DOCKETED	
Docket Number:	23-OPT-02
Project Title:	Darden Clean Energy Project
TN #:	255914
Document Title:	Data Response Set 3 Appendix A - SJVACPD Preliminary Draft Permit Application Vol 2
Description:	Volume 2 of the San Joaquin Valley Air Pollution Control District preliminary draft permit application, provided in response to DR AQ-2 as Appendix A of Response Set 3
Filer:	Evelyn Langsdale
Organization:	Rincon Consultants
Submitter Role:	Applicant Consultant
Submission Date:	4/24/2024 4:02:11 PM
Docketed Date:	4/24/2024

Data Response Set 3 - Appendix A

DR AQ-2 SJVAPCD Preliminary Draft Permit Application - Volume 2

Starting System Data Sheet

Commercial Battery

Extra ruggedness and resistance to vibration, heat, chemicals, and physical abuse are built into every commercial battery provided with an ***mtu*** generator set. The battery design features the latest in power storage technology for lead-acid batteries, as well as incorporates proven designs developed with the most experience in the business.

PRODUCT FEATURES

- **Case Design:** Tough, high-impact reinforced polypropylene case is heat sealed under extreme pressure to withstand heavy commercial service usage. This helps to prevent electrolyte leakage, improves reliability, and reduces breakage.
- **Internal Design:** Full-frame power path grids avoid sharp wires protruding through separators and directs the power straight to the lug for low resistance and higher cranking amps.
- **Terminals:** Standard terminals are solidly built preventing porosity, corrosion, black post, and harmful acid leaks.
- **Power Density:** Extra heavy-duty batteries deliver more cranking amps per pound.
- **Maintenance:** The battery uses pure de-mineralized electrolytes for reduced water loss, reduced gassing, longer battery life, and low maintenance.
- **Reliability:** Narrow ribs reduce separator corrosion to protect against shorts while deep-pocket envelopes dramatically improve reliability and extend service life.
- **Quality:** Over 250 quality control checks, combined with computer-aided design technology, provide a tough, durable battery in each commercial battery provided with an ***mtu*** generator set.

						Overall Dimension			
BCI Group Size	Terminal Type	*mtu* Part Number	Volt	Cranking Performance CCA (Cold Cranking Amps) -18° C / 0° F	Reserve Capacity	Length mm (in)	Width mm (in)	Height mm (in)	Weight (Wet) kg (lbs)
24	Post	SUA102538	12	650	115	273 (10.75)	171 (6.75)	229 (9)	18.1 (40)
31	Post	SUA120299	12	950	175	330 (13)	171 (6.75)	241 (9.5)	25.7 (56.5)
4D	Post	SUA102493	12	1,050	290	527 (20.75)	216 (8.5)	258 (10.125)	45.2 (99.5)
8D	Post	SUA102492	12	1,400	430	527 (20.75)	279 (11)	254 (10)	59.3 (130.5)

Subject to change. | WT00037987 | 2021-09

Water Heater Data Sheet

TPS Series

DESCRIPTION

The TPS engine preheater is designed to preheat diesel and gas engines in generator set applications. Simple to install and very lightweight, the TPS engine preheater features a built-in thermostat and heats engines with up to 12 L displacement. Thermosiphon circulation of the coolant delivers heat throughout the entire engine.



CERTIFICATIONS AND STANDARDS

- c-UL-us Listed
- CE Compliant

SPECIFICATIONS

Height:	200 mm (7.9 in)
Width:	117 mm (4.6 in)
Weight:	771 g (1.7 lb)
Heating fluid:	Engine coolant (50% glycol/50% water)
Power:	0.5, 1, 1.5, 1.8, and 2 kW
Voltage range:	120 to 240 V
Tank material:	Polyphenylene sulfide (PPS)
Heating element:	Incoloy 800
Enclosure:	IP41
Fluid capacity:	416 cm^3 (0.11 gal)
Max pressure:	6.2 bar (90 psi)
Inlet / outlet:	15.9 mm (0.625 in)
Thermostat range:	
On	38 °C (100 °F)
Off	49 °C (120 °F)

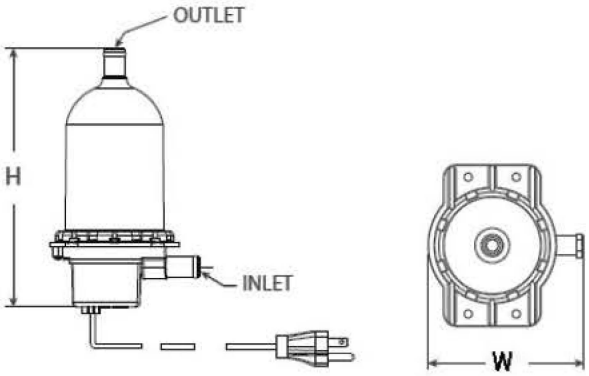

Model Number	*mtu* Part Number	Watts	Volts	Phase	Hz	Amps
TPS051GT10-000	SUA90366	500	120	1	60	4.2
TPS101GT10-000	SUA52746	1,000	120	1	60	8.4
TPS151GT10-000	SUA52748	1,500	120	1	60	12.5
TPS181GT10-000	SUA52750	1,800	120	1	60	15
TPS202GT10-000	SUA52751	2,000	240	1	60	8.3

Subject to change. | WT00032343 | 2021-04

A Rolls-Royce solution

NOTICE: This document is the property of Phillips & Temro industries and contains proprietary and trade secret information. The recipient of this document agrees to use the information contained herein only for the purpose for which it was furnished by Phillips & Temro industries and agrees not to copy or disclose this information without prior written approval. This notice shall appear on any complete or partial reproduction of this document.

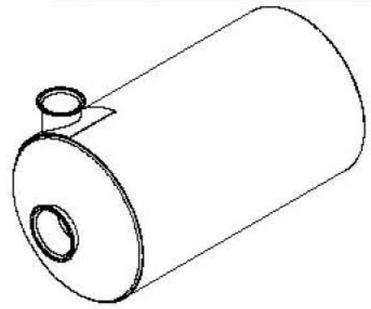

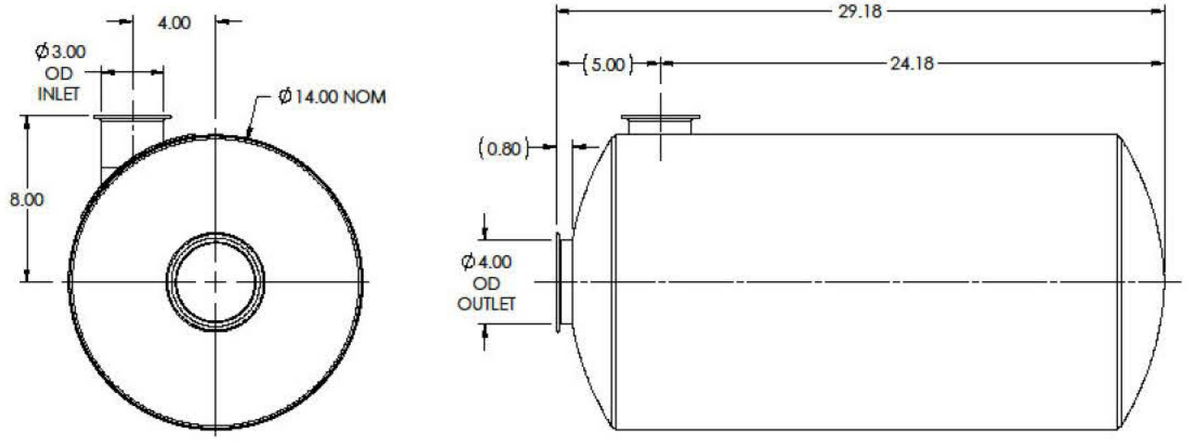

Reference Information:

Manufacturer: Philips & Temro
Model: CPJS-04X-90013905

Dimensions and Weights on Drawings are in Inches/Pounds.

ENGINE SPECIFIC INFORMATION	
ENGINE:	FORD 6.8L NG/LPG
DISPLACEMENT (IN³):	415
FLOW (CFM):	785
TEMP (°F):	1200/1260
BACK PRESSURE (H2O):	81.5"

CS CONSTRUCTION
GAS FLOW FULLY INSULATED INTERNAL

PHILLIPS & TEMRO Industries

REV	DATE	BY	COMMENTS
1	12/14/2011	JVC	RELEASED FOR CUSTOMER APPROVAL
2	1/5/2012	JVC	REVISED INLET WAS 3.50 OD & OAL WAS 23.00

CUSTOMER MTU — FINISH HIGH TEMP BLACK PAINT — WEIGHT 69.50

JVC | 12/14/2011 | S-E SB03-SB04 Ø14.00 29.18 OAL F:24.18 —

SIZE B | SHEET 3 OF 3 | DWG NO | SEE PO | SEE BOM | MTU - 101740 | SCALE: 1:5 | CPJS-04X-90013905 | REV 2

a	0x			12-01-13	Klassen	kost
—	———	———————				—
Buchst. Rev.Ltr.	Kommt vor Frequency	Änderung/Revision	Auftrags-Nr. Rev.Not.No.	Datum Date	Name	Gepr. Check

T-348-0108

Oberflächenangaben nach MTN5033 Surface Specification per MTN5033	Allgemeine Fertigungsvorschriften nach MMN 332 Production Specification per MMN 332	-- / --	Masse/Mass kg 154.945 — Format/Size **A3**

Verwendbar für Typ Applicable to Model	**WORD**	Datum Date	Name
Projekt-/Auftrags-Nr. Project/Order No.	Bearb. Drawn	12-01-13	Klassen
Ref.-Nr./Ref.No. Emissions_ID	Gepr. Checked	12-01-13	Kost
Bei Fremdteil/Kaufteil dürfen alle techn. Änderungen am Lieferumfang nur nach unserer vorherigen Genehmigung vorgenommen werden. Techn. modifications to third party or purchased parts require our prior permission.	Norm Stndr.	12-01-13	Halbert
	Abt. Dept. OAN		Halbert

Benennung/Title

ABGASSCHALLDAEMPFER

EXHAUST SILENCER

INSULATED FORD 6.8L

mtu onsite energy — MTU Friedrichshafen GmbH

Zeichnungs-Nr./Drawing No. **SUA101740**

Blatt/Sheet **1** von/of **1**

Für diese technische Unterlage behalten wir uns alle Rechte vor. Sie darf ohne unsere Zustimmung weder vervielfältigt, noch Dritten zugänglich gemacht, noch in anderer Weise mißbräuchlich verwertet werden.
All rights reserved. This document may not be reproduced or disclosed to a third party or used for any other purpose without our express consent.

Air Filter Data Sheet

DESCRIPTION

Air filters offer engine protection and minimal downtime during normal maintenance. The air filters on ***mtu*** generator sets are easy to install, durable, and reliable.



FEATURES

- Designed to withstand severe intake pulsation and high humidity
- Sturdy, self-supporting, one-piece construction
- Lightweight and compact

SPECIFICATIONS

***mtu* Part #**	**Airflow @ Inches of Water Restriction** (refer to *Airflow Diagrams* below)			**Weight**	**Maximum Temp**	
	m^3/min (SCFM) @ 4 in. H_2O	m^3/min (SCFM) @ 6 in. H_2O	m^3/min (SCFM) @ 8 in. H_2O	kg (lb)	Continuous °C (°F)	Intermittent °C (°F)
SUA106417	4.3 (150)	5.1 (180)	6.1 (215)	1 (2.2)	83 (180)	105 (220)
SUA90069	43.9 (1,550)	52 (1,836)	60 (2,118)	3.6 (8)	83 (180)	105 (220)
SUA86885	13.7 (485)	17.6 (620)	21.5 (760)	2.6 (5.8)	83 (180)	105 (220)
SUA77166	3.8 (135)	4.6 (163)	5.3 (190)	1.3 (2.9)	N/A	N/A
SUA40198	3.1 (112)	4.1 (145)	4.8 (170)	0.64 (1.4)	83 (180)	105 (220)
XG3012100019	23.5 (830)	31.43 (1,110)	36.67 (1,295)	1.45 (3.2)	83 (180)	105 (220)
XG2112100001 XG2512100002	9.63 (340)	13.03 (460)	15.85 (560)	1.59 (3.5)	N/A	N/A

***mtu* Part #**	**Dimensions** (refer to *Dimension Diagrams* on next page)				**Minimum Removal Clearance**
	Body Length (D) mm (in)	Body Diameter (A) mm (in)	Outlet Length (F) mm (in)	Outlet Diameter (C) mm (in)	mm (in)
SUA106417	127 (5)	216 (8.5)	35 (1.38)	76 (3)	38.1 (1.5)
SUA90069	400 (15.75)	318 (12.5)	48 (1.89)	198 (7.8)	38.1 (1.5)
SUA86885	279 (11)	318 (12.5)	35 (1.38)	127 (5)	38.1 (1.5)
SUA77166	172 (6.75)	216 (8.5)	27 (1.08)	75 (2.96)	38.1 (1.5)
SUA40198	102 (4)	216 (8.5)	35 (1.38)	64 (2.5)	38.1 (1.5)
XG3012100019	381 (15)	318 (12.5)	35 (1.38)	152 (6)	38.1 (1.5)
XG2112100001 XG2512100002	267 (10.5)	267 (10.5)	35 (1.38)	102 (4)	38.1 (1.5)

N/A = Not Available

A Rolls-Royce solution

AIRFLOW DIAGRAMS

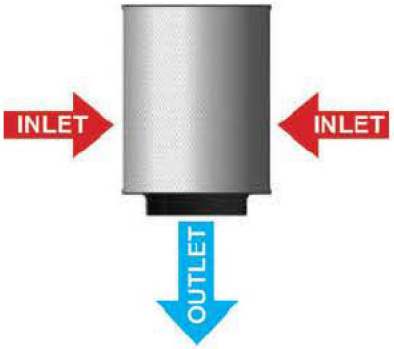

Airflow Diagram: SUA90069, XG3012100019

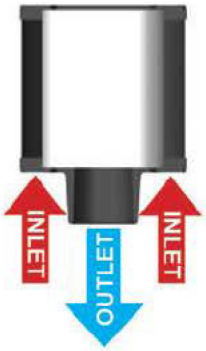

Airflow Diagram: SUA106417, SUA86885, SUA77166, SUA40198



Airflow Diagram: XG2112100001, XG2512100002

DIMENSION DIAGRAMS

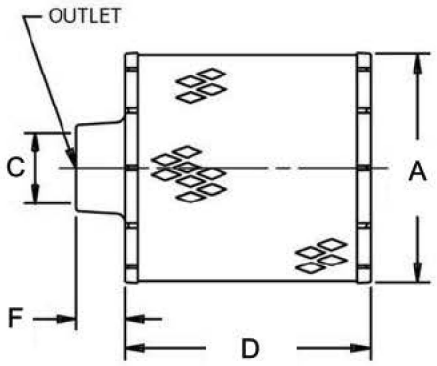

Dimension Diagram: SUA90069, XG3012100019

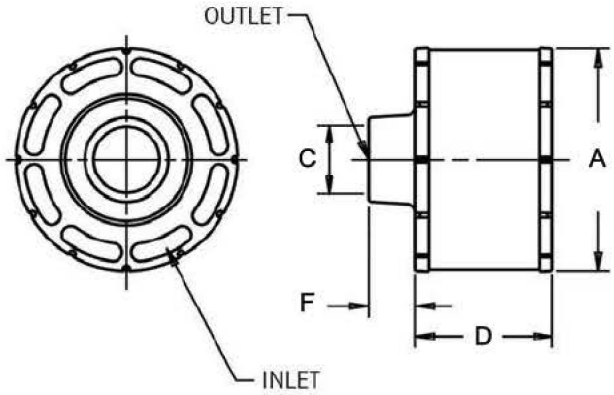

Dimension Diagram: SUA106417, SUA86885, SUA40198

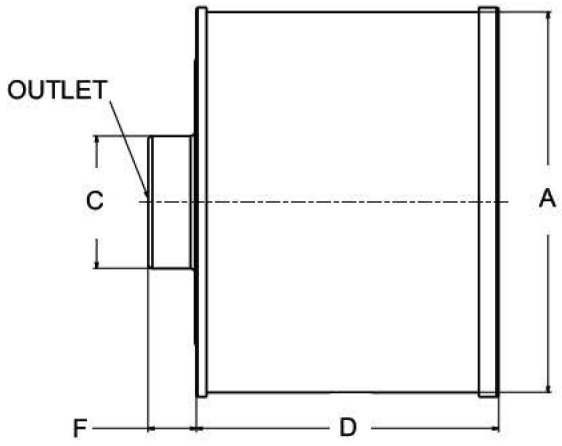

Dimension Diagram: SUA77166, XG2112100001, XG2512100002

Subject to change | WT00037879 | 2021-09

Isolator Pad Data Sheet

DESCRIPTION

These square-molded, neoprene pads can be used to compensate for inconsistencies in the mounting surface between the generator set base frame and the installation surface, or between the sub-base fuel tank and the installation surface, if applicable. They can be easily cut to any desired shape and can be used in multiple layers to increase deflection.

NEOPRENE TYPICAL PHYSICAL PROPERTIES

Hardness:	40A-90A
Tensile Strength:	500
Elongation:	200
Tear Value:	50
Thermal Conductivity (K Factor):	0.30

Heat Resistance @ 100 °C (212 °F) after 70 Hours:

Change in Hardness:	10
Change in Tensile:	-16%
Change in Elongation:	-60%
Compression Set:	50%
Lowest Working Temperature:	-40 °C (-40 °F)
Highest Working Temperature:	90.6 °C (195 °F)

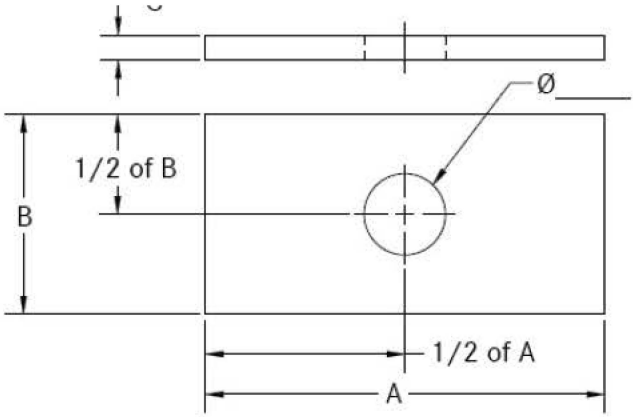

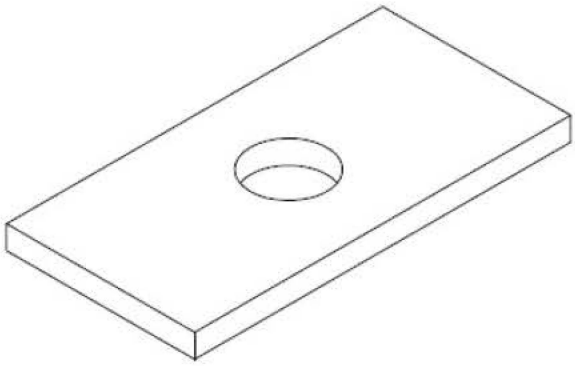

mtu Part Number	Dim. A mm (in)	Dim. B mm (in)	Dim. C mm (in)	Hole Diameter mm (in)	Durometer
SUA46904	101.6 (4)	50.8 (2)	6.35 (0.25)	20.638 (0.813)	50
SUA46905	152.4 (6)	50.8 (2)	6.35 (0.25)	20.638 (0.813)	50
SUA46906	254 (10)	50.8 (2)	6.35 (0.25)	20.638 (0.813)	50
SUA46907	457.2 (18)	63.5 (2.5)	6.35 (0.25)	20.638 (0.813)	50
SUA46908	457.2 (18)	76.2 (3)	6.35 (0.25)	20.638 (0.813)	50
SUA46909	457.2 (18)	457.2 (18)	6.35 (0.25)	Not Required	50
SUA63015	203.2 (8)	76.2 (3)	6.35 (0.25)	20.638 (0.813)	50
SUA77843	101.6 (4)	50.8 (2)	19.05 (0.75)	20.638 (0.813)	60
SUA86147	457.2 (18)	76.2 (3)	6.35 (0.25)	20.638 (0.813)	70
SUA95672	304.8 (12)	50.8 (2)	6.35 (0.25)	20.638 (0.813)	50
SUA102408	457.2 (18)	76.2 (3)	6.35 (0.25)	26 (1.024)	50
X54599100330	381 (15)	76.2 (3)	6.35 (0.25)	22.225 (0.875)	50

Subject to change. | WT00038043 | 2021-10

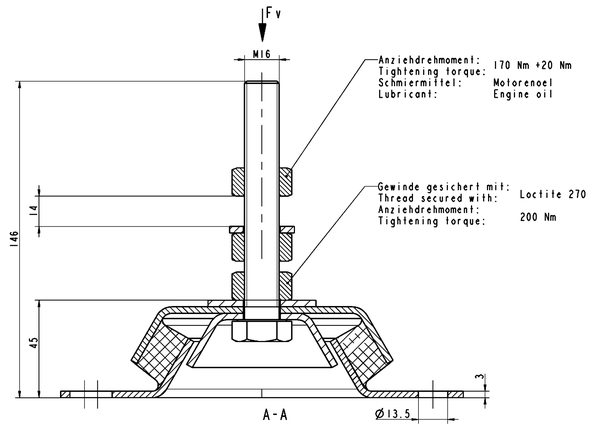

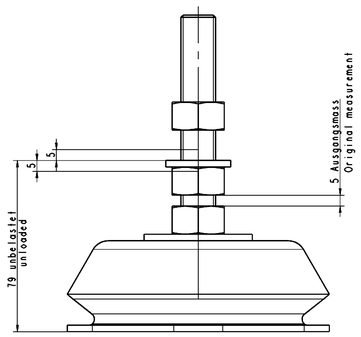

a1

Kennlinie Druck Fv
Reference line compression Fv

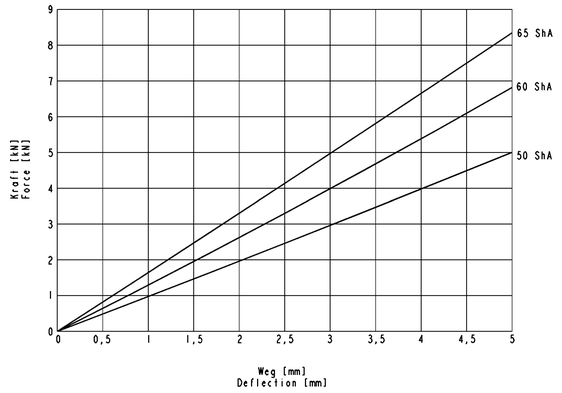

Kennlinie radial Fq
Reference line radial Fq

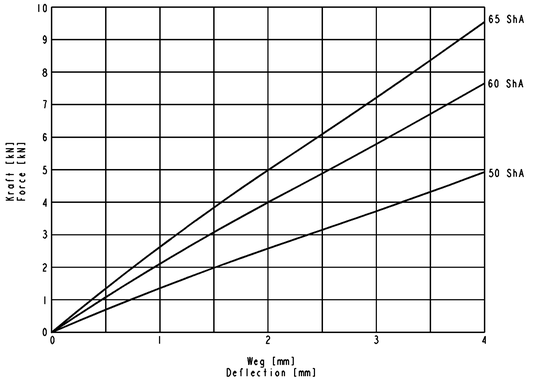

maximal zulaessiger Federweg: 4mm
Maximum permitted resilient tolerance:
maximal zulaessige Belastung: siehe Kennlinie
Maximum permitted load: see reference line

MTU-Sachnummer MTU-Part number	Sachnummer Lieferant Supplier Part No.	Shore Haerte Shore hardness	Daempfungsgrad Damping ratio	Federsteifigkeit Fv Resilient stiffness Fv
X57523100036	10004401	50 Sh A	0,04	1,0 kN/mm ±20%
X57523100037	10004402	60 Sh A	0,05	1,3 kN/mm ±20%
X57523100039	10004403	65 Sh A	0,06	1,6 kN/mm ±20%

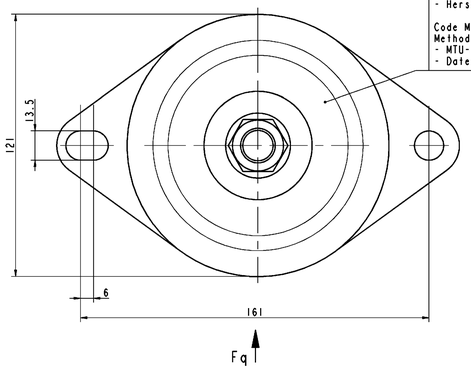

Kennzeichnung siehe MTN5077
Verfahren B2 -
- MTU-Sachnummer
- Herstelldatum auf Gummielement

Code Marking, see MTN5077
Method B2 -
- MTU-Part Number
- Date of Manufacture on Rubber Element

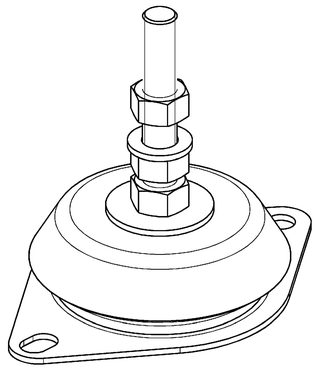

MTU-Sachnummer MTU-Part number	Zylinderzahl No. of cylinders	Shore Haerte Shore hardness	statische Einfederung Static resilient deflection
X57523100039	12V	65 Sh A	2,5 [mm]
X57523100037	10V	60 Sh A	2,8 [mm]
X57523100037	8V	60 Sh A	2,4 [mm]
X57523100036	6R	50 Sh A	3,1 [mm]

X57523100036 (50 ShA)

FEDERWEG-PRUEFVORSCHRIFT
Belastungsrichtung: Druck Fv
Pruefhaufigkeit: einmalig pro Charge
Pruefvorrichtung:
Messtemperatur: Raumtemperatur
Vorlast: 500 N
Anzahl Setzzyklen: 2
Setzgeschwindigkeit: 20mm/min
Setzbelastung bis: 4kN
Pruefgeschwindigkeit: 20mm/min
1. Kraftmessung:
2. Wegmessung:
3. Steifigkeitsmessung: C=0,8-1,2kN/mm zwischen 1-3mm

X57523100037 (60 ShA)

FEDERWEG-PRUEFVORSCHRIFT
Belastungsrichtung: Druck Fv
Pruefhaufigkeit: einmalig pro Charge
Pruefvorrichtung:
Messtemperatur: Raumtemperatur
Vorlast: 500 N
Anzahl Setzzyklen: 2
Setzgeschwindigkeit: 20mm/min
Setzbelastung bis: 5,5kN
Pruefgeschwindigkeit: 20mm/min
1. Kraftmessung:
2. Wegmessung:
3. Steifigkeitsmessung: C=1,05-1,6kN/mm zwischen 1-3mm

X57523100039 (65 ShA)

FEDERWEG-PRUEFVORSCHRIFT
Belastungsrichtung: Druck Fv
Pruefhaufigkeit: einmalig pro Charge
Pruefvorrichtung:
Messtemperatur: Raumtemperatur
Vorlast: 500 N
Anzahl Setzzyklen: 2
Setzgeschwindigkeit: 20mm/min
Setzbelastung bis: 6,5kN
Pruefgeschwindigkeit: 20mm/min
1. Kraftmessung:
2. Wegmessung:
3. Steifigkeitsmessung: C=1,3-1,9kN/mm zwischen 1-3mm

X57523100036 (50 ShA)

RESILIENT TOLERANCE - TEST SPECIFICATION
Load direction: pressure Fv
Test frequency: once per lot
Test device:
Measuring temperature: ambient temperature
Pre-load: 500 N
Number of creep cycles: 2
Creep rate: 20mm/min
Creep load up to: 4kN
Test rate: 20mm/min
1. Measurement - Force:
2. Measurement - Deflection:
3. Measurement - Rigidity: C=0,8-1,2kN/mm between 1-3mm

X57523100037 (60 ShA)

RESILIENT TOLERANCE - TEST SPECIFICATION
Load direction: pressure Fv
Test frequency: once per lot
Test device:
Measuring temperature: ambient temperature
Pre-load: 500 N
Number of creep cycles: 2
Creep rate: 20mm/min
Creep load up to: 5,5kN
Test rate: 20mm/min
1. Measurement - Force:
2. Measurement - Deflection:
3. Measurement - Rigidity: C=1,05-1,6kN/mm between 1-3mm

X57523100039 (65 ShA)

RESILIENT TOLERANCE - TEST SPECIFICATION
Load direction: pressure Fv
Test frequency: once per lot
Test device:
Measuring temperature: ambient temperature
Pre-load: 500 N
Number of creep cycles: 2
Creep rate: 20mm/min
Creep load up to: 6,5kN
Test rate: 20mm/min
1. Measurement - Force:
2. Measurement - Deflection:
3. Measurement - Rigidity: C=1,3-1,9kN/mm between 1-3mm

MTN5168

Oberflaechenschutz Stahlteile:
Surface Protection Steelparts:
MTV5025, Schichtdicke: 10 bis/to 12 µm Cr(VI) frei/free

Lieferung und Altersueberwachung nach MTV 5005
Shelf Life Monitoring in compliance with MTV 5005

MTV5025									
MTV5005									
MTN5168									
MTN5077			a	1	Kennlinie radial hinzugefügt	57974	14.09.2005	zobolo	
						49043	04.12.2008	zimmerma	
Aufgeführte Normen Relevant Standards	Passiv Fit	Umwelt-Simulation Sim	Betrieb Operation	Anwendung Use	Aenderungsbezeichnung Revision	Aenderungsnr. Revision Notice No.	Datum Date	Name	Gepr. Check

Lieferant
Supplier GMT GmbH

Diese Zeichnung darf ohne Zustimmung der Fa. GMT GmbH keinem Dritten zugaenglich gemacht werden oder in anderer Weise missbraeuchlich verwendet werden.

This drawing is not to be disclosed to a third party or used for any other purpose without the express consent of Fa. GMT GmbH

Toleranzen n.Lieferung tech. Charakteristics
Oberflaechenschutz Surface Protection
Vermerkbar fuer Typ BR 1600 Applicable to Model
Projekt-/Auftrags-Nr. Project/Order No.
Referenz-Nr./Reference No.

Oberflaechenangaben nach MTN5033 Surface Specification per MTN5033
Allgemeine Fertigungsvorschriften nach MAN 332 Production Specification per MAN 332
MTI

Massstab Scale 1:1
Masse/Mass kg 1.334
Format/Size A0
Werkstoff Material
Haftung, Modell, Gerael Semi-finished Product, Pattern, Die
Benennung/Title
DAEMPFUNGSLAGER
RUBBER MOUNT

Pro/E Datum/Date Name
bearb. Drawn 10.12.2008 Zimmerma
gepr. Checked 12.12.2008 Zorell
Norm. Standard 11.12.2008 Hans
Abt. Dept. TRA Dr. Barrack

Zeichnungs-Nr./Drawing No. XZ57523100035
Blatt Sheet 1v.1

Der Freundlich/Manifest duerfen alle technischen Aenderungen am Lieferumfang nur nach unserer vorherigen Genehmigung vorgenommen werden. Technical modifications to third party or purchased parts require our prior permission.

MTU Friedrichshafen GmbH

Fuer diese technische Unterlage behalten wir uns alle Rechte vor. Sie darf ohne unsere Zustimmung weder vervielfaeltigt, noch Dritten zugaenglich gemacht, noch in anderer Weise missbraeuchlich verwertet werden.
All rights reserved. This document may not be reproduced or disclosed to a third party or used for any other purpose without our express consent.

DVR2400 P1 CONNECTOR		
Terminal	Name	Description
P1-1	IB1	Generator Phase B CT - terminal 1
P1-2	IB2	Generator Phase B CT - terminal 2
P1-3	A_L	Auxiliary current loop (DVR2500 only)
P1-4	AU+	Auxiliary input positive
P1-5	AU-	Auxiliary input negative
P1-6	EXC	Excitation disable contact input (active closed)
P1-7	UP	UP contact input (active closed)
P1-8	DN	DOWN contact input (active closed)
P1-9	DRP	Droop disable contact input (active closed)
P1-10	QRP	VAR/PF mode disable (active closed)
P1-11	DG	Digital ground
P1-12	NO	Contact output normally open
P1-13	COM	Contact output common
P1-14	NC	Contact output normally closed

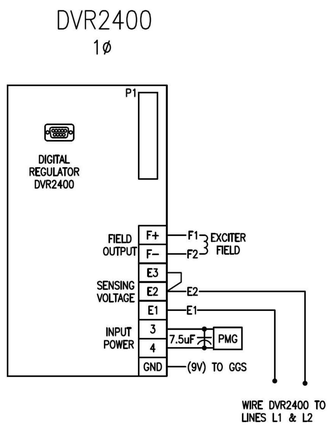

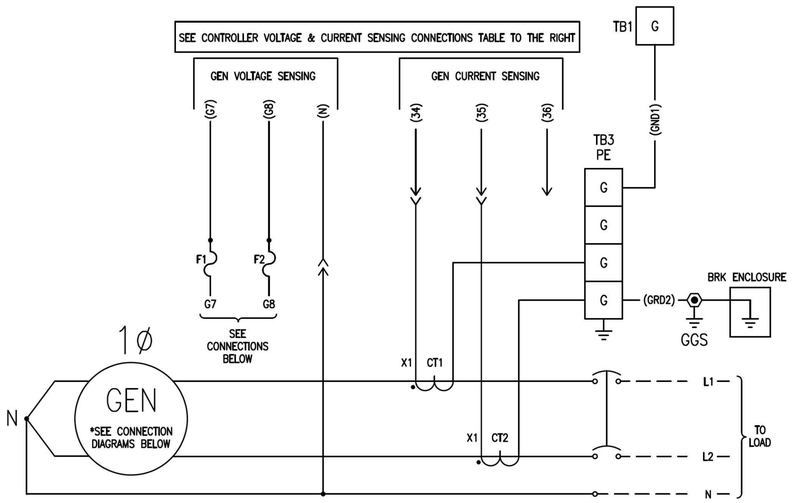

CONTROLLER VOLTAGE & CURRENT SENSING CONNECTIONS

NCP	MGC & PIN #		
TB1	1500	2000	3000
G7	45	41	86
G8	43	39	88
G9	41	37	90
N	40	35	91
34	38	69	1
35	36	72	3
36	34	75	5

WIRE #

DOUBLE DELTA 1ø

HZ	L-L	L-LO
60	240 277	120 139
50	200 220 240	100 110 120

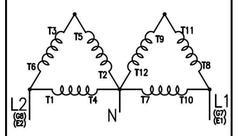

Aenderungsbeschreibung/Description of revision
INITIAL RELEASE

kommt vor/Frequency

Buchst./Rev.Ltr. -.1
Aenderungs-Nr./Revision Notice No. PR062671
Bearbeitungsstatus/Lifecycle Released

Allgemeintoleranzen / General Tolerances ISO 2768-mK
Toleranzen / Tolerancing ISO 8015
Masse / Size ISO 14405
Auslieferung u. Lieferung Tech. Characteristics ----
Oberflächenangaben nach MTN5033 Surface Specification per MTN5033
Oberflächenschutz Surface Protection ----
Verwendbar fuer Typ Applicable to Model ----
Allgemeine Fertigungsvorschriften nach MMN 332 Production Specification per MMN 332
Projekt-/Auftrags-Nr. Project/Order No. ----
Referenz-Nr./Ref.No. ----
Emission ID ----
block kevi 12.10.2020

Massstab/Scale
Masse/Mass ----
kg
Format/Size A
Werkstoff Material ----
Halbzeug,Modell,Gesenk Semifinished Product, Pattern,Die ----
Material-Nr./Material-No. XZG25K0000014

Alle Rechte aus Schutzrechtsanmeldungen vorbehalten. Weitergabe, Vervielfältigung, oder sonstige Verwertung ohne Zustimmung nicht gestattet. Zuwiderhandlungen verpflichten zum Schadensersatz.
All industrial property rights reserved. Disclosure, reproduction, or use for any other purpose is prohibited unless our express permission has been given. Any infringement results in liability to pay damages.

ACAD	Datum/Date	Name
Ersteller Drawn.	08.10.2020	groenke do
Geprüft Change	08.10.2020	groenke do
Norm. Sign.	12.10.2020	carsten jd
Gepr. Checked	12.10.2020	carsten jd

Benennung/Title AO Arrangement

ARRANGEMENT DRAWING
1GEN GENERATOR
ELECTRICAL SYSTEM DRAWING

Zeichnungs-Nr./Drawing No. CAD06787700
Beschreibung/Description ----
Blatt Sheet 1/1

NOTES:

1. WIRE NUMBERS ARE IN PARENTHESIS.
2. SHORT DASHED LINES (– – – – –) INDICATE CUSTOMER CONNECTION OR OPTIONAL EQUIPMENT.

LEGEND

AL	ALARM BUZZER
BPS	BACK PLATE STUD
DGS	DOOR GROUND STUD
ESP	EMERGENCY STOP BUTTON
F1	5A ATO FUSE MGC CONTROLLER
F2	25A ATO FUSE PANEL
F3	20A ATO FUSE ECU
GGS	GENERATOR GROUND STUD
LWL	LOW WATER LEVEL PROBE
MGC	MTU GENERATOR CONTROLLER
R1	120 OHM ⅛ 1% RESISTOR
TB1	TERMINAL BLOCK 1 (PANEL BACK)
TB1A	TERMINAL BLOCK 1A (PANEL BACK)

*X (X) XXX X	
*X	DESTINATION
(X)	WIRE NUMBER
XXX	DESTINATION
X	DESTINATION TERMINAL

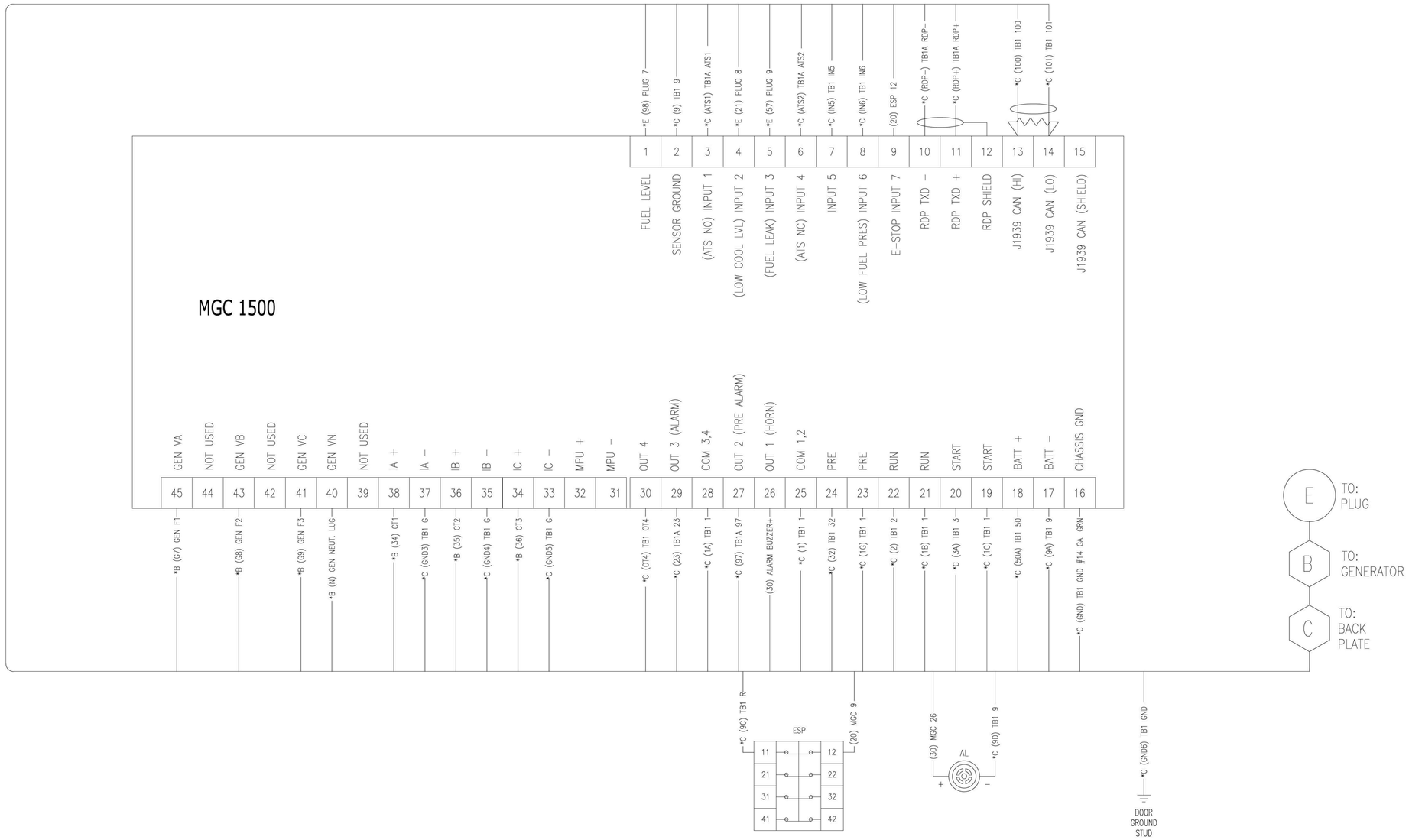

Änderungsbeschreibung/Description of revision	kommt vor/Frequency
INITIAL RELEASE	

Buchst./Rev.Ltr	Änderungs-Nr./Revision Notice No.	Bearbeitungsstatus/Lifecycle
–.1	PR062671	Released

Passmass Fit / Abmass in Devation µm

Allgemeintoleranzen / General Tolerances ISO 2768–mK

Tolerierung / Toleranzing ISO 8015	Masse / Size ISO 14405	Massstab/Scale
Ausführung u. Lieferung Tech. Characteristics –––––	Oberflächenangaben nach MTND033 Surface Specification per MTND033	Masse/Mass ––––– kg
Oberflächenschutz Surface Protection –––––		Format/Size A
Verwendbar fuer Typ Applicable to Model –––––	Allgemeine Fertigungsvorschriften nach MAN 332 Production Specification per MAN 332	Werkstoff Material –––––––––
Projekt-/Auftrags-Nr. Project/Order No. –––––		Halbzeug,Modell,Gesenk Semifinished Product, –––––
Referenz-Nr./Ref.No. –––––	Emission ID –––––	Pattern,Die
		Material-Nr./Material-No.
	block kevi 17.10.2020 ––––– –––	XZG25K0000015

Alle Rechte aus Schutzrechtsanmeldungen vorbehaltlich Weitergabe, Vervielfältigung, Verwertung, Mitteilung, ohne Genehmigung nicht gestattet. Zuwiderhandlungen verpflichten zum Schadenersatz. All industrial property rights reserved. Disclosure, reproduction or use for any other purpose is prohibited unless our written consent is given. Any infringement results in liability to pay damages.

	ACAD	Datum/Date	Name
Gezeichnet/Drawn		08.10.2020	groenke do
Überpr./Checked		08.10.2020	groenke do
Norm. Gepr./Checked		12.10.2020	carsten jd
		12.10.2020	carsten jd

Benennung/Title AO Arrangement

ARRANGEMENT DRAWING
1GEN MGC 1500 CONTROL PANEL
ELECTRICAL SYSTEM DRAWING

Zeichnungs-Nr./Drawing No. CAD06787711

Beschreibung/Description –––––

Blatt Sheet 1/3

MGC 1500

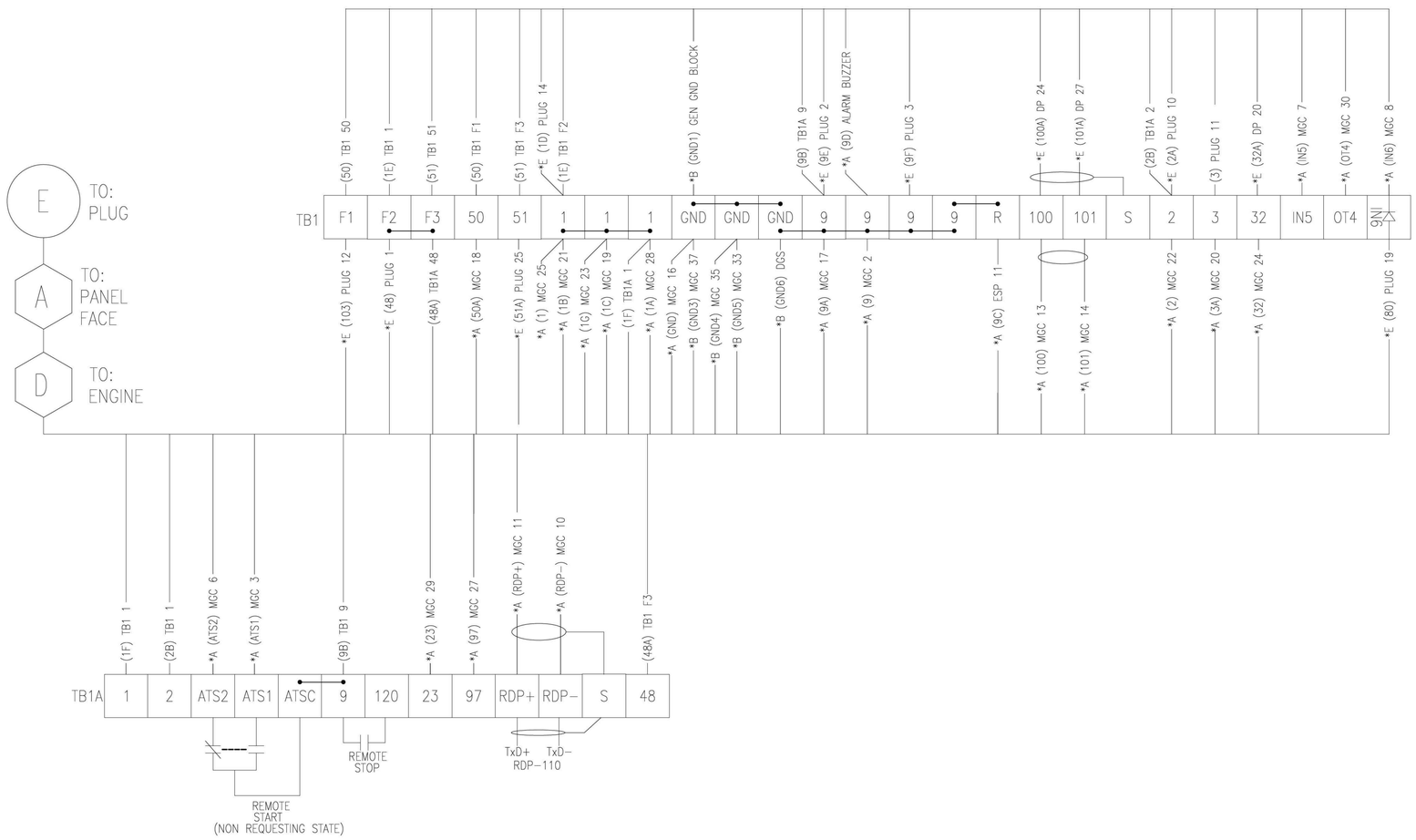

PANEL SIDE PLUG

(48) TB1 F2	1
(9E) TB1 9	2
(9F) TB1 9	3
(GND7) TB1 GND	4
	5
	6
*A (98) MGC 1	7
*A (21) MGC 4	8
*A (57) MGC 5	9
(2A) TB1 2	10
(3) TB1 3	11
(103) TB1 F1	12
	13
(1D) TB1 1	14
	15
	16
	17
	18
(80) TB1 IN6	19
(32A) TB1 32	20
	21
	22
	23
(100A) TB1 100	24
(51A) TB1 51	25
	26
(101A) TB1 101	27
	28
CAN S	29

NOTES:

1. WIRE NUMBERS ARE IN PARENTHESIS.
2. SHORT DASHED LINES (------) INDICATE CUSTOMER CONNECTION OR OPTIONAL EQUIPMENT.

LEGEND

AL	ALARM BUZZER
BPS	BACK PLATE STUD
DGS	DOOR GROUND STUD
ESP	EMERGENCY STOP BUTTON
F1	5A ATO FUSE MGC CONTROLLER
F2	25A ATO FUSE PANEL
F3	20A ATO FUSE ECU
GGS	GENERATOR GROUND STUD
LWL	LOW WATER LEVEL PROBE
MGC	MTU GENERATOR CONTROLLER
R1	120 OHM ⅛ 1% RESISTOR
TB1	TERMINAL BLOCK 1 (PANEL BACK)
TB1A	TERMINAL BLOCK 1A (PANEL BACK)

*X (X) XXX X	
*X	DESTINATION
(X)	WIRE NUMBER
XXX	DESTINATION
X	DESTINATION TERMINAL

AC CUSTOMER CONNECT

SEE PAGE 3 FOR TERMINAL DESIGNATION

Alle Rechte aus Schutzrechtsanmeldungen vorbehalten. Weitergabe, Vervielfältigung, oder sonstige Verwertung ohne Zustimmung nicht gestattet. Zuwiderhandlungen verpflichten zum Schadenersatz. All industrial property rights reserved. Passing on, copying, use or disclosure for any other purpose is prohibited unless our express permission has been given. Any infringement results in liability to pay damages.

Allgemeintoleranzen / General Tolerances ISO 2768-mK		Massstab/Scale	Masse/Mass	kg Format/Size
Toleranzang. / Tolerancing ISO 8015	Masse / Size ISO 14405		----	A
Ausführung u. Lieferung / Tech. Characteristics ----	Oberflächenangaben nach MTNO033 / Surface Specification per MTNO033	Werkstoff / Material ----		
Oberflächenschutz / Surface Protection ----				
Verwendbar für/ Typ / Applicable to Model ----	Allgemeine Fertigungsvorschriften nach MAN 332 / Production Specification per MAN 332	Halbzeug,Modell,Gesenk / Semifinished Product, Pattern,Die ----		
Projekt-/ Auftrags-Nr. / Project/Order No. ----		Material-Nr / Material-No.		
Referenz-Nr./Ref.No. ----	Emission ID ----	block rev: 12.10.2020	XZG25K0000015	

	ACAD	Datum/Date	Name
Ersteller / Creat.	ACAD	06.10.2020	groenke do
Gepr. / Check.	ACAD	06.10.2020	groenke do
Norm. / Norm	ACAD	12.10.2020	carsten jd
Gen. / Released	ACAD	12.10.2020	carsten jd

Benennung/Title AO Arrangement ----

ARRANGEMENT DRAWING
1GEN MGC 1500 CONTROL PANEL
ELECTRICAL SYSTEM DRAWING

Aenderungsbeschreibung/Description of revision	kommt vor/Frequency
INITIAL RELEASE	

Passmass Fit	Abmass in Deviation µm	Buchst./Rev.Ltr.	Aenderungs-Nr./Revision Notice No.	Bearbeitungsstatus/Lifecycle
		-.1	PR062671	Released

Zeichnungs-Nr./Drawing No. CAD06787712

Beschreibung/Description ----

Blatt / Sheet 2/3

AC OPTIONS

NO DISTRUBUTION PANEL

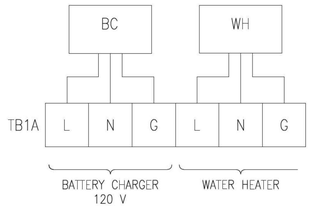

CUSTOMER CONNECTION

RECEPTACLE OPTIONS

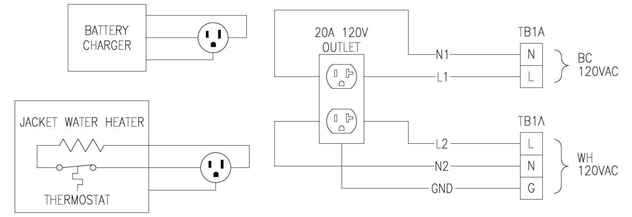

NOTES:

1. WIRE NUMBERS ARE IN PARENTHESIS.
2. SHORT DASHED LINES (------) INDICATE CUSTOMER CONNECTION OR OPTIONAL EQUIPMENT.

LEGEND

AL	ALARM BUZZER
BPS	BACK PLATE STUD
DGS	DOOR GROUND STUD
ESP	EMERGENCY STOP BUTTON
F1	5A ATO FUSE MGC CONTROLLER
F2	25A ATO FUSE PANEL
F3	20A ATO FUSE ECU
GGS	GENERATOR GROUND STUD
LWL	LOW WATER LEVEL PROBE
MGC	MTU GENERATOR CONTROLLER
R1	120 OHM ⅛ 1% RESISTOR
TB1	TERMINAL BLOCK 1 (PANEL BACK)
TB1A	TERMINAL BLOCK 1A (PANEL BACK)

*X (X) XXX X	
*X	DESTINATION
(X)	WIRE NUMBER
XXX	DESTINATION
X	DESTINATION TERMINAL

Aenderungsbeschreibung/Description of revision
INITIAL RELEASE
kommt vor/Frequency
Buchst./Rev.Ltr. -.2
Aenderungs-Nr./Revision Notice No. PR062671
Bearbeitungsstatus/Lifecycle Released
Passmass RR
Abmass in Deviation µm
Allgemeintoleranzen / General Tolerances ISO 2768-mK
Tolerierung / Toleranciing ISO 8015
Ausfuehrung u. Lieferung Tech. Characteristics ----
Oberflaechenschutz Surface Protection ----
Verwendbar fuer Typ Applicable to Model ----
Projekt-/Auftrags-Nr. Project/Order No. ----
Referenz-Nr./Ref.No. ----
Emission ID ----
Masse / Size ISO 14405
Oberflaechenangaben nach MTN5033
Surface Specification per MTN5033
Allgemeine Fertigungsvorschriften nach MMN 332
Production Specification per MMN 332
block kevi 12.10.2020
Alle Rechte aus Schutzrechtsanmeldungen vorbehalten. Weitergabe, Vervielfältigung, oder sonstige Verwertung ohne Zustimmung nicht gestattet. Zuwiderhandlungen verpflichten zum Schadenersatz.
All industrial property rights reserved. Disclosure, reproduction or use for any other purpose is prohibited unless our express permission has been given. Any infringement results in liability to pay damages.
ACAD Datum/Date Name
Ersteller Drawn 08.10.2020 groenke do
Geprüft Checked 08.10.2020 groenke do
Norm Date 12.10.2020 carsten jd
Gepr. Checked 12.10.2020 carsten jd
Massstab/Scale
Masse/Mass ----
kg
Format/Size A
Werkstoff Material ----
Halbzeug,Model,Gesenk Semifinished Product, Pattern,Die ----
Material-Nr./Material-No. XZG25K0000015
Benennung/Title AO Arrangement ----
ARRANGEMENT DRAWING
1GEN MGC 1500 CONTROL PANEL
ELECTRICAL SYSTEM DRAWING
Zeichnungs-Nr./Drawing No. CAD06787713
Beschreibung/Description ----
Blatt Sheet 3/3

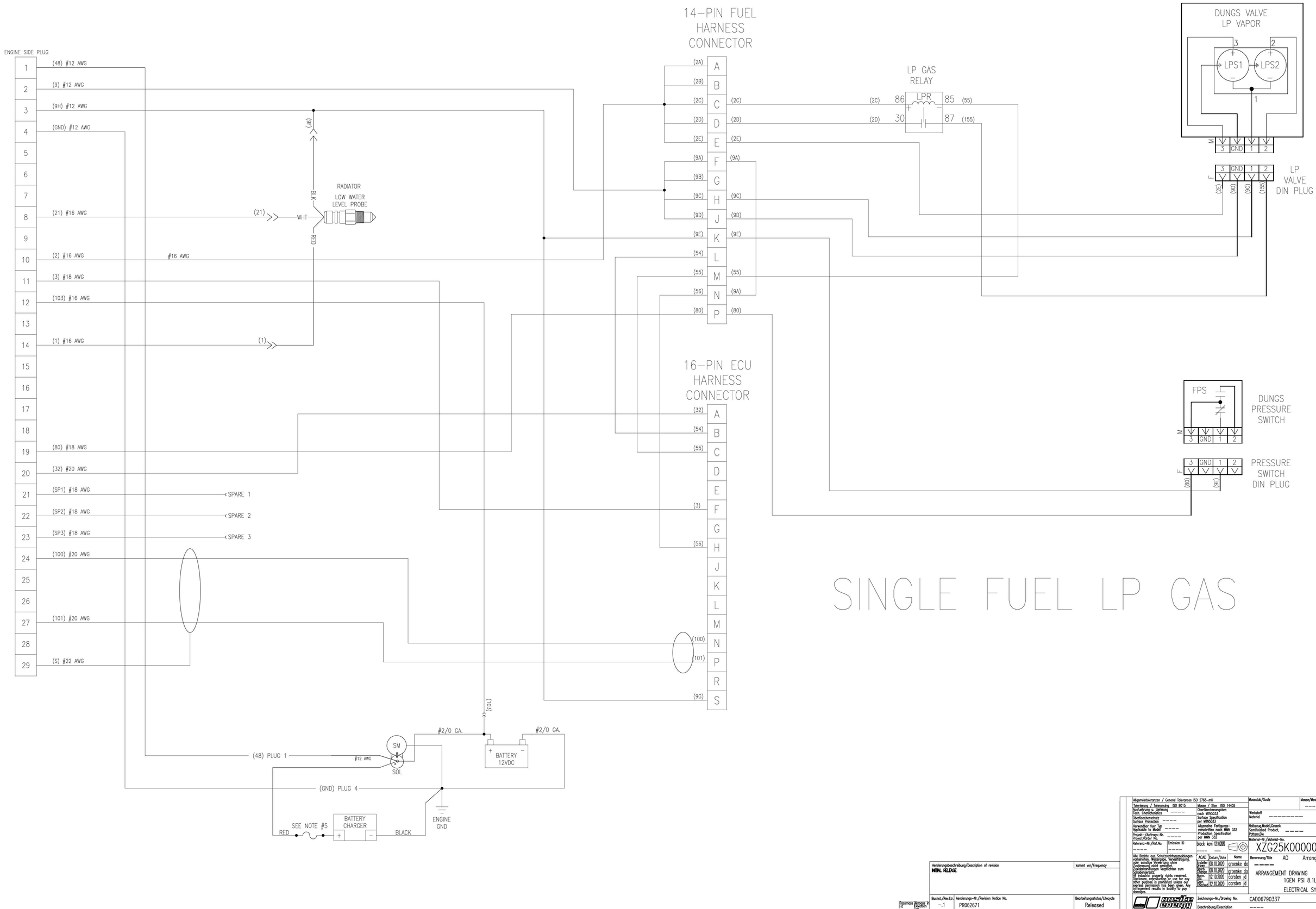

SINGLE FUEL LP GAS

Allgemeintoleranzen / General Tolerances ISO 2768-mK		Massstab/Scale	Masse/Mass kg / Format/Size A
Toleranzang / Tolerancing ISO 8015	Masse / Size ISO 14405		----
Ausführung u. Lieferung / Tech. Characteristics ----	Oberflächenangaben nach WTN5033 Surface Specification per WTN5033	Werkstoff / Material ----	
Oberflächenschutz / Surface Protection ----			
Verwendbar für Typ / Applicable to Model ----	Allgemeine Fertigungsvorschriften nach MAN 332 Production Specification per MAN 332	Halbzeug,Modell,Gesenk / Semifinished Product, Pattern,Die ----	
Projekt-/Auftrags-Nr. / Project/Order No. ----		Material-Nr./Material-No.	
Referenz-Nr./Ref.No. ----	Emission ID ----	block kevi 12.10.2020	XZG25K0000020
Alle Rechte aus Schutzrechtsanmeldungen vorbehalten. Weitergabe, Vervielfältigung, oder sonstige Verwertung ohne Zustimmung nicht gestattet. Zuwiderhandlungen verpflichten zum Schadenersatz. All industrial property rights reserved. Disclosure, reproduction or use for any other purpose is prohibited unless our express permission has been given. Any infringement results in liability to pay damages.	ACAD Datum/Date Name Ersteller draw. 08.10.2020 groenke do Zeichner 08.10.2020 groenke do Norm. 12.10.2020 carsten jd Std. Check 12.10.2020 carsten jd	Benennung/Title AO Arrangement ----	
		ARRANGEMENT DRAWING 1GEN PSI 8.1L GAS ENGINE ELECTRICAL SYSTEM DRAWING	
		Zeichnungs-Nr./Drawing No. CAD06790337	Blatt / Sheet 2/5
		Beschreibung/Description ----	

Aenderungsbeschreibung/Description of revision	kommt vor/Frequency
INITIAL RELEASE	

Passmass Fit	Abmass in Deviation um	Buchst./Rev.Ltr	Aenderungs-Nr./Revision Notice No.	Bearbeitungsstatus/Lifecycle
		-.1	PR062671	Released

NOTE:

X* X*

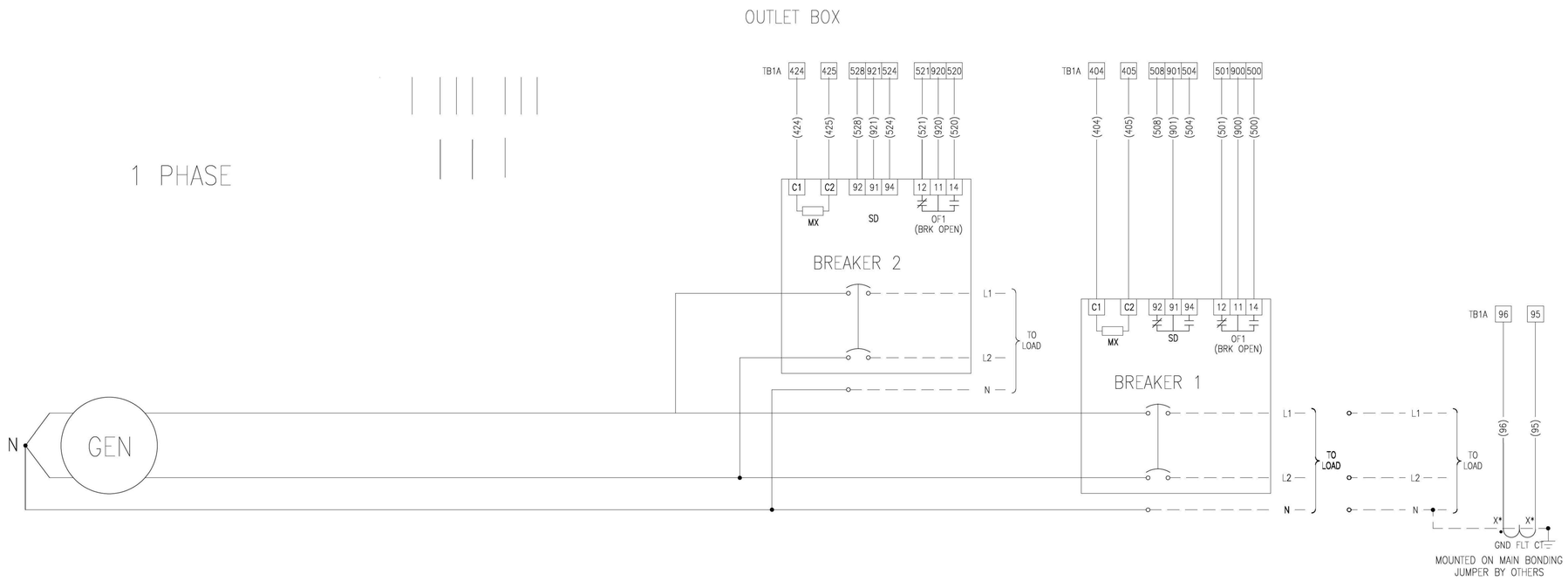

Aenderungsbeschreibung/Description of revision			kommt vor/Frequency
INITIAL RELEASE			
Buchst./Rev.Ltr.	Aenderungs-Nr./Revision Notice No.		Bearbeitungsstatus/Lifecycle
-.1	PR062671		Released

Passmass Fit | Abmass in Deviation µm

Allgemeintoleranzen / General Tolerances ISO 2768-mK
Tolerierung / Toleranzing ISO 8015
Ausführung u. Lieferung Tech. Characteristics ----
Oberflächenschutz Surface Protection ----
Verwendbar fuer Typ Applicable to Model ----
Projekt-/Auftrags-Nr. Project/Order No. ----
Referenz-Nr./Ref.No. ----
Emission ID ----

Masse / Size ISO 14405
Oberflächenangaben nach MTN5033
Surface Specification per MTN5033
Allgemeine Fertigungsvorschriften nach MMN 332
Production Specification per MMN 332
block kevi 12.10.2020

Massstab/Scale
Masse/Mass kg ----
Format/Size A
Werkstoff Material ----
Halbzeug,Modell,Gesenk Semifinished Product, Pattern,Die ----
Material-Nr./Material-No. XZG25K0000013

Alle Rechte aus Schutzrechtsanmeldungen vorbehalten. Weitergabe, Vervielfältigung, oder sonstige Verwertung ohne Zustimmung nicht gestattet. Zuwiderhandlungen verpflichten zum Schadensersatz.
All industrial property rights reserved. Disclosure, reproduction or use for any other purpose is prohibited unless our express permission has been given. Any infringement results in liability to pay damages.

ACAD	Datum/Date	Name
Ersteller Drawn	08.10.2020	groenke do
Geprüft Checked	08.10.2020	groenke do
Norm. Sch.	12.10.2020	carsten jd
Gepr. Checked	12.10.2020	carsten jd

Benennung/Title AO Arrangement

ARRANGEMENT DRAWING
1GEN BREAKERS
ELECTRICAL SYSTEM DRAWING

ansite energy

Zeichnungs-Nr./Drawing No. CAD06787676
Beschreibung/Description ----
Blatt Sheet 1/1

LEGEND:

D1	DIODE
D2	DIODE
F4	FUSE ATO 3A
F5	FUSE ATO 3A
TB1	TERMINAL BLOCK 1
TB1A	TERMINAL BLOCK 1A

4 RELAY OPTION

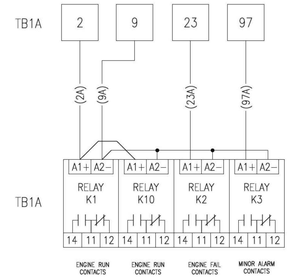

Aenderungsbeschreibung/Description of revision			kommt vor/Frequency
INITIAL RELEASE			
Buchst./Rev.Ltr.	Aenderungs-Nr./Revision Notice No.		Bearbeitungsstatus/Lifecycle
-.1	PR062671		Released

Passmass Fit | Abmass in Deviation µm

Allgemeintoleranzen / General Tolerances ISO 2768-mK
Tolerierung / Tolerancing ISO 8015
Ausführung u. Lieferung Tech. Characteristics ----
Oberflächenschutz Surface Protection ----
Verwendbar fuer Typ Applicable to Model ----
Projekt-/Auftrags-Nr. Project/Order No. ----
Referenz-Nr./Ref.No. ----
Emission ID ----
Masse / Size ISO 14405
Oberflächenangaben nach MTN5033 Surface Specification per MTN5033
Allgemeine Fertigungsvorschriften nach MMN 332 Production Specification per MMN 332
block kevi 12.10.2020

Massstab/Scale
Masse/Mass ----
kg
Format/Size A
Werkstoff Material ----
Halbzeug,Modell,Gesenk Semifinished Product, Pattern,Die ----
Material-Nr./Material-No. XZG25K0000019

Alle Rechte aus Schutzrechtsanmeldungen vorbehalten. Weitergabe, Vervielfältigung, oder sonstige Verwertung ohne Zustimmung nicht gestattet. Zuwiderhandlungen verpflichten zum Schadensersatz.
All industrial property rights reserved. Disclosure, reproduction or use for any other purpose is prohibited unless our express permission has been given. Any infringement results in liability to pay damages.

ACAD	Datum/Date	Name
Ersteller Drawn	08.10.2020	groenke do
Bearb. Change	08.10.2020	groenke do
Norm. Stand.	12.10.2020	carsten jd
Gepr. Checked	12.10.2020	carsten jd

Benennung/Title AO Arrangement ----

ARRANGEMENT DRAWING
1GEN OPTIONS
ELECTRICAL SYSTEM DRAWING

onsite energy

Zeichnungs-Nr./Drawing No. CAD06790329
Beschreibung/Description ----
Blatt Sheet 1/2

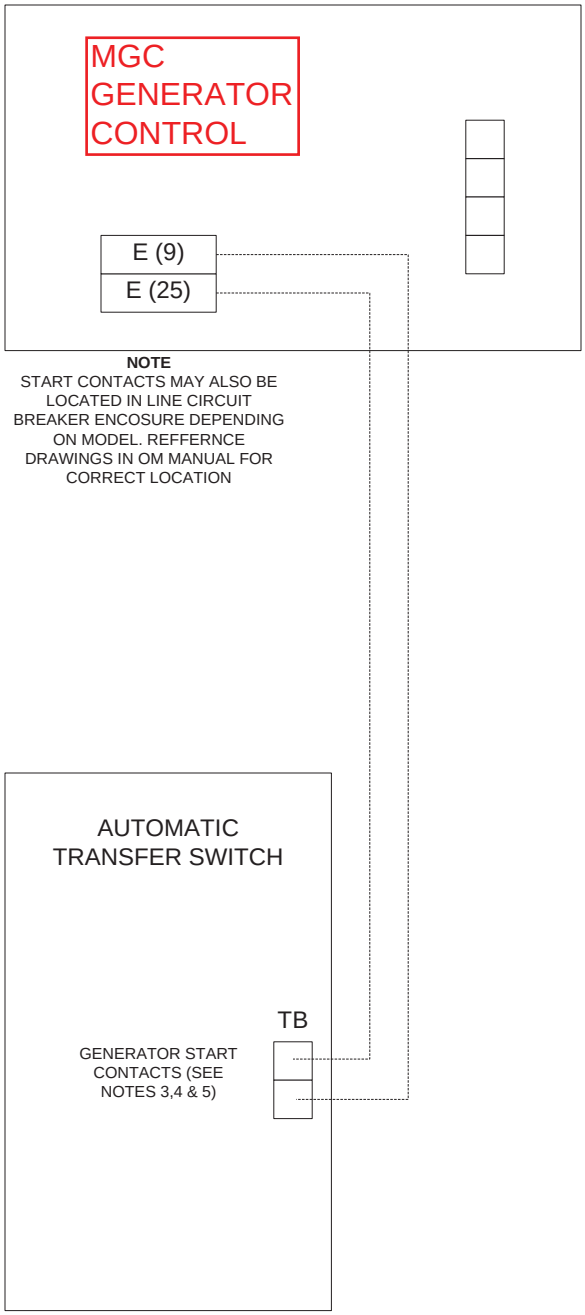

NOTES:

1. For ultiple ransfer s itche , dai y c ain the contact for g nerator tar .

2. ATS ontrol Inter onnect iri g. Two s randed copper wires requ red
0- 7 0 F et -20 Gauge
700- 1125 Fee – 18 Gaug

. F r conta t landi locations in trans er swi ch re er to the wiri g drawi includ d wi h t e transf r switch.

BASIC INTERCONNECT DRAWING FOR MGC CONTROL WITH TRANSFER SWITCH

Enclosure and Sound Data Sheet - Gas, Open Field

60 Hz: 150 kW Standby



Level 1 Enclosure (pictured)



Level 3 Enclosure (pictured)

Enclosure Level Identification	
Level 1	Skid-mounted weather-protective enclosure constructed of heavy gauge steel or aluminum with fixed stormproof panels designed for 130 mph wind load rating. Enclosure consists of a bolted and welded construction with unit-mounted internal silencer. Hinged, lockable double-door access on both sides of the enclosure.
Level 2	Level 1 enclosure with UL 94 HF-1 compliant, 1.5" thick sound attenuated foam insulation installed on enclosure walls.
Level 3	Level 2 enclosure with air exhaust scoop including UL 94 HF-1 compliant, 1.5" thick sound attenuated foam insulation.
Level 3 Plus	Level 3 enclosure with UL 94 HF-1 compliant, 1.5" thick sound attenuated foam on enclosure walls and ceiling.

CERTIFICATIONS AND STANDARDS

- UL 2200
- CE Marking Provided
- CSA C22.2 No. 100
- CSA C22.2 No. 14

STANDARD FEATURES FOR ALL LEVELS

- Heavy material construction
  - Steel enclosure: 1.9 mm (0.075 in) - 14 gauge or greater thickness
  - Aluminum enclosure: 2.3 mm (0.09 in) or greater thickness
- 130 mph wind rating
- Service access
  - Double door access gives ease of service to all components
- Pitched roof
- Rain shroud
- Rain cap
- Rodent barriers
- Exhaust scoop access panel and drain
- Hardware
  - Powder coated hinges with stainless steel pins
  - Key-lockable and pad-lockable powder coated door handles
- Powder coat finish paint: RAL 7001 Silver Grey standard
  - Custom colors available upon request
- Internal silencer (Hospital Grade)
  - Insulated silencer
  - Stainless steel flexible exhaust connections (where applicable)

Enclosure and Sound Data Sheet - Gas, Open Field
60 Hz: 150 kW Standby

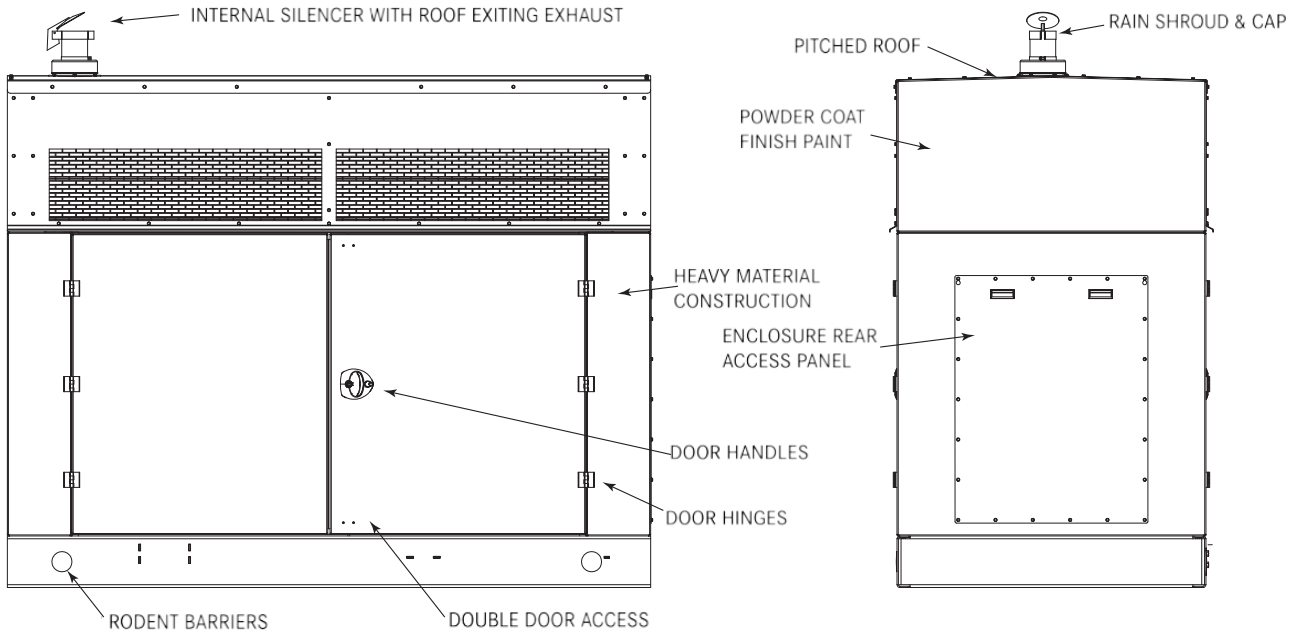

Level 1 Enclosure (pictured)

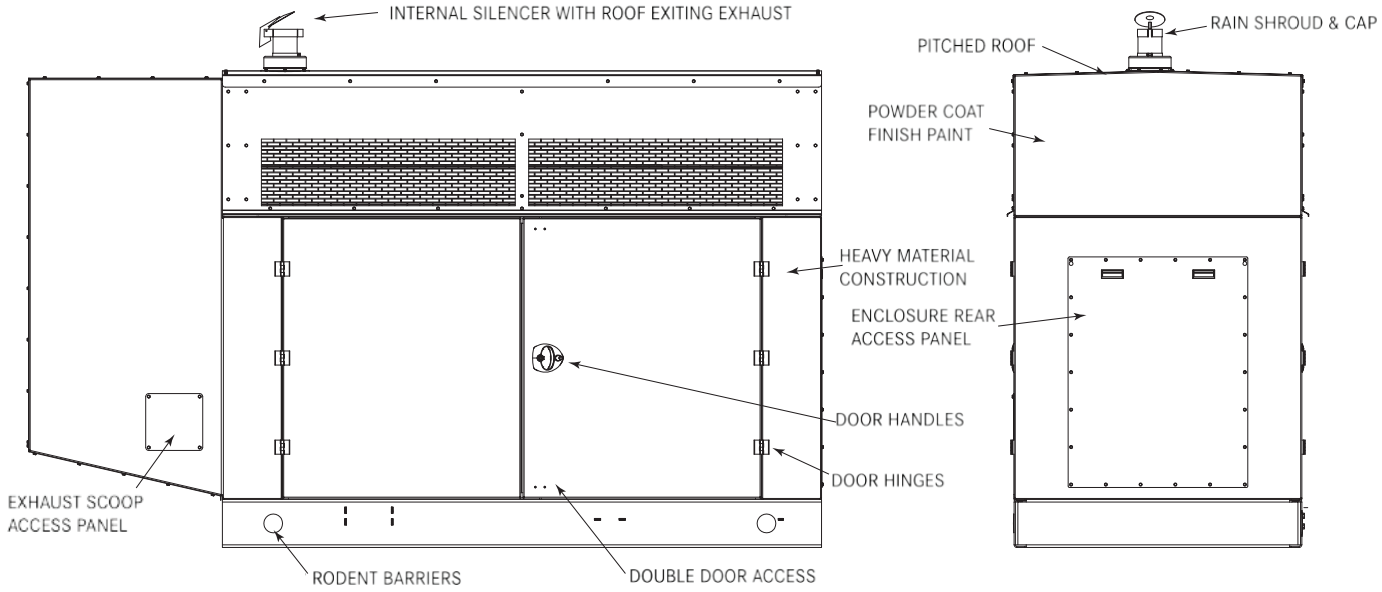

Level 3 Enclosure (pictured)

OPTIONAL FEATURES

- Door restraints
- LED light package
- Enclosure space heater
- Motorized intake louvers
- 190 mph wind rating
- Distribution panel
- Gravity exhaust louvers
- For other custom options, please consult factory.

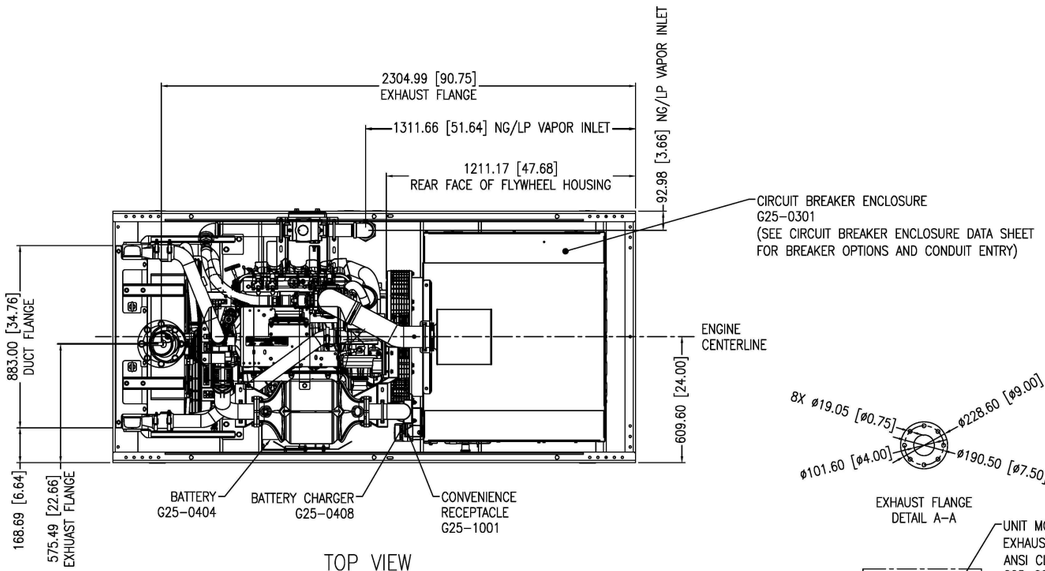

TOP VIEW

EXHAUST FLANGE
DETAIL A-A

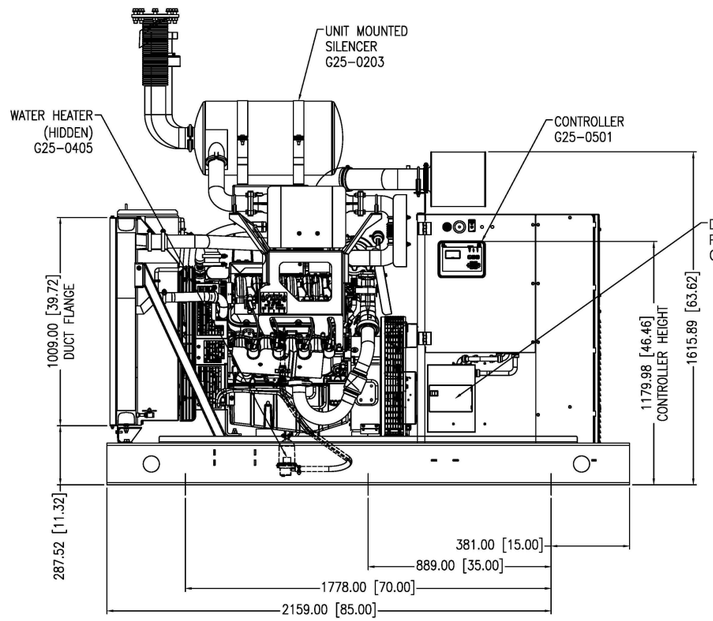

LEFT VIEW

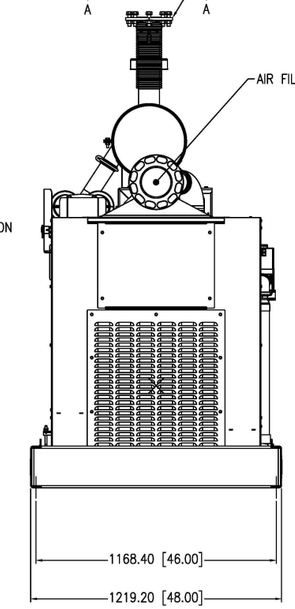

REAR VIEW

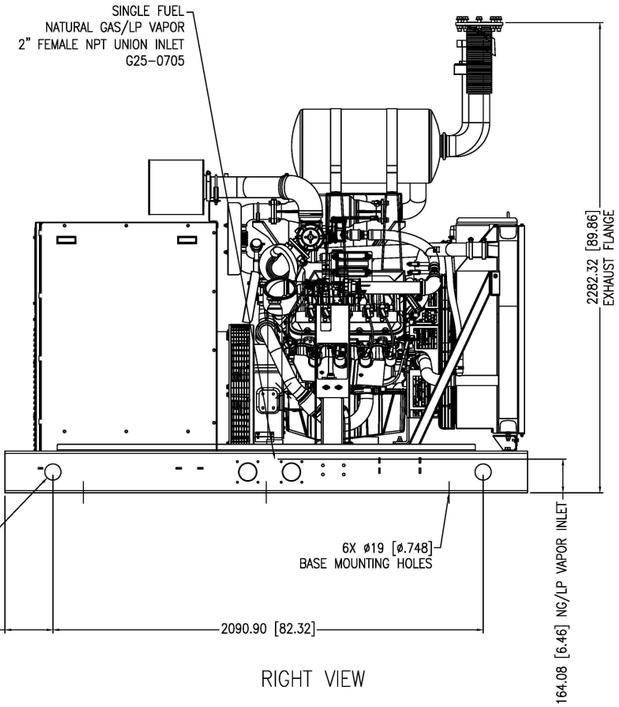

RIGHT VIEW

REVISION	DATE	DESCRIPTION

A Rolls-Royce solution

ALL INDUSTRIAL PROPERTY RIGHTS RESERVED. DISCLOSURE, REPRODUCTION OR USE FOR ANY OTHER PURPOSE IS PROHIBITED UNLESS OUR EXPRESS PERMISSION HAS BEEN GIVEN. ANY INFRINGEMENT RESULTS IN LIABILITY TO PAY DAMAGES.

APPLICABLE MODELS:
MTU 8V0110 GS150

THIRD ANGLE PROJECTION

DRAWN TO SCALE
DIMENSIONS: MM [INCH]

DATE CREATED: 2020-12-12

DIMENSIONAL LAYOUT

DESCRIPTION: 150 kW Genset, Housed Base

ENGINE: PSI 8.8LT CAC

WEIGHT (MIN-MAX): 1540-1820 KG 3400-4000 LB

DRAWING NUMBER: XZG2500100034

SHEET: 1 of 2

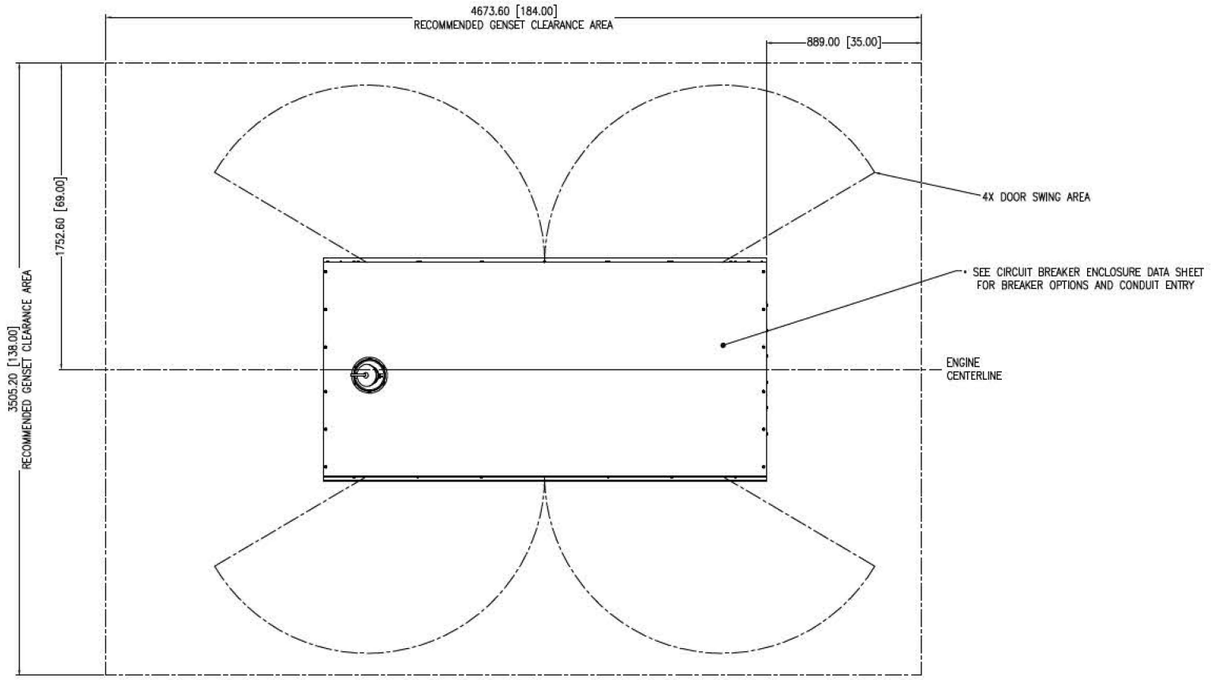

TOP VIEW

DRAWING OPTIONS 150kW PSI 8.8LT CAC			SELECTED OPTIONS
Group	Drawing Code	Description	
Housing Options, Exterior	G25–0801	Level 1 & 2 Housing	✓
	G25–0802	Level 3 Housing	
	G25–0803	Air Exhaust Gravity Louver	
Housing Options, Interior	G25–0901	Air Intake Motorized Louver	
	G25–0902	Interior Housing Lights	
	G25–0903	Space Heater	

Reference the Drawing Options table and within the Layer Properties turn on/off the Drawing Codes that may or may not apply to your configuration.

Note: Some options may not be referenced. Only options which visibly change the drawing are selectable

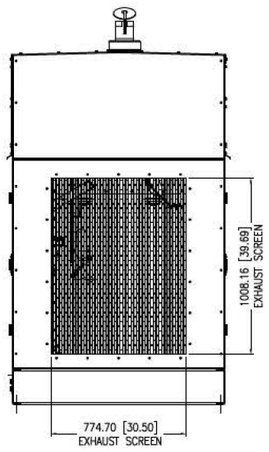

FRONT VIEW

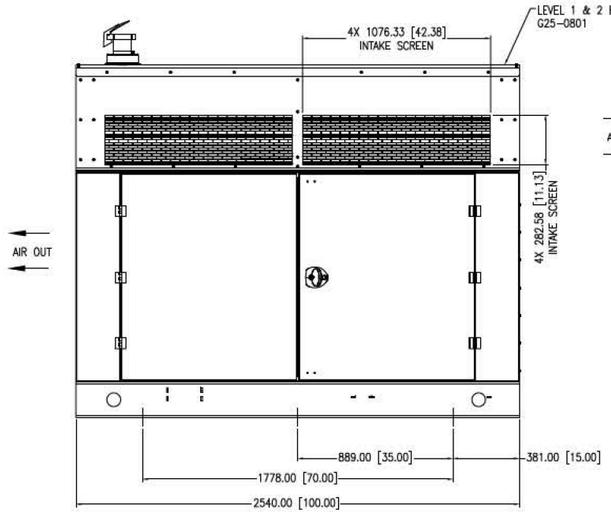

LEFT VIEW

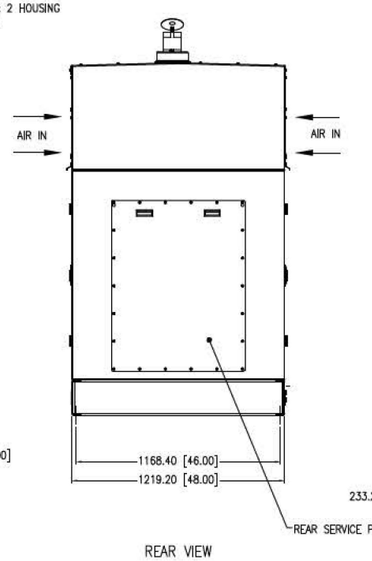

REAR VIEW

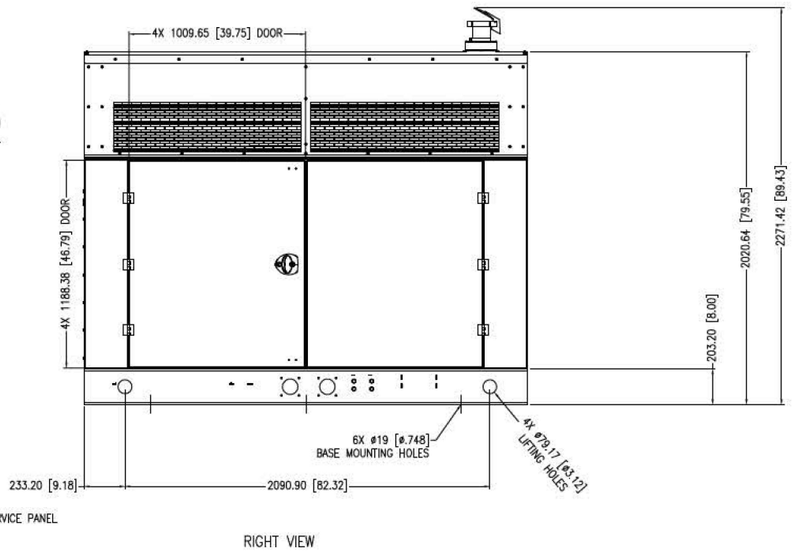

RIGHT VIEW

REVISION	DATE	DESCRIPTION

A Rolls-Royce solution

ALL INDUSTRIAL PROPERTY RIGHTS RESERVED. DISCLOSURE, REPRODUCTION OR USE FOR ANY OTHER PURPOSE IS PROHIBITED UNLESS OUR EXPRESS PERMISSION HAS BEEN GIVEN. ANY INFRINGEMENT RESULTS IN LIABILITY TO PAY DAMAGES.

APPLICABLE MODELS:
MTU 8V0110 GS150

THIRD ANGLE PROJECTION

DRAWN TO SCALE
DIMENSIONS: MM [INCH]

DATE CREATED: 2021–02–26

DIMENSIONAL LAYOUT

DESCRIPTION: 150 kW Genset Housing

ENGINE: PSI 8.8LT CAC

WEIGHT (MIN–MAX): 2040–2500 KG 4500–5500 LB

DRAWING NUMBER: XZG2500100035

SHEET: 1 of 1

Perf No: EM0067 **Change Level:** 02

General Heat Rejection Emissions Regulatory Altitude Derate Cross Reference Perf Param Ref

View PDF

SALES MODEL:	C18	**COMBUSTION:**	DIRECT INJECTION
BRAND:	CAT	**ENGINE SPEED (RPM):**	1,900
MACHINE SALES MODEL:		**ASPIRATION:**	TA
ENGINE POWER (BHP):	600	**AFTERCOOLER TYPE:**	SCAC
COMPRESSION RATIO:	16.3	**AFTERCOOLER CIRCUIT TYPE:**	JW+OC, AC
RATING LEVEL:	STANDBY - FMS/ULI	**AFTERCOOLER TEMP (F):**	95
PUMP QUANTITY:	1	**JACKET WATER TEMP (F):**	192.2
FUEL TYPE:	DIESEL	**TURBO CONFIGURATION:**	PARALLEL
MANIFOLD TYPE:	DRY	**TURBO QUANTITY:**	2
GOVERNOR TYPE:	ELEC	**TURBOCHARGER MODEL:**	S310S089-1.00
INJECTOR TYPE:	EUI	**CERTIFICATION YEAR:**	2008
REF EXH STACK DIAMETER (IN):	6	**PISTON SPD @ RATED ENG SPD (FT/MIN):**	2,281.5
MAX OPERATING ALTITUDE (FT):	302		

INDUSTRY	SUB INDUSTRY	APPLICATION
INDUSTRIAL	FIRE PUMP	INDUSTRIAL

General Performance Data Top

PERCENT LOAD	ENGINE POWER	BRAKE MEAN EFF PRES (BMEP)	BRAKE SPEC FUEL CONSUMPTN (BSFC)	ISO BRAKE SPEC FUEL CONSUMPTN (BSFC)	VOL FUEL CONSUMPTN (VFC)	ISO VOL FUEL CONSUMPTN (VFC)
%	BHP	PSI	LB/BHP-HR	LB/BHP-HR	GAL/HR	GAL/HR
100	600	226	0.362	0.357	30.6	30.2
90	540	203	0.372	0.367	28.3	27.9
80	480	181	0.384	0.378	26.0	25.6
75	450	170	0.390	0.384	24.7	24.4
70	420	158	0.394	0.388	23.3	23.0
60	360	136	0.402	0.396	20.4	20.1
50	300	113	0.407	0.401	17.2	17.0
40	240	90	0.401	0.395	13.6	13.4
30	180	68	0.395	0.390	10.0	9.9
25	150	57	0.399	0.393	8.4	8.3
20	120	45	0.419	0.413	7.1	7.0
10	60.0	23	0.566	0.558	4.8	4.7

PERCENT LOAD	ENGINE POWER	INLET MFLD PRES	INLET MFLD TEMP	EXH MFLD TEMP	EXH MFLD PRES	ENGINE OUTLET TEMP	COMPRESSOR OUTLET PRES	COMPRESSOR OUTLET TEMP
%	BHP	IN-HG	DEG F	DEG F	IN-HG	DEG F	IN-HG	DEG F
100	600	56.9	121.0	1,158.6	51.8	820.3	62	370.6
90	540	53.6	118.2	1,129.3	49.0	808.5	59	356.0
80	480	50.3	115.7	1,096.4	45.9	788.7	55	341.4

PERCENT LOAD	ENGINE POWER	INLET MFLD PRES	INLET MFLD TEMP	EXH MFLD TEMP	EXH MFLD PRES	ENGINE OUTLET TEMP	COMPRESSOR OUTLET PRES	COMPRESSOR OUTLET TEMP
75	450	48.5	114.3	1,078.2	44.2	777.1	53	333.8
70	420	46.0	112.5	1,058.3	41.7	765.9	51	323.6
60	360	40.0	108.8	1,008.0	36.2	738.1	44	297.8
50	300	32.6	105.2	943.5	29.8	703.1	36	265.0
40	240	22.0	101.5	827.8	21.4	621.8	25	213.3
30	180	12.4	97.9	701.3	14.0	541.3	15	164.7
25	150	8.6	96.1	639.0	11.0	501.3	11	145.0
20	120	6.3	95.5	583.6	9.2	461.5	8	132.6
10	60.0	4.4	95.6	478.7	7.7	382.6	6	119.8

PERCENT LOAD	ENGINE POWER	WET INLET AIR VOL FLOW RATE	ENGINE OUTLET WET EXH GAS VOL FLOW RATE	WET INLET AIR MASS FLOW RATE	WET EXH GAS MASS FLOW RATE	WET EXH VOL FLOW RATE (32 DEG F AND 29.98 IN HG)	DRY EXH VOL FLOW RATE (32 DEG F AND 29.98 IN HG)
%	BHP	CFM	CFM	LB/HR	LB/HR	FT3/MIN	FT3/MIN
100	600	1,496.9	3,757.5	6,639.1	6,856.5	1,443.4	1,331.3
90	540	1,456.1	3,596.5	6,421.8	6,622.7	1,394.4	1,289.3
80	480	1,411.7	3,413.8	6,196.3	6,380.2	1,344.6	1,247.1
75	450	1,385.6	3,307.7	6,072.1	6,247.3	1,314.9	1,221.6
70	420	1,348.4	3,176.1	5,888.6	6,054.1	1,274.2	1,185.6
60	360	1,253.7	2,862.6	5,434.1	5,578.8	1,175.1	1,096.5
50	300	1,131.4	2,481.2	4,861.4	4,983.6	1,049.1	981.9
40	240	945.2	1,944.5	4,026.6	4,122.7	884.0	830.2
30	180	772.1	1,444.8	3,258.5	3,329.6	709.7	668.9
25	150	703.0	1,240.2	2,953.8	3,013.6	634.5	599.2
20	120	661.4	1,106.2	2,771.7	2,822.0	590.4	559.8
10	60.0	623.4	954.6	2,611.1	2,645.3	557.3	534.2

Heat Rejection Data Top

PERCENT LOAD	ENGINE POWER	REJECTION TO JACKET WATER	REJECTION TO ATMOSPHERE	REJECTION TO EXH	EXHAUST RECOVERY TO 350F	FROM OIL COOLER	FROM AFTERCOOLER	WORK ENERGY	LOW HEAT VALUE ENERGY	HIGH HEAT VALUE ENERGY
%	BHP	BTU/MIN	BTU/MIN	BTU/MIN	BTU/MIN	BTU/MIN	BTU/MIN	BTU/MIN	BTU/MIN	BTU/MIN
100	600	8,946	4,150	25,784	13,545	3,548	6,636	25,449	66,618	70,965
90	540	8,084	4,214	24,344	12,727	3,283	6,116	22,904	61,639	65,661
80	480	7,796	3,731	22,674	11,696	3,008	5,601	20,359	56,476	60,161
75	450	7,712	3,354	21,770	11,133	2,863	5,337	19,086	53,753	57,261
70	420	7,396	3,178	20,698	10,487	2,703	4,978	17,814	50,753	54,064
60	360	6,555	3,098	18,219	8,987	2,363	4,113	15,269	44,359	47,253
50	300	5,564	3,122	15,360	7,276	1,994	3,111	12,724	37,439	39,882
40	240	5,098	3,157	11,158	4,598	1,570	1,803	10,180	29,473	31,396
30	180	4,580	2,424	7,739	2,594	1,162	872	7,635	21,824	23,248
25	150	4,241	1,963	6,404	1,850	977	578	6,363	18,351	19,549
20	120	3,843	1,667	5,403	1,270	821	412	5,090	15,409	16,414
10	60.0	3,044	1,329	3,927	344	555	253	2,545	10,418	11,098

Emissions Data Top

Units Filter All Units

DIESEL

RATED SPEED NOMINAL DATA: 1900 RPM

ENGINE POWER		BHP	600	450	300	150	60.0
PERCENT LOAD		%	100	75	50	25	10
TOTAL NOX (AS NO2)		G/HR	1,800	1,034	628	1,507	698
TOTAL CO		G/HR	243	148	157	141	221
TOTAL HC		G/HR	31	46	36	23	30
TOTAL CO2		KG/HR	307	247	173	83	49
PART MATTER		G/HR	44.7	41.9	41.0	13.0	15.0
TOTAL NOX (AS NO2)	(CORR 5% O2)	MG/NM3	1,297.9	935.7	824.0	3,955.6	3,082.7
TOTAL CO	(CORR 5% O2)	MG/NM3	176.8	133.6	200.3	373.8	965.1
TOTAL HC	(CORR 5% O2)	MG/NM3	19.5	35.6	39.4	53.1	114.1
PART MATTER	(CORR 5% O2)	MG/NM3	27.4	32.5	45.1	30.6	59.6
TOTAL NOX (AS NO2)	(CORR 5% O2)	PPM	632	456	401	1,927	1,502
TOTAL CO	(CORR 5% O2)	PPM	141	107	160	299	772
TOTAL HC	(CORR 5% O2)	PPM	36	66	74	99	213
TOTAL NOX (AS NO2)		G/HP-HR	3.03	2.32	2.11	10.08	11.67
TOTAL CO		G/HP-HR	0.41	0.33	0.53	0.94	3.70
TOTAL HC		G/HP-HR	0.05	0.10	0.12	0.15	0.51
PART MATTER		G/HP-HR	0.08	0.09	0.14	0.09	0.25
TOTAL NOX (AS NO2)		LB/HR	3.97	2.28	1.39	3.32	1.54
TOTAL CO		LB/HR	0.54	0.33	0.35	0.31	0.49
TOTAL HC		LB/HR	0.07	0.10	0.08	0.05	0.07
TOTAL CO2		LB/HR	676	544	382	182	107
PART MATTER		LB/HR	0.10	0.09	0.09	0.03	0.03
OXYGEN IN EXH		%	10.9	12.2	13.2	14.6	16.7
DRY SMOKE OPACITY		%	1.2	1.2	1.5	0.6	0.7
BOSCH SMOKE NUMBER			0.80	0.79	0.99	0.34	0.43

RATED SPEED POTENTIAL SITE VARIATION: 1900 RPM

ENGINE POWER		BHP	600	450	300	150	60.0
PERCENT LOAD		%	100	75	50	25	10
TOTAL NOX (AS NO2)		G/HR	1,944	1,117	679	1,628	754
TOTAL CO		G/HR	455	277	294	264	414
TOTAL HC		G/HR	58	86	67	44	57
PART MATTER		G/HR	87.1	81.7	80.0	25.4	29.3
TOTAL NOX (AS NO2)	(CORR 5% O2)	MG/NM3	1,401.7	1,010.6	889.9	4,272.0	3,329.3
TOTAL CO	(CORR 5% O2)	MG/NM3	330.6	249.9	374.6	699.0	1,804.8
TOTAL HC	(CORR 5% O2)	MG/NM3	36.8	67.3	74.5	100.4	215.6
PART MATTER	(CORR 5% O2)	MG/NM3	53.4	63.3	87.9	59.7	116.1
TOTAL NOX (AS NO2)	(CORR 5% O2)	PPM	683	492	433	2,081	1,622
TOTAL CO	(CORR 5% O2)	PPM	264	200	300	559	1,444
TOTAL HC	(CORR 5% O2)	PPM	69	126	139	188	402
TOTAL NOX (AS NO2)		G/HP-HR	3.28	2.51	2.28	10.89	12.61
TOTAL CO		G/HP-HR	0.77	0.62	0.99	1.76	6.93
TOTAL HC		G/HP-HR	0.10	0.19	0.23	0.29	0.96
PART MATTER		G/HP-HR	0.15	0.18	0.27	0.17	0.49
TOTAL NOX (AS NO2)		LB/HR	4.29	2.46	1.50	3.59	1.66
TOTAL CO		LB/HR	1.00	0.61	0.65	0.58	0.91
TOTAL HC		LB/HR	0.13	0.19	0.15	0.10	0.13
PART MATTER		LB/HR	0.19	0.18	0.18	0.06	0.06

Regulatory Information Top

EPA TIER 3 **2005 - 2010**

GASEOUS EMISSIONS DATA MEASUREMENTS PROVIDED TO THE EPA ARE CONSISTENT WITH THOSE DESCRIBED IN EPA 40 CFR PART 89 SUBPART D AND ISO 8178 FOR MEASURING HC, CO, PM, AND NOX. THE "MAX LIMITS" SHOWN BELOW ARE WEIGHTED CYCLE AVERAGES AND ARE IN COMPLIANCE WITH THE NON-ROAD REGULATIONS.

EPA TIER 3 **2005 - 2010**

Locality	Agency	Regulation	Tier/Stage	Max Limits - G/BKW - HR
U.S. (INCL CALIF)	EPA	NON-ROAD	TIER 3	CO: 3.5 NOx + HC: 4.0 PM: 0.20

EPA EMERGENCY STATIONARY **2011 - ----**

GASEOUS EMISSIONS DATA MEASUREMENTS PROVIDED TO THE EPA ARE CONSISTENT WITH THOSE DESCRIBED IN EPA 40 CFR PART 60 SUBPART IIII AND ISO 8178 FOR MEASURING HC, CO, PM, AND NOX. THE "MAX LIMITS" SHOWN BELOW ARE WEIGHTED CYCLE AVERAGES AND ARE IN COMPLIANCE WITH THE EMERGENCY STATIONARY REGULATIONS.

Locality	Agency	Regulation	Tier/Stage	Max Limits - G/BKW - HR
U.S. (INCL CALIF)	EPA	STATIONARY	EMERGENCY STATIONARY	CO: 3.5 NOx + HC: 6.4 PM: 0.20

Altitude Derate Data Top

STANDARD

ALTITUDE CORRECTED POWER CAPABILITY (BHP)

AMBIENT OPERATING TEMP (F)	50	60	70	80	90	100	110	120	130	NORMAL
ALTITUDE (FT)										
0	600	600	600	600	592	582	572	562	552	600
1,000	600	600	592	581	571	560	551	541	532	587
2,000	592	581	570	559	549	539	530	521	512	568
3,000	570	559	549	538	529	519	510	501	493	551
4,000	549	538	528	518	509	500	491	482	474	534
5,000	528	517	508	498	489	480	472	464	456	517
6,000	507	497	488	479	470	462	454	446	438	500
7,000	487	478	469	460	452	444	436	429	421	484
8,000	468	459	451	442	434	426	419	412	405	468
9,000	450	441	433	425	417	410	402	395	389	453
10,000	432	423	415	408	400	393	386	380	373	438
11,000	414	406	399	391	384	377	371	364	358	423
12,000	397	390	382	375	369	362	356	349	344	409
13,000	381	374	367	360	353	347	341	335	329	395
14,000	365	358	351	345	339	333	327	321	316	381
15,000	350	343	337	330	324	319	313	308	302	368

Cross Reference Top

Test Spec	Setting	Engine Arrangement	Engineering Model	Engineering Model Version	Start Effective Serial Number	End Effective Serial Number
0K9054	PP6863	3311789	E978	-	NBB00003	
0K9053	PP7796	4343750	E978	-	WJB00001	
0K9054	PP6863	4343754	E978	-	WJB00001	
5526560	NAP	5526061	E709	-	WRH00001	

Performance Parameter Reference Top

Parameters Reference: DM9600 - 14

PERFORMANCE DEFINITIONS

PERFORMANCE DEFINITIONS DM9600

APPLICATION: Engine performance tolerance values below are representative of a typical production engine tested in a calibrated dynamometer test cell at SAE J1995 standard reference conditions. Caterpillar maintains ISO9001:2000 certified quality management systems for engine test Facilities to assure accurate calibration of test equipment. Engine test data is corrected in accordance with SAE J1995. Additional reference material SAE J1228, J1349, ISO 8665, 3046-1:2002E, 3046-3:1989, 1585, 2534, 2288, and 9249 may apply in part or are similar to SAE J1995. Special engine rating request (SERR) test data shall be noted.

PERFORMANCE PARAMETER TOLERANCE FACTORS: Power +/- 3% Torque +/- 3% Exhaust stack temperature +/- 8% Inlet airflow +/- 5% Intake manifold pressure-gage +/- 10% Exhaust flow +/- 6% Specific fuel consumption +/- 3% Fuel rate +/- 5% Specific DEF consumption +/- 3% DEF rate +/- 5% Heat rejection +/- 5% Heat rejection exhaust only +/- 10% Heat rejection CEM only +/- 10%
Heat Rejection values based on using treated water.
Torque is included for truck and industrial applications, do not use for Gen Set or steady state applications.
On C7 - C18 engines, at speeds of 1100 RPM and under these values are provided for reference only, and may not meet the tolerance listed.
On 3500 and C175 engines, at speeds below Peak Torque these values are provided for reference only, and may not meet the tolerance listed.
These values do not apply to C280/3600. For these models, see the tolerances listed below.

C280/3600 HEAT REJECTION TOLERANCE FACTORS: Heat rejection +/- 10% Heat rejection to Atmosphere +/- 50% Heat rejection to Lube Oil +/- 20% Heat rejection to Aftercooler +/- 5%

TEST CELL TRANSDUCER TOLERANCE FACTORS: Torque +/- 0.5% Speed +/- 0.2% Fuel flow +/- 1.0% Temperature +/- 2.0 C degrees Intake manifold pressure +/- 0.1 kPa
OBSERVED ENGINE PERFORMANCE IS CORRECTED TO SAE J1995 REFERENCE AIR AND FUEL CONDITIONS.

REFERENCE ATMOSPHERIC INLET AIR FOR 3500 ENGINES AND SMALLER SAE J1228 AUG2002 for marine engines, and J1995 JAN2014 for other engines, reference atmospheric pressure is 100 KPA (29.61 in hg), and standard temperature is 25deg C (77 deg F) at 30% relative humidity at the stated aftercooler water temp, or inlet manifold temp.
FOR 3600 ENGINES Engine rating obtained and presented in accordance with ISO 3046/1 and SAE J1995 JANJAN2014 reference atmospheric pressure is 100 KPA (29.61 in hg), and standard temperature is 25deg C (77 deg F) at 30% relative humidity and 150M altitude at the stated aftercooler water temperature.

MEASUREMENT LOCATION FOR INLET AIR TEMPERATURE Location for air temperature measurement air cleaner inlet at stabilized operating conditions.

REFERENCE EXHAUST STACK DIAMETER The Reference Exhaust Stack Diameter published with this dataset is only used for the calculation of Smoke Opacity values displayed in this dataset. This value does not necessarily represent the actual stack diameter of the engine due to the variety of exhaust stack adapter options available. Consult the price list, engine order or general dimension drawings for the actual stack diameter size ordered or options available.

REFERENCE FUEL DIESEL Reference fuel is #2 distillate diesel with a 35API gravity; A lower heating value is 42,780 KJ/KG (18,390 BTU/LB) when used at 15 deg C (59 deg F), where the density is 850 G/Liter (7.0936 Lbs/Gal).
GAS Reference natural gas fuel has a lower heating value of 33.74 KJ/L (905 BTU/CU Ft). Low BTU ratings are based on 18.64 KJ/L (500 BTU/CU FT) lower heating value gas. Propane ratings are based on 87.56 KJ/L (2350 BTU/CU Ft) lower heating value gas.

ENGINE POWER (NET) IS THE CORRECTED FLYWHEEL POWER (GROSS) LESS EXTERNAL AUXILIARY LOAD Engine corrected gross output includes the power required to drive standard equipment; lube oil, scavenge lube oil, fuel transfer, common rail fuel, separate circuit aftercooler and jacket water pumps. Engine net power available for the external (flywheel) load is calculated by subtracting the sum of auxiliary load from the corrected gross flywheel out put power. Typical auxiliary loads are radiator cooling fans, hydraulic pumps, air compressors and battery charging alternators. For Tier 4 ratings additional Parasitic losses would also include Intake, and Exhaust Restrictions.

ALTITUDE CAPABILITY Altitude capability is the maximum altitude above sea level at standard temperature and standard pressure at which the engine could develop full rated output power on the current performance data set.
Standard temperature values versus altitude could be seen on TM2001.
When viewing the altitude capability chart the ambient temperature is the inlet air temp at the compressor inlet.
Engines with ADEM MEUI and HEUI fuel systems operating at conditions above the defined altitude capability derate for atmospheric pressure and temperature conditions outside the values defined, see TM2001.
Mechanical governor controlled unit injector engines require a setting change for operation at conditions above the altitude defined on the engine performance sheet. See your Caterpillar technical representative

for non standard ratings.

REGULATIONS AND PRODUCT COMPLIANCE TMI Emissions information is presented at 'nominal' and 'Potential Site Variation' values for standard ratings. No tolerances are applied to the emissions data. These values are subject to change at any time. The controlling federal and local emission requirements need to be verified by your Caterpillar technical representative.
Customer's may have special emission site requirements that need to be verified by the Caterpillar Product Group engineer.

EMISSION CYCLE LIMITS: Cycle emissions Max Limits apply to cycle-weighted averages only. Emissions at individual load points may exceed the cycle-weighted limit.

WET & DRY EXHAUST/EMISSIONS DESCRIPTION: Wet - Total exhaust flow or concentration of total exhaust flow Dry - Total exhaust flow minus water vapor or concentration of exhaust flow with water vapor excluded

EMISSIONS DEFINITIONS: Emissions : DM1176

EMISSION CYCLE DEFINITIONS
1. For constant-speed marine engines for ship main propulsion, including,diesel-electric drive, test cycle E2 shall be applied, for controllable-pitch propeller sets test cycle E2 shall be applied.
2. For propeller-law-operated main and propeller-law-operated auxiliary engines the test cycle E3 shall be applied.
3. For constant-speed auxiliary engines test cycle D2 shall be applied.
4. For variable-speed, variable-load auxiliary engines, not included above, test cycle C1 shall be applied.

HEAT REJECTION DEFINITIONS: Diesel Circuit Type and HHV Balance : DM9500

HIGH DISPLACEMENT (HD) DEFINITIONS: 3500: EM1500

RATING DEFINITIONS: Agriculture : TM6008
Fire Pump : TM6009
Generator Set : TM6035
Generator (Gas) : TM6041
Industrial Diesel : TM6010
Industrial (Gas) : TM6040
Irrigation : TM5749
Locomotive : TM6037
Marine Auxiliary : TM6036
Marine Prop (Except 3600) : TM5747
Marine Prop (3600 only) : TM5748
MSHA : TM6042
Oil Field (Petroleum) : TM6011
Off-Highway Truck : TM6039
On-Highway Truck : TM6038

SOUND DEFINITIONS: Sound Power : DM8702
Sound Pressure : TM7080

Date Released : 10/27/21

Caterpillar Confidential: **Green**
Content Owner: Commercial Processes Division
Web Master(s): PSG Web Based Systems Support
Current Date: 2/15/2024, 8:26:57 AM
© Caterpillar Inc. 2024 All Rights Reserved.
Data Privacy Statement.
Cookie Settings

Cat® C18 DIESEL GENERATOR SETS

Standby & Prime: 60Hz



Image shown might not reflect actual configuration

Engine Model	Cat® C18 ACERT™ In-line 6, 4-cycle diesel
Bore x Stroke	145mm x 183mm (5.7in x 7.2in)
Displacement	18.1 L (1106 in³)
Compression Ratio	14.5:1
Aspiration	Turbocharged Air-to-Air Aftercooled
Fuel Injection System	MEUI
Governor	Electronic ADEM™ A4

Model	Standby	Prime	Emission Strategy
C18	600 ekW, 750 kVA	545 ekW, 681 kVA	TIER II Non-Road

PACKAGE PERFORMANCE

Performance	Standby	Prime
Frequency	60 Hz	
Genset Power Rating	750 kVA	681 kVA
Genset power rating with fan @ 0.8 power factor	600 ekW	545 ekW
Emissions	TIER II Non-Road	
Performance Number	DM8518-04	DM8522-05
Fuel Consumption		
100% load with fan, L/hr (gal/hr)	161.6 (42.7)	151.1 (39.9)
75% load with fan, L/hr (gal/hr)	129.6 (34.2)	123.6 (32.6)
50% load with fan, L/hr (gal/hr)	91.7 (24.2)	89.2 (23.6)
25% load with fan, L/hr (gal/hr)	46.8 (12.4)	48.7 (12.9)
Cooling System[1]		
Radiator air flow restriction (system), kPa (in. Water)	0.12 (0.48)	0.12 (0.48)
Radiator air flow, m³/min (cfm)	803 (28357)	803 (28357)
Engine coolant capacity, L (gal)	20.8 (5.5)	20.8 (5.5)
Radiator coolant capacity, L (gal)	61 (16)	61 (16)
Total coolant capacity, L (gal)	82 (22)	82 (22)
Inlet Air		
Combustion air inlet flow rate, m³/min (cfm)	47.8 (1687.8)	46.7 (1649.0)
Max. Allowable Combustion Air Inlet Temp, °C (°F)	49 (120)	49 (120)
Exhaust System		
Exhaust stack gas temperature, °C (°F)	534.6 (994.3)	518.2 (964.8)
Exhaust gas flow rate, m³/min (cfm)	135.5 (4784.4)	129.6 (4576.4)
Exhaust system backpressure (maximum allowable) kPa (in. water)	10.0 (40.0)	10.0 (40.0)
Heat Rejection		
Heat rejection to jacket water, kW (Btu/min)	189 (10747)	175 (9953)
Heat rejection to exhaust (total) kW (Btu/min)	634 (36053)	596 (33895)
Heat rejection to aftercooler, kW (Btu/min)	153 (8700)	142 (8076)
Heat rejection to atmosphere from engine, kW (Btu/min)	86 (4902)	83 (4726)

Cat® C18 DIESEL GENERATOR SETS

Emissions (Nominal)[2]	Standby		Prime	
NOx, mg/Nm³ (g/hp-hr)	2798.7 (5.8)		2462.2 (5.1)	
CO, mg/Nm³ (g/hp-hr)	225.2 (0.5)		195.1 (0.4)	
HC, mg/Nm³ (g/hp-hr)	3.8 (0.01)		5.0 (0.01)	
PM, mg/Nm³ (g/hp-hr)	13.3 (0.03)		13.1 (0.03)	
Alternator[3]				
Voltages	480V	600V	480V	600V
Motor starting capability @ 30% Voltage Dip	1633 skVA	2023 skVA	1633 skVA	2023 skVA
Current	902 amps	722 amps	819 amps	656 amps
Frame Size	LC7024F	LC7024H	LC7024F	LC7024H
Excitation	AR	AR	AR	AR
Temperature Rise	150 ° C	130 ° C	125 ° C	105 ° C

WEIGHTS & DIMENSIONS

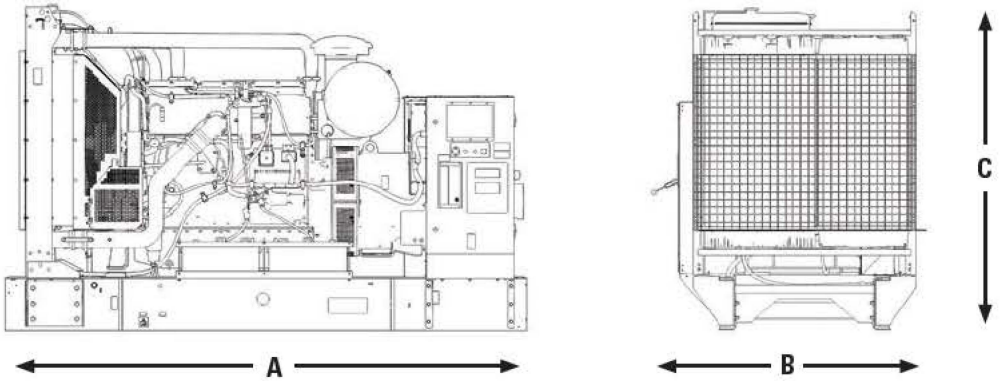

Dim "A" mm (in)	Dim "B" mm (in)	Dim "C" mm (in)	Dry Weight kg (lb)
3477 (137)	1628 (64)	2102 (83)	4431 (9769)

APPLICABLE CODES AND STANDARDS:

AS1359, CSA C22.2 No100-04, UL142, UL489, UL869, UL2200, NFPA37, NFPA70, NFPA99, NFPA110, IBC, IEC60034-1, ISO3046, ISO8528, NEMA MG1-22, NEMA MG1-33, 2006/95/EC, 2006/42/EC, 2004/108/EC.
Note: Codes may not be available in all model configurations. Please consult your local Cat Dealer representative for availability.

STANDBY: Output available with varying load for the duration of the interruption of the normal source power. Average power output is 70% of the standby power rating. Typical operation is 200 hours per year, with maximum expected usage of 500 hours per year.

PRIME: Output available with varying load for an unlimited time. Average power output is 70% of the prime power rating. Typical peak demand is 100% of prime rated ekW with 10% overload capability for emergency use for a maximum of 1 hour in 12. Overload operation cannot exceed 25 hours per year

RATINGS: Ratings are based on SAE J1349 standard conditions. These ratings also apply at ISO3046 standard conditions.

DEFINITIONS AND CONDITIONS

[1] For ambient and altitude capabilities consult your Cat dealer. Air flow restriction (system) is added to existing restriction from factory.

[2] Emissions data measurement procedures are consistent with those described in EPA CFR 40 Part 89, Subpart D & E and ISO8178-1 for measuring HC, CO, PM, NOx. Data shown is based on steady state operating conditions of 77° F, 28.42 in HG and number 2 diesel fuel with 35° API and LHV of 18,390 BTU/lb. The nominal emissions data shown is subject to instrumentation, measurement, facility and engine to engine variations. Emissions data is based on 100% load and thus cannot be used to compare to EPA regulations which use values based on a weighted cycle.

[3] UL 2200 Listed packages may have oversized generators with a different temperature rise and motor starting characteristics. Generator temperature rise is based on a 40° C ambient per NEMA MG1-32.

LET'S DO THE WORK.™

www.Cat.com/electricpower
All rights reserved.
Materials and specifications are subject to change without notice.The International System of Units (SI) is used in this publication.
© 2020 Caterpillar. All Rights Reserved. CAT, CATERPILLAR, LET'S DO THE WORK, their respective logos, "Caterpillar Corporate Yellow", the "Power Edge" and Cat "Modern Hex" trade dress as well as corporate and product identity used herein, are trademarks of Caterpillar and may not be used without permission

LEHE1581-02 (05/20)

DieselNet: Emission Standards

USA: Nonroad Diesel Engines

- Background
- Applicability
- Tier 1-3 Emission Standards
- Tier 4 Emission Standards
- Test Cycles and Fuels
- Environmental Benefit and Cost

Background

Emission standards for nonroad (or off road) engines and vehicles are set by the US EPA. In most cases, federal nonroad engine regulations also apply in California, whose authority to set emission standards for new nonroad engines is limited. The federal Clean Air Act Amendments of 1990 (CAA) preempt California's authority to control emissions from new farm and construction equipment under 175 hp [CAA Section 209(e)(1)(A)] and require California to receive authorization from the federal EPA for controls over other off road sources [CAA Section 209 (e)(2)(A)].

The important steps in nonroad engine emission regulations include:

- **Tier 1-3 Standards.** The first federal standards (Tier 1) for new nonroad diesel engines were adopted in 1994 for engines over 37 kW (50 hp), to be phased in from 1996 to 2000. In 1996, a Statement of Principles (SOP) pertaining to nonroad diesel engines was signed between EPA, California ARB and engine makers (including Caterpillar, Cummins, Deere, Detroit Diesel, Deutz, Isuzu, Komatsu, Kubota, Mitsubishi, Navistar, New Holland, Wis-Con, and Yanmar). On August 27, 1998, the EPA signed the final rule reflecting the provisions of the SOP [2787]. The 1998 regulation introduced Tier 1 standards for

equipment under 37 kW (50 hp) and increasingly more stringent Tier 2 and Tier 3 standards for all equipment with phase in schedules from 2000 to 2008. The Tier 1 3 standards are met through advanced engine design, with no or only limited use of exhaust gas aftertreatment (oxidation catalysts). Tier 3 standards for NOx+HC are similar in stringency to the 2004 standards for heavy duty onroad engines, however Tier 3 standards for PM were never adopted.

- **Tier 4 Standards.** On May 11, 2004, the EPA signed a final rule introducing Tier 4 emission standards, which were phased-in over the period of 2008-2015 [2786]. The Tier 4 standards require that emissions of PM and NOx be further reduced by about 90%. These emission reductions have been achieved through the use of advanced exhaust gas aftertreatment technologies, with most Tier 4 engine families using urea SCR catalysts for NOx control. Some Tier 4 engines also utilize a DPF, while others meet the standards without particulate filters.
- **Tier 5 Standards.** In November 2021, the California Air Resources Board held the first public workshop on the development of Tier 5 emission standards that will seek to further reduce NOx and PM emissions by 50 90%, depending on the engine power category, in the 2028 2030 timeframe. The considered changes also include a new low load certification test cycle (LLAC), extended full useful life (FUL) and emission warranty periods, OBD requirements, and more. However, due to the California preemption, California Tier 5 standards would have a limited scope and could produce only very limited emission reductions, unless a corresponding nonroad engine regulation be adopted by the EPA.

Nonroad Diesel Fuel. At the Tier 1-3 stage, the sulfur content in nonroad diesel fuels was not limited by environmental regulations. The oil industry specification was 0.5% (wt., max), with the average in-use sulfur level of about 0.3% = 3,000 ppm. To enable sulfur-sensitive control technologies in Tier 4 engines such as catalytic particulate filters and NOx adsorbers the EPA mandated reductions in sulfur content in nonroad diesel fuels, as follows:

- 500 ppm effective June 2007 for nonroad, locomotive and marine (NRLM) diesel fuels
- 15 ppm (ultra-low sulfur diesel) effective June 2010 for nonroad fuel, and June 2012 for locomotive and marine fuels

The US nonroad emission standards are harmonized to a certain degree with European nonroad emission standards.

EPA emission standards for nonroad diesel engines are published in the US Code of Federal Regulations, Title 40, Part 89. Regulatory text, fact sheets and related documents are available from the EPA web site [2788].

Applicability

The nonroad standards cover mobile *nonroad diesel engines* of all sizes used in a wide range of construction, agricultural and industrial equipment. The EPA definition of the *nonroad engine* is based on the principle of mobility/portability, and includes engines installed on (1) self-propelled equipment, (2) on equipment that is propelled while performing its function, or (3) on equipment that is portable or transportable, as indicated by the presence of wheels, skids, carrying handles, dolly, trailer, or platform [40 CFR 1068.30]. In other words, nonroad engines are all internal combustion engines except motor vehicle (highway) engines, stationary engines (or engines that remain at one location for more than 12 months), engines used solely for competition, or engines used in aircraft.

Effective May 14, 2003, the definition of nonroad engines was changed to also include all diesel powered engines including stationary ones used in agricultural operations in California. This change applies only to engines sold in the state of California; stationary engines sold in other states are not classified as nonroad engines.

The nonroad diesel emission regulations are not applicable to all nonroad diesel engines. Exempted are the following nonroad engine categories:

- Engines used in railway locomotives; those are subject to separate EPA regulations.
- Engines used in marine vessels, also covered by separate EPA regulations. Marine engines below 37 kW (50 hp) are subject to Tier 1-2—but not Tier 4—nonroad standards. Certain marine engines that are exempted from marine standards may be subject to nonroad regulations.

- Engines used in underground mining equipment. Diesel emissions and air quality in mines are regulated by the Mine Safety and Health Administration (MSHA).
- Hobby engines (below 50 cm^3 per cylinder)

Examples of regulated applications include farm tractors, excavators, bulldozers, wheel loaders, backhoe loaders, road graders, diesel lawn tractors, logging equipment, portable generators, skid steer loaders, or forklifts.

A new definition of a compression ignition (diesel) engine was introduced in the 1998 rule, consistent with definitions established for highway engines. The definition focuses on the engine cycle, rather than the ignition mechanism, with the presence of a throttle as an indicator to distinguish between diesel cycle and otto cycle operation. Regulating power by controlling the fuel supply in lieu of a throttle corresponds with lean combustion and diesel cycle operation. This language allows the possibility that a natural gas fueled engine equipped with a spark plug is considered a compression-ignition engine.

Tier 1-3 Emission Standards

The 1998 nonroad engine regulations were structured as a 3-tiered progression. Each tier involved a phase-in (by horsepower rating) over several years. Tier 1 standards were phased-in from 1996 to 2000. The more stringent Tier 2 standards took effect from 2001 to 2006, and yet more stringent Tier 3 standards phased in from 2006 to 2008 (Tier 3 standards applied only for engines from 37-560 kW).

Tier 1-3 emissions standards are listed in Table 1. Nonroad regulations use the metric system of units, with regulatory limits expressed in grams of pollutant per kWh.

Table 1
EPA Tier 1-3 nonroad diesel engine emission standards, g/kWh (g/bhp·hr)

Engine Power	Tier	Year	CO	HC	NMHC+NOx	NOx	PM
kW < 8 (hp < 11)	Tier 1	2000	8.0 (6.0)	-	10.5 (7.8)	-	1.0 (0.75)
	Tier 2	2005	8.0 (6.0)	-	7.5 (5.6)	-	0.8 (0.6)

Engine Power	Tier	Year	CO	HC	NMHC+NOx	NOx	PM
8 ≤ kW < 19 (11 ≤ hp < 25)	Tier 1	2000	6.6 (4.9)	-	9.5 (7.1)	-	0.8 (0.6)
	Tier 2	2005	6.6 (4.9)	-	7.5 (5.6)	-	0.8 (0.6)
19≤ kW < 37 (25 ≤ hp < 50)	Tier 1	1999	5.5 (4.1)	-	9.5 (7.1)	-	0.8 (0.6)
	Tier 2	2004	5.5 (4.1)	-	7.5 (5.6)	-	0.6 (0.45)
37 ≤ kW < 75 (50 ≤ hp < 100)	Tier 1	1998	-	-	-	9.2 (6.9)	-
	Tier 2	2004	5.0 (3.7)	-	7.5 (5.6)	-	0.4 (0.3)
	Tier 3	2008	5.0 (3.7)	-	4.7 (3.5)	-	-†
75 ≤ kW < 130 (100 ≤ hp < 175)	Tier 1	1997	-	-	-	9.2 (6.9)	-
	Tier 2	2003	5.0 (3.7)	-	6.6 (4.9)	-	0.3 (0.22)
	Tier 3	2007	5.0 (3.7)	-	4.0 (3.0)	-	-†
130 ≤ kW < 225 (175 ≤ hp < 300)	Tier 1	1996	11.4 (8.5)	1.3 (1.0)	-	9.2 (6.9)	0.54 (0.4)
	Tier 2	2003	3.5 (2.6)	-	6.6 (4.9)	-	0.2 (0.15)
	Tier 3	2006	3.5 (2.6)	-	4.0 (3.0)	-	-†
225 ≤ kW < 450 (300 ≤ hp < 600)	Tier 1	1996	11.4 (8.5)	1.3 (1.0)	-	9.2 (6.9)	0.54 (0.4)
	Tier 2	2001	3.5 (2.6)	-	6.4 (4.8)	-	0.2 (0.15)
	Tier 3	2006	3.5 (2.6)	-	4.0 (3.0)	-	-†
450 ≤ kW < 560 (600 ≤ hp < 750)	Tier 1	1996	11.4 (8.5)	1.3 (1.0)	-	9.2 (6.9)	0.54 (0.4)
	Tier 2	2002	3.5 (2.6)	-	6.4 (4.8)	-	0.2 (0.15)
	Tier 3	2006	3.5 (2.6)	-	4.0 (3.0)	-	-†
kW ≥ 560 (hp ≥ 750)	Tier 1	2000	11.4 (8.5)	1.3 (1.0)	-	9.2 (6.9)	0.54 (0.4)
	Tier 2	2006	3.5 (2.6)	-	6.4 (4.8)	-	0.2 (0.15)
† Not adopted, engines must meet Tier 2 PM standard.							

Manufacturers who signed the 1998 Consent Decrees with the EPA may have been required to meet the Tier 3 standards one year ahead of schedule (i.e. beginning in 2005).

Voluntary, more stringent emission standards that manufacturers could use to earn a designation of "Blue Sky Series" engines (applicable to Tier 1-3 certifications) are listed in Table 2.

Table 2
EPA voluntary emission standards for nonroad diesel engines, g/kWh (g/bhp·hr)

Rated Power (kW)	NMHC+NOx	PM
kW < 8	4.6 (3.4)	0.48 (0.36)
8 ≤ kW <19	4.5 (3.4)	0.48 (0.36)
19 ≤ kW <37	4.5 (3.4)	0.36 (0.27)
37 ≤ kW < 75	4.7 (3.5)	0.24 (0.18)
75 ≤ kW <130	4.0 (3.0)	0.18 (0.13)
130 ≤ kW < 560	4.0 (3.0)	0.12 (0.09)
kW ≥ 560	3.8 (2.8)	0.12 (0.09)

Engines of all sizes had to meet smoke standards of 20/15/50% opacity at acceleration/lug/peak modes, respectively.

The regulations included several other provisions, such as averaging, banking and trading of emission credits and maximum "family emission limits" (FEL) for emission averaging.

Tier 4 Emission Standards

The Tier 4 emission standards phased in from 2008 through 2015 introduce substantial reductions of NOx (for engines above 56 kW) and PM (above 19 kW), as well as more stringent HC limits. CO emission limits remain unchanged from the Tier 2-3 stage.

Engines up to 560 kW. Tier 4 emission standards for engines up to 560 kW are listed in Table 3.

Table 3
Tier 4 emission standards—Engines up to 560 kW, g/kWh (g/bhp-hr)

Engine Power	Year	CO	NMHC	NMHC+NO_x	NO_x	PM
kW < 8 (hp < 11)	2008	8.0 (6.0)	-	7.5 (5.6)	-	0.4[a] (0.3)
8 ≤ kW < 19 (11 ≤ hp < 25)	2008	6.6 (4.9)	-	7.5 (5.6)	-	0.4 (0.3)
19 ≤ kW < 37 (25 ≤ hp < 50)	2008	5.5 (4.1)	-	7.5 (5.6)	-	0.3 (0.22)
	2013	5.5 (4.1)	-	4.7 (3.5)	-	0.03 (0.022)

37 ≤ kW < 56 (50 ≤ hp < 75)	2008	5.0 (3.7)	-	4.7 (3.5)	-	0.3[b] (0.22)
	2013	5.0 (3.7)	-	4.7 (3.5)	-	0.03 (0.022)
56 ≤ kW < 130 (75 ≤ hp < 175)	2012-2014[c]	5.0 (3.7)	0.19 (0.14)	-	0.40 (0.30)	0.02 (0.015)
130 ≤ kW ≤ 560 (175 ≤ hp ≤ 750)	2011-2014[d]	3.5 (2.6)	0.19 (0.14)	-	0.40 (0.30)	0.02 (0.015)

a hand startable, air cooled, DI engines may be certified to Tier 2 standards through 2009 and to an optional PM standard of 0.6 g/kWh starting in 2010
b 0.4 g/kWh (Tier 2) if manufacturer complies with the 0.03 g/kWh standard from 2012
c PM/CO: full compliance from 2012; NOx/HC: Option 1 (if banked Tier 2 credits used) 50% engines must comply in 2012 2013; Option 2 (if no Tier 2 credits claimed) 25% engines must comply in 2012 2014, with full compliance from 2014.12.31
d PM/CO: full compliance from 2011; NOx/HC: 50% engines must comply in 2011 2013

In engines of 56 560 kW rated power, the NOx and HC standards were phased in over a few year period, as indicated in the notes to Table 3. The initial standards (PM compliance) are sometimes referred to as the 'interim Tier 4' (or 'Tier 4i'), 'transitional Tier 4' or 'Tier 4 A', while the final standards (NOx/HC compliance) are sometimes referred to as 'Tier 4 B'.

As an alternative to introducing the required percentage of Tier 4 compliant engines, manufacturers may certify all their engines to an *alternative NOx limit* in each model year during the phase in period. These alternative NOx standards are:

- Engines 56 130 kW:
  - Option 1: NOx = 2.3 g/kWh = 1.7 g/bhp-hr (Tier 2 credits used to comply, MY 2012-2013)
  - Option 2: NOx = 3.4 g/kWh = 2.5 g/bhp-hr (no Tier 2 credits claimed, MY 2012-2014)
- Engines 130 560 kW: NOx 2.0 g/kWh 1.5 g/bhp hr (MY 2011 2013)

Engines Above 560 kW. Tier 4 emission standards for engines above 560 kW are listed in Table 4. The 2011 standards are sometimes referred to as 'transitional Tier 4', while the 2015 limits represent final Tier 4 standards.

Table 4

Tier 4 emission standards—Engines above 560 kW, g/kWh (g/bhp-hr)

Year	Category	CO	NMHC	NO_x	PM
2011	Generator sets > 900 kW	3.5 (2.6)	0.40 (0.30)	0.67 (0.50)	0.10 (0.075)
	All engines except gensets > 900 kW	3.5 (2.6)	0.40 (0.30)	3.5 (2.6)	0.10 (0.075)
2015	Generator sets	3.5 (2.6)	0.19 (0.14)	0.67 (0.50)	0.03 (0.022)
	All engines except gensets	3.5 (2.6)	0.19 (0.14)	3.5 (2.6)	0.04 (0.03)

Other Provisions. The Tier 4 regulation and later amendments include a number of additional provisions:

- *Smoke Opacity*—Existing Tier 2-3 smoke opacity standards and procedures continue to apply in some engines. Exempted from smoke emission standards are engines certified to PM emission standards at or below 0.07 g/kWh (because an engine of such low PM level has inherently low smoke emission).
- *Crankcase Ventilation* The Tier 4 regulation does not require closed crankcase ventilation in nonroad engines. However, in engines with open crankcases, crankcase emissions must be measured and added to exhaust emissions in assessing compliance.
- *DEF Refill Interval* For SCR equipped nonroad diesel engines, a minimum DEF (urea solution) refill interval is defined as at least as long (in engine hours) as the vehicle's fuel capacity [3408].
- *Ammonia Emissions*—While ammonia emissions are unregulated, the EPA recommends that ammonia slip should be below 10 ppm average over the applicable test cycles [3693].
- *Emergency Operation*—To facilitate the use of certain nonroad engines in temporary emergency situations, the engines can be equipped with an AECD to override performance inducements related to the emission control system for example, to allow engine operation without urea in the SCR system during an emergency [3408]. This flexibility is intended primarily for engines used in construction equipment and portable equipment used for temporary power generation and flood control.

- *ABT Program* Similarly to earlier standards, the Tier 4 regulation includes such provisions as averaging, banking and trading of emission credits and FEL limits for emission averaging.

Test Cycles and Fuels

Nonroad engine emissions are measured on a steady-state test cycle that is equivalent to the ISO 8178 C1, 8-mode steady-state test cycle. Other ISO 8178 test cycles are allowed for selected applications, such as constant speed engines (D2 5 mode cycle), variable speed engines rated under 19 kW (G2 cycle), and marine engines (E3 cycle).

Transient Testing. Tier 4 standards have to be met over both the steady-state test and the nonroad transient cycle, NRTC. The transient testing requirements started with MY 2013 for engines below 56 kW, MY 2012 for 56-130 kW, and MY 2011 for 130-560 kW engines. Engines above 560 kW are not tested on the transient test. Also constant speed, variable load engines of any power category are not subject to transient testing. The NRTC protocol includes a cold start test. The cold start emissions are weighted at 5% and hot start emissions are weighted at 95% in calculating the final result.

Tier 4 nonroad engines must also meet not-to-exceed standards (NTE), which are measured without reference to any specific test schedule. The NTE standards became effective in 2011 for engines above 130 kW; in 2012 for 56 130 kW; and in 2013 for engines below 56 kW. In most engines, the NTE limits are set at 1.25 times the regular standard for each pollutant. In engines certified to NOx standards below 2.5 g/kWh or PM standards below 0.07 g/kWh, the NTE multiplier is 1.5. The NTE standards apply to engines at the time of certification, as well as in use throughout the useful life of the engine. The purpose of the added testing requirements is to prevent the possibility of "defeating" the test cycle by electronic engine controls.

Certification Fuels. Fuels with sulfur levels no greater than 0.2 wt% (2,000 ppm) were used for certification testing of Tier 1-3 engines. From 2011, all Tier 4 engines are tested using fuels of 7 15 ppm sulfur content. The transition from the 2000 ppm S specification to the 7 15 ppm specification took place in the 2006 2010 period (see Certification Diesel Fuel).

A change from measuring total hydrocarbons to nonmethane hydrocarbons (NMHC) has been introduced in the 1998 rule. Since there is no standardized EPA method for measuring methane in diesel engine exhaust, manufacturers can either use their own procedures to analyze nonmethane hydrocarbons or measure total hydrocarbons and subtract 2% from the measured hydrocarbon mass to correct for methane.

Environmental Benefit and Cost

1998 Regulation

At the time of signing the 1998 rule, the EPA estimated that by 2010 NO_x emissions would be reduced by about a million tons per year, the equivalent of taking 35 million passenger cars off the road.

The costs of meeting the emission standards were expected to add under 1% to the purchase price of typical new nonroad diesel equipment, although for some equipment the standards may cause price increases on the order of 2-3%. The program was expected to cost about $600 per ton of NO_x reduced.

Tier 4 Regulation

When the full inventory of older nonroad engines are replaced by Tier 4 engines, annual emission reductions are estimated at 738,000 tons of NOx and 129,000 tons of PM. By 2030, 12,000 premature deaths would be prevented annually due to the implementation of the proposed standards.

The estimated costs for added emission controls for the vast majority of equipment was estimated at 1-3% as a fraction of total equipment price. For example, for a 175 hp bulldozer that costs approximately $230,000 it would cost up to $6,900 to add the advanced emission controls and to design the bulldozer to accommodate the modified engine.

EPA estimated that the average cost increase for 15 ppm S fuel would be 7 cents per gallon. This figure would be reduced to 4 cents by anticipated savings in maintenance costs due to low sulfur diesel.

Table 18
Speciation Values
Vantage CA3 Project
Santa Clara, California

Source	Emission Type	Fraction	Chemical[1]
Diesel Offroad Equipment (Generators)	**Exhaust PM**	1.0	Diesel PM
	Exhaust TOG	0.0019	1,3-Butadiene
		0.074	Acetaldehyde
		0.020	Benzene
		0.0031	Ethylbenzene
		0.15	Formaldehyde
		0.0016	n-Hexane
		3.0E-04	Methanol
		0.015	Methyl Ethyl Ketone
		9.0E-04	Naphthalene
		0.026	Propylene
		6.0E-04	Styrene
		0.015	Toluene
		0.0061	m-Xylene
		0.0034	o-Xylene
		0.0010	p-Xylene

Notes:

1. Compounds presented in this table are only those air toxic contaminants with toxicity values from Cal/EPA (2015) evaluated in the health risk assessment. Speciation profiles presented in this table are from the following sources:

   Diesel offroad exhaust, TOG: ARB 818 / EPA 3161

Abbreviations:

ARB - Air Resources Board
BAAQMD - Bay Area Air Quality Management District
Cal/EPA - California Environmental Protection Agency
PM - particulate matter
TOG - total organic gas
USEPA - United States Environmental Protection Agency

References:

ARB. Speciation Profiles Used in ARB Modeling. Available online at: http://www.arb.ca.gov/ei/speciate/speciate.htm#specprof

BAAQMD. 2011. Recommended Methods for Screening and Modeling Local Risks and Hazards. May.

Cal/EPA. 2015. OEHHA/ARB Consolidated Table of Approved Risk Assessment Health Values. May 13.

USEPA. SPECIATE 4.3. Available online at: http://cfpub.epa.gov/si/speciate/

From: [redacted]
Sent: Thursday, February 15, 2024 1:24 PM
To: [redacted]
Cc: [redacted]
Subject: [EXT] RE: Darden Clean Energy Project (23-OPT-02) SJVAPCD Requirements Discussion Meeting Minutes

---

Follow Up Flag: Follow up
Flag Status: Flagged

CAUTION: This email originated from outside of Rincon Consultants. Be cautious before clicking on any links, or opening any attachments, until you are confident that the content is safe .

Evelyn,

Here are the default stack parameters the District utilizes when the characteristics are unknown for Diesel IC Engines. In most cases using a capped exhaust stack would result in the most conservative results.

Source ID	Rating	Rating Units	Release Height (m)	Stack Inside Diameter (m)	Gas Exit Temp. (K)	Gas Exit Velocity (m/s)
Diesel Reciprocating Internal Combustion Engines						
50_DE	0 - 50	BHP	2.97	0.07	799.80	52.65
100_DE	50 - 100	BHP	2.92	0.09	756.18	62.93
150_DE	100 - 150	BHP	2.69	0.10	759.49	58.78
175_DE	150 - 175	BHP	2.50	0.10	768.31	63.22
200_DE	175 - 200	BHP	3.04	0.12	765.80	54.28
275_DE	200 - 275	BHP	2.43	0.12	795.31	50.25
300_DE	275 - 300	BHP	3.55	0.13	728.55	54.78
400_DE	300 - 400	BHP	2.42	0.13	754.96	81.71
500_DE	400 - 500	BHP	2.85	0.18	761.90	71.23
550_DE	500 - 550	BHP	3.12	0.15	768.27	91.27
600_DE	550 - 600	BHP	3.71	0.16	793.56	92.45
750_DE	600 - 750	BHP	3.84	0.17	798.16	160.56
825_DE	750 - 825	BHP	6.07	0.19	784.00	87.68
1150_DE	825 - 1150	BHP	3.85	0.24	779.86	71.16
1500_DE	1150 - 1500	BHP	7.26	0.31	758.00	40.51
1850_DE	1500 - 1850	BHP	3.73	0.21	741.24	133.59
2500_DE	1850 - 2500	BHP	6.33	0.45	727.14	40.24

If you have any additional questions, please do not hesitate to reach out.

Thank you,

Kyle Melching
Senior Air Quality Specialist
San Joaquin Valley Air Pollution Control District
[redacted]

Appendix F

HRA and AAQS Modeling Supplementary Files

*HARP - HRACalc v21081 3/18/2024 7:11:41 PM - Cancer Risk - Input File: C:\HARP2\Projects\DARDEN CLEAN ENERGY PROJECT\hra\Darden_Permit_Resi_HRAInput.hra

REC	GRP	NETID	X	Y	RISK_SUM	SCENARIO	INH_RISK	SOIL_RISK	DERMAL_RISK	MMILK_RISK	WATER_RISK	FISH_RISK	CROP_RISK	BEEF_RISK	DAIRY_RISK	PIG_RISK	CHICKEN_RISK	EGG_RISK
1	ALL		732073	4033492	9.10E-08	70YrCancerDerived_InhSoil[	9.10E-08	0.00E+00	0.00E+00	0.00E+00	0.00E+00	0.00E+00	0.00E+00	0.00E+00	0.00E+00	0.00E+00	0.00E+00	0.00E+00
2	ALL		732173	4033492	8.88E-08	70YrCancerDerived_InhSoil[	8.88E-08	0.00E+00	0.00E+00	0.00E+00	0.00E+00	0.00E+00	0.00E+00	0.00E+00	0.00E+00	0.00E+00	0.00E+00	0.00E+00
3	ALL		732273	4033492	8.33E-08	70YrCancerDerived_InhSoil[	8.33E-08	0.00E+00	0.00E+00	0.00E+00	0.00E+00	0.00E+00	0.00E+00	0.00E+00	0.00E+00	0.00E+00	0.00E+00	0.00E+00
4	ALL		732373	4033492	8.26E-08	70YrCancerDerived_InhSoil[	8.26E-08	0.00E+00	0.00E+00	0.00E+00	0.00E+00	0.00E+00	0.00E+00	0.00E+00	0.00E+00	0.00E+00	0.00E+00	0.00E+00
5	ALL		732473	4033492	8.32E-08	70YrCancerDerived_InhSoil[	8.32E-08	0.00E+00	0.00E+00	0.00E+00	0.00E+00	0.00E+00	0.00E+00	0.00E+00	0.00E+00	0.00E+00	0.00E+00	0.00E+00
6	ALL		732573	4033492	8.44E-08	70YrCancerDerived_InhSoil[	8.44E-08	0.00E+00	0.00E+00	0.00E+00	0.00E+00	0.00E+00	0.00E+00	0.00E+00	0.00E+00	0.00E+00	0.00E+00	0.00E+00
7	ALL		732673	4033492	8.54E-08	70YrCancerDerived_InhSoil[	8.54E-08	0.00E+00	0.00E+00	0.00E+00	0.00E+00	0.00E+00	0.00E+00	0.00E+00	0.00E+00	0.00E+00	0.00E+00	0.00E+00
8	ALL		732773	4033492	8.92E-08	70YrCancerDerived_InhSoil[	8.92E-08	0.00E+00	0.00E+00	0.00E+00	0.00E+00	0.00E+00	0.00E+00	0.00E+00	0.00E+00	0.00E+00	0.00E+00	0.00E+00
9	ALL		732873	4033492	9.47E-08	70YrCancerDerived_InhSoil[	9.47E-08	0.00E+00	0.00E+00	0.00E+00	0.00E+00	0.00E+00	0.00E+00	0.00E+00	0.00E+00	0.00E+00	0.00E+00	0.00E+00
10	ALL		732973	4033492	1.06E-07	70YrCancerDerived_InhSoil[	1.06E-07	0.00E+00	0.00E+00	0.00E+00	0.00E+00	0.00E+00	0.00E+00	0.00E+00	0.00E+00	0.00E+00	0.00E+00	0.00E+00
11	ALL		733073	4033492	1.31E-07	70YrCancerDerived_InhSoil[	1.31E-07	0.00E+00	0.00E+00	0.00E+00	0.00E+00	0.00E+00	0.00E+00	0.00E+00	0.00E+00	0.00E+00	0.00E+00	0.00E+00
12	ALL		733173	4033492	1.68E-07	70YrCancerDerived_InhSoil[	1.68E-07	0.00E+00	0.00E+00	0.00E+00	0.00E+00	0.00E+00	0.00E+00	0.00E+00	0.00E+00	0.00E+00	0.00E+00	0.00E+00
13	ALL		733273	4033492	2.54E-07	70YrCancerDerived_InhSoil[	2.54E-07	0.00E+00	0.00E+00	0.00E+00	0.00E+00	0.00E+00	0.00E+00	0.00E+00	0.00E+00	0.00E+00	0.00E+00	0.00E+00
14	ALL		733373	4033492	4.68E-07	70YrCancerDerived_InhSoil[	4.68E-07	0.00E+00	0.00E+00	0.00E+00	0.00E+00	0.00E+00	0.00E+00	0.00E+00	0.00E+00	0.00E+00	0.00E+00	0.00E+00
15	ALL		733473	4033492	7.87E-07	70YrCancerDerived_InhSoil[	7.87E-07	0.00E+00	0.00E+00	0.00E+00	0.00E+00	0.00E+00	0.00E+00	0.00E+00	0.00E+00	0.00E+00	0.00E+00	0.00E+00
16	ALL		733573	4033492	1.09E-06	70YrCancerDerived_InhSoil[	1.09E-06	0.00E+00	0.00E+00	0.00E+00	0.00E+00	0.00E+00	0.00E+00	0.00E+00	0.00E+00	0.00E+00	0.00E+00	0.00E+00
17	ALL		733673	4033492	1.32E-06	70YrCancerDerived_InhSoil[	1.32E-06	0.00E+00	0.00E+00	0.00E+00	0.00E+00	0.00E+00	0.00E+00	0.00E+00	0.00E+00	0.00E+00	0.00E+00	0.00E+00
18	ALL		733773	4033492	1.47E-06	70YrCancerDerived_InhSoil[	1.47E-06	0.00E+00	0.00E+00	0.00E+00	0.00E+00	0.00E+00	0.00E+00	0.00E+00	0.00E+00	0.00E+00	0.00E+00	0.00E+00
19	ALL		733873	4033492	1.51E-06	70YrCancerDerived_InhSoil[	1.51E-06	0.00E+00	0.00E+00	0.00E+00	0.00E+00	0.00E+00	0.00E+00	0.00E+00	0.00E+00	0.00E+00	0.00E+00	0.00E+00
20	ALL		733973	4033492	1.47E-06	70YrCancerDerived_InhSoil[	1.47E-06	0.00E+00	0.00E+00	0.00E+00	0.00E+00	0.00E+00	0.00E+00	0.00E+00	0.00E+00	0.00E+00	0.00E+00	0.00E+00
21	ALL		734073	4033492	1.35E-06	70YrCancerDerived_InhSoil[	1.35E-06	0.00E+00	0.00E+00	0.00E+00	0.00E+00	0.00E+00	0.00E+00	0.00E+00	0.00E+00	0.00E+00	0.00E+00	0.00E+00
22	ALL		732073	4033592	9.19E-08	70YrCancerDerived_InhSoil[	9.19E-08	0.00E+00	0.00E+00	0.00E+00	0.00E+00	0.00E+00	0.00E+00	0.00E+00	0.00E+00	0.00E+00	0.00E+00	0.00E+00
23	ALL		732173	4033592	8.88E-08	70YrCancerDerived_InhSoil[	8.88E-08	0.00E+00	0.00E+00	0.00E+00	0.00E+00	0.00E+00	0.00E+00	0.00E+00	0.00E+00	0.00E+00	0.00E+00	0.00E+00
24	ALL		732273	4033592	8.74E-08	70YrCancerDerived_InhSoil[	8.74E-08	0.00E+00	0.00E+00	0.00E+00	0.00E+00	0.00E+00	0.00E+00	0.00E+00	0.00E+00	0.00E+00	0.00E+00	0.00E+00
25	ALL		732373	4033592	8.71E-08	70YrCancerDerived_InhSoil[	8.71E-08	0.00E+00	0.00E+00	0.00E+00	0.00E+00	0.00E+00	0.00E+00	0.00E+00	0.00E+00	0.00E+00	0.00E+00	0.00E+00
26	ALL		732473	4033592	8.68E-08	70YrCancerDerived_InhSoil[	8.68E-08	0.00E+00	0.00E+00	0.00E+00	0.00E+00	0.00E+00	0.00E+00	0.00E+00	0.00E+00	0.00E+00	0.00E+00	0.00E+00
27	ALL		732573	4033592	8.74E-08	70YrCancerDerived_InhSoil[	8.74E-08	0.00E+00	0.00E+00	0.00E+00	0.00E+00	0.00E+00	0.00E+00	0.00E+00	0.00E+00	0.00E+00	0.00E+00	0.00E+00
28	ALL		732673	4033592	9.14E-08	70YrCancerDerived_InhSoil[	9.14E-08	0.00E+00	0.00E+00	0.00E+00	0.00E+00	0.00E+00	0.00E+00	0.00E+00	0.00E+00	0.00E+00	0.00E+00	0.00E+00
29	ALL		732773	4033592	9.69E-08	70YrCancerDerived_InhSoil[	9.69E-08	0.00E+00	0.00E+00	0.00E+00	0.00E+00	0.00E+00	0.00E+00	0.00E+00	0.00E+00	0.00E+00	0.00E+00	0.00E+00
30	ALL		732873	4033592	1.04E-07	70YrCancerDerived_InhSoil[	1.04E-07	0.00E+00	0.00E+00	0.00E+00	0.00E+00	0.00E+00	0.00E+00	0.00E+00	0.00E+00	0.00E+00	0.00E+00	0.00E+00
31	ALL		732973	4033592	1.16E-07	70YrCancerDerived_InhSoil[	1.16E-07	0.00E+00	0.00E+00	0.00E+00	0.00E+00	0.00E+00	0.00E+00	0.00E+00	0.00E+00	0.00E+00	0.00E+00	0.00E+00
32	ALL		733073	4033592	1.41E-07	70YrCancerDerived_InhSoil[	1.41E-07	0.00E+00	0.00E+00	0.00E+00	0.00E+00	0.00E+00	0.00E+00	0.00E+00	0.00E+00	0.00E+00	0.00E+00	0.00E+00
33	ALL		733173	4033592	1.89E-07	70YrCancerDerived_InhSoil[	1.89E-07	0.00E+00	0.00E+00	0.00E+00	0.00E+00	0.00E+00	0.00E+00	0.00E+00	0.00E+00	0.00E+00	0.00E+00	0.00E+00
34	ALL		733273	4033592	3.06E-07	70YrCancerDerived_InhSoil[	3.06E-07	0.00E+00	0.00E+00	0.00E+00	0.00E+00	0.00E+00	0.00E+00	0.00E+00	0.00E+00	0.00E+00	0.00E+00	0.00E+00
35	ALL		733373	4033592	6.38E-07	70YrCancerDerived_InhSoil[	6.38E-07	0.00E+00	0.00E+00	0.00E+00	0.00E+00	0.00E+00	0.00E+00	0.00E+00	0.00E+00	0.00E+00	0.00E+00	0.00E+00
36	ALL		733473	4033592	1.15E-06	70YrCancerDerived_InhSoil[	1.15E-06	0.00E+00	0.00E+00	0.00E+00	0.00E+00	0.00E+00	0.00E+00	0.00E+00	0.00E+00	0.00E+00	0.00E+00	0.00E+00
37	ALL		733573	4033592	1.58E-06	70YrCancerDerived_InhSoil[	1.58E-06	0.00E+00	0.00E+00	0.00E+00	0.00E+00	0.00E+00	0.00E+00	0.00E+00	0.00E+00	0.00E+00	0.00E+00	0.00E+00
38	ALL		733673	4033592	1.87E-06	70YrCancerDerived_InhSoil[	1.87E-06	0.00E+00	0.00E+00	0.00E+00	0.00E+00	0.00E+00	0.00E+00	0.00E+00	0.00E+00	0.00E+00	0.00E+00	0.00E+00
39	ALL		733773	4033592	1.96E-06	70YrCancerDerived_InhSoil[	1.96E-06	0.00E+00	0.00E+00	0.00E+00	0.00E+00	0.00E+00	0.00E+00	0.00E+00	0.00E+00	0.00E+00	0.00E+00	0.00E+00
40	ALL		733873	4033592	1.88E-06	70YrCancerDerived_InhSoil[	1.88E-06	0.00E+00	0.00E+00	0.00E+00	0.00E+00	0.00E+00	0.00E+00	0.00E+00	0.00E+00	0.00E+00	0.00E+00	0.00E+00
41	ALL		733973	4033592	1.68E-06	70YrCancerDerived_InhSoil[	1.68E-06	0.00E+00	0.00E+00	0.00E+00	0.00E+00	0.00E+00	0.00E+00	0.00E+00	0.00E+00	0.00E+00	0.00E+00	0.00E+00
42	ALL		734073	4033592	1.45E-06	70YrCancerDerived_InhSoil[	1.45E-06	0.00E+00	0.00E+00	0.00E+00	0.00E+00	0.00E+00	0.00E+00	0.00E+00	0.00E+00	0.00E+00	0.00E+00	0.00E+00
43	ALL		732073	4033692	1.06E-07	70YrCancerDerived_InhSoil[	1.06E-07	0.00E+00	0.00E+00	0.00E+00	0.00E+00	0.00E+00	0.00E+00	0.00E+00	0.00E+00	0.00E+00	0.00E+00	0.00E+00
44	ALL		732173	4033692	9.83E-08	70YrCancerDerived_InhSoil[	9.83E-08	0.00E+00	0.00E+00	0.00E+00	0.00E+00	0.00E+00	0.00E+00	0.00E+00	0.00E+00	0.00E+00	0.00E+00	0.00E+00
45	ALL		732273	4033692	9.62E-08	70YrCancerDerived_InhSoil[	9.62E-08	0.00E+00	0.00E+00	0.00E+00	0.00E+00	0.00E+00	0.00E+00	0.00E+00	0.00E+00	0.00E+00	0.00E+00	0.00E+00
46	ALL		732373	4033692	9.37E-08	70YrCancerDerived_InhSoil[	9.37E-08	0.00E+00	0.00E+00	0.00E+00	0.00E+00	0.00E+00	0.00E+00	0.00E+00	0.00E+00	0.00E+00	0.00E+00	0.00E+00
47	ALL		732473	4033692	9.19E-08	70YrCancerDerived_InhSoil[	9.19E-08	0.00E+00	0.00E+00	0.00E+00	0.00E+00	0.00E+00	0.00E+00	0.00E+00	0.00E+00	0.00E+00	0.00E+00	0.00E+00
48	ALL		732573	4033692	9.17E-08	70YrCancerDerived_InhSoil[	9.17E-08	0.00E+00	0.00E+00	0.00E+00	0.00E+00	0.00E+00	0.00E+00	0.00E+00	0.00E+00	0.00E+00	0.00E+00	0.00E+00
49	ALL		732673	4033692	9.45E-08	70YrCancerDerived_InhSoil[	9.45E-08	0.00E+00	0.00E+00	0.00E+00	0.00E+00	0.00E+00	0.00E+00	0.00E+00	0.00E+00	0.00E+00	0.00E+00	0.00E+00
50	ALL		732773	4033692	1.02E-07	70YrCancerDerived_InhSoil[	1.02E-07	0.00E+00	0.00E+00	0.00E+00	0.00E+00	0.00E+00	0.00E+00	0.00E+00	0.00E+00	0.00E+00	0.00E+00	0.00E+00
51	ALL		732873	4033692	1.14E-07	70YrCancerDerived_InhSoil[	1.14E-07	0.00E+00	0.00E+00	0.00E+00	0.00E+00	0.00E+00	0.00E+00	0.00E+00	0.00E+00	0.00E+00	0.00E+00	0.00E+00
52	ALL		732973	4033692	1.30E-07	70YrCancerDerived_InhSoil[	1.30E-07	0.00E+00	0.00E+00	0.00E+00	0.00E+00	0.00E+00	0.00E+00	0.00E+00	0.00E+00	0.00E+00	0.00E+00	0.00E+00
53	ALL		733073	4033692	1.58E-07	70YrCancerDerived_InhSoil[	1.58E-07	0.00E+00	0.00E+00	0.00E+00	0.00E+00	0.00E+00	0.00E+00	0.00E+00	0.00E+00	0.00E+00	0.00E+00	0.00E+00
54	ALL		733173	4033692	2.18E-07	70YrCancerDerived_InhSoil[	2.18E-07	0.00E+00	0.00E+00	0.00E+00	0.00E+00	0.00E+00	0.00E+00	0.00E+00	0.00E+00	0.00E+00	0.00E+00	0.00E+00

55	ALL	733273	4033692	3.83E-07	70YrCancerDerived_InhSoil[	3.83E-07	0.00E+00	0.00E+00	0.00E+00	0.00E+00	0.00E+00	0.00E+00	0.00E+00	0.00E+00	0.00E+00	0.00E+00	0.00E+00
56	ALL	733373	4033692	9.54E-07	70YrCancerDerived_InhSoil[	9.54E-07	0.00E+00	0.00E+00	0.00E+00	0.00E+00	0.00E+00	0.00E+00	0.00E+00	0.00E+00	0.00E+00	0.00E+00	0.00E+00
57	ALL	733473	4033692	1.82E-06	70YrCancerDerived_InhSoil[	1.82E-06	0.00E+00	0.00E+00	0.00E+00	0.00E+00	0.00E+00	0.00E+00	0.00E+00	0.00E+00	0.00E+00	0.00E+00	0.00E+00
58	ALL	733573	4033692	2.45E-06	70YrCancerDerived_InhSoil[	2.45E-06	0.00E+00	0.00E+00	0.00E+00	0.00E+00	0.00E+00	0.00E+00	0.00E+00	0.00E+00	0.00E+00	0.00E+00	0.00E+00
59	ALL	733673	4033692	2.69E-06	70YrCancerDerived_InhSoil[	2.69E-06	0.00E+00	0.00E+00	0.00E+00	0.00E+00	0.00E+00	0.00E+00	0.00E+00	0.00E+00	0.00E+00	0.00E+00	0.00E+00
60	ALL	733773	4033692	2.53E-06	70YrCancerDerived_InhSoil[	2.53E-06	0.00E+00	0.00E+00	0.00E+00	0.00E+00	0.00E+00	0.00E+00	0.00E+00	0.00E+00	0.00E+00	0.00E+00	0.00E+00
61	ALL	733873	4033692	2.17E-06	70YrCancerDerived_InhSoil[	2.17E-06	0.00E+00	0.00E+00	0.00E+00	0.00E+00	0.00E+00	0.00E+00	0.00E+00	0.00E+00	0.00E+00	0.00E+00	0.00E+00
62	ALL	733973	4033692	1.77E-06	70YrCancerDerived_InhSoil[	1.77E-06	0.00E+00	0.00E+00	0.00E+00	0.00E+00	0.00E+00	0.00E+00	0.00E+00	0.00E+00	0.00E+00	0.00E+00	0.00E+00
63	ALL	734073	4033692	1.43E-06	70YrCancerDerived_InhSoil[	1.43E-06	0.00E+00	0.00E+00	0.00E+00	0.00E+00	0.00E+00	0.00E+00	0.00E+00	0.00E+00	0.00E+00	0.00E+00	0.00E+00
64	ALL	732073	4033792	1.11E-07	70YrCancerDerived_InhSoil[	1.11E-07	0.00E+00	0.00E+00	0.00E+00	0.00E+00	0.00E+00	0.00E+00	0.00E+00	0.00E+00	0.00E+00	0.00E+00	0.00E+00
65	ALL	732373	4033792	9.92E-08	70YrCancerDerived_InhSoil[	9.92E-08	0.00E+00	0.00E+00	0.00E+00	0.00E+00	0.00E+00	0.00E+00	0.00E+00	0.00E+00	0.00E+00	0.00E+00	0.00E+00
66	ALL	732473	4033792	9.78E-08	70YrCancerDerived_InhSoil[	9.78E-08	0.00E+00	0.00E+00	0.00E+00	0.00E+00	0.00E+00	0.00E+00	0.00E+00	0.00E+00	0.00E+00	0.00E+00	0.00E+00
67	ALL	732573	4033792	9.83E-08	70YrCancerDerived_InhSoil[	9.83E-08	0.00E+00	0.00E+00	0.00E+00	0.00E+00	0.00E+00	0.00E+00	0.00E+00	0.00E+00	0.00E+00	0.00E+00	0.00E+00
68	ALL	732673	4033792	1.01E-07	70YrCancerDerived_InhSoil[	1.01E-07	0.00E+00	0.00E+00	0.00E+00	0.00E+00	0.00E+00	0.00E+00	0.00E+00	0.00E+00	0.00E+00	0.00E+00	0.00E+00
69	ALL	732773	4033792	1.08E-07	70YrCancerDerived_InhSoil[	1.08E-07	0.00E+00	0.00E+00	0.00E+00	0.00E+00	0.00E+00	0.00E+00	0.00E+00	0.00E+00	0.00E+00	0.00E+00	0.00E+00
70	ALL	732873	4033792	1.24E-07	70YrCancerDerived_InhSoil[	1.24E-07	0.00E+00	0.00E+00	0.00E+00	0.00E+00	0.00E+00	0.00E+00	0.00E+00	0.00E+00	0.00E+00	0.00E+00	0.00E+00
71	ALL	732973	4033792	1.49E-07	70YrCancerDerived_InhSoil[	1.49E-07	0.00E+00	0.00E+00	0.00E+00	0.00E+00	0.00E+00	0.00E+00	0.00E+00	0.00E+00	0.00E+00	0.00E+00	0.00E+00
72	ALL	733073	4033792	1.86E-07	70YrCancerDerived_InhSoil[	1.86E-07	0.00E+00	0.00E+00	0.00E+00	0.00E+00	0.00E+00	0.00E+00	0.00E+00	0.00E+00	0.00E+00	0.00E+00	0.00E+00
73	ALL	733173	4033792	2.61E-07	70YrCancerDerived_InhSoil[	2.61E-07	0.00E+00	0.00E+00	0.00E+00	0.00E+00	0.00E+00	0.00E+00	0.00E+00	0.00E+00	0.00E+00	0.00E+00	0.00E+00
74	ALL	733273	4033792	4.97E-07	70YrCancerDerived_InhSoil[	4.97E-07	0.00E+00	0.00E+00	0.00E+00	0.00E+00	0.00E+00	0.00E+00	0.00E+00	0.00E+00	0.00E+00	0.00E+00	0.00E+00
75	ALL	733373	4033792	1.60E-06	70YrCancerDerived_InhSoil[	1.60E-06	0.00E+00	0.00E+00	0.00E+00	0.00E+00	0.00E+00	0.00E+00	0.00E+00	0.00E+00	0.00E+00	0.00E+00	0.00E+00
76	ALL	733473	4033792	3.25E-06	70YrCancerDerived_InhSoil[	3.25E-06	0.00E+00	0.00E+00	0.00E+00	0.00E+00	0.00E+00	0.00E+00	0.00E+00	0.00E+00	0.00E+00	0.00E+00	0.00E+00
77	ALL	733573	4033792	3.98E-06	70YrCancerDerived_InhSoil[	3.98E-06	0.00E+00	0.00E+00	0.00E+00	0.00E+00	0.00E+00	0.00E+00	0.00E+00	0.00E+00	0.00E+00	0.00E+00	0.00E+00
78	ALL	733673	4033792	3.67E-06	70YrCancerDerived_InhSoil[	3.67E-06	0.00E+00	0.00E+00	0.00E+00	0.00E+00	0.00E+00	0.00E+00	0.00E+00	0.00E+00	0.00E+00	0.00E+00	0.00E+00
79	ALL	733773	4033792	2.91E-06	70YrCancerDerived_InhSoil[	2.91E-06	0.00E+00	0.00E+00	0.00E+00	0.00E+00	0.00E+00	0.00E+00	0.00E+00	0.00E+00	0.00E+00	0.00E+00	0.00E+00
80	ALL	733873	4033792	2.20E-06	70YrCancerDerived_InhSoil[	2.20E-06	0.00E+00	0.00E+00	0.00E+00	0.00E+00	0.00E+00	0.00E+00	0.00E+00	0.00E+00	0.00E+00	0.00E+00	0.00E+00
81	ALL	733973	4033792	1.67E-06	70YrCancerDerived_InhSoil[	1.67E-06	0.00E+00	0.00E+00	0.00E+00	0.00E+00	0.00E+00	0.00E+00	0.00E+00	0.00E+00	0.00E+00	0.00E+00	0.00E+00
82	ALL	734073	4033792	1.30E-06	70YrCancerDerived_InhSoil[	1.30E-06	0.00E+00	0.00E+00	0.00E+00	0.00E+00	0.00E+00	0.00E+00	0.00E+00	0.00E+00	0.00E+00	0.00E+00	0.00E+00
83	ALL	732073	4033892	1.17E-07	70YrCancerDerived_InhSoil[	1.17E-07	0.00E+00	0.00E+00	0.00E+00	0.00E+00	0.00E+00	0.00E+00	0.00E+00	0.00E+00	0.00E+00	0.00E+00	0.00E+00
84	ALL	733773	4033892	2.72E-06	70YrCancerDerived_InhSoil[	2.72E-06	0.00E+00	0.00E+00	0.00E+00	0.00E+00	0.00E+00	0.00E+00	0.00E+00	0.00E+00	0.00E+00	0.00E+00	0.00E+00
85	ALL	733873	4033892	1.90E-06	70YrCancerDerived_InhSoil[	1.90E-06	0.00E+00	0.00E+00	0.00E+00	0.00E+00	0.00E+00	0.00E+00	0.00E+00	0.00E+00	0.00E+00	0.00E+00	0.00E+00
86	ALL	733973	4033892	1.39E-06	70YrCancerDerived_InhSoil[	1.39E-06	0.00E+00	0.00E+00	0.00E+00	0.00E+00	0.00E+00	0.00E+00	0.00E+00	0.00E+00	0.00E+00	0.00E+00	0.00E+00
87	ALL	734073	4033892	1.07E-06	70YrCancerDerived_InhSoil[	1.07E-06	0.00E+00	0.00E+00	0.00E+00	0.00E+00	0.00E+00	0.00E+00	0.00E+00	0.00E+00	0.00E+00	0.00E+00	0.00E+00
88	ALL	732073	4033992	1.16E-07	70YrCancerDerived_InhSoil[	1.16E-07	0.00E+00	0.00E+00	0.00E+00	0.00E+00	0.00E+00	0.00E+00	0.00E+00	0.00E+00	0.00E+00	0.00E+00	0.00E+00
89	ALL	733773	4033992	1.97E-06	70YrCancerDerived_InhSoil[	1.97E-06	0.00E+00	0.00E+00	0.00E+00	0.00E+00	0.00E+00	0.00E+00	0.00E+00	0.00E+00	0.00E+00	0.00E+00	0.00E+00
90	ALL	733873	4033992	1.37E-06	70YrCancerDerived_InhSoil[	1.37E-06	0.00E+00	0.00E+00	0.00E+00	0.00E+00	0.00E+00	0.00E+00	0.00E+00	0.00E+00	0.00E+00	0.00E+00	0.00E+00
91	ALL	733973	4033992	1.02E-06	70YrCancerDerived_InhSoil[	1.02E-06	0.00E+00	0.00E+00	0.00E+00	0.00E+00	0.00E+00	0.00E+00	0.00E+00	0.00E+00	0.00E+00	0.00E+00	0.00E+00
92	ALL	734073	4033992	8.02E-07	70YrCancerDerived_InhSoil[	8.02E-07	0.00E+00	0.00E+00	0.00E+00	0.00E+00	0.00E+00	0.00E+00	0.00E+00	0.00E+00	0.00E+00	0.00E+00	0.00E+00
93	ALL	732073	4034092	1.18E-07	70YrCancerDerived_InhSoil[	1.18E-07	0.00E+00	0.00E+00	0.00E+00	0.00E+00	0.00E+00	0.00E+00	0.00E+00	0.00E+00	0.00E+00	0.00E+00	0.00E+00
94	ALL	733773	4034092	1.05E-06	70YrCancerDerived_InhSoil[	1.05E-06	0.00E+00	0.00E+00	0.00E+00	0.00E+00	0.00E+00	0.00E+00	0.00E+00	0.00E+00	0.00E+00	0.00E+00	0.00E+00
95	ALL	733873	4034092	8.03E-07	70YrCancerDerived_InhSoil[	8.03E-07	0.00E+00	0.00E+00	0.00E+00	0.00E+00	0.00E+00	0.00E+00	0.00E+00	0.00E+00	0.00E+00	0.00E+00	0.00E+00
96	ALL	733973	4034092	6.45E-07	70YrCancerDerived_InhSoil[	6.45E-07	0.00E+00	0.00E+00	0.00E+00	0.00E+00	0.00E+00	0.00E+00	0.00E+00	0.00E+00	0.00E+00	0.00E+00	0.00E+00
97	ALL	734073	4034092	5.36E-07	70YrCancerDerived_InhSoil[	5.36E-07	0.00E+00	0.00E+00	0.00E+00	0.00E+00	0.00E+00	0.00E+00	0.00E+00	0.00E+00	0.00E+00	0.00E+00	0.00E+00
98	ALL	732073	4034192	1.17E-07	70YrCancerDerived_InhSoil[	1.17E-07	0.00E+00	0.00E+00	0.00E+00	0.00E+00	0.00E+00	0.00E+00	0.00E+00	0.00E+00	0.00E+00	0.00E+00	0.00E+00
99	ALL	733773	4034192	4.41E-07	70YrCancerDerived_InhSoil[	4.41E-07	0.00E+00	0.00E+00	0.00E+00	0.00E+00	0.00E+00	0.00E+00	0.00E+00	0.00E+00	0.00E+00	0.00E+00	0.00E+00
100	ALL	733873	4034192	4.00E-07	70YrCancerDerived_InhSoil[	4.00E-07	0.00E+00	0.00E+00	0.00E+00	0.00E+00	0.00E+00	0.00E+00	0.00E+00	0.00E+00	0.00E+00	0.00E+00	0.00E+00
101	ALL	733973	4034192	3.63E-07	70YrCancerDerived_InhSoil[	3.63E-07	0.00E+00	0.00E+00	0.00E+00	0.00E+00	0.00E+00	0.00E+00	0.00E+00	0.00E+00	0.00E+00	0.00E+00	0.00E+00
102	ALL	734073	4034192	3.29E-07	70YrCancerDerived_InhSoil[	3.29E-07	0.00E+00	0.00E+00	0.00E+00	0.00E+00	0.00E+00	0.00E+00	0.00E+00	0.00E+00	0.00E+00	0.00E+00	0.00E+00
103	ALL	732073	4034292	1.15E-07	70YrCancerDerived_InhSoil[	1.15E-07	0.00E+00	0.00E+00	0.00E+00	0.00E+00	0.00E+00	0.00E+00	0.00E+00	0.00E+00	0.00E+00	0.00E+00	0.00E+00
104	ALL	733773	4034292	2.13E-07	70YrCancerDerived_InhSoil[	2.13E-07	0.00E+00	0.00E+00	0.00E+00	0.00E+00	0.00E+00	0.00E+00	0.00E+00	0.00E+00	0.00E+00	0.00E+00	0.00E+00
105	ALL	733873	4034292	2.11E-07	70YrCancerDerived_InhSoil[	2.11E-07	0.00E+00	0.00E+00	0.00E+00	0.00E+00	0.00E+00	0.00E+00	0.00E+00	0.00E+00	0.00E+00	0.00E+00	0.00E+00
106	ALL	733973	4034292	2.08E-07	70YrCancerDerived_InhSoil[	2.08E-07	0.00E+00	0.00E+00	0.00E+00	0.00E+00	0.00E+00	0.00E+00	0.00E+00	0.00E+00	0.00E+00	0.00E+00	0.00E+00
107	ALL	734073	4034292	2.04E-07	70YrCancerDerived_InhSoil[	2.04E-07	0.00E+00	0.00E+00	0.00E+00	0.00E+00	0.00E+00	0.00E+00	0.00E+00	0.00E+00	0.00E+00	0.00E+00	0.00E+00
108	ALL	734173	4034292	1.97E-07	70YrCancerDerived_InhSoil[	1.97E-07	0.00E+00	0.00E+00	0.00E+00	0.00E+00	0.00E+00	0.00E+00	0.00E+00	0.00E+00	0.00E+00	0.00E+00	0.00E+00
109	ALL	732073	4034392	1.16E-07	70YrCancerDerived_InhSoil[	1.16E-07	0.00E+00	0.00E+00	0.00E+00	0.00E+00	0.00E+00	0.00E+00	0.00E+00	0.00E+00	0.00E+00	0.00E+00	0.00E+00
110	ALL	733773	4034392	1.43E-07	70YrCancerDerived_InhSoil[	1.43E-07	0.00E+00	0.00E+00	0.00E+00	0.00E+00	0.00E+00	0.00E+00	0.00E+00	0.00E+00	0.00E+00	0.00E+00	0.00E+00

111	ALL	733873	4034392	1.39E-07	70YrCancerDerived_InhSoilI	1.39E-07	0.00E+00	0.00E+00	0.00E+00	0.00E+00	0.00E+00	0.00E+00	0.00E+00	0.00E+00	0.00E+00	0.00E+00	0.00E+00
112	ALL	733973	4034392	1.39E-07	70YrCancerDerived_InhSoilI	1.39E-07	0.00E+00	0.00E+00	0.00E+00	0.00E+00	0.00E+00	0.00E+00	0.00E+00	0.00E+00	0.00E+00	0.00E+00	0.00E+00
113	ALL	734073	4034392	1.39E-07	70YrCancerDerived_InhSoilI	1.39E-07	0.00E+00	0.00E+00	0.00E+00	0.00E+00	0.00E+00	0.00E+00	0.00E+00	0.00E+00	0.00E+00	0.00E+00	0.00E+00
114	ALL	734173	4034392	1.38E-07	70YrCancerDerived_InhSoilI	1.38E-07	0.00E+00	0.00E+00	0.00E+00	0.00E+00	0.00E+00	0.00E+00	0.00E+00	0.00E+00	0.00E+00	0.00E+00	0.00E+00
115	ALL	734273	4034392	1.38E-07	70YrCancerDerived_InhSoilI	1.38E-07	0.00E+00	0.00E+00	0.00E+00	0.00E+00	0.00E+00	0.00E+00	0.00E+00	0.00E+00	0.00E+00	0.00E+00	0.00E+00
116	ALL	732073	4034492	1.24E-07	70YrCancerDerived_InhSoilI	1.24E-07	0.00E+00	0.00E+00	0.00E+00	0.00E+00	0.00E+00	0.00E+00	0.00E+00	0.00E+00	0.00E+00	0.00E+00	0.00E+00
117	ALL	734173	4034492	1.06E-07	70YrCancerDerived_InhSoilI	1.06E-07	0.00E+00	0.00E+00	0.00E+00	0.00E+00	0.00E+00	0.00E+00	0.00E+00	0.00E+00	0.00E+00	0.00E+00	0.00E+00
118	ALL	734273	4034492	1.07E-07	70YrCancerDerived_InhSoilI	1.07E-07	0.00E+00	0.00E+00	0.00E+00	0.00E+00	0.00E+00	0.00E+00	0.00E+00	0.00E+00	0.00E+00	0.00E+00	0.00E+00
119	ALL	734373	4034492	1.07E-07	70YrCancerDerived_InhSoilI	1.07E-07	0.00E+00	0.00E+00	0.00E+00	0.00E+00	0.00E+00	0.00E+00	0.00E+00	0.00E+00	0.00E+00	0.00E+00	0.00E+00
120	ALL	734473	4034492	1.06E-07	70YrCancerDerived_InhSoilI	1.06E-07	0.00E+00	0.00E+00	0.00E+00	0.00E+00	0.00E+00	0.00E+00	0.00E+00	0.00E+00	0.00E+00	0.00E+00	0.00E+00
121	ALL	734573	4034492	1.06E-07	70YrCancerDerived_InhSoilI	1.06E-07	0.00E+00	0.00E+00	0.00E+00	0.00E+00	0.00E+00	0.00E+00	0.00E+00	0.00E+00	0.00E+00	0.00E+00	0.00E+00
122	ALL	734673	4034492	1.05E-07	70YrCancerDerived_InhSoilI	1.05E-07	0.00E+00	0.00E+00	0.00E+00	0.00E+00	0.00E+00	0.00E+00	0.00E+00	0.00E+00	0.00E+00	0.00E+00	0.00E+00
123	ALL	734773	4034492	1.03E-07	70YrCancerDerived_InhSoilI	1.03E-07	0.00E+00	0.00E+00	0.00E+00	0.00E+00	0.00E+00	0.00E+00	0.00E+00	0.00E+00	0.00E+00	0.00E+00	0.00E+00
124	ALL	734873	4034492	1.02E-07	70YrCancerDerived_InhSoilI	1.02E-07	0.00E+00	0.00E+00	0.00E+00	0.00E+00	0.00E+00	0.00E+00	0.00E+00	0.00E+00	0.00E+00	0.00E+00	0.00E+00
125	ALL	732073	4034592	1.36E-07	70YrCancerDerived_InhSoilI	1.36E-07	0.00E+00	0.00E+00	0.00E+00	0.00E+00	0.00E+00	0.00E+00	0.00E+00	0.00E+00	0.00E+00	0.00E+00	0.00E+00
126	ALL	733773	4034592	9.41E-08	70YrCancerDerived_InhSoilI	9.41E-08	0.00E+00	0.00E+00	0.00E+00	0.00E+00	0.00E+00	0.00E+00	0.00E+00	0.00E+00	0.00E+00	0.00E+00	0.00E+00
127	ALL	733873	4034592	9.02E-08	70YrCancerDerived_InhSoilI	9.02E-08	0.00E+00	0.00E+00	0.00E+00	0.00E+00	0.00E+00	0.00E+00	0.00E+00	0.00E+00	0.00E+00	0.00E+00	0.00E+00
128	ALL	733973	4034592	8.85E-08	70YrCancerDerived_InhSoilI	8.85E-08	0.00E+00	0.00E+00	0.00E+00	0.00E+00	0.00E+00	0.00E+00	0.00E+00	0.00E+00	0.00E+00	0.00E+00	0.00E+00
129	ALL	734273	4034592	8.83E-08	70YrCancerDerived_InhSoilI	8.83E-08	0.00E+00	0.00E+00	0.00E+00	0.00E+00	0.00E+00	0.00E+00	0.00E+00	0.00E+00	0.00E+00	0.00E+00	0.00E+00
130	ALL	734373	4034592	8.86E-08	70YrCancerDerived_InhSoilI	8.86E-08	0.00E+00	0.00E+00	0.00E+00	0.00E+00	0.00E+00	0.00E+00	0.00E+00	0.00E+00	0.00E+00	0.00E+00	0.00E+00
131	ALL	734473	4034592	8.88E-08	70YrCancerDerived_InhSoilI	8.88E-08	0.00E+00	0.00E+00	0.00E+00	0.00E+00	0.00E+00	0.00E+00	0.00E+00	0.00E+00	0.00E+00	0.00E+00	0.00E+00
132	ALL	734573	4034592	8.88E-08	70YrCancerDerived_InhSoilI	8.88E-08	0.00E+00	0.00E+00	0.00E+00	0.00E+00	0.00E+00	0.00E+00	0.00E+00	0.00E+00	0.00E+00	0.00E+00	0.00E+00
133	ALL	734673	4034592	8.86E-08	70YrCancerDerived_InhSoilI	8.86E-08	0.00E+00	0.00E+00	0.00E+00	0.00E+00	0.00E+00	0.00E+00	0.00E+00	0.00E+00	0.00E+00	0.00E+00	0.00E+00
134	ALL	734773	4034592	8.80E-08	70YrCancerDerived_InhSoilI	8.80E-08	0.00E+00	0.00E+00	0.00E+00	0.00E+00	0.00E+00	0.00E+00	0.00E+00	0.00E+00	0.00E+00	0.00E+00	0.00E+00
135	ALL	734873	4034592	8.73E-08	70YrCancerDerived_InhSoilI	8.73E-08	0.00E+00	0.00E+00	0.00E+00	0.00E+00	0.00E+00	0.00E+00	0.00E+00	0.00E+00	0.00E+00	0.00E+00	0.00E+00
136	ALL	734973	4034592	8.63E-08	70YrCancerDerived_InhSoilI	8.63E-08	0.00E+00	0.00E+00	0.00E+00	0.00E+00	0.00E+00	0.00E+00	0.00E+00	0.00E+00	0.00E+00	0.00E+00	0.00E+00
137	ALL	732073	4034692	1.52E-07	70YrCancerDerived_InhSoilI	1.52E-07	0.00E+00	0.00E+00	0.00E+00	0.00E+00	0.00E+00	0.00E+00	0.00E+00	0.00E+00	0.00E+00	0.00E+00	0.00E+00
138	ALL	732173	4034692	1.68E-07	70YrCancerDerived_InhSoilI	1.68E-07	0.00E+00	0.00E+00	0.00E+00	0.00E+00	0.00E+00	0.00E+00	0.00E+00	0.00E+00	0.00E+00	0.00E+00	0.00E+00
139	ALL	732273	4034692	1.93E-07	70YrCancerDerived_InhSoilI	1.93E-07	0.00E+00	0.00E+00	0.00E+00	0.00E+00	0.00E+00	0.00E+00	0.00E+00	0.00E+00	0.00E+00	0.00E+00	0.00E+00
140	ALL	732373	4034692	2.24E-07	70YrCancerDerived_InhSoilI	2.24E-07	0.00E+00	0.00E+00	0.00E+00	0.00E+00	0.00E+00	0.00E+00	0.00E+00	0.00E+00	0.00E+00	0.00E+00	0.00E+00
141	ALL	732473	4034692	2.62E-07	70YrCancerDerived_InhSoilI	2.62E-07	0.00E+00	0.00E+00	0.00E+00	0.00E+00	0.00E+00	0.00E+00	0.00E+00	0.00E+00	0.00E+00	0.00E+00	0.00E+00
142	ALL	732573	4034692	2.99E-07	70YrCancerDerived_InhSoilI	2.99E-07	0.00E+00	0.00E+00	0.00E+00	0.00E+00	0.00E+00	0.00E+00	0.00E+00	0.00E+00	0.00E+00	0.00E+00	0.00E+00
143	ALL	732673	4034692	3.23E-07	70YrCancerDerived_InhSoilI	3.23E-07	0.00E+00	0.00E+00	0.00E+00	0.00E+00	0.00E+00	0.00E+00	0.00E+00	0.00E+00	0.00E+00	0.00E+00	0.00E+00
144	ALL	732773	4034692	3.17E-07	70YrCancerDerived_InhSoilI	3.17E-07	0.00E+00	0.00E+00	0.00E+00	0.00E+00	0.00E+00	0.00E+00	0.00E+00	0.00E+00	0.00E+00	0.00E+00	0.00E+00
145	ALL	732873	4034692	2.69E-07	70YrCancerDerived_InhSoilI	2.69E-07	0.00E+00	0.00E+00	0.00E+00	0.00E+00	0.00E+00	0.00E+00	0.00E+00	0.00E+00	0.00E+00	0.00E+00	0.00E+00
146	ALL	732973	4034692	2.16E-07	70YrCancerDerived_InhSoilI	2.16E-07	0.00E+00	0.00E+00	0.00E+00	0.00E+00	0.00E+00	0.00E+00	0.00E+00	0.00E+00	0.00E+00	0.00E+00	0.00E+00
147	ALL	733073	4034692	1.69E-07	70YrCancerDerived_InhSoilI	1.69E-07	0.00E+00	0.00E+00	0.00E+00	0.00E+00	0.00E+00	0.00E+00	0.00E+00	0.00E+00	0.00E+00	0.00E+00	0.00E+00
148	ALL	733173	4034692	1.38E-07	70YrCancerDerived_InhSoilI	1.38E-07	0.00E+00	0.00E+00	0.00E+00	0.00E+00	0.00E+00	0.00E+00	0.00E+00	0.00E+00	0.00E+00	0.00E+00	0.00E+00
149	ALL	733273	4034692	1.20E-07	70YrCancerDerived_InhSoilI	1.20E-07	0.00E+00	0.00E+00	0.00E+00	0.00E+00	0.00E+00	0.00E+00	0.00E+00	0.00E+00	0.00E+00	0.00E+00	0.00E+00
150	ALL	733373	4034692	1.10E-07	70YrCancerDerived_InhSoilI	1.10E-07	0.00E+00	0.00E+00	0.00E+00	0.00E+00	0.00E+00	0.00E+00	0.00E+00	0.00E+00	0.00E+00	0.00E+00	0.00E+00
151	ALL	733473	4034692	1.03E-07	70YrCancerDerived_InhSoilI	1.03E-07	0.00E+00	0.00E+00	0.00E+00	0.00E+00	0.00E+00	0.00E+00	0.00E+00	0.00E+00	0.00E+00	0.00E+00	0.00E+00
152	ALL	733573	4034692	9.41E-08	70YrCancerDerived_InhSoilI	9.41E-08	0.00E+00	0.00E+00	0.00E+00	0.00E+00	0.00E+00	0.00E+00	0.00E+00	0.00E+00	0.00E+00	0.00E+00	0.00E+00
153	ALL	733673	4034692	8.61E-08	70YrCancerDerived_InhSoilI	8.61E-08	0.00E+00	0.00E+00	0.00E+00	0.00E+00	0.00E+00	0.00E+00	0.00E+00	0.00E+00	0.00E+00	0.00E+00	0.00E+00
154	ALL	733773	4034692	8.08E-08	70YrCancerDerived_InhSoilI	8.08E-08	0.00E+00	0.00E+00	0.00E+00	0.00E+00	0.00E+00	0.00E+00	0.00E+00	0.00E+00	0.00E+00	0.00E+00	0.00E+00
155	ALL	733873	4034692	7.80E-08	70YrCancerDerived_InhSoilI	7.80E-08	0.00E+00	0.00E+00	0.00E+00	0.00E+00	0.00E+00	0.00E+00	0.00E+00	0.00E+00	0.00E+00	0.00E+00	0.00E+00
156	ALL	733973	4034692	7.65E-08	70YrCancerDerived_InhSoilI	7.65E-08	0.00E+00	0.00E+00	0.00E+00	0.00E+00	0.00E+00	0.00E+00	0.00E+00	0.00E+00	0.00E+00	0.00E+00	0.00E+00
157	ALL	734073	4034692	7.61E-08	70YrCancerDerived_InhSoilI	7.61E-08	0.00E+00	0.00E+00	0.00E+00	0.00E+00	0.00E+00	0.00E+00	0.00E+00	0.00E+00	0.00E+00	0.00E+00	0.00E+00
158	ALL	734273	4034692	7.66E-08	70YrCancerDerived_InhSoilI	7.66E-08	0.00E+00	0.00E+00	0.00E+00	0.00E+00	0.00E+00	0.00E+00	0.00E+00	0.00E+00	0.00E+00	0.00E+00	0.00E+00
159	ALL	734373	4034692	7.69E-08	70YrCancerDerived_InhSoilI	7.69E-08	0.00E+00	0.00E+00	0.00E+00	0.00E+00	0.00E+00	0.00E+00	0.00E+00	0.00E+00	0.00E+00	0.00E+00	0.00E+00
160	ALL	734473	4034692	7.72E-08	70YrCancerDerived_InhSoilI	7.72E-08	0.00E+00	0.00E+00	0.00E+00	0.00E+00	0.00E+00	0.00E+00	0.00E+00	0.00E+00	0.00E+00	0.00E+00	0.00E+00
161	ALL	734573	4034692	7.73E-08	70YrCancerDerived_InhSoilI	7.73E-08	0.00E+00	0.00E+00	0.00E+00	0.00E+00	0.00E+00	0.00E+00	0.00E+00	0.00E+00	0.00E+00	0.00E+00	0.00E+00
162	ALL	734673	4034692	7.73E-08	70YrCancerDerived_InhSoilI	7.73E-08	0.00E+00	0.00E+00	0.00E+00	0.00E+00	0.00E+00	0.00E+00	0.00E+00	0.00E+00	0.00E+00	0.00E+00	0.00E+00
163	ALL	734773	4034692	7.72E-08	70YrCancerDerived_InhSoilI	7.72E-08	0.00E+00	0.00E+00	0.00E+00	0.00E+00	0.00E+00	0.00E+00	0.00E+00	0.00E+00	0.00E+00	0.00E+00	0.00E+00
164	ALL	734873	4034692	7.68E-08	70YrCancerDerived_InhSoilI	7.68E-08	0.00E+00	0.00E+00	0.00E+00	0.00E+00	0.00E+00	0.00E+00	0.00E+00	0.00E+00	0.00E+00	0.00E+00	0.00E+00
165	ALL	734973	4034692	7.63E-08	70YrCancerDerived_InhSoilI	7.63E-08	0.00E+00	0.00E+00	0.00E+00	0.00E+00	0.00E+00	0.00E+00	0.00E+00	0.00E+00	0.00E+00	0.00E+00	0.00E+00
166	ALL	732073	4034792	1.61E-07	70YrCancerDerived_InhSoilI	1.61E-07	0.00E+00	0.00E+00	0.00E+00	0.00E+00	0.00E+00	0.00E+00	0.00E+00	0.00E+00	0.00E+00	0.00E+00	0.00E+00

167	ALL	732173	4034792	1.79E-07	70YrCancerDerived_InhSoil[	1.79E-07	0.00E+00	0.00E+00	0.00E+00	0.00E+00	0.00E+00	0.00E+00	0.00E+00	0.00E+00	0.00E+00	0.00E+00	0.00E+00
168	ALL	732273	4034792	2.03E-07	70YrCancerDerived_InhSoil[	2.03E-07	0.00E+00	0.00E+00	0.00E+00	0.00E+00	0.00E+00	0.00E+00	0.00E+00	0.00E+00	0.00E+00	0.00E+00	0.00E+00
169	ALL	732373	4034792	2.30E-07	70YrCancerDerived_InhSoil[	2.30E-07	0.00E+00	0.00E+00	0.00E+00	0.00E+00	0.00E+00	0.00E+00	0.00E+00	0.00E+00	0.00E+00	0.00E+00	0.00E+00
170	ALL	732473	4034792	2.55E-07	70YrCancerDerived_InhSoil[	2.55E-07	0.00E+00	0.00E+00	0.00E+00	0.00E+00	0.00E+00	0.00E+00	0.00E+00	0.00E+00	0.00E+00	0.00E+00	0.00E+00
171	ALL	732573	4034792	2.71E-07	70YrCancerDerived_InhSoil[	2.71E-07	0.00E+00	0.00E+00	0.00E+00	0.00E+00	0.00E+00	0.00E+00	0.00E+00	0.00E+00	0.00E+00	0.00E+00	0.00E+00
172	ALL	732673	4034792	2.65E-07	70YrCancerDerived_InhSoil[	2.65E-07	0.00E+00	0.00E+00	0.00E+00	0.00E+00	0.00E+00	0.00E+00	0.00E+00	0.00E+00	0.00E+00	0.00E+00	0.00E+00
173	ALL	732773	4034792	2.36E-07	70YrCancerDerived_InhSoil[	2.36E-07	0.00E+00	0.00E+00	0.00E+00	0.00E+00	0.00E+00	0.00E+00	0.00E+00	0.00E+00	0.00E+00	0.00E+00	0.00E+00
174	ALL	732873	4034792	1.96E-07	70YrCancerDerived_InhSoil[	1.96E-07	0.00E+00	0.00E+00	0.00E+00	0.00E+00	0.00E+00	0.00E+00	0.00E+00	0.00E+00	0.00E+00	0.00E+00	0.00E+00
175	ALL	732973	4034792	1.59E-07	70YrCancerDerived_InhSoil[	1.59E-07	0.00E+00	0.00E+00	0.00E+00	0.00E+00	0.00E+00	0.00E+00	0.00E+00	0.00E+00	0.00E+00	0.00E+00	0.00E+00
176	ALL	733073	4034792	1.32E-07	70YrCancerDerived_InhSoil[	1.32E-07	0.00E+00	0.00E+00	0.00E+00	0.00E+00	0.00E+00	0.00E+00	0.00E+00	0.00E+00	0.00E+00	0.00E+00	0.00E+00
177	ALL	733173	4034792	1.13E-07	70YrCancerDerived_InhSoil[	1.13E-07	0.00E+00	0.00E+00	0.00E+00	0.00E+00	0.00E+00	0.00E+00	0.00E+00	0.00E+00	0.00E+00	0.00E+00	0.00E+00
178	ALL	733273	4034792	1.01E-07	70YrCancerDerived_InhSoil[	1.01E-07	0.00E+00	0.00E+00	0.00E+00	0.00E+00	0.00E+00	0.00E+00	0.00E+00	0.00E+00	0.00E+00	0.00E+00	0.00E+00
179	ALL	733373	4034792	9.33E-08	70YrCancerDerived_InhSoil[	9.33E-08	0.00E+00	0.00E+00	0.00E+00	0.00E+00	0.00E+00	0.00E+00	0.00E+00	0.00E+00	0.00E+00	0.00E+00	0.00E+00
180	ALL	733473	4034792	8.77E-08	70YrCancerDerived_InhSoil[	8.77E-08	0.00E+00	0.00E+00	0.00E+00	0.00E+00	0.00E+00	0.00E+00	0.00E+00	0.00E+00	0.00E+00	0.00E+00	0.00E+00
181	ALL	733573	4034792	8.20E-08	70YrCancerDerived_InhSoil[	8.20E-08	0.00E+00	0.00E+00	0.00E+00	0.00E+00	0.00E+00	0.00E+00	0.00E+00	0.00E+00	0.00E+00	0.00E+00	0.00E+00
182	ALL	733673	4034792	7.59E-08	70YrCancerDerived_InhSoil[	7.59E-08	0.00E+00	0.00E+00	0.00E+00	0.00E+00	0.00E+00	0.00E+00	0.00E+00	0.00E+00	0.00E+00	0.00E+00	0.00E+00
183	ALL	733773	4034792	7.14E-08	70YrCancerDerived_InhSoil[	7.14E-08	0.00E+00	0.00E+00	0.00E+00	0.00E+00	0.00E+00	0.00E+00	0.00E+00	0.00E+00	0.00E+00	0.00E+00	0.00E+00
184	ALL	733873	4034792	6.90E-08	70YrCancerDerived_InhSoil[	6.90E-08	0.00E+00	0.00E+00	0.00E+00	0.00E+00	0.00E+00	0.00E+00	0.00E+00	0.00E+00	0.00E+00	0.00E+00	0.00E+00
185	ALL	733973	4034792	6.77E-08	70YrCancerDerived_InhSoil[	6.77E-08	0.00E+00	0.00E+00	0.00E+00	0.00E+00	0.00E+00	0.00E+00	0.00E+00	0.00E+00	0.00E+00	0.00E+00	0.00E+00
186	ALL	734073	4034792	6.73E-08	70YrCancerDerived_InhSoil[	6.73E-08	0.00E+00	0.00E+00	0.00E+00	0.00E+00	0.00E+00	0.00E+00	0.00E+00	0.00E+00	0.00E+00	0.00E+00	0.00E+00
187	ALL	734173	4034792	6.75E-08	70YrCancerDerived_InhSoil[	6.75E-08	0.00E+00	0.00E+00	0.00E+00	0.00E+00	0.00E+00	0.00E+00	0.00E+00	0.00E+00	0.00E+00	0.00E+00	0.00E+00
188	ALL	734773	4034792	6.93E-08	70YrCancerDerived_InhSoil[	6.93E-08	0.00E+00	0.00E+00	0.00E+00	0.00E+00	0.00E+00	0.00E+00	0.00E+00	0.00E+00	0.00E+00	0.00E+00	0.00E+00
189	ALL	734873	4034792	6.91E-08	70YrCancerDerived_InhSoil[	6.91E-08	0.00E+00	0.00E+00	0.00E+00	0.00E+00	0.00E+00	0.00E+00	0.00E+00	0.00E+00	0.00E+00	0.00E+00	0.00E+00
190	ALL	734973	4034792	6.88E-08	70YrCancerDerived_InhSoil[	6.88E-08	0.00E+00	0.00E+00	0.00E+00	0.00E+00	0.00E+00	0.00E+00	0.00E+00	0.00E+00	0.00E+00	0.00E+00	0.00E+00
191	ALL	735073	4034792	6.85E-08	70YrCancerDerived_InhSoil[	6.85E-08	0.00E+00	0.00E+00	0.00E+00	0.00E+00	0.00E+00	0.00E+00	0.00E+00	0.00E+00	0.00E+00	0.00E+00	0.00E+00
192	ALL	732073	4034892	1.66E-07	70YrCancerDerived_InhSoil[	1.66E-07	0.00E+00	0.00E+00	0.00E+00	0.00E+00	0.00E+00	0.00E+00	0.00E+00	0.00E+00	0.00E+00	0.00E+00	0.00E+00
193	ALL	732173	4034892	1.83E-07	70YrCancerDerived_InhSoil[	1.83E-07	0.00E+00	0.00E+00	0.00E+00	0.00E+00	0.00E+00	0.00E+00	0.00E+00	0.00E+00	0.00E+00	0.00E+00	0.00E+00
194	ALL	732273	4034892	2.01E-07	70YrCancerDerived_InhSoil[	2.01E-07	0.00E+00	0.00E+00	0.00E+00	0.00E+00	0.00E+00	0.00E+00	0.00E+00	0.00E+00	0.00E+00	0.00E+00	0.00E+00
195	ALL	732373	4034892	2.17E-07	70YrCancerDerived_InhSoil[	2.17E-07	0.00E+00	0.00E+00	0.00E+00	0.00E+00	0.00E+00	0.00E+00	0.00E+00	0.00E+00	0.00E+00	0.00E+00	0.00E+00
196	ALL	732473	4034892	2.27E-07	70YrCancerDerived_InhSoil[	2.27E-07	0.00E+00	0.00E+00	0.00E+00	0.00E+00	0.00E+00	0.00E+00	0.00E+00	0.00E+00	0.00E+00	0.00E+00	0.00E+00
197	ALL	732573	4034892	2.27E-07	70YrCancerDerived_InhSoil[	2.27E-07	0.00E+00	0.00E+00	0.00E+00	0.00E+00	0.00E+00	0.00E+00	0.00E+00	0.00E+00	0.00E+00	0.00E+00	0.00E+00
198	ALL	732673	4034892	2.08E-07	70YrCancerDerived_InhSoil[	2.08E-07	0.00E+00	0.00E+00	0.00E+00	0.00E+00	0.00E+00	0.00E+00	0.00E+00	0.00E+00	0.00E+00	0.00E+00	0.00E+00
199	ALL	732773	4034892	1.78E-07	70YrCancerDerived_InhSoil[	1.78E-07	0.00E+00	0.00E+00	0.00E+00	0.00E+00	0.00E+00	0.00E+00	0.00E+00	0.00E+00	0.00E+00	0.00E+00	0.00E+00
200	ALL	732873	4034892	1.50E-07	70YrCancerDerived_InhSoil[	1.50E-07	0.00E+00	0.00E+00	0.00E+00	0.00E+00	0.00E+00	0.00E+00	0.00E+00	0.00E+00	0.00E+00	0.00E+00	0.00E+00
201	ALL	732973	4034892	1.26E-07	70YrCancerDerived_InhSoil[	1.26E-07	0.00E+00	0.00E+00	0.00E+00	0.00E+00	0.00E+00	0.00E+00	0.00E+00	0.00E+00	0.00E+00	0.00E+00	0.00E+00
202	ALL	733073	4034892	1.09E-07	70YrCancerDerived_InhSoil[	1.09E-07	0.00E+00	0.00E+00	0.00E+00	0.00E+00	0.00E+00	0.00E+00	0.00E+00	0.00E+00	0.00E+00	0.00E+00	0.00E+00
203	ALL	733173	4034892	9.59E-08	70YrCancerDerived_InhSoil[	9.59E-08	0.00E+00	0.00E+00	0.00E+00	0.00E+00	0.00E+00	0.00E+00	0.00E+00	0.00E+00	0.00E+00	0.00E+00	0.00E+00
204	ALL	733273	4034892	8.70E-08	70YrCancerDerived_InhSoil[	8.70E-08	0.00E+00	0.00E+00	0.00E+00	0.00E+00	0.00E+00	0.00E+00	0.00E+00	0.00E+00	0.00E+00	0.00E+00	0.00E+00
205	ALL	733373	4034892	8.14E-08	70YrCancerDerived_InhSoil[	8.14E-08	0.00E+00	0.00E+00	0.00E+00	0.00E+00	0.00E+00	0.00E+00	0.00E+00	0.00E+00	0.00E+00	0.00E+00	0.00E+00
206	ALL	733473	4034892	7.70E-08	70YrCancerDerived_InhSoil[	7.70E-08	0.00E+00	0.00E+00	0.00E+00	0.00E+00	0.00E+00	0.00E+00	0.00E+00	0.00E+00	0.00E+00	0.00E+00	0.00E+00
207	ALL	733573	4034892	7.30E-08	70YrCancerDerived_InhSoil[	7.30E-08	0.00E+00	0.00E+00	0.00E+00	0.00E+00	0.00E+00	0.00E+00	0.00E+00	0.00E+00	0.00E+00	0.00E+00	0.00E+00
208	ALL	733673	4034892	6.85E-08	70YrCancerDerived_InhSoil[	6.85E-08	0.00E+00	0.00E+00	0.00E+00	0.00E+00	0.00E+00	0.00E+00	0.00E+00	0.00E+00	0.00E+00	0.00E+00	0.00E+00
209	ALL	733773	4034892	6.46E-08	70YrCancerDerived_InhSoil[	6.46E-08	0.00E+00	0.00E+00	0.00E+00	0.00E+00	0.00E+00	0.00E+00	0.00E+00	0.00E+00	0.00E+00	0.00E+00	0.00E+00
210	ALL	733873	4034892	6.22E-08	70YrCancerDerived_InhSoil[	6.22E-08	0.00E+00	0.00E+00	0.00E+00	0.00E+00	0.00E+00	0.00E+00	0.00E+00	0.00E+00	0.00E+00	0.00E+00	0.00E+00
211	ALL	733973	4034892	6.10E-08	70YrCancerDerived_InhSoil[	6.10E-08	0.00E+00	0.00E+00	0.00E+00	0.00E+00	0.00E+00	0.00E+00	0.00E+00	0.00E+00	0.00E+00	0.00E+00	0.00E+00
212	ALL	734073	4034892	6.07E-08	70YrCancerDerived_InhSoil[	6.07E-08	0.00E+00	0.00E+00	0.00E+00	0.00E+00	0.00E+00	0.00E+00	0.00E+00	0.00E+00	0.00E+00	0.00E+00	0.00E+00
213	ALL	734173	4034892	6.08E-08	70YrCancerDerived_InhSoil[	6.08E-08	0.00E+00	0.00E+00	0.00E+00	0.00E+00	0.00E+00	0.00E+00	0.00E+00	0.00E+00	0.00E+00	0.00E+00	0.00E+00
214	ALL	734273	4034892	6.14E-08	70YrCancerDerived_InhSoil[	6.14E-08	0.00E+00	0.00E+00	0.00E+00	0.00E+00	0.00E+00	0.00E+00	0.00E+00	0.00E+00	0.00E+00	0.00E+00	0.00E+00
215	ALL	734373	4034892	6.22E-08	70YrCancerDerived_InhSoil[	6.22E-08	0.00E+00	0.00E+00	0.00E+00	0.00E+00	0.00E+00	0.00E+00	0.00E+00	0.00E+00	0.00E+00	0.00E+00	0.00E+00
216	ALL	734473	4034892	6.28E-08	70YrCancerDerived_InhSoil[	6.28E-08	0.00E+00	0.00E+00	0.00E+00	0.00E+00	0.00E+00	0.00E+00	0.00E+00	0.00E+00	0.00E+00	0.00E+00	0.00E+00
217	ALL	734573	4034892	6.33E-08	70YrCancerDerived_InhSoil[	6.33E-08	0.00E+00	0.00E+00	0.00E+00	0.00E+00	0.00E+00	0.00E+00	0.00E+00	0.00E+00	0.00E+00	0.00E+00	0.00E+00
218	ALL	734673	4034892	6.34E-08	70YrCancerDerived_InhSoil[	6.34E-08	0.00E+00	0.00E+00	0.00E+00	0.00E+00	0.00E+00	0.00E+00	0.00E+00	0.00E+00	0.00E+00	0.00E+00	0.00E+00
219	ALL	734873	4034892	6.33E-08	70YrCancerDerived_InhSoil[	6.33E-08	0.00E+00	0.00E+00	0.00E+00	0.00E+00	0.00E+00	0.00E+00	0.00E+00	0.00E+00	0.00E+00	0.00E+00	0.00E+00
220	ALL	734973	4034892	6.31E-08	70YrCancerDerived_InhSoil[	6.31E-08	0.00E+00	0.00E+00	0.00E+00	0.00E+00	0.00E+00	0.00E+00	0.00E+00	0.00E+00	0.00E+00	0.00E+00	0.00E+00
221	ALL	735073	4034892	6.30E-08	70YrCancerDerived_InhSoil[	6.30E-08	0.00E+00	0.00E+00	0.00E+00	0.00E+00	0.00E+00	0.00E+00	0.00E+00	0.00E+00	0.00E+00	0.00E+00	0.00E+00
222	ALL	735173	4034892	6.28E-08	70YrCancerDerived_InhSoil[	6.28E-08	0.00E+00	0.00E+00	0.00E+00	0.00E+00	0.00E+00	0.00E+00	0.00E+00	0.00E+00	0.00E+00	0.00E+00	0.00E+00

223	ALL	732073	4034992	1.66E-07	70YrCancerDerived_InhSoilI	1.66E-07	0.00E+00	0.00E+00	0.00E+00	0.00E+00	0.00E+00	0.00E+00	0.00E+00	0.00E+00	0.00E+00	0.00E+00	0.00E+00
224	ALL	732173	4034992	1.79E-07	70YrCancerDerived_InhSoilI	1.79E-07	0.00E+00	0.00E+00	0.00E+00	0.00E+00	0.00E+00	0.00E+00	0.00E+00	0.00E+00	0.00E+00	0.00E+00	0.00E+00
225	ALL	732273	4034992	1.90E-07	70YrCancerDerived_InhSoilI	1.90E-07	0.00E+00	0.00E+00	0.00E+00	0.00E+00	0.00E+00	0.00E+00	0.00E+00	0.00E+00	0.00E+00	0.00E+00	0.00E+00
226	ALL	732373	4034992	1.94E-07	70YrCancerDerived_InhSoilI	1.94E-07	0.00E+00	0.00E+00	0.00E+00	0.00E+00	0.00E+00	0.00E+00	0.00E+00	0.00E+00	0.00E+00	0.00E+00	0.00E+00
227	ALL	732473	4034992	1.92E-07	70YrCancerDerived_InhSoilI	1.92E-07	0.00E+00	0.00E+00	0.00E+00	0.00E+00	0.00E+00	0.00E+00	0.00E+00	0.00E+00	0.00E+00	0.00E+00	0.00E+00
228	ALL	732573	4034992	1.85E-07	70YrCancerDerived_InhSoilI	1.85E-07	0.00E+00	0.00E+00	0.00E+00	0.00E+00	0.00E+00	0.00E+00	0.00E+00	0.00E+00	0.00E+00	0.00E+00	0.00E+00
229	ALL	732673	4034992	1.66E-07	70YrCancerDerived_InhSoilI	1.66E-07	0.00E+00	0.00E+00	0.00E+00	0.00E+00	0.00E+00	0.00E+00	0.00E+00	0.00E+00	0.00E+00	0.00E+00	0.00E+00
230	ALL	732773	4034992	1.41E-07	70YrCancerDerived_InhSoilI	1.41E-07	0.00E+00	0.00E+00	0.00E+00	0.00E+00	0.00E+00	0.00E+00	0.00E+00	0.00E+00	0.00E+00	0.00E+00	0.00E+00
231	ALL	732873	4034992	1.20E-07	70YrCancerDerived_InhSoilI	1.20E-07	0.00E+00	0.00E+00	0.00E+00	0.00E+00	0.00E+00	0.00E+00	0.00E+00	0.00E+00	0.00E+00	0.00E+00	0.00E+00
232	ALL	732973	4034992	1.05E-07	70YrCancerDerived_InhSoilI	1.05E-07	0.00E+00	0.00E+00	0.00E+00	0.00E+00	0.00E+00	0.00E+00	0.00E+00	0.00E+00	0.00E+00	0.00E+00	0.00E+00
233	ALL	733073	4034992	9.34E-08	70YrCancerDerived_InhSoilI	9.34E-08	0.00E+00	0.00E+00	0.00E+00	0.00E+00	0.00E+00	0.00E+00	0.00E+00	0.00E+00	0.00E+00	0.00E+00	0.00E+00
234	ALL	733173	4034992	8.40E-08	70YrCancerDerived_InhSoilI	8.40E-08	0.00E+00	0.00E+00	0.00E+00	0.00E+00	0.00E+00	0.00E+00	0.00E+00	0.00E+00	0.00E+00	0.00E+00	0.00E+00
235	ALL	733273	4034992	7.76E-08	70YrCancerDerived_InhSoilI	7.76E-08	0.00E+00	0.00E+00	0.00E+00	0.00E+00	0.00E+00	0.00E+00	0.00E+00	0.00E+00	0.00E+00	0.00E+00	0.00E+00
236	ALL	733373	4034992	7.28E-08	70YrCancerDerived_InhSoilI	7.28E-08	0.00E+00	0.00E+00	0.00E+00	0.00E+00	0.00E+00	0.00E+00	0.00E+00	0.00E+00	0.00E+00	0.00E+00	0.00E+00
237	ALL	733473	4034992	6.92E-08	70YrCancerDerived_InhSoilI	6.92E-08	0.00E+00	0.00E+00	0.00E+00	0.00E+00	0.00E+00	0.00E+00	0.00E+00	0.00E+00	0.00E+00	0.00E+00	0.00E+00
238	ALL	733573	4034992	6.62E-08	70YrCancerDerived_InhSoilI	6.62E-08	0.00E+00	0.00E+00	0.00E+00	0.00E+00	0.00E+00	0.00E+00	0.00E+00	0.00E+00	0.00E+00	0.00E+00	0.00E+00
239	ALL	733673	4034992	6.29E-08	70YrCancerDerived_InhSoilI	6.29E-08	0.00E+00	0.00E+00	0.00E+00	0.00E+00	0.00E+00	0.00E+00	0.00E+00	0.00E+00	0.00E+00	0.00E+00	0.00E+00
240	ALL	733773	4034992	5.96E-08	70YrCancerDerived_InhSoilI	5.96E-08	0.00E+00	0.00E+00	0.00E+00	0.00E+00	0.00E+00	0.00E+00	0.00E+00	0.00E+00	0.00E+00	0.00E+00	0.00E+00
241	ALL	733873	4034992	5.71E-08	70YrCancerDerived_InhSoilI	5.71E-08	0.00E+00	0.00E+00	0.00E+00	0.00E+00	0.00E+00	0.00E+00	0.00E+00	0.00E+00	0.00E+00	0.00E+00	0.00E+00
242	ALL	733973	4034992	5.60E-08	70YrCancerDerived_InhSoilI	5.60E-08	0.00E+00	0.00E+00	0.00E+00	0.00E+00	0.00E+00	0.00E+00	0.00E+00	0.00E+00	0.00E+00	0.00E+00	0.00E+00
243	ALL	734073	4034992	5.56E-08	70YrCancerDerived_InhSoilI	5.56E-08	0.00E+00	0.00E+00	0.00E+00	0.00E+00	0.00E+00	0.00E+00	0.00E+00	0.00E+00	0.00E+00	0.00E+00	0.00E+00
244	ALL	734173	4034992	5.57E-08	70YrCancerDerived_InhSoilI	5.57E-08	0.00E+00	0.00E+00	0.00E+00	0.00E+00	0.00E+00	0.00E+00	0.00E+00	0.00E+00	0.00E+00	0.00E+00	0.00E+00
245	ALL	734273	4034992	5.60E-08	70YrCancerDerived_InhSoilI	5.60E-08	0.00E+00	0.00E+00	0.00E+00	0.00E+00	0.00E+00	0.00E+00	0.00E+00	0.00E+00	0.00E+00	0.00E+00	0.00E+00
246	ALL	734373	4034992	5.67E-08	70YrCancerDerived_InhSoilI	5.67E-08	0.00E+00	0.00E+00	0.00E+00	0.00E+00	0.00E+00	0.00E+00	0.00E+00	0.00E+00	0.00E+00	0.00E+00	0.00E+00
247	ALL	734473	4034992	5.76E-08	70YrCancerDerived_InhSoilI	5.76E-08	0.00E+00	0.00E+00	0.00E+00	0.00E+00	0.00E+00	0.00E+00	0.00E+00	0.00E+00	0.00E+00	0.00E+00	0.00E+00
248	ALL	734573	4034992	5.83E-08	70YrCancerDerived_InhSoilI	5.83E-08	0.00E+00	0.00E+00	0.00E+00	0.00E+00	0.00E+00	0.00E+00	0.00E+00	0.00E+00	0.00E+00	0.00E+00	0.00E+00
249	ALL	734673	4034992	5.87E-08	70YrCancerDerived_InhSoilI	5.87E-08	0.00E+00	0.00E+00	0.00E+00	0.00E+00	0.00E+00	0.00E+00	0.00E+00	0.00E+00	0.00E+00	0.00E+00	0.00E+00
250	ALL	734773	4034992	5.89E-08	70YrCancerDerived_InhSoilI	5.89E-08	0.00E+00	0.00E+00	0.00E+00	0.00E+00	0.00E+00	0.00E+00	0.00E+00	0.00E+00	0.00E+00	0.00E+00	0.00E+00
251	ALL	734973	4034992	5.89E-08	70YrCancerDerived_InhSoilI	5.89E-08	0.00E+00	0.00E+00	0.00E+00	0.00E+00	0.00E+00	0.00E+00	0.00E+00	0.00E+00	0.00E+00	0.00E+00	0.00E+00
252	ALL	735073	4034992	5.88E-08	70YrCancerDerived_InhSoilI	5.88E-08	0.00E+00	0.00E+00	0.00E+00	0.00E+00	0.00E+00	0.00E+00	0.00E+00	0.00E+00	0.00E+00	0.00E+00	0.00E+00
253	ALL	735173	4034992	5.86E-08	70YrCancerDerived_InhSoilI	5.86E-08	0.00E+00	0.00E+00	0.00E+00	0.00E+00	0.00E+00	0.00E+00	0.00E+00	0.00E+00	0.00E+00	0.00E+00	0.00E+00
254	ALL	735273	4034992	5.84E-08	70YrCancerDerived_InhSoilI	5.84E-08	0.00E+00	0.00E+00	0.00E+00	0.00E+00	0.00E+00	0.00E+00	0.00E+00	0.00E+00	0.00E+00	0.00E+00	0.00E+00
255	ALL	734073	4035092	5.16E-08	70YrCancerDerived_InhSoilI	5.16E-08	0.00E+00	0.00E+00	0.00E+00	0.00E+00	0.00E+00	0.00E+00	0.00E+00	0.00E+00	0.00E+00	0.00E+00	0.00E+00
256	ALL	734173	4035092	5.16E-08	70YrCancerDerived_InhSoilI	5.16E-08	0.00E+00	0.00E+00	0.00E+00	0.00E+00	0.00E+00	0.00E+00	0.00E+00	0.00E+00	0.00E+00	0.00E+00	0.00E+00
257	ALL	734273	4035092	5.19E-08	70YrCancerDerived_InhSoilI	5.19E-08	0.00E+00	0.00E+00	0.00E+00	0.00E+00	0.00E+00	0.00E+00	0.00E+00	0.00E+00	0.00E+00	0.00E+00	0.00E+00
258	ALL	734373	4035092	5.24E-08	70YrCancerDerived_InhSoilI	5.24E-08	0.00E+00	0.00E+00	0.00E+00	0.00E+00	0.00E+00	0.00E+00	0.00E+00	0.00E+00	0.00E+00	0.00E+00	0.00E+00
259	ALL	734473	4035092	5.32E-08	70YrCancerDerived_InhSoilI	5.32E-08	0.00E+00	0.00E+00	0.00E+00	0.00E+00	0.00E+00	0.00E+00	0.00E+00	0.00E+00	0.00E+00	0.00E+00	0.00E+00
260	ALL	734573	4035092	5.39E-08	70YrCancerDerived_InhSoilI	5.39E-08	0.00E+00	0.00E+00	0.00E+00	0.00E+00	0.00E+00	0.00E+00	0.00E+00	0.00E+00	0.00E+00	0.00E+00	0.00E+00
261	ALL	734673	4035092	5.45E-08	70YrCancerDerived_InhSoilI	5.45E-08	0.00E+00	0.00E+00	0.00E+00	0.00E+00	0.00E+00	0.00E+00	0.00E+00	0.00E+00	0.00E+00	0.00E+00	0.00E+00
262	ALL	734773	4035092	5.50E-08	70YrCancerDerived_InhSoilI	5.50E-08	0.00E+00	0.00E+00	0.00E+00	0.00E+00	0.00E+00	0.00E+00	0.00E+00	0.00E+00	0.00E+00	0.00E+00	0.00E+00
263	ALL	734873	4035092	5.53E-08	70YrCancerDerived_InhSoilI	5.53E-08	0.00E+00	0.00E+00	0.00E+00	0.00E+00	0.00E+00	0.00E+00	0.00E+00	0.00E+00	0.00E+00	0.00E+00	0.00E+00
264	ALL	735073	4035092	5.54E-08	70YrCancerDerived_InhSoilI	5.54E-08	0.00E+00	0.00E+00	0.00E+00	0.00E+00	0.00E+00	0.00E+00	0.00E+00	0.00E+00	0.00E+00	0.00E+00	0.00E+00
265	ALL	735173	4035092	5.53E-08	70YrCancerDerived_InhSoilI	5.53E-08	0.00E+00	0.00E+00	0.00E+00	0.00E+00	0.00E+00	0.00E+00	0.00E+00	0.00E+00	0.00E+00	0.00E+00	0.00E+00
266	ALL	735273	4035092	5.51E-08	70YrCancerDerived_InhSoilI	5.51E-08	0.00E+00	0.00E+00	0.00E+00	0.00E+00	0.00E+00	0.00E+00	0.00E+00	0.00E+00	0.00E+00	0.00E+00	0.00E+00
267	ALL	735373	4035092	5.49E-08	70YrCancerDerived_InhSoilI	5.49E-08	0.00E+00	0.00E+00	0.00E+00	0.00E+00	0.00E+00	0.00E+00	0.00E+00	0.00E+00	0.00E+00	0.00E+00	0.00E+00
268	ALL	734073	4035192	4.84E-08	70YrCancerDerived_InhSoilI	4.84E-08	0.00E+00	0.00E+00	0.00E+00	0.00E+00	0.00E+00	0.00E+00	0.00E+00	0.00E+00	0.00E+00	0.00E+00	0.00E+00
269	ALL	734173	4035192	4.84E-08	70YrCancerDerived_InhSoilI	4.84E-08	0.00E+00	0.00E+00	0.00E+00	0.00E+00	0.00E+00	0.00E+00	0.00E+00	0.00E+00	0.00E+00	0.00E+00	0.00E+00
270	ALL	734273	4035192	4.87E-08	70YrCancerDerived_InhSoilI	4.87E-08	0.00E+00	0.00E+00	0.00E+00	0.00E+00	0.00E+00	0.00E+00	0.00E+00	0.00E+00	0.00E+00	0.00E+00	0.00E+00
271	ALL	734373	4035192	4.91E-08	70YrCancerDerived_InhSoilI	4.91E-08	0.00E+00	0.00E+00	0.00E+00	0.00E+00	0.00E+00	0.00E+00	0.00E+00	0.00E+00	0.00E+00	0.00E+00	0.00E+00
272	ALL	734473	4035192	4.96E-08	70YrCancerDerived_InhSoilI	4.96E-08	0.00E+00	0.00E+00	0.00E+00	0.00E+00	0.00E+00	0.00E+00	0.00E+00	0.00E+00	0.00E+00	0.00E+00	0.00E+00
273	ALL	734573	4035192	5.02E-08	70YrCancerDerived_InhSoilI	5.02E-08	0.00E+00	0.00E+00	0.00E+00	0.00E+00	0.00E+00	0.00E+00	0.00E+00	0.00E+00	0.00E+00	0.00E+00	0.00E+00
274	ALL	734673	4035192	5.08E-08	70YrCancerDerived_InhSoilI	5.08E-08	0.00E+00	0.00E+00	0.00E+00	0.00E+00	0.00E+00	0.00E+00	0.00E+00	0.00E+00	0.00E+00	0.00E+00	0.00E+00
275	ALL	734773	4035192	5.16E-08	70YrCancerDerived_InhSoilI	5.16E-08	0.00E+00	0.00E+00	0.00E+00	0.00E+00	0.00E+00	0.00E+00	0.00E+00	0.00E+00	0.00E+00	0.00E+00	0.00E+00
276	ALL	734873	4035192	5.21E-08	70YrCancerDerived_InhSoilI	5.21E-08	0.00E+00	0.00E+00	0.00E+00	0.00E+00	0.00E+00	0.00E+00	0.00E+00	0.00E+00	0.00E+00	0.00E+00	0.00E+00
277	ALL	734973	4035192	5.24E-08	70YrCancerDerived_InhSoilI	5.24E-08	0.00E+00	0.00E+00	0.00E+00	0.00E+00	0.00E+00	0.00E+00	0.00E+00	0.00E+00	0.00E+00	0.00E+00	0.00E+00
278	ALL	735173	4035192	5.26E-08	70YrCancerDerived_InhSoilI	5.26E-08	0.00E+00	0.00E+00	0.00E+00	0.00E+00	0.00E+00	0.00E+00	0.00E+00	0.00E+00	0.00E+00	0.00E+00	0.00E+00

279	ALL	735273	4035192	5.24E-08	70YrCancerDerived_InhSoilI	5.24E-08	0.00E+00	0.00E+00	0.00E+00	0.00E+00	0.00E+00	0.00E+00	0.00E+00	0.00E+00	0.00E+00	0.00E+00	0.00E+00
280	ALL	735373	4035192	5.23E-08	70YrCancerDerived_InhSoilI	5.23E-08	0.00E+00	0.00E+00	0.00E+00	0.00E+00	0.00E+00	0.00E+00	0.00E+00	0.00E+00	0.00E+00	0.00E+00	0.00E+00
281	ALL	735473	4035192	5.22E-08	70YrCancerDerived_InhSoilI	5.22E-08	0.00E+00	0.00E+00	0.00E+00	0.00E+00	0.00E+00	0.00E+00	0.00E+00	0.00E+00	0.00E+00	0.00E+00	0.00E+00
282	ALL	735573	4035192	5.21E-08	70YrCancerDerived_InhSoilI	5.21E-08	0.00E+00	0.00E+00	0.00E+00	0.00E+00	0.00E+00	0.00E+00	0.00E+00	0.00E+00	0.00E+00	0.00E+00	0.00E+00
283	ALL	735673	4035192	5.20E-08	70YrCancerDerived_InhSoilI	5.20E-08	0.00E+00	0.00E+00	0.00E+00	0.00E+00	0.00E+00	0.00E+00	0.00E+00	0.00E+00	0.00E+00	0.00E+00	0.00E+00
284	ALL	735773	4035192	5.19E-08	70YrCancerDerived_InhSoilI	5.19E-08	0.00E+00	0.00E+00	0.00E+00	0.00E+00	0.00E+00	0.00E+00	0.00E+00	0.00E+00	0.00E+00	0.00E+00	0.00E+00
285	ALL	735873	4035192	5.18E-08	70YrCancerDerived_InhSoilI	5.18E-08	0.00E+00	0.00E+00	0.00E+00	0.00E+00	0.00E+00	0.00E+00	0.00E+00	0.00E+00	0.00E+00	0.00E+00	0.00E+00
286	ALL	735973	4035192	5.17E-08	70YrCancerDerived_InhSoilI	5.17E-08	0.00E+00	0.00E+00	0.00E+00	0.00E+00	0.00E+00	0.00E+00	0.00E+00	0.00E+00	0.00E+00	0.00E+00	0.00E+00
287	ALL	736073	4035192	5.16E-08	70YrCancerDerived_InhSoilI	5.16E-08	0.00E+00	0.00E+00	0.00E+00	0.00E+00	0.00E+00	0.00E+00	0.00E+00	0.00E+00	0.00E+00	0.00E+00	0.00E+00
288	ALL	736173	4035192	5.15E-08	70YrCancerDerived_InhSoilI	5.15E-08	0.00E+00	0.00E+00	0.00E+00	0.00E+00	0.00E+00	0.00E+00	0.00E+00	0.00E+00	0.00E+00	0.00E+00	0.00E+00
289	ALL	736273	4035192	5.14E-08	70YrCancerDerived_InhSoilI	5.14E-08	0.00E+00	0.00E+00	0.00E+00	0.00E+00	0.00E+00	0.00E+00	0.00E+00	0.00E+00	0.00E+00	0.00E+00	0.00E+00
290	ALL	736373	4035192	5.12E-08	70YrCancerDerived_InhSoilI	5.12E-08	0.00E+00	0.00E+00	0.00E+00	0.00E+00	0.00E+00	0.00E+00	0.00E+00	0.00E+00	0.00E+00	0.00E+00	0.00E+00
291	ALL	736473	4035192	5.12E-08	70YrCancerDerived_InhSoilI	5.12E-08	0.00E+00	0.00E+00	0.00E+00	0.00E+00	0.00E+00	0.00E+00	0.00E+00	0.00E+00	0.00E+00	0.00E+00	0.00E+00
292	ALL	736573	4035192	5.10E-08	70YrCancerDerived_InhSoilI	5.10E-08	0.00E+00	0.00E+00	0.00E+00	0.00E+00	0.00E+00	0.00E+00	0.00E+00	0.00E+00	0.00E+00	0.00E+00	0.00E+00
293	ALL	736673	4035192	5.09E-08	70YrCancerDerived_InhSoilI	5.09E-08	0.00E+00	0.00E+00	0.00E+00	0.00E+00	0.00E+00	0.00E+00	0.00E+00	0.00E+00	0.00E+00	0.00E+00	0.00E+00
294	ALL	736773	4035192	5.08E-08	70YrCancerDerived_InhSoilI	5.08E-08	0.00E+00	0.00E+00	0.00E+00	0.00E+00	0.00E+00	0.00E+00	0.00E+00	0.00E+00	0.00E+00	0.00E+00	0.00E+00
295	ALL	736873	4035192	5.07E-08	70YrCancerDerived_InhSoilI	5.07E-08	0.00E+00	0.00E+00	0.00E+00	0.00E+00	0.00E+00	0.00E+00	0.00E+00	0.00E+00	0.00E+00	0.00E+00	0.00E+00
296	ALL	736973	4035192	5.06E-08	70YrCancerDerived_InhSoilI	5.06E-08	0.00E+00	0.00E+00	0.00E+00	0.00E+00	0.00E+00	0.00E+00	0.00E+00	0.00E+00	0.00E+00	0.00E+00	0.00E+00
297	ALL	737073	4035192	5.05E-08	70YrCancerDerived_InhSoilI	5.05E-08	0.00E+00	0.00E+00	0.00E+00	0.00E+00	0.00E+00	0.00E+00	0.00E+00	0.00E+00	0.00E+00	0.00E+00	0.00E+00
298	ALL	737173	4035192	5.04E-08	70YrCancerDerived_InhSoilI	5.04E-08	0.00E+00	0.00E+00	0.00E+00	0.00E+00	0.00E+00	0.00E+00	0.00E+00	0.00E+00	0.00E+00	0.00E+00	0.00E+00
299	ALL	737273	4035192	5.03E-08	70YrCancerDerived_InhSoilI	5.03E-08	0.00E+00	0.00E+00	0.00E+00	0.00E+00	0.00E+00	0.00E+00	0.00E+00	0.00E+00	0.00E+00	0.00E+00	0.00E+00
300	ALL	737373	4035192	5.02E-08	70YrCancerDerived_InhSoilI	5.02E-08	0.00E+00	0.00E+00	0.00E+00	0.00E+00	0.00E+00	0.00E+00	0.00E+00	0.00E+00	0.00E+00	0.00E+00	0.00E+00
301	ALL	737473	4035192	5.01E-08	70YrCancerDerived_InhSoilI	5.01E-08	0.00E+00	0.00E+00	0.00E+00	0.00E+00	0.00E+00	0.00E+00	0.00E+00	0.00E+00	0.00E+00	0.00E+00	0.00E+00
302	ALL	737573	4035192	5.00E-08	70YrCancerDerived_InhSoilI	5.00E-08	0.00E+00	0.00E+00	0.00E+00	0.00E+00	0.00E+00	0.00E+00	0.00E+00	0.00E+00	0.00E+00	0.00E+00	0.00E+00
303	ALL	737673	4035192	4.99E-08	70YrCancerDerived_InhSoilI	4.99E-08	0.00E+00	0.00E+00	0.00E+00	0.00E+00	0.00E+00	0.00E+00	0.00E+00	0.00E+00	0.00E+00	0.00E+00	0.00E+00
304	ALL	737773	4035192	4.97E-08	70YrCancerDerived_InhSoilI	4.97E-08	0.00E+00	0.00E+00	0.00E+00	0.00E+00	0.00E+00	0.00E+00	0.00E+00	0.00E+00	0.00E+00	0.00E+00	0.00E+00
305	ALL	737873	4035192	4.96E-08	70YrCancerDerived_InhSoilI	4.96E-08	0.00E+00	0.00E+00	0.00E+00	0.00E+00	0.00E+00	0.00E+00	0.00E+00	0.00E+00	0.00E+00	0.00E+00	0.00E+00
306	ALL	737973	4035192	4.95E-08	70YrCancerDerived_InhSoilI	4.95E-08	0.00E+00	0.00E+00	0.00E+00	0.00E+00	0.00E+00	0.00E+00	0.00E+00	0.00E+00	0.00E+00	0.00E+00	0.00E+00
307	ALL	734673	4035292	4.76E-08	70YrCancerDerived_InhSoilI	4.76E-08	0.00E+00	0.00E+00	0.00E+00	0.00E+00	0.00E+00	0.00E+00	0.00E+00	0.00E+00	0.00E+00	0.00E+00	0.00E+00
308	ALL	734773	4035292	4.84E-08	70YrCancerDerived_InhSoilI	4.84E-08	0.00E+00	0.00E+00	0.00E+00	0.00E+00	0.00E+00	0.00E+00	0.00E+00	0.00E+00	0.00E+00	0.00E+00	0.00E+00
309	ALL	734873	4035292	4.91E-08	70YrCancerDerived_InhSoilI	4.91E-08	0.00E+00	0.00E+00	0.00E+00	0.00E+00	0.00E+00	0.00E+00	0.00E+00	0.00E+00	0.00E+00	0.00E+00	0.00E+00
310	ALL	734973	4035292	4.96E-08	70YrCancerDerived_InhSoilI	4.96E-08	0.00E+00	0.00E+00	0.00E+00	0.00E+00	0.00E+00	0.00E+00	0.00E+00	0.00E+00	0.00E+00	0.00E+00	0.00E+00
311	ALL	735073	4035292	5.00E-08	70YrCancerDerived_InhSoilI	5.00E-08	0.00E+00	0.00E+00	0.00E+00	0.00E+00	0.00E+00	0.00E+00	0.00E+00	0.00E+00	0.00E+00	0.00E+00	0.00E+00
312	ALL	735273	4035292	5.03E-08	70YrCancerDerived_InhSoilI	5.03E-08	0.00E+00	0.00E+00	0.00E+00	0.00E+00	0.00E+00	0.00E+00	0.00E+00	0.00E+00	0.00E+00	0.00E+00	0.00E+00
313	ALL	735373	4035292	5.02E-08	70YrCancerDerived_InhSoilI	5.02E-08	0.00E+00	0.00E+00	0.00E+00	0.00E+00	0.00E+00	0.00E+00	0.00E+00	0.00E+00	0.00E+00	0.00E+00	0.00E+00
314	ALL	735473	4035292	5.01E-08	70YrCancerDerived_InhSoilI	5.01E-08	0.00E+00	0.00E+00	0.00E+00	0.00E+00	0.00E+00	0.00E+00	0.00E+00	0.00E+00	0.00E+00	0.00E+00	0.00E+00
315	ALL	735573	4035292	5.00E-08	70YrCancerDerived_InhSoilI	5.00E-08	0.00E+00	0.00E+00	0.00E+00	0.00E+00	0.00E+00	0.00E+00	0.00E+00	0.00E+00	0.00E+00	0.00E+00	0.00E+00
316	ALL	735673	4035292	4.99E-08	70YrCancerDerived_InhSoilI	4.99E-08	0.00E+00	0.00E+00	0.00E+00	0.00E+00	0.00E+00	0.00E+00	0.00E+00	0.00E+00	0.00E+00	0.00E+00	0.00E+00
317	ALL	735773	4035292	4.99E-08	70YrCancerDerived_InhSoilI	4.99E-08	0.00E+00	0.00E+00	0.00E+00	0.00E+00	0.00E+00	0.00E+00	0.00E+00	0.00E+00	0.00E+00	0.00E+00	0.00E+00
318	ALL	735873	4035292	4.98E-08	70YrCancerDerived_InhSoilI	4.98E-08	0.00E+00	0.00E+00	0.00E+00	0.00E+00	0.00E+00	0.00E+00	0.00E+00	0.00E+00	0.00E+00	0.00E+00	0.00E+00
319	ALL	735973	4035292	4.98E-08	70YrCancerDerived_InhSoilI	4.98E-08	0.00E+00	0.00E+00	0.00E+00	0.00E+00	0.00E+00	0.00E+00	0.00E+00	0.00E+00	0.00E+00	0.00E+00	0.00E+00
320	ALL	736073	4035292	4.98E-08	70YrCancerDerived_InhSoilI	4.98E-08	0.00E+00	0.00E+00	0.00E+00	0.00E+00	0.00E+00	0.00E+00	0.00E+00	0.00E+00	0.00E+00	0.00E+00	0.00E+00
321	ALL	736173	4035292	4.97E-08	70YrCancerDerived_InhSoilI	4.97E-08	0.00E+00	0.00E+00	0.00E+00	0.00E+00	0.00E+00	0.00E+00	0.00E+00	0.00E+00	0.00E+00	0.00E+00	0.00E+00
322	ALL	736273	4035292	4.96E-08	70YrCancerDerived_InhSoilI	4.96E-08	0.00E+00	0.00E+00	0.00E+00	0.00E+00	0.00E+00	0.00E+00	0.00E+00	0.00E+00	0.00E+00	0.00E+00	0.00E+00
323	ALL	736373	4035292	4.96E-08	70YrCancerDerived_InhSoilI	4.96E-08	0.00E+00	0.00E+00	0.00E+00	0.00E+00	0.00E+00	0.00E+00	0.00E+00	0.00E+00	0.00E+00	0.00E+00	0.00E+00
324	ALL	736473	4035292	4.95E-08	70YrCancerDerived_InhSoilI	4.95E-08	0.00E+00	0.00E+00	0.00E+00	0.00E+00	0.00E+00	0.00E+00	0.00E+00	0.00E+00	0.00E+00	0.00E+00	0.00E+00
325	ALL	736573	4035292	4.95E-08	70YrCancerDerived_InhSoilI	4.95E-08	0.00E+00	0.00E+00	0.00E+00	0.00E+00	0.00E+00	0.00E+00	0.00E+00	0.00E+00	0.00E+00	0.00E+00	0.00E+00
326	ALL	736673	4035292	4.94E-08	70YrCancerDerived_InhSoilI	4.94E-08	0.00E+00	0.00E+00	0.00E+00	0.00E+00	0.00E+00	0.00E+00	0.00E+00	0.00E+00	0.00E+00	0.00E+00	0.00E+00
327	ALL	736773	4035292	4.94E-08	70YrCancerDerived_InhSoilI	4.94E-08	0.00E+00	0.00E+00	0.00E+00	0.00E+00	0.00E+00	0.00E+00	0.00E+00	0.00E+00	0.00E+00	0.00E+00	0.00E+00
328	ALL	736873	4035292	4.93E-08	70YrCancerDerived_InhSoilI	4.93E-08	0.00E+00	0.00E+00	0.00E+00	0.00E+00	0.00E+00	0.00E+00	0.00E+00	0.00E+00	0.00E+00	0.00E+00	0.00E+00
329	ALL	736973	4035292	4.92E-08	70YrCancerDerived_InhSoilI	4.92E-08	0.00E+00	0.00E+00	0.00E+00	0.00E+00	0.00E+00	0.00E+00	0.00E+00	0.00E+00	0.00E+00	0.00E+00	0.00E+00
330	ALL	737073	4035292	4.92E-08	70YrCancerDerived_InhSoilI	4.92E-08	0.00E+00	0.00E+00	0.00E+00	0.00E+00	0.00E+00	0.00E+00	0.00E+00	0.00E+00	0.00E+00	0.00E+00	0.00E+00
331	ALL	737173	4035292	4.91E-08	70YrCancerDerived_InhSoilI	4.91E-08	0.00E+00	0.00E+00	0.00E+00	0.00E+00	0.00E+00	0.00E+00	0.00E+00	0.00E+00	0.00E+00	0.00E+00	0.00E+00
332	ALL	737273	4035292	4.91E-08	70YrCancerDerived_InhSoilI	4.91E-08	0.00E+00	0.00E+00	0.00E+00	0.00E+00	0.00E+00	0.00E+00	0.00E+00	0.00E+00	0.00E+00	0.00E+00	0.00E+00
333	ALL	737373	4035292	4.90E-08	70YrCancerDerived_InhSoilI	4.90E-08	0.00E+00	0.00E+00	0.00E+00	0.00E+00	0.00E+00	0.00E+00	0.00E+00	0.00E+00	0.00E+00	0.00E+00	0.00E+00
334	ALL	737473	4035292	4.90E-08	70YrCancerDerived_InhSoilI	4.90E-08	0.00E+00	0.00E+00	0.00E+00	0.00E+00	0.00E+00	0.00E+00	0.00E+00	0.00E+00	0.00E+00	0.00E+00	0.00E+00

335	ALL	737573	4035292	4.89E-08	70YrCancerDerived_InhSoilI	4.89E-08	0.00E+00	0.00E+00	0.00E+00	0.00E+00	0.00E+00	0.00E+00	0.00E+00	0.00E+00	0.00E+00	0.00E+00	0.00E+00
336	ALL	737673	4035292	4.88E-08	70YrCancerDerived_InhSoilI	4.88E-08	0.00E+00	0.00E+00	0.00E+00	0.00E+00	0.00E+00	0.00E+00	0.00E+00	0.00E+00	0.00E+00	0.00E+00	0.00E+00
337	ALL	737773	4035292	4.88E-08	70YrCancerDerived_InhSoilI	4.88E-08	0.00E+00	0.00E+00	0.00E+00	0.00E+00	0.00E+00	0.00E+00	0.00E+00	0.00E+00	0.00E+00	0.00E+00	0.00E+00
338	ALL	737873	4035292	4.87E-08	70YrCancerDerived_InhSoilI	4.87E-08	0.00E+00	0.00E+00	0.00E+00	0.00E+00	0.00E+00	0.00E+00	0.00E+00	0.00E+00	0.00E+00	0.00E+00	0.00E+00
339	ALL	737973	4035292	4.86E-08	70YrCancerDerived_InhSoilI	4.86E-08	0.00E+00	0.00E+00	0.00E+00	0.00E+00	0.00E+00	0.00E+00	0.00E+00	0.00E+00	0.00E+00	0.00E+00	0.00E+00
340	ALL	734873	4035392	4.64E-08	70YrCancerDerived_InhSoilI	4.64E-08	0.00E+00	0.00E+00	0.00E+00	0.00E+00	0.00E+00	0.00E+00	0.00E+00	0.00E+00	0.00E+00	0.00E+00	0.00E+00
341	ALL	734973	4035392	4.70E-08	70YrCancerDerived_InhSoilI	4.70E-08	0.00E+00	0.00E+00	0.00E+00	0.00E+00	0.00E+00	0.00E+00	0.00E+00	0.00E+00	0.00E+00	0.00E+00	0.00E+00
342	ALL	735073	4035392	4.76E-08	70YrCancerDerived_InhSoilI	4.76E-08	0.00E+00	0.00E+00	0.00E+00	0.00E+00	0.00E+00	0.00E+00	0.00E+00	0.00E+00	0.00E+00	0.00E+00	0.00E+00
343	ALL	735173	4035392	4.80E-08	70YrCancerDerived_InhSoilI	4.80E-08	0.00E+00	0.00E+00	0.00E+00	0.00E+00	0.00E+00	0.00E+00	0.00E+00	0.00E+00	0.00E+00	0.00E+00	0.00E+00
344	ALL	735373	4035392	4.83E-08	70YrCancerDerived_InhSoilI	4.83E-08	0.00E+00	0.00E+00	0.00E+00	0.00E+00	0.00E+00	0.00E+00	0.00E+00	0.00E+00	0.00E+00	0.00E+00	0.00E+00
345	ALL	735473	4035392	4.84E-08	70YrCancerDerived_InhSoilI	4.84E-08	0.00E+00	0.00E+00	0.00E+00	0.00E+00	0.00E+00	0.00E+00	0.00E+00	0.00E+00	0.00E+00	0.00E+00	0.00E+00
346	ALL	735573	4035392	4.83E-08	70YrCancerDerived_InhSoilI	4.83E-08	0.00E+00	0.00E+00	0.00E+00	0.00E+00	0.00E+00	0.00E+00	0.00E+00	0.00E+00	0.00E+00	0.00E+00	0.00E+00
347	ALL	735673	4035392	4.83E-08	70YrCancerDerived_InhSoilI	4.83E-08	0.00E+00	0.00E+00	0.00E+00	0.00E+00	0.00E+00	0.00E+00	0.00E+00	0.00E+00	0.00E+00	0.00E+00	0.00E+00
348	ALL	735773	4035392	4.82E-08	70YrCancerDerived_InhSoilI	4.82E-08	0.00E+00	0.00E+00	0.00E+00	0.00E+00	0.00E+00	0.00E+00	0.00E+00	0.00E+00	0.00E+00	0.00E+00	0.00E+00
349	ALL	735873	4035392	4.82E-08	70YrCancerDerived_InhSoilI	4.82E-08	0.00E+00	0.00E+00	0.00E+00	0.00E+00	0.00E+00	0.00E+00	0.00E+00	0.00E+00	0.00E+00	0.00E+00	0.00E+00
350	ALL	735973	4035392	4.81E-08	70YrCancerDerived_InhSoilI	4.81E-08	0.00E+00	0.00E+00	0.00E+00	0.00E+00	0.00E+00	0.00E+00	0.00E+00	0.00E+00	0.00E+00	0.00E+00	0.00E+00
351	ALL	736073	4035392	4.81E-08	70YrCancerDerived_InhSoilI	4.81E-08	0.00E+00	0.00E+00	0.00E+00	0.00E+00	0.00E+00	0.00E+00	0.00E+00	0.00E+00	0.00E+00	0.00E+00	0.00E+00
352	ALL	736173	4035392	4.81E-08	70YrCancerDerived_InhSoilI	4.81E-08	0.00E+00	0.00E+00	0.00E+00	0.00E+00	0.00E+00	0.00E+00	0.00E+00	0.00E+00	0.00E+00	0.00E+00	0.00E+00
353	ALL	736273	4035392	4.81E-08	70YrCancerDerived_InhSoilI	4.81E-08	0.00E+00	0.00E+00	0.00E+00	0.00E+00	0.00E+00	0.00E+00	0.00E+00	0.00E+00	0.00E+00	0.00E+00	0.00E+00
354	ALL	736373	4035392	4.81E-08	70YrCancerDerived_InhSoilI	4.81E-08	0.00E+00	0.00E+00	0.00E+00	0.00E+00	0.00E+00	0.00E+00	0.00E+00	0.00E+00	0.00E+00	0.00E+00	0.00E+00
355	ALL	736473	4035392	4.81E-08	70YrCancerDerived_InhSoilI	4.81E-08	0.00E+00	0.00E+00	0.00E+00	0.00E+00	0.00E+00	0.00E+00	0.00E+00	0.00E+00	0.00E+00	0.00E+00	0.00E+00
356	ALL	736573	4035392	4.81E-08	70YrCancerDerived_InhSoilI	4.81E-08	0.00E+00	0.00E+00	0.00E+00	0.00E+00	0.00E+00	0.00E+00	0.00E+00	0.00E+00	0.00E+00	0.00E+00	0.00E+00
357	ALL	736673	4035392	4.81E-08	70YrCancerDerived_InhSoilI	4.81E-08	0.00E+00	0.00E+00	0.00E+00	0.00E+00	0.00E+00	0.00E+00	0.00E+00	0.00E+00	0.00E+00	0.00E+00	0.00E+00
358	ALL	736773	4035392	4.81E-08	70YrCancerDerived_InhSoilI	4.81E-08	0.00E+00	0.00E+00	0.00E+00	0.00E+00	0.00E+00	0.00E+00	0.00E+00	0.00E+00	0.00E+00	0.00E+00	0.00E+00
359	ALL	736873	4035392	4.81E-08	70YrCancerDerived_InhSoilI	4.81E-08	0.00E+00	0.00E+00	0.00E+00	0.00E+00	0.00E+00	0.00E+00	0.00E+00	0.00E+00	0.00E+00	0.00E+00	0.00E+00
360	ALL	736973	4035392	4.81E-08	70YrCancerDerived_InhSoilI	4.81E-08	0.00E+00	0.00E+00	0.00E+00	0.00E+00	0.00E+00	0.00E+00	0.00E+00	0.00E+00	0.00E+00	0.00E+00	0.00E+00
361	ALL	737073	4035392	4.81E-08	70YrCancerDerived_InhSoilI	4.81E-08	0.00E+00	0.00E+00	0.00E+00	0.00E+00	0.00E+00	0.00E+00	0.00E+00	0.00E+00	0.00E+00	0.00E+00	0.00E+00
362	ALL	737173	4035392	4.81E-08	70YrCancerDerived_InhSoilI	4.81E-08	0.00E+00	0.00E+00	0.00E+00	0.00E+00	0.00E+00	0.00E+00	0.00E+00	0.00E+00	0.00E+00	0.00E+00	0.00E+00
363	ALL	737273	4035392	4.80E-08	70YrCancerDerived_InhSoilI	4.80E-08	0.00E+00	0.00E+00	0.00E+00	0.00E+00	0.00E+00	0.00E+00	0.00E+00	0.00E+00	0.00E+00	0.00E+00	0.00E+00
364	ALL	737373	4035392	4.80E-08	70YrCancerDerived_InhSoilI	4.80E-08	0.00E+00	0.00E+00	0.00E+00	0.00E+00	0.00E+00	0.00E+00	0.00E+00	0.00E+00	0.00E+00	0.00E+00	0.00E+00
365	ALL	737473	4035392	4.80E-08	70YrCancerDerived_InhSoilI	4.80E-08	0.00E+00	0.00E+00	0.00E+00	0.00E+00	0.00E+00	0.00E+00	0.00E+00	0.00E+00	0.00E+00	0.00E+00	0.00E+00
366	ALL	737573	4035392	4.79E-08	70YrCancerDerived_InhSoilI	4.79E-08	0.00E+00	0.00E+00	0.00E+00	0.00E+00	0.00E+00	0.00E+00	0.00E+00	0.00E+00	0.00E+00	0.00E+00	0.00E+00
367	ALL	737673	4035392	4.79E-08	70YrCancerDerived_InhSoilI	4.79E-08	0.00E+00	0.00E+00	0.00E+00	0.00E+00	0.00E+00	0.00E+00	0.00E+00	0.00E+00	0.00E+00	0.00E+00	0.00E+00
368	ALL	737773	4035392	4.79E-08	70YrCancerDerived_InhSoilI	4.79E-08	0.00E+00	0.00E+00	0.00E+00	0.00E+00	0.00E+00	0.00E+00	0.00E+00	0.00E+00	0.00E+00	0.00E+00	0.00E+00
369	ALL	737873	4035392	4.79E-08	70YrCancerDerived_InhSoilI	4.79E-08	0.00E+00	0.00E+00	0.00E+00	0.00E+00	0.00E+00	0.00E+00	0.00E+00	0.00E+00	0.00E+00	0.00E+00	0.00E+00
370	ALL	737973	4035392	4.78E-08	70YrCancerDerived_InhSoilI	4.78E-08	0.00E+00	0.00E+00	0.00E+00	0.00E+00	0.00E+00	0.00E+00	0.00E+00	0.00E+00	0.00E+00	0.00E+00	0.00E+00
371	ALL	734973	4035492	4.46E-08	70YrCancerDerived_InhSoilI	4.46E-08	0.00E+00	0.00E+00	0.00E+00	0.00E+00	0.00E+00	0.00E+00	0.00E+00	0.00E+00	0.00E+00	0.00E+00	0.00E+00
372	ALL	735073	4035492	4.52E-08	70YrCancerDerived_InhSoilI	4.52E-08	0.00E+00	0.00E+00	0.00E+00	0.00E+00	0.00E+00	0.00E+00	0.00E+00	0.00E+00	0.00E+00	0.00E+00	0.00E+00
373	ALL	735173	4035492	4.58E-08	70YrCancerDerived_InhSoilI	4.58E-08	0.00E+00	0.00E+00	0.00E+00	0.00E+00	0.00E+00	0.00E+00	0.00E+00	0.00E+00	0.00E+00	0.00E+00	0.00E+00
374	ALL	735273	4035492	4.63E-08	70YrCancerDerived_InhSoilI	4.63E-08	0.00E+00	0.00E+00	0.00E+00	0.00E+00	0.00E+00	0.00E+00	0.00E+00	0.00E+00	0.00E+00	0.00E+00	0.00E+00
375	ALL	737873	4035492	4.72E-08	70YrCancerDerived_InhSoilI	4.72E-08	0.00E+00	0.00E+00	0.00E+00	0.00E+00	0.00E+00	0.00E+00	0.00E+00	0.00E+00	0.00E+00	0.00E+00	0.00E+00
376	ALL	737973	4035492	4.72E-08	70YrCancerDerived_InhSoilI	4.72E-08	0.00E+00	0.00E+00	0.00E+00	0.00E+00	0.00E+00	0.00E+00	0.00E+00	0.00E+00	0.00E+00	0.00E+00	0.00E+00
377	ALL	735073	4035592	4.31E-08	70YrCancerDerived_InhSoilI	4.31E-08	0.00E+00	0.00E+00	0.00E+00	0.00E+00	0.00E+00	0.00E+00	0.00E+00	0.00E+00	0.00E+00	0.00E+00	0.00E+00
378	ALL	735173	4035592	4.37E-08	70YrCancerDerived_InhSoilI	4.37E-08	0.00E+00	0.00E+00	0.00E+00	0.00E+00	0.00E+00	0.00E+00	0.00E+00	0.00E+00	0.00E+00	0.00E+00	0.00E+00
379	ALL	735273	4035592	4.43E-08	70YrCancerDerived_InhSoilI	4.43E-08	0.00E+00	0.00E+00	0.00E+00	0.00E+00	0.00E+00	0.00E+00	0.00E+00	0.00E+00	0.00E+00	0.00E+00	0.00E+00
380	ALL	735373	4035592	4.48E-08	70YrCancerDerived_InhSoilI	4.48E-08	0.00E+00	0.00E+00	0.00E+00	0.00E+00	0.00E+00	0.00E+00	0.00E+00	0.00E+00	0.00E+00	0.00E+00	0.00E+00
381	ALL	735473	4035592	4.52E-08	70YrCancerDerived_InhSoilI	4.52E-08	0.00E+00	0.00E+00	0.00E+00	0.00E+00	0.00E+00	0.00E+00	0.00E+00	0.00E+00	0.00E+00	0.00E+00	0.00E+00
382	ALL	735573	4035592	4.54E-08	70YrCancerDerived_InhSoilI	4.54E-08	0.00E+00	0.00E+00	0.00E+00	0.00E+00	0.00E+00	0.00E+00	0.00E+00	0.00E+00	0.00E+00	0.00E+00	0.00E+00
383	ALL	735673	4035592	4.55E-08	70YrCancerDerived_InhSoilI	4.55E-08	0.00E+00	0.00E+00	0.00E+00	0.00E+00	0.00E+00	0.00E+00	0.00E+00	0.00E+00	0.00E+00	0.00E+00	0.00E+00
384	ALL	735773	4035592	4.55E-08	70YrCancerDerived_InhSoilI	4.55E-08	0.00E+00	0.00E+00	0.00E+00	0.00E+00	0.00E+00	0.00E+00	0.00E+00	0.00E+00	0.00E+00	0.00E+00	0.00E+00
385	ALL	735873	4035592	4.55E-08	70YrCancerDerived_InhSoilI	4.55E-08	0.00E+00	0.00E+00	0.00E+00	0.00E+00	0.00E+00	0.00E+00	0.00E+00	0.00E+00	0.00E+00	0.00E+00	0.00E+00
386	ALL	735973	4035592	4.55E-08	70YrCancerDerived_InhSoilI	4.55E-08	0.00E+00	0.00E+00	0.00E+00	0.00E+00	0.00E+00	0.00E+00	0.00E+00	0.00E+00	0.00E+00	0.00E+00	0.00E+00
387	ALL	736073	4035592	4.55E-08	70YrCancerDerived_InhSoilI	4.55E-08	0.00E+00	0.00E+00	0.00E+00	0.00E+00	0.00E+00	0.00E+00	0.00E+00	0.00E+00	0.00E+00	0.00E+00	0.00E+00
388	ALL	736173	4035592	4.56E-08	70YrCancerDerived_InhSoilI	4.56E-08	0.00E+00	0.00E+00	0.00E+00	0.00E+00	0.00E+00	0.00E+00	0.00E+00	0.00E+00	0.00E+00	0.00E+00	0.00E+00
389	ALL	736273	4035592	4.55E-08	70YrCancerDerived_InhSoilI	4.55E-08	0.00E+00	0.00E+00	0.00E+00	0.00E+00	0.00E+00	0.00E+00	0.00E+00	0.00E+00	0.00E+00	0.00E+00	0.00E+00
390	ALL	736373	4035592	4.56E-08	70YrCancerDerived_InhSoilI	4.56E-08	0.00E+00	0.00E+00	0.00E+00	0.00E+00	0.00E+00	0.00E+00	0.00E+00	0.00E+00	0.00E+00	0.00E+00	0.00E+00

391	ALL	736473	4035592	4.57E-08	70YrCancerDerived_InhSoil[	4.57E-08	0.00E+00	0.00E+00	0.00E+00	0.00E+00	0.00E+00	0.00E+00	0.00E+00	0.00E+00	0.00E+00	0.00E+00	0.00E+00
392	ALL	736573	4035592	4.57E-08	70YrCancerDerived_InhSoil[	4.57E-08	0.00E+00	0.00E+00	0.00E+00	0.00E+00	0.00E+00	0.00E+00	0.00E+00	0.00E+00	0.00E+00	0.00E+00	0.00E+00
393	ALL	736673	4035592	4.58E-08	70YrCancerDerived_InhSoil[	4.58E-08	0.00E+00	0.00E+00	0.00E+00	0.00E+00	0.00E+00	0.00E+00	0.00E+00	0.00E+00	0.00E+00	0.00E+00	0.00E+00
394	ALL	736773	4035592	4.59E-08	70YrCancerDerived_InhSoil[	4.59E-08	0.00E+00	0.00E+00	0.00E+00	0.00E+00	0.00E+00	0.00E+00	0.00E+00	0.00E+00	0.00E+00	0.00E+00	0.00E+00
395	ALL	736873	4035592	4.60E-08	70YrCancerDerived_InhSoil[	4.60E-08	0.00E+00	0.00E+00	0.00E+00	0.00E+00	0.00E+00	0.00E+00	0.00E+00	0.00E+00	0.00E+00	0.00E+00	0.00E+00
396	ALL	736973	4035592	4.61E-08	70YrCancerDerived_InhSoil[	4.61E-08	0.00E+00	0.00E+00	0.00E+00	0.00E+00	0.00E+00	0.00E+00	0.00E+00	0.00E+00	0.00E+00	0.00E+00	0.00E+00
397	ALL	737073	4035592	4.62E-08	70YrCancerDerived_InhSoil[	4.62E-08	0.00E+00	0.00E+00	0.00E+00	0.00E+00	0.00E+00	0.00E+00	0.00E+00	0.00E+00	0.00E+00	0.00E+00	0.00E+00
398	ALL	737173	4035592	4.62E-08	70YrCancerDerived_InhSoil[	4.62E-08	0.00E+00	0.00E+00	0.00E+00	0.00E+00	0.00E+00	0.00E+00	0.00E+00	0.00E+00	0.00E+00	0.00E+00	0.00E+00
399	ALL	737273	4035592	4.63E-08	70YrCancerDerived_InhSoil[	4.63E-08	0.00E+00	0.00E+00	0.00E+00	0.00E+00	0.00E+00	0.00E+00	0.00E+00	0.00E+00	0.00E+00	0.00E+00	0.00E+00
400	ALL	737373	4035592	4.63E-08	70YrCancerDerived_InhSoil[	4.63E-08	0.00E+00	0.00E+00	0.00E+00	0.00E+00	0.00E+00	0.00E+00	0.00E+00	0.00E+00	0.00E+00	0.00E+00	0.00E+00
401	ALL	737473	4035592	4.64E-08	70YrCancerDerived_InhSoil[	4.64E-08	0.00E+00	0.00E+00	0.00E+00	0.00E+00	0.00E+00	0.00E+00	0.00E+00	0.00E+00	0.00E+00	0.00E+00	0.00E+00
402	ALL	737573	4035592	4.65E-08	70YrCancerDerived_InhSoil[	4.65E-08	0.00E+00	0.00E+00	0.00E+00	0.00E+00	0.00E+00	0.00E+00	0.00E+00	0.00E+00	0.00E+00	0.00E+00	0.00E+00
403	ALL	737673	4035592	4.65E-08	70YrCancerDerived_InhSoil[	4.65E-08	0.00E+00	0.00E+00	0.00E+00	0.00E+00	0.00E+00	0.00E+00	0.00E+00	0.00E+00	0.00E+00	0.00E+00	0.00E+00
404	ALL	737773	4035592	4.65E-08	70YrCancerDerived_InhSoil[	4.65E-08	0.00E+00	0.00E+00	0.00E+00	0.00E+00	0.00E+00	0.00E+00	0.00E+00	0.00E+00	0.00E+00	0.00E+00	0.00E+00
405	ALL	737973	4035592	4.65E-08	70YrCancerDerived_InhSoil[	4.65E-08	0.00E+00	0.00E+00	0.00E+00	0.00E+00	0.00E+00	0.00E+00	0.00E+00	0.00E+00	0.00E+00	0.00E+00	0.00E+00
406	ALL	735273	4035692	4.24E-08	70YrCancerDerived_InhSoil[	4.24E-08	0.00E+00	0.00E+00	0.00E+00	0.00E+00	0.00E+00	0.00E+00	0.00E+00	0.00E+00	0.00E+00	0.00E+00	0.00E+00
407	ALL	735373	4035692	4.29E-08	70YrCancerDerived_InhSoil[	4.29E-08	0.00E+00	0.00E+00	0.00E+00	0.00E+00	0.00E+00	0.00E+00	0.00E+00	0.00E+00	0.00E+00	0.00E+00	0.00E+00
408	ALL	735473	4035692	4.35E-08	70YrCancerDerived_InhSoil[	4.35E-08	0.00E+00	0.00E+00	0.00E+00	0.00E+00	0.00E+00	0.00E+00	0.00E+00	0.00E+00	0.00E+00	0.00E+00	0.00E+00
409	ALL	735573	4035692	4.39E-08	70YrCancerDerived_InhSoil[	4.39E-08	0.00E+00	0.00E+00	0.00E+00	0.00E+00	0.00E+00	0.00E+00	0.00E+00	0.00E+00	0.00E+00	0.00E+00	0.00E+00
410	ALL	735673	4035692	4.42E-08	70YrCancerDerived_InhSoil[	4.42E-08	0.00E+00	0.00E+00	0.00E+00	0.00E+00	0.00E+00	0.00E+00	0.00E+00	0.00E+00	0.00E+00	0.00E+00	0.00E+00
411	ALL	735773	4035692	4.43E-08	70YrCancerDerived_InhSoil[	4.43E-08	0.00E+00	0.00E+00	0.00E+00	0.00E+00	0.00E+00	0.00E+00	0.00E+00	0.00E+00	0.00E+00	0.00E+00	0.00E+00
412	ALL	735873	4035692	4.44E-08	70YrCancerDerived_InhSoil[	4.44E-08	0.00E+00	0.00E+00	0.00E+00	0.00E+00	0.00E+00	0.00E+00	0.00E+00	0.00E+00	0.00E+00	0.00E+00	0.00E+00
413	ALL	735973	4035692	4.44E-08	70YrCancerDerived_InhSoil[	4.44E-08	0.00E+00	0.00E+00	0.00E+00	0.00E+00	0.00E+00	0.00E+00	0.00E+00	0.00E+00	0.00E+00	0.00E+00	0.00E+00
414	ALL	736073	4035692	4.45E-08	70YrCancerDerived_InhSoil[	4.45E-08	0.00E+00	0.00E+00	0.00E+00	0.00E+00	0.00E+00	0.00E+00	0.00E+00	0.00E+00	0.00E+00	0.00E+00	0.00E+00
415	ALL	736173	4035692	4.45E-08	70YrCancerDerived_InhSoil[	4.45E-08	0.00E+00	0.00E+00	0.00E+00	0.00E+00	0.00E+00	0.00E+00	0.00E+00	0.00E+00	0.00E+00	0.00E+00	0.00E+00
416	ALL	736273	4035692	4.45E-08	70YrCancerDerived_InhSoil[	4.45E-08	0.00E+00	0.00E+00	0.00E+00	0.00E+00	0.00E+00	0.00E+00	0.00E+00	0.00E+00	0.00E+00	0.00E+00	0.00E+00
417	ALL	736373	4035692	4.46E-08	70YrCancerDerived_InhSoil[	4.46E-08	0.00E+00	0.00E+00	0.00E+00	0.00E+00	0.00E+00	0.00E+00	0.00E+00	0.00E+00	0.00E+00	0.00E+00	0.00E+00
418	ALL	736473	4035692	4.46E-08	70YrCancerDerived_InhSoil[	4.46E-08	0.00E+00	0.00E+00	0.00E+00	0.00E+00	0.00E+00	0.00E+00	0.00E+00	0.00E+00	0.00E+00	0.00E+00	0.00E+00
419	ALL	736573	4035692	4.47E-08	70YrCancerDerived_InhSoil[	4.47E-08	0.00E+00	0.00E+00	0.00E+00	0.00E+00	0.00E+00	0.00E+00	0.00E+00	0.00E+00	0.00E+00	0.00E+00	0.00E+00
420	ALL	736673	4035692	4.48E-08	70YrCancerDerived_InhSoil[	4.48E-08	0.00E+00	0.00E+00	0.00E+00	0.00E+00	0.00E+00	0.00E+00	0.00E+00	0.00E+00	0.00E+00	0.00E+00	0.00E+00
421	ALL	736773	4035692	4.49E-08	70YrCancerDerived_InhSoil[	4.49E-08	0.00E+00	0.00E+00	0.00E+00	0.00E+00	0.00E+00	0.00E+00	0.00E+00	0.00E+00	0.00E+00	0.00E+00	0.00E+00
422	ALL	736873	4035692	4.50E-08	70YrCancerDerived_InhSoil[	4.50E-08	0.00E+00	0.00E+00	0.00E+00	0.00E+00	0.00E+00	0.00E+00	0.00E+00	0.00E+00	0.00E+00	0.00E+00	0.00E+00
423	ALL	736973	4035692	4.52E-08	70YrCancerDerived_InhSoil[	4.52E-08	0.00E+00	0.00E+00	0.00E+00	0.00E+00	0.00E+00	0.00E+00	0.00E+00	0.00E+00	0.00E+00	0.00E+00	0.00E+00
424	ALL	737073	4035692	4.53E-08	70YrCancerDerived_InhSoil[	4.53E-08	0.00E+00	0.00E+00	0.00E+00	0.00E+00	0.00E+00	0.00E+00	0.00E+00	0.00E+00	0.00E+00	0.00E+00	0.00E+00
425	ALL	737173	4035692	4.54E-08	70YrCancerDerived_InhSoil[	4.54E-08	0.00E+00	0.00E+00	0.00E+00	0.00E+00	0.00E+00	0.00E+00	0.00E+00	0.00E+00	0.00E+00	0.00E+00	0.00E+00
426	ALL	737273	4035692	4.54E-08	70YrCancerDerived_InhSoil[	4.54E-08	0.00E+00	0.00E+00	0.00E+00	0.00E+00	0.00E+00	0.00E+00	0.00E+00	0.00E+00	0.00E+00	0.00E+00	0.00E+00
427	ALL	737373	4035692	4.55E-08	70YrCancerDerived_InhSoil[	4.55E-08	0.00E+00	0.00E+00	0.00E+00	0.00E+00	0.00E+00	0.00E+00	0.00E+00	0.00E+00	0.00E+00	0.00E+00	0.00E+00
428	ALL	737473	4035692	4.56E-08	70YrCancerDerived_InhSoil[	4.56E-08	0.00E+00	0.00E+00	0.00E+00	0.00E+00	0.00E+00	0.00E+00	0.00E+00	0.00E+00	0.00E+00	0.00E+00	0.00E+00
429	ALL	737573	4035692	4.57E-08	70YrCancerDerived_InhSoil[	4.57E-08	0.00E+00	0.00E+00	0.00E+00	0.00E+00	0.00E+00	0.00E+00	0.00E+00	0.00E+00	0.00E+00	0.00E+00	0.00E+00
430	ALL	737673	4035692	4.58E-08	70YrCancerDerived_InhSoil[	4.58E-08	0.00E+00	0.00E+00	0.00E+00	0.00E+00	0.00E+00	0.00E+00	0.00E+00	0.00E+00	0.00E+00	0.00E+00	0.00E+00
431	ALL	737773	4035692	4.58E-08	70YrCancerDerived_InhSoil[	4.58E-08	0.00E+00	0.00E+00	0.00E+00	0.00E+00	0.00E+00	0.00E+00	0.00E+00	0.00E+00	0.00E+00	0.00E+00	0.00E+00
432	ALL	737973	4035692	4.59E-08	70YrCancerDerived_InhSoil[	4.59E-08	0.00E+00	0.00E+00	0.00E+00	0.00E+00	0.00E+00	0.00E+00	0.00E+00	0.00E+00	0.00E+00	0.00E+00	0.00E+00
433	ALL	735373	4035792	4.12E-08	70YrCancerDerived_InhSoil[	4.12E-08	0.00E+00	0.00E+00	0.00E+00	0.00E+00	0.00E+00	0.00E+00	0.00E+00	0.00E+00	0.00E+00	0.00E+00	0.00E+00
434	ALL	735473	4035792	4.18E-08	70YrCancerDerived_InhSoil[	4.18E-08	0.00E+00	0.00E+00	0.00E+00	0.00E+00	0.00E+00	0.00E+00	0.00E+00	0.00E+00	0.00E+00	0.00E+00	0.00E+00
435	ALL	735573	4035792	4.23E-08	70YrCancerDerived_InhSoil[	4.23E-08	0.00E+00	0.00E+00	0.00E+00	0.00E+00	0.00E+00	0.00E+00	0.00E+00	0.00E+00	0.00E+00	0.00E+00	0.00E+00
436	ALL	735673	4035792	4.27E-08	70YrCancerDerived_InhSoil[	4.27E-08	0.00E+00	0.00E+00	0.00E+00	0.00E+00	0.00E+00	0.00E+00	0.00E+00	0.00E+00	0.00E+00	0.00E+00	0.00E+00
437	ALL	735773	4035792	4.30E-08	70YrCancerDerived_InhSoil[	4.30E-08	0.00E+00	0.00E+00	0.00E+00	0.00E+00	0.00E+00	0.00E+00	0.00E+00	0.00E+00	0.00E+00	0.00E+00	0.00E+00
438	ALL	735873	4035792	4.32E-08	70YrCancerDerived_InhSoil[	4.32E-08	0.00E+00	0.00E+00	0.00E+00	0.00E+00	0.00E+00	0.00E+00	0.00E+00	0.00E+00	0.00E+00	0.00E+00	0.00E+00
439	ALL	735973	4035792	4.34E-08	70YrCancerDerived_InhSoil[	4.34E-08	0.00E+00	0.00E+00	0.00E+00	0.00E+00	0.00E+00	0.00E+00	0.00E+00	0.00E+00	0.00E+00	0.00E+00	0.00E+00
440	ALL	736073	4035792	4.35E-08	70YrCancerDerived_InhSoil[	4.35E-08	0.00E+00	0.00E+00	0.00E+00	0.00E+00	0.00E+00	0.00E+00	0.00E+00	0.00E+00	0.00E+00	0.00E+00	0.00E+00
441	ALL	736173	4035792	4.36E-08	70YrCancerDerived_InhSoil[	4.36E-08	0.00E+00	0.00E+00	0.00E+00	0.00E+00	0.00E+00	0.00E+00	0.00E+00	0.00E+00	0.00E+00	0.00E+00	0.00E+00
442	ALL	736273	4035792	4.36E-08	70YrCancerDerived_InhSoil[	4.36E-08	0.00E+00	0.00E+00	0.00E+00	0.00E+00	0.00E+00	0.00E+00	0.00E+00	0.00E+00	0.00E+00	0.00E+00	0.00E+00
443	ALL	736373	4035792	4.37E-08	70YrCancerDerived_InhSoil[	4.37E-08	0.00E+00	0.00E+00	0.00E+00	0.00E+00	0.00E+00	0.00E+00	0.00E+00	0.00E+00	0.00E+00	0.00E+00	0.00E+00
444	ALL	736473	4035792	4.37E-08	70YrCancerDerived_InhSoil[	4.37E-08	0.00E+00	0.00E+00	0.00E+00	0.00E+00	0.00E+00	0.00E+00	0.00E+00	0.00E+00	0.00E+00	0.00E+00	0.00E+00
445	ALL	736573	4035792	4.38E-08	70YrCancerDerived_InhSoil[	4.38E-08	0.00E+00	0.00E+00	0.00E+00	0.00E+00	0.00E+00	0.00E+00	0.00E+00	0.00E+00	0.00E+00	0.00E+00	0.00E+00
446	ALL	736673	4035792	4.39E-08	70YrCancerDerived_InhSoil[	4.39E-08	0.00E+00	0.00E+00	0.00E+00	0.00E+00	0.00E+00	0.00E+00	0.00E+00	0.00E+00	0.00E+00	0.00E+00	0.00E+00

447	ALL	736773	4035792	4.40E-08	70YrCancerDerived_InhSoilI	4.40E-08	0.00E+00	0.00E+00	0.00E+00	0.00E+00	0.00E+00	0.00E+00	0.00E+00	0.00E+00	0.00E+00	0.00E+00	0.00E+00
448	ALL	736873	4035792	4.41E-08	70YrCancerDerived_InhSoilI	4.41E-08	0.00E+00	0.00E+00	0.00E+00	0.00E+00	0.00E+00	0.00E+00	0.00E+00	0.00E+00	0.00E+00	0.00E+00	0.00E+00
449	ALL	736973	4035792	4.43E-08	70YrCancerDerived_InhSoilI	4.43E-08	0.00E+00	0.00E+00	0.00E+00	0.00E+00	0.00E+00	0.00E+00	0.00E+00	0.00E+00	0.00E+00	0.00E+00	0.00E+00
450	ALL	737073	4035792	4.44E-08	70YrCancerDerived_InhSoilI	4.44E-08	0.00E+00	0.00E+00	0.00E+00	0.00E+00	0.00E+00	0.00E+00	0.00E+00	0.00E+00	0.00E+00	0.00E+00	0.00E+00
451	ALL	737173	4035792	4.45E-08	70YrCancerDerived_InhSoilI	4.45E-08	0.00E+00	0.00E+00	0.00E+00	0.00E+00	0.00E+00	0.00E+00	0.00E+00	0.00E+00	0.00E+00	0.00E+00	0.00E+00
452	ALL	737273	4035792	4.46E-08	70YrCancerDerived_InhSoilI	4.46E-08	0.00E+00	0.00E+00	0.00E+00	0.00E+00	0.00E+00	0.00E+00	0.00E+00	0.00E+00	0.00E+00	0.00E+00	0.00E+00
453	ALL	737373	4035792	4.47E-08	70YrCancerDerived_InhSoilI	4.47E-08	0.00E+00	0.00E+00	0.00E+00	0.00E+00	0.00E+00	0.00E+00	0.00E+00	0.00E+00	0.00E+00	0.00E+00	0.00E+00
454	ALL	737473	4035792	4.48E-08	70YrCancerDerived_InhSoilI	4.48E-08	0.00E+00	0.00E+00	0.00E+00	0.00E+00	0.00E+00	0.00E+00	0.00E+00	0.00E+00	0.00E+00	0.00E+00	0.00E+00
455	ALL	737573	4035792	4.49E-08	70YrCancerDerived_InhSoilI	4.49E-08	0.00E+00	0.00E+00	0.00E+00	0.00E+00	0.00E+00	0.00E+00	0.00E+00	0.00E+00	0.00E+00	0.00E+00	0.00E+00
456	ALL	737673	4035792	4.51E-08	70YrCancerDerived_InhSoilI	4.51E-08	0.00E+00	0.00E+00	0.00E+00	0.00E+00	0.00E+00	0.00E+00	0.00E+00	0.00E+00	0.00E+00	0.00E+00	0.00E+00
457	ALL	737773	4035792	4.51E-08	70YrCancerDerived_InhSoilI	4.51E-08	0.00E+00	0.00E+00	0.00E+00	0.00E+00	0.00E+00	0.00E+00	0.00E+00	0.00E+00	0.00E+00	0.00E+00	0.00E+00
458	ALL	737873	4035792	4.53E-08	70YrCancerDerived_InhSoilI	4.53E-08	0.00E+00	0.00E+00	0.00E+00	0.00E+00	0.00E+00	0.00E+00	0.00E+00	0.00E+00	0.00E+00	0.00E+00	0.00E+00
459	ALL	735473	4035892	4.02E-08	70YrCancerDerived_InhSoilI	4.02E-08	0.00E+00	0.00E+00	0.00E+00	0.00E+00	0.00E+00	0.00E+00	0.00E+00	0.00E+00	0.00E+00	0.00E+00	0.00E+00
460	ALL	735573	4035892	4.08E-08	70YrCancerDerived_InhSoilI	4.08E-08	0.00E+00	0.00E+00	0.00E+00	0.00E+00	0.00E+00	0.00E+00	0.00E+00	0.00E+00	0.00E+00	0.00E+00	0.00E+00
461	ALL	735673	4035892	4.13E-08	70YrCancerDerived_InhSoilI	4.13E-08	0.00E+00	0.00E+00	0.00E+00	0.00E+00	0.00E+00	0.00E+00	0.00E+00	0.00E+00	0.00E+00	0.00E+00	0.00E+00
462	ALL	735773	4035892	4.17E-08	70YrCancerDerived_InhSoilI	4.17E-08	0.00E+00	0.00E+00	0.00E+00	0.00E+00	0.00E+00	0.00E+00	0.00E+00	0.00E+00	0.00E+00	0.00E+00	0.00E+00
463	ALL	735873	4035892	4.20E-08	70YrCancerDerived_InhSoilI	4.20E-08	0.00E+00	0.00E+00	0.00E+00	0.00E+00	0.00E+00	0.00E+00	0.00E+00	0.00E+00	0.00E+00	0.00E+00	0.00E+00
464	ALL	735973	4035892	4.24E-08	70YrCancerDerived_InhSoilI	4.24E-08	0.00E+00	0.00E+00	0.00E+00	0.00E+00	0.00E+00	0.00E+00	0.00E+00	0.00E+00	0.00E+00	0.00E+00	0.00E+00
465	ALL	736073	4035892	4.26E-08	70YrCancerDerived_InhSoilI	4.26E-08	0.00E+00	0.00E+00	0.00E+00	0.00E+00	0.00E+00	0.00E+00	0.00E+00	0.00E+00	0.00E+00	0.00E+00	0.00E+00
466	ALL	736173	4035892	4.27E-08	70YrCancerDerived_InhSoilI	4.27E-08	0.00E+00	0.00E+00	0.00E+00	0.00E+00	0.00E+00	0.00E+00	0.00E+00	0.00E+00	0.00E+00	0.00E+00	0.00E+00
467	ALL	736273	4035892	4.28E-08	70YrCancerDerived_InhSoilI	4.28E-08	0.00E+00	0.00E+00	0.00E+00	0.00E+00	0.00E+00	0.00E+00	0.00E+00	0.00E+00	0.00E+00	0.00E+00	0.00E+00
468	ALL	736373	4035892	4.28E-08	70YrCancerDerived_InhSoilI	4.28E-08	0.00E+00	0.00E+00	0.00E+00	0.00E+00	0.00E+00	0.00E+00	0.00E+00	0.00E+00	0.00E+00	0.00E+00	0.00E+00
469	ALL	736473	4035892	4.28E-08	70YrCancerDerived_InhSoilI	4.28E-08	0.00E+00	0.00E+00	0.00E+00	0.00E+00	0.00E+00	0.00E+00	0.00E+00	0.00E+00	0.00E+00	0.00E+00	0.00E+00
470	ALL	736573	4035892	4.29E-08	70YrCancerDerived_InhSoilI	4.29E-08	0.00E+00	0.00E+00	0.00E+00	0.00E+00	0.00E+00	0.00E+00	0.00E+00	0.00E+00	0.00E+00	0.00E+00	0.00E+00
471	ALL	736673	4035892	4.30E-08	70YrCancerDerived_InhSoilI	4.30E-08	0.00E+00	0.00E+00	0.00E+00	0.00E+00	0.00E+00	0.00E+00	0.00E+00	0.00E+00	0.00E+00	0.00E+00	0.00E+00
472	ALL	736773	4035892	4.31E-08	70YrCancerDerived_InhSoilI	4.31E-08	0.00E+00	0.00E+00	0.00E+00	0.00E+00	0.00E+00	0.00E+00	0.00E+00	0.00E+00	0.00E+00	0.00E+00	0.00E+00
473	ALL	736873	4035892	4.32E-08	70YrCancerDerived_InhSoilI	4.32E-08	0.00E+00	0.00E+00	0.00E+00	0.00E+00	0.00E+00	0.00E+00	0.00E+00	0.00E+00	0.00E+00	0.00E+00	0.00E+00
474	ALL	736973	4035892	4.34E-08	70YrCancerDerived_InhSoilI	4.34E-08	0.00E+00	0.00E+00	0.00E+00	0.00E+00	0.00E+00	0.00E+00	0.00E+00	0.00E+00	0.00E+00	0.00E+00	0.00E+00
475	ALL	737073	4035892	4.35E-08	70YrCancerDerived_InhSoilI	4.35E-08	0.00E+00	0.00E+00	0.00E+00	0.00E+00	0.00E+00	0.00E+00	0.00E+00	0.00E+00	0.00E+00	0.00E+00	0.00E+00
476	ALL	737173	4035892	4.36E-08	70YrCancerDerived_InhSoilI	4.36E-08	0.00E+00	0.00E+00	0.00E+00	0.00E+00	0.00E+00	0.00E+00	0.00E+00	0.00E+00	0.00E+00	0.00E+00	0.00E+00
477	ALL	737273	4035892	4.37E-08	70YrCancerDerived_InhSoilI	4.37E-08	0.00E+00	0.00E+00	0.00E+00	0.00E+00	0.00E+00	0.00E+00	0.00E+00	0.00E+00	0.00E+00	0.00E+00	0.00E+00
478	ALL	737373	4035892	4.38E-08	70YrCancerDerived_InhSoilI	4.38E-08	0.00E+00	0.00E+00	0.00E+00	0.00E+00	0.00E+00	0.00E+00	0.00E+00	0.00E+00	0.00E+00	0.00E+00	0.00E+00
479	ALL	737473	4035892	4.40E-08	70YrCancerDerived_InhSoilI	4.40E-08	0.00E+00	0.00E+00	0.00E+00	0.00E+00	0.00E+00	0.00E+00	0.00E+00	0.00E+00	0.00E+00	0.00E+00	0.00E+00
480	ALL	737573	4035892	4.42E-08	70YrCancerDerived_InhSoilI	4.42E-08	0.00E+00	0.00E+00	0.00E+00	0.00E+00	0.00E+00	0.00E+00	0.00E+00	0.00E+00	0.00E+00	0.00E+00	0.00E+00
481	ALL	737673	4035892	4.43E-08	70YrCancerDerived_InhSoilI	4.43E-08	0.00E+00	0.00E+00	0.00E+00	0.00E+00	0.00E+00	0.00E+00	0.00E+00	0.00E+00	0.00E+00	0.00E+00	0.00E+00
482	ALL	737773	4035892	4.44E-08	70YrCancerDerived_InhSoilI	4.44E-08	0.00E+00	0.00E+00	0.00E+00	0.00E+00	0.00E+00	0.00E+00	0.00E+00	0.00E+00	0.00E+00	0.00E+00	0.00E+00
483	ALL	737873	4035892	4.46E-08	70YrCancerDerived_InhSoilI	4.46E-08	0.00E+00	0.00E+00	0.00E+00	0.00E+00	0.00E+00	0.00E+00	0.00E+00	0.00E+00	0.00E+00	0.00E+00	0.00E+00
484	ALL	737973	4035892	4.47E-08	70YrCancerDerived_InhSoilI	4.47E-08	0.00E+00	0.00E+00	0.00E+00	0.00E+00	0.00E+00	0.00E+00	0.00E+00	0.00E+00	0.00E+00	0.00E+00	0.00E+00
485	ALL	737573	4035992	4.34E-08	70YrCancerDerived_InhSoilI	4.34E-08	0.00E+00	0.00E+00	0.00E+00	0.00E+00	0.00E+00	0.00E+00	0.00E+00	0.00E+00	0.00E+00	0.00E+00	0.00E+00
486	ALL	737673	4035992	4.35E-08	70YrCancerDerived_InhSoilI	4.35E-08	0.00E+00	0.00E+00	0.00E+00	0.00E+00	0.00E+00	0.00E+00	0.00E+00	0.00E+00	0.00E+00	0.00E+00	0.00E+00
487	ALL	737773	4035992	4.37E-08	70YrCancerDerived_InhSoilI	4.37E-08	0.00E+00	0.00E+00	0.00E+00	0.00E+00	0.00E+00	0.00E+00	0.00E+00	0.00E+00	0.00E+00	0.00E+00	0.00E+00
488	ALL	737873	4035992	4.38E-08	70YrCancerDerived_InhSoilI	4.38E-08	0.00E+00	0.00E+00	0.00E+00	0.00E+00	0.00E+00	0.00E+00	0.00E+00	0.00E+00	0.00E+00	0.00E+00	0.00E+00
489	ALL	737973	4035992	4.40E-08	70YrCancerDerived_InhSoilI	4.40E-08	0.00E+00	0.00E+00	0.00E+00	0.00E+00	0.00E+00	0.00E+00	0.00E+00	0.00E+00	0.00E+00	0.00E+00	0.00E+00
490	ALL	737573	4036092	4.26E-08	70YrCancerDerived_InhSoilI	4.26E-08	0.00E+00	0.00E+00	0.00E+00	0.00E+00	0.00E+00	0.00E+00	0.00E+00	0.00E+00	0.00E+00	0.00E+00	0.00E+00
491	ALL	737673	4036092	4.28E-08	70YrCancerDerived_InhSoilI	4.28E-08	0.00E+00	0.00E+00	0.00E+00	0.00E+00	0.00E+00	0.00E+00	0.00E+00	0.00E+00	0.00E+00	0.00E+00	0.00E+00
492	ALL	737773	4036092	4.29E-08	70YrCancerDerived_InhSoilI	4.29E-08	0.00E+00	0.00E+00	0.00E+00	0.00E+00	0.00E+00	0.00E+00	0.00E+00	0.00E+00	0.00E+00	0.00E+00	0.00E+00
493	ALL	737873	4036092	4.31E-08	70YrCancerDerived_InhSoilI	4.31E-08	0.00E+00	0.00E+00	0.00E+00	0.00E+00	0.00E+00	0.00E+00	0.00E+00	0.00E+00	0.00E+00	0.00E+00	0.00E+00
494	ALL	737973	4036092	4.33E-08	70YrCancerDerived_InhSoilI	4.33E-08	0.00E+00	0.00E+00	0.00E+00	0.00E+00	0.00E+00	0.00E+00	0.00E+00	0.00E+00	0.00E+00	0.00E+00	0.00E+00
495	ALL	737573	4036192	4.18E-08	70YrCancerDerived_InhSoilI	4.18E-08	0.00E+00	0.00E+00	0.00E+00	0.00E+00	0.00E+00	0.00E+00	0.00E+00	0.00E+00	0.00E+00	0.00E+00	0.00E+00
496	ALL	737673	4036192	4.20E-08	70YrCancerDerived_InhSoilI	4.20E-08	0.00E+00	0.00E+00	0.00E+00	0.00E+00	0.00E+00	0.00E+00	0.00E+00	0.00E+00	0.00E+00	0.00E+00	0.00E+00
497	ALL	737773	4036192	4.22E-08	70YrCancerDerived_InhSoilI	4.22E-08	0.00E+00	0.00E+00	0.00E+00	0.00E+00	0.00E+00	0.00E+00	0.00E+00	0.00E+00	0.00E+00	0.00E+00	0.00E+00
498	ALL	737873	4036192	4.24E-08	70YrCancerDerived_InhSoilI	4.24E-08	0.00E+00	0.00E+00	0.00E+00	0.00E+00	0.00E+00	0.00E+00	0.00E+00	0.00E+00	0.00E+00	0.00E+00	0.00E+00
499	ALL	737973	4036192	4.25E-08	70YrCancerDerived_InhSoilI	4.25E-08	0.00E+00	0.00E+00	0.00E+00	0.00E+00	0.00E+00	0.00E+00	0.00E+00	0.00E+00	0.00E+00	0.00E+00	0.00E+00
500	ALL	737573	4036292	4.12E-08	70YrCancerDerived_InhSoilI	4.12E-08	0.00E+00	0.00E+00	0.00E+00	0.00E+00	0.00E+00	0.00E+00	0.00E+00	0.00E+00	0.00E+00	0.00E+00	0.00E+00
501	ALL	737673	4036292	4.13E-08	70YrCancerDerived_InhSoilI	4.13E-08	0.00E+00	0.00E+00	0.00E+00	0.00E+00	0.00E+00	0.00E+00	0.00E+00	0.00E+00	0.00E+00	0.00E+00	0.00E+00
502	ALL	737773	4036292	4.15E-08	70YrCancerDerived_InhSoilI	4.15E-08	0.00E+00	0.00E+00	0.00E+00	0.00E+00	0.00E+00	0.00E+00	0.00E+00	0.00E+00	0.00E+00	0.00E+00	0.00E+00

503	ALL	737873	4036292	4.17E-08	70YrCancerDerived_InhSoil[	4.17E-08	0.00E+00	0.00E+00	0.00E+00	0.00E+00	0.00E+00	0.00E+00	0.00E+00	0.00E+00	0.00E+00	0.00E+00	0.00E+00
504	ALL	737973	4036292	4.18E-08	70YrCancerDerived_InhSoil[	4.18E-08	0.00E+00	0.00E+00	0.00E+00	0.00E+00	0.00E+00	0.00E+00	0.00E+00	0.00E+00	0.00E+00	0.00E+00	0.00E+00
505	ALL	738080.96	4035200.87	4.93E-08	70YrCancerDerived_InhSoil[	4.93E-08	0.00E+00	0.00E+00	0.00E+00	0.00E+00	0.00E+00	0.00E+00	0.00E+00	0.00E+00	0.00E+00	0.00E+00	0.00E+00
506	ALL	738180.96	4035200.87	4.91E-08	70YrCancerDerived_InhSoil[	4.91E-08	0.00E+00	0.00E+00	0.00E+00	0.00E+00	0.00E+00	0.00E+00	0.00E+00	0.00E+00	0.00E+00	0.00E+00	0.00E+00
507	ALL	738280.96	4035200.87	4.90E-08	70YrCancerDerived_InhSoil[	4.90E-08	0.00E+00	0.00E+00	0.00E+00	0.00E+00	0.00E+00	0.00E+00	0.00E+00	0.00E+00	0.00E+00	0.00E+00	0.00E+00
508	ALL	738080.96	4035300.87	4.84E-08	70YrCancerDerived_InhSoil[	4.84E-08	0.00E+00	0.00E+00	0.00E+00	0.00E+00	0.00E+00	0.00E+00	0.00E+00	0.00E+00	0.00E+00	0.00E+00	0.00E+00
509	ALL	738180.96	4035300.87	4.83E-08	70YrCancerDerived_InhSoil[	4.83E-08	0.00E+00	0.00E+00	0.00E+00	0.00E+00	0.00E+00	0.00E+00	0.00E+00	0.00E+00	0.00E+00	0.00E+00	0.00E+00
510	ALL	738280.96	4035300.87	4.82E-08	70YrCancerDerived_InhSoil[	4.82E-08	0.00E+00	0.00E+00	0.00E+00	0.00E+00	0.00E+00	0.00E+00	0.00E+00	0.00E+00	0.00E+00	0.00E+00	0.00E+00
511	ALL	738380.96	4035300.87	4.81E-08	70YrCancerDerived_InhSoil[	4.81E-08	0.00E+00	0.00E+00	0.00E+00	0.00E+00	0.00E+00	0.00E+00	0.00E+00	0.00E+00	0.00E+00	0.00E+00	0.00E+00
512	ALL	738080.96	4035400.87	4.77E-08	70YrCancerDerived_InhSoil[	4.77E-08	0.00E+00	0.00E+00	0.00E+00	0.00E+00	0.00E+00	0.00E+00	0.00E+00	0.00E+00	0.00E+00	0.00E+00	0.00E+00
513	ALL	738180.96	4035400.87	4.76E-08	70YrCancerDerived_InhSoil[	4.76E-08	0.00E+00	0.00E+00	0.00E+00	0.00E+00	0.00E+00	0.00E+00	0.00E+00	0.00E+00	0.00E+00	0.00E+00	0.00E+00
514	ALL	738280.96	4035400.87	4.76E-08	70YrCancerDerived_InhSoil[	4.76E-08	0.00E+00	0.00E+00	0.00E+00	0.00E+00	0.00E+00	0.00E+00	0.00E+00	0.00E+00	0.00E+00	0.00E+00	0.00E+00
515	ALL	738380.96	4035400.87	4.75E-08	70YrCancerDerived_InhSoil[	4.75E-08	0.00E+00	0.00E+00	0.00E+00	0.00E+00	0.00E+00	0.00E+00	0.00E+00	0.00E+00	0.00E+00	0.00E+00	0.00E+00
516	ALL	738480.96	4035400.87	4.74E-08	70YrCancerDerived_InhSoil[	4.74E-08	0.00E+00	0.00E+00	0.00E+00	0.00E+00	0.00E+00	0.00E+00	0.00E+00	0.00E+00	0.00E+00	0.00E+00	0.00E+00
517	ALL	738080.96	4035500.87	4.71E-08	70YrCancerDerived_InhSoil[	4.71E-08	0.00E+00	0.00E+00	0.00E+00	0.00E+00	0.00E+00	0.00E+00	0.00E+00	0.00E+00	0.00E+00	0.00E+00	0.00E+00
518	ALL	738180.96	4035500.87	4.70E-08	70YrCancerDerived_InhSoil[	4.70E-08	0.00E+00	0.00E+00	0.00E+00	0.00E+00	0.00E+00	0.00E+00	0.00E+00	0.00E+00	0.00E+00	0.00E+00	0.00E+00
519	ALL	738280.96	4035500.87	4.70E-08	70YrCancerDerived_InhSoil[	4.70E-08	0.00E+00	0.00E+00	0.00E+00	0.00E+00	0.00E+00	0.00E+00	0.00E+00	0.00E+00	0.00E+00	0.00E+00	0.00E+00
520	ALL	738380.96	4035500.87	4.70E-08	70YrCancerDerived_InhSoil[	4.70E-08	0.00E+00	0.00E+00	0.00E+00	0.00E+00	0.00E+00	0.00E+00	0.00E+00	0.00E+00	0.00E+00	0.00E+00	0.00E+00
521	ALL	738480.96	4035500.87	4.69E-08	70YrCancerDerived_InhSoil[	4.69E-08	0.00E+00	0.00E+00	0.00E+00	0.00E+00	0.00E+00	0.00E+00	0.00E+00	0.00E+00	0.00E+00	0.00E+00	0.00E+00
522	ALL	738580.96	4035500.87	4.69E-08	70YrCancerDerived_InhSoil[	4.69E-08	0.00E+00	0.00E+00	0.00E+00	0.00E+00	0.00E+00	0.00E+00	0.00E+00	0.00E+00	0.00E+00	0.00E+00	0.00E+00
523	ALL	738080.96	4035600.87	4.65E-08	70YrCancerDerived_InhSoil[	4.65E-08	0.00E+00	0.00E+00	0.00E+00	0.00E+00	0.00E+00	0.00E+00	0.00E+00	0.00E+00	0.00E+00	0.00E+00	0.00E+00
524	ALL	738180.96	4035600.87	4.65E-08	70YrCancerDerived_InhSoil[	4.65E-08	0.00E+00	0.00E+00	0.00E+00	0.00E+00	0.00E+00	0.00E+00	0.00E+00	0.00E+00	0.00E+00	0.00E+00	0.00E+00
525	ALL	738280.96	4035600.87	4.65E-08	70YrCancerDerived_InhSoil[	4.65E-08	0.00E+00	0.00E+00	0.00E+00	0.00E+00	0.00E+00	0.00E+00	0.00E+00	0.00E+00	0.00E+00	0.00E+00	0.00E+00
526	ALL	738380.96	4035600.87	4.65E-08	70YrCancerDerived_InhSoil[	4.65E-08	0.00E+00	0.00E+00	0.00E+00	0.00E+00	0.00E+00	0.00E+00	0.00E+00	0.00E+00	0.00E+00	0.00E+00	0.00E+00
527	ALL	738480.96	4035600.87	4.65E-08	70YrCancerDerived_InhSoil[	4.65E-08	0.00E+00	0.00E+00	0.00E+00	0.00E+00	0.00E+00	0.00E+00	0.00E+00	0.00E+00	0.00E+00	0.00E+00	0.00E+00
528	ALL	738580.96	4035600.87	4.65E-08	70YrCancerDerived_InhSoil[	4.65E-08	0.00E+00	0.00E+00	0.00E+00	0.00E+00	0.00E+00	0.00E+00	0.00E+00	0.00E+00	0.00E+00	0.00E+00	0.00E+00
529	ALL	738080.96	4035700.87	4.59E-08	70YrCancerDerived_InhSoil[	4.59E-08	0.00E+00	0.00E+00	0.00E+00	0.00E+00	0.00E+00	0.00E+00	0.00E+00	0.00E+00	0.00E+00	0.00E+00	0.00E+00
530	ALL	738180.96	4035700.87	4.60E-08	70YrCancerDerived_InhSoil[	4.60E-08	0.00E+00	0.00E+00	0.00E+00	0.00E+00	0.00E+00	0.00E+00	0.00E+00	0.00E+00	0.00E+00	0.00E+00	0.00E+00
531	ALL	738280.96	4035700.87	4.60E-08	70YrCancerDerived_InhSoil[	4.60E-08	0.00E+00	0.00E+00	0.00E+00	0.00E+00	0.00E+00	0.00E+00	0.00E+00	0.00E+00	0.00E+00	0.00E+00	0.00E+00
532	ALL	738380.96	4035700.87	4.60E-08	70YrCancerDerived_InhSoil[	4.60E-08	0.00E+00	0.00E+00	0.00E+00	0.00E+00	0.00E+00	0.00E+00	0.00E+00	0.00E+00	0.00E+00	0.00E+00	0.00E+00
533	ALL	738480.96	4035700.87	4.60E-08	70YrCancerDerived_InhSoil[	4.60E-08	0.00E+00	0.00E+00	0.00E+00	0.00E+00	0.00E+00	0.00E+00	0.00E+00	0.00E+00	0.00E+00	0.00E+00	0.00E+00
534	ALL	738580.96	4035700.87	4.61E-08	70YrCancerDerived_InhSoil[	4.61E-08	0.00E+00	0.00E+00	0.00E+00	0.00E+00	0.00E+00	0.00E+00	0.00E+00	0.00E+00	0.00E+00	0.00E+00	0.00E+00
535	ALL	738080.96	4035800.87	4.54E-08	70YrCancerDerived_InhSoil[	4.54E-08	0.00E+00	0.00E+00	0.00E+00	0.00E+00	0.00E+00	0.00E+00	0.00E+00	0.00E+00	0.00E+00	0.00E+00	0.00E+00
536	ALL	738180.96	4035800.87	4.54E-08	70YrCancerDerived_InhSoil[	4.54E-08	0.00E+00	0.00E+00	0.00E+00	0.00E+00	0.00E+00	0.00E+00	0.00E+00	0.00E+00	0.00E+00	0.00E+00	0.00E+00
537	ALL	738280.96	4035800.87	4.55E-08	70YrCancerDerived_InhSoil[	4.55E-08	0.00E+00	0.00E+00	0.00E+00	0.00E+00	0.00E+00	0.00E+00	0.00E+00	0.00E+00	0.00E+00	0.00E+00	0.00E+00
538	ALL	738380.96	4035800.87	4.55E-08	70YrCancerDerived_InhSoil[	4.55E-08	0.00E+00	0.00E+00	0.00E+00	0.00E+00	0.00E+00	0.00E+00	0.00E+00	0.00E+00	0.00E+00	0.00E+00	0.00E+00
539	ALL	738480.96	4035800.87	4.56E-08	70YrCancerDerived_InhSoil[	4.56E-08	0.00E+00	0.00E+00	0.00E+00	0.00E+00	0.00E+00	0.00E+00	0.00E+00	0.00E+00	0.00E+00	0.00E+00	0.00E+00
540	ALL	738580.96	4035800.87	4.56E-08	70YrCancerDerived_InhSoil[	4.56E-08	0.00E+00	0.00E+00	0.00E+00	0.00E+00	0.00E+00	0.00E+00	0.00E+00	0.00E+00	0.00E+00	0.00E+00	0.00E+00
541	ALL	738180.96	4035900.87	4.48E-08	70YrCancerDerived_InhSoil[	4.48E-08	0.00E+00	0.00E+00	0.00E+00	0.00E+00	0.00E+00	0.00E+00	0.00E+00	0.00E+00	0.00E+00	0.00E+00	0.00E+00
542	ALL	738280.96	4035900.87	4.49E-08	70YrCancerDerived_InhSoil[	4.49E-08	0.00E+00	0.00E+00	0.00E+00	0.00E+00	0.00E+00	0.00E+00	0.00E+00	0.00E+00	0.00E+00	0.00E+00	0.00E+00
543	ALL	738380.96	4035900.87	4.50E-08	70YrCancerDerived_InhSoil[	4.50E-08	0.00E+00	0.00E+00	0.00E+00	0.00E+00	0.00E+00	0.00E+00	0.00E+00	0.00E+00	0.00E+00	0.00E+00	0.00E+00
544	ALL	738480.96	4035900.87	4.51E-08	70YrCancerDerived_InhSoil[	4.51E-08	0.00E+00	0.00E+00	0.00E+00	0.00E+00	0.00E+00	0.00E+00	0.00E+00	0.00E+00	0.00E+00	0.00E+00	0.00E+00
545	ALL	738580.96	4035900.87	4.52E-08	70YrCancerDerived_InhSoil[	4.52E-08	0.00E+00	0.00E+00	0.00E+00	0.00E+00	0.00E+00	0.00E+00	0.00E+00	0.00E+00	0.00E+00	0.00E+00	0.00E+00
546	ALL	738180.96	4036000.87	4.42E-08	70YrCancerDerived_InhSoil[	4.42E-08	0.00E+00	0.00E+00	0.00E+00	0.00E+00	0.00E+00	0.00E+00	0.00E+00	0.00E+00	0.00E+00	0.00E+00	0.00E+00
547	ALL	738280.96	4036000.87	4.43E-08	70YrCancerDerived_InhSoil[	4.43E-08	0.00E+00	0.00E+00	0.00E+00	0.00E+00	0.00E+00	0.00E+00	0.00E+00	0.00E+00	0.00E+00	0.00E+00	0.00E+00
548	ALL	738380.96	4036000.87	4.44E-08	70YrCancerDerived_InhSoil[	4.44E-08	0.00E+00	0.00E+00	0.00E+00	0.00E+00	0.00E+00	0.00E+00	0.00E+00	0.00E+00	0.00E+00	0.00E+00	0.00E+00
549	ALL	738480.96	4036000.87	4.45E-08	70YrCancerDerived_InhSoil[	4.45E-08	0.00E+00	0.00E+00	0.00E+00	0.00E+00	0.00E+00	0.00E+00	0.00E+00	0.00E+00	0.00E+00	0.00E+00	0.00E+00
550	ALL	738580.96	4036000.87	4.46E-08	70YrCancerDerived_InhSoil[	4.46E-08	0.00E+00	0.00E+00	0.00E+00	0.00E+00	0.00E+00	0.00E+00	0.00E+00	0.00E+00	0.00E+00	0.00E+00	0.00E+00
551	ALL	738080.96	4036100.87	4.34E-08	70YrCancerDerived_InhSoil[	4.34E-08	0.00E+00	0.00E+00	0.00E+00	0.00E+00	0.00E+00	0.00E+00	0.00E+00	0.00E+00	0.00E+00	0.00E+00	0.00E+00
552	ALL	738280.96	4036100.87	4.37E-08	70YrCancerDerived_InhSoil[	4.37E-08	0.00E+00	0.00E+00	0.00E+00	0.00E+00	0.00E+00	0.00E+00	0.00E+00	0.00E+00	0.00E+00	0.00E+00	0.00E+00
553	ALL	738380.96	4036100.87	4.38E-08	70YrCancerDerived_InhSoil[	4.38E-08	0.00E+00	0.00E+00	0.00E+00	0.00E+00	0.00E+00	0.00E+00	0.00E+00	0.00E+00	0.00E+00	0.00E+00	0.00E+00
554	ALL	738480.96	4036100.87	4.39E-08	70YrCancerDerived_InhSoil[	4.39E-08	0.00E+00	0.00E+00	0.00E+00	0.00E+00	0.00E+00	0.00E+00	0.00E+00	0.00E+00	0.00E+00	0.00E+00	0.00E+00
555	ALL	738580.96	4036100.87	4.40E-08	70YrCancerDerived_InhSoil[	4.40E-08	0.00E+00	0.00E+00	0.00E+00	0.00E+00	0.00E+00	0.00E+00	0.00E+00	0.00E+00	0.00E+00	0.00E+00	0.00E+00
556	ALL	738680.96	4036100.87	4.42E-08	70YrCancerDerived_InhSoil[	4.42E-08	0.00E+00	0.00E+00	0.00E+00	0.00E+00	0.00E+00	0.00E+00	0.00E+00	0.00E+00	0.00E+00	0.00E+00	0.00E+00
557	ALL	738780.96	4036100.87	4.43E-08	70YrCancerDerived_InhSoil[	4.43E-08	0.00E+00	0.00E+00	0.00E+00	0.00E+00	0.00E+00	0.00E+00	0.00E+00	0.00E+00	0.00E+00	0.00E+00	0.00E+00
558	ALL	738880.96	4036100.87	4.44E-08	70YrCancerDerived_InhSoil[	4.44E-08	0.00E+00	0.00E+00	0.00E+00	0.00E+00	0.00E+00	0.00E+00	0.00E+00	0.00E+00	0.00E+00	0.00E+00	0.00E+00

559	ALL	738980.96	4036100.87	4.44E-08	70YrCancerDerived_InhSoilI	4.44E-08	0.00E+00	0.00E+00	0.00E+00	0.00E+00	0.00E+00	0.00E+00	0.00E+00	0.00E+00	0.00E+00	0.00E+00	0.00E+00
560	ALL	739080.96	4036100.87	4.45E-08	70YrCancerDerived_InhSoilI	4.45E-08	0.00E+00	0.00E+00	0.00E+00	0.00E+00	0.00E+00	0.00E+00	0.00E+00	0.00E+00	0.00E+00	0.00E+00	0.00E+00
561	ALL	739180.96	4036100.87	4.46E-08	70YrCancerDerived_InhSoilI	4.46E-08	0.00E+00	0.00E+00	0.00E+00	0.00E+00	0.00E+00	0.00E+00	0.00E+00	0.00E+00	0.00E+00	0.00E+00	0.00E+00
562	ALL	739280.96	4036100.87	4.46E-08	70YrCancerDerived_InhSoilI	4.46E-08	0.00E+00	0.00E+00	0.00E+00	0.00E+00	0.00E+00	0.00E+00	0.00E+00	0.00E+00	0.00E+00	0.00E+00	0.00E+00
563	ALL	739380.96	4036100.87	4.46E-08	70YrCancerDerived_InhSoilI	4.46E-08	0.00E+00	0.00E+00	0.00E+00	0.00E+00	0.00E+00	0.00E+00	0.00E+00	0.00E+00	0.00E+00	0.00E+00	0.00E+00
564	ALL	739480.96	4036100.87	4.46E-08	70YrCancerDerived_InhSoilI	4.46E-08	0.00E+00	0.00E+00	0.00E+00	0.00E+00	0.00E+00	0.00E+00	0.00E+00	0.00E+00	0.00E+00	0.00E+00	0.00E+00
565	ALL	739580.96	4036100.87	4.46E-08	70YrCancerDerived_InhSoilI	4.46E-08	0.00E+00	0.00E+00	0.00E+00	0.00E+00	0.00E+00	0.00E+00	0.00E+00	0.00E+00	0.00E+00	0.00E+00	0.00E+00
566	ALL	739680.96	4036100.87	4.46E-08	70YrCancerDerived_InhSoilI	4.46E-08	0.00E+00	0.00E+00	0.00E+00	0.00E+00	0.00E+00	0.00E+00	0.00E+00	0.00E+00	0.00E+00	0.00E+00	0.00E+00
567	ALL	739780.96	4036100.87	4.45E-08	70YrCancerDerived_InhSoilI	4.45E-08	0.00E+00	0.00E+00	0.00E+00	0.00E+00	0.00E+00	0.00E+00	0.00E+00	0.00E+00	0.00E+00	0.00E+00	0.00E+00
568	ALL	739880.96	4036100.87	4.45E-08	70YrCancerDerived_InhSoilI	4.45E-08	0.00E+00	0.00E+00	0.00E+00	0.00E+00	0.00E+00	0.00E+00	0.00E+00	0.00E+00	0.00E+00	0.00E+00	0.00E+00
569	ALL	739980.96	4036100.87	4.45E-08	70YrCancerDerived_InhSoilI	4.45E-08	0.00E+00	0.00E+00	0.00E+00	0.00E+00	0.00E+00	0.00E+00	0.00E+00	0.00E+00	0.00E+00	0.00E+00	0.00E+00
570	ALL	740080.96	4036100.87	4.44E-08	70YrCancerDerived_InhSoilI	4.44E-08	0.00E+00	0.00E+00	0.00E+00	0.00E+00	0.00E+00	0.00E+00	0.00E+00	0.00E+00	0.00E+00	0.00E+00	0.00E+00
571	ALL	740180.96	4036100.87	4.45E-08	70YrCancerDerived_InhSoilI	4.45E-08	0.00E+00	0.00E+00	0.00E+00	0.00E+00	0.00E+00	0.00E+00	0.00E+00	0.00E+00	0.00E+00	0.00E+00	0.00E+00
572	ALL	740280.96	4036100.87	4.45E-08	70YrCancerDerived_InhSoilI	4.45E-08	0.00E+00	0.00E+00	0.00E+00	0.00E+00	0.00E+00	0.00E+00	0.00E+00	0.00E+00	0.00E+00	0.00E+00	0.00E+00
573	ALL	740380.96	4036100.87	4.45E-08	70YrCancerDerived_InhSoilI	4.45E-08	0.00E+00	0.00E+00	0.00E+00	0.00E+00	0.00E+00	0.00E+00	0.00E+00	0.00E+00	0.00E+00	0.00E+00	0.00E+00
574	ALL	740480.96	4036100.87	4.45E-08	70YrCancerDerived_InhSoilI	4.45E-08	0.00E+00	0.00E+00	0.00E+00	0.00E+00	0.00E+00	0.00E+00	0.00E+00	0.00E+00	0.00E+00	0.00E+00	0.00E+00
575	ALL	740580.96	4036100.87	4.46E-08	70YrCancerDerived_InhSoilI	4.46E-08	0.00E+00	0.00E+00	0.00E+00	0.00E+00	0.00E+00	0.00E+00	0.00E+00	0.00E+00	0.00E+00	0.00E+00	0.00E+00
576	ALL	740680.96	4036100.87	4.47E-08	70YrCancerDerived_InhSoilI	4.47E-08	0.00E+00	0.00E+00	0.00E+00	0.00E+00	0.00E+00	0.00E+00	0.00E+00	0.00E+00	0.00E+00	0.00E+00	0.00E+00
577	ALL	740780.96	4036100.87	4.49E-08	70YrCancerDerived_InhSoilI	4.49E-08	0.00E+00	0.00E+00	0.00E+00	0.00E+00	0.00E+00	0.00E+00	0.00E+00	0.00E+00	0.00E+00	0.00E+00	0.00E+00
578	ALL	740880.96	4036100.87	4.50E-08	70YrCancerDerived_InhSoilI	4.50E-08	0.00E+00	0.00E+00	0.00E+00	0.00E+00	0.00E+00	0.00E+00	0.00E+00	0.00E+00	0.00E+00	0.00E+00	0.00E+00
579	ALL	740980.96	4036100.87	4.51E-08	70YrCancerDerived_InhSoilI	4.51E-08	0.00E+00	0.00E+00	0.00E+00	0.00E+00	0.00E+00	0.00E+00	0.00E+00	0.00E+00	0.00E+00	0.00E+00	0.00E+00
580	ALL	741080.96	4036100.87	4.52E-08	70YrCancerDerived_InhSoilI	4.52E-08	0.00E+00	0.00E+00	0.00E+00	0.00E+00	0.00E+00	0.00E+00	0.00E+00	0.00E+00	0.00E+00	0.00E+00	0.00E+00
581	ALL	741180.96	4036100.87	4.54E-08	70YrCancerDerived_InhSoilI	4.54E-08	0.00E+00	0.00E+00	0.00E+00	0.00E+00	0.00E+00	0.00E+00	0.00E+00	0.00E+00	0.00E+00	0.00E+00	0.00E+00
582	ALL	741280.96	4036100.87	4.56E-08	70YrCancerDerived_InhSoilI	4.56E-08	0.00E+00	0.00E+00	0.00E+00	0.00E+00	0.00E+00	0.00E+00	0.00E+00	0.00E+00	0.00E+00	0.00E+00	0.00E+00
583	ALL	741380.96	4036100.87	4.58E-08	70YrCancerDerived_InhSoilI	4.58E-08	0.00E+00	0.00E+00	0.00E+00	0.00E+00	0.00E+00	0.00E+00	0.00E+00	0.00E+00	0.00E+00	0.00E+00	0.00E+00
584	ALL	741480.96	4036100.87	4.62E-08	70YrCancerDerived_InhSoilI	4.62E-08	0.00E+00	0.00E+00	0.00E+00	0.00E+00	0.00E+00	0.00E+00	0.00E+00	0.00E+00	0.00E+00	0.00E+00	0.00E+00
585	ALL	741580.96	4036100.87	4.66E-08	70YrCancerDerived_InhSoilI	4.66E-08	0.00E+00	0.00E+00	0.00E+00	0.00E+00	0.00E+00	0.00E+00	0.00E+00	0.00E+00	0.00E+00	0.00E+00	0.00E+00
586	ALL	741680.96	4036100.87	4.70E-08	70YrCancerDerived_InhSoilI	4.70E-08	0.00E+00	0.00E+00	0.00E+00	0.00E+00	0.00E+00	0.00E+00	0.00E+00	0.00E+00	0.00E+00	0.00E+00	0.00E+00
587	ALL	741780.96	4036100.87	4.74E-08	70YrCancerDerived_InhSoilI	4.74E-08	0.00E+00	0.00E+00	0.00E+00	0.00E+00	0.00E+00	0.00E+00	0.00E+00	0.00E+00	0.00E+00	0.00E+00	0.00E+00
588	ALL	741880.96	4036100.87	4.78E-08	70YrCancerDerived_InhSoilI	4.78E-08	0.00E+00	0.00E+00	0.00E+00	0.00E+00	0.00E+00	0.00E+00	0.00E+00	0.00E+00	0.00E+00	0.00E+00	0.00E+00
589	ALL	741980.96	4036100.87	4.80E-08	70YrCancerDerived_InhSoilI	4.80E-08	0.00E+00	0.00E+00	0.00E+00	0.00E+00	0.00E+00	0.00E+00	0.00E+00	0.00E+00	0.00E+00	0.00E+00	0.00E+00
590	ALL	738080.96	4036200.87	4.27E-08	70YrCancerDerived_InhSoilI	4.27E-08	0.00E+00	0.00E+00	0.00E+00	0.00E+00	0.00E+00	0.00E+00	0.00E+00	0.00E+00	0.00E+00	0.00E+00	0.00E+00
591	ALL	738280.96	4036200.87	4.30E-08	70YrCancerDerived_InhSoilI	4.30E-08	0.00E+00	0.00E+00	0.00E+00	0.00E+00	0.00E+00	0.00E+00	0.00E+00	0.00E+00	0.00E+00	0.00E+00	0.00E+00
592	ALL	738380.96	4036200.87	4.32E-08	70YrCancerDerived_InhSoilI	4.32E-08	0.00E+00	0.00E+00	0.00E+00	0.00E+00	0.00E+00	0.00E+00	0.00E+00	0.00E+00	0.00E+00	0.00E+00	0.00E+00
593	ALL	738480.96	4036200.87	4.33E-08	70YrCancerDerived_InhSoilI	4.33E-08	0.00E+00	0.00E+00	0.00E+00	0.00E+00	0.00E+00	0.00E+00	0.00E+00	0.00E+00	0.00E+00	0.00E+00	0.00E+00
594	ALL	738580.96	4036200.87	4.34E-08	70YrCancerDerived_InhSoilI	4.34E-08	0.00E+00	0.00E+00	0.00E+00	0.00E+00	0.00E+00	0.00E+00	0.00E+00	0.00E+00	0.00E+00	0.00E+00	0.00E+00
595	ALL	738680.96	4036200.87	4.36E-08	70YrCancerDerived_InhSoilI	4.36E-08	0.00E+00	0.00E+00	0.00E+00	0.00E+00	0.00E+00	0.00E+00	0.00E+00	0.00E+00	0.00E+00	0.00E+00	0.00E+00
596	ALL	738780.96	4036200.87	4.37E-08	70YrCancerDerived_InhSoilI	4.37E-08	0.00E+00	0.00E+00	0.00E+00	0.00E+00	0.00E+00	0.00E+00	0.00E+00	0.00E+00	0.00E+00	0.00E+00	0.00E+00
597	ALL	738880.96	4036200.87	4.38E-08	70YrCancerDerived_InhSoilI	4.38E-08	0.00E+00	0.00E+00	0.00E+00	0.00E+00	0.00E+00	0.00E+00	0.00E+00	0.00E+00	0.00E+00	0.00E+00	0.00E+00
598	ALL	738980.96	4036200.87	4.39E-08	70YrCancerDerived_InhSoilI	4.39E-08	0.00E+00	0.00E+00	0.00E+00	0.00E+00	0.00E+00	0.00E+00	0.00E+00	0.00E+00	0.00E+00	0.00E+00	0.00E+00
599	ALL	739080.96	4036200.87	4.40E-08	70YrCancerDerived_InhSoilI	4.40E-08	0.00E+00	0.00E+00	0.00E+00	0.00E+00	0.00E+00	0.00E+00	0.00E+00	0.00E+00	0.00E+00	0.00E+00	0.00E+00
600	ALL	739180.96	4036200.87	4.41E-08	70YrCancerDerived_InhSoilI	4.41E-08	0.00E+00	0.00E+00	0.00E+00	0.00E+00	0.00E+00	0.00E+00	0.00E+00	0.00E+00	0.00E+00	0.00E+00	0.00E+00
601	ALL	739280.96	4036200.87	4.42E-08	70YrCancerDerived_InhSoilI	4.42E-08	0.00E+00	0.00E+00	0.00E+00	0.00E+00	0.00E+00	0.00E+00	0.00E+00	0.00E+00	0.00E+00	0.00E+00	0.00E+00
602	ALL	739380.96	4036200.87	4.42E-08	70YrCancerDerived_InhSoilI	4.42E-08	0.00E+00	0.00E+00	0.00E+00	0.00E+00	0.00E+00	0.00E+00	0.00E+00	0.00E+00	0.00E+00	0.00E+00	0.00E+00
603	ALL	739480.96	4036200.87	4.42E-08	70YrCancerDerived_InhSoilI	4.42E-08	0.00E+00	0.00E+00	0.00E+00	0.00E+00	0.00E+00	0.00E+00	0.00E+00	0.00E+00	0.00E+00	0.00E+00	0.00E+00
604	ALL	739580.96	4036200.87	4.42E-08	70YrCancerDerived_InhSoilI	4.42E-08	0.00E+00	0.00E+00	0.00E+00	0.00E+00	0.00E+00	0.00E+00	0.00E+00	0.00E+00	0.00E+00	0.00E+00	0.00E+00
605	ALL	739680.96	4036200.87	4.42E-08	70YrCancerDerived_InhSoilI	4.42E-08	0.00E+00	0.00E+00	0.00E+00	0.00E+00	0.00E+00	0.00E+00	0.00E+00	0.00E+00	0.00E+00	0.00E+00	0.00E+00
606	ALL	739780.96	4036200.87	4.42E-08	70YrCancerDerived_InhSoilI	4.42E-08	0.00E+00	0.00E+00	0.00E+00	0.00E+00	0.00E+00	0.00E+00	0.00E+00	0.00E+00	0.00E+00	0.00E+00	0.00E+00
607	ALL	739880.96	4036200.87	4.42E-08	70YrCancerDerived_InhSoilI	4.42E-08	0.00E+00	0.00E+00	0.00E+00	0.00E+00	0.00E+00	0.00E+00	0.00E+00	0.00E+00	0.00E+00	0.00E+00	0.00E+00
608	ALL	739980.96	4036200.87	4.42E-08	70YrCancerDerived_InhSoilI	4.42E-08	0.00E+00	0.00E+00	0.00E+00	0.00E+00	0.00E+00	0.00E+00	0.00E+00	0.00E+00	0.00E+00	0.00E+00	0.00E+00
609	ALL	740080.96	4036200.87	4.43E-08	70YrCancerDerived_InhSoilI	4.43E-08	0.00E+00	0.00E+00	0.00E+00	0.00E+00	0.00E+00	0.00E+00	0.00E+00	0.00E+00	0.00E+00	0.00E+00	0.00E+00
610	ALL	740180.96	4036200.87	4.43E-08	70YrCancerDerived_InhSoilI	4.43E-08	0.00E+00	0.00E+00	0.00E+00	0.00E+00	0.00E+00	0.00E+00	0.00E+00	0.00E+00	0.00E+00	0.00E+00	0.00E+00
611	ALL	740280.96	4036200.87	4.43E-08	70YrCancerDerived_InhSoilI	4.43E-08	0.00E+00	0.00E+00	0.00E+00	0.00E+00	0.00E+00	0.00E+00	0.00E+00	0.00E+00	0.00E+00	0.00E+00	0.00E+00
612	ALL	740380.96	4036200.87	4.44E-08	70YrCancerDerived_InhSoilI	4.44E-08	0.00E+00	0.00E+00	0.00E+00	0.00E+00	0.00E+00	0.00E+00	0.00E+00	0.00E+00	0.00E+00	0.00E+00	0.00E+00
613	ALL	740480.96	4036200.87	4.44E-08	70YrCancerDerived_InhSoilI	4.44E-08	0.00E+00	0.00E+00	0.00E+00	0.00E+00	0.00E+00	0.00E+00	0.00E+00	0.00E+00	0.00E+00	0.00E+00	0.00E+00
614	ALL	740580.96	4036200.87	4.45E-08	70YrCancerDerived_InhSoilI	4.45E-08	0.00E+00	0.00E+00	0.00E+00	0.00E+00	0.00E+00	0.00E+00	0.00E+00	0.00E+00	0.00E+00	0.00E+00	0.00E+00

615	ALL	740680.96	4036200.87	4.46E-08	70YrCancerDerived_InhSoilI	4.46E-08	0.00E+00	0.00E+00	0.00E+00	0.00E+00	0.00E+00	0.00E+00	0.00E+00	0.00E+00	0.00E+00	0.00E+00	0.00E+00
616	ALL	740780.96	4036200.87	4.48E-08	70YrCancerDerived_InhSoilI	4.48E-08	0.00E+00	0.00E+00	0.00E+00	0.00E+00	0.00E+00	0.00E+00	0.00E+00	0.00E+00	0.00E+00	0.00E+00	0.00E+00
617	ALL	740880.96	4036200.87	4.49E-08	70YrCancerDerived_InhSoilI	4.49E-08	0.00E+00	0.00E+00	0.00E+00	0.00E+00	0.00E+00	0.00E+00	0.00E+00	0.00E+00	0.00E+00	0.00E+00	0.00E+00
618	ALL	740980.96	4036200.87	4.50E-08	70YrCancerDerived_InhSoilI	4.50E-08	0.00E+00	0.00E+00	0.00E+00	0.00E+00	0.00E+00	0.00E+00	0.00E+00	0.00E+00	0.00E+00	0.00E+00	0.00E+00
619	ALL	741080.96	4036200.87	4.51E-08	70YrCancerDerived_InhSoilI	4.51E-08	0.00E+00	0.00E+00	0.00E+00	0.00E+00	0.00E+00	0.00E+00	0.00E+00	0.00E+00	0.00E+00	0.00E+00	0.00E+00
620	ALL	741180.96	4036200.87	4.53E-08	70YrCancerDerived_InhSoilI	4.53E-08	0.00E+00	0.00E+00	0.00E+00	0.00E+00	0.00E+00	0.00E+00	0.00E+00	0.00E+00	0.00E+00	0.00E+00	0.00E+00
621	ALL	741280.96	4036200.87	4.55E-08	70YrCancerDerived_InhSoilI	4.55E-08	0.00E+00	0.00E+00	0.00E+00	0.00E+00	0.00E+00	0.00E+00	0.00E+00	0.00E+00	0.00E+00	0.00E+00	0.00E+00
622	ALL	741380.96	4036200.87	4.58E-08	70YrCancerDerived_InhSoilI	4.58E-08	0.00E+00	0.00E+00	0.00E+00	0.00E+00	0.00E+00	0.00E+00	0.00E+00	0.00E+00	0.00E+00	0.00E+00	0.00E+00
623	ALL	741480.96	4036200.87	4.61E-08	70YrCancerDerived_InhSoilI	4.61E-08	0.00E+00	0.00E+00	0.00E+00	0.00E+00	0.00E+00	0.00E+00	0.00E+00	0.00E+00	0.00E+00	0.00E+00	0.00E+00
624	ALL	741580.96	4036200.87	4.65E-08	70YrCancerDerived_InhSoilI	4.65E-08	0.00E+00	0.00E+00	0.00E+00	0.00E+00	0.00E+00	0.00E+00	0.00E+00	0.00E+00	0.00E+00	0.00E+00	0.00E+00
625	ALL	741680.96	4036200.87	4.70E-08	70YrCancerDerived_InhSoilI	4.70E-08	0.00E+00	0.00E+00	0.00E+00	0.00E+00	0.00E+00	0.00E+00	0.00E+00	0.00E+00	0.00E+00	0.00E+00	0.00E+00
626	ALL	741780.96	4036200.87	4.74E-08	70YrCancerDerived_InhSoilI	4.74E-08	0.00E+00	0.00E+00	0.00E+00	0.00E+00	0.00E+00	0.00E+00	0.00E+00	0.00E+00	0.00E+00	0.00E+00	0.00E+00
627	ALL	741880.96	4036200.87	4.77E-08	70YrCancerDerived_InhSoilI	4.77E-08	0.00E+00	0.00E+00	0.00E+00	0.00E+00	0.00E+00	0.00E+00	0.00E+00	0.00E+00	0.00E+00	0.00E+00	0.00E+00
628	ALL	741980.96	4036200.87	4.78E-08	70YrCancerDerived_InhSoilI	4.78E-08	0.00E+00	0.00E+00	0.00E+00	0.00E+00	0.00E+00	0.00E+00	0.00E+00	0.00E+00	0.00E+00	0.00E+00	0.00E+00
629	ALL	742080.96	4036200.87	4.84E-08	70YrCancerDerived_InhSoilI	4.84E-08	0.00E+00	0.00E+00	0.00E+00	0.00E+00	0.00E+00	0.00E+00	0.00E+00	0.00E+00	0.00E+00	0.00E+00	0.00E+00
630	ALL	738080.96	4036300.87	4.20E-08	70YrCancerDerived_InhSoilI	4.20E-08	0.00E+00	0.00E+00	0.00E+00	0.00E+00	0.00E+00	0.00E+00	0.00E+00	0.00E+00	0.00E+00	0.00E+00	0.00E+00
631	ALL	738180.96	4036300.87	4.22E-08	70YrCancerDerived_InhSoilI	4.22E-08	0.00E+00	0.00E+00	0.00E+00	0.00E+00	0.00E+00	0.00E+00	0.00E+00	0.00E+00	0.00E+00	0.00E+00	0.00E+00
632	ALL	738380.96	4036300.87	4.25E-08	70YrCancerDerived_InhSoilI	4.25E-08	0.00E+00	0.00E+00	0.00E+00	0.00E+00	0.00E+00	0.00E+00	0.00E+00	0.00E+00	0.00E+00	0.00E+00	0.00E+00
633	ALL	738480.96	4036300.87	4.27E-08	70YrCancerDerived_InhSoilI	4.27E-08	0.00E+00	0.00E+00	0.00E+00	0.00E+00	0.00E+00	0.00E+00	0.00E+00	0.00E+00	0.00E+00	0.00E+00	0.00E+00
634	ALL	738580.96	4036300.87	4.28E-08	70YrCancerDerived_InhSoilI	4.28E-08	0.00E+00	0.00E+00	0.00E+00	0.00E+00	0.00E+00	0.00E+00	0.00E+00	0.00E+00	0.00E+00	0.00E+00	0.00E+00
635	ALL	738680.96	4036300.87	4.30E-08	70YrCancerDerived_InhSoilI	4.30E-08	0.00E+00	0.00E+00	0.00E+00	0.00E+00	0.00E+00	0.00E+00	0.00E+00	0.00E+00	0.00E+00	0.00E+00	0.00E+00
636	ALL	738780.96	4036300.87	4.32E-08	70YrCancerDerived_InhSoilI	4.32E-08	0.00E+00	0.00E+00	0.00E+00	0.00E+00	0.00E+00	0.00E+00	0.00E+00	0.00E+00	0.00E+00	0.00E+00	0.00E+00
637	ALL	738880.96	4036300.87	4.33E-08	70YrCancerDerived_InhSoilI	4.33E-08	0.00E+00	0.00E+00	0.00E+00	0.00E+00	0.00E+00	0.00E+00	0.00E+00	0.00E+00	0.00E+00	0.00E+00	0.00E+00
638	ALL	738980.96	4036300.87	4.34E-08	70YrCancerDerived_InhSoilI	4.34E-08	0.00E+00	0.00E+00	0.00E+00	0.00E+00	0.00E+00	0.00E+00	0.00E+00	0.00E+00	0.00E+00	0.00E+00	0.00E+00
639	ALL	739080.96	4036300.87	4.36E-08	70YrCancerDerived_InhSoilI	4.36E-08	0.00E+00	0.00E+00	0.00E+00	0.00E+00	0.00E+00	0.00E+00	0.00E+00	0.00E+00	0.00E+00	0.00E+00	0.00E+00
640	ALL	739180.96	4036300.87	4.37E-08	70YrCancerDerived_InhSoilI	4.37E-08	0.00E+00	0.00E+00	0.00E+00	0.00E+00	0.00E+00	0.00E+00	0.00E+00	0.00E+00	0.00E+00	0.00E+00	0.00E+00
641	ALL	739280.96	4036300.87	4.38E-08	70YrCancerDerived_InhSoilI	4.38E-08	0.00E+00	0.00E+00	0.00E+00	0.00E+00	0.00E+00	0.00E+00	0.00E+00	0.00E+00	0.00E+00	0.00E+00	0.00E+00
642	ALL	739380.96	4036300.87	4.38E-08	70YrCancerDerived_InhSoilI	4.38E-08	0.00E+00	0.00E+00	0.00E+00	0.00E+00	0.00E+00	0.00E+00	0.00E+00	0.00E+00	0.00E+00	0.00E+00	0.00E+00
643	ALL	739480.96	4036300.87	4.38E-08	70YrCancerDerived_InhSoilI	4.38E-08	0.00E+00	0.00E+00	0.00E+00	0.00E+00	0.00E+00	0.00E+00	0.00E+00	0.00E+00	0.00E+00	0.00E+00	0.00E+00
644	ALL	739580.96	4036300.87	4.39E-08	70YrCancerDerived_InhSoilI	4.39E-08	0.00E+00	0.00E+00	0.00E+00	0.00E+00	0.00E+00	0.00E+00	0.00E+00	0.00E+00	0.00E+00	0.00E+00	0.00E+00
645	ALL	739680.96	4036300.87	4.39E-08	70YrCancerDerived_InhSoilI	4.39E-08	0.00E+00	0.00E+00	0.00E+00	0.00E+00	0.00E+00	0.00E+00	0.00E+00	0.00E+00	0.00E+00	0.00E+00	0.00E+00
646	ALL	739780.96	4036300.87	4.39E-08	70YrCancerDerived_InhSoilI	4.39E-08	0.00E+00	0.00E+00	0.00E+00	0.00E+00	0.00E+00	0.00E+00	0.00E+00	0.00E+00	0.00E+00	0.00E+00	0.00E+00
647	ALL	739880.96	4036300.87	4.40E-08	70YrCancerDerived_InhSoilI	4.40E-08	0.00E+00	0.00E+00	0.00E+00	0.00E+00	0.00E+00	0.00E+00	0.00E+00	0.00E+00	0.00E+00	0.00E+00	0.00E+00
648	ALL	739980.96	4036300.87	4.41E-08	70YrCancerDerived_InhSoilI	4.41E-08	0.00E+00	0.00E+00	0.00E+00	0.00E+00	0.00E+00	0.00E+00	0.00E+00	0.00E+00	0.00E+00	0.00E+00	0.00E+00
649	ALL	740080.96	4036300.87	4.41E-08	70YrCancerDerived_InhSoilI	4.41E-08	0.00E+00	0.00E+00	0.00E+00	0.00E+00	0.00E+00	0.00E+00	0.00E+00	0.00E+00	0.00E+00	0.00E+00	0.00E+00
650	ALL	740180.96	4036300.87	4.42E-08	70YrCancerDerived_InhSoilI	4.42E-08	0.00E+00	0.00E+00	0.00E+00	0.00E+00	0.00E+00	0.00E+00	0.00E+00	0.00E+00	0.00E+00	0.00E+00	0.00E+00
651	ALL	740280.96	4036300.87	4.42E-08	70YrCancerDerived_InhSoilI	4.42E-08	0.00E+00	0.00E+00	0.00E+00	0.00E+00	0.00E+00	0.00E+00	0.00E+00	0.00E+00	0.00E+00	0.00E+00	0.00E+00
652	ALL	740380.96	4036300.87	4.43E-08	70YrCancerDerived_InhSoilI	4.43E-08	0.00E+00	0.00E+00	0.00E+00	0.00E+00	0.00E+00	0.00E+00	0.00E+00	0.00E+00	0.00E+00	0.00E+00	0.00E+00
653	ALL	740480.96	4036300.87	4.44E-08	70YrCancerDerived_InhSoilI	4.44E-08	0.00E+00	0.00E+00	0.00E+00	0.00E+00	0.00E+00	0.00E+00	0.00E+00	0.00E+00	0.00E+00	0.00E+00	0.00E+00
654	ALL	740580.96	4036300.87	4.45E-08	70YrCancerDerived_InhSoilI	4.45E-08	0.00E+00	0.00E+00	0.00E+00	0.00E+00	0.00E+00	0.00E+00	0.00E+00	0.00E+00	0.00E+00	0.00E+00	0.00E+00
655	ALL	740680.96	4036300.87	4.46E-08	70YrCancerDerived_InhSoilI	4.46E-08	0.00E+00	0.00E+00	0.00E+00	0.00E+00	0.00E+00	0.00E+00	0.00E+00	0.00E+00	0.00E+00	0.00E+00	0.00E+00
656	ALL	740780.96	4036300.87	4.48E-08	70YrCancerDerived_InhSoilI	4.48E-08	0.00E+00	0.00E+00	0.00E+00	0.00E+00	0.00E+00	0.00E+00	0.00E+00	0.00E+00	0.00E+00	0.00E+00	0.00E+00
657	ALL	740880.96	4036300.87	4.48E-08	70YrCancerDerived_InhSoilI	4.48E-08	0.00E+00	0.00E+00	0.00E+00	0.00E+00	0.00E+00	0.00E+00	0.00E+00	0.00E+00	0.00E+00	0.00E+00	0.00E+00
658	ALL	740980.96	4036300.87	4.50E-08	70YrCancerDerived_InhSoilI	4.50E-08	0.00E+00	0.00E+00	0.00E+00	0.00E+00	0.00E+00	0.00E+00	0.00E+00	0.00E+00	0.00E+00	0.00E+00	0.00E+00
659	ALL	741080.96	4036300.87	4.52E-08	70YrCancerDerived_InhSoilI	4.52E-08	0.00E+00	0.00E+00	0.00E+00	0.00E+00	0.00E+00	0.00E+00	0.00E+00	0.00E+00	0.00E+00	0.00E+00	0.00E+00
660	ALL	741180.96	4036300.87	4.53E-08	70YrCancerDerived_InhSoilI	4.53E-08	0.00E+00	0.00E+00	0.00E+00	0.00E+00	0.00E+00	0.00E+00	0.00E+00	0.00E+00	0.00E+00	0.00E+00	0.00E+00
661	ALL	741280.96	4036300.87	4.55E-08	70YrCancerDerived_InhSoilI	4.55E-08	0.00E+00	0.00E+00	0.00E+00	0.00E+00	0.00E+00	0.00E+00	0.00E+00	0.00E+00	0.00E+00	0.00E+00	0.00E+00
662	ALL	741380.96	4036300.87	4.58E-08	70YrCancerDerived_InhSoilI	4.58E-08	0.00E+00	0.00E+00	0.00E+00	0.00E+00	0.00E+00	0.00E+00	0.00E+00	0.00E+00	0.00E+00	0.00E+00	0.00E+00
663	ALL	741480.96	4036300.87	4.62E-08	70YrCancerDerived_InhSoilI	4.62E-08	0.00E+00	0.00E+00	0.00E+00	0.00E+00	0.00E+00	0.00E+00	0.00E+00	0.00E+00	0.00E+00	0.00E+00	0.00E+00
664	ALL	741580.96	4036300.87	4.65E-08	70YrCancerDerived_InhSoilI	4.65E-08	0.00E+00	0.00E+00	0.00E+00	0.00E+00	0.00E+00	0.00E+00	0.00E+00	0.00E+00	0.00E+00	0.00E+00	0.00E+00
665	ALL	741680.96	4036300.87	4.69E-08	70YrCancerDerived_InhSoilI	4.69E-08	0.00E+00	0.00E+00	0.00E+00	0.00E+00	0.00E+00	0.00E+00	0.00E+00	0.00E+00	0.00E+00	0.00E+00	0.00E+00
666	ALL	741780.96	4036300.87	4.73E-08	70YrCancerDerived_InhSoilI	4.73E-08	0.00E+00	0.00E+00	0.00E+00	0.00E+00	0.00E+00	0.00E+00	0.00E+00	0.00E+00	0.00E+00	0.00E+00	0.00E+00
667	ALL	741880.96	4036300.87	4.76E-08	70YrCancerDerived_InhSoilI	4.76E-08	0.00E+00	0.00E+00	0.00E+00	0.00E+00	0.00E+00	0.00E+00	0.00E+00	0.00E+00	0.00E+00	0.00E+00	0.00E+00
668	ALL	741980.96	4036300.87	4.78E-08	70YrCancerDerived_InhSoilI	4.78E-08	0.00E+00	0.00E+00	0.00E+00	0.00E+00	0.00E+00	0.00E+00	0.00E+00	0.00E+00	0.00E+00	0.00E+00	0.00E+00
669	ALL	742080.96	4036300.87	4.83E-08	70YrCancerDerived_InhSoilI	4.83E-08	0.00E+00	0.00E+00	0.00E+00	0.00E+00	0.00E+00	0.00E+00	0.00E+00	0.00E+00	0.00E+00	0.00E+00	0.00E+00
670	ALL	742180.96	4036300.87	4.89E-08	70YrCancerDerived_InhSoilI	4.89E-08	0.00E+00	0.00E+00	0.00E+00	0.00E+00	0.00E+00	0.00E+00	0.00E+00	0.00E+00	0.00E+00	0.00E+00	0.00E+00

671	ALL		742280.96	4036300.87	4.95E-08	70YrCancerDerived_InhSoilI	4.95E-08	0.00E+00	0.00E+00	0.00E+00	0.00E+00	0.00E+00	0.00E+00	0.00E+00	0.00E+00	0.00E+00	0.00E+00	0.00E+00
672	ALL		742380.96	4036300.87	5.02E-08	70YrCancerDerived_InhSoilI	5.02E-08	0.00E+00	0.00E+00	0.00E+00	0.00E+00	0.00E+00	0.00E+00	0.00E+00	0.00E+00	0.00E+00	0.00E+00	0.00E+00
673	ALL		742480.96	4036300.87	5.09E-08	70YrCancerDerived_InhSoilI	5.09E-08	0.00E+00	0.00E+00	0.00E+00	0.00E+00	0.00E+00	0.00E+00	0.00E+00	0.00E+00	0.00E+00	0.00E+00	0.00E+00
674	ALL		742580.96	4036300.87	5.17E-08	70YrCancerDerived_InhSoilI	5.17E-08	0.00E+00	0.00E+00	0.00E+00	0.00E+00	0.00E+00	0.00E+00	0.00E+00	0.00E+00	0.00E+00	0.00E+00	0.00E+00
675	ALL		742680.96	4036300.87	5.24E-08	70YrCancerDerived_InhSoilI	5.24E-08	0.00E+00	0.00E+00	0.00E+00	0.00E+00	0.00E+00	0.00E+00	0.00E+00	0.00E+00	0.00E+00	0.00E+00	0.00E+00
676	ALL		742780.96	4036300.87	5.33E-08	70YrCancerDerived_InhSoilI	5.33E-08	0.00E+00	0.00E+00	0.00E+00	0.00E+00	0.00E+00	0.00E+00	0.00E+00	0.00E+00	0.00E+00	0.00E+00	0.00E+00
677	ALL		742880.96	4036300.87	5.41E-08	70YrCancerDerived_InhSoilI	5.41E-08	0.00E+00	0.00E+00	0.00E+00	0.00E+00	0.00E+00	0.00E+00	0.00E+00	0.00E+00	0.00E+00	0.00E+00	0.00E+00
678	ALL		742980.96	4036300.87	5.50E-08	70YrCancerDerived_InhSoilI	5.50E-08	0.00E+00	0.00E+00	0.00E+00	0.00E+00	0.00E+00	0.00E+00	0.00E+00	0.00E+00	0.00E+00	0.00E+00	0.00E+00
679	ALL		743080.96	4036300.87	5.60E-08	70YrCancerDerived_InhSoilI	5.60E-08	0.00E+00	0.00E+00	0.00E+00	0.00E+00	0.00E+00	0.00E+00	0.00E+00	0.00E+00	0.00E+00	0.00E+00	0.00E+00
680	ALL		743180.96	4036300.87	5.69E-08	70YrCancerDerived_InhSoilI	5.69E-08	0.00E+00	0.00E+00	0.00E+00	0.00E+00	0.00E+00	0.00E+00	0.00E+00	0.00E+00	0.00E+00	0.00E+00	0.00E+00
681	ALL		743280.96	4036300.87	5.79E-08	70YrCancerDerived_InhSoilI	5.79E-08	0.00E+00	0.00E+00	0.00E+00	0.00E+00	0.00E+00	0.00E+00	0.00E+00	0.00E+00	0.00E+00	0.00E+00	0.00E+00
682	ALL		743380.96	4036300.87	5.90E-08	70YrCancerDerived_InhSoilI	5.90E-08	0.00E+00	0.00E+00	0.00E+00	0.00E+00	0.00E+00	0.00E+00	0.00E+00	0.00E+00	0.00E+00	0.00E+00	0.00E+00
683	ALL		743480.96	4036300.87	6.00E-08	70YrCancerDerived_InhSoilI	6.00E-08	0.00E+00	0.00E+00	0.00E+00	0.00E+00	0.00E+00	0.00E+00	0.00E+00	0.00E+00	0.00E+00	0.00E+00	0.00E+00
684	ALL		743580.96	4036300.87	6.11E-08	70YrCancerDerived_InhSoilI	6.11E-08	0.00E+00	0.00E+00	0.00E+00	0.00E+00	0.00E+00	0.00E+00	0.00E+00	0.00E+00	0.00E+00	0.00E+00	0.00E+00
685	ALL		743680.96	4036300.87	6.22E-08	70YrCancerDerived_InhSoilI	6.22E-08	0.00E+00	0.00E+00	0.00E+00	0.00E+00	0.00E+00	0.00E+00	0.00E+00	0.00E+00	0.00E+00	0.00E+00	0.00E+00
686	ALL		743780.96	4036300.87	6.34E-08	70YrCancerDerived_InhSoilI	6.34E-08	0.00E+00	0.00E+00	0.00E+00	0.00E+00	0.00E+00	0.00E+00	0.00E+00	0.00E+00	0.00E+00	0.00E+00	0.00E+00
687	ALL		743880.96	4036300.87	6.45E-08	70YrCancerDerived_InhSoilI	6.45E-08	0.00E+00	0.00E+00	0.00E+00	0.00E+00	0.00E+00	0.00E+00	0.00E+00	0.00E+00	0.00E+00	0.00E+00	0.00E+00
688	ALL		743980.96	4036300.87	6.58E-08	70YrCancerDerived_InhSoilI	6.58E-08	0.00E+00	0.00E+00	0.00E+00	0.00E+00	0.00E+00	0.00E+00	0.00E+00	0.00E+00	0.00E+00	0.00E+00	0.00E+00
689	ALL		744080.96	4036300.87	6.71E-08	70YrCancerDerived_InhSoilI	6.71E-08	0.00E+00	0.00E+00	0.00E+00	0.00E+00	0.00E+00	0.00E+00	0.00E+00	0.00E+00	0.00E+00	0.00E+00	0.00E+00
690	ALL		744180.96	4036300.87	6.84E-08	70YrCancerDerived_InhSoilI	6.84E-08	0.00E+00	0.00E+00	0.00E+00	0.00E+00	0.00E+00	0.00E+00	0.00E+00	0.00E+00	0.00E+00	0.00E+00	0.00E+00
691	ALL		744280.96	4036300.87	6.98E-08	70YrCancerDerived_InhSoilI	6.98E-08	0.00E+00	0.00E+00	0.00E+00	0.00E+00	0.00E+00	0.00E+00	0.00E+00	0.00E+00	0.00E+00	0.00E+00	0.00E+00
692	ALL		744380.96	4036300.87	7.12E-08	70YrCancerDerived_InhSoilI	7.12E-08	0.00E+00	0.00E+00	0.00E+00	0.00E+00	0.00E+00	0.00E+00	0.00E+00	0.00E+00	0.00E+00	0.00E+00	0.00E+00
693	ALL		744480.96	4036300.87	7.28E-08	70YrCancerDerived_InhSoilI	7.28E-08	0.00E+00	0.00E+00	0.00E+00	0.00E+00	0.00E+00	0.00E+00	0.00E+00	0.00E+00	0.00E+00	0.00E+00	0.00E+00
694	ALL		738080.96	4036400.87	4.13E-08	70YrCancerDerived_InhSoilI	4.13E-08	0.00E+00	0.00E+00	0.00E+00	0.00E+00	0.00E+00	0.00E+00	0.00E+00	0.00E+00	0.00E+00	0.00E+00	0.00E+00
695	ALL		738180.96	4036400.87	4.15E-08	70YrCancerDerived_InhSoilI	4.15E-08	0.00E+00	0.00E+00	0.00E+00	0.00E+00	0.00E+00	0.00E+00	0.00E+00	0.00E+00	0.00E+00	0.00E+00	0.00E+00
696	ALL		738280.96	4036400.87	4.17E-08	70YrCancerDerived_InhSoilI	4.17E-08	0.00E+00	0.00E+00	0.00E+00	0.00E+00	0.00E+00	0.00E+00	0.00E+00	0.00E+00	0.00E+00	0.00E+00	0.00E+00
697	ALL		738480.96	4036400.87	4.21E-08	70YrCancerDerived_InhSoilI	4.21E-08	0.00E+00	0.00E+00	0.00E+00	0.00E+00	0.00E+00	0.00E+00	0.00E+00	0.00E+00	0.00E+00	0.00E+00	0.00E+00
698	ALL		738580.96	4036400.87	4.22E-08	70YrCancerDerived_InhSoilI	4.22E-08	0.00E+00	0.00E+00	0.00E+00	0.00E+00	0.00E+00	0.00E+00	0.00E+00	0.00E+00	0.00E+00	0.00E+00	0.00E+00
699	ALL		738680.96	4036400.87	4.24E-08	70YrCancerDerived_InhSoilI	4.24E-08	0.00E+00	0.00E+00	0.00E+00	0.00E+00	0.00E+00	0.00E+00	0.00E+00	0.00E+00	0.00E+00	0.00E+00	0.00E+00
700	ALL		739380.96	4036400.87	4.34E-08	70YrCancerDerived_InhSoilI	4.34E-08	0.00E+00	0.00E+00	0.00E+00	0.00E+00	0.00E+00	0.00E+00	0.00E+00	0.00E+00	0.00E+00	0.00E+00	0.00E+00
701	ALL		739480.96	4036400.87	4.34E-08	70YrCancerDerived_InhSoilI	4.34E-08	0.00E+00	0.00E+00	0.00E+00	0.00E+00	0.00E+00	0.00E+00	0.00E+00	0.00E+00	0.00E+00	0.00E+00	0.00E+00
702	ALL		739580.96	4036400.87	4.35E-08	70YrCancerDerived_InhSoilI	4.35E-08	0.00E+00	0.00E+00	0.00E+00	0.00E+00	0.00E+00	0.00E+00	0.00E+00	0.00E+00	0.00E+00	0.00E+00	0.00E+00
703	ALL		739680.96	4036400.87	4.36E-08	70YrCancerDerived_InhSoilI	4.36E-08	0.00E+00	0.00E+00	0.00E+00	0.00E+00	0.00E+00	0.00E+00	0.00E+00	0.00E+00	0.00E+00	0.00E+00	0.00E+00
704	ALL		739780.96	4036400.87	4.37E-08	70YrCancerDerived_InhSoilI	4.37E-08	0.00E+00	0.00E+00	0.00E+00	0.00E+00	0.00E+00	0.00E+00	0.00E+00	0.00E+00	0.00E+00	0.00E+00	0.00E+00
705	ALL		739880.96	4036400.87	4.38E-08	70YrCancerDerived_InhSoilI	4.38E-08	0.00E+00	0.00E+00	0.00E+00	0.00E+00	0.00E+00	0.00E+00	0.00E+00	0.00E+00	0.00E+00	0.00E+00	0.00E+00
706	ALL		739980.96	4036400.87	4.39E-08	70YrCancerDerived_InhSoilI	4.39E-08	0.00E+00	0.00E+00	0.00E+00	0.00E+00	0.00E+00	0.00E+00	0.00E+00	0.00E+00	0.00E+00	0.00E+00	0.00E+00
707	ALL		740080.96	4036400.87	4.39E-08	70YrCancerDerived_InhSoilI	4.39E-08	0.00E+00	0.00E+00	0.00E+00	0.00E+00	0.00E+00	0.00E+00	0.00E+00	0.00E+00	0.00E+00	0.00E+00	0.00E+00
708	ALL		740180.96	4036400.87	4.41E-08	70YrCancerDerived_InhSoilI	4.41E-08	0.00E+00	0.00E+00	0.00E+00	0.00E+00	0.00E+00	0.00E+00	0.00E+00	0.00E+00	0.00E+00	0.00E+00	0.00E+00
709	ALL		740280.96	4036400.87	4.41E-08	70YrCancerDerived_InhSoilI	4.41E-08	0.00E+00	0.00E+00	0.00E+00	0.00E+00	0.00E+00	0.00E+00	0.00E+00	0.00E+00	0.00E+00	0.00E+00	0.00E+00
710	ALL		740380.96	4036400.87	4.43E-08	70YrCancerDerived_InhSoilI	4.43E-08	0.00E+00	0.00E+00	0.00E+00	0.00E+00	0.00E+00	0.00E+00	0.00E+00	0.00E+00	0.00E+00	0.00E+00	0.00E+00
711	ALL		740480.96	4036400.87	4.44E-08	70YrCancerDerived_InhSoilI	4.44E-08	0.00E+00	0.00E+00	0.00E+00	0.00E+00	0.00E+00	0.00E+00	0.00E+00	0.00E+00	0.00E+00	0.00E+00	0.00E+00
712	ALL		740580.96	4036400.87	4.45E-08	70YrCancerDerived_InhSoilI	4.45E-08	0.00E+00	0.00E+00	0.00E+00	0.00E+00	0.00E+00	0.00E+00	0.00E+00	0.00E+00	0.00E+00	0.00E+00	0.00E+00
713	ALL		740680.96	4036400.87	4.46E-08	70YrCancerDerived_InhSoilI	4.46E-08	0.00E+00	0.00E+00	0.00E+00	0.00E+00	0.00E+00	0.00E+00	0.00E+00	0.00E+00	0.00E+00	0.00E+00	0.00E+00
714	ALL		740780.96	4036400.87	4.48E-08	70YrCancerDerived_InhSoilI	4.48E-08	0.00E+00	0.00E+00	0.00E+00	0.00E+00	0.00E+00	0.00E+00	0.00E+00	0.00E+00	0.00E+00	0.00E+00	0.00E+00
715	ALL		740880.96	4036400.87	4.50E-08	70YrCancerDerived_InhSoilI	4.50E-08	0.00E+00	0.00E+00	0.00E+00	0.00E+00	0.00E+00	0.00E+00	0.00E+00	0.00E+00	0.00E+00	0.00E+00	0.00E+00
716	ALL		740980.96	4036400.87	4.51E-08	70YrCancerDerived_InhSoilI	4.51E-08	0.00E+00	0.00E+00	0.00E+00	0.00E+00	0.00E+00	0.00E+00	0.00E+00	0.00E+00	0.00E+00	0.00E+00	0.00E+00
717	ALL		741080.96	4036400.87	4.53E-08	70YrCancerDerived_InhSoilI	4.53E-08	0.00E+00	0.00E+00	0.00E+00	0.00E+00	0.00E+00	0.00E+00	0.00E+00	0.00E+00	0.00E+00	0.00E+00	0.00E+00
718	ALL		741180.96	4036400.87	4.55E-08	70YrCancerDerived_InhSoilI	4.55E-08	0.00E+00	0.00E+00	0.00E+00	0.00E+00	0.00E+00	0.00E+00	0.00E+00	0.00E+00	0.00E+00	0.00E+00	0.00E+00
719	ALL		741280.96	4036400.87	4.57E-08	70YrCancerDerived_InhSoilI	4.57E-08	0.00E+00	0.00E+00	0.00E+00	0.00E+00	0.00E+00	0.00E+00	0.00E+00	0.00E+00	0.00E+00	0.00E+00	0.00E+00
720	ALL		741380.96	4036400.87	4.60E-08	70YrCancerDerived_InhSoilI	4.60E-08	0.00E+00	0.00E+00	0.00E+00	0.00E+00	0.00E+00	0.00E+00	0.00E+00	0.00E+00	0.00E+00	0.00E+00	0.00E+00
721	ALL	SENS	741480.96	4036400.87	4.63E-08	70YrCancerDerived_InhSoilI	4.63E-08	0.00E+00	0.00E+00	0.00E+00	0.00E+00	0.00E+00	0.00E+00	0.00E+00	0.00E+00	0.00E+00	0.00E+00	0.00E+00
722	ALL		741580.96	4036400.87	4.67E-08	70YrCancerDerived_InhSoilI	4.67E-08	0.00E+00	0.00E+00	0.00E+00	0.00E+00	0.00E+00	0.00E+00	0.00E+00	0.00E+00	0.00E+00	0.00E+00	0.00E+00
723	ALL		741680.96	4036400.87	4.71E-08	70YrCancerDerived_InhSoilI	4.71E-08	0.00E+00	0.00E+00	0.00E+00	0.00E+00	0.00E+00	0.00E+00	0.00E+00	0.00E+00	0.00E+00	0.00E+00	0.00E+00
724	ALL		741780.96	4036400.87	4.75E-08	70YrCancerDerived_InhSoilI	4.75E-08	0.00E+00	0.00E+00	0.00E+00	0.00E+00	0.00E+00	0.00E+00	0.00E+00	0.00E+00	0.00E+00	0.00E+00	0.00E+00
725	ALL		741880.96	4036400.87	4.76E-08	70YrCancerDerived_InhSoilI	4.76E-08	0.00E+00	0.00E+00	0.00E+00	0.00E+00	0.00E+00	0.00E+00	0.00E+00	0.00E+00	0.00E+00	0.00E+00	0.00E+00
726	ALL		741980.96	4036400.87	4.79E-08	70YrCancerDerived_InhSoilI	4.79E-08	0.00E+00	0.00E+00	0.00E+00	0.00E+00	0.00E+00	0.00E+00	0.00E+00	0.00E+00	0.00E+00	0.00E+00	0.00E+00

727	ALL	742080.96	4036400.87	4.84E-08	70YrCancerDerived_InhSoil[	4.84E-08	0.00E+00	0.00E+00	0.00E+00	0.00E+00	0.00E+00	0.00E+00	0.00E+00	0.00E+00	0.00E+00	0.00E+00	0.00E+00
728	ALL	742180.96	4036400.87	4.90E-08	70YrCancerDerived_InhSoil[	4.90E-08	0.00E+00	0.00E+00	0.00E+00	0.00E+00	0.00E+00	0.00E+00	0.00E+00	0.00E+00	0.00E+00	0.00E+00	0.00E+00
729	ALL	742280.96	4036400.87	4.96E-08	70YrCancerDerived_InhSoil[	4.96E-08	0.00E+00	0.00E+00	0.00E+00	0.00E+00	0.00E+00	0.00E+00	0.00E+00	0.00E+00	0.00E+00	0.00E+00	0.00E+00
730	ALL	742380.96	4036400.87	5.03E-08	70YrCancerDerived_InhSoil[	5.03E-08	0.00E+00	0.00E+00	0.00E+00	0.00E+00	0.00E+00	0.00E+00	0.00E+00	0.00E+00	0.00E+00	0.00E+00	0.00E+00
731	ALL	742480.96	4036400.87	5.10E-08	70YrCancerDerived_InhSoil[	5.10E-08	0.00E+00	0.00E+00	0.00E+00	0.00E+00	0.00E+00	0.00E+00	0.00E+00	0.00E+00	0.00E+00	0.00E+00	0.00E+00
732	ALL	742580.96	4036400.87	5.18E-08	70YrCancerDerived_InhSoil[	5.18E-08	0.00E+00	0.00E+00	0.00E+00	0.00E+00	0.00E+00	0.00E+00	0.00E+00	0.00E+00	0.00E+00	0.00E+00	0.00E+00
733	ALL	742680.96	4036400.87	5.26E-08	70YrCancerDerived_InhSoil[	5.26E-08	0.00E+00	0.00E+00	0.00E+00	0.00E+00	0.00E+00	0.00E+00	0.00E+00	0.00E+00	0.00E+00	0.00E+00	0.00E+00
734	ALL	742780.96	4036400.87	5.34E-08	70YrCancerDerived_InhSoil[	5.34E-08	0.00E+00	0.00E+00	0.00E+00	0.00E+00	0.00E+00	0.00E+00	0.00E+00	0.00E+00	0.00E+00	0.00E+00	0.00E+00
735	ALL	742880.96	4036400.87	5.43E-08	70YrCancerDerived_InhSoil[	5.43E-08	0.00E+00	0.00E+00	0.00E+00	0.00E+00	0.00E+00	0.00E+00	0.00E+00	0.00E+00	0.00E+00	0.00E+00	0.00E+00
736	ALL	742980.96	4036400.87	5.53E-08	70YrCancerDerived_InhSoil[	5.53E-08	0.00E+00	0.00E+00	0.00E+00	0.00E+00	0.00E+00	0.00E+00	0.00E+00	0.00E+00	0.00E+00	0.00E+00	0.00E+00
737	ALL	743080.96	4036400.87	5.63E-08	70YrCancerDerived_InhSoil[	5.63E-08	0.00E+00	0.00E+00	0.00E+00	0.00E+00	0.00E+00	0.00E+00	0.00E+00	0.00E+00	0.00E+00	0.00E+00	0.00E+00
738	ALL	743180.96	4036400.87	5.73E-08	70YrCancerDerived_InhSoil[	5.73E-08	0.00E+00	0.00E+00	0.00E+00	0.00E+00	0.00E+00	0.00E+00	0.00E+00	0.00E+00	0.00E+00	0.00E+00	0.00E+00
739	ALL	743280.96	4036400.87	5.84E-08	70YrCancerDerived_InhSoil[	5.84E-08	0.00E+00	0.00E+00	0.00E+00	0.00E+00	0.00E+00	0.00E+00	0.00E+00	0.00E+00	0.00E+00	0.00E+00	0.00E+00
740	ALL	743380.96	4036400.87	5.95E-08	70YrCancerDerived_InhSoil[	5.95E-08	0.00E+00	0.00E+00	0.00E+00	0.00E+00	0.00E+00	0.00E+00	0.00E+00	0.00E+00	0.00E+00	0.00E+00	0.00E+00
741	ALL	743480.96	4036400.87	6.06E-08	70YrCancerDerived_InhSoil[	6.06E-08	0.00E+00	0.00E+00	0.00E+00	0.00E+00	0.00E+00	0.00E+00	0.00E+00	0.00E+00	0.00E+00	0.00E+00	0.00E+00
742	ALL	743580.96	4036400.87	6.18E-08	70YrCancerDerived_InhSoil[	6.18E-08	0.00E+00	0.00E+00	0.00E+00	0.00E+00	0.00E+00	0.00E+00	0.00E+00	0.00E+00	0.00E+00	0.00E+00	0.00E+00
743	ALL	743680.96	4036400.87	6.30E-08	70YrCancerDerived_InhSoil[	6.30E-08	0.00E+00	0.00E+00	0.00E+00	0.00E+00	0.00E+00	0.00E+00	0.00E+00	0.00E+00	0.00E+00	0.00E+00	0.00E+00
744	ALL	743780.96	4036400.87	6.42E-08	70YrCancerDerived_InhSoil[	6.42E-08	0.00E+00	0.00E+00	0.00E+00	0.00E+00	0.00E+00	0.00E+00	0.00E+00	0.00E+00	0.00E+00	0.00E+00	0.00E+00
745	ALL	743880.96	4036400.87	6.55E-08	70YrCancerDerived_InhSoil[	6.55E-08	0.00E+00	0.00E+00	0.00E+00	0.00E+00	0.00E+00	0.00E+00	0.00E+00	0.00E+00	0.00E+00	0.00E+00	0.00E+00
746	ALL	743980.96	4036400.87	6.68E-08	70YrCancerDerived_InhSoil[	6.68E-08	0.00E+00	0.00E+00	0.00E+00	0.00E+00	0.00E+00	0.00E+00	0.00E+00	0.00E+00	0.00E+00	0.00E+00	0.00E+00
747	ALL	744080.96	4036400.87	6.82E-08	70YrCancerDerived_InhSoil[	6.82E-08	0.00E+00	0.00E+00	0.00E+00	0.00E+00	0.00E+00	0.00E+00	0.00E+00	0.00E+00	0.00E+00	0.00E+00	0.00E+00
748	ALL	744180.96	4036400.87	6.96E-08	70YrCancerDerived_InhSoil[	6.96E-08	0.00E+00	0.00E+00	0.00E+00	0.00E+00	0.00E+00	0.00E+00	0.00E+00	0.00E+00	0.00E+00	0.00E+00	0.00E+00
749	ALL	744280.96	4036400.87	7.11E-08	70YrCancerDerived_InhSoil[	7.11E-08	0.00E+00	0.00E+00	0.00E+00	0.00E+00	0.00E+00	0.00E+00	0.00E+00	0.00E+00	0.00E+00	0.00E+00	0.00E+00
750	ALL	744380.96	4036400.87	7.27E-08	70YrCancerDerived_InhSoil[	7.27E-08	0.00E+00	0.00E+00	0.00E+00	0.00E+00	0.00E+00	0.00E+00	0.00E+00	0.00E+00	0.00E+00	0.00E+00	0.00E+00
751	ALL	744480.96	4036400.87	7.43E-08	70YrCancerDerived_InhSoil[	7.43E-08	0.00E+00	0.00E+00	0.00E+00	0.00E+00	0.00E+00	0.00E+00	0.00E+00	0.00E+00	0.00E+00	0.00E+00	0.00E+00
752	ALL	744580.96	4036400.87	7.61E-08	70YrCancerDerived_InhSoil[	7.61E-08	0.00E+00	0.00E+00	0.00E+00	0.00E+00	0.00E+00	0.00E+00	0.00E+00	0.00E+00	0.00E+00	0.00E+00	0.00E+00
753	ALL	744680.96	4036400.87	7.80E-08	70YrCancerDerived_InhSoil[	7.80E-08	0.00E+00	0.00E+00	0.00E+00	0.00E+00	0.00E+00	0.00E+00	0.00E+00	0.00E+00	0.00E+00	0.00E+00	0.00E+00
754	ALL	744780.96	4036400.87	8.01E-08	70YrCancerDerived_InhSoil[	8.01E-08	0.00E+00	0.00E+00	0.00E+00	0.00E+00	0.00E+00	0.00E+00	0.00E+00	0.00E+00	0.00E+00	0.00E+00	0.00E+00
755	ALL	744880.96	4036400.87	8.24E-08	70YrCancerDerived_InhSoil[	8.24E-08	0.00E+00	0.00E+00	0.00E+00	0.00E+00	0.00E+00	0.00E+00	0.00E+00	0.00E+00	0.00E+00	0.00E+00	0.00E+00
756	ALL	744980.96	4036400.87	8.49E-08	70YrCancerDerived_InhSoil[	8.49E-08	0.00E+00	0.00E+00	0.00E+00	0.00E+00	0.00E+00	0.00E+00	0.00E+00	0.00E+00	0.00E+00	0.00E+00	0.00E+00
757	ALL	745080.96	4036400.87	8.76E-08	70YrCancerDerived_InhSoil[	8.76E-08	0.00E+00	0.00E+00	0.00E+00	0.00E+00	0.00E+00	0.00E+00	0.00E+00	0.00E+00	0.00E+00	0.00E+00	0.00E+00
758	ALL	745180.96	4036400.87	9.07E-08	70YrCancerDerived_InhSoil[	9.07E-08	0.00E+00	0.00E+00	0.00E+00	0.00E+00	0.00E+00	0.00E+00	0.00E+00	0.00E+00	0.00E+00	0.00E+00	0.00E+00
759	ALL	745280.96	4036400.87	9.40E-08	70YrCancerDerived_InhSoil[	9.40E-08	0.00E+00	0.00E+00	0.00E+00	0.00E+00	0.00E+00	0.00E+00	0.00E+00	0.00E+00	0.00E+00	0.00E+00	0.00E+00
760	ALL	745380.96	4036400.87	9.78E-08	70YrCancerDerived_InhSoil[	9.78E-08	0.00E+00	0.00E+00	0.00E+00	0.00E+00	0.00E+00	0.00E+00	0.00E+00	0.00E+00	0.00E+00	0.00E+00	0.00E+00
761	ALL	745480.96	4036400.87	1.02E-07	70YrCancerDerived_InhSoil[	1.02E-07	0.00E+00	0.00E+00	0.00E+00	0.00E+00	0.00E+00	0.00E+00	0.00E+00	0.00E+00	0.00E+00	0.00E+00	0.00E+00
762	ALL	745580.96	4036400.87	1.07E-07	70YrCancerDerived_InhSoil[	1.07E-07	0.00E+00	0.00E+00	0.00E+00	0.00E+00	0.00E+00	0.00E+00	0.00E+00	0.00E+00	0.00E+00	0.00E+00	0.00E+00
763	ALL	745680.96	4036400.87	1.13E-07	70YrCancerDerived_InhSoil[	1.13E-07	0.00E+00	0.00E+00	0.00E+00	0.00E+00	0.00E+00	0.00E+00	0.00E+00	0.00E+00	0.00E+00	0.00E+00	0.00E+00
764	ALL	745780.96	4036400.87	1.21E-07	70YrCancerDerived_InhSoil[	1.21E-07	0.00E+00	0.00E+00	0.00E+00	0.00E+00	0.00E+00	0.00E+00	0.00E+00	0.00E+00	0.00E+00	0.00E+00	0.00E+00
765	ALL	745880.96	4036400.87	1.31E-07	70YrCancerDerived_InhSoil[	1.31E-07	0.00E+00	0.00E+00	0.00E+00	0.00E+00	0.00E+00	0.00E+00	0.00E+00	0.00E+00	0.00E+00	0.00E+00	0.00E+00
766	ALL	738080.96	4036500.87	4.08E-08	70YrCancerDerived_InhSoil[	4.08E-08	0.00E+00	0.00E+00	0.00E+00	0.00E+00	0.00E+00	0.00E+00	0.00E+00	0.00E+00	0.00E+00	0.00E+00	0.00E+00
767	ALL	738180.96	4036500.87	4.10E-08	70YrCancerDerived_InhSoil[	4.10E-08	0.00E+00	0.00E+00	0.00E+00	0.00E+00	0.00E+00	0.00E+00	0.00E+00	0.00E+00	0.00E+00	0.00E+00	0.00E+00
768	ALL	738280.96	4036500.87	4.11E-08	70YrCancerDerived_InhSoil[	4.11E-08	0.00E+00	0.00E+00	0.00E+00	0.00E+00	0.00E+00	0.00E+00	0.00E+00	0.00E+00	0.00E+00	0.00E+00	0.00E+00
769	ALL	738480.96	4036500.87	4.15E-08	70YrCancerDerived_InhSoil[	4.15E-08	0.00E+00	0.00E+00	0.00E+00	0.00E+00	0.00E+00	0.00E+00	0.00E+00	0.00E+00	0.00E+00	0.00E+00	0.00E+00
770	ALL	738780.96	4036500.87	4.21E-08	70YrCancerDerived_InhSoil[	4.21E-08	0.00E+00	0.00E+00	0.00E+00	0.00E+00	0.00E+00	0.00E+00	0.00E+00	0.00E+00	0.00E+00	0.00E+00	0.00E+00
771	ALL	738880.96	4036500.87	4.23E-08	70YrCancerDerived_InhSoil[	4.23E-08	0.00E+00	0.00E+00	0.00E+00	0.00E+00	0.00E+00	0.00E+00	0.00E+00	0.00E+00	0.00E+00	0.00E+00	0.00E+00
772	ALL	738980.96	4036500.87	4.25E-08	70YrCancerDerived_InhSoil[	4.25E-08	0.00E+00	0.00E+00	0.00E+00	0.00E+00	0.00E+00	0.00E+00	0.00E+00	0.00E+00	0.00E+00	0.00E+00	0.00E+00
773	ALL	739080.96	4036500.87	4.26E-08	70YrCancerDerived_InhSoil[	4.26E-08	0.00E+00	0.00E+00	0.00E+00	0.00E+00	0.00E+00	0.00E+00	0.00E+00	0.00E+00	0.00E+00	0.00E+00	0.00E+00
774	ALL	739180.96	4036500.87	4.28E-08	70YrCancerDerived_InhSoil[	4.28E-08	0.00E+00	0.00E+00	0.00E+00	0.00E+00	0.00E+00	0.00E+00	0.00E+00	0.00E+00	0.00E+00	0.00E+00	0.00E+00
775	ALL	739280.96	4036500.87	4.29E-08	70YrCancerDerived_InhSoil[	4.29E-08	0.00E+00	0.00E+00	0.00E+00	0.00E+00	0.00E+00	0.00E+00	0.00E+00	0.00E+00	0.00E+00	0.00E+00	0.00E+00
776	ALL	739380.96	4036500.87	4.30E-08	70YrCancerDerived_InhSoil[	4.30E-08	0.00E+00	0.00E+00	0.00E+00	0.00E+00	0.00E+00	0.00E+00	0.00E+00	0.00E+00	0.00E+00	0.00E+00	0.00E+00
777	ALL	739480.96	4036500.87	4.31E-08	70YrCancerDerived_InhSoil[	4.31E-08	0.00E+00	0.00E+00	0.00E+00	0.00E+00	0.00E+00	0.00E+00	0.00E+00	0.00E+00	0.00E+00	0.00E+00	0.00E+00
778	ALL	742280.96	4036500.87	4.98E-08	70YrCancerDerived_InhSoil[	4.98E-08	0.00E+00	0.00E+00	0.00E+00	0.00E+00	0.00E+00	0.00E+00	0.00E+00	0.00E+00	0.00E+00	0.00E+00	0.00E+00
779	ALL	742380.96	4036500.87	5.05E-08	70YrCancerDerived_InhSoil[	5.05E-08	0.00E+00	0.00E+00	0.00E+00	0.00E+00	0.00E+00	0.00E+00	0.00E+00	0.00E+00	0.00E+00	0.00E+00	0.00E+00
780	ALL	742480.96	4036500.87	5.12E-08	70YrCancerDerived_InhSoil[	5.12E-08	0.00E+00	0.00E+00	0.00E+00	0.00E+00	0.00E+00	0.00E+00	0.00E+00	0.00E+00	0.00E+00	0.00E+00	0.00E+00
781	ALL	742580.96	4036500.87	5.19E-08	70YrCancerDerived_InhSoil[	5.19E-08	0.00E+00	0.00E+00	0.00E+00	0.00E+00	0.00E+00	0.00E+00	0.00E+00	0.00E+00	0.00E+00	0.00E+00	0.00E+00
782	ALL	742680.96	4036500.87	5.27E-08	70YrCancerDerived_InhSoil[	5.27E-08	0.00E+00	0.00E+00	0.00E+00	0.00E+00	0.00E+00	0.00E+00	0.00E+00	0.00E+00	0.00E+00	0.00E+00	0.00E+00

783	ALL	742780.96	4036500.87	5.36E-08	70YrCancerDerived_InhSoil[	5.36E-08	0.00E+00	0.00E+00	0.00E+00	0.00E+00	0.00E+00	0.00E+00	0.00E+00	0.00E+00	0.00E+00	0.00E+00	0.00E+00
784	ALL	742880.96	4036500.87	5.45E-08	70YrCancerDerived_InhSoil[	5.45E-08	0.00E+00	0.00E+00	0.00E+00	0.00E+00	0.00E+00	0.00E+00	0.00E+00	0.00E+00	0.00E+00	0.00E+00	0.00E+00
785	ALL	742980.96	4036500.87	5.55E-08	70YrCancerDerived_InhSoil[	5.55E-08	0.00E+00	0.00E+00	0.00E+00	0.00E+00	0.00E+00	0.00E+00	0.00E+00	0.00E+00	0.00E+00	0.00E+00	0.00E+00
786	ALL	743080.96	4036500.87	5.65E-08	70YrCancerDerived_InhSoil[	5.65E-08	0.00E+00	0.00E+00	0.00E+00	0.00E+00	0.00E+00	0.00E+00	0.00E+00	0.00E+00	0.00E+00	0.00E+00	0.00E+00
787	ALL	743180.96	4036500.87	5.76E-08	70YrCancerDerived_InhSoil[	5.76E-08	0.00E+00	0.00E+00	0.00E+00	0.00E+00	0.00E+00	0.00E+00	0.00E+00	0.00E+00	0.00E+00	0.00E+00	0.00E+00
788	ALL	743280.96	4036500.87	5.87E-08	70YrCancerDerived_InhSoil[	5.87E-08	0.00E+00	0.00E+00	0.00E+00	0.00E+00	0.00E+00	0.00E+00	0.00E+00	0.00E+00	0.00E+00	0.00E+00	0.00E+00
789	ALL	743380.96	4036500.87	5.99E-08	70YrCancerDerived_InhSoil[	5.99E-08	0.00E+00	0.00E+00	0.00E+00	0.00E+00	0.00E+00	0.00E+00	0.00E+00	0.00E+00	0.00E+00	0.00E+00	0.00E+00
790	ALL	743480.96	4036500.87	6.10E-08	70YrCancerDerived_InhSoil[	6.10E-08	0.00E+00	0.00E+00	0.00E+00	0.00E+00	0.00E+00	0.00E+00	0.00E+00	0.00E+00	0.00E+00	0.00E+00	0.00E+00
791	ALL	743580.96	4036500.87	6.23E-08	70YrCancerDerived_InhSoil[	6.23E-08	0.00E+00	0.00E+00	0.00E+00	0.00E+00	0.00E+00	0.00E+00	0.00E+00	0.00E+00	0.00E+00	0.00E+00	0.00E+00
792	ALL	743680.96	4036500.87	6.35E-08	70YrCancerDerived_InhSoil[	6.35E-08	0.00E+00	0.00E+00	0.00E+00	0.00E+00	0.00E+00	0.00E+00	0.00E+00	0.00E+00	0.00E+00	0.00E+00	0.00E+00
793	ALL	743780.96	4036500.87	6.48E-08	70YrCancerDerived_InhSoil[	6.48E-08	0.00E+00	0.00E+00	0.00E+00	0.00E+00	0.00E+00	0.00E+00	0.00E+00	0.00E+00	0.00E+00	0.00E+00	0.00E+00
794	ALL	743880.96	4036500.87	6.62E-08	70YrCancerDerived_InhSoil[	6.62E-08	0.00E+00	0.00E+00	0.00E+00	0.00E+00	0.00E+00	0.00E+00	0.00E+00	0.00E+00	0.00E+00	0.00E+00	0.00E+00
795	ALL	743980.96	4036500.87	6.76E-08	70YrCancerDerived_InhSoil[	6.76E-08	0.00E+00	0.00E+00	0.00E+00	0.00E+00	0.00E+00	0.00E+00	0.00E+00	0.00E+00	0.00E+00	0.00E+00	0.00E+00
796	ALL	744080.96	4036500.87	6.90E-08	70YrCancerDerived_InhSoil[	6.90E-08	0.00E+00	0.00E+00	0.00E+00	0.00E+00	0.00E+00	0.00E+00	0.00E+00	0.00E+00	0.00E+00	0.00E+00	0.00E+00
797	ALL	744180.96	4036500.87	7.05E-08	70YrCancerDerived_InhSoil[	7.05E-08	0.00E+00	0.00E+00	0.00E+00	0.00E+00	0.00E+00	0.00E+00	0.00E+00	0.00E+00	0.00E+00	0.00E+00	0.00E+00
798	ALL	744280.96	4036500.87	7.20E-08	70YrCancerDerived_InhSoil[	7.20E-08	0.00E+00	0.00E+00	0.00E+00	0.00E+00	0.00E+00	0.00E+00	0.00E+00	0.00E+00	0.00E+00	0.00E+00	0.00E+00
799	ALL	744380.96	4036500.87	7.37E-08	70YrCancerDerived_InhSoil[	7.37E-08	0.00E+00	0.00E+00	0.00E+00	0.00E+00	0.00E+00	0.00E+00	0.00E+00	0.00E+00	0.00E+00	0.00E+00	0.00E+00
800	ALL	744480.96	4036500.87	7.54E-08	70YrCancerDerived_InhSoil[	7.54E-08	0.00E+00	0.00E+00	0.00E+00	0.00E+00	0.00E+00	0.00E+00	0.00E+00	0.00E+00	0.00E+00	0.00E+00	0.00E+00
801	ALL	744580.96	4036500.87	7.72E-08	70YrCancerDerived_InhSoil[	7.72E-08	0.00E+00	0.00E+00	0.00E+00	0.00E+00	0.00E+00	0.00E+00	0.00E+00	0.00E+00	0.00E+00	0.00E+00	0.00E+00
802	ALL	744680.96	4036500.87	7.92E-08	70YrCancerDerived_InhSoil[	7.92E-08	0.00E+00	0.00E+00	0.00E+00	0.00E+00	0.00E+00	0.00E+00	0.00E+00	0.00E+00	0.00E+00	0.00E+00	0.00E+00
803	ALL	744780.96	4036500.87	8.14E-08	70YrCancerDerived_InhSoil[	8.14E-08	0.00E+00	0.00E+00	0.00E+00	0.00E+00	0.00E+00	0.00E+00	0.00E+00	0.00E+00	0.00E+00	0.00E+00	0.00E+00
804	ALL	744880.96	4036500.87	8.39E-08	70YrCancerDerived_InhSoil[	8.39E-08	0.00E+00	0.00E+00	0.00E+00	0.00E+00	0.00E+00	0.00E+00	0.00E+00	0.00E+00	0.00E+00	0.00E+00	0.00E+00
805	ALL	744980.96	4036500.87	8.66E-08	70YrCancerDerived_InhSoil[	8.66E-08	0.00E+00	0.00E+00	0.00E+00	0.00E+00	0.00E+00	0.00E+00	0.00E+00	0.00E+00	0.00E+00	0.00E+00	0.00E+00
806	ALL	745080.96	4036500.87	8.96E-08	70YrCancerDerived_InhSoil[	8.96E-08	0.00E+00	0.00E+00	0.00E+00	0.00E+00	0.00E+00	0.00E+00	0.00E+00	0.00E+00	0.00E+00	0.00E+00	0.00E+00
807	ALL	745180.96	4036500.87	9.31E-08	70YrCancerDerived_InhSoil[	9.31E-08	0.00E+00	0.00E+00	0.00E+00	0.00E+00	0.00E+00	0.00E+00	0.00E+00	0.00E+00	0.00E+00	0.00E+00	0.00E+00
808	ALL	745280.96	4036500.87	9.70E-08	70YrCancerDerived_InhSoil[	9.70E-08	0.00E+00	0.00E+00	0.00E+00	0.00E+00	0.00E+00	0.00E+00	0.00E+00	0.00E+00	0.00E+00	0.00E+00	0.00E+00
809	ALL	745380.96	4036500.87	1.02E-07	70YrCancerDerived_InhSoil[	1.02E-07	0.00E+00	0.00E+00	0.00E+00	0.00E+00	0.00E+00	0.00E+00	0.00E+00	0.00E+00	0.00E+00	0.00E+00	0.00E+00
810	ALL	745480.96	4036500.87	1.07E-07	70YrCancerDerived_InhSoil[	1.07E-07	0.00E+00	0.00E+00	0.00E+00	0.00E+00	0.00E+00	0.00E+00	0.00E+00	0.00E+00	0.00E+00	0.00E+00	0.00E+00
811	ALL	745580.96	4036500.87	1.13E-07	70YrCancerDerived_InhSoil[	1.13E-07	0.00E+00	0.00E+00	0.00E+00	0.00E+00	0.00E+00	0.00E+00	0.00E+00	0.00E+00	0.00E+00	0.00E+00	0.00E+00
812	ALL	745680.96	4036500.87	1.21E-07	70YrCancerDerived_InhSoil[	1.21E-07	0.00E+00	0.00E+00	0.00E+00	0.00E+00	0.00E+00	0.00E+00	0.00E+00	0.00E+00	0.00E+00	0.00E+00	0.00E+00
813	ALL	745780.96	4036500.87	1.31E-07	70YrCancerDerived_InhSoil[	1.31E-07	0.00E+00	0.00E+00	0.00E+00	0.00E+00	0.00E+00	0.00E+00	0.00E+00	0.00E+00	0.00E+00	0.00E+00	0.00E+00
814	ALL	745880.96	4036500.87	1.45E-07	70YrCancerDerived_InhSoil[	1.45E-07	0.00E+00	0.00E+00	0.00E+00	0.00E+00	0.00E+00	0.00E+00	0.00E+00	0.00E+00	0.00E+00	0.00E+00	0.00E+00
815	ALL	738080.96	4036600.87	4.03E-08	70YrCancerDerived_InhSoil[	4.03E-08	0.00E+00	0.00E+00	0.00E+00	0.00E+00	0.00E+00	0.00E+00	0.00E+00	0.00E+00	0.00E+00	0.00E+00	0.00E+00
816	ALL	738180.96	4036600.87	4.05E-08	70YrCancerDerived_InhSoil[	4.05E-08	0.00E+00	0.00E+00	0.00E+00	0.00E+00	0.00E+00	0.00E+00	0.00E+00	0.00E+00	0.00E+00	0.00E+00	0.00E+00
817	ALL	738280.96	4036600.87	4.06E-08	70YrCancerDerived_InhSoil[	4.06E-08	0.00E+00	0.00E+00	0.00E+00	0.00E+00	0.00E+00	0.00E+00	0.00E+00	0.00E+00	0.00E+00	0.00E+00	0.00E+00
818	ALL	738380.96	4036600.87	4.08E-08	70YrCancerDerived_InhSoil[	4.08E-08	0.00E+00	0.00E+00	0.00E+00	0.00E+00	0.00E+00	0.00E+00	0.00E+00	0.00E+00	0.00E+00	0.00E+00	0.00E+00
819	ALL	738580.96	4036600.87	4.12E-08	70YrCancerDerived_InhSoil[	4.12E-08	0.00E+00	0.00E+00	0.00E+00	0.00E+00	0.00E+00	0.00E+00	0.00E+00	0.00E+00	0.00E+00	0.00E+00	0.00E+00
820	ALL	738680.96	4036600.87	4.14E-08	70YrCancerDerived_InhSoil[	4.14E-08	0.00E+00	0.00E+00	0.00E+00	0.00E+00	0.00E+00	0.00E+00	0.00E+00	0.00E+00	0.00E+00	0.00E+00	0.00E+00
821	ALL	738780.96	4036600.87	4.16E-08	70YrCancerDerived_InhSoil[	4.16E-08	0.00E+00	0.00E+00	0.00E+00	0.00E+00	0.00E+00	0.00E+00	0.00E+00	0.00E+00	0.00E+00	0.00E+00	0.00E+00
822	ALL	738880.96	4036600.87	4.18E-08	70YrCancerDerived_InhSoil[	4.18E-08	0.00E+00	0.00E+00	0.00E+00	0.00E+00	0.00E+00	0.00E+00	0.00E+00	0.00E+00	0.00E+00	0.00E+00	0.00E+00
823	ALL	738980.96	4036600.87	4.20E-08	70YrCancerDerived_InhSoil[	4.20E-08	0.00E+00	0.00E+00	0.00E+00	0.00E+00	0.00E+00	0.00E+00	0.00E+00	0.00E+00	0.00E+00	0.00E+00	0.00E+00
824	ALL	739080.96	4036600.87	4.22E-08	70YrCancerDerived_InhSoil[	4.22E-08	0.00E+00	0.00E+00	0.00E+00	0.00E+00	0.00E+00	0.00E+00	0.00E+00	0.00E+00	0.00E+00	0.00E+00	0.00E+00
825	ALL	739180.96	4036600.87	4.24E-08	70YrCancerDerived_InhSoil[	4.24E-08	0.00E+00	0.00E+00	0.00E+00	0.00E+00	0.00E+00	0.00E+00	0.00E+00	0.00E+00	0.00E+00	0.00E+00	0.00E+00
826	ALL	739280.96	4036600.87	4.25E-08	70YrCancerDerived_InhSoil[	4.25E-08	0.00E+00	0.00E+00	0.00E+00	0.00E+00	0.00E+00	0.00E+00	0.00E+00	0.00E+00	0.00E+00	0.00E+00	0.00E+00
827	ALL	739380.96	4036600.87	4.26E-08	70YrCancerDerived_InhSoil[	4.26E-08	0.00E+00	0.00E+00	0.00E+00	0.00E+00	0.00E+00	0.00E+00	0.00E+00	0.00E+00	0.00E+00	0.00E+00	0.00E+00
828	ALL	739480.96	4036600.87	4.28E-08	70YrCancerDerived_InhSoil[	4.28E-08	0.00E+00	0.00E+00	0.00E+00	0.00E+00	0.00E+00	0.00E+00	0.00E+00	0.00E+00	0.00E+00	0.00E+00	0.00E+00
829	ALL	739580.96	4036600.87	4.30E-08	70YrCancerDerived_InhSoil[	4.30E-08	0.00E+00	0.00E+00	0.00E+00	0.00E+00	0.00E+00	0.00E+00	0.00E+00	0.00E+00	0.00E+00	0.00E+00	0.00E+00
830	ALL	739680.96	4036600.87	4.31E-08	70YrCancerDerived_InhSoil[	4.31E-08	0.00E+00	0.00E+00	0.00E+00	0.00E+00	0.00E+00	0.00E+00	0.00E+00	0.00E+00	0.00E+00	0.00E+00	0.00E+00
831	ALL	739780.96	4036600.87	4.33E-08	70YrCancerDerived_InhSoil[	4.33E-08	0.00E+00	0.00E+00	0.00E+00	0.00E+00	0.00E+00	0.00E+00	0.00E+00	0.00E+00	0.00E+00	0.00E+00	0.00E+00
832	ALL	739880.96	4036600.87	4.35E-08	70YrCancerDerived_InhSoil[	4.35E-08	0.00E+00	0.00E+00	0.00E+00	0.00E+00	0.00E+00	0.00E+00	0.00E+00	0.00E+00	0.00E+00	0.00E+00	0.00E+00
833	ALL	739980.96	4036600.87	4.37E-08	70YrCancerDerived_InhSoil[	4.37E-08	0.00E+00	0.00E+00	0.00E+00	0.00E+00	0.00E+00	0.00E+00	0.00E+00	0.00E+00	0.00E+00	0.00E+00	0.00E+00
834	ALL	740080.96	4036600.87	4.38E-08	70YrCancerDerived_InhSoil[	4.38E-08	0.00E+00	0.00E+00	0.00E+00	0.00E+00	0.00E+00	0.00E+00	0.00E+00	0.00E+00	0.00E+00	0.00E+00	0.00E+00
835	ALL	740180.96	4036600.87	4.39E-08	70YrCancerDerived_InhSoil[	4.39E-08	0.00E+00	0.00E+00	0.00E+00	0.00E+00	0.00E+00	0.00E+00	0.00E+00	0.00E+00	0.00E+00	0.00E+00	0.00E+00
836	ALL	740280.96	4036600.87	4.40E-08	70YrCancerDerived_InhSoil[	4.40E-08	0.00E+00	0.00E+00	0.00E+00	0.00E+00	0.00E+00	0.00E+00	0.00E+00	0.00E+00	0.00E+00	0.00E+00	0.00E+00
837	ALL	740380.96	4036600.87	4.42E-08	70YrCancerDerived_InhSoil[	4.42E-08	0.00E+00	0.00E+00	0.00E+00	0.00E+00	0.00E+00	0.00E+00	0.00E+00	0.00E+00	0.00E+00	0.00E+00	0.00E+00
838	ALL	740480.96	4036600.87	4.44E-08	70YrCancerDerived_InhSoil[	4.44E-08	0.00E+00	0.00E+00	0.00E+00	0.00E+00	0.00E+00	0.00E+00	0.00E+00	0.00E+00	0.00E+00	0.00E+00	0.00E+00

839	ALL	740580.96	4036600.87	4.46E-08	70YrCancerDerived_InhSoil[	4.46E-08	0.00E+00	0.00E+00	0.00E+00	0.00E+00	0.00E+00	0.00E+00	0.00E+00	0.00E+00	0.00E+00	0.00E+00	0.00E+00
840	ALL	740680.96	4036600.87	4.48E-08	70YrCancerDerived_InhSoil[	4.48E-08	0.00E+00	0.00E+00	0.00E+00	0.00E+00	0.00E+00	0.00E+00	0.00E+00	0.00E+00	0.00E+00	0.00E+00	0.00E+00
841	ALL	740780.96	4036600.87	4.50E-08	70YrCancerDerived_InhSoil[	4.50E-08	0.00E+00	0.00E+00	0.00E+00	0.00E+00	0.00E+00	0.00E+00	0.00E+00	0.00E+00	0.00E+00	0.00E+00	0.00E+00
842	ALL	740880.96	4036600.87	4.52E-08	70YrCancerDerived_InhSoil[	4.52E-08	0.00E+00	0.00E+00	0.00E+00	0.00E+00	0.00E+00	0.00E+00	0.00E+00	0.00E+00	0.00E+00	0.00E+00	0.00E+00
843	ALL	740980.96	4036600.87	4.54E-08	70YrCancerDerived_InhSoil[	4.54E-08	0.00E+00	0.00E+00	0.00E+00	0.00E+00	0.00E+00	0.00E+00	0.00E+00	0.00E+00	0.00E+00	0.00E+00	0.00E+00
844	ALL	741080.96	4036600.87	4.57E-08	70YrCancerDerived_InhSoil[	4.57E-08	0.00E+00	0.00E+00	0.00E+00	0.00E+00	0.00E+00	0.00E+00	0.00E+00	0.00E+00	0.00E+00	0.00E+00	0.00E+00
845	ALL	741180.96	4036600.87	4.60E-08	70YrCancerDerived_InhSoil[	4.60E-08	0.00E+00	0.00E+00	0.00E+00	0.00E+00	0.00E+00	0.00E+00	0.00E+00	0.00E+00	0.00E+00	0.00E+00	0.00E+00
846	ALL	741280.96	4036600.87	4.62E-08	70YrCancerDerived_InhSoil[	4.62E-08	0.00E+00	0.00E+00	0.00E+00	0.00E+00	0.00E+00	0.00E+00	0.00E+00	0.00E+00	0.00E+00	0.00E+00	0.00E+00
847	ALL	741380.96	4036600.87	4.65E-08	70YrCancerDerived_InhSoil[	4.65E-08	0.00E+00	0.00E+00	0.00E+00	0.00E+00	0.00E+00	0.00E+00	0.00E+00	0.00E+00	0.00E+00	0.00E+00	0.00E+00
848	ALL	741480.96	4036600.87	4.68E-08	70YrCancerDerived_InhSoil[	4.68E-08	0.00E+00	0.00E+00	0.00E+00	0.00E+00	0.00E+00	0.00E+00	0.00E+00	0.00E+00	0.00E+00	0.00E+00	0.00E+00
849	ALL	741580.96	4036600.87	4.71E-08	70YrCancerDerived_InhSoil[	4.71E-08	0.00E+00	0.00E+00	0.00E+00	0.00E+00	0.00E+00	0.00E+00	0.00E+00	0.00E+00	0.00E+00	0.00E+00	0.00E+00
850	ALL	741680.96	4036600.87	4.75E-08	70YrCancerDerived_InhSoil[	4.75E-08	0.00E+00	0.00E+00	0.00E+00	0.00E+00	0.00E+00	0.00E+00	0.00E+00	0.00E+00	0.00E+00	0.00E+00	0.00E+00
851	ALL	741780.96	4036600.87	4.79E-08	70YrCancerDerived_InhSoil[	4.79E-08	0.00E+00	0.00E+00	0.00E+00	0.00E+00	0.00E+00	0.00E+00	0.00E+00	0.00E+00	0.00E+00	0.00E+00	0.00E+00
852	ALL	741880.96	4036600.87	4.81E-08	70YrCancerDerived_InhSoil[	4.81E-08	0.00E+00	0.00E+00	0.00E+00	0.00E+00	0.00E+00	0.00E+00	0.00E+00	0.00E+00	0.00E+00	0.00E+00	0.00E+00
853	ALL	741980.96	4036600.87	4.84E-08	70YrCancerDerived_InhSoil[	4.84E-08	0.00E+00	0.00E+00	0.00E+00	0.00E+00	0.00E+00	0.00E+00	0.00E+00	0.00E+00	0.00E+00	0.00E+00	0.00E+00
854	ALL	742080.96	4036600.87	4.89E-08	70YrCancerDerived_InhSoil[	4.89E-08	0.00E+00	0.00E+00	0.00E+00	0.00E+00	0.00E+00	0.00E+00	0.00E+00	0.00E+00	0.00E+00	0.00E+00	0.00E+00
855	ALL	742180.96	4036600.87	4.94E-08	70YrCancerDerived_InhSoil[	4.94E-08	0.00E+00	0.00E+00	0.00E+00	0.00E+00	0.00E+00	0.00E+00	0.00E+00	0.00E+00	0.00E+00	0.00E+00	0.00E+00
856	ALL	742280.96	4036600.87	5.00E-08	70YrCancerDerived_InhSoil[	5.00E-08	0.00E+00	0.00E+00	0.00E+00	0.00E+00	0.00E+00	0.00E+00	0.00E+00	0.00E+00	0.00E+00	0.00E+00	0.00E+00
857	ALL	745380.96	4036600.87	1.07E-07	70YrCancerDerived_InhSoil[	1.07E-07	0.00E+00	0.00E+00	0.00E+00	0.00E+00	0.00E+00	0.00E+00	0.00E+00	0.00E+00	0.00E+00	0.00E+00	0.00E+00
858	ALL	745480.96	4036600.87	1.14E-07	70YrCancerDerived_InhSoil[	1.14E-07	0.00E+00	0.00E+00	0.00E+00	0.00E+00	0.00E+00	0.00E+00	0.00E+00	0.00E+00	0.00E+00	0.00E+00	0.00E+00
859	ALL	745580.96	4036600.87	1.22E-07	70YrCancerDerived_InhSoil[	1.22E-07	0.00E+00	0.00E+00	0.00E+00	0.00E+00	0.00E+00	0.00E+00	0.00E+00	0.00E+00	0.00E+00	0.00E+00	0.00E+00
860	ALL	745680.96	4036600.87	1.32E-07	70YrCancerDerived_InhSoil[	1.32E-07	0.00E+00	0.00E+00	0.00E+00	0.00E+00	0.00E+00	0.00E+00	0.00E+00	0.00E+00	0.00E+00	0.00E+00	0.00E+00
861	ALL	745780.96	4036600.87	1.44E-07	70YrCancerDerived_InhSoil[	1.44E-07	0.00E+00	0.00E+00	0.00E+00	0.00E+00	0.00E+00	0.00E+00	0.00E+00	0.00E+00	0.00E+00	0.00E+00	0.00E+00
862	ALL	745880.96	4036600.87	1.61E-07	70YrCancerDerived_InhSoil[	1.61E-07	0.00E+00	0.00E+00	0.00E+00	0.00E+00	0.00E+00	0.00E+00	0.00E+00	0.00E+00	0.00E+00	0.00E+00	0.00E+00
863	ALL	745980.96	4036600.87	1.81E-07	70YrCancerDerived_InhSoil[	1.81E-07	0.00E+00	0.00E+00	0.00E+00	0.00E+00	0.00E+00	0.00E+00	0.00E+00	0.00E+00	0.00E+00	0.00E+00	0.00E+00
864	ALL	738080.96	4036700.87	4.00E-08	70YrCancerDerived_InhSoil[	4.00E-08	0.00E+00	0.00E+00	0.00E+00	0.00E+00	0.00E+00	0.00E+00	0.00E+00	0.00E+00	0.00E+00	0.00E+00	0.00E+00
865	ALL	738180.96	4036700.87	4.01E-08	70YrCancerDerived_InhSoil[	4.01E-08	0.00E+00	0.00E+00	0.00E+00	0.00E+00	0.00E+00	0.00E+00	0.00E+00	0.00E+00	0.00E+00	0.00E+00	0.00E+00
866	ALL	738280.96	4036700.87	4.03E-08	70YrCancerDerived_InhSoil[	4.03E-08	0.00E+00	0.00E+00	0.00E+00	0.00E+00	0.00E+00	0.00E+00	0.00E+00	0.00E+00	0.00E+00	0.00E+00	0.00E+00
867	ALL	738380.96	4036700.87	4.04E-08	70YrCancerDerived_InhSoil[	4.04E-08	0.00E+00	0.00E+00	0.00E+00	0.00E+00	0.00E+00	0.00E+00	0.00E+00	0.00E+00	0.00E+00	0.00E+00	0.00E+00
868	ALL	738480.96	4036700.87	4.06E-08	70YrCancerDerived_InhSoil[	4.06E-08	0.00E+00	0.00E+00	0.00E+00	0.00E+00	0.00E+00	0.00E+00	0.00E+00	0.00E+00	0.00E+00	0.00E+00	0.00E+00
869	ALL	738580.96	4036700.87	4.08E-08	70YrCancerDerived_InhSoil[	4.08E-08	0.00E+00	0.00E+00	0.00E+00	0.00E+00	0.00E+00	0.00E+00	0.00E+00	0.00E+00	0.00E+00	0.00E+00	0.00E+00
870	ALL	738680.96	4036700.87	4.10E-08	70YrCancerDerived_InhSoil[	4.10E-08	0.00E+00	0.00E+00	0.00E+00	0.00E+00	0.00E+00	0.00E+00	0.00E+00	0.00E+00	0.00E+00	0.00E+00	0.00E+00
871	ALL	738780.96	4036700.87	4.12E-08	70YrCancerDerived_InhSoil[	4.12E-08	0.00E+00	0.00E+00	0.00E+00	0.00E+00	0.00E+00	0.00E+00	0.00E+00	0.00E+00	0.00E+00	0.00E+00	0.00E+00
872	ALL	738880.96	4036700.87	4.14E-08	70YrCancerDerived_InhSoil[	4.14E-08	0.00E+00	0.00E+00	0.00E+00	0.00E+00	0.00E+00	0.00E+00	0.00E+00	0.00E+00	0.00E+00	0.00E+00	0.00E+00
873	ALL	738980.96	4036700.87	4.16E-08	70YrCancerDerived_InhSoil[	4.16E-08	0.00E+00	0.00E+00	0.00E+00	0.00E+00	0.00E+00	0.00E+00	0.00E+00	0.00E+00	0.00E+00	0.00E+00	0.00E+00
874	ALL	739080.96	4036700.87	4.18E-08	70YrCancerDerived_InhSoil[	4.18E-08	0.00E+00	0.00E+00	0.00E+00	0.00E+00	0.00E+00	0.00E+00	0.00E+00	0.00E+00	0.00E+00	0.00E+00	0.00E+00
875	ALL	739180.96	4036700.87	4.20E-08	70YrCancerDerived_InhSoil[	4.20E-08	0.00E+00	0.00E+00	0.00E+00	0.00E+00	0.00E+00	0.00E+00	0.00E+00	0.00E+00	0.00E+00	0.00E+00	0.00E+00
876	ALL	739280.96	4036700.87	4.21E-08	70YrCancerDerived_InhSoil[	4.21E-08	0.00E+00	0.00E+00	0.00E+00	0.00E+00	0.00E+00	0.00E+00	0.00E+00	0.00E+00	0.00E+00	0.00E+00	0.00E+00
877	ALL	739380.96	4036700.87	4.23E-08	70YrCancerDerived_InhSoil[	4.23E-08	0.00E+00	0.00E+00	0.00E+00	0.00E+00	0.00E+00	0.00E+00	0.00E+00	0.00E+00	0.00E+00	0.00E+00	0.00E+00
878	ALL	739480.96	4036700.87	4.25E-08	70YrCancerDerived_InhSoil[	4.25E-08	0.00E+00	0.00E+00	0.00E+00	0.00E+00	0.00E+00	0.00E+00	0.00E+00	0.00E+00	0.00E+00	0.00E+00	0.00E+00
879	ALL	739580.96	4036700.87	4.27E-08	70YrCancerDerived_InhSoil[	4.27E-08	0.00E+00	0.00E+00	0.00E+00	0.00E+00	0.00E+00	0.00E+00	0.00E+00	0.00E+00	0.00E+00	0.00E+00	0.00E+00
880	ALL	739680.96	4036700.87	4.29E-08	70YrCancerDerived_InhSoil[	4.29E-08	0.00E+00	0.00E+00	0.00E+00	0.00E+00	0.00E+00	0.00E+00	0.00E+00	0.00E+00	0.00E+00	0.00E+00	0.00E+00
881	ALL	739780.96	4036700.87	4.31E-08	70YrCancerDerived_InhSoil[	4.31E-08	0.00E+00	0.00E+00	0.00E+00	0.00E+00	0.00E+00	0.00E+00	0.00E+00	0.00E+00	0.00E+00	0.00E+00	0.00E+00
882	ALL	739880.96	4036700.87	4.33E-08	70YrCancerDerived_InhSoil[	4.33E-08	0.00E+00	0.00E+00	0.00E+00	0.00E+00	0.00E+00	0.00E+00	0.00E+00	0.00E+00	0.00E+00	0.00E+00	0.00E+00
883	ALL	739980.96	4036700.87	4.36E-08	70YrCancerDerived_InhSoil[	4.36E-08	0.00E+00	0.00E+00	0.00E+00	0.00E+00	0.00E+00	0.00E+00	0.00E+00	0.00E+00	0.00E+00	0.00E+00	0.00E+00
884	ALL	740080.96	4036700.87	4.38E-08	70YrCancerDerived_InhSoil[	4.38E-08	0.00E+00	0.00E+00	0.00E+00	0.00E+00	0.00E+00	0.00E+00	0.00E+00	0.00E+00	0.00E+00	0.00E+00	0.00E+00
885	ALL	740180.96	4036700.87	4.39E-08	70YrCancerDerived_InhSoil[	4.39E-08	0.00E+00	0.00E+00	0.00E+00	0.00E+00	0.00E+00	0.00E+00	0.00E+00	0.00E+00	0.00E+00	0.00E+00	0.00E+00
886	ALL	740280.96	4036700.87	4.40E-08	70YrCancerDerived_InhSoil[	4.40E-08	0.00E+00	0.00E+00	0.00E+00	0.00E+00	0.00E+00	0.00E+00	0.00E+00	0.00E+00	0.00E+00	0.00E+00	0.00E+00
887	ALL	740380.96	4036700.87	4.43E-08	70YrCancerDerived_InhSoil[	4.43E-08	0.00E+00	0.00E+00	0.00E+00	0.00E+00	0.00E+00	0.00E+00	0.00E+00	0.00E+00	0.00E+00	0.00E+00	0.00E+00
888	ALL	740480.96	4036700.87	4.45E-08	70YrCancerDerived_InhSoil[	4.45E-08	0.00E+00	0.00E+00	0.00E+00	0.00E+00	0.00E+00	0.00E+00	0.00E+00	0.00E+00	0.00E+00	0.00E+00	0.00E+00
889	ALL	740580.96	4036700.87	4.47E-08	70YrCancerDerived_InhSoil[	4.47E-08	0.00E+00	0.00E+00	0.00E+00	0.00E+00	0.00E+00	0.00E+00	0.00E+00	0.00E+00	0.00E+00	0.00E+00	0.00E+00
890	ALL	740680.96	4036700.87	4.50E-08	70YrCancerDerived_InhSoil[	4.50E-08	0.00E+00	0.00E+00	0.00E+00	0.00E+00	0.00E+00	0.00E+00	0.00E+00	0.00E+00	0.00E+00	0.00E+00	0.00E+00
891	ALL	740780.96	4036700.87	4.52E-08	70YrCancerDerived_InhSoil[	4.52E-08	0.00E+00	0.00E+00	0.00E+00	0.00E+00	0.00E+00	0.00E+00	0.00E+00	0.00E+00	0.00E+00	0.00E+00	0.00E+00
892	ALL	740880.96	4036700.87	4.54E-08	70YrCancerDerived_InhSoil[	4.54E-08	0.00E+00	0.00E+00	0.00E+00	0.00E+00	0.00E+00	0.00E+00	0.00E+00	0.00E+00	0.00E+00	0.00E+00	0.00E+00
893	ALL	740980.96	4036700.87	4.57E-08	70YrCancerDerived_InhSoil[	4.57E-08	0.00E+00	0.00E+00	0.00E+00	0.00E+00	0.00E+00	0.00E+00	0.00E+00	0.00E+00	0.00E+00	0.00E+00	0.00E+00
894	ALL	741080.96	4036700.87	4.60E-08	70YrCancerDerived_InhSoil[	4.60E-08	0.00E+00	0.00E+00	0.00E+00	0.00E+00	0.00E+00	0.00E+00	0.00E+00	0.00E+00	0.00E+00	0.00E+00	0.00E+00

895	ALL	741180.96	4036700.87	4.63E-08	70YrCancerDerived_InhSoil[	4.63E-08	0.00E+00	0.00E+00	0.00E+00	0.00E+00	0.00E+00	0.00E+00	0.00E+00	0.00E+00	0.00E+00	0.00E+00	0.00E+00
896	ALL	741280.96	4036700.87	4.66E-08	70YrCancerDerived_InhSoil[	4.66E-08	0.00E+00	0.00E+00	0.00E+00	0.00E+00	0.00E+00	0.00E+00	0.00E+00	0.00E+00	0.00E+00	0.00E+00	0.00E+00
897	ALL	741380.96	4036700.87	4.68E-08	70YrCancerDerived_InhSoil[	4.68E-08	0.00E+00	0.00E+00	0.00E+00	0.00E+00	0.00E+00	0.00E+00	0.00E+00	0.00E+00	0.00E+00	0.00E+00	0.00E+00
898	ALL	741480.96	4036700.87	4.71E-08	70YrCancerDerived_InhSoil[	4.71E-08	0.00E+00	0.00E+00	0.00E+00	0.00E+00	0.00E+00	0.00E+00	0.00E+00	0.00E+00	0.00E+00	0.00E+00	0.00E+00
899	ALL	741580.96	4036700.87	4.74E-08	70YrCancerDerived_InhSoil[	4.74E-08	0.00E+00	0.00E+00	0.00E+00	0.00E+00	0.00E+00	0.00E+00	0.00E+00	0.00E+00	0.00E+00	0.00E+00	0.00E+00
900	ALL	741680.96	4036700.87	4.78E-08	70YrCancerDerived_InhSoil[	4.78E-08	0.00E+00	0.00E+00	0.00E+00	0.00E+00	0.00E+00	0.00E+00	0.00E+00	0.00E+00	0.00E+00	0.00E+00	0.00E+00
901	ALL	741780.96	4036700.87	4.82E-08	70YrCancerDerived_InhSoil[	4.82E-08	0.00E+00	0.00E+00	0.00E+00	0.00E+00	0.00E+00	0.00E+00	0.00E+00	0.00E+00	0.00E+00	0.00E+00	0.00E+00
902	ALL	741880.96	4036700.87	4.84E-08	70YrCancerDerived_InhSoil[	4.84E-08	0.00E+00	0.00E+00	0.00E+00	0.00E+00	0.00E+00	0.00E+00	0.00E+00	0.00E+00	0.00E+00	0.00E+00	0.00E+00
903	ALL	741980.96	4036700.87	4.87E-08	70YrCancerDerived_InhSoil[	4.87E-08	0.00E+00	0.00E+00	0.00E+00	0.00E+00	0.00E+00	0.00E+00	0.00E+00	0.00E+00	0.00E+00	0.00E+00	0.00E+00
904	ALL	742080.96	4036700.87	4.91E-08	70YrCancerDerived_InhSoil[	4.91E-08	0.00E+00	0.00E+00	0.00E+00	0.00E+00	0.00E+00	0.00E+00	0.00E+00	0.00E+00	0.00E+00	0.00E+00	0.00E+00
905	ALL	742180.96	4036700.87	4.97E-08	70YrCancerDerived_InhSoil[	4.97E-08	0.00E+00	0.00E+00	0.00E+00	0.00E+00	0.00E+00	0.00E+00	0.00E+00	0.00E+00	0.00E+00	0.00E+00	0.00E+00
906	ALL	742280.96	4036700.87	5.02E-08	70YrCancerDerived_InhSoil[	5.02E-08	0.00E+00	0.00E+00	0.00E+00	0.00E+00	0.00E+00	0.00E+00	0.00E+00	0.00E+00	0.00E+00	0.00E+00	0.00E+00
907	ALL	742380.96	4036700.87	5.08E-08	70YrCancerDerived_InhSoil[	5.08E-08	0.00E+00	0.00E+00	0.00E+00	0.00E+00	0.00E+00	0.00E+00	0.00E+00	0.00E+00	0.00E+00	0.00E+00	0.00E+00
908	ALL	742480.96	4036700.87	5.15E-08	70YrCancerDerived_InhSoil[	5.15E-08	0.00E+00	0.00E+00	0.00E+00	0.00E+00	0.00E+00	0.00E+00	0.00E+00	0.00E+00	0.00E+00	0.00E+00	0.00E+00
909	ALL	742580.96	4036700.87	5.22E-08	70YrCancerDerived_InhSoil[	5.22E-08	0.00E+00	0.00E+00	0.00E+00	0.00E+00	0.00E+00	0.00E+00	0.00E+00	0.00E+00	0.00E+00	0.00E+00	0.00E+00
910	ALL	742680.96	4036700.87	5.29E-08	70YrCancerDerived_InhSoil[	5.29E-08	0.00E+00	0.00E+00	0.00E+00	0.00E+00	0.00E+00	0.00E+00	0.00E+00	0.00E+00	0.00E+00	0.00E+00	0.00E+00
911	ALL	742780.96	4036700.87	5.37E-08	70YrCancerDerived_InhSoil[	5.37E-08	0.00E+00	0.00E+00	0.00E+00	0.00E+00	0.00E+00	0.00E+00	0.00E+00	0.00E+00	0.00E+00	0.00E+00	0.00E+00
912	ALL	742880.96	4036700.87	5.46E-08	70YrCancerDerived_InhSoil[	5.46E-08	0.00E+00	0.00E+00	0.00E+00	0.00E+00	0.00E+00	0.00E+00	0.00E+00	0.00E+00	0.00E+00	0.00E+00	0.00E+00
913	ALL	742980.96	4036700.87	5.55E-08	70YrCancerDerived_InhSoil[	5.55E-08	0.00E+00	0.00E+00	0.00E+00	0.00E+00	0.00E+00	0.00E+00	0.00E+00	0.00E+00	0.00E+00	0.00E+00	0.00E+00
914	ALL	743080.96	4036700.87	5.65E-08	70YrCancerDerived_InhSoil[	5.65E-08	0.00E+00	0.00E+00	0.00E+00	0.00E+00	0.00E+00	0.00E+00	0.00E+00	0.00E+00	0.00E+00	0.00E+00	0.00E+00
915	ALL	743180.96	4036700.87	5.75E-08	70YrCancerDerived_InhSoil[	5.75E-08	0.00E+00	0.00E+00	0.00E+00	0.00E+00	0.00E+00	0.00E+00	0.00E+00	0.00E+00	0.00E+00	0.00E+00	0.00E+00
916	ALL	743280.96	4036700.87	5.87E-08	70YrCancerDerived_InhSoil[	5.87E-08	0.00E+00	0.00E+00	0.00E+00	0.00E+00	0.00E+00	0.00E+00	0.00E+00	0.00E+00	0.00E+00	0.00E+00	0.00E+00
917	ALL	743380.96	4036700.87	5.98E-08	70YrCancerDerived_InhSoil[	5.98E-08	0.00E+00	0.00E+00	0.00E+00	0.00E+00	0.00E+00	0.00E+00	0.00E+00	0.00E+00	0.00E+00	0.00E+00	0.00E+00
918	ALL	743480.96	4036700.87	6.11E-08	70YrCancerDerived_InhSoil[	6.11E-08	0.00E+00	0.00E+00	0.00E+00	0.00E+00	0.00E+00	0.00E+00	0.00E+00	0.00E+00	0.00E+00	0.00E+00	0.00E+00
919	ALL	743580.96	4036700.87	6.24E-08	70YrCancerDerived_InhSoil[	6.24E-08	0.00E+00	0.00E+00	0.00E+00	0.00E+00	0.00E+00	0.00E+00	0.00E+00	0.00E+00	0.00E+00	0.00E+00	0.00E+00
920	ALL	743680.96	4036700.87	6.38E-08	70YrCancerDerived_InhSoil[	6.38E-08	0.00E+00	0.00E+00	0.00E+00	0.00E+00	0.00E+00	0.00E+00	0.00E+00	0.00E+00	0.00E+00	0.00E+00	0.00E+00
921	ALL	743780.96	4036700.87	6.52E-08	70YrCancerDerived_InhSoil[	6.52E-08	0.00E+00	0.00E+00	0.00E+00	0.00E+00	0.00E+00	0.00E+00	0.00E+00	0.00E+00	0.00E+00	0.00E+00	0.00E+00
922	ALL	743880.96	4036700.87	6.67E-08	70YrCancerDerived_InhSoil[	6.67E-08	0.00E+00	0.00E+00	0.00E+00	0.00E+00	0.00E+00	0.00E+00	0.00E+00	0.00E+00	0.00E+00	0.00E+00	0.00E+00
923	ALL	743980.96	4036700.87	6.82E-08	70YrCancerDerived_InhSoil[	6.82E-08	0.00E+00	0.00E+00	0.00E+00	0.00E+00	0.00E+00	0.00E+00	0.00E+00	0.00E+00	0.00E+00	0.00E+00	0.00E+00
924	ALL	744080.96	4036700.87	6.98E-08	70YrCancerDerived_InhSoil[	6.98E-08	0.00E+00	0.00E+00	0.00E+00	0.00E+00	0.00E+00	0.00E+00	0.00E+00	0.00E+00	0.00E+00	0.00E+00	0.00E+00
925	ALL	744180.96	4036700.87	7.16E-08	70YrCancerDerived_InhSoil[	7.16E-08	0.00E+00	0.00E+00	0.00E+00	0.00E+00	0.00E+00	0.00E+00	0.00E+00	0.00E+00	0.00E+00	0.00E+00	0.00E+00
926	ALL	744280.96	4036700.87	7.34E-08	70YrCancerDerived_InhSoil[	7.34E-08	0.00E+00	0.00E+00	0.00E+00	0.00E+00	0.00E+00	0.00E+00	0.00E+00	0.00E+00	0.00E+00	0.00E+00	0.00E+00
927	ALL	744380.96	4036700.87	7.53E-08	70YrCancerDerived_InhSoil[	7.53E-08	0.00E+00	0.00E+00	0.00E+00	0.00E+00	0.00E+00	0.00E+00	0.00E+00	0.00E+00	0.00E+00	0.00E+00	0.00E+00
928	ALL	744480.96	4036700.87	7.74E-08	70YrCancerDerived_InhSoil[	7.74E-08	0.00E+00	0.00E+00	0.00E+00	0.00E+00	0.00E+00	0.00E+00	0.00E+00	0.00E+00	0.00E+00	0.00E+00	0.00E+00
929	ALL	744580.96	4036700.87	7.97E-08	70YrCancerDerived_InhSoil[	7.97E-08	0.00E+00	0.00E+00	0.00E+00	0.00E+00	0.00E+00	0.00E+00	0.00E+00	0.00E+00	0.00E+00	0.00E+00	0.00E+00
930	ALL	744680.96	4036700.87	8.23E-08	70YrCancerDerived_InhSoil[	8.23E-08	0.00E+00	0.00E+00	0.00E+00	0.00E+00	0.00E+00	0.00E+00	0.00E+00	0.00E+00	0.00E+00	0.00E+00	0.00E+00
931	ALL	744780.96	4036700.87	8.52E-08	70YrCancerDerived_InhSoil[	8.52E-08	0.00E+00	0.00E+00	0.00E+00	0.00E+00	0.00E+00	0.00E+00	0.00E+00	0.00E+00	0.00E+00	0.00E+00	0.00E+00
932	ALL	744880.96	4036700.87	8.84E-08	70YrCancerDerived_InhSoil[	8.84E-08	0.00E+00	0.00E+00	0.00E+00	0.00E+00	0.00E+00	0.00E+00	0.00E+00	0.00E+00	0.00E+00	0.00E+00	0.00E+00
933	ALL	744980.96	4036700.87	9.21E-08	70YrCancerDerived_InhSoil[	9.21E-08	0.00E+00	0.00E+00	0.00E+00	0.00E+00	0.00E+00	0.00E+00	0.00E+00	0.00E+00	0.00E+00	0.00E+00	0.00E+00
934	ALL	745080.96	4036700.87	9.63E-08	70YrCancerDerived_InhSoil[	9.63E-08	0.00E+00	0.00E+00	0.00E+00	0.00E+00	0.00E+00	0.00E+00	0.00E+00	0.00E+00	0.00E+00	0.00E+00	0.00E+00
935	ALL	745180.96	4036700.87	1.01E-07	70YrCancerDerived_InhSoil[	1.01E-07	0.00E+00	0.00E+00	0.00E+00	0.00E+00	0.00E+00	0.00E+00	0.00E+00	0.00E+00	0.00E+00	0.00E+00	0.00E+00
936	ALL	738080.96	4036800.87	3.97E-08	70YrCancerDerived_InhSoil[	3.97E-08	0.00E+00	0.00E+00	0.00E+00	0.00E+00	0.00E+00	0.00E+00	0.00E+00	0.00E+00	0.00E+00	0.00E+00	0.00E+00
937	ALL	738180.96	4036800.87	3.99E-08	70YrCancerDerived_InhSoil[	3.99E-08	0.00E+00	0.00E+00	0.00E+00	0.00E+00	0.00E+00	0.00E+00	0.00E+00	0.00E+00	0.00E+00	0.00E+00	0.00E+00
938	ALL	738280.96	4036800.87	4.00E-08	70YrCancerDerived_InhSoil[	4.00E-08	0.00E+00	0.00E+00	0.00E+00	0.00E+00	0.00E+00	0.00E+00	0.00E+00	0.00E+00	0.00E+00	0.00E+00	0.00E+00
939	ALL	738380.96	4036800.87	4.01E-08	70YrCancerDerived_InhSoil[	4.01E-08	0.00E+00	0.00E+00	0.00E+00	0.00E+00	0.00E+00	0.00E+00	0.00E+00	0.00E+00	0.00E+00	0.00E+00	0.00E+00
940	ALL	738480.96	4036800.87	4.03E-08	70YrCancerDerived_InhSoil[	4.03E-08	0.00E+00	0.00E+00	0.00E+00	0.00E+00	0.00E+00	0.00E+00	0.00E+00	0.00E+00	0.00E+00	0.00E+00	0.00E+00
941	ALL	738580.96	4036800.87	4.04E-08	70YrCancerDerived_InhSoil[	4.04E-08	0.00E+00	0.00E+00	0.00E+00	0.00E+00	0.00E+00	0.00E+00	0.00E+00	0.00E+00	0.00E+00	0.00E+00	0.00E+00
942	ALL	738680.96	4036800.87	4.06E-08	70YrCancerDerived_InhSoil[	4.06E-08	0.00E+00	0.00E+00	0.00E+00	0.00E+00	0.00E+00	0.00E+00	0.00E+00	0.00E+00	0.00E+00	0.00E+00	0.00E+00
943	ALL	738780.96	4036800.87	4.08E-08	70YrCancerDerived_InhSoil[	4.08E-08	0.00E+00	0.00E+00	0.00E+00	0.00E+00	0.00E+00	0.00E+00	0.00E+00	0.00E+00	0.00E+00	0.00E+00	0.00E+00
944	ALL	738880.96	4036800.87	4.10E-08	70YrCancerDerived_InhSoil[	4.10E-08	0.00E+00	0.00E+00	0.00E+00	0.00E+00	0.00E+00	0.00E+00	0.00E+00	0.00E+00	0.00E+00	0.00E+00	0.00E+00
945	ALL	738980.96	4036800.87	4.12E-08	70YrCancerDerived_InhSoil[	4.12E-08	0.00E+00	0.00E+00	0.00E+00	0.00E+00	0.00E+00	0.00E+00	0.00E+00	0.00E+00	0.00E+00	0.00E+00	0.00E+00
946	ALL	739080.96	4036800.87	4.14E-08	70YrCancerDerived_InhSoil[	4.14E-08	0.00E+00	0.00E+00	0.00E+00	0.00E+00	0.00E+00	0.00E+00	0.00E+00	0.00E+00	0.00E+00	0.00E+00	0.00E+00
947	ALL	739180.96	4036800.87	4.16E-08	70YrCancerDerived_InhSoil[	4.16E-08	0.00E+00	0.00E+00	0.00E+00	0.00E+00	0.00E+00	0.00E+00	0.00E+00	0.00E+00	0.00E+00	0.00E+00	0.00E+00
948	ALL	739280.96	4036800.87	4.18E-08	70YrCancerDerived_InhSoil[	4.18E-08	0.00E+00	0.00E+00	0.00E+00	0.00E+00	0.00E+00	0.00E+00	0.00E+00	0.00E+00	0.00E+00	0.00E+00	0.00E+00
949	ALL	739380.96	4036800.87	4.20E-08	70YrCancerDerived_InhSoil[	4.20E-08	0.00E+00	0.00E+00	0.00E+00	0.00E+00	0.00E+00	0.00E+00	0.00E+00	0.00E+00	0.00E+00	0.00E+00	0.00E+00
950	ALL	739480.96	4036800.87	4.22E-08	70YrCancerDerived_InhSoil[	4.22E-08	0.00E+00	0.00E+00	0.00E+00	0.00E+00	0.00E+00	0.00E+00	0.00E+00	0.00E+00	0.00E+00	0.00E+00	0.00E+00

951	ALL	739580.96	4036800.87	4.24E-08	70YrCancerDerived_InhSoilI	4.24E-08	0.00E+00	0.00E+00	0.00E+00	0.00E+00	0.00E+00	0.00E+00	0.00E+00	0.00E+00	0.00E+00	0.00E+00	0.00E+00
952	ALL	739680.96	4036800.87	4.27E-08	70YrCancerDerived_InhSoilI	4.27E-08	0.00E+00	0.00E+00	0.00E+00	0.00E+00	0.00E+00	0.00E+00	0.00E+00	0.00E+00	0.00E+00	0.00E+00	0.00E+00
953	ALL	739780.96	4036800.87	4.29E-08	70YrCancerDerived_InhSoilI	4.29E-08	0.00E+00	0.00E+00	0.00E+00	0.00E+00	0.00E+00	0.00E+00	0.00E+00	0.00E+00	0.00E+00	0.00E+00	0.00E+00
954	ALL	739880.96	4036800.87	4.32E-08	70YrCancerDerived_InhSoilI	4.32E-08	0.00E+00	0.00E+00	0.00E+00	0.00E+00	0.00E+00	0.00E+00	0.00E+00	0.00E+00	0.00E+00	0.00E+00	0.00E+00
955	ALL	739980.96	4036800.87	4.34E-08	70YrCancerDerived_InhSoilI	4.34E-08	0.00E+00	0.00E+00	0.00E+00	0.00E+00	0.00E+00	0.00E+00	0.00E+00	0.00E+00	0.00E+00	0.00E+00	0.00E+00
956	ALL	740080.96	4036800.87	4.36E-08	70YrCancerDerived_InhSoilI	4.36E-08	0.00E+00	0.00E+00	0.00E+00	0.00E+00	0.00E+00	0.00E+00	0.00E+00	0.00E+00	0.00E+00	0.00E+00	0.00E+00
957	ALL	740180.96	4036800.87	4.38E-08	70YrCancerDerived_InhSoilI	4.38E-08	0.00E+00	0.00E+00	0.00E+00	0.00E+00	0.00E+00	0.00E+00	0.00E+00	0.00E+00	0.00E+00	0.00E+00	0.00E+00
958	ALL	740280.96	4036800.87	4.40E-08	70YrCancerDerived_InhSoilI	4.40E-08	0.00E+00	0.00E+00	0.00E+00	0.00E+00	0.00E+00	0.00E+00	0.00E+00	0.00E+00	0.00E+00	0.00E+00	0.00E+00
959	ALL	740380.96	4036800.87	4.43E-08	70YrCancerDerived_InhSoilI	4.43E-08	0.00E+00	0.00E+00	0.00E+00	0.00E+00	0.00E+00	0.00E+00	0.00E+00	0.00E+00	0.00E+00	0.00E+00	0.00E+00
960	ALL	740480.96	4036800.87	4.45E-08	70YrCancerDerived_InhSoilI	4.45E-08	0.00E+00	0.00E+00	0.00E+00	0.00E+00	0.00E+00	0.00E+00	0.00E+00	0.00E+00	0.00E+00	0.00E+00	0.00E+00
961	ALL	740580.96	4036800.87	4.48E-08	70YrCancerDerived_InhSoilI	4.48E-08	0.00E+00	0.00E+00	0.00E+00	0.00E+00	0.00E+00	0.00E+00	0.00E+00	0.00E+00	0.00E+00	0.00E+00	0.00E+00
962	ALL	740680.96	4036800.87	4.51E-08	70YrCancerDerived_InhSoilI	4.51E-08	0.00E+00	0.00E+00	0.00E+00	0.00E+00	0.00E+00	0.00E+00	0.00E+00	0.00E+00	0.00E+00	0.00E+00	0.00E+00
963	ALL	740780.96	4036800.87	4.53E-08	70YrCancerDerived_InhSoilI	4.53E-08	0.00E+00	0.00E+00	0.00E+00	0.00E+00	0.00E+00	0.00E+00	0.00E+00	0.00E+00	0.00E+00	0.00E+00	0.00E+00
964	ALL	740880.96	4036800.87	4.56E-08	70YrCancerDerived_InhSoilI	4.56E-08	0.00E+00	0.00E+00	0.00E+00	0.00E+00	0.00E+00	0.00E+00	0.00E+00	0.00E+00	0.00E+00	0.00E+00	0.00E+00
965	ALL	740980.96	4036800.87	4.59E-08	70YrCancerDerived_InhSoilI	4.59E-08	0.00E+00	0.00E+00	0.00E+00	0.00E+00	0.00E+00	0.00E+00	0.00E+00	0.00E+00	0.00E+00	0.00E+00	0.00E+00
966	ALL	741080.96	4036800.87	4.62E-08	70YrCancerDerived_InhSoilI	4.62E-08	0.00E+00	0.00E+00	0.00E+00	0.00E+00	0.00E+00	0.00E+00	0.00E+00	0.00E+00	0.00E+00	0.00E+00	0.00E+00
967	ALL	741180.96	4036800.87	4.65E-08	70YrCancerDerived_InhSoilI	4.65E-08	0.00E+00	0.00E+00	0.00E+00	0.00E+00	0.00E+00	0.00E+00	0.00E+00	0.00E+00	0.00E+00	0.00E+00	0.00E+00
968	ALL	741280.96	4036800.87	4.68E-08	70YrCancerDerived_InhSoilI	4.68E-08	0.00E+00	0.00E+00	0.00E+00	0.00E+00	0.00E+00	0.00E+00	0.00E+00	0.00E+00	0.00E+00	0.00E+00	0.00E+00
969	ALL	741380.96	4036800.87	4.71E-08	70YrCancerDerived_InhSoilI	4.71E-08	0.00E+00	0.00E+00	0.00E+00	0.00E+00	0.00E+00	0.00E+00	0.00E+00	0.00E+00	0.00E+00	0.00E+00	0.00E+00
970	ALL	741480.96	4036800.87	4.74E-08	70YrCancerDerived_InhSoilI	4.74E-08	0.00E+00	0.00E+00	0.00E+00	0.00E+00	0.00E+00	0.00E+00	0.00E+00	0.00E+00	0.00E+00	0.00E+00	0.00E+00
971	ALL	741580.96	4036800.87	4.77E-08	70YrCancerDerived_InhSoilI	4.77E-08	0.00E+00	0.00E+00	0.00E+00	0.00E+00	0.00E+00	0.00E+00	0.00E+00	0.00E+00	0.00E+00	0.00E+00	0.00E+00
972	ALL	741680.96	4036800.87	4.81E-08	70YrCancerDerived_InhSoilI	4.81E-08	0.00E+00	0.00E+00	0.00E+00	0.00E+00	0.00E+00	0.00E+00	0.00E+00	0.00E+00	0.00E+00	0.00E+00	0.00E+00
973	ALL	741780.96	4036800.87	4.85E-08	70YrCancerDerived_InhSoilI	4.85E-08	0.00E+00	0.00E+00	0.00E+00	0.00E+00	0.00E+00	0.00E+00	0.00E+00	0.00E+00	0.00E+00	0.00E+00	0.00E+00
974	ALL	741880.96	4036800.87	4.87E-08	70YrCancerDerived_InhSoilI	4.87E-08	0.00E+00	0.00E+00	0.00E+00	0.00E+00	0.00E+00	0.00E+00	0.00E+00	0.00E+00	0.00E+00	0.00E+00	0.00E+00
975	ALL	741980.96	4036800.87	4.89E-08	70YrCancerDerived_InhSoilI	4.89E-08	0.00E+00	0.00E+00	0.00E+00	0.00E+00	0.00E+00	0.00E+00	0.00E+00	0.00E+00	0.00E+00	0.00E+00	0.00E+00
976	ALL	742080.96	4036800.87	4.93E-08	70YrCancerDerived_InhSoilI	4.93E-08	0.00E+00	0.00E+00	0.00E+00	0.00E+00	0.00E+00	0.00E+00	0.00E+00	0.00E+00	0.00E+00	0.00E+00	0.00E+00
977	ALL	742180.96	4036800.87	4.98E-08	70YrCancerDerived_InhSoilI	4.98E-08	0.00E+00	0.00E+00	0.00E+00	0.00E+00	0.00E+00	0.00E+00	0.00E+00	0.00E+00	0.00E+00	0.00E+00	0.00E+00
978	ALL	742280.96	4036800.87	5.03E-08	70YrCancerDerived_InhSoilI	5.03E-08	0.00E+00	0.00E+00	0.00E+00	0.00E+00	0.00E+00	0.00E+00	0.00E+00	0.00E+00	0.00E+00	0.00E+00	0.00E+00
979	ALL	742380.96	4036800.87	5.09E-08	70YrCancerDerived_InhSoilI	5.09E-08	0.00E+00	0.00E+00	0.00E+00	0.00E+00	0.00E+00	0.00E+00	0.00E+00	0.00E+00	0.00E+00	0.00E+00	0.00E+00
980	ALL	742480.96	4036800.87	5.15E-08	70YrCancerDerived_InhSoilI	5.15E-08	0.00E+00	0.00E+00	0.00E+00	0.00E+00	0.00E+00	0.00E+00	0.00E+00	0.00E+00	0.00E+00	0.00E+00	0.00E+00
981	ALL	742580.96	4036800.87	5.21E-08	70YrCancerDerived_InhSoilI	5.21E-08	0.00E+00	0.00E+00	0.00E+00	0.00E+00	0.00E+00	0.00E+00	0.00E+00	0.00E+00	0.00E+00	0.00E+00	0.00E+00
982	ALL	742680.96	4036800.87	5.28E-08	70YrCancerDerived_InhSoilI	5.28E-08	0.00E+00	0.00E+00	0.00E+00	0.00E+00	0.00E+00	0.00E+00	0.00E+00	0.00E+00	0.00E+00	0.00E+00	0.00E+00
983	ALL	742780.96	4036800.87	5.36E-08	70YrCancerDerived_InhSoilI	5.36E-08	0.00E+00	0.00E+00	0.00E+00	0.00E+00	0.00E+00	0.00E+00	0.00E+00	0.00E+00	0.00E+00	0.00E+00	0.00E+00
984	ALL	742880.96	4036800.87	5.44E-08	70YrCancerDerived_InhSoilI	5.44E-08	0.00E+00	0.00E+00	0.00E+00	0.00E+00	0.00E+00	0.00E+00	0.00E+00	0.00E+00	0.00E+00	0.00E+00	0.00E+00
985	ALL	742980.96	4036800.87	5.53E-08	70YrCancerDerived_InhSoilI	5.53E-08	0.00E+00	0.00E+00	0.00E+00	0.00E+00	0.00E+00	0.00E+00	0.00E+00	0.00E+00	0.00E+00	0.00E+00	0.00E+00
986	ALL	743080.96	4036800.87	5.63E-08	70YrCancerDerived_InhSoilI	5.63E-08	0.00E+00	0.00E+00	0.00E+00	0.00E+00	0.00E+00	0.00E+00	0.00E+00	0.00E+00	0.00E+00	0.00E+00	0.00E+00
987	ALL	743180.96	4036800.87	5.73E-08	70YrCancerDerived_InhSoilI	5.73E-08	0.00E+00	0.00E+00	0.00E+00	0.00E+00	0.00E+00	0.00E+00	0.00E+00	0.00E+00	0.00E+00	0.00E+00	0.00E+00
988	ALL	743280.96	4036800.87	5.85E-08	70YrCancerDerived_InhSoilI	5.85E-08	0.00E+00	0.00E+00	0.00E+00	0.00E+00	0.00E+00	0.00E+00	0.00E+00	0.00E+00	0.00E+00	0.00E+00	0.00E+00
989	ALL	743380.96	4036800.87	5.96E-08	70YrCancerDerived_InhSoilI	5.96E-08	0.00E+00	0.00E+00	0.00E+00	0.00E+00	0.00E+00	0.00E+00	0.00E+00	0.00E+00	0.00E+00	0.00E+00	0.00E+00
990	ALL	743480.96	4036800.87	6.09E-08	70YrCancerDerived_InhSoilI	6.09E-08	0.00E+00	0.00E+00	0.00E+00	0.00E+00	0.00E+00	0.00E+00	0.00E+00	0.00E+00	0.00E+00	0.00E+00	0.00E+00
991	ALL	743580.96	4036800.87	6.23E-08	70YrCancerDerived_InhSoilI	6.23E-08	0.00E+00	0.00E+00	0.00E+00	0.00E+00	0.00E+00	0.00E+00	0.00E+00	0.00E+00	0.00E+00	0.00E+00	0.00E+00
992	ALL	743680.96	4036800.87	6.37E-08	70YrCancerDerived_InhSoilI	6.37E-08	0.00E+00	0.00E+00	0.00E+00	0.00E+00	0.00E+00	0.00E+00	0.00E+00	0.00E+00	0.00E+00	0.00E+00	0.00E+00
993	ALL	743780.96	4036800.87	6.53E-08	70YrCancerDerived_InhSoilI	6.53E-08	0.00E+00	0.00E+00	0.00E+00	0.00E+00	0.00E+00	0.00E+00	0.00E+00	0.00E+00	0.00E+00	0.00E+00	0.00E+00
994	ALL	743880.96	4036800.87	6.69E-08	70YrCancerDerived_InhSoilI	6.69E-08	0.00E+00	0.00E+00	0.00E+00	0.00E+00	0.00E+00	0.00E+00	0.00E+00	0.00E+00	0.00E+00	0.00E+00	0.00E+00
995	ALL	743980.96	4036800.87	6.86E-08	70YrCancerDerived_InhSoilI	6.86E-08	0.00E+00	0.00E+00	0.00E+00	0.00E+00	0.00E+00	0.00E+00	0.00E+00	0.00E+00	0.00E+00	0.00E+00	0.00E+00
996	ALL	744080.96	4036800.87	7.04E-08	70YrCancerDerived_InhSoilI	7.04E-08	0.00E+00	0.00E+00	0.00E+00	0.00E+00	0.00E+00	0.00E+00	0.00E+00	0.00E+00	0.00E+00	0.00E+00	0.00E+00
997	ALL	744180.96	4036800.87	7.24E-08	70YrCancerDerived_InhSoilI	7.24E-08	0.00E+00	0.00E+00	0.00E+00	0.00E+00	0.00E+00	0.00E+00	0.00E+00	0.00E+00	0.00E+00	0.00E+00	0.00E+00
998	ALL	744280.96	4036800.87	7.45E-08	70YrCancerDerived_InhSoilI	7.45E-08	0.00E+00	0.00E+00	0.00E+00	0.00E+00	0.00E+00	0.00E+00	0.00E+00	0.00E+00	0.00E+00	0.00E+00	0.00E+00
999	ALL	744380.96	4036800.87	7.67E-08	70YrCancerDerived_InhSoilI	7.67E-08	0.00E+00	0.00E+00	0.00E+00	0.00E+00	0.00E+00	0.00E+00	0.00E+00	0.00E+00	0.00E+00	0.00E+00	0.00E+00
1000	ALL	744480.96	4036800.87	7.92E-08	70YrCancerDerived_InhSoilI	7.92E-08	0.00E+00	0.00E+00	0.00E+00	0.00E+00	0.00E+00	0.00E+00	0.00E+00	0.00E+00	0.00E+00	0.00E+00	0.00E+00
1001	ALL	744580.96	4036800.87	8.19E-08	70YrCancerDerived_InhSoilI	8.19E-08	0.00E+00	0.00E+00	0.00E+00	0.00E+00	0.00E+00	0.00E+00	0.00E+00	0.00E+00	0.00E+00	0.00E+00	0.00E+00
1002	ALL	744680.96	4036800.87	8.48E-08	70YrCancerDerived_InhSoilI	8.48E-08	0.00E+00	0.00E+00	0.00E+00	0.00E+00	0.00E+00	0.00E+00	0.00E+00	0.00E+00	0.00E+00	0.00E+00	0.00E+00
1003	ALL	744780.96	4036800.87	8.81E-08	70YrCancerDerived_InhSoilI	8.81E-08	0.00E+00	0.00E+00	0.00E+00	0.00E+00	0.00E+00	0.00E+00	0.00E+00	0.00E+00	0.00E+00	0.00E+00	0.00E+00
1004	ALL	744880.96	4036800.87	9.18E-08	70YrCancerDerived_InhSoilI	9.18E-08	0.00E+00	0.00E+00	0.00E+00	0.00E+00	0.00E+00	0.00E+00	0.00E+00	0.00E+00	0.00E+00	0.00E+00	0.00E+00
1005	ALL	744980.96	4036800.87	9.61E-08	70YrCancerDerived_InhSoilI	9.61E-08	0.00E+00	0.00E+00	0.00E+00	0.00E+00	0.00E+00	0.00E+00	0.00E+00	0.00E+00	0.00E+00	0.00E+00	0.00E+00
1006	ALL	745080.96	4036800.87	1.01E-07	70YrCancerDerived_InhSoilI	1.01E-07	0.00E+00	0.00E+00	0.00E+00	0.00E+00	0.00E+00	0.00E+00	0.00E+00	0.00E+00	0.00E+00	0.00E+00	0.00E+00

1007	ALL	745180.96	4036800.87	1.07E-07	70YrCancerDerived_InhSoil[	1.07E-07	0.00E+00	0.00E+00	0.00E+00	0.00E+00	0.00E+00	0.00E+00	0.00E+00	0.00E+00	0.00E+00	0.00E+00	0.00E+00
1008	ALL	745280.96	4036800.87	1.13E-07	70YrCancerDerived_InhSoil[	1.13E-07	0.00E+00	0.00E+00	0.00E+00	0.00E+00	0.00E+00	0.00E+00	0.00E+00	0.00E+00	0.00E+00	0.00E+00	0.00E+00
1009	ALL	745380.96	4036800.87	1.21E-07	70YrCancerDerived_InhSoil[	1.21E-07	0.00E+00	0.00E+00	0.00E+00	0.00E+00	0.00E+00	0.00E+00	0.00E+00	0.00E+00	0.00E+00	0.00E+00	0.00E+00
1010	ALL	745480.96	4036800.87	1.31E-07	70YrCancerDerived_InhSoil[	1.31E-07	0.00E+00	0.00E+00	0.00E+00	0.00E+00	0.00E+00	0.00E+00	0.00E+00	0.00E+00	0.00E+00	0.00E+00	0.00E+00
1011	ALL	745580.96	4036800.87	1.42E-07	70YrCancerDerived_InhSoil[	1.42E-07	0.00E+00	0.00E+00	0.00E+00	0.00E+00	0.00E+00	0.00E+00	0.00E+00	0.00E+00	0.00E+00	0.00E+00	0.00E+00
1012	ALL	745680.96	4036800.87	1.55E-07	70YrCancerDerived_InhSoil[	1.55E-07	0.00E+00	0.00E+00	0.00E+00	0.00E+00	0.00E+00	0.00E+00	0.00E+00	0.00E+00	0.00E+00	0.00E+00	0.00E+00
1013	ALL	745780.96	4036800.87	1.70E-07	70YrCancerDerived_InhSoil[	1.70E-07	0.00E+00	0.00E+00	0.00E+00	0.00E+00	0.00E+00	0.00E+00	0.00E+00	0.00E+00	0.00E+00	0.00E+00	0.00E+00
1014	ALL	745880.96	4036800.87	1.89E-07	70YrCancerDerived_InhSoil[	1.89E-07	0.00E+00	0.00E+00	0.00E+00	0.00E+00	0.00E+00	0.00E+00	0.00E+00	0.00E+00	0.00E+00	0.00E+00	0.00E+00
1015	ALL	741480.96	4036900.87	4.76E-08	70YrCancerDerived_InhSoil[	4.76E-08	0.00E+00	0.00E+00	0.00E+00	0.00E+00	0.00E+00	0.00E+00	0.00E+00	0.00E+00	0.00E+00	0.00E+00	0.00E+00
1016	ALL	741580.96	4036900.87	4.79E-08	70YrCancerDerived_InhSoil[	4.79E-08	0.00E+00	0.00E+00	0.00E+00	0.00E+00	0.00E+00	0.00E+00	0.00E+00	0.00E+00	0.00E+00	0.00E+00	0.00E+00
1017	ALL	741680.96	4036900.87	4.83E-08	70YrCancerDerived_InhSoil[	4.83E-08	0.00E+00	0.00E+00	0.00E+00	0.00E+00	0.00E+00	0.00E+00	0.00E+00	0.00E+00	0.00E+00	0.00E+00	0.00E+00
1018	ALL	741780.96	4036900.87	4.87E-08	70YrCancerDerived_InhSoil[	4.87E-08	0.00E+00	0.00E+00	0.00E+00	0.00E+00	0.00E+00	0.00E+00	0.00E+00	0.00E+00	0.00E+00	0.00E+00	0.00E+00
1019	ALL	741880.96	4036900.87	4.89E-08	70YrCancerDerived_InhSoil[	4.89E-08	0.00E+00	0.00E+00	0.00E+00	0.00E+00	0.00E+00	0.00E+00	0.00E+00	0.00E+00	0.00E+00	0.00E+00	0.00E+00
1020	ALL	741980.96	4036900.87	4.91E-08	70YrCancerDerived_InhSoil[	4.91E-08	0.00E+00	0.00E+00	0.00E+00	0.00E+00	0.00E+00	0.00E+00	0.00E+00	0.00E+00	0.00E+00	0.00E+00	0.00E+00
1021	ALL	742080.96	4036900.87	4.95E-08	70YrCancerDerived_InhSoil[	4.95E-08	0.00E+00	0.00E+00	0.00E+00	0.00E+00	0.00E+00	0.00E+00	0.00E+00	0.00E+00	0.00E+00	0.00E+00	0.00E+00
1022	ALL	742180.96	4036900.87	4.99E-08	70YrCancerDerived_InhSoil[	4.99E-08	0.00E+00	0.00E+00	0.00E+00	0.00E+00	0.00E+00	0.00E+00	0.00E+00	0.00E+00	0.00E+00	0.00E+00	0.00E+00
1023	ALL	742280.96	4036900.87	5.04E-08	70YrCancerDerived_InhSoil[	5.04E-08	0.00E+00	0.00E+00	0.00E+00	0.00E+00	0.00E+00	0.00E+00	0.00E+00	0.00E+00	0.00E+00	0.00E+00	0.00E+00
1024	ALL	742380.96	4036900.87	5.09E-08	70YrCancerDerived_InhSoil[	5.09E-08	0.00E+00	0.00E+00	0.00E+00	0.00E+00	0.00E+00	0.00E+00	0.00E+00	0.00E+00	0.00E+00	0.00E+00	0.00E+00
1025	ALL	742480.96	4036900.87	5.15E-08	70YrCancerDerived_InhSoil[	5.15E-08	0.00E+00	0.00E+00	0.00E+00	0.00E+00	0.00E+00	0.00E+00	0.00E+00	0.00E+00	0.00E+00	0.00E+00	0.00E+00
1026	ALL	742580.96	4036900.87	5.21E-08	70YrCancerDerived_InhSoil[	5.21E-08	0.00E+00	0.00E+00	0.00E+00	0.00E+00	0.00E+00	0.00E+00	0.00E+00	0.00E+00	0.00E+00	0.00E+00	0.00E+00
1027	ALL	742680.96	4036900.87	5.28E-08	70YrCancerDerived_InhSoil[	5.28E-08	0.00E+00	0.00E+00	0.00E+00	0.00E+00	0.00E+00	0.00E+00	0.00E+00	0.00E+00	0.00E+00	0.00E+00	0.00E+00
1028	ALL	742780.96	4036900.87	5.35E-08	70YrCancerDerived_InhSoil[	5.35E-08	0.00E+00	0.00E+00	0.00E+00	0.00E+00	0.00E+00	0.00E+00	0.00E+00	0.00E+00	0.00E+00	0.00E+00	0.00E+00
1029	ALL	742880.96	4036900.87	5.43E-08	70YrCancerDerived_InhSoil[	5.43E-08	0.00E+00	0.00E+00	0.00E+00	0.00E+00	0.00E+00	0.00E+00	0.00E+00	0.00E+00	0.00E+00	0.00E+00	0.00E+00
1030	ALL	742980.96	4036900.87	5.52E-08	70YrCancerDerived_InhSoil[	5.52E-08	0.00E+00	0.00E+00	0.00E+00	0.00E+00	0.00E+00	0.00E+00	0.00E+00	0.00E+00	0.00E+00	0.00E+00	0.00E+00
1031	ALL	743080.96	4036900.87	5.62E-08	70YrCancerDerived_InhSoil[	5.62E-08	0.00E+00	0.00E+00	0.00E+00	0.00E+00	0.00E+00	0.00E+00	0.00E+00	0.00E+00	0.00E+00	0.00E+00	0.00E+00
1032	ALL	743180.96	4036900.87	5.72E-08	70YrCancerDerived_InhSoil[	5.72E-08	0.00E+00	0.00E+00	0.00E+00	0.00E+00	0.00E+00	0.00E+00	0.00E+00	0.00E+00	0.00E+00	0.00E+00	0.00E+00
1033	ALL	743280.96	4036900.87	5.83E-08	70YrCancerDerived_InhSoil[	5.83E-08	0.00E+00	0.00E+00	0.00E+00	0.00E+00	0.00E+00	0.00E+00	0.00E+00	0.00E+00	0.00E+00	0.00E+00	0.00E+00
1034	ALL	743380.96	4036900.87	5.96E-08	70YrCancerDerived_InhSoil[	5.96E-08	0.00E+00	0.00E+00	0.00E+00	0.00E+00	0.00E+00	0.00E+00	0.00E+00	0.00E+00	0.00E+00	0.00E+00	0.00E+00
1035	ALL	743480.96	4036900.87	6.09E-08	70YrCancerDerived_InhSoil[	6.09E-08	0.00E+00	0.00E+00	0.00E+00	0.00E+00	0.00E+00	0.00E+00	0.00E+00	0.00E+00	0.00E+00	0.00E+00	0.00E+00
1036	ALL	743580.96	4036900.87	6.24E-08	70YrCancerDerived_InhSoil[	6.24E-08	0.00E+00	0.00E+00	0.00E+00	0.00E+00	0.00E+00	0.00E+00	0.00E+00	0.00E+00	0.00E+00	0.00E+00	0.00E+00
1037	ALL	743680.96	4036900.87	6.39E-08	70YrCancerDerived_InhSoil[	6.39E-08	0.00E+00	0.00E+00	0.00E+00	0.00E+00	0.00E+00	0.00E+00	0.00E+00	0.00E+00	0.00E+00	0.00E+00	0.00E+00
1038	ALL	743780.96	4036900.87	6.56E-08	70YrCancerDerived_InhSoil[	6.56E-08	0.00E+00	0.00E+00	0.00E+00	0.00E+00	0.00E+00	0.00E+00	0.00E+00	0.00E+00	0.00E+00	0.00E+00	0.00E+00
1039	ALL	743880.96	4036900.87	6.74E-08	70YrCancerDerived_InhSoil[	6.74E-08	0.00E+00	0.00E+00	0.00E+00	0.00E+00	0.00E+00	0.00E+00	0.00E+00	0.00E+00	0.00E+00	0.00E+00	0.00E+00
1040	ALL	743980.96	4036900.87	6.93E-08	70YrCancerDerived_InhSoil[	6.93E-08	0.00E+00	0.00E+00	0.00E+00	0.00E+00	0.00E+00	0.00E+00	0.00E+00	0.00E+00	0.00E+00	0.00E+00	0.00E+00
1041	ALL	744080.96	4036900.87	7.14E-08	70YrCancerDerived_InhSoil[	7.14E-08	0.00E+00	0.00E+00	0.00E+00	0.00E+00	0.00E+00	0.00E+00	0.00E+00	0.00E+00	0.00E+00	0.00E+00	0.00E+00
1042	ALL	744180.96	4036900.87	7.36E-08	70YrCancerDerived_InhSoil[	7.36E-08	0.00E+00	0.00E+00	0.00E+00	0.00E+00	0.00E+00	0.00E+00	0.00E+00	0.00E+00	0.00E+00	0.00E+00	0.00E+00
1043	ALL	744280.96	4036900.87	7.59E-08	70YrCancerDerived_InhSoil[	7.59E-08	0.00E+00	0.00E+00	0.00E+00	0.00E+00	0.00E+00	0.00E+00	0.00E+00	0.00E+00	0.00E+00	0.00E+00	0.00E+00
1044	ALL	744380.96	4036900.87	7.85E-08	70YrCancerDerived_InhSoil[	7.85E-08	0.00E+00	0.00E+00	0.00E+00	0.00E+00	0.00E+00	0.00E+00	0.00E+00	0.00E+00	0.00E+00	0.00E+00	0.00E+00
1045	ALL	744480.96	4036900.87	8.13E-08	70YrCancerDerived_InhSoil[	8.13E-08	0.00E+00	0.00E+00	0.00E+00	0.00E+00	0.00E+00	0.00E+00	0.00E+00	0.00E+00	0.00E+00	0.00E+00	0.00E+00
1046	ALL	744580.96	4036900.87	8.43E-08	70YrCancerDerived_InhSoil[	8.43E-08	0.00E+00	0.00E+00	0.00E+00	0.00E+00	0.00E+00	0.00E+00	0.00E+00	0.00E+00	0.00E+00	0.00E+00	0.00E+00
1047	ALL	744680.96	4036900.87	8.77E-08	70YrCancerDerived_InhSoil[	8.77E-08	0.00E+00	0.00E+00	0.00E+00	0.00E+00	0.00E+00	0.00E+00	0.00E+00	0.00E+00	0.00E+00	0.00E+00	0.00E+00
1048	ALL	744780.96	4036900.87	9.14E-08	70YrCancerDerived_InhSoil[	9.14E-08	0.00E+00	0.00E+00	0.00E+00	0.00E+00	0.00E+00	0.00E+00	0.00E+00	0.00E+00	0.00E+00	0.00E+00	0.00E+00
1049	ALL	744880.96	4036900.87	9.56E-08	70YrCancerDerived_InhSoil[	9.56E-08	0.00E+00	0.00E+00	0.00E+00	0.00E+00	0.00E+00	0.00E+00	0.00E+00	0.00E+00	0.00E+00	0.00E+00	0.00E+00
1050	ALL	744980.96	4036900.87	1.00E-07	70YrCancerDerived_InhSoil[	1.00E-07	0.00E+00	0.00E+00	0.00E+00	0.00E+00	0.00E+00	0.00E+00	0.00E+00	0.00E+00	0.00E+00	0.00E+00	0.00E+00
1051	ALL	745080.96	4036900.87	1.06E-07	70YrCancerDerived_InhSoil[	1.06E-07	0.00E+00	0.00E+00	0.00E+00	0.00E+00	0.00E+00	0.00E+00	0.00E+00	0.00E+00	0.00E+00	0.00E+00	0.00E+00
1052	ALL	745180.96	4036900.87	1.13E-07	70YrCancerDerived_InhSoil[	1.13E-07	0.00E+00	0.00E+00	0.00E+00	0.00E+00	0.00E+00	0.00E+00	0.00E+00	0.00E+00	0.00E+00	0.00E+00	0.00E+00
1053	ALL	745280.96	4036900.87	1.20E-07	70YrCancerDerived_InhSoil[	1.20E-07	0.00E+00	0.00E+00	0.00E+00	0.00E+00	0.00E+00	0.00E+00	0.00E+00	0.00E+00	0.00E+00	0.00E+00	0.00E+00
1054	ALL	745380.96	4036900.87	1.29E-07	70YrCancerDerived_InhSoil[	1.29E-07	0.00E+00	0.00E+00	0.00E+00	0.00E+00	0.00E+00	0.00E+00	0.00E+00	0.00E+00	0.00E+00	0.00E+00	0.00E+00
1055	ALL	745480.96	4036900.87	1.39E-07	70YrCancerDerived_InhSoil[	1.39E-07	0.00E+00	0.00E+00	0.00E+00	0.00E+00	0.00E+00	0.00E+00	0.00E+00	0.00E+00	0.00E+00	0.00E+00	0.00E+00
1056	ALL	745580.96	4036900.87	1.50E-07	70YrCancerDerived_InhSoil[	1.50E-07	0.00E+00	0.00E+00	0.00E+00	0.00E+00	0.00E+00	0.00E+00	0.00E+00	0.00E+00	0.00E+00	0.00E+00	0.00E+00
1057	ALL	745680.96	4036900.87	1.63E-07	70YrCancerDerived_InhSoil[	1.63E-07	0.00E+00	0.00E+00	0.00E+00	0.00E+00	0.00E+00	0.00E+00	0.00E+00	0.00E+00	0.00E+00	0.00E+00	0.00E+00
1058	ALL	745780.96	4036900.87	1.78E-07	70YrCancerDerived_InhSoil[	1.78E-07	0.00E+00	0.00E+00	0.00E+00	0.00E+00	0.00E+00	0.00E+00	0.00E+00	0.00E+00	0.00E+00	0.00E+00	0.00E+00
1059	ALL	745880.96	4036900.87	1.95E-07	70YrCancerDerived_InhSoil[	1.95E-07	0.00E+00	0.00E+00	0.00E+00	0.00E+00	0.00E+00	0.00E+00	0.00E+00	0.00E+00	0.00E+00	0.00E+00	0.00E+00
1060	ALL	747188.42	4034760.7	1.73E-07	70YrCancerDerived_InhSoil[	1.73E-07	0.00E+00	0.00E+00	0.00E+00	0.00E+00	0.00E+00	0.00E+00	0.00E+00	0.00E+00	0.00E+00	0.00E+00	0.00E+00
1061	ALL	747288.42	4034760.7	2.11E-07	70YrCancerDerived_InhSoil[	2.11E-07	0.00E+00	0.00E+00	0.00E+00	0.00E+00	0.00E+00	0.00E+00	0.00E+00	0.00E+00	0.00E+00	0.00E+00	0.00E+00
1062	ALL	747388.42	4034760.7	2.53E-07	70YrCancerDerived_InhSoil[	2.53E-07	0.00E+00	0.00E+00	0.00E+00	0.00E+00	0.00E+00	0.00E+00	0.00E+00	0.00E+00	0.00E+00	0.00E+00	0.00E+00

1063	ALL	747488.42	4034760.7	2.94E-07	70YrCancerDerived_InhSoil[	2.94E-07	0.00E+00	0.00E+00	0.00E+00	0.00E+00	0.00E+00	0.00E+00	0.00E+00	0.00E+00	0.00E+00	0.00E+00	0.00E+00
1064	ALL	747588.42	4034760.7	3.35E-07	70YrCancerDerived_InhSoil[	3.35E-07	0.00E+00	0.00E+00	0.00E+00	0.00E+00	0.00E+00	0.00E+00	0.00E+00	0.00E+00	0.00E+00	0.00E+00	0.00E+00
1065	ALL	747688.42	4034760.7	3.72E-07	70YrCancerDerived_InhSoil[	3.72E-07	0.00E+00	0.00E+00	0.00E+00	0.00E+00	0.00E+00	0.00E+00	0.00E+00	0.00E+00	0.00E+00	0.00E+00	0.00E+00
1066	ALL	747788.42	4034760.7	4.06E-07	70YrCancerDerived_InhSoil[	4.06E-07	0.00E+00	0.00E+00	0.00E+00	0.00E+00	0.00E+00	0.00E+00	0.00E+00	0.00E+00	0.00E+00	0.00E+00	0.00E+00
1067	ALL	747888.42	4034760.7	4.34E-07	70YrCancerDerived_InhSoil[	4.34E-07	0.00E+00	0.00E+00	0.00E+00	0.00E+00	0.00E+00	0.00E+00	0.00E+00	0.00E+00	0.00E+00	0.00E+00	0.00E+00
1068	ALL	747988.42	4034760.7	4.56E-07	70YrCancerDerived_InhSoil[	4.56E-07	0.00E+00	0.00E+00	0.00E+00	0.00E+00	0.00E+00	0.00E+00	0.00E+00	0.00E+00	0.00E+00	0.00E+00	0.00E+00
1069	ALL	748088.42	4034760.7	4.76E-07	70YrCancerDerived_InhSoil[	4.76E-07	0.00E+00	0.00E+00	0.00E+00	0.00E+00	0.00E+00	0.00E+00	0.00E+00	0.00E+00	0.00E+00	0.00E+00	0.00E+00
1070	ALL	748188.42	4034760.7	4.91E-07	70YrCancerDerived_InhSoil[	4.91E-07	0.00E+00	0.00E+00	0.00E+00	0.00E+00	0.00E+00	0.00E+00	0.00E+00	0.00E+00	0.00E+00	0.00E+00	0.00E+00
1071	ALL	748288.42	4034760.7	5.01E-07	70YrCancerDerived_InhSoil[	5.01E-07	0.00E+00	0.00E+00	0.00E+00	0.00E+00	0.00E+00	0.00E+00	0.00E+00	0.00E+00	0.00E+00	0.00E+00	0.00E+00
1072	ALL	748388.42	4034760.7	5.04E-07	70YrCancerDerived_InhSoil[	5.04E-07	0.00E+00	0.00E+00	0.00E+00	0.00E+00	0.00E+00	0.00E+00	0.00E+00	0.00E+00	0.00E+00	0.00E+00	0.00E+00
1073	ALL	748488.42	4034760.7	5.03E-07	70YrCancerDerived_InhSoil[	5.03E-07	0.00E+00	0.00E+00	0.00E+00	0.00E+00	0.00E+00	0.00E+00	0.00E+00	0.00E+00	0.00E+00	0.00E+00	0.00E+00
1074	ALL	748588.42	4034760.7	4.97E-07	70YrCancerDerived_InhSoil[	4.97E-07	0.00E+00	0.00E+00	0.00E+00	0.00E+00	0.00E+00	0.00E+00	0.00E+00	0.00E+00	0.00E+00	0.00E+00	0.00E+00
1075	ALL	748688.42	4034760.7	4.86E-07	70YrCancerDerived_InhSoil[	4.86E-07	0.00E+00	0.00E+00	0.00E+00	0.00E+00	0.00E+00	0.00E+00	0.00E+00	0.00E+00	0.00E+00	0.00E+00	0.00E+00
1076	ALL	748788.42	4034760.7	4.71E-07	70YrCancerDerived_InhSoil[	4.71E-07	0.00E+00	0.00E+00	0.00E+00	0.00E+00	0.00E+00	0.00E+00	0.00E+00	0.00E+00	0.00E+00	0.00E+00	0.00E+00
1077	ALL	748888.42	4034760.7	4.54E-07	70YrCancerDerived_InhSoil[	4.54E-07	0.00E+00	0.00E+00	0.00E+00	0.00E+00	0.00E+00	0.00E+00	0.00E+00	0.00E+00	0.00E+00	0.00E+00	0.00E+00
1078	ALL	747188.42	4034860.7	1.91E-07	70YrCancerDerived_InhSoil[	1.91E-07	0.00E+00	0.00E+00	0.00E+00	0.00E+00	0.00E+00	0.00E+00	0.00E+00	0.00E+00	0.00E+00	0.00E+00	0.00E+00
1079	ALL	747288.42	4034860.7	2.38E-07	70YrCancerDerived_InhSoil[	2.38E-07	0.00E+00	0.00E+00	0.00E+00	0.00E+00	0.00E+00	0.00E+00	0.00E+00	0.00E+00	0.00E+00	0.00E+00	0.00E+00
1080	ALL	747388.42	4034860.7	2.89E-07	70YrCancerDerived_InhSoil[	2.89E-07	0.00E+00	0.00E+00	0.00E+00	0.00E+00	0.00E+00	0.00E+00	0.00E+00	0.00E+00	0.00E+00	0.00E+00	0.00E+00
1081	ALL	747488.42	4034860.7	3.39E-07	70YrCancerDerived_InhSoil[	3.39E-07	0.00E+00	0.00E+00	0.00E+00	0.00E+00	0.00E+00	0.00E+00	0.00E+00	0.00E+00	0.00E+00	0.00E+00	0.00E+00
1082	ALL	747588.42	4034860.7	3.87E-07	70YrCancerDerived_InhSoil[	3.87E-07	0.00E+00	0.00E+00	0.00E+00	0.00E+00	0.00E+00	0.00E+00	0.00E+00	0.00E+00	0.00E+00	0.00E+00	0.00E+00
1083	ALL	747688.42	4034860.7	4.32E-07	70YrCancerDerived_InhSoil[	4.32E-07	0.00E+00	0.00E+00	0.00E+00	0.00E+00	0.00E+00	0.00E+00	0.00E+00	0.00E+00	0.00E+00	0.00E+00	0.00E+00
1084	ALL	747788.42	4034860.7	4.70E-07	70YrCancerDerived_InhSoil[	4.70E-07	0.00E+00	0.00E+00	0.00E+00	0.00E+00	0.00E+00	0.00E+00	0.00E+00	0.00E+00	0.00E+00	0.00E+00	0.00E+00
1085	ALL	747888.42	4034860.7	5.02E-07	70YrCancerDerived_InhSoil[	5.02E-07	0.00E+00	0.00E+00	0.00E+00	0.00E+00	0.00E+00	0.00E+00	0.00E+00	0.00E+00	0.00E+00	0.00E+00	0.00E+00
1086	ALL	747988.42	4034860.7	5.25E-07	70YrCancerDerived_InhSoil[	5.25E-07	0.00E+00	0.00E+00	0.00E+00	0.00E+00	0.00E+00	0.00E+00	0.00E+00	0.00E+00	0.00E+00	0.00E+00	0.00E+00
1087	ALL	748088.42	4034860.7	5.45E-07	70YrCancerDerived_InhSoil[	5.45E-07	0.00E+00	0.00E+00	0.00E+00	0.00E+00	0.00E+00	0.00E+00	0.00E+00	0.00E+00	0.00E+00	0.00E+00	0.00E+00
1088	ALL	748188.42	4034860.7	5.58E-07	70YrCancerDerived_InhSoil[	5.58E-07	0.00E+00	0.00E+00	0.00E+00	0.00E+00	0.00E+00	0.00E+00	0.00E+00	0.00E+00	0.00E+00	0.00E+00	0.00E+00
1089	ALL	748288.42	4034860.7	5.64E-07	70YrCancerDerived_InhSoil[	5.64E-07	0.00E+00	0.00E+00	0.00E+00	0.00E+00	0.00E+00	0.00E+00	0.00E+00	0.00E+00	0.00E+00	0.00E+00	0.00E+00
1090	ALL	748388.42	4034860.7	5.60E-07	70YrCancerDerived_InhSoil[	5.60E-07	0.00E+00	0.00E+00	0.00E+00	0.00E+00	0.00E+00	0.00E+00	0.00E+00	0.00E+00	0.00E+00	0.00E+00	0.00E+00
1091	ALL	748488.42	4034860.7	5.51E-07	70YrCancerDerived_InhSoil[	5.51E-07	0.00E+00	0.00E+00	0.00E+00	0.00E+00	0.00E+00	0.00E+00	0.00E+00	0.00E+00	0.00E+00	0.00E+00	0.00E+00
1092	ALL	748588.42	4034860.7	5.37E-07	70YrCancerDerived_InhSoil[	5.37E-07	0.00E+00	0.00E+00	0.00E+00	0.00E+00	0.00E+00	0.00E+00	0.00E+00	0.00E+00	0.00E+00	0.00E+00	0.00E+00
1093	ALL	748688.42	4034860.7	5.18E-07	70YrCancerDerived_InhSoil[	5.18E-07	0.00E+00	0.00E+00	0.00E+00	0.00E+00	0.00E+00	0.00E+00	0.00E+00	0.00E+00	0.00E+00	0.00E+00	0.00E+00
1094	ALL	748788.42	4034860.7	4.95E-07	70YrCancerDerived_InhSoil[	4.95E-07	0.00E+00	0.00E+00	0.00E+00	0.00E+00	0.00E+00	0.00E+00	0.00E+00	0.00E+00	0.00E+00	0.00E+00	0.00E+00
1095	ALL	748888.42	4034860.7	4.71E-07	70YrCancerDerived_InhSoil[	4.71E-07	0.00E+00	0.00E+00	0.00E+00	0.00E+00	0.00E+00	0.00E+00	0.00E+00	0.00E+00	0.00E+00	0.00E+00	0.00E+00
1096	ALL	747188.42	4034960.7	2.13E-07	70YrCancerDerived_InhSoil[	2.13E-07	0.00E+00	0.00E+00	0.00E+00	0.00E+00	0.00E+00	0.00E+00	0.00E+00	0.00E+00	0.00E+00	0.00E+00	0.00E+00
1097	ALL	747288.42	4034960.7	2.72E-07	70YrCancerDerived_InhSoil[	2.72E-07	0.00E+00	0.00E+00	0.00E+00	0.00E+00	0.00E+00	0.00E+00	0.00E+00	0.00E+00	0.00E+00	0.00E+00	0.00E+00
1098	ALL	747388.42	4034960.7	3.35E-07	70YrCancerDerived_InhSoil[	3.35E-07	0.00E+00	0.00E+00	0.00E+00	0.00E+00	0.00E+00	0.00E+00	0.00E+00	0.00E+00	0.00E+00	0.00E+00	0.00E+00
1099	ALL	747488.42	4034960.7	3.97E-07	70YrCancerDerived_InhSoil[	3.97E-07	0.00E+00	0.00E+00	0.00E+00	0.00E+00	0.00E+00	0.00E+00	0.00E+00	0.00E+00	0.00E+00	0.00E+00	0.00E+00
1100	ALL	747588.42	4034960.7	4.55E-07	70YrCancerDerived_InhSoil[	4.55E-07	0.00E+00	0.00E+00	0.00E+00	0.00E+00	0.00E+00	0.00E+00	0.00E+00	0.00E+00	0.00E+00	0.00E+00	0.00E+00
1101	ALL	747688.42	4034960.7	5.07E-07	70YrCancerDerived_InhSoil[	5.07E-07	0.00E+00	0.00E+00	0.00E+00	0.00E+00	0.00E+00	0.00E+00	0.00E+00	0.00E+00	0.00E+00	0.00E+00	0.00E+00
1102	ALL	747788.42	4034960.7	5.51E-07	70YrCancerDerived_InhSoil[	5.51E-07	0.00E+00	0.00E+00	0.00E+00	0.00E+00	0.00E+00	0.00E+00	0.00E+00	0.00E+00	0.00E+00	0.00E+00	0.00E+00
1103	ALL	747888.42	4034960.7	5.86E-07	70YrCancerDerived_InhSoil[	5.86E-07	0.00E+00	0.00E+00	0.00E+00	0.00E+00	0.00E+00	0.00E+00	0.00E+00	0.00E+00	0.00E+00	0.00E+00	0.00E+00
1104	ALL	747988.42	4034960.7	6.10E-07	70YrCancerDerived_InhSoil[	6.10E-07	0.00E+00	0.00E+00	0.00E+00	0.00E+00	0.00E+00	0.00E+00	0.00E+00	0.00E+00	0.00E+00	0.00E+00	0.00E+00
1105	ALL	748088.42	4034960.7	6.27E-07	70YrCancerDerived_InhSoil[	6.27E-07	0.00E+00	0.00E+00	0.00E+00	0.00E+00	0.00E+00	0.00E+00	0.00E+00	0.00E+00	0.00E+00	0.00E+00	0.00E+00
1106	ALL	748188.42	4034960.7	6.34E-07	70YrCancerDerived_InhSoil[	6.34E-07	0.00E+00	0.00E+00	0.00E+00	0.00E+00	0.00E+00	0.00E+00	0.00E+00	0.00E+00	0.00E+00	0.00E+00	0.00E+00
1107	ALL	748288.42	4034960.7	6.31E-07	70YrCancerDerived_InhSoil[	6.31E-07	0.00E+00	0.00E+00	0.00E+00	0.00E+00	0.00E+00	0.00E+00	0.00E+00	0.00E+00	0.00E+00	0.00E+00	0.00E+00
1108	ALL	748388.42	4034960.7	6.17E-07	70YrCancerDerived_InhSoil[	6.17E-07	0.00E+00	0.00E+00	0.00E+00	0.00E+00	0.00E+00	0.00E+00	0.00E+00	0.00E+00	0.00E+00	0.00E+00	0.00E+00
1109	ALL	748488.42	4034960.7	5.98E-07	70YrCancerDerived_InhSoil[	5.98E-07	0.00E+00	0.00E+00	0.00E+00	0.00E+00	0.00E+00	0.00E+00	0.00E+00	0.00E+00	0.00E+00	0.00E+00	0.00E+00
1110	ALL	748588.42	4034960.7	5.72E-07	70YrCancerDerived_InhSoil[	5.72E-07	0.00E+00	0.00E+00	0.00E+00	0.00E+00	0.00E+00	0.00E+00	0.00E+00	0.00E+00	0.00E+00	0.00E+00	0.00E+00
1111	ALL	748688.42	4034960.7	5.43E-07	70YrCancerDerived_InhSoil[	5.43E-07	0.00E+00	0.00E+00	0.00E+00	0.00E+00	0.00E+00	0.00E+00	0.00E+00	0.00E+00	0.00E+00	0.00E+00	0.00E+00
1112	ALL	748788.42	4034960.7	5.12E-07	70YrCancerDerived_InhSoil[	5.12E-07	0.00E+00	0.00E+00	0.00E+00	0.00E+00	0.00E+00	0.00E+00	0.00E+00	0.00E+00	0.00E+00	0.00E+00	0.00E+00
1113	ALL	748888.42	4034960.7	4.81E-07	70YrCancerDerived_InhSoil[	4.81E-07	0.00E+00	0.00E+00	0.00E+00	0.00E+00	0.00E+00	0.00E+00	0.00E+00	0.00E+00	0.00E+00	0.00E+00	0.00E+00
1114	ALL	747188.42	4035060.7	2.42E-07	70YrCancerDerived_InhSoil[	2.42E-07	0.00E+00	0.00E+00	0.00E+00	0.00E+00	0.00E+00	0.00E+00	0.00E+00	0.00E+00	0.00E+00	0.00E+00	0.00E+00
1115	ALL	747288.42	4035060.7	3.16E-07	70YrCancerDerived_InhSoil[	3.16E-07	0.00E+00	0.00E+00	0.00E+00	0.00E+00	0.00E+00	0.00E+00	0.00E+00	0.00E+00	0.00E+00	0.00E+00	0.00E+00
1116	ALL	747388.42	4035060.7	3.96E-07	70YrCancerDerived_InhSoil[	3.96E-07	0.00E+00	0.00E+00	0.00E+00	0.00E+00	0.00E+00	0.00E+00	0.00E+00	0.00E+00	0.00E+00	0.00E+00	0.00E+00
1117	ALL	747488.42	4035060.7	4.73E-07	70YrCancerDerived_InhSoil[	4.73E-07	0.00E+00	0.00E+00	0.00E+00	0.00E+00	0.00E+00	0.00E+00	0.00E+00	0.00E+00	0.00E+00	0.00E+00	0.00E+00
1118	ALL	747588.42	4035060.7	5.44E-07	70YrCancerDerived_InhSoil[	5.44E-07	0.00E+00	0.00E+00	0.00E+00	0.00E+00	0.00E+00	0.00E+00	0.00E+00	0.00E+00	0.00E+00	0.00E+00	0.00E+00

1119	ALL	747688.42	4035060.7	6.05E-07	70YrCancerDerived_InhSoil[	6.05E-07	0.00E+00	0.00E+00	0.00E+00	0.00E+00	0.00E+00	0.00E+00	0.00E+00	0.00E+00	0.00E+00	0.00E+00	0.00E+00
1120	ALL	747788.42	4035060.7	6.55E-07	70YrCancerDerived_InhSoil[	6.55E-07	0.00E+00	0.00E+00	0.00E+00	0.00E+00	0.00E+00	0.00E+00	0.00E+00	0.00E+00	0.00E+00	0.00E+00	0.00E+00
1121	ALL	747888.42	4035060.7	6.93E-07	70YrCancerDerived_InhSoil[	6.93E-07	0.00E+00	0.00E+00	0.00E+00	0.00E+00	0.00E+00	0.00E+00	0.00E+00	0.00E+00	0.00E+00	0.00E+00	0.00E+00
1122	ALL	747988.42	4035060.7	7.13E-07	70YrCancerDerived_InhSoil[	7.13E-07	0.00E+00	0.00E+00	0.00E+00	0.00E+00	0.00E+00	0.00E+00	0.00E+00	0.00E+00	0.00E+00	0.00E+00	0.00E+00
1123	ALL	748088.42	4035060.7	7.23E-07	70YrCancerDerived_InhSoil[	7.23E-07	0.00E+00	0.00E+00	0.00E+00	0.00E+00	0.00E+00	0.00E+00	0.00E+00	0.00E+00	0.00E+00	0.00E+00	0.00E+00
1124	ALL	748188.42	4035060.7	7.18E-07	70YrCancerDerived_InhSoil[	7.18E-07	0.00E+00	0.00E+00	0.00E+00	0.00E+00	0.00E+00	0.00E+00	0.00E+00	0.00E+00	0.00E+00	0.00E+00	0.00E+00
1125	ALL	748288.42	4035060.7	7.01E-07	70YrCancerDerived_InhSoil[	7.01E-07	0.00E+00	0.00E+00	0.00E+00	0.00E+00	0.00E+00	0.00E+00	0.00E+00	0.00E+00	0.00E+00	0.00E+00	0.00E+00
1126	ALL	748388.42	4035060.7	6.72E-07	70YrCancerDerived_InhSoil[	6.72E-07	0.00E+00	0.00E+00	0.00E+00	0.00E+00	0.00E+00	0.00E+00	0.00E+00	0.00E+00	0.00E+00	0.00E+00	0.00E+00
1127	ALL	748488.42	4035060.7	6.38E-07	70YrCancerDerived_InhSoil[	6.38E-07	0.00E+00	0.00E+00	0.00E+00	0.00E+00	0.00E+00	0.00E+00	0.00E+00	0.00E+00	0.00E+00	0.00E+00	0.00E+00
1128	ALL	748588.42	4035060.7	5.99E-07	70YrCancerDerived_InhSoil[	5.99E-07	0.00E+00	0.00E+00	0.00E+00	0.00E+00	0.00E+00	0.00E+00	0.00E+00	0.00E+00	0.00E+00	0.00E+00	0.00E+00
1129	ALL	748688.42	4035060.7	5.60E-07	70YrCancerDerived_InhSoil[	5.60E-07	0.00E+00	0.00E+00	0.00E+00	0.00E+00	0.00E+00	0.00E+00	0.00E+00	0.00E+00	0.00E+00	0.00E+00	0.00E+00
1130	ALL	748788.42	4035060.7	5.21E-07	70YrCancerDerived_InhSoil[	5.21E-07	0.00E+00	0.00E+00	0.00E+00	0.00E+00	0.00E+00	0.00E+00	0.00E+00	0.00E+00	0.00E+00	0.00E+00	0.00E+00
1131	ALL	748888.42	4035060.7	4.83E-07	70YrCancerDerived_InhSoil[	4.83E-07	0.00E+00	0.00E+00	0.00E+00	0.00E+00	0.00E+00	0.00E+00	0.00E+00	0.00E+00	0.00E+00	0.00E+00	0.00E+00
1132	ALL	747188.42	4035160.7	2.80E-07	70YrCancerDerived_InhSoil[	2.80E-07	0.00E+00	0.00E+00	0.00E+00	0.00E+00	0.00E+00	0.00E+00	0.00E+00	0.00E+00	0.00E+00	0.00E+00	0.00E+00
1133	ALL	747288.42	4035160.7	3.77E-07	70YrCancerDerived_InhSoil[	3.77E-07	0.00E+00	0.00E+00	0.00E+00	0.00E+00	0.00E+00	0.00E+00	0.00E+00	0.00E+00	0.00E+00	0.00E+00	0.00E+00
1134	ALL	747388.42	4035160.7	4.80E-07	70YrCancerDerived_InhSoil[	4.80E-07	0.00E+00	0.00E+00	0.00E+00	0.00E+00	0.00E+00	0.00E+00	0.00E+00	0.00E+00	0.00E+00	0.00E+00	0.00E+00
1135	ALL	747488.42	4035160.7	5.78E-07	70YrCancerDerived_InhSoil[	5.78E-07	0.00E+00	0.00E+00	0.00E+00	0.00E+00	0.00E+00	0.00E+00	0.00E+00	0.00E+00	0.00E+00	0.00E+00	0.00E+00
1136	ALL	748388.42	4035160.7	7.19E-07	70YrCancerDerived_InhSoil[	7.19E-07	0.00E+00	0.00E+00	0.00E+00	0.00E+00	0.00E+00	0.00E+00	0.00E+00	0.00E+00	0.00E+00	0.00E+00	0.00E+00
1137	ALL	748488.42	4035160.7	6.68E-07	70YrCancerDerived_InhSoil[	6.68E-07	0.00E+00	0.00E+00	0.00E+00	0.00E+00	0.00E+00	0.00E+00	0.00E+00	0.00E+00	0.00E+00	0.00E+00	0.00E+00
1138	ALL	748588.42	4035160.7	6.16E-07	70YrCancerDerived_InhSoil[	6.16E-07	0.00E+00	0.00E+00	0.00E+00	0.00E+00	0.00E+00	0.00E+00	0.00E+00	0.00E+00	0.00E+00	0.00E+00	0.00E+00
1139	ALL	748688.42	4035160.7	5.66E-07	70YrCancerDerived_InhSoil[	5.66E-07	0.00E+00	0.00E+00	0.00E+00	0.00E+00	0.00E+00	0.00E+00	0.00E+00	0.00E+00	0.00E+00	0.00E+00	0.00E+00
1140	ALL	748788.42	4035160.7	5.19E-07	70YrCancerDerived_InhSoil[	5.19E-07	0.00E+00	0.00E+00	0.00E+00	0.00E+00	0.00E+00	0.00E+00	0.00E+00	0.00E+00	0.00E+00	0.00E+00	0.00E+00
1141	ALL	748888.42	4035160.7	4.77E-07	70YrCancerDerived_InhSoil[	4.77E-07	0.00E+00	0.00E+00	0.00E+00	0.00E+00	0.00E+00	0.00E+00	0.00E+00	0.00E+00	0.00E+00	0.00E+00	0.00E+00
1142	ALL	747188.42	4035260.7	3.31E-07	70YrCancerDerived_InhSoil[	3.31E-07	0.00E+00	0.00E+00	0.00E+00	0.00E+00	0.00E+00	0.00E+00	0.00E+00	0.00E+00	0.00E+00	0.00E+00	0.00E+00
1143	ALL	747288.42	4035260.7	4.60E-07	70YrCancerDerived_InhSoil[	4.60E-07	0.00E+00	0.00E+00	0.00E+00	0.00E+00	0.00E+00	0.00E+00	0.00E+00	0.00E+00	0.00E+00	0.00E+00	0.00E+00
1144	ALL	747388.42	4035260.7	5.96E-07	70YrCancerDerived_InhSoil[	5.96E-07	0.00E+00	0.00E+00	0.00E+00	0.00E+00	0.00E+00	0.00E+00	0.00E+00	0.00E+00	0.00E+00	0.00E+00	0.00E+00
1145	ALL	747488.42	4035260.7	7.24E-07	70YrCancerDerived_InhSoil[	7.24E-07	0.00E+00	0.00E+00	0.00E+00	0.00E+00	0.00E+00	0.00E+00	0.00E+00	0.00E+00	0.00E+00	0.00E+00	0.00E+00
1146	ALL	748388.42	4035260.7	7.47E-07	70YrCancerDerived_InhSoil[	7.47E-07	0.00E+00	0.00E+00	0.00E+00	0.00E+00	0.00E+00	0.00E+00	0.00E+00	0.00E+00	0.00E+00	0.00E+00	0.00E+00
1147	ALL	748488.42	4035260.7	6.79E-07	70YrCancerDerived_InhSoil[	6.79E-07	0.00E+00	0.00E+00	0.00E+00	0.00E+00	0.00E+00	0.00E+00	0.00E+00	0.00E+00	0.00E+00	0.00E+00	0.00E+00
1148	ALL	748588.42	4035260.7	6.16E-07	70YrCancerDerived_InhSoil[	6.16E-07	0.00E+00	0.00E+00	0.00E+00	0.00E+00	0.00E+00	0.00E+00	0.00E+00	0.00E+00	0.00E+00	0.00E+00	0.00E+00
1149	ALL	748688.42	4035260.7	5.58E-07	70YrCancerDerived_InhSoil[	5.58E-07	0.00E+00	0.00E+00	0.00E+00	0.00E+00	0.00E+00	0.00E+00	0.00E+00	0.00E+00	0.00E+00	0.00E+00	0.00E+00
1150	ALL	748788.42	4035260.7	5.08E-07	70YrCancerDerived_InhSoil[	5.08E-07	0.00E+00	0.00E+00	0.00E+00	0.00E+00	0.00E+00	0.00E+00	0.00E+00	0.00E+00	0.00E+00	0.00E+00	0.00E+00
1151	ALL	748888.42	4035260.7	4.63E-07	70YrCancerDerived_InhSoil[	4.63E-07	0.00E+00	0.00E+00	0.00E+00	0.00E+00	0.00E+00	0.00E+00	0.00E+00	0.00E+00	0.00E+00	0.00E+00	0.00E+00
1152	ALL	747188.42	4035360.7	4.01E-07	70YrCancerDerived_InhSoil[	4.01E-07	0.00E+00	0.00E+00	0.00E+00	0.00E+00	0.00E+00	0.00E+00	0.00E+00	0.00E+00	0.00E+00	0.00E+00	0.00E+00
1153	ALL	747288.42	4035360.7	5.81E-07	70YrCancerDerived_InhSoil[	5.81E-07	0.00E+00	0.00E+00	0.00E+00	0.00E+00	0.00E+00	0.00E+00	0.00E+00	0.00E+00	0.00E+00	0.00E+00	0.00E+00
1154	ALL	747388.42	4035360.7	7.68E-07	70YrCancerDerived_InhSoil[	7.68E-07	0.00E+00	0.00E+00	0.00E+00	0.00E+00	0.00E+00	0.00E+00	0.00E+00	0.00E+00	0.00E+00	0.00E+00	0.00E+00
1155	ALL	747488.42	4035360.7	9.36E-07	70YrCancerDerived_InhSoil[	9.36E-07	0.00E+00	0.00E+00	0.00E+00	0.00E+00	0.00E+00	0.00E+00	0.00E+00	0.00E+00	0.00E+00	0.00E+00	0.00E+00
1156	ALL	748388.42	4035360.7	7.51E-07	70YrCancerDerived_InhSoil[	7.51E-07	0.00E+00	0.00E+00	0.00E+00	0.00E+00	0.00E+00	0.00E+00	0.00E+00	0.00E+00	0.00E+00	0.00E+00	0.00E+00
1157	ALL	748488.42	4035360.7	6.71E-07	70YrCancerDerived_InhSoil[	6.71E-07	0.00E+00	0.00E+00	0.00E+00	0.00E+00	0.00E+00	0.00E+00	0.00E+00	0.00E+00	0.00E+00	0.00E+00	0.00E+00
1158	ALL	748588.42	4035360.7	6.00E-07	70YrCancerDerived_InhSoil[	6.00E-07	0.00E+00	0.00E+00	0.00E+00	0.00E+00	0.00E+00	0.00E+00	0.00E+00	0.00E+00	0.00E+00	0.00E+00	0.00E+00
1159	ALL	748688.42	4035360.7	5.39E-07	70YrCancerDerived_InhSoil[	5.39E-07	0.00E+00	0.00E+00	0.00E+00	0.00E+00	0.00E+00	0.00E+00	0.00E+00	0.00E+00	0.00E+00	0.00E+00	0.00E+00
1160	ALL	748788.42	4035360.7	4.88E-07	70YrCancerDerived_InhSoil[	4.88E-07	0.00E+00	0.00E+00	0.00E+00	0.00E+00	0.00E+00	0.00E+00	0.00E+00	0.00E+00	0.00E+00	0.00E+00	0.00E+00
1161	ALL	748888.42	4035360.7	4.44E-07	70YrCancerDerived_InhSoil[	4.44E-07	0.00E+00	0.00E+00	0.00E+00	0.00E+00	0.00E+00	0.00E+00	0.00E+00	0.00E+00	0.00E+00	0.00E+00	0.00E+00
1162	ALL	747188.42	4035460.7	5.08E-07	70YrCancerDerived_InhSoil[	5.08E-07	0.00E+00	0.00E+00	0.00E+00	0.00E+00	0.00E+00	0.00E+00	0.00E+00	0.00E+00	0.00E+00	0.00E+00	0.00E+00
1163	ALL	747288.42	4035460.7	7.72E-07	70YrCancerDerived_InhSoil[	7.72E-07	0.00E+00	0.00E+00	0.00E+00	0.00E+00	0.00E+00	0.00E+00	0.00E+00	0.00E+00	0.00E+00	0.00E+00	0.00E+00
1164	ALL	747388.42	4035460.7	1.04E-06	70YrCancerDerived_InhSoil[	1.04E-06	0.00E+00	0.00E+00	0.00E+00	0.00E+00	0.00E+00	0.00E+00	0.00E+00	0.00E+00	0.00E+00	0.00E+00	0.00E+00
1165	ALL	747488.42	4035460.7	1.26E-06	70YrCancerDerived_InhSoil[	1.26E-06	0.00E+00	0.00E+00	0.00E+00	0.00E+00	0.00E+00	0.00E+00	0.00E+00	0.00E+00	0.00E+00	0.00E+00	0.00E+00
1166	ALL	748388.42	4035460.7	7.31E-07	70YrCancerDerived_InhSoil[	7.31E-07	0.00E+00	0.00E+00	0.00E+00	0.00E+00	0.00E+00	0.00E+00	0.00E+00	0.00E+00	0.00E+00	0.00E+00	0.00E+00
1167	ALL	748488.42	4035460.7	6.44E-07	70YrCancerDerived_InhSoil[	6.44E-07	0.00E+00	0.00E+00	0.00E+00	0.00E+00	0.00E+00	0.00E+00	0.00E+00	0.00E+00	0.00E+00	0.00E+00	0.00E+00
1168	ALL	748588.42	4035460.7	5.72E-07	70YrCancerDerived_InhSoil[	5.72E-07	0.00E+00	0.00E+00	0.00E+00	0.00E+00	0.00E+00	0.00E+00	0.00E+00	0.00E+00	0.00E+00	0.00E+00	0.00E+00
1169	ALL	748688.42	4035460.7	5.12E-07	70YrCancerDerived_InhSoil[	5.12E-07	0.00E+00	0.00E+00	0.00E+00	0.00E+00	0.00E+00	0.00E+00	0.00E+00	0.00E+00	0.00E+00	0.00E+00	0.00E+00
1170	ALL	748788.42	4035460.7	4.62E-07	70YrCancerDerived_InhSoil[	4.62E-07	0.00E+00	0.00E+00	0.00E+00	0.00E+00	0.00E+00	0.00E+00	0.00E+00	0.00E+00	0.00E+00	0.00E+00	0.00E+00
1171	ALL	748888.42	4035460.7	4.20E-07	70YrCancerDerived_InhSoil[	4.20E-07	0.00E+00	0.00E+00	0.00E+00	0.00E+00	0.00E+00	0.00E+00	0.00E+00	0.00E+00	0.00E+00	0.00E+00	0.00E+00
1172	ALL	746388.42	4035560.7	9.74E-08	70YrCancerDerived_InhSoil[	9.74E-08	0.00E+00	0.00E+00	0.00E+00	0.00E+00	0.00E+00	0.00E+00	0.00E+00	0.00E+00	0.00E+00	0.00E+00	0.00E+00
1173	ALL	746488.42	4035560.7	1.07E-07	70YrCancerDerived_InhSoil[	1.07E-07	0.00E+00	0.00E+00	0.00E+00	0.00E+00	0.00E+00	0.00E+00	0.00E+00	0.00E+00	0.00E+00	0.00E+00	0.00E+00
1174	ALL	746588.42	4035560.7	1.18E-07	70YrCancerDerived_InhSoil[	1.18E-07	0.00E+00	0.00E+00	0.00E+00	0.00E+00	0.00E+00	0.00E+00	0.00E+00	0.00E+00	0.00E+00	0.00E+00	0.00E+00

1175	ALL	746688.42	4035560.7	1.31E-07	70YrCancerDerived_InhSoilI	1.31E-07	0.00E+00	0.00E+00	0.00E+00	0.00E+00	0.00E+00	0.00E+00	0.00E+00	0.00E+00	0.00E+00	0.00E+00	0.00E+00
1176	ALL	746788.42	4035560.7	1.53E-07	70YrCancerDerived_InhSoilI	1.53E-07	0.00E+00	0.00E+00	0.00E+00	0.00E+00	0.00E+00	0.00E+00	0.00E+00	0.00E+00	0.00E+00	0.00E+00	0.00E+00
1177	ALL	746888.42	4035560.7	1.88E-07	70YrCancerDerived_InhSoilI	1.88E-07	0.00E+00	0.00E+00	0.00E+00	0.00E+00	0.00E+00	0.00E+00	0.00E+00	0.00E+00	0.00E+00	0.00E+00	0.00E+00
1178	ALL	746988.42	4035560.7	2.43E-07	70YrCancerDerived_InhSoilI	2.43E-07	0.00E+00	0.00E+00	0.00E+00	0.00E+00	0.00E+00	0.00E+00	0.00E+00	0.00E+00	0.00E+00	0.00E+00	0.00E+00
1179	ALL	747088.42	4035560.7	3.75E-07	70YrCancerDerived_InhSoilI	3.75E-07	0.00E+00	0.00E+00	0.00E+00	0.00E+00	0.00E+00	0.00E+00	0.00E+00	0.00E+00	0.00E+00	0.00E+00	0.00E+00
1180	ALL	747188.42	4035560.7	6.77E-07	70YrCancerDerived_InhSoilI	6.77E-07	0.00E+00	0.00E+00	0.00E+00	0.00E+00	0.00E+00	0.00E+00	0.00E+00	0.00E+00	0.00E+00	0.00E+00	0.00E+00
1181	ALL	747288.42	4035560.7	1.09E-06	70YrCancerDerived_InhSoilI	1.09E-06	0.00E+00	0.00E+00	0.00E+00	0.00E+00	0.00E+00	0.00E+00	0.00E+00	0.00E+00	0.00E+00	0.00E+00	0.00E+00
1182	ALL	747388.42	4035560.7	1.47E-06	70YrCancerDerived_InhSoilI	1.47E-06	0.00E+00	0.00E+00	0.00E+00	0.00E+00	0.00E+00	0.00E+00	0.00E+00	0.00E+00	0.00E+00	0.00E+00	0.00E+00
1183	ALL	747488.42	4035560.7	1.75E-06	70YrCancerDerived_InhSoilI	1.75E-06	0.00E+00	0.00E+00	0.00E+00	0.00E+00	0.00E+00	0.00E+00	0.00E+00	0.00E+00	0.00E+00	0.00E+00	0.00E+00
1184	ALL	748388.42	4035560.7	6.90E-07	70YrCancerDerived_InhSoilI	6.90E-07	0.00E+00	0.00E+00	0.00E+00	0.00E+00	0.00E+00	0.00E+00	0.00E+00	0.00E+00	0.00E+00	0.00E+00	0.00E+00
1185	ALL	748488.42	4035560.7	6.05E-07	70YrCancerDerived_InhSoilI	6.05E-07	0.00E+00	0.00E+00	0.00E+00	0.00E+00	0.00E+00	0.00E+00	0.00E+00	0.00E+00	0.00E+00	0.00E+00	0.00E+00
1186	ALL	748588.42	4035560.7	5.35E-07	70YrCancerDerived_InhSoilI	5.35E-07	0.00E+00	0.00E+00	0.00E+00	0.00E+00	0.00E+00	0.00E+00	0.00E+00	0.00E+00	0.00E+00	0.00E+00	0.00E+00
1187	ALL	748688.42	4035560.7	4.79E-07	70YrCancerDerived_InhSoilI	4.79E-07	0.00E+00	0.00E+00	0.00E+00	0.00E+00	0.00E+00	0.00E+00	0.00E+00	0.00E+00	0.00E+00	0.00E+00	0.00E+00
1188	ALL	748788.42	4035560.7	4.32E-07	70YrCancerDerived_InhSoilI	4.32E-07	0.00E+00	0.00E+00	0.00E+00	0.00E+00	0.00E+00	0.00E+00	0.00E+00	0.00E+00	0.00E+00	0.00E+00	0.00E+00
1189	ALL	748888.42	4035560.7	3.94E-07	70YrCancerDerived_InhSoilI	3.94E-07	0.00E+00	0.00E+00	0.00E+00	0.00E+00	0.00E+00	0.00E+00	0.00E+00	0.00E+00	0.00E+00	0.00E+00	0.00E+00
1190	ALL	746388.42	4035660.7	1.00E-07	70YrCancerDerived_InhSoilI	1.00E-07	0.00E+00	0.00E+00	0.00E+00	0.00E+00	0.00E+00	0.00E+00	0.00E+00	0.00E+00	0.00E+00	0.00E+00	0.00E+00
1191	ALL	746488.42	4035660.7	1.10E-07	70YrCancerDerived_InhSoilI	1.10E-07	0.00E+00	0.00E+00	0.00E+00	0.00E+00	0.00E+00	0.00E+00	0.00E+00	0.00E+00	0.00E+00	0.00E+00	0.00E+00
1192	ALL	746588.42	4035660.7	1.24E-07	70YrCancerDerived_InhSoilI	1.24E-07	0.00E+00	0.00E+00	0.00E+00	0.00E+00	0.00E+00	0.00E+00	0.00E+00	0.00E+00	0.00E+00	0.00E+00	0.00E+00
1193	ALL	746688.42	4035660.7	1.41E-07	70YrCancerDerived_InhSoilI	1.41E-07	0.00E+00	0.00E+00	0.00E+00	0.00E+00	0.00E+00	0.00E+00	0.00E+00	0.00E+00	0.00E+00	0.00E+00	0.00E+00
1194	ALL	746788.42	4035660.7	1.66E-07	70YrCancerDerived_InhSoilI	1.66E-07	0.00E+00	0.00E+00	0.00E+00	0.00E+00	0.00E+00	0.00E+00	0.00E+00	0.00E+00	0.00E+00	0.00E+00	0.00E+00
1195	ALL	746888.42	4035660.7	2.06E-07	70YrCancerDerived_InhSoilI	2.06E-07	0.00E+00	0.00E+00	0.00E+00	0.00E+00	0.00E+00	0.00E+00	0.00E+00	0.00E+00	0.00E+00	0.00E+00	0.00E+00
1196	ALL	746988.42	4035660.7	2.77E-07	70YrCancerDerived_InhSoilI	2.77E-07	0.00E+00	0.00E+00	0.00E+00	0.00E+00	0.00E+00	0.00E+00	0.00E+00	0.00E+00	0.00E+00	0.00E+00	0.00E+00
1197	ALL	747088.42	4035660.7	4.69E-07	70YrCancerDerived_InhSoilI	4.69E-07	0.00E+00	0.00E+00	0.00E+00	0.00E+00	0.00E+00	0.00E+00	0.00E+00	0.00E+00	0.00E+00	0.00E+00	0.00E+00
1198	ALL	747188.42	4035660.7	9.78E-07	70YrCancerDerived_InhSoilI	9.78E-07	0.00E+00	0.00E+00	0.00E+00	0.00E+00	0.00E+00	0.00E+00	0.00E+00	0.00E+00	0.00E+00	0.00E+00	0.00E+00
1199	ALL	747288.42	4035660.7	1.67E-06	70YrCancerDerived_InhSoilI	1.67E-06	0.00E+00	0.00E+00	0.00E+00	0.00E+00	0.00E+00	0.00E+00	0.00E+00	0.00E+00	0.00E+00	0.00E+00	0.00E+00
1200	ALL	747388.42	4035660.7	2.23E-06	70YrCancerDerived_InhSoilI	2.23E-06	0.00E+00	0.00E+00	0.00E+00	0.00E+00	0.00E+00	0.00E+00	0.00E+00	0.00E+00	0.00E+00	0.00E+00	0.00E+00
1201	ALL	747488.42	4035660.7	2.50E-06	70YrCancerDerived_InhSoilI	2.50E-06	0.00E+00	0.00E+00	0.00E+00	0.00E+00	0.00E+00	0.00E+00	0.00E+00	0.00E+00	0.00E+00	0.00E+00	0.00E+00
1202	ALL	748388.42	4035660.7	6.34E-07	70YrCancerDerived_InhSoilI	6.34E-07	0.00E+00	0.00E+00	0.00E+00	0.00E+00	0.00E+00	0.00E+00	0.00E+00	0.00E+00	0.00E+00	0.00E+00	0.00E+00
1203	ALL	748488.42	4035660.7	5.56E-07	70YrCancerDerived_InhSoilI	5.56E-07	0.00E+00	0.00E+00	0.00E+00	0.00E+00	0.00E+00	0.00E+00	0.00E+00	0.00E+00	0.00E+00	0.00E+00	0.00E+00
1204	ALL	748588.42	4035660.7	4.92E-07	70YrCancerDerived_InhSoilI	4.92E-07	0.00E+00	0.00E+00	0.00E+00	0.00E+00	0.00E+00	0.00E+00	0.00E+00	0.00E+00	0.00E+00	0.00E+00	0.00E+00
1205	ALL	748688.42	4035660.7	4.41E-07	70YrCancerDerived_InhSoilI	4.41E-07	0.00E+00	0.00E+00	0.00E+00	0.00E+00	0.00E+00	0.00E+00	0.00E+00	0.00E+00	0.00E+00	0.00E+00	0.00E+00
1206	ALL	748788.42	4035660.7	3.99E-07	70YrCancerDerived_InhSoilI	3.99E-07	0.00E+00	0.00E+00	0.00E+00	0.00E+00	0.00E+00	0.00E+00	0.00E+00	0.00E+00	0.00E+00	0.00E+00	0.00E+00
1207	ALL	748888.42	4035660.7	3.64E-07	70YrCancerDerived_InhSoilI	3.64E-07	0.00E+00	0.00E+00	0.00E+00	0.00E+00	0.00E+00	0.00E+00	0.00E+00	0.00E+00	0.00E+00	0.00E+00	0.00E+00
1208	ALL	746388.42	4035760.7	1.05E-07	70YrCancerDerived_InhSoilI	1.05E-07	0.00E+00	0.00E+00	0.00E+00	0.00E+00	0.00E+00	0.00E+00	0.00E+00	0.00E+00	0.00E+00	0.00E+00	0.00E+00
1209	ALL	746488.42	4035760.7	1.16E-07	70YrCancerDerived_InhSoilI	1.16E-07	0.00E+00	0.00E+00	0.00E+00	0.00E+00	0.00E+00	0.00E+00	0.00E+00	0.00E+00	0.00E+00	0.00E+00	0.00E+00
1210	ALL	746588.42	4035760.7	1.31E-07	70YrCancerDerived_InhSoilI	1.31E-07	0.00E+00	0.00E+00	0.00E+00	0.00E+00	0.00E+00	0.00E+00	0.00E+00	0.00E+00	0.00E+00	0.00E+00	0.00E+00
1211	ALL	746688.42	4035760.7	1.52E-07	70YrCancerDerived_InhSoilI	1.52E-07	0.00E+00	0.00E+00	0.00E+00	0.00E+00	0.00E+00	0.00E+00	0.00E+00	0.00E+00	0.00E+00	0.00E+00	0.00E+00
1212	ALL	746788.42	4035760.7	1.88E-07	70YrCancerDerived_InhSoilI	1.88E-07	0.00E+00	0.00E+00	0.00E+00	0.00E+00	0.00E+00	0.00E+00	0.00E+00	0.00E+00	0.00E+00	0.00E+00	0.00E+00
1213	ALL	746888.42	4035760.7	2.36E-07	70YrCancerDerived_InhSoilI	2.36E-07	0.00E+00	0.00E+00	0.00E+00	0.00E+00	0.00E+00	0.00E+00	0.00E+00	0.00E+00	0.00E+00	0.00E+00	0.00E+00
1214	ALL	746988.42	4035760.7	3.24E-07	70YrCancerDerived_InhSoilI	3.24E-07	0.00E+00	0.00E+00	0.00E+00	0.00E+00	0.00E+00	0.00E+00	0.00E+00	0.00E+00	0.00E+00	0.00E+00	0.00E+00
1215	ALL	747088.42	4035760.7	6.15E-07	70YrCancerDerived_InhSoilI	6.15E-07	0.00E+00	0.00E+00	0.00E+00	0.00E+00	0.00E+00	0.00E+00	0.00E+00	0.00E+00	0.00E+00	0.00E+00	0.00E+00
1216	ALL	747188.42	4035760.7	1.59E-06	70YrCancerDerived_InhSoilI	1.59E-06	0.00E+00	0.00E+00	0.00E+00	0.00E+00	0.00E+00	0.00E+00	0.00E+00	0.00E+00	0.00E+00	0.00E+00	0.00E+00
1217	ALL	747288.42	4035760.7	2.85E-06	70YrCancerDerived_InhSoilI	2.85E-06	0.00E+00	0.00E+00	0.00E+00	0.00E+00	0.00E+00	0.00E+00	0.00E+00	0.00E+00	0.00E+00	0.00E+00	0.00E+00
1218	ALL	747388.42	4035760.7	3.55E-06	70YrCancerDerived_InhSoilI	3.55E-06	0.00E+00	0.00E+00	0.00E+00	0.00E+00	0.00E+00	0.00E+00	0.00E+00	0.00E+00	0.00E+00	0.00E+00	0.00E+00
1219	ALL	747488.42	4035760.7	3.45E-06	70YrCancerDerived_InhSoilI	3.45E-06	0.00E+00	0.00E+00	0.00E+00	0.00E+00	0.00E+00	0.00E+00	0.00E+00	0.00E+00	0.00E+00	0.00E+00	0.00E+00
1220	ALL	748388.42	4035760.7	5.68E-07	70YrCancerDerived_InhSoilI	5.68E-07	0.00E+00	0.00E+00	0.00E+00	0.00E+00	0.00E+00	0.00E+00	0.00E+00	0.00E+00	0.00E+00	0.00E+00	0.00E+00
1221	ALL	748488.42	4035760.7	4.99E-07	70YrCancerDerived_InhSoilI	4.99E-07	0.00E+00	0.00E+00	0.00E+00	0.00E+00	0.00E+00	0.00E+00	0.00E+00	0.00E+00	0.00E+00	0.00E+00	0.00E+00
1222	ALL	748588.42	4035760.7	4.44E-07	70YrCancerDerived_InhSoilI	4.44E-07	0.00E+00	0.00E+00	0.00E+00	0.00E+00	0.00E+00	0.00E+00	0.00E+00	0.00E+00	0.00E+00	0.00E+00	0.00E+00
1223	ALL	748688.42	4035760.7	3.99E-07	70YrCancerDerived_InhSoilI	3.99E-07	0.00E+00	0.00E+00	0.00E+00	0.00E+00	0.00E+00	0.00E+00	0.00E+00	0.00E+00	0.00E+00	0.00E+00	0.00E+00
1224	ALL	748788.42	4035760.7	3.63E-07	70YrCancerDerived_InhSoilI	3.63E-07	0.00E+00	0.00E+00	0.00E+00	0.00E+00	0.00E+00	0.00E+00	0.00E+00	0.00E+00	0.00E+00	0.00E+00	0.00E+00
1225	ALL	748888.42	4035760.7	3.33E-07	70YrCancerDerived_InhSoilI	3.33E-07	0.00E+00	0.00E+00	0.00E+00	0.00E+00	0.00E+00	0.00E+00	0.00E+00	0.00E+00	0.00E+00	0.00E+00	0.00E+00
1226	ALL	746388.42	4035860.7	1.12E-07	70YrCancerDerived_InhSoilI	1.12E-07	0.00E+00	0.00E+00	0.00E+00	0.00E+00	0.00E+00	0.00E+00	0.00E+00	0.00E+00	0.00E+00	0.00E+00	0.00E+00
1227	ALL	746488.42	4035860.7	1.24E-07	70YrCancerDerived_InhSoilI	1.24E-07	0.00E+00	0.00E+00	0.00E+00	0.00E+00	0.00E+00	0.00E+00	0.00E+00	0.00E+00	0.00E+00	0.00E+00	0.00E+00
1228	ALL	746588.42	4035860.7	1.42E-07	70YrCancerDerived_InhSoilI	1.42E-07	0.00E+00	0.00E+00	0.00E+00	0.00E+00	0.00E+00	0.00E+00	0.00E+00	0.00E+00	0.00E+00	0.00E+00	0.00E+00
1229	ALL	746688.42	4035860.7	1.70E-07	70YrCancerDerived_InhSoilI	1.70E-07	0.00E+00	0.00E+00	0.00E+00	0.00E+00	0.00E+00	0.00E+00	0.00E+00	0.00E+00	0.00E+00	0.00E+00	0.00E+00
1230	ALL	746788.42	4035860.7	2.19E-07	70YrCancerDerived_InhSoilI	2.19E-07	0.00E+00	0.00E+00	0.00E+00	0.00E+00	0.00E+00	0.00E+00	0.00E+00	0.00E+00	0.00E+00	0.00E+00	0.00E+00

1231	ALL	746888.42	4035860.7	2.93E-07	70YrCancerDerived_InhSoilI	2.93E-07	0.00E+00	0.00E+00	0.00E+00	0.00E+00	0.00E+00	0.00E+00	0.00E+00	0.00E+00	0.00E+00	0.00E+00	0.00E+00
1232	ALL	746988.42	4035860.7	4.07E-07	70YrCancerDerived_InhSoilI	4.07E-07	0.00E+00	0.00E+00	0.00E+00	0.00E+00	0.00E+00	0.00E+00	0.00E+00	0.00E+00	0.00E+00	0.00E+00	0.00E+00
1233	ALL	747088.42	4035860.7	8.56E-07	70YrCancerDerived_InhSoilI	8.56E-07	0.00E+00	0.00E+00	0.00E+00	0.00E+00	0.00E+00	0.00E+00	0.00E+00	0.00E+00	0.00E+00	0.00E+00	0.00E+00
1234	ALL	747188.42	4035860.7	3.13E-06	70YrCancerDerived_InhSoilI	3.13E-06	0.00E+00	0.00E+00	0.00E+00	0.00E+00	0.00E+00	0.00E+00	0.00E+00	0.00E+00	0.00E+00	0.00E+00	0.00E+00
1235	ALL	747288.42	4035860.7	5.47E-06	70YrCancerDerived_InhSoilI	5.47E-06	0.00E+00	0.00E+00	0.00E+00	0.00E+00	0.00E+00	0.00E+00	0.00E+00	0.00E+00	0.00E+00	0.00E+00	0.00E+00
1236	ALL	747388.42	4035860.7	5.40E-06	70YrCancerDerived_InhSoilI	5.40E-06	0.00E+00	0.00E+00	0.00E+00	0.00E+00	0.00E+00	0.00E+00	0.00E+00	0.00E+00	0.00E+00	0.00E+00	0.00E+00
1237	ALL	747488.42	4035860.7	4.07E-06	70YrCancerDerived_InhSoilI	4.07E-06	0.00E+00	0.00E+00	0.00E+00	0.00E+00	0.00E+00	0.00E+00	0.00E+00	0.00E+00	0.00E+00	0.00E+00	0.00E+00
1238	ALL	748388.42	4035860.7	4.93E-07	70YrCancerDerived_InhSoilI	4.93E-07	0.00E+00	0.00E+00	0.00E+00	0.00E+00	0.00E+00	0.00E+00	0.00E+00	0.00E+00	0.00E+00	0.00E+00	0.00E+00
1239	ALL	748488.42	4035860.7	4.36E-07	70YrCancerDerived_InhSoilI	4.36E-07	0.00E+00	0.00E+00	0.00E+00	0.00E+00	0.00E+00	0.00E+00	0.00E+00	0.00E+00	0.00E+00	0.00E+00	0.00E+00
1240	ALL	748588.42	4035860.7	3.91E-07	70YrCancerDerived_InhSoilI	3.91E-07	0.00E+00	0.00E+00	0.00E+00	0.00E+00	0.00E+00	0.00E+00	0.00E+00	0.00E+00	0.00E+00	0.00E+00	0.00E+00
1241	ALL	748688.42	4035860.7	3.54E-07	70YrCancerDerived_InhSoilI	3.54E-07	0.00E+00	0.00E+00	0.00E+00	0.00E+00	0.00E+00	0.00E+00	0.00E+00	0.00E+00	0.00E+00	0.00E+00	0.00E+00
1242	ALL	748788.42	4035860.7	3.24E-07	70YrCancerDerived_InhSoilI	3.24E-07	0.00E+00	0.00E+00	0.00E+00	0.00E+00	0.00E+00	0.00E+00	0.00E+00	0.00E+00	0.00E+00	0.00E+00	0.00E+00
1243	ALL	748888.42	4035860.7	2.99E-07	70YrCancerDerived_InhSoilI	2.99E-07	0.00E+00	0.00E+00	0.00E+00	0.00E+00	0.00E+00	0.00E+00	0.00E+00	0.00E+00	0.00E+00	0.00E+00	0.00E+00
1244	ALL	746388.42	4035960.7	1.22E-07	70YrCancerDerived_InhSoilI	1.22E-07	0.00E+00	0.00E+00	0.00E+00	0.00E+00	0.00E+00	0.00E+00	0.00E+00	0.00E+00	0.00E+00	0.00E+00	0.00E+00
1245	ALL	746488.42	4035960.7	1.35E-07	70YrCancerDerived_InhSoilI	1.35E-07	0.00E+00	0.00E+00	0.00E+00	0.00E+00	0.00E+00	0.00E+00	0.00E+00	0.00E+00	0.00E+00	0.00E+00	0.00E+00
1246	ALL	746588.42	4035960.7	1.55E-07	70YrCancerDerived_InhSoilI	1.55E-07	0.00E+00	0.00E+00	0.00E+00	0.00E+00	0.00E+00	0.00E+00	0.00E+00	0.00E+00	0.00E+00	0.00E+00	0.00E+00
1247	ALL	746688.42	4035960.7	1.89E-07	70YrCancerDerived_InhSoilI	1.89E-07	0.00E+00	0.00E+00	0.00E+00	0.00E+00	0.00E+00	0.00E+00	0.00E+00	0.00E+00	0.00E+00	0.00E+00	0.00E+00
1248	ALL	748388.42	4035960.7	4.16E-07	70YrCancerDerived_InhSoilI	4.16E-07	0.00E+00	0.00E+00	0.00E+00	0.00E+00	0.00E+00	0.00E+00	0.00E+00	0.00E+00	0.00E+00	0.00E+00	0.00E+00
1249	ALL	748488.42	4035960.7	3.72E-07	70YrCancerDerived_InhSoilI	3.72E-07	0.00E+00	0.00E+00	0.00E+00	0.00E+00	0.00E+00	0.00E+00	0.00E+00	0.00E+00	0.00E+00	0.00E+00	0.00E+00
1250	ALL	748588.42	4035960.7	3.37E-07	70YrCancerDerived_InhSoilI	3.37E-07	0.00E+00	0.00E+00	0.00E+00	0.00E+00	0.00E+00	0.00E+00	0.00E+00	0.00E+00	0.00E+00	0.00E+00	0.00E+00
1251	ALL	748688.42	4035960.7	3.09E-07	70YrCancerDerived_InhSoilI	3.09E-07	0.00E+00	0.00E+00	0.00E+00	0.00E+00	0.00E+00	0.00E+00	0.00E+00	0.00E+00	0.00E+00	0.00E+00	0.00E+00
1252	ALL	748788.42	4035960.7	2.86E-07	70YrCancerDerived_InhSoilI	2.86E-07	0.00E+00	0.00E+00	0.00E+00	0.00E+00	0.00E+00	0.00E+00	0.00E+00	0.00E+00	0.00E+00	0.00E+00	0.00E+00
1253	ALL	748888.42	4035960.7	2.67E-07	70YrCancerDerived_InhSoilI	2.67E-07	0.00E+00	0.00E+00	0.00E+00	0.00E+00	0.00E+00	0.00E+00	0.00E+00	0.00E+00	0.00E+00	0.00E+00	0.00E+00
1254	ALL	746388.42	4036060.7	1.36E-07	70YrCancerDerived_InhSoilI	1.36E-07	0.00E+00	0.00E+00	0.00E+00	0.00E+00	0.00E+00	0.00E+00	0.00E+00	0.00E+00	0.00E+00	0.00E+00	0.00E+00
1255	ALL	746488.42	4036060.7	1.52E-07	70YrCancerDerived_InhSoilI	1.52E-07	0.00E+00	0.00E+00	0.00E+00	0.00E+00	0.00E+00	0.00E+00	0.00E+00	0.00E+00	0.00E+00	0.00E+00	0.00E+00
1256	ALL	746588.42	4036060.7	1.77E-07	70YrCancerDerived_InhSoilI	1.77E-07	0.00E+00	0.00E+00	0.00E+00	0.00E+00	0.00E+00	0.00E+00	0.00E+00	0.00E+00	0.00E+00	0.00E+00	0.00E+00
1257	ALL	746688.42	4036060.7	2.18E-07	70YrCancerDerived_InhSoilI	2.18E-07	0.00E+00	0.00E+00	0.00E+00	0.00E+00	0.00E+00	0.00E+00	0.00E+00	0.00E+00	0.00E+00	0.00E+00	0.00E+00
1258	ALL	748388.42	4036060.7	3.40E-07	70YrCancerDerived_InhSoilI	3.40E-07	0.00E+00	0.00E+00	0.00E+00	0.00E+00	0.00E+00	0.00E+00	0.00E+00	0.00E+00	0.00E+00	0.00E+00	0.00E+00
1259	ALL	748488.42	4036060.7	3.10E-07	70YrCancerDerived_InhSoilI	3.10E-07	0.00E+00	0.00E+00	0.00E+00	0.00E+00	0.00E+00	0.00E+00	0.00E+00	0.00E+00	0.00E+00	0.00E+00	0.00E+00
1260	ALL	748588.42	4036060.7	2.85E-07	70YrCancerDerived_InhSoilI	2.85E-07	0.00E+00	0.00E+00	0.00E+00	0.00E+00	0.00E+00	0.00E+00	0.00E+00	0.00E+00	0.00E+00	0.00E+00	0.00E+00
1261	ALL	748688.42	4036060.7	2.65E-07	70YrCancerDerived_InhSoilI	2.65E-07	0.00E+00	0.00E+00	0.00E+00	0.00E+00	0.00E+00	0.00E+00	0.00E+00	0.00E+00	0.00E+00	0.00E+00	0.00E+00
1262	ALL	748788.42	4036060.7	2.49E-07	70YrCancerDerived_InhSoilI	2.49E-07	0.00E+00	0.00E+00	0.00E+00	0.00E+00	0.00E+00	0.00E+00	0.00E+00	0.00E+00	0.00E+00	0.00E+00	0.00E+00
1263	ALL	748888.42	4036060.7	2.35E-07	70YrCancerDerived_InhSoilI	2.35E-07	0.00E+00	0.00E+00	0.00E+00	0.00E+00	0.00E+00	0.00E+00	0.00E+00	0.00E+00	0.00E+00	0.00E+00	0.00E+00
1264	ALL	746388.42	4036160.7	1.59E-07	70YrCancerDerived_InhSoilI	1.59E-07	0.00E+00	0.00E+00	0.00E+00	0.00E+00	0.00E+00	0.00E+00	0.00E+00	0.00E+00	0.00E+00	0.00E+00	0.00E+00
1265	ALL	746488.42	4036160.7	1.82E-07	70YrCancerDerived_InhSoilI	1.82E-07	0.00E+00	0.00E+00	0.00E+00	0.00E+00	0.00E+00	0.00E+00	0.00E+00	0.00E+00	0.00E+00	0.00E+00	0.00E+00
1266	ALL	746588.42	4036160.7	2.18E-07	70YrCancerDerived_InhSoilI	2.18E-07	0.00E+00	0.00E+00	0.00E+00	0.00E+00	0.00E+00	0.00E+00	0.00E+00	0.00E+00	0.00E+00	0.00E+00	0.00E+00
1267	ALL	746688.42	4036160.7	2.80E-07	70YrCancerDerived_InhSoilI	2.80E-07	0.00E+00	0.00E+00	0.00E+00	0.00E+00	0.00E+00	0.00E+00	0.00E+00	0.00E+00	0.00E+00	0.00E+00	0.00E+00
1268	ALL	748388.42	4036160.7	2.72E-07	70YrCancerDerived_InhSoilI	2.72E-07	0.00E+00	0.00E+00	0.00E+00	0.00E+00	0.00E+00	0.00E+00	0.00E+00	0.00E+00	0.00E+00	0.00E+00	0.00E+00
1269	ALL	748488.42	4036160.7	2.54E-07	70YrCancerDerived_InhSoilI	2.54E-07	0.00E+00	0.00E+00	0.00E+00	0.00E+00	0.00E+00	0.00E+00	0.00E+00	0.00E+00	0.00E+00	0.00E+00	0.00E+00
1270	ALL	748588.42	4036160.7	2.39E-07	70YrCancerDerived_InhSoilI	2.39E-07	0.00E+00	0.00E+00	0.00E+00	0.00E+00	0.00E+00	0.00E+00	0.00E+00	0.00E+00	0.00E+00	0.00E+00	0.00E+00
1271	ALL	748688.42	4036160.7	2.26E-07	70YrCancerDerived_InhSoilI	2.26E-07	0.00E+00	0.00E+00	0.00E+00	0.00E+00	0.00E+00	0.00E+00	0.00E+00	0.00E+00	0.00E+00	0.00E+00	0.00E+00
1272	ALL	748788.42	4036160.7	2.16E-07	70YrCancerDerived_InhSoilI	2.16E-07	0.00E+00	0.00E+00	0.00E+00	0.00E+00	0.00E+00	0.00E+00	0.00E+00	0.00E+00	0.00E+00	0.00E+00	0.00E+00
1273	ALL	748888.42	4036160.7	2.07E-07	70YrCancerDerived_InhSoilI	2.07E-07	0.00E+00	0.00E+00	0.00E+00	0.00E+00	0.00E+00	0.00E+00	0.00E+00	0.00E+00	0.00E+00	0.00E+00	0.00E+00
1274	ALL	746388.42	4036260.7	1.89E-07	70YrCancerDerived_InhSoilI	1.89E-07	0.00E+00	0.00E+00	0.00E+00	0.00E+00	0.00E+00	0.00E+00	0.00E+00	0.00E+00	0.00E+00	0.00E+00	0.00E+00
1275	ALL	746488.42	4036260.7	2.27E-07	70YrCancerDerived_InhSoilI	2.27E-07	0.00E+00	0.00E+00	0.00E+00	0.00E+00	0.00E+00	0.00E+00	0.00E+00	0.00E+00	0.00E+00	0.00E+00	0.00E+00
1276	ALL	746588.42	4036260.7	2.90E-07	70YrCancerDerived_InhSoilI	2.90E-07	0.00E+00	0.00E+00	0.00E+00	0.00E+00	0.00E+00	0.00E+00	0.00E+00	0.00E+00	0.00E+00	0.00E+00	0.00E+00
1277	ALL	746688.42	4036260.7	4.04E-07	70YrCancerDerived_InhSoilI	4.04E-07	0.00E+00	0.00E+00	0.00E+00	0.00E+00	0.00E+00	0.00E+00	0.00E+00	0.00E+00	0.00E+00	0.00E+00	0.00E+00
1278	ALL	748388.42	4036260.7	2.17E-07	70YrCancerDerived_InhSoilI	2.17E-07	0.00E+00	0.00E+00	0.00E+00	0.00E+00	0.00E+00	0.00E+00	0.00E+00	0.00E+00	0.00E+00	0.00E+00	0.00E+00
1279	ALL	748488.42	4036260.7	2.08E-07	70YrCancerDerived_InhSoilI	2.08E-07	0.00E+00	0.00E+00	0.00E+00	0.00E+00	0.00E+00	0.00E+00	0.00E+00	0.00E+00	0.00E+00	0.00E+00	0.00E+00
1280	ALL	748588.42	4036260.7	1.99E-07	70YrCancerDerived_InhSoilI	1.99E-07	0.00E+00	0.00E+00	0.00E+00	0.00E+00	0.00E+00	0.00E+00	0.00E+00	0.00E+00	0.00E+00	0.00E+00	0.00E+00
1281	ALL	748688.42	4036260.7	1.93E-07	70YrCancerDerived_InhSoilI	1.93E-07	0.00E+00	0.00E+00	0.00E+00	0.00E+00	0.00E+00	0.00E+00	0.00E+00	0.00E+00	0.00E+00	0.00E+00	0.00E+00
1282	ALL	748788.42	4036260.7	1.87E-07	70YrCancerDerived_InhSoilI	1.87E-07	0.00E+00	0.00E+00	0.00E+00	0.00E+00	0.00E+00	0.00E+00	0.00E+00	0.00E+00	0.00E+00	0.00E+00	0.00E+00
1283	ALL	748888.42	4036260.7	1.83E-07	70YrCancerDerived_InhSoilI	1.83E-07	0.00E+00	0.00E+00	0.00E+00	0.00E+00	0.00E+00	0.00E+00	0.00E+00	0.00E+00	0.00E+00	0.00E+00	0.00E+00
1284	ALL	745988.42	4036360.7	1.38E-07	70YrCancerDerived_InhSoilI	1.38E-07	0.00E+00	0.00E+00	0.00E+00	0.00E+00	0.00E+00	0.00E+00	0.00E+00	0.00E+00	0.00E+00	0.00E+00	0.00E+00
1285	ALL	746088.42	4036360.7	1.51E-07	70YrCancerDerived_InhSoilI	1.51E-07	0.00E+00	0.00E+00	0.00E+00	0.00E+00	0.00E+00	0.00E+00	0.00E+00	0.00E+00	0.00E+00	0.00E+00	0.00E+00
1286	ALL	746188.42	4036360.7	1.70E-07	70YrCancerDerived_InhSoilI	1.70E-07	0.00E+00	0.00E+00	0.00E+00	0.00E+00	0.00E+00	0.00E+00	0.00E+00	0.00E+00	0.00E+00	0.00E+00	0.00E+00

1287	ALL	746288.42	4036360.7	1.96E-07	70YrCancerDerived_InhSoil[	1.96E-07	0.00E+00	0.00E+00	0.00E+00	0.00E+00	0.00E+00	0.00E+00	0.00E+00	0.00E+00	0.00E+00	0.00E+00	0.00E+00
1288	ALL	746388.42	4036360.7	2.35E-07	70YrCancerDerived_InhSoil[	2.35E-07	0.00E+00	0.00E+00	0.00E+00	0.00E+00	0.00E+00	0.00E+00	0.00E+00	0.00E+00	0.00E+00	0.00E+00	0.00E+00
1289	ALL	746488.42	4036360.7	2.95E-07	70YrCancerDerived_InhSoil[	2.95E-07	0.00E+00	0.00E+00	0.00E+00	0.00E+00	0.00E+00	0.00E+00	0.00E+00	0.00E+00	0.00E+00	0.00E+00	0.00E+00
1290	ALL	746588.42	4036360.7	3.91E-07	70YrCancerDerived_InhSoil[	3.91E-07	0.00E+00	0.00E+00	0.00E+00	0.00E+00	0.00E+00	0.00E+00	0.00E+00	0.00E+00	0.00E+00	0.00E+00	0.00E+00
1291	ALL	748388.42	4036360.7	1.75E-07	70YrCancerDerived_InhSoil[	1.75E-07	0.00E+00	0.00E+00	0.00E+00	0.00E+00	0.00E+00	0.00E+00	0.00E+00	0.00E+00	0.00E+00	0.00E+00	0.00E+00
1292	ALL	748488.42	4036360.7	1.71E-07	70YrCancerDerived_InhSoil[	1.71E-07	0.00E+00	0.00E+00	0.00E+00	0.00E+00	0.00E+00	0.00E+00	0.00E+00	0.00E+00	0.00E+00	0.00E+00	0.00E+00
1293	ALL	748588.42	4036360.7	1.68E-07	70YrCancerDerived_InhSoil[	1.68E-07	0.00E+00	0.00E+00	0.00E+00	0.00E+00	0.00E+00	0.00E+00	0.00E+00	0.00E+00	0.00E+00	0.00E+00	0.00E+00
1294	ALL	748688.42	4036360.7	1.66E-07	70YrCancerDerived_InhSoil[	1.66E-07	0.00E+00	0.00E+00	0.00E+00	0.00E+00	0.00E+00	0.00E+00	0.00E+00	0.00E+00	0.00E+00	0.00E+00	0.00E+00
1295	ALL	748788.42	4036360.7	1.63E-07	70YrCancerDerived_InhSoil[	1.63E-07	0.00E+00	0.00E+00	0.00E+00	0.00E+00	0.00E+00	0.00E+00	0.00E+00	0.00E+00	0.00E+00	0.00E+00	0.00E+00
1296	ALL	748888.42	4036360.7	1.62E-07	70YrCancerDerived_InhSoil[	1.62E-07	0.00E+00	0.00E+00	0.00E+00	0.00E+00	0.00E+00	0.00E+00	0.00E+00	0.00E+00	0.00E+00	0.00E+00	0.00E+00
1297	ALL	748988.42	4036360.7	1.61E-07	70YrCancerDerived_InhSoil[	1.61E-07	0.00E+00	0.00E+00	0.00E+00	0.00E+00	0.00E+00	0.00E+00	0.00E+00	0.00E+00	0.00E+00	0.00E+00	0.00E+00
1298	ALL	749088.42	4036360.7	1.60E-07	70YrCancerDerived_InhSoil[	1.60E-07	0.00E+00	0.00E+00	0.00E+00	0.00E+00	0.00E+00	0.00E+00	0.00E+00	0.00E+00	0.00E+00	0.00E+00	0.00E+00
1299	ALL	749188.42	4036360.7	1.59E-07	70YrCancerDerived_InhSoil[	1.59E-07	0.00E+00	0.00E+00	0.00E+00	0.00E+00	0.00E+00	0.00E+00	0.00E+00	0.00E+00	0.00E+00	0.00E+00	0.00E+00
1300	ALL	749288.42	4036360.7	1.59E-07	70YrCancerDerived_InhSoil[	1.59E-07	0.00E+00	0.00E+00	0.00E+00	0.00E+00	0.00E+00	0.00E+00	0.00E+00	0.00E+00	0.00E+00	0.00E+00	0.00E+00
1301	ALL	749388.42	4036360.7	1.58E-07	70YrCancerDerived_InhSoil[	1.58E-07	0.00E+00	0.00E+00	0.00E+00	0.00E+00	0.00E+00	0.00E+00	0.00E+00	0.00E+00	0.00E+00	0.00E+00	0.00E+00
1302	ALL	749488.42	4036360.7	1.58E-07	70YrCancerDerived_InhSoil[	1.58E-07	0.00E+00	0.00E+00	0.00E+00	0.00E+00	0.00E+00	0.00E+00	0.00E+00	0.00E+00	0.00E+00	0.00E+00	0.00E+00
1303	ALL	749588.42	4036360.7	1.57E-07	70YrCancerDerived_InhSoil[	1.57E-07	0.00E+00	0.00E+00	0.00E+00	0.00E+00	0.00E+00	0.00E+00	0.00E+00	0.00E+00	0.00E+00	0.00E+00	0.00E+00
1304	ALL	749688.42	4036360.7	1.57E-07	70YrCancerDerived_InhSoil[	1.57E-07	0.00E+00	0.00E+00	0.00E+00	0.00E+00	0.00E+00	0.00E+00	0.00E+00	0.00E+00	0.00E+00	0.00E+00	0.00E+00
1305	ALL	749788.42	4036360.7	1.57E-07	70YrCancerDerived_InhSoil[	1.57E-07	0.00E+00	0.00E+00	0.00E+00	0.00E+00	0.00E+00	0.00E+00	0.00E+00	0.00E+00	0.00E+00	0.00E+00	0.00E+00
1306	ALL	749888.42	4036360.7	1.57E-07	70YrCancerDerived_InhSoil[	1.57E-07	0.00E+00	0.00E+00	0.00E+00	0.00E+00	0.00E+00	0.00E+00	0.00E+00	0.00E+00	0.00E+00	0.00E+00	0.00E+00
1307	ALL	749988.42	4036360.7	1.57E-07	70YrCancerDerived_InhSoil[	1.57E-07	0.00E+00	0.00E+00	0.00E+00	0.00E+00	0.00E+00	0.00E+00	0.00E+00	0.00E+00	0.00E+00	0.00E+00	0.00E+00
1308	ALL	750088.42	4036360.7	1.57E-07	70YrCancerDerived_InhSoil[	1.57E-07	0.00E+00	0.00E+00	0.00E+00	0.00E+00	0.00E+00	0.00E+00	0.00E+00	0.00E+00	0.00E+00	0.00E+00	0.00E+00
1309	ALL	750188.42	4036360.7	1.57E-07	70YrCancerDerived_InhSoil[	1.57E-07	0.00E+00	0.00E+00	0.00E+00	0.00E+00	0.00E+00	0.00E+00	0.00E+00	0.00E+00	0.00E+00	0.00E+00	0.00E+00
1310	ALL	745988.42	4036460.7	1.54E-07	70YrCancerDerived_InhSoil[	1.54E-07	0.00E+00	0.00E+00	0.00E+00	0.00E+00	0.00E+00	0.00E+00	0.00E+00	0.00E+00	0.00E+00	0.00E+00	0.00E+00
1311	ALL	746088.42	4036460.7	1.74E-07	70YrCancerDerived_InhSoil[	1.74E-07	0.00E+00	0.00E+00	0.00E+00	0.00E+00	0.00E+00	0.00E+00	0.00E+00	0.00E+00	0.00E+00	0.00E+00	0.00E+00
1312	ALL	746188.42	4036460.7	2.00E-07	70YrCancerDerived_InhSoil[	2.00E-07	0.00E+00	0.00E+00	0.00E+00	0.00E+00	0.00E+00	0.00E+00	0.00E+00	0.00E+00	0.00E+00	0.00E+00	0.00E+00
1313	ALL	746288.42	4036460.7	2.37E-07	70YrCancerDerived_InhSoil[	2.37E-07	0.00E+00	0.00E+00	0.00E+00	0.00E+00	0.00E+00	0.00E+00	0.00E+00	0.00E+00	0.00E+00	0.00E+00	0.00E+00
1314	ALL	746388.42	4036460.7	2.88E-07	70YrCancerDerived_InhSoil[	2.88E-07	0.00E+00	0.00E+00	0.00E+00	0.00E+00	0.00E+00	0.00E+00	0.00E+00	0.00E+00	0.00E+00	0.00E+00	0.00E+00
1315	ALL	746488.42	4036460.7	3.59E-07	70YrCancerDerived_InhSoil[	3.59E-07	0.00E+00	0.00E+00	0.00E+00	0.00E+00	0.00E+00	0.00E+00	0.00E+00	0.00E+00	0.00E+00	0.00E+00	0.00E+00
1316	ALL	746588.42	4036460.7	4.53E-07	70YrCancerDerived_InhSoil[	4.53E-07	0.00E+00	0.00E+00	0.00E+00	0.00E+00	0.00E+00	0.00E+00	0.00E+00	0.00E+00	0.00E+00	0.00E+00	0.00E+00
1317	ALL	748388.42	4036460.7	1.46E-07	70YrCancerDerived_InhSoil[	1.46E-07	0.00E+00	0.00E+00	0.00E+00	0.00E+00	0.00E+00	0.00E+00	0.00E+00	0.00E+00	0.00E+00	0.00E+00	0.00E+00
1318	ALL	748488.42	4036460.7	1.45E-07	70YrCancerDerived_InhSoil[	1.45E-07	0.00E+00	0.00E+00	0.00E+00	0.00E+00	0.00E+00	0.00E+00	0.00E+00	0.00E+00	0.00E+00	0.00E+00	0.00E+00
1319	ALL	748588.42	4036460.7	1.44E-07	70YrCancerDerived_InhSoil[	1.44E-07	0.00E+00	0.00E+00	0.00E+00	0.00E+00	0.00E+00	0.00E+00	0.00E+00	0.00E+00	0.00E+00	0.00E+00	0.00E+00
1320	ALL	748688.42	4036460.7	1.44E-07	70YrCancerDerived_InhSoil[	1.44E-07	0.00E+00	0.00E+00	0.00E+00	0.00E+00	0.00E+00	0.00E+00	0.00E+00	0.00E+00	0.00E+00	0.00E+00	0.00E+00
1321	ALL	748788.42	4036460.7	1.45E-07	70YrCancerDerived_InhSoil[	1.45E-07	0.00E+00	0.00E+00	0.00E+00	0.00E+00	0.00E+00	0.00E+00	0.00E+00	0.00E+00	0.00E+00	0.00E+00	0.00E+00
1322	ALL	748888.42	4036460.7	1.45E-07	70YrCancerDerived_InhSoil[	1.45E-07	0.00E+00	0.00E+00	0.00E+00	0.00E+00	0.00E+00	0.00E+00	0.00E+00	0.00E+00	0.00E+00	0.00E+00	0.00E+00
1323	ALL	748988.42	4036460.7	1.46E-07	70YrCancerDerived_InhSoil[	1.46E-07	0.00E+00	0.00E+00	0.00E+00	0.00E+00	0.00E+00	0.00E+00	0.00E+00	0.00E+00	0.00E+00	0.00E+00	0.00E+00
1324	ALL	749088.42	4036460.7	1.47E-07	70YrCancerDerived_InhSoil[	1.47E-07	0.00E+00	0.00E+00	0.00E+00	0.00E+00	0.00E+00	0.00E+00	0.00E+00	0.00E+00	0.00E+00	0.00E+00	0.00E+00
1325	ALL	749188.42	4036460.7	1.48E-07	70YrCancerDerived_InhSoil[	1.48E-07	0.00E+00	0.00E+00	0.00E+00	0.00E+00	0.00E+00	0.00E+00	0.00E+00	0.00E+00	0.00E+00	0.00E+00	0.00E+00
1326	ALL	749288.42	4036460.7	1.49E-07	70YrCancerDerived_InhSoil[	1.49E-07	0.00E+00	0.00E+00	0.00E+00	0.00E+00	0.00E+00	0.00E+00	0.00E+00	0.00E+00	0.00E+00	0.00E+00	0.00E+00
1327	ALL	749388.42	4036460.7	1.50E-07	70YrCancerDerived_InhSoil[	1.50E-07	0.00E+00	0.00E+00	0.00E+00	0.00E+00	0.00E+00	0.00E+00	0.00E+00	0.00E+00	0.00E+00	0.00E+00	0.00E+00
1328	ALL	749488.42	4036460.7	1.50E-07	70YrCancerDerived_InhSoil[	1.50E-07	0.00E+00	0.00E+00	0.00E+00	0.00E+00	0.00E+00	0.00E+00	0.00E+00	0.00E+00	0.00E+00	0.00E+00	0.00E+00
1329	ALL	749588.42	4036460.7	1.51E-07	70YrCancerDerived_InhSoil[	1.51E-07	0.00E+00	0.00E+00	0.00E+00	0.00E+00	0.00E+00	0.00E+00	0.00E+00	0.00E+00	0.00E+00	0.00E+00	0.00E+00
1330	ALL	749688.42	4036460.7	1.51E-07	70YrCancerDerived_InhSoil[	1.51E-07	0.00E+00	0.00E+00	0.00E+00	0.00E+00	0.00E+00	0.00E+00	0.00E+00	0.00E+00	0.00E+00	0.00E+00	0.00E+00
1331	ALL	749788.42	4036460.7	1.52E-07	70YrCancerDerived_InhSoil[	1.52E-07	0.00E+00	0.00E+00	0.00E+00	0.00E+00	0.00E+00	0.00E+00	0.00E+00	0.00E+00	0.00E+00	0.00E+00	0.00E+00
1332	ALL	749888.42	4036460.7	1.53E-07	70YrCancerDerived_InhSoil[	1.53E-07	0.00E+00	0.00E+00	0.00E+00	0.00E+00	0.00E+00	0.00E+00	0.00E+00	0.00E+00	0.00E+00	0.00E+00	0.00E+00
1333	ALL	749988.42	4036460.7	1.54E-07	70YrCancerDerived_InhSoil[	1.54E-07	0.00E+00	0.00E+00	0.00E+00	0.00E+00	0.00E+00	0.00E+00	0.00E+00	0.00E+00	0.00E+00	0.00E+00	0.00E+00
1334	ALL	750088.42	4036460.7	1.54E-07	70YrCancerDerived_InhSoil[	1.54E-07	0.00E+00	0.00E+00	0.00E+00	0.00E+00	0.00E+00	0.00E+00	0.00E+00	0.00E+00	0.00E+00	0.00E+00	0.00E+00
1335	ALL	750188.42	4036460.7	1.55E-07	70YrCancerDerived_InhSoil[	1.55E-07	0.00E+00	0.00E+00	0.00E+00	0.00E+00	0.00E+00	0.00E+00	0.00E+00	0.00E+00	0.00E+00	0.00E+00	0.00E+00
1336	ALL	745988.42	4036560.7	1.75E-07	70YrCancerDerived_InhSoil[	1.75E-07	0.00E+00	0.00E+00	0.00E+00	0.00E+00	0.00E+00	0.00E+00	0.00E+00	0.00E+00	0.00E+00	0.00E+00	0.00E+00
1337	ALL	746088.42	4036560.7	1.99E-07	70YrCancerDerived_InhSoil[	1.99E-07	0.00E+00	0.00E+00	0.00E+00	0.00E+00	0.00E+00	0.00E+00	0.00E+00	0.00E+00	0.00E+00	0.00E+00	0.00E+00
1338	ALL	746188.42	4036560.7	2.31E-07	70YrCancerDerived_InhSoil[	2.31E-07	0.00E+00	0.00E+00	0.00E+00	0.00E+00	0.00E+00	0.00E+00	0.00E+00	0.00E+00	0.00E+00	0.00E+00	0.00E+00
1339	ALL	746288.42	4036560.7	2.72E-07	70YrCancerDerived_InhSoil[	2.72E-07	0.00E+00	0.00E+00	0.00E+00	0.00E+00	0.00E+00	0.00E+00	0.00E+00	0.00E+00	0.00E+00	0.00E+00	0.00E+00
1340	ALL	746388.42	4036560.7	3.24E-07	70YrCancerDerived_InhSoil[	3.24E-07	0.00E+00	0.00E+00	0.00E+00	0.00E+00	0.00E+00	0.00E+00	0.00E+00	0.00E+00	0.00E+00	0.00E+00	0.00E+00
1341	ALL	746488.42	4036560.7	3.83E-07	70YrCancerDerived_InhSoil[	3.83E-07	0.00E+00	0.00E+00	0.00E+00	0.00E+00	0.00E+00	0.00E+00	0.00E+00	0.00E+00	0.00E+00	0.00E+00	0.00E+00
1342	ALL	746588.42	4036560.7	4.32E-07	70YrCancerDerived_InhSoil[	4.32E-07	0.00E+00	0.00E+00	0.00E+00	0.00E+00	0.00E+00	0.00E+00	0.00E+00	0.00E+00	0.00E+00	0.00E+00	0.00E+00

1343	ALL	748388.42	4036560.7	1.26E-07	70YrCancerDerived_InhSoilI	1.26E-07	0.00E+00	0.00E+00	0.00E+00	0.00E+00	0.00E+00	0.00E+00	0.00E+00	0.00E+00	0.00E+00	0.00E+00	0.00E+00
1344	ALL	748488.42	4036560.7	1.26E-07	70YrCancerDerived_InhSoilI	1.26E-07	0.00E+00	0.00E+00	0.00E+00	0.00E+00	0.00E+00	0.00E+00	0.00E+00	0.00E+00	0.00E+00	0.00E+00	0.00E+00
1345	ALL	748588.42	4036560.7	1.28E-07	70YrCancerDerived_InhSoilI	1.28E-07	0.00E+00	0.00E+00	0.00E+00	0.00E+00	0.00E+00	0.00E+00	0.00E+00	0.00E+00	0.00E+00	0.00E+00	0.00E+00
1346	ALL	748688.42	4036560.7	1.29E-07	70YrCancerDerived_InhSoilI	1.29E-07	0.00E+00	0.00E+00	0.00E+00	0.00E+00	0.00E+00	0.00E+00	0.00E+00	0.00E+00	0.00E+00	0.00E+00	0.00E+00
1347	ALL	748788.42	4036560.7	1.31E-07	70YrCancerDerived_InhSoilI	1.31E-07	0.00E+00	0.00E+00	0.00E+00	0.00E+00	0.00E+00	0.00E+00	0.00E+00	0.00E+00	0.00E+00	0.00E+00	0.00E+00
1348	ALL	748888.42	4036560.7	1.33E-07	70YrCancerDerived_InhSoilI	1.33E-07	0.00E+00	0.00E+00	0.00E+00	0.00E+00	0.00E+00	0.00E+00	0.00E+00	0.00E+00	0.00E+00	0.00E+00	0.00E+00
1349	ALL	748988.42	4036560.7	1.35E-07	70YrCancerDerived_InhSoilI	1.35E-07	0.00E+00	0.00E+00	0.00E+00	0.00E+00	0.00E+00	0.00E+00	0.00E+00	0.00E+00	0.00E+00	0.00E+00	0.00E+00
1350	ALL	749088.42	4036560.7	1.37E-07	70YrCancerDerived_InhSoilI	1.37E-07	0.00E+00	0.00E+00	0.00E+00	0.00E+00	0.00E+00	0.00E+00	0.00E+00	0.00E+00	0.00E+00	0.00E+00	0.00E+00
1351	ALL	749188.42	4036560.7	1.39E-07	70YrCancerDerived_InhSoilI	1.39E-07	0.00E+00	0.00E+00	0.00E+00	0.00E+00	0.00E+00	0.00E+00	0.00E+00	0.00E+00	0.00E+00	0.00E+00	0.00E+00
1352	ALL	749288.42	4036560.7	1.41E-07	70YrCancerDerived_InhSoilI	1.41E-07	0.00E+00	0.00E+00	0.00E+00	0.00E+00	0.00E+00	0.00E+00	0.00E+00	0.00E+00	0.00E+00	0.00E+00	0.00E+00
1353	ALL	749388.42	4036560.7	1.43E-07	70YrCancerDerived_InhSoilI	1.43E-07	0.00E+00	0.00E+00	0.00E+00	0.00E+00	0.00E+00	0.00E+00	0.00E+00	0.00E+00	0.00E+00	0.00E+00	0.00E+00
1354	ALL	749488.42	4036560.7	1.44E-07	70YrCancerDerived_InhSoilI	1.44E-07	0.00E+00	0.00E+00	0.00E+00	0.00E+00	0.00E+00	0.00E+00	0.00E+00	0.00E+00	0.00E+00	0.00E+00	0.00E+00
1355	ALL	749588.42	4036560.7	1.46E-07	70YrCancerDerived_InhSoilI	1.46E-07	0.00E+00	0.00E+00	0.00E+00	0.00E+00	0.00E+00	0.00E+00	0.00E+00	0.00E+00	0.00E+00	0.00E+00	0.00E+00
1356	ALL	749688.42	4036560.7	1.47E-07	70YrCancerDerived_InhSoilI	1.47E-07	0.00E+00	0.00E+00	0.00E+00	0.00E+00	0.00E+00	0.00E+00	0.00E+00	0.00E+00	0.00E+00	0.00E+00	0.00E+00
1357	ALL	749788.42	4036560.7	1.49E-07	70YrCancerDerived_InhSoilI	1.49E-07	0.00E+00	0.00E+00	0.00E+00	0.00E+00	0.00E+00	0.00E+00	0.00E+00	0.00E+00	0.00E+00	0.00E+00	0.00E+00
1358	ALL	749888.42	4036560.7	1.50E-07	70YrCancerDerived_InhSoilI	1.50E-07	0.00E+00	0.00E+00	0.00E+00	0.00E+00	0.00E+00	0.00E+00	0.00E+00	0.00E+00	0.00E+00	0.00E+00	0.00E+00
1359	ALL	749988.42	4036560.7	1.51E-07	70YrCancerDerived_InhSoilI	1.51E-07	0.00E+00	0.00E+00	0.00E+00	0.00E+00	0.00E+00	0.00E+00	0.00E+00	0.00E+00	0.00E+00	0.00E+00	0.00E+00
1360	ALL	750088.42	4036560.7	1.53E-07	70YrCancerDerived_InhSoilI	1.53E-07	0.00E+00	0.00E+00	0.00E+00	0.00E+00	0.00E+00	0.00E+00	0.00E+00	0.00E+00	0.00E+00	0.00E+00	0.00E+00
1361	ALL	750188.42	4036560.7	1.54E-07	70YrCancerDerived_InhSoilI	1.54E-07	0.00E+00	0.00E+00	0.00E+00	0.00E+00	0.00E+00	0.00E+00	0.00E+00	0.00E+00	0.00E+00	0.00E+00	0.00E+00
1362	ALL	750288.42	4036560.7	1.55E-07	70YrCancerDerived_InhSoilI	1.55E-07	0.00E+00	0.00E+00	0.00E+00	0.00E+00	0.00E+00	0.00E+00	0.00E+00	0.00E+00	0.00E+00	0.00E+00	0.00E+00
1363	ALL	752388.42	4036560.7	1.54E-07	70YrCancerDerived_InhSoilI	1.54E-07	0.00E+00	0.00E+00	0.00E+00	0.00E+00	0.00E+00	0.00E+00	0.00E+00	0.00E+00	0.00E+00	0.00E+00	0.00E+00
1364	ALL	752488.42	4036560.7	1.52E-07	70YrCancerDerived_InhSoilI	1.52E-07	0.00E+00	0.00E+00	0.00E+00	0.00E+00	0.00E+00	0.00E+00	0.00E+00	0.00E+00	0.00E+00	0.00E+00	0.00E+00
1365	ALL	752588.42	4036560.7	1.51E-07	70YrCancerDerived_InhSoilI	1.51E-07	0.00E+00	0.00E+00	0.00E+00	0.00E+00	0.00E+00	0.00E+00	0.00E+00	0.00E+00	0.00E+00	0.00E+00	0.00E+00
1366	ALL	752688.42	4036560.7	1.50E-07	70YrCancerDerived_InhSoilI	1.50E-07	0.00E+00	0.00E+00	0.00E+00	0.00E+00	0.00E+00	0.00E+00	0.00E+00	0.00E+00	0.00E+00	0.00E+00	0.00E+00
1367	ALL	752788.42	4036560.7	1.48E-07	70YrCancerDerived_InhSoilI	1.48E-07	0.00E+00	0.00E+00	0.00E+00	0.00E+00	0.00E+00	0.00E+00	0.00E+00	0.00E+00	0.00E+00	0.00E+00	0.00E+00
1368	ALL	752888.42	4036560.7	1.47E-07	70YrCancerDerived_InhSoilI	1.47E-07	0.00E+00	0.00E+00	0.00E+00	0.00E+00	0.00E+00	0.00E+00	0.00E+00	0.00E+00	0.00E+00	0.00E+00	0.00E+00
1369	ALL	752988.42	4036560.7	1.45E-07	70YrCancerDerived_InhSoilI	1.45E-07	0.00E+00	0.00E+00	0.00E+00	0.00E+00	0.00E+00	0.00E+00	0.00E+00	0.00E+00	0.00E+00	0.00E+00	0.00E+00
1370	ALL	753088.42	4036560.7	1.43E-07	70YrCancerDerived_InhSoilI	1.43E-07	0.00E+00	0.00E+00	0.00E+00	0.00E+00	0.00E+00	0.00E+00	0.00E+00	0.00E+00	0.00E+00	0.00E+00	0.00E+00
1371	ALL	753188.42	4036560.7	1.41E-07	70YrCancerDerived_InhSoilI	1.41E-07	0.00E+00	0.00E+00	0.00E+00	0.00E+00	0.00E+00	0.00E+00	0.00E+00	0.00E+00	0.00E+00	0.00E+00	0.00E+00
1372	ALL	753288.42	4036560.7	1.39E-07	70YrCancerDerived_InhSoilI	1.39E-07	0.00E+00	0.00E+00	0.00E+00	0.00E+00	0.00E+00	0.00E+00	0.00E+00	0.00E+00	0.00E+00	0.00E+00	0.00E+00
1373	ALL	753388.42	4036560.7	1.37E-07	70YrCancerDerived_InhSoilI	1.37E-07	0.00E+00	0.00E+00	0.00E+00	0.00E+00	0.00E+00	0.00E+00	0.00E+00	0.00E+00	0.00E+00	0.00E+00	0.00E+00
1374	ALL	753488.42	4036560.7	1.34E-07	70YrCancerDerived_InhSoilI	1.34E-07	0.00E+00	0.00E+00	0.00E+00	0.00E+00	0.00E+00	0.00E+00	0.00E+00	0.00E+00	0.00E+00	0.00E+00	0.00E+00
1375	ALL	753588.42	4036560.7	1.32E-07	70YrCancerDerived_InhSoilI	1.32E-07	0.00E+00	0.00E+00	0.00E+00	0.00E+00	0.00E+00	0.00E+00	0.00E+00	0.00E+00	0.00E+00	0.00E+00	0.00E+00
1376	ALL	753688.42	4036560.7	1.30E-07	70YrCancerDerived_InhSoilI	1.30E-07	0.00E+00	0.00E+00	0.00E+00	0.00E+00	0.00E+00	0.00E+00	0.00E+00	0.00E+00	0.00E+00	0.00E+00	0.00E+00
1377	ALL	753788.42	4036560.7	1.27E-07	70YrCancerDerived_InhSoilI	1.27E-07	0.00E+00	0.00E+00	0.00E+00	0.00E+00	0.00E+00	0.00E+00	0.00E+00	0.00E+00	0.00E+00	0.00E+00	0.00E+00
1378	ALL	753888.42	4036560.7	1.25E-07	70YrCancerDerived_InhSoilI	1.25E-07	0.00E+00	0.00E+00	0.00E+00	0.00E+00	0.00E+00	0.00E+00	0.00E+00	0.00E+00	0.00E+00	0.00E+00	0.00E+00
1379	ALL	753988.42	4036560.7	1.22E-07	70YrCancerDerived_InhSoilI	1.22E-07	0.00E+00	0.00E+00	0.00E+00	0.00E+00	0.00E+00	0.00E+00	0.00E+00	0.00E+00	0.00E+00	0.00E+00	0.00E+00
1380	ALL	754088.42	4036560.7	1.20E-07	70YrCancerDerived_InhSoilI	1.20E-07	0.00E+00	0.00E+00	0.00E+00	0.00E+00	0.00E+00	0.00E+00	0.00E+00	0.00E+00	0.00E+00	0.00E+00	0.00E+00
1381	ALL	754188.42	4036560.7	1.17E-07	70YrCancerDerived_InhSoilI	1.17E-07	0.00E+00	0.00E+00	0.00E+00	0.00E+00	0.00E+00	0.00E+00	0.00E+00	0.00E+00	0.00E+00	0.00E+00	0.00E+00
1382	ALL	754288.42	4036560.7	1.15E-07	70YrCancerDerived_InhSoilI	1.15E-07	0.00E+00	0.00E+00	0.00E+00	0.00E+00	0.00E+00	0.00E+00	0.00E+00	0.00E+00	0.00E+00	0.00E+00	0.00E+00
1383	ALL	754388.42	4036560.7	1.13E-07	70YrCancerDerived_InhSoilI	1.13E-07	0.00E+00	0.00E+00	0.00E+00	0.00E+00	0.00E+00	0.00E+00	0.00E+00	0.00E+00	0.00E+00	0.00E+00	0.00E+00
1384	ALL	754488.42	4036560.7	1.10E-07	70YrCancerDerived_InhSoilI	1.10E-07	0.00E+00	0.00E+00	0.00E+00	0.00E+00	0.00E+00	0.00E+00	0.00E+00	0.00E+00	0.00E+00	0.00E+00	0.00E+00
1385	ALL	754588.42	4036560.7	1.08E-07	70YrCancerDerived_InhSoilI	1.08E-07	0.00E+00	0.00E+00	0.00E+00	0.00E+00	0.00E+00	0.00E+00	0.00E+00	0.00E+00	0.00E+00	0.00E+00	0.00E+00
1386	ALL	754688.42	4036560.7	1.05E-07	70YrCancerDerived_InhSoilI	1.05E-07	0.00E+00	0.00E+00	0.00E+00	0.00E+00	0.00E+00	0.00E+00	0.00E+00	0.00E+00	0.00E+00	0.00E+00	0.00E+00
1387	ALL	754788.42	4036560.7	1.03E-07	70YrCancerDerived_InhSoilI	1.03E-07	0.00E+00	0.00E+00	0.00E+00	0.00E+00	0.00E+00	0.00E+00	0.00E+00	0.00E+00	0.00E+00	0.00E+00	0.00E+00
1388	ALL	754888.42	4036560.7	1.01E-07	70YrCancerDerived_InhSoilI	1.01E-07	0.00E+00	0.00E+00	0.00E+00	0.00E+00	0.00E+00	0.00E+00	0.00E+00	0.00E+00	0.00E+00	0.00E+00	0.00E+00
1389	ALL	754988.42	4036560.7	9.85E-08	70YrCancerDerived_InhSoilI	9.85E-08	0.00E+00	0.00E+00	0.00E+00	0.00E+00	0.00E+00	0.00E+00	0.00E+00	0.00E+00	0.00E+00	0.00E+00	0.00E+00
1390	ALL	755088.42	4036560.7	9.63E-08	70YrCancerDerived_InhSoilI	9.63E-08	0.00E+00	0.00E+00	0.00E+00	0.00E+00	0.00E+00	0.00E+00	0.00E+00	0.00E+00	0.00E+00	0.00E+00	0.00E+00
1391	ALL	755188.42	4036560.7	9.41E-08	70YrCancerDerived_InhSoilI	9.41E-08	0.00E+00	0.00E+00	0.00E+00	0.00E+00	0.00E+00	0.00E+00	0.00E+00	0.00E+00	0.00E+00	0.00E+00	0.00E+00
1392	ALL	755288.42	4036560.7	9.20E-08	70YrCancerDerived_InhSoilI	9.20E-08	0.00E+00	0.00E+00	0.00E+00	0.00E+00	0.00E+00	0.00E+00	0.00E+00	0.00E+00	0.00E+00	0.00E+00	0.00E+00
1393	ALL	748388.42	4036660.7	1.13E-07	70YrCancerDerived_InhSoilI	1.13E-07	0.00E+00	0.00E+00	0.00E+00	0.00E+00	0.00E+00	0.00E+00	0.00E+00	0.00E+00	0.00E+00	0.00E+00	0.00E+00
1394	ALL	748488.42	4036660.7	1.14E-07	70YrCancerDerived_InhSoilI	1.14E-07	0.00E+00	0.00E+00	0.00E+00	0.00E+00	0.00E+00	0.00E+00	0.00E+00	0.00E+00	0.00E+00	0.00E+00	0.00E+00
1395	ALL	748588.42	4036660.7	1.16E-07	70YrCancerDerived_InhSoilI	1.16E-07	0.00E+00	0.00E+00	0.00E+00	0.00E+00	0.00E+00	0.00E+00	0.00E+00	0.00E+00	0.00E+00	0.00E+00	0.00E+00
1396	ALL	748688.42	4036660.7	1.18E-07	70YrCancerDerived_InhSoilI	1.18E-07	0.00E+00	0.00E+00	0.00E+00	0.00E+00	0.00E+00	0.00E+00	0.00E+00	0.00E+00	0.00E+00	0.00E+00	0.00E+00
1397	ALL	748788.42	4036660.7	1.21E-07	70YrCancerDerived_InhSoilI	1.21E-07	0.00E+00	0.00E+00	0.00E+00	0.00E+00	0.00E+00	0.00E+00	0.00E+00	0.00E+00	0.00E+00	0.00E+00	0.00E+00
1398	ALL	748888.42	4036660.7	1.24E-07	70YrCancerDerived_InhSoilI	1.24E-07	0.00E+00	0.00E+00	0.00E+00	0.00E+00	0.00E+00	0.00E+00	0.00E+00	0.00E+00	0.00E+00	0.00E+00	0.00E+00

1399	ALL	748988.42	4036660.7	1.27E-07	70YrCancerDerived_InhSoil[	1.27E-07	0.00E+00	0.00E+00	0.00E+00	0.00E+00	0.00E+00	0.00E+00	0.00E+00	0.00E+00	0.00E+00	0.00E+00	0.00E+00
1400	ALL	749088.42	4036660.7	1.30E-07	70YrCancerDerived_InhSoil[	1.30E-07	0.00E+00	0.00E+00	0.00E+00	0.00E+00	0.00E+00	0.00E+00	0.00E+00	0.00E+00	0.00E+00	0.00E+00	0.00E+00
1401	ALL	749188.42	4036660.7	1.33E-07	70YrCancerDerived_InhSoil[	1.33E-07	0.00E+00	0.00E+00	0.00E+00	0.00E+00	0.00E+00	0.00E+00	0.00E+00	0.00E+00	0.00E+00	0.00E+00	0.00E+00
1402	ALL	749288.42	4036660.7	1.35E-07	70YrCancerDerived_InhSoil[	1.35E-07	0.00E+00	0.00E+00	0.00E+00	0.00E+00	0.00E+00	0.00E+00	0.00E+00	0.00E+00	0.00E+00	0.00E+00	0.00E+00
1403	ALL	749388.42	4036660.7	1.38E-07	70YrCancerDerived_InhSoil[	1.38E-07	0.00E+00	0.00E+00	0.00E+00	0.00E+00	0.00E+00	0.00E+00	0.00E+00	0.00E+00	0.00E+00	0.00E+00	0.00E+00
1404	ALL	749488.42	4036660.7	1.40E-07	70YrCancerDerived_InhSoil[	1.40E-07	0.00E+00	0.00E+00	0.00E+00	0.00E+00	0.00E+00	0.00E+00	0.00E+00	0.00E+00	0.00E+00	0.00E+00	0.00E+00
1405	ALL	749588.42	4036660.7	1.42E-07	70YrCancerDerived_InhSoil[	1.42E-07	0.00E+00	0.00E+00	0.00E+00	0.00E+00	0.00E+00	0.00E+00	0.00E+00	0.00E+00	0.00E+00	0.00E+00	0.00E+00
1406	ALL	749688.42	4036660.7	1.44E-07	70YrCancerDerived_InhSoil[	1.44E-07	0.00E+00	0.00E+00	0.00E+00	0.00E+00	0.00E+00	0.00E+00	0.00E+00	0.00E+00	0.00E+00	0.00E+00	0.00E+00
1407	ALL	749788.42	4036660.7	1.46E-07	70YrCancerDerived_InhSoil[	1.46E-07	0.00E+00	0.00E+00	0.00E+00	0.00E+00	0.00E+00	0.00E+00	0.00E+00	0.00E+00	0.00E+00	0.00E+00	0.00E+00
1408	ALL	749888.42	4036660.7	1.48E-07	70YrCancerDerived_InhSoil[	1.48E-07	0.00E+00	0.00E+00	0.00E+00	0.00E+00	0.00E+00	0.00E+00	0.00E+00	0.00E+00	0.00E+00	0.00E+00	0.00E+00
1409	ALL	749988.42	4036660.7	1.50E-07	70YrCancerDerived_InhSoil[	1.50E-07	0.00E+00	0.00E+00	0.00E+00	0.00E+00	0.00E+00	0.00E+00	0.00E+00	0.00E+00	0.00E+00	0.00E+00	0.00E+00
1410	ALL	750088.42	4036660.7	1.52E-07	70YrCancerDerived_InhSoil[	1.52E-07	0.00E+00	0.00E+00	0.00E+00	0.00E+00	0.00E+00	0.00E+00	0.00E+00	0.00E+00	0.00E+00	0.00E+00	0.00E+00
1411	ALL	750188.42	4036660.7	1.54E-07	70YrCancerDerived_InhSoil[	1.54E-07	0.00E+00	0.00E+00	0.00E+00	0.00E+00	0.00E+00	0.00E+00	0.00E+00	0.00E+00	0.00E+00	0.00E+00	0.00E+00
1412	ALL	750288.42	4036660.7	1.55E-07	70YrCancerDerived_InhSoil[	1.55E-07	0.00E+00	0.00E+00	0.00E+00	0.00E+00	0.00E+00	0.00E+00	0.00E+00	0.00E+00	0.00E+00	0.00E+00	0.00E+00
1413	ALL	752388.42	4036660.7	1.56E-07	70YrCancerDerived_InhSoil[	1.56E-07	0.00E+00	0.00E+00	0.00E+00	0.00E+00	0.00E+00	0.00E+00	0.00E+00	0.00E+00	0.00E+00	0.00E+00	0.00E+00
1414	ALL	752488.42	4036660.7	1.55E-07	70YrCancerDerived_InhSoil[	1.55E-07	0.00E+00	0.00E+00	0.00E+00	0.00E+00	0.00E+00	0.00E+00	0.00E+00	0.00E+00	0.00E+00	0.00E+00	0.00E+00
1415	ALL	752588.42	4036660.7	1.53E-07	70YrCancerDerived_InhSoil[	1.53E-07	0.00E+00	0.00E+00	0.00E+00	0.00E+00	0.00E+00	0.00E+00	0.00E+00	0.00E+00	0.00E+00	0.00E+00	0.00E+00
1416	ALL	752688.42	4036660.7	1.52E-07	70YrCancerDerived_InhSoil[	1.52E-07	0.00E+00	0.00E+00	0.00E+00	0.00E+00	0.00E+00	0.00E+00	0.00E+00	0.00E+00	0.00E+00	0.00E+00	0.00E+00
1417	ALL	752788.42	4036660.7	1.50E-07	70YrCancerDerived_InhSoil[	1.50E-07	0.00E+00	0.00E+00	0.00E+00	0.00E+00	0.00E+00	0.00E+00	0.00E+00	0.00E+00	0.00E+00	0.00E+00	0.00E+00
1418	ALL	752888.42	4036660.7	1.48E-07	70YrCancerDerived_InhSoil[	1.48E-07	0.00E+00	0.00E+00	0.00E+00	0.00E+00	0.00E+00	0.00E+00	0.00E+00	0.00E+00	0.00E+00	0.00E+00	0.00E+00
1419	ALL	752988.42	4036660.7	1.46E-07	70YrCancerDerived_InhSoil[	1.46E-07	0.00E+00	0.00E+00	0.00E+00	0.00E+00	0.00E+00	0.00E+00	0.00E+00	0.00E+00	0.00E+00	0.00E+00	0.00E+00
1420	ALL	753088.42	4036660.7	1.44E-07	70YrCancerDerived_InhSoil[	1.44E-07	0.00E+00	0.00E+00	0.00E+00	0.00E+00	0.00E+00	0.00E+00	0.00E+00	0.00E+00	0.00E+00	0.00E+00	0.00E+00
1421	ALL	753188.42	4036660.7	1.42E-07	70YrCancerDerived_InhSoil[	1.42E-07	0.00E+00	0.00E+00	0.00E+00	0.00E+00	0.00E+00	0.00E+00	0.00E+00	0.00E+00	0.00E+00	0.00E+00	0.00E+00
1422	ALL	753288.42	4036660.7	1.39E-07	70YrCancerDerived_InhSoil[	1.39E-07	0.00E+00	0.00E+00	0.00E+00	0.00E+00	0.00E+00	0.00E+00	0.00E+00	0.00E+00	0.00E+00	0.00E+00	0.00E+00
1423	ALL	753388.42	4036660.7	1.37E-07	70YrCancerDerived_InhSoil[	1.37E-07	0.00E+00	0.00E+00	0.00E+00	0.00E+00	0.00E+00	0.00E+00	0.00E+00	0.00E+00	0.00E+00	0.00E+00	0.00E+00
1424	ALL	753488.42	4036660.7	1.35E-07	70YrCancerDerived_InhSoil[	1.35E-07	0.00E+00	0.00E+00	0.00E+00	0.00E+00	0.00E+00	0.00E+00	0.00E+00	0.00E+00	0.00E+00	0.00E+00	0.00E+00
1425	ALL	753588.42	4036660.7	1.32E-07	70YrCancerDerived_InhSoil[	1.32E-07	0.00E+00	0.00E+00	0.00E+00	0.00E+00	0.00E+00	0.00E+00	0.00E+00	0.00E+00	0.00E+00	0.00E+00	0.00E+00
1426	ALL	753688.42	4036660.7	1.30E-07	70YrCancerDerived_InhSoil[	1.30E-07	0.00E+00	0.00E+00	0.00E+00	0.00E+00	0.00E+00	0.00E+00	0.00E+00	0.00E+00	0.00E+00	0.00E+00	0.00E+00
1427	ALL	753788.42	4036660.7	1.27E-07	70YrCancerDerived_InhSoil[	1.27E-07	0.00E+00	0.00E+00	0.00E+00	0.00E+00	0.00E+00	0.00E+00	0.00E+00	0.00E+00	0.00E+00	0.00E+00	0.00E+00
1428	ALL	753888.42	4036660.7	1.25E-07	70YrCancerDerived_InhSoil[	1.25E-07	0.00E+00	0.00E+00	0.00E+00	0.00E+00	0.00E+00	0.00E+00	0.00E+00	0.00E+00	0.00E+00	0.00E+00	0.00E+00
1429	ALL	753988.42	4036660.7	1.22E-07	70YrCancerDerived_InhSoil[	1.22E-07	0.00E+00	0.00E+00	0.00E+00	0.00E+00	0.00E+00	0.00E+00	0.00E+00	0.00E+00	0.00E+00	0.00E+00	0.00E+00
1430	ALL	754088.42	4036660.7	1.19E-07	70YrCancerDerived_InhSoil[	1.19E-07	0.00E+00	0.00E+00	0.00E+00	0.00E+00	0.00E+00	0.00E+00	0.00E+00	0.00E+00	0.00E+00	0.00E+00	0.00E+00
1431	ALL	754188.42	4036660.7	1.17E-07	70YrCancerDerived_InhSoil[	1.17E-07	0.00E+00	0.00E+00	0.00E+00	0.00E+00	0.00E+00	0.00E+00	0.00E+00	0.00E+00	0.00E+00	0.00E+00	0.00E+00
1432	ALL	754288.42	4036660.7	1.14E-07	70YrCancerDerived_InhSoil[	1.14E-07	0.00E+00	0.00E+00	0.00E+00	0.00E+00	0.00E+00	0.00E+00	0.00E+00	0.00E+00	0.00E+00	0.00E+00	0.00E+00
1433	ALL	754388.42	4036660.7	1.12E-07	70YrCancerDerived_InhSoil[	1.12E-07	0.00E+00	0.00E+00	0.00E+00	0.00E+00	0.00E+00	0.00E+00	0.00E+00	0.00E+00	0.00E+00	0.00E+00	0.00E+00
1434	ALL	754488.42	4036660.7	1.09E-07	70YrCancerDerived_InhSoil[	1.09E-07	0.00E+00	0.00E+00	0.00E+00	0.00E+00	0.00E+00	0.00E+00	0.00E+00	0.00E+00	0.00E+00	0.00E+00	0.00E+00
1435	ALL	754588.42	4036660.7	1.07E-07	70YrCancerDerived_InhSoil[	1.07E-07	0.00E+00	0.00E+00	0.00E+00	0.00E+00	0.00E+00	0.00E+00	0.00E+00	0.00E+00	0.00E+00	0.00E+00	0.00E+00
1436	ALL	754688.42	4036660.7	1.04E-07	70YrCancerDerived_InhSoil[	1.04E-07	0.00E+00	0.00E+00	0.00E+00	0.00E+00	0.00E+00	0.00E+00	0.00E+00	0.00E+00	0.00E+00	0.00E+00	0.00E+00
1437	ALL	754788.42	4036660.7	1.02E-07	70YrCancerDerived_InhSoil[	1.02E-07	0.00E+00	0.00E+00	0.00E+00	0.00E+00	0.00E+00	0.00E+00	0.00E+00	0.00E+00	0.00E+00	0.00E+00	0.00E+00
1438	ALL	754888.42	4036660.7	9.95E-08	70YrCancerDerived_InhSoil[	9.95E-08	0.00E+00	0.00E+00	0.00E+00	0.00E+00	0.00E+00	0.00E+00	0.00E+00	0.00E+00	0.00E+00	0.00E+00	0.00E+00
1439	ALL	754988.42	4036660.7	9.73E-08	70YrCancerDerived_InhSoil[	9.73E-08	0.00E+00	0.00E+00	0.00E+00	0.00E+00	0.00E+00	0.00E+00	0.00E+00	0.00E+00	0.00E+00	0.00E+00	0.00E+00
1440	ALL	755088.42	4036660.7	9.51E-08	70YrCancerDerived_InhSoil[	9.51E-08	0.00E+00	0.00E+00	0.00E+00	0.00E+00	0.00E+00	0.00E+00	0.00E+00	0.00E+00	0.00E+00	0.00E+00	0.00E+00
1441	ALL	755188.42	4036660.7	9.29E-08	70YrCancerDerived_InhSoil[	9.29E-08	0.00E+00	0.00E+00	0.00E+00	0.00E+00	0.00E+00	0.00E+00	0.00E+00	0.00E+00	0.00E+00	0.00E+00	0.00E+00
1442	ALL	755288.42	4036660.7	9.08E-08	70YrCancerDerived_InhSoil[	9.08E-08	0.00E+00	0.00E+00	0.00E+00	0.00E+00	0.00E+00	0.00E+00	0.00E+00	0.00E+00	0.00E+00	0.00E+00	0.00E+00
1443	ALL	745988.42	4036760.7	2.08E-07	70YrCancerDerived_InhSoil[	2.08E-07	0.00E+00	0.00E+00	0.00E+00	0.00E+00	0.00E+00	0.00E+00	0.00E+00	0.00E+00	0.00E+00	0.00E+00	0.00E+00
1444	ALL	746088.42	4036760.7	2.33E-07	70YrCancerDerived_InhSoil[	2.33E-07	0.00E+00	0.00E+00	0.00E+00	0.00E+00	0.00E+00	0.00E+00	0.00E+00	0.00E+00	0.00E+00	0.00E+00	0.00E+00
1445	ALL	746188.42	4036760.7	2.60E-07	70YrCancerDerived_InhSoil[	2.60E-07	0.00E+00	0.00E+00	0.00E+00	0.00E+00	0.00E+00	0.00E+00	0.00E+00	0.00E+00	0.00E+00	0.00E+00	0.00E+00
1446	ALL	746288.42	4036760.7	2.86E-07	70YrCancerDerived_InhSoil[	2.86E-07	0.00E+00	0.00E+00	0.00E+00	0.00E+00	0.00E+00	0.00E+00	0.00E+00	0.00E+00	0.00E+00	0.00E+00	0.00E+00
1447	ALL	746388.42	4036760.7	3.01E-07	70YrCancerDerived_InhSoil[	3.01E-07	0.00E+00	0.00E+00	0.00E+00	0.00E+00	0.00E+00	0.00E+00	0.00E+00	0.00E+00	0.00E+00	0.00E+00	0.00E+00
1448	ALL	746488.42	4036760.7	2.98E-07	70YrCancerDerived_InhSoil[	2.98E-07	0.00E+00	0.00E+00	0.00E+00	0.00E+00	0.00E+00	0.00E+00	0.00E+00	0.00E+00	0.00E+00	0.00E+00	0.00E+00
1449	ALL	746588.42	4036760.7	2.73E-07	70YrCancerDerived_InhSoil[	2.73E-07	0.00E+00	0.00E+00	0.00E+00	0.00E+00	0.00E+00	0.00E+00	0.00E+00	0.00E+00	0.00E+00	0.00E+00	0.00E+00
1450	ALL	749888.42	4036760.7	1.48E-07	70YrCancerDerived_InhSoil[	1.48E-07	0.00E+00	0.00E+00	0.00E+00	0.00E+00	0.00E+00	0.00E+00	0.00E+00	0.00E+00	0.00E+00	0.00E+00	0.00E+00
1451	ALL	749988.42	4036760.7	1.50E-07	70YrCancerDerived_InhSoil[	1.50E-07	0.00E+00	0.00E+00	0.00E+00	0.00E+00	0.00E+00	0.00E+00	0.00E+00	0.00E+00	0.00E+00	0.00E+00	0.00E+00
1452	ALL	750088.42	4036760.7	1.52E-07	70YrCancerDerived_InhSoil[	1.52E-07	0.00E+00	0.00E+00	0.00E+00	0.00E+00	0.00E+00	0.00E+00	0.00E+00	0.00E+00	0.00E+00	0.00E+00	0.00E+00
1453	ALL	750188.42	4036760.7	1.54E-07	70YrCancerDerived_InhSoil[	1.54E-07	0.00E+00	0.00E+00	0.00E+00	0.00E+00	0.00E+00	0.00E+00	0.00E+00	0.00E+00	0.00E+00	0.00E+00	0.00E+00
1454	ALL	750288.42	4036760.7	1.56E-07	70YrCancerDerived_InhSoil[	1.56E-07	0.00E+00	0.00E+00	0.00E+00	0.00E+00	0.00E+00	0.00E+00	0.00E+00	0.00E+00	0.00E+00	0.00E+00	0.00E+00

1455	ALL	752388.42	4036760.7	1.58E-07	70YrCancerDerived_InhSoilI	1.58E-07	0.00E+00	0.00E+00	0.00E+00	0.00E+00	0.00E+00	0.00E+00	0.00E+00	0.00E+00	0.00E+00	0.00E+00	0.00E+00
1456	ALL	752488.42	4036760.7	1.57E-07	70YrCancerDerived_InhSoilI	1.57E-07	0.00E+00	0.00E+00	0.00E+00	0.00E+00	0.00E+00	0.00E+00	0.00E+00	0.00E+00	0.00E+00	0.00E+00	0.00E+00
1457	ALL	752588.42	4036760.7	1.55E-07	70YrCancerDerived_InhSoilI	1.55E-07	0.00E+00	0.00E+00	0.00E+00	0.00E+00	0.00E+00	0.00E+00	0.00E+00	0.00E+00	0.00E+00	0.00E+00	0.00E+00
1458	ALL	752688.42	4036760.7	1.53E-07	70YrCancerDerived_InhSoilI	1.53E-07	0.00E+00	0.00E+00	0.00E+00	0.00E+00	0.00E+00	0.00E+00	0.00E+00	0.00E+00	0.00E+00	0.00E+00	0.00E+00
1459	ALL	752788.42	4036760.7	1.51E-07	70YrCancerDerived_InhSoilI	1.51E-07	0.00E+00	0.00E+00	0.00E+00	0.00E+00	0.00E+00	0.00E+00	0.00E+00	0.00E+00	0.00E+00	0.00E+00	0.00E+00
1460	ALL	752888.42	4036760.7	1.49E-07	70YrCancerDerived_InhSoilI	1.49E-07	0.00E+00	0.00E+00	0.00E+00	0.00E+00	0.00E+00	0.00E+00	0.00E+00	0.00E+00	0.00E+00	0.00E+00	0.00E+00
1461	ALL	752988.42	4036760.7	1.47E-07	70YrCancerDerived_InhSoilI	1.47E-07	0.00E+00	0.00E+00	0.00E+00	0.00E+00	0.00E+00	0.00E+00	0.00E+00	0.00E+00	0.00E+00	0.00E+00	0.00E+00
1462	ALL	753088.42	4036760.7	1.45E-07	70YrCancerDerived_InhSoilI	1.45E-07	0.00E+00	0.00E+00	0.00E+00	0.00E+00	0.00E+00	0.00E+00	0.00E+00	0.00E+00	0.00E+00	0.00E+00	0.00E+00
1463	ALL	753188.42	4036760.7	1.42E-07	70YrCancerDerived_InhSoilI	1.42E-07	0.00E+00	0.00E+00	0.00E+00	0.00E+00	0.00E+00	0.00E+00	0.00E+00	0.00E+00	0.00E+00	0.00E+00	0.00E+00
1464	ALL	753288.42	4036760.7	1.40E-07	70YrCancerDerived_InhSoilI	1.40E-07	0.00E+00	0.00E+00	0.00E+00	0.00E+00	0.00E+00	0.00E+00	0.00E+00	0.00E+00	0.00E+00	0.00E+00	0.00E+00
1465	ALL	753388.42	4036760.7	1.37E-07	70YrCancerDerived_InhSoilI	1.37E-07	0.00E+00	0.00E+00	0.00E+00	0.00E+00	0.00E+00	0.00E+00	0.00E+00	0.00E+00	0.00E+00	0.00E+00	0.00E+00
1466	ALL	753488.42	4036760.7	1.35E-07	70YrCancerDerived_InhSoilI	1.35E-07	0.00E+00	0.00E+00	0.00E+00	0.00E+00	0.00E+00	0.00E+00	0.00E+00	0.00E+00	0.00E+00	0.00E+00	0.00E+00
1467	ALL	753588.42	4036760.7	1.32E-07	70YrCancerDerived_InhSoilI	1.32E-07	0.00E+00	0.00E+00	0.00E+00	0.00E+00	0.00E+00	0.00E+00	0.00E+00	0.00E+00	0.00E+00	0.00E+00	0.00E+00
1468	ALL	753688.42	4036760.7	1.29E-07	70YrCancerDerived_InhSoilI	1.29E-07	0.00E+00	0.00E+00	0.00E+00	0.00E+00	0.00E+00	0.00E+00	0.00E+00	0.00E+00	0.00E+00	0.00E+00	0.00E+00
1469	ALL	753788.42	4036760.7	1.27E-07	70YrCancerDerived_InhSoilI	1.27E-07	0.00E+00	0.00E+00	0.00E+00	0.00E+00	0.00E+00	0.00E+00	0.00E+00	0.00E+00	0.00E+00	0.00E+00	0.00E+00
1470	ALL	753888.42	4036760.7	1.24E-07	70YrCancerDerived_InhSoilI	1.24E-07	0.00E+00	0.00E+00	0.00E+00	0.00E+00	0.00E+00	0.00E+00	0.00E+00	0.00E+00	0.00E+00	0.00E+00	0.00E+00
1471	ALL	753988.42	4036760.7	1.21E-07	70YrCancerDerived_InhSoilI	1.21E-07	0.00E+00	0.00E+00	0.00E+00	0.00E+00	0.00E+00	0.00E+00	0.00E+00	0.00E+00	0.00E+00	0.00E+00	0.00E+00
1472	ALL	754088.42	4036760.7	1.19E-07	70YrCancerDerived_InhSoilI	1.19E-07	0.00E+00	0.00E+00	0.00E+00	0.00E+00	0.00E+00	0.00E+00	0.00E+00	0.00E+00	0.00E+00	0.00E+00	0.00E+00
1473	ALL	754188.42	4036760.7	1.16E-07	70YrCancerDerived_InhSoilI	1.16E-07	0.00E+00	0.00E+00	0.00E+00	0.00E+00	0.00E+00	0.00E+00	0.00E+00	0.00E+00	0.00E+00	0.00E+00	0.00E+00
1474	ALL	754288.42	4036760.7	1.13E-07	70YrCancerDerived_InhSoilI	1.13E-07	0.00E+00	0.00E+00	0.00E+00	0.00E+00	0.00E+00	0.00E+00	0.00E+00	0.00E+00	0.00E+00	0.00E+00	0.00E+00
1475	ALL	754388.42	4036760.7	1.11E-07	70YrCancerDerived_InhSoilI	1.11E-07	0.00E+00	0.00E+00	0.00E+00	0.00E+00	0.00E+00	0.00E+00	0.00E+00	0.00E+00	0.00E+00	0.00E+00	0.00E+00
1476	ALL	754488.42	4036760.7	1.08E-07	70YrCancerDerived_InhSoilI	1.08E-07	0.00E+00	0.00E+00	0.00E+00	0.00E+00	0.00E+00	0.00E+00	0.00E+00	0.00E+00	0.00E+00	0.00E+00	0.00E+00
1477	ALL	754588.42	4036760.7	1.06E-07	70YrCancerDerived_InhSoilI	1.06E-07	0.00E+00	0.00E+00	0.00E+00	0.00E+00	0.00E+00	0.00E+00	0.00E+00	0.00E+00	0.00E+00	0.00E+00	0.00E+00
1478	ALL	754688.42	4036760.7	1.03E-07	70YrCancerDerived_InhSoilI	1.03E-07	0.00E+00	0.00E+00	0.00E+00	0.00E+00	0.00E+00	0.00E+00	0.00E+00	0.00E+00	0.00E+00	0.00E+00	0.00E+00
1479	ALL	754788.42	4036760.7	1.01E-07	70YrCancerDerived_InhSoilI	1.01E-07	0.00E+00	0.00E+00	0.00E+00	0.00E+00	0.00E+00	0.00E+00	0.00E+00	0.00E+00	0.00E+00	0.00E+00	0.00E+00
1480	ALL	754888.42	4036760.7	9.83E-08	70YrCancerDerived_InhSoilI	9.83E-08	0.00E+00	0.00E+00	0.00E+00	0.00E+00	0.00E+00	0.00E+00	0.00E+00	0.00E+00	0.00E+00	0.00E+00	0.00E+00
1481	ALL	754988.42	4036760.7	9.60E-08	70YrCancerDerived_InhSoilI	9.60E-08	0.00E+00	0.00E+00	0.00E+00	0.00E+00	0.00E+00	0.00E+00	0.00E+00	0.00E+00	0.00E+00	0.00E+00	0.00E+00
1482	ALL	755088.42	4036760.7	9.38E-08	70YrCancerDerived_InhSoilI	9.38E-08	0.00E+00	0.00E+00	0.00E+00	0.00E+00	0.00E+00	0.00E+00	0.00E+00	0.00E+00	0.00E+00	0.00E+00	0.00E+00
1483	ALL	755188.42	4036760.7	9.16E-08	70YrCancerDerived_InhSoilI	9.16E-08	0.00E+00	0.00E+00	0.00E+00	0.00E+00	0.00E+00	0.00E+00	0.00E+00	0.00E+00	0.00E+00	0.00E+00	0.00E+00
1484	ALL	755288.42	4036760.7	8.95E-08	70YrCancerDerived_InhSoilI	8.95E-08	0.00E+00	0.00E+00	0.00E+00	0.00E+00	0.00E+00	0.00E+00	0.00E+00	0.00E+00	0.00E+00	0.00E+00	0.00E+00
1485	ALL	745988.42	4036860.7	2.14E-07	70YrCancerDerived_InhSoilI	2.14E-07	0.00E+00	0.00E+00	0.00E+00	0.00E+00	0.00E+00	0.00E+00	0.00E+00	0.00E+00	0.00E+00	0.00E+00	0.00E+00
1486	ALL	746088.42	4036860.7	2.34E-07	70YrCancerDerived_InhSoilI	2.34E-07	0.00E+00	0.00E+00	0.00E+00	0.00E+00	0.00E+00	0.00E+00	0.00E+00	0.00E+00	0.00E+00	0.00E+00	0.00E+00
1487	ALL	746188.42	4036860.7	2.52E-07	70YrCancerDerived_InhSoilI	2.52E-07	0.00E+00	0.00E+00	0.00E+00	0.00E+00	0.00E+00	0.00E+00	0.00E+00	0.00E+00	0.00E+00	0.00E+00	0.00E+00
1488	ALL	746288.42	4036860.7	2.61E-07	70YrCancerDerived_InhSoilI	2.61E-07	0.00E+00	0.00E+00	0.00E+00	0.00E+00	0.00E+00	0.00E+00	0.00E+00	0.00E+00	0.00E+00	0.00E+00	0.00E+00
1489	ALL	746388.42	4036860.7	2.57E-07	70YrCancerDerived_InhSoilI	2.57E-07	0.00E+00	0.00E+00	0.00E+00	0.00E+00	0.00E+00	0.00E+00	0.00E+00	0.00E+00	0.00E+00	0.00E+00	0.00E+00
1490	ALL	746488.42	4036860.7	2.40E-07	70YrCancerDerived_InhSoilI	2.40E-07	0.00E+00	0.00E+00	0.00E+00	0.00E+00	0.00E+00	0.00E+00	0.00E+00	0.00E+00	0.00E+00	0.00E+00	0.00E+00
1491	ALL	746588.42	4036860.7	2.13E-07	70YrCancerDerived_InhSoilI	2.13E-07	0.00E+00	0.00E+00	0.00E+00	0.00E+00	0.00E+00	0.00E+00	0.00E+00	0.00E+00	0.00E+00	0.00E+00	0.00E+00
1492	ALL	747488.42	4036860.7	1.01E-07	70YrCancerDerived_InhSoilI	1.01E-07	0.00E+00	0.00E+00	0.00E+00	0.00E+00	0.00E+00	0.00E+00	0.00E+00	0.00E+00	0.00E+00	0.00E+00	0.00E+00
1493	ALL	747588.42	4036860.7	9.71E-08	70YrCancerDerived_InhSoilI	9.71E-08	0.00E+00	0.00E+00	0.00E+00	0.00E+00	0.00E+00	0.00E+00	0.00E+00	0.00E+00	0.00E+00	0.00E+00	0.00E+00
1494	ALL	747688.42	4036860.7	9.51E-08	70YrCancerDerived_InhSoilI	9.51E-08	0.00E+00	0.00E+00	0.00E+00	0.00E+00	0.00E+00	0.00E+00	0.00E+00	0.00E+00	0.00E+00	0.00E+00	0.00E+00
1495	ALL	747788.42	4036860.7	9.43E-08	70YrCancerDerived_InhSoilI	9.43E-08	0.00E+00	0.00E+00	0.00E+00	0.00E+00	0.00E+00	0.00E+00	0.00E+00	0.00E+00	0.00E+00	0.00E+00	0.00E+00
1496	ALL	747888.42	4036860.7	9.39E-08	70YrCancerDerived_InhSoilI	9.39E-08	0.00E+00	0.00E+00	0.00E+00	0.00E+00	0.00E+00	0.00E+00	0.00E+00	0.00E+00	0.00E+00	0.00E+00	0.00E+00
1497	ALL	747988.42	4036860.7	9.39E-08	70YrCancerDerived_InhSoilI	9.39E-08	0.00E+00	0.00E+00	0.00E+00	0.00E+00	0.00E+00	0.00E+00	0.00E+00	0.00E+00	0.00E+00	0.00E+00	0.00E+00
1498	ALL	748088.42	4036860.7	9.44E-08	70YrCancerDerived_InhSoilI	9.44E-08	0.00E+00	0.00E+00	0.00E+00	0.00E+00	0.00E+00	0.00E+00	0.00E+00	0.00E+00	0.00E+00	0.00E+00	0.00E+00
1499	ALL	748188.42	4036860.7	9.51E-08	70YrCancerDerived_InhSoilI	9.51E-08	0.00E+00	0.00E+00	0.00E+00	0.00E+00	0.00E+00	0.00E+00	0.00E+00	0.00E+00	0.00E+00	0.00E+00	0.00E+00
1500	ALL	749988.42	4036860.7	1.51E-07	70YrCancerDerived_InhSoilI	1.51E-07	0.00E+00	0.00E+00	0.00E+00	0.00E+00	0.00E+00	0.00E+00	0.00E+00	0.00E+00	0.00E+00	0.00E+00	0.00E+00
1501	ALL	750088.42	4036860.7	1.53E-07	70YrCancerDerived_InhSoilI	1.53E-07	0.00E+00	0.00E+00	0.00E+00	0.00E+00	0.00E+00	0.00E+00	0.00E+00	0.00E+00	0.00E+00	0.00E+00	0.00E+00
1502	ALL	750188.42	4036860.7	1.56E-07	70YrCancerDerived_InhSoilI	1.56E-07	0.00E+00	0.00E+00	0.00E+00	0.00E+00	0.00E+00	0.00E+00	0.00E+00	0.00E+00	0.00E+00	0.00E+00	0.00E+00
1503	ALL	750288.42	4036860.7	1.58E-07	70YrCancerDerived_InhSoilI	1.58E-07	0.00E+00	0.00E+00	0.00E+00	0.00E+00	0.00E+00	0.00E+00	0.00E+00	0.00E+00	0.00E+00	0.00E+00	0.00E+00
1504	ALL	752388.42	4036860.7	1.61E-07	70YrCancerDerived_InhSoilI	1.61E-07	0.00E+00	0.00E+00	0.00E+00	0.00E+00	0.00E+00	0.00E+00	0.00E+00	0.00E+00	0.00E+00	0.00E+00	0.00E+00
1505	ALL	752488.42	4036860.7	1.59E-07	70YrCancerDerived_InhSoilI	1.59E-07	0.00E+00	0.00E+00	0.00E+00	0.00E+00	0.00E+00	0.00E+00	0.00E+00	0.00E+00	0.00E+00	0.00E+00	0.00E+00
1506	ALL	752588.42	4036860.7	1.57E-07	70YrCancerDerived_InhSoilI	1.57E-07	0.00E+00	0.00E+00	0.00E+00	0.00E+00	0.00E+00	0.00E+00	0.00E+00	0.00E+00	0.00E+00	0.00E+00	0.00E+00
1507	ALL	752688.42	4036860.7	1.55E-07	70YrCancerDerived_InhSoilI	1.55E-07	0.00E+00	0.00E+00	0.00E+00	0.00E+00	0.00E+00	0.00E+00	0.00E+00	0.00E+00	0.00E+00	0.00E+00	0.00E+00
1508	ALL	752788.42	4036860.7	1.53E-07	70YrCancerDerived_InhSoilI	1.53E-07	0.00E+00	0.00E+00	0.00E+00	0.00E+00	0.00E+00	0.00E+00	0.00E+00	0.00E+00	0.00E+00	0.00E+00	0.00E+00
1509	ALL	752888.42	4036860.7	1.51E-07	70YrCancerDerived_InhSoilI	1.51E-07	0.00E+00	0.00E+00	0.00E+00	0.00E+00	0.00E+00	0.00E+00	0.00E+00	0.00E+00	0.00E+00	0.00E+00	0.00E+00
1510	ALL	752988.42	4036860.7	1.48E-07	70YrCancerDerived_InhSoilI	1.48E-07	0.00E+00	0.00E+00	0.00E+00	0.00E+00	0.00E+00	0.00E+00	0.00E+00	0.00E+00	0.00E+00	0.00E+00	0.00E+00

1511	ALL	753088.42	4036860.7	1.46E-07	70YrCancerDerived_InhSoilI	1.46E-07	0.00E+00	0.00E+00	0.00E+00	0.00E+00	0.00E+00	0.00E+00	0.00E+00	0.00E+00	0.00E+00	0.00E+00	0.00E+00
1512	ALL	753188.42	4036860.7	1.43E-07	70YrCancerDerived_InhSoilI	1.43E-07	0.00E+00	0.00E+00	0.00E+00	0.00E+00	0.00E+00	0.00E+00	0.00E+00	0.00E+00	0.00E+00	0.00E+00	0.00E+00
1513	ALL	753288.42	4036860.7	1.40E-07	70YrCancerDerived_InhSoilI	1.40E-07	0.00E+00	0.00E+00	0.00E+00	0.00E+00	0.00E+00	0.00E+00	0.00E+00	0.00E+00	0.00E+00	0.00E+00	0.00E+00
1514	ALL	753388.42	4036860.7	1.38E-07	70YrCancerDerived_InhSoilI	1.38E-07	0.00E+00	0.00E+00	0.00E+00	0.00E+00	0.00E+00	0.00E+00	0.00E+00	0.00E+00	0.00E+00	0.00E+00	0.00E+00
1515	ALL	753488.42	4036860.7	1.35E-07	70YrCancerDerived_InhSoilI	1.35E-07	0.00E+00	0.00E+00	0.00E+00	0.00E+00	0.00E+00	0.00E+00	0.00E+00	0.00E+00	0.00E+00	0.00E+00	0.00E+00
1516	ALL	753588.42	4036860.7	1.32E-07	70YrCancerDerived_InhSoilI	1.32E-07	0.00E+00	0.00E+00	0.00E+00	0.00E+00	0.00E+00	0.00E+00	0.00E+00	0.00E+00	0.00E+00	0.00E+00	0.00E+00
1517	ALL	753688.42	4036860.7	1.29E-07	70YrCancerDerived_InhSoilI	1.29E-07	0.00E+00	0.00E+00	0.00E+00	0.00E+00	0.00E+00	0.00E+00	0.00E+00	0.00E+00	0.00E+00	0.00E+00	0.00E+00
1518	ALL	753788.42	4036860.7	1.26E-07	70YrCancerDerived_InhSoilI	1.26E-07	0.00E+00	0.00E+00	0.00E+00	0.00E+00	0.00E+00	0.00E+00	0.00E+00	0.00E+00	0.00E+00	0.00E+00	0.00E+00
1519	ALL	753888.42	4036860.7	1.23E-07	70YrCancerDerived_InhSoilI	1.23E-07	0.00E+00	0.00E+00	0.00E+00	0.00E+00	0.00E+00	0.00E+00	0.00E+00	0.00E+00	0.00E+00	0.00E+00	0.00E+00
1520	ALL	753988.42	4036860.7	1.20E-07	70YrCancerDerived_InhSoilI	1.20E-07	0.00E+00	0.00E+00	0.00E+00	0.00E+00	0.00E+00	0.00E+00	0.00E+00	0.00E+00	0.00E+00	0.00E+00	0.00E+00
1521	ALL	754088.42	4036860.7	1.18E-07	70YrCancerDerived_InhSoilI	1.18E-07	0.00E+00	0.00E+00	0.00E+00	0.00E+00	0.00E+00	0.00E+00	0.00E+00	0.00E+00	0.00E+00	0.00E+00	0.00E+00
1522	ALL	754188.42	4036860.7	1.15E-07	70YrCancerDerived_InhSoilI	1.15E-07	0.00E+00	0.00E+00	0.00E+00	0.00E+00	0.00E+00	0.00E+00	0.00E+00	0.00E+00	0.00E+00	0.00E+00	0.00E+00
1523	ALL	754288.42	4036860.7	1.12E-07	70YrCancerDerived_InhSoilI	1.12E-07	0.00E+00	0.00E+00	0.00E+00	0.00E+00	0.00E+00	0.00E+00	0.00E+00	0.00E+00	0.00E+00	0.00E+00	0.00E+00
1524	ALL	754388.42	4036860.7	1.09E-07	70YrCancerDerived_InhSoilI	1.09E-07	0.00E+00	0.00E+00	0.00E+00	0.00E+00	0.00E+00	0.00E+00	0.00E+00	0.00E+00	0.00E+00	0.00E+00	0.00E+00
1525	ALL	754488.42	4036860.7	1.07E-07	70YrCancerDerived_InhSoilI	1.07E-07	0.00E+00	0.00E+00	0.00E+00	0.00E+00	0.00E+00	0.00E+00	0.00E+00	0.00E+00	0.00E+00	0.00E+00	0.00E+00
1526	ALL	754588.42	4036860.7	1.04E-07	70YrCancerDerived_InhSoilI	1.04E-07	0.00E+00	0.00E+00	0.00E+00	0.00E+00	0.00E+00	0.00E+00	0.00E+00	0.00E+00	0.00E+00	0.00E+00	0.00E+00
1527	ALL	754688.42	4036860.7	1.02E-07	70YrCancerDerived_InhSoilI	1.02E-07	0.00E+00	0.00E+00	0.00E+00	0.00E+00	0.00E+00	0.00E+00	0.00E+00	0.00E+00	0.00E+00	0.00E+00	0.00E+00
1528	ALL	754788.42	4036860.7	9.93E-08	70YrCancerDerived_InhSoilI	9.93E-08	0.00E+00	0.00E+00	0.00E+00	0.00E+00	0.00E+00	0.00E+00	0.00E+00	0.00E+00	0.00E+00	0.00E+00	0.00E+00
1529	ALL	754888.42	4036860.7	9.69E-08	70YrCancerDerived_InhSoilI	9.69E-08	0.00E+00	0.00E+00	0.00E+00	0.00E+00	0.00E+00	0.00E+00	0.00E+00	0.00E+00	0.00E+00	0.00E+00	0.00E+00
1530	ALL	754988.42	4036860.7	9.46E-08	70YrCancerDerived_InhSoilI	9.46E-08	0.00E+00	0.00E+00	0.00E+00	0.00E+00	0.00E+00	0.00E+00	0.00E+00	0.00E+00	0.00E+00	0.00E+00	0.00E+00
1531	ALL	755088.42	4036860.7	9.24E-08	70YrCancerDerived_InhSoilI	9.24E-08	0.00E+00	0.00E+00	0.00E+00	0.00E+00	0.00E+00	0.00E+00	0.00E+00	0.00E+00	0.00E+00	0.00E+00	0.00E+00
1532	ALL	755188.42	4036860.7	9.03E-08	70YrCancerDerived_InhSoilI	9.03E-08	0.00E+00	0.00E+00	0.00E+00	0.00E+00	0.00E+00	0.00E+00	0.00E+00	0.00E+00	0.00E+00	0.00E+00	0.00E+00
1533	ALL	755288.42	4036860.7	8.82E-08	70YrCancerDerived_InhSoilI	8.82E-08	0.00E+00	0.00E+00	0.00E+00	0.00E+00	0.00E+00	0.00E+00	0.00E+00	0.00E+00	0.00E+00	0.00E+00	0.00E+00
1534	ALL	746388.42	4036960.7	2.14E-07	70YrCancerDerived_InhSoilI	2.14E-07	0.00E+00	0.00E+00	0.00E+00	0.00E+00	0.00E+00	0.00E+00	0.00E+00	0.00E+00	0.00E+00	0.00E+00	0.00E+00
1535	ALL	746488.42	4036960.7	1.94E-07	70YrCancerDerived_InhSoilI	1.94E-07	0.00E+00	0.00E+00	0.00E+00	0.00E+00	0.00E+00	0.00E+00	0.00E+00	0.00E+00	0.00E+00	0.00E+00	0.00E+00
1536	ALL	746588.42	4036960.7	1.72E-07	70YrCancerDerived_InhSoilI	1.72E-07	0.00E+00	0.00E+00	0.00E+00	0.00E+00	0.00E+00	0.00E+00	0.00E+00	0.00E+00	0.00E+00	0.00E+00	0.00E+00
1537	ALL	747488.42	4036960.7	9.45E-08	70YrCancerDerived_InhSoilI	9.45E-08	0.00E+00	0.00E+00	0.00E+00	0.00E+00	0.00E+00	0.00E+00	0.00E+00	0.00E+00	0.00E+00	0.00E+00	0.00E+00
1538	ALL	747588.42	4036960.7	9.14E-08	70YrCancerDerived_InhSoilI	9.14E-08	0.00E+00	0.00E+00	0.00E+00	0.00E+00	0.00E+00	0.00E+00	0.00E+00	0.00E+00	0.00E+00	0.00E+00	0.00E+00
1539	ALL	747688.42	4036960.7	8.95E-08	70YrCancerDerived_InhSoilI	8.95E-08	0.00E+00	0.00E+00	0.00E+00	0.00E+00	0.00E+00	0.00E+00	0.00E+00	0.00E+00	0.00E+00	0.00E+00	0.00E+00
1540	ALL	747788.42	4036960.7	8.87E-08	70YrCancerDerived_InhSoilI	8.87E-08	0.00E+00	0.00E+00	0.00E+00	0.00E+00	0.00E+00	0.00E+00	0.00E+00	0.00E+00	0.00E+00	0.00E+00	0.00E+00
1541	ALL	747888.42	4036960.7	8.84E-08	70YrCancerDerived_InhSoilI	8.84E-08	0.00E+00	0.00E+00	0.00E+00	0.00E+00	0.00E+00	0.00E+00	0.00E+00	0.00E+00	0.00E+00	0.00E+00	0.00E+00
1542	ALL	747988.42	4036960.7	8.84E-08	70YrCancerDerived_InhSoilI	8.84E-08	0.00E+00	0.00E+00	0.00E+00	0.00E+00	0.00E+00	0.00E+00	0.00E+00	0.00E+00	0.00E+00	0.00E+00	0.00E+00
1543	ALL	748088.42	4036960.7	8.87E-08	70YrCancerDerived_InhSoilI	8.87E-08	0.00E+00	0.00E+00	0.00E+00	0.00E+00	0.00E+00	0.00E+00	0.00E+00	0.00E+00	0.00E+00	0.00E+00	0.00E+00
1544	ALL	748188.42	4036960.7	8.95E-08	70YrCancerDerived_InhSoilI	8.95E-08	0.00E+00	0.00E+00	0.00E+00	0.00E+00	0.00E+00	0.00E+00	0.00E+00	0.00E+00	0.00E+00	0.00E+00	0.00E+00
1545	ALL	749988.42	4036960.7	1.53E-07	70YrCancerDerived_InhSoilI	1.53E-07	0.00E+00	0.00E+00	0.00E+00	0.00E+00	0.00E+00	0.00E+00	0.00E+00	0.00E+00	0.00E+00	0.00E+00	0.00E+00
1546	ALL	750088.42	4036960.7	1.56E-07	70YrCancerDerived_InhSoilI	1.56E-07	0.00E+00	0.00E+00	0.00E+00	0.00E+00	0.00E+00	0.00E+00	0.00E+00	0.00E+00	0.00E+00	0.00E+00	0.00E+00
1547	ALL	750188.42	4036960.7	1.58E-07	70YrCancerDerived_InhSoilI	1.58E-07	0.00E+00	0.00E+00	0.00E+00	0.00E+00	0.00E+00	0.00E+00	0.00E+00	0.00E+00	0.00E+00	0.00E+00	0.00E+00
1548	ALL	750288.42	4036960.7	1.60E-07	70YrCancerDerived_InhSoilI	1.60E-07	0.00E+00	0.00E+00	0.00E+00	0.00E+00	0.00E+00	0.00E+00	0.00E+00	0.00E+00	0.00E+00	0.00E+00	0.00E+00
1549	ALL	752388.42	4036960.7	1.63E-07	70YrCancerDerived_InhSoilI	1.63E-07	0.00E+00	0.00E+00	0.00E+00	0.00E+00	0.00E+00	0.00E+00	0.00E+00	0.00E+00	0.00E+00	0.00E+00	0.00E+00
1550	ALL	752488.42	4036960.7	1.61E-07	70YrCancerDerived_InhSoilI	1.61E-07	0.00E+00	0.00E+00	0.00E+00	0.00E+00	0.00E+00	0.00E+00	0.00E+00	0.00E+00	0.00E+00	0.00E+00	0.00E+00
1551	ALL	752588.42	4036960.7	1.59E-07	70YrCancerDerived_InhSoilI	1.59E-07	0.00E+00	0.00E+00	0.00E+00	0.00E+00	0.00E+00	0.00E+00	0.00E+00	0.00E+00	0.00E+00	0.00E+00	0.00E+00
1552	ALL	752688.42	4036960.7	1.57E-07	70YrCancerDerived_InhSoilI	1.57E-07	0.00E+00	0.00E+00	0.00E+00	0.00E+00	0.00E+00	0.00E+00	0.00E+00	0.00E+00	0.00E+00	0.00E+00	0.00E+00
1553	ALL	752788.42	4036960.7	1.54E-07	70YrCancerDerived_InhSoilI	1.54E-07	0.00E+00	0.00E+00	0.00E+00	0.00E+00	0.00E+00	0.00E+00	0.00E+00	0.00E+00	0.00E+00	0.00E+00	0.00E+00
1554	ALL	754888.42	4036960.7	9.55E-08	70YrCancerDerived_InhSoilI	9.55E-08	0.00E+00	0.00E+00	0.00E+00	0.00E+00	0.00E+00	0.00E+00	0.00E+00	0.00E+00	0.00E+00	0.00E+00	0.00E+00
1555	ALL	754988.42	4036960.7	9.32E-08	70YrCancerDerived_InhSoilI	9.32E-08	0.00E+00	0.00E+00	0.00E+00	0.00E+00	0.00E+00	0.00E+00	0.00E+00	0.00E+00	0.00E+00	0.00E+00	0.00E+00
1556	ALL	755088.42	4036960.7	9.09E-08	70YrCancerDerived_InhSoilI	9.09E-08	0.00E+00	0.00E+00	0.00E+00	0.00E+00	0.00E+00	0.00E+00	0.00E+00	0.00E+00	0.00E+00	0.00E+00	0.00E+00
1557	ALL	755188.42	4036960.7	8.88E-08	70YrCancerDerived_InhSoilI	8.88E-08	0.00E+00	0.00E+00	0.00E+00	0.00E+00	0.00E+00	0.00E+00	0.00E+00	0.00E+00	0.00E+00	0.00E+00	0.00E+00
1558	ALL	755288.42	4036960.7	8.67E-08	70YrCancerDerived_InhSoilI	8.67E-08	0.00E+00	0.00E+00	0.00E+00	0.00E+00	0.00E+00	0.00E+00	0.00E+00	0.00E+00	0.00E+00	0.00E+00	0.00E+00
1559	ALL	746388.42	4037060.7	1.78E-07	70YrCancerDerived_InhSoilI	1.78E-07	0.00E+00	0.00E+00	0.00E+00	0.00E+00	0.00E+00	0.00E+00	0.00E+00	0.00E+00	0.00E+00	0.00E+00	0.00E+00
1560	ALL	746488.42	4037060.7	1.61E-07	70YrCancerDerived_InhSoilI	1.61E-07	0.00E+00	0.00E+00	0.00E+00	0.00E+00	0.00E+00	0.00E+00	0.00E+00	0.00E+00	0.00E+00	0.00E+00	0.00E+00
1561	ALL	746588.42	4037060.7	1.45E-07	70YrCancerDerived_InhSoilI	1.45E-07	0.00E+00	0.00E+00	0.00E+00	0.00E+00	0.00E+00	0.00E+00	0.00E+00	0.00E+00	0.00E+00	0.00E+00	0.00E+00
1562	ALL	747488.42	4037060.7	8.96E-08	70YrCancerDerived_InhSoilI	8.96E-08	0.00E+00	0.00E+00	0.00E+00	0.00E+00	0.00E+00	0.00E+00	0.00E+00	0.00E+00	0.00E+00	0.00E+00	0.00E+00
1563	ALL	747588.42	4037060.7	8.73E-08	70YrCancerDerived_InhSoilI	8.73E-08	0.00E+00	0.00E+00	0.00E+00	0.00E+00	0.00E+00	0.00E+00	0.00E+00	0.00E+00	0.00E+00	0.00E+00	0.00E+00
1564	ALL	747688.42	4037060.7	8.55E-08	70YrCancerDerived_InhSoilI	8.55E-08	0.00E+00	0.00E+00	0.00E+00	0.00E+00	0.00E+00	0.00E+00	0.00E+00	0.00E+00	0.00E+00	0.00E+00	0.00E+00
1565	ALL	747788.42	4037060.7	8.46E-08	70YrCancerDerived_InhSoilI	8.46E-08	0.00E+00	0.00E+00	0.00E+00	0.00E+00	0.00E+00	0.00E+00	0.00E+00	0.00E+00	0.00E+00	0.00E+00	0.00E+00
1566	ALL	747888.42	4037060.7	8.44E-08	70YrCancerDerived_InhSoilI	8.44E-08	0.00E+00	0.00E+00	0.00E+00	0.00E+00	0.00E+00	0.00E+00	0.00E+00	0.00E+00	0.00E+00	0.00E+00	0.00E+00

1567	ALL	747988.42	4037060.7	8.43E-08	70YrCancerDerived_InhSoil[	8.43E-08	0.00E+00	0.00E+00	0.00E+00	0.00E+00	0.00E+00	0.00E+00	0.00E+00	0.00E+00	0.00E+00	0.00E+00	0.00E+00
1568	ALL	748088.42	4037060.7	8.45E-08	70YrCancerDerived_InhSoil[	8.45E-08	0.00E+00	0.00E+00	0.00E+00	0.00E+00	0.00E+00	0.00E+00	0.00E+00	0.00E+00	0.00E+00	0.00E+00	0.00E+00
1569	ALL	748188.42	4037060.7	8.51E-08	70YrCancerDerived_InhSoil[	8.51E-08	0.00E+00	0.00E+00	0.00E+00	0.00E+00	0.00E+00	0.00E+00	0.00E+00	0.00E+00	0.00E+00	0.00E+00	0.00E+00
1570	ALL	749988.42	4037060.7	1.56E-07	70YrCancerDerived_InhSoil[	1.56E-07	0.00E+00	0.00E+00	0.00E+00	0.00E+00	0.00E+00	0.00E+00	0.00E+00	0.00E+00	0.00E+00	0.00E+00	0.00E+00
1571	ALL	750088.42	4037060.7	1.59E-07	70YrCancerDerived_InhSoil[	1.59E-07	0.00E+00	0.00E+00	0.00E+00	0.00E+00	0.00E+00	0.00E+00	0.00E+00	0.00E+00	0.00E+00	0.00E+00	0.00E+00
1572	ALL	750188.42	4037060.7	1.62E-07	70YrCancerDerived_InhSoil[	1.62E-07	0.00E+00	0.00E+00	0.00E+00	0.00E+00	0.00E+00	0.00E+00	0.00E+00	0.00E+00	0.00E+00	0.00E+00	0.00E+00
1573	ALL	750288.42	4037060.7	1.64E-07	70YrCancerDerived_InhSoil[	1.64E-07	0.00E+00	0.00E+00	0.00E+00	0.00E+00	0.00E+00	0.00E+00	0.00E+00	0.00E+00	0.00E+00	0.00E+00	0.00E+00
1574	ALL	752388.42	4037060.7	1.66E-07	70YrCancerDerived_InhSoil[	1.66E-07	0.00E+00	0.00E+00	0.00E+00	0.00E+00	0.00E+00	0.00E+00	0.00E+00	0.00E+00	0.00E+00	0.00E+00	0.00E+00
1575	ALL	752488.42	4037060.7	1.64E-07	70YrCancerDerived_InhSoil[	1.64E-07	0.00E+00	0.00E+00	0.00E+00	0.00E+00	0.00E+00	0.00E+00	0.00E+00	0.00E+00	0.00E+00	0.00E+00	0.00E+00
1576	ALL	752588.42	4037060.7	1.61E-07	70YrCancerDerived_InhSoil[	1.61E-07	0.00E+00	0.00E+00	0.00E+00	0.00E+00	0.00E+00	0.00E+00	0.00E+00	0.00E+00	0.00E+00	0.00E+00	0.00E+00
1577	ALL	752688.42	4037060.7	1.58E-07	70YrCancerDerived_InhSoil[	1.58E-07	0.00E+00	0.00E+00	0.00E+00	0.00E+00	0.00E+00	0.00E+00	0.00E+00	0.00E+00	0.00E+00	0.00E+00	0.00E+00
1578	ALL	752788.42	4037060.7	1.56E-07	70YrCancerDerived_InhSoil[	1.56E-07	0.00E+00	0.00E+00	0.00E+00	0.00E+00	0.00E+00	0.00E+00	0.00E+00	0.00E+00	0.00E+00	0.00E+00	0.00E+00
1579	ALL	754888.42	4037060.7	9.40E-08	70YrCancerDerived_InhSoil[	9.40E-08	0.00E+00	0.00E+00	0.00E+00	0.00E+00	0.00E+00	0.00E+00	0.00E+00	0.00E+00	0.00E+00	0.00E+00	0.00E+00
1580	ALL	754988.42	4037060.7	9.17E-08	70YrCancerDerived_InhSoil[	9.17E-08	0.00E+00	0.00E+00	0.00E+00	0.00E+00	0.00E+00	0.00E+00	0.00E+00	0.00E+00	0.00E+00	0.00E+00	0.00E+00
1581	ALL	755088.42	4037060.7	8.95E-08	70YrCancerDerived_InhSoil[	8.95E-08	0.00E+00	0.00E+00	0.00E+00	0.00E+00	0.00E+00	0.00E+00	0.00E+00	0.00E+00	0.00E+00	0.00E+00	0.00E+00
1582	ALL	755188.42	4037060.7	8.74E-08	70YrCancerDerived_InhSoil[	8.74E-08	0.00E+00	0.00E+00	0.00E+00	0.00E+00	0.00E+00	0.00E+00	0.00E+00	0.00E+00	0.00E+00	0.00E+00	0.00E+00
1583	ALL	755288.42	4037060.7	8.54E-08	70YrCancerDerived_InhSoil[	8.54E-08	0.00E+00	0.00E+00	0.00E+00	0.00E+00	0.00E+00	0.00E+00	0.00E+00	0.00E+00	0.00E+00	0.00E+00	0.00E+00
1584	ALL	746388.42	4037160.7	1.51E-07	70YrCancerDerived_InhSoil[	1.51E-07	0.00E+00	0.00E+00	0.00E+00	0.00E+00	0.00E+00	0.00E+00	0.00E+00	0.00E+00	0.00E+00	0.00E+00	0.00E+00
1585	ALL	746488.42	4037160.7	1.38E-07	70YrCancerDerived_InhSoil[	1.38E-07	0.00E+00	0.00E+00	0.00E+00	0.00E+00	0.00E+00	0.00E+00	0.00E+00	0.00E+00	0.00E+00	0.00E+00	0.00E+00
1586	ALL	746588.42	4037160.7	1.26E-07	70YrCancerDerived_InhSoil[	1.26E-07	0.00E+00	0.00E+00	0.00E+00	0.00E+00	0.00E+00	0.00E+00	0.00E+00	0.00E+00	0.00E+00	0.00E+00	0.00E+00
1587	ALL	747488.42	4037160.7	8.58E-08	70YrCancerDerived_InhSoil[	8.58E-08	0.00E+00	0.00E+00	0.00E+00	0.00E+00	0.00E+00	0.00E+00	0.00E+00	0.00E+00	0.00E+00	0.00E+00	0.00E+00
1588	ALL	747588.42	4037160.7	8.42E-08	70YrCancerDerived_InhSoil[	8.42E-08	0.00E+00	0.00E+00	0.00E+00	0.00E+00	0.00E+00	0.00E+00	0.00E+00	0.00E+00	0.00E+00	0.00E+00	0.00E+00
1589	ALL	747688.42	4037160.7	8.26E-08	70YrCancerDerived_InhSoil[	8.26E-08	0.00E+00	0.00E+00	0.00E+00	0.00E+00	0.00E+00	0.00E+00	0.00E+00	0.00E+00	0.00E+00	0.00E+00	0.00E+00
1590	ALL	747788.42	4037160.7	8.17E-08	70YrCancerDerived_InhSoil[	8.17E-08	0.00E+00	0.00E+00	0.00E+00	0.00E+00	0.00E+00	0.00E+00	0.00E+00	0.00E+00	0.00E+00	0.00E+00	0.00E+00
1591	ALL	747888.42	4037160.7	8.14E-08	70YrCancerDerived_InhSoil[	8.14E-08	0.00E+00	0.00E+00	0.00E+00	0.00E+00	0.00E+00	0.00E+00	0.00E+00	0.00E+00	0.00E+00	0.00E+00	0.00E+00
1592	ALL	747988.42	4037160.7	8.14E-08	70YrCancerDerived_InhSoil[	8.14E-08	0.00E+00	0.00E+00	0.00E+00	0.00E+00	0.00E+00	0.00E+00	0.00E+00	0.00E+00	0.00E+00	0.00E+00	0.00E+00
1593	ALL	748088.42	4037160.7	8.15E-08	70YrCancerDerived_InhSoil[	8.15E-08	0.00E+00	0.00E+00	0.00E+00	0.00E+00	0.00E+00	0.00E+00	0.00E+00	0.00E+00	0.00E+00	0.00E+00	0.00E+00
1594	ALL	748188.42	4037160.7	8.19E-08	70YrCancerDerived_InhSoil[	8.19E-08	0.00E+00	0.00E+00	0.00E+00	0.00E+00	0.00E+00	0.00E+00	0.00E+00	0.00E+00	0.00E+00	0.00E+00	0.00E+00
1595	ALL	749988.42	4037160.7	1.60E-07	70YrCancerDerived_InhSoil[	1.60E-07	0.00E+00	0.00E+00	0.00E+00	0.00E+00	0.00E+00	0.00E+00	0.00E+00	0.00E+00	0.00E+00	0.00E+00	0.00E+00
1596	ALL	750088.42	4037160.7	1.64E-07	70YrCancerDerived_InhSoil[	1.64E-07	0.00E+00	0.00E+00	0.00E+00	0.00E+00	0.00E+00	0.00E+00	0.00E+00	0.00E+00	0.00E+00	0.00E+00	0.00E+00
1597	ALL	750188.42	4037160.7	1.66E-07	70YrCancerDerived_InhSoil[	1.66E-07	0.00E+00	0.00E+00	0.00E+00	0.00E+00	0.00E+00	0.00E+00	0.00E+00	0.00E+00	0.00E+00	0.00E+00	0.00E+00
1598	ALL	750288.42	4037160.7	1.69E-07	70YrCancerDerived_InhSoil[	1.69E-07	0.00E+00	0.00E+00	0.00E+00	0.00E+00	0.00E+00	0.00E+00	0.00E+00	0.00E+00	0.00E+00	0.00E+00	0.00E+00
1599	ALL	752388.42	4037160.7	1.68E-07	70YrCancerDerived_InhSoil[	1.68E-07	0.00E+00	0.00E+00	0.00E+00	0.00E+00	0.00E+00	0.00E+00	0.00E+00	0.00E+00	0.00E+00	0.00E+00	0.00E+00
1600	ALL	752488.42	4037160.7	1.66E-07	70YrCancerDerived_InhSoil[	1.66E-07	0.00E+00	0.00E+00	0.00E+00	0.00E+00	0.00E+00	0.00E+00	0.00E+00	0.00E+00	0.00E+00	0.00E+00	0.00E+00
1601	ALL	752588.42	4037160.7	1.63E-07	70YrCancerDerived_InhSoil[	1.63E-07	0.00E+00	0.00E+00	0.00E+00	0.00E+00	0.00E+00	0.00E+00	0.00E+00	0.00E+00	0.00E+00	0.00E+00	0.00E+00
1602	ALL	752688.42	4037160.7	1.60E-07	70YrCancerDerived_InhSoil[	1.60E-07	0.00E+00	0.00E+00	0.00E+00	0.00E+00	0.00E+00	0.00E+00	0.00E+00	0.00E+00	0.00E+00	0.00E+00	0.00E+00
1603	ALL	752788.42	4037160.7	1.57E-07	70YrCancerDerived_InhSoil[	1.57E-07	0.00E+00	0.00E+00	0.00E+00	0.00E+00	0.00E+00	0.00E+00	0.00E+00	0.00E+00	0.00E+00	0.00E+00	0.00E+00
1604	ALL	754888.42	4037160.7	9.25E-08	70YrCancerDerived_InhSoil[	9.25E-08	0.00E+00	0.00E+00	0.00E+00	0.00E+00	0.00E+00	0.00E+00	0.00E+00	0.00E+00	0.00E+00	0.00E+00	0.00E+00
1605	ALL	754988.42	4037160.7	9.02E-08	70YrCancerDerived_InhSoil[	9.02E-08	0.00E+00	0.00E+00	0.00E+00	0.00E+00	0.00E+00	0.00E+00	0.00E+00	0.00E+00	0.00E+00	0.00E+00	0.00E+00
1606	ALL	755088.42	4037160.7	8.81E-08	70YrCancerDerived_InhSoil[	8.81E-08	0.00E+00	0.00E+00	0.00E+00	0.00E+00	0.00E+00	0.00E+00	0.00E+00	0.00E+00	0.00E+00	0.00E+00	0.00E+00
1607	ALL	755188.42	4037160.7	8.60E-08	70YrCancerDerived_InhSoil[	8.60E-08	0.00E+00	0.00E+00	0.00E+00	0.00E+00	0.00E+00	0.00E+00	0.00E+00	0.00E+00	0.00E+00	0.00E+00	0.00E+00
1608	ALL	755288.42	4037160.7	8.41E-08	70YrCancerDerived_InhSoil[	8.41E-08	0.00E+00	0.00E+00	0.00E+00	0.00E+00	0.00E+00	0.00E+00	0.00E+00	0.00E+00	0.00E+00	0.00E+00	0.00E+00
1609	ALL	746388.42	4037260.7	1.31E-07	70YrCancerDerived_InhSoil[	1.31E-07	0.00E+00	0.00E+00	0.00E+00	0.00E+00	0.00E+00	0.00E+00	0.00E+00	0.00E+00	0.00E+00	0.00E+00	0.00E+00
1610	ALL	746488.42	4037260.7	1.21E-07	70YrCancerDerived_InhSoil[	1.21E-07	0.00E+00	0.00E+00	0.00E+00	0.00E+00	0.00E+00	0.00E+00	0.00E+00	0.00E+00	0.00E+00	0.00E+00	0.00E+00
1611	ALL	746588.42	4037260.7	1.14E-07	70YrCancerDerived_InhSoil[	1.14E-07	0.00E+00	0.00E+00	0.00E+00	0.00E+00	0.00E+00	0.00E+00	0.00E+00	0.00E+00	0.00E+00	0.00E+00	0.00E+00
1612	ALL	747488.42	4037260.7	8.26E-08	70YrCancerDerived_InhSoil[	8.26E-08	0.00E+00	0.00E+00	0.00E+00	0.00E+00	0.00E+00	0.00E+00	0.00E+00	0.00E+00	0.00E+00	0.00E+00	0.00E+00
1613	ALL	747588.42	4037260.7	8.17E-08	70YrCancerDerived_InhSoil[	8.17E-08	0.00E+00	0.00E+00	0.00E+00	0.00E+00	0.00E+00	0.00E+00	0.00E+00	0.00E+00	0.00E+00	0.00E+00	0.00E+00
1614	ALL	747688.42	4037260.7	8.05E-08	70YrCancerDerived_InhSoil[	8.05E-08	0.00E+00	0.00E+00	0.00E+00	0.00E+00	0.00E+00	0.00E+00	0.00E+00	0.00E+00	0.00E+00	0.00E+00	0.00E+00
1615	ALL	747788.42	4037260.7	7.97E-08	70YrCancerDerived_InhSoil[	7.97E-08	0.00E+00	0.00E+00	0.00E+00	0.00E+00	0.00E+00	0.00E+00	0.00E+00	0.00E+00	0.00E+00	0.00E+00	0.00E+00
1616	ALL	747888.42	4037260.7	7.93E-08	70YrCancerDerived_InhSoil[	7.93E-08	0.00E+00	0.00E+00	0.00E+00	0.00E+00	0.00E+00	0.00E+00	0.00E+00	0.00E+00	0.00E+00	0.00E+00	0.00E+00
1617	ALL	747988.42	4037260.7	7.92E-08	70YrCancerDerived_InhSoil[	7.92E-08	0.00E+00	0.00E+00	0.00E+00	0.00E+00	0.00E+00	0.00E+00	0.00E+00	0.00E+00	0.00E+00	0.00E+00	0.00E+00
1618	ALL	748088.42	4037260.7	7.93E-08	70YrCancerDerived_InhSoil[	7.93E-08	0.00E+00	0.00E+00	0.00E+00	0.00E+00	0.00E+00	0.00E+00	0.00E+00	0.00E+00	0.00E+00	0.00E+00	0.00E+00
1619	ALL	748188.42	4037260.7	7.96E-08	70YrCancerDerived_InhSoil[	7.96E-08	0.00E+00	0.00E+00	0.00E+00	0.00E+00	0.00E+00	0.00E+00	0.00E+00	0.00E+00	0.00E+00	0.00E+00	0.00E+00
1620	ALL	749988.42	4037260.7	1.66E-07	70YrCancerDerived_InhSoil[	1.66E-07	0.00E+00	0.00E+00	0.00E+00	0.00E+00	0.00E+00	0.00E+00	0.00E+00	0.00E+00	0.00E+00	0.00E+00	0.00E+00
1621	ALL	750088.42	4037260.7	1.69E-07	70YrCancerDerived_InhSoil[	1.69E-07	0.00E+00	0.00E+00	0.00E+00	0.00E+00	0.00E+00	0.00E+00	0.00E+00	0.00E+00	0.00E+00	0.00E+00	0.00E+00
1622	ALL	750188.42	4037260.7	1.72E-07	70YrCancerDerived_InhSoil[	1.72E-07	0.00E+00	0.00E+00	0.00E+00	0.00E+00	0.00E+00	0.00E+00	0.00E+00	0.00E+00	0.00E+00	0.00E+00	0.00E+00

1623	ALL	750288.42	4037260.7	1.74E-07	70YrCancerDerived_InhSoil[	1.74E-07	0.00E+00	0.00E+00	0.00E+00	0.00E+00	0.00E+00	0.00E+00	0.00E+00	0.00E+00	0.00E+00	0.00E+00	0.00E+00
1624	ALL	752388.42	4037260.7	1.71E-07	70YrCancerDerived_InhSoil[	1.71E-07	0.00E+00	0.00E+00	0.00E+00	0.00E+00	0.00E+00	0.00E+00	0.00E+00	0.00E+00	0.00E+00	0.00E+00	0.00E+00
1625	ALL	752488.42	4037260.7	1.67E-07	70YrCancerDerived_InhSoil[	1.67E-07	0.00E+00	0.00E+00	0.00E+00	0.00E+00	0.00E+00	0.00E+00	0.00E+00	0.00E+00	0.00E+00	0.00E+00	0.00E+00
1626	ALL	752588.42	4037260.7	1.64E-07	70YrCancerDerived_InhSoil[	1.64E-07	0.00E+00	0.00E+00	0.00E+00	0.00E+00	0.00E+00	0.00E+00	0.00E+00	0.00E+00	0.00E+00	0.00E+00	0.00E+00
1627	ALL	752688.42	4037260.7	1.61E-07	70YrCancerDerived_InhSoil[	1.61E-07	0.00E+00	0.00E+00	0.00E+00	0.00E+00	0.00E+00	0.00E+00	0.00E+00	0.00E+00	0.00E+00	0.00E+00	0.00E+00
1628	ALL	752788.42	4037260.7	1.57E-07	70YrCancerDerived_InhSoil[	1.57E-07	0.00E+00	0.00E+00	0.00E+00	0.00E+00	0.00E+00	0.00E+00	0.00E+00	0.00E+00	0.00E+00	0.00E+00	0.00E+00
1629	ALL	754888.42	4037260.7	9.10E-08	70YrCancerDerived_InhSoil[	9.10E-08	0.00E+00	0.00E+00	0.00E+00	0.00E+00	0.00E+00	0.00E+00	0.00E+00	0.00E+00	0.00E+00	0.00E+00	0.00E+00
1630	ALL	754988.42	4037260.7	8.88E-08	70YrCancerDerived_InhSoil[	8.88E-08	0.00E+00	0.00E+00	0.00E+00	0.00E+00	0.00E+00	0.00E+00	0.00E+00	0.00E+00	0.00E+00	0.00E+00	0.00E+00
1631	ALL	755088.42	4037260.7	8.67E-08	70YrCancerDerived_InhSoil[	8.67E-08	0.00E+00	0.00E+00	0.00E+00	0.00E+00	0.00E+00	0.00E+00	0.00E+00	0.00E+00	0.00E+00	0.00E+00	0.00E+00
1632	ALL	755188.42	4037260.7	8.47E-08	70YrCancerDerived_InhSoil[	8.47E-08	0.00E+00	0.00E+00	0.00E+00	0.00E+00	0.00E+00	0.00E+00	0.00E+00	0.00E+00	0.00E+00	0.00E+00	0.00E+00
1633	ALL	755288.42	4037260.7	8.27E-08	70YrCancerDerived_InhSoil[	8.27E-08	0.00E+00	0.00E+00	0.00E+00	0.00E+00	0.00E+00	0.00E+00	0.00E+00	0.00E+00	0.00E+00	0.00E+00	0.00E+00
1634	ALL	746388.42	4037360.7	1.16E-07	70YrCancerDerived_InhSoil[	1.16E-07	0.00E+00	0.00E+00	0.00E+00	0.00E+00	0.00E+00	0.00E+00	0.00E+00	0.00E+00	0.00E+00	0.00E+00	0.00E+00
1635	ALL	746488.42	4037360.7	1.09E-07	70YrCancerDerived_InhSoil[	1.09E-07	0.00E+00	0.00E+00	0.00E+00	0.00E+00	0.00E+00	0.00E+00	0.00E+00	0.00E+00	0.00E+00	0.00E+00	0.00E+00
1636	ALL	746588.42	4037360.7	1.04E-07	70YrCancerDerived_InhSoil[	1.04E-07	0.00E+00	0.00E+00	0.00E+00	0.00E+00	0.00E+00	0.00E+00	0.00E+00	0.00E+00	0.00E+00	0.00E+00	0.00E+00
1637	ALL	747488.42	4037360.7	7.99E-08	70YrCancerDerived_InhSoil[	7.99E-08	0.00E+00	0.00E+00	0.00E+00	0.00E+00	0.00E+00	0.00E+00	0.00E+00	0.00E+00	0.00E+00	0.00E+00	0.00E+00
1638	ALL	747588.42	4037360.7	7.97E-08	70YrCancerDerived_InhSoil[	7.97E-08	0.00E+00	0.00E+00	0.00E+00	0.00E+00	0.00E+00	0.00E+00	0.00E+00	0.00E+00	0.00E+00	0.00E+00	0.00E+00
1639	ALL	747688.42	4037360.7	7.90E-08	70YrCancerDerived_InhSoil[	7.90E-08	0.00E+00	0.00E+00	0.00E+00	0.00E+00	0.00E+00	0.00E+00	0.00E+00	0.00E+00	0.00E+00	0.00E+00	0.00E+00
1640	ALL	747788.42	4037360.7	7.83E-08	70YrCancerDerived_InhSoil[	7.83E-08	0.00E+00	0.00E+00	0.00E+00	0.00E+00	0.00E+00	0.00E+00	0.00E+00	0.00E+00	0.00E+00	0.00E+00	0.00E+00
1641	ALL	747888.42	4037360.7	7.78E-08	70YrCancerDerived_InhSoil[	7.78E-08	0.00E+00	0.00E+00	0.00E+00	0.00E+00	0.00E+00	0.00E+00	0.00E+00	0.00E+00	0.00E+00	0.00E+00	0.00E+00
1642	ALL	747988.42	4037360.7	7.77E-08	70YrCancerDerived_InhSoil[	7.77E-08	0.00E+00	0.00E+00	0.00E+00	0.00E+00	0.00E+00	0.00E+00	0.00E+00	0.00E+00	0.00E+00	0.00E+00	0.00E+00
1643	ALL	748088.42	4037360.7	7.77E-08	70YrCancerDerived_InhSoil[	7.77E-08	0.00E+00	0.00E+00	0.00E+00	0.00E+00	0.00E+00	0.00E+00	0.00E+00	0.00E+00	0.00E+00	0.00E+00	0.00E+00
1644	ALL	748188.42	4037360.7	7.80E-08	70YrCancerDerived_InhSoil[	7.80E-08	0.00E+00	0.00E+00	0.00E+00	0.00E+00	0.00E+00	0.00E+00	0.00E+00	0.00E+00	0.00E+00	0.00E+00	0.00E+00
1645	ALL	749888.42	4037360.7	1.68E-07	70YrCancerDerived_InhSoil[	1.68E-07	0.00E+00	0.00E+00	0.00E+00	0.00E+00	0.00E+00	0.00E+00	0.00E+00	0.00E+00	0.00E+00	0.00E+00	0.00E+00
1646	ALL	749988.42	4037360.7	1.72E-07	70YrCancerDerived_InhSoil[	1.72E-07	0.00E+00	0.00E+00	0.00E+00	0.00E+00	0.00E+00	0.00E+00	0.00E+00	0.00E+00	0.00E+00	0.00E+00	0.00E+00
1647	ALL	750088.42	4037360.7	1.75E-07	70YrCancerDerived_InhSoil[	1.75E-07	0.00E+00	0.00E+00	0.00E+00	0.00E+00	0.00E+00	0.00E+00	0.00E+00	0.00E+00	0.00E+00	0.00E+00	0.00E+00
1648	ALL	750188.42	4037360.7	1.78E-07	70YrCancerDerived_InhSoil[	1.78E-07	0.00E+00	0.00E+00	0.00E+00	0.00E+00	0.00E+00	0.00E+00	0.00E+00	0.00E+00	0.00E+00	0.00E+00	0.00E+00
1649	ALL	750288.42	4037360.7	1.81E-07	70YrCancerDerived_InhSoil[	1.81E-07	0.00E+00	0.00E+00	0.00E+00	0.00E+00	0.00E+00	0.00E+00	0.00E+00	0.00E+00	0.00E+00	0.00E+00	0.00E+00
1650	ALL	752388.42	4037360.7	1.72E-07	70YrCancerDerived_InhSoil[	1.72E-07	0.00E+00	0.00E+00	0.00E+00	0.00E+00	0.00E+00	0.00E+00	0.00E+00	0.00E+00	0.00E+00	0.00E+00	0.00E+00
1651	ALL	752488.42	4037360.7	1.69E-07	70YrCancerDerived_InhSoil[	1.69E-07	0.00E+00	0.00E+00	0.00E+00	0.00E+00	0.00E+00	0.00E+00	0.00E+00	0.00E+00	0.00E+00	0.00E+00	0.00E+00
1652	ALL	752588.42	4037360.7	1.65E-07	70YrCancerDerived_InhSoil[	1.65E-07	0.00E+00	0.00E+00	0.00E+00	0.00E+00	0.00E+00	0.00E+00	0.00E+00	0.00E+00	0.00E+00	0.00E+00	0.00E+00
1653	ALL	752688.42	4037360.7	1.61E-07	70YrCancerDerived_InhSoil[	1.61E-07	0.00E+00	0.00E+00	0.00E+00	0.00E+00	0.00E+00	0.00E+00	0.00E+00	0.00E+00	0.00E+00	0.00E+00	0.00E+00
1654	ALL	752788.42	4037360.7	1.58E-07	70YrCancerDerived_InhSoil[	1.58E-07	0.00E+00	0.00E+00	0.00E+00	0.00E+00	0.00E+00	0.00E+00	0.00E+00	0.00E+00	0.00E+00	0.00E+00	0.00E+00
1655	ALL	754888.42	4037360.7	8.95E-08	70YrCancerDerived_InhSoil[	8.95E-08	0.00E+00	0.00E+00	0.00E+00	0.00E+00	0.00E+00	0.00E+00	0.00E+00	0.00E+00	0.00E+00	0.00E+00	0.00E+00
1656	ALL	754988.42	4037360.7	8.73E-08	70YrCancerDerived_InhSoil[	8.73E-08	0.00E+00	0.00E+00	0.00E+00	0.00E+00	0.00E+00	0.00E+00	0.00E+00	0.00E+00	0.00E+00	0.00E+00	0.00E+00
1657	ALL	755088.42	4037360.7	8.53E-08	70YrCancerDerived_InhSoil[	8.53E-08	0.00E+00	0.00E+00	0.00E+00	0.00E+00	0.00E+00	0.00E+00	0.00E+00	0.00E+00	0.00E+00	0.00E+00	0.00E+00
1658	ALL	755188.42	4037360.7	8.33E-08	70YrCancerDerived_InhSoil[	8.33E-08	0.00E+00	0.00E+00	0.00E+00	0.00E+00	0.00E+00	0.00E+00	0.00E+00	0.00E+00	0.00E+00	0.00E+00	0.00E+00
1659	ALL	755288.42	4037360.7	8.14E-08	70YrCancerDerived_InhSoil[	8.14E-08	0.00E+00	0.00E+00	0.00E+00	0.00E+00	0.00E+00	0.00E+00	0.00E+00	0.00E+00	0.00E+00	0.00E+00	0.00E+00
1660	ALL	746388.42	4037460.7	1.06E-07	70YrCancerDerived_InhSoil[	1.06E-07	0.00E+00	0.00E+00	0.00E+00	0.00E+00	0.00E+00	0.00E+00	0.00E+00	0.00E+00	0.00E+00	0.00E+00	0.00E+00
1661	ALL	746488.42	4037460.7	1.01E-07	70YrCancerDerived_InhSoil[	1.01E-07	0.00E+00	0.00E+00	0.00E+00	0.00E+00	0.00E+00	0.00E+00	0.00E+00	0.00E+00	0.00E+00	0.00E+00	0.00E+00
1662	ALL	746588.42	4037460.7	9.75E-08	70YrCancerDerived_InhSoil[	9.75E-08	0.00E+00	0.00E+00	0.00E+00	0.00E+00	0.00E+00	0.00E+00	0.00E+00	0.00E+00	0.00E+00	0.00E+00	0.00E+00
1663	ALL	747488.42	4037460.7	7.76E-08	70YrCancerDerived_InhSoil[	7.76E-08	0.00E+00	0.00E+00	0.00E+00	0.00E+00	0.00E+00	0.00E+00	0.00E+00	0.00E+00	0.00E+00	0.00E+00	0.00E+00
1664	ALL	747588.42	4037460.7	7.81E-08	70YrCancerDerived_InhSoil[	7.81E-08	0.00E+00	0.00E+00	0.00E+00	0.00E+00	0.00E+00	0.00E+00	0.00E+00	0.00E+00	0.00E+00	0.00E+00	0.00E+00
1665	ALL	747688.42	4037460.7	7.79E-08	70YrCancerDerived_InhSoil[	7.79E-08	0.00E+00	0.00E+00	0.00E+00	0.00E+00	0.00E+00	0.00E+00	0.00E+00	0.00E+00	0.00E+00	0.00E+00	0.00E+00
1666	ALL	747788.42	4037460.7	7.74E-08	70YrCancerDerived_InhSoil[	7.74E-08	0.00E+00	0.00E+00	0.00E+00	0.00E+00	0.00E+00	0.00E+00	0.00E+00	0.00E+00	0.00E+00	0.00E+00	0.00E+00
1667	ALL	747888.42	4037460.7	7.70E-08	70YrCancerDerived_InhSoil[	7.70E-08	0.00E+00	0.00E+00	0.00E+00	0.00E+00	0.00E+00	0.00E+00	0.00E+00	0.00E+00	0.00E+00	0.00E+00	0.00E+00
1668	ALL	747988.42	4037460.7	7.67E-08	70YrCancerDerived_InhSoil[	7.67E-08	0.00E+00	0.00E+00	0.00E+00	0.00E+00	0.00E+00	0.00E+00	0.00E+00	0.00E+00	0.00E+00	0.00E+00	0.00E+00
1669	ALL	748088.42	4037460.7	7.66E-08	70YrCancerDerived_InhSoil[	7.66E-08	0.00E+00	0.00E+00	0.00E+00	0.00E+00	0.00E+00	0.00E+00	0.00E+00	0.00E+00	0.00E+00	0.00E+00	0.00E+00
1670	ALL	748188.42	4037460.7	7.70E-08	70YrCancerDerived_InhSoil[	7.70E-08	0.00E+00	0.00E+00	0.00E+00	0.00E+00	0.00E+00	0.00E+00	0.00E+00	0.00E+00	0.00E+00	0.00E+00	0.00E+00
1671	ALL	749888.42	4037460.7	1.75E-07	70YrCancerDerived_InhSoil[	1.75E-07	0.00E+00	0.00E+00	0.00E+00	0.00E+00	0.00E+00	0.00E+00	0.00E+00	0.00E+00	0.00E+00	0.00E+00	0.00E+00
1672	ALL	749988.42	4037460.7	1.79E-07	70YrCancerDerived_InhSoil[	1.79E-07	0.00E+00	0.00E+00	0.00E+00	0.00E+00	0.00E+00	0.00E+00	0.00E+00	0.00E+00	0.00E+00	0.00E+00	0.00E+00
1673	ALL	750088.42	4037460.7	1.83E-07	70YrCancerDerived_InhSoil[	1.83E-07	0.00E+00	0.00E+00	0.00E+00	0.00E+00	0.00E+00	0.00E+00	0.00E+00	0.00E+00	0.00E+00	0.00E+00	0.00E+00
1674	ALL	750188.42	4037460.7	1.86E-07	70YrCancerDerived_InhSoil[	1.86E-07	0.00E+00	0.00E+00	0.00E+00	0.00E+00	0.00E+00	0.00E+00	0.00E+00	0.00E+00	0.00E+00	0.00E+00	0.00E+00
1675	ALL	750288.42	4037460.7	1.89E-07	70YrCancerDerived_InhSoil[	1.89E-07	0.00E+00	0.00E+00	0.00E+00	0.00E+00	0.00E+00	0.00E+00	0.00E+00	0.00E+00	0.00E+00	0.00E+00	0.00E+00
1676	ALL	752388.42	4037460.7	1.74E-07	70YrCancerDerived_InhSoil[	1.74E-07	0.00E+00	0.00E+00	0.00E+00	0.00E+00	0.00E+00	0.00E+00	0.00E+00	0.00E+00	0.00E+00	0.00E+00	0.00E+00
1677	ALL	752488.42	4037460.7	1.70E-07	70YrCancerDerived_InhSoil[	1.70E-07	0.00E+00	0.00E+00	0.00E+00	0.00E+00	0.00E+00	0.00E+00	0.00E+00	0.00E+00	0.00E+00	0.00E+00	0.00E+00
1678	ALL	752588.42	4037460.7	1.66E-07	70YrCancerDerived_InhSoil[	1.66E-07	0.00E+00	0.00E+00	0.00E+00	0.00E+00	0.00E+00	0.00E+00	0.00E+00	0.00E+00	0.00E+00	0.00E+00	0.00E+00

1679	ALL	752688.42	4037460.7	1.62E-07	70YrCancerDerived_InhSoilI	1.62E-07	0.00E+00	0.00E+00	0.00E+00	0.00E+00	0.00E+00	0.00E+00	0.00E+00	0.00E+00	0.00E+00	0.00E+00	0.00E+00
1680	ALL	752788.42	4037460.7	1.57E-07	70YrCancerDerived_InhSoilI	1.57E-07	0.00E+00	0.00E+00	0.00E+00	0.00E+00	0.00E+00	0.00E+00	0.00E+00	0.00E+00	0.00E+00	0.00E+00	0.00E+00
1681	ALL	754888.42	4037460.7	8.80E-08	70YrCancerDerived_InhSoilI	8.80E-08	0.00E+00	0.00E+00	0.00E+00	0.00E+00	0.00E+00	0.00E+00	0.00E+00	0.00E+00	0.00E+00	0.00E+00	0.00E+00
1682	ALL	754988.42	4037460.7	8.59E-08	70YrCancerDerived_InhSoilI	8.59E-08	0.00E+00	0.00E+00	0.00E+00	0.00E+00	0.00E+00	0.00E+00	0.00E+00	0.00E+00	0.00E+00	0.00E+00	0.00E+00
1683	ALL	755088.42	4037460.7	8.39E-08	70YrCancerDerived_InhSoilI	8.39E-08	0.00E+00	0.00E+00	0.00E+00	0.00E+00	0.00E+00	0.00E+00	0.00E+00	0.00E+00	0.00E+00	0.00E+00	0.00E+00
1684	ALL	755188.42	4037460.7	8.19E-08	70YrCancerDerived_InhSoilI	8.19E-08	0.00E+00	0.00E+00	0.00E+00	0.00E+00	0.00E+00	0.00E+00	0.00E+00	0.00E+00	0.00E+00	0.00E+00	0.00E+00
1685	ALL	755288.42	4037460.7	8.01E-08	70YrCancerDerived_InhSoilI	8.01E-08	0.00E+00	0.00E+00	0.00E+00	0.00E+00	0.00E+00	0.00E+00	0.00E+00	0.00E+00	0.00E+00	0.00E+00	0.00E+00
1686	ALL	746388.42	4037560.7	9.79E-08	70YrCancerDerived_InhSoilI	9.79E-08	0.00E+00	0.00E+00	0.00E+00	0.00E+00	0.00E+00	0.00E+00	0.00E+00	0.00E+00	0.00E+00	0.00E+00	0.00E+00
1687	ALL	746488.42	4037560.7	9.48E-08	70YrCancerDerived_InhSoilI	9.48E-08	0.00E+00	0.00E+00	0.00E+00	0.00E+00	0.00E+00	0.00E+00	0.00E+00	0.00E+00	0.00E+00	0.00E+00	0.00E+00
1688	ALL	746588.42	4037560.7	9.26E-08	70YrCancerDerived_InhSoilI	9.26E-08	0.00E+00	0.00E+00	0.00E+00	0.00E+00	0.00E+00	0.00E+00	0.00E+00	0.00E+00	0.00E+00	0.00E+00	0.00E+00
1689	ALL	747488.42	4037560.7	7.56E-08	70YrCancerDerived_InhSoilI	7.56E-08	0.00E+00	0.00E+00	0.00E+00	0.00E+00	0.00E+00	0.00E+00	0.00E+00	0.00E+00	0.00E+00	0.00E+00	0.00E+00
1690	ALL	747588.42	4037560.7	7.66E-08	70YrCancerDerived_InhSoilI	7.66E-08	0.00E+00	0.00E+00	0.00E+00	0.00E+00	0.00E+00	0.00E+00	0.00E+00	0.00E+00	0.00E+00	0.00E+00	0.00E+00
1691	ALL	747688.42	4037560.7	7.70E-08	70YrCancerDerived_InhSoilI	7.70E-08	0.00E+00	0.00E+00	0.00E+00	0.00E+00	0.00E+00	0.00E+00	0.00E+00	0.00E+00	0.00E+00	0.00E+00	0.00E+00
1692	ALL	747788.42	4037560.7	7.68E-08	70YrCancerDerived_InhSoilI	7.68E-08	0.00E+00	0.00E+00	0.00E+00	0.00E+00	0.00E+00	0.00E+00	0.00E+00	0.00E+00	0.00E+00	0.00E+00	0.00E+00
1693	ALL	747888.42	4037560.7	7.65E-08	70YrCancerDerived_InhSoilI	7.65E-08	0.00E+00	0.00E+00	0.00E+00	0.00E+00	0.00E+00	0.00E+00	0.00E+00	0.00E+00	0.00E+00	0.00E+00	0.00E+00
1694	ALL	747988.42	4037560.7	7.62E-08	70YrCancerDerived_InhSoilI	7.62E-08	0.00E+00	0.00E+00	0.00E+00	0.00E+00	0.00E+00	0.00E+00	0.00E+00	0.00E+00	0.00E+00	0.00E+00	0.00E+00
1695	ALL	748088.42	4037560.7	7.61E-08	70YrCancerDerived_InhSoilI	7.61E-08	0.00E+00	0.00E+00	0.00E+00	0.00E+00	0.00E+00	0.00E+00	0.00E+00	0.00E+00	0.00E+00	0.00E+00	0.00E+00
1696	ALL	748188.42	4037560.7	7.64E-08	70YrCancerDerived_InhSoilI	7.64E-08	0.00E+00	0.00E+00	0.00E+00	0.00E+00	0.00E+00	0.00E+00	0.00E+00	0.00E+00	0.00E+00	0.00E+00	0.00E+00
1697	ALL	749888.42	4037560.7	1.83E-07	70YrCancerDerived_InhSoilI	1.83E-07	0.00E+00	0.00E+00	0.00E+00	0.00E+00	0.00E+00	0.00E+00	0.00E+00	0.00E+00	0.00E+00	0.00E+00	0.00E+00
1698	ALL	749988.42	4037560.7	1.87E-07	70YrCancerDerived_InhSoilI	1.87E-07	0.00E+00	0.00E+00	0.00E+00	0.00E+00	0.00E+00	0.00E+00	0.00E+00	0.00E+00	0.00E+00	0.00E+00	0.00E+00
1699	ALL	750088.42	4037560.7	1.91E-07	70YrCancerDerived_InhSoilI	1.91E-07	0.00E+00	0.00E+00	0.00E+00	0.00E+00	0.00E+00	0.00E+00	0.00E+00	0.00E+00	0.00E+00	0.00E+00	0.00E+00
1700	ALL	750188.42	4037560.7	1.95E-07	70YrCancerDerived_InhSoilI	1.95E-07	0.00E+00	0.00E+00	0.00E+00	0.00E+00	0.00E+00	0.00E+00	0.00E+00	0.00E+00	0.00E+00	0.00E+00	0.00E+00
1701	ALL	750288.42	4037560.7	1.98E-07	70YrCancerDerived_InhSoilI	1.98E-07	0.00E+00	0.00E+00	0.00E+00	0.00E+00	0.00E+00	0.00E+00	0.00E+00	0.00E+00	0.00E+00	0.00E+00	0.00E+00
1702	ALL	752388.42	4037560.7	1.75E-07	70YrCancerDerived_InhSoilI	1.75E-07	0.00E+00	0.00E+00	0.00E+00	0.00E+00	0.00E+00	0.00E+00	0.00E+00	0.00E+00	0.00E+00	0.00E+00	0.00E+00
1703	ALL	752488.42	4037560.7	1.71E-07	70YrCancerDerived_InhSoilI	1.71E-07	0.00E+00	0.00E+00	0.00E+00	0.00E+00	0.00E+00	0.00E+00	0.00E+00	0.00E+00	0.00E+00	0.00E+00	0.00E+00
1704	ALL	752588.42	4037560.7	1.66E-07	70YrCancerDerived_InhSoilI	1.66E-07	0.00E+00	0.00E+00	0.00E+00	0.00E+00	0.00E+00	0.00E+00	0.00E+00	0.00E+00	0.00E+00	0.00E+00	0.00E+00
1705	ALL	752688.42	4037560.7	1.62E-07	70YrCancerDerived_InhSoilI	1.62E-07	0.00E+00	0.00E+00	0.00E+00	0.00E+00	0.00E+00	0.00E+00	0.00E+00	0.00E+00	0.00E+00	0.00E+00	0.00E+00
1706	ALL	752788.42	4037560.7	1.57E-07	70YrCancerDerived_InhSoilI	1.57E-07	0.00E+00	0.00E+00	0.00E+00	0.00E+00	0.00E+00	0.00E+00	0.00E+00	0.00E+00	0.00E+00	0.00E+00	0.00E+00
1707	ALL	754888.42	4037560.7	8.66E-08	70YrCancerDerived_InhSoilI	8.66E-08	0.00E+00	0.00E+00	0.00E+00	0.00E+00	0.00E+00	0.00E+00	0.00E+00	0.00E+00	0.00E+00	0.00E+00	0.00E+00
1708	ALL	754988.42	4037560.7	8.45E-08	70YrCancerDerived_InhSoilI	8.45E-08	0.00E+00	0.00E+00	0.00E+00	0.00E+00	0.00E+00	0.00E+00	0.00E+00	0.00E+00	0.00E+00	0.00E+00	0.00E+00
1709	ALL	755088.42	4037560.7	8.25E-08	70YrCancerDerived_InhSoilI	8.25E-08	0.00E+00	0.00E+00	0.00E+00	0.00E+00	0.00E+00	0.00E+00	0.00E+00	0.00E+00	0.00E+00	0.00E+00	0.00E+00
1710	ALL	755188.42	4037560.7	8.06E-08	70YrCancerDerived_InhSoilI	8.06E-08	0.00E+00	0.00E+00	0.00E+00	0.00E+00	0.00E+00	0.00E+00	0.00E+00	0.00E+00	0.00E+00	0.00E+00	0.00E+00
1711	ALL	755288.42	4037560.7	7.88E-08	70YrCancerDerived_InhSoilI	7.88E-08	0.00E+00	0.00E+00	0.00E+00	0.00E+00	0.00E+00	0.00E+00	0.00E+00	0.00E+00	0.00E+00	0.00E+00	0.00E+00
1712	ALL	746388.42	4037660.7	9.21E-08	70YrCancerDerived_InhSoilI	9.21E-08	0.00E+00	0.00E+00	0.00E+00	0.00E+00	0.00E+00	0.00E+00	0.00E+00	0.00E+00	0.00E+00	0.00E+00	0.00E+00
1713	ALL	746488.42	4037660.7	9.00E-08	70YrCancerDerived_InhSoilI	9.00E-08	0.00E+00	0.00E+00	0.00E+00	0.00E+00	0.00E+00	0.00E+00	0.00E+00	0.00E+00	0.00E+00	0.00E+00	0.00E+00
1714	ALL	746588.42	4037660.7	8.85E-08	70YrCancerDerived_InhSoilI	8.85E-08	0.00E+00	0.00E+00	0.00E+00	0.00E+00	0.00E+00	0.00E+00	0.00E+00	0.00E+00	0.00E+00	0.00E+00	0.00E+00
1715	ALL	747488.42	4037660.7	7.38E-08	70YrCancerDerived_InhSoilI	7.38E-08	0.00E+00	0.00E+00	0.00E+00	0.00E+00	0.00E+00	0.00E+00	0.00E+00	0.00E+00	0.00E+00	0.00E+00	0.00E+00
1716	ALL	747588.42	4037660.7	7.52E-08	70YrCancerDerived_InhSoilI	7.52E-08	0.00E+00	0.00E+00	0.00E+00	0.00E+00	0.00E+00	0.00E+00	0.00E+00	0.00E+00	0.00E+00	0.00E+00	0.00E+00
1717	ALL	747688.42	4037660.7	7.62E-08	70YrCancerDerived_InhSoilI	7.62E-08	0.00E+00	0.00E+00	0.00E+00	0.00E+00	0.00E+00	0.00E+00	0.00E+00	0.00E+00	0.00E+00	0.00E+00	0.00E+00
1718	ALL	747788.42	4037660.7	7.65E-08	70YrCancerDerived_InhSoilI	7.65E-08	0.00E+00	0.00E+00	0.00E+00	0.00E+00	0.00E+00	0.00E+00	0.00E+00	0.00E+00	0.00E+00	0.00E+00	0.00E+00
1719	ALL	747888.42	4037660.7	7.64E-08	70YrCancerDerived_InhSoilI	7.64E-08	0.00E+00	0.00E+00	0.00E+00	0.00E+00	0.00E+00	0.00E+00	0.00E+00	0.00E+00	0.00E+00	0.00E+00	0.00E+00
1720	ALL	747988.42	4037660.7	7.61E-08	70YrCancerDerived_InhSoilI	7.61E-08	0.00E+00	0.00E+00	0.00E+00	0.00E+00	0.00E+00	0.00E+00	0.00E+00	0.00E+00	0.00E+00	0.00E+00	0.00E+00
1721	ALL	748088.42	4037660.7	7.60E-08	70YrCancerDerived_InhSoilI	7.60E-08	0.00E+00	0.00E+00	0.00E+00	0.00E+00	0.00E+00	0.00E+00	0.00E+00	0.00E+00	0.00E+00	0.00E+00	0.00E+00
1722	ALL	748188.42	4037660.7	7.62E-08	70YrCancerDerived_InhSoilI	7.62E-08	0.00E+00	0.00E+00	0.00E+00	0.00E+00	0.00E+00	0.00E+00	0.00E+00	0.00E+00	0.00E+00	0.00E+00	0.00E+00
1723	ALL	749888.42	4037660.7	1.93E-07	70YrCancerDerived_InhSoilI	1.93E-07	0.00E+00	0.00E+00	0.00E+00	0.00E+00	0.00E+00	0.00E+00	0.00E+00	0.00E+00	0.00E+00	0.00E+00	0.00E+00
1724	ALL	749988.42	4037660.7	1.97E-07	70YrCancerDerived_InhSoilI	1.97E-07	0.00E+00	0.00E+00	0.00E+00	0.00E+00	0.00E+00	0.00E+00	0.00E+00	0.00E+00	0.00E+00	0.00E+00	0.00E+00
1725	ALL	750088.42	4037660.7	2.01E-07	70YrCancerDerived_InhSoilI	2.01E-07	0.00E+00	0.00E+00	0.00E+00	0.00E+00	0.00E+00	0.00E+00	0.00E+00	0.00E+00	0.00E+00	0.00E+00	0.00E+00
1726	ALL	750188.42	4037660.7	2.05E-07	70YrCancerDerived_InhSoilI	2.05E-07	0.00E+00	0.00E+00	0.00E+00	0.00E+00	0.00E+00	0.00E+00	0.00E+00	0.00E+00	0.00E+00	0.00E+00	0.00E+00
1727	ALL	750288.42	4037660.7	2.08E-07	70YrCancerDerived_InhSoilI	2.08E-07	0.00E+00	0.00E+00	0.00E+00	0.00E+00	0.00E+00	0.00E+00	0.00E+00	0.00E+00	0.00E+00	0.00E+00	0.00E+00
1728	ALL	752388.42	4037660.7	1.76E-07	70YrCancerDerived_InhSoilI	1.76E-07	0.00E+00	0.00E+00	0.00E+00	0.00E+00	0.00E+00	0.00E+00	0.00E+00	0.00E+00	0.00E+00	0.00E+00	0.00E+00
1729	ALL	752488.42	4037660.7	1.71E-07	70YrCancerDerived_InhSoilI	1.71E-07	0.00E+00	0.00E+00	0.00E+00	0.00E+00	0.00E+00	0.00E+00	0.00E+00	0.00E+00	0.00E+00	0.00E+00	0.00E+00
1730	ALL	752588.42	4037660.7	1.66E-07	70YrCancerDerived_InhSoilI	1.66E-07	0.00E+00	0.00E+00	0.00E+00	0.00E+00	0.00E+00	0.00E+00	0.00E+00	0.00E+00	0.00E+00	0.00E+00	0.00E+00
1731	ALL	752688.42	4037660.7	1.61E-07	70YrCancerDerived_InhSoilI	1.61E-07	0.00E+00	0.00E+00	0.00E+00	0.00E+00	0.00E+00	0.00E+00	0.00E+00	0.00E+00	0.00E+00	0.00E+00	0.00E+00
1732	ALL	752788.42	4037660.7	1.56E-07	70YrCancerDerived_InhSoilI	1.56E-07	0.00E+00	0.00E+00	0.00E+00	0.00E+00	0.00E+00	0.00E+00	0.00E+00	0.00E+00	0.00E+00	0.00E+00	0.00E+00
1733	ALL	754888.42	4037660.7	8.51E-08	70YrCancerDerived_InhSoilI	8.51E-08	0.00E+00	0.00E+00	0.00E+00	0.00E+00	0.00E+00	0.00E+00	0.00E+00	0.00E+00	0.00E+00	0.00E+00	0.00E+00
1734	ALL	754988.42	4037660.7	8.31E-08	70YrCancerDerived_InhSoilI	8.31E-08	0.00E+00	0.00E+00	0.00E+00	0.00E+00	0.00E+00	0.00E+00	0.00E+00	0.00E+00	0.00E+00	0.00E+00	0.00E+00

1735	ALL	755088.42	4037660.7	8.12E-08	70YrCancerDerived_InhSoil[	8.12E-08	0.00E+00	0.00E+00	0.00E+00	0.00E+00	0.00E+00	0.00E+00	0.00E+00	0.00E+00	0.00E+00	0.00E+00	0.00E+00
1736	ALL	755188.42	4037660.7	7.93E-08	70YrCancerDerived_InhSoil[	7.93E-08	0.00E+00	0.00E+00	0.00E+00	0.00E+00	0.00E+00	0.00E+00	0.00E+00	0.00E+00	0.00E+00	0.00E+00	0.00E+00
1737	ALL	755288.42	4037660.7	7.75E-08	70YrCancerDerived_InhSoil[	7.75E-08	0.00E+00	0.00E+00	0.00E+00	0.00E+00	0.00E+00	0.00E+00	0.00E+00	0.00E+00	0.00E+00	0.00E+00	0.00E+00
1738	ALL	746388.42	4037760.7	8.77E-08	70YrCancerDerived_InhSoil[	8.77E-08	0.00E+00	0.00E+00	0.00E+00	0.00E+00	0.00E+00	0.00E+00	0.00E+00	0.00E+00	0.00E+00	0.00E+00	0.00E+00
1739	ALL	746488.42	4037760.7	8.64E-08	70YrCancerDerived_InhSoil[	8.64E-08	0.00E+00	0.00E+00	0.00E+00	0.00E+00	0.00E+00	0.00E+00	0.00E+00	0.00E+00	0.00E+00	0.00E+00	0.00E+00
1740	ALL	746588.42	4037760.7	8.54E-08	70YrCancerDerived_InhSoil[	8.54E-08	0.00E+00	0.00E+00	0.00E+00	0.00E+00	0.00E+00	0.00E+00	0.00E+00	0.00E+00	0.00E+00	0.00E+00	0.00E+00
1741	ALL	746688.42	4037760.7	8.43E-08	70YrCancerDerived_InhSoil[	8.43E-08	0.00E+00	0.00E+00	0.00E+00	0.00E+00	0.00E+00	0.00E+00	0.00E+00	0.00E+00	0.00E+00	0.00E+00	0.00E+00
1742	ALL	746788.42	4037760.7	8.24E-08	70YrCancerDerived_InhSoil[	8.24E-08	0.00E+00	0.00E+00	0.00E+00	0.00E+00	0.00E+00	0.00E+00	0.00E+00	0.00E+00	0.00E+00	0.00E+00	0.00E+00
1743	ALL	746888.42	4037760.7	8.00E-08	70YrCancerDerived_InhSoil[	8.00E-08	0.00E+00	0.00E+00	0.00E+00	0.00E+00	0.00E+00	0.00E+00	0.00E+00	0.00E+00	0.00E+00	0.00E+00	0.00E+00
1744	ALL	746988.42	4037760.7	7.73E-08	70YrCancerDerived_InhSoil[	7.73E-08	0.00E+00	0.00E+00	0.00E+00	0.00E+00	0.00E+00	0.00E+00	0.00E+00	0.00E+00	0.00E+00	0.00E+00	0.00E+00
1745	ALL	747488.42	4037760.7	7.23E-08	70YrCancerDerived_InhSoil[	7.23E-08	0.00E+00	0.00E+00	0.00E+00	0.00E+00	0.00E+00	0.00E+00	0.00E+00	0.00E+00	0.00E+00	0.00E+00	0.00E+00
1746	ALL	747588.42	4037760.7	7.40E-08	70YrCancerDerived_InhSoil[	7.40E-08	0.00E+00	0.00E+00	0.00E+00	0.00E+00	0.00E+00	0.00E+00	0.00E+00	0.00E+00	0.00E+00	0.00E+00	0.00E+00
1747	ALL	747688.42	4037760.7	7.55E-08	70YrCancerDerived_InhSoil[	7.55E-08	0.00E+00	0.00E+00	0.00E+00	0.00E+00	0.00E+00	0.00E+00	0.00E+00	0.00E+00	0.00E+00	0.00E+00	0.00E+00
1748	ALL	747788.42	4037760.7	7.63E-08	70YrCancerDerived_InhSoil[	7.63E-08	0.00E+00	0.00E+00	0.00E+00	0.00E+00	0.00E+00	0.00E+00	0.00E+00	0.00E+00	0.00E+00	0.00E+00	0.00E+00
1749	ALL	747888.42	4037760.7	7.65E-08	70YrCancerDerived_InhSoil[	7.65E-08	0.00E+00	0.00E+00	0.00E+00	0.00E+00	0.00E+00	0.00E+00	0.00E+00	0.00E+00	0.00E+00	0.00E+00	0.00E+00
1750	ALL	747988.42	4037760.7	7.64E-08	70YrCancerDerived_InhSoil[	7.64E-08	0.00E+00	0.00E+00	0.00E+00	0.00E+00	0.00E+00	0.00E+00	0.00E+00	0.00E+00	0.00E+00	0.00E+00	0.00E+00
1751	ALL	748088.42	4037760.7	7.63E-08	70YrCancerDerived_InhSoil[	7.63E-08	0.00E+00	0.00E+00	0.00E+00	0.00E+00	0.00E+00	0.00E+00	0.00E+00	0.00E+00	0.00E+00	0.00E+00	0.00E+00
1752	ALL	748188.42	4037760.7	7.64E-08	70YrCancerDerived_InhSoil[	7.64E-08	0.00E+00	0.00E+00	0.00E+00	0.00E+00	0.00E+00	0.00E+00	0.00E+00	0.00E+00	0.00E+00	0.00E+00	0.00E+00
1753	ALL	749888.42	4037760.7	2.04E-07	70YrCancerDerived_InhSoil[	2.04E-07	0.00E+00	0.00E+00	0.00E+00	0.00E+00	0.00E+00	0.00E+00	0.00E+00	0.00E+00	0.00E+00	0.00E+00	0.00E+00
1754	ALL	749988.42	4037760.7	2.08E-07	70YrCancerDerived_InhSoil[	2.08E-07	0.00E+00	0.00E+00	0.00E+00	0.00E+00	0.00E+00	0.00E+00	0.00E+00	0.00E+00	0.00E+00	0.00E+00	0.00E+00
1755	ALL	750088.42	4037760.7	2.13E-07	70YrCancerDerived_InhSoil[	2.13E-07	0.00E+00	0.00E+00	0.00E+00	0.00E+00	0.00E+00	0.00E+00	0.00E+00	0.00E+00	0.00E+00	0.00E+00	0.00E+00
1756	ALL	750188.42	4037760.7	2.16E-07	70YrCancerDerived_InhSoil[	2.16E-07	0.00E+00	0.00E+00	0.00E+00	0.00E+00	0.00E+00	0.00E+00	0.00E+00	0.00E+00	0.00E+00	0.00E+00	0.00E+00
1757	ALL	750288.42	4037760.7	2.20E-07	70YrCancerDerived_InhSoil[	2.20E-07	0.00E+00	0.00E+00	0.00E+00	0.00E+00	0.00E+00	0.00E+00	0.00E+00	0.00E+00	0.00E+00	0.00E+00	0.00E+00
1758	ALL	752388.42	4037760.7	1.76E-07	70YrCancerDerived_InhSoil[	1.76E-07	0.00E+00	0.00E+00	0.00E+00	0.00E+00	0.00E+00	0.00E+00	0.00E+00	0.00E+00	0.00E+00	0.00E+00	0.00E+00
1759	ALL	752488.42	4037760.7	1.70E-07	70YrCancerDerived_InhSoil[	1.70E-07	0.00E+00	0.00E+00	0.00E+00	0.00E+00	0.00E+00	0.00E+00	0.00E+00	0.00E+00	0.00E+00	0.00E+00	0.00E+00
1760	ALL	752588.42	4037760.7	1.65E-07	70YrCancerDerived_InhSoil[	1.65E-07	0.00E+00	0.00E+00	0.00E+00	0.00E+00	0.00E+00	0.00E+00	0.00E+00	0.00E+00	0.00E+00	0.00E+00	0.00E+00
1761	ALL	752688.42	4037760.7	1.60E-07	70YrCancerDerived_InhSoil[	1.60E-07	0.00E+00	0.00E+00	0.00E+00	0.00E+00	0.00E+00	0.00E+00	0.00E+00	0.00E+00	0.00E+00	0.00E+00	0.00E+00
1762	ALL	752788.42	4037760.7	1.55E-07	70YrCancerDerived_InhSoil[	1.55E-07	0.00E+00	0.00E+00	0.00E+00	0.00E+00	0.00E+00	0.00E+00	0.00E+00	0.00E+00	0.00E+00	0.00E+00	0.00E+00
1763	ALL	754888.42	4037760.7	8.37E-08	70YrCancerDerived_InhSoil[	8.37E-08	0.00E+00	0.00E+00	0.00E+00	0.00E+00	0.00E+00	0.00E+00	0.00E+00	0.00E+00	0.00E+00	0.00E+00	0.00E+00
1764	ALL	754988.42	4037760.7	8.17E-08	70YrCancerDerived_InhSoil[	8.17E-08	0.00E+00	0.00E+00	0.00E+00	0.00E+00	0.00E+00	0.00E+00	0.00E+00	0.00E+00	0.00E+00	0.00E+00	0.00E+00
1765	ALL	755088.42	4037760.7	7.98E-08	70YrCancerDerived_InhSoil[	7.98E-08	0.00E+00	0.00E+00	0.00E+00	0.00E+00	0.00E+00	0.00E+00	0.00E+00	0.00E+00	0.00E+00	0.00E+00	0.00E+00
1766	ALL	755188.42	4037760.7	7.80E-08	70YrCancerDerived_InhSoil[	7.80E-08	0.00E+00	0.00E+00	0.00E+00	0.00E+00	0.00E+00	0.00E+00	0.00E+00	0.00E+00	0.00E+00	0.00E+00	0.00E+00
1767	ALL	755288.42	4037760.7	7.63E-08	70YrCancerDerived_InhSoil[	7.63E-08	0.00E+00	0.00E+00	0.00E+00	0.00E+00	0.00E+00	0.00E+00	0.00E+00	0.00E+00	0.00E+00	0.00E+00	0.00E+00
1768	ALL	746388.42	4037860.7	8.43E-08	70YrCancerDerived_InhSoil[	8.43E-08	0.00E+00	0.00E+00	0.00E+00	0.00E+00	0.00E+00	0.00E+00	0.00E+00	0.00E+00	0.00E+00	0.00E+00	0.00E+00
1769	ALL	746488.42	4037860.7	8.35E-08	70YrCancerDerived_InhSoil[	8.35E-08	0.00E+00	0.00E+00	0.00E+00	0.00E+00	0.00E+00	0.00E+00	0.00E+00	0.00E+00	0.00E+00	0.00E+00	0.00E+00
1770	ALL	746588.42	4037860.7	8.25E-08	70YrCancerDerived_InhSoil[	8.25E-08	0.00E+00	0.00E+00	0.00E+00	0.00E+00	0.00E+00	0.00E+00	0.00E+00	0.00E+00	0.00E+00	0.00E+00	0.00E+00
1771	ALL	746688.42	4037860.7	8.19E-08	70YrCancerDerived_InhSoil[	8.19E-08	0.00E+00	0.00E+00	0.00E+00	0.00E+00	0.00E+00	0.00E+00	0.00E+00	0.00E+00	0.00E+00	0.00E+00	0.00E+00
1772	ALL	746788.42	4037860.7	8.00E-08	70YrCancerDerived_InhSoil[	8.00E-08	0.00E+00	0.00E+00	0.00E+00	0.00E+00	0.00E+00	0.00E+00	0.00E+00	0.00E+00	0.00E+00	0.00E+00	0.00E+00
1773	ALL	746888.42	4037860.7	7.79E-08	70YrCancerDerived_InhSoil[	7.79E-08	0.00E+00	0.00E+00	0.00E+00	0.00E+00	0.00E+00	0.00E+00	0.00E+00	0.00E+00	0.00E+00	0.00E+00	0.00E+00
1774	ALL	746988.42	4037860.7	7.57E-08	70YrCancerDerived_InhSoil[	7.57E-08	0.00E+00	0.00E+00	0.00E+00	0.00E+00	0.00E+00	0.00E+00	0.00E+00	0.00E+00	0.00E+00	0.00E+00	0.00E+00
1775	ALL	747088.42	4037860.7	7.35E-08	70YrCancerDerived_InhSoil[	7.35E-08	0.00E+00	0.00E+00	0.00E+00	0.00E+00	0.00E+00	0.00E+00	0.00E+00	0.00E+00	0.00E+00	0.00E+00	0.00E+00
1776	ALL	747188.42	4037860.7	7.17E-08	70YrCancerDerived_InhSoil[	7.17E-08	0.00E+00	0.00E+00	0.00E+00	0.00E+00	0.00E+00	0.00E+00	0.00E+00	0.00E+00	0.00E+00	0.00E+00	0.00E+00
1777	ALL	747288.42	4037860.7	7.04E-08	70YrCancerDerived_InhSoil[	7.04E-08	0.00E+00	0.00E+00	0.00E+00	0.00E+00	0.00E+00	0.00E+00	0.00E+00	0.00E+00	0.00E+00	0.00E+00	0.00E+00
1778	ALL	747388.42	4037860.7	7.02E-08	70YrCancerDerived_InhSoil[	7.02E-08	0.00E+00	0.00E+00	0.00E+00	0.00E+00	0.00E+00	0.00E+00	0.00E+00	0.00E+00	0.00E+00	0.00E+00	0.00E+00
1779	ALL	747488.42	4037860.7	7.10E-08	70YrCancerDerived_InhSoil[	7.10E-08	0.00E+00	0.00E+00	0.00E+00	0.00E+00	0.00E+00	0.00E+00	0.00E+00	0.00E+00	0.00E+00	0.00E+00	0.00E+00
1780	ALL	747588.42	4037860.7	7.28E-08	70YrCancerDerived_InhSoil[	7.28E-08	0.00E+00	0.00E+00	0.00E+00	0.00E+00	0.00E+00	0.00E+00	0.00E+00	0.00E+00	0.00E+00	0.00E+00	0.00E+00
1781	ALL	747688.42	4037860.7	7.48E-08	70YrCancerDerived_InhSoil[	7.48E-08	0.00E+00	0.00E+00	0.00E+00	0.00E+00	0.00E+00	0.00E+00	0.00E+00	0.00E+00	0.00E+00	0.00E+00	0.00E+00
1782	ALL	747788.42	4037860.7	7.62E-08	70YrCancerDerived_InhSoil[	7.62E-08	0.00E+00	0.00E+00	0.00E+00	0.00E+00	0.00E+00	0.00E+00	0.00E+00	0.00E+00	0.00E+00	0.00E+00	0.00E+00
1783	ALL	747888.42	4037860.7	7.69E-08	70YrCancerDerived_InhSoil[	7.69E-08	0.00E+00	0.00E+00	0.00E+00	0.00E+00	0.00E+00	0.00E+00	0.00E+00	0.00E+00	0.00E+00	0.00E+00	0.00E+00
1784	ALL	747988.42	4037860.7	7.70E-08	70YrCancerDerived_InhSoil[	7.70E-08	0.00E+00	0.00E+00	0.00E+00	0.00E+00	0.00E+00	0.00E+00	0.00E+00	0.00E+00	0.00E+00	0.00E+00	0.00E+00
1785	ALL	748088.42	4037860.7	7.69E-08	70YrCancerDerived_InhSoil[	7.69E-08	0.00E+00	0.00E+00	0.00E+00	0.00E+00	0.00E+00	0.00E+00	0.00E+00	0.00E+00	0.00E+00	0.00E+00	0.00E+00
1786	ALL	748188.42	4037860.7	7.71E-08	70YrCancerDerived_InhSoil[	7.71E-08	0.00E+00	0.00E+00	0.00E+00	0.00E+00	0.00E+00	0.00E+00	0.00E+00	0.00E+00	0.00E+00	0.00E+00	0.00E+00
1787	ALL	749888.42	4037860.7	2.16E-07	70YrCancerDerived_InhSoil[	2.16E-07	0.00E+00	0.00E+00	0.00E+00	0.00E+00	0.00E+00	0.00E+00	0.00E+00	0.00E+00	0.00E+00	0.00E+00	0.00E+00
1788	ALL	749988.42	4037860.7	2.21E-07	70YrCancerDerived_InhSoil[	2.21E-07	0.00E+00	0.00E+00	0.00E+00	0.00E+00	0.00E+00	0.00E+00	0.00E+00	0.00E+00	0.00E+00	0.00E+00	0.00E+00
1789	ALL	750088.42	4037860.7	2.26E-07	70YrCancerDerived_InhSoil[	2.26E-07	0.00E+00	0.00E+00	0.00E+00	0.00E+00	0.00E+00	0.00E+00	0.00E+00	0.00E+00	0.00E+00	0.00E+00	0.00E+00
1790	ALL	750188.42	4037860.7	2.30E-07	70YrCancerDerived_InhSoil[	2.30E-07	0.00E+00	0.00E+00	0.00E+00	0.00E+00	0.00E+00	0.00E+00	0.00E+00	0.00E+00	0.00E+00	0.00E+00	0.00E+00

1791	ALL	750288.42	4037860.7	2.33E-07	70YrCancerDerived_InhSoil[	2.33E-07	0.00E+00	0.00E+00	0.00E+00	0.00E+00	0.00E+00	0.00E+00	0.00E+00	0.00E+00	0.00E+00	0.00E+00	0.00E+00
1792	ALL	752388.42	4037860.7	1.75E-07	70YrCancerDerived_InhSoil[	1.75E-07	0.00E+00	0.00E+00	0.00E+00	0.00E+00	0.00E+00	0.00E+00	0.00E+00	0.00E+00	0.00E+00	0.00E+00	0.00E+00
1793	ALL	752488.42	4037860.7	1.69E-07	70YrCancerDerived_InhSoil[	1.69E-07	0.00E+00	0.00E+00	0.00E+00	0.00E+00	0.00E+00	0.00E+00	0.00E+00	0.00E+00	0.00E+00	0.00E+00	0.00E+00
1794	ALL	752588.42	4037860.7	1.64E-07	70YrCancerDerived_InhSoil[	1.64E-07	0.00E+00	0.00E+00	0.00E+00	0.00E+00	0.00E+00	0.00E+00	0.00E+00	0.00E+00	0.00E+00	0.00E+00	0.00E+00
1795	ALL	752688.42	4037860.7	1.58E-07	70YrCancerDerived_InhSoil[	1.58E-07	0.00E+00	0.00E+00	0.00E+00	0.00E+00	0.00E+00	0.00E+00	0.00E+00	0.00E+00	0.00E+00	0.00E+00	0.00E+00
1796	ALL	752788.42	4037860.7	1.53E-07	70YrCancerDerived_InhSoil[	1.53E-07	0.00E+00	0.00E+00	0.00E+00	0.00E+00	0.00E+00	0.00E+00	0.00E+00	0.00E+00	0.00E+00	0.00E+00	0.00E+00
1797	ALL	754888.42	4037860.7	8.23E-08	70YrCancerDerived_InhSoil[	8.23E-08	0.00E+00	0.00E+00	0.00E+00	0.00E+00	0.00E+00	0.00E+00	0.00E+00	0.00E+00	0.00E+00	0.00E+00	0.00E+00
1798	ALL	754988.42	4037860.7	8.03E-08	70YrCancerDerived_InhSoil[	8.03E-08	0.00E+00	0.00E+00	0.00E+00	0.00E+00	0.00E+00	0.00E+00	0.00E+00	0.00E+00	0.00E+00	0.00E+00	0.00E+00
1799	ALL	755088.42	4037860.7	7.85E-08	70YrCancerDerived_InhSoil[	7.85E-08	0.00E+00	0.00E+00	0.00E+00	0.00E+00	0.00E+00	0.00E+00	0.00E+00	0.00E+00	0.00E+00	0.00E+00	0.00E+00
1800	ALL	755188.42	4037860.7	7.67E-08	70YrCancerDerived_InhSoil[	7.67E-08	0.00E+00	0.00E+00	0.00E+00	0.00E+00	0.00E+00	0.00E+00	0.00E+00	0.00E+00	0.00E+00	0.00E+00	0.00E+00
1801	ALL	755288.42	4037860.7	7.50E-08	70YrCancerDerived_InhSoil[	7.50E-08	0.00E+00	0.00E+00	0.00E+00	0.00E+00	0.00E+00	0.00E+00	0.00E+00	0.00E+00	0.00E+00	0.00E+00	0.00E+00
1802	ALL	746388.42	4037960.7	8.17E-08	70YrCancerDerived_InhSoil[	8.17E-08	0.00E+00	0.00E+00	0.00E+00	0.00E+00	0.00E+00	0.00E+00	0.00E+00	0.00E+00	0.00E+00	0.00E+00	0.00E+00
1803	ALL	746488.42	4037960.7	8.12E-08	70YrCancerDerived_InhSoil[	8.12E-08	0.00E+00	0.00E+00	0.00E+00	0.00E+00	0.00E+00	0.00E+00	0.00E+00	0.00E+00	0.00E+00	0.00E+00	0.00E+00
1804	ALL	746588.42	4037960.7	8.01E-08	70YrCancerDerived_InhSoil[	8.01E-08	0.00E+00	0.00E+00	0.00E+00	0.00E+00	0.00E+00	0.00E+00	0.00E+00	0.00E+00	0.00E+00	0.00E+00	0.00E+00
1805	ALL	746688.42	4037960.7	7.97E-08	70YrCancerDerived_InhSoil[	7.97E-08	0.00E+00	0.00E+00	0.00E+00	0.00E+00	0.00E+00	0.00E+00	0.00E+00	0.00E+00	0.00E+00	0.00E+00	0.00E+00
1806	ALL	746788.42	4037960.7	7.80E-08	70YrCancerDerived_InhSoil[	7.80E-08	0.00E+00	0.00E+00	0.00E+00	0.00E+00	0.00E+00	0.00E+00	0.00E+00	0.00E+00	0.00E+00	0.00E+00	0.00E+00
1807	ALL	746888.42	4037960.7	7.62E-08	70YrCancerDerived_InhSoil[	7.62E-08	0.00E+00	0.00E+00	0.00E+00	0.00E+00	0.00E+00	0.00E+00	0.00E+00	0.00E+00	0.00E+00	0.00E+00	0.00E+00
1808	ALL	746988.42	4037960.7	7.43E-08	70YrCancerDerived_InhSoil[	7.43E-08	0.00E+00	0.00E+00	0.00E+00	0.00E+00	0.00E+00	0.00E+00	0.00E+00	0.00E+00	0.00E+00	0.00E+00	0.00E+00
1809	ALL	747088.42	4037960.7	7.24E-08	70YrCancerDerived_InhSoil[	7.24E-08	0.00E+00	0.00E+00	0.00E+00	0.00E+00	0.00E+00	0.00E+00	0.00E+00	0.00E+00	0.00E+00	0.00E+00	0.00E+00
1810	ALL	747188.42	4037960.7	7.07E-08	70YrCancerDerived_InhSoil[	7.07E-08	0.00E+00	0.00E+00	0.00E+00	0.00E+00	0.00E+00	0.00E+00	0.00E+00	0.00E+00	0.00E+00	0.00E+00	0.00E+00
1811	ALL	747288.42	4037960.7	6.96E-08	70YrCancerDerived_InhSoil[	6.96E-08	0.00E+00	0.00E+00	0.00E+00	0.00E+00	0.00E+00	0.00E+00	0.00E+00	0.00E+00	0.00E+00	0.00E+00	0.00E+00
1812	ALL	747388.42	4037960.7	6.92E-08	70YrCancerDerived_InhSoil[	6.92E-08	0.00E+00	0.00E+00	0.00E+00	0.00E+00	0.00E+00	0.00E+00	0.00E+00	0.00E+00	0.00E+00	0.00E+00	0.00E+00
1813	ALL	747488.42	4037960.7	6.99E-08	70YrCancerDerived_InhSoil[	6.99E-08	0.00E+00	0.00E+00	0.00E+00	0.00E+00	0.00E+00	0.00E+00	0.00E+00	0.00E+00	0.00E+00	0.00E+00	0.00E+00
1814	ALL	747588.42	4037960.7	7.18E-08	70YrCancerDerived_InhSoil[	7.18E-08	0.00E+00	0.00E+00	0.00E+00	0.00E+00	0.00E+00	0.00E+00	0.00E+00	0.00E+00	0.00E+00	0.00E+00	0.00E+00
1815	ALL	747688.42	4037960.7	7.42E-08	70YrCancerDerived_InhSoil[	7.42E-08	0.00E+00	0.00E+00	0.00E+00	0.00E+00	0.00E+00	0.00E+00	0.00E+00	0.00E+00	0.00E+00	0.00E+00	0.00E+00
1816	ALL	747788.42	4037960.7	7.61E-08	70YrCancerDerived_InhSoil[	7.61E-08	0.00E+00	0.00E+00	0.00E+00	0.00E+00	0.00E+00	0.00E+00	0.00E+00	0.00E+00	0.00E+00	0.00E+00	0.00E+00
1817	ALL	747888.42	4037960.7	7.73E-08	70YrCancerDerived_InhSoil[	7.73E-08	0.00E+00	0.00E+00	0.00E+00	0.00E+00	0.00E+00	0.00E+00	0.00E+00	0.00E+00	0.00E+00	0.00E+00	0.00E+00
1818	ALL	747988.42	4037960.7	7.78E-08	70YrCancerDerived_InhSoil[	7.78E-08	0.00E+00	0.00E+00	0.00E+00	0.00E+00	0.00E+00	0.00E+00	0.00E+00	0.00E+00	0.00E+00	0.00E+00	0.00E+00
1819	ALL	748088.42	4037960.7	7.79E-08	70YrCancerDerived_InhSoil[	7.79E-08	0.00E+00	0.00E+00	0.00E+00	0.00E+00	0.00E+00	0.00E+00	0.00E+00	0.00E+00	0.00E+00	0.00E+00	0.00E+00
1820	ALL	748188.42	4037960.7	7.80E-08	70YrCancerDerived_InhSoil[	7.80E-08	0.00E+00	0.00E+00	0.00E+00	0.00E+00	0.00E+00	0.00E+00	0.00E+00	0.00E+00	0.00E+00	0.00E+00	0.00E+00
1821	ALL	749888.42	4037960.7	2.30E-07	70YrCancerDerived_InhSoil[	2.30E-07	0.00E+00	0.00E+00	0.00E+00	0.00E+00	0.00E+00	0.00E+00	0.00E+00	0.00E+00	0.00E+00	0.00E+00	0.00E+00
1822	ALL	749988.42	4037960.7	2.36E-07	70YrCancerDerived_InhSoil[	2.36E-07	0.00E+00	0.00E+00	0.00E+00	0.00E+00	0.00E+00	0.00E+00	0.00E+00	0.00E+00	0.00E+00	0.00E+00	0.00E+00
1823	ALL	750088.42	4037960.7	2.41E-07	70YrCancerDerived_InhSoil[	2.41E-07	0.00E+00	0.00E+00	0.00E+00	0.00E+00	0.00E+00	0.00E+00	0.00E+00	0.00E+00	0.00E+00	0.00E+00	0.00E+00
1824	ALL	750188.42	4037960.7	2.45E-07	70YrCancerDerived_InhSoil[	2.45E-07	0.00E+00	0.00E+00	0.00E+00	0.00E+00	0.00E+00	0.00E+00	0.00E+00	0.00E+00	0.00E+00	0.00E+00	0.00E+00
1825	ALL	750288.42	4037960.7	2.49E-07	70YrCancerDerived_InhSoil[	2.49E-07	0.00E+00	0.00E+00	0.00E+00	0.00E+00	0.00E+00	0.00E+00	0.00E+00	0.00E+00	0.00E+00	0.00E+00	0.00E+00
1826	ALL	752388.42	4037960.7	1.74E-07	70YrCancerDerived_InhSoil[	1.74E-07	0.00E+00	0.00E+00	0.00E+00	0.00E+00	0.00E+00	0.00E+00	0.00E+00	0.00E+00	0.00E+00	0.00E+00	0.00E+00
1827	ALL	752488.42	4037960.7	1.68E-07	70YrCancerDerived_InhSoil[	1.68E-07	0.00E+00	0.00E+00	0.00E+00	0.00E+00	0.00E+00	0.00E+00	0.00E+00	0.00E+00	0.00E+00	0.00E+00	0.00E+00
1828	ALL	752588.42	4037960.7	1.62E-07	70YrCancerDerived_InhSoil[	1.62E-07	0.00E+00	0.00E+00	0.00E+00	0.00E+00	0.00E+00	0.00E+00	0.00E+00	0.00E+00	0.00E+00	0.00E+00	0.00E+00
1829	ALL	752688.42	4037960.7	1.56E-07	70YrCancerDerived_InhSoil[	1.56E-07	0.00E+00	0.00E+00	0.00E+00	0.00E+00	0.00E+00	0.00E+00	0.00E+00	0.00E+00	0.00E+00	0.00E+00	0.00E+00
1830	ALL	752788.42	4037960.7	1.51E-07	70YrCancerDerived_InhSoil[	1.51E-07	0.00E+00	0.00E+00	0.00E+00	0.00E+00	0.00E+00	0.00E+00	0.00E+00	0.00E+00	0.00E+00	0.00E+00	0.00E+00
1831	ALL	754888.42	4037960.7	8.08E-08	70YrCancerDerived_InhSoil[	8.08E-08	0.00E+00	0.00E+00	0.00E+00	0.00E+00	0.00E+00	0.00E+00	0.00E+00	0.00E+00	0.00E+00	0.00E+00	0.00E+00
1832	ALL	754988.42	4037960.7	7.89E-08	70YrCancerDerived_InhSoil[	7.89E-08	0.00E+00	0.00E+00	0.00E+00	0.00E+00	0.00E+00	0.00E+00	0.00E+00	0.00E+00	0.00E+00	0.00E+00	0.00E+00
1833	ALL	755088.42	4037960.7	7.71E-08	70YrCancerDerived_InhSoil[	7.71E-08	0.00E+00	0.00E+00	0.00E+00	0.00E+00	0.00E+00	0.00E+00	0.00E+00	0.00E+00	0.00E+00	0.00E+00	0.00E+00
1834	ALL	755188.42	4037960.7	7.54E-08	70YrCancerDerived_InhSoil[	7.54E-08	0.00E+00	0.00E+00	0.00E+00	0.00E+00	0.00E+00	0.00E+00	0.00E+00	0.00E+00	0.00E+00	0.00E+00	0.00E+00
1835	ALL	755288.42	4037960.7	7.37E-08	70YrCancerDerived_InhSoil[	7.37E-08	0.00E+00	0.00E+00	0.00E+00	0.00E+00	0.00E+00	0.00E+00	0.00E+00	0.00E+00	0.00E+00	0.00E+00	0.00E+00
1836	ALL	747888.42	4038060.7	7.78E-08	70YrCancerDerived_InhSoil[	7.78E-08	0.00E+00	0.00E+00	0.00E+00	0.00E+00	0.00E+00	0.00E+00	0.00E+00	0.00E+00	0.00E+00	0.00E+00	0.00E+00
1837	ALL	747988.42	4038060.7	7.88E-08	70YrCancerDerived_InhSoil[	7.88E-08	0.00E+00	0.00E+00	0.00E+00	0.00E+00	0.00E+00	0.00E+00	0.00E+00	0.00E+00	0.00E+00	0.00E+00	0.00E+00
1838	ALL	748088.42	4038060.7	7.91E-08	70YrCancerDerived_InhSoil[	7.91E-08	0.00E+00	0.00E+00	0.00E+00	0.00E+00	0.00E+00	0.00E+00	0.00E+00	0.00E+00	0.00E+00	0.00E+00	0.00E+00
1839	ALL	748188.42	4038060.7	7.94E-08	70YrCancerDerived_InhSoil[	7.94E-08	0.00E+00	0.00E+00	0.00E+00	0.00E+00	0.00E+00	0.00E+00	0.00E+00	0.00E+00	0.00E+00	0.00E+00	0.00E+00
1840	ALL	749888.42	4038060.7	2.47E-07	70YrCancerDerived_InhSoil[	2.47E-07	0.00E+00	0.00E+00	0.00E+00	0.00E+00	0.00E+00	0.00E+00	0.00E+00	0.00E+00	0.00E+00	0.00E+00	0.00E+00
1841	ALL	749988.42	4038060.7	2.53E-07	70YrCancerDerived_InhSoil[	2.53E-07	0.00E+00	0.00E+00	0.00E+00	0.00E+00	0.00E+00	0.00E+00	0.00E+00	0.00E+00	0.00E+00	0.00E+00	0.00E+00
1842	ALL	750088.42	4038060.7	2.58E-07	70YrCancerDerived_InhSoil[	2.58E-07	0.00E+00	0.00E+00	0.00E+00	0.00E+00	0.00E+00	0.00E+00	0.00E+00	0.00E+00	0.00E+00	0.00E+00	0.00E+00
1843	ALL	750188.42	4038060.7	2.62E-07	70YrCancerDerived_InhSoil[	2.62E-07	0.00E+00	0.00E+00	0.00E+00	0.00E+00	0.00E+00	0.00E+00	0.00E+00	0.00E+00	0.00E+00	0.00E+00	0.00E+00
1844	ALL	750288.42	4038060.7	2.66E-07	70YrCancerDerived_InhSoil[	2.66E-07	0.00E+00	0.00E+00	0.00E+00	0.00E+00	0.00E+00	0.00E+00	0.00E+00	0.00E+00	0.00E+00	0.00E+00	0.00E+00
1845	ALL	750388.42	4038060.7	2.68E-07	70YrCancerDerived_InhSoil[	2.68E-07	0.00E+00	0.00E+00	0.00E+00	0.00E+00	0.00E+00	0.00E+00	0.00E+00	0.00E+00	0.00E+00	0.00E+00	0.00E+00
1846	ALL	750488.42	4038060.7	2.70E-07	70YrCancerDerived_InhSoil[	2.70E-07	0.00E+00	0.00E+00	0.00E+00	0.00E+00	0.00E+00	0.00E+00	0.00E+00	0.00E+00	0.00E+00	0.00E+00	0.00E+00

1847	ALL	750588.42	4038060.7	2.71E-07	70YrCancerDerived_InhSoil[	2.71E-07	0.00E+00	0.00E+00	0.00E+00	0.00E+00	0.00E+00	0.00E+00	0.00E+00	0.00E+00	0.00E+00	0.00E+00	0.00E+00
1848	ALL	750688.42	4038060.7	2.70E-07	70YrCancerDerived_InhSoil[	2.70E-07	0.00E+00	0.00E+00	0.00E+00	0.00E+00	0.00E+00	0.00E+00	0.00E+00	0.00E+00	0.00E+00	0.00E+00	0.00E+00
1849	ALL	750788.42	4038060.7	2.69E-07	70YrCancerDerived_InhSoil[	2.69E-07	0.00E+00	0.00E+00	0.00E+00	0.00E+00	0.00E+00	0.00E+00	0.00E+00	0.00E+00	0.00E+00	0.00E+00	0.00E+00
1850	ALL	750888.42	4038060.7	2.67E-07	70YrCancerDerived_InhSoil[	2.67E-07	0.00E+00	0.00E+00	0.00E+00	0.00E+00	0.00E+00	0.00E+00	0.00E+00	0.00E+00	0.00E+00	0.00E+00	0.00E+00
1851	ALL	750988.42	4038060.7	2.63E-07	70YrCancerDerived_InhSoil[	2.63E-07	0.00E+00	0.00E+00	0.00E+00	0.00E+00	0.00E+00	0.00E+00	0.00E+00	0.00E+00	0.00E+00	0.00E+00	0.00E+00
1852	ALL	751088.42	4038060.7	2.59E-07	70YrCancerDerived_InhSoil[	2.59E-07	0.00E+00	0.00E+00	0.00E+00	0.00E+00	0.00E+00	0.00E+00	0.00E+00	0.00E+00	0.00E+00	0.00E+00	0.00E+00
1853	ALL	751188.42	4038060.7	2.54E-07	70YrCancerDerived_InhSoil[	2.54E-07	0.00E+00	0.00E+00	0.00E+00	0.00E+00	0.00E+00	0.00E+00	0.00E+00	0.00E+00	0.00E+00	0.00E+00	0.00E+00
1854	ALL	751288.42	4038060.7	2.49E-07	70YrCancerDerived_InhSoil[	2.49E-07	0.00E+00	0.00E+00	0.00E+00	0.00E+00	0.00E+00	0.00E+00	0.00E+00	0.00E+00	0.00E+00	0.00E+00	0.00E+00
1855	ALL	751388.42	4038060.7	2.42E-07	70YrCancerDerived_InhSoil[	2.42E-07	0.00E+00	0.00E+00	0.00E+00	0.00E+00	0.00E+00	0.00E+00	0.00E+00	0.00E+00	0.00E+00	0.00E+00	0.00E+00
1856	ALL	752388.42	4038060.7	1.72E-07	70YrCancerDerived_InhSoil[	1.72E-07	0.00E+00	0.00E+00	0.00E+00	0.00E+00	0.00E+00	0.00E+00	0.00E+00	0.00E+00	0.00E+00	0.00E+00	0.00E+00
1857	ALL	752488.42	4038060.7	1.66E-07	70YrCancerDerived_InhSoil[	1.66E-07	0.00E+00	0.00E+00	0.00E+00	0.00E+00	0.00E+00	0.00E+00	0.00E+00	0.00E+00	0.00E+00	0.00E+00	0.00E+00
1858	ALL	752588.42	4038060.7	1.60E-07	70YrCancerDerived_InhSoil[	1.60E-07	0.00E+00	0.00E+00	0.00E+00	0.00E+00	0.00E+00	0.00E+00	0.00E+00	0.00E+00	0.00E+00	0.00E+00	0.00E+00
1859	ALL	752688.42	4038060.7	1.54E-07	70YrCancerDerived_InhSoil[	1.54E-07	0.00E+00	0.00E+00	0.00E+00	0.00E+00	0.00E+00	0.00E+00	0.00E+00	0.00E+00	0.00E+00	0.00E+00	0.00E+00
1860	ALL	754788.42	4038060.7	8.13E-08	70YrCancerDerived_InhSoil[	8.13E-08	0.00E+00	0.00E+00	0.00E+00	0.00E+00	0.00E+00	0.00E+00	0.00E+00	0.00E+00	0.00E+00	0.00E+00	0.00E+00
1861	ALL	754888.42	4038060.7	7.94E-08	70YrCancerDerived_InhSoil[	7.94E-08	0.00E+00	0.00E+00	0.00E+00	0.00E+00	0.00E+00	0.00E+00	0.00E+00	0.00E+00	0.00E+00	0.00E+00	0.00E+00
1862	ALL	754988.42	4038060.7	7.75E-08	70YrCancerDerived_InhSoil[	7.75E-08	0.00E+00	0.00E+00	0.00E+00	0.00E+00	0.00E+00	0.00E+00	0.00E+00	0.00E+00	0.00E+00	0.00E+00	0.00E+00
1863	ALL	755088.42	4038060.7	7.57E-08	70YrCancerDerived_InhSoil[	7.57E-08	0.00E+00	0.00E+00	0.00E+00	0.00E+00	0.00E+00	0.00E+00	0.00E+00	0.00E+00	0.00E+00	0.00E+00	0.00E+00
1864	ALL	755188.42	4038060.7	7.40E-08	70YrCancerDerived_InhSoil[	7.40E-08	0.00E+00	0.00E+00	0.00E+00	0.00E+00	0.00E+00	0.00E+00	0.00E+00	0.00E+00	0.00E+00	0.00E+00	0.00E+00
1865	ALL	755288.42	4038060.7	7.24E-08	70YrCancerDerived_InhSoil[	7.24E-08	0.00E+00	0.00E+00	0.00E+00	0.00E+00	0.00E+00	0.00E+00	0.00E+00	0.00E+00	0.00E+00	0.00E+00	0.00E+00
1866	ALL	747888.42	4038160.7	7.84E-08	70YrCancerDerived_InhSoil[	7.84E-08	0.00E+00	0.00E+00	0.00E+00	0.00E+00	0.00E+00	0.00E+00	0.00E+00	0.00E+00	0.00E+00	0.00E+00	0.00E+00
1867	ALL	747988.42	4038160.7	7.99E-08	70YrCancerDerived_InhSoil[	7.99E-08	0.00E+00	0.00E+00	0.00E+00	0.00E+00	0.00E+00	0.00E+00	0.00E+00	0.00E+00	0.00E+00	0.00E+00	0.00E+00
1868	ALL	748088.42	4038160.7	8.06E-08	70YrCancerDerived_InhSoil[	8.06E-08	0.00E+00	0.00E+00	0.00E+00	0.00E+00	0.00E+00	0.00E+00	0.00E+00	0.00E+00	0.00E+00	0.00E+00	0.00E+00
1869	ALL	748188.42	4038160.7	8.10E-08	70YrCancerDerived_InhSoil[	8.10E-08	0.00E+00	0.00E+00	0.00E+00	0.00E+00	0.00E+00	0.00E+00	0.00E+00	0.00E+00	0.00E+00	0.00E+00	0.00E+00
1870	ALL	749888.42	4038160.7	2.66E-07	70YrCancerDerived_InhSoil[	2.66E-07	0.00E+00	0.00E+00	0.00E+00	0.00E+00	0.00E+00	0.00E+00	0.00E+00	0.00E+00	0.00E+00	0.00E+00	0.00E+00
1871	ALL	749988.42	4038160.7	2.72E-07	70YrCancerDerived_InhSoil[	2.72E-07	0.00E+00	0.00E+00	0.00E+00	0.00E+00	0.00E+00	0.00E+00	0.00E+00	0.00E+00	0.00E+00	0.00E+00	0.00E+00
1872	ALL	750088.42	4038160.7	2.77E-07	70YrCancerDerived_InhSoil[	2.77E-07	0.00E+00	0.00E+00	0.00E+00	0.00E+00	0.00E+00	0.00E+00	0.00E+00	0.00E+00	0.00E+00	0.00E+00	0.00E+00
1873	ALL	750188.42	4038160.7	2.82E-07	70YrCancerDerived_InhSoil[	2.82E-07	0.00E+00	0.00E+00	0.00E+00	0.00E+00	0.00E+00	0.00E+00	0.00E+00	0.00E+00	0.00E+00	0.00E+00	0.00E+00
1874	ALL	750288.42	4038160.7	2.85E-07	70YrCancerDerived_InhSoil[	2.85E-07	0.00E+00	0.00E+00	0.00E+00	0.00E+00	0.00E+00	0.00E+00	0.00E+00	0.00E+00	0.00E+00	0.00E+00	0.00E+00
1875	ALL	750388.42	4038160.7	2.87E-07	70YrCancerDerived_InhSoil[	2.87E-07	0.00E+00	0.00E+00	0.00E+00	0.00E+00	0.00E+00	0.00E+00	0.00E+00	0.00E+00	0.00E+00	0.00E+00	0.00E+00
1876	ALL	750488.42	4038160.7	2.88E-07	70YrCancerDerived_InhSoil[	2.88E-07	0.00E+00	0.00E+00	0.00E+00	0.00E+00	0.00E+00	0.00E+00	0.00E+00	0.00E+00	0.00E+00	0.00E+00	0.00E+00
1877	ALL	750588.42	4038160.7	2.87E-07	70YrCancerDerived_InhSoil[	2.87E-07	0.00E+00	0.00E+00	0.00E+00	0.00E+00	0.00E+00	0.00E+00	0.00E+00	0.00E+00	0.00E+00	0.00E+00	0.00E+00
1878	ALL	750688.42	4038160.7	2.86E-07	70YrCancerDerived_InhSoil[	2.86E-07	0.00E+00	0.00E+00	0.00E+00	0.00E+00	0.00E+00	0.00E+00	0.00E+00	0.00E+00	0.00E+00	0.00E+00	0.00E+00
1879	ALL	750788.42	4038160.7	2.83E-07	70YrCancerDerived_InhSoil[	2.83E-07	0.00E+00	0.00E+00	0.00E+00	0.00E+00	0.00E+00	0.00E+00	0.00E+00	0.00E+00	0.00E+00	0.00E+00	0.00E+00
1880	ALL	750888.42	4038160.7	2.79E-07	70YrCancerDerived_InhSoil[	2.79E-07	0.00E+00	0.00E+00	0.00E+00	0.00E+00	0.00E+00	0.00E+00	0.00E+00	0.00E+00	0.00E+00	0.00E+00	0.00E+00
1881	ALL	750988.42	4038160.7	2.74E-07	70YrCancerDerived_InhSoil[	2.74E-07	0.00E+00	0.00E+00	0.00E+00	0.00E+00	0.00E+00	0.00E+00	0.00E+00	0.00E+00	0.00E+00	0.00E+00	0.00E+00
1882	ALL	751088.42	4038160.7	2.68E-07	70YrCancerDerived_InhSoil[	2.68E-07	0.00E+00	0.00E+00	0.00E+00	0.00E+00	0.00E+00	0.00E+00	0.00E+00	0.00E+00	0.00E+00	0.00E+00	0.00E+00
1883	ALL	751188.42	4038160.7	2.62E-07	70YrCancerDerived_InhSoil[	2.62E-07	0.00E+00	0.00E+00	0.00E+00	0.00E+00	0.00E+00	0.00E+00	0.00E+00	0.00E+00	0.00E+00	0.00E+00	0.00E+00
1884	ALL	751288.42	4038160.7	2.55E-07	70YrCancerDerived_InhSoil[	2.55E-07	0.00E+00	0.00E+00	0.00E+00	0.00E+00	0.00E+00	0.00E+00	0.00E+00	0.00E+00	0.00E+00	0.00E+00	0.00E+00
1885	ALL	751388.42	4038160.7	2.47E-07	70YrCancerDerived_InhSoil[	2.47E-07	0.00E+00	0.00E+00	0.00E+00	0.00E+00	0.00E+00	0.00E+00	0.00E+00	0.00E+00	0.00E+00	0.00E+00	0.00E+00
1886	ALL	751488.42	4038160.7	2.39E-07	70YrCancerDerived_InhSoil[	2.39E-07	0.00E+00	0.00E+00	0.00E+00	0.00E+00	0.00E+00	0.00E+00	0.00E+00	0.00E+00	0.00E+00	0.00E+00	0.00E+00
1887	ALL	751588.42	4038160.7	2.31E-07	70YrCancerDerived_InhSoil[	2.31E-07	0.00E+00	0.00E+00	0.00E+00	0.00E+00	0.00E+00	0.00E+00	0.00E+00	0.00E+00	0.00E+00	0.00E+00	0.00E+00
1888	ALL	751688.42	4038160.7	2.23E-07	70YrCancerDerived_InhSoil[	2.23E-07	0.00E+00	0.00E+00	0.00E+00	0.00E+00	0.00E+00	0.00E+00	0.00E+00	0.00E+00	0.00E+00	0.00E+00	0.00E+00
1889	ALL	751788.42	4038160.7	2.15E-07	70YrCancerDerived_InhSoil[	2.15E-07	0.00E+00	0.00E+00	0.00E+00	0.00E+00	0.00E+00	0.00E+00	0.00E+00	0.00E+00	0.00E+00	0.00E+00	0.00E+00
1890	ALL	751888.42	4038160.7	2.07E-07	70YrCancerDerived_InhSoil[	2.07E-07	0.00E+00	0.00E+00	0.00E+00	0.00E+00	0.00E+00	0.00E+00	0.00E+00	0.00E+00	0.00E+00	0.00E+00	0.00E+00
1891	ALL	751988.42	4038160.7	1.99E-07	70YrCancerDerived_InhSoil[	1.99E-07	0.00E+00	0.00E+00	0.00E+00	0.00E+00	0.00E+00	0.00E+00	0.00E+00	0.00E+00	0.00E+00	0.00E+00	0.00E+00
1892	ALL	752088.42	4038160.7	1.91E-07	70YrCancerDerived_InhSoil[	1.91E-07	0.00E+00	0.00E+00	0.00E+00	0.00E+00	0.00E+00	0.00E+00	0.00E+00	0.00E+00	0.00E+00	0.00E+00	0.00E+00
1893	ALL	752188.42	4038160.7	1.84E-07	70YrCancerDerived_InhSoil[	1.84E-07	0.00E+00	0.00E+00	0.00E+00	0.00E+00	0.00E+00	0.00E+00	0.00E+00	0.00E+00	0.00E+00	0.00E+00	0.00E+00
1894	ALL	752288.42	4038160.7	1.77E-07	70YrCancerDerived_InhSoil[	1.77E-07	0.00E+00	0.00E+00	0.00E+00	0.00E+00	0.00E+00	0.00E+00	0.00E+00	0.00E+00	0.00E+00	0.00E+00	0.00E+00
1895	ALL	752388.42	4038160.7	1.70E-07	70YrCancerDerived_InhSoil[	1.70E-07	0.00E+00	0.00E+00	0.00E+00	0.00E+00	0.00E+00	0.00E+00	0.00E+00	0.00E+00	0.00E+00	0.00E+00	0.00E+00
1896	ALL	752488.42	4038160.7	1.63E-07	70YrCancerDerived_InhSoil[	1.63E-07	0.00E+00	0.00E+00	0.00E+00	0.00E+00	0.00E+00	0.00E+00	0.00E+00	0.00E+00	0.00E+00	0.00E+00	0.00E+00
1897	ALL	752588.42	4038160.7	1.57E-07	70YrCancerDerived_InhSoil[	1.57E-07	0.00E+00	0.00E+00	0.00E+00	0.00E+00	0.00E+00	0.00E+00	0.00E+00	0.00E+00	0.00E+00	0.00E+00	0.00E+00
1898	ALL	752688.42	4038160.7	1.51E-07	70YrCancerDerived_InhSoil[	1.51E-07	0.00E+00	0.00E+00	0.00E+00	0.00E+00	0.00E+00	0.00E+00	0.00E+00	0.00E+00	0.00E+00	0.00E+00	0.00E+00
1899	ALL	754788.42	4038160.7	7.98E-08	70YrCancerDerived_InhSoil[	7.98E-08	0.00E+00	0.00E+00	0.00E+00	0.00E+00	0.00E+00	0.00E+00	0.00E+00	0.00E+00	0.00E+00	0.00E+00	0.00E+00
1900	ALL	754888.42	4038160.7	7.79E-08	70YrCancerDerived_InhSoil[	7.79E-08	0.00E+00	0.00E+00	0.00E+00	0.00E+00	0.00E+00	0.00E+00	0.00E+00	0.00E+00	0.00E+00	0.00E+00	0.00E+00
1901	ALL	754988.42	4038160.7	7.61E-08	70YrCancerDerived_InhSoil[	7.61E-08	0.00E+00	0.00E+00	0.00E+00	0.00E+00	0.00E+00	0.00E+00	0.00E+00	0.00E+00	0.00E+00	0.00E+00	0.00E+00
1902	ALL	755088.42	4038160.7	7.43E-08	70YrCancerDerived_InhSoil[	7.43E-08	0.00E+00	0.00E+00	0.00E+00	0.00E+00	0.00E+00	0.00E+00	0.00E+00	0.00E+00	0.00E+00	0.00E+00	0.00E+00

1903	ALL	755188.42	4038160.7	7.26E-08	70YrCancerDerived_InhSoilI	7.26E-08	0.00E+00	0.00E+00	0.00E+00	0.00E+00	0.00E+00	0.00E+00	0.00E+00	0.00E+00	0.00E+00	0.00E+00	0.00E+00
1904	ALL	755288.42	4038160.7	7.10E-08	70YrCancerDerived_InhSoilI	7.10E-08	0.00E+00	0.00E+00	0.00E+00	0.00E+00	0.00E+00	0.00E+00	0.00E+00	0.00E+00	0.00E+00	0.00E+00	0.00E+00
1905	ALL	747888.42	4038260.7	7.89E-08	70YrCancerDerived_InhSoilI	7.89E-08	0.00E+00	0.00E+00	0.00E+00	0.00E+00	0.00E+00	0.00E+00	0.00E+00	0.00E+00	0.00E+00	0.00E+00	0.00E+00
1906	ALL	747988.42	4038260.7	8.11E-08	70YrCancerDerived_InhSoilI	8.11E-08	0.00E+00	0.00E+00	0.00E+00	0.00E+00	0.00E+00	0.00E+00	0.00E+00	0.00E+00	0.00E+00	0.00E+00	0.00E+00
1907	ALL	748088.42	4038260.7	8.23E-08	70YrCancerDerived_InhSoilI	8.23E-08	0.00E+00	0.00E+00	0.00E+00	0.00E+00	0.00E+00	0.00E+00	0.00E+00	0.00E+00	0.00E+00	0.00E+00	0.00E+00
1908	ALL	748188.42	4038260.7	8.30E-08	70YrCancerDerived_InhSoilI	8.30E-08	0.00E+00	0.00E+00	0.00E+00	0.00E+00	0.00E+00	0.00E+00	0.00E+00	0.00E+00	0.00E+00	0.00E+00	0.00E+00
1909	ALL	749888.42	4038260.7	2.87E-07	70YrCancerDerived_InhSoilI	2.87E-07	0.00E+00	0.00E+00	0.00E+00	0.00E+00	0.00E+00	0.00E+00	0.00E+00	0.00E+00	0.00E+00	0.00E+00	0.00E+00
1910	ALL	749988.42	4038260.7	2.94E-07	70YrCancerDerived_InhSoilI	2.94E-07	0.00E+00	0.00E+00	0.00E+00	0.00E+00	0.00E+00	0.00E+00	0.00E+00	0.00E+00	0.00E+00	0.00E+00	0.00E+00
1911	ALL	750088.42	4038260.7	2.99E-07	70YrCancerDerived_InhSoilI	2.99E-07	0.00E+00	0.00E+00	0.00E+00	0.00E+00	0.00E+00	0.00E+00	0.00E+00	0.00E+00	0.00E+00	0.00E+00	0.00E+00
1912	ALL	750188.42	4038260.7	3.03E-07	70YrCancerDerived_InhSoilI	3.03E-07	0.00E+00	0.00E+00	0.00E+00	0.00E+00	0.00E+00	0.00E+00	0.00E+00	0.00E+00	0.00E+00	0.00E+00	0.00E+00
1913	ALL	750288.42	4038260.7	3.06E-07	70YrCancerDerived_InhSoilI	3.06E-07	0.00E+00	0.00E+00	0.00E+00	0.00E+00	0.00E+00	0.00E+00	0.00E+00	0.00E+00	0.00E+00	0.00E+00	0.00E+00
1914	ALL	750388.42	4038260.7	3.07E-07	70YrCancerDerived_InhSoilI	3.07E-07	0.00E+00	0.00E+00	0.00E+00	0.00E+00	0.00E+00	0.00E+00	0.00E+00	0.00E+00	0.00E+00	0.00E+00	0.00E+00
1915	ALL	750488.42	4038260.7	3.06E-07	70YrCancerDerived_InhSoilI	3.06E-07	0.00E+00	0.00E+00	0.00E+00	0.00E+00	0.00E+00	0.00E+00	0.00E+00	0.00E+00	0.00E+00	0.00E+00	0.00E+00
1916	ALL	750588.42	4038260.7	3.05E-07	70YrCancerDerived_InhSoilI	3.05E-07	0.00E+00	0.00E+00	0.00E+00	0.00E+00	0.00E+00	0.00E+00	0.00E+00	0.00E+00	0.00E+00	0.00E+00	0.00E+00
1917	ALL	750688.42	4038260.7	3.01E-07	70YrCancerDerived_InhSoilI	3.01E-07	0.00E+00	0.00E+00	0.00E+00	0.00E+00	0.00E+00	0.00E+00	0.00E+00	0.00E+00	0.00E+00	0.00E+00	0.00E+00
1918	ALL	750788.42	4038260.7	2.97E-07	70YrCancerDerived_InhSoilI	2.97E-07	0.00E+00	0.00E+00	0.00E+00	0.00E+00	0.00E+00	0.00E+00	0.00E+00	0.00E+00	0.00E+00	0.00E+00	0.00E+00
1919	ALL	750888.42	4038260.7	2.91E-07	70YrCancerDerived_InhSoilI	2.91E-07	0.00E+00	0.00E+00	0.00E+00	0.00E+00	0.00E+00	0.00E+00	0.00E+00	0.00E+00	0.00E+00	0.00E+00	0.00E+00
1920	ALL	750988.42	4038260.7	2.84E-07	70YrCancerDerived_InhSoilI	2.84E-07	0.00E+00	0.00E+00	0.00E+00	0.00E+00	0.00E+00	0.00E+00	0.00E+00	0.00E+00	0.00E+00	0.00E+00	0.00E+00
1921	ALL	751088.42	4038260.7	2.76E-07	70YrCancerDerived_InhSoilI	2.76E-07	0.00E+00	0.00E+00	0.00E+00	0.00E+00	0.00E+00	0.00E+00	0.00E+00	0.00E+00	0.00E+00	0.00E+00	0.00E+00
1922	ALL	751188.42	4038260.7	2.68E-07	70YrCancerDerived_InhSoilI	2.68E-07	0.00E+00	0.00E+00	0.00E+00	0.00E+00	0.00E+00	0.00E+00	0.00E+00	0.00E+00	0.00E+00	0.00E+00	0.00E+00
1923	ALL	751288.42	4038260.7	2.60E-07	70YrCancerDerived_InhSoilI	2.60E-07	0.00E+00	0.00E+00	0.00E+00	0.00E+00	0.00E+00	0.00E+00	0.00E+00	0.00E+00	0.00E+00	0.00E+00	0.00E+00
1924	ALL	751388.42	4038260.7	2.51E-07	70YrCancerDerived_InhSoilI	2.51E-07	0.00E+00	0.00E+00	0.00E+00	0.00E+00	0.00E+00	0.00E+00	0.00E+00	0.00E+00	0.00E+00	0.00E+00	0.00E+00
1925	ALL	751488.42	4038260.7	2.42E-07	70YrCancerDerived_InhSoilI	2.42E-07	0.00E+00	0.00E+00	0.00E+00	0.00E+00	0.00E+00	0.00E+00	0.00E+00	0.00E+00	0.00E+00	0.00E+00	0.00E+00
1926	ALL	751588.42	4038260.7	2.32E-07	70YrCancerDerived_InhSoilI	2.32E-07	0.00E+00	0.00E+00	0.00E+00	0.00E+00	0.00E+00	0.00E+00	0.00E+00	0.00E+00	0.00E+00	0.00E+00	0.00E+00
1927	ALL	751688.42	4038260.7	2.23E-07	70YrCancerDerived_InhSoilI	2.23E-07	0.00E+00	0.00E+00	0.00E+00	0.00E+00	0.00E+00	0.00E+00	0.00E+00	0.00E+00	0.00E+00	0.00E+00	0.00E+00
1928	ALL	751788.42	4038260.7	2.14E-07	70YrCancerDerived_InhSoilI	2.14E-07	0.00E+00	0.00E+00	0.00E+00	0.00E+00	0.00E+00	0.00E+00	0.00E+00	0.00E+00	0.00E+00	0.00E+00	0.00E+00
1929	ALL	751888.42	4038260.7	2.06E-07	70YrCancerDerived_InhSoilI	2.06E-07	0.00E+00	0.00E+00	0.00E+00	0.00E+00	0.00E+00	0.00E+00	0.00E+00	0.00E+00	0.00E+00	0.00E+00	0.00E+00
1930	ALL	751988.42	4038260.7	1.97E-07	70YrCancerDerived_InhSoilI	1.97E-07	0.00E+00	0.00E+00	0.00E+00	0.00E+00	0.00E+00	0.00E+00	0.00E+00	0.00E+00	0.00E+00	0.00E+00	0.00E+00
1931	ALL	752088.42	4038260.7	1.89E-07	70YrCancerDerived_InhSoilI	1.89E-07	0.00E+00	0.00E+00	0.00E+00	0.00E+00	0.00E+00	0.00E+00	0.00E+00	0.00E+00	0.00E+00	0.00E+00	0.00E+00
1932	ALL	752188.42	4038260.7	1.81E-07	70YrCancerDerived_InhSoilI	1.81E-07	0.00E+00	0.00E+00	0.00E+00	0.00E+00	0.00E+00	0.00E+00	0.00E+00	0.00E+00	0.00E+00	0.00E+00	0.00E+00
1933	ALL	752288.42	4038260.7	1.74E-07	70YrCancerDerived_InhSoilI	1.74E-07	0.00E+00	0.00E+00	0.00E+00	0.00E+00	0.00E+00	0.00E+00	0.00E+00	0.00E+00	0.00E+00	0.00E+00	0.00E+00
1934	ALL	752388.42	4038260.7	1.67E-07	70YrCancerDerived_InhSoilI	1.67E-07	0.00E+00	0.00E+00	0.00E+00	0.00E+00	0.00E+00	0.00E+00	0.00E+00	0.00E+00	0.00E+00	0.00E+00	0.00E+00
1935	ALL	752488.42	4038260.7	1.61E-07	70YrCancerDerived_InhSoilI	1.61E-07	0.00E+00	0.00E+00	0.00E+00	0.00E+00	0.00E+00	0.00E+00	0.00E+00	0.00E+00	0.00E+00	0.00E+00	0.00E+00
1936	ALL	752588.42	4038260.7	1.54E-07	70YrCancerDerived_InhSoilI	1.54E-07	0.00E+00	0.00E+00	0.00E+00	0.00E+00	0.00E+00	0.00E+00	0.00E+00	0.00E+00	0.00E+00	0.00E+00	0.00E+00
1937	ALL	752688.42	4038260.7	1.48E-07	70YrCancerDerived_InhSoilI	1.48E-07	0.00E+00	0.00E+00	0.00E+00	0.00E+00	0.00E+00	0.00E+00	0.00E+00	0.00E+00	0.00E+00	0.00E+00	0.00E+00
1938	ALL	754788.42	4038260.7	7.82E-08	70YrCancerDerived_InhSoilI	7.82E-08	0.00E+00	0.00E+00	0.00E+00	0.00E+00	0.00E+00	0.00E+00	0.00E+00	0.00E+00	0.00E+00	0.00E+00	0.00E+00
1939	ALL	754888.42	4038260.7	7.64E-08	70YrCancerDerived_InhSoilI	7.64E-08	0.00E+00	0.00E+00	0.00E+00	0.00E+00	0.00E+00	0.00E+00	0.00E+00	0.00E+00	0.00E+00	0.00E+00	0.00E+00
1940	ALL	754988.42	4038260.7	7.46E-08	70YrCancerDerived_InhSoilI	7.46E-08	0.00E+00	0.00E+00	0.00E+00	0.00E+00	0.00E+00	0.00E+00	0.00E+00	0.00E+00	0.00E+00	0.00E+00	0.00E+00
1941	ALL	755088.42	4038260.7	7.29E-08	70YrCancerDerived_InhSoilI	7.29E-08	0.00E+00	0.00E+00	0.00E+00	0.00E+00	0.00E+00	0.00E+00	0.00E+00	0.00E+00	0.00E+00	0.00E+00	0.00E+00
1942	ALL	755188.42	4038260.7	7.12E-08	70YrCancerDerived_InhSoilI	7.12E-08	0.00E+00	0.00E+00	0.00E+00	0.00E+00	0.00E+00	0.00E+00	0.00E+00	0.00E+00	0.00E+00	0.00E+00	0.00E+00
1943	ALL	755288.42	4038260.7	6.96E-08	70YrCancerDerived_InhSoilI	6.96E-08	0.00E+00	0.00E+00	0.00E+00	0.00E+00	0.00E+00	0.00E+00	0.00E+00	0.00E+00	0.00E+00	0.00E+00	0.00E+00
1944	ALL	747888.42	4038360.7	7.94E-08	70YrCancerDerived_InhSoilI	7.94E-08	0.00E+00	0.00E+00	0.00E+00	0.00E+00	0.00E+00	0.00E+00	0.00E+00	0.00E+00	0.00E+00	0.00E+00	0.00E+00
1945	ALL	747988.42	4038360.7	8.24E-08	70YrCancerDerived_InhSoilI	8.24E-08	0.00E+00	0.00E+00	0.00E+00	0.00E+00	0.00E+00	0.00E+00	0.00E+00	0.00E+00	0.00E+00	0.00E+00	0.00E+00
1946	ALL	748088.42	4038360.7	8.42E-08	70YrCancerDerived_InhSoilI	8.42E-08	0.00E+00	0.00E+00	0.00E+00	0.00E+00	0.00E+00	0.00E+00	0.00E+00	0.00E+00	0.00E+00	0.00E+00	0.00E+00
1947	ALL	748188.42	4038360.7	8.53E-08	70YrCancerDerived_InhSoilI	8.53E-08	0.00E+00	0.00E+00	0.00E+00	0.00E+00	0.00E+00	0.00E+00	0.00E+00	0.00E+00	0.00E+00	0.00E+00	0.00E+00
1948	ALL	749888.42	4038360.7	3.13E-07	70YrCancerDerived_InhSoilI	3.13E-07	0.00E+00	0.00E+00	0.00E+00	0.00E+00	0.00E+00	0.00E+00	0.00E+00	0.00E+00	0.00E+00	0.00E+00	0.00E+00
1949	ALL	749988.42	4038360.7	3.19E-07	70YrCancerDerived_InhSoilI	3.19E-07	0.00E+00	0.00E+00	0.00E+00	0.00E+00	0.00E+00	0.00E+00	0.00E+00	0.00E+00	0.00E+00	0.00E+00	0.00E+00
1950	ALL	750088.42	4038360.7	3.24E-07	70YrCancerDerived_InhSoilI	3.24E-07	0.00E+00	0.00E+00	0.00E+00	0.00E+00	0.00E+00	0.00E+00	0.00E+00	0.00E+00	0.00E+00	0.00E+00	0.00E+00
1951	ALL	750188.42	4038360.7	3.27E-07	70YrCancerDerived_InhSoilI	3.27E-07	0.00E+00	0.00E+00	0.00E+00	0.00E+00	0.00E+00	0.00E+00	0.00E+00	0.00E+00	0.00E+00	0.00E+00	0.00E+00
1952	ALL	750288.42	4038360.7	3.29E-07	70YrCancerDerived_InhSoilI	3.29E-07	0.00E+00	0.00E+00	0.00E+00	0.00E+00	0.00E+00	0.00E+00	0.00E+00	0.00E+00	0.00E+00	0.00E+00	0.00E+00
1953	ALL	750388.42	4038360.7	3.28E-07	70YrCancerDerived_InhSoilI	3.28E-07	0.00E+00	0.00E+00	0.00E+00	0.00E+00	0.00E+00	0.00E+00	0.00E+00	0.00E+00	0.00E+00	0.00E+00	0.00E+00
1954	ALL	750488.42	4038360.7	3.26E-07	70YrCancerDerived_InhSoilI	3.26E-07	0.00E+00	0.00E+00	0.00E+00	0.00E+00	0.00E+00	0.00E+00	0.00E+00	0.00E+00	0.00E+00	0.00E+00	0.00E+00
1955	ALL	750588.42	4038360.7	3.22E-07	70YrCancerDerived_InhSoilI	3.22E-07	0.00E+00	0.00E+00	0.00E+00	0.00E+00	0.00E+00	0.00E+00	0.00E+00	0.00E+00	0.00E+00	0.00E+00	0.00E+00
1956	ALL	750688.42	4038360.7	3.17E-07	70YrCancerDerived_InhSoilI	3.17E-07	0.00E+00	0.00E+00	0.00E+00	0.00E+00	0.00E+00	0.00E+00	0.00E+00	0.00E+00	0.00E+00	0.00E+00	0.00E+00
1957	ALL	750788.42	4038360.7	3.10E-07	70YrCancerDerived_InhSoilI	3.10E-07	0.00E+00	0.00E+00	0.00E+00	0.00E+00	0.00E+00	0.00E+00	0.00E+00	0.00E+00	0.00E+00	0.00E+00	0.00E+00
1958	ALL	750888.42	4038360.7	3.02E-07	70YrCancerDerived_InhSoilI	3.02E-07	0.00E+00	0.00E+00	0.00E+00	0.00E+00	0.00E+00	0.00E+00	0.00E+00	0.00E+00	0.00E+00	0.00E+00	0.00E+00

1959	ALL	750988.42	4038360.7	2.93E-07	70YrCancerDerived_InhSoilI	2.93E-07	0.00E+00	0.00E+00	0.00E+00	0.00E+00	0.00E+00	0.00E+00	0.00E+00	0.00E+00	0.00E+00	0.00E+00	0.00E+00
1960	ALL	751088.42	4038360.7	2.83E-07	70YrCancerDerived_InhSoilI	2.83E-07	0.00E+00	0.00E+00	0.00E+00	0.00E+00	0.00E+00	0.00E+00	0.00E+00	0.00E+00	0.00E+00	0.00E+00	0.00E+00
1961	ALL	751188.42	4038360.7	2.73E-07	70YrCancerDerived_InhSoilI	2.73E-07	0.00E+00	0.00E+00	0.00E+00	0.00E+00	0.00E+00	0.00E+00	0.00E+00	0.00E+00	0.00E+00	0.00E+00	0.00E+00
1962	ALL	751288.42	4038360.7	2.63E-07	70YrCancerDerived_InhSoilI	2.63E-07	0.00E+00	0.00E+00	0.00E+00	0.00E+00	0.00E+00	0.00E+00	0.00E+00	0.00E+00	0.00E+00	0.00E+00	0.00E+00
1963	ALL	751388.42	4038360.7	2.52E-07	70YrCancerDerived_InhSoilI	2.52E-07	0.00E+00	0.00E+00	0.00E+00	0.00E+00	0.00E+00	0.00E+00	0.00E+00	0.00E+00	0.00E+00	0.00E+00	0.00E+00
1964	ALL	751488.42	4038360.7	2.42E-07	70YrCancerDerived_InhSoilI	2.42E-07	0.00E+00	0.00E+00	0.00E+00	0.00E+00	0.00E+00	0.00E+00	0.00E+00	0.00E+00	0.00E+00	0.00E+00	0.00E+00
1965	ALL	751588.42	4038360.7	2.32E-07	70YrCancerDerived_InhSoilI	2.32E-07	0.00E+00	0.00E+00	0.00E+00	0.00E+00	0.00E+00	0.00E+00	0.00E+00	0.00E+00	0.00E+00	0.00E+00	0.00E+00
1966	ALL	751688.42	4038360.7	2.22E-07	70YrCancerDerived_InhSoilI	2.22E-07	0.00E+00	0.00E+00	0.00E+00	0.00E+00	0.00E+00	0.00E+00	0.00E+00	0.00E+00	0.00E+00	0.00E+00	0.00E+00
1967	ALL	751788.42	4038360.7	2.12E-07	70YrCancerDerived_InhSoilI	2.12E-07	0.00E+00	0.00E+00	0.00E+00	0.00E+00	0.00E+00	0.00E+00	0.00E+00	0.00E+00	0.00E+00	0.00E+00	0.00E+00
1968	ALL	751888.42	4038360.7	2.03E-07	70YrCancerDerived_InhSoilI	2.03E-07	0.00E+00	0.00E+00	0.00E+00	0.00E+00	0.00E+00	0.00E+00	0.00E+00	0.00E+00	0.00E+00	0.00E+00	0.00E+00
1969	ALL	751988.42	4038360.7	1.94E-07	70YrCancerDerived_InhSoilI	1.94E-07	0.00E+00	0.00E+00	0.00E+00	0.00E+00	0.00E+00	0.00E+00	0.00E+00	0.00E+00	0.00E+00	0.00E+00	0.00E+00
1970	ALL	752088.42	4038360.7	1.86E-07	70YrCancerDerived_InhSoilI	1.86E-07	0.00E+00	0.00E+00	0.00E+00	0.00E+00	0.00E+00	0.00E+00	0.00E+00	0.00E+00	0.00E+00	0.00E+00	0.00E+00
1971	ALL	752188.42	4038360.7	1.78E-07	70YrCancerDerived_InhSoilI	1.78E-07	0.00E+00	0.00E+00	0.00E+00	0.00E+00	0.00E+00	0.00E+00	0.00E+00	0.00E+00	0.00E+00	0.00E+00	0.00E+00
1972	ALL	752288.42	4038360.7	1.71E-07	70YrCancerDerived_InhSoilI	1.71E-07	0.00E+00	0.00E+00	0.00E+00	0.00E+00	0.00E+00	0.00E+00	0.00E+00	0.00E+00	0.00E+00	0.00E+00	0.00E+00
1973	ALL	752388.42	4038360.7	1.64E-07	70YrCancerDerived_InhSoilI	1.64E-07	0.00E+00	0.00E+00	0.00E+00	0.00E+00	0.00E+00	0.00E+00	0.00E+00	0.00E+00	0.00E+00	0.00E+00	0.00E+00
1974	ALL	752488.42	4038360.7	1.57E-07	70YrCancerDerived_InhSoilI	1.57E-07	0.00E+00	0.00E+00	0.00E+00	0.00E+00	0.00E+00	0.00E+00	0.00E+00	0.00E+00	0.00E+00	0.00E+00	0.00E+00
1975	ALL	752588.42	4038360.7	1.51E-07	70YrCancerDerived_InhSoilI	1.51E-07	0.00E+00	0.00E+00	0.00E+00	0.00E+00	0.00E+00	0.00E+00	0.00E+00	0.00E+00	0.00E+00	0.00E+00	0.00E+00
1976	ALL	752688.42	4038360.7	1.45E-07	70YrCancerDerived_InhSoilI	1.45E-07	0.00E+00	0.00E+00	0.00E+00	0.00E+00	0.00E+00	0.00E+00	0.00E+00	0.00E+00	0.00E+00	0.00E+00	0.00E+00
1977	ALL	754788.42	4038360.7	7.67E-08	70YrCancerDerived_InhSoilI	7.67E-08	0.00E+00	0.00E+00	0.00E+00	0.00E+00	0.00E+00	0.00E+00	0.00E+00	0.00E+00	0.00E+00	0.00E+00	0.00E+00
1978	ALL	754888.42	4038360.7	7.48E-08	70YrCancerDerived_InhSoilI	7.48E-08	0.00E+00	0.00E+00	0.00E+00	0.00E+00	0.00E+00	0.00E+00	0.00E+00	0.00E+00	0.00E+00	0.00E+00	0.00E+00
1979	ALL	754988.42	4038360.7	7.31E-08	70YrCancerDerived_InhSoilI	7.31E-08	0.00E+00	0.00E+00	0.00E+00	0.00E+00	0.00E+00	0.00E+00	0.00E+00	0.00E+00	0.00E+00	0.00E+00	0.00E+00
1980	ALL	755088.42	4038360.7	7.14E-08	70YrCancerDerived_InhSoilI	7.14E-08	0.00E+00	0.00E+00	0.00E+00	0.00E+00	0.00E+00	0.00E+00	0.00E+00	0.00E+00	0.00E+00	0.00E+00	0.00E+00
1981	ALL	755188.42	4038360.7	6.98E-08	70YrCancerDerived_InhSoilI	6.98E-08	0.00E+00	0.00E+00	0.00E+00	0.00E+00	0.00E+00	0.00E+00	0.00E+00	0.00E+00	0.00E+00	0.00E+00	0.00E+00
1982	ALL	755288.42	4038360.7	6.83E-08	70YrCancerDerived_InhSoilI	6.83E-08	0.00E+00	0.00E+00	0.00E+00	0.00E+00	0.00E+00	0.00E+00	0.00E+00	0.00E+00	0.00E+00	0.00E+00	0.00E+00
1983	ALL	747888.42	4038460.7	7.98E-08	70YrCancerDerived_InhSoilI	7.98E-08	0.00E+00	0.00E+00	0.00E+00	0.00E+00	0.00E+00	0.00E+00	0.00E+00	0.00E+00	0.00E+00	0.00E+00	0.00E+00
1984	ALL	747988.42	4038460.7	8.36E-08	70YrCancerDerived_InhSoilI	8.36E-08	0.00E+00	0.00E+00	0.00E+00	0.00E+00	0.00E+00	0.00E+00	0.00E+00	0.00E+00	0.00E+00	0.00E+00	0.00E+00
1985	ALL	748088.42	4038460.7	8.63E-08	70YrCancerDerived_InhSoilI	8.63E-08	0.00E+00	0.00E+00	0.00E+00	0.00E+00	0.00E+00	0.00E+00	0.00E+00	0.00E+00	0.00E+00	0.00E+00	0.00E+00
1986	ALL	748188.42	4038460.7	8.79E-08	70YrCancerDerived_InhSoilI	8.79E-08	0.00E+00	0.00E+00	0.00E+00	0.00E+00	0.00E+00	0.00E+00	0.00E+00	0.00E+00	0.00E+00	0.00E+00	0.00E+00
1987	ALL	749888.42	4038460.7	3.42E-07	70YrCancerDerived_InhSoilI	3.42E-07	0.00E+00	0.00E+00	0.00E+00	0.00E+00	0.00E+00	0.00E+00	0.00E+00	0.00E+00	0.00E+00	0.00E+00	0.00E+00
1988	ALL	749988.42	4038460.7	3.48E-07	70YrCancerDerived_InhSoilI	3.48E-07	0.00E+00	0.00E+00	0.00E+00	0.00E+00	0.00E+00	0.00E+00	0.00E+00	0.00E+00	0.00E+00	0.00E+00	0.00E+00
1989	ALL	750088.42	4038460.7	3.52E-07	70YrCancerDerived_InhSoilI	3.52E-07	0.00E+00	0.00E+00	0.00E+00	0.00E+00	0.00E+00	0.00E+00	0.00E+00	0.00E+00	0.00E+00	0.00E+00	0.00E+00
1990	ALL	750188.42	4038460.7	3.53E-07	70YrCancerDerived_InhSoilI	3.53E-07	0.00E+00	0.00E+00	0.00E+00	0.00E+00	0.00E+00	0.00E+00	0.00E+00	0.00E+00	0.00E+00	0.00E+00	0.00E+00
1991	ALL	750288.42	4038460.7	3.53E-07	70YrCancerDerived_InhSoilI	3.53E-07	0.00E+00	0.00E+00	0.00E+00	0.00E+00	0.00E+00	0.00E+00	0.00E+00	0.00E+00	0.00E+00	0.00E+00	0.00E+00
1992	ALL	750388.42	4038460.7	3.50E-07	70YrCancerDerived_InhSoilI	3.50E-07	0.00E+00	0.00E+00	0.00E+00	0.00E+00	0.00E+00	0.00E+00	0.00E+00	0.00E+00	0.00E+00	0.00E+00	0.00E+00
1993	ALL	750488.42	4038460.7	3.45E-07	70YrCancerDerived_InhSoilI	3.45E-07	0.00E+00	0.00E+00	0.00E+00	0.00E+00	0.00E+00	0.00E+00	0.00E+00	0.00E+00	0.00E+00	0.00E+00	0.00E+00
1994	ALL	750588.42	4038460.7	3.39E-07	70YrCancerDerived_InhSoilI	3.39E-07	0.00E+00	0.00E+00	0.00E+00	0.00E+00	0.00E+00	0.00E+00	0.00E+00	0.00E+00	0.00E+00	0.00E+00	0.00E+00
1995	ALL	750688.42	4038460.7	3.31E-07	70YrCancerDerived_InhSoilI	3.31E-07	0.00E+00	0.00E+00	0.00E+00	0.00E+00	0.00E+00	0.00E+00	0.00E+00	0.00E+00	0.00E+00	0.00E+00	0.00E+00
1996	ALL	750788.42	4038460.7	3.21E-07	70YrCancerDerived_InhSoilI	3.21E-07	0.00E+00	0.00E+00	0.00E+00	0.00E+00	0.00E+00	0.00E+00	0.00E+00	0.00E+00	0.00E+00	0.00E+00	0.00E+00
1997	ALL	750888.42	4038460.7	3.11E-07	70YrCancerDerived_InhSoilI	3.11E-07	0.00E+00	0.00E+00	0.00E+00	0.00E+00	0.00E+00	0.00E+00	0.00E+00	0.00E+00	0.00E+00	0.00E+00	0.00E+00
1998	ALL	750988.42	4038460.7	3.00E-07	70YrCancerDerived_InhSoilI	3.00E-07	0.00E+00	0.00E+00	0.00E+00	0.00E+00	0.00E+00	0.00E+00	0.00E+00	0.00E+00	0.00E+00	0.00E+00	0.00E+00
1999	ALL	751088.42	4038460.7	2.88E-07	70YrCancerDerived_InhSoilI	2.88E-07	0.00E+00	0.00E+00	0.00E+00	0.00E+00	0.00E+00	0.00E+00	0.00E+00	0.00E+00	0.00E+00	0.00E+00	0.00E+00
2000	ALL	751188.42	4038460.7	2.76E-07	70YrCancerDerived_InhSoilI	2.76E-07	0.00E+00	0.00E+00	0.00E+00	0.00E+00	0.00E+00	0.00E+00	0.00E+00	0.00E+00	0.00E+00	0.00E+00	0.00E+00
2001	ALL	751288.42	4038460.7	2.64E-07	70YrCancerDerived_InhSoilI	2.64E-07	0.00E+00	0.00E+00	0.00E+00	0.00E+00	0.00E+00	0.00E+00	0.00E+00	0.00E+00	0.00E+00	0.00E+00	0.00E+00
2002	ALL	751388.42	4038460.7	2.53E-07	70YrCancerDerived_InhSoilI	2.53E-07	0.00E+00	0.00E+00	0.00E+00	0.00E+00	0.00E+00	0.00E+00	0.00E+00	0.00E+00	0.00E+00	0.00E+00	0.00E+00
2003	ALL	751888.42	4038460.7	2.00E-07	70YrCancerDerived_InhSoilI	2.00E-07	0.00E+00	0.00E+00	0.00E+00	0.00E+00	0.00E+00	0.00E+00	0.00E+00	0.00E+00	0.00E+00	0.00E+00	0.00E+00
2004	ALL	751988.42	4038460.7	1.91E-07	70YrCancerDerived_InhSoilI	1.91E-07	0.00E+00	0.00E+00	0.00E+00	0.00E+00	0.00E+00	0.00E+00	0.00E+00	0.00E+00	0.00E+00	0.00E+00	0.00E+00
2005	ALL	752088.42	4038460.7	1.83E-07	70YrCancerDerived_InhSoilI	1.83E-07	0.00E+00	0.00E+00	0.00E+00	0.00E+00	0.00E+00	0.00E+00	0.00E+00	0.00E+00	0.00E+00	0.00E+00	0.00E+00
2006	ALL	752188.42	4038460.7	1.75E-07	70YrCancerDerived_InhSoilI	1.75E-07	0.00E+00	0.00E+00	0.00E+00	0.00E+00	0.00E+00	0.00E+00	0.00E+00	0.00E+00	0.00E+00	0.00E+00	0.00E+00
2007	ALL	752288.42	4038460.7	1.67E-07	70YrCancerDerived_InhSoilI	1.67E-07	0.00E+00	0.00E+00	0.00E+00	0.00E+00	0.00E+00	0.00E+00	0.00E+00	0.00E+00	0.00E+00	0.00E+00	0.00E+00
2008	ALL	752388.42	4038460.7	1.60E-07	70YrCancerDerived_InhSoilI	1.60E-07	0.00E+00	0.00E+00	0.00E+00	0.00E+00	0.00E+00	0.00E+00	0.00E+00	0.00E+00	0.00E+00	0.00E+00	0.00E+00
2009	ALL	752488.42	4038460.7	1.54E-07	70YrCancerDerived_InhSoilI	1.54E-07	0.00E+00	0.00E+00	0.00E+00	0.00E+00	0.00E+00	0.00E+00	0.00E+00	0.00E+00	0.00E+00	0.00E+00	0.00E+00
2010	ALL	752588.42	4038460.7	1.48E-07	70YrCancerDerived_InhSoilI	1.48E-07	0.00E+00	0.00E+00	0.00E+00	0.00E+00	0.00E+00	0.00E+00	0.00E+00	0.00E+00	0.00E+00	0.00E+00	0.00E+00
2011	ALL	752688.42	4038460.7	1.42E-07	70YrCancerDerived_InhSoilI	1.42E-07	0.00E+00	0.00E+00	0.00E+00	0.00E+00	0.00E+00	0.00E+00	0.00E+00	0.00E+00	0.00E+00	0.00E+00	0.00E+00
2012	ALL	754788.42	4038460.7	7.51E-08	70YrCancerDerived_InhSoilI	7.51E-08	0.00E+00	0.00E+00	0.00E+00	0.00E+00	0.00E+00	0.00E+00	0.00E+00	0.00E+00	0.00E+00	0.00E+00	0.00E+00
2013	ALL	754888.42	4038460.7	7.33E-08	70YrCancerDerived_InhSoilI	7.33E-08	0.00E+00	0.00E+00	0.00E+00	0.00E+00	0.00E+00	0.00E+00	0.00E+00	0.00E+00	0.00E+00	0.00E+00	0.00E+00
2014	ALL	754988.42	4038460.7	7.16E-08	70YrCancerDerived_InhSoilI	7.16E-08	0.00E+00	0.00E+00	0.00E+00	0.00E+00	0.00E+00	0.00E+00	0.00E+00	0.00E+00	0.00E+00	0.00E+00	0.00E+00

2015	ALL	755088.42	4038460.7	7.00E-08	70YrCancerDerived_InhSoilI	7.00E-08	0.00E+00	0.00E+00	0.00E+00	0.00E+00	0.00E+00	0.00E+00	0.00E+00	0.00E+00	0.00E+00	0.00E+00	0.00E+00
2016	ALL	755188.42	4038460.7	6.84E-08	70YrCancerDerived_InhSoilI	6.84E-08	0.00E+00	0.00E+00	0.00E+00	0.00E+00	0.00E+00	0.00E+00	0.00E+00	0.00E+00	0.00E+00	0.00E+00	0.00E+00
2017	ALL	755288.42	4038460.7	6.69E-08	70YrCancerDerived_InhSoilI	6.69E-08	0.00E+00	0.00E+00	0.00E+00	0.00E+00	0.00E+00	0.00E+00	0.00E+00	0.00E+00	0.00E+00	0.00E+00	0.00E+00
2018	ALL	747888.42	4038560.7	8.01E-08	70YrCancerDerived_InhSoilI	8.01E-08	0.00E+00	0.00E+00	0.00E+00	0.00E+00	0.00E+00	0.00E+00	0.00E+00	0.00E+00	0.00E+00	0.00E+00	0.00E+00
2019	ALL	747988.42	4038560.7	8.48E-08	70YrCancerDerived_InhSoilI	8.48E-08	0.00E+00	0.00E+00	0.00E+00	0.00E+00	0.00E+00	0.00E+00	0.00E+00	0.00E+00	0.00E+00	0.00E+00	0.00E+00
2020	ALL	748088.42	4038560.7	8.83E-08	70YrCancerDerived_InhSoilI	8.83E-08	0.00E+00	0.00E+00	0.00E+00	0.00E+00	0.00E+00	0.00E+00	0.00E+00	0.00E+00	0.00E+00	0.00E+00	0.00E+00
2021	ALL	748188.42	4038560.7	9.07E-08	70YrCancerDerived_InhSoilI	9.07E-08	0.00E+00	0.00E+00	0.00E+00	0.00E+00	0.00E+00	0.00E+00	0.00E+00	0.00E+00	0.00E+00	0.00E+00	0.00E+00
2022	ALL	749888.42	4038560.7	3.75E-07	70YrCancerDerived_InhSoilI	3.75E-07	0.00E+00	0.00E+00	0.00E+00	0.00E+00	0.00E+00	0.00E+00	0.00E+00	0.00E+00	0.00E+00	0.00E+00	0.00E+00
2023	ALL	749988.42	4038560.7	3.80E-07	70YrCancerDerived_InhSoilI	3.80E-07	0.00E+00	0.00E+00	0.00E+00	0.00E+00	0.00E+00	0.00E+00	0.00E+00	0.00E+00	0.00E+00	0.00E+00	0.00E+00
2024	ALL	750088.42	4038560.7	3.82E-07	70YrCancerDerived_InhSoilI	3.82E-07	0.00E+00	0.00E+00	0.00E+00	0.00E+00	0.00E+00	0.00E+00	0.00E+00	0.00E+00	0.00E+00	0.00E+00	0.00E+00
2025	ALL	750188.42	4038560.7	3.82E-07	70YrCancerDerived_InhSoilI	3.82E-07	0.00E+00	0.00E+00	0.00E+00	0.00E+00	0.00E+00	0.00E+00	0.00E+00	0.00E+00	0.00E+00	0.00E+00	0.00E+00
2026	ALL	750288.42	4038560.7	3.78E-07	70YrCancerDerived_InhSoilI	3.78E-07	0.00E+00	0.00E+00	0.00E+00	0.00E+00	0.00E+00	0.00E+00	0.00E+00	0.00E+00	0.00E+00	0.00E+00	0.00E+00
2027	ALL	750388.42	4038560.7	3.72E-07	70YrCancerDerived_InhSoilI	3.72E-07	0.00E+00	0.00E+00	0.00E+00	0.00E+00	0.00E+00	0.00E+00	0.00E+00	0.00E+00	0.00E+00	0.00E+00	0.00E+00
2028	ALL	750488.42	4038560.7	3.64E-07	70YrCancerDerived_InhSoilI	3.64E-07	0.00E+00	0.00E+00	0.00E+00	0.00E+00	0.00E+00	0.00E+00	0.00E+00	0.00E+00	0.00E+00	0.00E+00	0.00E+00
2029	ALL	750588.42	4038560.7	3.55E-07	70YrCancerDerived_InhSoilI	3.55E-07	0.00E+00	0.00E+00	0.00E+00	0.00E+00	0.00E+00	0.00E+00	0.00E+00	0.00E+00	0.00E+00	0.00E+00	0.00E+00
2030	ALL	750688.42	4038560.7	3.43E-07	70YrCancerDerived_InhSoilI	3.43E-07	0.00E+00	0.00E+00	0.00E+00	0.00E+00	0.00E+00	0.00E+00	0.00E+00	0.00E+00	0.00E+00	0.00E+00	0.00E+00
2031	ALL	750788.42	4038560.7	3.31E-07	70YrCancerDerived_InhSoilI	3.31E-07	0.00E+00	0.00E+00	0.00E+00	0.00E+00	0.00E+00	0.00E+00	0.00E+00	0.00E+00	0.00E+00	0.00E+00	0.00E+00
2032	ALL	750888.42	4038560.7	3.18E-07	70YrCancerDerived_InhSoilI	3.18E-07	0.00E+00	0.00E+00	0.00E+00	0.00E+00	0.00E+00	0.00E+00	0.00E+00	0.00E+00	0.00E+00	0.00E+00	0.00E+00
2033	ALL	750988.42	4038560.7	3.05E-07	70YrCancerDerived_InhSoilI	3.05E-07	0.00E+00	0.00E+00	0.00E+00	0.00E+00	0.00E+00	0.00E+00	0.00E+00	0.00E+00	0.00E+00	0.00E+00	0.00E+00
2034	ALL	751088.42	4038560.7	2.91E-07	70YrCancerDerived_InhSoilI	2.91E-07	0.00E+00	0.00E+00	0.00E+00	0.00E+00	0.00E+00	0.00E+00	0.00E+00	0.00E+00	0.00E+00	0.00E+00	0.00E+00
2035	ALL	751188.42	4038560.7	2.77E-07	70YrCancerDerived_InhSoilI	2.77E-07	0.00E+00	0.00E+00	0.00E+00	0.00E+00	0.00E+00	0.00E+00	0.00E+00	0.00E+00	0.00E+00	0.00E+00	0.00E+00
2036	ALL	751288.42	4038560.7	2.64E-07	70YrCancerDerived_InhSoilI	2.64E-07	0.00E+00	0.00E+00	0.00E+00	0.00E+00	0.00E+00	0.00E+00	0.00E+00	0.00E+00	0.00E+00	0.00E+00	0.00E+00
2037	ALL	751388.42	4038560.7	2.51E-07	70YrCancerDerived_InhSoilI	2.51E-07	0.00E+00	0.00E+00	0.00E+00	0.00E+00	0.00E+00	0.00E+00	0.00E+00	0.00E+00	0.00E+00	0.00E+00	0.00E+00
2038	ALL	752788.42	4038560.7	1.34E-07	70YrCancerDerived_InhSoilI	1.34E-07	0.00E+00	0.00E+00	0.00E+00	0.00E+00	0.00E+00	0.00E+00	0.00E+00	0.00E+00	0.00E+00	0.00E+00	0.00E+00
2039	ALL	752888.42	4038560.7	1.29E-07	70YrCancerDerived_InhSoilI	1.29E-07	0.00E+00	0.00E+00	0.00E+00	0.00E+00	0.00E+00	0.00E+00	0.00E+00	0.00E+00	0.00E+00	0.00E+00	0.00E+00
2040	ALL	752988.42	4038560.7	1.24E-07	70YrCancerDerived_InhSoilI	1.24E-07	0.00E+00	0.00E+00	0.00E+00	0.00E+00	0.00E+00	0.00E+00	0.00E+00	0.00E+00	0.00E+00	0.00E+00	0.00E+00
2041	ALL	753088.42	4038560.7	1.20E-07	70YrCancerDerived_InhSoilI	1.20E-07	0.00E+00	0.00E+00	0.00E+00	0.00E+00	0.00E+00	0.00E+00	0.00E+00	0.00E+00	0.00E+00	0.00E+00	0.00E+00
2042	ALL	753188.42	4038560.7	1.16E-07	70YrCancerDerived_InhSoilI	1.16E-07	0.00E+00	0.00E+00	0.00E+00	0.00E+00	0.00E+00	0.00E+00	0.00E+00	0.00E+00	0.00E+00	0.00E+00	0.00E+00
2043	ALL	753288.42	4038560.7	1.12E-07	70YrCancerDerived_InhSoilI	1.12E-07	0.00E+00	0.00E+00	0.00E+00	0.00E+00	0.00E+00	0.00E+00	0.00E+00	0.00E+00	0.00E+00	0.00E+00	0.00E+00
2044	ALL	753388.42	4038560.7	1.09E-07	70YrCancerDerived_InhSoilI	1.09E-07	0.00E+00	0.00E+00	0.00E+00	0.00E+00	0.00E+00	0.00E+00	0.00E+00	0.00E+00	0.00E+00	0.00E+00	0.00E+00
2045	ALL	753488.42	4038560.7	1.05E-07	70YrCancerDerived_InhSoilI	1.05E-07	0.00E+00	0.00E+00	0.00E+00	0.00E+00	0.00E+00	0.00E+00	0.00E+00	0.00E+00	0.00E+00	0.00E+00	0.00E+00
2046	ALL	753588.42	4038560.7	1.02E-07	70YrCancerDerived_InhSoilI	1.02E-07	0.00E+00	0.00E+00	0.00E+00	0.00E+00	0.00E+00	0.00E+00	0.00E+00	0.00E+00	0.00E+00	0.00E+00	0.00E+00
2047	ALL	753688.42	4038560.7	9.89E-08	70YrCancerDerived_InhSoilI	9.89E-08	0.00E+00	0.00E+00	0.00E+00	0.00E+00	0.00E+00	0.00E+00	0.00E+00	0.00E+00	0.00E+00	0.00E+00	0.00E+00
2048	ALL	753788.42	4038560.7	9.60E-08	70YrCancerDerived_InhSoilI	9.60E-08	0.00E+00	0.00E+00	0.00E+00	0.00E+00	0.00E+00	0.00E+00	0.00E+00	0.00E+00	0.00E+00	0.00E+00	0.00E+00
2049	ALL	753888.42	4038560.7	9.32E-08	70YrCancerDerived_InhSoilI	9.32E-08	0.00E+00	0.00E+00	0.00E+00	0.00E+00	0.00E+00	0.00E+00	0.00E+00	0.00E+00	0.00E+00	0.00E+00	0.00E+00
2050	ALL	753988.42	4038560.7	9.06E-08	70YrCancerDerived_InhSoilI	9.06E-08	0.00E+00	0.00E+00	0.00E+00	0.00E+00	0.00E+00	0.00E+00	0.00E+00	0.00E+00	0.00E+00	0.00E+00	0.00E+00
2051	ALL	754088.42	4038560.7	8.81E-08	70YrCancerDerived_InhSoilI	8.81E-08	0.00E+00	0.00E+00	0.00E+00	0.00E+00	0.00E+00	0.00E+00	0.00E+00	0.00E+00	0.00E+00	0.00E+00	0.00E+00
2052	ALL	754188.42	4038560.7	8.57E-08	70YrCancerDerived_InhSoilI	8.57E-08	0.00E+00	0.00E+00	0.00E+00	0.00E+00	0.00E+00	0.00E+00	0.00E+00	0.00E+00	0.00E+00	0.00E+00	0.00E+00
2053	ALL	754288.42	4038560.7	8.35E-08	70YrCancerDerived_InhSoilI	8.35E-08	0.00E+00	0.00E+00	0.00E+00	0.00E+00	0.00E+00	0.00E+00	0.00E+00	0.00E+00	0.00E+00	0.00E+00	0.00E+00
2054	ALL	754388.42	4038560.7	8.13E-08	70YrCancerDerived_InhSoilI	8.13E-08	0.00E+00	0.00E+00	0.00E+00	0.00E+00	0.00E+00	0.00E+00	0.00E+00	0.00E+00	0.00E+00	0.00E+00	0.00E+00
2055	ALL	754488.42	4038560.7	7.92E-08	70YrCancerDerived_InhSoilI	7.92E-08	0.00E+00	0.00E+00	0.00E+00	0.00E+00	0.00E+00	0.00E+00	0.00E+00	0.00E+00	0.00E+00	0.00E+00	0.00E+00
2056	ALL	754588.42	4038560.7	7.72E-08	70YrCancerDerived_InhSoilI	7.72E-08	0.00E+00	0.00E+00	0.00E+00	0.00E+00	0.00E+00	0.00E+00	0.00E+00	0.00E+00	0.00E+00	0.00E+00	0.00E+00
2057	ALL	754688.42	4038560.7	7.53E-08	70YrCancerDerived_InhSoilI	7.53E-08	0.00E+00	0.00E+00	0.00E+00	0.00E+00	0.00E+00	0.00E+00	0.00E+00	0.00E+00	0.00E+00	0.00E+00	0.00E+00
2058	ALL	754788.42	4038560.7	7.36E-08	70YrCancerDerived_InhSoilI	7.36E-08	0.00E+00	0.00E+00	0.00E+00	0.00E+00	0.00E+00	0.00E+00	0.00E+00	0.00E+00	0.00E+00	0.00E+00	0.00E+00
2059	ALL	754888.42	4038560.7	7.18E-08	70YrCancerDerived_InhSoilI	7.18E-08	0.00E+00	0.00E+00	0.00E+00	0.00E+00	0.00E+00	0.00E+00	0.00E+00	0.00E+00	0.00E+00	0.00E+00	0.00E+00
2060	ALL	754988.42	4038560.7	7.01E-08	70YrCancerDerived_InhSoilI	7.01E-08	0.00E+00	0.00E+00	0.00E+00	0.00E+00	0.00E+00	0.00E+00	0.00E+00	0.00E+00	0.00E+00	0.00E+00	0.00E+00
2061	ALL	755088.42	4038560.7	6.85E-08	70YrCancerDerived_InhSoilI	6.85E-08	0.00E+00	0.00E+00	0.00E+00	0.00E+00	0.00E+00	0.00E+00	0.00E+00	0.00E+00	0.00E+00	0.00E+00	0.00E+00
2062	ALL	755188.42	4038560.7	6.70E-08	70YrCancerDerived_InhSoilI	6.70E-08	0.00E+00	0.00E+00	0.00E+00	0.00E+00	0.00E+00	0.00E+00	0.00E+00	0.00E+00	0.00E+00	0.00E+00	0.00E+00
2063	ALL	755288.42	4038560.7	6.55E-08	70YrCancerDerived_InhSoilI	6.55E-08	0.00E+00	0.00E+00	0.00E+00	0.00E+00	0.00E+00	0.00E+00	0.00E+00	0.00E+00	0.00E+00	0.00E+00	0.00E+00
2064	ALL	747888.42	4038660.7	8.04E-08	70YrCancerDerived_InhSoilI	8.04E-08	0.00E+00	0.00E+00	0.00E+00	0.00E+00	0.00E+00	0.00E+00	0.00E+00	0.00E+00	0.00E+00	0.00E+00	0.00E+00
2065	ALL	747988.42	4038660.7	8.59E-08	70YrCancerDerived_InhSoilI	8.59E-08	0.00E+00	0.00E+00	0.00E+00	0.00E+00	0.00E+00	0.00E+00	0.00E+00	0.00E+00	0.00E+00	0.00E+00	0.00E+00
2066	ALL	748088.42	4038660.7	9.05E-08	70YrCancerDerived_InhSoilI	9.05E-08	0.00E+00	0.00E+00	0.00E+00	0.00E+00	0.00E+00	0.00E+00	0.00E+00	0.00E+00	0.00E+00	0.00E+00	0.00E+00
2067	ALL	748188.42	4038660.7	9.37E-08	70YrCancerDerived_InhSoilI	9.37E-08	0.00E+00	0.00E+00	0.00E+00	0.00E+00	0.00E+00	0.00E+00	0.00E+00	0.00E+00	0.00E+00	0.00E+00	0.00E+00
2068	ALL	749888.42	4038660.7	4.13E-07	70YrCancerDerived_InhSoilI	4.13E-07	0.00E+00	0.00E+00	0.00E+00	0.00E+00	0.00E+00	0.00E+00	0.00E+00	0.00E+00	0.00E+00	0.00E+00	0.00E+00
2069	ALL	749988.42	4038660.7	4.16E-07	70YrCancerDerived_InhSoilI	4.16E-07	0.00E+00	0.00E+00	0.00E+00	0.00E+00	0.00E+00	0.00E+00	0.00E+00	0.00E+00	0.00E+00	0.00E+00	0.00E+00
2070	ALL	750088.42	4038660.7	4.15E-07	70YrCancerDerived_InhSoilI	4.15E-07	0.00E+00	0.00E+00	0.00E+00	0.00E+00	0.00E+00	0.00E+00	0.00E+00	0.00E+00	0.00E+00	0.00E+00	0.00E+00

2071	ALL	750188.42	4038660.7	4.11E-07	70YrCancerDerived_InhSoilI	4.11E-07	0.00E+00	0.00E+00	0.00E+00	0.00E+00	0.00E+00	0.00E+00	0.00E+00	0.00E+00	0.00E+00	0.00E+00	0.00E+00
2072	ALL	750288.42	4038660.7	4.03E-07	70YrCancerDerived_InhSoilI	4.03E-07	0.00E+00	0.00E+00	0.00E+00	0.00E+00	0.00E+00	0.00E+00	0.00E+00	0.00E+00	0.00E+00	0.00E+00	0.00E+00
2073	ALL	750388.42	4038660.7	3.93E-07	70YrCancerDerived_InhSoilI	3.93E-07	0.00E+00	0.00E+00	0.00E+00	0.00E+00	0.00E+00	0.00E+00	0.00E+00	0.00E+00	0.00E+00	0.00E+00	0.00E+00
2074	ALL	750488.42	4038660.7	3.81E-07	70YrCancerDerived_InhSoilI	3.81E-07	0.00E+00	0.00E+00	0.00E+00	0.00E+00	0.00E+00	0.00E+00	0.00E+00	0.00E+00	0.00E+00	0.00E+00	0.00E+00
2075	ALL	750588.42	4038660.7	3.68E-07	70YrCancerDerived_InhSoilI	3.68E-07	0.00E+00	0.00E+00	0.00E+00	0.00E+00	0.00E+00	0.00E+00	0.00E+00	0.00E+00	0.00E+00	0.00E+00	0.00E+00
2076	ALL	750688.42	4038660.7	3.53E-07	70YrCancerDerived_InhSoilI	3.53E-07	0.00E+00	0.00E+00	0.00E+00	0.00E+00	0.00E+00	0.00E+00	0.00E+00	0.00E+00	0.00E+00	0.00E+00	0.00E+00
2077	ALL	750788.42	4038660.7	3.38E-07	70YrCancerDerived_InhSoilI	3.38E-07	0.00E+00	0.00E+00	0.00E+00	0.00E+00	0.00E+00	0.00E+00	0.00E+00	0.00E+00	0.00E+00	0.00E+00	0.00E+00
2078	ALL	750888.42	4038660.7	3.22E-07	70YrCancerDerived_InhSoilI	3.22E-07	0.00E+00	0.00E+00	0.00E+00	0.00E+00	0.00E+00	0.00E+00	0.00E+00	0.00E+00	0.00E+00	0.00E+00	0.00E+00
2079	ALL	750988.42	4038660.7	3.06E-07	70YrCancerDerived_InhSoilI	3.06E-07	0.00E+00	0.00E+00	0.00E+00	0.00E+00	0.00E+00	0.00E+00	0.00E+00	0.00E+00	0.00E+00	0.00E+00	0.00E+00
2080	ALL	751088.42	4038660.7	2.91E-07	70YrCancerDerived_InhSoilI	2.91E-07	0.00E+00	0.00E+00	0.00E+00	0.00E+00	0.00E+00	0.00E+00	0.00E+00	0.00E+00	0.00E+00	0.00E+00	0.00E+00
2081	ALL	751188.42	4038660.7	2.76E-07	70YrCancerDerived_InhSoilI	2.76E-07	0.00E+00	0.00E+00	0.00E+00	0.00E+00	0.00E+00	0.00E+00	0.00E+00	0.00E+00	0.00E+00	0.00E+00	0.00E+00
2082	ALL	751288.42	4038660.7	2.62E-07	70YrCancerDerived_InhSoilI	2.62E-07	0.00E+00	0.00E+00	0.00E+00	0.00E+00	0.00E+00	0.00E+00	0.00E+00	0.00E+00	0.00E+00	0.00E+00	0.00E+00
2083	ALL	751388.42	4038660.7	2.48E-07	70YrCancerDerived_InhSoilI	2.48E-07	0.00E+00	0.00E+00	0.00E+00	0.00E+00	0.00E+00	0.00E+00	0.00E+00	0.00E+00	0.00E+00	0.00E+00	0.00E+00
2084	ALL	752788.42	4038660.7	1.31E-07	70YrCancerDerived_InhSoilI	1.31E-07	0.00E+00	0.00E+00	0.00E+00	0.00E+00	0.00E+00	0.00E+00	0.00E+00	0.00E+00	0.00E+00	0.00E+00	0.00E+00
2085	ALL	752888.42	4038660.7	1.26E-07	70YrCancerDerived_InhSoilI	1.26E-07	0.00E+00	0.00E+00	0.00E+00	0.00E+00	0.00E+00	0.00E+00	0.00E+00	0.00E+00	0.00E+00	0.00E+00	0.00E+00
2086	ALL	752988.42	4038660.7	1.22E-07	70YrCancerDerived_InhSoilI	1.22E-07	0.00E+00	0.00E+00	0.00E+00	0.00E+00	0.00E+00	0.00E+00	0.00E+00	0.00E+00	0.00E+00	0.00E+00	0.00E+00
2087	ALL	753088.42	4038660.7	1.17E-07	70YrCancerDerived_InhSoilI	1.17E-07	0.00E+00	0.00E+00	0.00E+00	0.00E+00	0.00E+00	0.00E+00	0.00E+00	0.00E+00	0.00E+00	0.00E+00	0.00E+00
2088	ALL	753188.42	4038660.7	1.13E-07	70YrCancerDerived_InhSoilI	1.13E-07	0.00E+00	0.00E+00	0.00E+00	0.00E+00	0.00E+00	0.00E+00	0.00E+00	0.00E+00	0.00E+00	0.00E+00	0.00E+00
2089	ALL	753288.42	4038660.7	1.10E-07	70YrCancerDerived_InhSoilI	1.10E-07	0.00E+00	0.00E+00	0.00E+00	0.00E+00	0.00E+00	0.00E+00	0.00E+00	0.00E+00	0.00E+00	0.00E+00	0.00E+00
2090	ALL	753388.42	4038660.7	1.06E-07	70YrCancerDerived_InhSoilI	1.06E-07	0.00E+00	0.00E+00	0.00E+00	0.00E+00	0.00E+00	0.00E+00	0.00E+00	0.00E+00	0.00E+00	0.00E+00	0.00E+00
2091	ALL	753488.42	4038660.7	1.03E-07	70YrCancerDerived_InhSoilI	1.03E-07	0.00E+00	0.00E+00	0.00E+00	0.00E+00	0.00E+00	0.00E+00	0.00E+00	0.00E+00	0.00E+00	0.00E+00	0.00E+00
2092	ALL	753588.42	4038660.7	9.97E-08	70YrCancerDerived_InhSoilI	9.97E-08	0.00E+00	0.00E+00	0.00E+00	0.00E+00	0.00E+00	0.00E+00	0.00E+00	0.00E+00	0.00E+00	0.00E+00	0.00E+00
2093	ALL	753688.42	4038660.7	9.67E-08	70YrCancerDerived_InhSoilI	9.67E-08	0.00E+00	0.00E+00	0.00E+00	0.00E+00	0.00E+00	0.00E+00	0.00E+00	0.00E+00	0.00E+00	0.00E+00	0.00E+00
2094	ALL	753788.42	4038660.7	9.38E-08	70YrCancerDerived_InhSoilI	9.38E-08	0.00E+00	0.00E+00	0.00E+00	0.00E+00	0.00E+00	0.00E+00	0.00E+00	0.00E+00	0.00E+00	0.00E+00	0.00E+00
2095	ALL	753888.42	4038660.7	9.11E-08	70YrCancerDerived_InhSoilI	9.11E-08	0.00E+00	0.00E+00	0.00E+00	0.00E+00	0.00E+00	0.00E+00	0.00E+00	0.00E+00	0.00E+00	0.00E+00	0.00E+00
2096	ALL	753988.42	4038660.7	8.86E-08	70YrCancerDerived_InhSoilI	8.86E-08	0.00E+00	0.00E+00	0.00E+00	0.00E+00	0.00E+00	0.00E+00	0.00E+00	0.00E+00	0.00E+00	0.00E+00	0.00E+00
2097	ALL	754088.42	4038660.7	8.62E-08	70YrCancerDerived_InhSoilI	8.62E-08	0.00E+00	0.00E+00	0.00E+00	0.00E+00	0.00E+00	0.00E+00	0.00E+00	0.00E+00	0.00E+00	0.00E+00	0.00E+00
2098	ALL	754188.42	4038660.7	8.38E-08	70YrCancerDerived_InhSoilI	8.38E-08	0.00E+00	0.00E+00	0.00E+00	0.00E+00	0.00E+00	0.00E+00	0.00E+00	0.00E+00	0.00E+00	0.00E+00	0.00E+00
2099	ALL	754288.42	4038660.7	8.16E-08	70YrCancerDerived_InhSoilI	8.16E-08	0.00E+00	0.00E+00	0.00E+00	0.00E+00	0.00E+00	0.00E+00	0.00E+00	0.00E+00	0.00E+00	0.00E+00	0.00E+00
2100	ALL	754388.42	4038660.7	7.95E-08	70YrCancerDerived_InhSoilI	7.95E-08	0.00E+00	0.00E+00	0.00E+00	0.00E+00	0.00E+00	0.00E+00	0.00E+00	0.00E+00	0.00E+00	0.00E+00	0.00E+00
2101	ALL	754488.42	4038660.7	7.75E-08	70YrCancerDerived_InhSoilI	7.75E-08	0.00E+00	0.00E+00	0.00E+00	0.00E+00	0.00E+00	0.00E+00	0.00E+00	0.00E+00	0.00E+00	0.00E+00	0.00E+00
2102	ALL	754588.42	4038660.7	7.56E-08	70YrCancerDerived_InhSoilI	7.56E-08	0.00E+00	0.00E+00	0.00E+00	0.00E+00	0.00E+00	0.00E+00	0.00E+00	0.00E+00	0.00E+00	0.00E+00	0.00E+00
2103	ALL	754688.42	4038660.7	7.37E-08	70YrCancerDerived_InhSoilI	7.37E-08	0.00E+00	0.00E+00	0.00E+00	0.00E+00	0.00E+00	0.00E+00	0.00E+00	0.00E+00	0.00E+00	0.00E+00	0.00E+00
2104	ALL	754788.42	4038660.7	7.19E-08	70YrCancerDerived_InhSoilI	7.19E-08	0.00E+00	0.00E+00	0.00E+00	0.00E+00	0.00E+00	0.00E+00	0.00E+00	0.00E+00	0.00E+00	0.00E+00	0.00E+00
2105	ALL	754888.42	4038660.7	7.02E-08	70YrCancerDerived_InhSoilI	7.02E-08	0.00E+00	0.00E+00	0.00E+00	0.00E+00	0.00E+00	0.00E+00	0.00E+00	0.00E+00	0.00E+00	0.00E+00	0.00E+00
2106	ALL	754988.42	4038660.7	6.86E-08	70YrCancerDerived_InhSoilI	6.86E-08	0.00E+00	0.00E+00	0.00E+00	0.00E+00	0.00E+00	0.00E+00	0.00E+00	0.00E+00	0.00E+00	0.00E+00	0.00E+00
2107	ALL	755088.42	4038660.7	6.71E-08	70YrCancerDerived_InhSoilI	6.71E-08	0.00E+00	0.00E+00	0.00E+00	0.00E+00	0.00E+00	0.00E+00	0.00E+00	0.00E+00	0.00E+00	0.00E+00	0.00E+00
2108	ALL	755188.42	4038660.7	6.56E-08	70YrCancerDerived_InhSoilI	6.56E-08	0.00E+00	0.00E+00	0.00E+00	0.00E+00	0.00E+00	0.00E+00	0.00E+00	0.00E+00	0.00E+00	0.00E+00	0.00E+00
2109	ALL	755288.42	4038660.7	6.42E-08	70YrCancerDerived_InhSoilI	6.42E-08	0.00E+00	0.00E+00	0.00E+00	0.00E+00	0.00E+00	0.00E+00	0.00E+00	0.00E+00	0.00E+00	0.00E+00	0.00E+00
2110	ALL	747888.42	4038760.7	8.06E-08	70YrCancerDerived_InhSoilI	8.06E-08	0.00E+00	0.00E+00	0.00E+00	0.00E+00	0.00E+00	0.00E+00	0.00E+00	0.00E+00	0.00E+00	0.00E+00	0.00E+00
2111	ALL	747988.42	4038760.7	8.69E-08	70YrCancerDerived_InhSoilI	8.69E-08	0.00E+00	0.00E+00	0.00E+00	0.00E+00	0.00E+00	0.00E+00	0.00E+00	0.00E+00	0.00E+00	0.00E+00	0.00E+00
2112	ALL	748088.42	4038760.7	9.26E-08	70YrCancerDerived_InhSoilI	9.26E-08	0.00E+00	0.00E+00	0.00E+00	0.00E+00	0.00E+00	0.00E+00	0.00E+00	0.00E+00	0.00E+00	0.00E+00	0.00E+00
2113	ALL	748188.42	4038760.7	9.69E-08	70YrCancerDerived_InhSoilI	9.69E-08	0.00E+00	0.00E+00	0.00E+00	0.00E+00	0.00E+00	0.00E+00	0.00E+00	0.00E+00	0.00E+00	0.00E+00	0.00E+00
2114	ALL	749888.42	4038760.7	4.56E-07	70YrCancerDerived_InhSoilI	4.56E-07	0.00E+00	0.00E+00	0.00E+00	0.00E+00	0.00E+00	0.00E+00	0.00E+00	0.00E+00	0.00E+00	0.00E+00	0.00E+00
2115	ALL	749988.42	4038760.7	4.55E-07	70YrCancerDerived_InhSoilI	4.55E-07	0.00E+00	0.00E+00	0.00E+00	0.00E+00	0.00E+00	0.00E+00	0.00E+00	0.00E+00	0.00E+00	0.00E+00	0.00E+00
2116	ALL	750088.42	4038760.7	4.49E-07	70YrCancerDerived_InhSoilI	4.49E-07	0.00E+00	0.00E+00	0.00E+00	0.00E+00	0.00E+00	0.00E+00	0.00E+00	0.00E+00	0.00E+00	0.00E+00	0.00E+00
2117	ALL	750188.42	4038760.7	4.40E-07	70YrCancerDerived_InhSoilI	4.40E-07	0.00E+00	0.00E+00	0.00E+00	0.00E+00	0.00E+00	0.00E+00	0.00E+00	0.00E+00	0.00E+00	0.00E+00	0.00E+00
2118	ALL	750288.42	4038760.7	4.27E-07	70YrCancerDerived_InhSoilI	4.27E-07	0.00E+00	0.00E+00	0.00E+00	0.00E+00	0.00E+00	0.00E+00	0.00E+00	0.00E+00	0.00E+00	0.00E+00	0.00E+00
2119	ALL	750388.42	4038760.7	4.12E-07	70YrCancerDerived_InhSoilI	4.12E-07	0.00E+00	0.00E+00	0.00E+00	0.00E+00	0.00E+00	0.00E+00	0.00E+00	0.00E+00	0.00E+00	0.00E+00	0.00E+00
2120	ALL	750488.42	4038760.7	3.96E-07	70YrCancerDerived_InhSoilI	3.96E-07	0.00E+00	0.00E+00	0.00E+00	0.00E+00	0.00E+00	0.00E+00	0.00E+00	0.00E+00	0.00E+00	0.00E+00	0.00E+00
2121	ALL	750588.42	4038760.7	3.78E-07	70YrCancerDerived_InhSoilI	3.78E-07	0.00E+00	0.00E+00	0.00E+00	0.00E+00	0.00E+00	0.00E+00	0.00E+00	0.00E+00	0.00E+00	0.00E+00	0.00E+00
2122	ALL	750688.42	4038760.7	3.60E-07	70YrCancerDerived_InhSoilI	3.60E-07	0.00E+00	0.00E+00	0.00E+00	0.00E+00	0.00E+00	0.00E+00	0.00E+00	0.00E+00	0.00E+00	0.00E+00	0.00E+00
2123	ALL	750788.42	4038760.7	3.41E-07	70YrCancerDerived_InhSoilI	3.41E-07	0.00E+00	0.00E+00	0.00E+00	0.00E+00	0.00E+00	0.00E+00	0.00E+00	0.00E+00	0.00E+00	0.00E+00	0.00E+00
2124	ALL	750888.42	4038760.7	3.23E-07	70YrCancerDerived_InhSoilI	3.23E-07	0.00E+00	0.00E+00	0.00E+00	0.00E+00	0.00E+00	0.00E+00	0.00E+00	0.00E+00	0.00E+00	0.00E+00	0.00E+00
2125	ALL	750988.42	4038760.7	3.05E-07	70YrCancerDerived_InhSoilI	3.05E-07	0.00E+00	0.00E+00	0.00E+00	0.00E+00	0.00E+00	0.00E+00	0.00E+00	0.00E+00	0.00E+00	0.00E+00	0.00E+00
2126	ALL	751088.42	4038760.7	2.88E-07	70YrCancerDerived_InhSoilI	2.88E-07	0.00E+00	0.00E+00	0.00E+00	0.00E+00	0.00E+00	0.00E+00	0.00E+00	0.00E+00	0.00E+00	0.00E+00	0.00E+00

2127	ALL	751188.42	4038760.7	2.72E-07	70YrCancerDerived_InhSoilI	2.72E-07	0.00E+00	0.00E+00	0.00E+00	0.00E+00	0.00E+00	0.00E+00	0.00E+00	0.00E+00	0.00E+00	0.00E+00	0.00E+00
2128	ALL	751288.42	4038760.7	2.57E-07	70YrCancerDerived_InhSoilI	2.57E-07	0.00E+00	0.00E+00	0.00E+00	0.00E+00	0.00E+00	0.00E+00	0.00E+00	0.00E+00	0.00E+00	0.00E+00	0.00E+00
2129	ALL	751388.42	4038760.7	2.43E-07	70YrCancerDerived_InhSoilI	2.43E-07	0.00E+00	0.00E+00	0.00E+00	0.00E+00	0.00E+00	0.00E+00	0.00E+00	0.00E+00	0.00E+00	0.00E+00	0.00E+00
2130	ALL	752788.42	4038760.7	1.27E-07	70YrCancerDerived_InhSoilI	1.27E-07	0.00E+00	0.00E+00	0.00E+00	0.00E+00	0.00E+00	0.00E+00	0.00E+00	0.00E+00	0.00E+00	0.00E+00	0.00E+00
2131	ALL	752888.42	4038760.7	1.23E-07	70YrCancerDerived_InhSoilI	1.23E-07	0.00E+00	0.00E+00	0.00E+00	0.00E+00	0.00E+00	0.00E+00	0.00E+00	0.00E+00	0.00E+00	0.00E+00	0.00E+00
2132	ALL	752988.42	4038760.7	1.19E-07	70YrCancerDerived_InhSoilI	1.19E-07	0.00E+00	0.00E+00	0.00E+00	0.00E+00	0.00E+00	0.00E+00	0.00E+00	0.00E+00	0.00E+00	0.00E+00	0.00E+00
2133	ALL	753088.42	4038760.7	1.14E-07	70YrCancerDerived_InhSoilI	1.14E-07	0.00E+00	0.00E+00	0.00E+00	0.00E+00	0.00E+00	0.00E+00	0.00E+00	0.00E+00	0.00E+00	0.00E+00	0.00E+00
2134	ALL	753188.42	4038760.7	1.11E-07	70YrCancerDerived_InhSoilI	1.11E-07	0.00E+00	0.00E+00	0.00E+00	0.00E+00	0.00E+00	0.00E+00	0.00E+00	0.00E+00	0.00E+00	0.00E+00	0.00E+00
2135	ALL	753288.42	4038760.7	1.07E-07	70YrCancerDerived_InhSoilI	1.07E-07	0.00E+00	0.00E+00	0.00E+00	0.00E+00	0.00E+00	0.00E+00	0.00E+00	0.00E+00	0.00E+00	0.00E+00	0.00E+00
2136	ALL	753388.42	4038760.7	1.04E-07	70YrCancerDerived_InhSoilI	1.04E-07	0.00E+00	0.00E+00	0.00E+00	0.00E+00	0.00E+00	0.00E+00	0.00E+00	0.00E+00	0.00E+00	0.00E+00	0.00E+00
2137	ALL	753488.42	4038760.7	1.00E-07	70YrCancerDerived_InhSoilI	1.00E-07	0.00E+00	0.00E+00	0.00E+00	0.00E+00	0.00E+00	0.00E+00	0.00E+00	0.00E+00	0.00E+00	0.00E+00	0.00E+00
2138	ALL	753588.42	4038760.7	9.73E-08	70YrCancerDerived_InhSoilI	9.73E-08	0.00E+00	0.00E+00	0.00E+00	0.00E+00	0.00E+00	0.00E+00	0.00E+00	0.00E+00	0.00E+00	0.00E+00	0.00E+00
2139	ALL	753688.42	4038760.7	9.43E-08	70YrCancerDerived_InhSoilI	9.43E-08	0.00E+00	0.00E+00	0.00E+00	0.00E+00	0.00E+00	0.00E+00	0.00E+00	0.00E+00	0.00E+00	0.00E+00	0.00E+00
2140	ALL	753788.42	4038760.7	9.16E-08	70YrCancerDerived_InhSoilI	9.16E-08	0.00E+00	0.00E+00	0.00E+00	0.00E+00	0.00E+00	0.00E+00	0.00E+00	0.00E+00	0.00E+00	0.00E+00	0.00E+00
2141	ALL	753888.42	4038760.7	8.90E-08	70YrCancerDerived_InhSoilI	8.90E-08	0.00E+00	0.00E+00	0.00E+00	0.00E+00	0.00E+00	0.00E+00	0.00E+00	0.00E+00	0.00E+00	0.00E+00	0.00E+00
2142	ALL	753988.42	4038760.7	8.65E-08	70YrCancerDerived_InhSoilI	8.65E-08	0.00E+00	0.00E+00	0.00E+00	0.00E+00	0.00E+00	0.00E+00	0.00E+00	0.00E+00	0.00E+00	0.00E+00	0.00E+00
2143	ALL	754088.42	4038760.7	8.42E-08	70YrCancerDerived_InhSoilI	8.42E-08	0.00E+00	0.00E+00	0.00E+00	0.00E+00	0.00E+00	0.00E+00	0.00E+00	0.00E+00	0.00E+00	0.00E+00	0.00E+00
2144	ALL	754188.42	4038760.7	8.19E-08	70YrCancerDerived_InhSoilI	8.19E-08	0.00E+00	0.00E+00	0.00E+00	0.00E+00	0.00E+00	0.00E+00	0.00E+00	0.00E+00	0.00E+00	0.00E+00	0.00E+00
2145	ALL	754288.42	4038760.7	7.98E-08	70YrCancerDerived_InhSoilI	7.98E-08	0.00E+00	0.00E+00	0.00E+00	0.00E+00	0.00E+00	0.00E+00	0.00E+00	0.00E+00	0.00E+00	0.00E+00	0.00E+00
2146	ALL	754388.42	4038760.7	7.77E-08	70YrCancerDerived_InhSoilI	7.77E-08	0.00E+00	0.00E+00	0.00E+00	0.00E+00	0.00E+00	0.00E+00	0.00E+00	0.00E+00	0.00E+00	0.00E+00	0.00E+00
2147	ALL	754488.42	4038760.7	7.57E-08	70YrCancerDerived_InhSoilI	7.57E-08	0.00E+00	0.00E+00	0.00E+00	0.00E+00	0.00E+00	0.00E+00	0.00E+00	0.00E+00	0.00E+00	0.00E+00	0.00E+00
2148	ALL	754588.42	4038760.7	7.39E-08	70YrCancerDerived_InhSoilI	7.39E-08	0.00E+00	0.00E+00	0.00E+00	0.00E+00	0.00E+00	0.00E+00	0.00E+00	0.00E+00	0.00E+00	0.00E+00	0.00E+00
2149	ALL	754688.42	4038760.7	7.21E-08	70YrCancerDerived_InhSoilI	7.21E-08	0.00E+00	0.00E+00	0.00E+00	0.00E+00	0.00E+00	0.00E+00	0.00E+00	0.00E+00	0.00E+00	0.00E+00	0.00E+00
2150	ALL	754788.42	4038760.7	7.04E-08	70YrCancerDerived_InhSoilI	7.04E-08	0.00E+00	0.00E+00	0.00E+00	0.00E+00	0.00E+00	0.00E+00	0.00E+00	0.00E+00	0.00E+00	0.00E+00	0.00E+00
2151	ALL	754888.42	4038760.7	6.87E-08	70YrCancerDerived_InhSoilI	6.87E-08	0.00E+00	0.00E+00	0.00E+00	0.00E+00	0.00E+00	0.00E+00	0.00E+00	0.00E+00	0.00E+00	0.00E+00	0.00E+00
2152	ALL	754988.42	4038760.7	6.72E-08	70YrCancerDerived_InhSoilI	6.72E-08	0.00E+00	0.00E+00	0.00E+00	0.00E+00	0.00E+00	0.00E+00	0.00E+00	0.00E+00	0.00E+00	0.00E+00	0.00E+00
2153	ALL	755088.42	4038760.7	6.57E-08	70YrCancerDerived_InhSoilI	6.57E-08	0.00E+00	0.00E+00	0.00E+00	0.00E+00	0.00E+00	0.00E+00	0.00E+00	0.00E+00	0.00E+00	0.00E+00	0.00E+00
2154	ALL	755188.42	4038760.7	6.42E-08	70YrCancerDerived_InhSoilI	6.42E-08	0.00E+00	0.00E+00	0.00E+00	0.00E+00	0.00E+00	0.00E+00	0.00E+00	0.00E+00	0.00E+00	0.00E+00	0.00E+00
2155	ALL	755288.42	4038760.7	6.29E-08	70YrCancerDerived_InhSoilI	6.29E-08	0.00E+00	0.00E+00	0.00E+00	0.00E+00	0.00E+00	0.00E+00	0.00E+00	0.00E+00	0.00E+00	0.00E+00	0.00E+00
2156	ALL	747888.42	4038860.7	8.10E-08	70YrCancerDerived_InhSoilI	8.10E-08	0.00E+00	0.00E+00	0.00E+00	0.00E+00	0.00E+00	0.00E+00	0.00E+00	0.00E+00	0.00E+00	0.00E+00	0.00E+00
2157	ALL	747988.42	4038860.7	8.77E-08	70YrCancerDerived_InhSoilI	8.77E-08	0.00E+00	0.00E+00	0.00E+00	0.00E+00	0.00E+00	0.00E+00	0.00E+00	0.00E+00	0.00E+00	0.00E+00	0.00E+00
2158	ALL	748088.42	4038860.7	9.45E-08	70YrCancerDerived_InhSoilI	9.45E-08	0.00E+00	0.00E+00	0.00E+00	0.00E+00	0.00E+00	0.00E+00	0.00E+00	0.00E+00	0.00E+00	0.00E+00	0.00E+00
2159	ALL	748188.42	4038860.7	1.00E-07	70YrCancerDerived_InhSoilI	1.00E-07	0.00E+00	0.00E+00	0.00E+00	0.00E+00	0.00E+00	0.00E+00	0.00E+00	0.00E+00	0.00E+00	0.00E+00	0.00E+00
2160	ALL	749888.42	4038860.7	5.01E-07	70YrCancerDerived_InhSoilI	5.01E-07	0.00E+00	0.00E+00	0.00E+00	0.00E+00	0.00E+00	0.00E+00	0.00E+00	0.00E+00	0.00E+00	0.00E+00	0.00E+00
2161	ALL	749988.42	4038860.7	4.94E-07	70YrCancerDerived_InhSoilI	4.94E-07	0.00E+00	0.00E+00	0.00E+00	0.00E+00	0.00E+00	0.00E+00	0.00E+00	0.00E+00	0.00E+00	0.00E+00	0.00E+00
2162	ALL	750088.42	4038860.7	4.83E-07	70YrCancerDerived_InhSoilI	4.83E-07	0.00E+00	0.00E+00	0.00E+00	0.00E+00	0.00E+00	0.00E+00	0.00E+00	0.00E+00	0.00E+00	0.00E+00	0.00E+00
2163	ALL	750188.42	4038860.7	4.67E-07	70YrCancerDerived_InhSoilI	4.67E-07	0.00E+00	0.00E+00	0.00E+00	0.00E+00	0.00E+00	0.00E+00	0.00E+00	0.00E+00	0.00E+00	0.00E+00	0.00E+00
2164	ALL	750288.42	4038860.7	4.48E-07	70YrCancerDerived_InhSoilI	4.48E-07	0.00E+00	0.00E+00	0.00E+00	0.00E+00	0.00E+00	0.00E+00	0.00E+00	0.00E+00	0.00E+00	0.00E+00	0.00E+00
2165	ALL	750388.42	4038860.7	4.27E-07	70YrCancerDerived_InhSoilI	4.27E-07	0.00E+00	0.00E+00	0.00E+00	0.00E+00	0.00E+00	0.00E+00	0.00E+00	0.00E+00	0.00E+00	0.00E+00	0.00E+00
2166	ALL	750488.42	4038860.7	4.06E-07	70YrCancerDerived_InhSoilI	4.06E-07	0.00E+00	0.00E+00	0.00E+00	0.00E+00	0.00E+00	0.00E+00	0.00E+00	0.00E+00	0.00E+00	0.00E+00	0.00E+00
2167	ALL	750588.42	4038860.7	3.84E-07	70YrCancerDerived_InhSoilI	3.84E-07	0.00E+00	0.00E+00	0.00E+00	0.00E+00	0.00E+00	0.00E+00	0.00E+00	0.00E+00	0.00E+00	0.00E+00	0.00E+00
2168	ALL	750688.42	4038860.7	3.62E-07	70YrCancerDerived_InhSoilI	3.62E-07	0.00E+00	0.00E+00	0.00E+00	0.00E+00	0.00E+00	0.00E+00	0.00E+00	0.00E+00	0.00E+00	0.00E+00	0.00E+00
2169	ALL	750788.42	4038860.7	3.41E-07	70YrCancerDerived_InhSoilI	3.41E-07	0.00E+00	0.00E+00	0.00E+00	0.00E+00	0.00E+00	0.00E+00	0.00E+00	0.00E+00	0.00E+00	0.00E+00	0.00E+00
2170	ALL	750888.42	4038860.7	3.20E-07	70YrCancerDerived_InhSoilI	3.20E-07	0.00E+00	0.00E+00	0.00E+00	0.00E+00	0.00E+00	0.00E+00	0.00E+00	0.00E+00	0.00E+00	0.00E+00	0.00E+00
2171	ALL	750988.42	4038860.7	3.01E-07	70YrCancerDerived_InhSoilI	3.01E-07	0.00E+00	0.00E+00	0.00E+00	0.00E+00	0.00E+00	0.00E+00	0.00E+00	0.00E+00	0.00E+00	0.00E+00	0.00E+00
2172	ALL	751088.42	4038860.7	2.84E-07	70YrCancerDerived_InhSoilI	2.84E-07	0.00E+00	0.00E+00	0.00E+00	0.00E+00	0.00E+00	0.00E+00	0.00E+00	0.00E+00	0.00E+00	0.00E+00	0.00E+00
2173	ALL	751188.42	4038860.7	2.67E-07	70YrCancerDerived_InhSoilI	2.67E-07	0.00E+00	0.00E+00	0.00E+00	0.00E+00	0.00E+00	0.00E+00	0.00E+00	0.00E+00	0.00E+00	0.00E+00	0.00E+00
2174	ALL	751288.42	4038860.7	2.52E-07	70YrCancerDerived_InhSoilI	2.52E-07	0.00E+00	0.00E+00	0.00E+00	0.00E+00	0.00E+00	0.00E+00	0.00E+00	0.00E+00	0.00E+00	0.00E+00	0.00E+00
2175	ALL	751388.42	4038860.7	2.37E-07	70YrCancerDerived_InhSoilI	2.37E-07	0.00E+00	0.00E+00	0.00E+00	0.00E+00	0.00E+00	0.00E+00	0.00E+00	0.00E+00	0.00E+00	0.00E+00	0.00E+00
2176	ALL	752788.42	4038860.7	1.24E-07	70YrCancerDerived_InhSoilI	1.24E-07	0.00E+00	0.00E+00	0.00E+00	0.00E+00	0.00E+00	0.00E+00	0.00E+00	0.00E+00	0.00E+00	0.00E+00	0.00E+00
2177	ALL	752888.42	4038860.7	1.20E-07	70YrCancerDerived_InhSoilI	1.20E-07	0.00E+00	0.00E+00	0.00E+00	0.00E+00	0.00E+00	0.00E+00	0.00E+00	0.00E+00	0.00E+00	0.00E+00	0.00E+00
2178	ALL	752988.42	4038860.7	1.15E-07	70YrCancerDerived_InhSoilI	1.15E-07	0.00E+00	0.00E+00	0.00E+00	0.00E+00	0.00E+00	0.00E+00	0.00E+00	0.00E+00	0.00E+00	0.00E+00	0.00E+00
2179	ALL	753088.42	4038860.7	1.11E-07	70YrCancerDerived_InhSoilI	1.11E-07	0.00E+00	0.00E+00	0.00E+00	0.00E+00	0.00E+00	0.00E+00	0.00E+00	0.00E+00	0.00E+00	0.00E+00	0.00E+00
2180	ALL	753188.42	4038860.7	1.08E-07	70YrCancerDerived_InhSoilI	1.08E-07	0.00E+00	0.00E+00	0.00E+00	0.00E+00	0.00E+00	0.00E+00	0.00E+00	0.00E+00	0.00E+00	0.00E+00	0.00E+00
2181	ALL	753288.42	4038860.7	1.04E-07	70YrCancerDerived_InhSoilI	1.04E-07	0.00E+00	0.00E+00	0.00E+00	0.00E+00	0.00E+00	0.00E+00	0.00E+00	0.00E+00	0.00E+00	0.00E+00	0.00E+00
2182	ALL	753388.42	4038860.7	1.01E-07	70YrCancerDerived_InhSoilI	1.01E-07	0.00E+00	0.00E+00	0.00E+00	0.00E+00	0.00E+00	0.00E+00	0.00E+00	0.00E+00	0.00E+00	0.00E+00	0.00E+00

2183	ALL	753488.42	4038860.7	9.78E-08	70YrCancerDerived_InhSoilI	9.78E-08	0.00E+00	0.00E+00	0.00E+00	0.00E+00	0.00E+00	0.00E+00	0.00E+00	0.00E+00	0.00E+00	0.00E+00	0.00E+00
2184	ALL	753588.42	4038860.7	9.48E-08	70YrCancerDerived_InhSoilI	9.48E-08	0.00E+00	0.00E+00	0.00E+00	0.00E+00	0.00E+00	0.00E+00	0.00E+00	0.00E+00	0.00E+00	0.00E+00	0.00E+00
2185	ALL	753688.42	4038860.7	9.20E-08	70YrCancerDerived_InhSoilI	9.20E-08	0.00E+00	0.00E+00	0.00E+00	0.00E+00	0.00E+00	0.00E+00	0.00E+00	0.00E+00	0.00E+00	0.00E+00	0.00E+00
2186	ALL	753788.42	4038860.7	8.93E-08	70YrCancerDerived_InhSoilI	8.93E-08	0.00E+00	0.00E+00	0.00E+00	0.00E+00	0.00E+00	0.00E+00	0.00E+00	0.00E+00	0.00E+00	0.00E+00	0.00E+00
2187	ALL	753888.42	4038860.7	8.68E-08	70YrCancerDerived_InhSoilI	8.68E-08	0.00E+00	0.00E+00	0.00E+00	0.00E+00	0.00E+00	0.00E+00	0.00E+00	0.00E+00	0.00E+00	0.00E+00	0.00E+00
2188	ALL	753988.42	4038860.7	8.44E-08	70YrCancerDerived_InhSoilI	8.44E-08	0.00E+00	0.00E+00	0.00E+00	0.00E+00	0.00E+00	0.00E+00	0.00E+00	0.00E+00	0.00E+00	0.00E+00	0.00E+00
2189	ALL	754088.42	4038860.7	8.21E-08	70YrCancerDerived_InhSoilI	8.21E-08	0.00E+00	0.00E+00	0.00E+00	0.00E+00	0.00E+00	0.00E+00	0.00E+00	0.00E+00	0.00E+00	0.00E+00	0.00E+00
2190	ALL	754188.42	4038860.7	8.00E-08	70YrCancerDerived_InhSoilI	8.00E-08	0.00E+00	0.00E+00	0.00E+00	0.00E+00	0.00E+00	0.00E+00	0.00E+00	0.00E+00	0.00E+00	0.00E+00	0.00E+00
2191	ALL	754288.42	4038860.7	7.79E-08	70YrCancerDerived_InhSoilI	7.79E-08	0.00E+00	0.00E+00	0.00E+00	0.00E+00	0.00E+00	0.00E+00	0.00E+00	0.00E+00	0.00E+00	0.00E+00	0.00E+00
2192	ALL	754388.42	4038860.7	7.59E-08	70YrCancerDerived_InhSoilI	7.59E-08	0.00E+00	0.00E+00	0.00E+00	0.00E+00	0.00E+00	0.00E+00	0.00E+00	0.00E+00	0.00E+00	0.00E+00	0.00E+00
2193	ALL	754488.42	4038860.7	7.40E-08	70YrCancerDerived_InhSoilI	7.40E-08	0.00E+00	0.00E+00	0.00E+00	0.00E+00	0.00E+00	0.00E+00	0.00E+00	0.00E+00	0.00E+00	0.00E+00	0.00E+00
2194	ALL	754588.42	4038860.7	7.22E-08	70YrCancerDerived_InhSoilI	7.22E-08	0.00E+00	0.00E+00	0.00E+00	0.00E+00	0.00E+00	0.00E+00	0.00E+00	0.00E+00	0.00E+00	0.00E+00	0.00E+00
2195	ALL	754688.42	4038860.7	7.05E-08	70YrCancerDerived_InhSoilI	7.05E-08	0.00E+00	0.00E+00	0.00E+00	0.00E+00	0.00E+00	0.00E+00	0.00E+00	0.00E+00	0.00E+00	0.00E+00	0.00E+00
2196	ALL	754788.42	4038860.7	6.88E-08	70YrCancerDerived_InhSoilI	6.88E-08	0.00E+00	0.00E+00	0.00E+00	0.00E+00	0.00E+00	0.00E+00	0.00E+00	0.00E+00	0.00E+00	0.00E+00	0.00E+00
2197	ALL	754888.42	4038860.7	6.73E-08	70YrCancerDerived_InhSoilI	6.73E-08	0.00E+00	0.00E+00	0.00E+00	0.00E+00	0.00E+00	0.00E+00	0.00E+00	0.00E+00	0.00E+00	0.00E+00	0.00E+00
2198	ALL	754988.42	4038860.7	6.57E-08	70YrCancerDerived_InhSoilI	6.57E-08	0.00E+00	0.00E+00	0.00E+00	0.00E+00	0.00E+00	0.00E+00	0.00E+00	0.00E+00	0.00E+00	0.00E+00	0.00E+00
2199	ALL	755088.42	4038860.7	6.43E-08	70YrCancerDerived_InhSoilI	6.43E-08	0.00E+00	0.00E+00	0.00E+00	0.00E+00	0.00E+00	0.00E+00	0.00E+00	0.00E+00	0.00E+00	0.00E+00	0.00E+00
2200	ALL	755188.42	4038860.7	6.29E-08	70YrCancerDerived_InhSoilI	6.29E-08	0.00E+00	0.00E+00	0.00E+00	0.00E+00	0.00E+00	0.00E+00	0.00E+00	0.00E+00	0.00E+00	0.00E+00	0.00E+00
2201	ALL	755288.42	4038860.7	6.16E-08	70YrCancerDerived_InhSoilI	6.16E-08	0.00E+00	0.00E+00	0.00E+00	0.00E+00	0.00E+00	0.00E+00	0.00E+00	0.00E+00	0.00E+00	0.00E+00	0.00E+00
2202	ALL	747888.42	4038960.7	8.16E-08	70YrCancerDerived_InhSoilI	8.16E-08	0.00E+00	0.00E+00	0.00E+00	0.00E+00	0.00E+00	0.00E+00	0.00E+00	0.00E+00	0.00E+00	0.00E+00	0.00E+00
2203	ALL	747988.42	4038960.7	8.83E-08	70YrCancerDerived_InhSoilI	8.83E-08	0.00E+00	0.00E+00	0.00E+00	0.00E+00	0.00E+00	0.00E+00	0.00E+00	0.00E+00	0.00E+00	0.00E+00	0.00E+00
2204	ALL	748088.42	4038960.7	9.67E-08	70YrCancerDerived_InhSoilI	9.67E-08	0.00E+00	0.00E+00	0.00E+00	0.00E+00	0.00E+00	0.00E+00	0.00E+00	0.00E+00	0.00E+00	0.00E+00	0.00E+00
2205	ALL	748188.42	4038960.7	1.05E-07	70YrCancerDerived_InhSoilI	1.05E-07	0.00E+00	0.00E+00	0.00E+00	0.00E+00	0.00E+00	0.00E+00	0.00E+00	0.00E+00	0.00E+00	0.00E+00	0.00E+00
2206	ALL	749888.42	4038960.7	5.49E-07	70YrCancerDerived_InhSoilI	5.49E-07	0.00E+00	0.00E+00	0.00E+00	0.00E+00	0.00E+00	0.00E+00	0.00E+00	0.00E+00	0.00E+00	0.00E+00	0.00E+00
2207	ALL	749988.42	4038960.7	5.33E-07	70YrCancerDerived_InhSoilI	5.33E-07	0.00E+00	0.00E+00	0.00E+00	0.00E+00	0.00E+00	0.00E+00	0.00E+00	0.00E+00	0.00E+00	0.00E+00	0.00E+00
2208	ALL	750088.42	4038960.7	5.13E-07	70YrCancerDerived_InhSoilI	5.13E-07	0.00E+00	0.00E+00	0.00E+00	0.00E+00	0.00E+00	0.00E+00	0.00E+00	0.00E+00	0.00E+00	0.00E+00	0.00E+00
2209	ALL	750188.42	4038960.7	4.89E-07	70YrCancerDerived_InhSoilI	4.89E-07	0.00E+00	0.00E+00	0.00E+00	0.00E+00	0.00E+00	0.00E+00	0.00E+00	0.00E+00	0.00E+00	0.00E+00	0.00E+00
2210	ALL	750288.42	4038960.7	4.64E-07	70YrCancerDerived_InhSoilI	4.64E-07	0.00E+00	0.00E+00	0.00E+00	0.00E+00	0.00E+00	0.00E+00	0.00E+00	0.00E+00	0.00E+00	0.00E+00	0.00E+00
2211	ALL	750388.42	4038960.7	4.37E-07	70YrCancerDerived_InhSoilI	4.37E-07	0.00E+00	0.00E+00	0.00E+00	0.00E+00	0.00E+00	0.00E+00	0.00E+00	0.00E+00	0.00E+00	0.00E+00	0.00E+00
2212	ALL	750488.42	4038960.7	4.10E-07	70YrCancerDerived_InhSoilI	4.10E-07	0.00E+00	0.00E+00	0.00E+00	0.00E+00	0.00E+00	0.00E+00	0.00E+00	0.00E+00	0.00E+00	0.00E+00	0.00E+00
2213	ALL	750588.42	4038960.7	3.85E-07	70YrCancerDerived_InhSoilI	3.85E-07	0.00E+00	0.00E+00	0.00E+00	0.00E+00	0.00E+00	0.00E+00	0.00E+00	0.00E+00	0.00E+00	0.00E+00	0.00E+00
2214	ALL	750688.42	4038960.7	3.60E-07	70YrCancerDerived_InhSoilI	3.60E-07	0.00E+00	0.00E+00	0.00E+00	0.00E+00	0.00E+00	0.00E+00	0.00E+00	0.00E+00	0.00E+00	0.00E+00	0.00E+00
2215	ALL	750788.42	4038960.7	3.36E-07	70YrCancerDerived_InhSoilI	3.36E-07	0.00E+00	0.00E+00	0.00E+00	0.00E+00	0.00E+00	0.00E+00	0.00E+00	0.00E+00	0.00E+00	0.00E+00	0.00E+00
2216	ALL	750888.42	4038960.7	3.15E-07	70YrCancerDerived_InhSoilI	3.15E-07	0.00E+00	0.00E+00	0.00E+00	0.00E+00	0.00E+00	0.00E+00	0.00E+00	0.00E+00	0.00E+00	0.00E+00	0.00E+00
2217	ALL	750988.42	4038960.7	2.95E-07	70YrCancerDerived_InhSoilI	2.95E-07	0.00E+00	0.00E+00	0.00E+00	0.00E+00	0.00E+00	0.00E+00	0.00E+00	0.00E+00	0.00E+00	0.00E+00	0.00E+00
2218	ALL	751088.42	4038960.7	2.77E-07	70YrCancerDerived_InhSoilI	2.77E-07	0.00E+00	0.00E+00	0.00E+00	0.00E+00	0.00E+00	0.00E+00	0.00E+00	0.00E+00	0.00E+00	0.00E+00	0.00E+00
2219	ALL	751188.42	4038960.7	2.60E-07	70YrCancerDerived_InhSoilI	2.60E-07	0.00E+00	0.00E+00	0.00E+00	0.00E+00	0.00E+00	0.00E+00	0.00E+00	0.00E+00	0.00E+00	0.00E+00	0.00E+00
2220	ALL	751288.42	4038960.7	2.45E-07	70YrCancerDerived_InhSoilI	2.45E-07	0.00E+00	0.00E+00	0.00E+00	0.00E+00	0.00E+00	0.00E+00	0.00E+00	0.00E+00	0.00E+00	0.00E+00	0.00E+00
2221	ALL	751388.42	4038960.7	2.31E-07	70YrCancerDerived_InhSoilI	2.31E-07	0.00E+00	0.00E+00	0.00E+00	0.00E+00	0.00E+00	0.00E+00	0.00E+00	0.00E+00	0.00E+00	0.00E+00	0.00E+00
2222	ALL	752788.42	4038960.7	1.21E-07	70YrCancerDerived_InhSoilI	1.21E-07	0.00E+00	0.00E+00	0.00E+00	0.00E+00	0.00E+00	0.00E+00	0.00E+00	0.00E+00	0.00E+00	0.00E+00	0.00E+00
2223	ALL	752888.42	4038960.7	1.16E-07	70YrCancerDerived_InhSoilI	1.16E-07	0.00E+00	0.00E+00	0.00E+00	0.00E+00	0.00E+00	0.00E+00	0.00E+00	0.00E+00	0.00E+00	0.00E+00	0.00E+00
2224	ALL	752988.42	4038960.7	1.12E-07	70YrCancerDerived_InhSoilI	1.12E-07	0.00E+00	0.00E+00	0.00E+00	0.00E+00	0.00E+00	0.00E+00	0.00E+00	0.00E+00	0.00E+00	0.00E+00	0.00E+00
2225	ALL	753088.42	4038960.7	1.08E-07	70YrCancerDerived_InhSoilI	1.08E-07	0.00E+00	0.00E+00	0.00E+00	0.00E+00	0.00E+00	0.00E+00	0.00E+00	0.00E+00	0.00E+00	0.00E+00	0.00E+00
2226	ALL	753188.42	4038960.7	1.05E-07	70YrCancerDerived_InhSoilI	1.05E-07	0.00E+00	0.00E+00	0.00E+00	0.00E+00	0.00E+00	0.00E+00	0.00E+00	0.00E+00	0.00E+00	0.00E+00	0.00E+00
2227	ALL	753288.42	4038960.7	1.01E-07	70YrCancerDerived_InhSoilI	1.01E-07	0.00E+00	0.00E+00	0.00E+00	0.00E+00	0.00E+00	0.00E+00	0.00E+00	0.00E+00	0.00E+00	0.00E+00	0.00E+00
2228	ALL	753388.42	4038960.7	9.81E-08	70YrCancerDerived_InhSoilI	9.81E-08	0.00E+00	0.00E+00	0.00E+00	0.00E+00	0.00E+00	0.00E+00	0.00E+00	0.00E+00	0.00E+00	0.00E+00	0.00E+00
2229	ALL	753488.42	4038960.7	9.51E-08	70YrCancerDerived_InhSoilI	9.51E-08	0.00E+00	0.00E+00	0.00E+00	0.00E+00	0.00E+00	0.00E+00	0.00E+00	0.00E+00	0.00E+00	0.00E+00	0.00E+00
2230	ALL	753588.42	4038960.7	9.22E-08	70YrCancerDerived_InhSoilI	9.22E-08	0.00E+00	0.00E+00	0.00E+00	0.00E+00	0.00E+00	0.00E+00	0.00E+00	0.00E+00	0.00E+00	0.00E+00	0.00E+00
2231	ALL	753688.42	4038960.7	8.95E-08	70YrCancerDerived_InhSoilI	8.95E-08	0.00E+00	0.00E+00	0.00E+00	0.00E+00	0.00E+00	0.00E+00	0.00E+00	0.00E+00	0.00E+00	0.00E+00	0.00E+00
2232	ALL	753788.42	4038960.7	8.70E-08	70YrCancerDerived_InhSoilI	8.70E-08	0.00E+00	0.00E+00	0.00E+00	0.00E+00	0.00E+00	0.00E+00	0.00E+00	0.00E+00	0.00E+00	0.00E+00	0.00E+00
2233	ALL	753888.42	4038960.7	8.46E-08	70YrCancerDerived_InhSoilI	8.46E-08	0.00E+00	0.00E+00	0.00E+00	0.00E+00	0.00E+00	0.00E+00	0.00E+00	0.00E+00	0.00E+00	0.00E+00	0.00E+00
2234	ALL	753988.42	4038960.7	8.22E-08	70YrCancerDerived_InhSoilI	8.22E-08	0.00E+00	0.00E+00	0.00E+00	0.00E+00	0.00E+00	0.00E+00	0.00E+00	0.00E+00	0.00E+00	0.00E+00	0.00E+00
2235	ALL	754088.42	4038960.7	8.01E-08	70YrCancerDerived_InhSoilI	8.01E-08	0.00E+00	0.00E+00	0.00E+00	0.00E+00	0.00E+00	0.00E+00	0.00E+00	0.00E+00	0.00E+00	0.00E+00	0.00E+00
2236	ALL	754188.42	4038960.7	7.80E-08	70YrCancerDerived_InhSoilI	7.80E-08	0.00E+00	0.00E+00	0.00E+00	0.00E+00	0.00E+00	0.00E+00	0.00E+00	0.00E+00	0.00E+00	0.00E+00	0.00E+00
2237	ALL	754288.42	4038960.7	7.60E-08	70YrCancerDerived_InhSoilI	7.60E-08	0.00E+00	0.00E+00	0.00E+00	0.00E+00	0.00E+00	0.00E+00	0.00E+00	0.00E+00	0.00E+00	0.00E+00	0.00E+00
2238	ALL	754388.42	4038960.7	7.41E-08	70YrCancerDerived_InhSoilI	7.41E-08	0.00E+00	0.00E+00	0.00E+00	0.00E+00	0.00E+00	0.00E+00	0.00E+00	0.00E+00	0.00E+00	0.00E+00	0.00E+00

2239	ALL	754488.42	4038960.7	7.23E-08	70YrCancerDerived_InhSoil[	7.23E-08	0.00E+00	0.00E+00	0.00E+00	0.00E+00	0.00E+00	0.00E+00	0.00E+00	0.00E+00	0.00E+00	0.00E+00	0.00E+00
2240	ALL	754588.42	4038960.7	7.05E-08	70YrCancerDerived_InhSoil[	7.05E-08	0.00E+00	0.00E+00	0.00E+00	0.00E+00	0.00E+00	0.00E+00	0.00E+00	0.00E+00	0.00E+00	0.00E+00	0.00E+00
2241	ALL	754688.42	4038960.7	6.89E-08	70YrCancerDerived_InhSoil[	6.89E-08	0.00E+00	0.00E+00	0.00E+00	0.00E+00	0.00E+00	0.00E+00	0.00E+00	0.00E+00	0.00E+00	0.00E+00	0.00E+00
2242	ALL	754788.42	4038960.7	6.73E-08	70YrCancerDerived_InhSoil[	6.73E-08	0.00E+00	0.00E+00	0.00E+00	0.00E+00	0.00E+00	0.00E+00	0.00E+00	0.00E+00	0.00E+00	0.00E+00	0.00E+00
2243	ALL	754888.42	4038960.7	6.58E-08	70YrCancerDerived_InhSoil[	6.58E-08	0.00E+00	0.00E+00	0.00E+00	0.00E+00	0.00E+00	0.00E+00	0.00E+00	0.00E+00	0.00E+00	0.00E+00	0.00E+00
2244	ALL	754988.42	4038960.7	6.43E-08	70YrCancerDerived_InhSoil[	6.43E-08	0.00E+00	0.00E+00	0.00E+00	0.00E+00	0.00E+00	0.00E+00	0.00E+00	0.00E+00	0.00E+00	0.00E+00	0.00E+00
2245	ALL	755088.42	4038960.7	6.29E-08	70YrCancerDerived_InhSoil[	6.29E-08	0.00E+00	0.00E+00	0.00E+00	0.00E+00	0.00E+00	0.00E+00	0.00E+00	0.00E+00	0.00E+00	0.00E+00	0.00E+00
2246	ALL	755188.42	4038960.7	6.16E-08	70YrCancerDerived_InhSoil[	6.16E-08	0.00E+00	0.00E+00	0.00E+00	0.00E+00	0.00E+00	0.00E+00	0.00E+00	0.00E+00	0.00E+00	0.00E+00	0.00E+00
2247	ALL	755288.42	4038960.7	6.03E-08	70YrCancerDerived_InhSoil[	6.03E-08	0.00E+00	0.00E+00	0.00E+00	0.00E+00	0.00E+00	0.00E+00	0.00E+00	0.00E+00	0.00E+00	0.00E+00	0.00E+00
2248	ALL	747788.42	4039060.7	7.91E-08	70YrCancerDerived_InhSoil[	7.91E-08	0.00E+00	0.00E+00	0.00E+00	0.00E+00	0.00E+00	0.00E+00	0.00E+00	0.00E+00	0.00E+00	0.00E+00	0.00E+00
2249	ALL	747888.42	4039060.7	8.29E-08	70YrCancerDerived_InhSoil[	8.29E-08	0.00E+00	0.00E+00	0.00E+00	0.00E+00	0.00E+00	0.00E+00	0.00E+00	0.00E+00	0.00E+00	0.00E+00	0.00E+00
2250	ALL	747988.42	4039060.7	8.95E-08	70YrCancerDerived_InhSoil[	8.95E-08	0.00E+00	0.00E+00	0.00E+00	0.00E+00	0.00E+00	0.00E+00	0.00E+00	0.00E+00	0.00E+00	0.00E+00	0.00E+00
2251	ALL	748088.42	4039060.7	9.89E-08	70YrCancerDerived_InhSoil[	9.89E-08	0.00E+00	0.00E+00	0.00E+00	0.00E+00	0.00E+00	0.00E+00	0.00E+00	0.00E+00	0.00E+00	0.00E+00	0.00E+00
2252	ALL	748188.42	4039060.7	1.08E-07	70YrCancerDerived_InhSoil[	1.08E-07	0.00E+00	0.00E+00	0.00E+00	0.00E+00	0.00E+00	0.00E+00	0.00E+00	0.00E+00	0.00E+00	0.00E+00	0.00E+00
2253	ALL	749888.42	4039060.7	5.94E-07	70YrCancerDerived_InhSoil[	5.94E-07	0.00E+00	0.00E+00	0.00E+00	0.00E+00	0.00E+00	0.00E+00	0.00E+00	0.00E+00	0.00E+00	0.00E+00	0.00E+00
2254	ALL	749988.42	4039060.7	5.68E-07	70YrCancerDerived_InhSoil[	5.68E-07	0.00E+00	0.00E+00	0.00E+00	0.00E+00	0.00E+00	0.00E+00	0.00E+00	0.00E+00	0.00E+00	0.00E+00	0.00E+00
2255	ALL	750088.42	4039060.7	5.38E-07	70YrCancerDerived_InhSoil[	5.38E-07	0.00E+00	0.00E+00	0.00E+00	0.00E+00	0.00E+00	0.00E+00	0.00E+00	0.00E+00	0.00E+00	0.00E+00	0.00E+00
2256	ALL	750188.42	4039060.7	5.05E-07	70YrCancerDerived_InhSoil[	5.05E-07	0.00E+00	0.00E+00	0.00E+00	0.00E+00	0.00E+00	0.00E+00	0.00E+00	0.00E+00	0.00E+00	0.00E+00	0.00E+00
2257	ALL	750288.42	4039060.7	4.72E-07	70YrCancerDerived_InhSoil[	4.72E-07	0.00E+00	0.00E+00	0.00E+00	0.00E+00	0.00E+00	0.00E+00	0.00E+00	0.00E+00	0.00E+00	0.00E+00	0.00E+00
2258	ALL	750388.42	4039060.7	4.40E-07	70YrCancerDerived_InhSoil[	4.40E-07	0.00E+00	0.00E+00	0.00E+00	0.00E+00	0.00E+00	0.00E+00	0.00E+00	0.00E+00	0.00E+00	0.00E+00	0.00E+00
2259	ALL	750488.42	4039060.7	4.09E-07	70YrCancerDerived_InhSoil[	4.09E-07	0.00E+00	0.00E+00	0.00E+00	0.00E+00	0.00E+00	0.00E+00	0.00E+00	0.00E+00	0.00E+00	0.00E+00	0.00E+00
2260	ALL	750588.42	4039060.7	3.80E-07	70YrCancerDerived_InhSoil[	3.80E-07	0.00E+00	0.00E+00	0.00E+00	0.00E+00	0.00E+00	0.00E+00	0.00E+00	0.00E+00	0.00E+00	0.00E+00	0.00E+00
2261	ALL	750688.42	4039060.7	3.53E-07	70YrCancerDerived_InhSoil[	3.53E-07	0.00E+00	0.00E+00	0.00E+00	0.00E+00	0.00E+00	0.00E+00	0.00E+00	0.00E+00	0.00E+00	0.00E+00	0.00E+00
2262	ALL	750788.42	4039060.7	3.29E-07	70YrCancerDerived_InhSoil[	3.29E-07	0.00E+00	0.00E+00	0.00E+00	0.00E+00	0.00E+00	0.00E+00	0.00E+00	0.00E+00	0.00E+00	0.00E+00	0.00E+00
2263	ALL	750888.42	4039060.7	3.07E-07	70YrCancerDerived_InhSoil[	3.07E-07	0.00E+00	0.00E+00	0.00E+00	0.00E+00	0.00E+00	0.00E+00	0.00E+00	0.00E+00	0.00E+00	0.00E+00	0.00E+00
2264	ALL	750988.42	4039060.7	2.86E-07	70YrCancerDerived_InhSoil[	2.86E-07	0.00E+00	0.00E+00	0.00E+00	0.00E+00	0.00E+00	0.00E+00	0.00E+00	0.00E+00	0.00E+00	0.00E+00	0.00E+00
2265	ALL	751088.42	4039060.7	2.68E-07	70YrCancerDerived_InhSoil[	2.68E-07	0.00E+00	0.00E+00	0.00E+00	0.00E+00	0.00E+00	0.00E+00	0.00E+00	0.00E+00	0.00E+00	0.00E+00	0.00E+00
2266	ALL	751188.42	4039060.7	2.52E-07	70YrCancerDerived_InhSoil[	2.52E-07	0.00E+00	0.00E+00	0.00E+00	0.00E+00	0.00E+00	0.00E+00	0.00E+00	0.00E+00	0.00E+00	0.00E+00	0.00E+00
2267	ALL	751288.42	4039060.7	2.37E-07	70YrCancerDerived_InhSoil[	2.37E-07	0.00E+00	0.00E+00	0.00E+00	0.00E+00	0.00E+00	0.00E+00	0.00E+00	0.00E+00	0.00E+00	0.00E+00	0.00E+00
2268	ALL	751388.42	4039060.7	2.23E-07	70YrCancerDerived_InhSoil[	2.23E-07	0.00E+00	0.00E+00	0.00E+00	0.00E+00	0.00E+00	0.00E+00	0.00E+00	0.00E+00	0.00E+00	0.00E+00	0.00E+00
2269	ALL	752788.42	4039060.7	1.17E-07	70YrCancerDerived_InhSoil[	1.17E-07	0.00E+00	0.00E+00	0.00E+00	0.00E+00	0.00E+00	0.00E+00	0.00E+00	0.00E+00	0.00E+00	0.00E+00	0.00E+00
2270	ALL	752888.42	4039060.7	1.13E-07	70YrCancerDerived_InhSoil[	1.13E-07	0.00E+00	0.00E+00	0.00E+00	0.00E+00	0.00E+00	0.00E+00	0.00E+00	0.00E+00	0.00E+00	0.00E+00	0.00E+00
2271	ALL	752988.42	4039060.7	1.09E-07	70YrCancerDerived_InhSoil[	1.09E-07	0.00E+00	0.00E+00	0.00E+00	0.00E+00	0.00E+00	0.00E+00	0.00E+00	0.00E+00	0.00E+00	0.00E+00	0.00E+00
2272	ALL	753088.42	4039060.7	1.05E-07	70YrCancerDerived_InhSoil[	1.05E-07	0.00E+00	0.00E+00	0.00E+00	0.00E+00	0.00E+00	0.00E+00	0.00E+00	0.00E+00	0.00E+00	0.00E+00	0.00E+00
2273	ALL	753188.42	4039060.7	1.02E-07	70YrCancerDerived_InhSoil[	1.02E-07	0.00E+00	0.00E+00	0.00E+00	0.00E+00	0.00E+00	0.00E+00	0.00E+00	0.00E+00	0.00E+00	0.00E+00	0.00E+00
2274	ALL	747788.42	4039160.7	8.14E-08	70YrCancerDerived_InhSoil[	8.14E-08	0.00E+00	0.00E+00	0.00E+00	0.00E+00	0.00E+00	0.00E+00	0.00E+00	0.00E+00	0.00E+00	0.00E+00	0.00E+00
2275	ALL	747888.42	4039160.7	8.49E-08	70YrCancerDerived_InhSoil[	8.49E-08	0.00E+00	0.00E+00	0.00E+00	0.00E+00	0.00E+00	0.00E+00	0.00E+00	0.00E+00	0.00E+00	0.00E+00	0.00E+00
2276	ALL	747988.42	4039160.7	9.11E-08	70YrCancerDerived_InhSoil[	9.11E-08	0.00E+00	0.00E+00	0.00E+00	0.00E+00	0.00E+00	0.00E+00	0.00E+00	0.00E+00	0.00E+00	0.00E+00	0.00E+00
2277	ALL	748088.42	4039160.7	1.01E-07	70YrCancerDerived_InhSoil[	1.01E-07	0.00E+00	0.00E+00	0.00E+00	0.00E+00	0.00E+00	0.00E+00	0.00E+00	0.00E+00	0.00E+00	0.00E+00	0.00E+00
2278	ALL	748188.42	4039160.7	1.13E-07	70YrCancerDerived_InhSoil[	1.13E-07	0.00E+00	0.00E+00	0.00E+00	0.00E+00	0.00E+00	0.00E+00	0.00E+00	0.00E+00	0.00E+00	0.00E+00	0.00E+00
2279	ALL	749888.42	4039160.7	6.33E-07	70YrCancerDerived_InhSoil[	6.33E-07	0.00E+00	0.00E+00	0.00E+00	0.00E+00	0.00E+00	0.00E+00	0.00E+00	0.00E+00	0.00E+00	0.00E+00	0.00E+00
2280	ALL	749988.42	4039160.7	5.94E-07	70YrCancerDerived_InhSoil[	5.94E-07	0.00E+00	0.00E+00	0.00E+00	0.00E+00	0.00E+00	0.00E+00	0.00E+00	0.00E+00	0.00E+00	0.00E+00	0.00E+00
2281	ALL	750088.42	4039160.7	5.53E-07	70YrCancerDerived_InhSoil[	5.53E-07	0.00E+00	0.00E+00	0.00E+00	0.00E+00	0.00E+00	0.00E+00	0.00E+00	0.00E+00	0.00E+00	0.00E+00	0.00E+00
2282	ALL	750188.42	4039160.7	5.12E-07	70YrCancerDerived_InhSoil[	5.12E-07	0.00E+00	0.00E+00	0.00E+00	0.00E+00	0.00E+00	0.00E+00	0.00E+00	0.00E+00	0.00E+00	0.00E+00	0.00E+00
2283	ALL	750288.42	4039160.7	4.73E-07	70YrCancerDerived_InhSoil[	4.73E-07	0.00E+00	0.00E+00	0.00E+00	0.00E+00	0.00E+00	0.00E+00	0.00E+00	0.00E+00	0.00E+00	0.00E+00	0.00E+00
2284	ALL	750388.42	4039160.7	4.36E-07	70YrCancerDerived_InhSoil[	4.36E-07	0.00E+00	0.00E+00	0.00E+00	0.00E+00	0.00E+00	0.00E+00	0.00E+00	0.00E+00	0.00E+00	0.00E+00	0.00E+00
2285	ALL	750488.42	4039160.7	4.02E-07	70YrCancerDerived_InhSoil[	4.02E-07	0.00E+00	0.00E+00	0.00E+00	0.00E+00	0.00E+00	0.00E+00	0.00E+00	0.00E+00	0.00E+00	0.00E+00	0.00E+00
2286	ALL	750588.42	4039160.7	3.71E-07	70YrCancerDerived_InhSoil[	3.71E-07	0.00E+00	0.00E+00	0.00E+00	0.00E+00	0.00E+00	0.00E+00	0.00E+00	0.00E+00	0.00E+00	0.00E+00	0.00E+00
2287	ALL	750688.42	4039160.7	3.43E-07	70YrCancerDerived_InhSoil[	3.43E-07	0.00E+00	0.00E+00	0.00E+00	0.00E+00	0.00E+00	0.00E+00	0.00E+00	0.00E+00	0.00E+00	0.00E+00	0.00E+00
2288	ALL	750788.42	4039160.7	3.19E-07	70YrCancerDerived_InhSoil[	3.19E-07	0.00E+00	0.00E+00	0.00E+00	0.00E+00	0.00E+00	0.00E+00	0.00E+00	0.00E+00	0.00E+00	0.00E+00	0.00E+00
2289	ALL	750888.42	4039160.7	2.96E-07	70YrCancerDerived_InhSoil[	2.96E-07	0.00E+00	0.00E+00	0.00E+00	0.00E+00	0.00E+00	0.00E+00	0.00E+00	0.00E+00	0.00E+00	0.00E+00	0.00E+00
2290	ALL	750988.42	4039160.7	2.77E-07	70YrCancerDerived_InhSoil[	2.77E-07	0.00E+00	0.00E+00	0.00E+00	0.00E+00	0.00E+00	0.00E+00	0.00E+00	0.00E+00	0.00E+00	0.00E+00	0.00E+00
2291	ALL	751088.42	4039160.7	2.59E-07	70YrCancerDerived_InhSoil[	2.59E-07	0.00E+00	0.00E+00	0.00E+00	0.00E+00	0.00E+00	0.00E+00	0.00E+00	0.00E+00	0.00E+00	0.00E+00	0.00E+00
2292	ALL	751188.42	4039160.7	2.43E-07	70YrCancerDerived_InhSoil[	2.43E-07	0.00E+00	0.00E+00	0.00E+00	0.00E+00	0.00E+00	0.00E+00	0.00E+00	0.00E+00	0.00E+00	0.00E+00	0.00E+00
2293	ALL	751288.42	4039160.7	2.28E-07	70YrCancerDerived_InhSoil[	2.28E-07	0.00E+00	0.00E+00	0.00E+00	0.00E+00	0.00E+00	0.00E+00	0.00E+00	0.00E+00	0.00E+00	0.00E+00	0.00E+00
2294	ALL	751388.42	4039160.7	2.15E-07	70YrCancerDerived_InhSoil[	2.15E-07	0.00E+00	0.00E+00	0.00E+00	0.00E+00	0.00E+00	0.00E+00	0.00E+00	0.00E+00	0.00E+00	0.00E+00	0.00E+00

2295	ALL	752788.42	4039160.7	1.13E-07	70YrCancerDerived_InhSoil[	1.13E-07	0.00E+00	0.00E+00	0.00E+00	0.00E+00	0.00E+00	0.00E+00	0.00E+00	0.00E+00	0.00E+00	0.00E+00	0.00E+00
2296	ALL	752888.42	4039160.7	1.09E-07	70YrCancerDerived_InhSoil[	1.09E-07	0.00E+00	0.00E+00	0.00E+00	0.00E+00	0.00E+00	0.00E+00	0.00E+00	0.00E+00	0.00E+00	0.00E+00	0.00E+00
2297	ALL	752988.42	4039160.7	1.05E-07	70YrCancerDerived_InhSoil[	1.05E-07	0.00E+00	0.00E+00	0.00E+00	0.00E+00	0.00E+00	0.00E+00	0.00E+00	0.00E+00	0.00E+00	0.00E+00	0.00E+00
2298	ALL	753088.42	4039160.7	1.02E-07	70YrCancerDerived_InhSoil[	1.02E-07	0.00E+00	0.00E+00	0.00E+00	0.00E+00	0.00E+00	0.00E+00	0.00E+00	0.00E+00	0.00E+00	0.00E+00	0.00E+00
2299	ALL	753188.42	4039160.7	9.86E-08	70YrCancerDerived_InhSoil[	9.86E-08	0.00E+00	0.00E+00	0.00E+00	0.00E+00	0.00E+00	0.00E+00	0.00E+00	0.00E+00	0.00E+00	0.00E+00	0.00E+00
2300	ALL	747788.42	4039260.7	8.38E-08	70YrCancerDerived_InhSoil[	8.38E-08	0.00E+00	0.00E+00	0.00E+00	0.00E+00	0.00E+00	0.00E+00	0.00E+00	0.00E+00	0.00E+00	0.00E+00	0.00E+00
2301	ALL	747888.42	4039260.7	8.75E-08	70YrCancerDerived_InhSoil[	8.75E-08	0.00E+00	0.00E+00	0.00E+00	0.00E+00	0.00E+00	0.00E+00	0.00E+00	0.00E+00	0.00E+00	0.00E+00	0.00E+00
2302	ALL	747988.42	4039260.7	9.31E-08	70YrCancerDerived_InhSoil[	9.31E-08	0.00E+00	0.00E+00	0.00E+00	0.00E+00	0.00E+00	0.00E+00	0.00E+00	0.00E+00	0.00E+00	0.00E+00	0.00E+00
2303	ALL	748088.42	4039260.7	1.03E-07	70YrCancerDerived_InhSoil[	1.03E-07	0.00E+00	0.00E+00	0.00E+00	0.00E+00	0.00E+00	0.00E+00	0.00E+00	0.00E+00	0.00E+00	0.00E+00	0.00E+00
2304	ALL	748188.42	4039260.7	1.17E-07	70YrCancerDerived_InhSoil[	1.17E-07	0.00E+00	0.00E+00	0.00E+00	0.00E+00	0.00E+00	0.00E+00	0.00E+00	0.00E+00	0.00E+00	0.00E+00	0.00E+00
2305	ALL	749888.42	4039260.7	6.61E-07	70YrCancerDerived_InhSoil[	6.61E-07	0.00E+00	0.00E+00	0.00E+00	0.00E+00	0.00E+00	0.00E+00	0.00E+00	0.00E+00	0.00E+00	0.00E+00	0.00E+00
2306	ALL	749988.42	4039260.7	6.08E-07	70YrCancerDerived_InhSoil[	6.08E-07	0.00E+00	0.00E+00	0.00E+00	0.00E+00	0.00E+00	0.00E+00	0.00E+00	0.00E+00	0.00E+00	0.00E+00	0.00E+00
2307	ALL	750088.42	4039260.7	5.57E-07	70YrCancerDerived_InhSoil[	5.57E-07	0.00E+00	0.00E+00	0.00E+00	0.00E+00	0.00E+00	0.00E+00	0.00E+00	0.00E+00	0.00E+00	0.00E+00	0.00E+00
2308	ALL	750188.42	4039260.7	5.09E-07	70YrCancerDerived_InhSoil[	5.09E-07	0.00E+00	0.00E+00	0.00E+00	0.00E+00	0.00E+00	0.00E+00	0.00E+00	0.00E+00	0.00E+00	0.00E+00	0.00E+00
2309	ALL	750288.42	4039260.7	4.65E-07	70YrCancerDerived_InhSoil[	4.65E-07	0.00E+00	0.00E+00	0.00E+00	0.00E+00	0.00E+00	0.00E+00	0.00E+00	0.00E+00	0.00E+00	0.00E+00	0.00E+00
2310	ALL	750388.42	4039260.7	4.25E-07	70YrCancerDerived_InhSoil[	4.25E-07	0.00E+00	0.00E+00	0.00E+00	0.00E+00	0.00E+00	0.00E+00	0.00E+00	0.00E+00	0.00E+00	0.00E+00	0.00E+00
2311	ALL	750488.42	4039260.7	3.90E-07	70YrCancerDerived_InhSoil[	3.90E-07	0.00E+00	0.00E+00	0.00E+00	0.00E+00	0.00E+00	0.00E+00	0.00E+00	0.00E+00	0.00E+00	0.00E+00	0.00E+00
2312	ALL	750588.42	4039260.7	3.59E-07	70YrCancerDerived_InhSoil[	3.59E-07	0.00E+00	0.00E+00	0.00E+00	0.00E+00	0.00E+00	0.00E+00	0.00E+00	0.00E+00	0.00E+00	0.00E+00	0.00E+00
2313	ALL	750688.42	4039260.7	3.31E-07	70YrCancerDerived_InhSoil[	3.31E-07	0.00E+00	0.00E+00	0.00E+00	0.00E+00	0.00E+00	0.00E+00	0.00E+00	0.00E+00	0.00E+00	0.00E+00	0.00E+00
2314	ALL	750788.42	4039260.7	3.07E-07	70YrCancerDerived_InhSoil[	3.07E-07	0.00E+00	0.00E+00	0.00E+00	0.00E+00	0.00E+00	0.00E+00	0.00E+00	0.00E+00	0.00E+00	0.00E+00	0.00E+00
2315	ALL	750888.42	4039260.7	2.85E-07	70YrCancerDerived_InhSoil[	2.85E-07	0.00E+00	0.00E+00	0.00E+00	0.00E+00	0.00E+00	0.00E+00	0.00E+00	0.00E+00	0.00E+00	0.00E+00	0.00E+00
2316	ALL	750988.42	4039260.7	2.66E-07	70YrCancerDerived_InhSoil[	2.66E-07	0.00E+00	0.00E+00	0.00E+00	0.00E+00	0.00E+00	0.00E+00	0.00E+00	0.00E+00	0.00E+00	0.00E+00	0.00E+00
2317	ALL	751088.42	4039260.7	2.48E-07	70YrCancerDerived_InhSoil[	2.48E-07	0.00E+00	0.00E+00	0.00E+00	0.00E+00	0.00E+00	0.00E+00	0.00E+00	0.00E+00	0.00E+00	0.00E+00	0.00E+00
2318	ALL	751188.42	4039260.7	2.33E-07	70YrCancerDerived_InhSoil[	2.33E-07	0.00E+00	0.00E+00	0.00E+00	0.00E+00	0.00E+00	0.00E+00	0.00E+00	0.00E+00	0.00E+00	0.00E+00	0.00E+00
2319	ALL	751288.42	4039260.7	2.19E-07	70YrCancerDerived_InhSoil[	2.19E-07	0.00E+00	0.00E+00	0.00E+00	0.00E+00	0.00E+00	0.00E+00	0.00E+00	0.00E+00	0.00E+00	0.00E+00	0.00E+00
2320	ALL	751388.42	4039260.7	2.07E-07	70YrCancerDerived_InhSoil[	2.07E-07	0.00E+00	0.00E+00	0.00E+00	0.00E+00	0.00E+00	0.00E+00	0.00E+00	0.00E+00	0.00E+00	0.00E+00	0.00E+00
2321	ALL	752788.42	4039260.7	1.09E-07	70YrCancerDerived_InhSoil[	1.09E-07	0.00E+00	0.00E+00	0.00E+00	0.00E+00	0.00E+00	0.00E+00	0.00E+00	0.00E+00	0.00E+00	0.00E+00	0.00E+00
2322	ALL	752888.42	4039260.7	1.06E-07	70YrCancerDerived_InhSoil[	1.06E-07	0.00E+00	0.00E+00	0.00E+00	0.00E+00	0.00E+00	0.00E+00	0.00E+00	0.00E+00	0.00E+00	0.00E+00	0.00E+00
2323	ALL	752988.42	4039260.7	1.02E-07	70YrCancerDerived_InhSoil[	1.02E-07	0.00E+00	0.00E+00	0.00E+00	0.00E+00	0.00E+00	0.00E+00	0.00E+00	0.00E+00	0.00E+00	0.00E+00	0.00E+00
2324	ALL	753088.42	4039260.7	9.86E-08	70YrCancerDerived_InhSoil[	9.86E-08	0.00E+00	0.00E+00	0.00E+00	0.00E+00	0.00E+00	0.00E+00	0.00E+00	0.00E+00	0.00E+00	0.00E+00	0.00E+00
2325	ALL	753188.42	4039260.7	9.54E-08	70YrCancerDerived_InhSoil[	9.54E-08	0.00E+00	0.00E+00	0.00E+00	0.00E+00	0.00E+00	0.00E+00	0.00E+00	0.00E+00	0.00E+00	0.00E+00	0.00E+00
2326	ALL	747788.42	4039360.7	8.65E-08	70YrCancerDerived_InhSoil[	8.65E-08	0.00E+00	0.00E+00	0.00E+00	0.00E+00	0.00E+00	0.00E+00	0.00E+00	0.00E+00	0.00E+00	0.00E+00	0.00E+00
2327	ALL	747888.42	4039360.7	9.06E-08	70YrCancerDerived_InhSoil[	9.06E-08	0.00E+00	0.00E+00	0.00E+00	0.00E+00	0.00E+00	0.00E+00	0.00E+00	0.00E+00	0.00E+00	0.00E+00	0.00E+00
2328	ALL	747988.42	4039360.7	9.63E-08	70YrCancerDerived_InhSoil[	9.63E-08	0.00E+00	0.00E+00	0.00E+00	0.00E+00	0.00E+00	0.00E+00	0.00E+00	0.00E+00	0.00E+00	0.00E+00	0.00E+00
2329	ALL	748088.42	4039360.7	1.06E-07	70YrCancerDerived_InhSoil[	1.06E-07	0.00E+00	0.00E+00	0.00E+00	0.00E+00	0.00E+00	0.00E+00	0.00E+00	0.00E+00	0.00E+00	0.00E+00	0.00E+00
2330	ALL	748188.42	4039360.7	1.21E-07	70YrCancerDerived_InhSoil[	1.21E-07	0.00E+00	0.00E+00	0.00E+00	0.00E+00	0.00E+00	0.00E+00	0.00E+00	0.00E+00	0.00E+00	0.00E+00	0.00E+00
2331	ALL	749888.42	4039360.7	6.71E-07	70YrCancerDerived_InhSoil[	6.71E-07	0.00E+00	0.00E+00	0.00E+00	0.00E+00	0.00E+00	0.00E+00	0.00E+00	0.00E+00	0.00E+00	0.00E+00	0.00E+00
2332	ALL	749988.42	4039360.7	6.07E-07	70YrCancerDerived_InhSoil[	6.07E-07	0.00E+00	0.00E+00	0.00E+00	0.00E+00	0.00E+00	0.00E+00	0.00E+00	0.00E+00	0.00E+00	0.00E+00	0.00E+00
2333	ALL	750088.42	4039360.7	5.48E-07	70YrCancerDerived_InhSoil[	5.48E-07	0.00E+00	0.00E+00	0.00E+00	0.00E+00	0.00E+00	0.00E+00	0.00E+00	0.00E+00	0.00E+00	0.00E+00	0.00E+00
2334	ALL	750188.42	4039360.7	4.96E-07	70YrCancerDerived_InhSoil[	4.96E-07	0.00E+00	0.00E+00	0.00E+00	0.00E+00	0.00E+00	0.00E+00	0.00E+00	0.00E+00	0.00E+00	0.00E+00	0.00E+00
2335	ALL	750288.42	4039360.7	4.50E-07	70YrCancerDerived_InhSoil[	4.50E-07	0.00E+00	0.00E+00	0.00E+00	0.00E+00	0.00E+00	0.00E+00	0.00E+00	0.00E+00	0.00E+00	0.00E+00	0.00E+00
2336	ALL	750388.42	4039360.7	4.10E-07	70YrCancerDerived_InhSoil[	4.10E-07	0.00E+00	0.00E+00	0.00E+00	0.00E+00	0.00E+00	0.00E+00	0.00E+00	0.00E+00	0.00E+00	0.00E+00	0.00E+00
2337	ALL	750488.42	4039360.7	3.74E-07	70YrCancerDerived_InhSoil[	3.74E-07	0.00E+00	0.00E+00	0.00E+00	0.00E+00	0.00E+00	0.00E+00	0.00E+00	0.00E+00	0.00E+00	0.00E+00	0.00E+00
2338	ALL	750588.42	4039360.7	3.44E-07	70YrCancerDerived_InhSoil[	3.44E-07	0.00E+00	0.00E+00	0.00E+00	0.00E+00	0.00E+00	0.00E+00	0.00E+00	0.00E+00	0.00E+00	0.00E+00	0.00E+00
2339	ALL	750688.42	4039360.7	3.17E-07	70YrCancerDerived_InhSoil[	3.17E-07	0.00E+00	0.00E+00	0.00E+00	0.00E+00	0.00E+00	0.00E+00	0.00E+00	0.00E+00	0.00E+00	0.00E+00	0.00E+00
2340	ALL	750788.42	4039360.7	2.93E-07	70YrCancerDerived_InhSoil[	2.93E-07	0.00E+00	0.00E+00	0.00E+00	0.00E+00	0.00E+00	0.00E+00	0.00E+00	0.00E+00	0.00E+00	0.00E+00	0.00E+00
2341	ALL	750888.42	4039360.7	2.72E-07	70YrCancerDerived_InhSoil[	2.72E-07	0.00E+00	0.00E+00	0.00E+00	0.00E+00	0.00E+00	0.00E+00	0.00E+00	0.00E+00	0.00E+00	0.00E+00	0.00E+00
2342	ALL	750988.42	4039360.7	2.54E-07	70YrCancerDerived_InhSoil[	2.54E-07	0.00E+00	0.00E+00	0.00E+00	0.00E+00	0.00E+00	0.00E+00	0.00E+00	0.00E+00	0.00E+00	0.00E+00	0.00E+00
2343	ALL	751088.42	4039360.7	2.37E-07	70YrCancerDerived_InhSoil[	2.37E-07	0.00E+00	0.00E+00	0.00E+00	0.00E+00	0.00E+00	0.00E+00	0.00E+00	0.00E+00	0.00E+00	0.00E+00	0.00E+00
2344	ALL	751188.42	4039360.7	2.23E-07	70YrCancerDerived_InhSoil[	2.23E-07	0.00E+00	0.00E+00	0.00E+00	0.00E+00	0.00E+00	0.00E+00	0.00E+00	0.00E+00	0.00E+00	0.00E+00	0.00E+00
2345	ALL	751288.42	4039360.7	2.10E-07	70YrCancerDerived_InhSoil[	2.10E-07	0.00E+00	0.00E+00	0.00E+00	0.00E+00	0.00E+00	0.00E+00	0.00E+00	0.00E+00	0.00E+00	0.00E+00	0.00E+00
2346	ALL	751388.42	4039360.7	1.98E-07	70YrCancerDerived_InhSoil[	1.98E-07	0.00E+00	0.00E+00	0.00E+00	0.00E+00	0.00E+00	0.00E+00	0.00E+00	0.00E+00	0.00E+00	0.00E+00	0.00E+00
2347	ALL	752788.42	4039360.7	1.06E-07	70YrCancerDerived_InhSoil[	1.06E-07	0.00E+00	0.00E+00	0.00E+00	0.00E+00	0.00E+00	0.00E+00	0.00E+00	0.00E+00	0.00E+00	0.00E+00	0.00E+00
2348	ALL	752888.42	4039360.7	1.02E-07	70YrCancerDerived_InhSoil[	1.02E-07	0.00E+00	0.00E+00	0.00E+00	0.00E+00	0.00E+00	0.00E+00	0.00E+00	0.00E+00	0.00E+00	0.00E+00	0.00E+00
2349	ALL	752988.42	4039360.7	9.86E-08	70YrCancerDerived_InhSoil[	9.86E-08	0.00E+00	0.00E+00	0.00E+00	0.00E+00	0.00E+00	0.00E+00	0.00E+00	0.00E+00	0.00E+00	0.00E+00	0.00E+00
2350	ALL	753088.42	4039360.7	9.54E-08	70YrCancerDerived_InhSoil[	9.54E-08	0.00E+00	0.00E+00	0.00E+00	0.00E+00	0.00E+00	0.00E+00	0.00E+00	0.00E+00	0.00E+00	0.00E+00	0.00E+00

2351	ALL	753188.42	4039360.7	9.23E-08	70YrCancerDerived_InhSoilI	9.23E-08	0.00E+00	0.00E+00	0.00E+00	0.00E+00	0.00E+00	0.00E+00	0.00E+00	0.00E+00	0.00E+00	0.00E+00	0.00E+00
2352	ALL	747788.42	4039460.7	8.92E-08	70YrCancerDerived_InhSoilI	8.92E-08	0.00E+00	0.00E+00	0.00E+00	0.00E+00	0.00E+00	0.00E+00	0.00E+00	0.00E+00	0.00E+00	0.00E+00	0.00E+00
2353	ALL	747888.42	4039460.7	9.44E-08	70YrCancerDerived_InhSoilI	9.44E-08	0.00E+00	0.00E+00	0.00E+00	0.00E+00	0.00E+00	0.00E+00	0.00E+00	0.00E+00	0.00E+00	0.00E+00	0.00E+00
2354	ALL	747988.42	4039460.7	1.01E-07	70YrCancerDerived_InhSoilI	1.01E-07	0.00E+00	0.00E+00	0.00E+00	0.00E+00	0.00E+00	0.00E+00	0.00E+00	0.00E+00	0.00E+00	0.00E+00	0.00E+00
2355	ALL	748088.42	4039460.7	1.10E-07	70YrCancerDerived_InhSoilI	1.10E-07	0.00E+00	0.00E+00	0.00E+00	0.00E+00	0.00E+00	0.00E+00	0.00E+00	0.00E+00	0.00E+00	0.00E+00	0.00E+00
2356	ALL	748188.42	4039460.7	1.27E-07	70YrCancerDerived_InhSoilI	1.27E-07	0.00E+00	0.00E+00	0.00E+00	0.00E+00	0.00E+00	0.00E+00	0.00E+00	0.00E+00	0.00E+00	0.00E+00	0.00E+00
2357	ALL	749888.42	4039460.7	6.62E-07	70YrCancerDerived_InhSoilI	6.62E-07	0.00E+00	0.00E+00	0.00E+00	0.00E+00	0.00E+00	0.00E+00	0.00E+00	0.00E+00	0.00E+00	0.00E+00	0.00E+00
2358	ALL	749988.42	4039460.7	5.90E-07	70YrCancerDerived_InhSoilI	5.90E-07	0.00E+00	0.00E+00	0.00E+00	0.00E+00	0.00E+00	0.00E+00	0.00E+00	0.00E+00	0.00E+00	0.00E+00	0.00E+00
2359	ALL	750088.42	4039460.7	5.28E-07	70YrCancerDerived_InhSoilI	5.28E-07	0.00E+00	0.00E+00	0.00E+00	0.00E+00	0.00E+00	0.00E+00	0.00E+00	0.00E+00	0.00E+00	0.00E+00	0.00E+00
2360	ALL	750188.42	4039460.7	4.75E-07	70YrCancerDerived_InhSoilI	4.75E-07	0.00E+00	0.00E+00	0.00E+00	0.00E+00	0.00E+00	0.00E+00	0.00E+00	0.00E+00	0.00E+00	0.00E+00	0.00E+00
2361	ALL	750288.42	4039460.7	4.29E-07	70YrCancerDerived_InhSoilI	4.29E-07	0.00E+00	0.00E+00	0.00E+00	0.00E+00	0.00E+00	0.00E+00	0.00E+00	0.00E+00	0.00E+00	0.00E+00	0.00E+00
2362	ALL	750388.42	4039460.7	3.90E-07	70YrCancerDerived_InhSoilI	3.90E-07	0.00E+00	0.00E+00	0.00E+00	0.00E+00	0.00E+00	0.00E+00	0.00E+00	0.00E+00	0.00E+00	0.00E+00	0.00E+00
2363	ALL	750488.42	4039460.7	3.56E-07	70YrCancerDerived_InhSoilI	3.56E-07	0.00E+00	0.00E+00	0.00E+00	0.00E+00	0.00E+00	0.00E+00	0.00E+00	0.00E+00	0.00E+00	0.00E+00	0.00E+00
2364	ALL	750588.42	4039460.7	3.26E-07	70YrCancerDerived_InhSoilI	3.26E-07	0.00E+00	0.00E+00	0.00E+00	0.00E+00	0.00E+00	0.00E+00	0.00E+00	0.00E+00	0.00E+00	0.00E+00	0.00E+00
2365	ALL	750688.42	4039460.7	3.01E-07	70YrCancerDerived_InhSoilI	3.01E-07	0.00E+00	0.00E+00	0.00E+00	0.00E+00	0.00E+00	0.00E+00	0.00E+00	0.00E+00	0.00E+00	0.00E+00	0.00E+00
2366	ALL	750788.42	4039460.7	2.78E-07	70YrCancerDerived_InhSoilI	2.78E-07	0.00E+00	0.00E+00	0.00E+00	0.00E+00	0.00E+00	0.00E+00	0.00E+00	0.00E+00	0.00E+00	0.00E+00	0.00E+00
2367	ALL	750888.42	4039460.7	2.58E-07	70YrCancerDerived_InhSoilI	2.58E-07	0.00E+00	0.00E+00	0.00E+00	0.00E+00	0.00E+00	0.00E+00	0.00E+00	0.00E+00	0.00E+00	0.00E+00	0.00E+00
2368	ALL	750988.42	4039460.7	2.41E-07	70YrCancerDerived_InhSoilI	2.41E-07	0.00E+00	0.00E+00	0.00E+00	0.00E+00	0.00E+00	0.00E+00	0.00E+00	0.00E+00	0.00E+00	0.00E+00	0.00E+00
2369	ALL	751088.42	4039460.7	2.25E-07	70YrCancerDerived_InhSoilI	2.25E-07	0.00E+00	0.00E+00	0.00E+00	0.00E+00	0.00E+00	0.00E+00	0.00E+00	0.00E+00	0.00E+00	0.00E+00	0.00E+00
2370	ALL	751188.42	4039460.7	2.12E-07	70YrCancerDerived_InhSoilI	2.12E-07	0.00E+00	0.00E+00	0.00E+00	0.00E+00	0.00E+00	0.00E+00	0.00E+00	0.00E+00	0.00E+00	0.00E+00	0.00E+00
2371	ALL	751288.42	4039460.7	1.99E-07	70YrCancerDerived_InhSoilI	1.99E-07	0.00E+00	0.00E+00	0.00E+00	0.00E+00	0.00E+00	0.00E+00	0.00E+00	0.00E+00	0.00E+00	0.00E+00	0.00E+00
2372	ALL	751388.42	4039460.7	1.88E-07	70YrCancerDerived_InhSoilI	1.88E-07	0.00E+00	0.00E+00	0.00E+00	0.00E+00	0.00E+00	0.00E+00	0.00E+00	0.00E+00	0.00E+00	0.00E+00	0.00E+00
2373	ALL	752788.42	4039460.7	1.02E-07	70YrCancerDerived_InhSoilI	1.02E-07	0.00E+00	0.00E+00	0.00E+00	0.00E+00	0.00E+00	0.00E+00	0.00E+00	0.00E+00	0.00E+00	0.00E+00	0.00E+00
2374	ALL	752888.42	4039460.7	9.83E-08	70YrCancerDerived_InhSoilI	9.83E-08	0.00E+00	0.00E+00	0.00E+00	0.00E+00	0.00E+00	0.00E+00	0.00E+00	0.00E+00	0.00E+00	0.00E+00	0.00E+00
2375	ALL	752988.42	4039460.7	9.51E-08	70YrCancerDerived_InhSoilI	9.51E-08	0.00E+00	0.00E+00	0.00E+00	0.00E+00	0.00E+00	0.00E+00	0.00E+00	0.00E+00	0.00E+00	0.00E+00	0.00E+00
2376	ALL	753088.42	4039460.7	9.20E-08	70YrCancerDerived_InhSoilI	9.20E-08	0.00E+00	0.00E+00	0.00E+00	0.00E+00	0.00E+00	0.00E+00	0.00E+00	0.00E+00	0.00E+00	0.00E+00	0.00E+00
2377	ALL	753188.42	4039460.7	8.91E-08	70YrCancerDerived_InhSoilI	8.91E-08	0.00E+00	0.00E+00	0.00E+00	0.00E+00	0.00E+00	0.00E+00	0.00E+00	0.00E+00	0.00E+00	0.00E+00	0.00E+00
2378	ALL	747788.42	4039560.7	9.13E-08	70YrCancerDerived_InhSoilI	9.13E-08	0.00E+00	0.00E+00	0.00E+00	0.00E+00	0.00E+00	0.00E+00	0.00E+00	0.00E+00	0.00E+00	0.00E+00	0.00E+00
2379	ALL	747888.42	4039560.7	9.84E-08	70YrCancerDerived_InhSoilI	9.84E-08	0.00E+00	0.00E+00	0.00E+00	0.00E+00	0.00E+00	0.00E+00	0.00E+00	0.00E+00	0.00E+00	0.00E+00	0.00E+00
2380	ALL	747988.42	4039560.7	1.06E-07	70YrCancerDerived_InhSoilI	1.06E-07	0.00E+00	0.00E+00	0.00E+00	0.00E+00	0.00E+00	0.00E+00	0.00E+00	0.00E+00	0.00E+00	0.00E+00	0.00E+00
2381	ALL	748088.42	4039560.7	1.16E-07	70YrCancerDerived_InhSoilI	1.16E-07	0.00E+00	0.00E+00	0.00E+00	0.00E+00	0.00E+00	0.00E+00	0.00E+00	0.00E+00	0.00E+00	0.00E+00	0.00E+00
2382	ALL	748188.42	4039560.7	1.33E-07	70YrCancerDerived_InhSoilI	1.33E-07	0.00E+00	0.00E+00	0.00E+00	0.00E+00	0.00E+00	0.00E+00	0.00E+00	0.00E+00	0.00E+00	0.00E+00	0.00E+00
2383	ALL	749888.42	4039560.7	6.35E-07	70YrCancerDerived_InhSoilI	6.35E-07	0.00E+00	0.00E+00	0.00E+00	0.00E+00	0.00E+00	0.00E+00	0.00E+00	0.00E+00	0.00E+00	0.00E+00	0.00E+00
2384	ALL	749988.42	4039560.7	5.62E-07	70YrCancerDerived_InhSoilI	5.62E-07	0.00E+00	0.00E+00	0.00E+00	0.00E+00	0.00E+00	0.00E+00	0.00E+00	0.00E+00	0.00E+00	0.00E+00	0.00E+00
2385	ALL	750088.42	4039560.7	5.00E-07	70YrCancerDerived_InhSoilI	5.00E-07	0.00E+00	0.00E+00	0.00E+00	0.00E+00	0.00E+00	0.00E+00	0.00E+00	0.00E+00	0.00E+00	0.00E+00	0.00E+00
2386	ALL	750188.42	4039560.7	4.48E-07	70YrCancerDerived_InhSoilI	4.48E-07	0.00E+00	0.00E+00	0.00E+00	0.00E+00	0.00E+00	0.00E+00	0.00E+00	0.00E+00	0.00E+00	0.00E+00	0.00E+00
2387	ALL	750288.42	4039560.7	4.05E-07	70YrCancerDerived_InhSoilI	4.05E-07	0.00E+00	0.00E+00	0.00E+00	0.00E+00	0.00E+00	0.00E+00	0.00E+00	0.00E+00	0.00E+00	0.00E+00	0.00E+00
2388	ALL	750388.42	4039560.7	3.67E-07	70YrCancerDerived_InhSoilI	3.67E-07	0.00E+00	0.00E+00	0.00E+00	0.00E+00	0.00E+00	0.00E+00	0.00E+00	0.00E+00	0.00E+00	0.00E+00	0.00E+00
2389	ALL	750488.42	4039560.7	3.35E-07	70YrCancerDerived_InhSoilI	3.35E-07	0.00E+00	0.00E+00	0.00E+00	0.00E+00	0.00E+00	0.00E+00	0.00E+00	0.00E+00	0.00E+00	0.00E+00	0.00E+00
2390	ALL	750588.42	4039560.7	3.07E-07	70YrCancerDerived_InhSoilI	3.07E-07	0.00E+00	0.00E+00	0.00E+00	0.00E+00	0.00E+00	0.00E+00	0.00E+00	0.00E+00	0.00E+00	0.00E+00	0.00E+00
2391	ALL	750688.42	4039560.7	2.83E-07	70YrCancerDerived_InhSoilI	2.83E-07	0.00E+00	0.00E+00	0.00E+00	0.00E+00	0.00E+00	0.00E+00	0.00E+00	0.00E+00	0.00E+00	0.00E+00	0.00E+00
2392	ALL	750788.42	4039560.7	2.62E-07	70YrCancerDerived_InhSoilI	2.62E-07	0.00E+00	0.00E+00	0.00E+00	0.00E+00	0.00E+00	0.00E+00	0.00E+00	0.00E+00	0.00E+00	0.00E+00	0.00E+00
2393	ALL	750888.42	4039560.7	2.44E-07	70YrCancerDerived_InhSoilI	2.44E-07	0.00E+00	0.00E+00	0.00E+00	0.00E+00	0.00E+00	0.00E+00	0.00E+00	0.00E+00	0.00E+00	0.00E+00	0.00E+00
2394	ALL	750988.42	4039560.7	2.27E-07	70YrCancerDerived_InhSoilI	2.27E-07	0.00E+00	0.00E+00	0.00E+00	0.00E+00	0.00E+00	0.00E+00	0.00E+00	0.00E+00	0.00E+00	0.00E+00	0.00E+00
2395	ALL	751088.42	4039560.7	2.13E-07	70YrCancerDerived_InhSoilI	2.13E-07	0.00E+00	0.00E+00	0.00E+00	0.00E+00	0.00E+00	0.00E+00	0.00E+00	0.00E+00	0.00E+00	0.00E+00	0.00E+00
2396	ALL	751188.42	4039560.7	2.00E-07	70YrCancerDerived_InhSoilI	2.00E-07	0.00E+00	0.00E+00	0.00E+00	0.00E+00	0.00E+00	0.00E+00	0.00E+00	0.00E+00	0.00E+00	0.00E+00	0.00E+00
2397	ALL	751288.42	4039560.7	1.89E-07	70YrCancerDerived_InhSoilI	1.89E-07	0.00E+00	0.00E+00	0.00E+00	0.00E+00	0.00E+00	0.00E+00	0.00E+00	0.00E+00	0.00E+00	0.00E+00	0.00E+00
2398	ALL	751388.42	4039560.7	1.78E-07	70YrCancerDerived_InhSoilI	1.78E-07	0.00E+00	0.00E+00	0.00E+00	0.00E+00	0.00E+00	0.00E+00	0.00E+00	0.00E+00	0.00E+00	0.00E+00	0.00E+00
2399	ALL	752788.42	4039560.7	9.79E-08	70YrCancerDerived_InhSoilI	9.79E-08	0.00E+00	0.00E+00	0.00E+00	0.00E+00	0.00E+00	0.00E+00	0.00E+00	0.00E+00	0.00E+00	0.00E+00	0.00E+00
2400	ALL	752888.42	4039560.7	9.46E-08	70YrCancerDerived_InhSoilI	9.46E-08	0.00E+00	0.00E+00	0.00E+00	0.00E+00	0.00E+00	0.00E+00	0.00E+00	0.00E+00	0.00E+00	0.00E+00	0.00E+00
2401	ALL	752988.42	4039560.7	9.16E-08	70YrCancerDerived_InhSoilI	9.16E-08	0.00E+00	0.00E+00	0.00E+00	0.00E+00	0.00E+00	0.00E+00	0.00E+00	0.00E+00	0.00E+00	0.00E+00	0.00E+00
2402	ALL	753088.42	4039560.7	8.87E-08	70YrCancerDerived_InhSoilI	8.87E-08	0.00E+00	0.00E+00	0.00E+00	0.00E+00	0.00E+00	0.00E+00	0.00E+00	0.00E+00	0.00E+00	0.00E+00	0.00E+00
2403	ALL	753188.42	4039560.7	8.60E-08	70YrCancerDerived_InhSoilI	8.60E-08	0.00E+00	0.00E+00	0.00E+00	0.00E+00	0.00E+00	0.00E+00	0.00E+00	0.00E+00	0.00E+00	0.00E+00	0.00E+00
2404	ALL	746288.42	4039660.7	6.94E-08	70YrCancerDerived_InhSoilI	6.94E-08	0.00E+00	0.00E+00	0.00E+00	0.00E+00	0.00E+00	0.00E+00	0.00E+00	0.00E+00	0.00E+00	0.00E+00	0.00E+00
2405	ALL	746388.42	4039660.7	6.96E-08	70YrCancerDerived_InhSoilI	6.96E-08	0.00E+00	0.00E+00	0.00E+00	0.00E+00	0.00E+00	0.00E+00	0.00E+00	0.00E+00	0.00E+00	0.00E+00	0.00E+00
2406	ALL	746488.42	4039660.7	6.98E-08	70YrCancerDerived_InhSoilI	6.98E-08	0.00E+00	0.00E+00	0.00E+00	0.00E+00	0.00E+00	0.00E+00	0.00E+00	0.00E+00	0.00E+00	0.00E+00	0.00E+00

2407	ALL	746588.42	4039660.7	7.01E-08	70YrCancerDerived_InhSoil[	7.01E-08	0.00E+00	0.00E+00	0.00E+00	0.00E+00	0.00E+00	0.00E+00	0.00E+00	0.00E+00	0.00E+00	0.00E+00	0.00E+00
2408	ALL	746688.42	4039660.7	7.04E-08	70YrCancerDerived_InhSoil[	7.04E-08	0.00E+00	0.00E+00	0.00E+00	0.00E+00	0.00E+00	0.00E+00	0.00E+00	0.00E+00	0.00E+00	0.00E+00	0.00E+00
2409	ALL	746788.42	4039660.7	7.07E-08	70YrCancerDerived_InhSoil[	7.07E-08	0.00E+00	0.00E+00	0.00E+00	0.00E+00	0.00E+00	0.00E+00	0.00E+00	0.00E+00	0.00E+00	0.00E+00	0.00E+00
2410	ALL	746888.42	4039660.7	7.10E-08	70YrCancerDerived_InhSoil[	7.10E-08	0.00E+00	0.00E+00	0.00E+00	0.00E+00	0.00E+00	0.00E+00	0.00E+00	0.00E+00	0.00E+00	0.00E+00	0.00E+00
2411	ALL	746988.42	4039660.7	7.15E-08	70YrCancerDerived_InhSoil[	7.15E-08	0.00E+00	0.00E+00	0.00E+00	0.00E+00	0.00E+00	0.00E+00	0.00E+00	0.00E+00	0.00E+00	0.00E+00	0.00E+00
2412	ALL	747088.42	4039660.7	7.23E-08	70YrCancerDerived_InhSoil[	7.23E-08	0.00E+00	0.00E+00	0.00E+00	0.00E+00	0.00E+00	0.00E+00	0.00E+00	0.00E+00	0.00E+00	0.00E+00	0.00E+00
2413	ALL	747188.42	4039660.7	7.34E-08	70YrCancerDerived_InhSoil[	7.34E-08	0.00E+00	0.00E+00	0.00E+00	0.00E+00	0.00E+00	0.00E+00	0.00E+00	0.00E+00	0.00E+00	0.00E+00	0.00E+00
2414	ALL	747288.42	4039660.7	7.49E-08	70YrCancerDerived_InhSoil[	7.49E-08	0.00E+00	0.00E+00	0.00E+00	0.00E+00	0.00E+00	0.00E+00	0.00E+00	0.00E+00	0.00E+00	0.00E+00	0.00E+00
2415	ALL	747388.42	4039660.7	7.68E-08	70YrCancerDerived_InhSoil[	7.68E-08	0.00E+00	0.00E+00	0.00E+00	0.00E+00	0.00E+00	0.00E+00	0.00E+00	0.00E+00	0.00E+00	0.00E+00	0.00E+00
2416	ALL	747488.42	4039660.7	7.92E-08	70YrCancerDerived_InhSoil[	7.92E-08	0.00E+00	0.00E+00	0.00E+00	0.00E+00	0.00E+00	0.00E+00	0.00E+00	0.00E+00	0.00E+00	0.00E+00	0.00E+00
2417	ALL	747588.42	4039660.7	8.24E-08	70YrCancerDerived_InhSoil[	8.24E-08	0.00E+00	0.00E+00	0.00E+00	0.00E+00	0.00E+00	0.00E+00	0.00E+00	0.00E+00	0.00E+00	0.00E+00	0.00E+00
2418	ALL	747688.42	4039660.7	8.69E-08	70YrCancerDerived_InhSoil[	8.69E-08	0.00E+00	0.00E+00	0.00E+00	0.00E+00	0.00E+00	0.00E+00	0.00E+00	0.00E+00	0.00E+00	0.00E+00	0.00E+00
2419	ALL	747788.42	4039660.7	9.31E-08	70YrCancerDerived_InhSoil[	9.31E-08	0.00E+00	0.00E+00	0.00E+00	0.00E+00	0.00E+00	0.00E+00	0.00E+00	0.00E+00	0.00E+00	0.00E+00	0.00E+00
2420	ALL	747888.42	4039660.7	1.02E-07	70YrCancerDerived_InhSoil[	1.02E-07	0.00E+00	0.00E+00	0.00E+00	0.00E+00	0.00E+00	0.00E+00	0.00E+00	0.00E+00	0.00E+00	0.00E+00	0.00E+00
2421	ALL	747988.42	4039660.7	1.12E-07	70YrCancerDerived_InhSoil[	1.12E-07	0.00E+00	0.00E+00	0.00E+00	0.00E+00	0.00E+00	0.00E+00	0.00E+00	0.00E+00	0.00E+00	0.00E+00	0.00E+00
2422	ALL	748088.42	4039660.7	1.25E-07	70YrCancerDerived_InhSoil[	1.25E-07	0.00E+00	0.00E+00	0.00E+00	0.00E+00	0.00E+00	0.00E+00	0.00E+00	0.00E+00	0.00E+00	0.00E+00	0.00E+00
2423	ALL	748188.42	4039660.7	1.42E-07	70YrCancerDerived_InhSoil[	1.42E-07	0.00E+00	0.00E+00	0.00E+00	0.00E+00	0.00E+00	0.00E+00	0.00E+00	0.00E+00	0.00E+00	0.00E+00	0.00E+00
2424	ALL	749888.42	4039660.7	5.95E-07	70YrCancerDerived_InhSoil[	5.95E-07	0.00E+00	0.00E+00	0.00E+00	0.00E+00	0.00E+00	0.00E+00	0.00E+00	0.00E+00	0.00E+00	0.00E+00	0.00E+00
2425	ALL	749988.42	4039660.7	5.24E-07	70YrCancerDerived_InhSoil[	5.24E-07	0.00E+00	0.00E+00	0.00E+00	0.00E+00	0.00E+00	0.00E+00	0.00E+00	0.00E+00	0.00E+00	0.00E+00	0.00E+00
2426	ALL	750088.42	4039660.7	4.66E-07	70YrCancerDerived_InhSoil[	4.66E-07	0.00E+00	0.00E+00	0.00E+00	0.00E+00	0.00E+00	0.00E+00	0.00E+00	0.00E+00	0.00E+00	0.00E+00	0.00E+00
2427	ALL	750188.42	4039660.7	4.18E-07	70YrCancerDerived_InhSoil[	4.18E-07	0.00E+00	0.00E+00	0.00E+00	0.00E+00	0.00E+00	0.00E+00	0.00E+00	0.00E+00	0.00E+00	0.00E+00	0.00E+00
2428	ALL	750288.42	4039660.7	3.77E-07	70YrCancerDerived_InhSoil[	3.77E-07	0.00E+00	0.00E+00	0.00E+00	0.00E+00	0.00E+00	0.00E+00	0.00E+00	0.00E+00	0.00E+00	0.00E+00	0.00E+00
2429	ALL	750388.42	4039660.7	3.42E-07	70YrCancerDerived_InhSoil[	3.42E-07	0.00E+00	0.00E+00	0.00E+00	0.00E+00	0.00E+00	0.00E+00	0.00E+00	0.00E+00	0.00E+00	0.00E+00	0.00E+00
2430	ALL	750488.42	4039660.7	3.12E-07	70YrCancerDerived_InhSoil[	3.12E-07	0.00E+00	0.00E+00	0.00E+00	0.00E+00	0.00E+00	0.00E+00	0.00E+00	0.00E+00	0.00E+00	0.00E+00	0.00E+00
2431	ALL	750588.42	4039660.7	2.87E-07	70YrCancerDerived_InhSoil[	2.87E-07	0.00E+00	0.00E+00	0.00E+00	0.00E+00	0.00E+00	0.00E+00	0.00E+00	0.00E+00	0.00E+00	0.00E+00	0.00E+00
2432	ALL	750688.42	4039660.7	2.65E-07	70YrCancerDerived_InhSoil[	2.65E-07	0.00E+00	0.00E+00	0.00E+00	0.00E+00	0.00E+00	0.00E+00	0.00E+00	0.00E+00	0.00E+00	0.00E+00	0.00E+00
2433	ALL	750788.42	4039660.7	2.45E-07	70YrCancerDerived_InhSoil[	2.45E-07	0.00E+00	0.00E+00	0.00E+00	0.00E+00	0.00E+00	0.00E+00	0.00E+00	0.00E+00	0.00E+00	0.00E+00	0.00E+00
2434	ALL	750888.42	4039660.7	2.28E-07	70YrCancerDerived_InhSoil[	2.28E-07	0.00E+00	0.00E+00	0.00E+00	0.00E+00	0.00E+00	0.00E+00	0.00E+00	0.00E+00	0.00E+00	0.00E+00	0.00E+00
2435	ALL	750988.42	4039660.7	2.13E-07	70YrCancerDerived_InhSoil[	2.13E-07	0.00E+00	0.00E+00	0.00E+00	0.00E+00	0.00E+00	0.00E+00	0.00E+00	0.00E+00	0.00E+00	0.00E+00	0.00E+00
2436	ALL	751088.42	4039660.7	2.00E-07	70YrCancerDerived_InhSoil[	2.00E-07	0.00E+00	0.00E+00	0.00E+00	0.00E+00	0.00E+00	0.00E+00	0.00E+00	0.00E+00	0.00E+00	0.00E+00	0.00E+00
2437	ALL	751188.42	4039660.7	1.88E-07	70YrCancerDerived_InhSoil[	1.88E-07	0.00E+00	0.00E+00	0.00E+00	0.00E+00	0.00E+00	0.00E+00	0.00E+00	0.00E+00	0.00E+00	0.00E+00	0.00E+00
2438	ALL	751288.42	4039660.7	1.77E-07	70YrCancerDerived_InhSoil[	1.77E-07	0.00E+00	0.00E+00	0.00E+00	0.00E+00	0.00E+00	0.00E+00	0.00E+00	0.00E+00	0.00E+00	0.00E+00	0.00E+00
2439	ALL	751388.42	4039660.7	1.68E-07	70YrCancerDerived_InhSoil[	1.68E-07	0.00E+00	0.00E+00	0.00E+00	0.00E+00	0.00E+00	0.00E+00	0.00E+00	0.00E+00	0.00E+00	0.00E+00	0.00E+00
2440	ALL	752788.42	4039660.7	9.39E-08	70YrCancerDerived_InhSoil[	9.39E-08	0.00E+00	0.00E+00	0.00E+00	0.00E+00	0.00E+00	0.00E+00	0.00E+00	0.00E+00	0.00E+00	0.00E+00	0.00E+00
2441	ALL	752888.42	4039660.7	9.09E-08	70YrCancerDerived_InhSoil[	9.09E-08	0.00E+00	0.00E+00	0.00E+00	0.00E+00	0.00E+00	0.00E+00	0.00E+00	0.00E+00	0.00E+00	0.00E+00	0.00E+00
2442	ALL	752988.42	4039660.7	8.80E-08	70YrCancerDerived_InhSoil[	8.80E-08	0.00E+00	0.00E+00	0.00E+00	0.00E+00	0.00E+00	0.00E+00	0.00E+00	0.00E+00	0.00E+00	0.00E+00	0.00E+00
2443	ALL	753088.42	4039660.7	8.53E-08	70YrCancerDerived_InhSoil[	8.53E-08	0.00E+00	0.00E+00	0.00E+00	0.00E+00	0.00E+00	0.00E+00	0.00E+00	0.00E+00	0.00E+00	0.00E+00	0.00E+00
2444	ALL	753188.42	4039660.7	8.28E-08	70YrCancerDerived_InhSoil[	8.28E-08	0.00E+00	0.00E+00	0.00E+00	0.00E+00	0.00E+00	0.00E+00	0.00E+00	0.00E+00	0.00E+00	0.00E+00	0.00E+00
2445	ALL	746288.42	4039760.7	7.04E-08	70YrCancerDerived_InhSoil[	7.04E-08	0.00E+00	0.00E+00	0.00E+00	0.00E+00	0.00E+00	0.00E+00	0.00E+00	0.00E+00	0.00E+00	0.00E+00	0.00E+00
2446	ALL	746388.42	4039760.7	7.08E-08	70YrCancerDerived_InhSoil[	7.08E-08	0.00E+00	0.00E+00	0.00E+00	0.00E+00	0.00E+00	0.00E+00	0.00E+00	0.00E+00	0.00E+00	0.00E+00	0.00E+00
2447	ALL	746488.42	4039760.7	7.14E-08	70YrCancerDerived_InhSoil[	7.14E-08	0.00E+00	0.00E+00	0.00E+00	0.00E+00	0.00E+00	0.00E+00	0.00E+00	0.00E+00	0.00E+00	0.00E+00	0.00E+00
2448	ALL	746588.42	4039760.7	7.19E-08	70YrCancerDerived_InhSoil[	7.19E-08	0.00E+00	0.00E+00	0.00E+00	0.00E+00	0.00E+00	0.00E+00	0.00E+00	0.00E+00	0.00E+00	0.00E+00	0.00E+00
2449	ALL	746688.42	4039760.7	7.24E-08	70YrCancerDerived_InhSoil[	7.24E-08	0.00E+00	0.00E+00	0.00E+00	0.00E+00	0.00E+00	0.00E+00	0.00E+00	0.00E+00	0.00E+00	0.00E+00	0.00E+00
2450	ALL	746788.42	4039760.7	7.29E-08	70YrCancerDerived_InhSoil[	7.29E-08	0.00E+00	0.00E+00	0.00E+00	0.00E+00	0.00E+00	0.00E+00	0.00E+00	0.00E+00	0.00E+00	0.00E+00	0.00E+00
2451	ALL	746888.42	4039760.7	7.33E-08	70YrCancerDerived_InhSoil[	7.33E-08	0.00E+00	0.00E+00	0.00E+00	0.00E+00	0.00E+00	0.00E+00	0.00E+00	0.00E+00	0.00E+00	0.00E+00	0.00E+00
2452	ALL	746988.42	4039760.7	7.38E-08	70YrCancerDerived_InhSoil[	7.38E-08	0.00E+00	0.00E+00	0.00E+00	0.00E+00	0.00E+00	0.00E+00	0.00E+00	0.00E+00	0.00E+00	0.00E+00	0.00E+00
2453	ALL	747088.42	4039760.7	7.46E-08	70YrCancerDerived_InhSoil[	7.46E-08	0.00E+00	0.00E+00	0.00E+00	0.00E+00	0.00E+00	0.00E+00	0.00E+00	0.00E+00	0.00E+00	0.00E+00	0.00E+00
2454	ALL	747188.42	4039760.7	7.57E-08	70YrCancerDerived_InhSoil[	7.57E-08	0.00E+00	0.00E+00	0.00E+00	0.00E+00	0.00E+00	0.00E+00	0.00E+00	0.00E+00	0.00E+00	0.00E+00	0.00E+00
2455	ALL	747288.42	4039760.7	7.72E-08	70YrCancerDerived_InhSoil[	7.72E-08	0.00E+00	0.00E+00	0.00E+00	0.00E+00	0.00E+00	0.00E+00	0.00E+00	0.00E+00	0.00E+00	0.00E+00	0.00E+00
2456	ALL	747388.42	4039760.7	7.91E-08	70YrCancerDerived_InhSoil[	7.91E-08	0.00E+00	0.00E+00	0.00E+00	0.00E+00	0.00E+00	0.00E+00	0.00E+00	0.00E+00	0.00E+00	0.00E+00	0.00E+00
2457	ALL	747488.42	4039760.7	8.17E-08	70YrCancerDerived_InhSoil[	8.17E-08	0.00E+00	0.00E+00	0.00E+00	0.00E+00	0.00E+00	0.00E+00	0.00E+00	0.00E+00	0.00E+00	0.00E+00	0.00E+00
2458	ALL	747588.42	4039760.7	8.51E-08	70YrCancerDerived_InhSoil[	8.51E-08	0.00E+00	0.00E+00	0.00E+00	0.00E+00	0.00E+00	0.00E+00	0.00E+00	0.00E+00	0.00E+00	0.00E+00	0.00E+00
2459	ALL	747688.42	4039760.7	8.98E-08	70YrCancerDerived_InhSoil[	8.98E-08	0.00E+00	0.00E+00	0.00E+00	0.00E+00	0.00E+00	0.00E+00	0.00E+00	0.00E+00	0.00E+00	0.00E+00	0.00E+00
2460	ALL	747788.42	4039760.7	9.62E-08	70YrCancerDerived_InhSoil[	9.62E-08	0.00E+00	0.00E+00	0.00E+00	0.00E+00	0.00E+00	0.00E+00	0.00E+00	0.00E+00	0.00E+00	0.00E+00	0.00E+00
2461	ALL	747888.42	4039760.7	1.05E-07	70YrCancerDerived_InhSoil[	1.05E-07	0.00E+00	0.00E+00	0.00E+00	0.00E+00	0.00E+00	0.00E+00	0.00E+00	0.00E+00	0.00E+00	0.00E+00	0.00E+00
2462	ALL	747988.42	4039760.7	1.18E-07	70YrCancerDerived_InhSoil[	1.18E-07	0.00E+00	0.00E+00	0.00E+00	0.00E+00	0.00E+00	0.00E+00	0.00E+00	0.00E+00	0.00E+00	0.00E+00	0.00E+00

2463	ALL	748088.42	4039760.7	1.36E-07	70YrCancerDerived_InhSoilI	1.36E-07	0.00E+00	0.00E+00	0.00E+00	0.00E+00	0.00E+00	0.00E+00	0.00E+00	0.00E+00	0.00E+00	0.00E+00	0.00E+00
2464	ALL	748188.42	4039760.7	1.57E-07	70YrCancerDerived_InhSoilI	1.57E-07	0.00E+00	0.00E+00	0.00E+00	0.00E+00	0.00E+00	0.00E+00	0.00E+00	0.00E+00	0.00E+00	0.00E+00	0.00E+00
2465	ALL	749888.42	4039760.7	5.45E-07	70YrCancerDerived_InhSoilI	5.45E-07	0.00E+00	0.00E+00	0.00E+00	0.00E+00	0.00E+00	0.00E+00	0.00E+00	0.00E+00	0.00E+00	0.00E+00	0.00E+00
2466	ALL	749988.42	4039760.7	4.81E-07	70YrCancerDerived_InhSoilI	4.81E-07	0.00E+00	0.00E+00	0.00E+00	0.00E+00	0.00E+00	0.00E+00	0.00E+00	0.00E+00	0.00E+00	0.00E+00	0.00E+00
2467	ALL	750088.42	4039760.7	4.28E-07	70YrCancerDerived_InhSoilI	4.28E-07	0.00E+00	0.00E+00	0.00E+00	0.00E+00	0.00E+00	0.00E+00	0.00E+00	0.00E+00	0.00E+00	0.00E+00	0.00E+00
2468	ALL	750188.42	4039760.7	3.83E-07	70YrCancerDerived_InhSoilI	3.83E-07	0.00E+00	0.00E+00	0.00E+00	0.00E+00	0.00E+00	0.00E+00	0.00E+00	0.00E+00	0.00E+00	0.00E+00	0.00E+00
2469	ALL	750288.42	4039760.7	3.46E-07	70YrCancerDerived_InhSoilI	3.46E-07	0.00E+00	0.00E+00	0.00E+00	0.00E+00	0.00E+00	0.00E+00	0.00E+00	0.00E+00	0.00E+00	0.00E+00	0.00E+00
2470	ALL	750388.42	4039760.7	3.15E-07	70YrCancerDerived_InhSoilI	3.15E-07	0.00E+00	0.00E+00	0.00E+00	0.00E+00	0.00E+00	0.00E+00	0.00E+00	0.00E+00	0.00E+00	0.00E+00	0.00E+00
2471	ALL	750488.42	4039760.7	2.88E-07	70YrCancerDerived_InhSoilI	2.88E-07	0.00E+00	0.00E+00	0.00E+00	0.00E+00	0.00E+00	0.00E+00	0.00E+00	0.00E+00	0.00E+00	0.00E+00	0.00E+00
2472	ALL	750588.42	4039760.7	2.65E-07	70YrCancerDerived_InhSoilI	2.65E-07	0.00E+00	0.00E+00	0.00E+00	0.00E+00	0.00E+00	0.00E+00	0.00E+00	0.00E+00	0.00E+00	0.00E+00	0.00E+00
2473	ALL	750688.42	4039760.7	2.45E-07	70YrCancerDerived_InhSoilI	2.45E-07	0.00E+00	0.00E+00	0.00E+00	0.00E+00	0.00E+00	0.00E+00	0.00E+00	0.00E+00	0.00E+00	0.00E+00	0.00E+00
2474	ALL	750788.42	4039760.7	2.27E-07	70YrCancerDerived_InhSoilI	2.27E-07	0.00E+00	0.00E+00	0.00E+00	0.00E+00	0.00E+00	0.00E+00	0.00E+00	0.00E+00	0.00E+00	0.00E+00	0.00E+00
2475	ALL	750888.42	4039760.7	2.12E-07	70YrCancerDerived_InhSoilI	2.12E-07	0.00E+00	0.00E+00	0.00E+00	0.00E+00	0.00E+00	0.00E+00	0.00E+00	0.00E+00	0.00E+00	0.00E+00	0.00E+00
2476	ALL	750988.42	4039760.7	1.98E-07	70YrCancerDerived_InhSoilI	1.98E-07	0.00E+00	0.00E+00	0.00E+00	0.00E+00	0.00E+00	0.00E+00	0.00E+00	0.00E+00	0.00E+00	0.00E+00	0.00E+00
2477	ALL	751088.42	4039760.7	1.86E-07	70YrCancerDerived_InhSoilI	1.86E-07	0.00E+00	0.00E+00	0.00E+00	0.00E+00	0.00E+00	0.00E+00	0.00E+00	0.00E+00	0.00E+00	0.00E+00	0.00E+00
2478	ALL	751188.42	4039760.7	1.76E-07	70YrCancerDerived_InhSoilI	1.76E-07	0.00E+00	0.00E+00	0.00E+00	0.00E+00	0.00E+00	0.00E+00	0.00E+00	0.00E+00	0.00E+00	0.00E+00	0.00E+00
2479	ALL	751288.42	4039760.7	1.66E-07	70YrCancerDerived_InhSoilI	1.66E-07	0.00E+00	0.00E+00	0.00E+00	0.00E+00	0.00E+00	0.00E+00	0.00E+00	0.00E+00	0.00E+00	0.00E+00	0.00E+00
2480	ALL	751388.42	4039760.7	1.57E-07	70YrCancerDerived_InhSoilI	1.57E-07	0.00E+00	0.00E+00	0.00E+00	0.00E+00	0.00E+00	0.00E+00	0.00E+00	0.00E+00	0.00E+00	0.00E+00	0.00E+00
2481	ALL	752788.42	4039760.7	9.00E-08	70YrCancerDerived_InhSoilI	9.00E-08	0.00E+00	0.00E+00	0.00E+00	0.00E+00	0.00E+00	0.00E+00	0.00E+00	0.00E+00	0.00E+00	0.00E+00	0.00E+00
2482	ALL	752888.42	4039760.7	8.72E-08	70YrCancerDerived_InhSoilI	8.72E-08	0.00E+00	0.00E+00	0.00E+00	0.00E+00	0.00E+00	0.00E+00	0.00E+00	0.00E+00	0.00E+00	0.00E+00	0.00E+00
2483	ALL	752988.42	4039760.7	8.45E-08	70YrCancerDerived_InhSoilI	8.45E-08	0.00E+00	0.00E+00	0.00E+00	0.00E+00	0.00E+00	0.00E+00	0.00E+00	0.00E+00	0.00E+00	0.00E+00	0.00E+00
2484	ALL	753088.42	4039760.7	8.20E-08	70YrCancerDerived_InhSoilI	8.20E-08	0.00E+00	0.00E+00	0.00E+00	0.00E+00	0.00E+00	0.00E+00	0.00E+00	0.00E+00	0.00E+00	0.00E+00	0.00E+00
2485	ALL	753188.42	4039760.7	7.97E-08	70YrCancerDerived_InhSoilI	7.97E-08	0.00E+00	0.00E+00	0.00E+00	0.00E+00	0.00E+00	0.00E+00	0.00E+00	0.00E+00	0.00E+00	0.00E+00	0.00E+00
2486	ALL	746588.42	4039860.7	7.33E-08	70YrCancerDerived_InhSoilI	7.33E-08	0.00E+00	0.00E+00	0.00E+00	0.00E+00	0.00E+00	0.00E+00	0.00E+00	0.00E+00	0.00E+00	0.00E+00	0.00E+00
2487	ALL	746688.42	4039860.7	7.42E-08	70YrCancerDerived_InhSoilI	7.42E-08	0.00E+00	0.00E+00	0.00E+00	0.00E+00	0.00E+00	0.00E+00	0.00E+00	0.00E+00	0.00E+00	0.00E+00	0.00E+00
2488	ALL	746788.42	4039860.7	7.51E-08	70YrCancerDerived_InhSoilI	7.51E-08	0.00E+00	0.00E+00	0.00E+00	0.00E+00	0.00E+00	0.00E+00	0.00E+00	0.00E+00	0.00E+00	0.00E+00	0.00E+00
2489	ALL	746888.42	4039860.7	7.59E-08	70YrCancerDerived_InhSoilI	7.59E-08	0.00E+00	0.00E+00	0.00E+00	0.00E+00	0.00E+00	0.00E+00	0.00E+00	0.00E+00	0.00E+00	0.00E+00	0.00E+00
2490	ALL	746988.42	4039860.7	7.68E-08	70YrCancerDerived_InhSoilI	7.68E-08	0.00E+00	0.00E+00	0.00E+00	0.00E+00	0.00E+00	0.00E+00	0.00E+00	0.00E+00	0.00E+00	0.00E+00	0.00E+00
2491	ALL	747088.42	4039860.7	7.79E-08	70YrCancerDerived_InhSoilI	7.79E-08	0.00E+00	0.00E+00	0.00E+00	0.00E+00	0.00E+00	0.00E+00	0.00E+00	0.00E+00	0.00E+00	0.00E+00	0.00E+00
2492	ALL	747188.42	4039860.7	7.92E-08	70YrCancerDerived_InhSoilI	7.92E-08	0.00E+00	0.00E+00	0.00E+00	0.00E+00	0.00E+00	0.00E+00	0.00E+00	0.00E+00	0.00E+00	0.00E+00	0.00E+00
2493	ALL	747288.42	4039860.7	8.08E-08	70YrCancerDerived_InhSoilI	8.08E-08	0.00E+00	0.00E+00	0.00E+00	0.00E+00	0.00E+00	0.00E+00	0.00E+00	0.00E+00	0.00E+00	0.00E+00	0.00E+00
2494	ALL	747388.42	4039860.7	8.27E-08	70YrCancerDerived_InhSoilI	8.27E-08	0.00E+00	0.00E+00	0.00E+00	0.00E+00	0.00E+00	0.00E+00	0.00E+00	0.00E+00	0.00E+00	0.00E+00	0.00E+00
2495	ALL	747488.42	4039860.7	8.51E-08	70YrCancerDerived_InhSoilI	8.51E-08	0.00E+00	0.00E+00	0.00E+00	0.00E+00	0.00E+00	0.00E+00	0.00E+00	0.00E+00	0.00E+00	0.00E+00	0.00E+00
2496	ALL	747588.42	4039860.7	8.86E-08	70YrCancerDerived_InhSoilI	8.86E-08	0.00E+00	0.00E+00	0.00E+00	0.00E+00	0.00E+00	0.00E+00	0.00E+00	0.00E+00	0.00E+00	0.00E+00	0.00E+00
2497	ALL	747688.42	4039860.7	9.37E-08	70YrCancerDerived_InhSoilI	9.37E-08	0.00E+00	0.00E+00	0.00E+00	0.00E+00	0.00E+00	0.00E+00	0.00E+00	0.00E+00	0.00E+00	0.00E+00	0.00E+00
2498	ALL	747788.42	4039860.7	1.01E-07	70YrCancerDerived_InhSoilI	1.01E-07	0.00E+00	0.00E+00	0.00E+00	0.00E+00	0.00E+00	0.00E+00	0.00E+00	0.00E+00	0.00E+00	0.00E+00	0.00E+00
2499	ALL	747888.42	4039860.7	1.11E-07	70YrCancerDerived_InhSoilI	1.11E-07	0.00E+00	0.00E+00	0.00E+00	0.00E+00	0.00E+00	0.00E+00	0.00E+00	0.00E+00	0.00E+00	0.00E+00	0.00E+00
2500	ALL	747988.42	4039860.7	1.26E-07	70YrCancerDerived_InhSoilI	1.26E-07	0.00E+00	0.00E+00	0.00E+00	0.00E+00	0.00E+00	0.00E+00	0.00E+00	0.00E+00	0.00E+00	0.00E+00	0.00E+00
2501	ALL	748088.42	4039860.7	1.48E-07	70YrCancerDerived_InhSoilI	1.48E-07	0.00E+00	0.00E+00	0.00E+00	0.00E+00	0.00E+00	0.00E+00	0.00E+00	0.00E+00	0.00E+00	0.00E+00	0.00E+00
2502	ALL	749888.42	4039860.7	4.89E-07	70YrCancerDerived_InhSoilI	4.89E-07	0.00E+00	0.00E+00	0.00E+00	0.00E+00	0.00E+00	0.00E+00	0.00E+00	0.00E+00	0.00E+00	0.00E+00	0.00E+00
2503	ALL	749988.42	4039860.7	4.32E-07	70YrCancerDerived_InhSoilI	4.32E-07	0.00E+00	0.00E+00	0.00E+00	0.00E+00	0.00E+00	0.00E+00	0.00E+00	0.00E+00	0.00E+00	0.00E+00	0.00E+00
2504	ALL	750088.42	4039860.7	3.85E-07	70YrCancerDerived_InhSoilI	3.85E-07	0.00E+00	0.00E+00	0.00E+00	0.00E+00	0.00E+00	0.00E+00	0.00E+00	0.00E+00	0.00E+00	0.00E+00	0.00E+00
2505	ALL	750188.42	4039860.7	3.46E-07	70YrCancerDerived_InhSoilI	3.46E-07	0.00E+00	0.00E+00	0.00E+00	0.00E+00	0.00E+00	0.00E+00	0.00E+00	0.00E+00	0.00E+00	0.00E+00	0.00E+00
2506	ALL	750288.42	4039860.7	3.13E-07	70YrCancerDerived_InhSoilI	3.13E-07	0.00E+00	0.00E+00	0.00E+00	0.00E+00	0.00E+00	0.00E+00	0.00E+00	0.00E+00	0.00E+00	0.00E+00	0.00E+00
2507	ALL	750388.42	4039860.7	2.85E-07	70YrCancerDerived_InhSoilI	2.85E-07	0.00E+00	0.00E+00	0.00E+00	0.00E+00	0.00E+00	0.00E+00	0.00E+00	0.00E+00	0.00E+00	0.00E+00	0.00E+00
2508	ALL	750488.42	4039860.7	2.62E-07	70YrCancerDerived_InhSoilI	2.62E-07	0.00E+00	0.00E+00	0.00E+00	0.00E+00	0.00E+00	0.00E+00	0.00E+00	0.00E+00	0.00E+00	0.00E+00	0.00E+00
2509	ALL	750588.42	4039860.7	2.41E-07	70YrCancerDerived_InhSoilI	2.41E-07	0.00E+00	0.00E+00	0.00E+00	0.00E+00	0.00E+00	0.00E+00	0.00E+00	0.00E+00	0.00E+00	0.00E+00	0.00E+00
2510	ALL	750688.42	4039860.7	2.24E-07	70YrCancerDerived_InhSoilI	2.24E-07	0.00E+00	0.00E+00	0.00E+00	0.00E+00	0.00E+00	0.00E+00	0.00E+00	0.00E+00	0.00E+00	0.00E+00	0.00E+00
2511	ALL	750788.42	4039860.7	2.08E-07	70YrCancerDerived_InhSoilI	2.08E-07	0.00E+00	0.00E+00	0.00E+00	0.00E+00	0.00E+00	0.00E+00	0.00E+00	0.00E+00	0.00E+00	0.00E+00	0.00E+00
2512	ALL	750888.42	4039860.7	1.95E-07	70YrCancerDerived_InhSoilI	1.95E-07	0.00E+00	0.00E+00	0.00E+00	0.00E+00	0.00E+00	0.00E+00	0.00E+00	0.00E+00	0.00E+00	0.00E+00	0.00E+00
2513	ALL	750988.42	4039860.7	1.83E-07	70YrCancerDerived_InhSoilI	1.83E-07	0.00E+00	0.00E+00	0.00E+00	0.00E+00	0.00E+00	0.00E+00	0.00E+00	0.00E+00	0.00E+00	0.00E+00	0.00E+00
2514	ALL	751088.42	4039860.7	1.72E-07	70YrCancerDerived_InhSoilI	1.72E-07	0.00E+00	0.00E+00	0.00E+00	0.00E+00	0.00E+00	0.00E+00	0.00E+00	0.00E+00	0.00E+00	0.00E+00	0.00E+00
2515	ALL	751188.42	4039860.7	1.63E-07	70YrCancerDerived_InhSoilI	1.63E-07	0.00E+00	0.00E+00	0.00E+00	0.00E+00	0.00E+00	0.00E+00	0.00E+00	0.00E+00	0.00E+00	0.00E+00	0.00E+00
2516	ALL	751288.42	4039860.7	1.54E-07	70YrCancerDerived_InhSoilI	1.54E-07	0.00E+00	0.00E+00	0.00E+00	0.00E+00	0.00E+00	0.00E+00	0.00E+00	0.00E+00	0.00E+00	0.00E+00	0.00E+00
2517	ALL	751388.42	4039860.7	1.47E-07	70YrCancerDerived_InhSoilI	1.47E-07	0.00E+00	0.00E+00	0.00E+00	0.00E+00	0.00E+00	0.00E+00	0.00E+00	0.00E+00	0.00E+00	0.00E+00	0.00E+00
2518	ALL	752788.42	4039860.7	8.61E-08	70YrCancerDerived_InhSoilI	8.61E-08	0.00E+00	0.00E+00	0.00E+00	0.00E+00	0.00E+00	0.00E+00	0.00E+00	0.00E+00	0.00E+00	0.00E+00	0.00E+00

2519	ALL	752888.42	4039860.7	8.35E-08	70YrCancerDerived_InhSoilI	8.35E-08	0.00E+00	0.00E+00	0.00E+00	0.00E+00	0.00E+00	0.00E+00	0.00E+00	0.00E+00	0.00E+00	0.00E+00	0.00E+00
2520	ALL	752988.42	4039860.7	8.11E-08	70YrCancerDerived_InhSoilI	8.11E-08	0.00E+00	0.00E+00	0.00E+00	0.00E+00	0.00E+00	0.00E+00	0.00E+00	0.00E+00	0.00E+00	0.00E+00	0.00E+00
2521	ALL	753088.42	4039860.7	7.88E-08	70YrCancerDerived_InhSoilI	7.88E-08	0.00E+00	0.00E+00	0.00E+00	0.00E+00	0.00E+00	0.00E+00	0.00E+00	0.00E+00	0.00E+00	0.00E+00	0.00E+00
2522	ALL	753188.42	4039860.7	7.66E-08	70YrCancerDerived_InhSoilI	7.66E-08	0.00E+00	0.00E+00	0.00E+00	0.00E+00	0.00E+00	0.00E+00	0.00E+00	0.00E+00	0.00E+00	0.00E+00	0.00E+00
2523	ALL	749888.42	4039960.7	4.27E-07	70YrCancerDerived_InhSoilI	4.27E-07	0.00E+00	0.00E+00	0.00E+00	0.00E+00	0.00E+00	0.00E+00	0.00E+00	0.00E+00	0.00E+00	0.00E+00	0.00E+00
2524	ALL	749988.42	4039960.7	3.79E-07	70YrCancerDerived_InhSoilI	3.79E-07	0.00E+00	0.00E+00	0.00E+00	0.00E+00	0.00E+00	0.00E+00	0.00E+00	0.00E+00	0.00E+00	0.00E+00	0.00E+00
2525	ALL	750088.42	4039960.7	3.39E-07	70YrCancerDerived_InhSoilI	3.39E-07	0.00E+00	0.00E+00	0.00E+00	0.00E+00	0.00E+00	0.00E+00	0.00E+00	0.00E+00	0.00E+00	0.00E+00	0.00E+00
2526	ALL	750188.42	4039960.7	3.06E-07	70YrCancerDerived_InhSoilI	3.06E-07	0.00E+00	0.00E+00	0.00E+00	0.00E+00	0.00E+00	0.00E+00	0.00E+00	0.00E+00	0.00E+00	0.00E+00	0.00E+00
2527	ALL	750288.42	4039960.7	2.78E-07	70YrCancerDerived_InhSoilI	2.78E-07	0.00E+00	0.00E+00	0.00E+00	0.00E+00	0.00E+00	0.00E+00	0.00E+00	0.00E+00	0.00E+00	0.00E+00	0.00E+00
2528	ALL	750388.42	4039960.7	2.55E-07	70YrCancerDerived_InhSoilI	2.55E-07	0.00E+00	0.00E+00	0.00E+00	0.00E+00	0.00E+00	0.00E+00	0.00E+00	0.00E+00	0.00E+00	0.00E+00	0.00E+00
2529	ALL	750488.42	4039960.7	2.35E-07	70YrCancerDerived_InhSoilI	2.35E-07	0.00E+00	0.00E+00	0.00E+00	0.00E+00	0.00E+00	0.00E+00	0.00E+00	0.00E+00	0.00E+00	0.00E+00	0.00E+00
2530	ALL	750588.42	4039960.7	2.18E-07	70YrCancerDerived_InhSoilI	2.18E-07	0.00E+00	0.00E+00	0.00E+00	0.00E+00	0.00E+00	0.00E+00	0.00E+00	0.00E+00	0.00E+00	0.00E+00	0.00E+00
2531	ALL	750688.42	4039960.7	2.03E-07	70YrCancerDerived_InhSoilI	2.03E-07	0.00E+00	0.00E+00	0.00E+00	0.00E+00	0.00E+00	0.00E+00	0.00E+00	0.00E+00	0.00E+00	0.00E+00	0.00E+00
2532	ALL	750788.42	4039960.7	1.90E-07	70YrCancerDerived_InhSoilI	1.90E-07	0.00E+00	0.00E+00	0.00E+00	0.00E+00	0.00E+00	0.00E+00	0.00E+00	0.00E+00	0.00E+00	0.00E+00	0.00E+00
2533	ALL	750888.42	4039960.7	1.78E-07	70YrCancerDerived_InhSoilI	1.78E-07	0.00E+00	0.00E+00	0.00E+00	0.00E+00	0.00E+00	0.00E+00	0.00E+00	0.00E+00	0.00E+00	0.00E+00	0.00E+00
2534	ALL	750988.42	4039960.7	1.68E-07	70YrCancerDerived_InhSoilI	1.68E-07	0.00E+00	0.00E+00	0.00E+00	0.00E+00	0.00E+00	0.00E+00	0.00E+00	0.00E+00	0.00E+00	0.00E+00	0.00E+00
2535	ALL	751088.42	4039960.7	1.59E-07	70YrCancerDerived_InhSoilI	1.59E-07	0.00E+00	0.00E+00	0.00E+00	0.00E+00	0.00E+00	0.00E+00	0.00E+00	0.00E+00	0.00E+00	0.00E+00	0.00E+00
2536	ALL	751188.42	4039960.7	1.50E-07	70YrCancerDerived_InhSoilI	1.50E-07	0.00E+00	0.00E+00	0.00E+00	0.00E+00	0.00E+00	0.00E+00	0.00E+00	0.00E+00	0.00E+00	0.00E+00	0.00E+00
2537	ALL	751288.42	4039960.7	1.43E-07	70YrCancerDerived_InhSoilI	1.43E-07	0.00E+00	0.00E+00	0.00E+00	0.00E+00	0.00E+00	0.00E+00	0.00E+00	0.00E+00	0.00E+00	0.00E+00	0.00E+00
2538	ALL	751388.42	4039960.7	1.37E-07	70YrCancerDerived_InhSoilI	1.37E-07	0.00E+00	0.00E+00	0.00E+00	0.00E+00	0.00E+00	0.00E+00	0.00E+00	0.00E+00	0.00E+00	0.00E+00	0.00E+00
2539	ALL	752788.42	4039960.7	8.23E-08	70YrCancerDerived_InhSoilI	8.23E-08	0.00E+00	0.00E+00	0.00E+00	0.00E+00	0.00E+00	0.00E+00	0.00E+00	0.00E+00	0.00E+00	0.00E+00	0.00E+00
2540	ALL	752888.42	4039960.7	8.00E-08	70YrCancerDerived_InhSoilI	8.00E-08	0.00E+00	0.00E+00	0.00E+00	0.00E+00	0.00E+00	0.00E+00	0.00E+00	0.00E+00	0.00E+00	0.00E+00	0.00E+00
2541	ALL	752988.42	4039960.7	7.78E-08	70YrCancerDerived_InhSoilI	7.78E-08	0.00E+00	0.00E+00	0.00E+00	0.00E+00	0.00E+00	0.00E+00	0.00E+00	0.00E+00	0.00E+00	0.00E+00	0.00E+00
2542	ALL	753088.42	4039960.7	7.57E-08	70YrCancerDerived_InhSoilI	7.57E-08	0.00E+00	0.00E+00	0.00E+00	0.00E+00	0.00E+00	0.00E+00	0.00E+00	0.00E+00	0.00E+00	0.00E+00	0.00E+00
2543	ALL	753188.42	4039960.7	7.37E-08	70YrCancerDerived_InhSoilI	7.37E-08	0.00E+00	0.00E+00	0.00E+00	0.00E+00	0.00E+00	0.00E+00	0.00E+00	0.00E+00	0.00E+00	0.00E+00	0.00E+00
2544	ALL	746288.42	4040060.7	7.30E-08	70YrCancerDerived_InhSoilI	7.30E-08	0.00E+00	0.00E+00	0.00E+00	0.00E+00	0.00E+00	0.00E+00	0.00E+00	0.00E+00	0.00E+00	0.00E+00	0.00E+00
2545	ALL	746388.42	4040060.7	7.40E-08	70YrCancerDerived_InhSoilI	7.40E-08	0.00E+00	0.00E+00	0.00E+00	0.00E+00	0.00E+00	0.00E+00	0.00E+00	0.00E+00	0.00E+00	0.00E+00	0.00E+00
2546	ALL	746488.42	4040060.7	7.52E-08	70YrCancerDerived_InhSoilI	7.52E-08	0.00E+00	0.00E+00	0.00E+00	0.00E+00	0.00E+00	0.00E+00	0.00E+00	0.00E+00	0.00E+00	0.00E+00	0.00E+00
2547	ALL	752788.42	4040060.7	7.86E-08	70YrCancerDerived_InhSoilI	7.86E-08	0.00E+00	0.00E+00	0.00E+00	0.00E+00	0.00E+00	0.00E+00	0.00E+00	0.00E+00	0.00E+00	0.00E+00	0.00E+00
2548	ALL	752888.42	4040060.7	7.66E-08	70YrCancerDerived_InhSoilI	7.66E-08	0.00E+00	0.00E+00	0.00E+00	0.00E+00	0.00E+00	0.00E+00	0.00E+00	0.00E+00	0.00E+00	0.00E+00	0.00E+00
2549	ALL	752988.42	4040060.7	7.46E-08	70YrCancerDerived_InhSoilI	7.46E-08	0.00E+00	0.00E+00	0.00E+00	0.00E+00	0.00E+00	0.00E+00	0.00E+00	0.00E+00	0.00E+00	0.00E+00	0.00E+00
2550	ALL	753088.42	4040060.7	7.27E-08	70YrCancerDerived_InhSoilI	7.27E-08	0.00E+00	0.00E+00	0.00E+00	0.00E+00	0.00E+00	0.00E+00	0.00E+00	0.00E+00	0.00E+00	0.00E+00	0.00E+00
2551	ALL	753188.42	4040060.7	7.08E-08	70YrCancerDerived_InhSoilI	7.08E-08	0.00E+00	0.00E+00	0.00E+00	0.00E+00	0.00E+00	0.00E+00	0.00E+00	0.00E+00	0.00E+00	0.00E+00	0.00E+00
2552	ALL	746288.42	4040160.7	7.51E-08	70YrCancerDerived_InhSoilI	7.51E-08	0.00E+00	0.00E+00	0.00E+00	0.00E+00	0.00E+00	0.00E+00	0.00E+00	0.00E+00	0.00E+00	0.00E+00	0.00E+00
2553	ALL	746388.42	4040160.7	7.64E-08	70YrCancerDerived_InhSoilI	7.64E-08	0.00E+00	0.00E+00	0.00E+00	0.00E+00	0.00E+00	0.00E+00	0.00E+00	0.00E+00	0.00E+00	0.00E+00	0.00E+00
2554	ALL	746488.42	4040160.7	7.79E-08	70YrCancerDerived_InhSoilI	7.79E-08	0.00E+00	0.00E+00	0.00E+00	0.00E+00	0.00E+00	0.00E+00	0.00E+00	0.00E+00	0.00E+00	0.00E+00	0.00E+00
2555	ALL	751488.42	4040160.7	1.12E-07	70YrCancerDerived_InhSoilI	1.12E-07	0.00E+00	0.00E+00	0.00E+00	0.00E+00	0.00E+00	0.00E+00	0.00E+00	0.00E+00	0.00E+00	0.00E+00	0.00E+00
2556	ALL	751588.42	4040160.7	1.08E-07	70YrCancerDerived_InhSoilI	1.08E-07	0.00E+00	0.00E+00	0.00E+00	0.00E+00	0.00E+00	0.00E+00	0.00E+00	0.00E+00	0.00E+00	0.00E+00	0.00E+00
2557	ALL	751688.42	4040160.7	1.04E-07	70YrCancerDerived_InhSoilI	1.04E-07	0.00E+00	0.00E+00	0.00E+00	0.00E+00	0.00E+00	0.00E+00	0.00E+00	0.00E+00	0.00E+00	0.00E+00	0.00E+00
2558	ALL	751788.42	4040160.7	1.00E-07	70YrCancerDerived_InhSoilI	1.00E-07	0.00E+00	0.00E+00	0.00E+00	0.00E+00	0.00E+00	0.00E+00	0.00E+00	0.00E+00	0.00E+00	0.00E+00	0.00E+00
2559	ALL	751888.42	4040160.7	9.71E-08	70YrCancerDerived_InhSoilI	9.71E-08	0.00E+00	0.00E+00	0.00E+00	0.00E+00	0.00E+00	0.00E+00	0.00E+00	0.00E+00	0.00E+00	0.00E+00	0.00E+00
2560	ALL	751988.42	4040160.7	9.40E-08	70YrCancerDerived_InhSoilI	9.40E-08	0.00E+00	0.00E+00	0.00E+00	0.00E+00	0.00E+00	0.00E+00	0.00E+00	0.00E+00	0.00E+00	0.00E+00	0.00E+00
2561	ALL	752088.42	4040160.7	9.11E-08	70YrCancerDerived_InhSoilI	9.11E-08	0.00E+00	0.00E+00	0.00E+00	0.00E+00	0.00E+00	0.00E+00	0.00E+00	0.00E+00	0.00E+00	0.00E+00	0.00E+00
2562	ALL	752188.42	4040160.7	8.84E-08	70YrCancerDerived_InhSoilI	8.84E-08	0.00E+00	0.00E+00	0.00E+00	0.00E+00	0.00E+00	0.00E+00	0.00E+00	0.00E+00	0.00E+00	0.00E+00	0.00E+00
2563	ALL	752288.42	4040160.7	8.58E-08	70YrCancerDerived_InhSoilI	8.58E-08	0.00E+00	0.00E+00	0.00E+00	0.00E+00	0.00E+00	0.00E+00	0.00E+00	0.00E+00	0.00E+00	0.00E+00	0.00E+00
2564	ALL	752388.42	4040160.7	8.35E-08	70YrCancerDerived_InhSoilI	8.35E-08	0.00E+00	0.00E+00	0.00E+00	0.00E+00	0.00E+00	0.00E+00	0.00E+00	0.00E+00	0.00E+00	0.00E+00	0.00E+00
2565	ALL	752488.42	4040160.7	8.13E-08	70YrCancerDerived_InhSoilI	8.13E-08	0.00E+00	0.00E+00	0.00E+00	0.00E+00	0.00E+00	0.00E+00	0.00E+00	0.00E+00	0.00E+00	0.00E+00	0.00E+00
2566	ALL	752588.42	4040160.7	7.92E-08	70YrCancerDerived_InhSoilI	7.92E-08	0.00E+00	0.00E+00	0.00E+00	0.00E+00	0.00E+00	0.00E+00	0.00E+00	0.00E+00	0.00E+00	0.00E+00	0.00E+00
2567	ALL	752688.42	4040160.7	7.71E-08	70YrCancerDerived_InhSoilI	7.71E-08	0.00E+00	0.00E+00	0.00E+00	0.00E+00	0.00E+00	0.00E+00	0.00E+00	0.00E+00	0.00E+00	0.00E+00	0.00E+00
2568	ALL	752788.42	4040160.7	7.51E-08	70YrCancerDerived_InhSoilI	7.51E-08	0.00E+00	0.00E+00	0.00E+00	0.00E+00	0.00E+00	0.00E+00	0.00E+00	0.00E+00	0.00E+00	0.00E+00	0.00E+00
2569	ALL	752888.42	4040160.7	7.32E-08	70YrCancerDerived_InhSoilI	7.32E-08	0.00E+00	0.00E+00	0.00E+00	0.00E+00	0.00E+00	0.00E+00	0.00E+00	0.00E+00	0.00E+00	0.00E+00	0.00E+00
2570	ALL	752988.42	4040160.7	7.14E-08	70YrCancerDerived_InhSoilI	7.14E-08	0.00E+00	0.00E+00	0.00E+00	0.00E+00	0.00E+00	0.00E+00	0.00E+00	0.00E+00	0.00E+00	0.00E+00	0.00E+00
2571	ALL	753088.42	4040160.7	6.97E-08	70YrCancerDerived_InhSoilI	6.97E-08	0.00E+00	0.00E+00	0.00E+00	0.00E+00	0.00E+00	0.00E+00	0.00E+00	0.00E+00	0.00E+00	0.00E+00	0.00E+00
2572	ALL	753188.42	4040160.7	6.81E-08	70YrCancerDerived_InhSoilI	6.81E-08	0.00E+00	0.00E+00	0.00E+00	0.00E+00	0.00E+00	0.00E+00	0.00E+00	0.00E+00	0.00E+00	0.00E+00	0.00E+00
2573	ALL	746288.42	4040260.7	7.73E-08	70YrCancerDerived_InhSoilI	7.73E-08	0.00E+00	0.00E+00	0.00E+00	0.00E+00	0.00E+00	0.00E+00	0.00E+00	0.00E+00	0.00E+00	0.00E+00	0.00E+00
2574	ALL	746388.42	4040260.7	7.89E-08	70YrCancerDerived_InhSoilI	7.89E-08	0.00E+00	0.00E+00	0.00E+00	0.00E+00	0.00E+00	0.00E+00	0.00E+00	0.00E+00	0.00E+00	0.00E+00	0.00E+00

2575	ALL	746488.42	4040260.7	8.08E-08	70YrCancerDerived_InhSoil[	8.08E-08	0.00E+00	0.00E+00	0.00E+00	0.00E+00	0.00E+00	0.00E+00	0.00E+00	0.00E+00	0.00E+00	0.00E+00	0.00E+00
2576	ALL	751488.42	4040260.7	1.04E-07	70YrCancerDerived_InhSoil[	1.04E-07	0.00E+00	0.00E+00	0.00E+00	0.00E+00	0.00E+00	0.00E+00	0.00E+00	0.00E+00	0.00E+00	0.00E+00	0.00E+00
2577	ALL	751588.42	4040260.7	1.00E-07	70YrCancerDerived_InhSoil[	1.00E-07	0.00E+00	0.00E+00	0.00E+00	0.00E+00	0.00E+00	0.00E+00	0.00E+00	0.00E+00	0.00E+00	0.00E+00	0.00E+00
2578	ALL	751688.42	4040260.7	9.69E-08	70YrCancerDerived_InhSoil[	9.69E-08	0.00E+00	0.00E+00	0.00E+00	0.00E+00	0.00E+00	0.00E+00	0.00E+00	0.00E+00	0.00E+00	0.00E+00	0.00E+00
2579	ALL	751788.42	4040260.7	9.39E-08	70YrCancerDerived_InhSoil[	9.39E-08	0.00E+00	0.00E+00	0.00E+00	0.00E+00	0.00E+00	0.00E+00	0.00E+00	0.00E+00	0.00E+00	0.00E+00	0.00E+00
2580	ALL	751888.42	4040260.7	9.10E-08	70YrCancerDerived_InhSoil[	9.10E-08	0.00E+00	0.00E+00	0.00E+00	0.00E+00	0.00E+00	0.00E+00	0.00E+00	0.00E+00	0.00E+00	0.00E+00	0.00E+00
2581	ALL	751988.42	4040260.7	8.83E-08	70YrCancerDerived_InhSoil[	8.83E-08	0.00E+00	0.00E+00	0.00E+00	0.00E+00	0.00E+00	0.00E+00	0.00E+00	0.00E+00	0.00E+00	0.00E+00	0.00E+00
2582	ALL	752088.42	4040260.7	8.58E-08	70YrCancerDerived_InhSoil[	8.58E-08	0.00E+00	0.00E+00	0.00E+00	0.00E+00	0.00E+00	0.00E+00	0.00E+00	0.00E+00	0.00E+00	0.00E+00	0.00E+00
2583	ALL	752188.42	4040260.7	8.34E-08	70YrCancerDerived_InhSoil[	8.34E-08	0.00E+00	0.00E+00	0.00E+00	0.00E+00	0.00E+00	0.00E+00	0.00E+00	0.00E+00	0.00E+00	0.00E+00	0.00E+00
2584	ALL	752288.42	4040260.7	8.12E-08	70YrCancerDerived_InhSoil[	8.12E-08	0.00E+00	0.00E+00	0.00E+00	0.00E+00	0.00E+00	0.00E+00	0.00E+00	0.00E+00	0.00E+00	0.00E+00	0.00E+00
2585	ALL	752388.42	4040260.7	7.92E-08	70YrCancerDerived_InhSoil[	7.92E-08	0.00E+00	0.00E+00	0.00E+00	0.00E+00	0.00E+00	0.00E+00	0.00E+00	0.00E+00	0.00E+00	0.00E+00	0.00E+00
2586	ALL	752488.42	4040260.7	7.72E-08	70YrCancerDerived_InhSoil[	7.72E-08	0.00E+00	0.00E+00	0.00E+00	0.00E+00	0.00E+00	0.00E+00	0.00E+00	0.00E+00	0.00E+00	0.00E+00	0.00E+00
2587	ALL	752588.42	4040260.7	7.53E-08	70YrCancerDerived_InhSoil[	7.53E-08	0.00E+00	0.00E+00	0.00E+00	0.00E+00	0.00E+00	0.00E+00	0.00E+00	0.00E+00	0.00E+00	0.00E+00	0.00E+00
2588	ALL	752688.42	4040260.7	7.35E-08	70YrCancerDerived_InhSoil[	7.35E-08	0.00E+00	0.00E+00	0.00E+00	0.00E+00	0.00E+00	0.00E+00	0.00E+00	0.00E+00	0.00E+00	0.00E+00	0.00E+00
2589	ALL	752788.42	4040260.7	7.17E-08	70YrCancerDerived_InhSoil[	7.17E-08	0.00E+00	0.00E+00	0.00E+00	0.00E+00	0.00E+00	0.00E+00	0.00E+00	0.00E+00	0.00E+00	0.00E+00	0.00E+00
2590	ALL	752888.42	4040260.7	7.01E-08	70YrCancerDerived_InhSoil[	7.01E-08	0.00E+00	0.00E+00	0.00E+00	0.00E+00	0.00E+00	0.00E+00	0.00E+00	0.00E+00	0.00E+00	0.00E+00	0.00E+00
2591	ALL	752988.42	4040260.7	6.85E-08	70YrCancerDerived_InhSoil[	6.85E-08	0.00E+00	0.00E+00	0.00E+00	0.00E+00	0.00E+00	0.00E+00	0.00E+00	0.00E+00	0.00E+00	0.00E+00	0.00E+00
2592	ALL	753088.42	4040260.7	6.69E-08	70YrCancerDerived_InhSoil[	6.69E-08	0.00E+00	0.00E+00	0.00E+00	0.00E+00	0.00E+00	0.00E+00	0.00E+00	0.00E+00	0.00E+00	0.00E+00	0.00E+00
2593	ALL	753188.42	4040260.7	6.55E-08	70YrCancerDerived_InhSoil[	6.55E-08	0.00E+00	0.00E+00	0.00E+00	0.00E+00	0.00E+00	0.00E+00	0.00E+00	0.00E+00	0.00E+00	0.00E+00	0.00E+00
2594	ALL	746288.42	4040360.7	7.93E-08	70YrCancerDerived_InhSoil[	7.93E-08	0.00E+00	0.00E+00	0.00E+00	0.00E+00	0.00E+00	0.00E+00	0.00E+00	0.00E+00	0.00E+00	0.00E+00	0.00E+00
2595	ALL	746388.42	4040360.7	8.12E-08	70YrCancerDerived_InhSoil[	8.12E-08	0.00E+00	0.00E+00	0.00E+00	0.00E+00	0.00E+00	0.00E+00	0.00E+00	0.00E+00	0.00E+00	0.00E+00	0.00E+00
2596	ALL	751488.42	4040360.7	9.60E-08	70YrCancerDerived_InhSoil[	9.60E-08	0.00E+00	0.00E+00	0.00E+00	0.00E+00	0.00E+00	0.00E+00	0.00E+00	0.00E+00	0.00E+00	0.00E+00	0.00E+00
2597	ALL	751588.42	4040360.7	9.31E-08	70YrCancerDerived_InhSoil[	9.31E-08	0.00E+00	0.00E+00	0.00E+00	0.00E+00	0.00E+00	0.00E+00	0.00E+00	0.00E+00	0.00E+00	0.00E+00	0.00E+00
2598	ALL	751688.42	4040360.7	9.03E-08	70YrCancerDerived_InhSoil[	9.03E-08	0.00E+00	0.00E+00	0.00E+00	0.00E+00	0.00E+00	0.00E+00	0.00E+00	0.00E+00	0.00E+00	0.00E+00	0.00E+00
2599	ALL	751788.42	4040360.7	8.77E-08	70YrCancerDerived_InhSoil[	8.77E-08	0.00E+00	0.00E+00	0.00E+00	0.00E+00	0.00E+00	0.00E+00	0.00E+00	0.00E+00	0.00E+00	0.00E+00	0.00E+00
2600	ALL	751888.42	4040360.7	8.52E-08	70YrCancerDerived_InhSoil[	8.52E-08	0.00E+00	0.00E+00	0.00E+00	0.00E+00	0.00E+00	0.00E+00	0.00E+00	0.00E+00	0.00E+00	0.00E+00	0.00E+00
2601	ALL	751988.42	4040360.7	8.29E-08	70YrCancerDerived_InhSoil[	8.29E-08	0.00E+00	0.00E+00	0.00E+00	0.00E+00	0.00E+00	0.00E+00	0.00E+00	0.00E+00	0.00E+00	0.00E+00	0.00E+00
2602	ALL	752088.42	4040360.7	8.08E-08	70YrCancerDerived_InhSoil[	8.08E-08	0.00E+00	0.00E+00	0.00E+00	0.00E+00	0.00E+00	0.00E+00	0.00E+00	0.00E+00	0.00E+00	0.00E+00	0.00E+00
2603	ALL	752188.42	4040360.7	7.87E-08	70YrCancerDerived_InhSoil[	7.87E-08	0.00E+00	0.00E+00	0.00E+00	0.00E+00	0.00E+00	0.00E+00	0.00E+00	0.00E+00	0.00E+00	0.00E+00	0.00E+00
2604	ALL	752288.42	4040360.7	7.68E-08	70YrCancerDerived_InhSoil[	7.68E-08	0.00E+00	0.00E+00	0.00E+00	0.00E+00	0.00E+00	0.00E+00	0.00E+00	0.00E+00	0.00E+00	0.00E+00	0.00E+00
2605	ALL	752388.42	4040360.7	7.50E-08	70YrCancerDerived_InhSoil[	7.50E-08	0.00E+00	0.00E+00	0.00E+00	0.00E+00	0.00E+00	0.00E+00	0.00E+00	0.00E+00	0.00E+00	0.00E+00	0.00E+00
2606	ALL	752488.42	4040360.7	7.33E-08	70YrCancerDerived_InhSoil[	7.33E-08	0.00E+00	0.00E+00	0.00E+00	0.00E+00	0.00E+00	0.00E+00	0.00E+00	0.00E+00	0.00E+00	0.00E+00	0.00E+00
2607	ALL	752588.42	4040360.7	7.16E-08	70YrCancerDerived_InhSoil[	7.16E-08	0.00E+00	0.00E+00	0.00E+00	0.00E+00	0.00E+00	0.00E+00	0.00E+00	0.00E+00	0.00E+00	0.00E+00	0.00E+00
2608	ALL	752688.42	4040360.7	7.00E-08	70YrCancerDerived_InhSoil[	7.00E-08	0.00E+00	0.00E+00	0.00E+00	0.00E+00	0.00E+00	0.00E+00	0.00E+00	0.00E+00	0.00E+00	0.00E+00	0.00E+00
2609	ALL	752788.42	4040360.7	6.84E-08	70YrCancerDerived_InhSoil[	6.84E-08	0.00E+00	0.00E+00	0.00E+00	0.00E+00	0.00E+00	0.00E+00	0.00E+00	0.00E+00	0.00E+00	0.00E+00	0.00E+00
2610	ALL	752888.42	4040360.7	6.70E-08	70YrCancerDerived_InhSoil[	6.70E-08	0.00E+00	0.00E+00	0.00E+00	0.00E+00	0.00E+00	0.00E+00	0.00E+00	0.00E+00	0.00E+00	0.00E+00	0.00E+00
2611	ALL	752988.42	4040360.7	6.55E-08	70YrCancerDerived_InhSoil[	6.55E-08	0.00E+00	0.00E+00	0.00E+00	0.00E+00	0.00E+00	0.00E+00	0.00E+00	0.00E+00	0.00E+00	0.00E+00	0.00E+00
2612	ALL	753088.42	4040360.7	6.41E-08	70YrCancerDerived_InhSoil[	6.41E-08	0.00E+00	0.00E+00	0.00E+00	0.00E+00	0.00E+00	0.00E+00	0.00E+00	0.00E+00	0.00E+00	0.00E+00	0.00E+00
2613	ALL	753188.42	4040360.7	6.28E-08	70YrCancerDerived_InhSoil[	6.28E-08	0.00E+00	0.00E+00	0.00E+00	0.00E+00	0.00E+00	0.00E+00	0.00E+00	0.00E+00	0.00E+00	0.00E+00	0.00E+00
2614	ALL	746288.42	4040460.7	8.08E-08	70YrCancerDerived_InhSoil[	8.08E-08	0.00E+00	0.00E+00	0.00E+00	0.00E+00	0.00E+00	0.00E+00	0.00E+00	0.00E+00	0.00E+00	0.00E+00	0.00E+00
2615	ALL	746388.42	4040460.7	8.30E-08	70YrCancerDerived_InhSoil[	8.30E-08	0.00E+00	0.00E+00	0.00E+00	0.00E+00	0.00E+00	0.00E+00	0.00E+00	0.00E+00	0.00E+00	0.00E+00	0.00E+00
2616	ALL	751488.42	4040460.7	8.88E-08	70YrCancerDerived_InhSoil[	8.88E-08	0.00E+00	0.00E+00	0.00E+00	0.00E+00	0.00E+00	0.00E+00	0.00E+00	0.00E+00	0.00E+00	0.00E+00	0.00E+00
2617	ALL	751588.42	4040460.7	8.63E-08	70YrCancerDerived_InhSoil[	8.63E-08	0.00E+00	0.00E+00	0.00E+00	0.00E+00	0.00E+00	0.00E+00	0.00E+00	0.00E+00	0.00E+00	0.00E+00	0.00E+00
2618	ALL	751688.42	4040460.7	8.40E-08	70YrCancerDerived_InhSoil[	8.40E-08	0.00E+00	0.00E+00	0.00E+00	0.00E+00	0.00E+00	0.00E+00	0.00E+00	0.00E+00	0.00E+00	0.00E+00	0.00E+00
2619	ALL	751788.42	4040460.7	8.19E-08	70YrCancerDerived_InhSoil[	8.19E-08	0.00E+00	0.00E+00	0.00E+00	0.00E+00	0.00E+00	0.00E+00	0.00E+00	0.00E+00	0.00E+00	0.00E+00	0.00E+00
2620	ALL	751888.42	4040460.7	7.98E-08	70YrCancerDerived_InhSoil[	7.98E-08	0.00E+00	0.00E+00	0.00E+00	0.00E+00	0.00E+00	0.00E+00	0.00E+00	0.00E+00	0.00E+00	0.00E+00	0.00E+00
2621	ALL	751988.42	4040460.7	7.78E-08	70YrCancerDerived_InhSoil[	7.78E-08	0.00E+00	0.00E+00	0.00E+00	0.00E+00	0.00E+00	0.00E+00	0.00E+00	0.00E+00	0.00E+00	0.00E+00	0.00E+00
2622	ALL	752088.42	4040460.7	7.60E-08	70YrCancerDerived_InhSoil[	7.60E-08	0.00E+00	0.00E+00	0.00E+00	0.00E+00	0.00E+00	0.00E+00	0.00E+00	0.00E+00	0.00E+00	0.00E+00	0.00E+00
2623	ALL	752188.42	4040460.7	7.42E-08	70YrCancerDerived_InhSoil[	7.42E-08	0.00E+00	0.00E+00	0.00E+00	0.00E+00	0.00E+00	0.00E+00	0.00E+00	0.00E+00	0.00E+00	0.00E+00	0.00E+00
2624	ALL	752288.42	4040460.7	7.26E-08	70YrCancerDerived_InhSoil[	7.26E-08	0.00E+00	0.00E+00	0.00E+00	0.00E+00	0.00E+00	0.00E+00	0.00E+00	0.00E+00	0.00E+00	0.00E+00	0.00E+00
2625	ALL	752388.42	4040460.7	7.10E-08	70YrCancerDerived_InhSoil[	7.10E-08	0.00E+00	0.00E+00	0.00E+00	0.00E+00	0.00E+00	0.00E+00	0.00E+00	0.00E+00	0.00E+00	0.00E+00	0.00E+00
2626	ALL	752488.42	4040460.7	6.95E-08	70YrCancerDerived_InhSoil[	6.95E-08	0.00E+00	0.00E+00	0.00E+00	0.00E+00	0.00E+00	0.00E+00	0.00E+00	0.00E+00	0.00E+00	0.00E+00	0.00E+00
2627	ALL	752588.42	4040460.7	6.81E-08	70YrCancerDerived_InhSoil[	6.81E-08	0.00E+00	0.00E+00	0.00E+00	0.00E+00	0.00E+00	0.00E+00	0.00E+00	0.00E+00	0.00E+00	0.00E+00	0.00E+00
2628	ALL	752688.42	4040460.7	6.66E-08	70YrCancerDerived_InhSoil[	6.66E-08	0.00E+00	0.00E+00	0.00E+00	0.00E+00	0.00E+00	0.00E+00	0.00E+00	0.00E+00	0.00E+00	0.00E+00	0.00E+00
2629	ALL	752788.42	4040460.7	6.52E-08	70YrCancerDerived_InhSoil[	6.52E-08	0.00E+00	0.00E+00	0.00E+00	0.00E+00	0.00E+00	0.00E+00	0.00E+00	0.00E+00	0.00E+00	0.00E+00	0.00E+00
2630	ALL	752888.42	4040460.7	6.39E-08	70YrCancerDerived_InhSoil[	6.39E-08	0.00E+00	0.00E+00	0.00E+00	0.00E+00	0.00E+00	0.00E+00	0.00E+00	0.00E+00	0.00E+00	0.00E+00	0.00E+00

2631	ALL	752988.42	4040460.7	6.26E-08	70YrCancerDerived_InhSoilI	6.26E-08	0.00E+00	0.00E+00	0.00E+00	0.00E+00	0.00E+00	0.00E+00	0.00E+00	0.00E+00	0.00E+00	0.00E+00	0.00E+00
2632	ALL	753088.42	4040460.7	6.14E-08	70YrCancerDerived_InhSoilI	6.14E-08	0.00E+00	0.00E+00	0.00E+00	0.00E+00	0.00E+00	0.00E+00	0.00E+00	0.00E+00	0.00E+00	0.00E+00	0.00E+00
2633	ALL	753188.42	4040460.7	6.02E-08	70YrCancerDerived_InhSoilI	6.02E-08	0.00E+00	0.00E+00	0.00E+00	0.00E+00	0.00E+00	0.00E+00	0.00E+00	0.00E+00	0.00E+00	0.00E+00	0.00E+00
2634	ALL	746288.42	4040560.7	8.18E-08	70YrCancerDerived_InhSoilI	8.18E-08	0.00E+00	0.00E+00	0.00E+00	0.00E+00	0.00E+00	0.00E+00	0.00E+00	0.00E+00	0.00E+00	0.00E+00	0.00E+00
2635	ALL	746388.42	4040560.7	8.42E-08	70YrCancerDerived_InhSoilI	8.42E-08	0.00E+00	0.00E+00	0.00E+00	0.00E+00	0.00E+00	0.00E+00	0.00E+00	0.00E+00	0.00E+00	0.00E+00	0.00E+00
2636	ALL	751488.42	4040560.7	8.20E-08	70YrCancerDerived_InhSoilI	8.20E-08	0.00E+00	0.00E+00	0.00E+00	0.00E+00	0.00E+00	0.00E+00	0.00E+00	0.00E+00	0.00E+00	0.00E+00	0.00E+00
2637	ALL	751588.42	4040560.7	8.00E-08	70YrCancerDerived_InhSoilI	8.00E-08	0.00E+00	0.00E+00	0.00E+00	0.00E+00	0.00E+00	0.00E+00	0.00E+00	0.00E+00	0.00E+00	0.00E+00	0.00E+00
2638	ALL	751688.42	4040560.7	7.81E-08	70YrCancerDerived_InhSoilI	7.81E-08	0.00E+00	0.00E+00	0.00E+00	0.00E+00	0.00E+00	0.00E+00	0.00E+00	0.00E+00	0.00E+00	0.00E+00	0.00E+00
2639	ALL	751788.42	4040560.7	7.63E-08	70YrCancerDerived_InhSoilI	7.63E-08	0.00E+00	0.00E+00	0.00E+00	0.00E+00	0.00E+00	0.00E+00	0.00E+00	0.00E+00	0.00E+00	0.00E+00	0.00E+00
2640	ALL	751888.42	4040560.7	7.46E-08	70YrCancerDerived_InhSoilI	7.46E-08	0.00E+00	0.00E+00	0.00E+00	0.00E+00	0.00E+00	0.00E+00	0.00E+00	0.00E+00	0.00E+00	0.00E+00	0.00E+00
2641	ALL	751988.42	4040560.7	7.30E-08	70YrCancerDerived_InhSoilI	7.30E-08	0.00E+00	0.00E+00	0.00E+00	0.00E+00	0.00E+00	0.00E+00	0.00E+00	0.00E+00	0.00E+00	0.00E+00	0.00E+00
2642	ALL	752088.42	4040560.7	7.14E-08	70YrCancerDerived_InhSoilI	7.14E-08	0.00E+00	0.00E+00	0.00E+00	0.00E+00	0.00E+00	0.00E+00	0.00E+00	0.00E+00	0.00E+00	0.00E+00	0.00E+00
2643	ALL	752188.42	4040560.7	6.99E-08	70YrCancerDerived_InhSoilI	6.99E-08	0.00E+00	0.00E+00	0.00E+00	0.00E+00	0.00E+00	0.00E+00	0.00E+00	0.00E+00	0.00E+00	0.00E+00	0.00E+00
2644	ALL	752288.42	4040560.7	6.85E-08	70YrCancerDerived_InhSoilI	6.85E-08	0.00E+00	0.00E+00	0.00E+00	0.00E+00	0.00E+00	0.00E+00	0.00E+00	0.00E+00	0.00E+00	0.00E+00	0.00E+00
2645	ALL	752388.42	4040560.7	6.72E-08	70YrCancerDerived_InhSoilI	6.72E-08	0.00E+00	0.00E+00	0.00E+00	0.00E+00	0.00E+00	0.00E+00	0.00E+00	0.00E+00	0.00E+00	0.00E+00	0.00E+00
2646	ALL	752488.42	4040560.7	6.59E-08	70YrCancerDerived_InhSoilI	6.59E-08	0.00E+00	0.00E+00	0.00E+00	0.00E+00	0.00E+00	0.00E+00	0.00E+00	0.00E+00	0.00E+00	0.00E+00	0.00E+00
2647	ALL	752588.42	4040560.7	6.46E-08	70YrCancerDerived_InhSoilI	6.46E-08	0.00E+00	0.00E+00	0.00E+00	0.00E+00	0.00E+00	0.00E+00	0.00E+00	0.00E+00	0.00E+00	0.00E+00	0.00E+00
2648	ALL	752688.42	4040560.7	6.33E-08	70YrCancerDerived_InhSoilI	6.33E-08	0.00E+00	0.00E+00	0.00E+00	0.00E+00	0.00E+00	0.00E+00	0.00E+00	0.00E+00	0.00E+00	0.00E+00	0.00E+00
2649	ALL	752788.42	4040560.7	6.21E-08	70YrCancerDerived_InhSoilI	6.21E-08	0.00E+00	0.00E+00	0.00E+00	0.00E+00	0.00E+00	0.00E+00	0.00E+00	0.00E+00	0.00E+00	0.00E+00	0.00E+00
2650	ALL	752888.42	4040560.7	6.10E-08	70YrCancerDerived_InhSoilI	6.10E-08	0.00E+00	0.00E+00	0.00E+00	0.00E+00	0.00E+00	0.00E+00	0.00E+00	0.00E+00	0.00E+00	0.00E+00	0.00E+00
2651	ALL	752988.42	4040560.7	5.98E-08	70YrCancerDerived_InhSoilI	5.98E-08	0.00E+00	0.00E+00	0.00E+00	0.00E+00	0.00E+00	0.00E+00	0.00E+00	0.00E+00	0.00E+00	0.00E+00	0.00E+00
2652	ALL	753088.42	4040560.7	5.88E-08	70YrCancerDerived_InhSoilI	5.88E-08	0.00E+00	0.00E+00	0.00E+00	0.00E+00	0.00E+00	0.00E+00	0.00E+00	0.00E+00	0.00E+00	0.00E+00	0.00E+00
2653	ALL	753188.42	4040560.7	5.77E-08	70YrCancerDerived_InhSoilI	5.77E-08	0.00E+00	0.00E+00	0.00E+00	0.00E+00	0.00E+00	0.00E+00	0.00E+00	0.00E+00	0.00E+00	0.00E+00	0.00E+00
2654	ALL	746288.42	4040660.7	8.28E-08	70YrCancerDerived_InhSoilI	8.28E-08	0.00E+00	0.00E+00	0.00E+00	0.00E+00	0.00E+00	0.00E+00	0.00E+00	0.00E+00	0.00E+00	0.00E+00	0.00E+00
2655	ALL	746388.42	4040660.7	8.56E-08	70YrCancerDerived_InhSoilI	8.56E-08	0.00E+00	0.00E+00	0.00E+00	0.00E+00	0.00E+00	0.00E+00	0.00E+00	0.00E+00	0.00E+00	0.00E+00	0.00E+00
2656	ALL	746488.42	4040660.7	8.88E-08	70YrCancerDerived_InhSoilI	8.88E-08	0.00E+00	0.00E+00	0.00E+00	0.00E+00	0.00E+00	0.00E+00	0.00E+00	0.00E+00	0.00E+00	0.00E+00	0.00E+00
2657	ALL	751388.42	4040660.7	7.75E-08	70YrCancerDerived_InhSoilI	7.75E-08	0.00E+00	0.00E+00	0.00E+00	0.00E+00	0.00E+00	0.00E+00	0.00E+00	0.00E+00	0.00E+00	0.00E+00	0.00E+00
2658	ALL	751488.42	4040660.7	7.58E-08	70YrCancerDerived_InhSoilI	7.58E-08	0.00E+00	0.00E+00	0.00E+00	0.00E+00	0.00E+00	0.00E+00	0.00E+00	0.00E+00	0.00E+00	0.00E+00	0.00E+00
2659	ALL	751588.42	4040660.7	7.42E-08	70YrCancerDerived_InhSoilI	7.42E-08	0.00E+00	0.00E+00	0.00E+00	0.00E+00	0.00E+00	0.00E+00	0.00E+00	0.00E+00	0.00E+00	0.00E+00	0.00E+00
2660	ALL	751688.42	4040660.7	7.27E-08	70YrCancerDerived_InhSoilI	7.27E-08	0.00E+00	0.00E+00	0.00E+00	0.00E+00	0.00E+00	0.00E+00	0.00E+00	0.00E+00	0.00E+00	0.00E+00	0.00E+00
2661	ALL	751788.42	4040660.7	7.12E-08	70YrCancerDerived_InhSoilI	7.12E-08	0.00E+00	0.00E+00	0.00E+00	0.00E+00	0.00E+00	0.00E+00	0.00E+00	0.00E+00	0.00E+00	0.00E+00	0.00E+00
2662	ALL	751888.42	4040660.7	6.98E-08	70YrCancerDerived_InhSoilI	6.98E-08	0.00E+00	0.00E+00	0.00E+00	0.00E+00	0.00E+00	0.00E+00	0.00E+00	0.00E+00	0.00E+00	0.00E+00	0.00E+00
2663	ALL	751988.42	4040660.7	6.84E-08	70YrCancerDerived_InhSoilI	6.84E-08	0.00E+00	0.00E+00	0.00E+00	0.00E+00	0.00E+00	0.00E+00	0.00E+00	0.00E+00	0.00E+00	0.00E+00	0.00E+00
2664	ALL	752088.42	4040660.7	6.71E-08	70YrCancerDerived_InhSoilI	6.71E-08	0.00E+00	0.00E+00	0.00E+00	0.00E+00	0.00E+00	0.00E+00	0.00E+00	0.00E+00	0.00E+00	0.00E+00	0.00E+00
2665	ALL	746288.42	4040760.7	8.45E-08	70YrCancerDerived_InhSoilI	8.45E-08	0.00E+00	0.00E+00	0.00E+00	0.00E+00	0.00E+00	0.00E+00	0.00E+00	0.00E+00	0.00E+00	0.00E+00	0.00E+00
2666	ALL	746388.42	4040760.7	8.78E-08	70YrCancerDerived_InhSoilI	8.78E-08	0.00E+00	0.00E+00	0.00E+00	0.00E+00	0.00E+00	0.00E+00	0.00E+00	0.00E+00	0.00E+00	0.00E+00	0.00E+00
2667	ALL	746488.42	4040760.7	9.16E-08	70YrCancerDerived_InhSoilI	9.16E-08	0.00E+00	0.00E+00	0.00E+00	0.00E+00	0.00E+00	0.00E+00	0.00E+00	0.00E+00	0.00E+00	0.00E+00	0.00E+00
2668	ALL	751388.42	4040760.7	7.15E-08	70YrCancerDerived_InhSoilI	7.15E-08	0.00E+00	0.00E+00	0.00E+00	0.00E+00	0.00E+00	0.00E+00	0.00E+00	0.00E+00	0.00E+00	0.00E+00	0.00E+00
2669	ALL	751488.42	4040760.7	7.02E-08	70YrCancerDerived_InhSoilI	7.02E-08	0.00E+00	0.00E+00	0.00E+00	0.00E+00	0.00E+00	0.00E+00	0.00E+00	0.00E+00	0.00E+00	0.00E+00	0.00E+00
2670	ALL	751588.42	4040760.7	6.89E-08	70YrCancerDerived_InhSoilI	6.89E-08	0.00E+00	0.00E+00	0.00E+00	0.00E+00	0.00E+00	0.00E+00	0.00E+00	0.00E+00	0.00E+00	0.00E+00	0.00E+00
2671	ALL	751688.42	4040760.7	6.77E-08	70YrCancerDerived_InhSoilI	6.77E-08	0.00E+00	0.00E+00	0.00E+00	0.00E+00	0.00E+00	0.00E+00	0.00E+00	0.00E+00	0.00E+00	0.00E+00	0.00E+00
2672	ALL	751788.42	4040760.7	6.65E-08	70YrCancerDerived_InhSoilI	6.65E-08	0.00E+00	0.00E+00	0.00E+00	0.00E+00	0.00E+00	0.00E+00	0.00E+00	0.00E+00	0.00E+00	0.00E+00	0.00E+00
2673	ALL	751888.42	4040760.7	6.53E-08	70YrCancerDerived_InhSoilI	6.53E-08	0.00E+00	0.00E+00	0.00E+00	0.00E+00	0.00E+00	0.00E+00	0.00E+00	0.00E+00	0.00E+00	0.00E+00	0.00E+00
2674	ALL	751988.42	4040760.7	6.42E-08	70YrCancerDerived_InhSoilI	6.42E-08	0.00E+00	0.00E+00	0.00E+00	0.00E+00	0.00E+00	0.00E+00	0.00E+00	0.00E+00	0.00E+00	0.00E+00	0.00E+00
2675	ALL	752088.42	4040760.7	6.31E-08	70YrCancerDerived_InhSoilI	6.31E-08	0.00E+00	0.00E+00	0.00E+00	0.00E+00	0.00E+00	0.00E+00	0.00E+00	0.00E+00	0.00E+00	0.00E+00	0.00E+00
2676	ALL	746288.42	4040860.7	8.72E-08	70YrCancerDerived_InhSoilI	8.72E-08	0.00E+00	0.00E+00	0.00E+00	0.00E+00	0.00E+00	0.00E+00	0.00E+00	0.00E+00	0.00E+00	0.00E+00	0.00E+00
2677	ALL	746388.42	4040860.7	9.10E-08	70YrCancerDerived_InhSoilI	9.10E-08	0.00E+00	0.00E+00	0.00E+00	0.00E+00	0.00E+00	0.00E+00	0.00E+00	0.00E+00	0.00E+00	0.00E+00	0.00E+00
2678	ALL	746488.42	4040860.7	9.55E-08	70YrCancerDerived_InhSoilI	9.55E-08	0.00E+00	0.00E+00	0.00E+00	0.00E+00	0.00E+00	0.00E+00	0.00E+00	0.00E+00	0.00E+00	0.00E+00	0.00E+00
2679	ALL	751388.42	4040860.7	6.63E-08	70YrCancerDerived_InhSoilI	6.63E-08	0.00E+00	0.00E+00	0.00E+00	0.00E+00	0.00E+00	0.00E+00	0.00E+00	0.00E+00	0.00E+00	0.00E+00	0.00E+00
2680	ALL	751488.42	4040860.7	6.53E-08	70YrCancerDerived_InhSoilI	6.53E-08	0.00E+00	0.00E+00	0.00E+00	0.00E+00	0.00E+00	0.00E+00	0.00E+00	0.00E+00	0.00E+00	0.00E+00	0.00E+00
2681	ALL	751588.42	4040860.7	6.42E-08	70YrCancerDerived_InhSoilI	6.42E-08	0.00E+00	0.00E+00	0.00E+00	0.00E+00	0.00E+00	0.00E+00	0.00E+00	0.00E+00	0.00E+00	0.00E+00	0.00E+00
2682	ALL	751688.42	4040860.7	6.32E-08	70YrCancerDerived_InhSoilI	6.32E-08	0.00E+00	0.00E+00	0.00E+00	0.00E+00	0.00E+00	0.00E+00	0.00E+00	0.00E+00	0.00E+00	0.00E+00	0.00E+00
2683	ALL	751788.42	4040860.7	6.22E-08	70YrCancerDerived_InhSoilI	6.22E-08	0.00E+00	0.00E+00	0.00E+00	0.00E+00	0.00E+00	0.00E+00	0.00E+00	0.00E+00	0.00E+00	0.00E+00	0.00E+00
2684	ALL	751888.42	4040860.7	6.12E-08	70YrCancerDerived_InhSoilI	6.12E-08	0.00E+00	0.00E+00	0.00E+00	0.00E+00	0.00E+00	0.00E+00	0.00E+00	0.00E+00	0.00E+00	0.00E+00	0.00E+00
2685	ALL	751988.42	4040860.7	6.03E-08	70YrCancerDerived_InhSoilI	6.03E-08	0.00E+00	0.00E+00	0.00E+00	0.00E+00	0.00E+00	0.00E+00	0.00E+00	0.00E+00	0.00E+00	0.00E+00	0.00E+00
2686	ALL	752088.42	4040860.7	5.94E-08	70YrCancerDerived_InhSoilI	5.94E-08	0.00E+00	0.00E+00	0.00E+00	0.00E+00	0.00E+00	0.00E+00	0.00E+00	0.00E+00	0.00E+00	0.00E+00	0.00E+00

2687	ALL	746288.42	4040960.7	9.03E-08	70YrCancerDerived_InhSoil[	9.03E-08	0.00E+00	0.00E+00	0.00E+00	0.00E+00	0.00E+00	0.00E+00	0.00E+00	0.00E+00	0.00E+00	0.00E+00	0.00E+00
2688	ALL	746388.42	4040960.7	9.47E-08	70YrCancerDerived_InhSoil[	9.47E-08	0.00E+00	0.00E+00	0.00E+00	0.00E+00	0.00E+00	0.00E+00	0.00E+00	0.00E+00	0.00E+00	0.00E+00	0.00E+00
2689	ALL	746488.42	4040960.7	9.99E-08	70YrCancerDerived_InhSoil[	9.99E-08	0.00E+00	0.00E+00	0.00E+00	0.00E+00	0.00E+00	0.00E+00	0.00E+00	0.00E+00	0.00E+00	0.00E+00	0.00E+00
2690	ALL	751388.42	4040960.7	6.17E-08	70YrCancerDerived_InhSoil[	6.17E-08	0.00E+00	0.00E+00	0.00E+00	0.00E+00	0.00E+00	0.00E+00	0.00E+00	0.00E+00	0.00E+00	0.00E+00	0.00E+00
2691	ALL	751488.42	4040960.7	6.09E-08	70YrCancerDerived_InhSoil[	6.09E-08	0.00E+00	0.00E+00	0.00E+00	0.00E+00	0.00E+00	0.00E+00	0.00E+00	0.00E+00	0.00E+00	0.00E+00	0.00E+00
2692	ALL	751588.42	4040960.7	6.00E-08	70YrCancerDerived_InhSoil[	6.00E-08	0.00E+00	0.00E+00	0.00E+00	0.00E+00	0.00E+00	0.00E+00	0.00E+00	0.00E+00	0.00E+00	0.00E+00	0.00E+00
2693	ALL	751688.42	4040960.7	5.92E-08	70YrCancerDerived_InhSoil[	5.92E-08	0.00E+00	0.00E+00	0.00E+00	0.00E+00	0.00E+00	0.00E+00	0.00E+00	0.00E+00	0.00E+00	0.00E+00	0.00E+00
2694	ALL	751788.42	4040960.7	5.84E-08	70YrCancerDerived_InhSoil[	5.84E-08	0.00E+00	0.00E+00	0.00E+00	0.00E+00	0.00E+00	0.00E+00	0.00E+00	0.00E+00	0.00E+00	0.00E+00	0.00E+00
2695	ALL	751888.42	4040960.7	5.76E-08	70YrCancerDerived_InhSoil[	5.76E-08	0.00E+00	0.00E+00	0.00E+00	0.00E+00	0.00E+00	0.00E+00	0.00E+00	0.00E+00	0.00E+00	0.00E+00	0.00E+00
2696	ALL	751988.42	4040960.7	5.68E-08	70YrCancerDerived_InhSoil[	5.68E-08	0.00E+00	0.00E+00	0.00E+00	0.00E+00	0.00E+00	0.00E+00	0.00E+00	0.00E+00	0.00E+00	0.00E+00	0.00E+00
2697	ALL	752088.42	4040960.7	5.61E-08	70YrCancerDerived_InhSoil[	5.61E-08	0.00E+00	0.00E+00	0.00E+00	0.00E+00	0.00E+00	0.00E+00	0.00E+00	0.00E+00	0.00E+00	0.00E+00	0.00E+00
2698	ALL	746288.42	4041060.7	9.37E-08	70YrCancerDerived_InhSoil[	9.37E-08	0.00E+00	0.00E+00	0.00E+00	0.00E+00	0.00E+00	0.00E+00	0.00E+00	0.00E+00	0.00E+00	0.00E+00	0.00E+00
2699	ALL	746388.42	4041060.7	9.88E-08	70YrCancerDerived_InhSoil[	9.88E-08	0.00E+00	0.00E+00	0.00E+00	0.00E+00	0.00E+00	0.00E+00	0.00E+00	0.00E+00	0.00E+00	0.00E+00	0.00E+00
2700	ALL	746488.42	4041060.7	1.05E-07	70YrCancerDerived_InhSoil[	1.05E-07	0.00E+00	0.00E+00	0.00E+00	0.00E+00	0.00E+00	0.00E+00	0.00E+00	0.00E+00	0.00E+00	0.00E+00	0.00E+00
2701	ALL	751388.42	4041060.7	5.79E-08	70YrCancerDerived_InhSoil[	5.79E-08	0.00E+00	0.00E+00	0.00E+00	0.00E+00	0.00E+00	0.00E+00	0.00E+00	0.00E+00	0.00E+00	0.00E+00	0.00E+00
2702	ALL	751488.42	4041060.7	5.71E-08	70YrCancerDerived_InhSoil[	5.71E-08	0.00E+00	0.00E+00	0.00E+00	0.00E+00	0.00E+00	0.00E+00	0.00E+00	0.00E+00	0.00E+00	0.00E+00	0.00E+00
2703	ALL	751588.42	4041060.7	5.64E-08	70YrCancerDerived_InhSoil[	5.64E-08	0.00E+00	0.00E+00	0.00E+00	0.00E+00	0.00E+00	0.00E+00	0.00E+00	0.00E+00	0.00E+00	0.00E+00	0.00E+00
2704	ALL	751688.42	4041060.7	5.57E-08	70YrCancerDerived_InhSoil[	5.57E-08	0.00E+00	0.00E+00	0.00E+00	0.00E+00	0.00E+00	0.00E+00	0.00E+00	0.00E+00	0.00E+00	0.00E+00	0.00E+00
2705	ALL	751788.42	4041060.7	5.51E-08	70YrCancerDerived_InhSoil[	5.51E-08	0.00E+00	0.00E+00	0.00E+00	0.00E+00	0.00E+00	0.00E+00	0.00E+00	0.00E+00	0.00E+00	0.00E+00	0.00E+00
2706	ALL	751888.42	4041060.7	5.44E-08	70YrCancerDerived_InhSoil[	5.44E-08	0.00E+00	0.00E+00	0.00E+00	0.00E+00	0.00E+00	0.00E+00	0.00E+00	0.00E+00	0.00E+00	0.00E+00	0.00E+00
2707	ALL	751988.42	4041060.7	5.37E-08	70YrCancerDerived_InhSoil[	5.37E-08	0.00E+00	0.00E+00	0.00E+00	0.00E+00	0.00E+00	0.00E+00	0.00E+00	0.00E+00	0.00E+00	0.00E+00	0.00E+00
2708	ALL	752088.42	4041060.7	5.31E-08	70YrCancerDerived_InhSoil[	5.31E-08	0.00E+00	0.00E+00	0.00E+00	0.00E+00	0.00E+00	0.00E+00	0.00E+00	0.00E+00	0.00E+00	0.00E+00	0.00E+00
2709	ALL	746288.42	4041160.7	9.74E-08	70YrCancerDerived_InhSoil[	9.74E-08	0.00E+00	0.00E+00	0.00E+00	0.00E+00	0.00E+00	0.00E+00	0.00E+00	0.00E+00	0.00E+00	0.00E+00	0.00E+00
2710	ALL	746388.42	4041160.7	1.03E-07	70YrCancerDerived_InhSoil[	1.03E-07	0.00E+00	0.00E+00	0.00E+00	0.00E+00	0.00E+00	0.00E+00	0.00E+00	0.00E+00	0.00E+00	0.00E+00	0.00E+00
2711	ALL	746488.42	4041160.7	1.09E-07	70YrCancerDerived_InhSoil[	1.09E-07	0.00E+00	0.00E+00	0.00E+00	0.00E+00	0.00E+00	0.00E+00	0.00E+00	0.00E+00	0.00E+00	0.00E+00	0.00E+00
2712	ALL	746588.42	4041160.7	1.16E-07	70YrCancerDerived_InhSoil[	1.16E-07	0.00E+00	0.00E+00	0.00E+00	0.00E+00	0.00E+00	0.00E+00	0.00E+00	0.00E+00	0.00E+00	0.00E+00	0.00E+00
2713	ALL	746688.42	4041160.7	1.24E-07	70YrCancerDerived_InhSoil[	1.24E-07	0.00E+00	0.00E+00	0.00E+00	0.00E+00	0.00E+00	0.00E+00	0.00E+00	0.00E+00	0.00E+00	0.00E+00	0.00E+00
2714	ALL	751388.42	4041160.7	5.46E-08	70YrCancerDerived_InhSoil[	5.46E-08	0.00E+00	0.00E+00	0.00E+00	0.00E+00	0.00E+00	0.00E+00	0.00E+00	0.00E+00	0.00E+00	0.00E+00	0.00E+00
2715	ALL	751488.42	4041160.7	5.40E-08	70YrCancerDerived_InhSoil[	5.40E-08	0.00E+00	0.00E+00	0.00E+00	0.00E+00	0.00E+00	0.00E+00	0.00E+00	0.00E+00	0.00E+00	0.00E+00	0.00E+00
2716	ALL	751588.42	4041160.7	5.33E-08	70YrCancerDerived_InhSoil[	5.33E-08	0.00E+00	0.00E+00	0.00E+00	0.00E+00	0.00E+00	0.00E+00	0.00E+00	0.00E+00	0.00E+00	0.00E+00	0.00E+00
2717	ALL	751688.42	4041160.7	5.27E-08	70YrCancerDerived_InhSoil[	5.27E-08	0.00E+00	0.00E+00	0.00E+00	0.00E+00	0.00E+00	0.00E+00	0.00E+00	0.00E+00	0.00E+00	0.00E+00	0.00E+00
2718	ALL	751788.42	4041160.7	5.21E-08	70YrCancerDerived_InhSoil[	5.21E-08	0.00E+00	0.00E+00	0.00E+00	0.00E+00	0.00E+00	0.00E+00	0.00E+00	0.00E+00	0.00E+00	0.00E+00	0.00E+00
2719	ALL	751888.42	4041160.7	5.15E-08	70YrCancerDerived_InhSoil[	5.15E-08	0.00E+00	0.00E+00	0.00E+00	0.00E+00	0.00E+00	0.00E+00	0.00E+00	0.00E+00	0.00E+00	0.00E+00	0.00E+00
2720	ALL	751988.42	4041160.7	5.10E-08	70YrCancerDerived_InhSoil[	5.10E-08	0.00E+00	0.00E+00	0.00E+00	0.00E+00	0.00E+00	0.00E+00	0.00E+00	0.00E+00	0.00E+00	0.00E+00	0.00E+00
2721	ALL	752088.42	4041160.7	5.04E-08	70YrCancerDerived_InhSoil[	5.04E-08	0.00E+00	0.00E+00	0.00E+00	0.00E+00	0.00E+00	0.00E+00	0.00E+00	0.00E+00	0.00E+00	0.00E+00	0.00E+00
2722	ALL	752188.42	4041160.7	4.98E-08	70YrCancerDerived_InhSoil[	4.98E-08	0.00E+00	0.00E+00	0.00E+00	0.00E+00	0.00E+00	0.00E+00	0.00E+00	0.00E+00	0.00E+00	0.00E+00	0.00E+00
2723	ALL	752288.42	4041160.7	4.93E-08	70YrCancerDerived_InhSoil[	4.93E-08	0.00E+00	0.00E+00	0.00E+00	0.00E+00	0.00E+00	0.00E+00	0.00E+00	0.00E+00	0.00E+00	0.00E+00	0.00E+00
2724	ALL	752388.42	4041160.7	4.87E-08	70YrCancerDerived_InhSoil[	4.87E-08	0.00E+00	0.00E+00	0.00E+00	0.00E+00	0.00E+00	0.00E+00	0.00E+00	0.00E+00	0.00E+00	0.00E+00	0.00E+00
2725	ALL	752488.42	4041160.7	4.81E-08	70YrCancerDerived_InhSoil[	4.81E-08	0.00E+00	0.00E+00	0.00E+00	0.00E+00	0.00E+00	0.00E+00	0.00E+00	0.00E+00	0.00E+00	0.00E+00	0.00E+00
2726	ALL	752588.42	4041160.7	4.76E-08	70YrCancerDerived_InhSoil[	4.76E-08	0.00E+00	0.00E+00	0.00E+00	0.00E+00	0.00E+00	0.00E+00	0.00E+00	0.00E+00	0.00E+00	0.00E+00	0.00E+00
2727	ALL	752688.42	4041160.7	4.70E-08	70YrCancerDerived_InhSoil[	4.70E-08	0.00E+00	0.00E+00	0.00E+00	0.00E+00	0.00E+00	0.00E+00	0.00E+00	0.00E+00	0.00E+00	0.00E+00	0.00E+00
2728	ALL	752788.42	4041160.7	4.65E-08	70YrCancerDerived_InhSoil[	4.65E-08	0.00E+00	0.00E+00	0.00E+00	0.00E+00	0.00E+00	0.00E+00	0.00E+00	0.00E+00	0.00E+00	0.00E+00	0.00E+00
2729	ALL	752888.42	4041160.7	4.59E-08	70YrCancerDerived_InhSoil[	4.59E-08	0.00E+00	0.00E+00	0.00E+00	0.00E+00	0.00E+00	0.00E+00	0.00E+00	0.00E+00	0.00E+00	0.00E+00	0.00E+00
2730	ALL	752988.42	4041160.7	4.54E-08	70YrCancerDerived_InhSoil[	4.54E-08	0.00E+00	0.00E+00	0.00E+00	0.00E+00	0.00E+00	0.00E+00	0.00E+00	0.00E+00	0.00E+00	0.00E+00	0.00E+00
2731	ALL	753088.42	4041160.7	4.49E-08	70YrCancerDerived_InhSoil[	4.49E-08	0.00E+00	0.00E+00	0.00E+00	0.00E+00	0.00E+00	0.00E+00	0.00E+00	0.00E+00	0.00E+00	0.00E+00	0.00E+00
2732	ALL	753188.42	4041160.7	4.44E-08	70YrCancerDerived_InhSoil[	4.44E-08	0.00E+00	0.00E+00	0.00E+00	0.00E+00	0.00E+00	0.00E+00	0.00E+00	0.00E+00	0.00E+00	0.00E+00	0.00E+00
2733	ALL	753288.42	4041160.7	4.40E-08	70YrCancerDerived_InhSoil[	4.40E-08	0.00E+00	0.00E+00	0.00E+00	0.00E+00	0.00E+00	0.00E+00	0.00E+00	0.00E+00	0.00E+00	0.00E+00	0.00E+00
2734	ALL	753388.42	4041160.7	4.35E-08	70YrCancerDerived_InhSoil[	4.35E-08	0.00E+00	0.00E+00	0.00E+00	0.00E+00	0.00E+00	0.00E+00	0.00E+00	0.00E+00	0.00E+00	0.00E+00	0.00E+00
2735	ALL	753488.42	4041160.7	4.31E-08	70YrCancerDerived_InhSoil[	4.31E-08	0.00E+00	0.00E+00	0.00E+00	0.00E+00	0.00E+00	0.00E+00	0.00E+00	0.00E+00	0.00E+00	0.00E+00	0.00E+00
2736	ALL	753588.42	4041160.7	4.26E-08	70YrCancerDerived_InhSoil[	4.26E-08	0.00E+00	0.00E+00	0.00E+00	0.00E+00	0.00E+00	0.00E+00	0.00E+00	0.00E+00	0.00E+00	0.00E+00	0.00E+00
2737	ALL	753688.42	4041160.7	4.22E-08	70YrCancerDerived_InhSoil[	4.22E-08	0.00E+00	0.00E+00	0.00E+00	0.00E+00	0.00E+00	0.00E+00	0.00E+00	0.00E+00	0.00E+00	0.00E+00	0.00E+00
2738	ALL	753788.42	4041160.7	4.17E-08	70YrCancerDerived_InhSoil[	4.17E-08	0.00E+00	0.00E+00	0.00E+00	0.00E+00	0.00E+00	0.00E+00	0.00E+00	0.00E+00	0.00E+00	0.00E+00	0.00E+00
2739	ALL	753888.42	4041160.7	4.13E-08	70YrCancerDerived_InhSoil[	4.13E-08	0.00E+00	0.00E+00	0.00E+00	0.00E+00	0.00E+00	0.00E+00	0.00E+00	0.00E+00	0.00E+00	0.00E+00	0.00E+00
2740	ALL	753988.42	4041160.7	4.09E-08	70YrCancerDerived_InhSoil[	4.09E-08	0.00E+00	0.00E+00	0.00E+00	0.00E+00	0.00E+00	0.00E+00	0.00E+00	0.00E+00	0.00E+00	0.00E+00	0.00E+00
2741	ALL	746288.42	4041260.7	1.01E-07	70YrCancerDerived_InhSoil[	1.01E-07	0.00E+00	0.00E+00	0.00E+00	0.00E+00	0.00E+00	0.00E+00	0.00E+00	0.00E+00	0.00E+00	0.00E+00	0.00E+00
2742	ALL	746388.42	4041260.7	1.07E-07	70YrCancerDerived_InhSoil[	1.07E-07	0.00E+00	0.00E+00	0.00E+00	0.00E+00	0.00E+00	0.00E+00	0.00E+00	0.00E+00	0.00E+00	0.00E+00	0.00E+00

2743	ALL	746488.42	4041260.7	1.13E-07	70YrCancerDerived_InhSoil[	1.13E-07	0.00E+00	0.00E+00	0.00E+00	0.00E+00	0.00E+00	0.00E+00	0.00E+00	0.00E+00	0.00E+00	0.00E+00	0.00E+00
2744	ALL	746588.42	4041260.7	1.20E-07	70YrCancerDerived_InhSoil[	1.20E-07	0.00E+00	0.00E+00	0.00E+00	0.00E+00	0.00E+00	0.00E+00	0.00E+00	0.00E+00	0.00E+00	0.00E+00	0.00E+00
2745	ALL	746688.42	4041260.7	1.27E-07	70YrCancerDerived_InhSoil[	1.27E-07	0.00E+00	0.00E+00	0.00E+00	0.00E+00	0.00E+00	0.00E+00	0.00E+00	0.00E+00	0.00E+00	0.00E+00	0.00E+00
2746	ALL	751388.42	4041260.7	5.18E-08	70YrCancerDerived_InhSoil[	5.18E-08	0.00E+00	0.00E+00	0.00E+00	0.00E+00	0.00E+00	0.00E+00	0.00E+00	0.00E+00	0.00E+00	0.00E+00	0.00E+00
2747	ALL	751488.42	4041260.7	5.12E-08	70YrCancerDerived_InhSoil[	5.12E-08	0.00E+00	0.00E+00	0.00E+00	0.00E+00	0.00E+00	0.00E+00	0.00E+00	0.00E+00	0.00E+00	0.00E+00	0.00E+00
2748	ALL	751588.42	4041260.7	5.07E-08	70YrCancerDerived_InhSoil[	5.07E-08	0.00E+00	0.00E+00	0.00E+00	0.00E+00	0.00E+00	0.00E+00	0.00E+00	0.00E+00	0.00E+00	0.00E+00	0.00E+00
2749	ALL	751688.42	4041260.7	5.01E-08	70YrCancerDerived_InhSoil[	5.01E-08	0.00E+00	0.00E+00	0.00E+00	0.00E+00	0.00E+00	0.00E+00	0.00E+00	0.00E+00	0.00E+00	0.00E+00	0.00E+00
2750	ALL	751788.42	4041260.7	4.96E-08	70YrCancerDerived_InhSoil[	4.96E-08	0.00E+00	0.00E+00	0.00E+00	0.00E+00	0.00E+00	0.00E+00	0.00E+00	0.00E+00	0.00E+00	0.00E+00	0.00E+00
2751	ALL	751888.42	4041260.7	4.90E-08	70YrCancerDerived_InhSoil[	4.90E-08	0.00E+00	0.00E+00	0.00E+00	0.00E+00	0.00E+00	0.00E+00	0.00E+00	0.00E+00	0.00E+00	0.00E+00	0.00E+00
2752	ALL	751988.42	4041260.7	4.85E-08	70YrCancerDerived_InhSoil[	4.85E-08	0.00E+00	0.00E+00	0.00E+00	0.00E+00	0.00E+00	0.00E+00	0.00E+00	0.00E+00	0.00E+00	0.00E+00	0.00E+00
2753	ALL	752088.42	4041260.7	4.80E-08	70YrCancerDerived_InhSoil[	4.80E-08	0.00E+00	0.00E+00	0.00E+00	0.00E+00	0.00E+00	0.00E+00	0.00E+00	0.00E+00	0.00E+00	0.00E+00	0.00E+00
2754	ALL	752188.42	4041260.7	4.75E-08	70YrCancerDerived_InhSoil[	4.75E-08	0.00E+00	0.00E+00	0.00E+00	0.00E+00	0.00E+00	0.00E+00	0.00E+00	0.00E+00	0.00E+00	0.00E+00	0.00E+00
2755	ALL	752288.42	4041260.7	4.70E-08	70YrCancerDerived_InhSoil[	4.70E-08	0.00E+00	0.00E+00	0.00E+00	0.00E+00	0.00E+00	0.00E+00	0.00E+00	0.00E+00	0.00E+00	0.00E+00	0.00E+00
2756	ALL	752388.42	4041260.7	4.65E-08	70YrCancerDerived_InhSoil[	4.65E-08	0.00E+00	0.00E+00	0.00E+00	0.00E+00	0.00E+00	0.00E+00	0.00E+00	0.00E+00	0.00E+00	0.00E+00	0.00E+00
2757	ALL	752488.42	4041260.7	4.60E-08	70YrCancerDerived_InhSoil[	4.60E-08	0.00E+00	0.00E+00	0.00E+00	0.00E+00	0.00E+00	0.00E+00	0.00E+00	0.00E+00	0.00E+00	0.00E+00	0.00E+00
2758	ALL	752588.42	4041260.7	4.55E-08	70YrCancerDerived_InhSoil[	4.55E-08	0.00E+00	0.00E+00	0.00E+00	0.00E+00	0.00E+00	0.00E+00	0.00E+00	0.00E+00	0.00E+00	0.00E+00	0.00E+00
2759	ALL	752688.42	4041260.7	4.50E-08	70YrCancerDerived_InhSoil[	4.50E-08	0.00E+00	0.00E+00	0.00E+00	0.00E+00	0.00E+00	0.00E+00	0.00E+00	0.00E+00	0.00E+00	0.00E+00	0.00E+00
2760	ALL	752788.42	4041260.7	4.45E-08	70YrCancerDerived_InhSoil[	4.45E-08	0.00E+00	0.00E+00	0.00E+00	0.00E+00	0.00E+00	0.00E+00	0.00E+00	0.00E+00	0.00E+00	0.00E+00	0.00E+00
2761	ALL	752888.42	4041260.7	4.40E-08	70YrCancerDerived_InhSoil[	4.40E-08	0.00E+00	0.00E+00	0.00E+00	0.00E+00	0.00E+00	0.00E+00	0.00E+00	0.00E+00	0.00E+00	0.00E+00	0.00E+00
2762	ALL	752988.42	4041260.7	4.36E-08	70YrCancerDerived_InhSoil[	4.36E-08	0.00E+00	0.00E+00	0.00E+00	0.00E+00	0.00E+00	0.00E+00	0.00E+00	0.00E+00	0.00E+00	0.00E+00	0.00E+00
2763	ALL	753088.42	4041260.7	4.31E-08	70YrCancerDerived_InhSoil[	4.31E-08	0.00E+00	0.00E+00	0.00E+00	0.00E+00	0.00E+00	0.00E+00	0.00E+00	0.00E+00	0.00E+00	0.00E+00	0.00E+00
2764	ALL	753188.42	4041260.7	4.27E-08	70YrCancerDerived_InhSoil[	4.27E-08	0.00E+00	0.00E+00	0.00E+00	0.00E+00	0.00E+00	0.00E+00	0.00E+00	0.00E+00	0.00E+00	0.00E+00	0.00E+00
2765	ALL	753288.42	4041260.7	4.22E-08	70YrCancerDerived_InhSoil[	4.22E-08	0.00E+00	0.00E+00	0.00E+00	0.00E+00	0.00E+00	0.00E+00	0.00E+00	0.00E+00	0.00E+00	0.00E+00	0.00E+00
2766	ALL	753388.42	4041260.7	4.18E-08	70YrCancerDerived_InhSoil[	4.18E-08	0.00E+00	0.00E+00	0.00E+00	0.00E+00	0.00E+00	0.00E+00	0.00E+00	0.00E+00	0.00E+00	0.00E+00	0.00E+00
2767	ALL	753488.42	4041260.7	4.14E-08	70YrCancerDerived_InhSoil[	4.14E-08	0.00E+00	0.00E+00	0.00E+00	0.00E+00	0.00E+00	0.00E+00	0.00E+00	0.00E+00	0.00E+00	0.00E+00	0.00E+00
2768	ALL	753588.42	4041260.7	4.10E-08	70YrCancerDerived_InhSoil[	4.10E-08	0.00E+00	0.00E+00	0.00E+00	0.00E+00	0.00E+00	0.00E+00	0.00E+00	0.00E+00	0.00E+00	0.00E+00	0.00E+00
2769	ALL	753688.42	4041260.7	4.07E-08	70YrCancerDerived_InhSoil[	4.07E-08	0.00E+00	0.00E+00	0.00E+00	0.00E+00	0.00E+00	0.00E+00	0.00E+00	0.00E+00	0.00E+00	0.00E+00	0.00E+00
2770	ALL	753788.42	4041260.7	4.03E-08	70YrCancerDerived_InhSoil[	4.03E-08	0.00E+00	0.00E+00	0.00E+00	0.00E+00	0.00E+00	0.00E+00	0.00E+00	0.00E+00	0.00E+00	0.00E+00	0.00E+00
2771	ALL	753888.42	4041260.7	3.99E-08	70YrCancerDerived_InhSoil[	3.99E-08	0.00E+00	0.00E+00	0.00E+00	0.00E+00	0.00E+00	0.00E+00	0.00E+00	0.00E+00	0.00E+00	0.00E+00	0.00E+00
2772	ALL	753988.42	4041260.7	3.95E-08	70YrCancerDerived_InhSoil[	3.95E-08	0.00E+00	0.00E+00	0.00E+00	0.00E+00	0.00E+00	0.00E+00	0.00E+00	0.00E+00	0.00E+00	0.00E+00	0.00E+00
2773	ALL	746288.42	4041360.7	1.04E-07	70YrCancerDerived_InhSoil[	1.04E-07	0.00E+00	0.00E+00	0.00E+00	0.00E+00	0.00E+00	0.00E+00	0.00E+00	0.00E+00	0.00E+00	0.00E+00	0.00E+00
2774	ALL	746388.42	4041360.7	1.09E-07	70YrCancerDerived_InhSoil[	1.09E-07	0.00E+00	0.00E+00	0.00E+00	0.00E+00	0.00E+00	0.00E+00	0.00E+00	0.00E+00	0.00E+00	0.00E+00	0.00E+00
2775	ALL	746488.42	4041360.7	1.15E-07	70YrCancerDerived_InhSoil[	1.15E-07	0.00E+00	0.00E+00	0.00E+00	0.00E+00	0.00E+00	0.00E+00	0.00E+00	0.00E+00	0.00E+00	0.00E+00	0.00E+00
2776	ALL	746588.42	4041360.7	1.21E-07	70YrCancerDerived_InhSoil[	1.21E-07	0.00E+00	0.00E+00	0.00E+00	0.00E+00	0.00E+00	0.00E+00	0.00E+00	0.00E+00	0.00E+00	0.00E+00	0.00E+00
2777	ALL	746688.42	4041360.7	1.28E-07	70YrCancerDerived_InhSoil[	1.28E-07	0.00E+00	0.00E+00	0.00E+00	0.00E+00	0.00E+00	0.00E+00	0.00E+00	0.00E+00	0.00E+00	0.00E+00	0.00E+00
2778	ALL	751388.42	4041360.7	4.93E-08	70YrCancerDerived_InhSoil[	4.93E-08	0.00E+00	0.00E+00	0.00E+00	0.00E+00	0.00E+00	0.00E+00	0.00E+00	0.00E+00	0.00E+00	0.00E+00	0.00E+00
2779	ALL	751488.42	4041360.7	4.88E-08	70YrCancerDerived_InhSoil[	4.88E-08	0.00E+00	0.00E+00	0.00E+00	0.00E+00	0.00E+00	0.00E+00	0.00E+00	0.00E+00	0.00E+00	0.00E+00	0.00E+00
2780	ALL	751588.42	4041360.7	4.83E-08	70YrCancerDerived_InhSoil[	4.83E-08	0.00E+00	0.00E+00	0.00E+00	0.00E+00	0.00E+00	0.00E+00	0.00E+00	0.00E+00	0.00E+00	0.00E+00	0.00E+00
2781	ALL	751688.42	4041360.7	4.78E-08	70YrCancerDerived_InhSoil[	4.78E-08	0.00E+00	0.00E+00	0.00E+00	0.00E+00	0.00E+00	0.00E+00	0.00E+00	0.00E+00	0.00E+00	0.00E+00	0.00E+00
2782	ALL	751788.42	4041360.7	4.74E-08	70YrCancerDerived_InhSoil[	4.74E-08	0.00E+00	0.00E+00	0.00E+00	0.00E+00	0.00E+00	0.00E+00	0.00E+00	0.00E+00	0.00E+00	0.00E+00	0.00E+00
2783	ALL	751888.42	4041360.7	4.69E-08	70YrCancerDerived_InhSoil[	4.69E-08	0.00E+00	0.00E+00	0.00E+00	0.00E+00	0.00E+00	0.00E+00	0.00E+00	0.00E+00	0.00E+00	0.00E+00	0.00E+00
2784	ALL	751988.42	4041360.7	4.64E-08	70YrCancerDerived_InhSoil[	4.64E-08	0.00E+00	0.00E+00	0.00E+00	0.00E+00	0.00E+00	0.00E+00	0.00E+00	0.00E+00	0.00E+00	0.00E+00	0.00E+00
2785	ALL	752088.42	4041360.7	4.59E-08	70YrCancerDerived_InhSoil[	4.59E-08	0.00E+00	0.00E+00	0.00E+00	0.00E+00	0.00E+00	0.00E+00	0.00E+00	0.00E+00	0.00E+00	0.00E+00	0.00E+00
2786	ALL	752188.42	4041360.7	4.55E-08	70YrCancerDerived_InhSoil[	4.55E-08	0.00E+00	0.00E+00	0.00E+00	0.00E+00	0.00E+00	0.00E+00	0.00E+00	0.00E+00	0.00E+00	0.00E+00	0.00E+00
2787	ALL	752288.42	4041360.7	4.50E-08	70YrCancerDerived_InhSoil[	4.50E-08	0.00E+00	0.00E+00	0.00E+00	0.00E+00	0.00E+00	0.00E+00	0.00E+00	0.00E+00	0.00E+00	0.00E+00	0.00E+00
2788	ALL	752388.42	4041360.7	4.45E-08	70YrCancerDerived_InhSoil[	4.45E-08	0.00E+00	0.00E+00	0.00E+00	0.00E+00	0.00E+00	0.00E+00	0.00E+00	0.00E+00	0.00E+00	0.00E+00	0.00E+00
2789	ALL	752488.42	4041360.7	4.41E-08	70YrCancerDerived_InhSoil[	4.41E-08	0.00E+00	0.00E+00	0.00E+00	0.00E+00	0.00E+00	0.00E+00	0.00E+00	0.00E+00	0.00E+00	0.00E+00	0.00E+00
2790	ALL	752588.42	4041360.7	4.36E-08	70YrCancerDerived_InhSoil[	4.36E-08	0.00E+00	0.00E+00	0.00E+00	0.00E+00	0.00E+00	0.00E+00	0.00E+00	0.00E+00	0.00E+00	0.00E+00	0.00E+00
2791	ALL	752688.42	4041360.7	4.32E-08	70YrCancerDerived_InhSoil[	4.32E-08	0.00E+00	0.00E+00	0.00E+00	0.00E+00	0.00E+00	0.00E+00	0.00E+00	0.00E+00	0.00E+00	0.00E+00	0.00E+00
2792	ALL	752788.42	4041360.7	4.27E-08	70YrCancerDerived_InhSoil[	4.27E-08	0.00E+00	0.00E+00	0.00E+00	0.00E+00	0.00E+00	0.00E+00	0.00E+00	0.00E+00	0.00E+00	0.00E+00	0.00E+00
2793	ALL	752888.42	4041360.7	4.23E-08	70YrCancerDerived_InhSoil[	4.23E-08	0.00E+00	0.00E+00	0.00E+00	0.00E+00	0.00E+00	0.00E+00	0.00E+00	0.00E+00	0.00E+00	0.00E+00	0.00E+00
2794	ALL	752988.42	4041360.7	4.18E-08	70YrCancerDerived_InhSoil[	4.18E-08	0.00E+00	0.00E+00	0.00E+00	0.00E+00	0.00E+00	0.00E+00	0.00E+00	0.00E+00	0.00E+00	0.00E+00	0.00E+00
2795	ALL	753088.42	4041360.7	4.14E-08	70YrCancerDerived_InhSoil[	4.14E-08	0.00E+00	0.00E+00	0.00E+00	0.00E+00	0.00E+00	0.00E+00	0.00E+00	0.00E+00	0.00E+00	0.00E+00	0.00E+00
2796	ALL	753188.42	4041360.7	4.10E-08	70YrCancerDerived_InhSoil[	4.10E-08	0.00E+00	0.00E+00	0.00E+00	0.00E+00	0.00E+00	0.00E+00	0.00E+00	0.00E+00	0.00E+00	0.00E+00	0.00E+00
2797	ALL	753288.42	4041360.7	4.07E-08	70YrCancerDerived_InhSoil[	4.07E-08	0.00E+00	0.00E+00	0.00E+00	0.00E+00	0.00E+00	0.00E+00	0.00E+00	0.00E+00	0.00E+00	0.00E+00	0.00E+00
2798	ALL	753388.42	4041360.7	4.03E-08	70YrCancerDerived_InhSoil[	4.03E-08	0.00E+00	0.00E+00	0.00E+00	0.00E+00	0.00E+00	0.00E+00	0.00E+00	0.00E+00	0.00E+00	0.00E+00	0.00E+00

2799	ALL	753488.42	4041360.7	3.99E-08	70YrCancerDerived_InhSoilI	3.99E-08	0.00E+00	0.00E+00	0.00E+00	0.00E+00	0.00E+00	0.00E+00	0.00E+00	0.00E+00	0.00E+00	0.00E+00	0.00E+00
2800	ALL	753588.42	4041360.7	3.96E-08	70YrCancerDerived_InhSoilI	3.96E-08	0.00E+00	0.00E+00	0.00E+00	0.00E+00	0.00E+00	0.00E+00	0.00E+00	0.00E+00	0.00E+00	0.00E+00	0.00E+00
2801	ALL	753688.42	4041360.7	3.92E-08	70YrCancerDerived_InhSoilI	3.92E-08	0.00E+00	0.00E+00	0.00E+00	0.00E+00	0.00E+00	0.00E+00	0.00E+00	0.00E+00	0.00E+00	0.00E+00	0.00E+00
2802	ALL	753788.42	4041360.7	3.89E-08	70YrCancerDerived_InhSoilI	3.89E-08	0.00E+00	0.00E+00	0.00E+00	0.00E+00	0.00E+00	0.00E+00	0.00E+00	0.00E+00	0.00E+00	0.00E+00	0.00E+00
2803	ALL	753888.42	4041360.7	3.85E-08	70YrCancerDerived_InhSoilI	3.85E-08	0.00E+00	0.00E+00	0.00E+00	0.00E+00	0.00E+00	0.00E+00	0.00E+00	0.00E+00	0.00E+00	0.00E+00	0.00E+00
2804	ALL	753988.42	4041360.7	3.82E-08	70YrCancerDerived_InhSoilI	3.82E-08	0.00E+00	0.00E+00	0.00E+00	0.00E+00	0.00E+00	0.00E+00	0.00E+00	0.00E+00	0.00E+00	0.00E+00	0.00E+00
2805	ALL	746288.42	4041460.7	1.05E-07	70YrCancerDerived_InhSoilI	1.05E-07	0.00E+00	0.00E+00	0.00E+00	0.00E+00	0.00E+00	0.00E+00	0.00E+00	0.00E+00	0.00E+00	0.00E+00	0.00E+00
2806	ALL	746388.42	4041460.7	1.10E-07	70YrCancerDerived_InhSoilI	1.10E-07	0.00E+00	0.00E+00	0.00E+00	0.00E+00	0.00E+00	0.00E+00	0.00E+00	0.00E+00	0.00E+00	0.00E+00	0.00E+00
2807	ALL	746488.42	4041460.7	1.16E-07	70YrCancerDerived_InhSoilI	1.16E-07	0.00E+00	0.00E+00	0.00E+00	0.00E+00	0.00E+00	0.00E+00	0.00E+00	0.00E+00	0.00E+00	0.00E+00	0.00E+00
2808	ALL	746588.42	4041460.7	1.22E-07	70YrCancerDerived_InhSoilI	1.22E-07	0.00E+00	0.00E+00	0.00E+00	0.00E+00	0.00E+00	0.00E+00	0.00E+00	0.00E+00	0.00E+00	0.00E+00	0.00E+00
2809	ALL	746688.42	4041460.7	1.28E-07	70YrCancerDerived_InhSoilI	1.28E-07	0.00E+00	0.00E+00	0.00E+00	0.00E+00	0.00E+00	0.00E+00	0.00E+00	0.00E+00	0.00E+00	0.00E+00	0.00E+00
2810	ALL	751388.42	4041460.7	4.70E-08	70YrCancerDerived_InhSoilI	4.70E-08	0.00E+00	0.00E+00	0.00E+00	0.00E+00	0.00E+00	0.00E+00	0.00E+00	0.00E+00	0.00E+00	0.00E+00	0.00E+00
2811	ALL	751488.42	4041460.7	4.67E-08	70YrCancerDerived_InhSoilI	4.67E-08	0.00E+00	0.00E+00	0.00E+00	0.00E+00	0.00E+00	0.00E+00	0.00E+00	0.00E+00	0.00E+00	0.00E+00	0.00E+00
2812	ALL	751588.42	4041460.7	4.62E-08	70YrCancerDerived_InhSoilI	4.62E-08	0.00E+00	0.00E+00	0.00E+00	0.00E+00	0.00E+00	0.00E+00	0.00E+00	0.00E+00	0.00E+00	0.00E+00	0.00E+00
2813	ALL	751688.42	4041460.7	4.58E-08	70YrCancerDerived_InhSoilI	4.58E-08	0.00E+00	0.00E+00	0.00E+00	0.00E+00	0.00E+00	0.00E+00	0.00E+00	0.00E+00	0.00E+00	0.00E+00	0.00E+00
2814	ALL	751788.42	4041460.7	4.54E-08	70YrCancerDerived_InhSoilI	4.54E-08	0.00E+00	0.00E+00	0.00E+00	0.00E+00	0.00E+00	0.00E+00	0.00E+00	0.00E+00	0.00E+00	0.00E+00	0.00E+00
2815	ALL	751888.42	4041460.7	4.49E-08	70YrCancerDerived_InhSoilI	4.49E-08	0.00E+00	0.00E+00	0.00E+00	0.00E+00	0.00E+00	0.00E+00	0.00E+00	0.00E+00	0.00E+00	0.00E+00	0.00E+00
2816	ALL	751988.42	4041460.7	4.45E-08	70YrCancerDerived_InhSoilI	4.45E-08	0.00E+00	0.00E+00	0.00E+00	0.00E+00	0.00E+00	0.00E+00	0.00E+00	0.00E+00	0.00E+00	0.00E+00	0.00E+00
2817	ALL	752088.42	4041460.7	4.41E-08	70YrCancerDerived_InhSoilI	4.41E-08	0.00E+00	0.00E+00	0.00E+00	0.00E+00	0.00E+00	0.00E+00	0.00E+00	0.00E+00	0.00E+00	0.00E+00	0.00E+00
2818	ALL	752188.42	4041460.7	4.37E-08	70YrCancerDerived_InhSoilI	4.37E-08	0.00E+00	0.00E+00	0.00E+00	0.00E+00	0.00E+00	0.00E+00	0.00E+00	0.00E+00	0.00E+00	0.00E+00	0.00E+00
2819	ALL	752288.42	4041460.7	4.32E-08	70YrCancerDerived_InhSoilI	4.32E-08	0.00E+00	0.00E+00	0.00E+00	0.00E+00	0.00E+00	0.00E+00	0.00E+00	0.00E+00	0.00E+00	0.00E+00	0.00E+00
2820	ALL	752388.42	4041460.7	4.28E-08	70YrCancerDerived_InhSoilI	4.28E-08	0.00E+00	0.00E+00	0.00E+00	0.00E+00	0.00E+00	0.00E+00	0.00E+00	0.00E+00	0.00E+00	0.00E+00	0.00E+00
2821	ALL	752488.42	4041460.7	4.23E-08	70YrCancerDerived_InhSoilI	4.23E-08	0.00E+00	0.00E+00	0.00E+00	0.00E+00	0.00E+00	0.00E+00	0.00E+00	0.00E+00	0.00E+00	0.00E+00	0.00E+00
2822	ALL	752588.42	4041460.7	4.19E-08	70YrCancerDerived_InhSoilI	4.19E-08	0.00E+00	0.00E+00	0.00E+00	0.00E+00	0.00E+00	0.00E+00	0.00E+00	0.00E+00	0.00E+00	0.00E+00	0.00E+00
2823	ALL	752688.42	4041460.7	4.15E-08	70YrCancerDerived_InhSoilI	4.15E-08	0.00E+00	0.00E+00	0.00E+00	0.00E+00	0.00E+00	0.00E+00	0.00E+00	0.00E+00	0.00E+00	0.00E+00	0.00E+00
2824	ALL	752788.42	4041460.7	4.11E-08	70YrCancerDerived_InhSoilI	4.11E-08	0.00E+00	0.00E+00	0.00E+00	0.00E+00	0.00E+00	0.00E+00	0.00E+00	0.00E+00	0.00E+00	0.00E+00	0.00E+00
2825	ALL	752888.42	4041460.7	4.07E-08	70YrCancerDerived_InhSoilI	4.07E-08	0.00E+00	0.00E+00	0.00E+00	0.00E+00	0.00E+00	0.00E+00	0.00E+00	0.00E+00	0.00E+00	0.00E+00	0.00E+00
2826	ALL	752988.42	4041460.7	4.03E-08	70YrCancerDerived_InhSoilI	4.03E-08	0.00E+00	0.00E+00	0.00E+00	0.00E+00	0.00E+00	0.00E+00	0.00E+00	0.00E+00	0.00E+00	0.00E+00	0.00E+00
2827	ALL	753088.42	4041460.7	3.99E-08	70YrCancerDerived_InhSoilI	3.99E-08	0.00E+00	0.00E+00	0.00E+00	0.00E+00	0.00E+00	0.00E+00	0.00E+00	0.00E+00	0.00E+00	0.00E+00	0.00E+00
2828	ALL	753188.42	4041460.7	3.95E-08	70YrCancerDerived_InhSoilI	3.95E-08	0.00E+00	0.00E+00	0.00E+00	0.00E+00	0.00E+00	0.00E+00	0.00E+00	0.00E+00	0.00E+00	0.00E+00	0.00E+00
2829	ALL	753288.42	4041460.7	3.92E-08	70YrCancerDerived_InhSoilI	3.92E-08	0.00E+00	0.00E+00	0.00E+00	0.00E+00	0.00E+00	0.00E+00	0.00E+00	0.00E+00	0.00E+00	0.00E+00	0.00E+00
2830	ALL	753388.42	4041460.7	3.89E-08	70YrCancerDerived_InhSoilI	3.89E-08	0.00E+00	0.00E+00	0.00E+00	0.00E+00	0.00E+00	0.00E+00	0.00E+00	0.00E+00	0.00E+00	0.00E+00	0.00E+00
2831	ALL	753488.42	4041460.7	3.85E-08	70YrCancerDerived_InhSoilI	3.85E-08	0.00E+00	0.00E+00	0.00E+00	0.00E+00	0.00E+00	0.00E+00	0.00E+00	0.00E+00	0.00E+00	0.00E+00	0.00E+00
2832	ALL	753588.42	4041460.7	3.82E-08	70YrCancerDerived_InhSoilI	3.82E-08	0.00E+00	0.00E+00	0.00E+00	0.00E+00	0.00E+00	0.00E+00	0.00E+00	0.00E+00	0.00E+00	0.00E+00	0.00E+00
2833	ALL	753688.42	4041460.7	3.79E-08	70YrCancerDerived_InhSoilI	3.79E-08	0.00E+00	0.00E+00	0.00E+00	0.00E+00	0.00E+00	0.00E+00	0.00E+00	0.00E+00	0.00E+00	0.00E+00	0.00E+00
2834	ALL	753788.42	4041460.7	3.76E-08	70YrCancerDerived_InhSoilI	3.76E-08	0.00E+00	0.00E+00	0.00E+00	0.00E+00	0.00E+00	0.00E+00	0.00E+00	0.00E+00	0.00E+00	0.00E+00	0.00E+00
2835	ALL	753888.42	4041460.7	3.73E-08	70YrCancerDerived_InhSoilI	3.73E-08	0.00E+00	0.00E+00	0.00E+00	0.00E+00	0.00E+00	0.00E+00	0.00E+00	0.00E+00	0.00E+00	0.00E+00	0.00E+00
2836	ALL	753988.42	4041460.7	3.70E-08	70YrCancerDerived_InhSoilI	3.70E-08	0.00E+00	0.00E+00	0.00E+00	0.00E+00	0.00E+00	0.00E+00	0.00E+00	0.00E+00	0.00E+00	0.00E+00	0.00E+00
2837	ALL	746288.42	4041560.7	1.06E-07	70YrCancerDerived_InhSoilI	1.06E-07	0.00E+00	0.00E+00	0.00E+00	0.00E+00	0.00E+00	0.00E+00	0.00E+00	0.00E+00	0.00E+00	0.00E+00	0.00E+00
2838	ALL	746388.42	4041560.7	1.11E-07	70YrCancerDerived_InhSoilI	1.11E-07	0.00E+00	0.00E+00	0.00E+00	0.00E+00	0.00E+00	0.00E+00	0.00E+00	0.00E+00	0.00E+00	0.00E+00	0.00E+00
2839	ALL	746488.42	4041560.7	1.16E-07	70YrCancerDerived_InhSoilI	1.16E-07	0.00E+00	0.00E+00	0.00E+00	0.00E+00	0.00E+00	0.00E+00	0.00E+00	0.00E+00	0.00E+00	0.00E+00	0.00E+00
2840	ALL	746588.42	4041560.7	1.22E-07	70YrCancerDerived_InhSoilI	1.22E-07	0.00E+00	0.00E+00	0.00E+00	0.00E+00	0.00E+00	0.00E+00	0.00E+00	0.00E+00	0.00E+00	0.00E+00	0.00E+00
2841	ALL	746688.42	4041560.7	1.27E-07	70YrCancerDerived_InhSoilI	1.27E-07	0.00E+00	0.00E+00	0.00E+00	0.00E+00	0.00E+00	0.00E+00	0.00E+00	0.00E+00	0.00E+00	0.00E+00	0.00E+00
2842	ALL	746788.42	4041560.7	1.31E-07	70YrCancerDerived_InhSoilI	1.31E-07	0.00E+00	0.00E+00	0.00E+00	0.00E+00	0.00E+00	0.00E+00	0.00E+00	0.00E+00	0.00E+00	0.00E+00	0.00E+00
2843	ALL	746888.42	4041560.7	1.35E-07	70YrCancerDerived_InhSoilI	1.35E-07	0.00E+00	0.00E+00	0.00E+00	0.00E+00	0.00E+00	0.00E+00	0.00E+00	0.00E+00	0.00E+00	0.00E+00	0.00E+00
2844	ALL	746988.42	4041560.7	1.37E-07	70YrCancerDerived_InhSoilI	1.37E-07	0.00E+00	0.00E+00	0.00E+00	0.00E+00	0.00E+00	0.00E+00	0.00E+00	0.00E+00	0.00E+00	0.00E+00	0.00E+00
2845	ALL	747088.42	4041560.7	1.36E-07	70YrCancerDerived_InhSoilI	1.36E-07	0.00E+00	0.00E+00	0.00E+00	0.00E+00	0.00E+00	0.00E+00	0.00E+00	0.00E+00	0.00E+00	0.00E+00	0.00E+00
2846	ALL	747188.42	4041560.7	1.34E-07	70YrCancerDerived_InhSoilI	1.34E-07	0.00E+00	0.00E+00	0.00E+00	0.00E+00	0.00E+00	0.00E+00	0.00E+00	0.00E+00	0.00E+00	0.00E+00	0.00E+00
2847	ALL	747288.42	4041560.7	1.30E-07	70YrCancerDerived_InhSoilI	1.30E-07	0.00E+00	0.00E+00	0.00E+00	0.00E+00	0.00E+00	0.00E+00	0.00E+00	0.00E+00	0.00E+00	0.00E+00	0.00E+00
2848	ALL	747388.42	4041560.7	1.24E-07	70YrCancerDerived_InhSoilI	1.24E-07	0.00E+00	0.00E+00	0.00E+00	0.00E+00	0.00E+00	0.00E+00	0.00E+00	0.00E+00	0.00E+00	0.00E+00	0.00E+00
2849	ALL	747488.42	4041560.7	1.17E-07	70YrCancerDerived_InhSoilI	1.17E-07	0.00E+00	0.00E+00	0.00E+00	0.00E+00	0.00E+00	0.00E+00	0.00E+00	0.00E+00	0.00E+00	0.00E+00	0.00E+00
2850	ALL	747588.42	4041560.7	1.09E-07	70YrCancerDerived_InhSoilI	1.09E-07	0.00E+00	0.00E+00	0.00E+00	0.00E+00	0.00E+00	0.00E+00	0.00E+00	0.00E+00	0.00E+00	0.00E+00	0.00E+00
2851	ALL	747688.42	4041560.7	1.01E-07	70YrCancerDerived_InhSoilI	1.01E-07	0.00E+00	0.00E+00	0.00E+00	0.00E+00	0.00E+00	0.00E+00	0.00E+00	0.00E+00	0.00E+00	0.00E+00	0.00E+00
2852	ALL	747788.42	4041560.7	9.36E-08	70YrCancerDerived_InhSoilI	9.36E-08	0.00E+00	0.00E+00	0.00E+00	0.00E+00	0.00E+00	0.00E+00	0.00E+00	0.00E+00	0.00E+00	0.00E+00	0.00E+00
2853	ALL	747888.42	4041560.7	8.76E-08	70YrCancerDerived_InhSoilI	8.76E-08	0.00E+00	0.00E+00	0.00E+00	0.00E+00	0.00E+00	0.00E+00	0.00E+00	0.00E+00	0.00E+00	0.00E+00	0.00E+00
2854	ALL	747988.42	4041560.7	8.29E-08	70YrCancerDerived_InhSoilI	8.29E-08	0.00E+00	0.00E+00	0.00E+00	0.00E+00	0.00E+00	0.00E+00	0.00E+00	0.00E+00	0.00E+00	0.00E+00	0.00E+00

2855	ALL	748088.42	4041560.7	7.89E-08	70YrCancerDerived_InhSoil[	7.89E-08	0.00E+00	0.00E+00	0.00E+00	0.00E+00	0.00E+00	0.00E+00	0.00E+00	0.00E+00	0.00E+00	0.00E+00	0.00E+00
2856	ALL	751388.42	4041560.7	4.51E-08	70YrCancerDerived_InhSoil[	4.51E-08	0.00E+00	0.00E+00	0.00E+00	0.00E+00	0.00E+00	0.00E+00	0.00E+00	0.00E+00	0.00E+00	0.00E+00	0.00E+00
2857	ALL	751488.42	4041560.7	4.47E-08	70YrCancerDerived_InhSoil[	4.47E-08	0.00E+00	0.00E+00	0.00E+00	0.00E+00	0.00E+00	0.00E+00	0.00E+00	0.00E+00	0.00E+00	0.00E+00	0.00E+00
2858	ALL	751588.42	4041560.7	4.44E-08	70YrCancerDerived_InhSoil[	4.44E-08	0.00E+00	0.00E+00	0.00E+00	0.00E+00	0.00E+00	0.00E+00	0.00E+00	0.00E+00	0.00E+00	0.00E+00	0.00E+00
2859	ALL	751688.42	4041560.7	4.40E-08	70YrCancerDerived_InhSoil[	4.40E-08	0.00E+00	0.00E+00	0.00E+00	0.00E+00	0.00E+00	0.00E+00	0.00E+00	0.00E+00	0.00E+00	0.00E+00	0.00E+00
2860	ALL	751788.42	4041560.7	4.36E-08	70YrCancerDerived_InhSoil[	4.36E-08	0.00E+00	0.00E+00	0.00E+00	0.00E+00	0.00E+00	0.00E+00	0.00E+00	0.00E+00	0.00E+00	0.00E+00	0.00E+00
2861	ALL	751888.42	4041560.7	4.32E-08	70YrCancerDerived_InhSoil[	4.32E-08	0.00E+00	0.00E+00	0.00E+00	0.00E+00	0.00E+00	0.00E+00	0.00E+00	0.00E+00	0.00E+00	0.00E+00	0.00E+00
2862	ALL	751988.42	4041560.7	4.28E-08	70YrCancerDerived_InhSoil[	4.28E-08	0.00E+00	0.00E+00	0.00E+00	0.00E+00	0.00E+00	0.00E+00	0.00E+00	0.00E+00	0.00E+00	0.00E+00	0.00E+00
2863	ALL	752088.42	4041560.7	4.24E-08	70YrCancerDerived_InhSoil[	4.24E-08	0.00E+00	0.00E+00	0.00E+00	0.00E+00	0.00E+00	0.00E+00	0.00E+00	0.00E+00	0.00E+00	0.00E+00	0.00E+00
2864	ALL	752188.42	4041560.7	4.21E-08	70YrCancerDerived_InhSoil[	4.21E-08	0.00E+00	0.00E+00	0.00E+00	0.00E+00	0.00E+00	0.00E+00	0.00E+00	0.00E+00	0.00E+00	0.00E+00	0.00E+00
2865	ALL	752288.42	4041560.7	4.17E-08	70YrCancerDerived_InhSoil[	4.17E-08	0.00E+00	0.00E+00	0.00E+00	0.00E+00	0.00E+00	0.00E+00	0.00E+00	0.00E+00	0.00E+00	0.00E+00	0.00E+00
2866	ALL	752388.42	4041560.7	4.12E-08	70YrCancerDerived_InhSoil[	4.12E-08	0.00E+00	0.00E+00	0.00E+00	0.00E+00	0.00E+00	0.00E+00	0.00E+00	0.00E+00	0.00E+00	0.00E+00	0.00E+00
2867	ALL	752488.42	4041560.7	4.08E-08	70YrCancerDerived_InhSoil[	4.08E-08	0.00E+00	0.00E+00	0.00E+00	0.00E+00	0.00E+00	0.00E+00	0.00E+00	0.00E+00	0.00E+00	0.00E+00	0.00E+00
2868	ALL	752588.42	4041560.7	4.04E-08	70YrCancerDerived_InhSoil[	4.04E-08	0.00E+00	0.00E+00	0.00E+00	0.00E+00	0.00E+00	0.00E+00	0.00E+00	0.00E+00	0.00E+00	0.00E+00	0.00E+00
2869	ALL	752688.42	4041560.7	4.00E-08	70YrCancerDerived_InhSoil[	4.00E-08	0.00E+00	0.00E+00	0.00E+00	0.00E+00	0.00E+00	0.00E+00	0.00E+00	0.00E+00	0.00E+00	0.00E+00	0.00E+00
2870	ALL	752788.42	4041560.7	3.96E-08	70YrCancerDerived_InhSoil[	3.96E-08	0.00E+00	0.00E+00	0.00E+00	0.00E+00	0.00E+00	0.00E+00	0.00E+00	0.00E+00	0.00E+00	0.00E+00	0.00E+00
2871	ALL	752888.42	4041560.7	3.92E-08	70YrCancerDerived_InhSoil[	3.92E-08	0.00E+00	0.00E+00	0.00E+00	0.00E+00	0.00E+00	0.00E+00	0.00E+00	0.00E+00	0.00E+00	0.00E+00	0.00E+00
2872	ALL	752988.42	4041560.7	3.88E-08	70YrCancerDerived_InhSoil[	3.88E-08	0.00E+00	0.00E+00	0.00E+00	0.00E+00	0.00E+00	0.00E+00	0.00E+00	0.00E+00	0.00E+00	0.00E+00	0.00E+00
2873	ALL	753088.42	4041560.7	3.85E-08	70YrCancerDerived_InhSoil[	3.85E-08	0.00E+00	0.00E+00	0.00E+00	0.00E+00	0.00E+00	0.00E+00	0.00E+00	0.00E+00	0.00E+00	0.00E+00	0.00E+00
2874	ALL	753188.42	4041560.7	3.82E-08	70YrCancerDerived_InhSoil[	3.82E-08	0.00E+00	0.00E+00	0.00E+00	0.00E+00	0.00E+00	0.00E+00	0.00E+00	0.00E+00	0.00E+00	0.00E+00	0.00E+00
2875	ALL	753288.42	4041560.7	3.79E-08	70YrCancerDerived_InhSoil[	3.79E-08	0.00E+00	0.00E+00	0.00E+00	0.00E+00	0.00E+00	0.00E+00	0.00E+00	0.00E+00	0.00E+00	0.00E+00	0.00E+00
2876	ALL	753388.42	4041560.7	3.75E-08	70YrCancerDerived_InhSoil[	3.75E-08	0.00E+00	0.00E+00	0.00E+00	0.00E+00	0.00E+00	0.00E+00	0.00E+00	0.00E+00	0.00E+00	0.00E+00	0.00E+00
2877	ALL	753488.42	4041560.7	3.73E-08	70YrCancerDerived_InhSoil[	3.73E-08	0.00E+00	0.00E+00	0.00E+00	0.00E+00	0.00E+00	0.00E+00	0.00E+00	0.00E+00	0.00E+00	0.00E+00	0.00E+00
2878	ALL	753588.42	4041560.7	3.70E-08	70YrCancerDerived_InhSoil[	3.70E-08	0.00E+00	0.00E+00	0.00E+00	0.00E+00	0.00E+00	0.00E+00	0.00E+00	0.00E+00	0.00E+00	0.00E+00	0.00E+00
2879	ALL	753688.42	4041560.7	3.67E-08	70YrCancerDerived_InhSoil[	3.67E-08	0.00E+00	0.00E+00	0.00E+00	0.00E+00	0.00E+00	0.00E+00	0.00E+00	0.00E+00	0.00E+00	0.00E+00	0.00E+00
2880	ALL	753788.42	4041560.7	3.64E-08	70YrCancerDerived_InhSoil[	3.64E-08	0.00E+00	0.00E+00	0.00E+00	0.00E+00	0.00E+00	0.00E+00	0.00E+00	0.00E+00	0.00E+00	0.00E+00	0.00E+00
2881	ALL	753888.42	4041560.7	3.61E-08	70YrCancerDerived_InhSoil[	3.61E-08	0.00E+00	0.00E+00	0.00E+00	0.00E+00	0.00E+00	0.00E+00	0.00E+00	0.00E+00	0.00E+00	0.00E+00	0.00E+00
2882	ALL	753988.42	4041560.7	3.58E-08	70YrCancerDerived_InhSoil[	3.58E-08	0.00E+00	0.00E+00	0.00E+00	0.00E+00	0.00E+00	0.00E+00	0.00E+00	0.00E+00	0.00E+00	0.00E+00	0.00E+00
2883	ALL	746288.42	4041660.7	1.06E-07	70YrCancerDerived_InhSoil[	1.06E-07	0.00E+00	0.00E+00	0.00E+00	0.00E+00	0.00E+00	0.00E+00	0.00E+00	0.00E+00	0.00E+00	0.00E+00	0.00E+00
2884	ALL	746388.42	4041660.7	1.11E-07	70YrCancerDerived_InhSoil[	1.11E-07	0.00E+00	0.00E+00	0.00E+00	0.00E+00	0.00E+00	0.00E+00	0.00E+00	0.00E+00	0.00E+00	0.00E+00	0.00E+00
2885	ALL	746488.42	4041660.7	1.15E-07	70YrCancerDerived_InhSoil[	1.15E-07	0.00E+00	0.00E+00	0.00E+00	0.00E+00	0.00E+00	0.00E+00	0.00E+00	0.00E+00	0.00E+00	0.00E+00	0.00E+00
2886	ALL	746588.42	4041660.7	1.20E-07	70YrCancerDerived_InhSoil[	1.20E-07	0.00E+00	0.00E+00	0.00E+00	0.00E+00	0.00E+00	0.00E+00	0.00E+00	0.00E+00	0.00E+00	0.00E+00	0.00E+00
2887	ALL	746688.42	4041660.7	1.23E-07	70YrCancerDerived_InhSoil[	1.23E-07	0.00E+00	0.00E+00	0.00E+00	0.00E+00	0.00E+00	0.00E+00	0.00E+00	0.00E+00	0.00E+00	0.00E+00	0.00E+00
2888	ALL	746788.42	4041660.7	1.26E-07	70YrCancerDerived_InhSoil[	1.26E-07	0.00E+00	0.00E+00	0.00E+00	0.00E+00	0.00E+00	0.00E+00	0.00E+00	0.00E+00	0.00E+00	0.00E+00	0.00E+00
2889	ALL	746888.42	4041660.7	1.27E-07	70YrCancerDerived_InhSoil[	1.27E-07	0.00E+00	0.00E+00	0.00E+00	0.00E+00	0.00E+00	0.00E+00	0.00E+00	0.00E+00	0.00E+00	0.00E+00	0.00E+00
2890	ALL	746988.42	4041660.7	1.26E-07	70YrCancerDerived_InhSoil[	1.26E-07	0.00E+00	0.00E+00	0.00E+00	0.00E+00	0.00E+00	0.00E+00	0.00E+00	0.00E+00	0.00E+00	0.00E+00	0.00E+00
2891	ALL	747088.42	4041660.7	1.24E-07	70YrCancerDerived_InhSoil[	1.24E-07	0.00E+00	0.00E+00	0.00E+00	0.00E+00	0.00E+00	0.00E+00	0.00E+00	0.00E+00	0.00E+00	0.00E+00	0.00E+00
2892	ALL	747188.42	4041660.7	1.20E-07	70YrCancerDerived_InhSoil[	1.20E-07	0.00E+00	0.00E+00	0.00E+00	0.00E+00	0.00E+00	0.00E+00	0.00E+00	0.00E+00	0.00E+00	0.00E+00	0.00E+00
2893	ALL	747288.42	4041660.7	1.16E-07	70YrCancerDerived_InhSoil[	1.16E-07	0.00E+00	0.00E+00	0.00E+00	0.00E+00	0.00E+00	0.00E+00	0.00E+00	0.00E+00	0.00E+00	0.00E+00	0.00E+00
2894	ALL	747388.42	4041660.7	1.10E-07	70YrCancerDerived_InhSoil[	1.10E-07	0.00E+00	0.00E+00	0.00E+00	0.00E+00	0.00E+00	0.00E+00	0.00E+00	0.00E+00	0.00E+00	0.00E+00	0.00E+00
2895	ALL	747488.42	4041660.7	1.04E-07	70YrCancerDerived_InhSoil[	1.04E-07	0.00E+00	0.00E+00	0.00E+00	0.00E+00	0.00E+00	0.00E+00	0.00E+00	0.00E+00	0.00E+00	0.00E+00	0.00E+00
2896	ALL	747588.42	4041660.7	9.68E-08	70YrCancerDerived_InhSoil[	9.68E-08	0.00E+00	0.00E+00	0.00E+00	0.00E+00	0.00E+00	0.00E+00	0.00E+00	0.00E+00	0.00E+00	0.00E+00	0.00E+00
2897	ALL	747688.42	4041660.7	9.01E-08	70YrCancerDerived_InhSoil[	9.01E-08	0.00E+00	0.00E+00	0.00E+00	0.00E+00	0.00E+00	0.00E+00	0.00E+00	0.00E+00	0.00E+00	0.00E+00	0.00E+00
2898	ALL	747788.42	4041660.7	8.46E-08	70YrCancerDerived_InhSoil[	8.46E-08	0.00E+00	0.00E+00	0.00E+00	0.00E+00	0.00E+00	0.00E+00	0.00E+00	0.00E+00	0.00E+00	0.00E+00	0.00E+00
2899	ALL	747888.42	4041660.7	8.02E-08	70YrCancerDerived_InhSoil[	8.02E-08	0.00E+00	0.00E+00	0.00E+00	0.00E+00	0.00E+00	0.00E+00	0.00E+00	0.00E+00	0.00E+00	0.00E+00	0.00E+00
2900	ALL	747988.42	4041660.7	7.68E-08	70YrCancerDerived_InhSoil[	7.68E-08	0.00E+00	0.00E+00	0.00E+00	0.00E+00	0.00E+00	0.00E+00	0.00E+00	0.00E+00	0.00E+00	0.00E+00	0.00E+00
2901	ALL	748088.42	4041660.7	7.34E-08	70YrCancerDerived_InhSoil[	7.34E-08	0.00E+00	0.00E+00	0.00E+00	0.00E+00	0.00E+00	0.00E+00	0.00E+00	0.00E+00	0.00E+00	0.00E+00	0.00E+00
2902	ALL	748188.42	4041660.7	6.97E-08	70YrCancerDerived_InhSoil[	6.97E-08	0.00E+00	0.00E+00	0.00E+00	0.00E+00	0.00E+00	0.00E+00	0.00E+00	0.00E+00	0.00E+00	0.00E+00	0.00E+00
2903	ALL	748288.42	4041660.7	6.59E-08	70YrCancerDerived_InhSoil[	6.59E-08	0.00E+00	0.00E+00	0.00E+00	0.00E+00	0.00E+00	0.00E+00	0.00E+00	0.00E+00	0.00E+00	0.00E+00	0.00E+00
2904	ALL	748388.42	4041660.7	6.23E-08	70YrCancerDerived_InhSoil[	6.23E-08	0.00E+00	0.00E+00	0.00E+00	0.00E+00	0.00E+00	0.00E+00	0.00E+00	0.00E+00	0.00E+00	0.00E+00	0.00E+00
2905	ALL	748488.42	4041660.7	5.90E-08	70YrCancerDerived_InhSoil[	5.90E-08	0.00E+00	0.00E+00	0.00E+00	0.00E+00	0.00E+00	0.00E+00	0.00E+00	0.00E+00	0.00E+00	0.00E+00	0.00E+00
2906	ALL	751388.42	4041660.7	4.33E-08	70YrCancerDerived_InhSoil[	4.33E-08	0.00E+00	0.00E+00	0.00E+00	0.00E+00	0.00E+00	0.00E+00	0.00E+00	0.00E+00	0.00E+00	0.00E+00	0.00E+00
2907	ALL	751488.42	4041660.7	4.30E-08	70YrCancerDerived_InhSoil[	4.30E-08	0.00E+00	0.00E+00	0.00E+00	0.00E+00	0.00E+00	0.00E+00	0.00E+00	0.00E+00	0.00E+00	0.00E+00	0.00E+00
2908	ALL	751588.42	4041660.7	4.27E-08	70YrCancerDerived_InhSoil[	4.27E-08	0.00E+00	0.00E+00	0.00E+00	0.00E+00	0.00E+00	0.00E+00	0.00E+00	0.00E+00	0.00E+00	0.00E+00	0.00E+00
2909	ALL	751688.42	4041660.7	4.23E-08	70YrCancerDerived_InhSoil[	4.23E-08	0.00E+00	0.00E+00	0.00E+00	0.00E+00	0.00E+00	0.00E+00	0.00E+00	0.00E+00	0.00E+00	0.00E+00	0.00E+00
2910	ALL	751788.42	4041660.7	4.20E-08	70YrCancerDerived_InhSoil[	4.20E-08	0.00E+00	0.00E+00	0.00E+00	0.00E+00	0.00E+00	0.00E+00	0.00E+00	0.00E+00	0.00E+00	0.00E+00	0.00E+00

2911	ALL	751888.42	4041660.7	4.16E-08	70YrCancerDerived_InhSoilI	4.16E-08	0.00E+00	0.00E+00	0.00E+00	0.00E+00	0.00E+00	0.00E+00	0.00E+00	0.00E+00	0.00E+00	0.00E+00	0.00E+00
2912	ALL	751988.42	4041660.7	4.13E-08	70YrCancerDerived_InhSoilI	4.13E-08	0.00E+00	0.00E+00	0.00E+00	0.00E+00	0.00E+00	0.00E+00	0.00E+00	0.00E+00	0.00E+00	0.00E+00	0.00E+00
2913	ALL	752088.42	4041660.7	4.09E-08	70YrCancerDerived_InhSoilI	4.09E-08	0.00E+00	0.00E+00	0.00E+00	0.00E+00	0.00E+00	0.00E+00	0.00E+00	0.00E+00	0.00E+00	0.00E+00	0.00E+00
2914	ALL	752188.42	4041660.7	4.06E-08	70YrCancerDerived_InhSoilI	4.06E-08	0.00E+00	0.00E+00	0.00E+00	0.00E+00	0.00E+00	0.00E+00	0.00E+00	0.00E+00	0.00E+00	0.00E+00	0.00E+00
2915	ALL	752288.42	4041660.7	4.02E-08	70YrCancerDerived_InhSoilI	4.02E-08	0.00E+00	0.00E+00	0.00E+00	0.00E+00	0.00E+00	0.00E+00	0.00E+00	0.00E+00	0.00E+00	0.00E+00	0.00E+00
2916	ALL	752388.42	4041660.7	3.98E-08	70YrCancerDerived_InhSoilI	3.98E-08	0.00E+00	0.00E+00	0.00E+00	0.00E+00	0.00E+00	0.00E+00	0.00E+00	0.00E+00	0.00E+00	0.00E+00	0.00E+00
2917	ALL	752488.42	4041660.7	3.95E-08	70YrCancerDerived_InhSoilI	3.95E-08	0.00E+00	0.00E+00	0.00E+00	0.00E+00	0.00E+00	0.00E+00	0.00E+00	0.00E+00	0.00E+00	0.00E+00	0.00E+00
2918	ALL	752588.42	4041660.7	3.91E-08	70YrCancerDerived_InhSoilI	3.91E-08	0.00E+00	0.00E+00	0.00E+00	0.00E+00	0.00E+00	0.00E+00	0.00E+00	0.00E+00	0.00E+00	0.00E+00	0.00E+00
2919	ALL	752688.42	4041660.7	3.87E-08	70YrCancerDerived_InhSoilI	3.87E-08	0.00E+00	0.00E+00	0.00E+00	0.00E+00	0.00E+00	0.00E+00	0.00E+00	0.00E+00	0.00E+00	0.00E+00	0.00E+00
2920	ALL	752788.42	4041660.7	3.83E-08	70YrCancerDerived_InhSoilI	3.83E-08	0.00E+00	0.00E+00	0.00E+00	0.00E+00	0.00E+00	0.00E+00	0.00E+00	0.00E+00	0.00E+00	0.00E+00	0.00E+00
2921	ALL	752888.42	4041660.7	3.80E-08	70YrCancerDerived_InhSoilI	3.80E-08	0.00E+00	0.00E+00	0.00E+00	0.00E+00	0.00E+00	0.00E+00	0.00E+00	0.00E+00	0.00E+00	0.00E+00	0.00E+00
2922	ALL	752988.42	4041660.7	3.76E-08	70YrCancerDerived_InhSoilI	3.76E-08	0.00E+00	0.00E+00	0.00E+00	0.00E+00	0.00E+00	0.00E+00	0.00E+00	0.00E+00	0.00E+00	0.00E+00	0.00E+00
2923	ALL	753088.42	4041660.7	3.72E-08	70YrCancerDerived_InhSoilI	3.72E-08	0.00E+00	0.00E+00	0.00E+00	0.00E+00	0.00E+00	0.00E+00	0.00E+00	0.00E+00	0.00E+00	0.00E+00	0.00E+00
2924	ALL	753188.42	4041660.7	3.69E-08	70YrCancerDerived_InhSoilI	3.69E-08	0.00E+00	0.00E+00	0.00E+00	0.00E+00	0.00E+00	0.00E+00	0.00E+00	0.00E+00	0.00E+00	0.00E+00	0.00E+00
2925	ALL	753288.42	4041660.7	3.66E-08	70YrCancerDerived_InhSoilI	3.66E-08	0.00E+00	0.00E+00	0.00E+00	0.00E+00	0.00E+00	0.00E+00	0.00E+00	0.00E+00	0.00E+00	0.00E+00	0.00E+00
2926	ALL	753388.42	4041660.7	3.63E-08	70YrCancerDerived_InhSoilI	3.63E-08	0.00E+00	0.00E+00	0.00E+00	0.00E+00	0.00E+00	0.00E+00	0.00E+00	0.00E+00	0.00E+00	0.00E+00	0.00E+00
2927	ALL	753488.42	4041660.7	3.61E-08	70YrCancerDerived_InhSoilI	3.61E-08	0.00E+00	0.00E+00	0.00E+00	0.00E+00	0.00E+00	0.00E+00	0.00E+00	0.00E+00	0.00E+00	0.00E+00	0.00E+00
2928	ALL	753588.42	4041660.7	3.58E-08	70YrCancerDerived_InhSoilI	3.58E-08	0.00E+00	0.00E+00	0.00E+00	0.00E+00	0.00E+00	0.00E+00	0.00E+00	0.00E+00	0.00E+00	0.00E+00	0.00E+00
2929	ALL	753688.42	4041660.7	3.55E-08	70YrCancerDerived_InhSoilI	3.55E-08	0.00E+00	0.00E+00	0.00E+00	0.00E+00	0.00E+00	0.00E+00	0.00E+00	0.00E+00	0.00E+00	0.00E+00	0.00E+00
2930	ALL	753788.42	4041660.7	3.53E-08	70YrCancerDerived_InhSoilI	3.53E-08	0.00E+00	0.00E+00	0.00E+00	0.00E+00	0.00E+00	0.00E+00	0.00E+00	0.00E+00	0.00E+00	0.00E+00	0.00E+00
2931	ALL	753888.42	4041660.7	3.50E-08	70YrCancerDerived_InhSoilI	3.50E-08	0.00E+00	0.00E+00	0.00E+00	0.00E+00	0.00E+00	0.00E+00	0.00E+00	0.00E+00	0.00E+00	0.00E+00	0.00E+00
2932	ALL	753988.42	4041660.7	3.47E-08	70YrCancerDerived_InhSoilI	3.47E-08	0.00E+00	0.00E+00	0.00E+00	0.00E+00	0.00E+00	0.00E+00	0.00E+00	0.00E+00	0.00E+00	0.00E+00	0.00E+00
2933	ALL	746288.42	4041760.7	1.06E-07	70YrCancerDerived_InhSoilI	1.06E-07	0.00E+00	0.00E+00	0.00E+00	0.00E+00	0.00E+00	0.00E+00	0.00E+00	0.00E+00	0.00E+00	0.00E+00	0.00E+00
2934	ALL	746388.42	4041760.7	1.09E-07	70YrCancerDerived_InhSoilI	1.09E-07	0.00E+00	0.00E+00	0.00E+00	0.00E+00	0.00E+00	0.00E+00	0.00E+00	0.00E+00	0.00E+00	0.00E+00	0.00E+00
2935	ALL	746488.42	4041760.7	1.13E-07	70YrCancerDerived_InhSoilI	1.13E-07	0.00E+00	0.00E+00	0.00E+00	0.00E+00	0.00E+00	0.00E+00	0.00E+00	0.00E+00	0.00E+00	0.00E+00	0.00E+00
2936	ALL	746588.42	4041760.7	1.16E-07	70YrCancerDerived_InhSoilI	1.16E-07	0.00E+00	0.00E+00	0.00E+00	0.00E+00	0.00E+00	0.00E+00	0.00E+00	0.00E+00	0.00E+00	0.00E+00	0.00E+00
2937	ALL	746688.42	4041760.7	1.18E-07	70YrCancerDerived_InhSoilI	1.18E-07	0.00E+00	0.00E+00	0.00E+00	0.00E+00	0.00E+00	0.00E+00	0.00E+00	0.00E+00	0.00E+00	0.00E+00	0.00E+00
2938	ALL	746788.42	4041760.7	1.19E-07	70YrCancerDerived_InhSoilI	1.19E-07	0.00E+00	0.00E+00	0.00E+00	0.00E+00	0.00E+00	0.00E+00	0.00E+00	0.00E+00	0.00E+00	0.00E+00	0.00E+00
2939	ALL	746888.42	4041760.7	1.18E-07	70YrCancerDerived_InhSoilI	1.18E-07	0.00E+00	0.00E+00	0.00E+00	0.00E+00	0.00E+00	0.00E+00	0.00E+00	0.00E+00	0.00E+00	0.00E+00	0.00E+00
2940	ALL	746988.42	4041760.7	1.16E-07	70YrCancerDerived_InhSoilI	1.16E-07	0.00E+00	0.00E+00	0.00E+00	0.00E+00	0.00E+00	0.00E+00	0.00E+00	0.00E+00	0.00E+00	0.00E+00	0.00E+00
2941	ALL	747088.42	4041760.7	1.13E-07	70YrCancerDerived_InhSoilI	1.13E-07	0.00E+00	0.00E+00	0.00E+00	0.00E+00	0.00E+00	0.00E+00	0.00E+00	0.00E+00	0.00E+00	0.00E+00	0.00E+00
2942	ALL	747188.42	4041760.7	1.09E-07	70YrCancerDerived_InhSoilI	1.09E-07	0.00E+00	0.00E+00	0.00E+00	0.00E+00	0.00E+00	0.00E+00	0.00E+00	0.00E+00	0.00E+00	0.00E+00	0.00E+00
2943	ALL	747288.42	4041760.7	1.04E-07	70YrCancerDerived_InhSoilI	1.04E-07	0.00E+00	0.00E+00	0.00E+00	0.00E+00	0.00E+00	0.00E+00	0.00E+00	0.00E+00	0.00E+00	0.00E+00	0.00E+00
2944	ALL	747388.42	4041760.7	9.85E-08	70YrCancerDerived_InhSoilI	9.85E-08	0.00E+00	0.00E+00	0.00E+00	0.00E+00	0.00E+00	0.00E+00	0.00E+00	0.00E+00	0.00E+00	0.00E+00	0.00E+00
2945	ALL	747488.42	4041760.7	9.28E-08	70YrCancerDerived_InhSoilI	9.28E-08	0.00E+00	0.00E+00	0.00E+00	0.00E+00	0.00E+00	0.00E+00	0.00E+00	0.00E+00	0.00E+00	0.00E+00	0.00E+00
2946	ALL	747588.42	4041760.7	8.69E-08	70YrCancerDerived_InhSoilI	8.69E-08	0.00E+00	0.00E+00	0.00E+00	0.00E+00	0.00E+00	0.00E+00	0.00E+00	0.00E+00	0.00E+00	0.00E+00	0.00E+00
2947	ALL	747688.42	4041760.7	8.19E-08	70YrCancerDerived_InhSoilI	8.19E-08	0.00E+00	0.00E+00	0.00E+00	0.00E+00	0.00E+00	0.00E+00	0.00E+00	0.00E+00	0.00E+00	0.00E+00	0.00E+00
2948	ALL	747788.42	4041760.7	7.77E-08	70YrCancerDerived_InhSoilI	7.77E-08	0.00E+00	0.00E+00	0.00E+00	0.00E+00	0.00E+00	0.00E+00	0.00E+00	0.00E+00	0.00E+00	0.00E+00	0.00E+00
2949	ALL	747888.42	4041760.7	7.45E-08	70YrCancerDerived_InhSoilI	7.45E-08	0.00E+00	0.00E+00	0.00E+00	0.00E+00	0.00E+00	0.00E+00	0.00E+00	0.00E+00	0.00E+00	0.00E+00	0.00E+00
2950	ALL	747988.42	4041760.7	7.18E-08	70YrCancerDerived_InhSoilI	7.18E-08	0.00E+00	0.00E+00	0.00E+00	0.00E+00	0.00E+00	0.00E+00	0.00E+00	0.00E+00	0.00E+00	0.00E+00	0.00E+00
2951	ALL	748088.42	4041760.7	6.89E-08	70YrCancerDerived_InhSoilI	6.89E-08	0.00E+00	0.00E+00	0.00E+00	0.00E+00	0.00E+00	0.00E+00	0.00E+00	0.00E+00	0.00E+00	0.00E+00	0.00E+00
2952	ALL	748188.42	4041760.7	6.56E-08	70YrCancerDerived_InhSoilI	6.56E-08	0.00E+00	0.00E+00	0.00E+00	0.00E+00	0.00E+00	0.00E+00	0.00E+00	0.00E+00	0.00E+00	0.00E+00	0.00E+00
2953	ALL	748288.42	4041760.7	6.22E-08	70YrCancerDerived_InhSoilI	6.22E-08	0.00E+00	0.00E+00	0.00E+00	0.00E+00	0.00E+00	0.00E+00	0.00E+00	0.00E+00	0.00E+00	0.00E+00	0.00E+00
2954	ALL	748388.42	4041760.7	5.91E-08	70YrCancerDerived_InhSoilI	5.91E-08	0.00E+00	0.00E+00	0.00E+00	0.00E+00	0.00E+00	0.00E+00	0.00E+00	0.00E+00	0.00E+00	0.00E+00	0.00E+00
2955	ALL	748488.42	4041760.7	5.62E-08	70YrCancerDerived_InhSoilI	5.62E-08	0.00E+00	0.00E+00	0.00E+00	0.00E+00	0.00E+00	0.00E+00	0.00E+00	0.00E+00	0.00E+00	0.00E+00	0.00E+00
2956	ALL	753588.42	4041760.7	3.48E-08	70YrCancerDerived_InhSoilI	3.48E-08	0.00E+00	0.00E+00	0.00E+00	0.00E+00	0.00E+00	0.00E+00	0.00E+00	0.00E+00	0.00E+00	0.00E+00	0.00E+00
2957	ALL	753688.42	4041760.7	3.45E-08	70YrCancerDerived_InhSoilI	3.45E-08	0.00E+00	0.00E+00	0.00E+00	0.00E+00	0.00E+00	0.00E+00	0.00E+00	0.00E+00	0.00E+00	0.00E+00	0.00E+00
2958	ALL	753788.42	4041760.7	3.43E-08	70YrCancerDerived_InhSoilI	3.43E-08	0.00E+00	0.00E+00	0.00E+00	0.00E+00	0.00E+00	0.00E+00	0.00E+00	0.00E+00	0.00E+00	0.00E+00	0.00E+00
2959	ALL	753888.42	4041760.7	3.40E-08	70YrCancerDerived_InhSoilI	3.40E-08	0.00E+00	0.00E+00	0.00E+00	0.00E+00	0.00E+00	0.00E+00	0.00E+00	0.00E+00	0.00E+00	0.00E+00	0.00E+00
2960	ALL	753988.42	4041760.7	3.38E-08	70YrCancerDerived_InhSoilI	3.38E-08	0.00E+00	0.00E+00	0.00E+00	0.00E+00	0.00E+00	0.00E+00	0.00E+00	0.00E+00	0.00E+00	0.00E+00	0.00E+00
2961	ALL	746288.42	4041860.7	1.04E-07	70YrCancerDerived_InhSoilI	1.04E-07	0.00E+00	0.00E+00	0.00E+00	0.00E+00	0.00E+00	0.00E+00	0.00E+00	0.00E+00	0.00E+00	0.00E+00	0.00E+00
2962	ALL	746388.42	4041860.7	1.07E-07	70YrCancerDerived_InhSoilI	1.07E-07	0.00E+00	0.00E+00	0.00E+00	0.00E+00	0.00E+00	0.00E+00	0.00E+00	0.00E+00	0.00E+00	0.00E+00	0.00E+00
2963	ALL	746488.42	4041860.7	1.10E-07	70YrCancerDerived_InhSoilI	1.10E-07	0.00E+00	0.00E+00	0.00E+00	0.00E+00	0.00E+00	0.00E+00	0.00E+00	0.00E+00	0.00E+00	0.00E+00	0.00E+00
2964	ALL	746588.42	4041860.7	1.11E-07	70YrCancerDerived_InhSoilI	1.11E-07	0.00E+00	0.00E+00	0.00E+00	0.00E+00	0.00E+00	0.00E+00	0.00E+00	0.00E+00	0.00E+00	0.00E+00	0.00E+00
2965	ALL	746688.42	4041860.7	1.11E-07	70YrCancerDerived_InhSoilI	1.11E-07	0.00E+00	0.00E+00	0.00E+00	0.00E+00	0.00E+00	0.00E+00	0.00E+00	0.00E+00	0.00E+00	0.00E+00	0.00E+00
2966	ALL	746788.42	4041860.7	1.10E-07	70YrCancerDerived_InhSoilI	1.10E-07	0.00E+00	0.00E+00	0.00E+00	0.00E+00	0.00E+00	0.00E+00	0.00E+00	0.00E+00	0.00E+00	0.00E+00	0.00E+00

2967	ALL	746888.42	4041860.7	1.08E-07	70YrCancerDerived_InhSoilI	1.08E-07	0.00E+00	0.00E+00	0.00E+00	0.00E+00	0.00E+00	0.00E+00	0.00E+00	0.00E+00	0.00E+00	0.00E+00	0.00E+00
2968	ALL	746988.42	4041860.7	1.06E-07	70YrCancerDerived_InhSoilI	1.06E-07	0.00E+00	0.00E+00	0.00E+00	0.00E+00	0.00E+00	0.00E+00	0.00E+00	0.00E+00	0.00E+00	0.00E+00	0.00E+00
2969	ALL	747088.42	4041860.7	1.02E-07	70YrCancerDerived_InhSoilI	1.02E-07	0.00E+00	0.00E+00	0.00E+00	0.00E+00	0.00E+00	0.00E+00	0.00E+00	0.00E+00	0.00E+00	0.00E+00	0.00E+00
2970	ALL	747188.42	4041860.7	9.83E-08	70YrCancerDerived_InhSoilI	9.83E-08	0.00E+00	0.00E+00	0.00E+00	0.00E+00	0.00E+00	0.00E+00	0.00E+00	0.00E+00	0.00E+00	0.00E+00	0.00E+00
2971	ALL	747288.42	4041860.7	9.37E-08	70YrCancerDerived_InhSoilI	9.37E-08	0.00E+00	0.00E+00	0.00E+00	0.00E+00	0.00E+00	0.00E+00	0.00E+00	0.00E+00	0.00E+00	0.00E+00	0.00E+00
2972	ALL	747388.42	4041860.7	8.88E-08	70YrCancerDerived_InhSoilI	8.88E-08	0.00E+00	0.00E+00	0.00E+00	0.00E+00	0.00E+00	0.00E+00	0.00E+00	0.00E+00	0.00E+00	0.00E+00	0.00E+00
2973	ALL	747488.42	4041860.7	8.39E-08	70YrCancerDerived_InhSoilI	8.39E-08	0.00E+00	0.00E+00	0.00E+00	0.00E+00	0.00E+00	0.00E+00	0.00E+00	0.00E+00	0.00E+00	0.00E+00	0.00E+00
2974	ALL	747588.42	4041860.7	7.92E-08	70YrCancerDerived_InhSoilI	7.92E-08	0.00E+00	0.00E+00	0.00E+00	0.00E+00	0.00E+00	0.00E+00	0.00E+00	0.00E+00	0.00E+00	0.00E+00	0.00E+00
2975	ALL	747688.42	4041860.7	7.53E-08	70YrCancerDerived_InhSoilI	7.53E-08	0.00E+00	0.00E+00	0.00E+00	0.00E+00	0.00E+00	0.00E+00	0.00E+00	0.00E+00	0.00E+00	0.00E+00	0.00E+00
2976	ALL	747788.42	4041860.7	7.22E-08	70YrCancerDerived_InhSoilI	7.22E-08	0.00E+00	0.00E+00	0.00E+00	0.00E+00	0.00E+00	0.00E+00	0.00E+00	0.00E+00	0.00E+00	0.00E+00	0.00E+00
2977	ALL	747888.42	4041860.7	6.98E-08	70YrCancerDerived_InhSoilI	6.98E-08	0.00E+00	0.00E+00	0.00E+00	0.00E+00	0.00E+00	0.00E+00	0.00E+00	0.00E+00	0.00E+00	0.00E+00	0.00E+00
2978	ALL	747988.42	4041860.7	6.76E-08	70YrCancerDerived_InhSoilI	6.76E-08	0.00E+00	0.00E+00	0.00E+00	0.00E+00	0.00E+00	0.00E+00	0.00E+00	0.00E+00	0.00E+00	0.00E+00	0.00E+00
2979	ALL	748088.42	4041860.7	6.50E-08	70YrCancerDerived_InhSoilI	6.50E-08	0.00E+00	0.00E+00	0.00E+00	0.00E+00	0.00E+00	0.00E+00	0.00E+00	0.00E+00	0.00E+00	0.00E+00	0.00E+00
2980	ALL	748188.42	4041860.7	6.20E-08	70YrCancerDerived_InhSoilI	6.20E-08	0.00E+00	0.00E+00	0.00E+00	0.00E+00	0.00E+00	0.00E+00	0.00E+00	0.00E+00	0.00E+00	0.00E+00	0.00E+00
2981	ALL	748288.42	4041860.7	5.91E-08	70YrCancerDerived_InhSoilI	5.91E-08	0.00E+00	0.00E+00	0.00E+00	0.00E+00	0.00E+00	0.00E+00	0.00E+00	0.00E+00	0.00E+00	0.00E+00	0.00E+00
2982	ALL	748388.42	4041860.7	5.63E-08	70YrCancerDerived_InhSoilI	5.63E-08	0.00E+00	0.00E+00	0.00E+00	0.00E+00	0.00E+00	0.00E+00	0.00E+00	0.00E+00	0.00E+00	0.00E+00	0.00E+00
2983	ALL	748488.42	4041860.7	5.37E-08	70YrCancerDerived_InhSoilI	5.37E-08	0.00E+00	0.00E+00	0.00E+00	0.00E+00	0.00E+00	0.00E+00	0.00E+00	0.00E+00	0.00E+00	0.00E+00	0.00E+00
2984	ALL	753488.42	4041860.7	3.40E-08	70YrCancerDerived_InhSoilI	3.40E-08	0.00E+00	0.00E+00	0.00E+00	0.00E+00	0.00E+00	0.00E+00	0.00E+00	0.00E+00	0.00E+00	0.00E+00	0.00E+00
2985	ALL	753588.42	4041860.7	3.38E-08	70YrCancerDerived_InhSoilI	3.38E-08	0.00E+00	0.00E+00	0.00E+00	0.00E+00	0.00E+00	0.00E+00	0.00E+00	0.00E+00	0.00E+00	0.00E+00	0.00E+00
2986	ALL	753688.42	4041860.7	3.36E-08	70YrCancerDerived_InhSoilI	3.36E-08	0.00E+00	0.00E+00	0.00E+00	0.00E+00	0.00E+00	0.00E+00	0.00E+00	0.00E+00	0.00E+00	0.00E+00	0.00E+00
2987	ALL	753788.42	4041860.7	3.34E-08	70YrCancerDerived_InhSoilI	3.34E-08	0.00E+00	0.00E+00	0.00E+00	0.00E+00	0.00E+00	0.00E+00	0.00E+00	0.00E+00	0.00E+00	0.00E+00	0.00E+00
2988	ALL	753888.42	4041860.7	3.31E-08	70YrCancerDerived_InhSoilI	3.31E-08	0.00E+00	0.00E+00	0.00E+00	0.00E+00	0.00E+00	0.00E+00	0.00E+00	0.00E+00	0.00E+00	0.00E+00	0.00E+00
2989	ALL	753988.42	4041860.7	3.29E-08	70YrCancerDerived_InhSoilI	3.29E-08	0.00E+00	0.00E+00	0.00E+00	0.00E+00	0.00E+00	0.00E+00	0.00E+00	0.00E+00	0.00E+00	0.00E+00	0.00E+00
2990	ALL	748188.42	4041960.7	5.89E-08	70YrCancerDerived_InhSoilI	5.89E-08	0.00E+00	0.00E+00	0.00E+00	0.00E+00	0.00E+00	0.00E+00	0.00E+00	0.00E+00	0.00E+00	0.00E+00	0.00E+00
2991	ALL	748288.42	4041960.7	5.64E-08	70YrCancerDerived_InhSoilI	5.64E-08	0.00E+00	0.00E+00	0.00E+00	0.00E+00	0.00E+00	0.00E+00	0.00E+00	0.00E+00	0.00E+00	0.00E+00	0.00E+00
2992	ALL	748388.42	4041960.7	5.38E-08	70YrCancerDerived_InhSoilI	5.38E-08	0.00E+00	0.00E+00	0.00E+00	0.00E+00	0.00E+00	0.00E+00	0.00E+00	0.00E+00	0.00E+00	0.00E+00	0.00E+00
2993	ALL	748488.42	4041960.7	5.14E-08	70YrCancerDerived_InhSoilI	5.14E-08	0.00E+00	0.00E+00	0.00E+00	0.00E+00	0.00E+00	0.00E+00	0.00E+00	0.00E+00	0.00E+00	0.00E+00	0.00E+00
2994	ALL	753488.42	4041960.7	3.32E-08	70YrCancerDerived_InhSoilI	3.32E-08	0.00E+00	0.00E+00	0.00E+00	0.00E+00	0.00E+00	0.00E+00	0.00E+00	0.00E+00	0.00E+00	0.00E+00	0.00E+00
2995	ALL	753588.42	4041960.7	3.30E-08	70YrCancerDerived_InhSoilI	3.30E-08	0.00E+00	0.00E+00	0.00E+00	0.00E+00	0.00E+00	0.00E+00	0.00E+00	0.00E+00	0.00E+00	0.00E+00	0.00E+00
2996	ALL	753688.42	4041960.7	3.27E-08	70YrCancerDerived_InhSoilI	3.27E-08	0.00E+00	0.00E+00	0.00E+00	0.00E+00	0.00E+00	0.00E+00	0.00E+00	0.00E+00	0.00E+00	0.00E+00	0.00E+00
2997	ALL	753788.42	4041960.7	3.25E-08	70YrCancerDerived_InhSoilI	3.25E-08	0.00E+00	0.00E+00	0.00E+00	0.00E+00	0.00E+00	0.00E+00	0.00E+00	0.00E+00	0.00E+00	0.00E+00	0.00E+00
2998	ALL	753888.42	4041960.7	3.23E-08	70YrCancerDerived_InhSoilI	3.23E-08	0.00E+00	0.00E+00	0.00E+00	0.00E+00	0.00E+00	0.00E+00	0.00E+00	0.00E+00	0.00E+00	0.00E+00	0.00E+00
2999	ALL	753988.42	4041960.7	3.20E-08	70YrCancerDerived_InhSoilI	3.20E-08	0.00E+00	0.00E+00	0.00E+00	0.00E+00	0.00E+00	0.00E+00	0.00E+00	0.00E+00	0.00E+00	0.00E+00	0.00E+00
3000	ALL	748188.42	4042060.7	5.61E-08	70YrCancerDerived_InhSoilI	5.61E-08	0.00E+00	0.00E+00	0.00E+00	0.00E+00	0.00E+00	0.00E+00	0.00E+00	0.00E+00	0.00E+00	0.00E+00	0.00E+00
3001	ALL	748288.42	4042060.7	5.38E-08	70YrCancerDerived_InhSoilI	5.38E-08	0.00E+00	0.00E+00	0.00E+00	0.00E+00	0.00E+00	0.00E+00	0.00E+00	0.00E+00	0.00E+00	0.00E+00	0.00E+00
3002	ALL	748388.42	4042060.7	5.15E-08	70YrCancerDerived_InhSoilI	5.15E-08	0.00E+00	0.00E+00	0.00E+00	0.00E+00	0.00E+00	0.00E+00	0.00E+00	0.00E+00	0.00E+00	0.00E+00	0.00E+00
3003	ALL	748488.42	4042060.7	4.93E-08	70YrCancerDerived_InhSoilI	4.93E-08	0.00E+00	0.00E+00	0.00E+00	0.00E+00	0.00E+00	0.00E+00	0.00E+00	0.00E+00	0.00E+00	0.00E+00	0.00E+00
3004	ALL	753488.42	4042060.7	3.24E-08	70YrCancerDerived_InhSoilI	3.24E-08	0.00E+00	0.00E+00	0.00E+00	0.00E+00	0.00E+00	0.00E+00	0.00E+00	0.00E+00	0.00E+00	0.00E+00	0.00E+00
3005	ALL	753588.42	4042060.7	3.22E-08	70YrCancerDerived_InhSoilI	3.22E-08	0.00E+00	0.00E+00	0.00E+00	0.00E+00	0.00E+00	0.00E+00	0.00E+00	0.00E+00	0.00E+00	0.00E+00	0.00E+00
3006	ALL	753688.42	4042060.7	3.20E-08	70YrCancerDerived_InhSoilI	3.20E-08	0.00E+00	0.00E+00	0.00E+00	0.00E+00	0.00E+00	0.00E+00	0.00E+00	0.00E+00	0.00E+00	0.00E+00	0.00E+00
3007	ALL	753788.42	4042060.7	3.17E-08	70YrCancerDerived_InhSoilI	3.17E-08	0.00E+00	0.00E+00	0.00E+00	0.00E+00	0.00E+00	0.00E+00	0.00E+00	0.00E+00	0.00E+00	0.00E+00	0.00E+00
3008	ALL	753888.42	4042060.7	3.15E-08	70YrCancerDerived_InhSoilI	3.15E-08	0.00E+00	0.00E+00	0.00E+00	0.00E+00	0.00E+00	0.00E+00	0.00E+00	0.00E+00	0.00E+00	0.00E+00	0.00E+00
3009	ALL	753988.42	4042060.7	3.13E-08	70YrCancerDerived_InhSoilI	3.13E-08	0.00E+00	0.00E+00	0.00E+00	0.00E+00	0.00E+00	0.00E+00	0.00E+00	0.00E+00	0.00E+00	0.00E+00	0.00E+00
3010	ALL	748188.42	4042160.7	5.36E-08	70YrCancerDerived_InhSoilI	5.36E-08	0.00E+00	0.00E+00	0.00E+00	0.00E+00	0.00E+00	0.00E+00	0.00E+00	0.00E+00	0.00E+00	0.00E+00	0.00E+00
3011	ALL	748288.42	4042160.7	5.16E-08	70YrCancerDerived_InhSoilI	5.16E-08	0.00E+00	0.00E+00	0.00E+00	0.00E+00	0.00E+00	0.00E+00	0.00E+00	0.00E+00	0.00E+00	0.00E+00	0.00E+00
3012	ALL	748388.42	4042160.7	4.95E-08	70YrCancerDerived_InhSoilI	4.95E-08	0.00E+00	0.00E+00	0.00E+00	0.00E+00	0.00E+00	0.00E+00	0.00E+00	0.00E+00	0.00E+00	0.00E+00	0.00E+00
3013	ALL	748488.42	4042160.7	4.74E-08	70YrCancerDerived_InhSoilI	4.74E-08	0.00E+00	0.00E+00	0.00E+00	0.00E+00	0.00E+00	0.00E+00	0.00E+00	0.00E+00	0.00E+00	0.00E+00	0.00E+00
3014	ALL	753488.42	4042160.7	3.16E-08	70YrCancerDerived_InhSoilI	3.16E-08	0.00E+00	0.00E+00	0.00E+00	0.00E+00	0.00E+00	0.00E+00	0.00E+00	0.00E+00	0.00E+00	0.00E+00	0.00E+00
3015	ALL	753588.42	4042160.7	3.14E-08	70YrCancerDerived_InhSoilI	3.14E-08	0.00E+00	0.00E+00	0.00E+00	0.00E+00	0.00E+00	0.00E+00	0.00E+00	0.00E+00	0.00E+00	0.00E+00	0.00E+00
3016	ALL	753688.42	4042160.7	3.12E-08	70YrCancerDerived_InhSoilI	3.12E-08	0.00E+00	0.00E+00	0.00E+00	0.00E+00	0.00E+00	0.00E+00	0.00E+00	0.00E+00	0.00E+00	0.00E+00	0.00E+00
3017	ALL	753788.42	4042160.7	3.10E-08	70YrCancerDerived_InhSoilI	3.10E-08	0.00E+00	0.00E+00	0.00E+00	0.00E+00	0.00E+00	0.00E+00	0.00E+00	0.00E+00	0.00E+00	0.00E+00	0.00E+00
3018	ALL	753888.42	4042160.7	3.08E-08	70YrCancerDerived_InhSoilI	3.08E-08	0.00E+00	0.00E+00	0.00E+00	0.00E+00	0.00E+00	0.00E+00	0.00E+00	0.00E+00	0.00E+00	0.00E+00	0.00E+00
3019	ALL	753988.42	4042160.7	3.06E-08	70YrCancerDerived_InhSoilI	3.06E-08	0.00E+00	0.00E+00	0.00E+00	0.00E+00	0.00E+00	0.00E+00	0.00E+00	0.00E+00	0.00E+00	0.00E+00	0.00E+00
3020	ALL	748188.42	4042260.7	5.14E-08	70YrCancerDerived_InhSoilI	5.14E-08	0.00E+00	0.00E+00	0.00E+00	0.00E+00	0.00E+00	0.00E+00	0.00E+00	0.00E+00	0.00E+00	0.00E+00	0.00E+00
3021	ALL	748288.42	4042260.7	4.95E-08	70YrCancerDerived_InhSoilI	4.95E-08	0.00E+00	0.00E+00	0.00E+00	0.00E+00	0.00E+00	0.00E+00	0.00E+00	0.00E+00	0.00E+00	0.00E+00	0.00E+00
3022	ALL	748388.42	4042260.7	4.76E-08	70YrCancerDerived_InhSoilI	4.76E-08	0.00E+00	0.00E+00	0.00E+00	0.00E+00	0.00E+00	0.00E+00	0.00E+00	0.00E+00	0.00E+00	0.00E+00	0.00E+00

3023	ALL	748488.42	4042260.7	4.57E-08	70YrCancerDerived_InhSoilI	4.57E-08	0.00E+00	0.00E+00	0.00E+00	0.00E+00	0.00E+00	0.00E+00	0.00E+00	0.00E+00	0.00E+00	0.00E+00	0.00E+00
3024	ALL	753488.42	4042260.7	3.09E-08	70YrCancerDerived_InhSoilI	3.09E-08	0.00E+00	0.00E+00	0.00E+00	0.00E+00	0.00E+00	0.00E+00	0.00E+00	0.00E+00	0.00E+00	0.00E+00	0.00E+00
3025	ALL	753588.42	4042260.7	3.07E-08	70YrCancerDerived_InhSoilI	3.07E-08	0.00E+00	0.00E+00	0.00E+00	0.00E+00	0.00E+00	0.00E+00	0.00E+00	0.00E+00	0.00E+00	0.00E+00	0.00E+00
3026	ALL	753688.42	4042260.7	3.05E-08	70YrCancerDerived_InhSoilI	3.05E-08	0.00E+00	0.00E+00	0.00E+00	0.00E+00	0.00E+00	0.00E+00	0.00E+00	0.00E+00	0.00E+00	0.00E+00	0.00E+00
3027	ALL	753788.42	4042260.7	3.03E-08	70YrCancerDerived_InhSoilI	3.03E-08	0.00E+00	0.00E+00	0.00E+00	0.00E+00	0.00E+00	0.00E+00	0.00E+00	0.00E+00	0.00E+00	0.00E+00	0.00E+00
3028	ALL	753888.42	4042260.7	3.01E-08	70YrCancerDerived_InhSoilI	3.01E-08	0.00E+00	0.00E+00	0.00E+00	0.00E+00	0.00E+00	0.00E+00	0.00E+00	0.00E+00	0.00E+00	0.00E+00	0.00E+00
3029	ALL	753988.42	4042260.7	3.00E-08	70YrCancerDerived_InhSoilI	3.00E-08	0.00E+00	0.00E+00	0.00E+00	0.00E+00	0.00E+00	0.00E+00	0.00E+00	0.00E+00	0.00E+00	0.00E+00	0.00E+00
3030	ALL	748188.42	4042360.7	4.94E-08	70YrCancerDerived_InhSoilI	4.94E-08	0.00E+00	0.00E+00	0.00E+00	0.00E+00	0.00E+00	0.00E+00	0.00E+00	0.00E+00	0.00E+00	0.00E+00	0.00E+00
3031	ALL	748288.42	4042360.7	4.76E-08	70YrCancerDerived_InhSoilI	4.76E-08	0.00E+00	0.00E+00	0.00E+00	0.00E+00	0.00E+00	0.00E+00	0.00E+00	0.00E+00	0.00E+00	0.00E+00	0.00E+00
3032	ALL	748388.42	4042360.7	4.58E-08	70YrCancerDerived_InhSoilI	4.58E-08	0.00E+00	0.00E+00	0.00E+00	0.00E+00	0.00E+00	0.00E+00	0.00E+00	0.00E+00	0.00E+00	0.00E+00	0.00E+00
3033	ALL	748488.42	4042360.7	4.41E-08	70YrCancerDerived_InhSoilI	4.41E-08	0.00E+00	0.00E+00	0.00E+00	0.00E+00	0.00E+00	0.00E+00	0.00E+00	0.00E+00	0.00E+00	0.00E+00	0.00E+00
3034	ALL	753488.42	4042360.7	3.02E-08	70YrCancerDerived_InhSoilI	3.02E-08	0.00E+00	0.00E+00	0.00E+00	0.00E+00	0.00E+00	0.00E+00	0.00E+00	0.00E+00	0.00E+00	0.00E+00	0.00E+00
3035	ALL	753588.42	4042360.7	3.01E-08	70YrCancerDerived_InhSoilI	3.01E-08	0.00E+00	0.00E+00	0.00E+00	0.00E+00	0.00E+00	0.00E+00	0.00E+00	0.00E+00	0.00E+00	0.00E+00	0.00E+00
3036	ALL	753688.42	4042360.7	2.99E-08	70YrCancerDerived_InhSoilI	2.99E-08	0.00E+00	0.00E+00	0.00E+00	0.00E+00	0.00E+00	0.00E+00	0.00E+00	0.00E+00	0.00E+00	0.00E+00	0.00E+00
3037	ALL	753788.42	4042360.7	2.97E-08	70YrCancerDerived_InhSoilI	2.97E-08	0.00E+00	0.00E+00	0.00E+00	0.00E+00	0.00E+00	0.00E+00	0.00E+00	0.00E+00	0.00E+00	0.00E+00	0.00E+00
3038	ALL	753888.42	4042360.7	2.95E-08	70YrCancerDerived_InhSoilI	2.95E-08	0.00E+00	0.00E+00	0.00E+00	0.00E+00	0.00E+00	0.00E+00	0.00E+00	0.00E+00	0.00E+00	0.00E+00	0.00E+00
3039	ALL	753988.42	4042360.7	2.93E-08	70YrCancerDerived_InhSoilI	2.93E-08	0.00E+00	0.00E+00	0.00E+00	0.00E+00	0.00E+00	0.00E+00	0.00E+00	0.00E+00	0.00E+00	0.00E+00	0.00E+00
3040	ALL	748188.42	4042460.7	4.76E-08	70YrCancerDerived_InhSoilI	4.76E-08	0.00E+00	0.00E+00	0.00E+00	0.00E+00	0.00E+00	0.00E+00	0.00E+00	0.00E+00	0.00E+00	0.00E+00	0.00E+00
3041	ALL	748288.42	4042460.7	4.59E-08	70YrCancerDerived_InhSoilI	4.59E-08	0.00E+00	0.00E+00	0.00E+00	0.00E+00	0.00E+00	0.00E+00	0.00E+00	0.00E+00	0.00E+00	0.00E+00	0.00E+00
3042	ALL	748388.42	4042460.7	4.43E-08	70YrCancerDerived_InhSoilI	4.43E-08	0.00E+00	0.00E+00	0.00E+00	0.00E+00	0.00E+00	0.00E+00	0.00E+00	0.00E+00	0.00E+00	0.00E+00	0.00E+00
3043	ALL	748488.42	4042460.7	4.27E-08	70YrCancerDerived_InhSoilI	4.27E-08	0.00E+00	0.00E+00	0.00E+00	0.00E+00	0.00E+00	0.00E+00	0.00E+00	0.00E+00	0.00E+00	0.00E+00	0.00E+00
3044	ALL	753488.42	4042460.7	2.95E-08	70YrCancerDerived_InhSoilI	2.95E-08	0.00E+00	0.00E+00	0.00E+00	0.00E+00	0.00E+00	0.00E+00	0.00E+00	0.00E+00	0.00E+00	0.00E+00	0.00E+00
3045	ALL	753588.42	4042460.7	2.94E-08	70YrCancerDerived_InhSoilI	2.94E-08	0.00E+00	0.00E+00	0.00E+00	0.00E+00	0.00E+00	0.00E+00	0.00E+00	0.00E+00	0.00E+00	0.00E+00	0.00E+00
3046	ALL	753688.42	4042460.7	2.92E-08	70YrCancerDerived_InhSoilI	2.92E-08	0.00E+00	0.00E+00	0.00E+00	0.00E+00	0.00E+00	0.00E+00	0.00E+00	0.00E+00	0.00E+00	0.00E+00	0.00E+00
3047	ALL	753788.42	4042460.7	2.91E-08	70YrCancerDerived_InhSoilI	2.91E-08	0.00E+00	0.00E+00	0.00E+00	0.00E+00	0.00E+00	0.00E+00	0.00E+00	0.00E+00	0.00E+00	0.00E+00	0.00E+00
3048	ALL	753888.42	4042460.7	2.89E-08	70YrCancerDerived_InhSoilI	2.89E-08	0.00E+00	0.00E+00	0.00E+00	0.00E+00	0.00E+00	0.00E+00	0.00E+00	0.00E+00	0.00E+00	0.00E+00	0.00E+00
3049	ALL	753988.42	4042460.7	2.87E-08	70YrCancerDerived_InhSoilI	2.87E-08	0.00E+00	0.00E+00	0.00E+00	0.00E+00	0.00E+00	0.00E+00	0.00E+00	0.00E+00	0.00E+00	0.00E+00	0.00E+00
3050	ALL	748188.42	4042560.7	4.59E-08	70YrCancerDerived_InhSoilI	4.59E-08	0.00E+00	0.00E+00	0.00E+00	0.00E+00	0.00E+00	0.00E+00	0.00E+00	0.00E+00	0.00E+00	0.00E+00	0.00E+00
3051	ALL	748288.42	4042560.7	4.44E-08	70YrCancerDerived_InhSoilI	4.44E-08	0.00E+00	0.00E+00	0.00E+00	0.00E+00	0.00E+00	0.00E+00	0.00E+00	0.00E+00	0.00E+00	0.00E+00	0.00E+00
3052	ALL	748388.42	4042560.7	4.28E-08	70YrCancerDerived_InhSoilI	4.28E-08	0.00E+00	0.00E+00	0.00E+00	0.00E+00	0.00E+00	0.00E+00	0.00E+00	0.00E+00	0.00E+00	0.00E+00	0.00E+00
3053	ALL	748488.42	4042560.7	4.13E-08	70YrCancerDerived_InhSoilI	4.13E-08	0.00E+00	0.00E+00	0.00E+00	0.00E+00	0.00E+00	0.00E+00	0.00E+00	0.00E+00	0.00E+00	0.00E+00	0.00E+00
3054	ALL	753488.42	4042560.7	2.89E-08	70YrCancerDerived_InhSoilI	2.89E-08	0.00E+00	0.00E+00	0.00E+00	0.00E+00	0.00E+00	0.00E+00	0.00E+00	0.00E+00	0.00E+00	0.00E+00	0.00E+00
3055	ALL	753588.42	4042560.7	2.87E-08	70YrCancerDerived_InhSoilI	2.87E-08	0.00E+00	0.00E+00	0.00E+00	0.00E+00	0.00E+00	0.00E+00	0.00E+00	0.00E+00	0.00E+00	0.00E+00	0.00E+00
3056	ALL	753688.42	4042560.7	2.86E-08	70YrCancerDerived_InhSoilI	2.86E-08	0.00E+00	0.00E+00	0.00E+00	0.00E+00	0.00E+00	0.00E+00	0.00E+00	0.00E+00	0.00E+00	0.00E+00	0.00E+00
3057	ALL	753788.42	4042560.7	2.84E-08	70YrCancerDerived_InhSoilI	2.84E-08	0.00E+00	0.00E+00	0.00E+00	0.00E+00	0.00E+00	0.00E+00	0.00E+00	0.00E+00	0.00E+00	0.00E+00	0.00E+00
3058	ALL	753888.42	4042560.7	2.83E-08	70YrCancerDerived_InhSoilI	2.83E-08	0.00E+00	0.00E+00	0.00E+00	0.00E+00	0.00E+00	0.00E+00	0.00E+00	0.00E+00	0.00E+00	0.00E+00	0.00E+00
3059	ALL	753988.42	4042560.7	2.81E-08	70YrCancerDerived_InhSoilI	2.81E-08	0.00E+00	0.00E+00	0.00E+00	0.00E+00	0.00E+00	0.00E+00	0.00E+00	0.00E+00	0.00E+00	0.00E+00	0.00E+00
3060	ALL	748188.42	4042660.7	4.43E-08	70YrCancerDerived_InhSoilI	4.43E-08	0.00E+00	0.00E+00	0.00E+00	0.00E+00	0.00E+00	0.00E+00	0.00E+00	0.00E+00	0.00E+00	0.00E+00	0.00E+00
3061	ALL	748288.42	4042660.7	4.29E-08	70YrCancerDerived_InhSoilI	4.29E-08	0.00E+00	0.00E+00	0.00E+00	0.00E+00	0.00E+00	0.00E+00	0.00E+00	0.00E+00	0.00E+00	0.00E+00	0.00E+00
3062	ALL	748388.42	4042660.7	4.15E-08	70YrCancerDerived_InhSoilI	4.15E-08	0.00E+00	0.00E+00	0.00E+00	0.00E+00	0.00E+00	0.00E+00	0.00E+00	0.00E+00	0.00E+00	0.00E+00	0.00E+00
3063	ALL	748488.42	4042660.7	4.01E-08	70YrCancerDerived_InhSoilI	4.01E-08	0.00E+00	0.00E+00	0.00E+00	0.00E+00	0.00E+00	0.00E+00	0.00E+00	0.00E+00	0.00E+00	0.00E+00	0.00E+00
3064	ALL	753488.42	4042660.7	2.83E-08	70YrCancerDerived_InhSoilI	2.83E-08	0.00E+00	0.00E+00	0.00E+00	0.00E+00	0.00E+00	0.00E+00	0.00E+00	0.00E+00	0.00E+00	0.00E+00	0.00E+00
3065	ALL	753588.42	4042660.7	2.81E-08	70YrCancerDerived_InhSoilI	2.81E-08	0.00E+00	0.00E+00	0.00E+00	0.00E+00	0.00E+00	0.00E+00	0.00E+00	0.00E+00	0.00E+00	0.00E+00	0.00E+00
3066	ALL	753688.42	4042660.7	2.79E-08	70YrCancerDerived_InhSoilI	2.79E-08	0.00E+00	0.00E+00	0.00E+00	0.00E+00	0.00E+00	0.00E+00	0.00E+00	0.00E+00	0.00E+00	0.00E+00	0.00E+00
3067	ALL	753788.42	4042660.7	2.78E-08	70YrCancerDerived_InhSoilI	2.78E-08	0.00E+00	0.00E+00	0.00E+00	0.00E+00	0.00E+00	0.00E+00	0.00E+00	0.00E+00	0.00E+00	0.00E+00	0.00E+00
3068	ALL	753888.42	4042660.7	2.76E-08	70YrCancerDerived_InhSoilI	2.76E-08	0.00E+00	0.00E+00	0.00E+00	0.00E+00	0.00E+00	0.00E+00	0.00E+00	0.00E+00	0.00E+00	0.00E+00	0.00E+00
3069	ALL	753988.42	4042660.7	2.75E-08	70YrCancerDerived_InhSoilI	2.75E-08	0.00E+00	0.00E+00	0.00E+00	0.00E+00	0.00E+00	0.00E+00	0.00E+00	0.00E+00	0.00E+00	0.00E+00	0.00E+00
3070	ALL	748188.42	4042760.7	4.29E-08	70YrCancerDerived_InhSoilI	4.29E-08	0.00E+00	0.00E+00	0.00E+00	0.00E+00	0.00E+00	0.00E+00	0.00E+00	0.00E+00	0.00E+00	0.00E+00	0.00E+00
3071	ALL	748288.42	4042760.7	4.16E-08	70YrCancerDerived_InhSoilI	4.16E-08	0.00E+00	0.00E+00	0.00E+00	0.00E+00	0.00E+00	0.00E+00	0.00E+00	0.00E+00	0.00E+00	0.00E+00	0.00E+00
3072	ALL	748388.42	4042760.7	4.02E-08	70YrCancerDerived_InhSoilI	4.02E-08	0.00E+00	0.00E+00	0.00E+00	0.00E+00	0.00E+00	0.00E+00	0.00E+00	0.00E+00	0.00E+00	0.00E+00	0.00E+00
3073	ALL	748488.42	4042760.7	3.89E-08	70YrCancerDerived_InhSoilI	3.89E-08	0.00E+00	0.00E+00	0.00E+00	0.00E+00	0.00E+00	0.00E+00	0.00E+00	0.00E+00	0.00E+00	0.00E+00	0.00E+00
3074	ALL	753488.42	4042760.7	2.77E-08	70YrCancerDerived_InhSoilI	2.77E-08	0.00E+00	0.00E+00	0.00E+00	0.00E+00	0.00E+00	0.00E+00	0.00E+00	0.00E+00	0.00E+00	0.00E+00	0.00E+00
3075	ALL	753588.42	4042760.7	2.75E-08	70YrCancerDerived_InhSoilI	2.75E-08	0.00E+00	0.00E+00	0.00E+00	0.00E+00	0.00E+00	0.00E+00	0.00E+00	0.00E+00	0.00E+00	0.00E+00	0.00E+00
3076	ALL	753688.42	4042760.7	2.74E-08	70YrCancerDerived_InhSoilI	2.74E-08	0.00E+00	0.00E+00	0.00E+00	0.00E+00	0.00E+00	0.00E+00	0.00E+00	0.00E+00	0.00E+00	0.00E+00	0.00E+00
3077	ALL	753788.42	4042760.7	2.72E-08	70YrCancerDerived_InhSoilI	2.72E-08	0.00E+00	0.00E+00	0.00E+00	0.00E+00	0.00E+00	0.00E+00	0.00E+00	0.00E+00	0.00E+00	0.00E+00	0.00E+00
3078	ALL	753888.42	4042760.7	2.71E-08	70YrCancerDerived_InhSoilI	2.71E-08	0.00E+00	0.00E+00	0.00E+00	0.00E+00	0.00E+00	0.00E+00	0.00E+00	0.00E+00	0.00E+00	0.00E+00	0.00E+00

3079	ALL	753988.42	4042760.7	2.69E-08	70YrCancerDerived_InhSoil[	2.69E-08	0.00E+00	0.00E+00	0.00E+00	0.00E+00	0.00E+00	0.00E+00	0.00E+00	0.00E+00	0.00E+00	0.00E+00	0.00E+00
3080	ALL	748188.42	4042860.7	4.16E-08	70YrCancerDerived_InhSoil[	4.16E-08	0.00E+00	0.00E+00	0.00E+00	0.00E+00	0.00E+00	0.00E+00	0.00E+00	0.00E+00	0.00E+00	0.00E+00	0.00E+00
3081	ALL	748288.42	4042860.7	4.03E-08	70YrCancerDerived_InhSoil[	4.03E-08	0.00E+00	0.00E+00	0.00E+00	0.00E+00	0.00E+00	0.00E+00	0.00E+00	0.00E+00	0.00E+00	0.00E+00	0.00E+00
3082	ALL	748388.42	4042860.7	3.91E-08	70YrCancerDerived_InhSoil[	3.91E-08	0.00E+00	0.00E+00	0.00E+00	0.00E+00	0.00E+00	0.00E+00	0.00E+00	0.00E+00	0.00E+00	0.00E+00	0.00E+00
3083	ALL	748488.42	4042860.7	3.78E-08	70YrCancerDerived_InhSoil[	3.78E-08	0.00E+00	0.00E+00	0.00E+00	0.00E+00	0.00E+00	0.00E+00	0.00E+00	0.00E+00	0.00E+00	0.00E+00	0.00E+00
3084	ALL	753488.42	4042860.7	2.72E-08	70YrCancerDerived_InhSoil[	2.72E-08	0.00E+00	0.00E+00	0.00E+00	0.00E+00	0.00E+00	0.00E+00	0.00E+00	0.00E+00	0.00E+00	0.00E+00	0.00E+00
3085	ALL	753588.42	4042860.7	2.70E-08	70YrCancerDerived_InhSoil[	2.70E-08	0.00E+00	0.00E+00	0.00E+00	0.00E+00	0.00E+00	0.00E+00	0.00E+00	0.00E+00	0.00E+00	0.00E+00	0.00E+00
3086	ALL	753688.42	4042860.7	2.69E-08	70YrCancerDerived_InhSoil[	2.69E-08	0.00E+00	0.00E+00	0.00E+00	0.00E+00	0.00E+00	0.00E+00	0.00E+00	0.00E+00	0.00E+00	0.00E+00	0.00E+00
3087	ALL	753788.42	4042860.7	2.67E-08	70YrCancerDerived_InhSoil[	2.67E-08	0.00E+00	0.00E+00	0.00E+00	0.00E+00	0.00E+00	0.00E+00	0.00E+00	0.00E+00	0.00E+00	0.00E+00	0.00E+00
3088	ALL	753888.42	4042860.7	2.66E-08	70YrCancerDerived_InhSoil[	2.66E-08	0.00E+00	0.00E+00	0.00E+00	0.00E+00	0.00E+00	0.00E+00	0.00E+00	0.00E+00	0.00E+00	0.00E+00	0.00E+00
3089	ALL	753988.42	4042860.7	2.64E-08	70YrCancerDerived_InhSoil[	2.64E-08	0.00E+00	0.00E+00	0.00E+00	0.00E+00	0.00E+00	0.00E+00	0.00E+00	0.00E+00	0.00E+00	0.00E+00	0.00E+00
3090	ALL	748188.42	4042960.7	4.04E-08	70YrCancerDerived_InhSoil[	4.04E-08	0.00E+00	0.00E+00	0.00E+00	0.00E+00	0.00E+00	0.00E+00	0.00E+00	0.00E+00	0.00E+00	0.00E+00	0.00E+00
3091	ALL	748288.42	4042960.7	3.92E-08	70YrCancerDerived_InhSoil[	3.92E-08	0.00E+00	0.00E+00	0.00E+00	0.00E+00	0.00E+00	0.00E+00	0.00E+00	0.00E+00	0.00E+00	0.00E+00	0.00E+00
3092	ALL	748388.42	4042960.7	3.80E-08	70YrCancerDerived_InhSoil[	3.80E-08	0.00E+00	0.00E+00	0.00E+00	0.00E+00	0.00E+00	0.00E+00	0.00E+00	0.00E+00	0.00E+00	0.00E+00	0.00E+00
3093	ALL	748488.42	4042960.7	3.68E-08	70YrCancerDerived_InhSoil[	3.68E-08	0.00E+00	0.00E+00	0.00E+00	0.00E+00	0.00E+00	0.00E+00	0.00E+00	0.00E+00	0.00E+00	0.00E+00	0.00E+00
3094	ALL	753488.42	4042960.7	2.68E-08	70YrCancerDerived_InhSoil[	2.68E-08	0.00E+00	0.00E+00	0.00E+00	0.00E+00	0.00E+00	0.00E+00	0.00E+00	0.00E+00	0.00E+00	0.00E+00	0.00E+00
3095	ALL	753588.42	4042960.7	2.66E-08	70YrCancerDerived_InhSoil[	2.66E-08	0.00E+00	0.00E+00	0.00E+00	0.00E+00	0.00E+00	0.00E+00	0.00E+00	0.00E+00	0.00E+00	0.00E+00	0.00E+00
3096	ALL	753688.42	4042960.7	2.64E-08	70YrCancerDerived_InhSoil[	2.64E-08	0.00E+00	0.00E+00	0.00E+00	0.00E+00	0.00E+00	0.00E+00	0.00E+00	0.00E+00	0.00E+00	0.00E+00	0.00E+00
3097	ALL	753788.42	4042960.7	2.62E-08	70YrCancerDerived_InhSoil[	2.62E-08	0.00E+00	0.00E+00	0.00E+00	0.00E+00	0.00E+00	0.00E+00	0.00E+00	0.00E+00	0.00E+00	0.00E+00	0.00E+00
3098	ALL	753888.42	4042960.7	2.61E-08	70YrCancerDerived_InhSoil[	2.61E-08	0.00E+00	0.00E+00	0.00E+00	0.00E+00	0.00E+00	0.00E+00	0.00E+00	0.00E+00	0.00E+00	0.00E+00	0.00E+00
3099	ALL	753988.42	4042960.7	2.59E-08	70YrCancerDerived_InhSoil[	2.59E-08	0.00E+00	0.00E+00	0.00E+00	0.00E+00	0.00E+00	0.00E+00	0.00E+00	0.00E+00	0.00E+00	0.00E+00	0.00E+00
3100	ALL	748188.42	4043060.7	3.92E-08	70YrCancerDerived_InhSoil[	3.92E-08	0.00E+00	0.00E+00	0.00E+00	0.00E+00	0.00E+00	0.00E+00	0.00E+00	0.00E+00	0.00E+00	0.00E+00	0.00E+00
3101	ALL	748288.42	4043060.7	3.81E-08	70YrCancerDerived_InhSoil[	3.81E-08	0.00E+00	0.00E+00	0.00E+00	0.00E+00	0.00E+00	0.00E+00	0.00E+00	0.00E+00	0.00E+00	0.00E+00	0.00E+00
3102	ALL	748388.42	4043060.7	3.70E-08	70YrCancerDerived_InhSoil[	3.70E-08	0.00E+00	0.00E+00	0.00E+00	0.00E+00	0.00E+00	0.00E+00	0.00E+00	0.00E+00	0.00E+00	0.00E+00	0.00E+00
3103	ALL	748488.42	4043060.7	3.59E-08	70YrCancerDerived_InhSoil[	3.59E-08	0.00E+00	0.00E+00	0.00E+00	0.00E+00	0.00E+00	0.00E+00	0.00E+00	0.00E+00	0.00E+00	0.00E+00	0.00E+00
3104	ALL	753488.42	4043060.7	2.64E-08	70YrCancerDerived_InhSoil[	2.64E-08	0.00E+00	0.00E+00	0.00E+00	0.00E+00	0.00E+00	0.00E+00	0.00E+00	0.00E+00	0.00E+00	0.00E+00	0.00E+00
3105	ALL	753588.42	4043060.7	2.62E-08	70YrCancerDerived_InhSoil[	2.62E-08	0.00E+00	0.00E+00	0.00E+00	0.00E+00	0.00E+00	0.00E+00	0.00E+00	0.00E+00	0.00E+00	0.00E+00	0.00E+00
3106	ALL	753688.42	4043060.7	2.60E-08	70YrCancerDerived_InhSoil[	2.60E-08	0.00E+00	0.00E+00	0.00E+00	0.00E+00	0.00E+00	0.00E+00	0.00E+00	0.00E+00	0.00E+00	0.00E+00	0.00E+00
3107	ALL	753788.42	4043060.7	2.58E-08	70YrCancerDerived_InhSoil[	2.58E-08	0.00E+00	0.00E+00	0.00E+00	0.00E+00	0.00E+00	0.00E+00	0.00E+00	0.00E+00	0.00E+00	0.00E+00	0.00E+00
3108	ALL	753888.42	4043060.7	2.56E-08	70YrCancerDerived_InhSoil[	2.56E-08	0.00E+00	0.00E+00	0.00E+00	0.00E+00	0.00E+00	0.00E+00	0.00E+00	0.00E+00	0.00E+00	0.00E+00	0.00E+00
3109	ALL	753988.42	4043060.7	2.55E-08	70YrCancerDerived_InhSoil[	2.55E-08	0.00E+00	0.00E+00	0.00E+00	0.00E+00	0.00E+00	0.00E+00	0.00E+00	0.00E+00	0.00E+00	0.00E+00	0.00E+00
3110	ALL	748188.42	4043160.7	3.82E-08	70YrCancerDerived_InhSoil[	3.82E-08	0.00E+00	0.00E+00	0.00E+00	0.00E+00	0.00E+00	0.00E+00	0.00E+00	0.00E+00	0.00E+00	0.00E+00	0.00E+00
3111	ALL	748288.42	4043160.7	3.72E-08	70YrCancerDerived_InhSoil[	3.72E-08	0.00E+00	0.00E+00	0.00E+00	0.00E+00	0.00E+00	0.00E+00	0.00E+00	0.00E+00	0.00E+00	0.00E+00	0.00E+00
3112	ALL	748388.42	4043160.7	3.61E-08	70YrCancerDerived_InhSoil[	3.61E-08	0.00E+00	0.00E+00	0.00E+00	0.00E+00	0.00E+00	0.00E+00	0.00E+00	0.00E+00	0.00E+00	0.00E+00	0.00E+00
3113	ALL	748488.42	4043160.7	3.51E-08	70YrCancerDerived_InhSoil[	3.51E-08	0.00E+00	0.00E+00	0.00E+00	0.00E+00	0.00E+00	0.00E+00	0.00E+00	0.00E+00	0.00E+00	0.00E+00	0.00E+00
3114	ALL	753488.42	4043160.7	2.61E-08	70YrCancerDerived_InhSoil[	2.61E-08	0.00E+00	0.00E+00	0.00E+00	0.00E+00	0.00E+00	0.00E+00	0.00E+00	0.00E+00	0.00E+00	0.00E+00	0.00E+00
3115	ALL	753588.42	4043160.7	2.59E-08	70YrCancerDerived_InhSoil[	2.59E-08	0.00E+00	0.00E+00	0.00E+00	0.00E+00	0.00E+00	0.00E+00	0.00E+00	0.00E+00	0.00E+00	0.00E+00	0.00E+00
3116	ALL	753688.42	4043160.7	2.57E-08	70YrCancerDerived_InhSoil[	2.57E-08	0.00E+00	0.00E+00	0.00E+00	0.00E+00	0.00E+00	0.00E+00	0.00E+00	0.00E+00	0.00E+00	0.00E+00	0.00E+00
3117	ALL	753788.42	4043160.7	2.55E-08	70YrCancerDerived_InhSoil[	2.55E-08	0.00E+00	0.00E+00	0.00E+00	0.00E+00	0.00E+00	0.00E+00	0.00E+00	0.00E+00	0.00E+00	0.00E+00	0.00E+00
3118	ALL	753888.42	4043160.7	2.53E-08	70YrCancerDerived_InhSoil[	2.53E-08	0.00E+00	0.00E+00	0.00E+00	0.00E+00	0.00E+00	0.00E+00	0.00E+00	0.00E+00	0.00E+00	0.00E+00	0.00E+00
3119	ALL	753988.42	4043160.7	2.51E-08	70YrCancerDerived_InhSoil[	2.51E-08	0.00E+00	0.00E+00	0.00E+00	0.00E+00	0.00E+00	0.00E+00	0.00E+00	0.00E+00	0.00E+00	0.00E+00	0.00E+00
3120	ALL	748188.42	4043260.7	3.72E-08	70YrCancerDerived_InhSoil[	3.72E-08	0.00E+00	0.00E+00	0.00E+00	0.00E+00	0.00E+00	0.00E+00	0.00E+00	0.00E+00	0.00E+00	0.00E+00	0.00E+00
3121	ALL	748288.42	4043260.7	3.62E-08	70YrCancerDerived_InhSoil[	3.62E-08	0.00E+00	0.00E+00	0.00E+00	0.00E+00	0.00E+00	0.00E+00	0.00E+00	0.00E+00	0.00E+00	0.00E+00	0.00E+00
3122	ALL	748388.42	4043260.7	3.52E-08	70YrCancerDerived_InhSoil[	3.52E-08	0.00E+00	0.00E+00	0.00E+00	0.00E+00	0.00E+00	0.00E+00	0.00E+00	0.00E+00	0.00E+00	0.00E+00	0.00E+00
3123	ALL	748488.42	4043260.7	3.42E-08	70YrCancerDerived_InhSoil[	3.42E-08	0.00E+00	0.00E+00	0.00E+00	0.00E+00	0.00E+00	0.00E+00	0.00E+00	0.00E+00	0.00E+00	0.00E+00	0.00E+00
3124	ALL	753488.42	4043260.7	2.57E-08	70YrCancerDerived_InhSoil[	2.57E-08	0.00E+00	0.00E+00	0.00E+00	0.00E+00	0.00E+00	0.00E+00	0.00E+00	0.00E+00	0.00E+00	0.00E+00	0.00E+00
3125	ALL	753588.42	4043260.7	2.55E-08	70YrCancerDerived_InhSoil[	2.55E-08	0.00E+00	0.00E+00	0.00E+00	0.00E+00	0.00E+00	0.00E+00	0.00E+00	0.00E+00	0.00E+00	0.00E+00	0.00E+00
3126	ALL	753688.42	4043260.7	2.53E-08	70YrCancerDerived_InhSoil[	2.53E-08	0.00E+00	0.00E+00	0.00E+00	0.00E+00	0.00E+00	0.00E+00	0.00E+00	0.00E+00	0.00E+00	0.00E+00	0.00E+00
3127	ALL	753788.42	4043260.7	2.51E-08	70YrCancerDerived_InhSoil[	2.51E-08	0.00E+00	0.00E+00	0.00E+00	0.00E+00	0.00E+00	0.00E+00	0.00E+00	0.00E+00	0.00E+00	0.00E+00	0.00E+00
3128	ALL	753888.42	4043260.7	2.49E-08	70YrCancerDerived_InhSoil[	2.49E-08	0.00E+00	0.00E+00	0.00E+00	0.00E+00	0.00E+00	0.00E+00	0.00E+00	0.00E+00	0.00E+00	0.00E+00	0.00E+00
3129	ALL	753988.42	4043260.7	2.48E-08	70YrCancerDerived_InhSoil[	2.48E-08	0.00E+00	0.00E+00	0.00E+00	0.00E+00	0.00E+00	0.00E+00	0.00E+00	0.00E+00	0.00E+00	0.00E+00	0.00E+00
3130	ALL	748188.42	4043360.7	3.63E-08	70YrCancerDerived_InhSoil[	3.63E-08	0.00E+00	0.00E+00	0.00E+00	0.00E+00	0.00E+00	0.00E+00	0.00E+00	0.00E+00	0.00E+00	0.00E+00	0.00E+00
3131	ALL	748288.42	4043360.7	3.53E-08	70YrCancerDerived_InhSoil[	3.53E-08	0.00E+00	0.00E+00	0.00E+00	0.00E+00	0.00E+00	0.00E+00	0.00E+00	0.00E+00	0.00E+00	0.00E+00	0.00E+00
3132	ALL	748388.42	4043360.7	3.43E-08	70YrCancerDerived_InhSoil[	3.43E-08	0.00E+00	0.00E+00	0.00E+00	0.00E+00	0.00E+00	0.00E+00	0.00E+00	0.00E+00	0.00E+00	0.00E+00	0.00E+00
3133	ALL	748488.42	4043360.7	3.34E-08	70YrCancerDerived_InhSoil[	3.34E-08	0.00E+00	0.00E+00	0.00E+00	0.00E+00	0.00E+00	0.00E+00	0.00E+00	0.00E+00	0.00E+00	0.00E+00	0.00E+00
3134	ALL	752688.42	4043360.7	2.58E-08	70YrCancerDerived_InhSoil[	2.58E-08	0.00E+00	0.00E+00	0.00E+00	0.00E+00	0.00E+00	0.00E+00	0.00E+00	0.00E+00	0.00E+00	0.00E+00	0.00E+00

3135	ALL	752788.42	4043360.7	2.58E-08	70YrCancerDerived_InhSoil[	2.58E-08	0.00E+00	0.00E+00	0.00E+00	0.00E+00	0.00E+00	0.00E+00	0.00E+00	0.00E+00	0.00E+00	0.00E+00	0.00E+00
3136	ALL	752888.42	4043360.7	2.59E-08	70YrCancerDerived_InhSoil[	2.59E-08	0.00E+00	0.00E+00	0.00E+00	0.00E+00	0.00E+00	0.00E+00	0.00E+00	0.00E+00	0.00E+00	0.00E+00	0.00E+00
3137	ALL	752988.42	4043360.7	2.59E-08	70YrCancerDerived_InhSoil[	2.59E-08	0.00E+00	0.00E+00	0.00E+00	0.00E+00	0.00E+00	0.00E+00	0.00E+00	0.00E+00	0.00E+00	0.00E+00	0.00E+00
3138	ALL	753088.42	4043360.7	2.58E-08	70YrCancerDerived_InhSoil[	2.58E-08	0.00E+00	0.00E+00	0.00E+00	0.00E+00	0.00E+00	0.00E+00	0.00E+00	0.00E+00	0.00E+00	0.00E+00	0.00E+00
3139	ALL	753188.42	4043360.7	2.58E-08	70YrCancerDerived_InhSoil[	2.58E-08	0.00E+00	0.00E+00	0.00E+00	0.00E+00	0.00E+00	0.00E+00	0.00E+00	0.00E+00	0.00E+00	0.00E+00	0.00E+00
3140	ALL	753488.42	4043360.7	2.54E-08	70YrCancerDerived_InhSoil[	2.54E-08	0.00E+00	0.00E+00	0.00E+00	0.00E+00	0.00E+00	0.00E+00	0.00E+00	0.00E+00	0.00E+00	0.00E+00	0.00E+00
3141	ALL	753588.42	4043360.7	2.52E-08	70YrCancerDerived_InhSoil[	2.52E-08	0.00E+00	0.00E+00	0.00E+00	0.00E+00	0.00E+00	0.00E+00	0.00E+00	0.00E+00	0.00E+00	0.00E+00	0.00E+00
3142	ALL	753688.42	4043360.7	2.50E-08	70YrCancerDerived_InhSoil[	2.50E-08	0.00E+00	0.00E+00	0.00E+00	0.00E+00	0.00E+00	0.00E+00	0.00E+00	0.00E+00	0.00E+00	0.00E+00	0.00E+00
3143	ALL	753788.42	4043360.7	2.48E-08	70YrCancerDerived_InhSoil[	2.48E-08	0.00E+00	0.00E+00	0.00E+00	0.00E+00	0.00E+00	0.00E+00	0.00E+00	0.00E+00	0.00E+00	0.00E+00	0.00E+00
3144	ALL	753888.42	4043360.7	2.46E-08	70YrCancerDerived_InhSoil[	2.46E-08	0.00E+00	0.00E+00	0.00E+00	0.00E+00	0.00E+00	0.00E+00	0.00E+00	0.00E+00	0.00E+00	0.00E+00	0.00E+00
3145	ALL	753988.42	4043360.7	2.44E-08	70YrCancerDerived_InhSoil[	2.44E-08	0.00E+00	0.00E+00	0.00E+00	0.00E+00	0.00E+00	0.00E+00	0.00E+00	0.00E+00	0.00E+00	0.00E+00	0.00E+00
3146	ALL	748188.42	4043460.7	3.54E-08	70YrCancerDerived_InhSoil[	3.54E-08	0.00E+00	0.00E+00	0.00E+00	0.00E+00	0.00E+00	0.00E+00	0.00E+00	0.00E+00	0.00E+00	0.00E+00	0.00E+00
3147	ALL	748288.42	4043460.7	3.45E-08	70YrCancerDerived_InhSoil[	3.45E-08	0.00E+00	0.00E+00	0.00E+00	0.00E+00	0.00E+00	0.00E+00	0.00E+00	0.00E+00	0.00E+00	0.00E+00	0.00E+00
3148	ALL	748388.42	4043460.7	3.36E-08	70YrCancerDerived_InhSoil[	3.36E-08	0.00E+00	0.00E+00	0.00E+00	0.00E+00	0.00E+00	0.00E+00	0.00E+00	0.00E+00	0.00E+00	0.00E+00	0.00E+00
3149	ALL	748488.42	4043460.7	3.27E-08	70YrCancerDerived_InhSoil[	3.27E-08	0.00E+00	0.00E+00	0.00E+00	0.00E+00	0.00E+00	0.00E+00	0.00E+00	0.00E+00	0.00E+00	0.00E+00	0.00E+00
3150	ALL	752688.42	4043460.7	2.51E-08	70YrCancerDerived_InhSoil[	2.51E-08	0.00E+00	0.00E+00	0.00E+00	0.00E+00	0.00E+00	0.00E+00	0.00E+00	0.00E+00	0.00E+00	0.00E+00	0.00E+00
3151	ALL	752788.42	4043460.7	2.51E-08	70YrCancerDerived_InhSoil[	2.51E-08	0.00E+00	0.00E+00	0.00E+00	0.00E+00	0.00E+00	0.00E+00	0.00E+00	0.00E+00	0.00E+00	0.00E+00	0.00E+00
3152	ALL	752888.42	4043460.7	2.52E-08	70YrCancerDerived_InhSoil[	2.52E-08	0.00E+00	0.00E+00	0.00E+00	0.00E+00	0.00E+00	0.00E+00	0.00E+00	0.00E+00	0.00E+00	0.00E+00	0.00E+00
3153	ALL	752988.42	4043460.7	2.52E-08	70YrCancerDerived_InhSoil[	2.52E-08	0.00E+00	0.00E+00	0.00E+00	0.00E+00	0.00E+00	0.00E+00	0.00E+00	0.00E+00	0.00E+00	0.00E+00	0.00E+00
3154	ALL	753088.42	4043460.7	2.52E-08	70YrCancerDerived_InhSoil[	2.52E-08	0.00E+00	0.00E+00	0.00E+00	0.00E+00	0.00E+00	0.00E+00	0.00E+00	0.00E+00	0.00E+00	0.00E+00	0.00E+00
3155	ALL	753188.42	4043460.7	2.52E-08	70YrCancerDerived_InhSoil[	2.52E-08	0.00E+00	0.00E+00	0.00E+00	0.00E+00	0.00E+00	0.00E+00	0.00E+00	0.00E+00	0.00E+00	0.00E+00	0.00E+00
3156	ALL	753288.42	4043460.7	2.52E-08	70YrCancerDerived_InhSoil[	2.52E-08	0.00E+00	0.00E+00	0.00E+00	0.00E+00	0.00E+00	0.00E+00	0.00E+00	0.00E+00	0.00E+00	0.00E+00	0.00E+00
3157	ALL	753388.42	4043460.7	2.51E-08	70YrCancerDerived_InhSoil[	2.51E-08	0.00E+00	0.00E+00	0.00E+00	0.00E+00	0.00E+00	0.00E+00	0.00E+00	0.00E+00	0.00E+00	0.00E+00	0.00E+00
3158	ALL	753488.42	4043460.7	2.49E-08	70YrCancerDerived_InhSoil[	2.49E-08	0.00E+00	0.00E+00	0.00E+00	0.00E+00	0.00E+00	0.00E+00	0.00E+00	0.00E+00	0.00E+00	0.00E+00	0.00E+00
3159	ALL	753588.42	4043460.7	2.48E-08	70YrCancerDerived_InhSoil[	2.48E-08	0.00E+00	0.00E+00	0.00E+00	0.00E+00	0.00E+00	0.00E+00	0.00E+00	0.00E+00	0.00E+00	0.00E+00	0.00E+00
3160	ALL	753688.42	4043460.7	2.47E-08	70YrCancerDerived_InhSoil[	2.47E-08	0.00E+00	0.00E+00	0.00E+00	0.00E+00	0.00E+00	0.00E+00	0.00E+00	0.00E+00	0.00E+00	0.00E+00	0.00E+00
3161	ALL	753788.42	4043460.7	2.45E-08	70YrCancerDerived_InhSoil[	2.45E-08	0.00E+00	0.00E+00	0.00E+00	0.00E+00	0.00E+00	0.00E+00	0.00E+00	0.00E+00	0.00E+00	0.00E+00	0.00E+00
3162	ALL	753888.42	4043460.7	2.43E-08	70YrCancerDerived_InhSoil[	2.43E-08	0.00E+00	0.00E+00	0.00E+00	0.00E+00	0.00E+00	0.00E+00	0.00E+00	0.00E+00	0.00E+00	0.00E+00	0.00E+00
3163	ALL	753988.42	4043460.7	2.41E-08	70YrCancerDerived_InhSoil[	2.41E-08	0.00E+00	0.00E+00	0.00E+00	0.00E+00	0.00E+00	0.00E+00	0.00E+00	0.00E+00	0.00E+00	0.00E+00	0.00E+00
3164	ALL	748188.42	4043560.7	3.45E-08	70YrCancerDerived_InhSoil[	3.45E-08	0.00E+00	0.00E+00	0.00E+00	0.00E+00	0.00E+00	0.00E+00	0.00E+00	0.00E+00	0.00E+00	0.00E+00	0.00E+00
3165	ALL	748288.42	4043560.7	3.37E-08	70YrCancerDerived_InhSoil[	3.37E-08	0.00E+00	0.00E+00	0.00E+00	0.00E+00	0.00E+00	0.00E+00	0.00E+00	0.00E+00	0.00E+00	0.00E+00	0.00E+00
3166	ALL	748388.42	4043560.7	3.28E-08	70YrCancerDerived_InhSoil[	3.28E-08	0.00E+00	0.00E+00	0.00E+00	0.00E+00	0.00E+00	0.00E+00	0.00E+00	0.00E+00	0.00E+00	0.00E+00	0.00E+00
3167	ALL	748488.42	4043560.7	3.20E-08	70YrCancerDerived_InhSoil[	3.20E-08	0.00E+00	0.00E+00	0.00E+00	0.00E+00	0.00E+00	0.00E+00	0.00E+00	0.00E+00	0.00E+00	0.00E+00	0.00E+00
3168	ALL	752688.42	4043560.7	2.44E-08	70YrCancerDerived_InhSoil[	2.44E-08	0.00E+00	0.00E+00	0.00E+00	0.00E+00	0.00E+00	0.00E+00	0.00E+00	0.00E+00	0.00E+00	0.00E+00	0.00E+00
3169	ALL	752788.42	4043560.7	2.45E-08	70YrCancerDerived_InhSoil[	2.45E-08	0.00E+00	0.00E+00	0.00E+00	0.00E+00	0.00E+00	0.00E+00	0.00E+00	0.00E+00	0.00E+00	0.00E+00	0.00E+00
3170	ALL	752888.42	4043560.7	2.46E-08	70YrCancerDerived_InhSoil[	2.46E-08	0.00E+00	0.00E+00	0.00E+00	0.00E+00	0.00E+00	0.00E+00	0.00E+00	0.00E+00	0.00E+00	0.00E+00	0.00E+00
3171	ALL	752988.42	4043560.7	2.46E-08	70YrCancerDerived_InhSoil[	2.46E-08	0.00E+00	0.00E+00	0.00E+00	0.00E+00	0.00E+00	0.00E+00	0.00E+00	0.00E+00	0.00E+00	0.00E+00	0.00E+00
3172	ALL	753088.42	4043560.7	2.46E-08	70YrCancerDerived_InhSoil[	2.46E-08	0.00E+00	0.00E+00	0.00E+00	0.00E+00	0.00E+00	0.00E+00	0.00E+00	0.00E+00	0.00E+00	0.00E+00	0.00E+00
3173	ALL	753188.42	4043560.7	2.46E-08	70YrCancerDerived_InhSoil[	2.46E-08	0.00E+00	0.00E+00	0.00E+00	0.00E+00	0.00E+00	0.00E+00	0.00E+00	0.00E+00	0.00E+00	0.00E+00	0.00E+00
3174	ALL	753288.42	4043560.7	2.46E-08	70YrCancerDerived_InhSoil[	2.46E-08	0.00E+00	0.00E+00	0.00E+00	0.00E+00	0.00E+00	0.00E+00	0.00E+00	0.00E+00	0.00E+00	0.00E+00	0.00E+00
3175	ALL	753388.42	4043560.7	2.46E-08	70YrCancerDerived_InhSoil[	2.46E-08	0.00E+00	0.00E+00	0.00E+00	0.00E+00	0.00E+00	0.00E+00	0.00E+00	0.00E+00	0.00E+00	0.00E+00	0.00E+00
3176	ALL	753488.42	4043560.7	2.45E-08	70YrCancerDerived_InhSoil[	2.45E-08	0.00E+00	0.00E+00	0.00E+00	0.00E+00	0.00E+00	0.00E+00	0.00E+00	0.00E+00	0.00E+00	0.00E+00	0.00E+00
3177	ALL	753588.42	4043560.7	2.44E-08	70YrCancerDerived_InhSoil[	2.44E-08	0.00E+00	0.00E+00	0.00E+00	0.00E+00	0.00E+00	0.00E+00	0.00E+00	0.00E+00	0.00E+00	0.00E+00	0.00E+00
3178	ALL	753688.42	4043560.7	2.43E-08	70YrCancerDerived_InhSoil[	2.43E-08	0.00E+00	0.00E+00	0.00E+00	0.00E+00	0.00E+00	0.00E+00	0.00E+00	0.00E+00	0.00E+00	0.00E+00	0.00E+00
3179	ALL	753788.42	4043560.7	2.42E-08	70YrCancerDerived_InhSoil[	2.42E-08	0.00E+00	0.00E+00	0.00E+00	0.00E+00	0.00E+00	0.00E+00	0.00E+00	0.00E+00	0.00E+00	0.00E+00	0.00E+00
3180	ALL	753888.42	4043560.7	2.40E-08	70YrCancerDerived_InhSoil[	2.40E-08	0.00E+00	0.00E+00	0.00E+00	0.00E+00	0.00E+00	0.00E+00	0.00E+00	0.00E+00	0.00E+00	0.00E+00	0.00E+00
3181	ALL	753988.42	4043560.7	2.38E-08	70YrCancerDerived_InhSoil[	2.38E-08	0.00E+00	0.00E+00	0.00E+00	0.00E+00	0.00E+00	0.00E+00	0.00E+00	0.00E+00	0.00E+00	0.00E+00	0.00E+00
3182	ALL	748188.42	4043660.7	3.37E-08	70YrCancerDerived_InhSoil[	3.37E-08	0.00E+00	0.00E+00	0.00E+00	0.00E+00	0.00E+00	0.00E+00	0.00E+00	0.00E+00	0.00E+00	0.00E+00	0.00E+00
3183	ALL	748288.42	4043660.7	3.29E-08	70YrCancerDerived_InhSoil[	3.29E-08	0.00E+00	0.00E+00	0.00E+00	0.00E+00	0.00E+00	0.00E+00	0.00E+00	0.00E+00	0.00E+00	0.00E+00	0.00E+00
3184	ALL	748388.42	4043660.7	3.21E-08	70YrCancerDerived_InhSoil[	3.21E-08	0.00E+00	0.00E+00	0.00E+00	0.00E+00	0.00E+00	0.00E+00	0.00E+00	0.00E+00	0.00E+00	0.00E+00	0.00E+00
3185	ALL	748488.42	4043660.7	3.13E-08	70YrCancerDerived_InhSoil[	3.13E-08	0.00E+00	0.00E+00	0.00E+00	0.00E+00	0.00E+00	0.00E+00	0.00E+00	0.00E+00	0.00E+00	0.00E+00	0.00E+00
3186	ALL	752688.42	4043660.7	2.37E-08	70YrCancerDerived_InhSoil[	2.37E-08	0.00E+00	0.00E+00	0.00E+00	0.00E+00	0.00E+00	0.00E+00	0.00E+00	0.00E+00	0.00E+00	0.00E+00	0.00E+00
3187	ALL	752788.42	4043660.7	2.38E-08	70YrCancerDerived_InhSoil[	2.38E-08	0.00E+00	0.00E+00	0.00E+00	0.00E+00	0.00E+00	0.00E+00	0.00E+00	0.00E+00	0.00E+00	0.00E+00	0.00E+00
3188	ALL	752888.42	4043660.7	2.39E-08	70YrCancerDerived_InhSoil[	2.39E-08	0.00E+00	0.00E+00	0.00E+00	0.00E+00	0.00E+00	0.00E+00	0.00E+00	0.00E+00	0.00E+00	0.00E+00	0.00E+00
3189	ALL	752988.42	4043660.7	2.40E-08	70YrCancerDerived_InhSoil[	2.40E-08	0.00E+00	0.00E+00	0.00E+00	0.00E+00	0.00E+00	0.00E+00	0.00E+00	0.00E+00	0.00E+00	0.00E+00	0.00E+00
3190	ALL	753088.42	4043660.7	2.40E-08	70YrCancerDerived_InhSoil[	2.40E-08	0.00E+00	0.00E+00	0.00E+00	0.00E+00	0.00E+00	0.00E+00	0.00E+00	0.00E+00	0.00E+00	0.00E+00	0.00E+00

3191	ALL	753188.42	4043660.7	2.41E-08	70YrCancerDerived_InhSoilI	2.41E-08	0.00E+00	0.00E+00	0.00E+00	0.00E+00	0.00E+00	0.00E+00	0.00E+00	0.00E+00	0.00E+00	0.00E+00	0.00E+00
3192	ALL	753288.42	4043660.7	2.41E-08	70YrCancerDerived_InhSoilI	2.41E-08	0.00E+00	0.00E+00	0.00E+00	0.00E+00	0.00E+00	0.00E+00	0.00E+00	0.00E+00	0.00E+00	0.00E+00	0.00E+00
3193	ALL	753388.42	4043660.7	2.41E-08	70YrCancerDerived_InhSoilI	2.41E-08	0.00E+00	0.00E+00	0.00E+00	0.00E+00	0.00E+00	0.00E+00	0.00E+00	0.00E+00	0.00E+00	0.00E+00	0.00E+00
3194	ALL	753488.42	4043660.7	2.41E-08	70YrCancerDerived_InhSoilI	2.41E-08	0.00E+00	0.00E+00	0.00E+00	0.00E+00	0.00E+00	0.00E+00	0.00E+00	0.00E+00	0.00E+00	0.00E+00	0.00E+00
3195	ALL	753588.42	4043660.7	2.40E-08	70YrCancerDerived_InhSoilI	2.40E-08	0.00E+00	0.00E+00	0.00E+00	0.00E+00	0.00E+00	0.00E+00	0.00E+00	0.00E+00	0.00E+00	0.00E+00	0.00E+00
3196	ALL	753688.42	4043660.7	2.39E-08	70YrCancerDerived_InhSoilI	2.39E-08	0.00E+00	0.00E+00	0.00E+00	0.00E+00	0.00E+00	0.00E+00	0.00E+00	0.00E+00	0.00E+00	0.00E+00	0.00E+00
3197	ALL	753788.42	4043660.7	2.38E-08	70YrCancerDerived_InhSoilI	2.38E-08	0.00E+00	0.00E+00	0.00E+00	0.00E+00	0.00E+00	0.00E+00	0.00E+00	0.00E+00	0.00E+00	0.00E+00	0.00E+00
3198	ALL	753888.42	4043660.7	2.37E-08	70YrCancerDerived_InhSoilI	2.37E-08	0.00E+00	0.00E+00	0.00E+00	0.00E+00	0.00E+00	0.00E+00	0.00E+00	0.00E+00	0.00E+00	0.00E+00	0.00E+00
3199	ALL	753988.42	4043660.7	2.36E-08	70YrCancerDerived_InhSoilI	2.36E-08	0.00E+00	0.00E+00	0.00E+00	0.00E+00	0.00E+00	0.00E+00	0.00E+00	0.00E+00	0.00E+00	0.00E+00	0.00E+00
3200	ALL	748188.42	4043760.7	3.29E-08	70YrCancerDerived_InhSoilI	3.29E-08	0.00E+00	0.00E+00	0.00E+00	0.00E+00	0.00E+00	0.00E+00	0.00E+00	0.00E+00	0.00E+00	0.00E+00	0.00E+00
3201	ALL	748288.42	4043760.7	3.22E-08	70YrCancerDerived_InhSoilI	3.22E-08	0.00E+00	0.00E+00	0.00E+00	0.00E+00	0.00E+00	0.00E+00	0.00E+00	0.00E+00	0.00E+00	0.00E+00	0.00E+00
3202	ALL	748388.42	4043760.7	3.14E-08	70YrCancerDerived_InhSoilI	3.14E-08	0.00E+00	0.00E+00	0.00E+00	0.00E+00	0.00E+00	0.00E+00	0.00E+00	0.00E+00	0.00E+00	0.00E+00	0.00E+00
3203	ALL	748488.42	4043760.7	3.07E-08	70YrCancerDerived_InhSoilI	3.07E-08	0.00E+00	0.00E+00	0.00E+00	0.00E+00	0.00E+00	0.00E+00	0.00E+00	0.00E+00	0.00E+00	0.00E+00	0.00E+00
3204	ALL	752688.42	4043760.7	2.31E-08	70YrCancerDerived_InhSoilI	2.31E-08	0.00E+00	0.00E+00	0.00E+00	0.00E+00	0.00E+00	0.00E+00	0.00E+00	0.00E+00	0.00E+00	0.00E+00	0.00E+00
3205	ALL	752788.42	4043760.7	2.32E-08	70YrCancerDerived_InhSoilI	2.32E-08	0.00E+00	0.00E+00	0.00E+00	0.00E+00	0.00E+00	0.00E+00	0.00E+00	0.00E+00	0.00E+00	0.00E+00	0.00E+00
3206	ALL	752888.42	4043760.7	2.33E-08	70YrCancerDerived_InhSoilI	2.33E-08	0.00E+00	0.00E+00	0.00E+00	0.00E+00	0.00E+00	0.00E+00	0.00E+00	0.00E+00	0.00E+00	0.00E+00	0.00E+00
3207	ALL	752988.42	4043760.7	2.34E-08	70YrCancerDerived_InhSoilI	2.34E-08	0.00E+00	0.00E+00	0.00E+00	0.00E+00	0.00E+00	0.00E+00	0.00E+00	0.00E+00	0.00E+00	0.00E+00	0.00E+00
3208	ALL	753088.42	4043760.7	2.35E-08	70YrCancerDerived_InhSoilI	2.35E-08	0.00E+00	0.00E+00	0.00E+00	0.00E+00	0.00E+00	0.00E+00	0.00E+00	0.00E+00	0.00E+00	0.00E+00	0.00E+00
3209	ALL	753188.42	4043760.7	2.35E-08	70YrCancerDerived_InhSoilI	2.35E-08	0.00E+00	0.00E+00	0.00E+00	0.00E+00	0.00E+00	0.00E+00	0.00E+00	0.00E+00	0.00E+00	0.00E+00	0.00E+00
3210	ALL	753288.42	4043760.7	2.35E-08	70YrCancerDerived_InhSoilI	2.35E-08	0.00E+00	0.00E+00	0.00E+00	0.00E+00	0.00E+00	0.00E+00	0.00E+00	0.00E+00	0.00E+00	0.00E+00	0.00E+00
3211	ALL	753388.42	4043760.7	2.36E-08	70YrCancerDerived_InhSoilI	2.36E-08	0.00E+00	0.00E+00	0.00E+00	0.00E+00	0.00E+00	0.00E+00	0.00E+00	0.00E+00	0.00E+00	0.00E+00	0.00E+00
3212	ALL	753488.42	4043760.7	2.36E-08	70YrCancerDerived_InhSoilI	2.36E-08	0.00E+00	0.00E+00	0.00E+00	0.00E+00	0.00E+00	0.00E+00	0.00E+00	0.00E+00	0.00E+00	0.00E+00	0.00E+00
3213	ALL	753588.42	4043760.7	2.36E-08	70YrCancerDerived_InhSoilI	2.36E-08	0.00E+00	0.00E+00	0.00E+00	0.00E+00	0.00E+00	0.00E+00	0.00E+00	0.00E+00	0.00E+00	0.00E+00	0.00E+00
3214	ALL	753688.42	4043760.7	2.35E-08	70YrCancerDerived_InhSoilI	2.35E-08	0.00E+00	0.00E+00	0.00E+00	0.00E+00	0.00E+00	0.00E+00	0.00E+00	0.00E+00	0.00E+00	0.00E+00	0.00E+00
3215	ALL	753788.42	4043760.7	2.34E-08	70YrCancerDerived_InhSoilI	2.34E-08	0.00E+00	0.00E+00	0.00E+00	0.00E+00	0.00E+00	0.00E+00	0.00E+00	0.00E+00	0.00E+00	0.00E+00	0.00E+00
3216	ALL	753888.42	4043760.7	2.34E-08	70YrCancerDerived_InhSoilI	2.34E-08	0.00E+00	0.00E+00	0.00E+00	0.00E+00	0.00E+00	0.00E+00	0.00E+00	0.00E+00	0.00E+00	0.00E+00	0.00E+00
3217	ALL	753988.42	4043760.7	2.32E-08	70YrCancerDerived_InhSoilI	2.32E-08	0.00E+00	0.00E+00	0.00E+00	0.00E+00	0.00E+00	0.00E+00	0.00E+00	0.00E+00	0.00E+00	0.00E+00	0.00E+00
3218	ALL	748188.42	4043860.7	3.22E-08	70YrCancerDerived_InhSoilI	3.22E-08	0.00E+00	0.00E+00	0.00E+00	0.00E+00	0.00E+00	0.00E+00	0.00E+00	0.00E+00	0.00E+00	0.00E+00	0.00E+00
3219	ALL	748288.42	4043860.7	3.15E-08	70YrCancerDerived_InhSoilI	3.15E-08	0.00E+00	0.00E+00	0.00E+00	0.00E+00	0.00E+00	0.00E+00	0.00E+00	0.00E+00	0.00E+00	0.00E+00	0.00E+00
3220	ALL	748388.42	4043860.7	3.07E-08	70YrCancerDerived_InhSoilI	3.07E-08	0.00E+00	0.00E+00	0.00E+00	0.00E+00	0.00E+00	0.00E+00	0.00E+00	0.00E+00	0.00E+00	0.00E+00	0.00E+00
3221	ALL	748488.42	4043860.7	3.00E-08	70YrCancerDerived_InhSoilI	3.00E-08	0.00E+00	0.00E+00	0.00E+00	0.00E+00	0.00E+00	0.00E+00	0.00E+00	0.00E+00	0.00E+00	0.00E+00	0.00E+00
3222	ALL	752688.42	4043860.7	2.26E-08	70YrCancerDerived_InhSoilI	2.26E-08	0.00E+00	0.00E+00	0.00E+00	0.00E+00	0.00E+00	0.00E+00	0.00E+00	0.00E+00	0.00E+00	0.00E+00	0.00E+00
3223	ALL	752788.42	4043860.7	2.27E-08	70YrCancerDerived_InhSoilI	2.27E-08	0.00E+00	0.00E+00	0.00E+00	0.00E+00	0.00E+00	0.00E+00	0.00E+00	0.00E+00	0.00E+00	0.00E+00	0.00E+00
3224	ALL	752888.42	4043860.7	2.28E-08	70YrCancerDerived_InhSoilI	2.28E-08	0.00E+00	0.00E+00	0.00E+00	0.00E+00	0.00E+00	0.00E+00	0.00E+00	0.00E+00	0.00E+00	0.00E+00	0.00E+00
3225	ALL	752988.42	4043860.7	2.28E-08	70YrCancerDerived_InhSoilI	2.28E-08	0.00E+00	0.00E+00	0.00E+00	0.00E+00	0.00E+00	0.00E+00	0.00E+00	0.00E+00	0.00E+00	0.00E+00	0.00E+00
3226	ALL	748088.42	4043960.7	3.22E-08	70YrCancerDerived_InhSoilI	3.22E-08	0.00E+00	0.00E+00	0.00E+00	0.00E+00	0.00E+00	0.00E+00	0.00E+00	0.00E+00	0.00E+00	0.00E+00	0.00E+00
3227	ALL	748188.42	4043960.7	3.15E-08	70YrCancerDerived_InhSoilI	3.15E-08	0.00E+00	0.00E+00	0.00E+00	0.00E+00	0.00E+00	0.00E+00	0.00E+00	0.00E+00	0.00E+00	0.00E+00	0.00E+00
3228	ALL	748288.42	4043960.7	3.08E-08	70YrCancerDerived_InhSoilI	3.08E-08	0.00E+00	0.00E+00	0.00E+00	0.00E+00	0.00E+00	0.00E+00	0.00E+00	0.00E+00	0.00E+00	0.00E+00	0.00E+00
3229	ALL	748388.42	4043960.7	3.01E-08	70YrCancerDerived_InhSoilI	3.01E-08	0.00E+00	0.00E+00	0.00E+00	0.00E+00	0.00E+00	0.00E+00	0.00E+00	0.00E+00	0.00E+00	0.00E+00	0.00E+00
3230	ALL	748488.42	4043960.7	2.94E-08	70YrCancerDerived_InhSoilI	2.94E-08	0.00E+00	0.00E+00	0.00E+00	0.00E+00	0.00E+00	0.00E+00	0.00E+00	0.00E+00	0.00E+00	0.00E+00	0.00E+00
3231	ALL	752688.42	4043960.7	2.21E-08	70YrCancerDerived_InhSoilI	2.21E-08	0.00E+00	0.00E+00	0.00E+00	0.00E+00	0.00E+00	0.00E+00	0.00E+00	0.00E+00	0.00E+00	0.00E+00	0.00E+00
3232	ALL	752788.42	4043960.7	2.21E-08	70YrCancerDerived_InhSoilI	2.21E-08	0.00E+00	0.00E+00	0.00E+00	0.00E+00	0.00E+00	0.00E+00	0.00E+00	0.00E+00	0.00E+00	0.00E+00	0.00E+00
3233	ALL	752888.42	4043960.7	2.22E-08	70YrCancerDerived_InhSoilI	2.22E-08	0.00E+00	0.00E+00	0.00E+00	0.00E+00	0.00E+00	0.00E+00	0.00E+00	0.00E+00	0.00E+00	0.00E+00	0.00E+00
3234	ALL	752988.42	4043960.7	2.23E-08	70YrCancerDerived_InhSoilI	2.23E-08	0.00E+00	0.00E+00	0.00E+00	0.00E+00	0.00E+00	0.00E+00	0.00E+00	0.00E+00	0.00E+00	0.00E+00	0.00E+00
3235	ALL	748088.42	4044060.7	3.15E-08	70YrCancerDerived_InhSoilI	3.15E-08	0.00E+00	0.00E+00	0.00E+00	0.00E+00	0.00E+00	0.00E+00	0.00E+00	0.00E+00	0.00E+00	0.00E+00	0.00E+00
3236	ALL	748188.42	4044060.7	3.08E-08	70YrCancerDerived_InhSoilI	3.08E-08	0.00E+00	0.00E+00	0.00E+00	0.00E+00	0.00E+00	0.00E+00	0.00E+00	0.00E+00	0.00E+00	0.00E+00	0.00E+00
3237	ALL	748288.42	4044060.7	3.02E-08	70YrCancerDerived_InhSoilI	3.02E-08	0.00E+00	0.00E+00	0.00E+00	0.00E+00	0.00E+00	0.00E+00	0.00E+00	0.00E+00	0.00E+00	0.00E+00	0.00E+00
3238	ALL	748388.42	4044060.7	2.95E-08	70YrCancerDerived_InhSoilI	2.95E-08	0.00E+00	0.00E+00	0.00E+00	0.00E+00	0.00E+00	0.00E+00	0.00E+00	0.00E+00	0.00E+00	0.00E+00	0.00E+00
3239	ALL	748488.42	4044060.7	2.88E-08	70YrCancerDerived_InhSoilI	2.88E-08	0.00E+00	0.00E+00	0.00E+00	0.00E+00	0.00E+00	0.00E+00	0.00E+00	0.00E+00	0.00E+00	0.00E+00	0.00E+00
3240	ALL	752688.42	4044060.7	2.16E-08	70YrCancerDerived_InhSoilI	2.16E-08	0.00E+00	0.00E+00	0.00E+00	0.00E+00	0.00E+00	0.00E+00	0.00E+00	0.00E+00	0.00E+00	0.00E+00	0.00E+00
3241	ALL	752788.42	4044060.7	2.16E-08	70YrCancerDerived_InhSoilI	2.16E-08	0.00E+00	0.00E+00	0.00E+00	0.00E+00	0.00E+00	0.00E+00	0.00E+00	0.00E+00	0.00E+00	0.00E+00	0.00E+00
3242	ALL	752888.42	4044060.7	2.17E-08	70YrCancerDerived_InhSoilI	2.17E-08	0.00E+00	0.00E+00	0.00E+00	0.00E+00	0.00E+00	0.00E+00	0.00E+00	0.00E+00	0.00E+00	0.00E+00	0.00E+00
3243	ALL	752988.42	4044060.7	2.18E-08	70YrCancerDerived_InhSoilI	2.18E-08	0.00E+00	0.00E+00	0.00E+00	0.00E+00	0.00E+00	0.00E+00	0.00E+00	0.00E+00	0.00E+00	0.00E+00	0.00E+00
3244	ALL	748088.42	4044160.7	3.08E-08	70YrCancerDerived_InhSoilI	3.08E-08	0.00E+00	0.00E+00	0.00E+00	0.00E+00	0.00E+00	0.00E+00	0.00E+00	0.00E+00	0.00E+00	0.00E+00	0.00E+00
3245	ALL	748188.42	4044160.7	3.02E-08	70YrCancerDerived_InhSoilI	3.02E-08	0.00E+00	0.00E+00	0.00E+00	0.00E+00	0.00E+00	0.00E+00	0.00E+00	0.00E+00	0.00E+00	0.00E+00	0.00E+00
3246	ALL	748288.42	4044160.7	2.95E-08	70YrCancerDerived_InhSoilI	2.95E-08	0.00E+00	0.00E+00	0.00E+00	0.00E+00	0.00E+00	0.00E+00	0.00E+00	0.00E+00	0.00E+00	0.00E+00	0.00E+00

3247	ALL	748388.42	4044160.7	2.89E-08	70YrCancerDerived_InhSoil[	2.89E-08	0.00E+00	0.00E+00	0.00E+00	0.00E+00	0.00E+00	0.00E+00	0.00E+00	0.00E+00	0.00E+00	0.00E+00	0.00E+00
3248	ALL	748488.42	4044160.7	2.83E-08	70YrCancerDerived_InhSoil[	2.83E-08	0.00E+00	0.00E+00	0.00E+00	0.00E+00	0.00E+00	0.00E+00	0.00E+00	0.00E+00	0.00E+00	0.00E+00	0.00E+00
3249	ALL	752688.42	4044160.7	2.12E-08	70YrCancerDerived_InhSoil[	2.12E-08	0.00E+00	0.00E+00	0.00E+00	0.00E+00	0.00E+00	0.00E+00	0.00E+00	0.00E+00	0.00E+00	0.00E+00	0.00E+00
3250	ALL	752788.42	4044160.7	2.12E-08	70YrCancerDerived_InhSoil[	2.12E-08	0.00E+00	0.00E+00	0.00E+00	0.00E+00	0.00E+00	0.00E+00	0.00E+00	0.00E+00	0.00E+00	0.00E+00	0.00E+00
3251	ALL	752888.42	4044160.7	2.13E-08	70YrCancerDerived_InhSoil[	2.13E-08	0.00E+00	0.00E+00	0.00E+00	0.00E+00	0.00E+00	0.00E+00	0.00E+00	0.00E+00	0.00E+00	0.00E+00	0.00E+00
3252	ALL	752988.42	4044160.7	2.13E-08	70YrCancerDerived_InhSoil[	2.13E-08	0.00E+00	0.00E+00	0.00E+00	0.00E+00	0.00E+00	0.00E+00	0.00E+00	0.00E+00	0.00E+00	0.00E+00	0.00E+00
3253	ALL	748088.42	4044260.7	3.01E-08	70YrCancerDerived_InhSoil[	3.01E-08	0.00E+00	0.00E+00	0.00E+00	0.00E+00	0.00E+00	0.00E+00	0.00E+00	0.00E+00	0.00E+00	0.00E+00	0.00E+00
3254	ALL	748188.42	4044260.7	2.96E-08	70YrCancerDerived_InhSoil[	2.96E-08	0.00E+00	0.00E+00	0.00E+00	0.00E+00	0.00E+00	0.00E+00	0.00E+00	0.00E+00	0.00E+00	0.00E+00	0.00E+00
3255	ALL	748288.42	4044260.7	2.90E-08	70YrCancerDerived_InhSoil[	2.90E-08	0.00E+00	0.00E+00	0.00E+00	0.00E+00	0.00E+00	0.00E+00	0.00E+00	0.00E+00	0.00E+00	0.00E+00	0.00E+00
3256	ALL	748388.42	4044260.7	2.83E-08	70YrCancerDerived_InhSoil[	2.83E-08	0.00E+00	0.00E+00	0.00E+00	0.00E+00	0.00E+00	0.00E+00	0.00E+00	0.00E+00	0.00E+00	0.00E+00	0.00E+00
3257	ALL	748488.42	4044260.7	2.78E-08	70YrCancerDerived_InhSoil[	2.78E-08	0.00E+00	0.00E+00	0.00E+00	0.00E+00	0.00E+00	0.00E+00	0.00E+00	0.00E+00	0.00E+00	0.00E+00	0.00E+00
3258	ALL	752688.42	4044260.7	2.07E-08	70YrCancerDerived_InhSoil[	2.07E-08	0.00E+00	0.00E+00	0.00E+00	0.00E+00	0.00E+00	0.00E+00	0.00E+00	0.00E+00	0.00E+00	0.00E+00	0.00E+00
3259	ALL	752788.42	4044260.7	2.08E-08	70YrCancerDerived_InhSoil[	2.08E-08	0.00E+00	0.00E+00	0.00E+00	0.00E+00	0.00E+00	0.00E+00	0.00E+00	0.00E+00	0.00E+00	0.00E+00	0.00E+00
3260	ALL	752888.42	4044260.7	2.08E-08	70YrCancerDerived_InhSoil[	2.08E-08	0.00E+00	0.00E+00	0.00E+00	0.00E+00	0.00E+00	0.00E+00	0.00E+00	0.00E+00	0.00E+00	0.00E+00	0.00E+00
3261	ALL	752988.42	4044260.7	2.09E-08	70YrCancerDerived_InhSoil[	2.09E-08	0.00E+00	0.00E+00	0.00E+00	0.00E+00	0.00E+00	0.00E+00	0.00E+00	0.00E+00	0.00E+00	0.00E+00	0.00E+00
3262	ALL	748088.42	4044360.7	2.95E-08	70YrCancerDerived_InhSoil[	2.95E-08	0.00E+00	0.00E+00	0.00E+00	0.00E+00	0.00E+00	0.00E+00	0.00E+00	0.00E+00	0.00E+00	0.00E+00	0.00E+00
3263	ALL	748188.42	4044360.7	2.90E-08	70YrCancerDerived_InhSoil[	2.90E-08	0.00E+00	0.00E+00	0.00E+00	0.00E+00	0.00E+00	0.00E+00	0.00E+00	0.00E+00	0.00E+00	0.00E+00	0.00E+00
3264	ALL	748288.42	4044360.7	2.84E-08	70YrCancerDerived_InhSoil[	2.84E-08	0.00E+00	0.00E+00	0.00E+00	0.00E+00	0.00E+00	0.00E+00	0.00E+00	0.00E+00	0.00E+00	0.00E+00	0.00E+00
3265	ALL	748388.42	4044360.7	2.78E-08	70YrCancerDerived_InhSoil[	2.78E-08	0.00E+00	0.00E+00	0.00E+00	0.00E+00	0.00E+00	0.00E+00	0.00E+00	0.00E+00	0.00E+00	0.00E+00	0.00E+00
3266	ALL	748488.42	4044360.7	2.72E-08	70YrCancerDerived_InhSoil[	2.72E-08	0.00E+00	0.00E+00	0.00E+00	0.00E+00	0.00E+00	0.00E+00	0.00E+00	0.00E+00	0.00E+00	0.00E+00	0.00E+00
3267	ALL	752688.42	4044360.7	2.04E-08	70YrCancerDerived_InhSoil[	2.04E-08	0.00E+00	0.00E+00	0.00E+00	0.00E+00	0.00E+00	0.00E+00	0.00E+00	0.00E+00	0.00E+00	0.00E+00	0.00E+00
3268	ALL	752788.42	4044360.7	2.04E-08	70YrCancerDerived_InhSoil[	2.04E-08	0.00E+00	0.00E+00	0.00E+00	0.00E+00	0.00E+00	0.00E+00	0.00E+00	0.00E+00	0.00E+00	0.00E+00	0.00E+00
3269	ALL	752888.42	4044360.7	2.04E-08	70YrCancerDerived_InhSoil[	2.04E-08	0.00E+00	0.00E+00	0.00E+00	0.00E+00	0.00E+00	0.00E+00	0.00E+00	0.00E+00	0.00E+00	0.00E+00	0.00E+00
3270	ALL	752988.42	4044360.7	2.05E-08	70YrCancerDerived_InhSoil[	2.05E-08	0.00E+00	0.00E+00	0.00E+00	0.00E+00	0.00E+00	0.00E+00	0.00E+00	0.00E+00	0.00E+00	0.00E+00	0.00E+00
3271	ALL	748088.42	4044460.7	2.89E-08	70YrCancerDerived_InhSoil[	2.89E-08	0.00E+00	0.00E+00	0.00E+00	0.00E+00	0.00E+00	0.00E+00	0.00E+00	0.00E+00	0.00E+00	0.00E+00	0.00E+00
3272	ALL	748188.42	4044460.7	2.84E-08	70YrCancerDerived_InhSoil[	2.84E-08	0.00E+00	0.00E+00	0.00E+00	0.00E+00	0.00E+00	0.00E+00	0.00E+00	0.00E+00	0.00E+00	0.00E+00	0.00E+00
3273	ALL	748288.42	4044460.7	2.78E-08	70YrCancerDerived_InhSoil[	2.78E-08	0.00E+00	0.00E+00	0.00E+00	0.00E+00	0.00E+00	0.00E+00	0.00E+00	0.00E+00	0.00E+00	0.00E+00	0.00E+00
3274	ALL	748388.42	4044460.7	2.73E-08	70YrCancerDerived_InhSoil[	2.73E-08	0.00E+00	0.00E+00	0.00E+00	0.00E+00	0.00E+00	0.00E+00	0.00E+00	0.00E+00	0.00E+00	0.00E+00	0.00E+00
3275	ALL	748488.42	4044460.7	2.68E-08	70YrCancerDerived_InhSoil[	2.68E-08	0.00E+00	0.00E+00	0.00E+00	0.00E+00	0.00E+00	0.00E+00	0.00E+00	0.00E+00	0.00E+00	0.00E+00	0.00E+00
3276	ALL	752688.42	4044460.7	2.00E-08	70YrCancerDerived_InhSoil[	2.00E-08	0.00E+00	0.00E+00	0.00E+00	0.00E+00	0.00E+00	0.00E+00	0.00E+00	0.00E+00	0.00E+00	0.00E+00	0.00E+00
3277	ALL	752788.42	4044460.7	2.00E-08	70YrCancerDerived_InhSoil[	2.00E-08	0.00E+00	0.00E+00	0.00E+00	0.00E+00	0.00E+00	0.00E+00	0.00E+00	0.00E+00	0.00E+00	0.00E+00	0.00E+00
3278	ALL	752888.42	4044460.7	2.00E-08	70YrCancerDerived_InhSoil[	2.00E-08	0.00E+00	0.00E+00	0.00E+00	0.00E+00	0.00E+00	0.00E+00	0.00E+00	0.00E+00	0.00E+00	0.00E+00	0.00E+00
3279	ALL	752988.42	4044460.7	2.01E-08	70YrCancerDerived_InhSoil[	2.01E-08	0.00E+00	0.00E+00	0.00E+00	0.00E+00	0.00E+00	0.00E+00	0.00E+00	0.00E+00	0.00E+00	0.00E+00	0.00E+00
3280	ALL	748088.42	4044560.7	2.83E-08	70YrCancerDerived_InhSoil[	2.83E-08	0.00E+00	0.00E+00	0.00E+00	0.00E+00	0.00E+00	0.00E+00	0.00E+00	0.00E+00	0.00E+00	0.00E+00	0.00E+00
3281	ALL	748188.42	4044560.7	2.78E-08	70YrCancerDerived_InhSoil[	2.78E-08	0.00E+00	0.00E+00	0.00E+00	0.00E+00	0.00E+00	0.00E+00	0.00E+00	0.00E+00	0.00E+00	0.00E+00	0.00E+00
3282	ALL	748288.42	4044560.7	2.73E-08	70YrCancerDerived_InhSoil[	2.73E-08	0.00E+00	0.00E+00	0.00E+00	0.00E+00	0.00E+00	0.00E+00	0.00E+00	0.00E+00	0.00E+00	0.00E+00	0.00E+00
3283	ALL	748388.42	4044560.7	2.68E-08	70YrCancerDerived_InhSoil[	2.68E-08	0.00E+00	0.00E+00	0.00E+00	0.00E+00	0.00E+00	0.00E+00	0.00E+00	0.00E+00	0.00E+00	0.00E+00	0.00E+00
3284	ALL	748488.42	4044560.7	2.62E-08	70YrCancerDerived_InhSoil[	2.62E-08	0.00E+00	0.00E+00	0.00E+00	0.00E+00	0.00E+00	0.00E+00	0.00E+00	0.00E+00	0.00E+00	0.00E+00	0.00E+00
3285	ALL	752688.42	4044560.7	1.97E-08	70YrCancerDerived_InhSoil[	1.97E-08	0.00E+00	0.00E+00	0.00E+00	0.00E+00	0.00E+00	0.00E+00	0.00E+00	0.00E+00	0.00E+00	0.00E+00	0.00E+00
3286	ALL	752788.42	4044560.7	1.97E-08	70YrCancerDerived_InhSoil[	1.97E-08	0.00E+00	0.00E+00	0.00E+00	0.00E+00	0.00E+00	0.00E+00	0.00E+00	0.00E+00	0.00E+00	0.00E+00	0.00E+00
3287	ALL	752888.42	4044560.7	1.97E-08	70YrCancerDerived_InhSoil[	1.97E-08	0.00E+00	0.00E+00	0.00E+00	0.00E+00	0.00E+00	0.00E+00	0.00E+00	0.00E+00	0.00E+00	0.00E+00	0.00E+00
3288	ALL	752988.42	4044560.7	1.97E-08	70YrCancerDerived_InhSoil[	1.97E-08	0.00E+00	0.00E+00	0.00E+00	0.00E+00	0.00E+00	0.00E+00	0.00E+00	0.00E+00	0.00E+00	0.00E+00	0.00E+00
3289	ALL	748088.42	4044660.7	2.78E-08	70YrCancerDerived_InhSoil[	2.78E-08	0.00E+00	0.00E+00	0.00E+00	0.00E+00	0.00E+00	0.00E+00	0.00E+00	0.00E+00	0.00E+00	0.00E+00	0.00E+00
3290	ALL	748188.42	4044660.7	2.73E-08	70YrCancerDerived_InhSoil[	2.73E-08	0.00E+00	0.00E+00	0.00E+00	0.00E+00	0.00E+00	0.00E+00	0.00E+00	0.00E+00	0.00E+00	0.00E+00	0.00E+00
3291	ALL	748288.42	4044660.7	2.68E-08	70YrCancerDerived_InhSoil[	2.68E-08	0.00E+00	0.00E+00	0.00E+00	0.00E+00	0.00E+00	0.00E+00	0.00E+00	0.00E+00	0.00E+00	0.00E+00	0.00E+00
3292	ALL	748388.42	4044660.7	2.63E-08	70YrCancerDerived_InhSoil[	2.63E-08	0.00E+00	0.00E+00	0.00E+00	0.00E+00	0.00E+00	0.00E+00	0.00E+00	0.00E+00	0.00E+00	0.00E+00	0.00E+00
3293	ALL	748488.42	4044660.7	2.58E-08	70YrCancerDerived_InhSoil[	2.58E-08	0.00E+00	0.00E+00	0.00E+00	0.00E+00	0.00E+00	0.00E+00	0.00E+00	0.00E+00	0.00E+00	0.00E+00	0.00E+00
3294	ALL	752688.42	4044660.7	1.93E-08	70YrCancerDerived_InhSoil[	1.93E-08	0.00E+00	0.00E+00	0.00E+00	0.00E+00	0.00E+00	0.00E+00	0.00E+00	0.00E+00	0.00E+00	0.00E+00	0.00E+00
3295	ALL	752788.42	4044660.7	1.93E-08	70YrCancerDerived_InhSoil[	1.93E-08	0.00E+00	0.00E+00	0.00E+00	0.00E+00	0.00E+00	0.00E+00	0.00E+00	0.00E+00	0.00E+00	0.00E+00	0.00E+00
3296	ALL	752888.42	4044660.7	1.93E-08	70YrCancerDerived_InhSoil[	1.93E-08	0.00E+00	0.00E+00	0.00E+00	0.00E+00	0.00E+00	0.00E+00	0.00E+00	0.00E+00	0.00E+00	0.00E+00	0.00E+00
3297	ALL	752988.42	4044660.7	1.94E-08	70YrCancerDerived_InhSoil[	1.94E-08	0.00E+00	0.00E+00	0.00E+00	0.00E+00	0.00E+00	0.00E+00	0.00E+00	0.00E+00	0.00E+00	0.00E+00	0.00E+00
3298	ALL	748088.42	4044760.7	2.73E-08	70YrCancerDerived_InhSoil[	2.73E-08	0.00E+00	0.00E+00	0.00E+00	0.00E+00	0.00E+00	0.00E+00	0.00E+00	0.00E+00	0.00E+00	0.00E+00	0.00E+00
3299	ALL	748188.42	4044760.7	2.68E-08	70YrCancerDerived_InhSoil[	2.68E-08	0.00E+00	0.00E+00	0.00E+00	0.00E+00	0.00E+00	0.00E+00	0.00E+00	0.00E+00	0.00E+00	0.00E+00	0.00E+00
3300	ALL	748288.42	4044760.7	2.63E-08	70YrCancerDerived_InhSoil[	2.63E-08	0.00E+00	0.00E+00	0.00E+00	0.00E+00	0.00E+00	0.00E+00	0.00E+00	0.00E+00	0.00E+00	0.00E+00	0.00E+00
3301	ALL	748388.42	4044760.7	2.58E-08	70YrCancerDerived_InhSoil[	2.58E-08	0.00E+00	0.00E+00	0.00E+00	0.00E+00	0.00E+00	0.00E+00	0.00E+00	0.00E+00	0.00E+00	0.00E+00	0.00E+00
3302	ALL	748488.42	4044760.7	2.54E-08	70YrCancerDerived_InhSoil[	2.54E-08	0.00E+00	0.00E+00	0.00E+00	0.00E+00	0.00E+00	0.00E+00	0.00E+00	0.00E+00	0.00E+00	0.00E+00	0.00E+00

3303	ALL	752688.42	4044760.7	1.91E-08	70YrCancerDerived_InhSoilI	1.91E-08	0.00E+00	0.00E+00	0.00E+00	0.00E+00	0.00E+00	0.00E+00	0.00E+00	0.00E+00	0.00E+00	0.00E+00	0.00E+00
3304	ALL	752788.42	4044760.7	1.90E-08	70YrCancerDerived_InhSoilI	1.90E-08	0.00E+00	0.00E+00	0.00E+00	0.00E+00	0.00E+00	0.00E+00	0.00E+00	0.00E+00	0.00E+00	0.00E+00	0.00E+00
3305	ALL	752888.42	4044760.7	1.90E-08	70YrCancerDerived_InhSoilI	1.90E-08	0.00E+00	0.00E+00	0.00E+00	0.00E+00	0.00E+00	0.00E+00	0.00E+00	0.00E+00	0.00E+00	0.00E+00	0.00E+00
3306	ALL	752988.42	4044760.7	1.90E-08	70YrCancerDerived_InhSoilI	1.90E-08	0.00E+00	0.00E+00	0.00E+00	0.00E+00	0.00E+00	0.00E+00	0.00E+00	0.00E+00	0.00E+00	0.00E+00	0.00E+00
3307	ALL	748088.42	4044860.7	2.68E-08	70YrCancerDerived_InhSoilI	2.68E-08	0.00E+00	0.00E+00	0.00E+00	0.00E+00	0.00E+00	0.00E+00	0.00E+00	0.00E+00	0.00E+00	0.00E+00	0.00E+00
3308	ALL	748188.42	4044860.7	2.63E-08	70YrCancerDerived_InhSoilI	2.63E-08	0.00E+00	0.00E+00	0.00E+00	0.00E+00	0.00E+00	0.00E+00	0.00E+00	0.00E+00	0.00E+00	0.00E+00	0.00E+00
3309	ALL	748288.42	4044860.7	2.59E-08	70YrCancerDerived_InhSoilI	2.59E-08	0.00E+00	0.00E+00	0.00E+00	0.00E+00	0.00E+00	0.00E+00	0.00E+00	0.00E+00	0.00E+00	0.00E+00	0.00E+00
3310	ALL	748388.42	4044860.7	2.54E-08	70YrCancerDerived_InhSoilI	2.54E-08	0.00E+00	0.00E+00	0.00E+00	0.00E+00	0.00E+00	0.00E+00	0.00E+00	0.00E+00	0.00E+00	0.00E+00	0.00E+00
3311	ALL	750188.42	4044860.7	2.19E-08	70YrCancerDerived_InhSoilI	2.19E-08	0.00E+00	0.00E+00	0.00E+00	0.00E+00	0.00E+00	0.00E+00	0.00E+00	0.00E+00	0.00E+00	0.00E+00	0.00E+00
3312	ALL	752688.42	4044860.7	1.88E-08	70YrCancerDerived_InhSoilI	1.88E-08	0.00E+00	0.00E+00	0.00E+00	0.00E+00	0.00E+00	0.00E+00	0.00E+00	0.00E+00	0.00E+00	0.00E+00	0.00E+00
3313	ALL	752788.42	4044860.7	1.88E-08	70YrCancerDerived_InhSoilI	1.88E-08	0.00E+00	0.00E+00	0.00E+00	0.00E+00	0.00E+00	0.00E+00	0.00E+00	0.00E+00	0.00E+00	0.00E+00	0.00E+00
3314	ALL	752888.42	4044860.7	1.88E-08	70YrCancerDerived_InhSoilI	1.88E-08	0.00E+00	0.00E+00	0.00E+00	0.00E+00	0.00E+00	0.00E+00	0.00E+00	0.00E+00	0.00E+00	0.00E+00	0.00E+00
3315	ALL	752988.42	4044860.7	1.87E-08	70YrCancerDerived_InhSoilI	1.87E-08	0.00E+00	0.00E+00	0.00E+00	0.00E+00	0.00E+00	0.00E+00	0.00E+00	0.00E+00	0.00E+00	0.00E+00	0.00E+00
3316	ALL	748088.42	4044960.7	2.63E-08	70YrCancerDerived_InhSoilI	2.63E-08	0.00E+00	0.00E+00	0.00E+00	0.00E+00	0.00E+00	0.00E+00	0.00E+00	0.00E+00	0.00E+00	0.00E+00	0.00E+00
3317	ALL	748188.42	4044960.7	2.58E-08	70YrCancerDerived_InhSoilI	2.58E-08	0.00E+00	0.00E+00	0.00E+00	0.00E+00	0.00E+00	0.00E+00	0.00E+00	0.00E+00	0.00E+00	0.00E+00	0.00E+00
3318	ALL	748288.42	4044960.7	2.54E-08	70YrCancerDerived_InhSoilI	2.54E-08	0.00E+00	0.00E+00	0.00E+00	0.00E+00	0.00E+00	0.00E+00	0.00E+00	0.00E+00	0.00E+00	0.00E+00	0.00E+00
3319	ALL	748388.42	4044960.7	2.50E-08	70YrCancerDerived_InhSoilI	2.50E-08	0.00E+00	0.00E+00	0.00E+00	0.00E+00	0.00E+00	0.00E+00	0.00E+00	0.00E+00	0.00E+00	0.00E+00	0.00E+00
3320	ALL	750188.42	4044960.7	2.16E-08	70YrCancerDerived_InhSoilI	2.16E-08	0.00E+00	0.00E+00	0.00E+00	0.00E+00	0.00E+00	0.00E+00	0.00E+00	0.00E+00	0.00E+00	0.00E+00	0.00E+00
3321	ALL	750288.42	4044960.7	2.14E-08	70YrCancerDerived_InhSoilI	2.14E-08	0.00E+00	0.00E+00	0.00E+00	0.00E+00	0.00E+00	0.00E+00	0.00E+00	0.00E+00	0.00E+00	0.00E+00	0.00E+00
3322	ALL	750388.42	4044960.7	2.11E-08	70YrCancerDerived_InhSoilI	2.11E-08	0.00E+00	0.00E+00	0.00E+00	0.00E+00	0.00E+00	0.00E+00	0.00E+00	0.00E+00	0.00E+00	0.00E+00	0.00E+00
3323	ALL	750488.42	4044960.7	2.08E-08	70YrCancerDerived_InhSoilI	2.08E-08	0.00E+00	0.00E+00	0.00E+00	0.00E+00	0.00E+00	0.00E+00	0.00E+00	0.00E+00	0.00E+00	0.00E+00	0.00E+00
3324	ALL	750588.42	4044960.7	2.05E-08	70YrCancerDerived_InhSoilI	2.05E-08	0.00E+00	0.00E+00	0.00E+00	0.00E+00	0.00E+00	0.00E+00	0.00E+00	0.00E+00	0.00E+00	0.00E+00	0.00E+00
3325	ALL	750688.42	4044960.7	2.01E-08	70YrCancerDerived_InhSoilI	2.01E-08	0.00E+00	0.00E+00	0.00E+00	0.00E+00	0.00E+00	0.00E+00	0.00E+00	0.00E+00	0.00E+00	0.00E+00	0.00E+00
3326	ALL	750788.42	4044960.7	1.98E-08	70YrCancerDerived_InhSoilI	1.98E-08	0.00E+00	0.00E+00	0.00E+00	0.00E+00	0.00E+00	0.00E+00	0.00E+00	0.00E+00	0.00E+00	0.00E+00	0.00E+00
3327	ALL	750888.42	4044960.7	1.95E-08	70YrCancerDerived_InhSoilI	1.95E-08	0.00E+00	0.00E+00	0.00E+00	0.00E+00	0.00E+00	0.00E+00	0.00E+00	0.00E+00	0.00E+00	0.00E+00	0.00E+00
3328	ALL	750988.42	4044960.7	1.93E-08	70YrCancerDerived_InhSoilI	1.93E-08	0.00E+00	0.00E+00	0.00E+00	0.00E+00	0.00E+00	0.00E+00	0.00E+00	0.00E+00	0.00E+00	0.00E+00	0.00E+00
3329	ALL	751088.42	4044960.7	1.91E-08	70YrCancerDerived_InhSoilI	1.91E-08	0.00E+00	0.00E+00	0.00E+00	0.00E+00	0.00E+00	0.00E+00	0.00E+00	0.00E+00	0.00E+00	0.00E+00	0.00E+00
3330	ALL	751188.42	4044960.7	1.90E-08	70YrCancerDerived_InhSoilI	1.90E-08	0.00E+00	0.00E+00	0.00E+00	0.00E+00	0.00E+00	0.00E+00	0.00E+00	0.00E+00	0.00E+00	0.00E+00	0.00E+00
3331	ALL	751288.42	4044960.7	1.88E-08	70YrCancerDerived_InhSoilI	1.88E-08	0.00E+00	0.00E+00	0.00E+00	0.00E+00	0.00E+00	0.00E+00	0.00E+00	0.00E+00	0.00E+00	0.00E+00	0.00E+00
3332	ALL	751388.42	4044960.7	1.88E-08	70YrCancerDerived_InhSoilI	1.88E-08	0.00E+00	0.00E+00	0.00E+00	0.00E+00	0.00E+00	0.00E+00	0.00E+00	0.00E+00	0.00E+00	0.00E+00	0.00E+00
3333	ALL	751488.42	4044960.7	1.87E-08	70YrCancerDerived_InhSoilI	1.87E-08	0.00E+00	0.00E+00	0.00E+00	0.00E+00	0.00E+00	0.00E+00	0.00E+00	0.00E+00	0.00E+00	0.00E+00	0.00E+00
3334	ALL	751588.42	4044960.7	1.87E-08	70YrCancerDerived_InhSoilI	1.87E-08	0.00E+00	0.00E+00	0.00E+00	0.00E+00	0.00E+00	0.00E+00	0.00E+00	0.00E+00	0.00E+00	0.00E+00	0.00E+00
3335	ALL	751688.42	4044960.7	1.87E-08	70YrCancerDerived_InhSoilI	1.87E-08	0.00E+00	0.00E+00	0.00E+00	0.00E+00	0.00E+00	0.00E+00	0.00E+00	0.00E+00	0.00E+00	0.00E+00	0.00E+00
3336	ALL	751788.42	4044960.7	1.87E-08	70YrCancerDerived_InhSoilI	1.87E-08	0.00E+00	0.00E+00	0.00E+00	0.00E+00	0.00E+00	0.00E+00	0.00E+00	0.00E+00	0.00E+00	0.00E+00	0.00E+00
3337	ALL	751888.42	4044960.7	1.87E-08	70YrCancerDerived_InhSoilI	1.87E-08	0.00E+00	0.00E+00	0.00E+00	0.00E+00	0.00E+00	0.00E+00	0.00E+00	0.00E+00	0.00E+00	0.00E+00	0.00E+00
3338	ALL	751988.42	4044960.7	1.87E-08	70YrCancerDerived_InhSoilI	1.87E-08	0.00E+00	0.00E+00	0.00E+00	0.00E+00	0.00E+00	0.00E+00	0.00E+00	0.00E+00	0.00E+00	0.00E+00	0.00E+00
3339	ALL	752088.42	4044960.7	1.87E-08	70YrCancerDerived_InhSoilI	1.87E-08	0.00E+00	0.00E+00	0.00E+00	0.00E+00	0.00E+00	0.00E+00	0.00E+00	0.00E+00	0.00E+00	0.00E+00	0.00E+00
3340	ALL	752188.42	4044960.7	1.87E-08	70YrCancerDerived_InhSoilI	1.87E-08	0.00E+00	0.00E+00	0.00E+00	0.00E+00	0.00E+00	0.00E+00	0.00E+00	0.00E+00	0.00E+00	0.00E+00	0.00E+00
3341	ALL	752288.42	4044960.7	1.87E-08	70YrCancerDerived_InhSoilI	1.87E-08	0.00E+00	0.00E+00	0.00E+00	0.00E+00	0.00E+00	0.00E+00	0.00E+00	0.00E+00	0.00E+00	0.00E+00	0.00E+00
3342	ALL	752388.42	4044960.7	1.87E-08	70YrCancerDerived_InhSoilI	1.87E-08	0.00E+00	0.00E+00	0.00E+00	0.00E+00	0.00E+00	0.00E+00	0.00E+00	0.00E+00	0.00E+00	0.00E+00	0.00E+00
3343	ALL	752488.42	4044960.7	1.86E-08	70YrCancerDerived_InhSoilI	1.86E-08	0.00E+00	0.00E+00	0.00E+00	0.00E+00	0.00E+00	0.00E+00	0.00E+00	0.00E+00	0.00E+00	0.00E+00	0.00E+00
3344	ALL	752588.42	4044960.7	1.86E-08	70YrCancerDerived_InhSoilI	1.86E-08	0.00E+00	0.00E+00	0.00E+00	0.00E+00	0.00E+00	0.00E+00	0.00E+00	0.00E+00	0.00E+00	0.00E+00	0.00E+00
3345	ALL	752688.42	4044960.7	1.86E-08	70YrCancerDerived_InhSoilI	1.86E-08	0.00E+00	0.00E+00	0.00E+00	0.00E+00	0.00E+00	0.00E+00	0.00E+00	0.00E+00	0.00E+00	0.00E+00	0.00E+00
3346	ALL	752788.42	4044960.7	1.85E-08	70YrCancerDerived_InhSoilI	1.85E-08	0.00E+00	0.00E+00	0.00E+00	0.00E+00	0.00E+00	0.00E+00	0.00E+00	0.00E+00	0.00E+00	0.00E+00	0.00E+00
3347	ALL	752888.42	4044960.7	1.85E-08	70YrCancerDerived_InhSoilI	1.85E-08	0.00E+00	0.00E+00	0.00E+00	0.00E+00	0.00E+00	0.00E+00	0.00E+00	0.00E+00	0.00E+00	0.00E+00	0.00E+00
3348	ALL	752988.42	4044960.7	1.85E-08	70YrCancerDerived_InhSoilI	1.85E-08	0.00E+00	0.00E+00	0.00E+00	0.00E+00	0.00E+00	0.00E+00	0.00E+00	0.00E+00	0.00E+00	0.00E+00	0.00E+00
3349	ALL	748088.42	4045060.7	2.58E-08	70YrCancerDerived_InhSoilI	2.58E-08	0.00E+00	0.00E+00	0.00E+00	0.00E+00	0.00E+00	0.00E+00	0.00E+00	0.00E+00	0.00E+00	0.00E+00	0.00E+00
3350	ALL	748188.42	4045060.7	2.54E-08	70YrCancerDerived_InhSoilI	2.54E-08	0.00E+00	0.00E+00	0.00E+00	0.00E+00	0.00E+00	0.00E+00	0.00E+00	0.00E+00	0.00E+00	0.00E+00	0.00E+00
3351	ALL	748288.42	4045060.7	2.50E-08	70YrCancerDerived_InhSoilI	2.50E-08	0.00E+00	0.00E+00	0.00E+00	0.00E+00	0.00E+00	0.00E+00	0.00E+00	0.00E+00	0.00E+00	0.00E+00	0.00E+00
3352	ALL	748388.42	4045060.7	2.46E-08	70YrCancerDerived_InhSoilI	2.46E-08	0.00E+00	0.00E+00	0.00E+00	0.00E+00	0.00E+00	0.00E+00	0.00E+00	0.00E+00	0.00E+00	0.00E+00	0.00E+00
3353	ALL	750188.42	4045060.7	2.14E-08	70YrCancerDerived_InhSoilI	2.14E-08	0.00E+00	0.00E+00	0.00E+00	0.00E+00	0.00E+00	0.00E+00	0.00E+00	0.00E+00	0.00E+00	0.00E+00	0.00E+00
3354	ALL	750288.42	4045060.7	2.12E-08	70YrCancerDerived_InhSoilI	2.12E-08	0.00E+00	0.00E+00	0.00E+00	0.00E+00	0.00E+00	0.00E+00	0.00E+00	0.00E+00	0.00E+00	0.00E+00	0.00E+00
3355	ALL	750388.42	4045060.7	2.10E-08	70YrCancerDerived_InhSoilI	2.10E-08	0.00E+00	0.00E+00	0.00E+00	0.00E+00	0.00E+00	0.00E+00	0.00E+00	0.00E+00	0.00E+00	0.00E+00	0.00E+00
3356	ALL	750488.42	4045060.7	2.07E-08	70YrCancerDerived_InhSoilI	2.07E-08	0.00E+00	0.00E+00	0.00E+00	0.00E+00	0.00E+00	0.00E+00	0.00E+00	0.00E+00	0.00E+00	0.00E+00	0.00E+00
3357	ALL	750588.42	4045060.7	2.03E-08	70YrCancerDerived_InhSoilI	2.03E-08	0.00E+00	0.00E+00	0.00E+00	0.00E+00	0.00E+00	0.00E+00	0.00E+00	0.00E+00	0.00E+00	0.00E+00	0.00E+00
3358	ALL	750688.42	4045060.7	2.00E-08	70YrCancerDerived_InhSoilI	2.00E-08	0.00E+00	0.00E+00	0.00E+00	0.00E+00	0.00E+00	0.00E+00	0.00E+00	0.00E+00	0.00E+00	0.00E+00	0.00E+00

3359	ALL	750788.42	4045060.7	1.97E-08	70YrCancerDerived_InhSoil[	1.97E-08	0.00E+00	0.00E+00	0.00E+00	0.00E+00	0.00E+00	0.00E+00	0.00E+00	0.00E+00	0.00E+00	0.00E+00	0.00E+00
3360	ALL	750888.42	4045060.7	1.94E-08	70YrCancerDerived_InhSoil[	1.94E-08	0.00E+00	0.00E+00	0.00E+00	0.00E+00	0.00E+00	0.00E+00	0.00E+00	0.00E+00	0.00E+00	0.00E+00	0.00E+00
3361	ALL	750988.42	4045060.7	1.92E-08	70YrCancerDerived_InhSoil[	1.92E-08	0.00E+00	0.00E+00	0.00E+00	0.00E+00	0.00E+00	0.00E+00	0.00E+00	0.00E+00	0.00E+00	0.00E+00	0.00E+00
3362	ALL	751088.42	4045060.7	1.90E-08	70YrCancerDerived_InhSoil[	1.90E-08	0.00E+00	0.00E+00	0.00E+00	0.00E+00	0.00E+00	0.00E+00	0.00E+00	0.00E+00	0.00E+00	0.00E+00	0.00E+00
3363	ALL	751188.42	4045060.7	1.88E-08	70YrCancerDerived_InhSoil[	1.88E-08	0.00E+00	0.00E+00	0.00E+00	0.00E+00	0.00E+00	0.00E+00	0.00E+00	0.00E+00	0.00E+00	0.00E+00	0.00E+00
3364	ALL	751288.42	4045060.7	1.86E-08	70YrCancerDerived_InhSoil[	1.86E-08	0.00E+00	0.00E+00	0.00E+00	0.00E+00	0.00E+00	0.00E+00	0.00E+00	0.00E+00	0.00E+00	0.00E+00	0.00E+00
3365	ALL	751388.42	4045060.7	1.85E-08	70YrCancerDerived_InhSoil[	1.85E-08	0.00E+00	0.00E+00	0.00E+00	0.00E+00	0.00E+00	0.00E+00	0.00E+00	0.00E+00	0.00E+00	0.00E+00	0.00E+00
3366	ALL	751488.42	4045060.7	1.85E-08	70YrCancerDerived_InhSoil[	1.85E-08	0.00E+00	0.00E+00	0.00E+00	0.00E+00	0.00E+00	0.00E+00	0.00E+00	0.00E+00	0.00E+00	0.00E+00	0.00E+00
3367	ALL	751588.42	4045060.7	1.84E-08	70YrCancerDerived_InhSoil[	1.84E-08	0.00E+00	0.00E+00	0.00E+00	0.00E+00	0.00E+00	0.00E+00	0.00E+00	0.00E+00	0.00E+00	0.00E+00	0.00E+00
3368	ALL	751688.42	4045060.7	1.84E-08	70YrCancerDerived_InhSoil[	1.84E-08	0.00E+00	0.00E+00	0.00E+00	0.00E+00	0.00E+00	0.00E+00	0.00E+00	0.00E+00	0.00E+00	0.00E+00	0.00E+00
3369	ALL	751788.42	4045060.7	1.84E-08	70YrCancerDerived_InhSoil[	1.84E-08	0.00E+00	0.00E+00	0.00E+00	0.00E+00	0.00E+00	0.00E+00	0.00E+00	0.00E+00	0.00E+00	0.00E+00	0.00E+00
3370	ALL	751888.42	4045060.7	1.84E-08	70YrCancerDerived_InhSoil[	1.84E-08	0.00E+00	0.00E+00	0.00E+00	0.00E+00	0.00E+00	0.00E+00	0.00E+00	0.00E+00	0.00E+00	0.00E+00	0.00E+00
3371	ALL	751988.42	4045060.7	1.84E-08	70YrCancerDerived_InhSoil[	1.84E-08	0.00E+00	0.00E+00	0.00E+00	0.00E+00	0.00E+00	0.00E+00	0.00E+00	0.00E+00	0.00E+00	0.00E+00	0.00E+00
3372	ALL	752088.42	4045060.7	1.84E-08	70YrCancerDerived_InhSoil[	1.84E-08	0.00E+00	0.00E+00	0.00E+00	0.00E+00	0.00E+00	0.00E+00	0.00E+00	0.00E+00	0.00E+00	0.00E+00	0.00E+00
3373	ALL	752188.42	4045060.7	1.85E-08	70YrCancerDerived_InhSoil[	1.85E-08	0.00E+00	0.00E+00	0.00E+00	0.00E+00	0.00E+00	0.00E+00	0.00E+00	0.00E+00	0.00E+00	0.00E+00	0.00E+00
3374	ALL	752288.42	4045060.7	1.84E-08	70YrCancerDerived_InhSoil[	1.84E-08	0.00E+00	0.00E+00	0.00E+00	0.00E+00	0.00E+00	0.00E+00	0.00E+00	0.00E+00	0.00E+00	0.00E+00	0.00E+00
3375	ALL	752388.42	4045060.7	1.84E-08	70YrCancerDerived_InhSoil[	1.84E-08	0.00E+00	0.00E+00	0.00E+00	0.00E+00	0.00E+00	0.00E+00	0.00E+00	0.00E+00	0.00E+00	0.00E+00	0.00E+00
3376	ALL	752488.42	4045060.7	1.84E-08	70YrCancerDerived_InhSoil[	1.84E-08	0.00E+00	0.00E+00	0.00E+00	0.00E+00	0.00E+00	0.00E+00	0.00E+00	0.00E+00	0.00E+00	0.00E+00	0.00E+00
3377	ALL	752588.42	4045060.7	1.83E-08	70YrCancerDerived_InhSoil[	1.83E-08	0.00E+00	0.00E+00	0.00E+00	0.00E+00	0.00E+00	0.00E+00	0.00E+00	0.00E+00	0.00E+00	0.00E+00	0.00E+00
3378	ALL	752688.42	4045060.7	1.83E-08	70YrCancerDerived_InhSoil[	1.83E-08	0.00E+00	0.00E+00	0.00E+00	0.00E+00	0.00E+00	0.00E+00	0.00E+00	0.00E+00	0.00E+00	0.00E+00	0.00E+00
3379	ALL	752788.42	4045060.7	1.83E-08	70YrCancerDerived_InhSoil[	1.83E-08	0.00E+00	0.00E+00	0.00E+00	0.00E+00	0.00E+00	0.00E+00	0.00E+00	0.00E+00	0.00E+00	0.00E+00	0.00E+00
3380	ALL	752888.42	4045060.7	1.82E-08	70YrCancerDerived_InhSoil[	1.82E-08	0.00E+00	0.00E+00	0.00E+00	0.00E+00	0.00E+00	0.00E+00	0.00E+00	0.00E+00	0.00E+00	0.00E+00	0.00E+00
3381	ALL	752988.42	4045060.7	1.82E-08	70YrCancerDerived_InhSoil[	1.82E-08	0.00E+00	0.00E+00	0.00E+00	0.00E+00	0.00E+00	0.00E+00	0.00E+00	0.00E+00	0.00E+00	0.00E+00	0.00E+00
3382	ALL	748088.42	4045160.7	2.54E-08	70YrCancerDerived_InhSoil[	2.54E-08	0.00E+00	0.00E+00	0.00E+00	0.00E+00	0.00E+00	0.00E+00	0.00E+00	0.00E+00	0.00E+00	0.00E+00	0.00E+00
3383	ALL	748188.42	4045160.7	2.50E-08	70YrCancerDerived_InhSoil[	2.50E-08	0.00E+00	0.00E+00	0.00E+00	0.00E+00	0.00E+00	0.00E+00	0.00E+00	0.00E+00	0.00E+00	0.00E+00	0.00E+00
3384	ALL	748288.42	4045160.7	2.46E-08	70YrCancerDerived_InhSoil[	2.46E-08	0.00E+00	0.00E+00	0.00E+00	0.00E+00	0.00E+00	0.00E+00	0.00E+00	0.00E+00	0.00E+00	0.00E+00	0.00E+00
3385	ALL	748388.42	4045160.7	2.42E-08	70YrCancerDerived_InhSoil[	2.42E-08	0.00E+00	0.00E+00	0.00E+00	0.00E+00	0.00E+00	0.00E+00	0.00E+00	0.00E+00	0.00E+00	0.00E+00	0.00E+00
3386	ALL	750188.42	4045160.7	2.11E-08	70YrCancerDerived_InhSoil[	2.11E-08	0.00E+00	0.00E+00	0.00E+00	0.00E+00	0.00E+00	0.00E+00	0.00E+00	0.00E+00	0.00E+00	0.00E+00	0.00E+00
3387	ALL	750288.42	4045160.7	2.10E-08	70YrCancerDerived_InhSoil[	2.10E-08	0.00E+00	0.00E+00	0.00E+00	0.00E+00	0.00E+00	0.00E+00	0.00E+00	0.00E+00	0.00E+00	0.00E+00	0.00E+00
3388	ALL	750388.42	4045160.7	2.08E-08	70YrCancerDerived_InhSoil[	2.08E-08	0.00E+00	0.00E+00	0.00E+00	0.00E+00	0.00E+00	0.00E+00	0.00E+00	0.00E+00	0.00E+00	0.00E+00	0.00E+00
3389	ALL	750488.42	4045160.7	2.05E-08	70YrCancerDerived_InhSoil[	2.05E-08	0.00E+00	0.00E+00	0.00E+00	0.00E+00	0.00E+00	0.00E+00	0.00E+00	0.00E+00	0.00E+00	0.00E+00	0.00E+00
3390	ALL	750588.42	4045160.7	2.02E-08	70YrCancerDerived_InhSoil[	2.02E-08	0.00E+00	0.00E+00	0.00E+00	0.00E+00	0.00E+00	0.00E+00	0.00E+00	0.00E+00	0.00E+00	0.00E+00	0.00E+00
3391	ALL	750688.42	4045160.7	1.99E-08	70YrCancerDerived_InhSoil[	1.99E-08	0.00E+00	0.00E+00	0.00E+00	0.00E+00	0.00E+00	0.00E+00	0.00E+00	0.00E+00	0.00E+00	0.00E+00	0.00E+00
3392	ALL	750788.42	4045160.7	1.96E-08	70YrCancerDerived_InhSoil[	1.96E-08	0.00E+00	0.00E+00	0.00E+00	0.00E+00	0.00E+00	0.00E+00	0.00E+00	0.00E+00	0.00E+00	0.00E+00	0.00E+00
3393	ALL	750888.42	4045160.7	1.93E-08	70YrCancerDerived_InhSoil[	1.93E-08	0.00E+00	0.00E+00	0.00E+00	0.00E+00	0.00E+00	0.00E+00	0.00E+00	0.00E+00	0.00E+00	0.00E+00	0.00E+00
3394	ALL	750988.42	4045160.7	1.90E-08	70YrCancerDerived_InhSoil[	1.90E-08	0.00E+00	0.00E+00	0.00E+00	0.00E+00	0.00E+00	0.00E+00	0.00E+00	0.00E+00	0.00E+00	0.00E+00	0.00E+00
3395	ALL	751088.42	4045160.7	1.88E-08	70YrCancerDerived_InhSoil[	1.88E-08	0.00E+00	0.00E+00	0.00E+00	0.00E+00	0.00E+00	0.00E+00	0.00E+00	0.00E+00	0.00E+00	0.00E+00	0.00E+00
3396	ALL	751188.42	4045160.7	1.86E-08	70YrCancerDerived_InhSoil[	1.86E-08	0.00E+00	0.00E+00	0.00E+00	0.00E+00	0.00E+00	0.00E+00	0.00E+00	0.00E+00	0.00E+00	0.00E+00	0.00E+00
3397	ALL	751288.42	4045160.7	1.84E-08	70YrCancerDerived_InhSoil[	1.84E-08	0.00E+00	0.00E+00	0.00E+00	0.00E+00	0.00E+00	0.00E+00	0.00E+00	0.00E+00	0.00E+00	0.00E+00	0.00E+00
3398	ALL	751388.42	4045160.7	1.83E-08	70YrCancerDerived_InhSoil[	1.83E-08	0.00E+00	0.00E+00	0.00E+00	0.00E+00	0.00E+00	0.00E+00	0.00E+00	0.00E+00	0.00E+00	0.00E+00	0.00E+00
3399	ALL	751488.42	4045160.7	1.82E-08	70YrCancerDerived_InhSoil[	1.82E-08	0.00E+00	0.00E+00	0.00E+00	0.00E+00	0.00E+00	0.00E+00	0.00E+00	0.00E+00	0.00E+00	0.00E+00	0.00E+00
3400	ALL	751588.42	4045160.7	1.82E-08	70YrCancerDerived_InhSoil[	1.82E-08	0.00E+00	0.00E+00	0.00E+00	0.00E+00	0.00E+00	0.00E+00	0.00E+00	0.00E+00	0.00E+00	0.00E+00	0.00E+00
3401	ALL	751688.42	4045160.7	1.82E-08	70YrCancerDerived_InhSoil[	1.82E-08	0.00E+00	0.00E+00	0.00E+00	0.00E+00	0.00E+00	0.00E+00	0.00E+00	0.00E+00	0.00E+00	0.00E+00	0.00E+00
3402	ALL	751788.42	4045160.7	1.82E-08	70YrCancerDerived_InhSoil[	1.82E-08	0.00E+00	0.00E+00	0.00E+00	0.00E+00	0.00E+00	0.00E+00	0.00E+00	0.00E+00	0.00E+00	0.00E+00	0.00E+00
3403	ALL	751888.42	4045160.7	1.82E-08	70YrCancerDerived_InhSoil[	1.82E-08	0.00E+00	0.00E+00	0.00E+00	0.00E+00	0.00E+00	0.00E+00	0.00E+00	0.00E+00	0.00E+00	0.00E+00	0.00E+00
3404	ALL	751988.42	4045160.7	1.82E-08	70YrCancerDerived_InhSoil[	1.82E-08	0.00E+00	0.00E+00	0.00E+00	0.00E+00	0.00E+00	0.00E+00	0.00E+00	0.00E+00	0.00E+00	0.00E+00	0.00E+00
3405	ALL	752088.42	4045160.7	1.82E-08	70YrCancerDerived_InhSoil[	1.82E-08	0.00E+00	0.00E+00	0.00E+00	0.00E+00	0.00E+00	0.00E+00	0.00E+00	0.00E+00	0.00E+00	0.00E+00	0.00E+00
3406	ALL	752188.42	4045160.7	1.82E-08	70YrCancerDerived_InhSoil[	1.82E-08	0.00E+00	0.00E+00	0.00E+00	0.00E+00	0.00E+00	0.00E+00	0.00E+00	0.00E+00	0.00E+00	0.00E+00	0.00E+00
3407	ALL	752288.42	4045160.7	1.82E-08	70YrCancerDerived_InhSoil[	1.82E-08	0.00E+00	0.00E+00	0.00E+00	0.00E+00	0.00E+00	0.00E+00	0.00E+00	0.00E+00	0.00E+00	0.00E+00	0.00E+00
3408	ALL	752388.42	4045160.7	1.82E-08	70YrCancerDerived_InhSoil[	1.82E-08	0.00E+00	0.00E+00	0.00E+00	0.00E+00	0.00E+00	0.00E+00	0.00E+00	0.00E+00	0.00E+00	0.00E+00	0.00E+00
3409	ALL	752488.42	4045160.7	1.81E-08	70YrCancerDerived_InhSoil[	1.81E-08	0.00E+00	0.00E+00	0.00E+00	0.00E+00	0.00E+00	0.00E+00	0.00E+00	0.00E+00	0.00E+00	0.00E+00	0.00E+00
3410	ALL	752588.42	4045160.7	1.81E-08	70YrCancerDerived_InhSoil[	1.81E-08	0.00E+00	0.00E+00	0.00E+00	0.00E+00	0.00E+00	0.00E+00	0.00E+00	0.00E+00	0.00E+00	0.00E+00	0.00E+00
3411	ALL	752688.42	4045160.7	1.81E-08	70YrCancerDerived_InhSoil[	1.81E-08	0.00E+00	0.00E+00	0.00E+00	0.00E+00	0.00E+00	0.00E+00	0.00E+00	0.00E+00	0.00E+00	0.00E+00	0.00E+00
3412	ALL	752788.42	4045160.7	1.80E-08	70YrCancerDerived_InhSoil[	1.80E-08	0.00E+00	0.00E+00	0.00E+00	0.00E+00	0.00E+00	0.00E+00	0.00E+00	0.00E+00	0.00E+00	0.00E+00	0.00E+00
3413	ALL	752888.42	4045160.7	1.80E-08	70YrCancerDerived_InhSoil[	1.80E-08	0.00E+00	0.00E+00	0.00E+00	0.00E+00	0.00E+00	0.00E+00	0.00E+00	0.00E+00	0.00E+00	0.00E+00	0.00E+00
3414	ALL	752988.42	4045160.7	1.80E-08	70YrCancerDerived_InhSoil[	1.80E-08	0.00E+00	0.00E+00	0.00E+00	0.00E+00	0.00E+00	0.00E+00	0.00E+00	0.00E+00	0.00E+00	0.00E+00	0.00E+00

3415	ALL	748088.42	4045260.7	2.50E-08	70YrCancerDerived_InhSoil[	2.50E-08	0.00E+00	0.00E+00	0.00E+00	0.00E+00	0.00E+00	0.00E+00	0.00E+00	0.00E+00	0.00E+00	0.00E+00	0.00E+00
3416	ALL	748188.42	4045260.7	2.46E-08	70YrCancerDerived_InhSoil[	2.46E-08	0.00E+00	0.00E+00	0.00E+00	0.00E+00	0.00E+00	0.00E+00	0.00E+00	0.00E+00	0.00E+00	0.00E+00	0.00E+00
3417	ALL	748288.42	4045260.7	2.42E-08	70YrCancerDerived_InhSoil[	2.42E-08	0.00E+00	0.00E+00	0.00E+00	0.00E+00	0.00E+00	0.00E+00	0.00E+00	0.00E+00	0.00E+00	0.00E+00	0.00E+00
3418	ALL	748388.42	4045260.7	2.38E-08	70YrCancerDerived_InhSoil[	2.38E-08	0.00E+00	0.00E+00	0.00E+00	0.00E+00	0.00E+00	0.00E+00	0.00E+00	0.00E+00	0.00E+00	0.00E+00	0.00E+00
3419	ALL	750188.42	4045260.7	2.08E-08	70YrCancerDerived_InhSoil[	2.08E-08	0.00E+00	0.00E+00	0.00E+00	0.00E+00	0.00E+00	0.00E+00	0.00E+00	0.00E+00	0.00E+00	0.00E+00	0.00E+00
3420	ALL	750288.42	4045260.7	2.07E-08	70YrCancerDerived_InhSoil[	2.07E-08	0.00E+00	0.00E+00	0.00E+00	0.00E+00	0.00E+00	0.00E+00	0.00E+00	0.00E+00	0.00E+00	0.00E+00	0.00E+00
3421	ALL	750388.42	4045260.7	2.06E-08	70YrCancerDerived_InhSoil[	2.06E-08	0.00E+00	0.00E+00	0.00E+00	0.00E+00	0.00E+00	0.00E+00	0.00E+00	0.00E+00	0.00E+00	0.00E+00	0.00E+00
3422	ALL	750488.42	4045260.7	2.03E-08	70YrCancerDerived_InhSoil[	2.03E-08	0.00E+00	0.00E+00	0.00E+00	0.00E+00	0.00E+00	0.00E+00	0.00E+00	0.00E+00	0.00E+00	0.00E+00	0.00E+00
3423	ALL	750588.42	4045260.7	2.01E-08	70YrCancerDerived_InhSoil[	2.01E-08	0.00E+00	0.00E+00	0.00E+00	0.00E+00	0.00E+00	0.00E+00	0.00E+00	0.00E+00	0.00E+00	0.00E+00	0.00E+00
3424	ALL	750688.42	4045260.7	1.97E-08	70YrCancerDerived_InhSoil[	1.97E-08	0.00E+00	0.00E+00	0.00E+00	0.00E+00	0.00E+00	0.00E+00	0.00E+00	0.00E+00	0.00E+00	0.00E+00	0.00E+00
3425	ALL	750788.42	4045260.7	1.94E-08	70YrCancerDerived_InhSoil[	1.94E-08	0.00E+00	0.00E+00	0.00E+00	0.00E+00	0.00E+00	0.00E+00	0.00E+00	0.00E+00	0.00E+00	0.00E+00	0.00E+00
3426	ALL	750888.42	4045260.7	1.91E-08	70YrCancerDerived_InhSoil[	1.91E-08	0.00E+00	0.00E+00	0.00E+00	0.00E+00	0.00E+00	0.00E+00	0.00E+00	0.00E+00	0.00E+00	0.00E+00	0.00E+00
3427	ALL	750988.42	4045260.7	1.89E-08	70YrCancerDerived_InhSoil[	1.89E-08	0.00E+00	0.00E+00	0.00E+00	0.00E+00	0.00E+00	0.00E+00	0.00E+00	0.00E+00	0.00E+00	0.00E+00	0.00E+00
3428	ALL	751088.42	4045260.7	1.87E-08	70YrCancerDerived_InhSoil[	1.87E-08	0.00E+00	0.00E+00	0.00E+00	0.00E+00	0.00E+00	0.00E+00	0.00E+00	0.00E+00	0.00E+00	0.00E+00	0.00E+00
3429	ALL	751188.42	4045260.7	1.85E-08	70YrCancerDerived_InhSoil[	1.85E-08	0.00E+00	0.00E+00	0.00E+00	0.00E+00	0.00E+00	0.00E+00	0.00E+00	0.00E+00	0.00E+00	0.00E+00	0.00E+00
3430	ALL	751288.42	4045260.7	1.83E-08	70YrCancerDerived_InhSoil[	1.83E-08	0.00E+00	0.00E+00	0.00E+00	0.00E+00	0.00E+00	0.00E+00	0.00E+00	0.00E+00	0.00E+00	0.00E+00	0.00E+00
3431	ALL	751388.42	4045260.7	1.81E-08	70YrCancerDerived_InhSoil[	1.81E-08	0.00E+00	0.00E+00	0.00E+00	0.00E+00	0.00E+00	0.00E+00	0.00E+00	0.00E+00	0.00E+00	0.00E+00	0.00E+00
3432	ALL	751488.42	4045260.7	1.80E-08	70YrCancerDerived_InhSoil[	1.80E-08	0.00E+00	0.00E+00	0.00E+00	0.00E+00	0.00E+00	0.00E+00	0.00E+00	0.00E+00	0.00E+00	0.00E+00	0.00E+00
3433	ALL	751588.42	4045260.7	1.80E-08	70YrCancerDerived_InhSoil[	1.80E-08	0.00E+00	0.00E+00	0.00E+00	0.00E+00	0.00E+00	0.00E+00	0.00E+00	0.00E+00	0.00E+00	0.00E+00	0.00E+00
3434	ALL	751688.42	4045260.7	1.79E-08	70YrCancerDerived_InhSoil[	1.79E-08	0.00E+00	0.00E+00	0.00E+00	0.00E+00	0.00E+00	0.00E+00	0.00E+00	0.00E+00	0.00E+00	0.00E+00	0.00E+00
3435	ALL	751788.42	4045260.7	1.79E-08	70YrCancerDerived_InhSoil[	1.79E-08	0.00E+00	0.00E+00	0.00E+00	0.00E+00	0.00E+00	0.00E+00	0.00E+00	0.00E+00	0.00E+00	0.00E+00	0.00E+00
3436	ALL	751888.42	4045260.7	1.79E-08	70YrCancerDerived_InhSoil[	1.79E-08	0.00E+00	0.00E+00	0.00E+00	0.00E+00	0.00E+00	0.00E+00	0.00E+00	0.00E+00	0.00E+00	0.00E+00	0.00E+00
3437	ALL	751988.42	4045260.7	1.79E-08	70YrCancerDerived_InhSoil[	1.79E-08	0.00E+00	0.00E+00	0.00E+00	0.00E+00	0.00E+00	0.00E+00	0.00E+00	0.00E+00	0.00E+00	0.00E+00	0.00E+00
3438	ALL	752088.42	4045260.7	1.79E-08	70YrCancerDerived_InhSoil[	1.79E-08	0.00E+00	0.00E+00	0.00E+00	0.00E+00	0.00E+00	0.00E+00	0.00E+00	0.00E+00	0.00E+00	0.00E+00	0.00E+00
3439	ALL	752188.42	4045260.7	1.80E-08	70YrCancerDerived_InhSoil[	1.80E-08	0.00E+00	0.00E+00	0.00E+00	0.00E+00	0.00E+00	0.00E+00	0.00E+00	0.00E+00	0.00E+00	0.00E+00	0.00E+00
3440	ALL	752288.42	4045260.7	1.79E-08	70YrCancerDerived_InhSoil[	1.79E-08	0.00E+00	0.00E+00	0.00E+00	0.00E+00	0.00E+00	0.00E+00	0.00E+00	0.00E+00	0.00E+00	0.00E+00	0.00E+00
3441	ALL	752388.42	4045260.7	1.79E-08	70YrCancerDerived_InhSoil[	1.79E-08	0.00E+00	0.00E+00	0.00E+00	0.00E+00	0.00E+00	0.00E+00	0.00E+00	0.00E+00	0.00E+00	0.00E+00	0.00E+00
3442	ALL	752488.42	4045260.7	1.79E-08	70YrCancerDerived_InhSoil[	1.79E-08	0.00E+00	0.00E+00	0.00E+00	0.00E+00	0.00E+00	0.00E+00	0.00E+00	0.00E+00	0.00E+00	0.00E+00	0.00E+00
3443	ALL	752588.42	4045260.7	1.79E-08	70YrCancerDerived_InhSoil[	1.79E-08	0.00E+00	0.00E+00	0.00E+00	0.00E+00	0.00E+00	0.00E+00	0.00E+00	0.00E+00	0.00E+00	0.00E+00	0.00E+00
3444	ALL	752688.42	4045260.7	1.79E-08	70YrCancerDerived_InhSoil[	1.79E-08	0.00E+00	0.00E+00	0.00E+00	0.00E+00	0.00E+00	0.00E+00	0.00E+00	0.00E+00	0.00E+00	0.00E+00	0.00E+00
3445	ALL	752788.42	4045260.7	1.78E-08	70YrCancerDerived_InhSoil[	1.78E-08	0.00E+00	0.00E+00	0.00E+00	0.00E+00	0.00E+00	0.00E+00	0.00E+00	0.00E+00	0.00E+00	0.00E+00	0.00E+00
3446	ALL	752888.42	4045260.7	1.78E-08	70YrCancerDerived_InhSoil[	1.78E-08	0.00E+00	0.00E+00	0.00E+00	0.00E+00	0.00E+00	0.00E+00	0.00E+00	0.00E+00	0.00E+00	0.00E+00	0.00E+00
3447	ALL	752988.42	4045260.7	1.78E-08	70YrCancerDerived_InhSoil[	1.78E-08	0.00E+00	0.00E+00	0.00E+00	0.00E+00	0.00E+00	0.00E+00	0.00E+00	0.00E+00	0.00E+00	0.00E+00	0.00E+00
3448	ALL	748088.42	4045360.7	2.46E-08	70YrCancerDerived_InhSoil[	2.46E-08	0.00E+00	0.00E+00	0.00E+00	0.00E+00	0.00E+00	0.00E+00	0.00E+00	0.00E+00	0.00E+00	0.00E+00	0.00E+00
3449	ALL	748188.42	4045360.7	2.42E-08	70YrCancerDerived_InhSoil[	2.42E-08	0.00E+00	0.00E+00	0.00E+00	0.00E+00	0.00E+00	0.00E+00	0.00E+00	0.00E+00	0.00E+00	0.00E+00	0.00E+00
3450	ALL	748288.42	4045360.7	2.38E-08	70YrCancerDerived_InhSoil[	2.38E-08	0.00E+00	0.00E+00	0.00E+00	0.00E+00	0.00E+00	0.00E+00	0.00E+00	0.00E+00	0.00E+00	0.00E+00	0.00E+00
3451	ALL	748388.42	4045360.7	2.34E-08	70YrCancerDerived_InhSoil[	2.34E-08	0.00E+00	0.00E+00	0.00E+00	0.00E+00	0.00E+00	0.00E+00	0.00E+00	0.00E+00	0.00E+00	0.00E+00	0.00E+00
3452	ALL	750188.42	4045360.7	2.06E-08	70YrCancerDerived_InhSoil[	2.06E-08	0.00E+00	0.00E+00	0.00E+00	0.00E+00	0.00E+00	0.00E+00	0.00E+00	0.00E+00	0.00E+00	0.00E+00	0.00E+00
3453	ALL	750288.42	4045360.7	2.05E-08	70YrCancerDerived_InhSoil[	2.05E-08	0.00E+00	0.00E+00	0.00E+00	0.00E+00	0.00E+00	0.00E+00	0.00E+00	0.00E+00	0.00E+00	0.00E+00	0.00E+00
3454	ALL	750388.42	4045360.7	2.04E-08	70YrCancerDerived_InhSoil[	2.04E-08	0.00E+00	0.00E+00	0.00E+00	0.00E+00	0.00E+00	0.00E+00	0.00E+00	0.00E+00	0.00E+00	0.00E+00	0.00E+00
3455	ALL	750488.42	4045360.7	2.02E-08	70YrCancerDerived_InhSoil[	2.02E-08	0.00E+00	0.00E+00	0.00E+00	0.00E+00	0.00E+00	0.00E+00	0.00E+00	0.00E+00	0.00E+00	0.00E+00	0.00E+00
3456	ALL	748088.42	4045460.7	2.41E-08	70YrCancerDerived_InhSoil[	2.41E-08	0.00E+00	0.00E+00	0.00E+00	0.00E+00	0.00E+00	0.00E+00	0.00E+00	0.00E+00	0.00E+00	0.00E+00	0.00E+00
3457	ALL	748188.42	4045460.7	2.38E-08	70YrCancerDerived_InhSoil[	2.38E-08	0.00E+00	0.00E+00	0.00E+00	0.00E+00	0.00E+00	0.00E+00	0.00E+00	0.00E+00	0.00E+00	0.00E+00	0.00E+00
3458	ALL	748288.42	4045460.7	2.34E-08	70YrCancerDerived_InhSoil[	2.34E-08	0.00E+00	0.00E+00	0.00E+00	0.00E+00	0.00E+00	0.00E+00	0.00E+00	0.00E+00	0.00E+00	0.00E+00	0.00E+00
3459	ALL	748388.42	4045460.7	2.31E-08	70YrCancerDerived_InhSoil[	2.31E-08	0.00E+00	0.00E+00	0.00E+00	0.00E+00	0.00E+00	0.00E+00	0.00E+00	0.00E+00	0.00E+00	0.00E+00	0.00E+00
3460	ALL	750188.42	4045460.7	2.03E-08	70YrCancerDerived_InhSoil[	2.03E-08	0.00E+00	0.00E+00	0.00E+00	0.00E+00	0.00E+00	0.00E+00	0.00E+00	0.00E+00	0.00E+00	0.00E+00	0.00E+00
3461	ALL	750288.42	4045460.7	2.03E-08	70YrCancerDerived_InhSoil[	2.03E-08	0.00E+00	0.00E+00	0.00E+00	0.00E+00	0.00E+00	0.00E+00	0.00E+00	0.00E+00	0.00E+00	0.00E+00	0.00E+00
3462	ALL	750388.42	4045460.7	2.02E-08	70YrCancerDerived_InhSoil[	2.02E-08	0.00E+00	0.00E+00	0.00E+00	0.00E+00	0.00E+00	0.00E+00	0.00E+00	0.00E+00	0.00E+00	0.00E+00	0.00E+00
3463	ALL	750488.42	4045460.7	2.00E-08	70YrCancerDerived_InhSoil[	2.00E-08	0.00E+00	0.00E+00	0.00E+00	0.00E+00	0.00E+00	0.00E+00	0.00E+00	0.00E+00	0.00E+00	0.00E+00	0.00E+00
3464	ALL	748088.42	4045560.7	2.37E-08	70YrCancerDerived_InhSoil[	2.37E-08	0.00E+00	0.00E+00	0.00E+00	0.00E+00	0.00E+00	0.00E+00	0.00E+00	0.00E+00	0.00E+00	0.00E+00	0.00E+00
3465	ALL	748188.42	4045560.7	2.34E-08	70YrCancerDerived_InhSoil[	2.34E-08	0.00E+00	0.00E+00	0.00E+00	0.00E+00	0.00E+00	0.00E+00	0.00E+00	0.00E+00	0.00E+00	0.00E+00	0.00E+00
3466	ALL	748288.42	4045560.7	2.31E-08	70YrCancerDerived_InhSoil[	2.31E-08	0.00E+00	0.00E+00	0.00E+00	0.00E+00	0.00E+00	0.00E+00	0.00E+00	0.00E+00	0.00E+00	0.00E+00	0.00E+00
3467	ALL	748388.42	4045560.7	2.27E-08	70YrCancerDerived_InhSoil[	2.27E-08	0.00E+00	0.00E+00	0.00E+00	0.00E+00	0.00E+00	0.00E+00	0.00E+00	0.00E+00	0.00E+00	0.00E+00	0.00E+00
3468	ALL	750188.42	4045560.7	2.00E-08	70YrCancerDerived_InhSoil[	2.00E-08	0.00E+00	0.00E+00	0.00E+00	0.00E+00	0.00E+00	0.00E+00	0.00E+00	0.00E+00	0.00E+00	0.00E+00	0.00E+00
3469	ALL	750288.42	4045560.7	2.00E-08	70YrCancerDerived_InhSoil[	2.00E-08	0.00E+00	0.00E+00	0.00E+00	0.00E+00	0.00E+00	0.00E+00	0.00E+00	0.00E+00	0.00E+00	0.00E+00	0.00E+00
3470	ALL	750388.42	4045560.7	2.00E-08	70YrCancerDerived_InhSoil[	2.00E-08	0.00E+00	0.00E+00	0.00E+00	0.00E+00	0.00E+00	0.00E+00	0.00E+00	0.00E+00	0.00E+00	0.00E+00	0.00E+00

3471	ALL	750488.42	4045560.7	1.98E-08	70YrCancerDerived_InhSoilI	1.98E-08	0.00E+00	0.00E+00	0.00E+00	0.00E+00	0.00E+00	0.00E+00	0.00E+00	0.00E+00	0.00E+00	0.00E+00	0.00E+00
3472	ALL	748088.42	4045660.7	2.34E-08	70YrCancerDerived_InhSoilI	2.34E-08	0.00E+00	0.00E+00	0.00E+00	0.00E+00	0.00E+00	0.00E+00	0.00E+00	0.00E+00	0.00E+00	0.00E+00	0.00E+00
3473	ALL	748188.42	4045660.7	2.30E-08	70YrCancerDerived_InhSoilI	2.30E-08	0.00E+00	0.00E+00	0.00E+00	0.00E+00	0.00E+00	0.00E+00	0.00E+00	0.00E+00	0.00E+00	0.00E+00	0.00E+00
3474	ALL	748288.42	4045660.7	2.27E-08	70YrCancerDerived_InhSoilI	2.27E-08	0.00E+00	0.00E+00	0.00E+00	0.00E+00	0.00E+00	0.00E+00	0.00E+00	0.00E+00	0.00E+00	0.00E+00	0.00E+00
3475	ALL	748388.42	4045660.7	2.24E-08	70YrCancerDerived_InhSoilI	2.24E-08	0.00E+00	0.00E+00	0.00E+00	0.00E+00	0.00E+00	0.00E+00	0.00E+00	0.00E+00	0.00E+00	0.00E+00	0.00E+00
3476	ALL	748488.42	4045660.7	2.21E-08	70YrCancerDerived_InhSoilI	2.21E-08	0.00E+00	0.00E+00	0.00E+00	0.00E+00	0.00E+00	0.00E+00	0.00E+00	0.00E+00	0.00E+00	0.00E+00	0.00E+00
3477	ALL	748588.42	4045660.7	2.18E-08	70YrCancerDerived_InhSoilI	2.18E-08	0.00E+00	0.00E+00	0.00E+00	0.00E+00	0.00E+00	0.00E+00	0.00E+00	0.00E+00	0.00E+00	0.00E+00	0.00E+00
3478	ALL	748688.42	4045660.7	2.15E-08	70YrCancerDerived_InhSoilI	2.15E-08	0.00E+00	0.00E+00	0.00E+00	0.00E+00	0.00E+00	0.00E+00	0.00E+00	0.00E+00	0.00E+00	0.00E+00	0.00E+00
3479	ALL	748788.42	4045660.7	2.13E-08	70YrCancerDerived_InhSoilI	2.13E-08	0.00E+00	0.00E+00	0.00E+00	0.00E+00	0.00E+00	0.00E+00	0.00E+00	0.00E+00	0.00E+00	0.00E+00	0.00E+00
3480	ALL	748888.42	4045660.7	2.11E-08	70YrCancerDerived_InhSoilI	2.11E-08	0.00E+00	0.00E+00	0.00E+00	0.00E+00	0.00E+00	0.00E+00	0.00E+00	0.00E+00	0.00E+00	0.00E+00	0.00E+00
3481	ALL	748988.42	4045660.7	2.08E-08	70YrCancerDerived_InhSoilI	2.08E-08	0.00E+00	0.00E+00	0.00E+00	0.00E+00	0.00E+00	0.00E+00	0.00E+00	0.00E+00	0.00E+00	0.00E+00	0.00E+00
3482	ALL	749088.42	4045660.7	2.06E-08	70YrCancerDerived_InhSoilI	2.06E-08	0.00E+00	0.00E+00	0.00E+00	0.00E+00	0.00E+00	0.00E+00	0.00E+00	0.00E+00	0.00E+00	0.00E+00	0.00E+00
3483	ALL	749188.42	4045660.7	2.04E-08	70YrCancerDerived_InhSoilI	2.04E-08	0.00E+00	0.00E+00	0.00E+00	0.00E+00	0.00E+00	0.00E+00	0.00E+00	0.00E+00	0.00E+00	0.00E+00	0.00E+00
3484	ALL	749288.42	4045660.7	2.02E-08	70YrCancerDerived_InhSoilI	2.02E-08	0.00E+00	0.00E+00	0.00E+00	0.00E+00	0.00E+00	0.00E+00	0.00E+00	0.00E+00	0.00E+00	0.00E+00	0.00E+00
3485	ALL	749388.42	4045660.7	2.00E-08	70YrCancerDerived_InhSoilI	2.00E-08	0.00E+00	0.00E+00	0.00E+00	0.00E+00	0.00E+00	0.00E+00	0.00E+00	0.00E+00	0.00E+00	0.00E+00	0.00E+00
3486	ALL	749488.42	4045660.7	1.98E-08	70YrCancerDerived_InhSoilI	1.98E-08	0.00E+00	0.00E+00	0.00E+00	0.00E+00	0.00E+00	0.00E+00	0.00E+00	0.00E+00	0.00E+00	0.00E+00	0.00E+00
3487	ALL	749588.42	4045660.7	1.96E-08	70YrCancerDerived_InhSoilI	1.96E-08	0.00E+00	0.00E+00	0.00E+00	0.00E+00	0.00E+00	0.00E+00	0.00E+00	0.00E+00	0.00E+00	0.00E+00	0.00E+00
3488	ALL	749688.42	4045660.7	1.96E-08	70YrCancerDerived_InhSoilI	1.96E-08	0.00E+00	0.00E+00	0.00E+00	0.00E+00	0.00E+00	0.00E+00	0.00E+00	0.00E+00	0.00E+00	0.00E+00	0.00E+00
3489	ALL	749788.42	4045660.7	1.96E-08	70YrCancerDerived_InhSoilI	1.96E-08	0.00E+00	0.00E+00	0.00E+00	0.00E+00	0.00E+00	0.00E+00	0.00E+00	0.00E+00	0.00E+00	0.00E+00	0.00E+00
3490	ALL	749888.42	4045660.7	1.96E-08	70YrCancerDerived_InhSoilI	1.96E-08	0.00E+00	0.00E+00	0.00E+00	0.00E+00	0.00E+00	0.00E+00	0.00E+00	0.00E+00	0.00E+00	0.00E+00	0.00E+00
3491	ALL	749988.42	4045660.7	1.96E-08	70YrCancerDerived_InhSoilI	1.96E-08	0.00E+00	0.00E+00	0.00E+00	0.00E+00	0.00E+00	0.00E+00	0.00E+00	0.00E+00	0.00E+00	0.00E+00	0.00E+00
3492	ALL	750088.42	4045660.7	1.97E-08	70YrCancerDerived_InhSoilI	1.97E-08	0.00E+00	0.00E+00	0.00E+00	0.00E+00	0.00E+00	0.00E+00	0.00E+00	0.00E+00	0.00E+00	0.00E+00	0.00E+00
3493	ALL	750188.42	4045660.7	1.98E-08	70YrCancerDerived_InhSoilI	1.98E-08	0.00E+00	0.00E+00	0.00E+00	0.00E+00	0.00E+00	0.00E+00	0.00E+00	0.00E+00	0.00E+00	0.00E+00	0.00E+00
3494	ALL	750288.42	4045660.7	1.98E-08	70YrCancerDerived_InhSoilI	1.98E-08	0.00E+00	0.00E+00	0.00E+00	0.00E+00	0.00E+00	0.00E+00	0.00E+00	0.00E+00	0.00E+00	0.00E+00	0.00E+00
3495	ALL	750388.42	4045660.7	1.97E-08	70YrCancerDerived_InhSoilI	1.97E-08	0.00E+00	0.00E+00	0.00E+00	0.00E+00	0.00E+00	0.00E+00	0.00E+00	0.00E+00	0.00E+00	0.00E+00	0.00E+00
3496	ALL	750488.42	4045660.7	1.96E-08	70YrCancerDerived_InhSoilI	1.96E-08	0.00E+00	0.00E+00	0.00E+00	0.00E+00	0.00E+00	0.00E+00	0.00E+00	0.00E+00	0.00E+00	0.00E+00	0.00E+00
3497	ALL	748088.42	4045760.7	2.30E-08	70YrCancerDerived_InhSoilI	2.30E-08	0.00E+00	0.00E+00	0.00E+00	0.00E+00	0.00E+00	0.00E+00	0.00E+00	0.00E+00	0.00E+00	0.00E+00	0.00E+00
3498	ALL	748188.42	4045760.7	2.27E-08	70YrCancerDerived_InhSoilI	2.27E-08	0.00E+00	0.00E+00	0.00E+00	0.00E+00	0.00E+00	0.00E+00	0.00E+00	0.00E+00	0.00E+00	0.00E+00	0.00E+00
3499	ALL	748288.42	4045760.7	2.24E-08	70YrCancerDerived_InhSoilI	2.24E-08	0.00E+00	0.00E+00	0.00E+00	0.00E+00	0.00E+00	0.00E+00	0.00E+00	0.00E+00	0.00E+00	0.00E+00	0.00E+00
3500	ALL	748388.42	4045760.7	2.20E-08	70YrCancerDerived_InhSoilI	2.20E-08	0.00E+00	0.00E+00	0.00E+00	0.00E+00	0.00E+00	0.00E+00	0.00E+00	0.00E+00	0.00E+00	0.00E+00	0.00E+00
3501	ALL	748488.42	4045760.7	2.17E-08	70YrCancerDerived_InhSoilI	2.17E-08	0.00E+00	0.00E+00	0.00E+00	0.00E+00	0.00E+00	0.00E+00	0.00E+00	0.00E+00	0.00E+00	0.00E+00	0.00E+00
3502	ALL	748588.42	4045760.7	2.15E-08	70YrCancerDerived_InhSoilI	2.15E-08	0.00E+00	0.00E+00	0.00E+00	0.00E+00	0.00E+00	0.00E+00	0.00E+00	0.00E+00	0.00E+00	0.00E+00	0.00E+00
3503	ALL	748688.42	4045760.7	2.12E-08	70YrCancerDerived_InhSoilI	2.12E-08	0.00E+00	0.00E+00	0.00E+00	0.00E+00	0.00E+00	0.00E+00	0.00E+00	0.00E+00	0.00E+00	0.00E+00	0.00E+00
3504	ALL	748788.42	4045760.7	2.10E-08	70YrCancerDerived_InhSoilI	2.10E-08	0.00E+00	0.00E+00	0.00E+00	0.00E+00	0.00E+00	0.00E+00	0.00E+00	0.00E+00	0.00E+00	0.00E+00	0.00E+00
3505	ALL	748888.42	4045760.7	2.08E-08	70YrCancerDerived_InhSoilI	2.08E-08	0.00E+00	0.00E+00	0.00E+00	0.00E+00	0.00E+00	0.00E+00	0.00E+00	0.00E+00	0.00E+00	0.00E+00	0.00E+00
3506	ALL	748988.42	4045760.7	2.06E-08	70YrCancerDerived_InhSoilI	2.06E-08	0.00E+00	0.00E+00	0.00E+00	0.00E+00	0.00E+00	0.00E+00	0.00E+00	0.00E+00	0.00E+00	0.00E+00	0.00E+00
3507	ALL	749088.42	4045760.7	2.04E-08	70YrCancerDerived_InhSoilI	2.04E-08	0.00E+00	0.00E+00	0.00E+00	0.00E+00	0.00E+00	0.00E+00	0.00E+00	0.00E+00	0.00E+00	0.00E+00	0.00E+00
3508	ALL	749188.42	4045760.7	2.01E-08	70YrCancerDerived_InhSoilI	2.01E-08	0.00E+00	0.00E+00	0.00E+00	0.00E+00	0.00E+00	0.00E+00	0.00E+00	0.00E+00	0.00E+00	0.00E+00	0.00E+00
3509	ALL	749288.42	4045760.7	1.99E-08	70YrCancerDerived_InhSoilI	1.99E-08	0.00E+00	0.00E+00	0.00E+00	0.00E+00	0.00E+00	0.00E+00	0.00E+00	0.00E+00	0.00E+00	0.00E+00	0.00E+00
3510	ALL	749388.42	4045760.7	1.97E-08	70YrCancerDerived_InhSoilI	1.97E-08	0.00E+00	0.00E+00	0.00E+00	0.00E+00	0.00E+00	0.00E+00	0.00E+00	0.00E+00	0.00E+00	0.00E+00	0.00E+00
3511	ALL	749488.42	4045760.7	1.95E-08	70YrCancerDerived_InhSoilI	1.95E-08	0.00E+00	0.00E+00	0.00E+00	0.00E+00	0.00E+00	0.00E+00	0.00E+00	0.00E+00	0.00E+00	0.00E+00	0.00E+00
3512	ALL	749588.42	4045760.7	1.94E-08	70YrCancerDerived_InhSoilI	1.94E-08	0.00E+00	0.00E+00	0.00E+00	0.00E+00	0.00E+00	0.00E+00	0.00E+00	0.00E+00	0.00E+00	0.00E+00	0.00E+00
3513	ALL	749688.42	4045760.7	1.93E-08	70YrCancerDerived_InhSoilI	1.93E-08	0.00E+00	0.00E+00	0.00E+00	0.00E+00	0.00E+00	0.00E+00	0.00E+00	0.00E+00	0.00E+00	0.00E+00	0.00E+00
3514	ALL	749788.42	4045760.7	1.93E-08	70YrCancerDerived_InhSoilI	1.93E-08	0.00E+00	0.00E+00	0.00E+00	0.00E+00	0.00E+00	0.00E+00	0.00E+00	0.00E+00	0.00E+00	0.00E+00	0.00E+00
3515	ALL	749888.42	4045760.7	1.93E-08	70YrCancerDerived_InhSoilI	1.93E-08	0.00E+00	0.00E+00	0.00E+00	0.00E+00	0.00E+00	0.00E+00	0.00E+00	0.00E+00	0.00E+00	0.00E+00	0.00E+00
3516	ALL	749988.42	4045760.7	1.94E-08	70YrCancerDerived_InhSoilI	1.94E-08	0.00E+00	0.00E+00	0.00E+00	0.00E+00	0.00E+00	0.00E+00	0.00E+00	0.00E+00	0.00E+00	0.00E+00	0.00E+00
3517	ALL	750088.42	4045760.7	1.94E-08	70YrCancerDerived_InhSoilI	1.94E-08	0.00E+00	0.00E+00	0.00E+00	0.00E+00	0.00E+00	0.00E+00	0.00E+00	0.00E+00	0.00E+00	0.00E+00	0.00E+00
3518	ALL	750188.42	4045760.7	1.95E-08	70YrCancerDerived_InhSoilI	1.95E-08	0.00E+00	0.00E+00	0.00E+00	0.00E+00	0.00E+00	0.00E+00	0.00E+00	0.00E+00	0.00E+00	0.00E+00	0.00E+00
3519	ALL	750288.42	4045760.7	1.95E-08	70YrCancerDerived_InhSoilI	1.95E-08	0.00E+00	0.00E+00	0.00E+00	0.00E+00	0.00E+00	0.00E+00	0.00E+00	0.00E+00	0.00E+00	0.00E+00	0.00E+00
3520	ALL	750388.42	4045760.7	1.95E-08	70YrCancerDerived_InhSoilI	1.95E-08	0.00E+00	0.00E+00	0.00E+00	0.00E+00	0.00E+00	0.00E+00	0.00E+00	0.00E+00	0.00E+00	0.00E+00	0.00E+00
3521	ALL	750488.42	4045760.7	1.94E-08	70YrCancerDerived_InhSoilI	1.94E-08	0.00E+00	0.00E+00	0.00E+00	0.00E+00	0.00E+00	0.00E+00	0.00E+00	0.00E+00	0.00E+00	0.00E+00	0.00E+00
3522	ALL	748088.42	4045860.7	2.27E-08	70YrCancerDerived_InhSoilI	2.27E-08	0.00E+00	0.00E+00	0.00E+00	0.00E+00	0.00E+00	0.00E+00	0.00E+00	0.00E+00	0.00E+00	0.00E+00	0.00E+00
3523	ALL	748188.42	4045860.7	2.24E-08	70YrCancerDerived_InhSoilI	2.24E-08	0.00E+00	0.00E+00	0.00E+00	0.00E+00	0.00E+00	0.00E+00	0.00E+00	0.00E+00	0.00E+00	0.00E+00	0.00E+00
3524	ALL	748288.42	4045860.7	2.20E-08	70YrCancerDerived_InhSoilI	2.20E-08	0.00E+00	0.00E+00	0.00E+00	0.00E+00	0.00E+00	0.00E+00	0.00E+00	0.00E+00	0.00E+00	0.00E+00	0.00E+00
3525	ALL	748388.42	4045860.7	2.17E-08	70YrCancerDerived_InhSoilI	2.17E-08	0.00E+00	0.00E+00	0.00E+00	0.00E+00	0.00E+00	0.00E+00	0.00E+00	0.00E+00	0.00E+00	0.00E+00	0.00E+00
3526	ALL	748488.42	4045860.7	2.14E-08	70YrCancerDerived_InhSoilI	2.14E-08	0.00E+00	0.00E+00	0.00E+00	0.00E+00	0.00E+00	0.00E+00	0.00E+00	0.00E+00	0.00E+00	0.00E+00	0.00E+00

3527	ALL	748588.42	4045860.7	2.12E-08	70YrCancerDerived_InhSoil[	2.12E-08	0.00E+00	0.00E+00	0.00E+00	0.00E+00	0.00E+00	0.00E+00	0.00E+00	0.00E+00	0.00E+00	0.00E+00	0.00E+00
3528	ALL	748688.42	4045860.7	2.09E-08	70YrCancerDerived_InhSoil[	2.09E-08	0.00E+00	0.00E+00	0.00E+00	0.00E+00	0.00E+00	0.00E+00	0.00E+00	0.00E+00	0.00E+00	0.00E+00	0.00E+00
3529	ALL	748788.42	4045860.7	2.07E-08	70YrCancerDerived_InhSoil[	2.07E-08	0.00E+00	0.00E+00	0.00E+00	0.00E+00	0.00E+00	0.00E+00	0.00E+00	0.00E+00	0.00E+00	0.00E+00	0.00E+00
3530	ALL	748888.42	4045860.7	2.05E-08	70YrCancerDerived_InhSoil[	2.05E-08	0.00E+00	0.00E+00	0.00E+00	0.00E+00	0.00E+00	0.00E+00	0.00E+00	0.00E+00	0.00E+00	0.00E+00	0.00E+00
3531	ALL	748988.42	4045860.7	2.03E-08	70YrCancerDerived_InhSoil[	2.03E-08	0.00E+00	0.00E+00	0.00E+00	0.00E+00	0.00E+00	0.00E+00	0.00E+00	0.00E+00	0.00E+00	0.00E+00	0.00E+00
3532	ALL	749088.42	4045860.7	2.01E-08	70YrCancerDerived_InhSoil[	2.01E-08	0.00E+00	0.00E+00	0.00E+00	0.00E+00	0.00E+00	0.00E+00	0.00E+00	0.00E+00	0.00E+00	0.00E+00	0.00E+00
3533	ALL	749188.42	4045860.7	1.99E-08	70YrCancerDerived_InhSoil[	1.99E-08	0.00E+00	0.00E+00	0.00E+00	0.00E+00	0.00E+00	0.00E+00	0.00E+00	0.00E+00	0.00E+00	0.00E+00	0.00E+00
3534	ALL	749288.42	4045860.7	1.97E-08	70YrCancerDerived_InhSoil[	1.97E-08	0.00E+00	0.00E+00	0.00E+00	0.00E+00	0.00E+00	0.00E+00	0.00E+00	0.00E+00	0.00E+00	0.00E+00	0.00E+00
3535	ALL	749388.42	4045860.7	1.95E-08	70YrCancerDerived_InhSoil[	1.95E-08	0.00E+00	0.00E+00	0.00E+00	0.00E+00	0.00E+00	0.00E+00	0.00E+00	0.00E+00	0.00E+00	0.00E+00	0.00E+00
3536	ALL	749488.42	4045860.7	1.93E-08	70YrCancerDerived_InhSoil[	1.93E-08	0.00E+00	0.00E+00	0.00E+00	0.00E+00	0.00E+00	0.00E+00	0.00E+00	0.00E+00	0.00E+00	0.00E+00	0.00E+00
3537	ALL	749588.42	4045860.7	1.92E-08	70YrCancerDerived_InhSoil[	1.92E-08	0.00E+00	0.00E+00	0.00E+00	0.00E+00	0.00E+00	0.00E+00	0.00E+00	0.00E+00	0.00E+00	0.00E+00	0.00E+00
3538	ALL	749688.42	4045860.7	1.91E-08	70YrCancerDerived_InhSoil[	1.91E-08	0.00E+00	0.00E+00	0.00E+00	0.00E+00	0.00E+00	0.00E+00	0.00E+00	0.00E+00	0.00E+00	0.00E+00	0.00E+00
3539	ALL	749788.42	4045860.7	1.90E-08	70YrCancerDerived_InhSoil[	1.90E-08	0.00E+00	0.00E+00	0.00E+00	0.00E+00	0.00E+00	0.00E+00	0.00E+00	0.00E+00	0.00E+00	0.00E+00	0.00E+00
3540	ALL	749888.42	4045860.7	1.90E-08	70YrCancerDerived_InhSoil[	1.90E-08	0.00E+00	0.00E+00	0.00E+00	0.00E+00	0.00E+00	0.00E+00	0.00E+00	0.00E+00	0.00E+00	0.00E+00	0.00E+00
3541	ALL	749988.42	4045860.7	1.91E-08	70YrCancerDerived_InhSoil[	1.91E-08	0.00E+00	0.00E+00	0.00E+00	0.00E+00	0.00E+00	0.00E+00	0.00E+00	0.00E+00	0.00E+00	0.00E+00	0.00E+00
3542	ALL	750088.42	4045860.7	1.91E-08	70YrCancerDerived_InhSoil[	1.91E-08	0.00E+00	0.00E+00	0.00E+00	0.00E+00	0.00E+00	0.00E+00	0.00E+00	0.00E+00	0.00E+00	0.00E+00	0.00E+00
3543	ALL	750188.42	4045860.7	1.92E-08	70YrCancerDerived_InhSoil[	1.92E-08	0.00E+00	0.00E+00	0.00E+00	0.00E+00	0.00E+00	0.00E+00	0.00E+00	0.00E+00	0.00E+00	0.00E+00	0.00E+00
3544	ALL	750288.42	4045860.7	1.93E-08	70YrCancerDerived_InhSoil[	1.93E-08	0.00E+00	0.00E+00	0.00E+00	0.00E+00	0.00E+00	0.00E+00	0.00E+00	0.00E+00	0.00E+00	0.00E+00	0.00E+00
3545	ALL	750388.42	4045860.7	1.93E-08	70YrCancerDerived_InhSoil[	1.93E-08	0.00E+00	0.00E+00	0.00E+00	0.00E+00	0.00E+00	0.00E+00	0.00E+00	0.00E+00	0.00E+00	0.00E+00	0.00E+00
3546	ALL	750488.42	4045860.7	1.92E-08	70YrCancerDerived_InhSoil[	1.92E-08	0.00E+00	0.00E+00	0.00E+00	0.00E+00	0.00E+00	0.00E+00	0.00E+00	0.00E+00	0.00E+00	0.00E+00	0.00E+00
3547	ALL	745916	4035023	6.98E-08	70YrCancerDerived_InhSoil[	6.98E-08	0.00E+00	0.00E+00	0.00E+00	0.00E+00	0.00E+00	0.00E+00	0.00E+00	0.00E+00	0.00E+00	0.00E+00	0.00E+00
3548	ALL	745966	4035023	7.10E-08	70YrCancerDerived_InhSoil[	7.10E-08	0.00E+00	0.00E+00	0.00E+00	0.00E+00	0.00E+00	0.00E+00	0.00E+00	0.00E+00	0.00E+00	0.00E+00	0.00E+00
3549	ALL	746016	4035023	7.22E-08	70YrCancerDerived_InhSoil[	7.22E-08	0.00E+00	0.00E+00	0.00E+00	0.00E+00	0.00E+00	0.00E+00	0.00E+00	0.00E+00	0.00E+00	0.00E+00	0.00E+00
3550	ALL	746066	4035023	7.35E-08	70YrCancerDerived_InhSoil[	7.35E-08	0.00E+00	0.00E+00	0.00E+00	0.00E+00	0.00E+00	0.00E+00	0.00E+00	0.00E+00	0.00E+00	0.00E+00	0.00E+00
3551	ALL	746116	4035023	7.48E-08	70YrCancerDerived_InhSoil[	7.48E-08	0.00E+00	0.00E+00	0.00E+00	0.00E+00	0.00E+00	0.00E+00	0.00E+00	0.00E+00	0.00E+00	0.00E+00	0.00E+00
3552	ALL	746166	4035023	7.62E-08	70YrCancerDerived_InhSoil[	7.62E-08	0.00E+00	0.00E+00	0.00E+00	0.00E+00	0.00E+00	0.00E+00	0.00E+00	0.00E+00	0.00E+00	0.00E+00	0.00E+00
3553	ALL	746216	4035023	7.76E-08	70YrCancerDerived_InhSoil[	7.76E-08	0.00E+00	0.00E+00	0.00E+00	0.00E+00	0.00E+00	0.00E+00	0.00E+00	0.00E+00	0.00E+00	0.00E+00	0.00E+00
3554	ALL	746266	4035023	7.91E-08	70YrCancerDerived_InhSoil[	7.91E-08	0.00E+00	0.00E+00	0.00E+00	0.00E+00	0.00E+00	0.00E+00	0.00E+00	0.00E+00	0.00E+00	0.00E+00	0.00E+00
3555	ALL	746316	4035023	8.07E-08	70YrCancerDerived_InhSoil[	8.07E-08	0.00E+00	0.00E+00	0.00E+00	0.00E+00	0.00E+00	0.00E+00	0.00E+00	0.00E+00	0.00E+00	0.00E+00	0.00E+00
3556	ALL	746366	4035023	8.24E-08	70YrCancerDerived_InhSoil[	8.24E-08	0.00E+00	0.00E+00	0.00E+00	0.00E+00	0.00E+00	0.00E+00	0.00E+00	0.00E+00	0.00E+00	0.00E+00	0.00E+00
3557	ALL	745916	4035073	7.02E-08	70YrCancerDerived_InhSoil[	7.02E-08	0.00E+00	0.00E+00	0.00E+00	0.00E+00	0.00E+00	0.00E+00	0.00E+00	0.00E+00	0.00E+00	0.00E+00	0.00E+00
3558	ALL	745966	4035073	7.13E-08	70YrCancerDerived_InhSoil[	7.13E-08	0.00E+00	0.00E+00	0.00E+00	0.00E+00	0.00E+00	0.00E+00	0.00E+00	0.00E+00	0.00E+00	0.00E+00	0.00E+00
3559	ALL	746016	4035073	7.28E-08	70YrCancerDerived_InhSoil[	7.28E-08	0.00E+00	0.00E+00	0.00E+00	0.00E+00	0.00E+00	0.00E+00	0.00E+00	0.00E+00	0.00E+00	0.00E+00	0.00E+00
3560	ALL	746066	4035073	7.42E-08	70YrCancerDerived_InhSoil[	7.42E-08	0.00E+00	0.00E+00	0.00E+00	0.00E+00	0.00E+00	0.00E+00	0.00E+00	0.00E+00	0.00E+00	0.00E+00	0.00E+00
3561	ALL	746116	4035073	7.55E-08	70YrCancerDerived_InhSoil[	7.55E-08	0.00E+00	0.00E+00	0.00E+00	0.00E+00	0.00E+00	0.00E+00	0.00E+00	0.00E+00	0.00E+00	0.00E+00	0.00E+00
3562	ALL	746166	4035073	7.77E-08	70YrCancerDerived_InhSoil[	7.77E-08	0.00E+00	0.00E+00	0.00E+00	0.00E+00	0.00E+00	0.00E+00	0.00E+00	0.00E+00	0.00E+00	0.00E+00	0.00E+00
3563	ALL	746216	4035073	7.94E-08	70YrCancerDerived_InhSoil[	7.94E-08	0.00E+00	0.00E+00	0.00E+00	0.00E+00	0.00E+00	0.00E+00	0.00E+00	0.00E+00	0.00E+00	0.00E+00	0.00E+00
3564	ALL	746266	4035073	8.10E-08	70YrCancerDerived_InhSoil[	8.10E-08	0.00E+00	0.00E+00	0.00E+00	0.00E+00	0.00E+00	0.00E+00	0.00E+00	0.00E+00	0.00E+00	0.00E+00	0.00E+00
3565	ALL	746316	4035073	8.27E-08	70YrCancerDerived_InhSoil[	8.27E-08	0.00E+00	0.00E+00	0.00E+00	0.00E+00	0.00E+00	0.00E+00	0.00E+00	0.00E+00	0.00E+00	0.00E+00	0.00E+00
3566	ALL	746366	4035073	8.49E-08	70YrCancerDerived_InhSoil[	8.49E-08	0.00E+00	0.00E+00	0.00E+00	0.00E+00	0.00E+00	0.00E+00	0.00E+00	0.00E+00	0.00E+00	0.00E+00	0.00E+00
3567	ALL	745916	4035123	7.05E-08	70YrCancerDerived_InhSoil[	7.05E-08	0.00E+00	0.00E+00	0.00E+00	0.00E+00	0.00E+00	0.00E+00	0.00E+00	0.00E+00	0.00E+00	0.00E+00	0.00E+00
3568	ALL	745966	4035123	7.17E-08	70YrCancerDerived_InhSoil[	7.17E-08	0.00E+00	0.00E+00	0.00E+00	0.00E+00	0.00E+00	0.00E+00	0.00E+00	0.00E+00	0.00E+00	0.00E+00	0.00E+00
3569	ALL	746016	4035123	7.31E-08	70YrCancerDerived_InhSoil[	7.31E-08	0.00E+00	0.00E+00	0.00E+00	0.00E+00	0.00E+00	0.00E+00	0.00E+00	0.00E+00	0.00E+00	0.00E+00	0.00E+00
3570	ALL	746066	4035123	7.49E-08	70YrCancerDerived_InhSoil[	7.49E-08	0.00E+00	0.00E+00	0.00E+00	0.00E+00	0.00E+00	0.00E+00	0.00E+00	0.00E+00	0.00E+00	0.00E+00	0.00E+00
3571	ALL	746116	4035123	7.64E-08	70YrCancerDerived_InhSoil[	7.64E-08	0.00E+00	0.00E+00	0.00E+00	0.00E+00	0.00E+00	0.00E+00	0.00E+00	0.00E+00	0.00E+00	0.00E+00	0.00E+00
3572	ALL	746166	4035123	7.86E-08	70YrCancerDerived_InhSoil[	7.86E-08	0.00E+00	0.00E+00	0.00E+00	0.00E+00	0.00E+00	0.00E+00	0.00E+00	0.00E+00	0.00E+00	0.00E+00	0.00E+00
3573	ALL	746216	4035123	8.02E-08	70YrCancerDerived_InhSoil[	8.02E-08	0.00E+00	0.00E+00	0.00E+00	0.00E+00	0.00E+00	0.00E+00	0.00E+00	0.00E+00	0.00E+00	0.00E+00	0.00E+00
3574	ALL	746266	4035123	8.18E-08	70YrCancerDerived_InhSoil[	8.18E-08	0.00E+00	0.00E+00	0.00E+00	0.00E+00	0.00E+00	0.00E+00	0.00E+00	0.00E+00	0.00E+00	0.00E+00	0.00E+00
3575	ALL	746316	4035123	8.34E-08	70YrCancerDerived_InhSoil[	8.34E-08	0.00E+00	0.00E+00	0.00E+00	0.00E+00	0.00E+00	0.00E+00	0.00E+00	0.00E+00	0.00E+00	0.00E+00	0.00E+00
3576	ALL	746366	4035123	8.74E-08	70YrCancerDerived_InhSoil[	8.74E-08	0.00E+00	0.00E+00	0.00E+00	0.00E+00	0.00E+00	0.00E+00	0.00E+00	0.00E+00	0.00E+00	0.00E+00	0.00E+00
3577	ALL	745916	4035173	7.09E-08	70YrCancerDerived_InhSoil[	7.09E-08	0.00E+00	0.00E+00	0.00E+00	0.00E+00	0.00E+00	0.00E+00	0.00E+00	0.00E+00	0.00E+00	0.00E+00	0.00E+00
3578	ALL	745966	4035173	7.20E-08	70YrCancerDerived_InhSoil[	7.20E-08	0.00E+00	0.00E+00	0.00E+00	0.00E+00	0.00E+00	0.00E+00	0.00E+00	0.00E+00	0.00E+00	0.00E+00	0.00E+00
3579	ALL	746016	4035173	7.35E-08	70YrCancerDerived_InhSoil[	7.35E-08	0.00E+00	0.00E+00	0.00E+00	0.00E+00	0.00E+00	0.00E+00	0.00E+00	0.00E+00	0.00E+00	0.00E+00	0.00E+00
3580	ALL	746066	4035173	7.56E-08	70YrCancerDerived_InhSoil[	7.56E-08	0.00E+00	0.00E+00	0.00E+00	0.00E+00	0.00E+00	0.00E+00	0.00E+00	0.00E+00	0.00E+00	0.00E+00	0.00E+00
3581	ALL	746116	4035173	7.72E-08	70YrCancerDerived_InhSoil[	7.72E-08	0.00E+00	0.00E+00	0.00E+00	0.00E+00	0.00E+00	0.00E+00	0.00E+00	0.00E+00	0.00E+00	0.00E+00	0.00E+00
3582	ALL	746166	4035173	7.95E-08	70YrCancerDerived_InhSoil[	7.95E-08	0.00E+00	0.00E+00	0.00E+00	0.00E+00	0.00E+00	0.00E+00	0.00E+00	0.00E+00	0.00E+00	0.00E+00	0.00E+00

3583	ALL	746216	4035173	8.15E-08	70YrCancerDerived_InhSoil[	8.15E-08	0.00E+00	0.00E+00	0.00E+00	0.00E+00	0.00E+00	0.00E+00	0.00E+00	0.00E+00	0.00E+00	0.00E+00	0.00E+00
3584	ALL	746266	4035173	8.34E-08	70YrCancerDerived_InhSoil[	8.34E-08	0.00E+00	0.00E+00	0.00E+00	0.00E+00	0.00E+00	0.00E+00	0.00E+00	0.00E+00	0.00E+00	0.00E+00	0.00E+00
3585	ALL	746316	4035173	8.53E-08	70YrCancerDerived_InhSoil[	8.53E-08	0.00E+00	0.00E+00	0.00E+00	0.00E+00	0.00E+00	0.00E+00	0.00E+00	0.00E+00	0.00E+00	0.00E+00	0.00E+00
3586	ALL	746366	4035173	8.86E-08	70YrCancerDerived_InhSoil[	8.86E-08	0.00E+00	0.00E+00	0.00E+00	0.00E+00	0.00E+00	0.00E+00	0.00E+00	0.00E+00	0.00E+00	0.00E+00	0.00E+00
3587	ALL	745916	4035223	7.11E-08	70YrCancerDerived_InhSoil[	7.11E-08	0.00E+00	0.00E+00	0.00E+00	0.00E+00	0.00E+00	0.00E+00	0.00E+00	0.00E+00	0.00E+00	0.00E+00	0.00E+00
3588	ALL	745966	4035223	7.24E-08	70YrCancerDerived_InhSoil[	7.24E-08	0.00E+00	0.00E+00	0.00E+00	0.00E+00	0.00E+00	0.00E+00	0.00E+00	0.00E+00	0.00E+00	0.00E+00	0.00E+00
3589	ALL	746016	4035223	7.42E-08	70YrCancerDerived_InhSoil[	7.42E-08	0.00E+00	0.00E+00	0.00E+00	0.00E+00	0.00E+00	0.00E+00	0.00E+00	0.00E+00	0.00E+00	0.00E+00	0.00E+00
3590	ALL	746066	4035223	7.60E-08	70YrCancerDerived_InhSoil[	7.60E-08	0.00E+00	0.00E+00	0.00E+00	0.00E+00	0.00E+00	0.00E+00	0.00E+00	0.00E+00	0.00E+00	0.00E+00	0.00E+00
3591	ALL	746116	4035223	7.79E-08	70YrCancerDerived_InhSoil[	7.79E-08	0.00E+00	0.00E+00	0.00E+00	0.00E+00	0.00E+00	0.00E+00	0.00E+00	0.00E+00	0.00E+00	0.00E+00	0.00E+00
3592	ALL	746166	4035223	7.99E-08	70YrCancerDerived_InhSoil[	7.99E-08	0.00E+00	0.00E+00	0.00E+00	0.00E+00	0.00E+00	0.00E+00	0.00E+00	0.00E+00	0.00E+00	0.00E+00	0.00E+00
3593	ALL	746216	4035223	8.19E-08	70YrCancerDerived_InhSoil[	8.19E-08	0.00E+00	0.00E+00	0.00E+00	0.00E+00	0.00E+00	0.00E+00	0.00E+00	0.00E+00	0.00E+00	0.00E+00	0.00E+00
3594	ALL	746266	4035223	8.40E-08	70YrCancerDerived_InhSoil[	8.40E-08	0.00E+00	0.00E+00	0.00E+00	0.00E+00	0.00E+00	0.00E+00	0.00E+00	0.00E+00	0.00E+00	0.00E+00	0.00E+00
3595	ALL	746316	4035223	8.62E-08	70YrCancerDerived_InhSoil[	8.62E-08	0.00E+00	0.00E+00	0.00E+00	0.00E+00	0.00E+00	0.00E+00	0.00E+00	0.00E+00	0.00E+00	0.00E+00	0.00E+00
3596	ALL	746366	4035223	8.90E-08	70YrCancerDerived_InhSoil[	8.90E-08	0.00E+00	0.00E+00	0.00E+00	0.00E+00	0.00E+00	0.00E+00	0.00E+00	0.00E+00	0.00E+00	0.00E+00	0.00E+00
3597	ALL	745916	4035273	7.14E-08	70YrCancerDerived_InhSoil[	7.14E-08	0.00E+00	0.00E+00	0.00E+00	0.00E+00	0.00E+00	0.00E+00	0.00E+00	0.00E+00	0.00E+00	0.00E+00	0.00E+00
3598	ALL	745966	4035273	7.28E-08	70YrCancerDerived_InhSoil[	7.28E-08	0.00E+00	0.00E+00	0.00E+00	0.00E+00	0.00E+00	0.00E+00	0.00E+00	0.00E+00	0.00E+00	0.00E+00	0.00E+00
3599	ALL	746016	4035273	7.46E-08	70YrCancerDerived_InhSoil[	7.46E-08	0.00E+00	0.00E+00	0.00E+00	0.00E+00	0.00E+00	0.00E+00	0.00E+00	0.00E+00	0.00E+00	0.00E+00	0.00E+00
3600	ALL	746066	4035273	7.63E-08	70YrCancerDerived_InhSoil[	7.63E-08	0.00E+00	0.00E+00	0.00E+00	0.00E+00	0.00E+00	0.00E+00	0.00E+00	0.00E+00	0.00E+00	0.00E+00	0.00E+00
3601	ALL	746116	4035273	7.81E-08	70YrCancerDerived_InhSoil[	7.81E-08	0.00E+00	0.00E+00	0.00E+00	0.00E+00	0.00E+00	0.00E+00	0.00E+00	0.00E+00	0.00E+00	0.00E+00	0.00E+00
3602	ALL	746166	4035273	8.07E-08	70YrCancerDerived_InhSoil[	8.07E-08	0.00E+00	0.00E+00	0.00E+00	0.00E+00	0.00E+00	0.00E+00	0.00E+00	0.00E+00	0.00E+00	0.00E+00	0.00E+00
3603	ALL	746216	4035273	8.30E-08	70YrCancerDerived_InhSoil[	8.30E-08	0.00E+00	0.00E+00	0.00E+00	0.00E+00	0.00E+00	0.00E+00	0.00E+00	0.00E+00	0.00E+00	0.00E+00	0.00E+00
3604	ALL	746266	4035273	8.53E-08	70YrCancerDerived_InhSoil[	8.53E-08	0.00E+00	0.00E+00	0.00E+00	0.00E+00	0.00E+00	0.00E+00	0.00E+00	0.00E+00	0.00E+00	0.00E+00	0.00E+00
3605	ALL	746316	4035273	8.77E-08	70YrCancerDerived_InhSoil[	8.77E-08	0.00E+00	0.00E+00	0.00E+00	0.00E+00	0.00E+00	0.00E+00	0.00E+00	0.00E+00	0.00E+00	0.00E+00	0.00E+00
3606	ALL	746366	4035273	9.03E-08	70YrCancerDerived_InhSoil[	9.03E-08	0.00E+00	0.00E+00	0.00E+00	0.00E+00	0.00E+00	0.00E+00	0.00E+00	0.00E+00	0.00E+00	0.00E+00	0.00E+00
3607	ALL	745916	4035323	7.17E-08	70YrCancerDerived_InhSoil[	7.17E-08	0.00E+00	0.00E+00	0.00E+00	0.00E+00	0.00E+00	0.00E+00	0.00E+00	0.00E+00	0.00E+00	0.00E+00	0.00E+00
3608	ALL	745966	4035323	7.31E-08	70YrCancerDerived_InhSoil[	7.31E-08	0.00E+00	0.00E+00	0.00E+00	0.00E+00	0.00E+00	0.00E+00	0.00E+00	0.00E+00	0.00E+00	0.00E+00	0.00E+00
3609	ALL	746016	4035323	7.49E-08	70YrCancerDerived_InhSoil[	7.49E-08	0.00E+00	0.00E+00	0.00E+00	0.00E+00	0.00E+00	0.00E+00	0.00E+00	0.00E+00	0.00E+00	0.00E+00	0.00E+00
3610	ALL	746066	4035323	7.64E-08	70YrCancerDerived_InhSoil[	7.64E-08	0.00E+00	0.00E+00	0.00E+00	0.00E+00	0.00E+00	0.00E+00	0.00E+00	0.00E+00	0.00E+00	0.00E+00	0.00E+00
3611	ALL	746116	4035323	7.81E-08	70YrCancerDerived_InhSoil[	7.81E-08	0.00E+00	0.00E+00	0.00E+00	0.00E+00	0.00E+00	0.00E+00	0.00E+00	0.00E+00	0.00E+00	0.00E+00	0.00E+00
3612	ALL	746166	4035323	8.09E-08	70YrCancerDerived_InhSoil[	8.09E-08	0.00E+00	0.00E+00	0.00E+00	0.00E+00	0.00E+00	0.00E+00	0.00E+00	0.00E+00	0.00E+00	0.00E+00	0.00E+00
3613	ALL	746216	4035323	8.33E-08	70YrCancerDerived_InhSoil[	8.33E-08	0.00E+00	0.00E+00	0.00E+00	0.00E+00	0.00E+00	0.00E+00	0.00E+00	0.00E+00	0.00E+00	0.00E+00	0.00E+00
3614	ALL	746266	4035323	8.59E-08	70YrCancerDerived_InhSoil[	8.59E-08	0.00E+00	0.00E+00	0.00E+00	0.00E+00	0.00E+00	0.00E+00	0.00E+00	0.00E+00	0.00E+00	0.00E+00	0.00E+00
3615	ALL	746316	4035323	8.86E-08	70YrCancerDerived_InhSoil[	8.86E-08	0.00E+00	0.00E+00	0.00E+00	0.00E+00	0.00E+00	0.00E+00	0.00E+00	0.00E+00	0.00E+00	0.00E+00	0.00E+00
3616	ALL	746366	4035323	9.13E-08	70YrCancerDerived_InhSoil[	9.13E-08	0.00E+00	0.00E+00	0.00E+00	0.00E+00	0.00E+00	0.00E+00	0.00E+00	0.00E+00	0.00E+00	0.00E+00	0.00E+00
3617	ALL	745916	4035373	7.23E-08	70YrCancerDerived_InhSoil[	7.23E-08	0.00E+00	0.00E+00	0.00E+00	0.00E+00	0.00E+00	0.00E+00	0.00E+00	0.00E+00	0.00E+00	0.00E+00	0.00E+00
3618	ALL	745966	4035373	7.37E-08	70YrCancerDerived_InhSoil[	7.37E-08	0.00E+00	0.00E+00	0.00E+00	0.00E+00	0.00E+00	0.00E+00	0.00E+00	0.00E+00	0.00E+00	0.00E+00	0.00E+00
3619	ALL	746016	4035373	7.55E-08	70YrCancerDerived_InhSoil[	7.55E-08	0.00E+00	0.00E+00	0.00E+00	0.00E+00	0.00E+00	0.00E+00	0.00E+00	0.00E+00	0.00E+00	0.00E+00	0.00E+00
3620	ALL	746066	4035373	7.67E-08	70YrCancerDerived_InhSoil[	7.67E-08	0.00E+00	0.00E+00	0.00E+00	0.00E+00	0.00E+00	0.00E+00	0.00E+00	0.00E+00	0.00E+00	0.00E+00	0.00E+00
3621	ALL	746116	4035373	7.84E-08	70YrCancerDerived_InhSoil[	7.84E-08	0.00E+00	0.00E+00	0.00E+00	0.00E+00	0.00E+00	0.00E+00	0.00E+00	0.00E+00	0.00E+00	0.00E+00	0.00E+00
3622	ALL	746166	4035373	8.12E-08	70YrCancerDerived_InhSoil[	8.12E-08	0.00E+00	0.00E+00	0.00E+00	0.00E+00	0.00E+00	0.00E+00	0.00E+00	0.00E+00	0.00E+00	0.00E+00	0.00E+00
3623	ALL	746216	4035373	8.36E-08	70YrCancerDerived_InhSoil[	8.36E-08	0.00E+00	0.00E+00	0.00E+00	0.00E+00	0.00E+00	0.00E+00	0.00E+00	0.00E+00	0.00E+00	0.00E+00	0.00E+00
3624	ALL	746266	4035373	8.62E-08	70YrCancerDerived_InhSoil[	8.62E-08	0.00E+00	0.00E+00	0.00E+00	0.00E+00	0.00E+00	0.00E+00	0.00E+00	0.00E+00	0.00E+00	0.00E+00	0.00E+00
3625	ALL	746316	4035373	8.91E-08	70YrCancerDerived_InhSoil[	8.91E-08	0.00E+00	0.00E+00	0.00E+00	0.00E+00	0.00E+00	0.00E+00	0.00E+00	0.00E+00	0.00E+00	0.00E+00	0.00E+00
3626	ALL	746366	4035373	9.25E-08	70YrCancerDerived_InhSoil[	9.25E-08	0.00E+00	0.00E+00	0.00E+00	0.00E+00	0.00E+00	0.00E+00	0.00E+00	0.00E+00	0.00E+00	0.00E+00	0.00E+00
3627	ALL	745916	4035423	7.31E-08	70YrCancerDerived_InhSoil[	7.31E-08	0.00E+00	0.00E+00	0.00E+00	0.00E+00	0.00E+00	0.00E+00	0.00E+00	0.00E+00	0.00E+00	0.00E+00	0.00E+00
3628	ALL	745966	4035423	7.45E-08	70YrCancerDerived_InhSoil[	7.45E-08	0.00E+00	0.00E+00	0.00E+00	0.00E+00	0.00E+00	0.00E+00	0.00E+00	0.00E+00	0.00E+00	0.00E+00	0.00E+00
3629	ALL	746016	4035423	7.61E-08	70YrCancerDerived_InhSoil[	7.61E-08	0.00E+00	0.00E+00	0.00E+00	0.00E+00	0.00E+00	0.00E+00	0.00E+00	0.00E+00	0.00E+00	0.00E+00	0.00E+00
3630	ALL	746066	4035423	7.74E-08	70YrCancerDerived_InhSoil[	7.74E-08	0.00E+00	0.00E+00	0.00E+00	0.00E+00	0.00E+00	0.00E+00	0.00E+00	0.00E+00	0.00E+00	0.00E+00	0.00E+00
3631	ALL	746116	4035423	7.91E-08	70YrCancerDerived_InhSoil[	7.91E-08	0.00E+00	0.00E+00	0.00E+00	0.00E+00	0.00E+00	0.00E+00	0.00E+00	0.00E+00	0.00E+00	0.00E+00	0.00E+00
3632	ALL	746166	4035423	8.19E-08	70YrCancerDerived_InhSoil[	8.19E-08	0.00E+00	0.00E+00	0.00E+00	0.00E+00	0.00E+00	0.00E+00	0.00E+00	0.00E+00	0.00E+00	0.00E+00	0.00E+00
3633	ALL	746216	4035423	8.44E-08	70YrCancerDerived_InhSoil[	8.44E-08	0.00E+00	0.00E+00	0.00E+00	0.00E+00	0.00E+00	0.00E+00	0.00E+00	0.00E+00	0.00E+00	0.00E+00	0.00E+00
3634	ALL	746266	4035423	8.73E-08	70YrCancerDerived_InhSoil[	8.73E-08	0.00E+00	0.00E+00	0.00E+00	0.00E+00	0.00E+00	0.00E+00	0.00E+00	0.00E+00	0.00E+00	0.00E+00	0.00E+00
3635	ALL	746316	4035423	9.05E-08	70YrCancerDerived_InhSoil[	9.05E-08	0.00E+00	0.00E+00	0.00E+00	0.00E+00	0.00E+00	0.00E+00	0.00E+00	0.00E+00	0.00E+00	0.00E+00	0.00E+00
3636	ALL	746366	4035423	9.31E-08	70YrCancerDerived_InhSoil[	9.31E-08	0.00E+00	0.00E+00	0.00E+00	0.00E+00	0.00E+00	0.00E+00	0.00E+00	0.00E+00	0.00E+00	0.00E+00	0.00E+00
3637	ALL	745916	4035473	7.41E-08	70YrCancerDerived_InhSoil[	7.41E-08	0.00E+00	0.00E+00	0.00E+00	0.00E+00	0.00E+00	0.00E+00	0.00E+00	0.00E+00	0.00E+00	0.00E+00	0.00E+00
3638	ALL	745966	4035473	7.60E-08	70YrCancerDerived_InhSoil[	7.60E-08	0.00E+00	0.00E+00	0.00E+00	0.00E+00	0.00E+00	0.00E+00	0.00E+00	0.00E+00	0.00E+00	0.00E+00	0.00E+00

3639	ALL		746016	4035473	7.71E-08	70YrCancerDerived_InhSoilI	7.71E-08	0.00E+00	0.00E+00	0.00E+00	0.00E+00	0.00E+00	0.00E+00	0.00E+00	0.00E+00	0.00E+00	0.00E+00	0.00E+00
3640	ALL		746066	4035473	7.86E-08	70YrCancerDerived_InhSoilI	7.86E-08	0.00E+00	0.00E+00	0.00E+00	0.00E+00	0.00E+00	0.00E+00	0.00E+00	0.00E+00	0.00E+00	0.00E+00	0.00E+00
3641	ALL		746116	4035473	8.04E-08	70YrCancerDerived_InhSoilI	8.04E-08	0.00E+00	0.00E+00	0.00E+00	0.00E+00	0.00E+00	0.00E+00	0.00E+00	0.00E+00	0.00E+00	0.00E+00	0.00E+00
3642	ALL		746166	4035473	8.22E-08	70YrCancerDerived_InhSoilI	8.22E-08	0.00E+00	0.00E+00	0.00E+00	0.00E+00	0.00E+00	0.00E+00	0.00E+00	0.00E+00	0.00E+00	0.00E+00	0.00E+00
3643	ALL		746216	4035473	8.46E-08	70YrCancerDerived_InhSoilI	8.46E-08	0.00E+00	0.00E+00	0.00E+00	0.00E+00	0.00E+00	0.00E+00	0.00E+00	0.00E+00	0.00E+00	0.00E+00	0.00E+00
3644	ALL		746266	4035473	8.75E-08	70YrCancerDerived_InhSoilI	8.75E-08	0.00E+00	0.00E+00	0.00E+00	0.00E+00	0.00E+00	0.00E+00	0.00E+00	0.00E+00	0.00E+00	0.00E+00	0.00E+00
3645	ALL		746316	4035473	9.08E-08	70YrCancerDerived_InhSoilI	9.08E-08	0.00E+00	0.00E+00	0.00E+00	0.00E+00	0.00E+00	0.00E+00	0.00E+00	0.00E+00	0.00E+00	0.00E+00	0.00E+00
3646	ALL		746366	4035473	9.39E-08	70YrCancerDerived_InhSoilI	9.39E-08	0.00E+00	0.00E+00	0.00E+00	0.00E+00	0.00E+00	0.00E+00	0.00E+00	0.00E+00	0.00E+00	0.00E+00	0.00E+00
3647	ALL		746762.33	4034654.27	1.00E-07	70YrCancerDerived_InhSoilI	1.00E-07	0.00E+00	0.00E+00	0.00E+00	0.00E+00	0.00E+00	0.00E+00	0.00E+00	0.00E+00	0.00E+00	0.00E+00	0.00E+00
3648	ALL		746812.33	4034654.27	1.03E-07	70YrCancerDerived_InhSoilI	1.03E-07	0.00E+00	0.00E+00	0.00E+00	0.00E+00	0.00E+00	0.00E+00	0.00E+00	0.00E+00	0.00E+00	0.00E+00	0.00E+00
3649	ALL		746862.33	4034654.27	1.06E-07	70YrCancerDerived_InhSoilI	1.06E-07	0.00E+00	0.00E+00	0.00E+00	0.00E+00	0.00E+00	0.00E+00	0.00E+00	0.00E+00	0.00E+00	0.00E+00	0.00E+00
3650	ALL		746912.33	4034654.27	1.10E-07	70YrCancerDerived_InhSoilI	1.10E-07	0.00E+00	0.00E+00	0.00E+00	0.00E+00	0.00E+00	0.00E+00	0.00E+00	0.00E+00	0.00E+00	0.00E+00	0.00E+00
3651	ALL		746962.33	4034654.27	1.14E-07	70YrCancerDerived_InhSoilI	1.14E-07	0.00E+00	0.00E+00	0.00E+00	0.00E+00	0.00E+00	0.00E+00	0.00E+00	0.00E+00	0.00E+00	0.00E+00	0.00E+00
3652	ALL		746762.33	4034704.27	1.02E-07	70YrCancerDerived_InhSoilI	1.02E-07	0.00E+00	0.00E+00	0.00E+00	0.00E+00	0.00E+00	0.00E+00	0.00E+00	0.00E+00	0.00E+00	0.00E+00	0.00E+00
3653	ALL		746812.33	4034704.27	1.05E-07	70YrCancerDerived_InhSoilI	1.05E-07	0.00E+00	0.00E+00	0.00E+00	0.00E+00	0.00E+00	0.00E+00	0.00E+00	0.00E+00	0.00E+00	0.00E+00	0.00E+00
3654	ALL		746862.33	4034704.27	1.09E-07	70YrCancerDerived_InhSoilI	1.09E-07	0.00E+00	0.00E+00	0.00E+00	0.00E+00	0.00E+00	0.00E+00	0.00E+00	0.00E+00	0.00E+00	0.00E+00	0.00E+00
3655	ALL		746912.33	4034704.27	1.13E-07	70YrCancerDerived_InhSoilI	1.13E-07	0.00E+00	0.00E+00	0.00E+00	0.00E+00	0.00E+00	0.00E+00	0.00E+00	0.00E+00	0.00E+00	0.00E+00	0.00E+00
3656	ALL		746962.33	4034704.27	1.17E-07	70YrCancerDerived_InhSoilI	1.17E-07	0.00E+00	0.00E+00	0.00E+00	0.00E+00	0.00E+00	0.00E+00	0.00E+00	0.00E+00	0.00E+00	0.00E+00	0.00E+00
3657	ALL		746762.33	4034754.27	1.04E-07	70YrCancerDerived_InhSoilI	1.04E-07	0.00E+00	0.00E+00	0.00E+00	0.00E+00	0.00E+00	0.00E+00	0.00E+00	0.00E+00	0.00E+00	0.00E+00	0.00E+00
3658	ALL		746812.33	4034754.27	1.07E-07	70YrCancerDerived_InhSoilI	1.07E-07	0.00E+00	0.00E+00	0.00E+00	0.00E+00	0.00E+00	0.00E+00	0.00E+00	0.00E+00	0.00E+00	0.00E+00	0.00E+00
3659	ALL		746862.33	4034754.27	1.11E-07	70YrCancerDerived_InhSoilI	1.11E-07	0.00E+00	0.00E+00	0.00E+00	0.00E+00	0.00E+00	0.00E+00	0.00E+00	0.00E+00	0.00E+00	0.00E+00	0.00E+00
3660	ALL		746912.33	4034754.27	1.16E-07	70YrCancerDerived_InhSoilI	1.16E-07	0.00E+00	0.00E+00	0.00E+00	0.00E+00	0.00E+00	0.00E+00	0.00E+00	0.00E+00	0.00E+00	0.00E+00	0.00E+00
3661	ALL		746962.33	4034754.27	1.21E-07	70YrCancerDerived_InhSoilI	1.21E-07	0.00E+00	0.00E+00	0.00E+00	0.00E+00	0.00E+00	0.00E+00	0.00E+00	0.00E+00	0.00E+00	0.00E+00	0.00E+00
3662	ALL		746762.33	4034804.27	1.06E-07	70YrCancerDerived_InhSoilI	1.06E-07	0.00E+00	0.00E+00	0.00E+00	0.00E+00	0.00E+00	0.00E+00	0.00E+00	0.00E+00	0.00E+00	0.00E+00	0.00E+00
3663	ALL		746812.33	4034804.27	1.10E-07	70YrCancerDerived_InhSoilI	1.10E-07	0.00E+00	0.00E+00	0.00E+00	0.00E+00	0.00E+00	0.00E+00	0.00E+00	0.00E+00	0.00E+00	0.00E+00	0.00E+00
3664	ALL		746862.33	4034804.27	1.14E-07	70YrCancerDerived_InhSoilI	1.14E-07	0.00E+00	0.00E+00	0.00E+00	0.00E+00	0.00E+00	0.00E+00	0.00E+00	0.00E+00	0.00E+00	0.00E+00	0.00E+00
3665	ALL		746912.33	4034804.27	1.19E-07	70YrCancerDerived_InhSoilI	1.19E-07	0.00E+00	0.00E+00	0.00E+00	0.00E+00	0.00E+00	0.00E+00	0.00E+00	0.00E+00	0.00E+00	0.00E+00	0.00E+00
3666	ALL		746962.33	4034804.27	1.25E-07	70YrCancerDerived_InhSoilI	1.25E-07	0.00E+00	0.00E+00	0.00E+00	0.00E+00	0.00E+00	0.00E+00	0.00E+00	0.00E+00	0.00E+00	0.00E+00	0.00E+00
3667	ALL		746762.33	4034854.27	1.08E-07	70YrCancerDerived_InhSoilI	1.08E-07	0.00E+00	0.00E+00	0.00E+00	0.00E+00	0.00E+00	0.00E+00	0.00E+00	0.00E+00	0.00E+00	0.00E+00	0.00E+00
3668	ALL		746812.33	4034854.27	1.13E-07	70YrCancerDerived_InhSoilI	1.13E-07	0.00E+00	0.00E+00	0.00E+00	0.00E+00	0.00E+00	0.00E+00	0.00E+00	0.00E+00	0.00E+00	0.00E+00	0.00E+00
3669	ALL		746862.33	4034854.27	1.17E-07	70YrCancerDerived_InhSoilI	1.17E-07	0.00E+00	0.00E+00	0.00E+00	0.00E+00	0.00E+00	0.00E+00	0.00E+00	0.00E+00	0.00E+00	0.00E+00	0.00E+00
3670	ALL		746912.33	4034854.27	1.22E-07	70YrCancerDerived_InhSoilI	1.22E-07	0.00E+00	0.00E+00	0.00E+00	0.00E+00	0.00E+00	0.00E+00	0.00E+00	0.00E+00	0.00E+00	0.00E+00	0.00E+00
3671	ALL		746962.33	4034854.27	1.28E-07	70YrCancerDerived_InhSoilI	1.28E-07	0.00E+00	0.00E+00	0.00E+00	0.00E+00	0.00E+00	0.00E+00	0.00E+00	0.00E+00	0.00E+00	0.00E+00	0.00E+00
3672	ALL		746762.33	4034904.27	1.10E-07	70YrCancerDerived_InhSoilI	1.10E-07	0.00E+00	0.00E+00	0.00E+00	0.00E+00	0.00E+00	0.00E+00	0.00E+00	0.00E+00	0.00E+00	0.00E+00	0.00E+00
3673	ALL		746812.33	4034904.27	1.14E-07	70YrCancerDerived_InhSoilI	1.14E-07	0.00E+00	0.00E+00	0.00E+00	0.00E+00	0.00E+00	0.00E+00	0.00E+00	0.00E+00	0.00E+00	0.00E+00	0.00E+00
3674	ALL		746862.33	4034904.27	1.20E-07	70YrCancerDerived_InhSoilI	1.20E-07	0.00E+00	0.00E+00	0.00E+00	0.00E+00	0.00E+00	0.00E+00	0.00E+00	0.00E+00	0.00E+00	0.00E+00	0.00E+00
3675	ALL		746912.33	4034904.27	1.26E-07	70YrCancerDerived_InhSoilI	1.26E-07	0.00E+00	0.00E+00	0.00E+00	0.00E+00	0.00E+00	0.00E+00	0.00E+00	0.00E+00	0.00E+00	0.00E+00	0.00E+00
3676	ALL		746962.33	4034904.27	1.32E-07	70YrCancerDerived_InhSoilI	1.32E-07	0.00E+00	0.00E+00	0.00E+00	0.00E+00	0.00E+00	0.00E+00	0.00E+00	0.00E+00	0.00E+00	0.00E+00	0.00E+00
3677	ALL		746762.33	4034954.27	1.12E-07	70YrCancerDerived_InhSoilI	1.12E-07	0.00E+00	0.00E+00	0.00E+00	0.00E+00	0.00E+00	0.00E+00	0.00E+00	0.00E+00	0.00E+00	0.00E+00	0.00E+00
3678	ALL		746812.33	4034954.27	1.18E-07	70YrCancerDerived_InhSoilI	1.18E-07	0.00E+00	0.00E+00	0.00E+00	0.00E+00	0.00E+00	0.00E+00	0.00E+00	0.00E+00	0.00E+00	0.00E+00	0.00E+00
3679	ALL		746862.33	4034954.27	1.23E-07	70YrCancerDerived_InhSoilI	1.23E-07	0.00E+00	0.00E+00	0.00E+00	0.00E+00	0.00E+00	0.00E+00	0.00E+00	0.00E+00	0.00E+00	0.00E+00	0.00E+00
3680	ALL		746912.33	4034954.27	1.30E-07	70YrCancerDerived_InhSoilI	1.30E-07	0.00E+00	0.00E+00	0.00E+00	0.00E+00	0.00E+00	0.00E+00	0.00E+00	0.00E+00	0.00E+00	0.00E+00	0.00E+00
3681	ALL		746962.33	4034954.27	1.37E-07	70YrCancerDerived_InhSoilI	1.37E-07	0.00E+00	0.00E+00	0.00E+00	0.00E+00	0.00E+00	0.00E+00	0.00E+00	0.00E+00	0.00E+00	0.00E+00	0.00E+00
3682	ALL	SENS	746762.33	4035004.27	1.14E-07	70YrCancerDerived_InhSoilI	1.14E-07	0.00E+00	0.00E+00	0.00E+00	0.00E+00	0.00E+00	0.00E+00	0.00E+00	0.00E+00	0.00E+00	0.00E+00	0.00E+00
3683	ALL	SENS	746812.33	4035004.27	1.19E-07	70YrCancerDerived_InhSoilI	1.19E-07	0.00E+00	0.00E+00	0.00E+00	0.00E+00	0.00E+00	0.00E+00	0.00E+00	0.00E+00	0.00E+00	0.00E+00	0.00E+00
3684	ALL	SENS	746862.33	4035004.27	1.26E-07	70YrCancerDerived_InhSoilI	1.26E-07	0.00E+00	0.00E+00	0.00E+00	0.00E+00	0.00E+00	0.00E+00	0.00E+00	0.00E+00	0.00E+00	0.00E+00	0.00E+00
3685	ALL	SENS	746912.33	4035004.27	1.33E-07	70YrCancerDerived_InhSoilI	1.33E-07	0.00E+00	0.00E+00	0.00E+00	0.00E+00	0.00E+00	0.00E+00	0.00E+00	0.00E+00	0.00E+00	0.00E+00	0.00E+00
3686	ALL		746962.33	4035004.27	1.41E-07	70YrCancerDerived_InhSoilI	1.41E-07	0.00E+00	0.00E+00	0.00E+00	0.00E+00	0.00E+00	0.00E+00	0.00E+00	0.00E+00	0.00E+00	0.00E+00	0.00E+00
3687	ALL		746762.33	4035054.27	1.16E-07	70YrCancerDerived_InhSoilI	1.16E-07	0.00E+00	0.00E+00	0.00E+00	0.00E+00	0.00E+00	0.00E+00	0.00E+00	0.00E+00	0.00E+00	0.00E+00	0.00E+00
3688	ALL		746812.33	4035054.27	1.22E-07	70YrCancerDerived_InhSoilI	1.22E-07	0.00E+00	0.00E+00	0.00E+00	0.00E+00	0.00E+00	0.00E+00	0.00E+00	0.00E+00	0.00E+00	0.00E+00	0.00E+00
3689	ALL		746862.33	4035054.27	1.29E-07	70YrCancerDerived_InhSoilI	1.29E-07	0.00E+00	0.00E+00	0.00E+00	0.00E+00	0.00E+00	0.00E+00	0.00E+00	0.00E+00	0.00E+00	0.00E+00	0.00E+00
3690	ALL		746912.33	4035054.27	1.36E-07	70YrCancerDerived_InhSoilI	1.36E-07	0.00E+00	0.00E+00	0.00E+00	0.00E+00	0.00E+00	0.00E+00	0.00E+00	0.00E+00	0.00E+00	0.00E+00	0.00E+00
3691	ALL		746962.33	4035054.27	1.46E-07	70YrCancerDerived_InhSoilI	1.46E-07	0.00E+00	0.00E+00	0.00E+00	0.00E+00	0.00E+00	0.00E+00	0.00E+00	0.00E+00	0.00E+00	0.00E+00	0.00E+00
3692	ALL		747420	4038175	6.81E-08	70YrCancerDerived_InhSoilI	6.81E-08	0.00E+00	0.00E+00	0.00E+00	0.00E+00	0.00E+00	0.00E+00	0.00E+00	0.00E+00	0.00E+00	0.00E+00	0.00E+00
3693	ALL		747470	4038175	6.83E-08	70YrCancerDerived_InhSoilI	6.83E-08	0.00E+00	0.00E+00	0.00E+00	0.00E+00	0.00E+00	0.00E+00	0.00E+00	0.00E+00	0.00E+00	0.00E+00	0.00E+00
3694	ALL		747520	4038175	6.88E-08	70YrCancerDerived_InhSoilI	6.88E-08	0.00E+00	0.00E+00	0.00E+00	0.00E+00	0.00E+00	0.00E+00	0.00E+00	0.00E+00	0.00E+00	0.00E+00	0.00E+00

3695	ALL	SENS	747420	4038225	6.80E-08	70YrCancerDerived_InhSoil[	6.80E-08	0.00E+00	0.00E+00	0.00E+00	0.00E+00	0.00E+00	0.00E+00	0.00E+00	0.00E+00	0.00E+00	0.00E+00	0.00E+00
3696	ALL	SENS	747470	4038225	6.82E-08	70YrCancerDerived_InhSoil[	6.82E-08	0.00E+00	0.00E+00	0.00E+00	0.00E+00	0.00E+00	0.00E+00	0.00E+00	0.00E+00	0.00E+00	0.00E+00	0.00E+00
3697	ALL	SENS	747520	4038225	6.86E-08	70YrCancerDerived_InhSoil[	6.86E-08	0.00E+00	0.00E+00	0.00E+00	0.00E+00	0.00E+00	0.00E+00	0.00E+00	0.00E+00	0.00E+00	0.00E+00	0.00E+00
3698	ALL	SENS	747420	4038275	6.80E-08	70YrCancerDerived_InhSoil[	6.80E-08	0.00E+00	0.00E+00	0.00E+00	0.00E+00	0.00E+00	0.00E+00	0.00E+00	0.00E+00	0.00E+00	0.00E+00	0.00E+00
3699	ALL	SENS	747470	4038275	6.81E-08	70YrCancerDerived_InhSoil[	6.81E-08	0.00E+00	0.00E+00	0.00E+00	0.00E+00	0.00E+00	0.00E+00	0.00E+00	0.00E+00	0.00E+00	0.00E+00	0.00E+00
3700	ALL	SENS	747520	4038275	6.85E-08	70YrCancerDerived_InhSoil[	6.85E-08	0.00E+00	0.00E+00	0.00E+00	0.00E+00	0.00E+00	0.00E+00	0.00E+00	0.00E+00	0.00E+00	0.00E+00	0.00E+00
3701	ALL		747420	4038325	6.81E-08	70YrCancerDerived_InhSoil[	6.81E-08	0.00E+00	0.00E+00	0.00E+00	0.00E+00	0.00E+00	0.00E+00	0.00E+00	0.00E+00	0.00E+00	0.00E+00	0.00E+00
3702	ALL		747470	4038325	6.82E-08	70YrCancerDerived_InhSoil[	6.82E-08	0.00E+00	0.00E+00	0.00E+00	0.00E+00	0.00E+00	0.00E+00	0.00E+00	0.00E+00	0.00E+00	0.00E+00	0.00E+00
3703	ALL		747520	4038325	6.85E-08	70YrCancerDerived_InhSoil[	6.85E-08	0.00E+00	0.00E+00	0.00E+00	0.00E+00	0.00E+00	0.00E+00	0.00E+00	0.00E+00	0.00E+00	0.00E+00	0.00E+00
3704	ALL		746279	4039819	7.06E-08	70YrCancerDerived_InhSoil[	7.06E-08	0.00E+00	0.00E+00	0.00E+00	0.00E+00	0.00E+00	0.00E+00	0.00E+00	0.00E+00	0.00E+00	0.00E+00	0.00E+00
3705	ALL		746329	4039819	7.09E-08	70YrCancerDerived_InhSoil[	7.09E-08	0.00E+00	0.00E+00	0.00E+00	0.00E+00	0.00E+00	0.00E+00	0.00E+00	0.00E+00	0.00E+00	0.00E+00	0.00E+00
3706	ALL		746379	4039819	7.12E-08	70YrCancerDerived_InhSoil[	7.12E-08	0.00E+00	0.00E+00	0.00E+00	0.00E+00	0.00E+00	0.00E+00	0.00E+00	0.00E+00	0.00E+00	0.00E+00	0.00E+00
3707	ALL	SENS	746429	4039819	7.16E-08	70YrCancerDerived_InhSoil[	7.16E-08	0.00E+00	0.00E+00	0.00E+00	0.00E+00	0.00E+00	0.00E+00	0.00E+00	0.00E+00	0.00E+00	0.00E+00	0.00E+00
3708	ALL	SENS	746479	4039819	7.19E-08	70YrCancerDerived_InhSoil[	7.19E-08	0.00E+00	0.00E+00	0.00E+00	0.00E+00	0.00E+00	0.00E+00	0.00E+00	0.00E+00	0.00E+00	0.00E+00	0.00E+00
3709	ALL		746529	4039819	7.23E-08	70YrCancerDerived_InhSoil[	7.23E-08	0.00E+00	0.00E+00	0.00E+00	0.00E+00	0.00E+00	0.00E+00	0.00E+00	0.00E+00	0.00E+00	0.00E+00	0.00E+00
3710	ALL	SENS	746279	4039869	7.08E-08	70YrCancerDerived_InhSoil[	7.08E-08	0.00E+00	0.00E+00	0.00E+00	0.00E+00	0.00E+00	0.00E+00	0.00E+00	0.00E+00	0.00E+00	0.00E+00	0.00E+00
3711	ALL	SENS	746329	4039869	7.12E-08	70YrCancerDerived_InhSoil[	7.12E-08	0.00E+00	0.00E+00	0.00E+00	0.00E+00	0.00E+00	0.00E+00	0.00E+00	0.00E+00	0.00E+00	0.00E+00	0.00E+00
3712	ALL	SENS	746379	4039869	7.15E-08	70YrCancerDerived_InhSoil[	7.15E-08	0.00E+00	0.00E+00	0.00E+00	0.00E+00	0.00E+00	0.00E+00	0.00E+00	0.00E+00	0.00E+00	0.00E+00	0.00E+00
3713	ALL	SENS	746429	4039869	7.19E-08	70YrCancerDerived_InhSoil[	7.19E-08	0.00E+00	0.00E+00	0.00E+00	0.00E+00	0.00E+00	0.00E+00	0.00E+00	0.00E+00	0.00E+00	0.00E+00	0.00E+00
3714	ALL	SENS	746479	4039869	7.24E-08	70YrCancerDerived_InhSoil[	7.24E-08	0.00E+00	0.00E+00	0.00E+00	0.00E+00	0.00E+00	0.00E+00	0.00E+00	0.00E+00	0.00E+00	0.00E+00	0.00E+00
3715	ALL		746529	4039869	7.28E-08	70YrCancerDerived_InhSoil[	7.28E-08	0.00E+00	0.00E+00	0.00E+00	0.00E+00	0.00E+00	0.00E+00	0.00E+00	0.00E+00	0.00E+00	0.00E+00	0.00E+00
3716	ALL	SENS	746279	4039919	7.11E-08	70YrCancerDerived_InhSoil[	7.11E-08	0.00E+00	0.00E+00	0.00E+00	0.00E+00	0.00E+00	0.00E+00	0.00E+00	0.00E+00	0.00E+00	0.00E+00	0.00E+00
3717	ALL	SENS	746329	4039919	7.14E-08	70YrCancerDerived_InhSoil[	7.14E-08	0.00E+00	0.00E+00	0.00E+00	0.00E+00	0.00E+00	0.00E+00	0.00E+00	0.00E+00	0.00E+00	0.00E+00	0.00E+00
3718	ALL	SENS	746379	4039919	7.19E-08	70YrCancerDerived_InhSoil[	7.19E-08	0.00E+00	0.00E+00	0.00E+00	0.00E+00	0.00E+00	0.00E+00	0.00E+00	0.00E+00	0.00E+00	0.00E+00	0.00E+00
3719	ALL		746429	4039919	7.23E-08	70YrCancerDerived_InhSoil[	7.23E-08	0.00E+00	0.00E+00	0.00E+00	0.00E+00	0.00E+00	0.00E+00	0.00E+00	0.00E+00	0.00E+00	0.00E+00	0.00E+00
3720	ALL		746479	4039919	7.28E-08	70YrCancerDerived_InhSoil[	7.28E-08	0.00E+00	0.00E+00	0.00E+00	0.00E+00	0.00E+00	0.00E+00	0.00E+00	0.00E+00	0.00E+00	0.00E+00	0.00E+00
3721	ALL		746529	4039919	7.33E-08	70YrCancerDerived_InhSoil[	7.33E-08	0.00E+00	0.00E+00	0.00E+00	0.00E+00	0.00E+00	0.00E+00	0.00E+00	0.00E+00	0.00E+00	0.00E+00	0.00E+00
3722	ALL		746279	4039969	7.15E-08	70YrCancerDerived_InhSoil[	7.15E-08	0.00E+00	0.00E+00	0.00E+00	0.00E+00	0.00E+00	0.00E+00	0.00E+00	0.00E+00	0.00E+00	0.00E+00	0.00E+00
3723	ALL		746329	4039969	7.19E-08	70YrCancerDerived_InhSoil[	7.19E-08	0.00E+00	0.00E+00	0.00E+00	0.00E+00	0.00E+00	0.00E+00	0.00E+00	0.00E+00	0.00E+00	0.00E+00	0.00E+00
3724	ALL		746379	4039969	7.24E-08	70YrCancerDerived_InhSoil[	7.24E-08	0.00E+00	0.00E+00	0.00E+00	0.00E+00	0.00E+00	0.00E+00	0.00E+00	0.00E+00	0.00E+00	0.00E+00	0.00E+00
3725	ALL		746429	4039969	7.28E-08	70YrCancerDerived_InhSoil[	7.28E-08	0.00E+00	0.00E+00	0.00E+00	0.00E+00	0.00E+00	0.00E+00	0.00E+00	0.00E+00	0.00E+00	0.00E+00	0.00E+00
3726	ALL		746479	4039969	7.34E-08	70YrCancerDerived_InhSoil[	7.34E-08	0.00E+00	0.00E+00	0.00E+00	0.00E+00	0.00E+00	0.00E+00	0.00E+00	0.00E+00	0.00E+00	0.00E+00	0.00E+00
3727	ALL		746529	4039969	7.39E-08	70YrCancerDerived_InhSoil[	7.39E-08	0.00E+00	0.00E+00	0.00E+00	0.00E+00	0.00E+00	0.00E+00	0.00E+00	0.00E+00	0.00E+00	0.00E+00	0.00E+00
3728	ALL		746279	4040019	7.22E-08	70YrCancerDerived_InhSoil[	7.22E-08	0.00E+00	0.00E+00	0.00E+00	0.00E+00	0.00E+00	0.00E+00	0.00E+00	0.00E+00	0.00E+00	0.00E+00	0.00E+00
3729	ALL		746329	4040019	7.26E-08	70YrCancerDerived_InhSoil[	7.26E-08	0.00E+00	0.00E+00	0.00E+00	0.00E+00	0.00E+00	0.00E+00	0.00E+00	0.00E+00	0.00E+00	0.00E+00	0.00E+00
3730	ALL		746379	4040019	7.31E-08	70YrCancerDerived_InhSoil[	7.31E-08	0.00E+00	0.00E+00	0.00E+00	0.00E+00	0.00E+00	0.00E+00	0.00E+00	0.00E+00	0.00E+00	0.00E+00	0.00E+00
3731	ALL		746429	4040019	7.36E-08	70YrCancerDerived_InhSoil[	7.36E-08	0.00E+00	0.00E+00	0.00E+00	0.00E+00	0.00E+00	0.00E+00	0.00E+00	0.00E+00	0.00E+00	0.00E+00	0.00E+00
3732	ALL		746479	4040019	7.42E-08	70YrCancerDerived_InhSoil[	7.42E-08	0.00E+00	0.00E+00	0.00E+00	0.00E+00	0.00E+00	0.00E+00	0.00E+00	0.00E+00	0.00E+00	0.00E+00	0.00E+00
3733	ALL		746529	4040019	7.48E-08	70YrCancerDerived_InhSoil[	7.48E-08	0.00E+00	0.00E+00	0.00E+00	0.00E+00	0.00E+00	0.00E+00	0.00E+00	0.00E+00	0.00E+00	0.00E+00	0.00E+00
3734	ALL		746566	4040066	7.63E-08	70YrCancerDerived_InhSoil[	7.63E-08	0.00E+00	0.00E+00	0.00E+00	0.00E+00	0.00E+00	0.00E+00	0.00E+00	0.00E+00	0.00E+00	0.00E+00	0.00E+00
3735	ALL	SENS	746576	4040066	7.64E-08	70YrCancerDerived_InhSoil[	7.64E-08	0.00E+00	0.00E+00	0.00E+00	0.00E+00	0.00E+00	0.00E+00	0.00E+00	0.00E+00	0.00E+00	0.00E+00	0.00E+00
3736	ALL	SENS	746586	4040066	7.66E-08	70YrCancerDerived_InhSoil[	7.66E-08	0.00E+00	0.00E+00	0.00E+00	0.00E+00	0.00E+00	0.00E+00	0.00E+00	0.00E+00	0.00E+00	0.00E+00	0.00E+00
3737	ALL	SENS	746596	4040066	7.68E-08	70YrCancerDerived_InhSoil[	7.68E-08	0.00E+00	0.00E+00	0.00E+00	0.00E+00	0.00E+00	0.00E+00	0.00E+00	0.00E+00	0.00E+00	0.00E+00	0.00E+00
3738	ALL	SENS	746606	4040066	7.69E-08	70YrCancerDerived_InhSoil[	7.69E-08	0.00E+00	0.00E+00	0.00E+00	0.00E+00	0.00E+00	0.00E+00	0.00E+00	0.00E+00	0.00E+00	0.00E+00	0.00E+00
3739	ALL	SENS	746616	4040066	7.71E-08	70YrCancerDerived_InhSoil[	7.71E-08	0.00E+00	0.00E+00	0.00E+00	0.00E+00	0.00E+00	0.00E+00	0.00E+00	0.00E+00	0.00E+00	0.00E+00	0.00E+00
3740	ALL	SENS	746566	4040076	7.65E-08	70YrCancerDerived_InhSoil[	7.65E-08	0.00E+00	0.00E+00	0.00E+00	0.00E+00	0.00E+00	0.00E+00	0.00E+00	0.00E+00	0.00E+00	0.00E+00	0.00E+00
3741	ALL	SENS	746576	4040076	7.67E-08	70YrCancerDerived_InhSoil[	7.67E-08	0.00E+00	0.00E+00	0.00E+00	0.00E+00	0.00E+00	0.00E+00	0.00E+00	0.00E+00	0.00E+00	0.00E+00	0.00E+00
3742	ALL	SENS	746586	4040076	7.69E-08	70YrCancerDerived_InhSoil[	7.69E-08	0.00E+00	0.00E+00	0.00E+00	0.00E+00	0.00E+00	0.00E+00	0.00E+00	0.00E+00	0.00E+00	0.00E+00	0.00E+00
3743	ALL	SENS	746596	4040076	7.70E-08	70YrCancerDerived_InhSoil[	7.70E-08	0.00E+00	0.00E+00	0.00E+00	0.00E+00	0.00E+00	0.00E+00	0.00E+00	0.00E+00	0.00E+00	0.00E+00	0.00E+00
3744	ALL	SENS	746606	4040076	7.72E-08	70YrCancerDerived_InhSoil[	7.72E-08	0.00E+00	0.00E+00	0.00E+00	0.00E+00	0.00E+00	0.00E+00	0.00E+00	0.00E+00	0.00E+00	0.00E+00	0.00E+00
3745	ALL	SENS	746616	4040076	7.73E-08	70YrCancerDerived_InhSoil[	7.73E-08	0.00E+00	0.00E+00	0.00E+00	0.00E+00	0.00E+00	0.00E+00	0.00E+00	0.00E+00	0.00E+00	0.00E+00	0.00E+00
3746	ALL	SENS	746566	4040086	7.68E-08	70YrCancerDerived_InhSoil[	7.68E-08	0.00E+00	0.00E+00	0.00E+00	0.00E+00	0.00E+00	0.00E+00	0.00E+00	0.00E+00	0.00E+00	0.00E+00	0.00E+00
3747	ALL	SENS	746576	4040086	7.70E-08	70YrCancerDerived_InhSoil[	7.70E-08	0.00E+00	0.00E+00	0.00E+00	0.00E+00	0.00E+00	0.00E+00	0.00E+00	0.00E+00	0.00E+00	0.00E+00	0.00E+00
3748	ALL	SENS	746586	4040086	7.72E-08	70YrCancerDerived_InhSoil[	7.72E-08	0.00E+00	0.00E+00	0.00E+00	0.00E+00	0.00E+00	0.00E+00	0.00E+00	0.00E+00	0.00E+00	0.00E+00	0.00E+00
3749	ALL	SENS	746596	4040086	7.73E-08	70YrCancerDerived_InhSoil[	7.73E-08	0.00E+00	0.00E+00	0.00E+00	0.00E+00	0.00E+00	0.00E+00	0.00E+00	0.00E+00	0.00E+00	0.00E+00	0.00E+00
3750	ALL	SENS	746606	4040086	7.75E-08	70YrCancerDerived_InhSoil[	7.75E-08	0.00E+00	0.00E+00	0.00E+00	0.00E+00	0.00E+00	0.00E+00	0.00E+00	0.00E+00	0.00E+00	0.00E+00	0.00E+00

3751	ALL	SENS	746616	4040086	7.76E-08	70YrCancerDerived_InhSoil[	7.76E-08	0.00E+00	0.00E+00	0.00E+00	0.00E+00	0.00E+00	0.00E+00	0.00E+00	0.00E+00	0.00E+00	0.00E+00	0.00E+00
3752	ALL	SENS	746566	4040096	7.71E-08	70YrCancerDerived_InhSoil[	7.71E-08	0.00E+00	0.00E+00	0.00E+00	0.00E+00	0.00E+00	0.00E+00	0.00E+00	0.00E+00	0.00E+00	0.00E+00	0.00E+00
3753	ALL	SENS	746576	4040096	7.73E-08	70YrCancerDerived_InhSoil[	7.73E-08	0.00E+00	0.00E+00	0.00E+00	0.00E+00	0.00E+00	0.00E+00	0.00E+00	0.00E+00	0.00E+00	0.00E+00	0.00E+00
3754	ALL	SENS	746586	4040096	7.75E-08	70YrCancerDerived_InhSoil[	7.75E-08	0.00E+00	0.00E+00	0.00E+00	0.00E+00	0.00E+00	0.00E+00	0.00E+00	0.00E+00	0.00E+00	0.00E+00	0.00E+00
3755	ALL	SENS	746596	4040096	7.76E-08	70YrCancerDerived_InhSoil[	7.76E-08	0.00E+00	0.00E+00	0.00E+00	0.00E+00	0.00E+00	0.00E+00	0.00E+00	0.00E+00	0.00E+00	0.00E+00	0.00E+00
3756	ALL	SENS	746606	4040096	7.78E-08	70YrCancerDerived_InhSoil[	7.78E-08	0.00E+00	0.00E+00	0.00E+00	0.00E+00	0.00E+00	0.00E+00	0.00E+00	0.00E+00	0.00E+00	0.00E+00	0.00E+00
3757	ALL	SENS	746616	4040096	7.79E-08	70YrCancerDerived_InhSoil[	7.79E-08	0.00E+00	0.00E+00	0.00E+00	0.00E+00	0.00E+00	0.00E+00	0.00E+00	0.00E+00	0.00E+00	0.00E+00	0.00E+00
3758	ALL	SENS	746566	4040106	7.74E-08	70YrCancerDerived_InhSoil[	7.74E-08	0.00E+00	0.00E+00	0.00E+00	0.00E+00	0.00E+00	0.00E+00	0.00E+00	0.00E+00	0.00E+00	0.00E+00	0.00E+00
3759	ALL	SENS	746576	4040106	7.76E-08	70YrCancerDerived_InhSoil[	7.76E-08	0.00E+00	0.00E+00	0.00E+00	0.00E+00	0.00E+00	0.00E+00	0.00E+00	0.00E+00	0.00E+00	0.00E+00	0.00E+00
3760	ALL	SENS	746586	4040106	7.77E-08	70YrCancerDerived_InhSoil[	7.77E-08	0.00E+00	0.00E+00	0.00E+00	0.00E+00	0.00E+00	0.00E+00	0.00E+00	0.00E+00	0.00E+00	0.00E+00	0.00E+00
3761	ALL	SENS	746596	4040106	7.79E-08	70YrCancerDerived_InhSoil[	7.79E-08	0.00E+00	0.00E+00	0.00E+00	0.00E+00	0.00E+00	0.00E+00	0.00E+00	0.00E+00	0.00E+00	0.00E+00	0.00E+00
3762	ALL	SENS	746606	4040106	7.81E-08	70YrCancerDerived_InhSoil[	7.81E-08	0.00E+00	0.00E+00	0.00E+00	0.00E+00	0.00E+00	0.00E+00	0.00E+00	0.00E+00	0.00E+00	0.00E+00	0.00E+00
3763	ALL	SENS	746616	4040106	7.82E-08	70YrCancerDerived_InhSoil[	7.82E-08	0.00E+00	0.00E+00	0.00E+00	0.00E+00	0.00E+00	0.00E+00	0.00E+00	0.00E+00	0.00E+00	0.00E+00	0.00E+00
3764	ALL	SENS	746566	4040116	7.77E-08	70YrCancerDerived_InhSoil[	7.77E-08	0.00E+00	0.00E+00	0.00E+00	0.00E+00	0.00E+00	0.00E+00	0.00E+00	0.00E+00	0.00E+00	0.00E+00	0.00E+00
3765	ALL	SENS	746576	4040116	7.79E-08	70YrCancerDerived_InhSoil[	7.79E-08	0.00E+00	0.00E+00	0.00E+00	0.00E+00	0.00E+00	0.00E+00	0.00E+00	0.00E+00	0.00E+00	0.00E+00	0.00E+00
3766	ALL	SENS	746586	4040116	7.81E-08	70YrCancerDerived_InhSoil[	7.81E-08	0.00E+00	0.00E+00	0.00E+00	0.00E+00	0.00E+00	0.00E+00	0.00E+00	0.00E+00	0.00E+00	0.00E+00	0.00E+00
3767	ALL	SENS	746596	4040116	7.82E-08	70YrCancerDerived_InhSoil[	7.82E-08	0.00E+00	0.00E+00	0.00E+00	0.00E+00	0.00E+00	0.00E+00	0.00E+00	0.00E+00	0.00E+00	0.00E+00	0.00E+00
3768	ALL	SENS	746606	4040116	7.84E-08	70YrCancerDerived_InhSoil[	7.84E-08	0.00E+00	0.00E+00	0.00E+00	0.00E+00	0.00E+00	0.00E+00	0.00E+00	0.00E+00	0.00E+00	0.00E+00	0.00E+00
3769	ALL	SENS	746616	4040116	7.85E-08	70YrCancerDerived_InhSoil[	7.85E-08	0.00E+00	0.00E+00	0.00E+00	0.00E+00	0.00E+00	0.00E+00	0.00E+00	0.00E+00	0.00E+00	0.00E+00	0.00E+00
3770	ALL	SENS	746566	4040126	7.80E-08	70YrCancerDerived_InhSoil[	7.80E-08	0.00E+00	0.00E+00	0.00E+00	0.00E+00	0.00E+00	0.00E+00	0.00E+00	0.00E+00	0.00E+00	0.00E+00	0.00E+00
3771	ALL	SENS	746576	4040126	7.82E-08	70YrCancerDerived_InhSoil[	7.82E-08	0.00E+00	0.00E+00	0.00E+00	0.00E+00	0.00E+00	0.00E+00	0.00E+00	0.00E+00	0.00E+00	0.00E+00	0.00E+00
3772	ALL	SENS	746586	4040126	7.84E-08	70YrCancerDerived_InhSoil[	7.84E-08	0.00E+00	0.00E+00	0.00E+00	0.00E+00	0.00E+00	0.00E+00	0.00E+00	0.00E+00	0.00E+00	0.00E+00	0.00E+00
3773	ALL	SENS	746596	4040126	7.85E-08	70YrCancerDerived_InhSoil[	7.85E-08	0.00E+00	0.00E+00	0.00E+00	0.00E+00	0.00E+00	0.00E+00	0.00E+00	0.00E+00	0.00E+00	0.00E+00	0.00E+00
3774	ALL	SENS	746606	4040126	7.87E-08	70YrCancerDerived_InhSoil[	7.87E-08	0.00E+00	0.00E+00	0.00E+00	0.00E+00	0.00E+00	0.00E+00	0.00E+00	0.00E+00	0.00E+00	0.00E+00	0.00E+00
3775	ALL	SENS	746616	4040126	7.89E-08	70YrCancerDerived_InhSoil[	7.89E-08	0.00E+00	0.00E+00	0.00E+00	0.00E+00	0.00E+00	0.00E+00	0.00E+00	0.00E+00	0.00E+00	0.00E+00	0.00E+00
3776	ALL	SENS	746566	4040136	7.83E-08	70YrCancerDerived_InhSoil[	7.83E-08	0.00E+00	0.00E+00	0.00E+00	0.00E+00	0.00E+00	0.00E+00	0.00E+00	0.00E+00	0.00E+00	0.00E+00	0.00E+00
3777	ALL	SENS	746576	4040136	7.85E-08	70YrCancerDerived_InhSoil[	7.85E-08	0.00E+00	0.00E+00	0.00E+00	0.00E+00	0.00E+00	0.00E+00	0.00E+00	0.00E+00	0.00E+00	0.00E+00	0.00E+00
3778	ALL	SENS	746586	4040136	7.87E-08	70YrCancerDerived_InhSoil[	7.87E-08	0.00E+00	0.00E+00	0.00E+00	0.00E+00	0.00E+00	0.00E+00	0.00E+00	0.00E+00	0.00E+00	0.00E+00	0.00E+00
3779	ALL	SENS	746596	4040136	7.89E-08	70YrCancerDerived_InhSoil[	7.89E-08	0.00E+00	0.00E+00	0.00E+00	0.00E+00	0.00E+00	0.00E+00	0.00E+00	0.00E+00	0.00E+00	0.00E+00	0.00E+00
3780	ALL	SENS	746606	4040136	7.90E-08	70YrCancerDerived_InhSoil[	7.90E-08	0.00E+00	0.00E+00	0.00E+00	0.00E+00	0.00E+00	0.00E+00	0.00E+00	0.00E+00	0.00E+00	0.00E+00	0.00E+00
3781	ALL	SENS	746616	4040136	7.92E-08	70YrCancerDerived_InhSoil[	7.92E-08	0.00E+00	0.00E+00	0.00E+00	0.00E+00	0.00E+00	0.00E+00	0.00E+00	0.00E+00	0.00E+00	0.00E+00	0.00E+00
3782	ALL	SENS	746566	4040146	7.86E-08	70YrCancerDerived_InhSoil[	7.86E-08	0.00E+00	0.00E+00	0.00E+00	0.00E+00	0.00E+00	0.00E+00	0.00E+00	0.00E+00	0.00E+00	0.00E+00	0.00E+00
3783	ALL	SENS	746576	4040146	7.88E-08	70YrCancerDerived_InhSoil[	7.88E-08	0.00E+00	0.00E+00	0.00E+00	0.00E+00	0.00E+00	0.00E+00	0.00E+00	0.00E+00	0.00E+00	0.00E+00	0.00E+00
3784	ALL	SENS	746586	4040146	7.90E-08	70YrCancerDerived_InhSoil[	7.90E-08	0.00E+00	0.00E+00	0.00E+00	0.00E+00	0.00E+00	0.00E+00	0.00E+00	0.00E+00	0.00E+00	0.00E+00	0.00E+00
3785	ALL	SENS	746596	4040146	7.92E-08	70YrCancerDerived_InhSoil[	7.92E-08	0.00E+00	0.00E+00	0.00E+00	0.00E+00	0.00E+00	0.00E+00	0.00E+00	0.00E+00	0.00E+00	0.00E+00	0.00E+00
3786	ALL	SENS	746606	4040146	7.94E-08	70YrCancerDerived_InhSoil[	7.94E-08	0.00E+00	0.00E+00	0.00E+00	0.00E+00	0.00E+00	0.00E+00	0.00E+00	0.00E+00	0.00E+00	0.00E+00	0.00E+00
3787	ALL	SENS	746616	4040146	7.95E-08	70YrCancerDerived_InhSoil[	7.95E-08	0.00E+00	0.00E+00	0.00E+00	0.00E+00	0.00E+00	0.00E+00	0.00E+00	0.00E+00	0.00E+00	0.00E+00	0.00E+00
3788	ALL	SENS	746566	4040156	7.89E-08	70YrCancerDerived_InhSoil[	7.89E-08	0.00E+00	0.00E+00	0.00E+00	0.00E+00	0.00E+00	0.00E+00	0.00E+00	0.00E+00	0.00E+00	0.00E+00	0.00E+00
3789	ALL	SENS	746576	4040156	7.92E-08	70YrCancerDerived_InhSoil[	7.92E-08	0.00E+00	0.00E+00	0.00E+00	0.00E+00	0.00E+00	0.00E+00	0.00E+00	0.00E+00	0.00E+00	0.00E+00	0.00E+00
3790	ALL	SENS	746586	4040156	7.94E-08	70YrCancerDerived_InhSoil[	7.94E-08	0.00E+00	0.00E+00	0.00E+00	0.00E+00	0.00E+00	0.00E+00	0.00E+00	0.00E+00	0.00E+00	0.00E+00	0.00E+00
3791	ALL	SENS	746596	4040156	7.95E-08	70YrCancerDerived_InhSoil[	7.95E-08	0.00E+00	0.00E+00	0.00E+00	0.00E+00	0.00E+00	0.00E+00	0.00E+00	0.00E+00	0.00E+00	0.00E+00	0.00E+00
3792	ALL	SENS	746606	4040156	7.97E-08	70YrCancerDerived_InhSoil[	7.97E-08	0.00E+00	0.00E+00	0.00E+00	0.00E+00	0.00E+00	0.00E+00	0.00E+00	0.00E+00	0.00E+00	0.00E+00	0.00E+00
3793	ALL	SENS	746616	4040156	7.99E-08	70YrCancerDerived_InhSoil[	7.99E-08	0.00E+00	0.00E+00	0.00E+00	0.00E+00	0.00E+00	0.00E+00	0.00E+00	0.00E+00	0.00E+00	0.00E+00	0.00E+00
3794	ALL	SENS	746566	4040166	7.93E-08	70YrCancerDerived_InhSoil[	7.93E-08	0.00E+00	0.00E+00	0.00E+00	0.00E+00	0.00E+00	0.00E+00	0.00E+00	0.00E+00	0.00E+00	0.00E+00	0.00E+00
3795	ALL	SENS	746576	4040166	7.95E-08	70YrCancerDerived_InhSoil[	7.95E-08	0.00E+00	0.00E+00	0.00E+00	0.00E+00	0.00E+00	0.00E+00	0.00E+00	0.00E+00	0.00E+00	0.00E+00	0.00E+00
3796	ALL	SENS	746586	4040166	7.97E-08	70YrCancerDerived_InhSoil[	7.97E-08	0.00E+00	0.00E+00	0.00E+00	0.00E+00	0.00E+00	0.00E+00	0.00E+00	0.00E+00	0.00E+00	0.00E+00	0.00E+00
3797	ALL	SENS	746596	4040166	7.99E-08	70YrCancerDerived_InhSoil[	7.99E-08	0.00E+00	0.00E+00	0.00E+00	0.00E+00	0.00E+00	0.00E+00	0.00E+00	0.00E+00	0.00E+00	0.00E+00	0.00E+00
3798	ALL	SENS	746606	4040166	8.01E-08	70YrCancerDerived_InhSoil[	8.01E-08	0.00E+00	0.00E+00	0.00E+00	0.00E+00	0.00E+00	0.00E+00	0.00E+00	0.00E+00	0.00E+00	0.00E+00	0.00E+00
3799	ALL	SENS	746616	4040166	8.02E-08	70YrCancerDerived_InhSoil[	8.02E-08	0.00E+00	0.00E+00	0.00E+00	0.00E+00	0.00E+00	0.00E+00	0.00E+00	0.00E+00	0.00E+00	0.00E+00	0.00E+00
3800	ALL		746559.72	4040315.67	8.38E-08	70YrCancerDerived_InhSoil[	8.38E-08	0.00E+00	0.00E+00	0.00E+00	0.00E+00	0.00E+00	0.00E+00	0.00E+00	0.00E+00	0.00E+00	0.00E+00	0.00E+00
3801	ALL		746569.72	4040315.67	8.41E-08	70YrCancerDerived_InhSoil[	8.41E-08	0.00E+00	0.00E+00	0.00E+00	0.00E+00	0.00E+00	0.00E+00	0.00E+00	0.00E+00	0.00E+00	0.00E+00	0.00E+00
3802	ALL		746579.72	4040315.67	8.44E-08	70YrCancerDerived_InhSoil[	8.44E-08	0.00E+00	0.00E+00	0.00E+00	0.00E+00	0.00E+00	0.00E+00	0.00E+00	0.00E+00	0.00E+00	0.00E+00	0.00E+00
3803	ALL		746589.72	4040315.67	8.47E-08	70YrCancerDerived_InhSoil[	8.47E-08	0.00E+00	0.00E+00	0.00E+00	0.00E+00	0.00E+00	0.00E+00	0.00E+00	0.00E+00	0.00E+00	0.00E+00	0.00E+00
3804	ALL		746599.72	4040315.67	8.49E-08	70YrCancerDerived_InhSoil[	8.49E-08	0.00E+00	0.00E+00	0.00E+00	0.00E+00	0.00E+00	0.00E+00	0.00E+00	0.00E+00	0.00E+00	0.00E+00	0.00E+00
3805	ALL		746609.72	4040315.67	8.51E-08	70YrCancerDerived_InhSoil[	8.51E-08	0.00E+00	0.00E+00	0.00E+00	0.00E+00	0.00E+00	0.00E+00	0.00E+00	0.00E+00	0.00E+00	0.00E+00	0.00E+00
3806	ALL		746619.72	4040315.67	8.54E-08	70YrCancerDerived_InhSoil[	8.54E-08	0.00E+00	0.00E+00	0.00E+00	0.00E+00	0.00E+00	0.00E+00	0.00E+00	0.00E+00	0.00E+00	0.00E+00	0.00E+00

3807	ALL		746559.72	4040325.67	8.40E-08	70YrCancerDerived_InhSoilI	8.40E-08	0.00E+00	0.00E+00	0.00E+00	0.00E+00	0.00E+00	0.00E+00	0.00E+00	0.00E+00	0.00E+00	0.00E+00	0.00E+00
3808	ALL		746569.72	4040325.67	8.44E-08	70YrCancerDerived_InhSoilI	8.44E-08	0.00E+00	0.00E+00	0.00E+00	0.00E+00	0.00E+00	0.00E+00	0.00E+00	0.00E+00	0.00E+00	0.00E+00	0.00E+00
3809	ALL		746579.72	4040325.67	8.47E-08	70YrCancerDerived_InhSoilI	8.47E-08	0.00E+00	0.00E+00	0.00E+00	0.00E+00	0.00E+00	0.00E+00	0.00E+00	0.00E+00	0.00E+00	0.00E+00	0.00E+00
3810	ALL		746589.72	4040325.67	8.50E-08	70YrCancerDerived_InhSoilI	8.50E-08	0.00E+00	0.00E+00	0.00E+00	0.00E+00	0.00E+00	0.00E+00	0.00E+00	0.00E+00	0.00E+00	0.00E+00	0.00E+00
3811	ALL		746599.72	4040325.67	8.52E-08	70YrCancerDerived_InhSoilI	8.52E-08	0.00E+00	0.00E+00	0.00E+00	0.00E+00	0.00E+00	0.00E+00	0.00E+00	0.00E+00	0.00E+00	0.00E+00	0.00E+00
3812	ALL		746609.72	4040325.67	8.54E-08	70YrCancerDerived_InhSoilI	8.54E-08	0.00E+00	0.00E+00	0.00E+00	0.00E+00	0.00E+00	0.00E+00	0.00E+00	0.00E+00	0.00E+00	0.00E+00	0.00E+00
3813	ALL		746619.72	4040325.67	8.57E-08	70YrCancerDerived_InhSoilI	8.57E-08	0.00E+00	0.00E+00	0.00E+00	0.00E+00	0.00E+00	0.00E+00	0.00E+00	0.00E+00	0.00E+00	0.00E+00	0.00E+00
3814	ALL		746559.72	4040335.67	8.43E-08	70YrCancerDerived_InhSoilI	8.43E-08	0.00E+00	0.00E+00	0.00E+00	0.00E+00	0.00E+00	0.00E+00	0.00E+00	0.00E+00	0.00E+00	0.00E+00	0.00E+00
3815	ALL		746569.72	4040335.67	8.47E-08	70YrCancerDerived_InhSoilI	8.47E-08	0.00E+00	0.00E+00	0.00E+00	0.00E+00	0.00E+00	0.00E+00	0.00E+00	0.00E+00	0.00E+00	0.00E+00	0.00E+00
3816	ALL		746579.72	4040335.67	8.50E-08	70YrCancerDerived_InhSoilI	8.50E-08	0.00E+00	0.00E+00	0.00E+00	0.00E+00	0.00E+00	0.00E+00	0.00E+00	0.00E+00	0.00E+00	0.00E+00	0.00E+00
3817	ALL		746589.72	4040335.67	8.52E-08	70YrCancerDerived_InhSoilI	8.52E-08	0.00E+00	0.00E+00	0.00E+00	0.00E+00	0.00E+00	0.00E+00	0.00E+00	0.00E+00	0.00E+00	0.00E+00	0.00E+00
3818	ALL		746599.72	4040335.67	8.55E-08	70YrCancerDerived_InhSoilI	8.55E-08	0.00E+00	0.00E+00	0.00E+00	0.00E+00	0.00E+00	0.00E+00	0.00E+00	0.00E+00	0.00E+00	0.00E+00	0.00E+00
3819	ALL		746609.72	4040335.67	8.57E-08	70YrCancerDerived_InhSoilI	8.57E-08	0.00E+00	0.00E+00	0.00E+00	0.00E+00	0.00E+00	0.00E+00	0.00E+00	0.00E+00	0.00E+00	0.00E+00	0.00E+00
3820	ALL		746619.72	4040335.67	8.60E-08	70YrCancerDerived_InhSoilI	8.60E-08	0.00E+00	0.00E+00	0.00E+00	0.00E+00	0.00E+00	0.00E+00	0.00E+00	0.00E+00	0.00E+00	0.00E+00	0.00E+00
3821	ALL		746559.72	4040345.67	8.46E-08	70YrCancerDerived_InhSoilI	8.46E-08	0.00E+00	0.00E+00	0.00E+00	0.00E+00	0.00E+00	0.00E+00	0.00E+00	0.00E+00	0.00E+00	0.00E+00	0.00E+00
3822	ALL		746569.72	4040345.67	8.50E-08	70YrCancerDerived_InhSoilI	8.50E-08	0.00E+00	0.00E+00	0.00E+00	0.00E+00	0.00E+00	0.00E+00	0.00E+00	0.00E+00	0.00E+00	0.00E+00	0.00E+00
3823	ALL		746579.72	4040345.67	8.53E-08	70YrCancerDerived_InhSoilI	8.53E-08	0.00E+00	0.00E+00	0.00E+00	0.00E+00	0.00E+00	0.00E+00	0.00E+00	0.00E+00	0.00E+00	0.00E+00	0.00E+00
3824	ALL		746589.72	4040345.67	8.55E-08	70YrCancerDerived_InhSoilI	8.55E-08	0.00E+00	0.00E+00	0.00E+00	0.00E+00	0.00E+00	0.00E+00	0.00E+00	0.00E+00	0.00E+00	0.00E+00	0.00E+00
3825	ALL		746599.72	4040345.67	8.57E-08	70YrCancerDerived_InhSoilI	8.57E-08	0.00E+00	0.00E+00	0.00E+00	0.00E+00	0.00E+00	0.00E+00	0.00E+00	0.00E+00	0.00E+00	0.00E+00	0.00E+00
3826	ALL		746609.72	4040345.67	8.60E-08	70YrCancerDerived_InhSoilI	8.60E-08	0.00E+00	0.00E+00	0.00E+00	0.00E+00	0.00E+00	0.00E+00	0.00E+00	0.00E+00	0.00E+00	0.00E+00	0.00E+00
3827	ALL		746619.72	4040345.67	8.63E-08	70YrCancerDerived_InhSoilI	8.63E-08	0.00E+00	0.00E+00	0.00E+00	0.00E+00	0.00E+00	0.00E+00	0.00E+00	0.00E+00	0.00E+00	0.00E+00	0.00E+00
3828	ALL		746559.72	4040355.67	8.49E-08	70YrCancerDerived_InhSoilI	8.49E-08	0.00E+00	0.00E+00	0.00E+00	0.00E+00	0.00E+00	0.00E+00	0.00E+00	0.00E+00	0.00E+00	0.00E+00	0.00E+00
3829	ALL		746569.72	4040355.67	8.53E-08	70YrCancerDerived_InhSoilI	8.53E-08	0.00E+00	0.00E+00	0.00E+00	0.00E+00	0.00E+00	0.00E+00	0.00E+00	0.00E+00	0.00E+00	0.00E+00	0.00E+00
3830	ALL		746579.72	4040355.67	8.56E-08	70YrCancerDerived_InhSoilI	8.56E-08	0.00E+00	0.00E+00	0.00E+00	0.00E+00	0.00E+00	0.00E+00	0.00E+00	0.00E+00	0.00E+00	0.00E+00	0.00E+00
3831	ALL		746589.72	4040355.67	8.58E-08	70YrCancerDerived_InhSoilI	8.58E-08	0.00E+00	0.00E+00	0.00E+00	0.00E+00	0.00E+00	0.00E+00	0.00E+00	0.00E+00	0.00E+00	0.00E+00	0.00E+00
3832	ALL		746599.72	4040355.67	8.60E-08	70YrCancerDerived_InhSoilI	8.60E-08	0.00E+00	0.00E+00	0.00E+00	0.00E+00	0.00E+00	0.00E+00	0.00E+00	0.00E+00	0.00E+00	0.00E+00	0.00E+00
3833	ALL		746609.72	4040355.67	8.63E-08	70YrCancerDerived_InhSoilI	8.63E-08	0.00E+00	0.00E+00	0.00E+00	0.00E+00	0.00E+00	0.00E+00	0.00E+00	0.00E+00	0.00E+00	0.00E+00	0.00E+00
3834	ALL		746619.72	4040355.67	8.65E-08	70YrCancerDerived_InhSoilI	8.65E-08	0.00E+00	0.00E+00	0.00E+00	0.00E+00	0.00E+00	0.00E+00	0.00E+00	0.00E+00	0.00E+00	0.00E+00	0.00E+00
3835	ALL		746554	4040469	8.71E-08	70YrCancerDerived_InhSoilI	8.71E-08	0.00E+00	0.00E+00	0.00E+00	0.00E+00	0.00E+00	0.00E+00	0.00E+00	0.00E+00	0.00E+00	0.00E+00	0.00E+00
3836	ALL	SENS	746564	4040469	8.75E-08	70YrCancerDerived_InhSoilI	8.75E-08	0.00E+00	0.00E+00	0.00E+00	0.00E+00	0.00E+00	0.00E+00	0.00E+00	0.00E+00	0.00E+00	0.00E+00	0.00E+00
3837	ALL	SENS	746574	4040469	8.78E-08	70YrCancerDerived_InhSoilI	8.78E-08	0.00E+00	0.00E+00	0.00E+00	0.00E+00	0.00E+00	0.00E+00	0.00E+00	0.00E+00	0.00E+00	0.00E+00	0.00E+00
3838	ALL	SENS	746584	4040469	8.81E-08	70YrCancerDerived_InhSoilI	8.81E-08	0.00E+00	0.00E+00	0.00E+00	0.00E+00	0.00E+00	0.00E+00	0.00E+00	0.00E+00	0.00E+00	0.00E+00	0.00E+00
3839	ALL	SENS	746594	4040469	8.84E-08	70YrCancerDerived_InhSoilI	8.84E-08	0.00E+00	0.00E+00	0.00E+00	0.00E+00	0.00E+00	0.00E+00	0.00E+00	0.00E+00	0.00E+00	0.00E+00	0.00E+00
3840	ALL	SENS	746604	4040469	8.87E-08	70YrCancerDerived_InhSoilI	8.87E-08	0.00E+00	0.00E+00	0.00E+00	0.00E+00	0.00E+00	0.00E+00	0.00E+00	0.00E+00	0.00E+00	0.00E+00	0.00E+00
3841	ALL	SENS	746614	4040469	8.89E-08	70YrCancerDerived_InhSoilI	8.89E-08	0.00E+00	0.00E+00	0.00E+00	0.00E+00	0.00E+00	0.00E+00	0.00E+00	0.00E+00	0.00E+00	0.00E+00	0.00E+00
3842	ALL	SENS	746624	4040469	8.93E-08	70YrCancerDerived_InhSoilI	8.93E-08	0.00E+00	0.00E+00	0.00E+00	0.00E+00	0.00E+00	0.00E+00	0.00E+00	0.00E+00	0.00E+00	0.00E+00	0.00E+00
3843	ALL	SENS	746634	4040469	8.96E-08	70YrCancerDerived_InhSoilI	8.96E-08	0.00E+00	0.00E+00	0.00E+00	0.00E+00	0.00E+00	0.00E+00	0.00E+00	0.00E+00	0.00E+00	0.00E+00	0.00E+00
3844	ALL	SENS	746554	4040479	8.73E-08	70YrCancerDerived_InhSoilI	8.73E-08	0.00E+00	0.00E+00	0.00E+00	0.00E+00	0.00E+00	0.00E+00	0.00E+00	0.00E+00	0.00E+00	0.00E+00	0.00E+00
3845	ALL	SENS	746564	4040479	8.77E-08	70YrCancerDerived_InhSoilI	8.77E-08	0.00E+00	0.00E+00	0.00E+00	0.00E+00	0.00E+00	0.00E+00	0.00E+00	0.00E+00	0.00E+00	0.00E+00	0.00E+00
3846	ALL	SENS	746574	4040479	8.81E-08	70YrCancerDerived_InhSoilI	8.81E-08	0.00E+00	0.00E+00	0.00E+00	0.00E+00	0.00E+00	0.00E+00	0.00E+00	0.00E+00	0.00E+00	0.00E+00	0.00E+00
3847	ALL	SENS	746584	4040479	8.84E-08	70YrCancerDerived_InhSoilI	8.84E-08	0.00E+00	0.00E+00	0.00E+00	0.00E+00	0.00E+00	0.00E+00	0.00E+00	0.00E+00	0.00E+00	0.00E+00	0.00E+00
3848	ALL	SENS	746594	4040479	8.86E-08	70YrCancerDerived_InhSoilI	8.86E-08	0.00E+00	0.00E+00	0.00E+00	0.00E+00	0.00E+00	0.00E+00	0.00E+00	0.00E+00	0.00E+00	0.00E+00	0.00E+00
3849	ALL	SENS	746604	4040479	8.89E-08	70YrCancerDerived_InhSoilI	8.89E-08	0.00E+00	0.00E+00	0.00E+00	0.00E+00	0.00E+00	0.00E+00	0.00E+00	0.00E+00	0.00E+00	0.00E+00	0.00E+00
3850	ALL	SENS	746614	4040479	8.91E-08	70YrCancerDerived_InhSoilI	8.91E-08	0.00E+00	0.00E+00	0.00E+00	0.00E+00	0.00E+00	0.00E+00	0.00E+00	0.00E+00	0.00E+00	0.00E+00	0.00E+00
3851	ALL	SENS	746624	4040479	8.95E-08	70YrCancerDerived_InhSoilI	8.95E-08	0.00E+00	0.00E+00	0.00E+00	0.00E+00	0.00E+00	0.00E+00	0.00E+00	0.00E+00	0.00E+00	0.00E+00	0.00E+00
3852	ALL	SENS	746634	4040479	8.98E-08	70YrCancerDerived_InhSoilI	8.98E-08	0.00E+00	0.00E+00	0.00E+00	0.00E+00	0.00E+00	0.00E+00	0.00E+00	0.00E+00	0.00E+00	0.00E+00	0.00E+00
3853	ALL	SENS	746554	4040489	8.74E-08	70YrCancerDerived_InhSoilI	8.74E-08	0.00E+00	0.00E+00	0.00E+00	0.00E+00	0.00E+00	0.00E+00	0.00E+00	0.00E+00	0.00E+00	0.00E+00	0.00E+00
3854	ALL	SENS	746564	4040489	8.79E-08	70YrCancerDerived_InhSoilI	8.79E-08	0.00E+00	0.00E+00	0.00E+00	0.00E+00	0.00E+00	0.00E+00	0.00E+00	0.00E+00	0.00E+00	0.00E+00	0.00E+00
3855	ALL	SENS	746574	4040489	8.83E-08	70YrCancerDerived_InhSoilI	8.83E-08	0.00E+00	0.00E+00	0.00E+00	0.00E+00	0.00E+00	0.00E+00	0.00E+00	0.00E+00	0.00E+00	0.00E+00	0.00E+00
3856	ALL	SENS	746584	4040489	8.86E-08	70YrCancerDerived_InhSoilI	8.86E-08	0.00E+00	0.00E+00	0.00E+00	0.00E+00	0.00E+00	0.00E+00	0.00E+00	0.00E+00	0.00E+00	0.00E+00	0.00E+00
3857	ALL	SENS	746594	4040489	8.89E-08	70YrCancerDerived_InhSoilI	8.89E-08	0.00E+00	0.00E+00	0.00E+00	0.00E+00	0.00E+00	0.00E+00	0.00E+00	0.00E+00	0.00E+00	0.00E+00	0.00E+00
3858	ALL	SENS	746604	4040489	8.91E-08	70YrCancerDerived_InhSoilI	8.91E-08	0.00E+00	0.00E+00	0.00E+00	0.00E+00	0.00E+00	0.00E+00	0.00E+00	0.00E+00	0.00E+00	0.00E+00	0.00E+00
3859	ALL	SENS	746614	4040489	8.93E-08	70YrCancerDerived_InhSoilI	8.93E-08	0.00E+00	0.00E+00	0.00E+00	0.00E+00	0.00E+00	0.00E+00	0.00E+00	0.00E+00	0.00E+00	0.00E+00	0.00E+00
3860	ALL	SENS	746624	4040489	8.97E-08	70YrCancerDerived_InhSoilI	8.97E-08	0.00E+00	0.00E+00	0.00E+00	0.00E+00	0.00E+00	0.00E+00	0.00E+00	0.00E+00	0.00E+00	0.00E+00	0.00E+00
3861	ALL	SENS	746634	4040489	9.00E-08	70YrCancerDerived_InhSoilI	9.00E-08	0.00E+00	0.00E+00	0.00E+00	0.00E+00	0.00E+00	0.00E+00	0.00E+00	0.00E+00	0.00E+00	0.00E+00	0.00E+00
3862	ALL	SENS	746554	4040499	8.76E-08	70YrCancerDerived_InhSoilI	8.76E-08	0.00E+00	0.00E+00	0.00E+00	0.00E+00	0.00E+00	0.00E+00	0.00E+00	0.00E+00	0.00E+00	0.00E+00	0.00E+00

3863	ALL	SENS	746564	4040499	8.81E-08	70YrCancerDerived_InhSoil[	8.81E-08	0.00E+00	0.00E+00	0.00E+00	0.00E+00	0.00E+00	0.00E+00	0.00E+00	0.00E+00	0.00E+00	0.00E+00	0.00E+00
3864	ALL	SENS	746574	4040499	8.85E-08	70YrCancerDerived_InhSoil[	8.85E-08	0.00E+00	0.00E+00	0.00E+00	0.00E+00	0.00E+00	0.00E+00	0.00E+00	0.00E+00	0.00E+00	0.00E+00	0.00E+00
3865	ALL	SENS	746584	4040499	8.88E-08	70YrCancerDerived_InhSoil[	8.88E-08	0.00E+00	0.00E+00	0.00E+00	0.00E+00	0.00E+00	0.00E+00	0.00E+00	0.00E+00	0.00E+00	0.00E+00	0.00E+00
3866	ALL	SENS	746594	4040499	8.91E-08	70YrCancerDerived_InhSoil[	8.91E-08	0.00E+00	0.00E+00	0.00E+00	0.00E+00	0.00E+00	0.00E+00	0.00E+00	0.00E+00	0.00E+00	0.00E+00	0.00E+00
3867	ALL	SENS	746604	4040499	8.93E-08	70YrCancerDerived_InhSoil[	8.93E-08	0.00E+00	0.00E+00	0.00E+00	0.00E+00	0.00E+00	0.00E+00	0.00E+00	0.00E+00	0.00E+00	0.00E+00	0.00E+00
3868	ALL	SENS	746614	4040499	8.95E-08	70YrCancerDerived_InhSoil[	8.95E-08	0.00E+00	0.00E+00	0.00E+00	0.00E+00	0.00E+00	0.00E+00	0.00E+00	0.00E+00	0.00E+00	0.00E+00	0.00E+00
3869	ALL	SENS	746624	4040499	8.99E-08	70YrCancerDerived_InhSoil[	8.99E-08	0.00E+00	0.00E+00	0.00E+00	0.00E+00	0.00E+00	0.00E+00	0.00E+00	0.00E+00	0.00E+00	0.00E+00	0.00E+00
3870	ALL	SENS	746634	4040499	9.02E-08	70YrCancerDerived_InhSoil[	9.02E-08	0.00E+00	0.00E+00	0.00E+00	0.00E+00	0.00E+00	0.00E+00	0.00E+00	0.00E+00	0.00E+00	0.00E+00	0.00E+00
3871	ALL	SENS	746554	4040509	8.78E-08	70YrCancerDerived_InhSoil[	8.78E-08	0.00E+00	0.00E+00	0.00E+00	0.00E+00	0.00E+00	0.00E+00	0.00E+00	0.00E+00	0.00E+00	0.00E+00	0.00E+00
3872	ALL	SENS	746564	4040509	8.83E-08	70YrCancerDerived_InhSoil[	8.83E-08	0.00E+00	0.00E+00	0.00E+00	0.00E+00	0.00E+00	0.00E+00	0.00E+00	0.00E+00	0.00E+00	0.00E+00	0.00E+00
3873	ALL	SENS	746574	4040509	8.87E-08	70YrCancerDerived_InhSoil[	8.87E-08	0.00E+00	0.00E+00	0.00E+00	0.00E+00	0.00E+00	0.00E+00	0.00E+00	0.00E+00	0.00E+00	0.00E+00	0.00E+00
3874	ALL	SENS	746584	4040509	8.90E-08	70YrCancerDerived_InhSoil[	8.90E-08	0.00E+00	0.00E+00	0.00E+00	0.00E+00	0.00E+00	0.00E+00	0.00E+00	0.00E+00	0.00E+00	0.00E+00	0.00E+00
3875	ALL	SENS	746594	4040509	8.92E-08	70YrCancerDerived_InhSoil[	8.92E-08	0.00E+00	0.00E+00	0.00E+00	0.00E+00	0.00E+00	0.00E+00	0.00E+00	0.00E+00	0.00E+00	0.00E+00	0.00E+00
3876	ALL	SENS	746604	4040509	8.95E-08	70YrCancerDerived_InhSoil[	8.95E-08	0.00E+00	0.00E+00	0.00E+00	0.00E+00	0.00E+00	0.00E+00	0.00E+00	0.00E+00	0.00E+00	0.00E+00	0.00E+00
3877	ALL	SENS	746614	4040509	8.98E-08	70YrCancerDerived_InhSoil[	8.98E-08	0.00E+00	0.00E+00	0.00E+00	0.00E+00	0.00E+00	0.00E+00	0.00E+00	0.00E+00	0.00E+00	0.00E+00	0.00E+00
3878	ALL	SENS	746624	4040509	9.01E-08	70YrCancerDerived_InhSoil[	9.01E-08	0.00E+00	0.00E+00	0.00E+00	0.00E+00	0.00E+00	0.00E+00	0.00E+00	0.00E+00	0.00E+00	0.00E+00	0.00E+00
3879	ALL	SENS	746634	4040509	9.04E-08	70YrCancerDerived_InhSoil[	9.04E-08	0.00E+00	0.00E+00	0.00E+00	0.00E+00	0.00E+00	0.00E+00	0.00E+00	0.00E+00	0.00E+00	0.00E+00	0.00E+00
3880	ALL	SENS	746554	4040519	8.79E-08	70YrCancerDerived_InhSoil[	8.79E-08	0.00E+00	0.00E+00	0.00E+00	0.00E+00	0.00E+00	0.00E+00	0.00E+00	0.00E+00	0.00E+00	0.00E+00	0.00E+00
3881	ALL	SENS	746564	4040519	8.85E-08	70YrCancerDerived_InhSoil[	8.85E-08	0.00E+00	0.00E+00	0.00E+00	0.00E+00	0.00E+00	0.00E+00	0.00E+00	0.00E+00	0.00E+00	0.00E+00	0.00E+00
3882	ALL	SENS	746574	4040519	8.88E-08	70YrCancerDerived_InhSoil[	8.88E-08	0.00E+00	0.00E+00	0.00E+00	0.00E+00	0.00E+00	0.00E+00	0.00E+00	0.00E+00	0.00E+00	0.00E+00	0.00E+00
3883	ALL	SENS	746584	4040519	8.91E-08	70YrCancerDerived_InhSoil[	8.91E-08	0.00E+00	0.00E+00	0.00E+00	0.00E+00	0.00E+00	0.00E+00	0.00E+00	0.00E+00	0.00E+00	0.00E+00	0.00E+00
3884	ALL	SENS	746594	4040519	8.94E-08	70YrCancerDerived_InhSoil[	8.94E-08	0.00E+00	0.00E+00	0.00E+00	0.00E+00	0.00E+00	0.00E+00	0.00E+00	0.00E+00	0.00E+00	0.00E+00	0.00E+00
3885	ALL	SENS	746604	4040519	8.97E-08	70YrCancerDerived_InhSoil[	8.97E-08	0.00E+00	0.00E+00	0.00E+00	0.00E+00	0.00E+00	0.00E+00	0.00E+00	0.00E+00	0.00E+00	0.00E+00	0.00E+00
3886	ALL	SENS	746614	4040519	9.00E-08	70YrCancerDerived_InhSoil[	9.00E-08	0.00E+00	0.00E+00	0.00E+00	0.00E+00	0.00E+00	0.00E+00	0.00E+00	0.00E+00	0.00E+00	0.00E+00	0.00E+00
3887	ALL	SENS	746624	4040519	9.03E-08	70YrCancerDerived_InhSoil[	9.03E-08	0.00E+00	0.00E+00	0.00E+00	0.00E+00	0.00E+00	0.00E+00	0.00E+00	0.00E+00	0.00E+00	0.00E+00	0.00E+00
3888	ALL	SENS	746634	4040519	9.06E-08	70YrCancerDerived_InhSoil[	9.06E-08	0.00E+00	0.00E+00	0.00E+00	0.00E+00	0.00E+00	0.00E+00	0.00E+00	0.00E+00	0.00E+00	0.00E+00	0.00E+00
3889	ALL	SENS	746491	4040326	8.26E-08	70YrCancerDerived_InhSoil[	8.26E-08	0.00E+00	0.00E+00	0.00E+00	0.00E+00	0.00E+00	0.00E+00	0.00E+00	0.00E+00	0.00E+00	0.00E+00	0.00E+00
3890	ALL	SENS	746501	4040326	8.28E-08	70YrCancerDerived_InhSoil[	8.28E-08	0.00E+00	0.00E+00	0.00E+00	0.00E+00	0.00E+00	0.00E+00	0.00E+00	0.00E+00	0.00E+00	0.00E+00	0.00E+00
3891	ALL	SENS	746511	4040326	8.30E-08	70YrCancerDerived_InhSoil[	8.30E-08	0.00E+00	0.00E+00	0.00E+00	0.00E+00	0.00E+00	0.00E+00	0.00E+00	0.00E+00	0.00E+00	0.00E+00	0.00E+00
3892	ALL	SENS	746521	4040326	8.32E-08	70YrCancerDerived_InhSoil[	8.32E-08	0.00E+00	0.00E+00	0.00E+00	0.00E+00	0.00E+00	0.00E+00	0.00E+00	0.00E+00	0.00E+00	0.00E+00	0.00E+00
3893	ALL	SENS	746531	4040326	8.34E-08	70YrCancerDerived_InhSoil[	8.34E-08	0.00E+00	0.00E+00	0.00E+00	0.00E+00	0.00E+00	0.00E+00	0.00E+00	0.00E+00	0.00E+00	0.00E+00	0.00E+00
3894	ALL	SENS	746541	4040326	8.37E-08	70YrCancerDerived_InhSoil[	8.37E-08	0.00E+00	0.00E+00	0.00E+00	0.00E+00	0.00E+00	0.00E+00	0.00E+00	0.00E+00	0.00E+00	0.00E+00	0.00E+00
3895	ALL	SENS	746491	4040336	8.28E-08	70YrCancerDerived_InhSoil[	8.28E-08	0.00E+00	0.00E+00	0.00E+00	0.00E+00	0.00E+00	0.00E+00	0.00E+00	0.00E+00	0.00E+00	0.00E+00	0.00E+00
3896	ALL	SENS	746501	4040336	8.30E-08	70YrCancerDerived_InhSoil[	8.30E-08	0.00E+00	0.00E+00	0.00E+00	0.00E+00	0.00E+00	0.00E+00	0.00E+00	0.00E+00	0.00E+00	0.00E+00	0.00E+00
3897	ALL	SENS	746511	4040336	8.33E-08	70YrCancerDerived_InhSoil[	8.33E-08	0.00E+00	0.00E+00	0.00E+00	0.00E+00	0.00E+00	0.00E+00	0.00E+00	0.00E+00	0.00E+00	0.00E+00	0.00E+00
3898	ALL	SENS	746521	4040336	8.35E-08	70YrCancerDerived_InhSoil[	8.35E-08	0.00E+00	0.00E+00	0.00E+00	0.00E+00	0.00E+00	0.00E+00	0.00E+00	0.00E+00	0.00E+00	0.00E+00	0.00E+00
3899	ALL	SENS	746531	4040336	8.37E-08	70YrCancerDerived_InhSoil[	8.37E-08	0.00E+00	0.00E+00	0.00E+00	0.00E+00	0.00E+00	0.00E+00	0.00E+00	0.00E+00	0.00E+00	0.00E+00	0.00E+00
3900	ALL	SENS	746541	4040336	8.40E-08	70YrCancerDerived_InhSoil[	8.40E-08	0.00E+00	0.00E+00	0.00E+00	0.00E+00	0.00E+00	0.00E+00	0.00E+00	0.00E+00	0.00E+00	0.00E+00	0.00E+00
3901	ALL	SENS	746491	4040346	8.31E-08	70YrCancerDerived_InhSoil[	8.31E-08	0.00E+00	0.00E+00	0.00E+00	0.00E+00	0.00E+00	0.00E+00	0.00E+00	0.00E+00	0.00E+00	0.00E+00	0.00E+00
3902	ALL	SENS	746501	4040346	8.33E-08	70YrCancerDerived_InhSoil[	8.33E-08	0.00E+00	0.00E+00	0.00E+00	0.00E+00	0.00E+00	0.00E+00	0.00E+00	0.00E+00	0.00E+00	0.00E+00	0.00E+00
3903	ALL	SENS	746511	4040346	8.35E-08	70YrCancerDerived_InhSoil[	8.35E-08	0.00E+00	0.00E+00	0.00E+00	0.00E+00	0.00E+00	0.00E+00	0.00E+00	0.00E+00	0.00E+00	0.00E+00	0.00E+00
3904	ALL	SENS	746521	4040346	8.37E-08	70YrCancerDerived_InhSoil[	8.37E-08	0.00E+00	0.00E+00	0.00E+00	0.00E+00	0.00E+00	0.00E+00	0.00E+00	0.00E+00	0.00E+00	0.00E+00	0.00E+00
3905	ALL	SENS	746531	4040346	8.40E-08	70YrCancerDerived_InhSoil[	8.40E-08	0.00E+00	0.00E+00	0.00E+00	0.00E+00	0.00E+00	0.00E+00	0.00E+00	0.00E+00	0.00E+00	0.00E+00	0.00E+00
3906	ALL	SENS	746541	4040346	8.42E-08	70YrCancerDerived_InhSoil[	8.42E-08	0.00E+00	0.00E+00	0.00E+00	0.00E+00	0.00E+00	0.00E+00	0.00E+00	0.00E+00	0.00E+00	0.00E+00	0.00E+00
3907	ALL	SENS	746491	4040356	8.33E-08	70YrCancerDerived_InhSoil[	8.33E-08	0.00E+00	0.00E+00	0.00E+00	0.00E+00	0.00E+00	0.00E+00	0.00E+00	0.00E+00	0.00E+00	0.00E+00	0.00E+00
3908	ALL	SENS	746501	4040356	8.35E-08	70YrCancerDerived_InhSoil[	8.35E-08	0.00E+00	0.00E+00	0.00E+00	0.00E+00	0.00E+00	0.00E+00	0.00E+00	0.00E+00	0.00E+00	0.00E+00	0.00E+00
3909	ALL	SENS	746511	4040356	8.38E-08	70YrCancerDerived_InhSoil[	8.38E-08	0.00E+00	0.00E+00	0.00E+00	0.00E+00	0.00E+00	0.00E+00	0.00E+00	0.00E+00	0.00E+00	0.00E+00	0.00E+00
3910	ALL	SENS	746521	4040356	8.40E-08	70YrCancerDerived_InhSoil[	8.40E-08	0.00E+00	0.00E+00	0.00E+00	0.00E+00	0.00E+00	0.00E+00	0.00E+00	0.00E+00	0.00E+00	0.00E+00	0.00E+00
3911	ALL	SENS	746531	4040356	8.42E-08	70YrCancerDerived_InhSoil[	8.42E-08	0.00E+00	0.00E+00	0.00E+00	0.00E+00	0.00E+00	0.00E+00	0.00E+00	0.00E+00	0.00E+00	0.00E+00	0.00E+00
3912	ALL	SENS	746541	4040356	8.45E-08	70YrCancerDerived_InhSoil[	8.45E-08	0.00E+00	0.00E+00	0.00E+00	0.00E+00	0.00E+00	0.00E+00	0.00E+00	0.00E+00	0.00E+00	0.00E+00	0.00E+00
3913	ALL	SENS	746491	4040366	8.36E-08	70YrCancerDerived_InhSoil[	8.36E-08	0.00E+00	0.00E+00	0.00E+00	0.00E+00	0.00E+00	0.00E+00	0.00E+00	0.00E+00	0.00E+00	0.00E+00	0.00E+00
3914	ALL	SENS	746501	4040366	8.38E-08	70YrCancerDerived_InhSoil[	8.38E-08	0.00E+00	0.00E+00	0.00E+00	0.00E+00	0.00E+00	0.00E+00	0.00E+00	0.00E+00	0.00E+00	0.00E+00	0.00E+00
3915	ALL	SENS	746511	4040366	8.40E-08	70YrCancerDerived_InhSoil[	8.40E-08	0.00E+00	0.00E+00	0.00E+00	0.00E+00	0.00E+00	0.00E+00	0.00E+00	0.00E+00	0.00E+00	0.00E+00	0.00E+00
3916	ALL	SENS	746521	4040366	8.42E-08	70YrCancerDerived_InhSoil[	8.42E-08	0.00E+00	0.00E+00	0.00E+00	0.00E+00	0.00E+00	0.00E+00	0.00E+00	0.00E+00	0.00E+00	0.00E+00	0.00E+00
3917	ALL	SENS	746531	4040366	8.45E-08	70YrCancerDerived_InhSoil[	8.45E-08	0.00E+00	0.00E+00	0.00E+00	0.00E+00	0.00E+00	0.00E+00	0.00E+00	0.00E+00	0.00E+00	0.00E+00	0.00E+00
3918	ALL	SENS	746541	4040366	8.47E-08	70YrCancerDerived_InhSoil[	8.47E-08	0.00E+00	0.00E+00	0.00E+00	0.00E+00	0.00E+00	0.00E+00	0.00E+00	0.00E+00	0.00E+00	0.00E+00	0.00E+00

3919	ALL	SENS	746491	4040376	8.38E-08	70YrCancerDerived_InhSoil[	8.38E-08	0.00E+00	0.00E+00	0.00E+00	0.00E+00	0.00E+00	0.00E+00	0.00E+00	0.00E+00	0.00E+00	0.00E+00	0.00E+00
3920	ALL	SENS	746501	4040376	8.40E-08	70YrCancerDerived_InhSoil[	8.40E-08	0.00E+00	0.00E+00	0.00E+00	0.00E+00	0.00E+00	0.00E+00	0.00E+00	0.00E+00	0.00E+00	0.00E+00	0.00E+00
3921	ALL	SENS	746511	4040376	8.42E-08	70YrCancerDerived_InhSoil[	8.42E-08	0.00E+00	0.00E+00	0.00E+00	0.00E+00	0.00E+00	0.00E+00	0.00E+00	0.00E+00	0.00E+00	0.00E+00	0.00E+00
3922	ALL	SENS	746521	4040376	8.44E-08	70YrCancerDerived_InhSoil[	8.44E-08	0.00E+00	0.00E+00	0.00E+00	0.00E+00	0.00E+00	0.00E+00	0.00E+00	0.00E+00	0.00E+00	0.00E+00	0.00E+00
3923	ALL	SENS	746531	4040376	8.47E-08	70YrCancerDerived_InhSoil[	8.47E-08	0.00E+00	0.00E+00	0.00E+00	0.00E+00	0.00E+00	0.00E+00	0.00E+00	0.00E+00	0.00E+00	0.00E+00	0.00E+00
3924	ALL	SENS	746541	4040376	8.50E-08	70YrCancerDerived_InhSoil[	8.50E-08	0.00E+00	0.00E+00	0.00E+00	0.00E+00	0.00E+00	0.00E+00	0.00E+00	0.00E+00	0.00E+00	0.00E+00	0.00E+00
3925	ALL	SENS	746491	4040386	8.40E-08	70YrCancerDerived_InhSoil[	8.40E-08	0.00E+00	0.00E+00	0.00E+00	0.00E+00	0.00E+00	0.00E+00	0.00E+00	0.00E+00	0.00E+00	0.00E+00	0.00E+00
3926	ALL	SENS	746501	4040386	8.42E-08	70YrCancerDerived_InhSoil[	8.42E-08	0.00E+00	0.00E+00	0.00E+00	0.00E+00	0.00E+00	0.00E+00	0.00E+00	0.00E+00	0.00E+00	0.00E+00	0.00E+00
3927	ALL	SENS	746511	4040386	8.45E-08	70YrCancerDerived_InhSoil[	8.45E-08	0.00E+00	0.00E+00	0.00E+00	0.00E+00	0.00E+00	0.00E+00	0.00E+00	0.00E+00	0.00E+00	0.00E+00	0.00E+00
3928	ALL	SENS	746521	4040386	8.47E-08	70YrCancerDerived_InhSoil[	8.47E-08	0.00E+00	0.00E+00	0.00E+00	0.00E+00	0.00E+00	0.00E+00	0.00E+00	0.00E+00	0.00E+00	0.00E+00	0.00E+00
3929	ALL	SENS	746531	4040386	8.50E-08	70YrCancerDerived_InhSoil[	8.50E-08	0.00E+00	0.00E+00	0.00E+00	0.00E+00	0.00E+00	0.00E+00	0.00E+00	0.00E+00	0.00E+00	0.00E+00	0.00E+00
3930	ALL	SENS	746541	4040386	8.52E-08	70YrCancerDerived_InhSoil[	8.52E-08	0.00E+00	0.00E+00	0.00E+00	0.00E+00	0.00E+00	0.00E+00	0.00E+00	0.00E+00	0.00E+00	0.00E+00	0.00E+00
3931	ALL	SENS	746491	4040396	8.42E-08	70YrCancerDerived_InhSoil[	8.42E-08	0.00E+00	0.00E+00	0.00E+00	0.00E+00	0.00E+00	0.00E+00	0.00E+00	0.00E+00	0.00E+00	0.00E+00	0.00E+00
3932	ALL	SENS	746501	4040396	8.45E-08	70YrCancerDerived_InhSoil[	8.45E-08	0.00E+00	0.00E+00	0.00E+00	0.00E+00	0.00E+00	0.00E+00	0.00E+00	0.00E+00	0.00E+00	0.00E+00	0.00E+00
3933	ALL	SENS	746511	4040396	8.47E-08	70YrCancerDerived_InhSoil[	8.47E-08	0.00E+00	0.00E+00	0.00E+00	0.00E+00	0.00E+00	0.00E+00	0.00E+00	0.00E+00	0.00E+00	0.00E+00	0.00E+00
3934	ALL	SENS	746521	4040396	8.49E-08	70YrCancerDerived_InhSoil[	8.49E-08	0.00E+00	0.00E+00	0.00E+00	0.00E+00	0.00E+00	0.00E+00	0.00E+00	0.00E+00	0.00E+00	0.00E+00	0.00E+00
3935	ALL	SENS	746531	4040396	8.52E-08	70YrCancerDerived_InhSoil[	8.52E-08	0.00E+00	0.00E+00	0.00E+00	0.00E+00	0.00E+00	0.00E+00	0.00E+00	0.00E+00	0.00E+00	0.00E+00	0.00E+00
3936	ALL	SENS	746541	4040396	8.54E-08	70YrCancerDerived_InhSoil[	8.54E-08	0.00E+00	0.00E+00	0.00E+00	0.00E+00	0.00E+00	0.00E+00	0.00E+00	0.00E+00	0.00E+00	0.00E+00	0.00E+00
3937	ALL	SENS	746491	4040406	8.44E-08	70YrCancerDerived_InhSoil[	8.44E-08	0.00E+00	0.00E+00	0.00E+00	0.00E+00	0.00E+00	0.00E+00	0.00E+00	0.00E+00	0.00E+00	0.00E+00	0.00E+00
3938	ALL	SENS	746501	4040406	8.47E-08	70YrCancerDerived_InhSoil[	8.47E-08	0.00E+00	0.00E+00	0.00E+00	0.00E+00	0.00E+00	0.00E+00	0.00E+00	0.00E+00	0.00E+00	0.00E+00	0.00E+00
3939	ALL	SENS	746511	4040406	8.50E-08	70YrCancerDerived_InhSoil[	8.50E-08	0.00E+00	0.00E+00	0.00E+00	0.00E+00	0.00E+00	0.00E+00	0.00E+00	0.00E+00	0.00E+00	0.00E+00	0.00E+00
3940	ALL	SENS	746521	4040406	8.52E-08	70YrCancerDerived_InhSoil[	8.52E-08	0.00E+00	0.00E+00	0.00E+00	0.00E+00	0.00E+00	0.00E+00	0.00E+00	0.00E+00	0.00E+00	0.00E+00	0.00E+00
3941	ALL	SENS	746531	4040406	8.55E-08	70YrCancerDerived_InhSoil[	8.55E-08	0.00E+00	0.00E+00	0.00E+00	0.00E+00	0.00E+00	0.00E+00	0.00E+00	0.00E+00	0.00E+00	0.00E+00	0.00E+00
3942	ALL	SENS	746541	4040406	8.57E-08	70YrCancerDerived_InhSoil[	8.57E-08	0.00E+00	0.00E+00	0.00E+00	0.00E+00	0.00E+00	0.00E+00	0.00E+00	0.00E+00	0.00E+00	0.00E+00	0.00E+00
3943	ALL	SENS	746491	4040416	8.46E-08	70YrCancerDerived_InhSoil[	8.46E-08	0.00E+00	0.00E+00	0.00E+00	0.00E+00	0.00E+00	0.00E+00	0.00E+00	0.00E+00	0.00E+00	0.00E+00	0.00E+00
3944	ALL	SENS	746501	4040416	8.49E-08	70YrCancerDerived_InhSoil[	8.49E-08	0.00E+00	0.00E+00	0.00E+00	0.00E+00	0.00E+00	0.00E+00	0.00E+00	0.00E+00	0.00E+00	0.00E+00	0.00E+00
3945	ALL	SENS	746511	4040416	8.52E-08	70YrCancerDerived_InhSoil[	8.52E-08	0.00E+00	0.00E+00	0.00E+00	0.00E+00	0.00E+00	0.00E+00	0.00E+00	0.00E+00	0.00E+00	0.00E+00	0.00E+00
3946	ALL	SENS	746521	4040416	8.55E-08	70YrCancerDerived_InhSoil[	8.55E-08	0.00E+00	0.00E+00	0.00E+00	0.00E+00	0.00E+00	0.00E+00	0.00E+00	0.00E+00	0.00E+00	0.00E+00	0.00E+00
3947	ALL	SENS	746531	4040416	8.57E-08	70YrCancerDerived_InhSoil[	8.57E-08	0.00E+00	0.00E+00	0.00E+00	0.00E+00	0.00E+00	0.00E+00	0.00E+00	0.00E+00	0.00E+00	0.00E+00	0.00E+00
3948	ALL	SENS	746541	4040416	8.59E-08	70YrCancerDerived_InhSoil[	8.59E-08	0.00E+00	0.00E+00	0.00E+00	0.00E+00	0.00E+00	0.00E+00	0.00E+00	0.00E+00	0.00E+00	0.00E+00	0.00E+00
3949	ALL	SENS	746491	4040426	8.48E-08	70YrCancerDerived_InhSoil[	8.48E-08	0.00E+00	0.00E+00	0.00E+00	0.00E+00	0.00E+00	0.00E+00	0.00E+00	0.00E+00	0.00E+00	0.00E+00	0.00E+00
3950	ALL	SENS	746501	4040426	8.50E-08	70YrCancerDerived_InhSoil[	8.50E-08	0.00E+00	0.00E+00	0.00E+00	0.00E+00	0.00E+00	0.00E+00	0.00E+00	0.00E+00	0.00E+00	0.00E+00	0.00E+00
3951	ALL	SENS	746511	4040426	8.53E-08	70YrCancerDerived_InhSoil[	8.53E-08	0.00E+00	0.00E+00	0.00E+00	0.00E+00	0.00E+00	0.00E+00	0.00E+00	0.00E+00	0.00E+00	0.00E+00	0.00E+00
3952	ALL	SENS	746521	4040426	8.56E-08	70YrCancerDerived_InhSoil[	8.56E-08	0.00E+00	0.00E+00	0.00E+00	0.00E+00	0.00E+00	0.00E+00	0.00E+00	0.00E+00	0.00E+00	0.00E+00	0.00E+00
3953	ALL	SENS	746531	4040426	8.59E-08	70YrCancerDerived_InhSoil[	8.59E-08	0.00E+00	0.00E+00	0.00E+00	0.00E+00	0.00E+00	0.00E+00	0.00E+00	0.00E+00	0.00E+00	0.00E+00	0.00E+00
3954	ALL	SENS	746541	4040426	8.60E-08	70YrCancerDerived_InhSoil[	8.60E-08	0.00E+00	0.00E+00	0.00E+00	0.00E+00	0.00E+00	0.00E+00	0.00E+00	0.00E+00	0.00E+00	0.00E+00	0.00E+00
3955	ALL	SENS	746491	4040436	8.50E-08	70YrCancerDerived_InhSoil[	8.50E-08	0.00E+00	0.00E+00	0.00E+00	0.00E+00	0.00E+00	0.00E+00	0.00E+00	0.00E+00	0.00E+00	0.00E+00	0.00E+00
3956	ALL	SENS	746501	4040436	8.52E-08	70YrCancerDerived_InhSoil[	8.52E-08	0.00E+00	0.00E+00	0.00E+00	0.00E+00	0.00E+00	0.00E+00	0.00E+00	0.00E+00	0.00E+00	0.00E+00	0.00E+00
3957	ALL	SENS	746511	4040436	8.55E-08	70YrCancerDerived_InhSoil[	8.55E-08	0.00E+00	0.00E+00	0.00E+00	0.00E+00	0.00E+00	0.00E+00	0.00E+00	0.00E+00	0.00E+00	0.00E+00	0.00E+00
3958	ALL	SENS	746521	4040436	8.57E-08	70YrCancerDerived_InhSoil[	8.57E-08	0.00E+00	0.00E+00	0.00E+00	0.00E+00	0.00E+00	0.00E+00	0.00E+00	0.00E+00	0.00E+00	0.00E+00	0.00E+00
3959	ALL	SENS	746531	4040436	8.60E-08	70YrCancerDerived_InhSoil[	8.60E-08	0.00E+00	0.00E+00	0.00E+00	0.00E+00	0.00E+00	0.00E+00	0.00E+00	0.00E+00	0.00E+00	0.00E+00	0.00E+00
3960	ALL	SENS	746541	4040436	8.62E-08	70YrCancerDerived_InhSoil[	8.62E-08	0.00E+00	0.00E+00	0.00E+00	0.00E+00	0.00E+00	0.00E+00	0.00E+00	0.00E+00	0.00E+00	0.00E+00	0.00E+00
3961	ALL	SENS	746491	4040446	8.52E-08	70YrCancerDerived_InhSoil[	8.52E-08	0.00E+00	0.00E+00	0.00E+00	0.00E+00	0.00E+00	0.00E+00	0.00E+00	0.00E+00	0.00E+00	0.00E+00	0.00E+00
3962	ALL	SENS	746501	4040446	8.54E-08	70YrCancerDerived_InhSoil[	8.54E-08	0.00E+00	0.00E+00	0.00E+00	0.00E+00	0.00E+00	0.00E+00	0.00E+00	0.00E+00	0.00E+00	0.00E+00	0.00E+00
3963	ALL	SENS	746511	4040446	8.56E-08	70YrCancerDerived_InhSoil[	8.56E-08	0.00E+00	0.00E+00	0.00E+00	0.00E+00	0.00E+00	0.00E+00	0.00E+00	0.00E+00	0.00E+00	0.00E+00	0.00E+00
3964	ALL	SENS	746521	4040446	8.58E-08	70YrCancerDerived_InhSoil[	8.58E-08	0.00E+00	0.00E+00	0.00E+00	0.00E+00	0.00E+00	0.00E+00	0.00E+00	0.00E+00	0.00E+00	0.00E+00	0.00E+00
3965	ALL	SENS	746531	4040446	8.61E-08	70YrCancerDerived_InhSoil[	8.61E-08	0.00E+00	0.00E+00	0.00E+00	0.00E+00	0.00E+00	0.00E+00	0.00E+00	0.00E+00	0.00E+00	0.00E+00	0.00E+00
3966	ALL	SENS	746541	4040446	8.64E-08	70YrCancerDerived_InhSoil[	8.64E-08	0.00E+00	0.00E+00	0.00E+00	0.00E+00	0.00E+00	0.00E+00	0.00E+00	0.00E+00	0.00E+00	0.00E+00	0.00E+00
3967	ALL	SENS	746491	4040456	8.53E-08	70YrCancerDerived_InhSoil[	8.53E-08	0.00E+00	0.00E+00	0.00E+00	0.00E+00	0.00E+00	0.00E+00	0.00E+00	0.00E+00	0.00E+00	0.00E+00	0.00E+00
3968	ALL	SENS	746501	4040456	8.56E-08	70YrCancerDerived_InhSoil[	8.56E-08	0.00E+00	0.00E+00	0.00E+00	0.00E+00	0.00E+00	0.00E+00	0.00E+00	0.00E+00	0.00E+00	0.00E+00	0.00E+00
3969	ALL	SENS	746511	4040456	8.58E-08	70YrCancerDerived_InhSoil[	8.58E-08	0.00E+00	0.00E+00	0.00E+00	0.00E+00	0.00E+00	0.00E+00	0.00E+00	0.00E+00	0.00E+00	0.00E+00	0.00E+00
3970	ALL	SENS	746521	4040456	8.60E-08	70YrCancerDerived_InhSoil[	8.60E-08	0.00E+00	0.00E+00	0.00E+00	0.00E+00	0.00E+00	0.00E+00	0.00E+00	0.00E+00	0.00E+00	0.00E+00	0.00E+00
3971	ALL	SENS	746531	4040456	8.64E-08	70YrCancerDerived_InhSoil[	8.64E-08	0.00E+00	0.00E+00	0.00E+00	0.00E+00	0.00E+00	0.00E+00	0.00E+00	0.00E+00	0.00E+00	0.00E+00	0.00E+00
3972	ALL	SENS	746541	4040456	8.66E-08	70YrCancerDerived_InhSoil[	8.66E-08	0.00E+00	0.00E+00	0.00E+00	0.00E+00	0.00E+00	0.00E+00	0.00E+00	0.00E+00	0.00E+00	0.00E+00	0.00E+00
3973	ALL	SENS	746491	4040466	8.55E-08	70YrCancerDerived_InhSoil[	8.55E-08	0.00E+00	0.00E+00	0.00E+00	0.00E+00	0.00E+00	0.00E+00	0.00E+00	0.00E+00	0.00E+00	0.00E+00	0.00E+00
3974	ALL	SENS	746501	4040466	8.57E-08	70YrCancerDerived_InhSoil[	8.57E-08	0.00E+00	0.00E+00	0.00E+00	0.00E+00	0.00E+00	0.00E+00	0.00E+00	0.00E+00	0.00E+00	0.00E+00	0.00E+00

3975	ALL	SENS	746511	4040466	8.60E-08	70YrCancerDerived_InhSoil[	8.60E-08	0.00E+00	0.00E+00	0.00E+00	0.00E+00	0.00E+00	0.00E+00	0.00E+00	0.00E+00	0.00E+00	0.00E+00	0.00E+00
3976	ALL	SENS	746521	4040466	8.63E-08	70YrCancerDerived_InhSoil[	8.63E-08	0.00E+00	0.00E+00	0.00E+00	0.00E+00	0.00E+00	0.00E+00	0.00E+00	0.00E+00	0.00E+00	0.00E+00	0.00E+00
3977	ALL	SENS	746531	4040466	8.66E-08	70YrCancerDerived_InhSoil[	8.66E-08	0.00E+00	0.00E+00	0.00E+00	0.00E+00	0.00E+00	0.00E+00	0.00E+00	0.00E+00	0.00E+00	0.00E+00	0.00E+00
3978	ALL	SENS	746541	4040466	8.68E-08	70YrCancerDerived_InhSoil[	8.68E-08	0.00E+00	0.00E+00	0.00E+00	0.00E+00	0.00E+00	0.00E+00	0.00E+00	0.00E+00	0.00E+00	0.00E+00	0.00E+00
3979	ALL	SENS	746491	4040476	8.56E-08	70YrCancerDerived_InhSoil[	8.56E-08	0.00E+00	0.00E+00	0.00E+00	0.00E+00	0.00E+00	0.00E+00	0.00E+00	0.00E+00	0.00E+00	0.00E+00	0.00E+00
3980	ALL	SENS	746501	4040476	8.59E-08	70YrCancerDerived_InhSoil[	8.59E-08	0.00E+00	0.00E+00	0.00E+00	0.00E+00	0.00E+00	0.00E+00	0.00E+00	0.00E+00	0.00E+00	0.00E+00	0.00E+00
3981	ALL	SENS	746511	4040476	8.62E-08	70YrCancerDerived_InhSoil[	8.62E-08	0.00E+00	0.00E+00	0.00E+00	0.00E+00	0.00E+00	0.00E+00	0.00E+00	0.00E+00	0.00E+00	0.00E+00	0.00E+00
3982	ALL	SENS	746521	4040476	8.65E-08	70YrCancerDerived_InhSoil[	8.65E-08	0.00E+00	0.00E+00	0.00E+00	0.00E+00	0.00E+00	0.00E+00	0.00E+00	0.00E+00	0.00E+00	0.00E+00	0.00E+00
3983	ALL	SENS	746531	4040476	8.68E-08	70YrCancerDerived_InhSoil[	8.68E-08	0.00E+00	0.00E+00	0.00E+00	0.00E+00	0.00E+00	0.00E+00	0.00E+00	0.00E+00	0.00E+00	0.00E+00	0.00E+00
3984	ALL	SENS	746541	4040476	8.70E-08	70YrCancerDerived_InhSoil[	8.70E-08	0.00E+00	0.00E+00	0.00E+00	0.00E+00	0.00E+00	0.00E+00	0.00E+00	0.00E+00	0.00E+00	0.00E+00	0.00E+00
3985	ALL	SENS	746491	4040486	8.58E-08	70YrCancerDerived_InhSoil[	8.58E-08	0.00E+00	0.00E+00	0.00E+00	0.00E+00	0.00E+00	0.00E+00	0.00E+00	0.00E+00	0.00E+00	0.00E+00	0.00E+00
3986	ALL	SENS	746501	4040486	8.60E-08	70YrCancerDerived_InhSoil[	8.60E-08	0.00E+00	0.00E+00	0.00E+00	0.00E+00	0.00E+00	0.00E+00	0.00E+00	0.00E+00	0.00E+00	0.00E+00	0.00E+00
3987	ALL	SENS	746511	4040486	8.63E-08	70YrCancerDerived_InhSoil[	8.63E-08	0.00E+00	0.00E+00	0.00E+00	0.00E+00	0.00E+00	0.00E+00	0.00E+00	0.00E+00	0.00E+00	0.00E+00	0.00E+00
3988	ALL	SENS	746521	4040486	8.66E-08	70YrCancerDerived_InhSoil[	8.66E-08	0.00E+00	0.00E+00	0.00E+00	0.00E+00	0.00E+00	0.00E+00	0.00E+00	0.00E+00	0.00E+00	0.00E+00	0.00E+00
3989	ALL	SENS	746531	4040486	8.69E-08	70YrCancerDerived_InhSoil[	8.69E-08	0.00E+00	0.00E+00	0.00E+00	0.00E+00	0.00E+00	0.00E+00	0.00E+00	0.00E+00	0.00E+00	0.00E+00	0.00E+00
3990	ALL	SENS	746541	4040486	8.71E-08	70YrCancerDerived_InhSoil[	8.71E-08	0.00E+00	0.00E+00	0.00E+00	0.00E+00	0.00E+00	0.00E+00	0.00E+00	0.00E+00	0.00E+00	0.00E+00	0.00E+00
3991	ALL	SENS	746491	4040496	8.59E-08	70YrCancerDerived_InhSoil[	8.59E-08	0.00E+00	0.00E+00	0.00E+00	0.00E+00	0.00E+00	0.00E+00	0.00E+00	0.00E+00	0.00E+00	0.00E+00	0.00E+00
3992	ALL	SENS	746501	4040496	8.62E-08	70YrCancerDerived_InhSoil[	8.62E-08	0.00E+00	0.00E+00	0.00E+00	0.00E+00	0.00E+00	0.00E+00	0.00E+00	0.00E+00	0.00E+00	0.00E+00	0.00E+00
3993	ALL	SENS	746511	4040496	8.65E-08	70YrCancerDerived_InhSoil[	8.65E-08	0.00E+00	0.00E+00	0.00E+00	0.00E+00	0.00E+00	0.00E+00	0.00E+00	0.00E+00	0.00E+00	0.00E+00	0.00E+00
3994	ALL	SENS	746521	4040496	8.67E-08	70YrCancerDerived_InhSoil[	8.67E-08	0.00E+00	0.00E+00	0.00E+00	0.00E+00	0.00E+00	0.00E+00	0.00E+00	0.00E+00	0.00E+00	0.00E+00	0.00E+00
3995	ALL	SENS	746531	4040496	8.70E-08	70YrCancerDerived_InhSoil[	8.70E-08	0.00E+00	0.00E+00	0.00E+00	0.00E+00	0.00E+00	0.00E+00	0.00E+00	0.00E+00	0.00E+00	0.00E+00	0.00E+00
3996	ALL	SENS	746541	4040496	8.73E-08	70YrCancerDerived_InhSoil[	8.73E-08	0.00E+00	0.00E+00	0.00E+00	0.00E+00	0.00E+00	0.00E+00	0.00E+00	0.00E+00	0.00E+00	0.00E+00	0.00E+00
3997	ALL	SENS	746491	4040506	8.61E-08	70YrCancerDerived_InhSoil[	8.61E-08	0.00E+00	0.00E+00	0.00E+00	0.00E+00	0.00E+00	0.00E+00	0.00E+00	0.00E+00	0.00E+00	0.00E+00	0.00E+00
3998	ALL	SENS	746501	4040506	8.64E-08	70YrCancerDerived_InhSoil[	8.64E-08	0.00E+00	0.00E+00	0.00E+00	0.00E+00	0.00E+00	0.00E+00	0.00E+00	0.00E+00	0.00E+00	0.00E+00	0.00E+00
3999	ALL	SENS	746511	4040506	8.66E-08	70YrCancerDerived_InhSoil[	8.66E-08	0.00E+00	0.00E+00	0.00E+00	0.00E+00	0.00E+00	0.00E+00	0.00E+00	0.00E+00	0.00E+00	0.00E+00	0.00E+00
4000	ALL	SENS	746521	4040506	8.69E-08	70YrCancerDerived_InhSoil[	8.69E-08	0.00E+00	0.00E+00	0.00E+00	0.00E+00	0.00E+00	0.00E+00	0.00E+00	0.00E+00	0.00E+00	0.00E+00	0.00E+00
4001	ALL		746531	4040506	8.72E-08	70YrCancerDerived_InhSoil[	8.72E-08	0.00E+00	0.00E+00	0.00E+00	0.00E+00	0.00E+00	0.00E+00	0.00E+00	0.00E+00	0.00E+00	0.00E+00	0.00E+00
4002	ALL		746541	4040506	8.74E-08	70YrCancerDerived_InhSoil[	8.74E-08	0.00E+00	0.00E+00	0.00E+00	0.00E+00	0.00E+00	0.00E+00	0.00E+00	0.00E+00	0.00E+00	0.00E+00	0.00E+00
4003	ALL		746491	4040516	8.63E-08	70YrCancerDerived_InhSoil[	8.63E-08	0.00E+00	0.00E+00	0.00E+00	0.00E+00	0.00E+00	0.00E+00	0.00E+00	0.00E+00	0.00E+00	0.00E+00	0.00E+00
4004	ALL		746501	4040516	8.65E-08	70YrCancerDerived_InhSoil[	8.65E-08	0.00E+00	0.00E+00	0.00E+00	0.00E+00	0.00E+00	0.00E+00	0.00E+00	0.00E+00	0.00E+00	0.00E+00	0.00E+00
4005	ALL		746511	4040516	8.68E-08	70YrCancerDerived_InhSoil[	8.68E-08	0.00E+00	0.00E+00	0.00E+00	0.00E+00	0.00E+00	0.00E+00	0.00E+00	0.00E+00	0.00E+00	0.00E+00	0.00E+00
4006	ALL		746521	4040516	8.70E-08	70YrCancerDerived_InhSoil[	8.70E-08	0.00E+00	0.00E+00	0.00E+00	0.00E+00	0.00E+00	0.00E+00	0.00E+00	0.00E+00	0.00E+00	0.00E+00	0.00E+00
4007	ALL		746531	4040516	8.73E-08	70YrCancerDerived_InhSoil[	8.73E-08	0.00E+00	0.00E+00	0.00E+00	0.00E+00	0.00E+00	0.00E+00	0.00E+00	0.00E+00	0.00E+00	0.00E+00	0.00E+00
4008	ALL		746541	4040516	8.76E-08	70YrCancerDerived_InhSoil[	8.76E-08	0.00E+00	0.00E+00	0.00E+00	0.00E+00	0.00E+00	0.00E+00	0.00E+00	0.00E+00	0.00E+00	0.00E+00	0.00E+00
4009	ALL		746491	4040526	8.64E-08	70YrCancerDerived_InhSoil[	8.64E-08	0.00E+00	0.00E+00	0.00E+00	0.00E+00	0.00E+00	0.00E+00	0.00E+00	0.00E+00	0.00E+00	0.00E+00	0.00E+00
4010	ALL		746501	4040526	8.67E-08	70YrCancerDerived_InhSoil[	8.67E-08	0.00E+00	0.00E+00	0.00E+00	0.00E+00	0.00E+00	0.00E+00	0.00E+00	0.00E+00	0.00E+00	0.00E+00	0.00E+00
4011	ALL		746511	4040526	8.69E-08	70YrCancerDerived_InhSoil[	8.69E-08	0.00E+00	0.00E+00	0.00E+00	0.00E+00	0.00E+00	0.00E+00	0.00E+00	0.00E+00	0.00E+00	0.00E+00	0.00E+00
4012	ALL		746521	4040526	8.72E-08	70YrCancerDerived_InhSoil[	8.72E-08	0.00E+00	0.00E+00	0.00E+00	0.00E+00	0.00E+00	0.00E+00	0.00E+00	0.00E+00	0.00E+00	0.00E+00	0.00E+00
4013	ALL		746531	4040526	8.75E-08	70YrCancerDerived_InhSoil[	8.75E-08	0.00E+00	0.00E+00	0.00E+00	0.00E+00	0.00E+00	0.00E+00	0.00E+00	0.00E+00	0.00E+00	0.00E+00	0.00E+00
4014	ALL		746541	4040526	8.77E-08	70YrCancerDerived_InhSoil[	8.77E-08	0.00E+00	0.00E+00	0.00E+00	0.00E+00	0.00E+00	0.00E+00	0.00E+00	0.00E+00	0.00E+00	0.00E+00	0.00E+00
4015	ALL		746491	4040536	8.66E-08	70YrCancerDerived_InhSoil[	8.66E-08	0.00E+00	0.00E+00	0.00E+00	0.00E+00	0.00E+00	0.00E+00	0.00E+00	0.00E+00	0.00E+00	0.00E+00	0.00E+00
4016	ALL		746501	4040536	8.68E-08	70YrCancerDerived_InhSoil[	8.68E-08	0.00E+00	0.00E+00	0.00E+00	0.00E+00	0.00E+00	0.00E+00	0.00E+00	0.00E+00	0.00E+00	0.00E+00	0.00E+00
4017	ALL		746511	4040536	8.71E-08	70YrCancerDerived_InhSoil[	8.71E-08	0.00E+00	0.00E+00	0.00E+00	0.00E+00	0.00E+00	0.00E+00	0.00E+00	0.00E+00	0.00E+00	0.00E+00	0.00E+00
4018	ALL		746521	4040536	8.74E-08	70YrCancerDerived_InhSoil[	8.74E-08	0.00E+00	0.00E+00	0.00E+00	0.00E+00	0.00E+00	0.00E+00	0.00E+00	0.00E+00	0.00E+00	0.00E+00	0.00E+00
4019	ALL		746531	4040536	8.77E-08	70YrCancerDerived_InhSoil[	8.77E-08	0.00E+00	0.00E+00	0.00E+00	0.00E+00	0.00E+00	0.00E+00	0.00E+00	0.00E+00	0.00E+00	0.00E+00	0.00E+00
4020	ALL		746541	4040536	8.79E-08	70YrCancerDerived_InhSoil[	8.79E-08	0.00E+00	0.00E+00	0.00E+00	0.00E+00	0.00E+00	0.00E+00	0.00E+00	0.00E+00	0.00E+00	0.00E+00	0.00E+00
4021	ALL		746491	4040546	8.67E-08	70YrCancerDerived_InhSoil[	8.67E-08	0.00E+00	0.00E+00	0.00E+00	0.00E+00	0.00E+00	0.00E+00	0.00E+00	0.00E+00	0.00E+00	0.00E+00	0.00E+00
4022	ALL		746501	4040546	8.70E-08	70YrCancerDerived_InhSoil[	8.70E-08	0.00E+00	0.00E+00	0.00E+00	0.00E+00	0.00E+00	0.00E+00	0.00E+00	0.00E+00	0.00E+00	0.00E+00	0.00E+00
4023	ALL		746511	4040546	8.72E-08	70YrCancerDerived_InhSoil[	8.72E-08	0.00E+00	0.00E+00	0.00E+00	0.00E+00	0.00E+00	0.00E+00	0.00E+00	0.00E+00	0.00E+00	0.00E+00	0.00E+00
4024	ALL		746521	4040546	8.75E-08	70YrCancerDerived_InhSoil[	8.75E-08	0.00E+00	0.00E+00	0.00E+00	0.00E+00	0.00E+00	0.00E+00	0.00E+00	0.00E+00	0.00E+00	0.00E+00	0.00E+00
4025	ALL		746531	4040546	8.78E-08	70YrCancerDerived_InhSoil[	8.78E-08	0.00E+00	0.00E+00	0.00E+00	0.00E+00	0.00E+00	0.00E+00	0.00E+00	0.00E+00	0.00E+00	0.00E+00	0.00E+00
4026	ALL		746541	4040546	8.81E-08	70YrCancerDerived_InhSoil[	8.81E-08	0.00E+00	0.00E+00	0.00E+00	0.00E+00	0.00E+00	0.00E+00	0.00E+00	0.00E+00	0.00E+00	0.00E+00	0.00E+00
4027	ALL		746491	4040556	8.68E-08	70YrCancerDerived_InhSoil[	8.68E-08	0.00E+00	0.00E+00	0.00E+00	0.00E+00	0.00E+00	0.00E+00	0.00E+00	0.00E+00	0.00E+00	0.00E+00	0.00E+00
4028	ALL		746501	4040556	8.71E-08	70YrCancerDerived_InhSoil[	8.71E-08	0.00E+00	0.00E+00	0.00E+00	0.00E+00	0.00E+00	0.00E+00	0.00E+00	0.00E+00	0.00E+00	0.00E+00	0.00E+00
4029	ALL		746511	4040556	8.74E-08	70YrCancerDerived_InhSoil[	8.74E-08	0.00E+00	0.00E+00	0.00E+00	0.00E+00	0.00E+00	0.00E+00	0.00E+00	0.00E+00	0.00E+00	0.00E+00	0.00E+00
4030	ALL		746521	4040556	8.77E-08	70YrCancerDerived_InhSoil[	8.77E-08	0.00E+00	0.00E+00	0.00E+00	0.00E+00	0.00E+00	0.00E+00	0.00E+00	0.00E+00	0.00E+00	0.00E+00	0.00E+00

4031	ALL	746531	4040556	8.80E-08	70YrCancerDerived_InhSoil[	8.80E-08	0.00E+00	0.00E+00	0.00E+00	0.00E+00	0.00E+00	0.00E+00	0.00E+00	0.00E+00	0.00E+00	0.00E+00	0.00E+00
4032	ALL	746541	4040556	8.82E-08	70YrCancerDerived_InhSoil[	8.82E-08	0.00E+00	0.00E+00	0.00E+00	0.00E+00	0.00E+00	0.00E+00	0.00E+00	0.00E+00	0.00E+00	0.00E+00	0.00E+00
4033	ALL	746491	4040566	8.70E-08	70YrCancerDerived_InhSoil[	8.70E-08	0.00E+00	0.00E+00	0.00E+00	0.00E+00	0.00E+00	0.00E+00	0.00E+00	0.00E+00	0.00E+00	0.00E+00	0.00E+00
4034	ALL	746501	4040566	8.73E-08	70YrCancerDerived_InhSoil[	8.73E-08	0.00E+00	0.00E+00	0.00E+00	0.00E+00	0.00E+00	0.00E+00	0.00E+00	0.00E+00	0.00E+00	0.00E+00	0.00E+00
4035	ALL	746511	4040566	8.76E-08	70YrCancerDerived_InhSoil[	8.76E-08	0.00E+00	0.00E+00	0.00E+00	0.00E+00	0.00E+00	0.00E+00	0.00E+00	0.00E+00	0.00E+00	0.00E+00	0.00E+00
4036	ALL	746521	4040566	8.79E-08	70YrCancerDerived_InhSoil[	8.79E-08	0.00E+00	0.00E+00	0.00E+00	0.00E+00	0.00E+00	0.00E+00	0.00E+00	0.00E+00	0.00E+00	0.00E+00	0.00E+00
4037	ALL	746531	4040566	8.82E-08	70YrCancerDerived_InhSoil[	8.82E-08	0.00E+00	0.00E+00	0.00E+00	0.00E+00	0.00E+00	0.00E+00	0.00E+00	0.00E+00	0.00E+00	0.00E+00	0.00E+00
4038	ALL	746541	4040566	8.84E-08	70YrCancerDerived_InhSoil[	8.84E-08	0.00E+00	0.00E+00	0.00E+00	0.00E+00	0.00E+00	0.00E+00	0.00E+00	0.00E+00	0.00E+00	0.00E+00	0.00E+00
4039	ALL	746548	4041125	1.12E-07	70YrCancerDerived_InhSoil[	1.12E-07	0.00E+00	0.00E+00	0.00E+00	0.00E+00	0.00E+00	0.00E+00	0.00E+00	0.00E+00	0.00E+00	0.00E+00	0.00E+00
4040	ALL	746573	4041125	1.14E-07	70YrCancerDerived_InhSoil[	1.14E-07	0.00E+00	0.00E+00	0.00E+00	0.00E+00	0.00E+00	0.00E+00	0.00E+00	0.00E+00	0.00E+00	0.00E+00	0.00E+00
4041	ALL	746598	4041125	1.15E-07	70YrCancerDerived_InhSoil[	1.15E-07	0.00E+00	0.00E+00	0.00E+00	0.00E+00	0.00E+00	0.00E+00	0.00E+00	0.00E+00	0.00E+00	0.00E+00	0.00E+00
4042	ALL	746623	4041125	1.17E-07	70YrCancerDerived_InhSoil[	1.17E-07	0.00E+00	0.00E+00	0.00E+00	0.00E+00	0.00E+00	0.00E+00	0.00E+00	0.00E+00	0.00E+00	0.00E+00	0.00E+00
4043	ALL	746648	4041125	1.19E-07	70YrCancerDerived_InhSoil[	1.19E-07	0.00E+00	0.00E+00	0.00E+00	0.00E+00	0.00E+00	0.00E+00	0.00E+00	0.00E+00	0.00E+00	0.00E+00	0.00E+00
4044	ALL	746673	4041125	1.21E-07	70YrCancerDerived_InhSoil[	1.21E-07	0.00E+00	0.00E+00	0.00E+00	0.00E+00	0.00E+00	0.00E+00	0.00E+00	0.00E+00	0.00E+00	0.00E+00	0.00E+00
4045	ALL	746698	4041125	1.23E-07	70YrCancerDerived_InhSoil[	1.23E-07	0.00E+00	0.00E+00	0.00E+00	0.00E+00	0.00E+00	0.00E+00	0.00E+00	0.00E+00	0.00E+00	0.00E+00	0.00E+00
4046	ALL	746723	4041125	1.25E-07	70YrCancerDerived_InhSoil[	1.25E-07	0.00E+00	0.00E+00	0.00E+00	0.00E+00	0.00E+00	0.00E+00	0.00E+00	0.00E+00	0.00E+00	0.00E+00	0.00E+00
4047	ALL	746548	4041150	1.13E-07	70YrCancerDerived_InhSoil[	1.13E-07	0.00E+00	0.00E+00	0.00E+00	0.00E+00	0.00E+00	0.00E+00	0.00E+00	0.00E+00	0.00E+00	0.00E+00	0.00E+00
4048	ALL	746573	4041150	1.15E-07	70YrCancerDerived_InhSoil[	1.15E-07	0.00E+00	0.00E+00	0.00E+00	0.00E+00	0.00E+00	0.00E+00	0.00E+00	0.00E+00	0.00E+00	0.00E+00	0.00E+00
4049	ALL	746598	4041150	1.17E-07	70YrCancerDerived_InhSoil[	1.17E-07	0.00E+00	0.00E+00	0.00E+00	0.00E+00	0.00E+00	0.00E+00	0.00E+00	0.00E+00	0.00E+00	0.00E+00	0.00E+00
4050	ALL	746623	4041150	1.18E-07	70YrCancerDerived_InhSoil[	1.18E-07	0.00E+00	0.00E+00	0.00E+00	0.00E+00	0.00E+00	0.00E+00	0.00E+00	0.00E+00	0.00E+00	0.00E+00	0.00E+00
4051	ALL	746648	4041150	1.20E-07	70YrCancerDerived_InhSoil[	1.20E-07	0.00E+00	0.00E+00	0.00E+00	0.00E+00	0.00E+00	0.00E+00	0.00E+00	0.00E+00	0.00E+00	0.00E+00	0.00E+00
4052	ALL	746673	4041150	1.22E-07	70YrCancerDerived_InhSoil[	1.22E-07	0.00E+00	0.00E+00	0.00E+00	0.00E+00	0.00E+00	0.00E+00	0.00E+00	0.00E+00	0.00E+00	0.00E+00	0.00E+00
4053	ALL	746698	4041150	1.24E-07	70YrCancerDerived_InhSoil[	1.24E-07	0.00E+00	0.00E+00	0.00E+00	0.00E+00	0.00E+00	0.00E+00	0.00E+00	0.00E+00	0.00E+00	0.00E+00	0.00E+00
4054	ALL	746723	4041150	1.27E-07	70YrCancerDerived_InhSoil[	1.27E-07	0.00E+00	0.00E+00	0.00E+00	0.00E+00	0.00E+00	0.00E+00	0.00E+00	0.00E+00	0.00E+00	0.00E+00	0.00E+00
4055	ALL	746548	4041175	1.14E-07	70YrCancerDerived_InhSoil[	1.14E-07	0.00E+00	0.00E+00	0.00E+00	0.00E+00	0.00E+00	0.00E+00	0.00E+00	0.00E+00	0.00E+00	0.00E+00	0.00E+00
4056	ALL	746573	4041175	1.16E-07	70YrCancerDerived_InhSoil[	1.16E-07	0.00E+00	0.00E+00	0.00E+00	0.00E+00	0.00E+00	0.00E+00	0.00E+00	0.00E+00	0.00E+00	0.00E+00	0.00E+00
4057	ALL	746598	4041175	1.18E-07	70YrCancerDerived_InhSoil[	1.18E-07	0.00E+00	0.00E+00	0.00E+00	0.00E+00	0.00E+00	0.00E+00	0.00E+00	0.00E+00	0.00E+00	0.00E+00	0.00E+00
4058	ALL	746623	4041175	1.19E-07	70YrCancerDerived_InhSoil[	1.19E-07	0.00E+00	0.00E+00	0.00E+00	0.00E+00	0.00E+00	0.00E+00	0.00E+00	0.00E+00	0.00E+00	0.00E+00	0.00E+00
4059	ALL	746648	4041175	1.21E-07	70YrCancerDerived_InhSoil[	1.21E-07	0.00E+00	0.00E+00	0.00E+00	0.00E+00	0.00E+00	0.00E+00	0.00E+00	0.00E+00	0.00E+00	0.00E+00	0.00E+00
4060	ALL	746673	4041175	1.23E-07	70YrCancerDerived_InhSoil[	1.23E-07	0.00E+00	0.00E+00	0.00E+00	0.00E+00	0.00E+00	0.00E+00	0.00E+00	0.00E+00	0.00E+00	0.00E+00	0.00E+00
4061	ALL	746698	4041175	1.25E-07	70YrCancerDerived_InhSoil[	1.25E-07	0.00E+00	0.00E+00	0.00E+00	0.00E+00	0.00E+00	0.00E+00	0.00E+00	0.00E+00	0.00E+00	0.00E+00	0.00E+00
4062	ALL	746723	4041175	1.27E-07	70YrCancerDerived_InhSoil[	1.27E-07	0.00E+00	0.00E+00	0.00E+00	0.00E+00	0.00E+00	0.00E+00	0.00E+00	0.00E+00	0.00E+00	0.00E+00	0.00E+00
4063	ALL	746548	4041200	1.15E-07	70YrCancerDerived_InhSoil[	1.15E-07	0.00E+00	0.00E+00	0.00E+00	0.00E+00	0.00E+00	0.00E+00	0.00E+00	0.00E+00	0.00E+00	0.00E+00	0.00E+00
4064	ALL	746573	4041200	1.17E-07	70YrCancerDerived_InhSoil[	1.17E-07	0.00E+00	0.00E+00	0.00E+00	0.00E+00	0.00E+00	0.00E+00	0.00E+00	0.00E+00	0.00E+00	0.00E+00	0.00E+00
4065	ALL	746598	4041200	1.19E-07	70YrCancerDerived_InhSoil[	1.19E-07	0.00E+00	0.00E+00	0.00E+00	0.00E+00	0.00E+00	0.00E+00	0.00E+00	0.00E+00	0.00E+00	0.00E+00	0.00E+00
4066	ALL	746623	4041200	1.20E-07	70YrCancerDerived_InhSoil[	1.20E-07	0.00E+00	0.00E+00	0.00E+00	0.00E+00	0.00E+00	0.00E+00	0.00E+00	0.00E+00	0.00E+00	0.00E+00	0.00E+00
4067	ALL	746648	4041200	1.22E-07	70YrCancerDerived_InhSoil[	1.22E-07	0.00E+00	0.00E+00	0.00E+00	0.00E+00	0.00E+00	0.00E+00	0.00E+00	0.00E+00	0.00E+00	0.00E+00	0.00E+00
4068	ALL	746673	4041200	1.24E-07	70YrCancerDerived_InhSoil[	1.24E-07	0.00E+00	0.00E+00	0.00E+00	0.00E+00	0.00E+00	0.00E+00	0.00E+00	0.00E+00	0.00E+00	0.00E+00	0.00E+00
4069	ALL	746698	4041200	1.26E-07	70YrCancerDerived_InhSoil[	1.26E-07	0.00E+00	0.00E+00	0.00E+00	0.00E+00	0.00E+00	0.00E+00	0.00E+00	0.00E+00	0.00E+00	0.00E+00	0.00E+00
4070	ALL	746723	4041200	1.28E-07	70YrCancerDerived_InhSoil[	1.28E-07	0.00E+00	0.00E+00	0.00E+00	0.00E+00	0.00E+00	0.00E+00	0.00E+00	0.00E+00	0.00E+00	0.00E+00	0.00E+00
4071	ALL	746548	4041225	1.16E-07	70YrCancerDerived_InhSoil[	1.16E-07	0.00E+00	0.00E+00	0.00E+00	0.00E+00	0.00E+00	0.00E+00	0.00E+00	0.00E+00	0.00E+00	0.00E+00	0.00E+00
4072	ALL	746573	4041225	1.18E-07	70YrCancerDerived_InhSoil[	1.18E-07	0.00E+00	0.00E+00	0.00E+00	0.00E+00	0.00E+00	0.00E+00	0.00E+00	0.00E+00	0.00E+00	0.00E+00	0.00E+00
4073	ALL	746598	4041225	1.19E-07	70YrCancerDerived_InhSoil[	1.19E-07	0.00E+00	0.00E+00	0.00E+00	0.00E+00	0.00E+00	0.00E+00	0.00E+00	0.00E+00	0.00E+00	0.00E+00	0.00E+00
4074	ALL	746623	4041225	1.21E-07	70YrCancerDerived_InhSoil[	1.21E-07	0.00E+00	0.00E+00	0.00E+00	0.00E+00	0.00E+00	0.00E+00	0.00E+00	0.00E+00	0.00E+00	0.00E+00	0.00E+00
4075	ALL	746648	4041225	1.23E-07	70YrCancerDerived_InhSoil[	1.23E-07	0.00E+00	0.00E+00	0.00E+00	0.00E+00	0.00E+00	0.00E+00	0.00E+00	0.00E+00	0.00E+00	0.00E+00	0.00E+00
4076	ALL	746673	4041225	1.25E-07	70YrCancerDerived_InhSoil[	1.25E-07	0.00E+00	0.00E+00	0.00E+00	0.00E+00	0.00E+00	0.00E+00	0.00E+00	0.00E+00	0.00E+00	0.00E+00	0.00E+00
4077	ALL	746698	4041225	1.27E-07	70YrCancerDerived_InhSoil[	1.27E-07	0.00E+00	0.00E+00	0.00E+00	0.00E+00	0.00E+00	0.00E+00	0.00E+00	0.00E+00	0.00E+00	0.00E+00	0.00E+00
4078	ALL	746723	4041225	1.29E-07	70YrCancerDerived_InhSoil[	1.29E-07	0.00E+00	0.00E+00	0.00E+00	0.00E+00	0.00E+00	0.00E+00	0.00E+00	0.00E+00	0.00E+00	0.00E+00	0.00E+00
4079	ALL	746548	4041250	1.16E-07	70YrCancerDerived_InhSoil[	1.16E-07	0.00E+00	0.00E+00	0.00E+00	0.00E+00	0.00E+00	0.00E+00	0.00E+00	0.00E+00	0.00E+00	0.00E+00	0.00E+00
4080	ALL	746573	4041250	1.18E-07	70YrCancerDerived_InhSoil[	1.18E-07	0.00E+00	0.00E+00	0.00E+00	0.00E+00	0.00E+00	0.00E+00	0.00E+00	0.00E+00	0.00E+00	0.00E+00	0.00E+00
4081	ALL	746598	4041250	1.20E-07	70YrCancerDerived_InhSoil[	1.20E-07	0.00E+00	0.00E+00	0.00E+00	0.00E+00	0.00E+00	0.00E+00	0.00E+00	0.00E+00	0.00E+00	0.00E+00	0.00E+00
4082	ALL	746623	4041250	1.22E-07	70YrCancerDerived_InhSoil[	1.22E-07	0.00E+00	0.00E+00	0.00E+00	0.00E+00	0.00E+00	0.00E+00	0.00E+00	0.00E+00	0.00E+00	0.00E+00	0.00E+00
4083	ALL	746648	4041250	1.24E-07	70YrCancerDerived_InhSoil[	1.24E-07	0.00E+00	0.00E+00	0.00E+00	0.00E+00	0.00E+00	0.00E+00	0.00E+00	0.00E+00	0.00E+00	0.00E+00	0.00E+00
4084	ALL	746673	4041250	1.26E-07	70YrCancerDerived_InhSoil[	1.26E-07	0.00E+00	0.00E+00	0.00E+00	0.00E+00	0.00E+00	0.00E+00	0.00E+00	0.00E+00	0.00E+00	0.00E+00	0.00E+00
4085	ALL	746698	4041250	1.28E-07	70YrCancerDerived_InhSoil[	1.28E-07	0.00E+00	0.00E+00	0.00E+00	0.00E+00	0.00E+00	0.00E+00	0.00E+00	0.00E+00	0.00E+00	0.00E+00	0.00E+00
4086	ALL	746723	4041250	1.29E-07	70YrCancerDerived_InhSoil[	1.29E-07	0.00E+00	0.00E+00	0.00E+00	0.00E+00	0.00E+00	0.00E+00	0.00E+00	0.00E+00	0.00E+00	0.00E+00	0.00E+00

4087	ALL	746548	4041275	1.17E-07	70YrCancerDerived_InhSoil[	1.17E-07	0.00E+00	0.00E+00	0.00E+00	0.00E+00	0.00E+00	0.00E+00	0.00E+00	0.00E+00	0.00E+00	0.00E+00	0.00E+00
4088	ALL	746573	4041275	1.19E-07	70YrCancerDerived_InhSoil[	1.19E-07	0.00E+00	0.00E+00	0.00E+00	0.00E+00	0.00E+00	0.00E+00	0.00E+00	0.00E+00	0.00E+00	0.00E+00	0.00E+00
4089	ALL	746598	4041275	1.21E-07	70YrCancerDerived_InhSoil[	1.21E-07	0.00E+00	0.00E+00	0.00E+00	0.00E+00	0.00E+00	0.00E+00	0.00E+00	0.00E+00	0.00E+00	0.00E+00	0.00E+00
4090	ALL	746623	4041275	1.23E-07	70YrCancerDerived_InhSoil[	1.23E-07	0.00E+00	0.00E+00	0.00E+00	0.00E+00	0.00E+00	0.00E+00	0.00E+00	0.00E+00	0.00E+00	0.00E+00	0.00E+00
4091	ALL	746648	4041275	1.24E-07	70YrCancerDerived_InhSoil[	1.24E-07	0.00E+00	0.00E+00	0.00E+00	0.00E+00	0.00E+00	0.00E+00	0.00E+00	0.00E+00	0.00E+00	0.00E+00	0.00E+00
4092	ALL	746673	4041275	1.26E-07	70YrCancerDerived_InhSoil[	1.26E-07	0.00E+00	0.00E+00	0.00E+00	0.00E+00	0.00E+00	0.00E+00	0.00E+00	0.00E+00	0.00E+00	0.00E+00	0.00E+00
4093	ALL	746698	4041275	1.28E-07	70YrCancerDerived_InhSoil[	1.28E-07	0.00E+00	0.00E+00	0.00E+00	0.00E+00	0.00E+00	0.00E+00	0.00E+00	0.00E+00	0.00E+00	0.00E+00	0.00E+00
4094	ALL	746723	4041275	1.30E-07	70YrCancerDerived_InhSoil[	1.30E-07	0.00E+00	0.00E+00	0.00E+00	0.00E+00	0.00E+00	0.00E+00	0.00E+00	0.00E+00	0.00E+00	0.00E+00	0.00E+00
4095	ALL	746548	4041300	1.18E-07	70YrCancerDerived_InhSoil[	1.18E-07	0.00E+00	0.00E+00	0.00E+00	0.00E+00	0.00E+00	0.00E+00	0.00E+00	0.00E+00	0.00E+00	0.00E+00	0.00E+00
4096	ALL	746573	4041300	1.20E-07	70YrCancerDerived_InhSoil[	1.20E-07	0.00E+00	0.00E+00	0.00E+00	0.00E+00	0.00E+00	0.00E+00	0.00E+00	0.00E+00	0.00E+00	0.00E+00	0.00E+00
4097	ALL	746598	4041300	1.21E-07	70YrCancerDerived_InhSoil[	1.21E-07	0.00E+00	0.00E+00	0.00E+00	0.00E+00	0.00E+00	0.00E+00	0.00E+00	0.00E+00	0.00E+00	0.00E+00	0.00E+00
4098	ALL	746623	4041300	1.23E-07	70YrCancerDerived_InhSoil[	1.23E-07	0.00E+00	0.00E+00	0.00E+00	0.00E+00	0.00E+00	0.00E+00	0.00E+00	0.00E+00	0.00E+00	0.00E+00	0.00E+00
4099	ALL	746648	4041300	1.25E-07	70YrCancerDerived_InhSoil[	1.25E-07	0.00E+00	0.00E+00	0.00E+00	0.00E+00	0.00E+00	0.00E+00	0.00E+00	0.00E+00	0.00E+00	0.00E+00	0.00E+00
4100	ALL	746673	4041300	1.27E-07	70YrCancerDerived_InhSoil[	1.27E-07	0.00E+00	0.00E+00	0.00E+00	0.00E+00	0.00E+00	0.00E+00	0.00E+00	0.00E+00	0.00E+00	0.00E+00	0.00E+00
4101	ALL	746698	4041300	1.29E-07	70YrCancerDerived_InhSoil[	1.29E-07	0.00E+00	0.00E+00	0.00E+00	0.00E+00	0.00E+00	0.00E+00	0.00E+00	0.00E+00	0.00E+00	0.00E+00	0.00E+00
4102	ALL	746723	4041300	1.30E-07	70YrCancerDerived_InhSoil[	1.30E-07	0.00E+00	0.00E+00	0.00E+00	0.00E+00	0.00E+00	0.00E+00	0.00E+00	0.00E+00	0.00E+00	0.00E+00	0.00E+00
4103	ALL	746561.71	4041116.1	1.12E-07	70YrCancerDerived_InhSoil[	1.12E-07	0.00E+00	0.00E+00	0.00E+00	0.00E+00	0.00E+00	0.00E+00	0.00E+00	0.00E+00	0.00E+00	0.00E+00	0.00E+00
4104	ALL	746586.71	4041116.1	1.14E-07	70YrCancerDerived_InhSoil[	1.14E-07	0.00E+00	0.00E+00	0.00E+00	0.00E+00	0.00E+00	0.00E+00	0.00E+00	0.00E+00	0.00E+00	0.00E+00	0.00E+00
4105	ALL	746611.71	4041116.1	1.16E-07	70YrCancerDerived_InhSoil[	1.16E-07	0.00E+00	0.00E+00	0.00E+00	0.00E+00	0.00E+00	0.00E+00	0.00E+00	0.00E+00	0.00E+00	0.00E+00	0.00E+00
4106	ALL	746561.71	4041141.1	1.13E-07	70YrCancerDerived_InhSoil[	1.13E-07	0.00E+00	0.00E+00	0.00E+00	0.00E+00	0.00E+00	0.00E+00	0.00E+00	0.00E+00	0.00E+00	0.00E+00	0.00E+00
4107	ALL	746586.71	4041141.1	1.15E-07	70YrCancerDerived_InhSoil[	1.15E-07	0.00E+00	0.00E+00	0.00E+00	0.00E+00	0.00E+00	0.00E+00	0.00E+00	0.00E+00	0.00E+00	0.00E+00	0.00E+00
4108	ALL	746611.71	4041141.1	1.17E-07	70YrCancerDerived_InhSoil[	1.17E-07	0.00E+00	0.00E+00	0.00E+00	0.00E+00	0.00E+00	0.00E+00	0.00E+00	0.00E+00	0.00E+00	0.00E+00	0.00E+00
4109	ALL	746561.71	4041166.1	1.15E-07	70YrCancerDerived_InhSoil[	1.15E-07	0.00E+00	0.00E+00	0.00E+00	0.00E+00	0.00E+00	0.00E+00	0.00E+00	0.00E+00	0.00E+00	0.00E+00	0.00E+00
4110	ALL	746586.71	4041166.1	1.16E-07	70YrCancerDerived_InhSoil[	1.16E-07	0.00E+00	0.00E+00	0.00E+00	0.00E+00	0.00E+00	0.00E+00	0.00E+00	0.00E+00	0.00E+00	0.00E+00	0.00E+00
4111	ALL	746611.71	4041166.1	1.18E-07	70YrCancerDerived_InhSoil[	1.18E-07	0.00E+00	0.00E+00	0.00E+00	0.00E+00	0.00E+00	0.00E+00	0.00E+00	0.00E+00	0.00E+00	0.00E+00	0.00E+00
4112	ALL	732066.53	4034602.91	1.37E-07	70YrCancerDerived_InhSoil[	1.37E-07	0.00E+00	0.00E+00	0.00E+00	0.00E+00	0.00E+00	0.00E+00	0.00E+00	0.00E+00	0.00E+00	0.00E+00	0.00E+00
4113	ALL	732091.13	4033774.4	1.08E-07	70YrCancerDerived_InhSoil[	1.08E-07	0.00E+00	0.00E+00	0.00E+00	0.00E+00	0.00E+00	0.00E+00	0.00E+00	0.00E+00	0.00E+00	0.00E+00	0.00E+00
4114	ALL	733692.71	4033824.33	3.73E-06	70YrCancerDerived_InhSoil[	3.73E-06	0.00E+00	0.00E+00	0.00E+00	0.00E+00	0.00E+00	0.00E+00	0.00E+00	0.00E+00	0.00E+00	0.00E+00	0.00E+00
4115	ALL	733674.04	4034495.29	1.21E-07	70YrCancerDerived_InhSoil[	1.21E-07	0.00E+00	0.00E+00	0.00E+00	0.00E+00	0.00E+00	0.00E+00	0.00E+00	0.00E+00	0.00E+00	0.00E+00	0.00E+00
4116	ALL	734110.13	4034487.33	1.07E-07	70YrCancerDerived_InhSoil[	1.07E-07	0.00E+00	0.00E+00	0.00E+00	0.00E+00	0.00E+00	0.00E+00	0.00E+00	0.00E+00	0.00E+00	0.00E+00	0.00E+00
4117	ALL	734257.24	4034696.21	7.62E-08	70YrCancerDerived_InhSoil[	7.62E-08	0.00E+00	0.00E+00	0.00E+00	0.00E+00	0.00E+00	0.00E+00	0.00E+00	0.00E+00	0.00E+00	0.00E+00	0.00E+00
4118	ALL	734627.91	4034703.99	7.62E-08	70YrCancerDerived_InhSoil[	7.62E-08	0.00E+00	0.00E+00	0.00E+00	0.00E+00	0.00E+00	0.00E+00	0.00E+00	0.00E+00	0.00E+00	0.00E+00	0.00E+00
4119	ALL	735392.15	4035430.99	4.77E-08	70YrCancerDerived_InhSoil[	4.77E-08	0.00E+00	0.00E+00	0.00E+00	0.00E+00	0.00E+00	0.00E+00	0.00E+00	0.00E+00	0.00E+00	0.00E+00	0.00E+00
4120	ALL	737808.42	4035430.09	4.76E-08	70YrCancerDerived_InhSoil[	4.76E-08	0.00E+00	0.00E+00	0.00E+00	0.00E+00	0.00E+00	0.00E+00	0.00E+00	0.00E+00	0.00E+00	0.00E+00	0.00E+00
4121	ALL	738465.19	4036541.12	4.13E-08	70YrCancerDerived_InhSoil[	4.13E-08	0.00E+00	0.00E+00	0.00E+00	0.00E+00	0.00E+00	0.00E+00	0.00E+00	0.00E+00	0.00E+00	0.00E+00	0.00E+00
4122	ALL	738750.39	4036380.31	4.27E-08	70YrCancerDerived_InhSoil[	4.27E-08	0.00E+00	0.00E+00	0.00E+00	0.00E+00	0.00E+00	0.00E+00	0.00E+00	0.00E+00	0.00E+00	0.00E+00	0.00E+00
4123	ALL	742069.46	4036499.23	4.85E-08	70YrCancerDerived_InhSoil[	4.85E-08	0.00E+00	0.00E+00	0.00E+00	0.00E+00	0.00E+00	0.00E+00	0.00E+00	0.00E+00	0.00E+00	0.00E+00	0.00E+00
4124	ALL	745283.68	4036598.92	1.01E-07	70YrCancerDerived_InhSoil[	1.01E-07	0.00E+00	0.00E+00	0.00E+00	0.00E+00	0.00E+00	0.00E+00	0.00E+00	0.00E+00	0.00E+00	0.00E+00	0.00E+00
4125	ALL	746673.96	4036659.94	3.21E-07	70YrCancerDerived_InhSoil[	3.21E-07	0.00E+00	0.00E+00	0.00E+00	0.00E+00	0.00E+00	0.00E+00	0.00E+00	0.00E+00	0.00E+00	0.00E+00	0.00E+00
4126	ALL	746708.07	4035860.27	1.76E-07	70YrCancerDerived_InhSoil[	1.76E-07	0.00E+00	0.00E+00	0.00E+00	0.00E+00	0.00E+00	0.00E+00	0.00E+00	0.00E+00	0.00E+00	0.00E+00	0.00E+00
4127	ALL	747515.51	4035882.35	3.67E-06	70YrCancerDerived_InhSoil[	3.67E-06	0.00E+00	0.00E+00	0.00E+00	0.00E+00	0.00E+00	0.00E+00	0.00E+00	0.00E+00	0.00E+00	0.00E+00	0.00E+00
4128	ALL	747536.38	4035076.16	5.25E-07	70YrCancerDerived_InhSoil[	5.25E-07	0.00E+00	0.00E+00	0.00E+00	0.00E+00	0.00E+00	0.00E+00	0.00E+00	0.00E+00	0.00E+00	0.00E+00	0.00E+00
4129	ALL	748342.31	4035116.19	7.21E-07	70YrCancerDerived_InhSoil[	7.21E-07	0.00E+00	0.00E+00	0.00E+00	0.00E+00	0.00E+00	0.00E+00	0.00E+00	0.00E+00	0.00E+00	0.00E+00	0.00E+00
4130	ALL	748310.9	4036726.09	1.06E-07	70YrCancerDerived_InhSoil[	1.06E-07	0.00E+00	0.00E+00	0.00E+00	0.00E+00	0.00E+00	0.00E+00	0.00E+00	0.00E+00	0.00E+00	0.00E+00	0.00E+00
4131	ALL	749907.56	4036767.46	1.48E-07	70YrCancerDerived_InhSoil[	1.48E-07	0.00E+00	0.00E+00	0.00E+00	0.00E+00	0.00E+00	0.00E+00	0.00E+00	0.00E+00	0.00E+00	0.00E+00	0.00E+00
4132	ALL	749811.98	4039992.18	4.49E-07	70YrCancerDerived_InhSoil[	4.49E-07	0.00E+00	0.00E+00	0.00E+00	0.00E+00	0.00E+00	0.00E+00	0.00E+00	0.00E+00	0.00E+00	0.00E+00	0.00E+00
4133	ALL	751400.39	4040064.69	1.25E-07	70YrCancerDerived_InhSoil[	1.25E-07	0.00E+00	0.00E+00	0.00E+00	0.00E+00	0.00E+00	0.00E+00	0.00E+00	0.00E+00	0.00E+00	0.00E+00	0.00E+00
4134	ALL	751462.23	4038438.34	2.45E-07	70YrCancerDerived_InhSoil[	2.45E-07	0.00E+00	0.00E+00	0.00E+00	0.00E+00	0.00E+00	0.00E+00	0.00E+00	0.00E+00	0.00E+00	0.00E+00	0.00E+00
4135	ALL	752772.2	4038498.22	1.37E-07	70YrCancerDerived_InhSoil[	1.37E-07	0.00E+00	0.00E+00	0.00E+00	0.00E+00	0.00E+00	0.00E+00	0.00E+00	0.00E+00	0.00E+00	0.00E+00	0.00E+00
4136	ALL	752832.11	4036888.4	1.52E-07	70YrCancerDerived_InhSoil[	1.52E-07	0.00E+00	0.00E+00	0.00E+00	0.00E+00	0.00E+00	0.00E+00	0.00E+00	0.00E+00	0.00E+00	0.00E+00	0.00E+00
4137	ALL	754818.78	4036951.87	9.73E-08	70YrCancerDerived_InhSoil[	9.73E-08	0.00E+00	0.00E+00	0.00E+00	0.00E+00	0.00E+00	0.00E+00	0.00E+00	0.00E+00	0.00E+00	0.00E+00	0.00E+00
4138	ALL	754771.03	4038559.27	7.39E-08	70YrCancerDerived_InhSoil[	7.39E-08	0.00E+00	0.00E+00	0.00E+00	0.00E+00	0.00E+00	0.00E+00	0.00E+00	0.00E+00	0.00E+00	0.00E+00	0.00E+00
4139	ALL	752787.25	4038507.84	1.36E-07	70YrCancerDerived_InhSoil[	1.36E-07	0.00E+00	0.00E+00	0.00E+00	0.00E+00	0.00E+00	0.00E+00	0.00E+00	0.00E+00	0.00E+00	0.00E+00	0.00E+00
4140	ALL	752734.04	4040110.04	7.81E-08	70YrCancerDerived_InhSoil[	7.81E-08	0.00E+00	0.00E+00	0.00E+00	0.00E+00	0.00E+00	0.00E+00	0.00E+00	0.00E+00	0.00E+00	0.00E+00	0.00E+00
4141	ALL	751403.83	4040076.27	1.24E-07	70YrCancerDerived_InhSoil[	1.24E-07	0.00E+00	0.00E+00	0.00E+00	0.00E+00	0.00E+00	0.00E+00	0.00E+00	0.00E+00	0.00E+00	0.00E+00	0.00E+00
4142	ALL	751355.71	4041673.39	4.33E-08	70YrCancerDerived_InhSoil[	4.33E-08	0.00E+00	0.00E+00	0.00E+00	0.00E+00	0.00E+00	0.00E+00	0.00E+00	0.00E+00	0.00E+00	0.00E+00	0.00E+00

4143	ALL	753494.58	4041753.1	3.51E-08	70YrCancerDerived_InhSoil[	3.51E-08	0.00E+00	0.00E+00	0.00E+00	0.00E+00	0.00E+00	0.00E+00	0.00E+00	0.00E+00	0.00E+00	0.00E+00	0.00E+00
4144	ALL	753492.55	4041789.93	3.47E-08	70YrCancerDerived_InhSoil[	3.47E-08	0.00E+00	0.00E+00	0.00E+00	0.00E+00	0.00E+00	0.00E+00	0.00E+00	0.00E+00	0.00E+00	0.00E+00	0.00E+00
4145	ALL	753430	4043372.28	2.54E-08	70YrCancerDerived_InhSoil[	2.54E-08	0.00E+00	0.00E+00	0.00E+00	0.00E+00	0.00E+00	0.00E+00	0.00E+00	0.00E+00	0.00E+00	0.00E+00	0.00E+00
4146	ALL	752608.63	4043340.49	2.59E-08	70YrCancerDerived_InhSoil[	2.59E-08	0.00E+00	0.00E+00	0.00E+00	0.00E+00	0.00E+00	0.00E+00	0.00E+00	0.00E+00	0.00E+00	0.00E+00	0.00E+00
4147	ALL	752588.7	4044954.02	1.86E-08	70YrCancerDerived_InhSoil[	1.86E-08	0.00E+00	0.00E+00	0.00E+00	0.00E+00	0.00E+00	0.00E+00	0.00E+00	0.00E+00	0.00E+00	0.00E+00	0.00E+00
4148	ALL	751182.35	4044928.16	1.91E-08	70YrCancerDerived_InhSoil[	1.91E-08	0.00E+00	0.00E+00	0.00E+00	0.00E+00	0.00E+00	0.00E+00	0.00E+00	0.00E+00	0.00E+00	0.00E+00	0.00E+00
4149	ALL	750128.34	4044862.62	2.20E-08	70YrCancerDerived_InhSoil[	2.20E-08	0.00E+00	0.00E+00	0.00E+00	0.00E+00	0.00E+00	0.00E+00	0.00E+00	0.00E+00	0.00E+00	0.00E+00	0.00E+00
4150	ALL	750113.01	4045660.82	1.97E-08	70YrCancerDerived_InhSoil[	1.97E-08	0.00E+00	0.00E+00	0.00E+00	0.00E+00	0.00E+00	0.00E+00	0.00E+00	0.00E+00	0.00E+00	0.00E+00	0.00E+00
4151	ALL	748466.7	4045588.02	2.24E-08	70YrCancerDerived_InhSoil[	2.24E-08	0.00E+00	0.00E+00	0.00E+00	0.00E+00	0.00E+00	0.00E+00	0.00E+00	0.00E+00	0.00E+00	0.00E+00	0.00E+00
4152	ALL	748517.04	4043182.11	3.46E-08	70YrCancerDerived_InhSoil[	3.46E-08	0.00E+00	0.00E+00	0.00E+00	0.00E+00	0.00E+00	0.00E+00	0.00E+00	0.00E+00	0.00E+00	0.00E+00	0.00E+00
4153	ALL	748555.57	4041574.8	5.99E-08	70YrCancerDerived_InhSoil[	5.99E-08	0.00E+00	0.00E+00	0.00E+00	0.00E+00	0.00E+00	0.00E+00	0.00E+00	0.00E+00	0.00E+00	0.00E+00	0.00E+00
4154	ALL	748134.63	4041563.3	7.70E-08	70YrCancerDerived_InhSoil[	7.70E-08	0.00E+00	0.00E+00	0.00E+00	0.00E+00	0.00E+00	0.00E+00	0.00E+00	0.00E+00	0.00E+00	0.00E+00	0.00E+00
4155	ALL	747727.94	4041548.19	9.93E-08	70YrCancerDerived_InhSoil[	9.93E-08	0.00E+00	0.00E+00	0.00E+00	0.00E+00	0.00E+00	0.00E+00	0.00E+00	0.00E+00	0.00E+00	0.00E+00	0.00E+00
4156	ALL	746738.41	4041515.68	1.30E-07	70YrCancerDerived_InhSoil[	1.30E-07	0.00E+00	0.00E+00	0.00E+00	0.00E+00	0.00E+00	0.00E+00	0.00E+00	0.00E+00	0.00E+00	0.00E+00	0.00E+00
4157	ALL	746735.92	4041120.52	1.26E-07	70YrCancerDerived_InhSoil[	1.26E-07	0.00E+00	0.00E+00	0.00E+00	0.00E+00	0.00E+00	0.00E+00	0.00E+00	0.00E+00	0.00E+00	0.00E+00	0.00E+00
4158	ALL	746543.23	4041110.63	1.11E-07	70YrCancerDerived_InhSoil[	1.11E-07	0.00E+00	0.00E+00	0.00E+00	0.00E+00	0.00E+00	0.00E+00	0.00E+00	0.00E+00	0.00E+00	0.00E+00	0.00E+00
4159	ALL	746547.66	4040518.95	8.77E-08	70YrCancerDerived_InhSoil[	8.77E-08	0.00E+00	0.00E+00	0.00E+00	0.00E+00	0.00E+00	0.00E+00	0.00E+00	0.00E+00	0.00E+00	0.00E+00	0.00E+00
4160	ALL	746633.93	4040521.31	9.06E-08	70YrCancerDerived_InhSoil[	9.06E-08	0.00E+00	0.00E+00	0.00E+00	0.00E+00	0.00E+00	0.00E+00	0.00E+00	0.00E+00	0.00E+00	0.00E+00	0.00E+00
4161	ALL	746634.88	4040467.3	8.96E-08	70YrCancerDerived_InhSoil[	8.96E-08	0.00E+00	0.00E+00	0.00E+00	0.00E+00	0.00E+00	0.00E+00	0.00E+00	0.00E+00	0.00E+00	0.00E+00	0.00E+00
4162	ALL	746550.33	4040468.06	8.70E-08	70YrCancerDerived_InhSoil[	8.70E-08	0.00E+00	0.00E+00	0.00E+00	0.00E+00	0.00E+00	0.00E+00	0.00E+00	0.00E+00	0.00E+00	0.00E+00	0.00E+00
4163	ALL	746553.92	4040355.79	8.47E-08	70YrCancerDerived_InhSoil[	8.47E-08	0.00E+00	0.00E+00	0.00E+00	0.00E+00	0.00E+00	0.00E+00	0.00E+00	0.00E+00	0.00E+00	0.00E+00	0.00E+00
4164	ALL	746620.22	4040356.68	8.66E-08	70YrCancerDerived_InhSoil[	8.66E-08	0.00E+00	0.00E+00	0.00E+00	0.00E+00	0.00E+00	0.00E+00	0.00E+00	0.00E+00	0.00E+00	0.00E+00	0.00E+00
4165	ALL	746621.12	4040314.75	8.54E-08	70YrCancerDerived_InhSoil[	8.54E-08	0.00E+00	0.00E+00	0.00E+00	0.00E+00	0.00E+00	0.00E+00	0.00E+00	0.00E+00	0.00E+00	0.00E+00	0.00E+00
4166	ALL	746554.62	4040315.5	8.36E-08	70YrCancerDerived_InhSoil[	8.36E-08	0.00E+00	0.00E+00	0.00E+00	0.00E+00	0.00E+00	0.00E+00	0.00E+00	0.00E+00	0.00E+00	0.00E+00	0.00E+00
4167	ALL	746560.36	4040168.37	7.92E-08	70YrCancerDerived_InhSoil[	7.92E-08	0.00E+00	0.00E+00	0.00E+00	0.00E+00	0.00E+00	0.00E+00	0.00E+00	0.00E+00	0.00E+00	0.00E+00	0.00E+00
4168	ALL	746603.42	4040169.72	8.01E-08	70YrCancerDerived_InhSoil[	8.01E-08	0.00E+00	0.00E+00	0.00E+00	0.00E+00	0.00E+00	0.00E+00	0.00E+00	0.00E+00	0.00E+00	0.00E+00	0.00E+00
4169	ALL	746617.4	4040169.94	8.04E-08	70YrCancerDerived_InhSoil[	8.04E-08	0.00E+00	0.00E+00	0.00E+00	0.00E+00	0.00E+00	0.00E+00	0.00E+00	0.00E+00	0.00E+00	0.00E+00	0.00E+00
4170	ALL	746619.21	4040066.32	7.71E-08	70YrCancerDerived_InhSoil[	7.71E-08	0.00E+00	0.00E+00	0.00E+00	0.00E+00	0.00E+00	0.00E+00	0.00E+00	0.00E+00	0.00E+00	0.00E+00	0.00E+00
4171	ALL	746619.25	4040065.57	7.71E-08	70YrCancerDerived_InhSoil[	7.71E-08	0.00E+00	0.00E+00	0.00E+00	0.00E+00	0.00E+00	0.00E+00	0.00E+00	0.00E+00	0.00E+00	0.00E+00	0.00E+00
4172	ALL	746566.34	4040064.96	7.63E-08	70YrCancerDerived_InhSoil[	7.63E-08	0.00E+00	0.00E+00	0.00E+00	0.00E+00	0.00E+00	0.00E+00	0.00E+00	0.00E+00	0.00E+00	0.00E+00	0.00E+00
4173	ALL	746573	4039885.4	7.34E-08	70YrCancerDerived_InhSoil[	7.34E-08	0.00E+00	0.00E+00	0.00E+00	0.00E+00	0.00E+00	0.00E+00	0.00E+00	0.00E+00	0.00E+00	0.00E+00	0.00E+00
4174	ALL	748187.61	4039939.79	1.98E-07	70YrCancerDerived_InhSoil[	1.98E-07	0.00E+00	0.00E+00	0.00E+00	0.00E+00	0.00E+00	0.00E+00	0.00E+00	0.00E+00	0.00E+00	0.00E+00	0.00E+00
4175	ALL	748269.93	4036790.15	1.00E-07	70YrCancerDerived_InhSoil[	1.00E-07	0.00E+00	0.00E+00	0.00E+00	0.00E+00	0.00E+00	0.00E+00	0.00E+00	0.00E+00	0.00E+00	0.00E+00	0.00E+00
4176	ALL	747485.7	4036764.65	1.09E-07	70YrCancerDerived_InhSoil[	1.09E-07	0.00E+00	0.00E+00	0.00E+00	0.00E+00	0.00E+00	0.00E+00	0.00E+00	0.00E+00	0.00E+00	0.00E+00	0.00E+00
4177	ALL	747441.54	4037774.89	7.16E-08	70YrCancerDerived_InhSoil[	7.16E-08	0.00E+00	0.00E+00	0.00E+00	0.00E+00	0.00E+00	0.00E+00	0.00E+00	0.00E+00	0.00E+00	0.00E+00	0.00E+00
4178	ALL	746636.18	4037748.26	8.45E-08	70YrCancerDerived_InhSoil[	8.45E-08	0.00E+00	0.00E+00	0.00E+00	0.00E+00	0.00E+00	0.00E+00	0.00E+00	0.00E+00	0.00E+00	0.00E+00	0.00E+00
4179	ALL	746670.69	4036745.26	2.50E-07	70YrCancerDerived_InhSoil[	2.50E-07	0.00E+00	0.00E+00	0.00E+00	0.00E+00	0.00E+00	0.00E+00	0.00E+00	0.00E+00	0.00E+00	0.00E+00	0.00E+00
4180	ALL	745738.29	4036714.6	1.53E-07	70YrCancerDerived_InhSoil[	1.53E-07	0.00E+00	0.00E+00	0.00E+00	0.00E+00	0.00E+00	0.00E+00	0.00E+00	0.00E+00	0.00E+00	0.00E+00	0.00E+00
4181	ALL	738770.04	4036473.6	4.22E-08	70YrCancerDerived_InhSoil[	4.22E-08	0.00E+00	0.00E+00	0.00E+00	0.00E+00	0.00E+00	0.00E+00	0.00E+00	0.00E+00	0.00E+00	0.00E+00	0.00E+00
4182	ALL	738439.61	4036664.66	4.07E-08	70YrCancerDerived_InhSoil[	4.07E-08	0.00E+00	0.00E+00	0.00E+00	0.00E+00	0.00E+00	0.00E+00	0.00E+00	0.00E+00	0.00E+00	0.00E+00	0.00E+00
4183	ALL	737829.88	4035658.81	4.61E-08	70YrCancerDerived_InhSoil[	4.61E-08	0.00E+00	0.00E+00	0.00E+00	0.00E+00	0.00E+00	0.00E+00	0.00E+00	0.00E+00	0.00E+00	0.00E+00	0.00E+00
4184	ALL	737743.73	4035513.27	4.71E-08	70YrCancerDerived_InhSoil[	4.71E-08	0.00E+00	0.00E+00	0.00E+00	0.00E+00	0.00E+00	0.00E+00	0.00E+00	0.00E+00	0.00E+00	0.00E+00	0.00E+00
4185	ALL	737022.12	4035512.85	4.69E-08	70YrCancerDerived_InhSoil[	4.69E-08	0.00E+00	0.00E+00	0.00E+00	0.00E+00	0.00E+00	0.00E+00	0.00E+00	0.00E+00	0.00E+00	0.00E+00	0.00E+00
4186	ALL	735339.16	4035512.23	4.62E-08	70YrCancerDerived_InhSoil[	4.62E-08	0.00E+00	0.00E+00	0.00E+00	0.00E+00	0.00E+00	0.00E+00	0.00E+00	0.00E+00	0.00E+00	0.00E+00	0.00E+00
4187	ALL	734620.84	4034828.06	6.70E-08	70YrCancerDerived_InhSoil[	6.70E-08	0.00E+00	0.00E+00	0.00E+00	0.00E+00	0.00E+00	0.00E+00	0.00E+00	0.00E+00	0.00E+00	0.00E+00	0.00E+00
4188	ALL	734199.14	4034810.78	6.63E-08	70YrCancerDerived_InhSoil[	6.63E-08	0.00E+00	0.00E+00	0.00E+00	0.00E+00	0.00E+00	0.00E+00	0.00E+00	0.00E+00	0.00E+00	0.00E+00	0.00E+00
4189	ALL	734063.26	4034590.76	8.82E-08	70YrCancerDerived_InhSoil[	8.82E-08	0.00E+00	0.00E+00	0.00E+00	0.00E+00	0.00E+00	0.00E+00	0.00E+00	0.00E+00	0.00E+00	0.00E+00	0.00E+00
4190	ALL	733671.38	4034584.06	1.02E-07	70YrCancerDerived_InhSoil[	1.02E-07	0.00E+00	0.00E+00	0.00E+00	0.00E+00	0.00E+00	0.00E+00	0.00E+00	0.00E+00	0.00E+00	0.00E+00	0.00E+00
4191	ALL	733670.9	4034611.62	9.75E-08	70YrCancerDerived_InhSoil[	9.75E-08	0.00E+00	0.00E+00	0.00E+00	0.00E+00	0.00E+00	0.00E+00	0.00E+00	0.00E+00	0.00E+00	0.00E+00	0.00E+00
4192	ALL	733666.71	4034642.68	9.30E-08	70YrCancerDerived_InhSoil[	9.30E-08	0.00E+00	0.00E+00	0.00E+00	0.00E+00	0.00E+00	0.00E+00	0.00E+00	0.00E+00	0.00E+00	0.00E+00	0.00E+00
4193	ALL	732743.17	4034617.72	3.70E-07	70YrCancerDerived_InhSoil[	3.70E-07	0.00E+00	0.00E+00	0.00E+00	0.00E+00	0.00E+00	0.00E+00	0.00E+00	0.00E+00	0.00E+00	0.00E+00	0.00E+00
4194	ALL	732071.45	4034437.21	1.22E-07	70YrCancerDerived_InhSoil[	1.22E-07	0.00E+00	0.00E+00	0.00E+00	0.00E+00	0.00E+00	0.00E+00	0.00E+00	0.00E+00	0.00E+00	0.00E+00	0.00E+00
4195	ALL	732076.37	4034271.51	1.15E-07	70YrCancerDerived_InhSoil[	1.15E-07	0.00E+00	0.00E+00	0.00E+00	0.00E+00	0.00E+00	0.00E+00	0.00E+00	0.00E+00	0.00E+00	0.00E+00	0.00E+00
4196	ALL	732081.29	4034105.8	1.18E-07	70YrCancerDerived_InhSoil[	1.18E-07	0.00E+00	0.00E+00	0.00E+00	0.00E+00	0.00E+00	0.00E+00	0.00E+00	0.00E+00	0.00E+00	0.00E+00	0.00E+00
4197	ALL	732086.21	4033940.1	1.18E-07	70YrCancerDerived_InhSoil[	1.18E-07	0.00E+00	0.00E+00	0.00E+00	0.00E+00	0.00E+00	0.00E+00	0.00E+00	0.00E+00	0.00E+00	0.00E+00	0.00E+00
4198	ALL	732269.08	4033779.95	1.00E-07	70YrCancerDerived_InhSoil[	1.00E-07	0.00E+00	0.00E+00	0.00E+00	0.00E+00	0.00E+00	0.00E+00	0.00E+00	0.00E+00	0.00E+00	0.00E+00	0.00E+00

4199	ALL	732447.04	4033785.5	9.77E-08	70YrCancerDerived_InhSoilI	9.77E-08	0.00E+00	0.00E+00	0.00E+00	0.00E+00	0.00E+00	0.00E+00	0.00E+00	0.00E+00	0.00E+00	0.00E+00	0.00E+00
4200	ALL	732624.99	4033791.04	9.92E-08	70YrCancerDerived_InhSoilI	9.92E-08	0.00E+00	0.00E+00	0.00E+00	0.00E+00	0.00E+00	0.00E+00	0.00E+00	0.00E+00	0.00E+00	0.00E+00	0.00E+00
4201	ALL	732802.94	4033796.59	1.12E-07	70YrCancerDerived_InhSoilI	1.12E-07	0.00E+00	0.00E+00	0.00E+00	0.00E+00	0.00E+00	0.00E+00	0.00E+00	0.00E+00	0.00E+00	0.00E+00	0.00E+00
4202	ALL	732980.9	4033802.14	1.54E-07	70YrCancerDerived_InhSoilI	1.54E-07	0.00E+00	0.00E+00	0.00E+00	0.00E+00	0.00E+00	0.00E+00	0.00E+00	0.00E+00	0.00E+00	0.00E+00	0.00E+00
4203	ALL	733158.85	4033807.69	2.55E-07	70YrCancerDerived_InhSoilI	2.55E-07	0.00E+00	0.00E+00	0.00E+00	0.00E+00	0.00E+00	0.00E+00	0.00E+00	0.00E+00	0.00E+00	0.00E+00	0.00E+00
4204	ALL	733336.8	4033813.23	1.20E-06	70YrCancerDerived_InhSoilI	1.20E-06	0.00E+00	0.00E+00	0.00E+00	0.00E+00	0.00E+00	0.00E+00	0.00E+00	0.00E+00	0.00E+00	0.00E+00	0.00E+00
4205	ALL	733514.76	4033818.78	4.32E-06	70YrCancerDerived_InhSoilI	4.32E-06	0.00E+00	0.00E+00	0.00E+00	0.00E+00	0.00E+00	0.00E+00	0.00E+00	0.00E+00	0.00E+00	0.00E+00	0.00E+00
4206	ALL	733688.04	4033992.07	2.88E-06	70YrCancerDerived_InhSoilI	2.88E-06	0.00E+00	0.00E+00	0.00E+00	0.00E+00	0.00E+00	0.00E+00	0.00E+00	0.00E+00	0.00E+00	0.00E+00	0.00E+00
4207	ALL	733683.38	4034159.81	6.80E-07	70YrCancerDerived_InhSoilI	6.80E-07	0.00E+00	0.00E+00	0.00E+00	0.00E+00	0.00E+00	0.00E+00	0.00E+00	0.00E+00	0.00E+00	0.00E+00	0.00E+00
4208	ALL	733678.71	4034327.55	1.88E-07	70YrCancerDerived_InhSoilI	1.88E-07	0.00E+00	0.00E+00	0.00E+00	0.00E+00	0.00E+00	0.00E+00	0.00E+00	0.00E+00	0.00E+00	0.00E+00	0.00E+00
4209	ALL	733819.4	4034492.64	1.10E-07	70YrCancerDerived_InhSoilI	1.10E-07	0.00E+00	0.00E+00	0.00E+00	0.00E+00	0.00E+00	0.00E+00	0.00E+00	0.00E+00	0.00E+00	0.00E+00	0.00E+00
4210	ALL	733964.77	4034489.98	1.07E-07	70YrCancerDerived_InhSoilI	1.07E-07	0.00E+00	0.00E+00	0.00E+00	0.00E+00	0.00E+00	0.00E+00	0.00E+00	0.00E+00	0.00E+00	0.00E+00	0.00E+00
4211	ALL	734183.69	4034591.77	8.81E-08	70YrCancerDerived_InhSoilI	8.81E-08	0.00E+00	0.00E+00	0.00E+00	0.00E+00	0.00E+00	0.00E+00	0.00E+00	0.00E+00	0.00E+00	0.00E+00	0.00E+00
4212	ALL	734442.57	4034700.1	7.63E-08	70YrCancerDerived_InhSoilI	7.63E-08	0.00E+00	0.00E+00	0.00E+00	0.00E+00	0.00E+00	0.00E+00	0.00E+00	0.00E+00	0.00E+00	0.00E+00	0.00E+00
4213	ALL	734755.28	4034825.16	6.71E-08	70YrCancerDerived_InhSoilI	6.71E-08	0.00E+00	0.00E+00	0.00E+00	0.00E+00	0.00E+00	0.00E+00	0.00E+00	0.00E+00	0.00E+00	0.00E+00	0.00E+00
4214	ALL	734882.66	4034946.32	6.08E-08	70YrCancerDerived_InhSoilI	6.08E-08	0.00E+00	0.00E+00	0.00E+00	0.00E+00	0.00E+00	0.00E+00	0.00E+00	0.00E+00	0.00E+00	0.00E+00	0.00E+00
4215	ALL	735010.03	4035067.49	5.62E-08	70YrCancerDerived_InhSoilI	5.62E-08	0.00E+00	0.00E+00	0.00E+00	0.00E+00	0.00E+00	0.00E+00	0.00E+00	0.00E+00	0.00E+00	0.00E+00	0.00E+00
4216	ALL	735137.4	4035188.66	5.27E-08	70YrCancerDerived_InhSoilI	5.27E-08	0.00E+00	0.00E+00	0.00E+00	0.00E+00	0.00E+00	0.00E+00	0.00E+00	0.00E+00	0.00E+00	0.00E+00	0.00E+00
4217	ALL	735264.78	4035309.82	4.99E-08	70YrCancerDerived_InhSoilI	4.99E-08	0.00E+00	0.00E+00	0.00E+00	0.00E+00	0.00E+00	0.00E+00	0.00E+00	0.00E+00	0.00E+00	0.00E+00	0.00E+00
4218	ALL	735578.02	4035430.92	4.77E-08	70YrCancerDerived_InhSoilI	4.77E-08	0.00E+00	0.00E+00	0.00E+00	0.00E+00	0.00E+00	0.00E+00	0.00E+00	0.00E+00	0.00E+00	0.00E+00	0.00E+00
4219	ALL	735763.88	4035430.85	4.76E-08	70YrCancerDerived_InhSoilI	4.76E-08	0.00E+00	0.00E+00	0.00E+00	0.00E+00	0.00E+00	0.00E+00	0.00E+00	0.00E+00	0.00E+00	0.00E+00	0.00E+00
4220	ALL	735949.75	4035430.78	4.76E-08	70YrCancerDerived_InhSoilI	4.76E-08	0.00E+00	0.00E+00	0.00E+00	0.00E+00	0.00E+00	0.00E+00	0.00E+00	0.00E+00	0.00E+00	0.00E+00	0.00E+00
4221	ALL	736135.62	4035430.71	4.76E-08	70YrCancerDerived_InhSoilI	4.76E-08	0.00E+00	0.00E+00	0.00E+00	0.00E+00	0.00E+00	0.00E+00	0.00E+00	0.00E+00	0.00E+00	0.00E+00	0.00E+00
4222	ALL	736321.48	4035430.64	4.75E-08	70YrCancerDerived_InhSoilI	4.75E-08	0.00E+00	0.00E+00	0.00E+00	0.00E+00	0.00E+00	0.00E+00	0.00E+00	0.00E+00	0.00E+00	0.00E+00	0.00E+00
4223	ALL	736507.35	4035430.57	4.76E-08	70YrCancerDerived_InhSoilI	4.76E-08	0.00E+00	0.00E+00	0.00E+00	0.00E+00	0.00E+00	0.00E+00	0.00E+00	0.00E+00	0.00E+00	0.00E+00	0.00E+00
4224	ALL	736693.22	4035430.51	4.77E-08	70YrCancerDerived_InhSoilI	4.77E-08	0.00E+00	0.00E+00	0.00E+00	0.00E+00	0.00E+00	0.00E+00	0.00E+00	0.00E+00	0.00E+00	0.00E+00	0.00E+00
4225	ALL	736879.09	4035430.44	4.77E-08	70YrCancerDerived_InhSoilI	4.77E-08	0.00E+00	0.00E+00	0.00E+00	0.00E+00	0.00E+00	0.00E+00	0.00E+00	0.00E+00	0.00E+00	0.00E+00	0.00E+00
4226	ALL	737064.95	4035430.37	4.77E-08	70YrCancerDerived_InhSoilI	4.77E-08	0.00E+00	0.00E+00	0.00E+00	0.00E+00	0.00E+00	0.00E+00	0.00E+00	0.00E+00	0.00E+00	0.00E+00	0.00E+00
4227	ALL	737250.82	4035430.3	4.77E-08	70YrCancerDerived_InhSoilI	4.77E-08	0.00E+00	0.00E+00	0.00E+00	0.00E+00	0.00E+00	0.00E+00	0.00E+00	0.00E+00	0.00E+00	0.00E+00	0.00E+00
4228	ALL	737436.69	4035430.23	4.76E-08	70YrCancerDerived_InhSoilI	4.76E-08	0.00E+00	0.00E+00	0.00E+00	0.00E+00	0.00E+00	0.00E+00	0.00E+00	0.00E+00	0.00E+00	0.00E+00	0.00E+00
4229	ALL	737622.55	4035430.16	4.76E-08	70YrCancerDerived_InhSoilI	4.76E-08	0.00E+00	0.00E+00	0.00E+00	0.00E+00	0.00E+00	0.00E+00	0.00E+00	0.00E+00	0.00E+00	0.00E+00	0.00E+00
4230	ALL	737902.24	4035588.81	4.66E-08	70YrCancerDerived_InhSoilI	4.66E-08	0.00E+00	0.00E+00	0.00E+00	0.00E+00	0.00E+00	0.00E+00	0.00E+00	0.00E+00	0.00E+00	0.00E+00	0.00E+00
4231	ALL	737996.07	4035747.53	4.56E-08	70YrCancerDerived_InhSoilI	4.56E-08	0.00E+00	0.00E+00	0.00E+00	0.00E+00	0.00E+00	0.00E+00	0.00E+00	0.00E+00	0.00E+00	0.00E+00	0.00E+00
4232	ALL	738089.89	4035906.25	4.47E-08	70YrCancerDerived_InhSoilI	4.47E-08	0.00E+00	0.00E+00	0.00E+00	0.00E+00	0.00E+00	0.00E+00	0.00E+00	0.00E+00	0.00E+00	0.00E+00	0.00E+00
4233	ALL	738183.72	4036064.96	4.38E-08	70YrCancerDerived_InhSoilI	4.38E-08	0.00E+00	0.00E+00	0.00E+00	0.00E+00	0.00E+00	0.00E+00	0.00E+00	0.00E+00	0.00E+00	0.00E+00	0.00E+00
4234	ALL	738277.54	4036223.68	4.28E-08	70YrCancerDerived_InhSoilI	4.28E-08	0.00E+00	0.00E+00	0.00E+00	0.00E+00	0.00E+00	0.00E+00	0.00E+00	0.00E+00	0.00E+00	0.00E+00	0.00E+00
4235	ALL	738371.37	4036382.4	4.20E-08	70YrCancerDerived_InhSoilI	4.20E-08	0.00E+00	0.00E+00	0.00E+00	0.00E+00	0.00E+00	0.00E+00	0.00E+00	0.00E+00	0.00E+00	0.00E+00	0.00E+00
4236	ALL	738607.79	4036460.71	4.20E-08	70YrCancerDerived_InhSoilI	4.20E-08	0.00E+00	0.00E+00	0.00E+00	0.00E+00	0.00E+00	0.00E+00	0.00E+00	0.00E+00	0.00E+00	0.00E+00	0.00E+00
4237	ALL	738945.63	4036387.31	4.29E-08	70YrCancerDerived_InhSoilI	4.29E-08	0.00E+00	0.00E+00	0.00E+00	0.00E+00	0.00E+00	0.00E+00	0.00E+00	0.00E+00	0.00E+00	0.00E+00	0.00E+00
4238	ALL	739140.87	4036394.3	4.32E-08	70YrCancerDerived_InhSoilI	4.32E-08	0.00E+00	0.00E+00	0.00E+00	0.00E+00	0.00E+00	0.00E+00	0.00E+00	0.00E+00	0.00E+00	0.00E+00	0.00E+00
4239	ALL	739336.11	4036401.3	4.34E-08	70YrCancerDerived_InhSoilI	4.34E-08	0.00E+00	0.00E+00	0.00E+00	0.00E+00	0.00E+00	0.00E+00	0.00E+00	0.00E+00	0.00E+00	0.00E+00	0.00E+00
4240	ALL	739531.35	4036408.29	4.35E-08	70YrCancerDerived_InhSoilI	4.35E-08	0.00E+00	0.00E+00	0.00E+00	0.00E+00	0.00E+00	0.00E+00	0.00E+00	0.00E+00	0.00E+00	0.00E+00	0.00E+00
4241	ALL	739726.59	4036415.29	4.36E-08	70YrCancerDerived_InhSoilI	4.36E-08	0.00E+00	0.00E+00	0.00E+00	0.00E+00	0.00E+00	0.00E+00	0.00E+00	0.00E+00	0.00E+00	0.00E+00	0.00E+00
4242	ALL	739921.83	4036422.28	4.38E-08	70YrCancerDerived_InhSoilI	4.38E-08	0.00E+00	0.00E+00	0.00E+00	0.00E+00	0.00E+00	0.00E+00	0.00E+00	0.00E+00	0.00E+00	0.00E+00	0.00E+00
4243	ALL	740117.07	4036429.28	4.40E-08	70YrCancerDerived_InhSoilI	4.40E-08	0.00E+00	0.00E+00	0.00E+00	0.00E+00	0.00E+00	0.00E+00	0.00E+00	0.00E+00	0.00E+00	0.00E+00	0.00E+00
4244	ALL	740312.31	4036436.27	4.41E-08	70YrCancerDerived_InhSoilI	4.41E-08	0.00E+00	0.00E+00	0.00E+00	0.00E+00	0.00E+00	0.00E+00	0.00E+00	0.00E+00	0.00E+00	0.00E+00	0.00E+00
4245	ALL	740507.54	4036443.27	4.43E-08	70YrCancerDerived_InhSoilI	4.43E-08	0.00E+00	0.00E+00	0.00E+00	0.00E+00	0.00E+00	0.00E+00	0.00E+00	0.00E+00	0.00E+00	0.00E+00	0.00E+00
4246	ALL	740702.78	4036450.26	4.46E-08	70YrCancerDerived_InhSoilI	4.46E-08	0.00E+00	0.00E+00	0.00E+00	0.00E+00	0.00E+00	0.00E+00	0.00E+00	0.00E+00	0.00E+00	0.00E+00	0.00E+00
4247	ALL	740898.02	4036457.26	4.50E-08	70YrCancerDerived_InhSoilI	4.50E-08	0.00E+00	0.00E+00	0.00E+00	0.00E+00	0.00E+00	0.00E+00	0.00E+00	0.00E+00	0.00E+00	0.00E+00	0.00E+00
4248	ALL	741093.26	4036464.25	4.54E-08	70YrCancerDerived_InhSoilI	4.54E-08	0.00E+00	0.00E+00	0.00E+00	0.00E+00	0.00E+00	0.00E+00	0.00E+00	0.00E+00	0.00E+00	0.00E+00	0.00E+00
4249	ALL	741288.5	4036471.25	4.59E-08	70YrCancerDerived_InhSoilI	4.59E-08	0.00E+00	0.00E+00	0.00E+00	0.00E+00	0.00E+00	0.00E+00	0.00E+00	0.00E+00	0.00E+00	0.00E+00	0.00E+00
4250	ALL	741483.74	4036478.24	4.65E-08	70YrCancerDerived_InhSoilI	4.65E-08	0.00E+00	0.00E+00	0.00E+00	0.00E+00	0.00E+00	0.00E+00	0.00E+00	0.00E+00	0.00E+00	0.00E+00	0.00E+00
4251	ALL	741678.98	4036485.24	4.71E-08	70YrCancerDerived_InhSoilI	4.71E-08	0.00E+00	0.00E+00	0.00E+00	0.00E+00	0.00E+00	0.00E+00	0.00E+00	0.00E+00	0.00E+00	0.00E+00	0.00E+00
4252	ALL	741874.22	4036492.23	4.78E-08	70YrCancerDerived_InhSoilI	4.78E-08	0.00E+00	0.00E+00	0.00E+00	0.00E+00	0.00E+00	0.00E+00	0.00E+00	0.00E+00	0.00E+00	0.00E+00	0.00E+00
4253	ALL	742258.53	4036505.09	4.97E-08	70YrCancerDerived_InhSoilI	4.97E-08	0.00E+00	0.00E+00	0.00E+00	0.00E+00	0.00E+00	0.00E+00	0.00E+00	0.00E+00	0.00E+00	0.00E+00	0.00E+00
4254	ALL	742447.6	4036510.96	5.10E-08	70YrCancerDerived_InhSoilI	5.10E-08	0.00E+00	0.00E+00	0.00E+00	0.00E+00	0.00E+00	0.00E+00	0.00E+00	0.00E+00	0.00E+00	0.00E+00	0.00E+00

4255	ALL	742636.68	4036516.82	5.24E-08	70YrCancerDerived_InhSoil[	5.24E-08	0.00E+00	0.00E+00	0.00E+00	0.00E+00	0.00E+00	0.00E+00	0.00E+00	0.00E+00	0.00E+00	0.00E+00	0.00E+00
4256	ALL	742825.75	4036522.69	5.40E-08	70YrCancerDerived_InhSoil[	5.40E-08	0.00E+00	0.00E+00	0.00E+00	0.00E+00	0.00E+00	0.00E+00	0.00E+00	0.00E+00	0.00E+00	0.00E+00	0.00E+00
4257	ALL	743014.82	4036528.55	5.59E-08	70YrCancerDerived_InhSoil[	5.59E-08	0.00E+00	0.00E+00	0.00E+00	0.00E+00	0.00E+00	0.00E+00	0.00E+00	0.00E+00	0.00E+00	0.00E+00	0.00E+00
4258	ALL	743203.89	4036534.41	5.79E-08	70YrCancerDerived_InhSoil[	5.79E-08	0.00E+00	0.00E+00	0.00E+00	0.00E+00	0.00E+00	0.00E+00	0.00E+00	0.00E+00	0.00E+00	0.00E+00	0.00E+00
4259	ALL	743392.96	4036540.28	6.01E-08	70YrCancerDerived_InhSoil[	6.01E-08	0.00E+00	0.00E+00	0.00E+00	0.00E+00	0.00E+00	0.00E+00	0.00E+00	0.00E+00	0.00E+00	0.00E+00	0.00E+00
4260	ALL	743582.03	4036546.14	6.24E-08	70YrCancerDerived_InhSoil[	6.24E-08	0.00E+00	0.00E+00	0.00E+00	0.00E+00	0.00E+00	0.00E+00	0.00E+00	0.00E+00	0.00E+00	0.00E+00	0.00E+00
4261	ALL	743771.11	4036552.01	6.49E-08	70YrCancerDerived_InhSoil[	6.49E-08	0.00E+00	0.00E+00	0.00E+00	0.00E+00	0.00E+00	0.00E+00	0.00E+00	0.00E+00	0.00E+00	0.00E+00	0.00E+00
4262	ALL	743960.18	4036557.87	6.75E-08	70YrCancerDerived_InhSoil[	6.75E-08	0.00E+00	0.00E+00	0.00E+00	0.00E+00	0.00E+00	0.00E+00	0.00E+00	0.00E+00	0.00E+00	0.00E+00	0.00E+00
4263	ALL	744149.25	4036563.74	7.03E-08	70YrCancerDerived_InhSoil[	7.03E-08	0.00E+00	0.00E+00	0.00E+00	0.00E+00	0.00E+00	0.00E+00	0.00E+00	0.00E+00	0.00E+00	0.00E+00	0.00E+00
4264	ALL	744338.32	4036569.6	7.34E-08	70YrCancerDerived_InhSoil[	7.34E-08	0.00E+00	0.00E+00	0.00E+00	0.00E+00	0.00E+00	0.00E+00	0.00E+00	0.00E+00	0.00E+00	0.00E+00	0.00E+00
4265	ALL	744527.39	4036575.46	7.69E-08	70YrCancerDerived_InhSoil[	7.69E-08	0.00E+00	0.00E+00	0.00E+00	0.00E+00	0.00E+00	0.00E+00	0.00E+00	0.00E+00	0.00E+00	0.00E+00	0.00E+00
4266	ALL	744716.46	4036581.33	8.10E-08	70YrCancerDerived_InhSoil[	8.10E-08	0.00E+00	0.00E+00	0.00E+00	0.00E+00	0.00E+00	0.00E+00	0.00E+00	0.00E+00	0.00E+00	0.00E+00	0.00E+00
4267	ALL	744905.54	4036587.19	8.61E-08	70YrCancerDerived_InhSoil[	8.61E-08	0.00E+00	0.00E+00	0.00E+00	0.00E+00	0.00E+00	0.00E+00	0.00E+00	0.00E+00	0.00E+00	0.00E+00	0.00E+00
4268	ALL	745094.61	4036593.06	9.27E-08	70YrCancerDerived_InhSoil[	9.27E-08	0.00E+00	0.00E+00	0.00E+00	0.00E+00	0.00E+00	0.00E+00	0.00E+00	0.00E+00	0.00E+00	0.00E+00	0.00E+00
4269	ALL	745482.29	4036607.64	1.14E-07	70YrCancerDerived_InhSoil[	1.14E-07	0.00E+00	0.00E+00	0.00E+00	0.00E+00	0.00E+00	0.00E+00	0.00E+00	0.00E+00	0.00E+00	0.00E+00	0.00E+00
4270	ALL	745680.9	4036616.35	1.33E-07	70YrCancerDerived_InhSoil[	1.33E-07	0.00E+00	0.00E+00	0.00E+00	0.00E+00	0.00E+00	0.00E+00	0.00E+00	0.00E+00	0.00E+00	0.00E+00	0.00E+00
4271	ALL	745879.51	4036625.07	1.64E-07	70YrCancerDerived_InhSoil[	1.64E-07	0.00E+00	0.00E+00	0.00E+00	0.00E+00	0.00E+00	0.00E+00	0.00E+00	0.00E+00	0.00E+00	0.00E+00	0.00E+00
4272	ALL	746078.13	4036633.79	2.13E-07	70YrCancerDerived_InhSoil[	2.13E-07	0.00E+00	0.00E+00	0.00E+00	0.00E+00	0.00E+00	0.00E+00	0.00E+00	0.00E+00	0.00E+00	0.00E+00	0.00E+00
4273	ALL	746276.74	4036642.51	2.83E-07	70YrCancerDerived_InhSoil[	2.83E-07	0.00E+00	0.00E+00	0.00E+00	0.00E+00	0.00E+00	0.00E+00	0.00E+00	0.00E+00	0.00E+00	0.00E+00	0.00E+00
4274	ALL	746475.35	4036651.22	3.57E-07	70YrCancerDerived_InhSoil[	3.57E-07	0.00E+00	0.00E+00	0.00E+00	0.00E+00	0.00E+00	0.00E+00	0.00E+00	0.00E+00	0.00E+00	0.00E+00	0.00E+00
4275	ALL	746680.78	4036500.01	5.10E-07	70YrCancerDerived_InhSoil[	5.10E-07	0.00E+00	0.00E+00	0.00E+00	0.00E+00	0.00E+00	0.00E+00	0.00E+00	0.00E+00	0.00E+00	0.00E+00	0.00E+00
4276	ALL	746687.6	4036340.07	5.17E-07	70YrCancerDerived_InhSoil[	5.17E-07	0.00E+00	0.00E+00	0.00E+00	0.00E+00	0.00E+00	0.00E+00	0.00E+00	0.00E+00	0.00E+00	0.00E+00	0.00E+00
4277	ALL	746694.43	4036180.14	3.03E-07	70YrCancerDerived_InhSoil[	3.03E-07	0.00E+00	0.00E+00	0.00E+00	0.00E+00	0.00E+00	0.00E+00	0.00E+00	0.00E+00	0.00E+00	0.00E+00	0.00E+00
4278	ALL	746701.25	4036020.2	2.09E-07	70YrCancerDerived_InhSoil[	2.09E-07	0.00E+00	0.00E+00	0.00E+00	0.00E+00	0.00E+00	0.00E+00	0.00E+00	0.00E+00	0.00E+00	0.00E+00	0.00E+00
4279	ALL	746869.56	4035864.69	2.79E-07	70YrCancerDerived_InhSoil[	2.79E-07	0.00E+00	0.00E+00	0.00E+00	0.00E+00	0.00E+00	0.00E+00	0.00E+00	0.00E+00	0.00E+00	0.00E+00	0.00E+00
4280	ALL	747031.05	4035869.1	5.13E-07	70YrCancerDerived_InhSoil[	5.13E-07	0.00E+00	0.00E+00	0.00E+00	0.00E+00	0.00E+00	0.00E+00	0.00E+00	0.00E+00	0.00E+00	0.00E+00	0.00E+00
4281	ALL	747192.53	4035873.52	3.62E-06	70YrCancerDerived_InhSoil[	3.62E-06	0.00E+00	0.00E+00	0.00E+00	0.00E+00	0.00E+00	0.00E+00	0.00E+00	0.00E+00	0.00E+00	0.00E+00	0.00E+00
4282	ALL	747354.02	4035877.93	6.09E-06	70YrCancerDerived_InhSoil[	6.09E-06	0.00E+00	0.00E+00	0.00E+00	0.00E+00	0.00E+00	0.00E+00	0.00E+00	0.00E+00	0.00E+00	0.00E+00	0.00E+00
4283	ALL	747519.68	4035721.11	3.00E-06	70YrCancerDerived_InhSoil[	3.00E-06	0.00E+00	0.00E+00	0.00E+00	0.00E+00	0.00E+00	0.00E+00	0.00E+00	0.00E+00	0.00E+00	0.00E+00	0.00E+00
4284	ALL	747523.86	4035559.87	1.81E-06	70YrCancerDerived_InhSoil[	1.81E-06	0.00E+00	0.00E+00	0.00E+00	0.00E+00	0.00E+00	0.00E+00	0.00E+00	0.00E+00	0.00E+00	0.00E+00	0.00E+00
4285	ALL	747528.03	4035398.64	1.10E-06	70YrCancerDerived_InhSoil[	1.10E-06	0.00E+00	0.00E+00	0.00E+00	0.00E+00	0.00E+00	0.00E+00	0.00E+00	0.00E+00	0.00E+00	0.00E+00	0.00E+00
4286	ALL	747532.21	4035237.4	7.33E-07	70YrCancerDerived_InhSoil[	7.33E-07	0.00E+00	0.00E+00	0.00E+00	0.00E+00	0.00E+00	0.00E+00	0.00E+00	0.00E+00	0.00E+00	0.00E+00	0.00E+00
4287	ALL	747697.57	4035084.17	6.39E-07	70YrCancerDerived_InhSoil[	6.39E-07	0.00E+00	0.00E+00	0.00E+00	0.00E+00	0.00E+00	0.00E+00	0.00E+00	0.00E+00	0.00E+00	0.00E+00	0.00E+00
4288	ALL	747858.75	4035092.17	7.22E-07	70YrCancerDerived_InhSoil[	7.22E-07	0.00E+00	0.00E+00	0.00E+00	0.00E+00	0.00E+00	0.00E+00	0.00E+00	0.00E+00	0.00E+00	0.00E+00	0.00E+00
4289	ALL	748019.94	4035100.18	7.65E-07	70YrCancerDerived_InhSoil[	7.65E-07	0.00E+00	0.00E+00	0.00E+00	0.00E+00	0.00E+00	0.00E+00	0.00E+00	0.00E+00	0.00E+00	0.00E+00	0.00E+00
4290	ALL	748181.12	4035108.18	7.63E-07	70YrCancerDerived_InhSoil[	7.63E-07	0.00E+00	0.00E+00	0.00E+00	0.00E+00	0.00E+00	0.00E+00	0.00E+00	0.00E+00	0.00E+00	0.00E+00	0.00E+00
4291	ALL	748338.82	4035295.07	7.89E-07	70YrCancerDerived_InhSoil[	7.89E-07	0.00E+00	0.00E+00	0.00E+00	0.00E+00	0.00E+00	0.00E+00	0.00E+00	0.00E+00	0.00E+00	0.00E+00	0.00E+00
4292	ALL	748335.33	4035473.95	7.80E-07	70YrCancerDerived_InhSoil[	7.80E-07	0.00E+00	0.00E+00	0.00E+00	0.00E+00	0.00E+00	0.00E+00	0.00E+00	0.00E+00	0.00E+00	0.00E+00	0.00E+00
4293	ALL	748331.84	4035652.82	6.93E-07	70YrCancerDerived_InhSoil[	6.93E-07	0.00E+00	0.00E+00	0.00E+00	0.00E+00	0.00E+00	0.00E+00	0.00E+00	0.00E+00	0.00E+00	0.00E+00	0.00E+00
4294	ALL	748328.35	4035831.7	5.61E-07	70YrCancerDerived_InhSoil[	5.61E-07	0.00E+00	0.00E+00	0.00E+00	0.00E+00	0.00E+00	0.00E+00	0.00E+00	0.00E+00	0.00E+00	0.00E+00	0.00E+00
4295	ALL	748324.86	4036010.58	4.05E-07	70YrCancerDerived_InhSoil[	4.05E-07	0.00E+00	0.00E+00	0.00E+00	0.00E+00	0.00E+00	0.00E+00	0.00E+00	0.00E+00	0.00E+00	0.00E+00	0.00E+00
4296	ALL	748321.37	4036189.46	2.67E-07	70YrCancerDerived_InhSoil[	2.67E-07	0.00E+00	0.00E+00	0.00E+00	0.00E+00	0.00E+00	0.00E+00	0.00E+00	0.00E+00	0.00E+00	0.00E+00	0.00E+00
4297	ALL	748317.88	4036368.33	1.75E-07	70YrCancerDerived_InhSoil[	1.75E-07	0.00E+00	0.00E+00	0.00E+00	0.00E+00	0.00E+00	0.00E+00	0.00E+00	0.00E+00	0.00E+00	0.00E+00	0.00E+00
4298	ALL	748314.39	4036547.21	1.28E-07	70YrCancerDerived_InhSoil[	1.28E-07	0.00E+00	0.00E+00	0.00E+00	0.00E+00	0.00E+00	0.00E+00	0.00E+00	0.00E+00	0.00E+00	0.00E+00	0.00E+00
4299	ALL	748510.48	4036731.26	1.08E-07	70YrCancerDerived_InhSoil[	1.08E-07	0.00E+00	0.00E+00	0.00E+00	0.00E+00	0.00E+00	0.00E+00	0.00E+00	0.00E+00	0.00E+00	0.00E+00	0.00E+00
4300	ALL	748710.07	4036736.43	1.13E-07	70YrCancerDerived_InhSoil[	1.13E-07	0.00E+00	0.00E+00	0.00E+00	0.00E+00	0.00E+00	0.00E+00	0.00E+00	0.00E+00	0.00E+00	0.00E+00	0.00E+00
4301	ALL	748909.65	4036741.6	1.19E-07	70YrCancerDerived_InhSoil[	1.19E-07	0.00E+00	0.00E+00	0.00E+00	0.00E+00	0.00E+00	0.00E+00	0.00E+00	0.00E+00	0.00E+00	0.00E+00	0.00E+00
4302	ALL	749109.23	4036746.77	1.26E-07	70YrCancerDerived_InhSoil[	1.26E-07	0.00E+00	0.00E+00	0.00E+00	0.00E+00	0.00E+00	0.00E+00	0.00E+00	0.00E+00	0.00E+00	0.00E+00	0.00E+00
4303	ALL	749308.81	4036751.95	1.33E-07	70YrCancerDerived_InhSoil[	1.33E-07	0.00E+00	0.00E+00	0.00E+00	0.00E+00	0.00E+00	0.00E+00	0.00E+00	0.00E+00	0.00E+00	0.00E+00	0.00E+00
4304	ALL	749508.4	4036757.12	1.38E-07	70YrCancerDerived_InhSoil[	1.38E-07	0.00E+00	0.00E+00	0.00E+00	0.00E+00	0.00E+00	0.00E+00	0.00E+00	0.00E+00	0.00E+00	0.00E+00	0.00E+00
4305	ALL	749707.98	4036762.29	1.43E-07	70YrCancerDerived_InhSoil[	1.43E-07	0.00E+00	0.00E+00	0.00E+00	0.00E+00	0.00E+00	0.00E+00	0.00E+00	0.00E+00	0.00E+00	0.00E+00	0.00E+00
4306	ALL	749901.94	4036957.15	1.50E-07	70YrCancerDerived_InhSoil[	1.50E-07	0.00E+00	0.00E+00	0.00E+00	0.00E+00	0.00E+00	0.00E+00	0.00E+00	0.00E+00	0.00E+00	0.00E+00	0.00E+00
4307	ALL	749896.32	4037146.84	1.57E-07	70YrCancerDerived_InhSoil[	1.57E-07	0.00E+00	0.00E+00	0.00E+00	0.00E+00	0.00E+00	0.00E+00	0.00E+00	0.00E+00	0.00E+00	0.00E+00	0.00E+00
4308	ALL	749890.69	4037336.53	1.67E-07	70YrCancerDerived_InhSoil[	1.67E-07	0.00E+00	0.00E+00	0.00E+00	0.00E+00	0.00E+00	0.00E+00	0.00E+00	0.00E+00	0.00E+00	0.00E+00	0.00E+00
4309	ALL	749885.07	4037526.22	1.80E-07	70YrCancerDerived_InhSoil[	1.80E-07	0.00E+00	0.00E+00	0.00E+00	0.00E+00	0.00E+00	0.00E+00	0.00E+00	0.00E+00	0.00E+00	0.00E+00	0.00E+00
4310	ALL	749879.45	4037715.91	1.98E-07	70YrCancerDerived_InhSoil[	1.98E-07	0.00E+00	0.00E+00	0.00E+00	0.00E+00	0.00E+00	0.00E+00	0.00E+00	0.00E+00	0.00E+00	0.00E+00	0.00E+00

4311	ALL	749873.83	4037905.6	2.22E-07	70YrCancerDerived_InhSoilI	2.22E-07	0.00E+00	0.00E+00	0.00E+00	0.00E+00	0.00E+00	0.00E+00	0.00E+00	0.00E+00	0.00E+00	0.00E+00	0.00E+00
4312	ALL	749868.2	4038095.29	2.52E-07	70YrCancerDerived_InhSoilI	2.52E-07	0.00E+00	0.00E+00	0.00E+00	0.00E+00	0.00E+00	0.00E+00	0.00E+00	0.00E+00	0.00E+00	0.00E+00	0.00E+00
4313	ALL	749862.58	4038284.98	2.91E-07	70YrCancerDerived_InhSoilI	2.91E-07	0.00E+00	0.00E+00	0.00E+00	0.00E+00	0.00E+00	0.00E+00	0.00E+00	0.00E+00	0.00E+00	0.00E+00	0.00E+00
4314	ALL	749856.96	4038474.66	3.44E-07	70YrCancerDerived_InhSoilI	3.44E-07	0.00E+00	0.00E+00	0.00E+00	0.00E+00	0.00E+00	0.00E+00	0.00E+00	0.00E+00	0.00E+00	0.00E+00	0.00E+00
4315	ALL	749851.34	4038664.35	4.13E-07	70YrCancerDerived_InhSoilI	4.13E-07	0.00E+00	0.00E+00	0.00E+00	0.00E+00	0.00E+00	0.00E+00	0.00E+00	0.00E+00	0.00E+00	0.00E+00	0.00E+00
4316	ALL	749845.71	4038854.04	5.00E-07	70YrCancerDerived_InhSoilI	5.00E-07	0.00E+00	0.00E+00	0.00E+00	0.00E+00	0.00E+00	0.00E+00	0.00E+00	0.00E+00	0.00E+00	0.00E+00	0.00E+00
4317	ALL	749840.09	4039043.73	5.97E-07	70YrCancerDerived_InhSoilI	5.97E-07	0.00E+00	0.00E+00	0.00E+00	0.00E+00	0.00E+00	0.00E+00	0.00E+00	0.00E+00	0.00E+00	0.00E+00	0.00E+00
4318	ALL	749834.47	4039233.42	6.82E-07	70YrCancerDerived_InhSoilI	6.82E-07	0.00E+00	0.00E+00	0.00E+00	0.00E+00	0.00E+00	0.00E+00	0.00E+00	0.00E+00	0.00E+00	0.00E+00	0.00E+00
4319	ALL	749828.85	4039423.11	7.13E-07	70YrCancerDerived_InhSoilI	7.13E-07	0.00E+00	0.00E+00	0.00E+00	0.00E+00	0.00E+00	0.00E+00	0.00E+00	0.00E+00	0.00E+00	0.00E+00	0.00E+00
4320	ALL	749823.22	4039612.8	6.71E-07	70YrCancerDerived_InhSoilI	6.71E-07	0.00E+00	0.00E+00	0.00E+00	0.00E+00	0.00E+00	0.00E+00	0.00E+00	0.00E+00	0.00E+00	0.00E+00	0.00E+00
4321	ALL	749817.6	4039802.49	5.74E-07	70YrCancerDerived_InhSoilI	5.74E-07	0.00E+00	0.00E+00	0.00E+00	0.00E+00	0.00E+00	0.00E+00	0.00E+00	0.00E+00	0.00E+00	0.00E+00	0.00E+00
4322	ALL	750010.53	4040001.24	3.48E-07	70YrCancerDerived_InhSoilI	3.48E-07	0.00E+00	0.00E+00	0.00E+00	0.00E+00	0.00E+00	0.00E+00	0.00E+00	0.00E+00	0.00E+00	0.00E+00	0.00E+00
4323	ALL	750209.08	4040010.31	2.81E-07	70YrCancerDerived_InhSoilI	2.81E-07	0.00E+00	0.00E+00	0.00E+00	0.00E+00	0.00E+00	0.00E+00	0.00E+00	0.00E+00	0.00E+00	0.00E+00	0.00E+00
4324	ALL	750407.63	4040019.37	2.34E-07	70YrCancerDerived_InhSoilI	2.34E-07	0.00E+00	0.00E+00	0.00E+00	0.00E+00	0.00E+00	0.00E+00	0.00E+00	0.00E+00	0.00E+00	0.00E+00	0.00E+00
4325	ALL	750606.19	4040028.44	2.00E-07	70YrCancerDerived_InhSoilI	2.00E-07	0.00E+00	0.00E+00	0.00E+00	0.00E+00	0.00E+00	0.00E+00	0.00E+00	0.00E+00	0.00E+00	0.00E+00	0.00E+00
4326	ALL	750804.74	4040037.5	1.74E-07	70YrCancerDerived_InhSoilI	1.74E-07	0.00E+00	0.00E+00	0.00E+00	0.00E+00	0.00E+00	0.00E+00	0.00E+00	0.00E+00	0.00E+00	0.00E+00	0.00E+00
4327	ALL	751003.29	4040046.56	1.54E-07	70YrCancerDerived_InhSoilI	1.54E-07	0.00E+00	0.00E+00	0.00E+00	0.00E+00	0.00E+00	0.00E+00	0.00E+00	0.00E+00	0.00E+00	0.00E+00	0.00E+00
4328	ALL	751201.84	4040055.63	1.38E-07	70YrCancerDerived_InhSoilI	1.38E-07	0.00E+00	0.00E+00	0.00E+00	0.00E+00	0.00E+00	0.00E+00	0.00E+00	0.00E+00	0.00E+00	0.00E+00	0.00E+00
4329	ALL	751407.26	4039883.98	1.43E-07	70YrCancerDerived_InhSoilI	1.43E-07	0.00E+00	0.00E+00	0.00E+00	0.00E+00	0.00E+00	0.00E+00	0.00E+00	0.00E+00	0.00E+00	0.00E+00	0.00E+00
4330	ALL	751414.13	4039703.28	1.61E-07	70YrCancerDerived_InhSoilI	1.61E-07	0.00E+00	0.00E+00	0.00E+00	0.00E+00	0.00E+00	0.00E+00	0.00E+00	0.00E+00	0.00E+00	0.00E+00	0.00E+00
4331	ALL	751421	4039522.57	1.79E-07	70YrCancerDerived_InhSoilI	1.79E-07	0.00E+00	0.00E+00	0.00E+00	0.00E+00	0.00E+00	0.00E+00	0.00E+00	0.00E+00	0.00E+00	0.00E+00	0.00E+00
4332	ALL	751427.87	4039341.87	1.95E-07	70YrCancerDerived_InhSoilI	1.95E-07	0.00E+00	0.00E+00	0.00E+00	0.00E+00	0.00E+00	0.00E+00	0.00E+00	0.00E+00	0.00E+00	0.00E+00	0.00E+00
4333	ALL	751434.75	4039161.16	2.10E-07	70YrCancerDerived_InhSoilI	2.10E-07	0.00E+00	0.00E+00	0.00E+00	0.00E+00	0.00E+00	0.00E+00	0.00E+00	0.00E+00	0.00E+00	0.00E+00	0.00E+00
4334	ALL	751441.62	4038980.46	2.22E-07	70YrCancerDerived_InhSoilI	2.22E-07	0.00E+00	0.00E+00	0.00E+00	0.00E+00	0.00E+00	0.00E+00	0.00E+00	0.00E+00	0.00E+00	0.00E+00	0.00E+00
4335	ALL	751448.49	4038799.75	2.33E-07	70YrCancerDerived_InhSoilI	2.33E-07	0.00E+00	0.00E+00	0.00E+00	0.00E+00	0.00E+00	0.00E+00	0.00E+00	0.00E+00	0.00E+00	0.00E+00	0.00E+00
4336	ALL	751455.36	4038619.05	2.41E-07	70YrCancerDerived_InhSoilI	2.41E-07	0.00E+00	0.00E+00	0.00E+00	0.00E+00	0.00E+00	0.00E+00	0.00E+00	0.00E+00	0.00E+00	0.00E+00	0.00E+00
4337	ALL	751649.37	4038446.89	2.24E-07	70YrCancerDerived_InhSoilI	2.24E-07	0.00E+00	0.00E+00	0.00E+00	0.00E+00	0.00E+00	0.00E+00	0.00E+00	0.00E+00	0.00E+00	0.00E+00	0.00E+00
4338	ALL	751836.51	4038455.45	2.05E-07	70YrCancerDerived_InhSoilI	2.05E-07	0.00E+00	0.00E+00	0.00E+00	0.00E+00	0.00E+00	0.00E+00	0.00E+00	0.00E+00	0.00E+00	0.00E+00	0.00E+00
4339	ALL	752023.65	4038464	1.88E-07	70YrCancerDerived_InhSoilI	1.88E-07	0.00E+00	0.00E+00	0.00E+00	0.00E+00	0.00E+00	0.00E+00	0.00E+00	0.00E+00	0.00E+00	0.00E+00	0.00E+00
4340	ALL	752210.78	4038472.56	1.73E-07	70YrCancerDerived_InhSoilI	1.73E-07	0.00E+00	0.00E+00	0.00E+00	0.00E+00	0.00E+00	0.00E+00	0.00E+00	0.00E+00	0.00E+00	0.00E+00	0.00E+00
4341	ALL	752397.92	4038481.11	1.59E-07	70YrCancerDerived_InhSoilI	1.59E-07	0.00E+00	0.00E+00	0.00E+00	0.00E+00	0.00E+00	0.00E+00	0.00E+00	0.00E+00	0.00E+00	0.00E+00	0.00E+00
4342	ALL	752585.06	4038489.67	1.47E-07	70YrCancerDerived_InhSoilI	1.47E-07	0.00E+00	0.00E+00	0.00E+00	0.00E+00	0.00E+00	0.00E+00	0.00E+00	0.00E+00	0.00E+00	0.00E+00	0.00E+00
4343	ALL	752778.86	4038319.35	1.42E-07	70YrCancerDerived_InhSoilI	1.42E-07	0.00E+00	0.00E+00	0.00E+00	0.00E+00	0.00E+00	0.00E+00	0.00E+00	0.00E+00	0.00E+00	0.00E+00	0.00E+00
4344	ALL	752785.51	4038140.48	1.46E-07	70YrCancerDerived_InhSoilI	1.46E-07	0.00E+00	0.00E+00	0.00E+00	0.00E+00	0.00E+00	0.00E+00	0.00E+00	0.00E+00	0.00E+00	0.00E+00	0.00E+00
4345	ALL	752792.17	4037961.61	1.51E-07	70YrCancerDerived_InhSoilI	1.51E-07	0.00E+00	0.00E+00	0.00E+00	0.00E+00	0.00E+00	0.00E+00	0.00E+00	0.00E+00	0.00E+00	0.00E+00	0.00E+00
4346	ALL	752798.83	4037782.74	1.54E-07	70YrCancerDerived_InhSoilI	1.54E-07	0.00E+00	0.00E+00	0.00E+00	0.00E+00	0.00E+00	0.00E+00	0.00E+00	0.00E+00	0.00E+00	0.00E+00	0.00E+00
4347	ALL	752805.48	4037603.88	1.56E-07	70YrCancerDerived_InhSoilI	1.56E-07	0.00E+00	0.00E+00	0.00E+00	0.00E+00	0.00E+00	0.00E+00	0.00E+00	0.00E+00	0.00E+00	0.00E+00	0.00E+00
4348	ALL	752812.14	4037425.01	1.57E-07	70YrCancerDerived_InhSoilI	1.57E-07	0.00E+00	0.00E+00	0.00E+00	0.00E+00	0.00E+00	0.00E+00	0.00E+00	0.00E+00	0.00E+00	0.00E+00	0.00E+00
4349	ALL	752818.8	4037246.14	1.56E-07	70YrCancerDerived_InhSoilI	1.56E-07	0.00E+00	0.00E+00	0.00E+00	0.00E+00	0.00E+00	0.00E+00	0.00E+00	0.00E+00	0.00E+00	0.00E+00	0.00E+00
4350	ALL	752825.45	4037067.27	1.54E-07	70YrCancerDerived_InhSoilI	1.54E-07	0.00E+00	0.00E+00	0.00E+00	0.00E+00	0.00E+00	0.00E+00	0.00E+00	0.00E+00	0.00E+00	0.00E+00	0.00E+00
4351	ALL	753030.78	4036894.75	1.47E-07	70YrCancerDerived_InhSoilI	1.47E-07	0.00E+00	0.00E+00	0.00E+00	0.00E+00	0.00E+00	0.00E+00	0.00E+00	0.00E+00	0.00E+00	0.00E+00	0.00E+00
4352	ALL	753229.44	4036901.09	1.42E-07	70YrCancerDerived_InhSoilI	1.42E-07	0.00E+00	0.00E+00	0.00E+00	0.00E+00	0.00E+00	0.00E+00	0.00E+00	0.00E+00	0.00E+00	0.00E+00	0.00E+00
4353	ALL	753428.11	4036907.44	1.36E-07	70YrCancerDerived_InhSoilI	1.36E-07	0.00E+00	0.00E+00	0.00E+00	0.00E+00	0.00E+00	0.00E+00	0.00E+00	0.00E+00	0.00E+00	0.00E+00	0.00E+00
4354	ALL	753626.78	4036913.79	1.30E-07	70YrCancerDerived_InhSoilI	1.30E-07	0.00E+00	0.00E+00	0.00E+00	0.00E+00	0.00E+00	0.00E+00	0.00E+00	0.00E+00	0.00E+00	0.00E+00	0.00E+00
4355	ALL	753825.45	4036920.13	1.25E-07	70YrCancerDerived_InhSoilI	1.25E-07	0.00E+00	0.00E+00	0.00E+00	0.00E+00	0.00E+00	0.00E+00	0.00E+00	0.00E+00	0.00E+00	0.00E+00	0.00E+00
4356	ALL	754024.11	4036926.48	1.19E-07	70YrCancerDerived_InhSoilI	1.19E-07	0.00E+00	0.00E+00	0.00E+00	0.00E+00	0.00E+00	0.00E+00	0.00E+00	0.00E+00	0.00E+00	0.00E+00	0.00E+00
4357	ALL	754222.78	4036932.83	1.13E-07	70YrCancerDerived_InhSoilI	1.13E-07	0.00E+00	0.00E+00	0.00E+00	0.00E+00	0.00E+00	0.00E+00	0.00E+00	0.00E+00	0.00E+00	0.00E+00	0.00E+00
4358	ALL	754421.45	4036939.18	1.07E-07	70YrCancerDerived_InhSoilI	1.07E-07	0.00E+00	0.00E+00	0.00E+00	0.00E+00	0.00E+00	0.00E+00	0.00E+00	0.00E+00	0.00E+00	0.00E+00	0.00E+00
4359	ALL	754620.11	4036945.52	1.02E-07	70YrCancerDerived_InhSoilI	1.02E-07	0.00E+00	0.00E+00	0.00E+00	0.00E+00	0.00E+00	0.00E+00	0.00E+00	0.00E+00	0.00E+00	0.00E+00	0.00E+00
4360	ALL	754813.47	4037130.47	9.46E-08	70YrCancerDerived_InhSoilI	9.46E-08	0.00E+00	0.00E+00	0.00E+00	0.00E+00	0.00E+00	0.00E+00	0.00E+00	0.00E+00	0.00E+00	0.00E+00	0.00E+00
4361	ALL	754808.17	4037309.07	9.19E-08	70YrCancerDerived_InhSoilI	9.19E-08	0.00E+00	0.00E+00	0.00E+00	0.00E+00	0.00E+00	0.00E+00	0.00E+00	0.00E+00	0.00E+00	0.00E+00	0.00E+00
4362	ALL	754802.86	4037487.67	8.94E-08	70YrCancerDerived_InhSoilI	8.94E-08	0.00E+00	0.00E+00	0.00E+00	0.00E+00	0.00E+00	0.00E+00	0.00E+00	0.00E+00	0.00E+00	0.00E+00	0.00E+00
4363	ALL	754797.56	4037666.27	8.69E-08	70YrCancerDerived_InhSoilI	8.69E-08	0.00E+00	0.00E+00	0.00E+00	0.00E+00	0.00E+00	0.00E+00	0.00E+00	0.00E+00	0.00E+00	0.00E+00	0.00E+00
4364	ALL	754792.25	4037844.87	8.43E-08	70YrCancerDerived_InhSoilI	8.43E-08	0.00E+00	0.00E+00	0.00E+00	0.00E+00	0.00E+00	0.00E+00	0.00E+00	0.00E+00	0.00E+00	0.00E+00	0.00E+00
4365	ALL	754786.95	4038023.47	8.18E-08	70YrCancerDerived_InhSoilI	8.18E-08	0.00E+00	0.00E+00	0.00E+00	0.00E+00	0.00E+00	0.00E+00	0.00E+00	0.00E+00	0.00E+00	0.00E+00	0.00E+00
4366	ALL	754781.64	4038202.07	7.92E-08	70YrCancerDerived_InhSoilI	7.92E-08	0.00E+00	0.00E+00	0.00E+00	0.00E+00	0.00E+00	0.00E+00	0.00E+00	0.00E+00	0.00E+00	0.00E+00	0.00E+00

4367	ALL	754776.34	4038380.67	7.65E-08	70YrCancerDerived_InhSoilI	7.65E-08	0.00E+00	0.00E+00	0.00E+00	0.00E+00	0.00E+00	0.00E+00	0.00E+00	0.00E+00	0.00E+00	0.00E+00	0.00E+00
4368	ALL	754572.65	4038554.13	7.77E-08	70YrCancerDerived_InhSoilI	7.77E-08	0.00E+00	0.00E+00	0.00E+00	0.00E+00	0.00E+00	0.00E+00	0.00E+00	0.00E+00	0.00E+00	0.00E+00	0.00E+00
4369	ALL	754374.27	4038548.98	8.18E-08	70YrCancerDerived_InhSoilI	8.18E-08	0.00E+00	0.00E+00	0.00E+00	0.00E+00	0.00E+00	0.00E+00	0.00E+00	0.00E+00	0.00E+00	0.00E+00	0.00E+00
4370	ALL	754175.9	4038543.84	8.64E-08	70YrCancerDerived_InhSoilI	8.64E-08	0.00E+00	0.00E+00	0.00E+00	0.00E+00	0.00E+00	0.00E+00	0.00E+00	0.00E+00	0.00E+00	0.00E+00	0.00E+00
4371	ALL	753977.52	4038538.7	9.14E-08	70YrCancerDerived_InhSoilI	9.14E-08	0.00E+00	0.00E+00	0.00E+00	0.00E+00	0.00E+00	0.00E+00	0.00E+00	0.00E+00	0.00E+00	0.00E+00	0.00E+00
4372	ALL	753779.14	4038533.55	9.69E-08	70YrCancerDerived_InhSoilI	9.69E-08	0.00E+00	0.00E+00	0.00E+00	0.00E+00	0.00E+00	0.00E+00	0.00E+00	0.00E+00	0.00E+00	0.00E+00	0.00E+00
4373	ALL	753580.76	4038528.41	1.03E-07	70YrCancerDerived_InhSoilI	1.03E-07	0.00E+00	0.00E+00	0.00E+00	0.00E+00	0.00E+00	0.00E+00	0.00E+00	0.00E+00	0.00E+00	0.00E+00	0.00E+00
4374	ALL	753382.38	4038523.27	1.10E-07	70YrCancerDerived_InhSoilI	1.10E-07	0.00E+00	0.00E+00	0.00E+00	0.00E+00	0.00E+00	0.00E+00	0.00E+00	0.00E+00	0.00E+00	0.00E+00	0.00E+00
4375	ALL	753184.01	4038518.13	1.17E-07	70YrCancerDerived_InhSoilI	1.17E-07	0.00E+00	0.00E+00	0.00E+00	0.00E+00	0.00E+00	0.00E+00	0.00E+00	0.00E+00	0.00E+00	0.00E+00	0.00E+00
4376	ALL	752985.63	4038512.98	1.26E-07	70YrCancerDerived_InhSoilI	1.26E-07	0.00E+00	0.00E+00	0.00E+00	0.00E+00	0.00E+00	0.00E+00	0.00E+00	0.00E+00	0.00E+00	0.00E+00	0.00E+00
4377	ALL	752781.34	4038685.86	1.30E-07	70YrCancerDerived_InhSoilI	1.30E-07	0.00E+00	0.00E+00	0.00E+00	0.00E+00	0.00E+00	0.00E+00	0.00E+00	0.00E+00	0.00E+00	0.00E+00	0.00E+00
4378	ALL	752775.43	4038863.88	1.25E-07	70YrCancerDerived_InhSoilI	1.25E-07	0.00E+00	0.00E+00	0.00E+00	0.00E+00	0.00E+00	0.00E+00	0.00E+00	0.00E+00	0.00E+00	0.00E+00	0.00E+00
4379	ALL	752769.51	4039041.91	1.18E-07	70YrCancerDerived_InhSoilI	1.18E-07	0.00E+00	0.00E+00	0.00E+00	0.00E+00	0.00E+00	0.00E+00	0.00E+00	0.00E+00	0.00E+00	0.00E+00	0.00E+00
4380	ALL	752763.6	4039219.93	1.12E-07	70YrCancerDerived_InhSoilI	1.12E-07	0.00E+00	0.00E+00	0.00E+00	0.00E+00	0.00E+00	0.00E+00	0.00E+00	0.00E+00	0.00E+00	0.00E+00	0.00E+00
4381	ALL	752757.69	4039397.95	1.05E-07	70YrCancerDerived_InhSoilI	1.05E-07	0.00E+00	0.00E+00	0.00E+00	0.00E+00	0.00E+00	0.00E+00	0.00E+00	0.00E+00	0.00E+00	0.00E+00	0.00E+00
4382	ALL	752751.78	4039575.97	9.85E-08	70YrCancerDerived_InhSoilI	9.85E-08	0.00E+00	0.00E+00	0.00E+00	0.00E+00	0.00E+00	0.00E+00	0.00E+00	0.00E+00	0.00E+00	0.00E+00	0.00E+00
4383	ALL	752745.86	4039754	9.15E-08	70YrCancerDerived_InhSoilI	9.15E-08	0.00E+00	0.00E+00	0.00E+00	0.00E+00	0.00E+00	0.00E+00	0.00E+00	0.00E+00	0.00E+00	0.00E+00	0.00E+00
4384	ALL	752739.95	4039932.02	8.46E-08	70YrCancerDerived_InhSoilI	8.46E-08	0.00E+00	0.00E+00	0.00E+00	0.00E+00	0.00E+00	0.00E+00	0.00E+00	0.00E+00	0.00E+00	0.00E+00	0.00E+00
4385	ALL	752544.01	4040105.22	8.23E-08	70YrCancerDerived_InhSoilI	8.23E-08	0.00E+00	0.00E+00	0.00E+00	0.00E+00	0.00E+00	0.00E+00	0.00E+00	0.00E+00	0.00E+00	0.00E+00	0.00E+00
4386	ALL	752353.98	4040100.39	8.71E-08	70YrCancerDerived_InhSoilI	8.71E-08	0.00E+00	0.00E+00	0.00E+00	0.00E+00	0.00E+00	0.00E+00	0.00E+00	0.00E+00	0.00E+00	0.00E+00	0.00E+00
4387	ALL	752163.95	4040095.57	9.24E-08	70YrCancerDerived_InhSoilI	9.24E-08	0.00E+00	0.00E+00	0.00E+00	0.00E+00	0.00E+00	0.00E+00	0.00E+00	0.00E+00	0.00E+00	0.00E+00	0.00E+00
4388	ALL	751973.92	4040090.74	9.86E-08	70YrCancerDerived_InhSoilI	9.86E-08	0.00E+00	0.00E+00	0.00E+00	0.00E+00	0.00E+00	0.00E+00	0.00E+00	0.00E+00	0.00E+00	0.00E+00	0.00E+00
4389	ALL	751783.89	4040085.92	1.06E-07	70YrCancerDerived_InhSoilI	1.06E-07	0.00E+00	0.00E+00	0.00E+00	0.00E+00	0.00E+00	0.00E+00	0.00E+00	0.00E+00	0.00E+00	0.00E+00	0.00E+00
4390	ALL	751593.86	4040081.09	1.14E-07	70YrCancerDerived_InhSoilI	1.14E-07	0.00E+00	0.00E+00	0.00E+00	0.00E+00	0.00E+00	0.00E+00	0.00E+00	0.00E+00	0.00E+00	0.00E+00	0.00E+00
4391	ALL	751397.81	4040275.91	1.06E-07	70YrCancerDerived_InhSoilI	1.06E-07	0.00E+00	0.00E+00	0.00E+00	0.00E+00	0.00E+00	0.00E+00	0.00E+00	0.00E+00	0.00E+00	0.00E+00	0.00E+00
4392	ALL	751391.8	4040475.55	9.02E-08	70YrCancerDerived_InhSoilI	9.02E-08	0.00E+00	0.00E+00	0.00E+00	0.00E+00	0.00E+00	0.00E+00	0.00E+00	0.00E+00	0.00E+00	0.00E+00	0.00E+00
4393	ALL	751385.78	4040675.19	7.66E-08	70YrCancerDerived_InhSoilI	7.66E-08	0.00E+00	0.00E+00	0.00E+00	0.00E+00	0.00E+00	0.00E+00	0.00E+00	0.00E+00	0.00E+00	0.00E+00	0.00E+00
4394	ALL	751379.77	4040874.83	6.57E-08	70YrCancerDerived_InhSoilI	6.57E-08	0.00E+00	0.00E+00	0.00E+00	0.00E+00	0.00E+00	0.00E+00	0.00E+00	0.00E+00	0.00E+00	0.00E+00	0.00E+00
4395	ALL	751373.76	4041074.47	5.75E-08	70YrCancerDerived_InhSoilI	5.75E-08	0.00E+00	0.00E+00	0.00E+00	0.00E+00	0.00E+00	0.00E+00	0.00E+00	0.00E+00	0.00E+00	0.00E+00	0.00E+00
4396	ALL	751367.74	4041274.11	5.15E-08	70YrCancerDerived_InhSoilI	5.15E-08	0.00E+00	0.00E+00	0.00E+00	0.00E+00	0.00E+00	0.00E+00	0.00E+00	0.00E+00	0.00E+00	0.00E+00	0.00E+00
4397	ALL	751361.72	4041473.75	4.69E-08	70YrCancerDerived_InhSoilI	4.69E-08	0.00E+00	0.00E+00	0.00E+00	0.00E+00	0.00E+00	0.00E+00	0.00E+00	0.00E+00	0.00E+00	0.00E+00	0.00E+00
4398	ALL	751550.15	4041680.64	4.25E-08	70YrCancerDerived_InhSoilI	4.25E-08	0.00E+00	0.00E+00	0.00E+00	0.00E+00	0.00E+00	0.00E+00	0.00E+00	0.00E+00	0.00E+00	0.00E+00	0.00E+00
4399	ALL	751744.6	4041687.88	4.18E-08	70YrCancerDerived_InhSoilI	4.18E-08	0.00E+00	0.00E+00	0.00E+00	0.00E+00	0.00E+00	0.00E+00	0.00E+00	0.00E+00	0.00E+00	0.00E+00	0.00E+00
4400	ALL	751939.04	4041695.13	4.10E-08	70YrCancerDerived_InhSoilI	4.10E-08	0.00E+00	0.00E+00	0.00E+00	0.00E+00	0.00E+00	0.00E+00	0.00E+00	0.00E+00	0.00E+00	0.00E+00	0.00E+00
4401	ALL	752133.48	4041702.38	4.02E-08	70YrCancerDerived_InhSoilI	4.02E-08	0.00E+00	0.00E+00	0.00E+00	0.00E+00	0.00E+00	0.00E+00	0.00E+00	0.00E+00	0.00E+00	0.00E+00	0.00E+00
4402	ALL	752327.92	4041709.62	3.94E-08	70YrCancerDerived_InhSoilI	3.94E-08	0.00E+00	0.00E+00	0.00E+00	0.00E+00	0.00E+00	0.00E+00	0.00E+00	0.00E+00	0.00E+00	0.00E+00	0.00E+00
4403	ALL	752522.37	4041716.87	3.86E-08	70YrCancerDerived_InhSoilI	3.86E-08	0.00E+00	0.00E+00	0.00E+00	0.00E+00	0.00E+00	0.00E+00	0.00E+00	0.00E+00	0.00E+00	0.00E+00	0.00E+00
4404	ALL	752716.81	4041724.11	3.78E-08	70YrCancerDerived_InhSoilI	3.78E-08	0.00E+00	0.00E+00	0.00E+00	0.00E+00	0.00E+00	0.00E+00	0.00E+00	0.00E+00	0.00E+00	0.00E+00	0.00E+00
4405	ALL	752911.25	4041731.36	3.71E-08	70YrCancerDerived_InhSoilI	3.71E-08	0.00E+00	0.00E+00	0.00E+00	0.00E+00	0.00E+00	0.00E+00	0.00E+00	0.00E+00	0.00E+00	0.00E+00	0.00E+00
4406	ALL	753105.69	4041738.61	3.63E-08	70YrCancerDerived_InhSoilI	3.63E-08	0.00E+00	0.00E+00	0.00E+00	0.00E+00	0.00E+00	0.00E+00	0.00E+00	0.00E+00	0.00E+00	0.00E+00	0.00E+00
4407	ALL	753300.14	4041745.85	3.57E-08	70YrCancerDerived_InhSoilI	3.57E-08	0.00E+00	0.00E+00	0.00E+00	0.00E+00	0.00E+00	0.00E+00	0.00E+00	0.00E+00	0.00E+00	0.00E+00	0.00E+00
4408	ALL	753484.73	4041987.72	3.29E-08	70YrCancerDerived_InhSoilI	3.29E-08	0.00E+00	0.00E+00	0.00E+00	0.00E+00	0.00E+00	0.00E+00	0.00E+00	0.00E+00	0.00E+00	0.00E+00	0.00E+00
4409	ALL	753476.91	4042185.52	3.15E-08	70YrCancerDerived_InhSoilI	3.15E-08	0.00E+00	0.00E+00	0.00E+00	0.00E+00	0.00E+00	0.00E+00	0.00E+00	0.00E+00	0.00E+00	0.00E+00	0.00E+00
4410	ALL	753469.09	4042383.31	3.01E-08	70YrCancerDerived_InhSoilI	3.01E-08	0.00E+00	0.00E+00	0.00E+00	0.00E+00	0.00E+00	0.00E+00	0.00E+00	0.00E+00	0.00E+00	0.00E+00	0.00E+00
4411	ALL	753461.28	4042581.1	2.88E-08	70YrCancerDerived_InhSoilI	2.88E-08	0.00E+00	0.00E+00	0.00E+00	0.00E+00	0.00E+00	0.00E+00	0.00E+00	0.00E+00	0.00E+00	0.00E+00	0.00E+00
4412	ALL	753453.46	4042778.9	2.77E-08	70YrCancerDerived_InhSoilI	2.77E-08	0.00E+00	0.00E+00	0.00E+00	0.00E+00	0.00E+00	0.00E+00	0.00E+00	0.00E+00	0.00E+00	0.00E+00	0.00E+00
4413	ALL	753445.64	4042976.69	2.68E-08	70YrCancerDerived_InhSoilI	2.68E-08	0.00E+00	0.00E+00	0.00E+00	0.00E+00	0.00E+00	0.00E+00	0.00E+00	0.00E+00	0.00E+00	0.00E+00	0.00E+00
4414	ALL	753437.82	4043174.49	2.61E-08	70YrCancerDerived_InhSoilI	2.61E-08	0.00E+00	0.00E+00	0.00E+00	0.00E+00	0.00E+00	0.00E+00	0.00E+00	0.00E+00	0.00E+00	0.00E+00	0.00E+00
4415	ALL	753265.73	4043365.92	2.57E-08	70YrCancerDerived_InhSoilI	2.57E-08	0.00E+00	0.00E+00	0.00E+00	0.00E+00	0.00E+00	0.00E+00	0.00E+00	0.00E+00	0.00E+00	0.00E+00	0.00E+00
4416	ALL	753101.45	4043359.56	2.58E-08	70YrCancerDerived_InhSoilI	2.58E-08	0.00E+00	0.00E+00	0.00E+00	0.00E+00	0.00E+00	0.00E+00	0.00E+00	0.00E+00	0.00E+00	0.00E+00	0.00E+00
4417	ALL	752937.18	4043353.21	2.59E-08	70YrCancerDerived_InhSoilI	2.59E-08	0.00E+00	0.00E+00	0.00E+00	0.00E+00	0.00E+00	0.00E+00	0.00E+00	0.00E+00	0.00E+00	0.00E+00	0.00E+00
4418	ALL	752772.9	4043346.85	2.59E-08	70YrCancerDerived_InhSoilI	2.59E-08	0.00E+00	0.00E+00	0.00E+00	0.00E+00	0.00E+00	0.00E+00	0.00E+00	0.00E+00	0.00E+00	0.00E+00	0.00E+00
4419	ALL	752606.42	4043519.77	2.46E-08	70YrCancerDerived_InhSoilI	2.46E-08	0.00E+00	0.00E+00	0.00E+00	0.00E+00	0.00E+00	0.00E+00	0.00E+00	0.00E+00	0.00E+00	0.00E+00	0.00E+00
4420	ALL	752604.2	4043699.05	2.34E-08	70YrCancerDerived_InhSoilI	2.34E-08	0.00E+00	0.00E+00	0.00E+00	0.00E+00	0.00E+00	0.00E+00	0.00E+00	0.00E+00	0.00E+00	0.00E+00	0.00E+00
4421	ALL	752601.99	4043878.33	2.24E-08	70YrCancerDerived_InhSoilI	2.24E-08	0.00E+00	0.00E+00	0.00E+00	0.00E+00	0.00E+00	0.00E+00	0.00E+00	0.00E+00	0.00E+00	0.00E+00	0.00E+00
4422	ALL	752599.77	4044057.61	2.16E-08	70YrCancerDerived_InhSoilI	2.16E-08	0.00E+00	0.00E+00	0.00E+00	0.00E+00	0.00E+00	0.00E+00	0.00E+00	0.00E+00	0.00E+00	0.00E+00	0.00E+00

4423	ALL	752597.56	4044236.9	2.08E-08	70YrCancerDerived_InhSoil[	2.08E-08	0.00E+00	0.00E+00	0.00E+00	0.00E+00	0.00E+00	0.00E+00	0.00E+00	0.00E+00	0.00E+00	0.00E+00	0.00E+00	0.00E+00
4424	ALL	752595.34	4044416.18	2.01E-08	70YrCancerDerived_InhSoil[	2.01E-08	0.00E+00	0.00E+00	0.00E+00	0.00E+00	0.00E+00	0.00E+00	0.00E+00	0.00E+00	0.00E+00	0.00E+00	0.00E+00	0.00E+00
4425	ALL	752593.13	4044595.46	1.95E-08	70YrCancerDerived_InhSoil[	1.95E-08	0.00E+00	0.00E+00	0.00E+00	0.00E+00	0.00E+00	0.00E+00	0.00E+00	0.00E+00	0.00E+00	0.00E+00	0.00E+00	0.00E+00
4426	ALL	752590.91	4044774.74	1.90E-08	70YrCancerDerived_InhSoil[	1.90E-08	0.00E+00	0.00E+00	0.00E+00	0.00E+00	0.00E+00	0.00E+00	0.00E+00	0.00E+00	0.00E+00	0.00E+00	0.00E+00	0.00E+00
4427	ALL	752412.91	4044950.79	1.87E-08	70YrCancerDerived_InhSoil[	1.87E-08	0.00E+00	0.00E+00	0.00E+00	0.00E+00	0.00E+00	0.00E+00	0.00E+00	0.00E+00	0.00E+00	0.00E+00	0.00E+00	0.00E+00
4428	ALL	752237.11	4044947.56	1.87E-08	70YrCancerDerived_InhSoil[	1.87E-08	0.00E+00	0.00E+00	0.00E+00	0.00E+00	0.00E+00	0.00E+00	0.00E+00	0.00E+00	0.00E+00	0.00E+00	0.00E+00	0.00E+00
4429	ALL	752061.32	4044944.32	1.88E-08	70YrCancerDerived_InhSoil[	1.88E-08	0.00E+00	0.00E+00	0.00E+00	0.00E+00	0.00E+00	0.00E+00	0.00E+00	0.00E+00	0.00E+00	0.00E+00	0.00E+00	0.00E+00
4430	ALL	751885.52	4044941.09	1.88E-08	70YrCancerDerived_InhSoil[	1.88E-08	0.00E+00	0.00E+00	0.00E+00	0.00E+00	0.00E+00	0.00E+00	0.00E+00	0.00E+00	0.00E+00	0.00E+00	0.00E+00	0.00E+00
4431	ALL	751709.73	4044937.86	1.88E-08	70YrCancerDerived_InhSoil[	1.88E-08	0.00E+00	0.00E+00	0.00E+00	0.00E+00	0.00E+00	0.00E+00	0.00E+00	0.00E+00	0.00E+00	0.00E+00	0.00E+00	0.00E+00
4432	ALL	751533.94	4044934.63	1.88E-08	70YrCancerDerived_InhSoil[	1.88E-08	0.00E+00	0.00E+00	0.00E+00	0.00E+00	0.00E+00	0.00E+00	0.00E+00	0.00E+00	0.00E+00	0.00E+00	0.00E+00	0.00E+00
4433	ALL	751358.14	4044931.39	1.89E-08	70YrCancerDerived_InhSoil[	1.89E-08	0.00E+00	0.00E+00	0.00E+00	0.00E+00	0.00E+00	0.00E+00	0.00E+00	0.00E+00	0.00E+00	0.00E+00	0.00E+00	0.00E+00
4434	ALL	751006.68	4044917.24	1.94E-08	70YrCancerDerived_InhSoil[	1.94E-08	0.00E+00	0.00E+00	0.00E+00	0.00E+00	0.00E+00	0.00E+00	0.00E+00	0.00E+00	0.00E+00	0.00E+00	0.00E+00	0.00E+00
4435	ALL	750831.01	4044906.31	1.98E-08	70YrCancerDerived_InhSoil[	1.98E-08	0.00E+00	0.00E+00	0.00E+00	0.00E+00	0.00E+00	0.00E+00	0.00E+00	0.00E+00	0.00E+00	0.00E+00	0.00E+00	0.00E+00
4436	ALL	750655.34	4044895.39	2.03E-08	70YrCancerDerived_InhSoil[	2.03E-08	0.00E+00	0.00E+00	0.00E+00	0.00E+00	0.00E+00	0.00E+00	0.00E+00	0.00E+00	0.00E+00	0.00E+00	0.00E+00	0.00E+00
4437	ALL	750479.68	4044884.47	2.10E-08	70YrCancerDerived_InhSoil[	2.10E-08	0.00E+00	0.00E+00	0.00E+00	0.00E+00	0.00E+00	0.00E+00	0.00E+00	0.00E+00	0.00E+00	0.00E+00	0.00E+00	0.00E+00
4438	ALL	750304.01	4044873.54	2.16E-08	70YrCancerDerived_InhSoil[	2.16E-08	0.00E+00	0.00E+00	0.00E+00	0.00E+00	0.00E+00	0.00E+00	0.00E+00	0.00E+00	0.00E+00	0.00E+00	0.00E+00	0.00E+00
4439	ALL	750124.51	4045062.17	2.15E-08	70YrCancerDerived_InhSoil[	2.15E-08	0.00E+00	0.00E+00	0.00E+00	0.00E+00	0.00E+00	0.00E+00	0.00E+00	0.00E+00	0.00E+00	0.00E+00	0.00E+00	0.00E+00
4440	ALL	750120.68	4045261.72	2.09E-08	70YrCancerDerived_InhSoil[	2.09E-08	0.00E+00	0.00E+00	0.00E+00	0.00E+00	0.00E+00	0.00E+00	0.00E+00	0.00E+00	0.00E+00	0.00E+00	0.00E+00	0.00E+00
4441	ALL	750116.84	4045461.27	2.03E-08	70YrCancerDerived_InhSoil[	2.03E-08	0.00E+00	0.00E+00	0.00E+00	0.00E+00	0.00E+00	0.00E+00	0.00E+00	0.00E+00	0.00E+00	0.00E+00	0.00E+00	0.00E+00
4442	ALL	749930.09	4045652.73	1.96E-08	70YrCancerDerived_InhSoil[	1.96E-08	0.00E+00	0.00E+00	0.00E+00	0.00E+00	0.00E+00	0.00E+00	0.00E+00	0.00E+00	0.00E+00	0.00E+00	0.00E+00	0.00E+00
4443	ALL	749747.16	4045644.64	1.96E-08	70YrCancerDerived_InhSoil[	1.96E-08	0.00E+00	0.00E+00	0.00E+00	0.00E+00	0.00E+00	0.00E+00	0.00E+00	0.00E+00	0.00E+00	0.00E+00	0.00E+00	0.00E+00
4444	ALL	749564.24	4045636.55	1.97E-08	70YrCancerDerived_InhSoil[	1.97E-08	0.00E+00	0.00E+00	0.00E+00	0.00E+00	0.00E+00	0.00E+00	0.00E+00	0.00E+00	0.00E+00	0.00E+00	0.00E+00	0.00E+00
4445	ALL	749381.32	4045628.46	2.01E-08	70YrCancerDerived_InhSoil[	2.01E-08	0.00E+00	0.00E+00	0.00E+00	0.00E+00	0.00E+00	0.00E+00	0.00E+00	0.00E+00	0.00E+00	0.00E+00	0.00E+00	0.00E+00
4446	ALL	749198.39	4045620.38	2.05E-08	70YrCancerDerived_InhSoil[	2.05E-08	0.00E+00	0.00E+00	0.00E+00	0.00E+00	0.00E+00	0.00E+00	0.00E+00	0.00E+00	0.00E+00	0.00E+00	0.00E+00	0.00E+00
4447	ALL	749015.47	4045612.29	2.09E-08	70YrCancerDerived_InhSoil[	2.09E-08	0.00E+00	0.00E+00	0.00E+00	0.00E+00	0.00E+00	0.00E+00	0.00E+00	0.00E+00	0.00E+00	0.00E+00	0.00E+00	0.00E+00
4448	ALL	748832.55	4045604.2	2.14E-08	70YrCancerDerived_InhSoil[	2.14E-08	0.00E+00	0.00E+00	0.00E+00	0.00E+00	0.00E+00	0.00E+00	0.00E+00	0.00E+00	0.00E+00	0.00E+00	0.00E+00	0.00E+00
4449	ALL	748649.62	4045596.11	2.18E-08	70YrCancerDerived_InhSoil[	2.18E-08	0.00E+00	0.00E+00	0.00E+00	0.00E+00	0.00E+00	0.00E+00	0.00E+00	0.00E+00	0.00E+00	0.00E+00	0.00E+00	0.00E+00
4450	ALL	748470.57	4045402.95	2.30E-08	70YrCancerDerived_InhSoil[	2.30E-08	0.00E+00	0.00E+00	0.00E+00	0.00E+00	0.00E+00	0.00E+00	0.00E+00	0.00E+00	0.00E+00	0.00E+00	0.00E+00	0.00E+00
4451	ALL	748474.44	4045217.88	2.37E-08	70YrCancerDerived_InhSoil[	2.37E-08	0.00E+00	0.00E+00	0.00E+00	0.00E+00	0.00E+00	0.00E+00	0.00E+00	0.00E+00	0.00E+00	0.00E+00	0.00E+00	0.00E+00
4452	ALL	748478.32	4045032.81	2.44E-08	70YrCancerDerived_InhSoil[	2.44E-08	0.00E+00	0.00E+00	0.00E+00	0.00E+00	0.00E+00	0.00E+00	0.00E+00	0.00E+00	0.00E+00	0.00E+00	0.00E+00	0.00E+00
4453	ALL	748482.19	4044847.74	2.51E-08	70YrCancerDerived_InhSoil[	2.51E-08	0.00E+00	0.00E+00	0.00E+00	0.00E+00	0.00E+00	0.00E+00	0.00E+00	0.00E+00	0.00E+00	0.00E+00	0.00E+00	0.00E+00
4454	ALL	748486.06	4044662.67	2.57E-08	70YrCancerDerived_InhSoil[	2.57E-08	0.00E+00	0.00E+00	0.00E+00	0.00E+00	0.00E+00	0.00E+00	0.00E+00	0.00E+00	0.00E+00	0.00E+00	0.00E+00	0.00E+00
4455	ALL	748489.93	4044477.6	2.67E-08	70YrCancerDerived_InhSoil[	2.67E-08	0.00E+00	0.00E+00	0.00E+00	0.00E+00	0.00E+00	0.00E+00	0.00E+00	0.00E+00	0.00E+00	0.00E+00	0.00E+00	0.00E+00
4456	ALL	748493.81	4044292.53	2.76E-08	70YrCancerDerived_InhSoil[	2.76E-08	0.00E+00	0.00E+00	0.00E+00	0.00E+00	0.00E+00	0.00E+00	0.00E+00	0.00E+00	0.00E+00	0.00E+00	0.00E+00	0.00E+00
4457	ALL	748497.68	4044107.46	2.86E-08	70YrCancerDerived_InhSoil[	2.86E-08	0.00E+00	0.00E+00	0.00E+00	0.00E+00	0.00E+00	0.00E+00	0.00E+00	0.00E+00	0.00E+00	0.00E+00	0.00E+00	0.00E+00
4458	ALL	748501.55	4043922.39	2.96E-08	70YrCancerDerived_InhSoil[	2.96E-08	0.00E+00	0.00E+00	0.00E+00	0.00E+00	0.00E+00	0.00E+00	0.00E+00	0.00E+00	0.00E+00	0.00E+00	0.00E+00	0.00E+00
4459	ALL	748505.42	4043737.32	3.07E-08	70YrCancerDerived_InhSoil[	3.07E-08	0.00E+00	0.00E+00	0.00E+00	0.00E+00	0.00E+00	0.00E+00	0.00E+00	0.00E+00	0.00E+00	0.00E+00	0.00E+00	0.00E+00
4460	ALL	748509.3	4043552.25	3.19E-08	70YrCancerDerived_InhSoil[	3.19E-08	0.00E+00	0.00E+00	0.00E+00	0.00E+00	0.00E+00	0.00E+00	0.00E+00	0.00E+00	0.00E+00	0.00E+00	0.00E+00	0.00E+00
4461	ALL	748513.17	4043367.18	3.32E-08	70YrCancerDerived_InhSoil[	3.32E-08	0.00E+00	0.00E+00	0.00E+00	0.00E+00	0.00E+00	0.00E+00	0.00E+00	0.00E+00	0.00E+00	0.00E+00	0.00E+00	0.00E+00
4462	ALL	748521.32	4043003.52	3.61E-08	70YrCancerDerived_InhSoil[	3.61E-08	0.00E+00	0.00E+00	0.00E+00	0.00E+00	0.00E+00	0.00E+00	0.00E+00	0.00E+00	0.00E+00	0.00E+00	0.00E+00	0.00E+00
4463	ALL	748525.6	4042824.93	3.78E-08	70YrCancerDerived_InhSoil[	3.78E-08	0.00E+00	0.00E+00	0.00E+00	0.00E+00	0.00E+00	0.00E+00	0.00E+00	0.00E+00	0.00E+00	0.00E+00	0.00E+00	0.00E+00
4464	ALL	748529.88	4042646.34	3.97E-08	70YrCancerDerived_InhSoil[	3.97E-08	0.00E+00	0.00E+00	0.00E+00	0.00E+00	0.00E+00	0.00E+00	0.00E+00	0.00E+00	0.00E+00	0.00E+00	0.00E+00	0.00E+00
4465	ALL	748534.16	4042467.75	4.19E-08	70YrCancerDerived_InhSoil[	4.19E-08	0.00E+00	0.00E+00	0.00E+00	0.00E+00	0.00E+00	0.00E+00	0.00E+00	0.00E+00	0.00E+00	0.00E+00	0.00E+00	0.00E+00
4466	ALL	748538.45	4042289.16	4.44E-08	70YrCancerDerived_InhSoil[	4.44E-08	0.00E+00	0.00E+00	0.00E+00	0.00E+00	0.00E+00	0.00E+00	0.00E+00	0.00E+00	0.00E+00	0.00E+00	0.00E+00	0.00E+00
4467	ALL	748542.73	4042110.57	4.73E-08	70YrCancerDerived_InhSoil[	4.73E-08	0.00E+00	0.00E+00	0.00E+00	0.00E+00	0.00E+00	0.00E+00	0.00E+00	0.00E+00	0.00E+00	0.00E+00	0.00E+00	0.00E+00
4468	ALL	748547.01	4041931.98	5.07E-08	70YrCancerDerived_InhSoil[	5.07E-08	0.00E+00	0.00E+00	0.00E+00	0.00E+00	0.00E+00	0.00E+00	0.00E+00	0.00E+00	0.00E+00	0.00E+00	0.00E+00	0.00E+00
4469	ALL	748551.29	4041753.39	5.47E-08	70YrCancerDerived_InhSoil[	5.47E-08	0.00E+00	0.00E+00	0.00E+00	0.00E+00	0.00E+00	0.00E+00	0.00E+00	0.00E+00	0.00E+00	0.00E+00	0.00E+00	0.00E+00
4470	ALL	748415.26	4041570.97	6.46E-08	70YrCancerDerived_InhSoil[	6.46E-08	0.00E+00	0.00E+00	0.00E+00	0.00E+00	0.00E+00	0.00E+00	0.00E+00	0.00E+00	0.00E+00	0.00E+00	0.00E+00	0.00E+00
4471	ALL	748274.94	4041567.13	7.04E-08	70YrCancerDerived_InhSoil[	7.04E-08	0.00E+00	0.00E+00	0.00E+00	0.00E+00	0.00E+00	0.00E+00	0.00E+00	0.00E+00	0.00E+00	0.00E+00	0.00E+00	0.00E+00
4472	ALL	747999.07	4041558.26	8.26E-08	70YrCancerDerived_InhSoil[	8.26E-08	0.00E+00	0.00E+00	0.00E+00	0.00E+00	0.00E+00	0.00E+00	0.00E+00	0.00E+00	0.00E+00	0.00E+00	0.00E+00	0.00E+00
4473	ALL	747863.5	4041553.23	8.95E-08	70YrCancerDerived_InhSoil[	8.95E-08	0.00E+00	0.00E+00	0.00E+00	0.00E+00	0.00E+00	0.00E+00	0.00E+00	0.00E+00	0.00E+00	0.00E+00	0.00E+00	0.00E+00
4474	ALL	747530.03	4041541.69	1.17E-07	70YrCancerDerived_InhSoil[	1.17E-07	0.00E+00	0.00E+00	0.00E+00	0.00E+00	0.00E+00	0.00E+00	0.00E+00	0.00E+00	0.00E+00	0.00E+00	0.00E+00	0.00E+00
4475	ALL	747332.13	4041535.19	1.31E-07	70YrCancerDerived_InhSoil[	1.31E-07	0.00E+00	0.00E+00	0.00E+00	0.00E+00	0.00E+00	0.00E+00	0.00E+00	0.00E+00	0.00E+00	0.00E+00	0.00E+00	0.00E+00
4476	ALL	747134.22	4041528.68	1.40E-07	70YrCancerDerived_InhSoil[	1.40E-07	0.00E+00	0.00E+00	0.00E+00	0.00E+00	0.00E+00	0.00E+00	0.00E+00	0.00E+00	0.00E+00	0.00E+00	0.00E+00	0.00E+00
4477	ALL	746936.32	4041522.18	1.39E-07	70YrCancerDerived_InhSoil[	1.39E-07	0.00E+00	0.00E+00	0.00E+00	0.00E+00	0.00E+00	0.00E+00	0.00E+00	0.00E+00	0.00E+00	0.00E+00	0.00E+00	0.00E+00
4478	ALL	746737.17	4041318.1	1.32E-07	70YrCancerDerived_InhSoil[	1.32E-07	0.00E+00	0.00E+00	0.00E+00	0.00E+00	0.00E+00	0.00E+00	0.00E+00	0.00E+00	0.00E+00	0.00E+00	0.00E+00	0.00E+00

4479	ALL	746544.71	4040913.4	1.00E-07	70YrCancerDerived_InhSoilI	1.00E-07	0.00E+00	0.00E+00	0.00E+00	0.00E+00	0.00E+00	0.00E+00	0.00E+00	0.00E+00	0.00E+00	0.00E+00	0.00E+00
4480	ALL	746546.18	4040716.18	9.21E-08	70YrCancerDerived_InhSoilI	9.21E-08	0.00E+00	0.00E+00	0.00E+00	0.00E+00	0.00E+00	0.00E+00	0.00E+00	0.00E+00	0.00E+00	0.00E+00	0.00E+00
4481	ALL	746752.4	4039891.44	7.53E-08	70YrCancerDerived_InhSoilI	7.53E-08	0.00E+00	0.00E+00	0.00E+00	0.00E+00	0.00E+00	0.00E+00	0.00E+00	0.00E+00	0.00E+00	0.00E+00	0.00E+00
4482	ALL	746931.8	4039897.49	7.72E-08	70YrCancerDerived_InhSoilI	7.72E-08	0.00E+00	0.00E+00	0.00E+00	0.00E+00	0.00E+00	0.00E+00	0.00E+00	0.00E+00	0.00E+00	0.00E+00	0.00E+00
4483	ALL	747111.2	4039903.53	7.97E-08	70YrCancerDerived_InhSoilI	7.97E-08	0.00E+00	0.00E+00	0.00E+00	0.00E+00	0.00E+00	0.00E+00	0.00E+00	0.00E+00	0.00E+00	0.00E+00	0.00E+00
4484	ALL	747290.6	4039909.57	8.30E-08	70YrCancerDerived_InhSoilI	8.30E-08	0.00E+00	0.00E+00	0.00E+00	0.00E+00	0.00E+00	0.00E+00	0.00E+00	0.00E+00	0.00E+00	0.00E+00	0.00E+00
4485	ALL	747470.01	4039915.62	8.75E-08	70YrCancerDerived_InhSoilI	8.75E-08	0.00E+00	0.00E+00	0.00E+00	0.00E+00	0.00E+00	0.00E+00	0.00E+00	0.00E+00	0.00E+00	0.00E+00	0.00E+00
4486	ALL	747649.41	4039921.66	9.48E-08	70YrCancerDerived_InhSoilI	9.48E-08	0.00E+00	0.00E+00	0.00E+00	0.00E+00	0.00E+00	0.00E+00	0.00E+00	0.00E+00	0.00E+00	0.00E+00	0.00E+00
4487	ALL	747828.81	4039927.7	1.09E-07	70YrCancerDerived_InhSoilI	1.09E-07	0.00E+00	0.00E+00	0.00E+00	0.00E+00	0.00E+00	0.00E+00	0.00E+00	0.00E+00	0.00E+00	0.00E+00	0.00E+00
4488	ALL	748008.21	4039933.75	1.37E-07	70YrCancerDerived_InhSoilI	1.37E-07	0.00E+00	0.00E+00	0.00E+00	0.00E+00	0.00E+00	0.00E+00	0.00E+00	0.00E+00	0.00E+00	0.00E+00	0.00E+00
4489	ALL	748192.76	4039742.94	1.55E-07	70YrCancerDerived_InhSoilI	1.55E-07	0.00E+00	0.00E+00	0.00E+00	0.00E+00	0.00E+00	0.00E+00	0.00E+00	0.00E+00	0.00E+00	0.00E+00	0.00E+00
4490	ALL	748197.9	4039546.08	1.34E-07	70YrCancerDerived_InhSoilI	1.34E-07	0.00E+00	0.00E+00	0.00E+00	0.00E+00	0.00E+00	0.00E+00	0.00E+00	0.00E+00	0.00E+00	0.00E+00	0.00E+00
4491	ALL	748203.05	4039349.23	1.23E-07	70YrCancerDerived_InhSoilI	1.23E-07	0.00E+00	0.00E+00	0.00E+00	0.00E+00	0.00E+00	0.00E+00	0.00E+00	0.00E+00	0.00E+00	0.00E+00	0.00E+00
4492	ALL	748208.19	4039152.38	1.15E-07	70YrCancerDerived_InhSoilI	1.15E-07	0.00E+00	0.00E+00	0.00E+00	0.00E+00	0.00E+00	0.00E+00	0.00E+00	0.00E+00	0.00E+00	0.00E+00	0.00E+00
4493	ALL	748213.33	4038955.53	1.06E-07	70YrCancerDerived_InhSoilI	1.06E-07	0.00E+00	0.00E+00	0.00E+00	0.00E+00	0.00E+00	0.00E+00	0.00E+00	0.00E+00	0.00E+00	0.00E+00	0.00E+00
4494	ALL	748218.48	4038758.67	9.83E-08	70YrCancerDerived_InhSoilI	9.83E-08	0.00E+00	0.00E+00	0.00E+00	0.00E+00	0.00E+00	0.00E+00	0.00E+00	0.00E+00	0.00E+00	0.00E+00	0.00E+00
4495	ALL	748223.63	4038561.82	9.16E-08	70YrCancerDerived_InhSoilI	9.16E-08	0.00E+00	0.00E+00	0.00E+00	0.00E+00	0.00E+00	0.00E+00	0.00E+00	0.00E+00	0.00E+00	0.00E+00	0.00E+00
4496	ALL	748228.77	4038364.97	8.60E-08	70YrCancerDerived_InhSoilI	8.60E-08	0.00E+00	0.00E+00	0.00E+00	0.00E+00	0.00E+00	0.00E+00	0.00E+00	0.00E+00	0.00E+00	0.00E+00	0.00E+00
4497	ALL	748233.92	4038168.12	8.15E-08	70YrCancerDerived_InhSoilI	8.15E-08	0.00E+00	0.00E+00	0.00E+00	0.00E+00	0.00E+00	0.00E+00	0.00E+00	0.00E+00	0.00E+00	0.00E+00	0.00E+00
4498	ALL	748239.06	4037971.27	7.85E-08	70YrCancerDerived_InhSoilI	7.85E-08	0.00E+00	0.00E+00	0.00E+00	0.00E+00	0.00E+00	0.00E+00	0.00E+00	0.00E+00	0.00E+00	0.00E+00	0.00E+00
4499	ALL	748244.21	4037774.41	7.69E-08	70YrCancerDerived_InhSoilI	7.69E-08	0.00E+00	0.00E+00	0.00E+00	0.00E+00	0.00E+00	0.00E+00	0.00E+00	0.00E+00	0.00E+00	0.00E+00	0.00E+00
4500	ALL	748249.35	4037577.56	7.68E-08	70YrCancerDerived_InhSoilI	7.68E-08	0.00E+00	0.00E+00	0.00E+00	0.00E+00	0.00E+00	0.00E+00	0.00E+00	0.00E+00	0.00E+00	0.00E+00	0.00E+00
4501	ALL	748254.49	4037380.71	7.82E-08	70YrCancerDerived_InhSoilI	7.82E-08	0.00E+00	0.00E+00	0.00E+00	0.00E+00	0.00E+00	0.00E+00	0.00E+00	0.00E+00	0.00E+00	0.00E+00	0.00E+00
4502	ALL	748259.64	4037183.85	8.19E-08	70YrCancerDerived_InhSoilI	8.19E-08	0.00E+00	0.00E+00	0.00E+00	0.00E+00	0.00E+00	0.00E+00	0.00E+00	0.00E+00	0.00E+00	0.00E+00	0.00E+00
4503	ALL	748264.79	4036987	8.91E-08	70YrCancerDerived_InhSoilI	8.91E-08	0.00E+00	0.00E+00	0.00E+00	0.00E+00	0.00E+00	0.00E+00	0.00E+00	0.00E+00	0.00E+00	0.00E+00	0.00E+00
4504	ALL	748073.87	4036783.77	9.98E-08	70YrCancerDerived_InhSoilI	9.98E-08	0.00E+00	0.00E+00	0.00E+00	0.00E+00	0.00E+00	0.00E+00	0.00E+00	0.00E+00	0.00E+00	0.00E+00	0.00E+00
4505	ALL	747877.81	4036777.4	9.99E-08	70YrCancerDerived_InhSoilI	9.99E-08	0.00E+00	0.00E+00	0.00E+00	0.00E+00	0.00E+00	0.00E+00	0.00E+00	0.00E+00	0.00E+00	0.00E+00	0.00E+00
4506	ALL	747681.76	4036771.02	1.02E-07	70YrCancerDerived_InhSoilI	1.02E-07	0.00E+00	0.00E+00	0.00E+00	0.00E+00	0.00E+00	0.00E+00	0.00E+00	0.00E+00	0.00E+00	0.00E+00	0.00E+00
4507	ALL	747478.34	4036933.02	9.65E-08	70YrCancerDerived_InhSoilI	9.65E-08	0.00E+00	0.00E+00	0.00E+00	0.00E+00	0.00E+00	0.00E+00	0.00E+00	0.00E+00	0.00E+00	0.00E+00	0.00E+00
4508	ALL	747470.98	4037101.4	8.83E-08	70YrCancerDerived_InhSoilI	8.83E-08	0.00E+00	0.00E+00	0.00E+00	0.00E+00	0.00E+00	0.00E+00	0.00E+00	0.00E+00	0.00E+00	0.00E+00	0.00E+00
4509	ALL	747463.62	4037269.77	8.25E-08	70YrCancerDerived_InhSoilI	8.25E-08	0.00E+00	0.00E+00	0.00E+00	0.00E+00	0.00E+00	0.00E+00	0.00E+00	0.00E+00	0.00E+00	0.00E+00	0.00E+00
4510	ALL	747456.26	4037438.14	7.79E-08	70YrCancerDerived_InhSoilI	7.79E-08	0.00E+00	0.00E+00	0.00E+00	0.00E+00	0.00E+00	0.00E+00	0.00E+00	0.00E+00	0.00E+00	0.00E+00	0.00E+00
4511	ALL	747448.9	4037606.52	7.44E-08	70YrCancerDerived_InhSoilI	7.44E-08	0.00E+00	0.00E+00	0.00E+00	0.00E+00	0.00E+00	0.00E+00	0.00E+00	0.00E+00	0.00E+00	0.00E+00	0.00E+00
4512	ALL	747280.47	4037769.56	7.16E-08	70YrCancerDerived_InhSoilI	7.16E-08	0.00E+00	0.00E+00	0.00E+00	0.00E+00	0.00E+00	0.00E+00	0.00E+00	0.00E+00	0.00E+00	0.00E+00	0.00E+00
4513	ALL	747119.4	4037764.24	7.41E-08	70YrCancerDerived_InhSoilI	7.41E-08	0.00E+00	0.00E+00	0.00E+00	0.00E+00	0.00E+00	0.00E+00	0.00E+00	0.00E+00	0.00E+00	0.00E+00	0.00E+00
4514	ALL	746958.32	4037758.91	7.82E-08	70YrCancerDerived_InhSoilI	7.82E-08	0.00E+00	0.00E+00	0.00E+00	0.00E+00	0.00E+00	0.00E+00	0.00E+00	0.00E+00	0.00E+00	0.00E+00	0.00E+00
4515	ALL	746797.25	4037753.59	8.23E-08	70YrCancerDerived_InhSoilI	8.23E-08	0.00E+00	0.00E+00	0.00E+00	0.00E+00	0.00E+00	0.00E+00	0.00E+00	0.00E+00	0.00E+00	0.00E+00	0.00E+00
4516	ALL	746641.93	4037581.09	8.99E-08	70YrCancerDerived_InhSoilI	8.99E-08	0.00E+00	0.00E+00	0.00E+00	0.00E+00	0.00E+00	0.00E+00	0.00E+00	0.00E+00	0.00E+00	0.00E+00	0.00E+00
4517	ALL	746647.68	4037413.93	9.79E-08	70YrCancerDerived_InhSoilI	9.79E-08	0.00E+00	0.00E+00	0.00E+00	0.00E+00	0.00E+00	0.00E+00	0.00E+00	0.00E+00	0.00E+00	0.00E+00	0.00E+00
4518	ALL	746653.44	4037246.76	1.10E-07	70YrCancerDerived_InhSoilI	1.10E-07	0.00E+00	0.00E+00	0.00E+00	0.00E+00	0.00E+00	0.00E+00	0.00E+00	0.00E+00	0.00E+00	0.00E+00	0.00E+00
4519	ALL	746659.19	4037079.59	1.31E-07	70YrCancerDerived_InhSoilI	1.31E-07	0.00E+00	0.00E+00	0.00E+00	0.00E+00	0.00E+00	0.00E+00	0.00E+00	0.00E+00	0.00E+00	0.00E+00	0.00E+00
4520	ALL	746664.94	4036912.43	1.69E-07	70YrCancerDerived_InhSoilI	1.69E-07	0.00E+00	0.00E+00	0.00E+00	0.00E+00	0.00E+00	0.00E+00	0.00E+00	0.00E+00	0.00E+00	0.00E+00	0.00E+00
4521	ALL	746484.21	4036739.13	3.11E-07	70YrCancerDerived_InhSoilI	3.11E-07	0.00E+00	0.00E+00	0.00E+00	0.00E+00	0.00E+00	0.00E+00	0.00E+00	0.00E+00	0.00E+00	0.00E+00	0.00E+00
4522	ALL	746297.73	4036733	2.92E-07	70YrCancerDerived_InhSoilI	2.92E-07	0.00E+00	0.00E+00	0.00E+00	0.00E+00	0.00E+00	0.00E+00	0.00E+00	0.00E+00	0.00E+00	0.00E+00	0.00E+00
4523	ALL	746111.25	4036726.86	2.36E-07	70YrCancerDerived_InhSoilI	2.36E-07	0.00E+00	0.00E+00	0.00E+00	0.00E+00	0.00E+00	0.00E+00	0.00E+00	0.00E+00	0.00E+00	0.00E+00	0.00E+00
4524	ALL	745924.77	4036720.73	1.89E-07	70YrCancerDerived_InhSoilI	1.89E-07	0.00E+00	0.00E+00	0.00E+00	0.00E+00	0.00E+00	0.00E+00	0.00E+00	0.00E+00	0.00E+00	0.00E+00	0.00E+00
4525	ALL	745539.2	4036707.71	1.28E-07	70YrCancerDerived_InhSoilI	1.28E-07	0.00E+00	0.00E+00	0.00E+00	0.00E+00	0.00E+00	0.00E+00	0.00E+00	0.00E+00	0.00E+00	0.00E+00	0.00E+00
4526	ALL	745340.1	4036700.83	1.11E-07	70YrCancerDerived_InhSoilI	1.11E-07	0.00E+00	0.00E+00	0.00E+00	0.00E+00	0.00E+00	0.00E+00	0.00E+00	0.00E+00	0.00E+00	0.00E+00	0.00E+00
4527	ALL	745141.01	4036693.94	9.89E-08	70YrCancerDerived_InhSoilI	9.89E-08	0.00E+00	0.00E+00	0.00E+00	0.00E+00	0.00E+00	0.00E+00	0.00E+00	0.00E+00	0.00E+00	0.00E+00	0.00E+00
4528	ALL	744941.92	4036687.06	9.01E-08	70YrCancerDerived_InhSoilI	9.01E-08	0.00E+00	0.00E+00	0.00E+00	0.00E+00	0.00E+00	0.00E+00	0.00E+00	0.00E+00	0.00E+00	0.00E+00	0.00E+00
4529	ALL	744742.83	4036680.17	8.35E-08	70YrCancerDerived_InhSoilI	8.35E-08	0.00E+00	0.00E+00	0.00E+00	0.00E+00	0.00E+00	0.00E+00	0.00E+00	0.00E+00	0.00E+00	0.00E+00	0.00E+00
4530	ALL	744543.73	4036673.29	7.84E-08	70YrCancerDerived_InhSoilI	7.84E-08	0.00E+00	0.00E+00	0.00E+00	0.00E+00	0.00E+00	0.00E+00	0.00E+00	0.00E+00	0.00E+00	0.00E+00	0.00E+00
4531	ALL	744344.64	4036666.4	7.43E-08	70YrCancerDerived_InhSoilI	7.43E-08	0.00E+00	0.00E+00	0.00E+00	0.00E+00	0.00E+00	0.00E+00	0.00E+00	0.00E+00	0.00E+00	0.00E+00	0.00E+00
4532	ALL	744145.55	4036659.51	7.07E-08	70YrCancerDerived_InhSoilI	7.07E-08	0.00E+00	0.00E+00	0.00E+00	0.00E+00	0.00E+00	0.00E+00	0.00E+00	0.00E+00	0.00E+00	0.00E+00	0.00E+00
4533	ALL	743946.45	4036652.63	6.76E-08	70YrCancerDerived_InhSoilI	6.76E-08	0.00E+00	0.00E+00	0.00E+00	0.00E+00	0.00E+00	0.00E+00	0.00E+00	0.00E+00	0.00E+00	0.00E+00	0.00E+00
4534	ALL	743747.36	4036645.74	6.47E-08	70YrCancerDerived_InhSoilI	6.47E-08	0.00E+00	0.00E+00	0.00E+00	0.00E+00	0.00E+00	0.00E+00	0.00E+00	0.00E+00	0.00E+00	0.00E+00	0.00E+00

4535	ALL	743548.27	4036638.86	6.20E-08	70YrCancerDerived_InhSoilI	6.20E-08	0.00E+00	0.00E+00	0.00E+00	0.00E+00	0.00E+00	0.00E+00	0.00E+00	0.00E+00	0.00E+00	0.00E+00	0.00E+00
4536	ALL	743349.18	4036631.97	5.96E-08	70YrCancerDerived_InhSoilI	5.96E-08	0.00E+00	0.00E+00	0.00E+00	0.00E+00	0.00E+00	0.00E+00	0.00E+00	0.00E+00	0.00E+00	0.00E+00	0.00E+00
4537	ALL	743150.08	4036625.09	5.73E-08	70YrCancerDerived_InhSoilI	5.73E-08	0.00E+00	0.00E+00	0.00E+00	0.00E+00	0.00E+00	0.00E+00	0.00E+00	0.00E+00	0.00E+00	0.00E+00	0.00E+00
4538	ALL	742950.99	4036618.2	5.53E-08	70YrCancerDerived_InhSoilI	5.53E-08	0.00E+00	0.00E+00	0.00E+00	0.00E+00	0.00E+00	0.00E+00	0.00E+00	0.00E+00	0.00E+00	0.00E+00	0.00E+00
4539	ALL	742751.9	4036611.31	5.35E-08	70YrCancerDerived_InhSoilI	5.35E-08	0.00E+00	0.00E+00	0.00E+00	0.00E+00	0.00E+00	0.00E+00	0.00E+00	0.00E+00	0.00E+00	0.00E+00	0.00E+00
4540	ALL	742552.8	4036604.43	5.19E-08	70YrCancerDerived_InhSoilI	5.19E-08	0.00E+00	0.00E+00	0.00E+00	0.00E+00	0.00E+00	0.00E+00	0.00E+00	0.00E+00	0.00E+00	0.00E+00	0.00E+00
4541	ALL	742353.71	4036597.54	5.05E-08	70YrCancerDerived_InhSoilI	5.05E-08	0.00E+00	0.00E+00	0.00E+00	0.00E+00	0.00E+00	0.00E+00	0.00E+00	0.00E+00	0.00E+00	0.00E+00	0.00E+00
4542	ALL	742154.62	4036590.66	4.93E-08	70YrCancerDerived_InhSoilI	4.93E-08	0.00E+00	0.00E+00	0.00E+00	0.00E+00	0.00E+00	0.00E+00	0.00E+00	0.00E+00	0.00E+00	0.00E+00	0.00E+00
4543	ALL	741955.53	4036583.77	4.83E-08	70YrCancerDerived_InhSoilI	4.83E-08	0.00E+00	0.00E+00	0.00E+00	0.00E+00	0.00E+00	0.00E+00	0.00E+00	0.00E+00	0.00E+00	0.00E+00	0.00E+00
4544	ALL	741756.43	4036576.89	4.77E-08	70YrCancerDerived_InhSoilI	4.77E-08	0.00E+00	0.00E+00	0.00E+00	0.00E+00	0.00E+00	0.00E+00	0.00E+00	0.00E+00	0.00E+00	0.00E+00	0.00E+00
4545	ALL	741557.34	4036570	4.69E-08	70YrCancerDerived_InhSoilI	4.69E-08	0.00E+00	0.00E+00	0.00E+00	0.00E+00	0.00E+00	0.00E+00	0.00E+00	0.00E+00	0.00E+00	0.00E+00	0.00E+00
4546	ALL	741358.25	4036563.11	4.63E-08	70YrCancerDerived_InhSoilI	4.63E-08	0.00E+00	0.00E+00	0.00E+00	0.00E+00	0.00E+00	0.00E+00	0.00E+00	0.00E+00	0.00E+00	0.00E+00	0.00E+00
4547	ALL	741159.15	4036556.23	4.58E-08	70YrCancerDerived_InhSoilI	4.58E-08	0.00E+00	0.00E+00	0.00E+00	0.00E+00	0.00E+00	0.00E+00	0.00E+00	0.00E+00	0.00E+00	0.00E+00	0.00E+00
4548	ALL	740960.06	4036549.34	4.52E-08	70YrCancerDerived_InhSoilI	4.52E-08	0.00E+00	0.00E+00	0.00E+00	0.00E+00	0.00E+00	0.00E+00	0.00E+00	0.00E+00	0.00E+00	0.00E+00	0.00E+00
4549	ALL	740760.97	4036542.46	4.48E-08	70YrCancerDerived_InhSoilI	4.48E-08	0.00E+00	0.00E+00	0.00E+00	0.00E+00	0.00E+00	0.00E+00	0.00E+00	0.00E+00	0.00E+00	0.00E+00	0.00E+00
4550	ALL	740561.88	4036535.57	4.44E-08	70YrCancerDerived_InhSoilI	4.44E-08	0.00E+00	0.00E+00	0.00E+00	0.00E+00	0.00E+00	0.00E+00	0.00E+00	0.00E+00	0.00E+00	0.00E+00	0.00E+00
4551	ALL	740362.78	4036528.69	4.41E-08	70YrCancerDerived_InhSoilI	4.41E-08	0.00E+00	0.00E+00	0.00E+00	0.00E+00	0.00E+00	0.00E+00	0.00E+00	0.00E+00	0.00E+00	0.00E+00	0.00E+00
4552	ALL	740163.69	4036521.8	4.39E-08	70YrCancerDerived_InhSoilI	4.39E-08	0.00E+00	0.00E+00	0.00E+00	0.00E+00	0.00E+00	0.00E+00	0.00E+00	0.00E+00	0.00E+00	0.00E+00	0.00E+00
4553	ALL	739964.6	4036514.91	4.37E-08	70YrCancerDerived_InhSoilI	4.37E-08	0.00E+00	0.00E+00	0.00E+00	0.00E+00	0.00E+00	0.00E+00	0.00E+00	0.00E+00	0.00E+00	0.00E+00	0.00E+00
4554	ALL	739765.5	4036508.03	4.34E-08	70YrCancerDerived_InhSoilI	4.34E-08	0.00E+00	0.00E+00	0.00E+00	0.00E+00	0.00E+00	0.00E+00	0.00E+00	0.00E+00	0.00E+00	0.00E+00	0.00E+00
4555	ALL	739566.41	4036501.14	4.32E-08	70YrCancerDerived_InhSoilI	4.32E-08	0.00E+00	0.00E+00	0.00E+00	0.00E+00	0.00E+00	0.00E+00	0.00E+00	0.00E+00	0.00E+00	0.00E+00	0.00E+00
4556	ALL	739367.32	4036494.26	4.30E-08	70YrCancerDerived_InhSoilI	4.30E-08	0.00E+00	0.00E+00	0.00E+00	0.00E+00	0.00E+00	0.00E+00	0.00E+00	0.00E+00	0.00E+00	0.00E+00	0.00E+00
4557	ALL	739168.23	4036487.37	4.28E-08	70YrCancerDerived_InhSoilI	4.28E-08	0.00E+00	0.00E+00	0.00E+00	0.00E+00	0.00E+00	0.00E+00	0.00E+00	0.00E+00	0.00E+00	0.00E+00	0.00E+00
4558	ALL	738969.13	4036480.49	4.26E-08	70YrCancerDerived_InhSoilI	4.26E-08	0.00E+00	0.00E+00	0.00E+00	0.00E+00	0.00E+00	0.00E+00	0.00E+00	0.00E+00	0.00E+00	0.00E+00	0.00E+00
4559	ALL	738604.82	4036569.13	4.14E-08	70YrCancerDerived_InhSoilI	4.14E-08	0.00E+00	0.00E+00	0.00E+00	0.00E+00	0.00E+00	0.00E+00	0.00E+00	0.00E+00	0.00E+00	0.00E+00	0.00E+00
4560	ALL	738337.99	4036497.02	4.13E-08	70YrCancerDerived_InhSoilI	4.13E-08	0.00E+00	0.00E+00	0.00E+00	0.00E+00	0.00E+00	0.00E+00	0.00E+00	0.00E+00	0.00E+00	0.00E+00	0.00E+00
4561	ALL	738236.37	4036329.38	4.21E-08	70YrCancerDerived_InhSoilI	4.21E-08	0.00E+00	0.00E+00	0.00E+00	0.00E+00	0.00E+00	0.00E+00	0.00E+00	0.00E+00	0.00E+00	0.00E+00	0.00E+00
4562	ALL	738134.74	4036161.74	4.30E-08	70YrCancerDerived_InhSoilI	4.30E-08	0.00E+00	0.00E+00	0.00E+00	0.00E+00	0.00E+00	0.00E+00	0.00E+00	0.00E+00	0.00E+00	0.00E+00	0.00E+00
4563	ALL	738033.12	4035994.09	4.40E-08	70YrCancerDerived_InhSoilI	4.40E-08	0.00E+00	0.00E+00	0.00E+00	0.00E+00	0.00E+00	0.00E+00	0.00E+00	0.00E+00	0.00E+00	0.00E+00	0.00E+00
4564	ALL	737931.5	4035826.45	4.51E-08	70YrCancerDerived_InhSoilI	4.51E-08	0.00E+00	0.00E+00	0.00E+00	0.00E+00	0.00E+00	0.00E+00	0.00E+00	0.00E+00	0.00E+00	0.00E+00	0.00E+00
4565	ALL	737563.33	4035513.17	4.70E-08	70YrCancerDerived_InhSoilI	4.70E-08	0.00E+00	0.00E+00	0.00E+00	0.00E+00	0.00E+00	0.00E+00	0.00E+00	0.00E+00	0.00E+00	0.00E+00	0.00E+00
4566	ALL	737382.93	4035513.06	4.70E-08	70YrCancerDerived_InhSoilI	4.70E-08	0.00E+00	0.00E+00	0.00E+00	0.00E+00	0.00E+00	0.00E+00	0.00E+00	0.00E+00	0.00E+00	0.00E+00	0.00E+00
4567	ALL	737202.52	4035512.96	4.69E-08	70YrCancerDerived_InhSoilI	4.69E-08	0.00E+00	0.00E+00	0.00E+00	0.00E+00	0.00E+00	0.00E+00	0.00E+00	0.00E+00	0.00E+00	0.00E+00	0.00E+00
4568	ALL	736835.12	4035512.78	4.68E-08	70YrCancerDerived_InhSoilI	4.68E-08	0.00E+00	0.00E+00	0.00E+00	0.00E+00	0.00E+00	0.00E+00	0.00E+00	0.00E+00	0.00E+00	0.00E+00	0.00E+00
4569	ALL	736648.13	4035512.71	4.67E-08	70YrCancerDerived_InhSoilI	4.67E-08	0.00E+00	0.00E+00	0.00E+00	0.00E+00	0.00E+00	0.00E+00	0.00E+00	0.00E+00	0.00E+00	0.00E+00	0.00E+00
4570	ALL	736461.13	4035512.64	4.66E-08	70YrCancerDerived_InhSoilI	4.66E-08	0.00E+00	0.00E+00	0.00E+00	0.00E+00	0.00E+00	0.00E+00	0.00E+00	0.00E+00	0.00E+00	0.00E+00	0.00E+00
4571	ALL	736274.14	4035512.57	4.65E-08	70YrCancerDerived_InhSoilI	4.65E-08	0.00E+00	0.00E+00	0.00E+00	0.00E+00	0.00E+00	0.00E+00	0.00E+00	0.00E+00	0.00E+00	0.00E+00	0.00E+00
4572	ALL	736087.14	4035512.51	4.65E-08	70YrCancerDerived_InhSoilI	4.65E-08	0.00E+00	0.00E+00	0.00E+00	0.00E+00	0.00E+00	0.00E+00	0.00E+00	0.00E+00	0.00E+00	0.00E+00	0.00E+00
4573	ALL	735900.15	4035512.44	4.65E-08	70YrCancerDerived_InhSoilI	4.65E-08	0.00E+00	0.00E+00	0.00E+00	0.00E+00	0.00E+00	0.00E+00	0.00E+00	0.00E+00	0.00E+00	0.00E+00	0.00E+00
4574	ALL	735713.15	4035512.37	4.66E-08	70YrCancerDerived_InhSoilI	4.66E-08	0.00E+00	0.00E+00	0.00E+00	0.00E+00	0.00E+00	0.00E+00	0.00E+00	0.00E+00	0.00E+00	0.00E+00	0.00E+00
4575	ALL	735526.16	4035512.3	4.65E-08	70YrCancerDerived_InhSoilI	4.65E-08	0.00E+00	0.00E+00	0.00E+00	0.00E+00	0.00E+00	0.00E+00	0.00E+00	0.00E+00	0.00E+00	0.00E+00	0.00E+00
4576	ALL	735195.5	4035375.4	4.84E-08	70YrCancerDerived_InhSoilI	4.84E-08	0.00E+00	0.00E+00	0.00E+00	0.00E+00	0.00E+00	0.00E+00	0.00E+00	0.00E+00	0.00E+00	0.00E+00	0.00E+00
4577	ALL	735051.83	4035238.56	5.14E-08	70YrCancerDerived_InhSoilI	5.14E-08	0.00E+00	0.00E+00	0.00E+00	0.00E+00	0.00E+00	0.00E+00	0.00E+00	0.00E+00	0.00E+00	0.00E+00	0.00E+00
4578	ALL	734908.17	4035101.73	5.50E-08	70YrCancerDerived_InhSoilI	5.50E-08	0.00E+00	0.00E+00	0.00E+00	0.00E+00	0.00E+00	0.00E+00	0.00E+00	0.00E+00	0.00E+00	0.00E+00	0.00E+00
4579	ALL	734764.5	4034964.89	6.00E-08	70YrCancerDerived_InhSoilI	6.00E-08	0.00E+00	0.00E+00	0.00E+00	0.00E+00	0.00E+00	0.00E+00	0.00E+00	0.00E+00	0.00E+00	0.00E+00	0.00E+00
4580	ALL	734480.27	4034822.3	6.70E-08	70YrCancerDerived_InhSoilI	6.70E-08	0.00E+00	0.00E+00	0.00E+00	0.00E+00	0.00E+00	0.00E+00	0.00E+00	0.00E+00	0.00E+00	0.00E+00	0.00E+00
4581	ALL	734339.71	4034816.54	6.68E-08	70YrCancerDerived_InhSoilI	6.68E-08	0.00E+00	0.00E+00	0.00E+00	0.00E+00	0.00E+00	0.00E+00	0.00E+00	0.00E+00	0.00E+00	0.00E+00	0.00E+00
4582	ALL	734131.2	4034700.77	7.53E-08	70YrCancerDerived_InhSoilI	7.53E-08	0.00E+00	0.00E+00	0.00E+00	0.00E+00	0.00E+00	0.00E+00	0.00E+00	0.00E+00	0.00E+00	0.00E+00	0.00E+00
4583	ALL	733867.32	4034587.41	9.11E-08	70YrCancerDerived_InhSoilI	9.11E-08	0.00E+00	0.00E+00	0.00E+00	0.00E+00	0.00E+00	0.00E+00	0.00E+00	0.00E+00	0.00E+00	0.00E+00	0.00E+00
4584	ALL	733482	4034637.69	1.13E-07	70YrCancerDerived_InhSoilI	1.13E-07	0.00E+00	0.00E+00	0.00E+00	0.00E+00	0.00E+00	0.00E+00	0.00E+00	0.00E+00	0.00E+00	0.00E+00	0.00E+00
4585	ALL	733297.29	4034632.7	1.33E-07	70YrCancerDerived_InhSoilI	1.33E-07	0.00E+00	0.00E+00	0.00E+00	0.00E+00	0.00E+00	0.00E+00	0.00E+00	0.00E+00	0.00E+00	0.00E+00	0.00E+00
4586	ALL	733112.59	4034627.7	1.86E-07	70YrCancerDerived_InhSoilI	1.86E-07	0.00E+00	0.00E+00	0.00E+00	0.00E+00	0.00E+00	0.00E+00	0.00E+00	0.00E+00	0.00E+00	0.00E+00	0.00E+00
4587	ALL	732927.88	4034622.71	3.11E-07	70YrCancerDerived_InhSoilI	3.11E-07	0.00E+00	0.00E+00	0.00E+00	0.00E+00	0.00E+00	0.00E+00	0.00E+00	0.00E+00	0.00E+00	0.00E+00	0.00E+00
4588	ALL	732574.01	4034614.02	2.99E-07	70YrCancerDerived_InhSoilI	2.99E-07	0.00E+00	0.00E+00	0.00E+00	0.00E+00	0.00E+00	0.00E+00	0.00E+00	0.00E+00	0.00E+00	0.00E+00	0.00E+00
4589	ALL	732404.85	4034610.32	2.22E-07	70YrCancerDerived_InhSoilI	2.22E-07	0.00E+00	0.00E+00	0.00E+00	0.00E+00	0.00E+00	0.00E+00	0.00E+00	0.00E+00	0.00E+00	0.00E+00	0.00E+00
4590	ALL	732235.69	4034606.61	1.68E-07	70YrCancerDerived_InhSoilI	1.68E-07	0.00E+00	0.00E+00	0.00E+00	0.00E+00	0.00E+00	0.00E+00	0.00E+00	0.00E+00	0.00E+00	0.00E+00	0.00E+00

*HARP - HRACalc v21081 3/18/2024 7:13:03 PM - Cancer Risk - Input File: C:\HARP2\Projects\DARDEN CLEAN ENERGY PROJECT\hra\Darden_Permit_Worker_HRAInput.hra

REC	GRP	NETID	X	Y	RISK_SUM	SCENARIO	INH_RISK	SOIL_RISK	DERMAL_RISK	MMILK_RISK	WATER_RISK	FISH_RISK	CROP_RISK	BEEF_RISK	DAIRY_RISK	PIG_RISK	CHICKEN_RISK	EGG_RISK
1	ALL		732073	4033492	5.72E-09	25YrCancer	5.72E-09	0.00E+00	0.00E+00	0.00E+00	0.00E+00	0.00E+00	0.00E+00	0.00E+00	0.00E+00	0.00E+00	0.00E+00	0.00E+00
2	ALL		732173	4033492	5.57E-09	25YrCancer	5.57E-09	0.00E+00	0.00E+00	0.00E+00	0.00E+00	0.00E+00	0.00E+00	0.00E+00	0.00E+00	0.00E+00	0.00E+00	0.00E+00
3	ALL		732273	4033492	5.23E-09	25YrCancer	5.23E-09	0.00E+00	0.00E+00	0.00E+00	0.00E+00	0.00E+00	0.00E+00	0.00E+00	0.00E+00	0.00E+00	0.00E+00	0.00E+00
4	ALL		732373	4033492	5.19E-09	25YrCancer	5.19E-09	0.00E+00	0.00E+00	0.00E+00	0.00E+00	0.00E+00	0.00E+00	0.00E+00	0.00E+00	0.00E+00	0.00E+00	0.00E+00
5	ALL		732473	4033492	5.22E-09	25YrCancer	5.22E-09	0.00E+00	0.00E+00	0.00E+00	0.00E+00	0.00E+00	0.00E+00	0.00E+00	0.00E+00	0.00E+00	0.00E+00	0.00E+00
6	ALL		732573	4033492	5.30E-09	25YrCancer	5.30E-09	0.00E+00	0.00E+00	0.00E+00	0.00E+00	0.00E+00	0.00E+00	0.00E+00	0.00E+00	0.00E+00	0.00E+00	0.00E+00
7	ALL		732673	4033492	5.36E-09	25YrCancer	5.36E-09	0.00E+00	0.00E+00	0.00E+00	0.00E+00	0.00E+00	0.00E+00	0.00E+00	0.00E+00	0.00E+00	0.00E+00	0.00E+00
8	ALL		732773	4033492	5.60E-09	25YrCancer	5.60E-09	0.00E+00	0.00E+00	0.00E+00	0.00E+00	0.00E+00	0.00E+00	0.00E+00	0.00E+00	0.00E+00	0.00E+00	0.00E+00
9	ALL		732873	4033492	5.95E-09	25YrCancer	5.95E-09	0.00E+00	0.00E+00	0.00E+00	0.00E+00	0.00E+00	0.00E+00	0.00E+00	0.00E+00	0.00E+00	0.00E+00	0.00E+00
10	ALL		732973	4033492	6.65E-09	25YrCancer	6.65E-09	0.00E+00	0.00E+00	0.00E+00	0.00E+00	0.00E+00	0.00E+00	0.00E+00	0.00E+00	0.00E+00	0.00E+00	0.00E+00
11	ALL		733073	4033492	8.21E-09	25YrCancer	8.21E-09	0.00E+00	0.00E+00	0.00E+00	0.00E+00	0.00E+00	0.00E+00	0.00E+00	0.00E+00	0.00E+00	0.00E+00	0.00E+00
12	ALL		733173	4033492	1.06E-08	25YrCancer	1.06E-08	0.00E+00	0.00E+00	0.00E+00	0.00E+00	0.00E+00	0.00E+00	0.00E+00	0.00E+00	0.00E+00	0.00E+00	0.00E+00
13	ALL		733273	4033492	1.60E-08	25YrCancer	1.60E-08	0.00E+00	0.00E+00	0.00E+00	0.00E+00	0.00E+00	0.00E+00	0.00E+00	0.00E+00	0.00E+00	0.00E+00	0.00E+00
14	ALL		733373	4033492	2.93E-08	25YrCancer	2.93E-08	0.00E+00	0.00E+00	0.00E+00	0.00E+00	0.00E+00	0.00E+00	0.00E+00	0.00E+00	0.00E+00	0.00E+00	0.00E+00
15	ALL		733473	4033492	4.94E-08	25YrCancer	4.94E-08	0.00E+00	0.00E+00	0.00E+00	0.00E+00	0.00E+00	0.00E+00	0.00E+00	0.00E+00	0.00E+00	0.00E+00	0.00E+00
16	ALL		733573	4033492	6.84E-08	25YrCancer	6.84E-08	0.00E+00	0.00E+00	0.00E+00	0.00E+00	0.00E+00	0.00E+00	0.00E+00	0.00E+00	0.00E+00	0.00E+00	0.00E+00
17	ALL		733673	4033492	8.30E-08	25YrCancer	8.30E-08	0.00E+00	0.00E+00	0.00E+00	0.00E+00	0.00E+00	0.00E+00	0.00E+00	0.00E+00	0.00E+00	0.00E+00	0.00E+00
18	ALL		733773	4033492	9.22E-08	25YrCancer	9.22E-08	0.00E+00	0.00E+00	0.00E+00	0.00E+00	0.00E+00	0.00E+00	0.00E+00	0.00E+00	0.00E+00	0.00E+00	0.00E+00
19	ALL		733873	4033492	9.51E-08	25YrCancer	9.51E-08	0.00E+00	0.00E+00	0.00E+00	0.00E+00	0.00E+00	0.00E+00	0.00E+00	0.00E+00	0.00E+00	0.00E+00	0.00E+00
20	ALL		733973	4033492	9.20E-08	25YrCancer	9.20E-08	0.00E+00	0.00E+00	0.00E+00	0.00E+00	0.00E+00	0.00E+00	0.00E+00	0.00E+00	0.00E+00	0.00E+00	0.00E+00
21	ALL		734073	4033492	8.48E-08	25YrCancer	8.48E-08	0.00E+00	0.00E+00	0.00E+00	0.00E+00	0.00E+00	0.00E+00	0.00E+00	0.00E+00	0.00E+00	0.00E+00	0.00E+00
22	ALL		732073	4033592	5.77E-09	25YrCancer	5.77E-09	0.00E+00	0.00E+00	0.00E+00	0.00E+00	0.00E+00	0.00E+00	0.00E+00	0.00E+00	0.00E+00	0.00E+00	0.00E+00
23	ALL		732173	4033592	5.58E-09	25YrCancer	5.58E-09	0.00E+00	0.00E+00	0.00E+00	0.00E+00	0.00E+00	0.00E+00	0.00E+00	0.00E+00	0.00E+00	0.00E+00	0.00E+00
24	ALL		732273	4033592	5.49E-09	25YrCancer	5.49E-09	0.00E+00	0.00E+00	0.00E+00	0.00E+00	0.00E+00	0.00E+00	0.00E+00	0.00E+00	0.00E+00	0.00E+00	0.00E+00
25	ALL		732373	4033592	5.47E-09	25YrCancer	5.47E-09	0.00E+00	0.00E+00	0.00E+00	0.00E+00	0.00E+00	0.00E+00	0.00E+00	0.00E+00	0.00E+00	0.00E+00	0.00E+00
26	ALL		732473	4033592	5.45E-09	25YrCancer	5.45E-09	0.00E+00	0.00E+00	0.00E+00	0.00E+00	0.00E+00	0.00E+00	0.00E+00	0.00E+00	0.00E+00	0.00E+00	0.00E+00
27	ALL		732573	4033592	5.49E-09	25YrCancer	5.49E-09	0.00E+00	0.00E+00	0.00E+00	0.00E+00	0.00E+00	0.00E+00	0.00E+00	0.00E+00	0.00E+00	0.00E+00	0.00E+00
28	ALL		732673	4033592	5.74E-09	25YrCancer	5.74E-09	0.00E+00	0.00E+00	0.00E+00	0.00E+00	0.00E+00	0.00E+00	0.00E+00	0.00E+00	0.00E+00	0.00E+00	0.00E+00
29	ALL		732773	4033592	6.08E-09	25YrCancer	6.08E-09	0.00E+00	0.00E+00	0.00E+00	0.00E+00	0.00E+00	0.00E+00	0.00E+00	0.00E+00	0.00E+00	0.00E+00	0.00E+00
30	ALL		732873	4033592	6.53E-09	25YrCancer	6.53E-09	0.00E+00	0.00E+00	0.00E+00	0.00E+00	0.00E+00	0.00E+00	0.00E+00	0.00E+00	0.00E+00	0.00E+00	0.00E+00
31	ALL		732973	4033592	7.26E-09	25YrCancer	7.26E-09	0.00E+00	0.00E+00	0.00E+00	0.00E+00	0.00E+00	0.00E+00	0.00E+00	0.00E+00	0.00E+00	0.00E+00	0.00E+00
32	ALL		733073	4033592	8.85E-09	25YrCancer	8.85E-09	0.00E+00	0.00E+00	0.00E+00	0.00E+00	0.00E+00	0.00E+00	0.00E+00	0.00E+00	0.00E+00	0.00E+00	0.00E+00
33	ALL		733173	4033592	1.19E-08	25YrCancer	1.19E-08	0.00E+00	0.00E+00	0.00E+00	0.00E+00	0.00E+00	0.00E+00	0.00E+00	0.00E+00	0.00E+00	0.00E+00	0.00E+00
34	ALL		733273	4033592	1.92E-08	25YrCancer	1.92E-08	0.00E+00	0.00E+00	0.00E+00	0.00E+00	0.00E+00	0.00E+00	0.00E+00	0.00E+00	0.00E+00	0.00E+00	0.00E+00
35	ALL		733373	4033592	4.00E-08	25YrCancer	4.00E-08	0.00E+00	0.00E+00	0.00E+00	0.00E+00	0.00E+00	0.00E+00	0.00E+00	0.00E+00	0.00E+00	0.00E+00	0.00E+00
36	ALL		733473	4033592	7.21E-08	25YrCancer	7.21E-08	0.00E+00	0.00E+00	0.00E+00	0.00E+00	0.00E+00	0.00E+00	0.00E+00	0.00E+00	0.00E+00	0.00E+00	0.00E+00
37	ALL		733573	4033592	9.94E-08	25YrCancer	9.94E-08	0.00E+00	0.00E+00	0.00E+00	0.00E+00	0.00E+00	0.00E+00	0.00E+00	0.00E+00	0.00E+00	0.00E+00	0.00E+00
38	ALL		733673	4033592	1.17E-07	25YrCancer	1.17E-07	0.00E+00	0.00E+00	0.00E+00	0.00E+00	0.00E+00	0.00E+00	0.00E+00	0.00E+00	0.00E+00	0.00E+00	0.00E+00
39	ALL		733773	4033592	1.23E-07	25YrCancer	1.23E-07	0.00E+00	0.00E+00	0.00E+00	0.00E+00	0.00E+00	0.00E+00	0.00E+00	0.00E+00	0.00E+00	0.00E+00	0.00E+00
40	ALL		733873	4033592	1.18E-07	25YrCancer	1.18E-07	0.00E+00	0.00E+00	0.00E+00	0.00E+00	0.00E+00	0.00E+00	0.00E+00	0.00E+00	0.00E+00	0.00E+00	0.00E+00
41	ALL		733973	4033592	1.06E-07	25YrCancer	1.06E-07	0.00E+00	0.00E+00	0.00E+00	0.00E+00	0.00E+00	0.00E+00	0.00E+00	0.00E+00	0.00E+00	0.00E+00	0.00E+00
42	ALL		734073	4033592	9.10E-08	25YrCancer	9.10E-08	0.00E+00	0.00E+00	0.00E+00	0.00E+00	0.00E+00	0.00E+00	0.00E+00	0.00E+00	0.00E+00	0.00E+00	0.00E+00
43	ALL		732073	4033692	6.64E-09	25YrCancer	6.64E-09	0.00E+00	0.00E+00	0.00E+00	0.00E+00	0.00E+00	0.00E+00	0.00E+00	0.00E+00	0.00E+00	0.00E+00	0.00E+00
44	ALL		732173	4033692	6.17E-09	25YrCancer	6.17E-09	0.00E+00	0.00E+00	0.00E+00	0.00E+00	0.00E+00	0.00E+00	0.00E+00	0.00E+00	0.00E+00	0.00E+00	0.00E+00
45	ALL		732273	4033692	6.04E-09	25YrCancer	6.04E-09	0.00E+00	0.00E+00	0.00E+00	0.00E+00	0.00E+00	0.00E+00	0.00E+00	0.00E+00	0.00E+00	0.00E+00	0.00E+00
46	ALL		732373	4033692	5.88E-09	25YrCancer	5.88E-09	0.00E+00	0.00E+00	0.00E+00	0.00E+00	0.00E+00	0.00E+00	0.00E+00	0.00E+00	0.00E+00	0.00E+00	0.00E+00
47	ALL		732473	4033692	5.77E-09	25YrCancer	5.77E-09	0.00E+00	0.00E+00	0.00E+00	0.00E+00	0.00E+00	0.00E+00	0.00E+00	0.00E+00	0.00E+00	0.00E+00	0.00E+00
48	ALL		732573	4033692	5.76E-09	25YrCancer	5.76E-09	0.00E+00	0.00E+00	0.00E+00	0.00E+00	0.00E+00	0.00E+00	0.00E+00	0.00E+00	0.00E+00	0.00E+00	0.00E+00
49	ALL		732673	4033692	5.93E-09	25YrCancer	5.93E-09	0.00E+00	0.00E+00	0.00E+00	0.00E+00	0.00E+00	0.00E+00	0.00E+00	0.00E+00	0.00E+00	0.00E+00	0.00E+00

50	ALL	732773	4033692	6.43E-09	25YrCancer	6.43E-09	0.00E+00	0.00E+00	0.00E+00	0.00E+00	0.00E+00	0.00E+00	0.00E+00	0.00E+00	0.00E+00	0.00E+00	0.00E+00
51	ALL	732873	4033692	7.18E-09	25YrCancer	7.18E-09	0.00E+00	0.00E+00	0.00E+00	0.00E+00	0.00E+00	0.00E+00	0.00E+00	0.00E+00	0.00E+00	0.00E+00	0.00E+00
52	ALL	732973	4033692	8.16E-09	25YrCancer	8.16E-09	0.00E+00	0.00E+00	0.00E+00	0.00E+00	0.00E+00	0.00E+00	0.00E+00	0.00E+00	0.00E+00	0.00E+00	0.00E+00
53	ALL	733073	4033692	9.89E-09	25YrCancer	9.89E-09	0.00E+00	0.00E+00	0.00E+00	0.00E+00	0.00E+00	0.00E+00	0.00E+00	0.00E+00	0.00E+00	0.00E+00	0.00E+00
54	ALL	733173	4033692	1.37E-08	25YrCancer	1.37E-08	0.00E+00	0.00E+00	0.00E+00	0.00E+00	0.00E+00	0.00E+00	0.00E+00	0.00E+00	0.00E+00	0.00E+00	0.00E+00
55	ALL	733273	4033692	2.40E-08	25YrCancer	2.40E-08	0.00E+00	0.00E+00	0.00E+00	0.00E+00	0.00E+00	0.00E+00	0.00E+00	0.00E+00	0.00E+00	0.00E+00	0.00E+00
56	ALL	733373	4033692	5.99E-08	25YrCancer	5.99E-08	0.00E+00	0.00E+00	0.00E+00	0.00E+00	0.00E+00	0.00E+00	0.00E+00	0.00E+00	0.00E+00	0.00E+00	0.00E+00
57	ALL	733473	4033692	1.14E-07	25YrCancer	1.14E-07	0.00E+00	0.00E+00	0.00E+00	0.00E+00	0.00E+00	0.00E+00	0.00E+00	0.00E+00	0.00E+00	0.00E+00	0.00E+00
58	ALL	733573	4033692	1.54E-07	25YrCancer	1.54E-07	0.00E+00	0.00E+00	0.00E+00	0.00E+00	0.00E+00	0.00E+00	0.00E+00	0.00E+00	0.00E+00	0.00E+00	0.00E+00
59	ALL	733673	4033692	1.69E-07	25YrCancer	1.69E-07	0.00E+00	0.00E+00	0.00E+00	0.00E+00	0.00E+00	0.00E+00	0.00E+00	0.00E+00	0.00E+00	0.00E+00	0.00E+00
60	ALL	733773	4033692	1.59E-07	25YrCancer	1.59E-07	0.00E+00	0.00E+00	0.00E+00	0.00E+00	0.00E+00	0.00E+00	0.00E+00	0.00E+00	0.00E+00	0.00E+00	0.00E+00
61	ALL	733873	4033692	1.36E-07	25YrCancer	1.36E-07	0.00E+00	0.00E+00	0.00E+00	0.00E+00	0.00E+00	0.00E+00	0.00E+00	0.00E+00	0.00E+00	0.00E+00	0.00E+00
62	ALL	733973	4033692	1.11E-07	25YrCancer	1.11E-07	0.00E+00	0.00E+00	0.00E+00	0.00E+00	0.00E+00	0.00E+00	0.00E+00	0.00E+00	0.00E+00	0.00E+00	0.00E+00
63	ALL	734073	4033692	9.00E-08	25YrCancer	9.00E-08	0.00E+00	0.00E+00	0.00E+00	0.00E+00	0.00E+00	0.00E+00	0.00E+00	0.00E+00	0.00E+00	0.00E+00	0.00E+00
64	ALL	732073	4033792	6.97E-09	25YrCancer	6.97E-09	0.00E+00	0.00E+00	0.00E+00	0.00E+00	0.00E+00	0.00E+00	0.00E+00	0.00E+00	0.00E+00	0.00E+00	0.00E+00
65	ALL	732373	4033792	6.23E-09	25YrCancer	6.23E-09	0.00E+00	0.00E+00	0.00E+00	0.00E+00	0.00E+00	0.00E+00	0.00E+00	0.00E+00	0.00E+00	0.00E+00	0.00E+00
66	ALL	732473	4033792	6.14E-09	25YrCancer	6.14E-09	0.00E+00	0.00E+00	0.00E+00	0.00E+00	0.00E+00	0.00E+00	0.00E+00	0.00E+00	0.00E+00	0.00E+00	0.00E+00
67	ALL	732573	4033792	6.17E-09	25YrCancer	6.17E-09	0.00E+00	0.00E+00	0.00E+00	0.00E+00	0.00E+00	0.00E+00	0.00E+00	0.00E+00	0.00E+00	0.00E+00	0.00E+00
68	ALL	732673	4033792	6.32E-09	25YrCancer	6.32E-09	0.00E+00	0.00E+00	0.00E+00	0.00E+00	0.00E+00	0.00E+00	0.00E+00	0.00E+00	0.00E+00	0.00E+00	0.00E+00
69	ALL	732773	4033792	6.80E-09	25YrCancer	6.80E-09	0.00E+00	0.00E+00	0.00E+00	0.00E+00	0.00E+00	0.00E+00	0.00E+00	0.00E+00	0.00E+00	0.00E+00	0.00E+00
70	ALL	732873	4033792	7.77E-09	25YrCancer	7.77E-09	0.00E+00	0.00E+00	0.00E+00	0.00E+00	0.00E+00	0.00E+00	0.00E+00	0.00E+00	0.00E+00	0.00E+00	0.00E+00
71	ALL	732973	4033792	9.36E-09	25YrCancer	9.36E-09	0.00E+00	0.00E+00	0.00E+00	0.00E+00	0.00E+00	0.00E+00	0.00E+00	0.00E+00	0.00E+00	0.00E+00	0.00E+00
72	ALL	733073	4033792	1.17E-08	25YrCancer	1.17E-08	0.00E+00	0.00E+00	0.00E+00	0.00E+00	0.00E+00	0.00E+00	0.00E+00	0.00E+00	0.00E+00	0.00E+00	0.00E+00
73	ALL	733173	4033792	1.64E-08	25YrCancer	1.64E-08	0.00E+00	0.00E+00	0.00E+00	0.00E+00	0.00E+00	0.00E+00	0.00E+00	0.00E+00	0.00E+00	0.00E+00	0.00E+00
74	ALL	733273	4033792	3.12E-08	25YrCancer	3.12E-08	0.00E+00	0.00E+00	0.00E+00	0.00E+00	0.00E+00	0.00E+00	0.00E+00	0.00E+00	0.00E+00	0.00E+00	0.00E+00
75	ALL	733373	4033792	1.01E-07	25YrCancer	1.01E-07	0.00E+00	0.00E+00	0.00E+00	0.00E+00	0.00E+00	0.00E+00	0.00E+00	0.00E+00	0.00E+00	0.00E+00	0.00E+00
76	ALL	733473	4033792	2.04E-07	25YrCancer	2.04E-07	0.00E+00	0.00E+00	0.00E+00	0.00E+00	0.00E+00	0.00E+00	0.00E+00	0.00E+00	0.00E+00	0.00E+00	0.00E+00
77	ALL	733573	4033792	2.50E-07	25YrCancer	2.50E-07	0.00E+00	0.00E+00	0.00E+00	0.00E+00	0.00E+00	0.00E+00	0.00E+00	0.00E+00	0.00E+00	0.00E+00	0.00E+00
78	ALL	733673	4033792	2.30E-07	25YrCancer	2.30E-07	0.00E+00	0.00E+00	0.00E+00	0.00E+00	0.00E+00	0.00E+00	0.00E+00	0.00E+00	0.00E+00	0.00E+00	0.00E+00
79	ALL	733773	4033792	1.82E-07	25YrCancer	1.82E-07	0.00E+00	0.00E+00	0.00E+00	0.00E+00	0.00E+00	0.00E+00	0.00E+00	0.00E+00	0.00E+00	0.00E+00	0.00E+00
80	ALL	733873	4033792	1.38E-07	25YrCancer	1.38E-07	0.00E+00	0.00E+00	0.00E+00	0.00E+00	0.00E+00	0.00E+00	0.00E+00	0.00E+00	0.00E+00	0.00E+00	0.00E+00
81	ALL	733973	4033792	1.05E-07	25YrCancer	1.05E-07	0.00E+00	0.00E+00	0.00E+00	0.00E+00	0.00E+00	0.00E+00	0.00E+00	0.00E+00	0.00E+00	0.00E+00	0.00E+00
82	ALL	734073	4033792	8.14E-08	25YrCancer	8.14E-08	0.00E+00	0.00E+00	0.00E+00	0.00E+00	0.00E+00	0.00E+00	0.00E+00	0.00E+00	0.00E+00	0.00E+00	0.00E+00
83	ALL	732073	4033892	7.32E-09	25YrCancer	7.32E-09	0.00E+00	0.00E+00	0.00E+00	0.00E+00	0.00E+00	0.00E+00	0.00E+00	0.00E+00	0.00E+00	0.00E+00	0.00E+00
84	ALL	733773	4033892	1.70E-07	25YrCancer	1.70E-07	0.00E+00	0.00E+00	0.00E+00	0.00E+00	0.00E+00	0.00E+00	0.00E+00	0.00E+00	0.00E+00	0.00E+00	0.00E+00
85	ALL	733873	4033892	1.19E-07	25YrCancer	1.19E-07	0.00E+00	0.00E+00	0.00E+00	0.00E+00	0.00E+00	0.00E+00	0.00E+00	0.00E+00	0.00E+00	0.00E+00	0.00E+00
86	ALL	733973	4033892	8.75E-08	25YrCancer	8.75E-08	0.00E+00	0.00E+00	0.00E+00	0.00E+00	0.00E+00	0.00E+00	0.00E+00	0.00E+00	0.00E+00	0.00E+00	0.00E+00
87	ALL	734073	4033892	6.73E-08	25YrCancer	6.73E-08	0.00E+00	0.00E+00	0.00E+00	0.00E+00	0.00E+00	0.00E+00	0.00E+00	0.00E+00	0.00E+00	0.00E+00	0.00E+00
88	ALL	732073	4033992	7.28E-09	25YrCancer	7.28E-09	0.00E+00	0.00E+00	0.00E+00	0.00E+00	0.00E+00	0.00E+00	0.00E+00	0.00E+00	0.00E+00	0.00E+00	0.00E+00
89	ALL	733773	4033992	1.23E-07	25YrCancer	1.23E-07	0.00E+00	0.00E+00	0.00E+00	0.00E+00	0.00E+00	0.00E+00	0.00E+00	0.00E+00	0.00E+00	0.00E+00	0.00E+00
90	ALL	733873	4033992	8.62E-08	25YrCancer	8.62E-08	0.00E+00	0.00E+00	0.00E+00	0.00E+00	0.00E+00	0.00E+00	0.00E+00	0.00E+00	0.00E+00	0.00E+00	0.00E+00
91	ALL	733973	4033992	6.43E-08	25YrCancer	6.43E-08	0.00E+00	0.00E+00	0.00E+00	0.00E+00	0.00E+00	0.00E+00	0.00E+00	0.00E+00	0.00E+00	0.00E+00	0.00E+00
92	ALL	734073	4033992	5.04E-08	25YrCancer	5.04E-08	0.00E+00	0.00E+00	0.00E+00	0.00E+00	0.00E+00	0.00E+00	0.00E+00	0.00E+00	0.00E+00	0.00E+00	0.00E+00
93	ALL	732073	4034092	7.43E-09	25YrCancer	7.43E-09	0.00E+00	0.00E+00	0.00E+00	0.00E+00	0.00E+00	0.00E+00	0.00E+00	0.00E+00	0.00E+00	0.00E+00	0.00E+00
94	ALL	733773	4034092	6.60E-08	25YrCancer	6.60E-08	0.00E+00	0.00E+00	0.00E+00	0.00E+00	0.00E+00	0.00E+00	0.00E+00	0.00E+00	0.00E+00	0.00E+00	0.00E+00
95	ALL	733873	4034092	5.04E-08	25YrCancer	5.04E-08	0.00E+00	0.00E+00	0.00E+00	0.00E+00	0.00E+00	0.00E+00	0.00E+00	0.00E+00	0.00E+00	0.00E+00	0.00E+00
96	ALL	733973	4034092	4.05E-08	25YrCancer	4.05E-08	0.00E+00	0.00E+00	0.00E+00	0.00E+00	0.00E+00	0.00E+00	0.00E+00	0.00E+00	0.00E+00	0.00E+00	0.00E+00
97	ALL	734073	4034092	3.36E-08	25YrCancer	3.36E-08	0.00E+00	0.00E+00	0.00E+00	0.00E+00	0.00E+00	0.00E+00	0.00E+00	0.00E+00	0.00E+00	0.00E+00	0.00E+00
98	ALL	732073	4034192	7.33E-09	25YrCancer	7.33E-09	0.00E+00	0.00E+00	0.00E+00	0.00E+00	0.00E+00	0.00E+00	0.00E+00	0.00E+00	0.00E+00	0.00E+00	0.00E+00
99	ALL	733773	4034192	2.77E-08	25YrCancer	2.77E-08	0.00E+00	0.00E+00	0.00E+00	0.00E+00	0.00E+00	0.00E+00	0.00E+00	0.00E+00	0.00E+00	0.00E+00	0.00E+00
100	ALL	733873	4034192	2.51E-08	25YrCancer	2.51E-08	0.00E+00	0.00E+00	0.00E+00	0.00E+00	0.00E+00	0.00E+00	0.00E+00	0.00E+00	0.00E+00	0.00E+00	0.00E+00

101	ALL	733973	4034192	2.28E-08	25YrCancer	2.28E-08	0.00E+00	0.00E+00	0.00E+00	0.00E+00	0.00E+00	0.00E+00	0.00E+00	0.00E+00	0.00E+00	0.00E+00	0.00E+00
102	ALL	734073	4034192	2.07E-08	25YrCancer	2.07E-08	0.00E+00	0.00E+00	0.00E+00	0.00E+00	0.00E+00	0.00E+00	0.00E+00	0.00E+00	0.00E+00	0.00E+00	0.00E+00
103	ALL	732073	4034292	7.23E-09	25YrCancer	7.23E-09	0.00E+00	0.00E+00	0.00E+00	0.00E+00	0.00E+00	0.00E+00	0.00E+00	0.00E+00	0.00E+00	0.00E+00	0.00E+00
104	ALL	733773	4034292	1.34E-08	25YrCancer	1.34E-08	0.00E+00	0.00E+00	0.00E+00	0.00E+00	0.00E+00	0.00E+00	0.00E+00	0.00E+00	0.00E+00	0.00E+00	0.00E+00
105	ALL	733873	4034292	1.32E-08	25YrCancer	1.32E-08	0.00E+00	0.00E+00	0.00E+00	0.00E+00	0.00E+00	0.00E+00	0.00E+00	0.00E+00	0.00E+00	0.00E+00	0.00E+00
106	ALL	733973	4034292	1.31E-08	25YrCancer	1.31E-08	0.00E+00	0.00E+00	0.00E+00	0.00E+00	0.00E+00	0.00E+00	0.00E+00	0.00E+00	0.00E+00	0.00E+00	0.00E+00
107	ALL	734073	4034292	1.28E-08	25YrCancer	1.28E-08	0.00E+00	0.00E+00	0.00E+00	0.00E+00	0.00E+00	0.00E+00	0.00E+00	0.00E+00	0.00E+00	0.00E+00	0.00E+00
108	ALL	734173	4034292	1.24E-08	25YrCancer	1.24E-08	0.00E+00	0.00E+00	0.00E+00	0.00E+00	0.00E+00	0.00E+00	0.00E+00	0.00E+00	0.00E+00	0.00E+00	0.00E+00
109	ALL	732073	4034392	7.31E-09	25YrCancer	7.31E-09	0.00E+00	0.00E+00	0.00E+00	0.00E+00	0.00E+00	0.00E+00	0.00E+00	0.00E+00	0.00E+00	0.00E+00	0.00E+00
110	ALL	733773	4034392	8.97E-09	25YrCancer	8.97E-09	0.00E+00	0.00E+00	0.00E+00	0.00E+00	0.00E+00	0.00E+00	0.00E+00	0.00E+00	0.00E+00	0.00E+00	0.00E+00
111	ALL	733873	4034392	8.73E-09	25YrCancer	8.73E-09	0.00E+00	0.00E+00	0.00E+00	0.00E+00	0.00E+00	0.00E+00	0.00E+00	0.00E+00	0.00E+00	0.00E+00	0.00E+00
112	ALL	733973	4034392	8.70E-09	25YrCancer	8.70E-09	0.00E+00	0.00E+00	0.00E+00	0.00E+00	0.00E+00	0.00E+00	0.00E+00	0.00E+00	0.00E+00	0.00E+00	0.00E+00
113	ALL	734073	4034392	8.71E-09	25YrCancer	8.71E-09	0.00E+00	0.00E+00	0.00E+00	0.00E+00	0.00E+00	0.00E+00	0.00E+00	0.00E+00	0.00E+00	0.00E+00	0.00E+00
114	ALL	734173	4034392	8.69E-09	25YrCancer	8.69E-09	0.00E+00	0.00E+00	0.00E+00	0.00E+00	0.00E+00	0.00E+00	0.00E+00	0.00E+00	0.00E+00	0.00E+00	0.00E+00
115	ALL	734273	4034392	8.64E-09	25YrCancer	8.64E-09	0.00E+00	0.00E+00	0.00E+00	0.00E+00	0.00E+00	0.00E+00	0.00E+00	0.00E+00	0.00E+00	0.00E+00	0.00E+00
116	ALL	732073	4034492	7.79E-09	25YrCancer	7.79E-09	0.00E+00	0.00E+00	0.00E+00	0.00E+00	0.00E+00	0.00E+00	0.00E+00	0.00E+00	0.00E+00	0.00E+00	0.00E+00
117	ALL	734173	4034492	6.68E-09	25YrCancer	6.68E-09	0.00E+00	0.00E+00	0.00E+00	0.00E+00	0.00E+00	0.00E+00	0.00E+00	0.00E+00	0.00E+00	0.00E+00	0.00E+00
118	ALL	734273	4034492	6.70E-09	25YrCancer	6.70E-09	0.00E+00	0.00E+00	0.00E+00	0.00E+00	0.00E+00	0.00E+00	0.00E+00	0.00E+00	0.00E+00	0.00E+00	0.00E+00
119	ALL	734373	4034492	6.70E-09	25YrCancer	6.70E-09	0.00E+00	0.00E+00	0.00E+00	0.00E+00	0.00E+00	0.00E+00	0.00E+00	0.00E+00	0.00E+00	0.00E+00	0.00E+00
120	ALL	734473	4034492	6.68E-09	25YrCancer	6.68E-09	0.00E+00	0.00E+00	0.00E+00	0.00E+00	0.00E+00	0.00E+00	0.00E+00	0.00E+00	0.00E+00	0.00E+00	0.00E+00
121	ALL	734573	4034492	6.64E-09	25YrCancer	6.64E-09	0.00E+00	0.00E+00	0.00E+00	0.00E+00	0.00E+00	0.00E+00	0.00E+00	0.00E+00	0.00E+00	0.00E+00	0.00E+00
122	ALL	734673	4034492	6.57E-09	25YrCancer	6.57E-09	0.00E+00	0.00E+00	0.00E+00	0.00E+00	0.00E+00	0.00E+00	0.00E+00	0.00E+00	0.00E+00	0.00E+00	0.00E+00
123	ALL	734773	4034492	6.48E-09	25YrCancer	6.48E-09	0.00E+00	0.00E+00	0.00E+00	0.00E+00	0.00E+00	0.00E+00	0.00E+00	0.00E+00	0.00E+00	0.00E+00	0.00E+00
124	ALL	734873	4034492	6.38E-09	25YrCancer	6.38E-09	0.00E+00	0.00E+00	0.00E+00	0.00E+00	0.00E+00	0.00E+00	0.00E+00	0.00E+00	0.00E+00	0.00E+00	0.00E+00
125	ALL	732073	4034592	8.55E-09	25YrCancer	8.55E-09	0.00E+00	0.00E+00	0.00E+00	0.00E+00	0.00E+00	0.00E+00	0.00E+00	0.00E+00	0.00E+00	0.00E+00	0.00E+00
126	ALL	733773	4034592	5.91E-09	25YrCancer	5.91E-09	0.00E+00	0.00E+00	0.00E+00	0.00E+00	0.00E+00	0.00E+00	0.00E+00	0.00E+00	0.00E+00	0.00E+00	0.00E+00
127	ALL	733873	4034592	5.67E-09	25YrCancer	5.67E-09	0.00E+00	0.00E+00	0.00E+00	0.00E+00	0.00E+00	0.00E+00	0.00E+00	0.00E+00	0.00E+00	0.00E+00	0.00E+00
128	ALL	733973	4034592	5.56E-09	25YrCancer	5.56E-09	0.00E+00	0.00E+00	0.00E+00	0.00E+00	0.00E+00	0.00E+00	0.00E+00	0.00E+00	0.00E+00	0.00E+00	0.00E+00
129	ALL	734273	4034592	5.55E-09	25YrCancer	5.55E-09	0.00E+00	0.00E+00	0.00E+00	0.00E+00	0.00E+00	0.00E+00	0.00E+00	0.00E+00	0.00E+00	0.00E+00	0.00E+00
130	ALL	734373	4034592	5.56E-09	25YrCancer	5.56E-09	0.00E+00	0.00E+00	0.00E+00	0.00E+00	0.00E+00	0.00E+00	0.00E+00	0.00E+00	0.00E+00	0.00E+00	0.00E+00
131	ALL	734473	4034592	5.58E-09	25YrCancer	5.58E-09	0.00E+00	0.00E+00	0.00E+00	0.00E+00	0.00E+00	0.00E+00	0.00E+00	0.00E+00	0.00E+00	0.00E+00	0.00E+00
132	ALL	734573	4034592	5.58E-09	25YrCancer	5.58E-09	0.00E+00	0.00E+00	0.00E+00	0.00E+00	0.00E+00	0.00E+00	0.00E+00	0.00E+00	0.00E+00	0.00E+00	0.00E+00
133	ALL	734673	4034592	5.56E-09	25YrCancer	5.56E-09	0.00E+00	0.00E+00	0.00E+00	0.00E+00	0.00E+00	0.00E+00	0.00E+00	0.00E+00	0.00E+00	0.00E+00	0.00E+00
134	ALL	734773	4034592	5.53E-09	25YrCancer	5.53E-09	0.00E+00	0.00E+00	0.00E+00	0.00E+00	0.00E+00	0.00E+00	0.00E+00	0.00E+00	0.00E+00	0.00E+00	0.00E+00
135	ALL	734873	4034592	5.48E-09	25YrCancer	5.48E-09	0.00E+00	0.00E+00	0.00E+00	0.00E+00	0.00E+00	0.00E+00	0.00E+00	0.00E+00	0.00E+00	0.00E+00	0.00E+00
136	ALL	734973	4034592	5.42E-09	25YrCancer	5.42E-09	0.00E+00	0.00E+00	0.00E+00	0.00E+00	0.00E+00	0.00E+00	0.00E+00	0.00E+00	0.00E+00	0.00E+00	0.00E+00
137	ALL	732073	4034692	9.55E-09	25YrCancer	9.55E-09	0.00E+00	0.00E+00	0.00E+00	0.00E+00	0.00E+00	0.00E+00	0.00E+00	0.00E+00	0.00E+00	0.00E+00	0.00E+00
138	ALL	732173	4034692	1.06E-08	25YrCancer	1.06E-08	0.00E+00	0.00E+00	0.00E+00	0.00E+00	0.00E+00	0.00E+00	0.00E+00	0.00E+00	0.00E+00	0.00E+00	0.00E+00
139	ALL	732273	4034692	1.21E-08	25YrCancer	1.21E-08	0.00E+00	0.00E+00	0.00E+00	0.00E+00	0.00E+00	0.00E+00	0.00E+00	0.00E+00	0.00E+00	0.00E+00	0.00E+00
140	ALL	732373	4034692	1.41E-08	25YrCancer	1.41E-08	0.00E+00	0.00E+00	0.00E+00	0.00E+00	0.00E+00	0.00E+00	0.00E+00	0.00E+00	0.00E+00	0.00E+00	0.00E+00
141	ALL	732473	4034692	1.64E-08	25YrCancer	1.64E-08	0.00E+00	0.00E+00	0.00E+00	0.00E+00	0.00E+00	0.00E+00	0.00E+00	0.00E+00	0.00E+00	0.00E+00	0.00E+00
142	ALL	732573	4034692	1.88E-08	25YrCancer	1.88E-08	0.00E+00	0.00E+00	0.00E+00	0.00E+00	0.00E+00	0.00E+00	0.00E+00	0.00E+00	0.00E+00	0.00E+00	0.00E+00
143	ALL	732673	4034692	2.03E-08	25YrCancer	2.03E-08	0.00E+00	0.00E+00	0.00E+00	0.00E+00	0.00E+00	0.00E+00	0.00E+00	0.00E+00	0.00E+00	0.00E+00	0.00E+00
144	ALL	732773	4034692	1.99E-08	25YrCancer	1.99E-08	0.00E+00	0.00E+00	0.00E+00	0.00E+00	0.00E+00	0.00E+00	0.00E+00	0.00E+00	0.00E+00	0.00E+00	0.00E+00
145	ALL	732873	4034692	1.69E-08	25YrCancer	1.69E-08	0.00E+00	0.00E+00	0.00E+00	0.00E+00	0.00E+00	0.00E+00	0.00E+00	0.00E+00	0.00E+00	0.00E+00	0.00E+00
146	ALL	732973	4034692	1.35E-08	25YrCancer	1.35E-08	0.00E+00	0.00E+00	0.00E+00	0.00E+00	0.00E+00	0.00E+00	0.00E+00	0.00E+00	0.00E+00	0.00E+00	0.00E+00
147	ALL	733073	4034692	1.06E-08	25YrCancer	1.06E-08	0.00E+00	0.00E+00	0.00E+00	0.00E+00	0.00E+00	0.00E+00	0.00E+00	0.00E+00	0.00E+00	0.00E+00	0.00E+00
148	ALL	733173	4034692	8.67E-09	25YrCancer	8.67E-09	0.00E+00	0.00E+00	0.00E+00	0.00E+00	0.00E+00	0.00E+00	0.00E+00	0.00E+00	0.00E+00	0.00E+00	0.00E+00
149	ALL	733273	4034692	7.56E-09	25YrCancer	7.56E-09	0.00E+00	0.00E+00	0.00E+00	0.00E+00	0.00E+00	0.00E+00	0.00E+00	0.00E+00	0.00E+00	0.00E+00	0.00E+00
150	ALL	733373	4034692	6.93E-09	25YrCancer	6.93E-09	0.00E+00	0.00E+00	0.00E+00	0.00E+00	0.00E+00	0.00E+00	0.00E+00	0.00E+00	0.00E+00	0.00E+00	0.00E+00
151	ALL	733473	4034692	6.46E-09	25YrCancer	6.46E-09	0.00E+00	0.00E+00	0.00E+00	0.00E+00	0.00E+00	0.00E+00	0.00E+00	0.00E+00	0.00E+00	0.00E+00	0.00E+00

152	ALL	733573	4034692	5.91E-09	25YrCancer	5.91E-09	0.00E+00	0.00E+00	0.00E+00	0.00E+00	0.00E+00	0.00E+00	0.00E+00	0.00E+00	0.00E+00	0.00E+00	0.00E+00
153	ALL	733673	4034692	5.40E-09	25YrCancer	5.40E-09	0.00E+00	0.00E+00	0.00E+00	0.00E+00	0.00E+00	0.00E+00	0.00E+00	0.00E+00	0.00E+00	0.00E+00	0.00E+00
154	ALL	733773	4034692	5.07E-09	25YrCancer	5.07E-09	0.00E+00	0.00E+00	0.00E+00	0.00E+00	0.00E+00	0.00E+00	0.00E+00	0.00E+00	0.00E+00	0.00E+00	0.00E+00
155	ALL	733873	4034692	4.89E-09	25YrCancer	4.89E-09	0.00E+00	0.00E+00	0.00E+00	0.00E+00	0.00E+00	0.00E+00	0.00E+00	0.00E+00	0.00E+00	0.00E+00	0.00E+00
156	ALL	733973	4034692	4.80E-09	25YrCancer	4.80E-09	0.00E+00	0.00E+00	0.00E+00	0.00E+00	0.00E+00	0.00E+00	0.00E+00	0.00E+00	0.00E+00	0.00E+00	0.00E+00
157	ALL	734073	4034692	4.78E-09	25YrCancer	4.78E-09	0.00E+00	0.00E+00	0.00E+00	0.00E+00	0.00E+00	0.00E+00	0.00E+00	0.00E+00	0.00E+00	0.00E+00	0.00E+00
158	ALL	734273	4034692	4.81E-09	25YrCancer	4.81E-09	0.00E+00	0.00E+00	0.00E+00	0.00E+00	0.00E+00	0.00E+00	0.00E+00	0.00E+00	0.00E+00	0.00E+00	0.00E+00
159	ALL	734373	4034692	4.83E-09	25YrCancer	4.83E-09	0.00E+00	0.00E+00	0.00E+00	0.00E+00	0.00E+00	0.00E+00	0.00E+00	0.00E+00	0.00E+00	0.00E+00	0.00E+00
160	ALL	734473	4034692	4.84E-09	25YrCancer	4.84E-09	0.00E+00	0.00E+00	0.00E+00	0.00E+00	0.00E+00	0.00E+00	0.00E+00	0.00E+00	0.00E+00	0.00E+00	0.00E+00
161	ALL	734573	4034692	4.85E-09	25YrCancer	4.85E-09	0.00E+00	0.00E+00	0.00E+00	0.00E+00	0.00E+00	0.00E+00	0.00E+00	0.00E+00	0.00E+00	0.00E+00	0.00E+00
162	ALL	734673	4034692	4.85E-09	25YrCancer	4.85E-09	0.00E+00	0.00E+00	0.00E+00	0.00E+00	0.00E+00	0.00E+00	0.00E+00	0.00E+00	0.00E+00	0.00E+00	0.00E+00
163	ALL	734773	4034692	4.85E-09	25YrCancer	4.85E-09	0.00E+00	0.00E+00	0.00E+00	0.00E+00	0.00E+00	0.00E+00	0.00E+00	0.00E+00	0.00E+00	0.00E+00	0.00E+00
164	ALL	734873	4034692	4.82E-09	25YrCancer	4.82E-09	0.00E+00	0.00E+00	0.00E+00	0.00E+00	0.00E+00	0.00E+00	0.00E+00	0.00E+00	0.00E+00	0.00E+00	0.00E+00
165	ALL	734973	4034692	4.79E-09	25YrCancer	4.79E-09	0.00E+00	0.00E+00	0.00E+00	0.00E+00	0.00E+00	0.00E+00	0.00E+00	0.00E+00	0.00E+00	0.00E+00	0.00E+00
166	ALL	732073	4034792	1.01E-08	25YrCancer	1.01E-08	0.00E+00	0.00E+00	0.00E+00	0.00E+00	0.00E+00	0.00E+00	0.00E+00	0.00E+00	0.00E+00	0.00E+00	0.00E+00
167	ALL	732173	4034792	1.12E-08	25YrCancer	1.12E-08	0.00E+00	0.00E+00	0.00E+00	0.00E+00	0.00E+00	0.00E+00	0.00E+00	0.00E+00	0.00E+00	0.00E+00	0.00E+00
168	ALL	732273	4034792	1.27E-08	25YrCancer	1.27E-08	0.00E+00	0.00E+00	0.00E+00	0.00E+00	0.00E+00	0.00E+00	0.00E+00	0.00E+00	0.00E+00	0.00E+00	0.00E+00
169	ALL	732373	4034792	1.44E-08	25YrCancer	1.44E-08	0.00E+00	0.00E+00	0.00E+00	0.00E+00	0.00E+00	0.00E+00	0.00E+00	0.00E+00	0.00E+00	0.00E+00	0.00E+00
170	ALL	732473	4034792	1.60E-08	25YrCancer	1.60E-08	0.00E+00	0.00E+00	0.00E+00	0.00E+00	0.00E+00	0.00E+00	0.00E+00	0.00E+00	0.00E+00	0.00E+00	0.00E+00
171	ALL	732573	4034792	1.70E-08	25YrCancer	1.70E-08	0.00E+00	0.00E+00	0.00E+00	0.00E+00	0.00E+00	0.00E+00	0.00E+00	0.00E+00	0.00E+00	0.00E+00	0.00E+00
172	ALL	732673	4034792	1.66E-08	25YrCancer	1.66E-08	0.00E+00	0.00E+00	0.00E+00	0.00E+00	0.00E+00	0.00E+00	0.00E+00	0.00E+00	0.00E+00	0.00E+00	0.00E+00
173	ALL	732773	4034792	1.48E-08	25YrCancer	1.48E-08	0.00E+00	0.00E+00	0.00E+00	0.00E+00	0.00E+00	0.00E+00	0.00E+00	0.00E+00	0.00E+00	0.00E+00	0.00E+00
174	ALL	732873	4034792	1.23E-08	25YrCancer	1.23E-08	0.00E+00	0.00E+00	0.00E+00	0.00E+00	0.00E+00	0.00E+00	0.00E+00	0.00E+00	0.00E+00	0.00E+00	0.00E+00
175	ALL	732973	4034792	9.99E-09	25YrCancer	9.99E-09	0.00E+00	0.00E+00	0.00E+00	0.00E+00	0.00E+00	0.00E+00	0.00E+00	0.00E+00	0.00E+00	0.00E+00	0.00E+00
176	ALL	733073	4034792	8.26E-09	25YrCancer	8.26E-09	0.00E+00	0.00E+00	0.00E+00	0.00E+00	0.00E+00	0.00E+00	0.00E+00	0.00E+00	0.00E+00	0.00E+00	0.00E+00
177	ALL	733173	4034792	7.08E-09	25YrCancer	7.08E-09	0.00E+00	0.00E+00	0.00E+00	0.00E+00	0.00E+00	0.00E+00	0.00E+00	0.00E+00	0.00E+00	0.00E+00	0.00E+00
178	ALL	733273	4034792	6.31E-09	25YrCancer	6.31E-09	0.00E+00	0.00E+00	0.00E+00	0.00E+00	0.00E+00	0.00E+00	0.00E+00	0.00E+00	0.00E+00	0.00E+00	0.00E+00
179	ALL	733373	4034792	5.86E-09	25YrCancer	5.86E-09	0.00E+00	0.00E+00	0.00E+00	0.00E+00	0.00E+00	0.00E+00	0.00E+00	0.00E+00	0.00E+00	0.00E+00	0.00E+00
180	ALL	733473	4034792	5.50E-09	25YrCancer	5.50E-09	0.00E+00	0.00E+00	0.00E+00	0.00E+00	0.00E+00	0.00E+00	0.00E+00	0.00E+00	0.00E+00	0.00E+00	0.00E+00
181	ALL	733573	4034792	5.15E-09	25YrCancer	5.15E-09	0.00E+00	0.00E+00	0.00E+00	0.00E+00	0.00E+00	0.00E+00	0.00E+00	0.00E+00	0.00E+00	0.00E+00	0.00E+00
182	ALL	733673	4034792	4.77E-09	25YrCancer	4.77E-09	0.00E+00	0.00E+00	0.00E+00	0.00E+00	0.00E+00	0.00E+00	0.00E+00	0.00E+00	0.00E+00	0.00E+00	0.00E+00
183	ALL	733773	4034792	4.48E-09	25YrCancer	4.48E-09	0.00E+00	0.00E+00	0.00E+00	0.00E+00	0.00E+00	0.00E+00	0.00E+00	0.00E+00	0.00E+00	0.00E+00	0.00E+00
184	ALL	733873	4034792	4.33E-09	25YrCancer	4.33E-09	0.00E+00	0.00E+00	0.00E+00	0.00E+00	0.00E+00	0.00E+00	0.00E+00	0.00E+00	0.00E+00	0.00E+00	0.00E+00
185	ALL	733973	4034792	4.25E-09	25YrCancer	4.25E-09	0.00E+00	0.00E+00	0.00E+00	0.00E+00	0.00E+00	0.00E+00	0.00E+00	0.00E+00	0.00E+00	0.00E+00	0.00E+00
186	ALL	734073	4034792	4.22E-09	25YrCancer	4.22E-09	0.00E+00	0.00E+00	0.00E+00	0.00E+00	0.00E+00	0.00E+00	0.00E+00	0.00E+00	0.00E+00	0.00E+00	0.00E+00
187	ALL	734173	4034792	4.24E-09	25YrCancer	4.24E-09	0.00E+00	0.00E+00	0.00E+00	0.00E+00	0.00E+00	0.00E+00	0.00E+00	0.00E+00	0.00E+00	0.00E+00	0.00E+00
188	ALL	734773	4034792	4.35E-09	25YrCancer	4.35E-09	0.00E+00	0.00E+00	0.00E+00	0.00E+00	0.00E+00	0.00E+00	0.00E+00	0.00E+00	0.00E+00	0.00E+00	0.00E+00
189	ALL	734873	4034792	4.34E-09	25YrCancer	4.34E-09	0.00E+00	0.00E+00	0.00E+00	0.00E+00	0.00E+00	0.00E+00	0.00E+00	0.00E+00	0.00E+00	0.00E+00	0.00E+00
190	ALL	734973	4034792	4.32E-09	25YrCancer	4.32E-09	0.00E+00	0.00E+00	0.00E+00	0.00E+00	0.00E+00	0.00E+00	0.00E+00	0.00E+00	0.00E+00	0.00E+00	0.00E+00
191	ALL	735073	4034792	4.30E-09	25YrCancer	4.30E-09	0.00E+00	0.00E+00	0.00E+00	0.00E+00	0.00E+00	0.00E+00	0.00E+00	0.00E+00	0.00E+00	0.00E+00	0.00E+00
192	ALL	732073	4034892	1.04E-08	25YrCancer	1.04E-08	0.00E+00	0.00E+00	0.00E+00	0.00E+00	0.00E+00	0.00E+00	0.00E+00	0.00E+00	0.00E+00	0.00E+00	0.00E+00
193	ALL	732173	4034892	1.15E-08	25YrCancer	1.15E-08	0.00E+00	0.00E+00	0.00E+00	0.00E+00	0.00E+00	0.00E+00	0.00E+00	0.00E+00	0.00E+00	0.00E+00	0.00E+00
194	ALL	732273	4034892	1.26E-08	25YrCancer	1.26E-08	0.00E+00	0.00E+00	0.00E+00	0.00E+00	0.00E+00	0.00E+00	0.00E+00	0.00E+00	0.00E+00	0.00E+00	0.00E+00
195	ALL	732373	4034892	1.36E-08	25YrCancer	1.36E-08	0.00E+00	0.00E+00	0.00E+00	0.00E+00	0.00E+00	0.00E+00	0.00E+00	0.00E+00	0.00E+00	0.00E+00	0.00E+00
196	ALL	732473	4034892	1.42E-08	25YrCancer	1.42E-08	0.00E+00	0.00E+00	0.00E+00	0.00E+00	0.00E+00	0.00E+00	0.00E+00	0.00E+00	0.00E+00	0.00E+00	0.00E+00
197	ALL	732573	4034892	1.42E-08	25YrCancer	1.42E-08	0.00E+00	0.00E+00	0.00E+00	0.00E+00	0.00E+00	0.00E+00	0.00E+00	0.00E+00	0.00E+00	0.00E+00	0.00E+00
198	ALL	732673	4034892	1.31E-08	25YrCancer	1.31E-08	0.00E+00	0.00E+00	0.00E+00	0.00E+00	0.00E+00	0.00E+00	0.00E+00	0.00E+00	0.00E+00	0.00E+00	0.00E+00
199	ALL	732773	4034892	1.12E-08	25YrCancer	1.12E-08	0.00E+00	0.00E+00	0.00E+00	0.00E+00	0.00E+00	0.00E+00	0.00E+00	0.00E+00	0.00E+00	0.00E+00	0.00E+00
200	ALL	732873	4034892	9.39E-09	25YrCancer	9.39E-09	0.00E+00	0.00E+00	0.00E+00	0.00E+00	0.00E+00	0.00E+00	0.00E+00	0.00E+00	0.00E+00	0.00E+00	0.00E+00
201	ALL	732973	4034892	7.91E-09	25YrCancer	7.91E-09	0.00E+00	0.00E+00	0.00E+00	0.00E+00	0.00E+00	0.00E+00	0.00E+00	0.00E+00	0.00E+00	0.00E+00	0.00E+00
202	ALL	733073	4034892	6.83E-09	25YrCancer	6.83E-09	0.00E+00	0.00E+00	0.00E+00	0.00E+00	0.00E+00	0.00E+00	0.00E+00	0.00E+00	0.00E+00	0.00E+00	0.00E+00

203	ALL	733173	4034892	6.02E-09	25YrCancer	6.02E-09	0.00E+00	0.00E+00	0.00E+00	0.00E+00	0.00E+00	0.00E+00	0.00E+00	0.00E+00	0.00E+00	0.00E+00	0.00E+00
204	ALL	733273	4034892	5.46E-09	25YrCancer	5.46E-09	0.00E+00	0.00E+00	0.00E+00	0.00E+00	0.00E+00	0.00E+00	0.00E+00	0.00E+00	0.00E+00	0.00E+00	0.00E+00
205	ALL	733373	4034892	5.11E-09	25YrCancer	5.11E-09	0.00E+00	0.00E+00	0.00E+00	0.00E+00	0.00E+00	0.00E+00	0.00E+00	0.00E+00	0.00E+00	0.00E+00	0.00E+00
206	ALL	733473	4034892	4.83E-09	25YrCancer	4.83E-09	0.00E+00	0.00E+00	0.00E+00	0.00E+00	0.00E+00	0.00E+00	0.00E+00	0.00E+00	0.00E+00	0.00E+00	0.00E+00
207	ALL	733573	4034892	4.59E-09	25YrCancer	4.59E-09	0.00E+00	0.00E+00	0.00E+00	0.00E+00	0.00E+00	0.00E+00	0.00E+00	0.00E+00	0.00E+00	0.00E+00	0.00E+00
208	ALL	733673	4034892	4.30E-09	25YrCancer	4.30E-09	0.00E+00	0.00E+00	0.00E+00	0.00E+00	0.00E+00	0.00E+00	0.00E+00	0.00E+00	0.00E+00	0.00E+00	0.00E+00
209	ALL	733773	4034892	4.06E-09	25YrCancer	4.06E-09	0.00E+00	0.00E+00	0.00E+00	0.00E+00	0.00E+00	0.00E+00	0.00E+00	0.00E+00	0.00E+00	0.00E+00	0.00E+00
210	ALL	733873	4034892	3.91E-09	25YrCancer	3.91E-09	0.00E+00	0.00E+00	0.00E+00	0.00E+00	0.00E+00	0.00E+00	0.00E+00	0.00E+00	0.00E+00	0.00E+00	0.00E+00
211	ALL	733973	4034892	3.83E-09	25YrCancer	3.83E-09	0.00E+00	0.00E+00	0.00E+00	0.00E+00	0.00E+00	0.00E+00	0.00E+00	0.00E+00	0.00E+00	0.00E+00	0.00E+00
212	ALL	734073	4034892	3.81E-09	25YrCancer	3.81E-09	0.00E+00	0.00E+00	0.00E+00	0.00E+00	0.00E+00	0.00E+00	0.00E+00	0.00E+00	0.00E+00	0.00E+00	0.00E+00
213	ALL	734173	4034892	3.82E-09	25YrCancer	3.82E-09	0.00E+00	0.00E+00	0.00E+00	0.00E+00	0.00E+00	0.00E+00	0.00E+00	0.00E+00	0.00E+00	0.00E+00	0.00E+00
214	ALL	734273	4034892	3.85E-09	25YrCancer	3.85E-09	0.00E+00	0.00E+00	0.00E+00	0.00E+00	0.00E+00	0.00E+00	0.00E+00	0.00E+00	0.00E+00	0.00E+00	0.00E+00
215	ALL	734373	4034892	3.90E-09	25YrCancer	3.90E-09	0.00E+00	0.00E+00	0.00E+00	0.00E+00	0.00E+00	0.00E+00	0.00E+00	0.00E+00	0.00E+00	0.00E+00	0.00E+00
216	ALL	734473	4034892	3.94E-09	25YrCancer	3.94E-09	0.00E+00	0.00E+00	0.00E+00	0.00E+00	0.00E+00	0.00E+00	0.00E+00	0.00E+00	0.00E+00	0.00E+00	0.00E+00
217	ALL	734573	4034892	3.97E-09	25YrCancer	3.97E-09	0.00E+00	0.00E+00	0.00E+00	0.00E+00	0.00E+00	0.00E+00	0.00E+00	0.00E+00	0.00E+00	0.00E+00	0.00E+00
218	ALL	734673	4034892	3.98E-09	25YrCancer	3.98E-09	0.00E+00	0.00E+00	0.00E+00	0.00E+00	0.00E+00	0.00E+00	0.00E+00	0.00E+00	0.00E+00	0.00E+00	0.00E+00
219	ALL	734873	4034892	3.97E-09	25YrCancer	3.97E-09	0.00E+00	0.00E+00	0.00E+00	0.00E+00	0.00E+00	0.00E+00	0.00E+00	0.00E+00	0.00E+00	0.00E+00	0.00E+00
220	ALL	734973	4034892	3.96E-09	25YrCancer	3.96E-09	0.00E+00	0.00E+00	0.00E+00	0.00E+00	0.00E+00	0.00E+00	0.00E+00	0.00E+00	0.00E+00	0.00E+00	0.00E+00
221	ALL	735073	4034892	3.95E-09	25YrCancer	3.95E-09	0.00E+00	0.00E+00	0.00E+00	0.00E+00	0.00E+00	0.00E+00	0.00E+00	0.00E+00	0.00E+00	0.00E+00	0.00E+00
222	ALL	735173	4034892	3.94E-09	25YrCancer	3.94E-09	0.00E+00	0.00E+00	0.00E+00	0.00E+00	0.00E+00	0.00E+00	0.00E+00	0.00E+00	0.00E+00	0.00E+00	0.00E+00
223	ALL	732073	4034992	1.04E-08	25YrCancer	1.04E-08	0.00E+00	0.00E+00	0.00E+00	0.00E+00	0.00E+00	0.00E+00	0.00E+00	0.00E+00	0.00E+00	0.00E+00	0.00E+00
224	ALL	732173	4034992	1.13E-08	25YrCancer	1.13E-08	0.00E+00	0.00E+00	0.00E+00	0.00E+00	0.00E+00	0.00E+00	0.00E+00	0.00E+00	0.00E+00	0.00E+00	0.00E+00
225	ALL	732273	4034992	1.19E-08	25YrCancer	1.19E-08	0.00E+00	0.00E+00	0.00E+00	0.00E+00	0.00E+00	0.00E+00	0.00E+00	0.00E+00	0.00E+00	0.00E+00	0.00E+00
226	ALL	732373	4034992	1.22E-08	25YrCancer	1.22E-08	0.00E+00	0.00E+00	0.00E+00	0.00E+00	0.00E+00	0.00E+00	0.00E+00	0.00E+00	0.00E+00	0.00E+00	0.00E+00
227	ALL	732473	4034992	1.21E-08	25YrCancer	1.21E-08	0.00E+00	0.00E+00	0.00E+00	0.00E+00	0.00E+00	0.00E+00	0.00E+00	0.00E+00	0.00E+00	0.00E+00	0.00E+00
228	ALL	732573	4034992	1.16E-08	25YrCancer	1.16E-08	0.00E+00	0.00E+00	0.00E+00	0.00E+00	0.00E+00	0.00E+00	0.00E+00	0.00E+00	0.00E+00	0.00E+00	0.00E+00
229	ALL	732673	4034992	1.04E-08	25YrCancer	1.04E-08	0.00E+00	0.00E+00	0.00E+00	0.00E+00	0.00E+00	0.00E+00	0.00E+00	0.00E+00	0.00E+00	0.00E+00	0.00E+00
230	ALL	732773	4034992	8.85E-09	25YrCancer	8.85E-09	0.00E+00	0.00E+00	0.00E+00	0.00E+00	0.00E+00	0.00E+00	0.00E+00	0.00E+00	0.00E+00	0.00E+00	0.00E+00
231	ALL	732873	4034992	7.55E-09	25YrCancer	7.55E-09	0.00E+00	0.00E+00	0.00E+00	0.00E+00	0.00E+00	0.00E+00	0.00E+00	0.00E+00	0.00E+00	0.00E+00	0.00E+00
232	ALL	732973	4034992	6.59E-09	25YrCancer	6.59E-09	0.00E+00	0.00E+00	0.00E+00	0.00E+00	0.00E+00	0.00E+00	0.00E+00	0.00E+00	0.00E+00	0.00E+00	0.00E+00
233	ALL	733073	4034992	5.86E-09	25YrCancer	5.86E-09	0.00E+00	0.00E+00	0.00E+00	0.00E+00	0.00E+00	0.00E+00	0.00E+00	0.00E+00	0.00E+00	0.00E+00	0.00E+00
234	ALL	733173	4034992	5.27E-09	25YrCancer	5.27E-09	0.00E+00	0.00E+00	0.00E+00	0.00E+00	0.00E+00	0.00E+00	0.00E+00	0.00E+00	0.00E+00	0.00E+00	0.00E+00
235	ALL	733273	4034992	4.87E-09	25YrCancer	4.87E-09	0.00E+00	0.00E+00	0.00E+00	0.00E+00	0.00E+00	0.00E+00	0.00E+00	0.00E+00	0.00E+00	0.00E+00	0.00E+00
236	ALL	733373	4034992	4.57E-09	25YrCancer	4.57E-09	0.00E+00	0.00E+00	0.00E+00	0.00E+00	0.00E+00	0.00E+00	0.00E+00	0.00E+00	0.00E+00	0.00E+00	0.00E+00
237	ALL	733473	4034992	4.34E-09	25YrCancer	4.34E-09	0.00E+00	0.00E+00	0.00E+00	0.00E+00	0.00E+00	0.00E+00	0.00E+00	0.00E+00	0.00E+00	0.00E+00	0.00E+00
238	ALL	733573	4034992	4.16E-09	25YrCancer	4.16E-09	0.00E+00	0.00E+00	0.00E+00	0.00E+00	0.00E+00	0.00E+00	0.00E+00	0.00E+00	0.00E+00	0.00E+00	0.00E+00
239	ALL	733673	4034992	3.95E-09	25YrCancer	3.95E-09	0.00E+00	0.00E+00	0.00E+00	0.00E+00	0.00E+00	0.00E+00	0.00E+00	0.00E+00	0.00E+00	0.00E+00	0.00E+00
240	ALL	733773	4034992	3.74E-09	25YrCancer	3.74E-09	0.00E+00	0.00E+00	0.00E+00	0.00E+00	0.00E+00	0.00E+00	0.00E+00	0.00E+00	0.00E+00	0.00E+00	0.00E+00
241	ALL	733873	4034992	3.59E-09	25YrCancer	3.59E-09	0.00E+00	0.00E+00	0.00E+00	0.00E+00	0.00E+00	0.00E+00	0.00E+00	0.00E+00	0.00E+00	0.00E+00	0.00E+00
242	ALL	733973	4034992	3.51E-09	25YrCancer	3.51E-09	0.00E+00	0.00E+00	0.00E+00	0.00E+00	0.00E+00	0.00E+00	0.00E+00	0.00E+00	0.00E+00	0.00E+00	0.00E+00
243	ALL	734073	4034992	3.49E-09	25YrCancer	3.49E-09	0.00E+00	0.00E+00	0.00E+00	0.00E+00	0.00E+00	0.00E+00	0.00E+00	0.00E+00	0.00E+00	0.00E+00	0.00E+00
244	ALL	734173	4034992	3.49E-09	25YrCancer	3.49E-09	0.00E+00	0.00E+00	0.00E+00	0.00E+00	0.00E+00	0.00E+00	0.00E+00	0.00E+00	0.00E+00	0.00E+00	0.00E+00
245	ALL	734273	4034992	3.52E-09	25YrCancer	3.52E-09	0.00E+00	0.00E+00	0.00E+00	0.00E+00	0.00E+00	0.00E+00	0.00E+00	0.00E+00	0.00E+00	0.00E+00	0.00E+00
246	ALL	734373	4034992	3.56E-09	25YrCancer	3.56E-09	0.00E+00	0.00E+00	0.00E+00	0.00E+00	0.00E+00	0.00E+00	0.00E+00	0.00E+00	0.00E+00	0.00E+00	0.00E+00
247	ALL	734473	4034992	3.62E-09	25YrCancer	3.62E-09	0.00E+00	0.00E+00	0.00E+00	0.00E+00	0.00E+00	0.00E+00	0.00E+00	0.00E+00	0.00E+00	0.00E+00	0.00E+00
248	ALL	734573	4034992	3.66E-09	25YrCancer	3.66E-09	0.00E+00	0.00E+00	0.00E+00	0.00E+00	0.00E+00	0.00E+00	0.00E+00	0.00E+00	0.00E+00	0.00E+00	0.00E+00
249	ALL	734673	4034992	3.68E-09	25YrCancer	3.68E-09	0.00E+00	0.00E+00	0.00E+00	0.00E+00	0.00E+00	0.00E+00	0.00E+00	0.00E+00	0.00E+00	0.00E+00	0.00E+00
250	ALL	734773	4034992	3.70E-09	25YrCancer	3.70E-09	0.00E+00	0.00E+00	0.00E+00	0.00E+00	0.00E+00	0.00E+00	0.00E+00	0.00E+00	0.00E+00	0.00E+00	0.00E+00
251	ALL	734973	4034992	3.70E-09	25YrCancer	3.70E-09	0.00E+00	0.00E+00	0.00E+00	0.00E+00	0.00E+00	0.00E+00	0.00E+00	0.00E+00	0.00E+00	0.00E+00	0.00E+00
252	ALL	735073	4034992	3.69E-09	25YrCancer	3.69E-09	0.00E+00	0.00E+00	0.00E+00	0.00E+00	0.00E+00	0.00E+00	0.00E+00	0.00E+00	0.00E+00	0.00E+00	0.00E+00
253	ALL	735173	4034992	3.68E-09	25YrCancer	3.68E-09	0.00E+00	0.00E+00	0.00E+00	0.00E+00	0.00E+00	0.00E+00	0.00E+00	0.00E+00	0.00E+00	0.00E+00	0.00E+00

254	ALL	735273	4034992	3.66E-09	25YrCancer	3.66E-09	0.00E+00	0.00E+00	0.00E+00	0.00E+00	0.00E+00	0.00E+00	0.00E+00	0.00E+00	0.00E+00	0.00E+00	0.00E+00
255	ALL	734073	4035092	3.24E-09	25YrCancer	3.24E-09	0.00E+00	0.00E+00	0.00E+00	0.00E+00	0.00E+00	0.00E+00	0.00E+00	0.00E+00	0.00E+00	0.00E+00	0.00E+00
256	ALL	734173	4035092	3.24E-09	25YrCancer	3.24E-09	0.00E+00	0.00E+00	0.00E+00	0.00E+00	0.00E+00	0.00E+00	0.00E+00	0.00E+00	0.00E+00	0.00E+00	0.00E+00
257	ALL	734273	4035092	3.26E-09	25YrCancer	3.26E-09	0.00E+00	0.00E+00	0.00E+00	0.00E+00	0.00E+00	0.00E+00	0.00E+00	0.00E+00	0.00E+00	0.00E+00	0.00E+00
258	ALL	734373	4035092	3.29E-09	25YrCancer	3.29E-09	0.00E+00	0.00E+00	0.00E+00	0.00E+00	0.00E+00	0.00E+00	0.00E+00	0.00E+00	0.00E+00	0.00E+00	0.00E+00
259	ALL	734473	4035092	3.34E-09	25YrCancer	3.34E-09	0.00E+00	0.00E+00	0.00E+00	0.00E+00	0.00E+00	0.00E+00	0.00E+00	0.00E+00	0.00E+00	0.00E+00	0.00E+00
260	ALL	734573	4035092	3.39E-09	25YrCancer	3.39E-09	0.00E+00	0.00E+00	0.00E+00	0.00E+00	0.00E+00	0.00E+00	0.00E+00	0.00E+00	0.00E+00	0.00E+00	0.00E+00
261	ALL	734673	4035092	3.42E-09	25YrCancer	3.42E-09	0.00E+00	0.00E+00	0.00E+00	0.00E+00	0.00E+00	0.00E+00	0.00E+00	0.00E+00	0.00E+00	0.00E+00	0.00E+00
262	ALL	734773	4035092	3.45E-09	25YrCancer	3.45E-09	0.00E+00	0.00E+00	0.00E+00	0.00E+00	0.00E+00	0.00E+00	0.00E+00	0.00E+00	0.00E+00	0.00E+00	0.00E+00
263	ALL	734873	4035092	3.47E-09	25YrCancer	3.47E-09	0.00E+00	0.00E+00	0.00E+00	0.00E+00	0.00E+00	0.00E+00	0.00E+00	0.00E+00	0.00E+00	0.00E+00	0.00E+00
264	ALL	735073	4035092	3.48E-09	25YrCancer	3.48E-09	0.00E+00	0.00E+00	0.00E+00	0.00E+00	0.00E+00	0.00E+00	0.00E+00	0.00E+00	0.00E+00	0.00E+00	0.00E+00
265	ALL	735173	4035092	3.47E-09	25YrCancer	3.47E-09	0.00E+00	0.00E+00	0.00E+00	0.00E+00	0.00E+00	0.00E+00	0.00E+00	0.00E+00	0.00E+00	0.00E+00	0.00E+00
266	ALL	735273	4035092	3.46E-09	25YrCancer	3.46E-09	0.00E+00	0.00E+00	0.00E+00	0.00E+00	0.00E+00	0.00E+00	0.00E+00	0.00E+00	0.00E+00	0.00E+00	0.00E+00
267	ALL	735373	4035092	3.45E-09	25YrCancer	3.45E-09	0.00E+00	0.00E+00	0.00E+00	0.00E+00	0.00E+00	0.00E+00	0.00E+00	0.00E+00	0.00E+00	0.00E+00	0.00E+00
268	ALL	734073	4035192	3.04E-09	25YrCancer	3.04E-09	0.00E+00	0.00E+00	0.00E+00	0.00E+00	0.00E+00	0.00E+00	0.00E+00	0.00E+00	0.00E+00	0.00E+00	0.00E+00
269	ALL	734173	4035192	3.04E-09	25YrCancer	3.04E-09	0.00E+00	0.00E+00	0.00E+00	0.00E+00	0.00E+00	0.00E+00	0.00E+00	0.00E+00	0.00E+00	0.00E+00	0.00E+00
270	ALL	734273	4035192	3.06E-09	25YrCancer	3.06E-09	0.00E+00	0.00E+00	0.00E+00	0.00E+00	0.00E+00	0.00E+00	0.00E+00	0.00E+00	0.00E+00	0.00E+00	0.00E+00
271	ALL	734373	4035192	3.08E-09	25YrCancer	3.08E-09	0.00E+00	0.00E+00	0.00E+00	0.00E+00	0.00E+00	0.00E+00	0.00E+00	0.00E+00	0.00E+00	0.00E+00	0.00E+00
272	ALL	734473	4035192	3.11E-09	25YrCancer	3.11E-09	0.00E+00	0.00E+00	0.00E+00	0.00E+00	0.00E+00	0.00E+00	0.00E+00	0.00E+00	0.00E+00	0.00E+00	0.00E+00
273	ALL	734573	4035192	3.15E-09	25YrCancer	3.15E-09	0.00E+00	0.00E+00	0.00E+00	0.00E+00	0.00E+00	0.00E+00	0.00E+00	0.00E+00	0.00E+00	0.00E+00	0.00E+00
274	ALL	734673	4035192	3.19E-09	25YrCancer	3.19E-09	0.00E+00	0.00E+00	0.00E+00	0.00E+00	0.00E+00	0.00E+00	0.00E+00	0.00E+00	0.00E+00	0.00E+00	0.00E+00
275	ALL	734773	4035192	3.24E-09	25YrCancer	3.24E-09	0.00E+00	0.00E+00	0.00E+00	0.00E+00	0.00E+00	0.00E+00	0.00E+00	0.00E+00	0.00E+00	0.00E+00	0.00E+00
276	ALL	734873	4035192	3.27E-09	25YrCancer	3.27E-09	0.00E+00	0.00E+00	0.00E+00	0.00E+00	0.00E+00	0.00E+00	0.00E+00	0.00E+00	0.00E+00	0.00E+00	0.00E+00
277	ALL	734973	4035192	3.29E-09	25YrCancer	3.29E-09	0.00E+00	0.00E+00	0.00E+00	0.00E+00	0.00E+00	0.00E+00	0.00E+00	0.00E+00	0.00E+00	0.00E+00	0.00E+00
278	ALL	735173	4035192	3.30E-09	25YrCancer	3.30E-09	0.00E+00	0.00E+00	0.00E+00	0.00E+00	0.00E+00	0.00E+00	0.00E+00	0.00E+00	0.00E+00	0.00E+00	0.00E+00
279	ALL	735273	4035192	3.29E-09	25YrCancer	3.29E-09	0.00E+00	0.00E+00	0.00E+00	0.00E+00	0.00E+00	0.00E+00	0.00E+00	0.00E+00	0.00E+00	0.00E+00	0.00E+00
280	ALL	735373	4035192	3.28E-09	25YrCancer	3.28E-09	0.00E+00	0.00E+00	0.00E+00	0.00E+00	0.00E+00	0.00E+00	0.00E+00	0.00E+00	0.00E+00	0.00E+00	0.00E+00
281	ALL	735473	4035192	3.28E-09	25YrCancer	3.28E-09	0.00E+00	0.00E+00	0.00E+00	0.00E+00	0.00E+00	0.00E+00	0.00E+00	0.00E+00	0.00E+00	0.00E+00	0.00E+00
282	ALL	735573	4035192	3.27E-09	25YrCancer	3.27E-09	0.00E+00	0.00E+00	0.00E+00	0.00E+00	0.00E+00	0.00E+00	0.00E+00	0.00E+00	0.00E+00	0.00E+00	0.00E+00
283	ALL	735673	4035192	3.26E-09	25YrCancer	3.26E-09	0.00E+00	0.00E+00	0.00E+00	0.00E+00	0.00E+00	0.00E+00	0.00E+00	0.00E+00	0.00E+00	0.00E+00	0.00E+00
284	ALL	735773	4035192	3.26E-09	25YrCancer	3.26E-09	0.00E+00	0.00E+00	0.00E+00	0.00E+00	0.00E+00	0.00E+00	0.00E+00	0.00E+00	0.00E+00	0.00E+00	0.00E+00
285	ALL	735873	4035192	3.25E-09	25YrCancer	3.25E-09	0.00E+00	0.00E+00	0.00E+00	0.00E+00	0.00E+00	0.00E+00	0.00E+00	0.00E+00	0.00E+00	0.00E+00	0.00E+00
286	ALL	735973	4035192	3.25E-09	25YrCancer	3.25E-09	0.00E+00	0.00E+00	0.00E+00	0.00E+00	0.00E+00	0.00E+00	0.00E+00	0.00E+00	0.00E+00	0.00E+00	0.00E+00
287	ALL	736073	4035192	3.24E-09	25YrCancer	3.24E-09	0.00E+00	0.00E+00	0.00E+00	0.00E+00	0.00E+00	0.00E+00	0.00E+00	0.00E+00	0.00E+00	0.00E+00	0.00E+00
288	ALL	736173	4035192	3.23E-09	25YrCancer	3.23E-09	0.00E+00	0.00E+00	0.00E+00	0.00E+00	0.00E+00	0.00E+00	0.00E+00	0.00E+00	0.00E+00	0.00E+00	0.00E+00
289	ALL	736273	4035192	3.22E-09	25YrCancer	3.22E-09	0.00E+00	0.00E+00	0.00E+00	0.00E+00	0.00E+00	0.00E+00	0.00E+00	0.00E+00	0.00E+00	0.00E+00	0.00E+00
290	ALL	736373	4035192	3.22E-09	25YrCancer	3.22E-09	0.00E+00	0.00E+00	0.00E+00	0.00E+00	0.00E+00	0.00E+00	0.00E+00	0.00E+00	0.00E+00	0.00E+00	0.00E+00
291	ALL	736473	4035192	3.21E-09	25YrCancer	3.21E-09	0.00E+00	0.00E+00	0.00E+00	0.00E+00	0.00E+00	0.00E+00	0.00E+00	0.00E+00	0.00E+00	0.00E+00	0.00E+00
292	ALL	736573	4035192	3.20E-09	25YrCancer	3.20E-09	0.00E+00	0.00E+00	0.00E+00	0.00E+00	0.00E+00	0.00E+00	0.00E+00	0.00E+00	0.00E+00	0.00E+00	0.00E+00
293	ALL	736673	4035192	3.20E-09	25YrCancer	3.20E-09	0.00E+00	0.00E+00	0.00E+00	0.00E+00	0.00E+00	0.00E+00	0.00E+00	0.00E+00	0.00E+00	0.00E+00	0.00E+00
294	ALL	736773	4035192	3.19E-09	25YrCancer	3.19E-09	0.00E+00	0.00E+00	0.00E+00	0.00E+00	0.00E+00	0.00E+00	0.00E+00	0.00E+00	0.00E+00	0.00E+00	0.00E+00
295	ALL	736873	4035192	3.18E-09	25YrCancer	3.18E-09	0.00E+00	0.00E+00	0.00E+00	0.00E+00	0.00E+00	0.00E+00	0.00E+00	0.00E+00	0.00E+00	0.00E+00	0.00E+00
296	ALL	736973	4035192	3.17E-09	25YrCancer	3.17E-09	0.00E+00	0.00E+00	0.00E+00	0.00E+00	0.00E+00	0.00E+00	0.00E+00	0.00E+00	0.00E+00	0.00E+00	0.00E+00
297	ALL	737073	4035192	3.17E-09	25YrCancer	3.17E-09	0.00E+00	0.00E+00	0.00E+00	0.00E+00	0.00E+00	0.00E+00	0.00E+00	0.00E+00	0.00E+00	0.00E+00	0.00E+00
298	ALL	737173	4035192	3.17E-09	25YrCancer	3.17E-09	0.00E+00	0.00E+00	0.00E+00	0.00E+00	0.00E+00	0.00E+00	0.00E+00	0.00E+00	0.00E+00	0.00E+00	0.00E+00
299	ALL	737273	4035192	3.16E-09	25YrCancer	3.16E-09	0.00E+00	0.00E+00	0.00E+00	0.00E+00	0.00E+00	0.00E+00	0.00E+00	0.00E+00	0.00E+00	0.00E+00	0.00E+00
300	ALL	737373	4035192	3.15E-09	25YrCancer	3.15E-09	0.00E+00	0.00E+00	0.00E+00	0.00E+00	0.00E+00	0.00E+00	0.00E+00	0.00E+00	0.00E+00	0.00E+00	0.00E+00
301	ALL	737473	4035192	3.15E-09	25YrCancer	3.15E-09	0.00E+00	0.00E+00	0.00E+00	0.00E+00	0.00E+00	0.00E+00	0.00E+00	0.00E+00	0.00E+00	0.00E+00	0.00E+00
302	ALL	737573	4035192	3.14E-09	25YrCancer	3.14E-09	0.00E+00	0.00E+00	0.00E+00	0.00E+00	0.00E+00	0.00E+00	0.00E+00	0.00E+00	0.00E+00	0.00E+00	0.00E+00
303	ALL	737673	4035192	3.13E-09	25YrCancer	3.13E-09	0.00E+00	0.00E+00	0.00E+00	0.00E+00	0.00E+00	0.00E+00	0.00E+00	0.00E+00	0.00E+00	0.00E+00	0.00E+00
304	ALL	737773	4035192	3.12E-09	25YrCancer	3.12E-09	0.00E+00	0.00E+00	0.00E+00	0.00E+00	0.00E+00	0.00E+00	0.00E+00	0.00E+00	0.00E+00	0.00E+00	0.00E+00

305	ALL	737873	4035192	3.12E-09	25YrCancer	3.12E-09	0.00E+00	0.00E+00	0.00E+00	0.00E+00	0.00E+00	0.00E+00	0.00E+00	0.00E+00	0.00E+00	0.00E+00	0.00E+00
306	ALL	737973	4035192	3.11E-09	25YrCancer	3.11E-09	0.00E+00	0.00E+00	0.00E+00	0.00E+00	0.00E+00	0.00E+00	0.00E+00	0.00E+00	0.00E+00	0.00E+00	0.00E+00
307	ALL	734673	4035292	2.99E-09	25YrCancer	2.99E-09	0.00E+00	0.00E+00	0.00E+00	0.00E+00	0.00E+00	0.00E+00	0.00E+00	0.00E+00	0.00E+00	0.00E+00	0.00E+00
308	ALL	734773	4035292	3.04E-09	25YrCancer	3.04E-09	0.00E+00	0.00E+00	0.00E+00	0.00E+00	0.00E+00	0.00E+00	0.00E+00	0.00E+00	0.00E+00	0.00E+00	0.00E+00
309	ALL	734873	4035292	3.08E-09	25YrCancer	3.08E-09	0.00E+00	0.00E+00	0.00E+00	0.00E+00	0.00E+00	0.00E+00	0.00E+00	0.00E+00	0.00E+00	0.00E+00	0.00E+00
310	ALL	734973	4035292	3.12E-09	25YrCancer	3.12E-09	0.00E+00	0.00E+00	0.00E+00	0.00E+00	0.00E+00	0.00E+00	0.00E+00	0.00E+00	0.00E+00	0.00E+00	0.00E+00
311	ALL	735073	4035292	3.14E-09	25YrCancer	3.14E-09	0.00E+00	0.00E+00	0.00E+00	0.00E+00	0.00E+00	0.00E+00	0.00E+00	0.00E+00	0.00E+00	0.00E+00	0.00E+00
312	ALL	735273	4035292	3.16E-09	25YrCancer	3.16E-09	0.00E+00	0.00E+00	0.00E+00	0.00E+00	0.00E+00	0.00E+00	0.00E+00	0.00E+00	0.00E+00	0.00E+00	0.00E+00
313	ALL	735373	4035292	3.15E-09	25YrCancer	3.15E-09	0.00E+00	0.00E+00	0.00E+00	0.00E+00	0.00E+00	0.00E+00	0.00E+00	0.00E+00	0.00E+00	0.00E+00	0.00E+00
314	ALL	735473	4035292	3.15E-09	25YrCancer	3.15E-09	0.00E+00	0.00E+00	0.00E+00	0.00E+00	0.00E+00	0.00E+00	0.00E+00	0.00E+00	0.00E+00	0.00E+00	0.00E+00
315	ALL	735573	4035292	3.14E-09	25YrCancer	3.14E-09	0.00E+00	0.00E+00	0.00E+00	0.00E+00	0.00E+00	0.00E+00	0.00E+00	0.00E+00	0.00E+00	0.00E+00	0.00E+00
316	ALL	735673	4035292	3.13E-09	25YrCancer	3.13E-09	0.00E+00	0.00E+00	0.00E+00	0.00E+00	0.00E+00	0.00E+00	0.00E+00	0.00E+00	0.00E+00	0.00E+00	0.00E+00
317	ALL	735773	4035292	3.13E-09	25YrCancer	3.13E-09	0.00E+00	0.00E+00	0.00E+00	0.00E+00	0.00E+00	0.00E+00	0.00E+00	0.00E+00	0.00E+00	0.00E+00	0.00E+00
318	ALL	735873	4035292	3.13E-09	25YrCancer	3.13E-09	0.00E+00	0.00E+00	0.00E+00	0.00E+00	0.00E+00	0.00E+00	0.00E+00	0.00E+00	0.00E+00	0.00E+00	0.00E+00
319	ALL	735973	4035292	3.13E-09	25YrCancer	3.13E-09	0.00E+00	0.00E+00	0.00E+00	0.00E+00	0.00E+00	0.00E+00	0.00E+00	0.00E+00	0.00E+00	0.00E+00	0.00E+00
320	ALL	736073	4035292	3.12E-09	25YrCancer	3.12E-09	0.00E+00	0.00E+00	0.00E+00	0.00E+00	0.00E+00	0.00E+00	0.00E+00	0.00E+00	0.00E+00	0.00E+00	0.00E+00
321	ALL	736173	4035292	3.12E-09	25YrCancer	3.12E-09	0.00E+00	0.00E+00	0.00E+00	0.00E+00	0.00E+00	0.00E+00	0.00E+00	0.00E+00	0.00E+00	0.00E+00	0.00E+00
322	ALL	736273	4035292	3.11E-09	25YrCancer	3.11E-09	0.00E+00	0.00E+00	0.00E+00	0.00E+00	0.00E+00	0.00E+00	0.00E+00	0.00E+00	0.00E+00	0.00E+00	0.00E+00
323	ALL	736373	4035292	3.11E-09	25YrCancer	3.11E-09	0.00E+00	0.00E+00	0.00E+00	0.00E+00	0.00E+00	0.00E+00	0.00E+00	0.00E+00	0.00E+00	0.00E+00	0.00E+00
324	ALL	736473	4035292	3.11E-09	25YrCancer	3.11E-09	0.00E+00	0.00E+00	0.00E+00	0.00E+00	0.00E+00	0.00E+00	0.00E+00	0.00E+00	0.00E+00	0.00E+00	0.00E+00
325	ALL	736573	4035292	3.10E-09	25YrCancer	3.10E-09	0.00E+00	0.00E+00	0.00E+00	0.00E+00	0.00E+00	0.00E+00	0.00E+00	0.00E+00	0.00E+00	0.00E+00	0.00E+00
326	ALL	736673	4035292	3.10E-09	25YrCancer	3.10E-09	0.00E+00	0.00E+00	0.00E+00	0.00E+00	0.00E+00	0.00E+00	0.00E+00	0.00E+00	0.00E+00	0.00E+00	0.00E+00
327	ALL	736773	4035292	3.10E-09	25YrCancer	3.10E-09	0.00E+00	0.00E+00	0.00E+00	0.00E+00	0.00E+00	0.00E+00	0.00E+00	0.00E+00	0.00E+00	0.00E+00	0.00E+00
328	ALL	736873	4035292	3.10E-09	25YrCancer	3.10E-09	0.00E+00	0.00E+00	0.00E+00	0.00E+00	0.00E+00	0.00E+00	0.00E+00	0.00E+00	0.00E+00	0.00E+00	0.00E+00
329	ALL	736973	4035292	3.09E-09	25YrCancer	3.09E-09	0.00E+00	0.00E+00	0.00E+00	0.00E+00	0.00E+00	0.00E+00	0.00E+00	0.00E+00	0.00E+00	0.00E+00	0.00E+00
330	ALL	737073	4035292	3.09E-09	25YrCancer	3.09E-09	0.00E+00	0.00E+00	0.00E+00	0.00E+00	0.00E+00	0.00E+00	0.00E+00	0.00E+00	0.00E+00	0.00E+00	0.00E+00
331	ALL	737173	4035292	3.08E-09	25YrCancer	3.08E-09	0.00E+00	0.00E+00	0.00E+00	0.00E+00	0.00E+00	0.00E+00	0.00E+00	0.00E+00	0.00E+00	0.00E+00	0.00E+00
332	ALL	737273	4035292	3.08E-09	25YrCancer	3.08E-09	0.00E+00	0.00E+00	0.00E+00	0.00E+00	0.00E+00	0.00E+00	0.00E+00	0.00E+00	0.00E+00	0.00E+00	0.00E+00
333	ALL	737373	4035292	3.08E-09	25YrCancer	3.08E-09	0.00E+00	0.00E+00	0.00E+00	0.00E+00	0.00E+00	0.00E+00	0.00E+00	0.00E+00	0.00E+00	0.00E+00	0.00E+00
334	ALL	737473	4035292	3.07E-09	25YrCancer	3.07E-09	0.00E+00	0.00E+00	0.00E+00	0.00E+00	0.00E+00	0.00E+00	0.00E+00	0.00E+00	0.00E+00	0.00E+00	0.00E+00
335	ALL	737573	4035292	3.07E-09	25YrCancer	3.07E-09	0.00E+00	0.00E+00	0.00E+00	0.00E+00	0.00E+00	0.00E+00	0.00E+00	0.00E+00	0.00E+00	0.00E+00	0.00E+00
336	ALL	737673	4035292	3.06E-09	25YrCancer	3.06E-09	0.00E+00	0.00E+00	0.00E+00	0.00E+00	0.00E+00	0.00E+00	0.00E+00	0.00E+00	0.00E+00	0.00E+00	0.00E+00
337	ALL	737773	4035292	3.06E-09	25YrCancer	3.06E-09	0.00E+00	0.00E+00	0.00E+00	0.00E+00	0.00E+00	0.00E+00	0.00E+00	0.00E+00	0.00E+00	0.00E+00	0.00E+00
338	ALL	737873	4035292	3.06E-09	25YrCancer	3.06E-09	0.00E+00	0.00E+00	0.00E+00	0.00E+00	0.00E+00	0.00E+00	0.00E+00	0.00E+00	0.00E+00	0.00E+00	0.00E+00
339	ALL	737973	4035292	3.05E-09	25YrCancer	3.05E-09	0.00E+00	0.00E+00	0.00E+00	0.00E+00	0.00E+00	0.00E+00	0.00E+00	0.00E+00	0.00E+00	0.00E+00	0.00E+00
340	ALL	734873	4035392	2.91E-09	25YrCancer	2.91E-09	0.00E+00	0.00E+00	0.00E+00	0.00E+00	0.00E+00	0.00E+00	0.00E+00	0.00E+00	0.00E+00	0.00E+00	0.00E+00
341	ALL	734973	4035392	2.95E-09	25YrCancer	2.95E-09	0.00E+00	0.00E+00	0.00E+00	0.00E+00	0.00E+00	0.00E+00	0.00E+00	0.00E+00	0.00E+00	0.00E+00	0.00E+00
342	ALL	735073	4035392	2.99E-09	25YrCancer	2.99E-09	0.00E+00	0.00E+00	0.00E+00	0.00E+00	0.00E+00	0.00E+00	0.00E+00	0.00E+00	0.00E+00	0.00E+00	0.00E+00
343	ALL	735173	4035392	3.01E-09	25YrCancer	3.01E-09	0.00E+00	0.00E+00	0.00E+00	0.00E+00	0.00E+00	0.00E+00	0.00E+00	0.00E+00	0.00E+00	0.00E+00	0.00E+00
344	ALL	735373	4035392	3.03E-09	25YrCancer	3.03E-09	0.00E+00	0.00E+00	0.00E+00	0.00E+00	0.00E+00	0.00E+00	0.00E+00	0.00E+00	0.00E+00	0.00E+00	0.00E+00
345	ALL	735473	4035392	3.04E-09	25YrCancer	3.04E-09	0.00E+00	0.00E+00	0.00E+00	0.00E+00	0.00E+00	0.00E+00	0.00E+00	0.00E+00	0.00E+00	0.00E+00	0.00E+00
346	ALL	735573	4035392	3.03E-09	25YrCancer	3.03E-09	0.00E+00	0.00E+00	0.00E+00	0.00E+00	0.00E+00	0.00E+00	0.00E+00	0.00E+00	0.00E+00	0.00E+00	0.00E+00
347	ALL	735673	4035392	3.03E-09	25YrCancer	3.03E-09	0.00E+00	0.00E+00	0.00E+00	0.00E+00	0.00E+00	0.00E+00	0.00E+00	0.00E+00	0.00E+00	0.00E+00	0.00E+00
348	ALL	735773	4035392	3.03E-09	25YrCancer	3.03E-09	0.00E+00	0.00E+00	0.00E+00	0.00E+00	0.00E+00	0.00E+00	0.00E+00	0.00E+00	0.00E+00	0.00E+00	0.00E+00
349	ALL	735873	4035392	3.02E-09	25YrCancer	3.02E-09	0.00E+00	0.00E+00	0.00E+00	0.00E+00	0.00E+00	0.00E+00	0.00E+00	0.00E+00	0.00E+00	0.00E+00	0.00E+00
350	ALL	735973	4035392	3.02E-09	25YrCancer	3.02E-09	0.00E+00	0.00E+00	0.00E+00	0.00E+00	0.00E+00	0.00E+00	0.00E+00	0.00E+00	0.00E+00	0.00E+00	0.00E+00
351	ALL	736073	4035392	3.02E-09	25YrCancer	3.02E-09	0.00E+00	0.00E+00	0.00E+00	0.00E+00	0.00E+00	0.00E+00	0.00E+00	0.00E+00	0.00E+00	0.00E+00	0.00E+00
352	ALL	736173	4035392	3.02E-09	25YrCancer	3.02E-09	0.00E+00	0.00E+00	0.00E+00	0.00E+00	0.00E+00	0.00E+00	0.00E+00	0.00E+00	0.00E+00	0.00E+00	0.00E+00
353	ALL	736273	4035392	3.02E-09	25YrCancer	3.02E-09	0.00E+00	0.00E+00	0.00E+00	0.00E+00	0.00E+00	0.00E+00	0.00E+00	0.00E+00	0.00E+00	0.00E+00	0.00E+00
354	ALL	736373	4035392	3.02E-09	25YrCancer	3.02E-09	0.00E+00	0.00E+00	0.00E+00	0.00E+00	0.00E+00	0.00E+00	0.00E+00	0.00E+00	0.00E+00	0.00E+00	0.00E+00
355	ALL	736473	4035392	3.02E-09	25YrCancer	3.02E-09	0.00E+00	0.00E+00	0.00E+00	0.00E+00	0.00E+00	0.00E+00	0.00E+00	0.00E+00	0.00E+00	0.00E+00	0.00E+00

356	ALL	736573	4035392	3.02E-09	25YrCancer	3.02E-09	0.00E+00	0.00E+00	0.00E+00	0.00E+00	0.00E+00	0.00E+00	0.00E+00	0.00E+00	0.00E+00	0.00E+00	0.00E+00
357	ALL	736673	4035392	3.02E-09	25YrCancer	3.02E-09	0.00E+00	0.00E+00	0.00E+00	0.00E+00	0.00E+00	0.00E+00	0.00E+00	0.00E+00	0.00E+00	0.00E+00	0.00E+00
358	ALL	736773	4035392	3.02E-09	25YrCancer	3.02E-09	0.00E+00	0.00E+00	0.00E+00	0.00E+00	0.00E+00	0.00E+00	0.00E+00	0.00E+00	0.00E+00	0.00E+00	0.00E+00
359	ALL	736873	4035392	3.02E-09	25YrCancer	3.02E-09	0.00E+00	0.00E+00	0.00E+00	0.00E+00	0.00E+00	0.00E+00	0.00E+00	0.00E+00	0.00E+00	0.00E+00	0.00E+00
360	ALL	736973	4035392	3.02E-09	25YrCancer	3.02E-09	0.00E+00	0.00E+00	0.00E+00	0.00E+00	0.00E+00	0.00E+00	0.00E+00	0.00E+00	0.00E+00	0.00E+00	0.00E+00
361	ALL	737073	4035392	3.02E-09	25YrCancer	3.02E-09	0.00E+00	0.00E+00	0.00E+00	0.00E+00	0.00E+00	0.00E+00	0.00E+00	0.00E+00	0.00E+00	0.00E+00	0.00E+00
362	ALL	737173	4035392	3.02E-09	25YrCancer	3.02E-09	0.00E+00	0.00E+00	0.00E+00	0.00E+00	0.00E+00	0.00E+00	0.00E+00	0.00E+00	0.00E+00	0.00E+00	0.00E+00
363	ALL	737273	4035392	3.01E-09	25YrCancer	3.01E-09	0.00E+00	0.00E+00	0.00E+00	0.00E+00	0.00E+00	0.00E+00	0.00E+00	0.00E+00	0.00E+00	0.00E+00	0.00E+00
364	ALL	737373	4035392	3.01E-09	25YrCancer	3.01E-09	0.00E+00	0.00E+00	0.00E+00	0.00E+00	0.00E+00	0.00E+00	0.00E+00	0.00E+00	0.00E+00	0.00E+00	0.00E+00
365	ALL	737473	4035392	3.01E-09	25YrCancer	3.01E-09	0.00E+00	0.00E+00	0.00E+00	0.00E+00	0.00E+00	0.00E+00	0.00E+00	0.00E+00	0.00E+00	0.00E+00	0.00E+00
366	ALL	737573	4035392	3.01E-09	25YrCancer	3.01E-09	0.00E+00	0.00E+00	0.00E+00	0.00E+00	0.00E+00	0.00E+00	0.00E+00	0.00E+00	0.00E+00	0.00E+00	0.00E+00
367	ALL	737673	4035392	3.01E-09	25YrCancer	3.01E-09	0.00E+00	0.00E+00	0.00E+00	0.00E+00	0.00E+00	0.00E+00	0.00E+00	0.00E+00	0.00E+00	0.00E+00	0.00E+00
368	ALL	737773	4035392	3.01E-09	25YrCancer	3.01E-09	0.00E+00	0.00E+00	0.00E+00	0.00E+00	0.00E+00	0.00E+00	0.00E+00	0.00E+00	0.00E+00	0.00E+00	0.00E+00
369	ALL	737873	4035392	3.01E-09	25YrCancer	3.01E-09	0.00E+00	0.00E+00	0.00E+00	0.00E+00	0.00E+00	0.00E+00	0.00E+00	0.00E+00	0.00E+00	0.00E+00	0.00E+00
370	ALL	737973	4035392	3.00E-09	25YrCancer	3.00E-09	0.00E+00	0.00E+00	0.00E+00	0.00E+00	0.00E+00	0.00E+00	0.00E+00	0.00E+00	0.00E+00	0.00E+00	0.00E+00
371	ALL	734973	4035492	2.80E-09	25YrCancer	2.80E-09	0.00E+00	0.00E+00	0.00E+00	0.00E+00	0.00E+00	0.00E+00	0.00E+00	0.00E+00	0.00E+00	0.00E+00	0.00E+00
372	ALL	735073	4035492	2.84E-09	25YrCancer	2.84E-09	0.00E+00	0.00E+00	0.00E+00	0.00E+00	0.00E+00	0.00E+00	0.00E+00	0.00E+00	0.00E+00	0.00E+00	0.00E+00
373	ALL	735173	4035492	2.87E-09	25YrCancer	2.87E-09	0.00E+00	0.00E+00	0.00E+00	0.00E+00	0.00E+00	0.00E+00	0.00E+00	0.00E+00	0.00E+00	0.00E+00	0.00E+00
374	ALL	735273	4035492	2.91E-09	25YrCancer	2.91E-09	0.00E+00	0.00E+00	0.00E+00	0.00E+00	0.00E+00	0.00E+00	0.00E+00	0.00E+00	0.00E+00	0.00E+00	0.00E+00
375	ALL	737873	4035492	2.96E-09	25YrCancer	2.96E-09	0.00E+00	0.00E+00	0.00E+00	0.00E+00	0.00E+00	0.00E+00	0.00E+00	0.00E+00	0.00E+00	0.00E+00	0.00E+00
376	ALL	737973	4035492	2.96E-09	25YrCancer	2.96E-09	0.00E+00	0.00E+00	0.00E+00	0.00E+00	0.00E+00	0.00E+00	0.00E+00	0.00E+00	0.00E+00	0.00E+00	0.00E+00
377	ALL	735073	4035592	2.70E-09	25YrCancer	2.70E-09	0.00E+00	0.00E+00	0.00E+00	0.00E+00	0.00E+00	0.00E+00	0.00E+00	0.00E+00	0.00E+00	0.00E+00	0.00E+00
378	ALL	735173	4035592	2.74E-09	25YrCancer	2.74E-09	0.00E+00	0.00E+00	0.00E+00	0.00E+00	0.00E+00	0.00E+00	0.00E+00	0.00E+00	0.00E+00	0.00E+00	0.00E+00
379	ALL	735273	4035592	2.78E-09	25YrCancer	2.78E-09	0.00E+00	0.00E+00	0.00E+00	0.00E+00	0.00E+00	0.00E+00	0.00E+00	0.00E+00	0.00E+00	0.00E+00	0.00E+00
380	ALL	735373	4035592	2.81E-09	25YrCancer	2.81E-09	0.00E+00	0.00E+00	0.00E+00	0.00E+00	0.00E+00	0.00E+00	0.00E+00	0.00E+00	0.00E+00	0.00E+00	0.00E+00
381	ALL	735473	4035592	2.84E-09	25YrCancer	2.84E-09	0.00E+00	0.00E+00	0.00E+00	0.00E+00	0.00E+00	0.00E+00	0.00E+00	0.00E+00	0.00E+00	0.00E+00	0.00E+00
382	ALL	735573	4035592	2.85E-09	25YrCancer	2.85E-09	0.00E+00	0.00E+00	0.00E+00	0.00E+00	0.00E+00	0.00E+00	0.00E+00	0.00E+00	0.00E+00	0.00E+00	0.00E+00
383	ALL	735673	4035592	2.86E-09	25YrCancer	2.86E-09	0.00E+00	0.00E+00	0.00E+00	0.00E+00	0.00E+00	0.00E+00	0.00E+00	0.00E+00	0.00E+00	0.00E+00	0.00E+00
384	ALL	735773	4035592	2.86E-09	25YrCancer	2.86E-09	0.00E+00	0.00E+00	0.00E+00	0.00E+00	0.00E+00	0.00E+00	0.00E+00	0.00E+00	0.00E+00	0.00E+00	0.00E+00
385	ALL	735873	4035592	2.86E-09	25YrCancer	2.86E-09	0.00E+00	0.00E+00	0.00E+00	0.00E+00	0.00E+00	0.00E+00	0.00E+00	0.00E+00	0.00E+00	0.00E+00	0.00E+00
386	ALL	735973	4035592	2.86E-09	25YrCancer	2.86E-09	0.00E+00	0.00E+00	0.00E+00	0.00E+00	0.00E+00	0.00E+00	0.00E+00	0.00E+00	0.00E+00	0.00E+00	0.00E+00
387	ALL	736073	4035592	2.86E-09	25YrCancer	2.86E-09	0.00E+00	0.00E+00	0.00E+00	0.00E+00	0.00E+00	0.00E+00	0.00E+00	0.00E+00	0.00E+00	0.00E+00	0.00E+00
388	ALL	736173	4035592	2.86E-09	25YrCancer	2.86E-09	0.00E+00	0.00E+00	0.00E+00	0.00E+00	0.00E+00	0.00E+00	0.00E+00	0.00E+00	0.00E+00	0.00E+00	0.00E+00
389	ALL	736273	4035592	2.86E-09	25YrCancer	2.86E-09	0.00E+00	0.00E+00	0.00E+00	0.00E+00	0.00E+00	0.00E+00	0.00E+00	0.00E+00	0.00E+00	0.00E+00	0.00E+00
390	ALL	736373	4035592	2.86E-09	25YrCancer	2.86E-09	0.00E+00	0.00E+00	0.00E+00	0.00E+00	0.00E+00	0.00E+00	0.00E+00	0.00E+00	0.00E+00	0.00E+00	0.00E+00
391	ALL	736473	4035592	2.87E-09	25YrCancer	2.87E-09	0.00E+00	0.00E+00	0.00E+00	0.00E+00	0.00E+00	0.00E+00	0.00E+00	0.00E+00	0.00E+00	0.00E+00	0.00E+00
392	ALL	736573	4035592	2.87E-09	25YrCancer	2.87E-09	0.00E+00	0.00E+00	0.00E+00	0.00E+00	0.00E+00	0.00E+00	0.00E+00	0.00E+00	0.00E+00	0.00E+00	0.00E+00
393	ALL	736673	4035592	2.88E-09	25YrCancer	2.88E-09	0.00E+00	0.00E+00	0.00E+00	0.00E+00	0.00E+00	0.00E+00	0.00E+00	0.00E+00	0.00E+00	0.00E+00	0.00E+00
394	ALL	736773	4035592	2.88E-09	25YrCancer	2.88E-09	0.00E+00	0.00E+00	0.00E+00	0.00E+00	0.00E+00	0.00E+00	0.00E+00	0.00E+00	0.00E+00	0.00E+00	0.00E+00
395	ALL	736873	4035592	2.89E-09	25YrCancer	2.89E-09	0.00E+00	0.00E+00	0.00E+00	0.00E+00	0.00E+00	0.00E+00	0.00E+00	0.00E+00	0.00E+00	0.00E+00	0.00E+00
396	ALL	736973	4035592	2.90E-09	25YrCancer	2.90E-09	0.00E+00	0.00E+00	0.00E+00	0.00E+00	0.00E+00	0.00E+00	0.00E+00	0.00E+00	0.00E+00	0.00E+00	0.00E+00
397	ALL	737073	4035592	2.90E-09	25YrCancer	2.90E-09	0.00E+00	0.00E+00	0.00E+00	0.00E+00	0.00E+00	0.00E+00	0.00E+00	0.00E+00	0.00E+00	0.00E+00	0.00E+00
398	ALL	737173	4035592	2.90E-09	25YrCancer	2.90E-09	0.00E+00	0.00E+00	0.00E+00	0.00E+00	0.00E+00	0.00E+00	0.00E+00	0.00E+00	0.00E+00	0.00E+00	0.00E+00
399	ALL	737273	4035592	2.91E-09	25YrCancer	2.91E-09	0.00E+00	0.00E+00	0.00E+00	0.00E+00	0.00E+00	0.00E+00	0.00E+00	0.00E+00	0.00E+00	0.00E+00	0.00E+00
400	ALL	737373	4035592	2.91E-09	25YrCancer	2.91E-09	0.00E+00	0.00E+00	0.00E+00	0.00E+00	0.00E+00	0.00E+00	0.00E+00	0.00E+00	0.00E+00	0.00E+00	0.00E+00
401	ALL	737473	4035592	2.91E-09	25YrCancer	2.91E-09	0.00E+00	0.00E+00	0.00E+00	0.00E+00	0.00E+00	0.00E+00	0.00E+00	0.00E+00	0.00E+00	0.00E+00	0.00E+00
402	ALL	737573	4035592	2.92E-09	25YrCancer	2.92E-09	0.00E+00	0.00E+00	0.00E+00	0.00E+00	0.00E+00	0.00E+00	0.00E+00	0.00E+00	0.00E+00	0.00E+00	0.00E+00
403	ALL	737673	4035592	2.92E-09	25YrCancer	2.92E-09	0.00E+00	0.00E+00	0.00E+00	0.00E+00	0.00E+00	0.00E+00	0.00E+00	0.00E+00	0.00E+00	0.00E+00	0.00E+00
404	ALL	737773	4035592	2.92E-09	25YrCancer	2.92E-09	0.00E+00	0.00E+00	0.00E+00	0.00E+00	0.00E+00	0.00E+00	0.00E+00	0.00E+00	0.00E+00	0.00E+00	0.00E+00
405	ALL	737973	4035592	2.92E-09	25YrCancer	2.92E-09	0.00E+00	0.00E+00	0.00E+00	0.00E+00	0.00E+00	0.00E+00	0.00E+00	0.00E+00	0.00E+00	0.00E+00	0.00E+00
406	ALL	735273	4035692	2.66E-09	25YrCancer	2.66E-09	0.00E+00	0.00E+00	0.00E+00	0.00E+00	0.00E+00	0.00E+00	0.00E+00	0.00E+00	0.00E+00	0.00E+00	0.00E+00

407	ALL	735373	4035692	2.70E-09	25YrCancer	2.70E-09	0.00E+00	0.00E+00	0.00E+00	0.00E+00	0.00E+00	0.00E+00	0.00E+00	0.00E+00	0.00E+00	0.00E+00	0.00E+00
408	ALL	735473	4035692	2.73E-09	25YrCancer	2.73E-09	0.00E+00	0.00E+00	0.00E+00	0.00E+00	0.00E+00	0.00E+00	0.00E+00	0.00E+00	0.00E+00	0.00E+00	0.00E+00
409	ALL	735573	4035692	2.76E-09	25YrCancer	2.76E-09	0.00E+00	0.00E+00	0.00E+00	0.00E+00	0.00E+00	0.00E+00	0.00E+00	0.00E+00	0.00E+00	0.00E+00	0.00E+00
410	ALL	735673	4035692	2.77E-09	25YrCancer	2.77E-09	0.00E+00	0.00E+00	0.00E+00	0.00E+00	0.00E+00	0.00E+00	0.00E+00	0.00E+00	0.00E+00	0.00E+00	0.00E+00
411	ALL	735773	4035692	2.78E-09	25YrCancer	2.78E-09	0.00E+00	0.00E+00	0.00E+00	0.00E+00	0.00E+00	0.00E+00	0.00E+00	0.00E+00	0.00E+00	0.00E+00	0.00E+00
412	ALL	735873	4035692	2.78E-09	25YrCancer	2.78E-09	0.00E+00	0.00E+00	0.00E+00	0.00E+00	0.00E+00	0.00E+00	0.00E+00	0.00E+00	0.00E+00	0.00E+00	0.00E+00
413	ALL	735973	4035692	2.79E-09	25YrCancer	2.79E-09	0.00E+00	0.00E+00	0.00E+00	0.00E+00	0.00E+00	0.00E+00	0.00E+00	0.00E+00	0.00E+00	0.00E+00	0.00E+00
414	ALL	736073	4035692	2.79E-09	25YrCancer	2.79E-09	0.00E+00	0.00E+00	0.00E+00	0.00E+00	0.00E+00	0.00E+00	0.00E+00	0.00E+00	0.00E+00	0.00E+00	0.00E+00
415	ALL	736173	4035692	2.80E-09	25YrCancer	2.80E-09	0.00E+00	0.00E+00	0.00E+00	0.00E+00	0.00E+00	0.00E+00	0.00E+00	0.00E+00	0.00E+00	0.00E+00	0.00E+00
416	ALL	736273	4035692	2.80E-09	25YrCancer	2.80E-09	0.00E+00	0.00E+00	0.00E+00	0.00E+00	0.00E+00	0.00E+00	0.00E+00	0.00E+00	0.00E+00	0.00E+00	0.00E+00
417	ALL	736373	4035692	2.80E-09	25YrCancer	2.80E-09	0.00E+00	0.00E+00	0.00E+00	0.00E+00	0.00E+00	0.00E+00	0.00E+00	0.00E+00	0.00E+00	0.00E+00	0.00E+00
418	ALL	736473	4035692	2.80E-09	25YrCancer	2.80E-09	0.00E+00	0.00E+00	0.00E+00	0.00E+00	0.00E+00	0.00E+00	0.00E+00	0.00E+00	0.00E+00	0.00E+00	0.00E+00
419	ALL	736573	4035692	2.81E-09	25YrCancer	2.81E-09	0.00E+00	0.00E+00	0.00E+00	0.00E+00	0.00E+00	0.00E+00	0.00E+00	0.00E+00	0.00E+00	0.00E+00	0.00E+00
420	ALL	736673	4035692	2.81E-09	25YrCancer	2.81E-09	0.00E+00	0.00E+00	0.00E+00	0.00E+00	0.00E+00	0.00E+00	0.00E+00	0.00E+00	0.00E+00	0.00E+00	0.00E+00
421	ALL	736773	4035692	2.82E-09	25YrCancer	2.82E-09	0.00E+00	0.00E+00	0.00E+00	0.00E+00	0.00E+00	0.00E+00	0.00E+00	0.00E+00	0.00E+00	0.00E+00	0.00E+00
422	ALL	736873	4035692	2.83E-09	25YrCancer	2.83E-09	0.00E+00	0.00E+00	0.00E+00	0.00E+00	0.00E+00	0.00E+00	0.00E+00	0.00E+00	0.00E+00	0.00E+00	0.00E+00
423	ALL	736973	4035692	2.84E-09	25YrCancer	2.84E-09	0.00E+00	0.00E+00	0.00E+00	0.00E+00	0.00E+00	0.00E+00	0.00E+00	0.00E+00	0.00E+00	0.00E+00	0.00E+00
424	ALL	737073	4035692	2.84E-09	25YrCancer	2.84E-09	0.00E+00	0.00E+00	0.00E+00	0.00E+00	0.00E+00	0.00E+00	0.00E+00	0.00E+00	0.00E+00	0.00E+00	0.00E+00
425	ALL	737173	4035692	2.85E-09	25YrCancer	2.85E-09	0.00E+00	0.00E+00	0.00E+00	0.00E+00	0.00E+00	0.00E+00	0.00E+00	0.00E+00	0.00E+00	0.00E+00	0.00E+00
426	ALL	737273	4035692	2.85E-09	25YrCancer	2.85E-09	0.00E+00	0.00E+00	0.00E+00	0.00E+00	0.00E+00	0.00E+00	0.00E+00	0.00E+00	0.00E+00	0.00E+00	0.00E+00
427	ALL	737373	4035692	2.86E-09	25YrCancer	2.86E-09	0.00E+00	0.00E+00	0.00E+00	0.00E+00	0.00E+00	0.00E+00	0.00E+00	0.00E+00	0.00E+00	0.00E+00	0.00E+00
428	ALL	737473	4035692	2.86E-09	25YrCancer	2.86E-09	0.00E+00	0.00E+00	0.00E+00	0.00E+00	0.00E+00	0.00E+00	0.00E+00	0.00E+00	0.00E+00	0.00E+00	0.00E+00
429	ALL	737573	4035692	2.87E-09	25YrCancer	2.87E-09	0.00E+00	0.00E+00	0.00E+00	0.00E+00	0.00E+00	0.00E+00	0.00E+00	0.00E+00	0.00E+00	0.00E+00	0.00E+00
430	ALL	737673	4035692	2.87E-09	25YrCancer	2.87E-09	0.00E+00	0.00E+00	0.00E+00	0.00E+00	0.00E+00	0.00E+00	0.00E+00	0.00E+00	0.00E+00	0.00E+00	0.00E+00
431	ALL	737773	4035692	2.88E-09	25YrCancer	2.88E-09	0.00E+00	0.00E+00	0.00E+00	0.00E+00	0.00E+00	0.00E+00	0.00E+00	0.00E+00	0.00E+00	0.00E+00	0.00E+00
432	ALL	737973	4035692	2.88E-09	25YrCancer	2.88E-09	0.00E+00	0.00E+00	0.00E+00	0.00E+00	0.00E+00	0.00E+00	0.00E+00	0.00E+00	0.00E+00	0.00E+00	0.00E+00
433	ALL	735373	4035792	2.59E-09	25YrCancer	2.59E-09	0.00E+00	0.00E+00	0.00E+00	0.00E+00	0.00E+00	0.00E+00	0.00E+00	0.00E+00	0.00E+00	0.00E+00	0.00E+00
434	ALL	735473	4035792	2.62E-09	25YrCancer	2.62E-09	0.00E+00	0.00E+00	0.00E+00	0.00E+00	0.00E+00	0.00E+00	0.00E+00	0.00E+00	0.00E+00	0.00E+00	0.00E+00
435	ALL	735573	4035792	2.66E-09	25YrCancer	2.66E-09	0.00E+00	0.00E+00	0.00E+00	0.00E+00	0.00E+00	0.00E+00	0.00E+00	0.00E+00	0.00E+00	0.00E+00	0.00E+00
436	ALL	735673	4035792	2.68E-09	25YrCancer	2.68E-09	0.00E+00	0.00E+00	0.00E+00	0.00E+00	0.00E+00	0.00E+00	0.00E+00	0.00E+00	0.00E+00	0.00E+00	0.00E+00
437	ALL	735773	4035792	2.70E-09	25YrCancer	2.70E-09	0.00E+00	0.00E+00	0.00E+00	0.00E+00	0.00E+00	0.00E+00	0.00E+00	0.00E+00	0.00E+00	0.00E+00	0.00E+00
438	ALL	735873	4035792	2.71E-09	25YrCancer	2.71E-09	0.00E+00	0.00E+00	0.00E+00	0.00E+00	0.00E+00	0.00E+00	0.00E+00	0.00E+00	0.00E+00	0.00E+00	0.00E+00
439	ALL	735973	4035792	2.73E-09	25YrCancer	2.73E-09	0.00E+00	0.00E+00	0.00E+00	0.00E+00	0.00E+00	0.00E+00	0.00E+00	0.00E+00	0.00E+00	0.00E+00	0.00E+00
440	ALL	736073	4035792	2.73E-09	25YrCancer	2.73E-09	0.00E+00	0.00E+00	0.00E+00	0.00E+00	0.00E+00	0.00E+00	0.00E+00	0.00E+00	0.00E+00	0.00E+00	0.00E+00
441	ALL	736173	4035792	2.74E-09	25YrCancer	2.74E-09	0.00E+00	0.00E+00	0.00E+00	0.00E+00	0.00E+00	0.00E+00	0.00E+00	0.00E+00	0.00E+00	0.00E+00	0.00E+00
442	ALL	736273	4035792	2.74E-09	25YrCancer	2.74E-09	0.00E+00	0.00E+00	0.00E+00	0.00E+00	0.00E+00	0.00E+00	0.00E+00	0.00E+00	0.00E+00	0.00E+00	0.00E+00
443	ALL	736373	4035792	2.74E-09	25YrCancer	2.74E-09	0.00E+00	0.00E+00	0.00E+00	0.00E+00	0.00E+00	0.00E+00	0.00E+00	0.00E+00	0.00E+00	0.00E+00	0.00E+00
444	ALL	736473	4035792	2.74E-09	25YrCancer	2.74E-09	0.00E+00	0.00E+00	0.00E+00	0.00E+00	0.00E+00	0.00E+00	0.00E+00	0.00E+00	0.00E+00	0.00E+00	0.00E+00
445	ALL	736573	4035792	2.75E-09	25YrCancer	2.75E-09	0.00E+00	0.00E+00	0.00E+00	0.00E+00	0.00E+00	0.00E+00	0.00E+00	0.00E+00	0.00E+00	0.00E+00	0.00E+00
446	ALL	736673	4035792	2.75E-09	25YrCancer	2.75E-09	0.00E+00	0.00E+00	0.00E+00	0.00E+00	0.00E+00	0.00E+00	0.00E+00	0.00E+00	0.00E+00	0.00E+00	0.00E+00
447	ALL	736773	4035792	2.76E-09	25YrCancer	2.76E-09	0.00E+00	0.00E+00	0.00E+00	0.00E+00	0.00E+00	0.00E+00	0.00E+00	0.00E+00	0.00E+00	0.00E+00	0.00E+00
448	ALL	736873	4035792	2.77E-09	25YrCancer	2.77E-09	0.00E+00	0.00E+00	0.00E+00	0.00E+00	0.00E+00	0.00E+00	0.00E+00	0.00E+00	0.00E+00	0.00E+00	0.00E+00
449	ALL	736973	4035792	2.78E-09	25YrCancer	2.78E-09	0.00E+00	0.00E+00	0.00E+00	0.00E+00	0.00E+00	0.00E+00	0.00E+00	0.00E+00	0.00E+00	0.00E+00	0.00E+00
450	ALL	737073	4035792	2.79E-09	25YrCancer	2.79E-09	0.00E+00	0.00E+00	0.00E+00	0.00E+00	0.00E+00	0.00E+00	0.00E+00	0.00E+00	0.00E+00	0.00E+00	0.00E+00
451	ALL	737173	4035792	2.79E-09	25YrCancer	2.79E-09	0.00E+00	0.00E+00	0.00E+00	0.00E+00	0.00E+00	0.00E+00	0.00E+00	0.00E+00	0.00E+00	0.00E+00	0.00E+00
452	ALL	737273	4035792	2.80E-09	25YrCancer	2.80E-09	0.00E+00	0.00E+00	0.00E+00	0.00E+00	0.00E+00	0.00E+00	0.00E+00	0.00E+00	0.00E+00	0.00E+00	0.00E+00
453	ALL	737373	4035792	2.80E-09	25YrCancer	2.80E-09	0.00E+00	0.00E+00	0.00E+00	0.00E+00	0.00E+00	0.00E+00	0.00E+00	0.00E+00	0.00E+00	0.00E+00	0.00E+00
454	ALL	737473	4035792	2.81E-09	25YrCancer	2.81E-09	0.00E+00	0.00E+00	0.00E+00	0.00E+00	0.00E+00	0.00E+00	0.00E+00	0.00E+00	0.00E+00	0.00E+00	0.00E+00
455	ALL	737573	4035792	2.82E-09	25YrCancer	2.82E-09	0.00E+00	0.00E+00	0.00E+00	0.00E+00	0.00E+00	0.00E+00	0.00E+00	0.00E+00	0.00E+00	0.00E+00	0.00E+00
456	ALL	737673	4035792	2.83E-09	25YrCancer	2.83E-09	0.00E+00	0.00E+00	0.00E+00	0.00E+00	0.00E+00	0.00E+00	0.00E+00	0.00E+00	0.00E+00	0.00E+00	0.00E+00
457	ALL	737773	4035792	2.83E-09	25YrCancer	2.83E-09	0.00E+00	0.00E+00	0.00E+00	0.00E+00	0.00E+00	0.00E+00	0.00E+00	0.00E+00	0.00E+00	0.00E+00	0.00E+00

458	ALL	737873	4035792	2.84E-09	25YrCancer	2.84E-09	0.00E+00	0.00E+00	0.00E+00	0.00E+00	0.00E+00	0.00E+00	0.00E+00	0.00E+00	0.00E+00	0.00E+00	0.00E+00
459	ALL	735473	4035892	2.52E-09	25YrCancer	2.52E-09	0.00E+00	0.00E+00	0.00E+00	0.00E+00	0.00E+00	0.00E+00	0.00E+00	0.00E+00	0.00E+00	0.00E+00	0.00E+00
460	ALL	735573	4035892	2.56E-09	25YrCancer	2.56E-09	0.00E+00	0.00E+00	0.00E+00	0.00E+00	0.00E+00	0.00E+00	0.00E+00	0.00E+00	0.00E+00	0.00E+00	0.00E+00
461	ALL	735673	4035892	2.59E-09	25YrCancer	2.59E-09	0.00E+00	0.00E+00	0.00E+00	0.00E+00	0.00E+00	0.00E+00	0.00E+00	0.00E+00	0.00E+00	0.00E+00	0.00E+00
462	ALL	735773	4035892	2.62E-09	25YrCancer	2.62E-09	0.00E+00	0.00E+00	0.00E+00	0.00E+00	0.00E+00	0.00E+00	0.00E+00	0.00E+00	0.00E+00	0.00E+00	0.00E+00
463	ALL	735873	4035892	2.64E-09	25YrCancer	2.64E-09	0.00E+00	0.00E+00	0.00E+00	0.00E+00	0.00E+00	0.00E+00	0.00E+00	0.00E+00	0.00E+00	0.00E+00	0.00E+00
464	ALL	735973	4035892	2.66E-09	25YrCancer	2.66E-09	0.00E+00	0.00E+00	0.00E+00	0.00E+00	0.00E+00	0.00E+00	0.00E+00	0.00E+00	0.00E+00	0.00E+00	0.00E+00
465	ALL	736073	4035892	2.67E-09	25YrCancer	2.67E-09	0.00E+00	0.00E+00	0.00E+00	0.00E+00	0.00E+00	0.00E+00	0.00E+00	0.00E+00	0.00E+00	0.00E+00	0.00E+00
466	ALL	736173	4035892	2.68E-09	25YrCancer	2.68E-09	0.00E+00	0.00E+00	0.00E+00	0.00E+00	0.00E+00	0.00E+00	0.00E+00	0.00E+00	0.00E+00	0.00E+00	0.00E+00
467	ALL	736273	4035892	2.69E-09	25YrCancer	2.69E-09	0.00E+00	0.00E+00	0.00E+00	0.00E+00	0.00E+00	0.00E+00	0.00E+00	0.00E+00	0.00E+00	0.00E+00	0.00E+00
468	ALL	736373	4035892	2.69E-09	25YrCancer	2.69E-09	0.00E+00	0.00E+00	0.00E+00	0.00E+00	0.00E+00	0.00E+00	0.00E+00	0.00E+00	0.00E+00	0.00E+00	0.00E+00
469	ALL	736473	4035892	2.69E-09	25YrCancer	2.69E-09	0.00E+00	0.00E+00	0.00E+00	0.00E+00	0.00E+00	0.00E+00	0.00E+00	0.00E+00	0.00E+00	0.00E+00	0.00E+00
470	ALL	736573	4035892	2.69E-09	25YrCancer	2.69E-09	0.00E+00	0.00E+00	0.00E+00	0.00E+00	0.00E+00	0.00E+00	0.00E+00	0.00E+00	0.00E+00	0.00E+00	0.00E+00
471	ALL	736673	4035892	2.70E-09	25YrCancer	2.70E-09	0.00E+00	0.00E+00	0.00E+00	0.00E+00	0.00E+00	0.00E+00	0.00E+00	0.00E+00	0.00E+00	0.00E+00	0.00E+00
472	ALL	736773	4035892	2.71E-09	25YrCancer	2.71E-09	0.00E+00	0.00E+00	0.00E+00	0.00E+00	0.00E+00	0.00E+00	0.00E+00	0.00E+00	0.00E+00	0.00E+00	0.00E+00
473	ALL	736873	4035892	2.71E-09	25YrCancer	2.71E-09	0.00E+00	0.00E+00	0.00E+00	0.00E+00	0.00E+00	0.00E+00	0.00E+00	0.00E+00	0.00E+00	0.00E+00	0.00E+00
474	ALL	736973	4035892	2.72E-09	25YrCancer	2.72E-09	0.00E+00	0.00E+00	0.00E+00	0.00E+00	0.00E+00	0.00E+00	0.00E+00	0.00E+00	0.00E+00	0.00E+00	0.00E+00
475	ALL	737073	4035892	2.73E-09	25YrCancer	2.73E-09	0.00E+00	0.00E+00	0.00E+00	0.00E+00	0.00E+00	0.00E+00	0.00E+00	0.00E+00	0.00E+00	0.00E+00	0.00E+00
476	ALL	737173	4035892	2.74E-09	25YrCancer	2.74E-09	0.00E+00	0.00E+00	0.00E+00	0.00E+00	0.00E+00	0.00E+00	0.00E+00	0.00E+00	0.00E+00	0.00E+00	0.00E+00
477	ALL	737273	4035892	2.74E-09	25YrCancer	2.74E-09	0.00E+00	0.00E+00	0.00E+00	0.00E+00	0.00E+00	0.00E+00	0.00E+00	0.00E+00	0.00E+00	0.00E+00	0.00E+00
478	ALL	737373	4035892	2.75E-09	25YrCancer	2.75E-09	0.00E+00	0.00E+00	0.00E+00	0.00E+00	0.00E+00	0.00E+00	0.00E+00	0.00E+00	0.00E+00	0.00E+00	0.00E+00
479	ALL	737473	4035892	2.76E-09	25YrCancer	2.76E-09	0.00E+00	0.00E+00	0.00E+00	0.00E+00	0.00E+00	0.00E+00	0.00E+00	0.00E+00	0.00E+00	0.00E+00	0.00E+00
480	ALL	737573	4035892	2.77E-09	25YrCancer	2.77E-09	0.00E+00	0.00E+00	0.00E+00	0.00E+00	0.00E+00	0.00E+00	0.00E+00	0.00E+00	0.00E+00	0.00E+00	0.00E+00
481	ALL	737673	4035892	2.78E-09	25YrCancer	2.78E-09	0.00E+00	0.00E+00	0.00E+00	0.00E+00	0.00E+00	0.00E+00	0.00E+00	0.00E+00	0.00E+00	0.00E+00	0.00E+00
482	ALL	737773	4035892	2.79E-09	25YrCancer	2.79E-09	0.00E+00	0.00E+00	0.00E+00	0.00E+00	0.00E+00	0.00E+00	0.00E+00	0.00E+00	0.00E+00	0.00E+00	0.00E+00
483	ALL	737873	4035892	2.80E-09	25YrCancer	2.80E-09	0.00E+00	0.00E+00	0.00E+00	0.00E+00	0.00E+00	0.00E+00	0.00E+00	0.00E+00	0.00E+00	0.00E+00	0.00E+00
484	ALL	737973	4035892	2.80E-09	25YrCancer	2.80E-09	0.00E+00	0.00E+00	0.00E+00	0.00E+00	0.00E+00	0.00E+00	0.00E+00	0.00E+00	0.00E+00	0.00E+00	0.00E+00
485	ALL	737573	4035992	2.72E-09	25YrCancer	2.72E-09	0.00E+00	0.00E+00	0.00E+00	0.00E+00	0.00E+00	0.00E+00	0.00E+00	0.00E+00	0.00E+00	0.00E+00	0.00E+00
486	ALL	737673	4035992	2.73E-09	25YrCancer	2.73E-09	0.00E+00	0.00E+00	0.00E+00	0.00E+00	0.00E+00	0.00E+00	0.00E+00	0.00E+00	0.00E+00	0.00E+00	0.00E+00
487	ALL	737773	4035992	2.74E-09	25YrCancer	2.74E-09	0.00E+00	0.00E+00	0.00E+00	0.00E+00	0.00E+00	0.00E+00	0.00E+00	0.00E+00	0.00E+00	0.00E+00	0.00E+00
488	ALL	737873	4035992	2.75E-09	25YrCancer	2.75E-09	0.00E+00	0.00E+00	0.00E+00	0.00E+00	0.00E+00	0.00E+00	0.00E+00	0.00E+00	0.00E+00	0.00E+00	0.00E+00
489	ALL	737973	4035992	2.76E-09	25YrCancer	2.76E-09	0.00E+00	0.00E+00	0.00E+00	0.00E+00	0.00E+00	0.00E+00	0.00E+00	0.00E+00	0.00E+00	0.00E+00	0.00E+00
490	ALL	737573	4036092	2.67E-09	25YrCancer	2.67E-09	0.00E+00	0.00E+00	0.00E+00	0.00E+00	0.00E+00	0.00E+00	0.00E+00	0.00E+00	0.00E+00	0.00E+00	0.00E+00
491	ALL	737673	4036092	2.68E-09	25YrCancer	2.68E-09	0.00E+00	0.00E+00	0.00E+00	0.00E+00	0.00E+00	0.00E+00	0.00E+00	0.00E+00	0.00E+00	0.00E+00	0.00E+00
492	ALL	737773	4036092	2.70E-09	25YrCancer	2.70E-09	0.00E+00	0.00E+00	0.00E+00	0.00E+00	0.00E+00	0.00E+00	0.00E+00	0.00E+00	0.00E+00	0.00E+00	0.00E+00
493	ALL	737873	4036092	2.71E-09	25YrCancer	2.71E-09	0.00E+00	0.00E+00	0.00E+00	0.00E+00	0.00E+00	0.00E+00	0.00E+00	0.00E+00	0.00E+00	0.00E+00	0.00E+00
494	ALL	737973	4036092	2.72E-09	25YrCancer	2.72E-09	0.00E+00	0.00E+00	0.00E+00	0.00E+00	0.00E+00	0.00E+00	0.00E+00	0.00E+00	0.00E+00	0.00E+00	0.00E+00
495	ALL	737573	4036192	2.63E-09	25YrCancer	2.63E-09	0.00E+00	0.00E+00	0.00E+00	0.00E+00	0.00E+00	0.00E+00	0.00E+00	0.00E+00	0.00E+00	0.00E+00	0.00E+00
496	ALL	737673	4036192	2.64E-09	25YrCancer	2.64E-09	0.00E+00	0.00E+00	0.00E+00	0.00E+00	0.00E+00	0.00E+00	0.00E+00	0.00E+00	0.00E+00	0.00E+00	0.00E+00
497	ALL	737773	4036192	2.65E-09	25YrCancer	2.65E-09	0.00E+00	0.00E+00	0.00E+00	0.00E+00	0.00E+00	0.00E+00	0.00E+00	0.00E+00	0.00E+00	0.00E+00	0.00E+00
498	ALL	737873	4036192	2.66E-09	25YrCancer	2.66E-09	0.00E+00	0.00E+00	0.00E+00	0.00E+00	0.00E+00	0.00E+00	0.00E+00	0.00E+00	0.00E+00	0.00E+00	0.00E+00
499	ALL	737973	4036192	2.67E-09	25YrCancer	2.67E-09	0.00E+00	0.00E+00	0.00E+00	0.00E+00	0.00E+00	0.00E+00	0.00E+00	0.00E+00	0.00E+00	0.00E+00	0.00E+00
500	ALL	737573	4036292	2.59E-09	25YrCancer	2.59E-09	0.00E+00	0.00E+00	0.00E+00	0.00E+00	0.00E+00	0.00E+00	0.00E+00	0.00E+00	0.00E+00	0.00E+00	0.00E+00
501	ALL	737673	4036292	2.60E-09	25YrCancer	2.60E-09	0.00E+00	0.00E+00	0.00E+00	0.00E+00	0.00E+00	0.00E+00	0.00E+00	0.00E+00	0.00E+00	0.00E+00	0.00E+00
502	ALL	737773	4036292	2.61E-09	25YrCancer	2.61E-09	0.00E+00	0.00E+00	0.00E+00	0.00E+00	0.00E+00	0.00E+00	0.00E+00	0.00E+00	0.00E+00	0.00E+00	0.00E+00
503	ALL	737873	4036292	2.62E-09	25YrCancer	2.62E-09	0.00E+00	0.00E+00	0.00E+00	0.00E+00	0.00E+00	0.00E+00	0.00E+00	0.00E+00	0.00E+00	0.00E+00	0.00E+00
504	ALL	737973	4036292	2.63E-09	25YrCancer	2.63E-09	0.00E+00	0.00E+00	0.00E+00	0.00E+00	0.00E+00	0.00E+00	0.00E+00	0.00E+00	0.00E+00	0.00E+00	0.00E+00
505	ALL	738080.96	4035200.87	3.09E-09	25YrCancer	3.09E-09	0.00E+00	0.00E+00	0.00E+00	0.00E+00	0.00E+00	0.00E+00	0.00E+00	0.00E+00	0.00E+00	0.00E+00	0.00E+00
506	ALL	738180.96	4035200.87	3.08E-09	25YrCancer	3.08E-09	0.00E+00	0.00E+00	0.00E+00	0.00E+00	0.00E+00	0.00E+00	0.00E+00	0.00E+00	0.00E+00	0.00E+00	0.00E+00
507	ALL	738280.96	4035200.87	3.07E-09	25YrCancer	3.07E-09	0.00E+00	0.00E+00	0.00E+00	0.00E+00	0.00E+00	0.00E+00	0.00E+00	0.00E+00	0.00E+00	0.00E+00	0.00E+00
508	ALL	738080.96	4035300.87	3.04E-09	25YrCancer	3.04E-09	0.00E+00	0.00E+00	0.00E+00	0.00E+00	0.00E+00	0.00E+00	0.00E+00	0.00E+00	0.00E+00	0.00E+00	0.00E+00

509	ALL	738180.96	4035300.87	3.03E-09	25YrCancer	3.03E-09	0.00E+00	0.00E+00	0.00E+00	0.00E+00	0.00E+00	0.00E+00	0.00E+00	0.00E+00	0.00E+00	0.00E+00	0.00E+00
510	ALL	738280.96	4035300.87	3.03E-09	25YrCancer	3.03E-09	0.00E+00	0.00E+00	0.00E+00	0.00E+00	0.00E+00	0.00E+00	0.00E+00	0.00E+00	0.00E+00	0.00E+00	0.00E+00
511	ALL	738380.96	4035300.87	3.02E-09	25YrCancer	3.02E-09	0.00E+00	0.00E+00	0.00E+00	0.00E+00	0.00E+00	0.00E+00	0.00E+00	0.00E+00	0.00E+00	0.00E+00	0.00E+00
512	ALL	738080.96	4035400.87	2.99E-09	25YrCancer	2.99E-09	0.00E+00	0.00E+00	0.00E+00	0.00E+00	0.00E+00	0.00E+00	0.00E+00	0.00E+00	0.00E+00	0.00E+00	0.00E+00
513	ALL	738180.96	4035400.87	2.99E-09	25YrCancer	2.99E-09	0.00E+00	0.00E+00	0.00E+00	0.00E+00	0.00E+00	0.00E+00	0.00E+00	0.00E+00	0.00E+00	0.00E+00	0.00E+00
514	ALL	738280.96	4035400.87	2.99E-09	25YrCancer	2.99E-09	0.00E+00	0.00E+00	0.00E+00	0.00E+00	0.00E+00	0.00E+00	0.00E+00	0.00E+00	0.00E+00	0.00E+00	0.00E+00
515	ALL	738380.96	4035400.87	2.98E-09	25YrCancer	2.98E-09	0.00E+00	0.00E+00	0.00E+00	0.00E+00	0.00E+00	0.00E+00	0.00E+00	0.00E+00	0.00E+00	0.00E+00	0.00E+00
516	ALL	738480.96	4035400.87	2.98E-09	25YrCancer	2.98E-09	0.00E+00	0.00E+00	0.00E+00	0.00E+00	0.00E+00	0.00E+00	0.00E+00	0.00E+00	0.00E+00	0.00E+00	0.00E+00
517	ALL	738080.96	4035500.87	2.95E-09	25YrCancer	2.95E-09	0.00E+00	0.00E+00	0.00E+00	0.00E+00	0.00E+00	0.00E+00	0.00E+00	0.00E+00	0.00E+00	0.00E+00	0.00E+00
518	ALL	738180.96	4035500.87	2.95E-09	25YrCancer	2.95E-09	0.00E+00	0.00E+00	0.00E+00	0.00E+00	0.00E+00	0.00E+00	0.00E+00	0.00E+00	0.00E+00	0.00E+00	0.00E+00
519	ALL	738280.96	4035500.87	2.95E-09	25YrCancer	2.95E-09	0.00E+00	0.00E+00	0.00E+00	0.00E+00	0.00E+00	0.00E+00	0.00E+00	0.00E+00	0.00E+00	0.00E+00	0.00E+00
520	ALL	738380.96	4035500.87	2.95E-09	25YrCancer	2.95E-09	0.00E+00	0.00E+00	0.00E+00	0.00E+00	0.00E+00	0.00E+00	0.00E+00	0.00E+00	0.00E+00	0.00E+00	0.00E+00
521	ALL	738480.96	4035500.87	2.95E-09	25YrCancer	2.95E-09	0.00E+00	0.00E+00	0.00E+00	0.00E+00	0.00E+00	0.00E+00	0.00E+00	0.00E+00	0.00E+00	0.00E+00	0.00E+00
522	ALL	738580.96	4035500.87	2.94E-09	25YrCancer	2.94E-09	0.00E+00	0.00E+00	0.00E+00	0.00E+00	0.00E+00	0.00E+00	0.00E+00	0.00E+00	0.00E+00	0.00E+00	0.00E+00
523	ALL	738080.96	4035600.87	2.92E-09	25YrCancer	2.92E-09	0.00E+00	0.00E+00	0.00E+00	0.00E+00	0.00E+00	0.00E+00	0.00E+00	0.00E+00	0.00E+00	0.00E+00	0.00E+00
524	ALL	738180.96	4035600.87	2.92E-09	25YrCancer	2.92E-09	0.00E+00	0.00E+00	0.00E+00	0.00E+00	0.00E+00	0.00E+00	0.00E+00	0.00E+00	0.00E+00	0.00E+00	0.00E+00
525	ALL	738280.96	4035600.87	2.92E-09	25YrCancer	2.92E-09	0.00E+00	0.00E+00	0.00E+00	0.00E+00	0.00E+00	0.00E+00	0.00E+00	0.00E+00	0.00E+00	0.00E+00	0.00E+00
526	ALL	738380.96	4035600.87	2.92E-09	25YrCancer	2.92E-09	0.00E+00	0.00E+00	0.00E+00	0.00E+00	0.00E+00	0.00E+00	0.00E+00	0.00E+00	0.00E+00	0.00E+00	0.00E+00
527	ALL	738480.96	4035600.87	2.92E-09	25YrCancer	2.92E-09	0.00E+00	0.00E+00	0.00E+00	0.00E+00	0.00E+00	0.00E+00	0.00E+00	0.00E+00	0.00E+00	0.00E+00	0.00E+00
528	ALL	738580.96	4035600.87	2.92E-09	25YrCancer	2.92E-09	0.00E+00	0.00E+00	0.00E+00	0.00E+00	0.00E+00	0.00E+00	0.00E+00	0.00E+00	0.00E+00	0.00E+00	0.00E+00
529	ALL	738080.96	4035700.87	2.88E-09	25YrCancer	2.88E-09	0.00E+00	0.00E+00	0.00E+00	0.00E+00	0.00E+00	0.00E+00	0.00E+00	0.00E+00	0.00E+00	0.00E+00	0.00E+00
530	ALL	738180.96	4035700.87	2.89E-09	25YrCancer	2.89E-09	0.00E+00	0.00E+00	0.00E+00	0.00E+00	0.00E+00	0.00E+00	0.00E+00	0.00E+00	0.00E+00	0.00E+00	0.00E+00
531	ALL	738280.96	4035700.87	2.89E-09	25YrCancer	2.89E-09	0.00E+00	0.00E+00	0.00E+00	0.00E+00	0.00E+00	0.00E+00	0.00E+00	0.00E+00	0.00E+00	0.00E+00	0.00E+00
532	ALL	738380.96	4035700.87	2.89E-09	25YrCancer	2.89E-09	0.00E+00	0.00E+00	0.00E+00	0.00E+00	0.00E+00	0.00E+00	0.00E+00	0.00E+00	0.00E+00	0.00E+00	0.00E+00
533	ALL	738480.96	4035700.87	2.89E-09	25YrCancer	2.89E-09	0.00E+00	0.00E+00	0.00E+00	0.00E+00	0.00E+00	0.00E+00	0.00E+00	0.00E+00	0.00E+00	0.00E+00	0.00E+00
534	ALL	738580.96	4035700.87	2.89E-09	25YrCancer	2.89E-09	0.00E+00	0.00E+00	0.00E+00	0.00E+00	0.00E+00	0.00E+00	0.00E+00	0.00E+00	0.00E+00	0.00E+00	0.00E+00
535	ALL	738080.96	4035800.87	2.85E-09	25YrCancer	2.85E-09	0.00E+00	0.00E+00	0.00E+00	0.00E+00	0.00E+00	0.00E+00	0.00E+00	0.00E+00	0.00E+00	0.00E+00	0.00E+00
536	ALL	738180.96	4035800.87	2.85E-09	25YrCancer	2.85E-09	0.00E+00	0.00E+00	0.00E+00	0.00E+00	0.00E+00	0.00E+00	0.00E+00	0.00E+00	0.00E+00	0.00E+00	0.00E+00
537	ALL	738280.96	4035800.87	2.85E-09	25YrCancer	2.85E-09	0.00E+00	0.00E+00	0.00E+00	0.00E+00	0.00E+00	0.00E+00	0.00E+00	0.00E+00	0.00E+00	0.00E+00	0.00E+00
538	ALL	738380.96	4035800.87	2.86E-09	25YrCancer	2.86E-09	0.00E+00	0.00E+00	0.00E+00	0.00E+00	0.00E+00	0.00E+00	0.00E+00	0.00E+00	0.00E+00	0.00E+00	0.00E+00
539	ALL	738480.96	4035800.87	2.86E-09	25YrCancer	2.86E-09	0.00E+00	0.00E+00	0.00E+00	0.00E+00	0.00E+00	0.00E+00	0.00E+00	0.00E+00	0.00E+00	0.00E+00	0.00E+00
540	ALL	738580.96	4035800.87	2.86E-09	25YrCancer	2.86E-09	0.00E+00	0.00E+00	0.00E+00	0.00E+00	0.00E+00	0.00E+00	0.00E+00	0.00E+00	0.00E+00	0.00E+00	0.00E+00
541	ALL	738180.96	4035900.87	2.81E-09	25YrCancer	2.81E-09	0.00E+00	0.00E+00	0.00E+00	0.00E+00	0.00E+00	0.00E+00	0.00E+00	0.00E+00	0.00E+00	0.00E+00	0.00E+00
542	ALL	738280.96	4035900.87	2.82E-09	25YrCancer	2.82E-09	0.00E+00	0.00E+00	0.00E+00	0.00E+00	0.00E+00	0.00E+00	0.00E+00	0.00E+00	0.00E+00	0.00E+00	0.00E+00
543	ALL	738380.96	4035900.87	2.82E-09	25YrCancer	2.82E-09	0.00E+00	0.00E+00	0.00E+00	0.00E+00	0.00E+00	0.00E+00	0.00E+00	0.00E+00	0.00E+00	0.00E+00	0.00E+00
544	ALL	738480.96	4035900.87	2.83E-09	25YrCancer	2.83E-09	0.00E+00	0.00E+00	0.00E+00	0.00E+00	0.00E+00	0.00E+00	0.00E+00	0.00E+00	0.00E+00	0.00E+00	0.00E+00
545	ALL	738580.96	4035900.87	2.83E-09	25YrCancer	2.83E-09	0.00E+00	0.00E+00	0.00E+00	0.00E+00	0.00E+00	0.00E+00	0.00E+00	0.00E+00	0.00E+00	0.00E+00	0.00E+00
546	ALL	738180.96	4036000.87	2.77E-09	25YrCancer	2.77E-09	0.00E+00	0.00E+00	0.00E+00	0.00E+00	0.00E+00	0.00E+00	0.00E+00	0.00E+00	0.00E+00	0.00E+00	0.00E+00
547	ALL	738280.96	4036000.87	2.78E-09	25YrCancer	2.78E-09	0.00E+00	0.00E+00	0.00E+00	0.00E+00	0.00E+00	0.00E+00	0.00E+00	0.00E+00	0.00E+00	0.00E+00	0.00E+00
548	ALL	738380.96	4036000.87	2.79E-09	25YrCancer	2.79E-09	0.00E+00	0.00E+00	0.00E+00	0.00E+00	0.00E+00	0.00E+00	0.00E+00	0.00E+00	0.00E+00	0.00E+00	0.00E+00
549	ALL	738480.96	4036000.87	2.79E-09	25YrCancer	2.79E-09	0.00E+00	0.00E+00	0.00E+00	0.00E+00	0.00E+00	0.00E+00	0.00E+00	0.00E+00	0.00E+00	0.00E+00	0.00E+00
550	ALL	738580.96	4036000.87	2.80E-09	25YrCancer	2.80E-09	0.00E+00	0.00E+00	0.00E+00	0.00E+00	0.00E+00	0.00E+00	0.00E+00	0.00E+00	0.00E+00	0.00E+00	0.00E+00
551	ALL	738080.96	4036100.87	2.72E-09	25YrCancer	2.72E-09	0.00E+00	0.00E+00	0.00E+00	0.00E+00	0.00E+00	0.00E+00	0.00E+00	0.00E+00	0.00E+00	0.00E+00	0.00E+00
552	ALL	738280.96	4036100.87	2.74E-09	25YrCancer	2.74E-09	0.00E+00	0.00E+00	0.00E+00	0.00E+00	0.00E+00	0.00E+00	0.00E+00	0.00E+00	0.00E+00	0.00E+00	0.00E+00
553	ALL	738380.96	4036100.87	2.75E-09	25YrCancer	2.75E-09	0.00E+00	0.00E+00	0.00E+00	0.00E+00	0.00E+00	0.00E+00	0.00E+00	0.00E+00	0.00E+00	0.00E+00	0.00E+00
554	ALL	738480.96	4036100.87	2.76E-09	25YrCancer	2.76E-09	0.00E+00	0.00E+00	0.00E+00	0.00E+00	0.00E+00	0.00E+00	0.00E+00	0.00E+00	0.00E+00	0.00E+00	0.00E+00
555	ALL	738580.96	4036100.87	2.76E-09	25YrCancer	2.76E-09	0.00E+00	0.00E+00	0.00E+00	0.00E+00	0.00E+00	0.00E+00	0.00E+00	0.00E+00	0.00E+00	0.00E+00	0.00E+00
556	ALL	738680.96	4036100.87	2.77E-09	25YrCancer	2.77E-09	0.00E+00	0.00E+00	0.00E+00	0.00E+00	0.00E+00	0.00E+00	0.00E+00	0.00E+00	0.00E+00	0.00E+00	0.00E+00
557	ALL	738780.96	4036100.87	2.78E-09	25YrCancer	2.78E-09	0.00E+00	0.00E+00	0.00E+00	0.00E+00	0.00E+00	0.00E+00	0.00E+00	0.00E+00	0.00E+00	0.00E+00	0.00E+00
558	ALL	738880.96	4036100.87	2.79E-09	25YrCancer	2.79E-09	0.00E+00	0.00E+00	0.00E+00	0.00E+00	0.00E+00	0.00E+00	0.00E+00	0.00E+00	0.00E+00	0.00E+00	0.00E+00
559	ALL	738980.96	4036100.87	2.79E-09	25YrCancer	2.79E-09	0.00E+00	0.00E+00	0.00E+00	0.00E+00	0.00E+00	0.00E+00	0.00E+00	0.00E+00	0.00E+00	0.00E+00	0.00E+00

560	ALL	739080.96	4036100.87	2.79E-09	25YrCancer	2.79E-09	0.00E+00	0.00E+00	0.00E+00	0.00E+00	0.00E+00	0.00E+00	0.00E+00	0.00E+00	0.00E+00	0.00E+00	0.00E+00
561	ALL	739180.96	4036100.87	2.80E-09	25YrCancer	2.80E-09	0.00E+00	0.00E+00	0.00E+00	0.00E+00	0.00E+00	0.00E+00	0.00E+00	0.00E+00	0.00E+00	0.00E+00	0.00E+00
562	ALL	739280.96	4036100.87	2.80E-09	25YrCancer	2.80E-09	0.00E+00	0.00E+00	0.00E+00	0.00E+00	0.00E+00	0.00E+00	0.00E+00	0.00E+00	0.00E+00	0.00E+00	0.00E+00
563	ALL	739380.96	4036100.87	2.80E-09	25YrCancer	2.80E-09	0.00E+00	0.00E+00	0.00E+00	0.00E+00	0.00E+00	0.00E+00	0.00E+00	0.00E+00	0.00E+00	0.00E+00	0.00E+00
564	ALL	739480.96	4036100.87	2.80E-09	25YrCancer	2.80E-09	0.00E+00	0.00E+00	0.00E+00	0.00E+00	0.00E+00	0.00E+00	0.00E+00	0.00E+00	0.00E+00	0.00E+00	0.00E+00
565	ALL	739580.96	4036100.87	2.80E-09	25YrCancer	2.80E-09	0.00E+00	0.00E+00	0.00E+00	0.00E+00	0.00E+00	0.00E+00	0.00E+00	0.00E+00	0.00E+00	0.00E+00	0.00E+00
566	ALL	739680.96	4036100.87	2.80E-09	25YrCancer	2.80E-09	0.00E+00	0.00E+00	0.00E+00	0.00E+00	0.00E+00	0.00E+00	0.00E+00	0.00E+00	0.00E+00	0.00E+00	0.00E+00
567	ALL	739780.96	4036100.87	2.79E-09	25YrCancer	2.79E-09	0.00E+00	0.00E+00	0.00E+00	0.00E+00	0.00E+00	0.00E+00	0.00E+00	0.00E+00	0.00E+00	0.00E+00	0.00E+00
568	ALL	739880.96	4036100.87	2.79E-09	25YrCancer	2.79E-09	0.00E+00	0.00E+00	0.00E+00	0.00E+00	0.00E+00	0.00E+00	0.00E+00	0.00E+00	0.00E+00	0.00E+00	0.00E+00
569	ALL	739980.96	4036100.87	2.79E-09	25YrCancer	2.79E-09	0.00E+00	0.00E+00	0.00E+00	0.00E+00	0.00E+00	0.00E+00	0.00E+00	0.00E+00	0.00E+00	0.00E+00	0.00E+00
570	ALL	740080.96	4036100.87	2.79E-09	25YrCancer	2.79E-09	0.00E+00	0.00E+00	0.00E+00	0.00E+00	0.00E+00	0.00E+00	0.00E+00	0.00E+00	0.00E+00	0.00E+00	0.00E+00
571	ALL	740180.96	4036100.87	2.79E-09	25YrCancer	2.79E-09	0.00E+00	0.00E+00	0.00E+00	0.00E+00	0.00E+00	0.00E+00	0.00E+00	0.00E+00	0.00E+00	0.00E+00	0.00E+00
572	ALL	740280.96	4036100.87	2.79E-09	25YrCancer	2.79E-09	0.00E+00	0.00E+00	0.00E+00	0.00E+00	0.00E+00	0.00E+00	0.00E+00	0.00E+00	0.00E+00	0.00E+00	0.00E+00
573	ALL	740380.96	4036100.87	2.79E-09	25YrCancer	2.79E-09	0.00E+00	0.00E+00	0.00E+00	0.00E+00	0.00E+00	0.00E+00	0.00E+00	0.00E+00	0.00E+00	0.00E+00	0.00E+00
574	ALL	740480.96	4036100.87	2.80E-09	25YrCancer	2.80E-09	0.00E+00	0.00E+00	0.00E+00	0.00E+00	0.00E+00	0.00E+00	0.00E+00	0.00E+00	0.00E+00	0.00E+00	0.00E+00
575	ALL	740580.96	4036100.87	2.80E-09	25YrCancer	2.80E-09	0.00E+00	0.00E+00	0.00E+00	0.00E+00	0.00E+00	0.00E+00	0.00E+00	0.00E+00	0.00E+00	0.00E+00	0.00E+00
576	ALL	740680.96	4036100.87	2.81E-09	25YrCancer	2.81E-09	0.00E+00	0.00E+00	0.00E+00	0.00E+00	0.00E+00	0.00E+00	0.00E+00	0.00E+00	0.00E+00	0.00E+00	0.00E+00
577	ALL	740780.96	4036100.87	2.82E-09	25YrCancer	2.82E-09	0.00E+00	0.00E+00	0.00E+00	0.00E+00	0.00E+00	0.00E+00	0.00E+00	0.00E+00	0.00E+00	0.00E+00	0.00E+00
578	ALL	740880.96	4036100.87	2.83E-09	25YrCancer	2.83E-09	0.00E+00	0.00E+00	0.00E+00	0.00E+00	0.00E+00	0.00E+00	0.00E+00	0.00E+00	0.00E+00	0.00E+00	0.00E+00
579	ALL	740980.96	4036100.87	2.83E-09	25YrCancer	2.83E-09	0.00E+00	0.00E+00	0.00E+00	0.00E+00	0.00E+00	0.00E+00	0.00E+00	0.00E+00	0.00E+00	0.00E+00	0.00E+00
580	ALL	741080.96	4036100.87	2.84E-09	25YrCancer	2.84E-09	0.00E+00	0.00E+00	0.00E+00	0.00E+00	0.00E+00	0.00E+00	0.00E+00	0.00E+00	0.00E+00	0.00E+00	0.00E+00
581	ALL	741180.96	4036100.87	2.85E-09	25YrCancer	2.85E-09	0.00E+00	0.00E+00	0.00E+00	0.00E+00	0.00E+00	0.00E+00	0.00E+00	0.00E+00	0.00E+00	0.00E+00	0.00E+00
582	ALL	741280.96	4036100.87	2.86E-09	25YrCancer	2.86E-09	0.00E+00	0.00E+00	0.00E+00	0.00E+00	0.00E+00	0.00E+00	0.00E+00	0.00E+00	0.00E+00	0.00E+00	0.00E+00
583	ALL	741380.96	4036100.87	2.88E-09	25YrCancer	2.88E-09	0.00E+00	0.00E+00	0.00E+00	0.00E+00	0.00E+00	0.00E+00	0.00E+00	0.00E+00	0.00E+00	0.00E+00	0.00E+00
584	ALL	741480.96	4036100.87	2.90E-09	25YrCancer	2.90E-09	0.00E+00	0.00E+00	0.00E+00	0.00E+00	0.00E+00	0.00E+00	0.00E+00	0.00E+00	0.00E+00	0.00E+00	0.00E+00
585	ALL	741580.96	4036100.87	2.92E-09	25YrCancer	2.92E-09	0.00E+00	0.00E+00	0.00E+00	0.00E+00	0.00E+00	0.00E+00	0.00E+00	0.00E+00	0.00E+00	0.00E+00	0.00E+00
586	ALL	741680.96	4036100.87	2.95E-09	25YrCancer	2.95E-09	0.00E+00	0.00E+00	0.00E+00	0.00E+00	0.00E+00	0.00E+00	0.00E+00	0.00E+00	0.00E+00	0.00E+00	0.00E+00
587	ALL	741780.96	4036100.87	2.98E-09	25YrCancer	2.98E-09	0.00E+00	0.00E+00	0.00E+00	0.00E+00	0.00E+00	0.00E+00	0.00E+00	0.00E+00	0.00E+00	0.00E+00	0.00E+00
588	ALL	741880.96	4036100.87	3.00E-09	25YrCancer	3.00E-09	0.00E+00	0.00E+00	0.00E+00	0.00E+00	0.00E+00	0.00E+00	0.00E+00	0.00E+00	0.00E+00	0.00E+00	0.00E+00
589	ALL	741980.96	4036100.87	3.01E-09	25YrCancer	3.01E-09	0.00E+00	0.00E+00	0.00E+00	0.00E+00	0.00E+00	0.00E+00	0.00E+00	0.00E+00	0.00E+00	0.00E+00	0.00E+00
590	ALL	738080.96	4036200.87	2.68E-09	25YrCancer	2.68E-09	0.00E+00	0.00E+00	0.00E+00	0.00E+00	0.00E+00	0.00E+00	0.00E+00	0.00E+00	0.00E+00	0.00E+00	0.00E+00
591	ALL	738280.96	4036200.87	2.70E-09	25YrCancer	2.70E-09	0.00E+00	0.00E+00	0.00E+00	0.00E+00	0.00E+00	0.00E+00	0.00E+00	0.00E+00	0.00E+00	0.00E+00	0.00E+00
592	ALL	738380.96	4036200.87	2.71E-09	25YrCancer	2.71E-09	0.00E+00	0.00E+00	0.00E+00	0.00E+00	0.00E+00	0.00E+00	0.00E+00	0.00E+00	0.00E+00	0.00E+00	0.00E+00
593	ALL	738480.96	4036200.87	2.72E-09	25YrCancer	2.72E-09	0.00E+00	0.00E+00	0.00E+00	0.00E+00	0.00E+00	0.00E+00	0.00E+00	0.00E+00	0.00E+00	0.00E+00	0.00E+00
594	ALL	738580.96	4036200.87	2.73E-09	25YrCancer	2.73E-09	0.00E+00	0.00E+00	0.00E+00	0.00E+00	0.00E+00	0.00E+00	0.00E+00	0.00E+00	0.00E+00	0.00E+00	0.00E+00
595	ALL	738680.96	4036200.87	2.74E-09	25YrCancer	2.74E-09	0.00E+00	0.00E+00	0.00E+00	0.00E+00	0.00E+00	0.00E+00	0.00E+00	0.00E+00	0.00E+00	0.00E+00	0.00E+00
596	ALL	738780.96	4036200.87	2.75E-09	25YrCancer	2.75E-09	0.00E+00	0.00E+00	0.00E+00	0.00E+00	0.00E+00	0.00E+00	0.00E+00	0.00E+00	0.00E+00	0.00E+00	0.00E+00
597	ALL	738880.96	4036200.87	2.75E-09	25YrCancer	2.75E-09	0.00E+00	0.00E+00	0.00E+00	0.00E+00	0.00E+00	0.00E+00	0.00E+00	0.00E+00	0.00E+00	0.00E+00	0.00E+00
598	ALL	738980.96	4036200.87	2.76E-09	25YrCancer	2.76E-09	0.00E+00	0.00E+00	0.00E+00	0.00E+00	0.00E+00	0.00E+00	0.00E+00	0.00E+00	0.00E+00	0.00E+00	0.00E+00
599	ALL	739080.96	4036200.87	2.76E-09	25YrCancer	2.76E-09	0.00E+00	0.00E+00	0.00E+00	0.00E+00	0.00E+00	0.00E+00	0.00E+00	0.00E+00	0.00E+00	0.00E+00	0.00E+00
600	ALL	739180.96	4036200.87	2.77E-09	25YrCancer	2.77E-09	0.00E+00	0.00E+00	0.00E+00	0.00E+00	0.00E+00	0.00E+00	0.00E+00	0.00E+00	0.00E+00	0.00E+00	0.00E+00
601	ALL	739280.96	4036200.87	2.77E-09	25YrCancer	2.77E-09	0.00E+00	0.00E+00	0.00E+00	0.00E+00	0.00E+00	0.00E+00	0.00E+00	0.00E+00	0.00E+00	0.00E+00	0.00E+00
602	ALL	739380.96	4036200.87	2.78E-09	25YrCancer	2.78E-09	0.00E+00	0.00E+00	0.00E+00	0.00E+00	0.00E+00	0.00E+00	0.00E+00	0.00E+00	0.00E+00	0.00E+00	0.00E+00
603	ALL	739480.96	4036200.87	2.78E-09	25YrCancer	2.78E-09	0.00E+00	0.00E+00	0.00E+00	0.00E+00	0.00E+00	0.00E+00	0.00E+00	0.00E+00	0.00E+00	0.00E+00	0.00E+00
604	ALL	739580.96	4036200.87	2.78E-09	25YrCancer	2.78E-09	0.00E+00	0.00E+00	0.00E+00	0.00E+00	0.00E+00	0.00E+00	0.00E+00	0.00E+00	0.00E+00	0.00E+00	0.00E+00
605	ALL	739680.96	4036200.87	2.78E-09	25YrCancer	2.78E-09	0.00E+00	0.00E+00	0.00E+00	0.00E+00	0.00E+00	0.00E+00	0.00E+00	0.00E+00	0.00E+00	0.00E+00	0.00E+00
606	ALL	739780.96	4036200.87	2.78E-09	25YrCancer	2.78E-09	0.00E+00	0.00E+00	0.00E+00	0.00E+00	0.00E+00	0.00E+00	0.00E+00	0.00E+00	0.00E+00	0.00E+00	0.00E+00
607	ALL	739880.96	4036200.87	2.78E-09	25YrCancer	2.78E-09	0.00E+00	0.00E+00	0.00E+00	0.00E+00	0.00E+00	0.00E+00	0.00E+00	0.00E+00	0.00E+00	0.00E+00	0.00E+00
608	ALL	739980.96	4036200.87	2.78E-09	25YrCancer	2.78E-09	0.00E+00	0.00E+00	0.00E+00	0.00E+00	0.00E+00	0.00E+00	0.00E+00	0.00E+00	0.00E+00	0.00E+00	0.00E+00
609	ALL	740080.96	4036200.87	2.78E-09	25YrCancer	2.78E-09	0.00E+00	0.00E+00	0.00E+00	0.00E+00	0.00E+00	0.00E+00	0.00E+00	0.00E+00	0.00E+00	0.00E+00	0.00E+00
610	ALL	740180.96	4036200.87	2.78E-09	25YrCancer	2.78E-09	0.00E+00	0.00E+00	0.00E+00	0.00E+00	0.00E+00	0.00E+00	0.00E+00	0.00E+00	0.00E+00	0.00E+00	0.00E+00

611	ALL	740280.96	4036200.87	2.78E-09	25YrCancer	2.78E-09	0.00E+00	0.00E+00	0.00E+00	0.00E+00	0.00E+00	0.00E+00	0.00E+00	0.00E+00	0.00E+00	0.00E+00	0.00E+00
612	ALL	740380.96	4036200.87	2.79E-09	25YrCancer	2.79E-09	0.00E+00	0.00E+00	0.00E+00	0.00E+00	0.00E+00	0.00E+00	0.00E+00	0.00E+00	0.00E+00	0.00E+00	0.00E+00
613	ALL	740480.96	4036200.87	2.79E-09	25YrCancer	2.79E-09	0.00E+00	0.00E+00	0.00E+00	0.00E+00	0.00E+00	0.00E+00	0.00E+00	0.00E+00	0.00E+00	0.00E+00	0.00E+00
614	ALL	740580.96	4036200.87	2.79E-09	25YrCancer	2.79E-09	0.00E+00	0.00E+00	0.00E+00	0.00E+00	0.00E+00	0.00E+00	0.00E+00	0.00E+00	0.00E+00	0.00E+00	0.00E+00
615	ALL	740680.96	4036200.87	2.80E-09	25YrCancer	2.80E-09	0.00E+00	0.00E+00	0.00E+00	0.00E+00	0.00E+00	0.00E+00	0.00E+00	0.00E+00	0.00E+00	0.00E+00	0.00E+00
616	ALL	740780.96	4036200.87	2.81E-09	25YrCancer	2.81E-09	0.00E+00	0.00E+00	0.00E+00	0.00E+00	0.00E+00	0.00E+00	0.00E+00	0.00E+00	0.00E+00	0.00E+00	0.00E+00
617	ALL	740880.96	4036200.87	2.82E-09	25YrCancer	2.82E-09	0.00E+00	0.00E+00	0.00E+00	0.00E+00	0.00E+00	0.00E+00	0.00E+00	0.00E+00	0.00E+00	0.00E+00	0.00E+00
618	ALL	740980.96	4036200.87	2.83E-09	25YrCancer	2.83E-09	0.00E+00	0.00E+00	0.00E+00	0.00E+00	0.00E+00	0.00E+00	0.00E+00	0.00E+00	0.00E+00	0.00E+00	0.00E+00
619	ALL	741080.96	4036200.87	2.83E-09	25YrCancer	2.83E-09	0.00E+00	0.00E+00	0.00E+00	0.00E+00	0.00E+00	0.00E+00	0.00E+00	0.00E+00	0.00E+00	0.00E+00	0.00E+00
620	ALL	741180.96	4036200.87	2.84E-09	25YrCancer	2.84E-09	0.00E+00	0.00E+00	0.00E+00	0.00E+00	0.00E+00	0.00E+00	0.00E+00	0.00E+00	0.00E+00	0.00E+00	0.00E+00
621	ALL	741280.96	4036200.87	2.86E-09	25YrCancer	2.86E-09	0.00E+00	0.00E+00	0.00E+00	0.00E+00	0.00E+00	0.00E+00	0.00E+00	0.00E+00	0.00E+00	0.00E+00	0.00E+00
622	ALL	741380.96	4036200.87	2.87E-09	25YrCancer	2.87E-09	0.00E+00	0.00E+00	0.00E+00	0.00E+00	0.00E+00	0.00E+00	0.00E+00	0.00E+00	0.00E+00	0.00E+00	0.00E+00
623	ALL	741480.96	4036200.87	2.89E-09	25YrCancer	2.89E-09	0.00E+00	0.00E+00	0.00E+00	0.00E+00	0.00E+00	0.00E+00	0.00E+00	0.00E+00	0.00E+00	0.00E+00	0.00E+00
624	ALL	741580.96	4036200.87	2.92E-09	25YrCancer	2.92E-09	0.00E+00	0.00E+00	0.00E+00	0.00E+00	0.00E+00	0.00E+00	0.00E+00	0.00E+00	0.00E+00	0.00E+00	0.00E+00
625	ALL	741680.96	4036200.87	2.95E-09	25YrCancer	2.95E-09	0.00E+00	0.00E+00	0.00E+00	0.00E+00	0.00E+00	0.00E+00	0.00E+00	0.00E+00	0.00E+00	0.00E+00	0.00E+00
626	ALL	741780.96	4036200.87	2.97E-09	25YrCancer	2.97E-09	0.00E+00	0.00E+00	0.00E+00	0.00E+00	0.00E+00	0.00E+00	0.00E+00	0.00E+00	0.00E+00	0.00E+00	0.00E+00
627	ALL	741880.96	4036200.87	2.99E-09	25YrCancer	2.99E-09	0.00E+00	0.00E+00	0.00E+00	0.00E+00	0.00E+00	0.00E+00	0.00E+00	0.00E+00	0.00E+00	0.00E+00	0.00E+00
628	ALL	741980.96	4036200.87	3.00E-09	25YrCancer	3.00E-09	0.00E+00	0.00E+00	0.00E+00	0.00E+00	0.00E+00	0.00E+00	0.00E+00	0.00E+00	0.00E+00	0.00E+00	0.00E+00
629	ALL	742080.96	4036200.87	3.04E-09	25YrCancer	3.04E-09	0.00E+00	0.00E+00	0.00E+00	0.00E+00	0.00E+00	0.00E+00	0.00E+00	0.00E+00	0.00E+00	0.00E+00	0.00E+00
630	ALL	738080.96	4036300.87	2.64E-09	25YrCancer	2.64E-09	0.00E+00	0.00E+00	0.00E+00	0.00E+00	0.00E+00	0.00E+00	0.00E+00	0.00E+00	0.00E+00	0.00E+00	0.00E+00
631	ALL	738180.96	4036300.87	2.65E-09	25YrCancer	2.65E-09	0.00E+00	0.00E+00	0.00E+00	0.00E+00	0.00E+00	0.00E+00	0.00E+00	0.00E+00	0.00E+00	0.00E+00	0.00E+00
632	ALL	738380.96	4036300.87	2.67E-09	25YrCancer	2.67E-09	0.00E+00	0.00E+00	0.00E+00	0.00E+00	0.00E+00	0.00E+00	0.00E+00	0.00E+00	0.00E+00	0.00E+00	0.00E+00
633	ALL	738480.96	4036300.87	2.68E-09	25YrCancer	2.68E-09	0.00E+00	0.00E+00	0.00E+00	0.00E+00	0.00E+00	0.00E+00	0.00E+00	0.00E+00	0.00E+00	0.00E+00	0.00E+00
634	ALL	738580.96	4036300.87	2.69E-09	25YrCancer	2.69E-09	0.00E+00	0.00E+00	0.00E+00	0.00E+00	0.00E+00	0.00E+00	0.00E+00	0.00E+00	0.00E+00	0.00E+00	0.00E+00
635	ALL	738680.96	4036300.87	2.70E-09	25YrCancer	2.70E-09	0.00E+00	0.00E+00	0.00E+00	0.00E+00	0.00E+00	0.00E+00	0.00E+00	0.00E+00	0.00E+00	0.00E+00	0.00E+00
636	ALL	738780.96	4036300.87	2.71E-09	25YrCancer	2.71E-09	0.00E+00	0.00E+00	0.00E+00	0.00E+00	0.00E+00	0.00E+00	0.00E+00	0.00E+00	0.00E+00	0.00E+00	0.00E+00
637	ALL	738880.96	4036300.87	2.72E-09	25YrCancer	2.72E-09	0.00E+00	0.00E+00	0.00E+00	0.00E+00	0.00E+00	0.00E+00	0.00E+00	0.00E+00	0.00E+00	0.00E+00	0.00E+00
638	ALL	738980.96	4036300.87	2.73E-09	25YrCancer	2.73E-09	0.00E+00	0.00E+00	0.00E+00	0.00E+00	0.00E+00	0.00E+00	0.00E+00	0.00E+00	0.00E+00	0.00E+00	0.00E+00
639	ALL	739080.96	4036300.87	2.74E-09	25YrCancer	2.74E-09	0.00E+00	0.00E+00	0.00E+00	0.00E+00	0.00E+00	0.00E+00	0.00E+00	0.00E+00	0.00E+00	0.00E+00	0.00E+00
640	ALL	739180.96	4036300.87	2.74E-09	25YrCancer	2.74E-09	0.00E+00	0.00E+00	0.00E+00	0.00E+00	0.00E+00	0.00E+00	0.00E+00	0.00E+00	0.00E+00	0.00E+00	0.00E+00
641	ALL	739280.96	4036300.87	2.75E-09	25YrCancer	2.75E-09	0.00E+00	0.00E+00	0.00E+00	0.00E+00	0.00E+00	0.00E+00	0.00E+00	0.00E+00	0.00E+00	0.00E+00	0.00E+00
642	ALL	739380.96	4036300.87	2.75E-09	25YrCancer	2.75E-09	0.00E+00	0.00E+00	0.00E+00	0.00E+00	0.00E+00	0.00E+00	0.00E+00	0.00E+00	0.00E+00	0.00E+00	0.00E+00
643	ALL	739480.96	4036300.87	2.75E-09	25YrCancer	2.75E-09	0.00E+00	0.00E+00	0.00E+00	0.00E+00	0.00E+00	0.00E+00	0.00E+00	0.00E+00	0.00E+00	0.00E+00	0.00E+00
644	ALL	739580.96	4036300.87	2.76E-09	25YrCancer	2.76E-09	0.00E+00	0.00E+00	0.00E+00	0.00E+00	0.00E+00	0.00E+00	0.00E+00	0.00E+00	0.00E+00	0.00E+00	0.00E+00
645	ALL	739680.96	4036300.87	2.76E-09	25YrCancer	2.76E-09	0.00E+00	0.00E+00	0.00E+00	0.00E+00	0.00E+00	0.00E+00	0.00E+00	0.00E+00	0.00E+00	0.00E+00	0.00E+00
646	ALL	739780.96	4036300.87	2.76E-09	25YrCancer	2.76E-09	0.00E+00	0.00E+00	0.00E+00	0.00E+00	0.00E+00	0.00E+00	0.00E+00	0.00E+00	0.00E+00	0.00E+00	0.00E+00
647	ALL	739880.96	4036300.87	2.76E-09	25YrCancer	2.76E-09	0.00E+00	0.00E+00	0.00E+00	0.00E+00	0.00E+00	0.00E+00	0.00E+00	0.00E+00	0.00E+00	0.00E+00	0.00E+00
648	ALL	739980.96	4036300.87	2.77E-09	25YrCancer	2.77E-09	0.00E+00	0.00E+00	0.00E+00	0.00E+00	0.00E+00	0.00E+00	0.00E+00	0.00E+00	0.00E+00	0.00E+00	0.00E+00
649	ALL	740080.96	4036300.87	2.77E-09	25YrCancer	2.77E-09	0.00E+00	0.00E+00	0.00E+00	0.00E+00	0.00E+00	0.00E+00	0.00E+00	0.00E+00	0.00E+00	0.00E+00	0.00E+00
650	ALL	740180.96	4036300.87	2.77E-09	25YrCancer	2.77E-09	0.00E+00	0.00E+00	0.00E+00	0.00E+00	0.00E+00	0.00E+00	0.00E+00	0.00E+00	0.00E+00	0.00E+00	0.00E+00
651	ALL	740280.96	4036300.87	2.78E-09	25YrCancer	2.78E-09	0.00E+00	0.00E+00	0.00E+00	0.00E+00	0.00E+00	0.00E+00	0.00E+00	0.00E+00	0.00E+00	0.00E+00	0.00E+00
652	ALL	740380.96	4036300.87	2.78E-09	25YrCancer	2.78E-09	0.00E+00	0.00E+00	0.00E+00	0.00E+00	0.00E+00	0.00E+00	0.00E+00	0.00E+00	0.00E+00	0.00E+00	0.00E+00
653	ALL	740480.96	4036300.87	2.79E-09	25YrCancer	2.79E-09	0.00E+00	0.00E+00	0.00E+00	0.00E+00	0.00E+00	0.00E+00	0.00E+00	0.00E+00	0.00E+00	0.00E+00	0.00E+00
654	ALL	740580.96	4036300.87	2.79E-09	25YrCancer	2.79E-09	0.00E+00	0.00E+00	0.00E+00	0.00E+00	0.00E+00	0.00E+00	0.00E+00	0.00E+00	0.00E+00	0.00E+00	0.00E+00
655	ALL	740680.96	4036300.87	2.80E-09	25YrCancer	2.80E-09	0.00E+00	0.00E+00	0.00E+00	0.00E+00	0.00E+00	0.00E+00	0.00E+00	0.00E+00	0.00E+00	0.00E+00	0.00E+00
656	ALL	740780.96	4036300.87	2.81E-09	25YrCancer	2.81E-09	0.00E+00	0.00E+00	0.00E+00	0.00E+00	0.00E+00	0.00E+00	0.00E+00	0.00E+00	0.00E+00	0.00E+00	0.00E+00
657	ALL	740880.96	4036300.87	2.81E-09	25YrCancer	2.81E-09	0.00E+00	0.00E+00	0.00E+00	0.00E+00	0.00E+00	0.00E+00	0.00E+00	0.00E+00	0.00E+00	0.00E+00	0.00E+00
658	ALL	740980.96	4036300.87	2.82E-09	25YrCancer	2.82E-09	0.00E+00	0.00E+00	0.00E+00	0.00E+00	0.00E+00	0.00E+00	0.00E+00	0.00E+00	0.00E+00	0.00E+00	0.00E+00
659	ALL	741080.96	4036300.87	2.84E-09	25YrCancer	2.84E-09	0.00E+00	0.00E+00	0.00E+00	0.00E+00	0.00E+00	0.00E+00	0.00E+00	0.00E+00	0.00E+00	0.00E+00	0.00E+00
660	ALL	741180.96	4036300.87	2.85E-09	25YrCancer	2.85E-09	0.00E+00	0.00E+00	0.00E+00	0.00E+00	0.00E+00	0.00E+00	0.00E+00	0.00E+00	0.00E+00	0.00E+00	0.00E+00
661	ALL	741280.96	4036300.87	2.86E-09	25YrCancer	2.86E-09	0.00E+00	0.00E+00	0.00E+00	0.00E+00	0.00E+00	0.00E+00	0.00E+00	0.00E+00	0.00E+00	0.00E+00	0.00E+00

662	ALL	741380.96	4036300.87	2.88E-09	25YrCancer	2.88E-09	0.00E+00	0.00E+00	0.00E+00	0.00E+00	0.00E+00	0.00E+00	0.00E+00	0.00E+00	0.00E+00	0.00E+00	0.00E+00
663	ALL	741480.96	4036300.87	2.90E-09	25YrCancer	2.90E-09	0.00E+00	0.00E+00	0.00E+00	0.00E+00	0.00E+00	0.00E+00	0.00E+00	0.00E+00	0.00E+00	0.00E+00	0.00E+00
664	ALL	741580.96	4036300.87	2.92E-09	25YrCancer	2.92E-09	0.00E+00	0.00E+00	0.00E+00	0.00E+00	0.00E+00	0.00E+00	0.00E+00	0.00E+00	0.00E+00	0.00E+00	0.00E+00
665	ALL	741680.96	4036300.87	2.95E-09	25YrCancer	2.95E-09	0.00E+00	0.00E+00	0.00E+00	0.00E+00	0.00E+00	0.00E+00	0.00E+00	0.00E+00	0.00E+00	0.00E+00	0.00E+00
666	ALL	741780.96	4036300.87	2.97E-09	25YrCancer	2.97E-09	0.00E+00	0.00E+00	0.00E+00	0.00E+00	0.00E+00	0.00E+00	0.00E+00	0.00E+00	0.00E+00	0.00E+00	0.00E+00
667	ALL	741880.96	4036300.87	2.99E-09	25YrCancer	2.99E-09	0.00E+00	0.00E+00	0.00E+00	0.00E+00	0.00E+00	0.00E+00	0.00E+00	0.00E+00	0.00E+00	0.00E+00	0.00E+00
668	ALL	741980.96	4036300.87	3.00E-09	25YrCancer	3.00E-09	0.00E+00	0.00E+00	0.00E+00	0.00E+00	0.00E+00	0.00E+00	0.00E+00	0.00E+00	0.00E+00	0.00E+00	0.00E+00
669	ALL	742080.96	4036300.87	3.03E-09	25YrCancer	3.03E-09	0.00E+00	0.00E+00	0.00E+00	0.00E+00	0.00E+00	0.00E+00	0.00E+00	0.00E+00	0.00E+00	0.00E+00	0.00E+00
670	ALL	742180.96	4036300.87	3.07E-09	25YrCancer	3.07E-09	0.00E+00	0.00E+00	0.00E+00	0.00E+00	0.00E+00	0.00E+00	0.00E+00	0.00E+00	0.00E+00	0.00E+00	0.00E+00
671	ALL	742280.96	4036300.87	3.11E-09	25YrCancer	3.11E-09	0.00E+00	0.00E+00	0.00E+00	0.00E+00	0.00E+00	0.00E+00	0.00E+00	0.00E+00	0.00E+00	0.00E+00	0.00E+00
672	ALL	742380.96	4036300.87	3.15E-09	25YrCancer	3.15E-09	0.00E+00	0.00E+00	0.00E+00	0.00E+00	0.00E+00	0.00E+00	0.00E+00	0.00E+00	0.00E+00	0.00E+00	0.00E+00
673	ALL	742480.96	4036300.87	3.20E-09	25YrCancer	3.20E-09	0.00E+00	0.00E+00	0.00E+00	0.00E+00	0.00E+00	0.00E+00	0.00E+00	0.00E+00	0.00E+00	0.00E+00	0.00E+00
674	ALL	742580.96	4036300.87	3.24E-09	25YrCancer	3.24E-09	0.00E+00	0.00E+00	0.00E+00	0.00E+00	0.00E+00	0.00E+00	0.00E+00	0.00E+00	0.00E+00	0.00E+00	0.00E+00
675	ALL	742680.96	4036300.87	3.29E-09	25YrCancer	3.29E-09	0.00E+00	0.00E+00	0.00E+00	0.00E+00	0.00E+00	0.00E+00	0.00E+00	0.00E+00	0.00E+00	0.00E+00	0.00E+00
676	ALL	742780.96	4036300.87	3.34E-09	25YrCancer	3.34E-09	0.00E+00	0.00E+00	0.00E+00	0.00E+00	0.00E+00	0.00E+00	0.00E+00	0.00E+00	0.00E+00	0.00E+00	0.00E+00
677	ALL	742880.96	4036300.87	3.40E-09	25YrCancer	3.40E-09	0.00E+00	0.00E+00	0.00E+00	0.00E+00	0.00E+00	0.00E+00	0.00E+00	0.00E+00	0.00E+00	0.00E+00	0.00E+00
678	ALL	742980.96	4036300.87	3.45E-09	25YrCancer	3.45E-09	0.00E+00	0.00E+00	0.00E+00	0.00E+00	0.00E+00	0.00E+00	0.00E+00	0.00E+00	0.00E+00	0.00E+00	0.00E+00
679	ALL	743080.96	4036300.87	3.51E-09	25YrCancer	3.51E-09	0.00E+00	0.00E+00	0.00E+00	0.00E+00	0.00E+00	0.00E+00	0.00E+00	0.00E+00	0.00E+00	0.00E+00	0.00E+00
680	ALL	743180.96	4036300.87	3.57E-09	25YrCancer	3.57E-09	0.00E+00	0.00E+00	0.00E+00	0.00E+00	0.00E+00	0.00E+00	0.00E+00	0.00E+00	0.00E+00	0.00E+00	0.00E+00
681	ALL	743280.96	4036300.87	3.64E-09	25YrCancer	3.64E-09	0.00E+00	0.00E+00	0.00E+00	0.00E+00	0.00E+00	0.00E+00	0.00E+00	0.00E+00	0.00E+00	0.00E+00	0.00E+00
682	ALL	743380.96	4036300.87	3.70E-09	25YrCancer	3.70E-09	0.00E+00	0.00E+00	0.00E+00	0.00E+00	0.00E+00	0.00E+00	0.00E+00	0.00E+00	0.00E+00	0.00E+00	0.00E+00
683	ALL	743480.96	4036300.87	3.77E-09	25YrCancer	3.77E-09	0.00E+00	0.00E+00	0.00E+00	0.00E+00	0.00E+00	0.00E+00	0.00E+00	0.00E+00	0.00E+00	0.00E+00	0.00E+00
684	ALL	743580.96	4036300.87	3.84E-09	25YrCancer	3.84E-09	0.00E+00	0.00E+00	0.00E+00	0.00E+00	0.00E+00	0.00E+00	0.00E+00	0.00E+00	0.00E+00	0.00E+00	0.00E+00
685	ALL	743680.96	4036300.87	3.91E-09	25YrCancer	3.91E-09	0.00E+00	0.00E+00	0.00E+00	0.00E+00	0.00E+00	0.00E+00	0.00E+00	0.00E+00	0.00E+00	0.00E+00	0.00E+00
686	ALL	743780.96	4036300.87	3.98E-09	25YrCancer	3.98E-09	0.00E+00	0.00E+00	0.00E+00	0.00E+00	0.00E+00	0.00E+00	0.00E+00	0.00E+00	0.00E+00	0.00E+00	0.00E+00
687	ALL	743880.96	4036300.87	4.05E-09	25YrCancer	4.05E-09	0.00E+00	0.00E+00	0.00E+00	0.00E+00	0.00E+00	0.00E+00	0.00E+00	0.00E+00	0.00E+00	0.00E+00	0.00E+00
688	ALL	743980.96	4036300.87	4.13E-09	25YrCancer	4.13E-09	0.00E+00	0.00E+00	0.00E+00	0.00E+00	0.00E+00	0.00E+00	0.00E+00	0.00E+00	0.00E+00	0.00E+00	0.00E+00
689	ALL	744080.96	4036300.87	4.21E-09	25YrCancer	4.21E-09	0.00E+00	0.00E+00	0.00E+00	0.00E+00	0.00E+00	0.00E+00	0.00E+00	0.00E+00	0.00E+00	0.00E+00	0.00E+00
690	ALL	744180.96	4036300.87	4.29E-09	25YrCancer	4.29E-09	0.00E+00	0.00E+00	0.00E+00	0.00E+00	0.00E+00	0.00E+00	0.00E+00	0.00E+00	0.00E+00	0.00E+00	0.00E+00
691	ALL	744280.96	4036300.87	4.38E-09	25YrCancer	4.38E-09	0.00E+00	0.00E+00	0.00E+00	0.00E+00	0.00E+00	0.00E+00	0.00E+00	0.00E+00	0.00E+00	0.00E+00	0.00E+00
692	ALL	744380.96	4036300.87	4.47E-09	25YrCancer	4.47E-09	0.00E+00	0.00E+00	0.00E+00	0.00E+00	0.00E+00	0.00E+00	0.00E+00	0.00E+00	0.00E+00	0.00E+00	0.00E+00
693	ALL	744480.96	4036300.87	4.57E-09	25YrCancer	4.57E-09	0.00E+00	0.00E+00	0.00E+00	0.00E+00	0.00E+00	0.00E+00	0.00E+00	0.00E+00	0.00E+00	0.00E+00	0.00E+00
694	ALL	738080.96	4036400.87	2.60E-09	25YrCancer	2.60E-09	0.00E+00	0.00E+00	0.00E+00	0.00E+00	0.00E+00	0.00E+00	0.00E+00	0.00E+00	0.00E+00	0.00E+00	0.00E+00
695	ALL	738180.96	4036400.87	2.61E-09	25YrCancer	2.61E-09	0.00E+00	0.00E+00	0.00E+00	0.00E+00	0.00E+00	0.00E+00	0.00E+00	0.00E+00	0.00E+00	0.00E+00	0.00E+00
696	ALL	738280.96	4036400.87	2.62E-09	25YrCancer	2.62E-09	0.00E+00	0.00E+00	0.00E+00	0.00E+00	0.00E+00	0.00E+00	0.00E+00	0.00E+00	0.00E+00	0.00E+00	0.00E+00
697	ALL	738480.96	4036400.87	2.64E-09	25YrCancer	2.64E-09	0.00E+00	0.00E+00	0.00E+00	0.00E+00	0.00E+00	0.00E+00	0.00E+00	0.00E+00	0.00E+00	0.00E+00	0.00E+00
698	ALL	738580.96	4036400.87	2.65E-09	25YrCancer	2.65E-09	0.00E+00	0.00E+00	0.00E+00	0.00E+00	0.00E+00	0.00E+00	0.00E+00	0.00E+00	0.00E+00	0.00E+00	0.00E+00
699	ALL	738680.96	4036400.87	2.66E-09	25YrCancer	2.66E-09	0.00E+00	0.00E+00	0.00E+00	0.00E+00	0.00E+00	0.00E+00	0.00E+00	0.00E+00	0.00E+00	0.00E+00	0.00E+00
700	ALL	739380.96	4036400.87	2.73E-09	25YrCancer	2.73E-09	0.00E+00	0.00E+00	0.00E+00	0.00E+00	0.00E+00	0.00E+00	0.00E+00	0.00E+00	0.00E+00	0.00E+00	0.00E+00
701	ALL	739480.96	4036400.87	2.73E-09	25YrCancer	2.73E-09	0.00E+00	0.00E+00	0.00E+00	0.00E+00	0.00E+00	0.00E+00	0.00E+00	0.00E+00	0.00E+00	0.00E+00	0.00E+00
702	ALL	739580.96	4036400.87	2.73E-09	25YrCancer	2.73E-09	0.00E+00	0.00E+00	0.00E+00	0.00E+00	0.00E+00	0.00E+00	0.00E+00	0.00E+00	0.00E+00	0.00E+00	0.00E+00
703	ALL	739680.96	4036400.87	2.74E-09	25YrCancer	2.74E-09	0.00E+00	0.00E+00	0.00E+00	0.00E+00	0.00E+00	0.00E+00	0.00E+00	0.00E+00	0.00E+00	0.00E+00	0.00E+00
704	ALL	739780.96	4036400.87	2.74E-09	25YrCancer	2.74E-09	0.00E+00	0.00E+00	0.00E+00	0.00E+00	0.00E+00	0.00E+00	0.00E+00	0.00E+00	0.00E+00	0.00E+00	0.00E+00
705	ALL	739880.96	4036400.87	2.75E-09	25YrCancer	2.75E-09	0.00E+00	0.00E+00	0.00E+00	0.00E+00	0.00E+00	0.00E+00	0.00E+00	0.00E+00	0.00E+00	0.00E+00	0.00E+00
706	ALL	739980.96	4036400.87	2.75E-09	25YrCancer	2.75E-09	0.00E+00	0.00E+00	0.00E+00	0.00E+00	0.00E+00	0.00E+00	0.00E+00	0.00E+00	0.00E+00	0.00E+00	0.00E+00
707	ALL	740080.96	4036400.87	2.76E-09	25YrCancer	2.76E-09	0.00E+00	0.00E+00	0.00E+00	0.00E+00	0.00E+00	0.00E+00	0.00E+00	0.00E+00	0.00E+00	0.00E+00	0.00E+00
708	ALL	740180.96	4036400.87	2.77E-09	25YrCancer	2.77E-09	0.00E+00	0.00E+00	0.00E+00	0.00E+00	0.00E+00	0.00E+00	0.00E+00	0.00E+00	0.00E+00	0.00E+00	0.00E+00
709	ALL	740280.96	4036400.87	2.77E-09	25YrCancer	2.77E-09	0.00E+00	0.00E+00	0.00E+00	0.00E+00	0.00E+00	0.00E+00	0.00E+00	0.00E+00	0.00E+00	0.00E+00	0.00E+00
710	ALL	740380.96	4036400.87	2.78E-09	25YrCancer	2.78E-09	0.00E+00	0.00E+00	0.00E+00	0.00E+00	0.00E+00	0.00E+00	0.00E+00	0.00E+00	0.00E+00	0.00E+00	0.00E+00
711	ALL	740480.96	4036400.87	2.79E-09	25YrCancer	2.79E-09	0.00E+00	0.00E+00	0.00E+00	0.00E+00	0.00E+00	0.00E+00	0.00E+00	0.00E+00	0.00E+00	0.00E+00	0.00E+00
712	ALL	740580.96	4036400.87	2.79E-09	25YrCancer	2.79E-09	0.00E+00	0.00E+00	0.00E+00	0.00E+00	0.00E+00	0.00E+00	0.00E+00	0.00E+00	0.00E+00	0.00E+00	0.00E+00

713	ALL		740680.96	4036400.87	2.80E-09	25YrCancer	2.80E-09	0.00E+00	0.00E+00	0.00E+00	0.00E+00	0.00E+00	0.00E+00	0.00E+00	0.00E+00	0.00E+00	0.00E+00	0.00E+00
714	ALL		740780.96	4036400.87	2.81E-09	25YrCancer	2.81E-09	0.00E+00	0.00E+00	0.00E+00	0.00E+00	0.00E+00	0.00E+00	0.00E+00	0.00E+00	0.00E+00	0.00E+00	0.00E+00
715	ALL		740880.96	4036400.87	2.83E-09	25YrCancer	2.83E-09	0.00E+00	0.00E+00	0.00E+00	0.00E+00	0.00E+00	0.00E+00	0.00E+00	0.00E+00	0.00E+00	0.00E+00	0.00E+00
716	ALL		740980.96	4036400.87	2.83E-09	25YrCancer	2.83E-09	0.00E+00	0.00E+00	0.00E+00	0.00E+00	0.00E+00	0.00E+00	0.00E+00	0.00E+00	0.00E+00	0.00E+00	0.00E+00
717	ALL		741080.96	4036400.87	2.84E-09	25YrCancer	2.84E-09	0.00E+00	0.00E+00	0.00E+00	0.00E+00	0.00E+00	0.00E+00	0.00E+00	0.00E+00	0.00E+00	0.00E+00	0.00E+00
718	ALL		741180.96	4036400.87	2.85E-09	25YrCancer	2.85E-09	0.00E+00	0.00E+00	0.00E+00	0.00E+00	0.00E+00	0.00E+00	0.00E+00	0.00E+00	0.00E+00	0.00E+00	0.00E+00
719	ALL		741280.96	4036400.87	2.87E-09	25YrCancer	2.87E-09	0.00E+00	0.00E+00	0.00E+00	0.00E+00	0.00E+00	0.00E+00	0.00E+00	0.00E+00	0.00E+00	0.00E+00	0.00E+00
720	ALL		741380.96	4036400.87	2.89E-09	25YrCancer	2.89E-09	0.00E+00	0.00E+00	0.00E+00	0.00E+00	0.00E+00	0.00E+00	0.00E+00	0.00E+00	0.00E+00	0.00E+00	0.00E+00
721	ALL	SENS	741480.96	4036400.87	2.91E-09	25YrCancer	2.91E-09	0.00E+00	0.00E+00	0.00E+00	0.00E+00	0.00E+00	0.00E+00	0.00E+00	0.00E+00	0.00E+00	0.00E+00	0.00E+00
722	ALL		741580.96	4036400.87	2.93E-09	25YrCancer	2.93E-09	0.00E+00	0.00E+00	0.00E+00	0.00E+00	0.00E+00	0.00E+00	0.00E+00	0.00E+00	0.00E+00	0.00E+00	0.00E+00
723	ALL		741680.96	4036400.87	2.96E-09	25YrCancer	2.96E-09	0.00E+00	0.00E+00	0.00E+00	0.00E+00	0.00E+00	0.00E+00	0.00E+00	0.00E+00	0.00E+00	0.00E+00	0.00E+00
724	ALL		741780.96	4036400.87	2.98E-09	25YrCancer	2.98E-09	0.00E+00	0.00E+00	0.00E+00	0.00E+00	0.00E+00	0.00E+00	0.00E+00	0.00E+00	0.00E+00	0.00E+00	0.00E+00
725	ALL		741880.96	4036400.87	2.99E-09	25YrCancer	2.99E-09	0.00E+00	0.00E+00	0.00E+00	0.00E+00	0.00E+00	0.00E+00	0.00E+00	0.00E+00	0.00E+00	0.00E+00	0.00E+00
726	ALL		741980.96	4036400.87	3.01E-09	25YrCancer	3.01E-09	0.00E+00	0.00E+00	0.00E+00	0.00E+00	0.00E+00	0.00E+00	0.00E+00	0.00E+00	0.00E+00	0.00E+00	0.00E+00
727	ALL		742080.96	4036400.87	3.04E-09	25YrCancer	3.04E-09	0.00E+00	0.00E+00	0.00E+00	0.00E+00	0.00E+00	0.00E+00	0.00E+00	0.00E+00	0.00E+00	0.00E+00	0.00E+00
728	ALL		742180.96	4036400.87	3.08E-09	25YrCancer	3.08E-09	0.00E+00	0.00E+00	0.00E+00	0.00E+00	0.00E+00	0.00E+00	0.00E+00	0.00E+00	0.00E+00	0.00E+00	0.00E+00
729	ALL		742280.96	4036400.87	3.12E-09	25YrCancer	3.12E-09	0.00E+00	0.00E+00	0.00E+00	0.00E+00	0.00E+00	0.00E+00	0.00E+00	0.00E+00	0.00E+00	0.00E+00	0.00E+00
730	ALL		742380.96	4036400.87	3.16E-09	25YrCancer	3.16E-09	0.00E+00	0.00E+00	0.00E+00	0.00E+00	0.00E+00	0.00E+00	0.00E+00	0.00E+00	0.00E+00	0.00E+00	0.00E+00
731	ALL		742480.96	4036400.87	3.20E-09	25YrCancer	3.20E-09	0.00E+00	0.00E+00	0.00E+00	0.00E+00	0.00E+00	0.00E+00	0.00E+00	0.00E+00	0.00E+00	0.00E+00	0.00E+00
732	ALL		742580.96	4036400.87	3.25E-09	25YrCancer	3.25E-09	0.00E+00	0.00E+00	0.00E+00	0.00E+00	0.00E+00	0.00E+00	0.00E+00	0.00E+00	0.00E+00	0.00E+00	0.00E+00
733	ALL		742680.96	4036400.87	3.30E-09	25YrCancer	3.30E-09	0.00E+00	0.00E+00	0.00E+00	0.00E+00	0.00E+00	0.00E+00	0.00E+00	0.00E+00	0.00E+00	0.00E+00	0.00E+00
734	ALL		742780.96	4036400.87	3.35E-09	25YrCancer	3.35E-09	0.00E+00	0.00E+00	0.00E+00	0.00E+00	0.00E+00	0.00E+00	0.00E+00	0.00E+00	0.00E+00	0.00E+00	0.00E+00
735	ALL		742880.96	4036400.87	3.41E-09	25YrCancer	3.41E-09	0.00E+00	0.00E+00	0.00E+00	0.00E+00	0.00E+00	0.00E+00	0.00E+00	0.00E+00	0.00E+00	0.00E+00	0.00E+00
736	ALL		742980.96	4036400.87	3.47E-09	25YrCancer	3.47E-09	0.00E+00	0.00E+00	0.00E+00	0.00E+00	0.00E+00	0.00E+00	0.00E+00	0.00E+00	0.00E+00	0.00E+00	0.00E+00
737	ALL		743080.96	4036400.87	3.53E-09	25YrCancer	3.53E-09	0.00E+00	0.00E+00	0.00E+00	0.00E+00	0.00E+00	0.00E+00	0.00E+00	0.00E+00	0.00E+00	0.00E+00	0.00E+00
738	ALL		743180.96	4036400.87	3.60E-09	25YrCancer	3.60E-09	0.00E+00	0.00E+00	0.00E+00	0.00E+00	0.00E+00	0.00E+00	0.00E+00	0.00E+00	0.00E+00	0.00E+00	0.00E+00
739	ALL		743280.96	4036400.87	3.66E-09	25YrCancer	3.66E-09	0.00E+00	0.00E+00	0.00E+00	0.00E+00	0.00E+00	0.00E+00	0.00E+00	0.00E+00	0.00E+00	0.00E+00	0.00E+00
740	ALL		743380.96	4036400.87	3.73E-09	25YrCancer	3.73E-09	0.00E+00	0.00E+00	0.00E+00	0.00E+00	0.00E+00	0.00E+00	0.00E+00	0.00E+00	0.00E+00	0.00E+00	0.00E+00
741	ALL		743480.96	4036400.87	3.81E-09	25YrCancer	3.81E-09	0.00E+00	0.00E+00	0.00E+00	0.00E+00	0.00E+00	0.00E+00	0.00E+00	0.00E+00	0.00E+00	0.00E+00	0.00E+00
742	ALL		743580.96	4036400.87	3.88E-09	25YrCancer	3.88E-09	0.00E+00	0.00E+00	0.00E+00	0.00E+00	0.00E+00	0.00E+00	0.00E+00	0.00E+00	0.00E+00	0.00E+00	0.00E+00
743	ALL		743680.96	4036400.87	3.95E-09	25YrCancer	3.95E-09	0.00E+00	0.00E+00	0.00E+00	0.00E+00	0.00E+00	0.00E+00	0.00E+00	0.00E+00	0.00E+00	0.00E+00	0.00E+00
744	ALL		743780.96	4036400.87	4.03E-09	25YrCancer	4.03E-09	0.00E+00	0.00E+00	0.00E+00	0.00E+00	0.00E+00	0.00E+00	0.00E+00	0.00E+00	0.00E+00	0.00E+00	0.00E+00
745	ALL		743880.96	4036400.87	4.11E-09	25YrCancer	4.11E-09	0.00E+00	0.00E+00	0.00E+00	0.00E+00	0.00E+00	0.00E+00	0.00E+00	0.00E+00	0.00E+00	0.00E+00	0.00E+00
746	ALL		743980.96	4036400.87	4.20E-09	25YrCancer	4.20E-09	0.00E+00	0.00E+00	0.00E+00	0.00E+00	0.00E+00	0.00E+00	0.00E+00	0.00E+00	0.00E+00	0.00E+00	0.00E+00
747	ALL		744080.96	4036400.87	4.28E-09	25YrCancer	4.28E-09	0.00E+00	0.00E+00	0.00E+00	0.00E+00	0.00E+00	0.00E+00	0.00E+00	0.00E+00	0.00E+00	0.00E+00	0.00E+00
748	ALL		744180.96	4036400.87	4.37E-09	25YrCancer	4.37E-09	0.00E+00	0.00E+00	0.00E+00	0.00E+00	0.00E+00	0.00E+00	0.00E+00	0.00E+00	0.00E+00	0.00E+00	0.00E+00
749	ALL		744280.96	4036400.87	4.46E-09	25YrCancer	4.46E-09	0.00E+00	0.00E+00	0.00E+00	0.00E+00	0.00E+00	0.00E+00	0.00E+00	0.00E+00	0.00E+00	0.00E+00	0.00E+00
750	ALL		744380.96	4036400.87	4.56E-09	25YrCancer	4.56E-09	0.00E+00	0.00E+00	0.00E+00	0.00E+00	0.00E+00	0.00E+00	0.00E+00	0.00E+00	0.00E+00	0.00E+00	0.00E+00
751	ALL		744480.96	4036400.87	4.67E-09	25YrCancer	4.67E-09	0.00E+00	0.00E+00	0.00E+00	0.00E+00	0.00E+00	0.00E+00	0.00E+00	0.00E+00	0.00E+00	0.00E+00	0.00E+00
752	ALL		744580.96	4036400.87	4.78E-09	25YrCancer	4.78E-09	0.00E+00	0.00E+00	0.00E+00	0.00E+00	0.00E+00	0.00E+00	0.00E+00	0.00E+00	0.00E+00	0.00E+00	0.00E+00
753	ALL		744680.96	4036400.87	4.90E-09	25YrCancer	4.90E-09	0.00E+00	0.00E+00	0.00E+00	0.00E+00	0.00E+00	0.00E+00	0.00E+00	0.00E+00	0.00E+00	0.00E+00	0.00E+00
754	ALL		744780.96	4036400.87	5.03E-09	25YrCancer	5.03E-09	0.00E+00	0.00E+00	0.00E+00	0.00E+00	0.00E+00	0.00E+00	0.00E+00	0.00E+00	0.00E+00	0.00E+00	0.00E+00
755	ALL		744880.96	4036400.87	5.17E-09	25YrCancer	5.17E-09	0.00E+00	0.00E+00	0.00E+00	0.00E+00	0.00E+00	0.00E+00	0.00E+00	0.00E+00	0.00E+00	0.00E+00	0.00E+00
756	ALL		744980.96	4036400.87	5.33E-09	25YrCancer	5.33E-09	0.00E+00	0.00E+00	0.00E+00	0.00E+00	0.00E+00	0.00E+00	0.00E+00	0.00E+00	0.00E+00	0.00E+00	0.00E+00
757	ALL		745080.96	4036400.87	5.50E-09	25YrCancer	5.50E-09	0.00E+00	0.00E+00	0.00E+00	0.00E+00	0.00E+00	0.00E+00	0.00E+00	0.00E+00	0.00E+00	0.00E+00	0.00E+00
758	ALL		745180.96	4036400.87	5.69E-09	25YrCancer	5.69E-09	0.00E+00	0.00E+00	0.00E+00	0.00E+00	0.00E+00	0.00E+00	0.00E+00	0.00E+00	0.00E+00	0.00E+00	0.00E+00
759	ALL		745280.96	4036400.87	5.90E-09	25YrCancer	5.90E-09	0.00E+00	0.00E+00	0.00E+00	0.00E+00	0.00E+00	0.00E+00	0.00E+00	0.00E+00	0.00E+00	0.00E+00	0.00E+00
760	ALL		745380.96	4036400.87	6.14E-09	25YrCancer	6.14E-09	0.00E+00	0.00E+00	0.00E+00	0.00E+00	0.00E+00	0.00E+00	0.00E+00	0.00E+00	0.00E+00	0.00E+00	0.00E+00
761	ALL		745480.96	4036400.87	6.41E-09	25YrCancer	6.41E-09	0.00E+00	0.00E+00	0.00E+00	0.00E+00	0.00E+00	0.00E+00	0.00E+00	0.00E+00	0.00E+00	0.00E+00	0.00E+00
762	ALL		745580.96	4036400.87	6.73E-09	25YrCancer	6.73E-09	0.00E+00	0.00E+00	0.00E+00	0.00E+00	0.00E+00	0.00E+00	0.00E+00	0.00E+00	0.00E+00	0.00E+00	0.00E+00
763	ALL		745680.96	4036400.87	7.11E-09	25YrCancer	7.11E-09	0.00E+00	0.00E+00	0.00E+00	0.00E+00	0.00E+00	0.00E+00	0.00E+00	0.00E+00	0.00E+00	0.00E+00	0.00E+00

764	ALL	745780.96	4036400.87	7.58E-09	25YrCancer	7.58E-09	0.00E+00	0.00E+00	0.00E+00	0.00E+00	0.00E+00	0.00E+00	0.00E+00	0.00E+00	0.00E+00	0.00E+00
765	ALL	745880.96	4036400.87	8.20E-09	25YrCancer	8.20E-09	0.00E+00	0.00E+00	0.00E+00	0.00E+00	0.00E+00	0.00E+00	0.00E+00	0.00E+00	0.00E+00	0.00E+00
766	ALL	738080.96	4036500.87	2.56E-09	25YrCancer	2.56E-09	0.00E+00	0.00E+00	0.00E+00	0.00E+00	0.00E+00	0.00E+00	0.00E+00	0.00E+00	0.00E+00	0.00E+00
767	ALL	738180.96	4036500.87	2.57E-09	25YrCancer	2.57E-09	0.00E+00	0.00E+00	0.00E+00	0.00E+00	0.00E+00	0.00E+00	0.00E+00	0.00E+00	0.00E+00	0.00E+00
768	ALL	738280.96	4036500.87	2.58E-09	25YrCancer	2.58E-09	0.00E+00	0.00E+00	0.00E+00	0.00E+00	0.00E+00	0.00E+00	0.00E+00	0.00E+00	0.00E+00	0.00E+00
769	ALL	738480.96	4036500.87	2.61E-09	25YrCancer	2.61E-09	0.00E+00	0.00E+00	0.00E+00	0.00E+00	0.00E+00	0.00E+00	0.00E+00	0.00E+00	0.00E+00	0.00E+00
770	ALL	738780.96	4036500.87	2.64E-09	25YrCancer	2.64E-09	0.00E+00	0.00E+00	0.00E+00	0.00E+00	0.00E+00	0.00E+00	0.00E+00	0.00E+00	0.00E+00	0.00E+00
771	ALL	738880.96	4036500.87	2.66E-09	25YrCancer	2.66E-09	0.00E+00	0.00E+00	0.00E+00	0.00E+00	0.00E+00	0.00E+00	0.00E+00	0.00E+00	0.00E+00	0.00E+00
772	ALL	738980.96	4036500.87	2.67E-09	25YrCancer	2.67E-09	0.00E+00	0.00E+00	0.00E+00	0.00E+00	0.00E+00	0.00E+00	0.00E+00	0.00E+00	0.00E+00	0.00E+00
773	ALL	739080.96	4036500.87	2.68E-09	25YrCancer	2.68E-09	0.00E+00	0.00E+00	0.00E+00	0.00E+00	0.00E+00	0.00E+00	0.00E+00	0.00E+00	0.00E+00	0.00E+00
774	ALL	739180.96	4036500.87	2.69E-09	25YrCancer	2.69E-09	0.00E+00	0.00E+00	0.00E+00	0.00E+00	0.00E+00	0.00E+00	0.00E+00	0.00E+00	0.00E+00	0.00E+00
775	ALL	739280.96	4036500.87	2.69E-09	25YrCancer	2.69E-09	0.00E+00	0.00E+00	0.00E+00	0.00E+00	0.00E+00	0.00E+00	0.00E+00	0.00E+00	0.00E+00	0.00E+00
776	ALL	739380.96	4036500.87	2.70E-09	25YrCancer	2.70E-09	0.00E+00	0.00E+00	0.00E+00	0.00E+00	0.00E+00	0.00E+00	0.00E+00	0.00E+00	0.00E+00	0.00E+00
777	ALL	739480.96	4036500.87	2.71E-09	25YrCancer	2.71E-09	0.00E+00	0.00E+00	0.00E+00	0.00E+00	0.00E+00	0.00E+00	0.00E+00	0.00E+00	0.00E+00	0.00E+00
778	ALL	742280.96	4036500.87	3.13E-09	25YrCancer	3.13E-09	0.00E+00	0.00E+00	0.00E+00	0.00E+00	0.00E+00	0.00E+00	0.00E+00	0.00E+00	0.00E+00	0.00E+00
779	ALL	742380.96	4036500.87	3.17E-09	25YrCancer	3.17E-09	0.00E+00	0.00E+00	0.00E+00	0.00E+00	0.00E+00	0.00E+00	0.00E+00	0.00E+00	0.00E+00	0.00E+00
780	ALL	742480.96	4036500.87	3.21E-09	25YrCancer	3.21E-09	0.00E+00	0.00E+00	0.00E+00	0.00E+00	0.00E+00	0.00E+00	0.00E+00	0.00E+00	0.00E+00	0.00E+00
781	ALL	742580.96	4036500.87	3.26E-09	25YrCancer	3.26E-09	0.00E+00	0.00E+00	0.00E+00	0.00E+00	0.00E+00	0.00E+00	0.00E+00	0.00E+00	0.00E+00	0.00E+00
782	ALL	742680.96	4036500.87	3.31E-09	25YrCancer	3.31E-09	0.00E+00	0.00E+00	0.00E+00	0.00E+00	0.00E+00	0.00E+00	0.00E+00	0.00E+00	0.00E+00	0.00E+00
783	ALL	742780.96	4036500.87	3.36E-09	25YrCancer	3.36E-09	0.00E+00	0.00E+00	0.00E+00	0.00E+00	0.00E+00	0.00E+00	0.00E+00	0.00E+00	0.00E+00	0.00E+00
784	ALL	742880.96	4036500.87	3.42E-09	25YrCancer	3.42E-09	0.00E+00	0.00E+00	0.00E+00	0.00E+00	0.00E+00	0.00E+00	0.00E+00	0.00E+00	0.00E+00	0.00E+00
785	ALL	742980.96	4036500.87	3.48E-09	25YrCancer	3.48E-09	0.00E+00	0.00E+00	0.00E+00	0.00E+00	0.00E+00	0.00E+00	0.00E+00	0.00E+00	0.00E+00	0.00E+00
786	ALL	743080.96	4036500.87	3.55E-09	25YrCancer	3.55E-09	0.00E+00	0.00E+00	0.00E+00	0.00E+00	0.00E+00	0.00E+00	0.00E+00	0.00E+00	0.00E+00	0.00E+00
787	ALL	743180.96	4036500.87	3.61E-09	25YrCancer	3.61E-09	0.00E+00	0.00E+00	0.00E+00	0.00E+00	0.00E+00	0.00E+00	0.00E+00	0.00E+00	0.00E+00	0.00E+00
788	ALL	743280.96	4036500.87	3.68E-09	25YrCancer	3.68E-09	0.00E+00	0.00E+00	0.00E+00	0.00E+00	0.00E+00	0.00E+00	0.00E+00	0.00E+00	0.00E+00	0.00E+00
789	ALL	743380.96	4036500.87	3.76E-09	25YrCancer	3.76E-09	0.00E+00	0.00E+00	0.00E+00	0.00E+00	0.00E+00	0.00E+00	0.00E+00	0.00E+00	0.00E+00	0.00E+00
790	ALL	743480.96	4036500.87	3.83E-09	25YrCancer	3.83E-09	0.00E+00	0.00E+00	0.00E+00	0.00E+00	0.00E+00	0.00E+00	0.00E+00	0.00E+00	0.00E+00	0.00E+00
791	ALL	743580.96	4036500.87	3.91E-09	25YrCancer	3.91E-09	0.00E+00	0.00E+00	0.00E+00	0.00E+00	0.00E+00	0.00E+00	0.00E+00	0.00E+00	0.00E+00	0.00E+00
792	ALL	743680.96	4036500.87	3.99E-09	25YrCancer	3.99E-09	0.00E+00	0.00E+00	0.00E+00	0.00E+00	0.00E+00	0.00E+00	0.00E+00	0.00E+00	0.00E+00	0.00E+00
793	ALL	743780.96	4036500.87	4.07E-09	25YrCancer	4.07E-09	0.00E+00	0.00E+00	0.00E+00	0.00E+00	0.00E+00	0.00E+00	0.00E+00	0.00E+00	0.00E+00	0.00E+00
794	ALL	743880.96	4036500.87	4.15E-09	25YrCancer	4.15E-09	0.00E+00	0.00E+00	0.00E+00	0.00E+00	0.00E+00	0.00E+00	0.00E+00	0.00E+00	0.00E+00	0.00E+00
795	ALL	743980.96	4036500.87	4.24E-09	25YrCancer	4.24E-09	0.00E+00	0.00E+00	0.00E+00	0.00E+00	0.00E+00	0.00E+00	0.00E+00	0.00E+00	0.00E+00	0.00E+00
796	ALL	744080.96	4036500.87	4.33E-09	25YrCancer	4.33E-09	0.00E+00	0.00E+00	0.00E+00	0.00E+00	0.00E+00	0.00E+00	0.00E+00	0.00E+00	0.00E+00	0.00E+00
797	ALL	744180.96	4036500.87	4.43E-09	25YrCancer	4.43E-09	0.00E+00	0.00E+00	0.00E+00	0.00E+00	0.00E+00	0.00E+00	0.00E+00	0.00E+00	0.00E+00	0.00E+00
798	ALL	744280.96	4036500.87	4.52E-09	25YrCancer	4.52E-09	0.00E+00	0.00E+00	0.00E+00	0.00E+00	0.00E+00	0.00E+00	0.00E+00	0.00E+00	0.00E+00	0.00E+00
799	ALL	744380.96	4036500.87	4.62E-09	25YrCancer	4.62E-09	0.00E+00	0.00E+00	0.00E+00	0.00E+00	0.00E+00	0.00E+00	0.00E+00	0.00E+00	0.00E+00	0.00E+00
800	ALL	744480.96	4036500.87	4.73E-09	25YrCancer	4.73E-09	0.00E+00	0.00E+00	0.00E+00	0.00E+00	0.00E+00	0.00E+00	0.00E+00	0.00E+00	0.00E+00	0.00E+00
801	ALL	744580.96	4036500.87	4.85E-09	25YrCancer	4.85E-09	0.00E+00	0.00E+00	0.00E+00	0.00E+00	0.00E+00	0.00E+00	0.00E+00	0.00E+00	0.00E+00	0.00E+00
802	ALL	744680.96	4036500.87	4.97E-09	25YrCancer	4.97E-09	0.00E+00	0.00E+00	0.00E+00	0.00E+00	0.00E+00	0.00E+00	0.00E+00	0.00E+00	0.00E+00	0.00E+00
803	ALL	744780.96	4036500.87	5.11E-09	25YrCancer	5.11E-09	0.00E+00	0.00E+00	0.00E+00	0.00E+00	0.00E+00	0.00E+00	0.00E+00	0.00E+00	0.00E+00	0.00E+00
804	ALL	744880.96	4036500.87	5.27E-09	25YrCancer	5.27E-09	0.00E+00	0.00E+00	0.00E+00	0.00E+00	0.00E+00	0.00E+00	0.00E+00	0.00E+00	0.00E+00	0.00E+00
805	ALL	744980.96	4036500.87	5.44E-09	25YrCancer	5.44E-09	0.00E+00	0.00E+00	0.00E+00	0.00E+00	0.00E+00	0.00E+00	0.00E+00	0.00E+00	0.00E+00	0.00E+00
806	ALL	745080.96	4036500.87	5.63E-09	25YrCancer	5.63E-09	0.00E+00	0.00E+00	0.00E+00	0.00E+00	0.00E+00	0.00E+00	0.00E+00	0.00E+00	0.00E+00	0.00E+00
807	ALL	745180.96	4036500.87	5.85E-09	25YrCancer	5.85E-09	0.00E+00	0.00E+00	0.00E+00	0.00E+00	0.00E+00	0.00E+00	0.00E+00	0.00E+00	0.00E+00	0.00E+00
808	ALL	745280.96	4036500.87	6.09E-09	25YrCancer	6.09E-09	0.00E+00	0.00E+00	0.00E+00	0.00E+00	0.00E+00	0.00E+00	0.00E+00	0.00E+00	0.00E+00	0.00E+00
809	ALL	745380.96	4036500.87	6.38E-09	25YrCancer	6.38E-09	0.00E+00	0.00E+00	0.00E+00	0.00E+00	0.00E+00	0.00E+00	0.00E+00	0.00E+00	0.00E+00	0.00E+00
810	ALL	745480.96	4036500.87	6.72E-09	25YrCancer	6.72E-09	0.00E+00	0.00E+00	0.00E+00	0.00E+00	0.00E+00	0.00E+00	0.00E+00	0.00E+00	0.00E+00	0.00E+00
811	ALL	745580.96	4036500.87	7.12E-09	25YrCancer	7.12E-09	0.00E+00	0.00E+00	0.00E+00	0.00E+00	0.00E+00	0.00E+00	0.00E+00	0.00E+00	0.00E+00	0.00E+00
812	ALL	745680.96	4036500.87	7.61E-09	25YrCancer	7.61E-09	0.00E+00	0.00E+00	0.00E+00	0.00E+00	0.00E+00	0.00E+00	0.00E+00	0.00E+00	0.00E+00	0.00E+00
813	ALL	745780.96	4036500.87	8.23E-09	25YrCancer	8.23E-09	0.00E+00	0.00E+00	0.00E+00	0.00E+00	0.00E+00	0.00E+00	0.00E+00	0.00E+00	0.00E+00	0.00E+00
814	ALL	745880.96	4036500.87	9.08E-09	25YrCancer	9.08E-09	0.00E+00	0.00E+00	0.00E+00	0.00E+00	0.00E+00	0.00E+00	0.00E+00	0.00E+00	0.00E+00	0.00E+00

815	ALL	738080.96	4036600.87	2.53E-09	25YrCancer	2.53E-09	0.00E+00	0.00E+00	0.00E+00	0.00E+00	0.00E+00	0.00E+00	0.00E+00	0.00E+00	0.00E+00	0.00E+00	0.00E+00
816	ALL	738180.96	4036600.87	2.54E-09	25YrCancer	2.54E-09	0.00E+00	0.00E+00	0.00E+00	0.00E+00	0.00E+00	0.00E+00	0.00E+00	0.00E+00	0.00E+00	0.00E+00	0.00E+00
817	ALL	738280.96	4036600.87	2.55E-09	25YrCancer	2.55E-09	0.00E+00	0.00E+00	0.00E+00	0.00E+00	0.00E+00	0.00E+00	0.00E+00	0.00E+00	0.00E+00	0.00E+00	0.00E+00
818	ALL	738380.96	4036600.87	2.56E-09	25YrCancer	2.56E-09	0.00E+00	0.00E+00	0.00E+00	0.00E+00	0.00E+00	0.00E+00	0.00E+00	0.00E+00	0.00E+00	0.00E+00	0.00E+00
819	ALL	738580.96	4036600.87	2.58E-09	25YrCancer	2.58E-09	0.00E+00	0.00E+00	0.00E+00	0.00E+00	0.00E+00	0.00E+00	0.00E+00	0.00E+00	0.00E+00	0.00E+00	0.00E+00
820	ALL	738680.96	4036600.87	2.60E-09	25YrCancer	2.60E-09	0.00E+00	0.00E+00	0.00E+00	0.00E+00	0.00E+00	0.00E+00	0.00E+00	0.00E+00	0.00E+00	0.00E+00	0.00E+00
821	ALL	738780.96	4036600.87	2.61E-09	25YrCancer	2.61E-09	0.00E+00	0.00E+00	0.00E+00	0.00E+00	0.00E+00	0.00E+00	0.00E+00	0.00E+00	0.00E+00	0.00E+00	0.00E+00
822	ALL	738880.96	4036600.87	2.63E-09	25YrCancer	2.63E-09	0.00E+00	0.00E+00	0.00E+00	0.00E+00	0.00E+00	0.00E+00	0.00E+00	0.00E+00	0.00E+00	0.00E+00	0.00E+00
823	ALL	738980.96	4036600.87	2.64E-09	25YrCancer	2.64E-09	0.00E+00	0.00E+00	0.00E+00	0.00E+00	0.00E+00	0.00E+00	0.00E+00	0.00E+00	0.00E+00	0.00E+00	0.00E+00
824	ALL	739080.96	4036600.87	2.65E-09	25YrCancer	2.65E-09	0.00E+00	0.00E+00	0.00E+00	0.00E+00	0.00E+00	0.00E+00	0.00E+00	0.00E+00	0.00E+00	0.00E+00	0.00E+00
825	ALL	739180.96	4036600.87	2.66E-09	25YrCancer	2.66E-09	0.00E+00	0.00E+00	0.00E+00	0.00E+00	0.00E+00	0.00E+00	0.00E+00	0.00E+00	0.00E+00	0.00E+00	0.00E+00
826	ALL	739280.96	4036600.87	2.67E-09	25YrCancer	2.67E-09	0.00E+00	0.00E+00	0.00E+00	0.00E+00	0.00E+00	0.00E+00	0.00E+00	0.00E+00	0.00E+00	0.00E+00	0.00E+00
827	ALL	739380.96	4036600.87	2.68E-09	25YrCancer	2.68E-09	0.00E+00	0.00E+00	0.00E+00	0.00E+00	0.00E+00	0.00E+00	0.00E+00	0.00E+00	0.00E+00	0.00E+00	0.00E+00
828	ALL	739480.96	4036600.87	2.69E-09	25YrCancer	2.69E-09	0.00E+00	0.00E+00	0.00E+00	0.00E+00	0.00E+00	0.00E+00	0.00E+00	0.00E+00	0.00E+00	0.00E+00	0.00E+00
829	ALL	739580.96	4036600.87	2.70E-09	25YrCancer	2.70E-09	0.00E+00	0.00E+00	0.00E+00	0.00E+00	0.00E+00	0.00E+00	0.00E+00	0.00E+00	0.00E+00	0.00E+00	0.00E+00
830	ALL	739680.96	4036600.87	2.71E-09	25YrCancer	2.71E-09	0.00E+00	0.00E+00	0.00E+00	0.00E+00	0.00E+00	0.00E+00	0.00E+00	0.00E+00	0.00E+00	0.00E+00	0.00E+00
831	ALL	739780.96	4036600.87	2.72E-09	25YrCancer	2.72E-09	0.00E+00	0.00E+00	0.00E+00	0.00E+00	0.00E+00	0.00E+00	0.00E+00	0.00E+00	0.00E+00	0.00E+00	0.00E+00
832	ALL	739880.96	4036600.87	2.73E-09	25YrCancer	2.73E-09	0.00E+00	0.00E+00	0.00E+00	0.00E+00	0.00E+00	0.00E+00	0.00E+00	0.00E+00	0.00E+00	0.00E+00	0.00E+00
833	ALL	739980.96	4036600.87	2.74E-09	25YrCancer	2.74E-09	0.00E+00	0.00E+00	0.00E+00	0.00E+00	0.00E+00	0.00E+00	0.00E+00	0.00E+00	0.00E+00	0.00E+00	0.00E+00
834	ALL	740080.96	4036600.87	2.75E-09	25YrCancer	2.75E-09	0.00E+00	0.00E+00	0.00E+00	0.00E+00	0.00E+00	0.00E+00	0.00E+00	0.00E+00	0.00E+00	0.00E+00	0.00E+00
835	ALL	740180.96	4036600.87	2.76E-09	25YrCancer	2.76E-09	0.00E+00	0.00E+00	0.00E+00	0.00E+00	0.00E+00	0.00E+00	0.00E+00	0.00E+00	0.00E+00	0.00E+00	0.00E+00
836	ALL	740280.96	4036600.87	2.76E-09	25YrCancer	2.76E-09	0.00E+00	0.00E+00	0.00E+00	0.00E+00	0.00E+00	0.00E+00	0.00E+00	0.00E+00	0.00E+00	0.00E+00	0.00E+00
837	ALL	740380.96	4036600.87	2.78E-09	25YrCancer	2.78E-09	0.00E+00	0.00E+00	0.00E+00	0.00E+00	0.00E+00	0.00E+00	0.00E+00	0.00E+00	0.00E+00	0.00E+00	0.00E+00
838	ALL	740480.96	4036600.87	2.79E-09	25YrCancer	2.79E-09	0.00E+00	0.00E+00	0.00E+00	0.00E+00	0.00E+00	0.00E+00	0.00E+00	0.00E+00	0.00E+00	0.00E+00	0.00E+00
839	ALL	740580.96	4036600.87	2.80E-09	25YrCancer	2.80E-09	0.00E+00	0.00E+00	0.00E+00	0.00E+00	0.00E+00	0.00E+00	0.00E+00	0.00E+00	0.00E+00	0.00E+00	0.00E+00
840	ALL	740680.96	4036600.87	2.81E-09	25YrCancer	2.81E-09	0.00E+00	0.00E+00	0.00E+00	0.00E+00	0.00E+00	0.00E+00	0.00E+00	0.00E+00	0.00E+00	0.00E+00	0.00E+00
841	ALL	740780.96	4036600.87	2.82E-09	25YrCancer	2.82E-09	0.00E+00	0.00E+00	0.00E+00	0.00E+00	0.00E+00	0.00E+00	0.00E+00	0.00E+00	0.00E+00	0.00E+00	0.00E+00
842	ALL	740880.96	4036600.87	2.84E-09	25YrCancer	2.84E-09	0.00E+00	0.00E+00	0.00E+00	0.00E+00	0.00E+00	0.00E+00	0.00E+00	0.00E+00	0.00E+00	0.00E+00	0.00E+00
843	ALL	740980.96	4036600.87	2.85E-09	25YrCancer	2.85E-09	0.00E+00	0.00E+00	0.00E+00	0.00E+00	0.00E+00	0.00E+00	0.00E+00	0.00E+00	0.00E+00	0.00E+00	0.00E+00
844	ALL	741080.96	4036600.87	2.87E-09	25YrCancer	2.87E-09	0.00E+00	0.00E+00	0.00E+00	0.00E+00	0.00E+00	0.00E+00	0.00E+00	0.00E+00	0.00E+00	0.00E+00	0.00E+00
845	ALL	741180.96	4036600.87	2.89E-09	25YrCancer	2.89E-09	0.00E+00	0.00E+00	0.00E+00	0.00E+00	0.00E+00	0.00E+00	0.00E+00	0.00E+00	0.00E+00	0.00E+00	0.00E+00
846	ALL	741280.96	4036600.87	2.90E-09	25YrCancer	2.90E-09	0.00E+00	0.00E+00	0.00E+00	0.00E+00	0.00E+00	0.00E+00	0.00E+00	0.00E+00	0.00E+00	0.00E+00	0.00E+00
847	ALL	741380.96	4036600.87	2.92E-09	25YrCancer	2.92E-09	0.00E+00	0.00E+00	0.00E+00	0.00E+00	0.00E+00	0.00E+00	0.00E+00	0.00E+00	0.00E+00	0.00E+00	0.00E+00
848	ALL	741480.96	4036600.87	2.94E-09	25YrCancer	2.94E-09	0.00E+00	0.00E+00	0.00E+00	0.00E+00	0.00E+00	0.00E+00	0.00E+00	0.00E+00	0.00E+00	0.00E+00	0.00E+00
849	ALL	741580.96	4036600.87	2.96E-09	25YrCancer	2.96E-09	0.00E+00	0.00E+00	0.00E+00	0.00E+00	0.00E+00	0.00E+00	0.00E+00	0.00E+00	0.00E+00	0.00E+00	0.00E+00
850	ALL	741680.96	4036600.87	2.98E-09	25YrCancer	2.98E-09	0.00E+00	0.00E+00	0.00E+00	0.00E+00	0.00E+00	0.00E+00	0.00E+00	0.00E+00	0.00E+00	0.00E+00	0.00E+00
851	ALL	741780.96	4036600.87	3.00E-09	25YrCancer	3.00E-09	0.00E+00	0.00E+00	0.00E+00	0.00E+00	0.00E+00	0.00E+00	0.00E+00	0.00E+00	0.00E+00	0.00E+00	0.00E+00
852	ALL	741880.96	4036600.87	3.02E-09	25YrCancer	3.02E-09	0.00E+00	0.00E+00	0.00E+00	0.00E+00	0.00E+00	0.00E+00	0.00E+00	0.00E+00	0.00E+00	0.00E+00	0.00E+00
853	ALL	741980.96	4036600.87	3.04E-09	25YrCancer	3.04E-09	0.00E+00	0.00E+00	0.00E+00	0.00E+00	0.00E+00	0.00E+00	0.00E+00	0.00E+00	0.00E+00	0.00E+00	0.00E+00
854	ALL	742080.96	4036600.87	3.07E-09	25YrCancer	3.07E-09	0.00E+00	0.00E+00	0.00E+00	0.00E+00	0.00E+00	0.00E+00	0.00E+00	0.00E+00	0.00E+00	0.00E+00	0.00E+00
855	ALL	742180.96	4036600.87	3.10E-09	25YrCancer	3.10E-09	0.00E+00	0.00E+00	0.00E+00	0.00E+00	0.00E+00	0.00E+00	0.00E+00	0.00E+00	0.00E+00	0.00E+00	0.00E+00
856	ALL	742280.96	4036600.87	3.14E-09	25YrCancer	3.14E-09	0.00E+00	0.00E+00	0.00E+00	0.00E+00	0.00E+00	0.00E+00	0.00E+00	0.00E+00	0.00E+00	0.00E+00	0.00E+00
857	ALL	745380.96	4036600.87	6.72E-09	25YrCancer	6.72E-09	0.00E+00	0.00E+00	0.00E+00	0.00E+00	0.00E+00	0.00E+00	0.00E+00	0.00E+00	0.00E+00	0.00E+00	0.00E+00
858	ALL	745480.96	4036600.87	7.14E-09	25YrCancer	7.14E-09	0.00E+00	0.00E+00	0.00E+00	0.00E+00	0.00E+00	0.00E+00	0.00E+00	0.00E+00	0.00E+00	0.00E+00	0.00E+00
859	ALL	745580.96	4036600.87	7.65E-09	25YrCancer	7.65E-09	0.00E+00	0.00E+00	0.00E+00	0.00E+00	0.00E+00	0.00E+00	0.00E+00	0.00E+00	0.00E+00	0.00E+00	0.00E+00
860	ALL	745680.96	4036600.87	8.27E-09	25YrCancer	8.27E-09	0.00E+00	0.00E+00	0.00E+00	0.00E+00	0.00E+00	0.00E+00	0.00E+00	0.00E+00	0.00E+00	0.00E+00	0.00E+00
861	ALL	745780.96	4036600.87	9.05E-09	25YrCancer	9.05E-09	0.00E+00	0.00E+00	0.00E+00	0.00E+00	0.00E+00	0.00E+00	0.00E+00	0.00E+00	0.00E+00	0.00E+00	0.00E+00
862	ALL	745880.96	4036600.87	1.01E-08	25YrCancer	1.01E-08	0.00E+00	0.00E+00	0.00E+00	0.00E+00	0.00E+00	0.00E+00	0.00E+00	0.00E+00	0.00E+00	0.00E+00	0.00E+00
863	ALL	745980.96	4036600.87	1.14E-08	25YrCancer	1.14E-08	0.00E+00	0.00E+00	0.00E+00	0.00E+00	0.00E+00	0.00E+00	0.00E+00	0.00E+00	0.00E+00	0.00E+00	0.00E+00
864	ALL	738080.96	4036700.87	2.51E-09	25YrCancer	2.51E-09	0.00E+00	0.00E+00	0.00E+00	0.00E+00	0.00E+00	0.00E+00	0.00E+00	0.00E+00	0.00E+00	0.00E+00	0.00E+00
865	ALL	738180.96	4036700.87	2.52E-09	25YrCancer	2.52E-09	0.00E+00	0.00E+00	0.00E+00	0.00E+00	0.00E+00	0.00E+00	0.00E+00	0.00E+00	0.00E+00	0.00E+00	0.00E+00

866	ALL	738280.96	4036700.87	2.53E-09	25YrCancer	2.53E-09	0.00E+00	0.00E+00	0.00E+00	0.00E+00	0.00E+00	0.00E+00	0.00E+00	0.00E+00	0.00E+00	0.00E+00	0.00E+00
867	ALL	738380.96	4036700.87	2.54E-09	25YrCancer	2.54E-09	0.00E+00	0.00E+00	0.00E+00	0.00E+00	0.00E+00	0.00E+00	0.00E+00	0.00E+00	0.00E+00	0.00E+00	0.00E+00
868	ALL	738480.96	4036700.87	2.55E-09	25YrCancer	2.55E-09	0.00E+00	0.00E+00	0.00E+00	0.00E+00	0.00E+00	0.00E+00	0.00E+00	0.00E+00	0.00E+00	0.00E+00	0.00E+00
869	ALL	738580.96	4036700.87	2.56E-09	25YrCancer	2.56E-09	0.00E+00	0.00E+00	0.00E+00	0.00E+00	0.00E+00	0.00E+00	0.00E+00	0.00E+00	0.00E+00	0.00E+00	0.00E+00
870	ALL	738680.96	4036700.87	2.57E-09	25YrCancer	2.57E-09	0.00E+00	0.00E+00	0.00E+00	0.00E+00	0.00E+00	0.00E+00	0.00E+00	0.00E+00	0.00E+00	0.00E+00	0.00E+00
871	ALL	738780.96	4036700.87	2.59E-09	25YrCancer	2.59E-09	0.00E+00	0.00E+00	0.00E+00	0.00E+00	0.00E+00	0.00E+00	0.00E+00	0.00E+00	0.00E+00	0.00E+00	0.00E+00
872	ALL	738880.96	4036700.87	2.60E-09	25YrCancer	2.60E-09	0.00E+00	0.00E+00	0.00E+00	0.00E+00	0.00E+00	0.00E+00	0.00E+00	0.00E+00	0.00E+00	0.00E+00	0.00E+00
873	ALL	738980.96	4036700.87	2.61E-09	25YrCancer	2.61E-09	0.00E+00	0.00E+00	0.00E+00	0.00E+00	0.00E+00	0.00E+00	0.00E+00	0.00E+00	0.00E+00	0.00E+00	0.00E+00
874	ALL	739080.96	4036700.87	2.62E-09	25YrCancer	2.62E-09	0.00E+00	0.00E+00	0.00E+00	0.00E+00	0.00E+00	0.00E+00	0.00E+00	0.00E+00	0.00E+00	0.00E+00	0.00E+00
875	ALL	739180.96	4036700.87	2.64E-09	25YrCancer	2.64E-09	0.00E+00	0.00E+00	0.00E+00	0.00E+00	0.00E+00	0.00E+00	0.00E+00	0.00E+00	0.00E+00	0.00E+00	0.00E+00
876	ALL	739280.96	4036700.87	2.65E-09	25YrCancer	2.65E-09	0.00E+00	0.00E+00	0.00E+00	0.00E+00	0.00E+00	0.00E+00	0.00E+00	0.00E+00	0.00E+00	0.00E+00	0.00E+00
877	ALL	739380.96	4036700.87	2.66E-09	25YrCancer	2.66E-09	0.00E+00	0.00E+00	0.00E+00	0.00E+00	0.00E+00	0.00E+00	0.00E+00	0.00E+00	0.00E+00	0.00E+00	0.00E+00
878	ALL	739480.96	4036700.87	2.67E-09	25YrCancer	2.67E-09	0.00E+00	0.00E+00	0.00E+00	0.00E+00	0.00E+00	0.00E+00	0.00E+00	0.00E+00	0.00E+00	0.00E+00	0.00E+00
879	ALL	739580.96	4036700.87	2.68E-09	25YrCancer	2.68E-09	0.00E+00	0.00E+00	0.00E+00	0.00E+00	0.00E+00	0.00E+00	0.00E+00	0.00E+00	0.00E+00	0.00E+00	0.00E+00
880	ALL	739680.96	4036700.87	2.69E-09	25YrCancer	2.69E-09	0.00E+00	0.00E+00	0.00E+00	0.00E+00	0.00E+00	0.00E+00	0.00E+00	0.00E+00	0.00E+00	0.00E+00	0.00E+00
881	ALL	739780.96	4036700.87	2.70E-09	25YrCancer	2.70E-09	0.00E+00	0.00E+00	0.00E+00	0.00E+00	0.00E+00	0.00E+00	0.00E+00	0.00E+00	0.00E+00	0.00E+00	0.00E+00
882	ALL	739880.96	4036700.87	2.72E-09	25YrCancer	2.72E-09	0.00E+00	0.00E+00	0.00E+00	0.00E+00	0.00E+00	0.00E+00	0.00E+00	0.00E+00	0.00E+00	0.00E+00	0.00E+00
883	ALL	739980.96	4036700.87	2.73E-09	25YrCancer	2.73E-09	0.00E+00	0.00E+00	0.00E+00	0.00E+00	0.00E+00	0.00E+00	0.00E+00	0.00E+00	0.00E+00	0.00E+00	0.00E+00
884	ALL	740080.96	4036700.87	2.75E-09	25YrCancer	2.75E-09	0.00E+00	0.00E+00	0.00E+00	0.00E+00	0.00E+00	0.00E+00	0.00E+00	0.00E+00	0.00E+00	0.00E+00	0.00E+00
885	ALL	740180.96	4036700.87	2.75E-09	25YrCancer	2.75E-09	0.00E+00	0.00E+00	0.00E+00	0.00E+00	0.00E+00	0.00E+00	0.00E+00	0.00E+00	0.00E+00	0.00E+00	0.00E+00
886	ALL	740280.96	4036700.87	2.76E-09	25YrCancer	2.76E-09	0.00E+00	0.00E+00	0.00E+00	0.00E+00	0.00E+00	0.00E+00	0.00E+00	0.00E+00	0.00E+00	0.00E+00	0.00E+00
887	ALL	740380.96	4036700.87	2.78E-09	25YrCancer	2.78E-09	0.00E+00	0.00E+00	0.00E+00	0.00E+00	0.00E+00	0.00E+00	0.00E+00	0.00E+00	0.00E+00	0.00E+00	0.00E+00
888	ALL	740480.96	4036700.87	2.79E-09	25YrCancer	2.79E-09	0.00E+00	0.00E+00	0.00E+00	0.00E+00	0.00E+00	0.00E+00	0.00E+00	0.00E+00	0.00E+00	0.00E+00	0.00E+00
889	ALL	740580.96	4036700.87	2.81E-09	25YrCancer	2.81E-09	0.00E+00	0.00E+00	0.00E+00	0.00E+00	0.00E+00	0.00E+00	0.00E+00	0.00E+00	0.00E+00	0.00E+00	0.00E+00
890	ALL	740680.96	4036700.87	2.82E-09	25YrCancer	2.82E-09	0.00E+00	0.00E+00	0.00E+00	0.00E+00	0.00E+00	0.00E+00	0.00E+00	0.00E+00	0.00E+00	0.00E+00	0.00E+00
891	ALL	740780.96	4036700.87	2.84E-09	25YrCancer	2.84E-09	0.00E+00	0.00E+00	0.00E+00	0.00E+00	0.00E+00	0.00E+00	0.00E+00	0.00E+00	0.00E+00	0.00E+00	0.00E+00
892	ALL	740880.96	4036700.87	2.85E-09	25YrCancer	2.85E-09	0.00E+00	0.00E+00	0.00E+00	0.00E+00	0.00E+00	0.00E+00	0.00E+00	0.00E+00	0.00E+00	0.00E+00	0.00E+00
893	ALL	740980.96	4036700.87	2.87E-09	25YrCancer	2.87E-09	0.00E+00	0.00E+00	0.00E+00	0.00E+00	0.00E+00	0.00E+00	0.00E+00	0.00E+00	0.00E+00	0.00E+00	0.00E+00
894	ALL	741080.96	4036700.87	2.89E-09	25YrCancer	2.89E-09	0.00E+00	0.00E+00	0.00E+00	0.00E+00	0.00E+00	0.00E+00	0.00E+00	0.00E+00	0.00E+00	0.00E+00	0.00E+00
895	ALL	741180.96	4036700.87	2.91E-09	25YrCancer	2.91E-09	0.00E+00	0.00E+00	0.00E+00	0.00E+00	0.00E+00	0.00E+00	0.00E+00	0.00E+00	0.00E+00	0.00E+00	0.00E+00
896	ALL	741280.96	4036700.87	2.92E-09	25YrCancer	2.92E-09	0.00E+00	0.00E+00	0.00E+00	0.00E+00	0.00E+00	0.00E+00	0.00E+00	0.00E+00	0.00E+00	0.00E+00	0.00E+00
897	ALL	741380.96	4036700.87	2.94E-09	25YrCancer	2.94E-09	0.00E+00	0.00E+00	0.00E+00	0.00E+00	0.00E+00	0.00E+00	0.00E+00	0.00E+00	0.00E+00	0.00E+00	0.00E+00
898	ALL	741480.96	4036700.87	2.96E-09	25YrCancer	2.96E-09	0.00E+00	0.00E+00	0.00E+00	0.00E+00	0.00E+00	0.00E+00	0.00E+00	0.00E+00	0.00E+00	0.00E+00	0.00E+00
899	ALL	741580.96	4036700.87	2.98E-09	25YrCancer	2.98E-09	0.00E+00	0.00E+00	0.00E+00	0.00E+00	0.00E+00	0.00E+00	0.00E+00	0.00E+00	0.00E+00	0.00E+00	0.00E+00
900	ALL	741680.96	4036700.87	3.00E-09	25YrCancer	3.00E-09	0.00E+00	0.00E+00	0.00E+00	0.00E+00	0.00E+00	0.00E+00	0.00E+00	0.00E+00	0.00E+00	0.00E+00	0.00E+00
901	ALL	741780.96	4036700.87	3.03E-09	25YrCancer	3.03E-09	0.00E+00	0.00E+00	0.00E+00	0.00E+00	0.00E+00	0.00E+00	0.00E+00	0.00E+00	0.00E+00	0.00E+00	0.00E+00
902	ALL	741880.96	4036700.87	3.04E-09	25YrCancer	3.04E-09	0.00E+00	0.00E+00	0.00E+00	0.00E+00	0.00E+00	0.00E+00	0.00E+00	0.00E+00	0.00E+00	0.00E+00	0.00E+00
903	ALL	741980.96	4036700.87	3.06E-09	25YrCancer	3.06E-09	0.00E+00	0.00E+00	0.00E+00	0.00E+00	0.00E+00	0.00E+00	0.00E+00	0.00E+00	0.00E+00	0.00E+00	0.00E+00
904	ALL	742080.96	4036700.87	3.09E-09	25YrCancer	3.09E-09	0.00E+00	0.00E+00	0.00E+00	0.00E+00	0.00E+00	0.00E+00	0.00E+00	0.00E+00	0.00E+00	0.00E+00	0.00E+00
905	ALL	742180.96	4036700.87	3.12E-09	25YrCancer	3.12E-09	0.00E+00	0.00E+00	0.00E+00	0.00E+00	0.00E+00	0.00E+00	0.00E+00	0.00E+00	0.00E+00	0.00E+00	0.00E+00
906	ALL	742280.96	4036700.87	3.15E-09	25YrCancer	3.15E-09	0.00E+00	0.00E+00	0.00E+00	0.00E+00	0.00E+00	0.00E+00	0.00E+00	0.00E+00	0.00E+00	0.00E+00	0.00E+00
907	ALL	742380.96	4036700.87	3.19E-09	25YrCancer	3.19E-09	0.00E+00	0.00E+00	0.00E+00	0.00E+00	0.00E+00	0.00E+00	0.00E+00	0.00E+00	0.00E+00	0.00E+00	0.00E+00
908	ALL	742480.96	4036700.87	3.23E-09	25YrCancer	3.23E-09	0.00E+00	0.00E+00	0.00E+00	0.00E+00	0.00E+00	0.00E+00	0.00E+00	0.00E+00	0.00E+00	0.00E+00	0.00E+00
909	ALL	742580.96	4036700.87	3.27E-09	25YrCancer	3.27E-09	0.00E+00	0.00E+00	0.00E+00	0.00E+00	0.00E+00	0.00E+00	0.00E+00	0.00E+00	0.00E+00	0.00E+00	0.00E+00
910	ALL	742680.96	4036700.87	3.32E-09	25YrCancer	3.32E-09	0.00E+00	0.00E+00	0.00E+00	0.00E+00	0.00E+00	0.00E+00	0.00E+00	0.00E+00	0.00E+00	0.00E+00	0.00E+00
911	ALL	742780.96	4036700.87	3.37E-09	25YrCancer	3.37E-09	0.00E+00	0.00E+00	0.00E+00	0.00E+00	0.00E+00	0.00E+00	0.00E+00	0.00E+00	0.00E+00	0.00E+00	0.00E+00
912	ALL	742880.96	4036700.87	3.43E-09	25YrCancer	3.43E-09	0.00E+00	0.00E+00	0.00E+00	0.00E+00	0.00E+00	0.00E+00	0.00E+00	0.00E+00	0.00E+00	0.00E+00	0.00E+00
913	ALL	742980.96	4036700.87	3.48E-09	25YrCancer	3.48E-09	0.00E+00	0.00E+00	0.00E+00	0.00E+00	0.00E+00	0.00E+00	0.00E+00	0.00E+00	0.00E+00	0.00E+00	0.00E+00
914	ALL	743080.96	4036700.87	3.55E-09	25YrCancer	3.55E-09	0.00E+00	0.00E+00	0.00E+00	0.00E+00	0.00E+00	0.00E+00	0.00E+00	0.00E+00	0.00E+00	0.00E+00	0.00E+00
915	ALL	743180.96	4036700.87	3.61E-09	25YrCancer	3.61E-09	0.00E+00	0.00E+00	0.00E+00	0.00E+00	0.00E+00	0.00E+00	0.00E+00	0.00E+00	0.00E+00	0.00E+00	0.00E+00
916	ALL	743280.96	4036700.87	3.68E-09	25YrCancer	3.68E-09	0.00E+00	0.00E+00	0.00E+00	0.00E+00	0.00E+00	0.00E+00	0.00E+00	0.00E+00	0.00E+00	0.00E+00	0.00E+00

917	ALL	743380.96	4036700.87	3.76E-09	25YrCancer	3.76E-09	0.00E+00	0.00E+00	0.00E+00	0.00E+00	0.00E+00	0.00E+00	0.00E+00	0.00E+00	0.00E+00	0.00E+00
918	ALL	743480.96	4036700.87	3.84E-09	25YrCancer	3.84E-09	0.00E+00	0.00E+00	0.00E+00	0.00E+00	0.00E+00	0.00E+00	0.00E+00	0.00E+00	0.00E+00	0.00E+00
919	ALL	743580.96	4036700.87	3.92E-09	25YrCancer	3.92E-09	0.00E+00	0.00E+00	0.00E+00	0.00E+00	0.00E+00	0.00E+00	0.00E+00	0.00E+00	0.00E+00	0.00E+00
920	ALL	743680.96	4036700.87	4.00E-09	25YrCancer	4.00E-09	0.00E+00	0.00E+00	0.00E+00	0.00E+00	0.00E+00	0.00E+00	0.00E+00	0.00E+00	0.00E+00	0.00E+00
921	ALL	743780.96	4036700.87	4.09E-09	25YrCancer	4.09E-09	0.00E+00	0.00E+00	0.00E+00	0.00E+00	0.00E+00	0.00E+00	0.00E+00	0.00E+00	0.00E+00	0.00E+00
922	ALL	743880.96	4036700.87	4.19E-09	25YrCancer	4.19E-09	0.00E+00	0.00E+00	0.00E+00	0.00E+00	0.00E+00	0.00E+00	0.00E+00	0.00E+00	0.00E+00	0.00E+00
923	ALL	743980.96	4036700.87	4.28E-09	25YrCancer	4.28E-09	0.00E+00	0.00E+00	0.00E+00	0.00E+00	0.00E+00	0.00E+00	0.00E+00	0.00E+00	0.00E+00	0.00E+00
924	ALL	744080.96	4036700.87	4.38E-09	25YrCancer	4.38E-09	0.00E+00	0.00E+00	0.00E+00	0.00E+00	0.00E+00	0.00E+00	0.00E+00	0.00E+00	0.00E+00	0.00E+00
925	ALL	744180.96	4036700.87	4.49E-09	25YrCancer	4.49E-09	0.00E+00	0.00E+00	0.00E+00	0.00E+00	0.00E+00	0.00E+00	0.00E+00	0.00E+00	0.00E+00	0.00E+00
926	ALL	744280.96	4036700.87	4.60E-09	25YrCancer	4.60E-09	0.00E+00	0.00E+00	0.00E+00	0.00E+00	0.00E+00	0.00E+00	0.00E+00	0.00E+00	0.00E+00	0.00E+00
927	ALL	744380.96	4036700.87	4.73E-09	25YrCancer	4.73E-09	0.00E+00	0.00E+00	0.00E+00	0.00E+00	0.00E+00	0.00E+00	0.00E+00	0.00E+00	0.00E+00	0.00E+00
928	ALL	744480.96	4036700.87	4.86E-09	25YrCancer	4.86E-09	0.00E+00	0.00E+00	0.00E+00	0.00E+00	0.00E+00	0.00E+00	0.00E+00	0.00E+00	0.00E+00	0.00E+00
929	ALL	744580.96	4036700.87	5.01E-09	25YrCancer	5.01E-09	0.00E+00	0.00E+00	0.00E+00	0.00E+00	0.00E+00	0.00E+00	0.00E+00	0.00E+00	0.00E+00	0.00E+00
930	ALL	744680.96	4036700.87	5.17E-09	25YrCancer	5.17E-09	0.00E+00	0.00E+00	0.00E+00	0.00E+00	0.00E+00	0.00E+00	0.00E+00	0.00E+00	0.00E+00	0.00E+00
931	ALL	744780.96	4036700.87	5.35E-09	25YrCancer	5.35E-09	0.00E+00	0.00E+00	0.00E+00	0.00E+00	0.00E+00	0.00E+00	0.00E+00	0.00E+00	0.00E+00	0.00E+00
932	ALL	744880.96	4036700.87	5.55E-09	25YrCancer	5.55E-09	0.00E+00	0.00E+00	0.00E+00	0.00E+00	0.00E+00	0.00E+00	0.00E+00	0.00E+00	0.00E+00	0.00E+00
933	ALL	744980.96	4036700.87	5.78E-09	25YrCancer	5.78E-09	0.00E+00	0.00E+00	0.00E+00	0.00E+00	0.00E+00	0.00E+00	0.00E+00	0.00E+00	0.00E+00	0.00E+00
934	ALL	745080.96	4036700.87	6.05E-09	25YrCancer	6.05E-09	0.00E+00	0.00E+00	0.00E+00	0.00E+00	0.00E+00	0.00E+00	0.00E+00	0.00E+00	0.00E+00	0.00E+00
935	ALL	745180.96	4036700.87	6.36E-09	25YrCancer	6.36E-09	0.00E+00	0.00E+00	0.00E+00	0.00E+00	0.00E+00	0.00E+00	0.00E+00	0.00E+00	0.00E+00	0.00E+00
936	ALL	738080.96	4036800.87	2.49E-09	25YrCancer	2.49E-09	0.00E+00	0.00E+00	0.00E+00	0.00E+00	0.00E+00	0.00E+00	0.00E+00	0.00E+00	0.00E+00	0.00E+00
937	ALL	738180.96	4036800.87	2.50E-09	25YrCancer	2.50E-09	0.00E+00	0.00E+00	0.00E+00	0.00E+00	0.00E+00	0.00E+00	0.00E+00	0.00E+00	0.00E+00	0.00E+00
938	ALL	738280.96	4036800.87	2.51E-09	25YrCancer	2.51E-09	0.00E+00	0.00E+00	0.00E+00	0.00E+00	0.00E+00	0.00E+00	0.00E+00	0.00E+00	0.00E+00	0.00E+00
939	ALL	738380.96	4036800.87	2.52E-09	25YrCancer	2.52E-09	0.00E+00	0.00E+00	0.00E+00	0.00E+00	0.00E+00	0.00E+00	0.00E+00	0.00E+00	0.00E+00	0.00E+00
940	ALL	738480.96	4036800.87	2.53E-09	25YrCancer	2.53E-09	0.00E+00	0.00E+00	0.00E+00	0.00E+00	0.00E+00	0.00E+00	0.00E+00	0.00E+00	0.00E+00	0.00E+00
941	ALL	738580.96	4036800.87	2.54E-09	25YrCancer	2.54E-09	0.00E+00	0.00E+00	0.00E+00	0.00E+00	0.00E+00	0.00E+00	0.00E+00	0.00E+00	0.00E+00	0.00E+00
942	ALL	738680.96	4036800.87	2.55E-09	25YrCancer	2.55E-09	0.00E+00	0.00E+00	0.00E+00	0.00E+00	0.00E+00	0.00E+00	0.00E+00	0.00E+00	0.00E+00	0.00E+00
943	ALL	738780.96	4036800.87	2.56E-09	25YrCancer	2.56E-09	0.00E+00	0.00E+00	0.00E+00	0.00E+00	0.00E+00	0.00E+00	0.00E+00	0.00E+00	0.00E+00	0.00E+00
944	ALL	738880.96	4036800.87	2.58E-09	25YrCancer	2.58E-09	0.00E+00	0.00E+00	0.00E+00	0.00E+00	0.00E+00	0.00E+00	0.00E+00	0.00E+00	0.00E+00	0.00E+00
945	ALL	738980.96	4036800.87	2.59E-09	25YrCancer	2.59E-09	0.00E+00	0.00E+00	0.00E+00	0.00E+00	0.00E+00	0.00E+00	0.00E+00	0.00E+00	0.00E+00	0.00E+00
946	ALL	739080.96	4036800.87	2.60E-09	25YrCancer	2.60E-09	0.00E+00	0.00E+00	0.00E+00	0.00E+00	0.00E+00	0.00E+00	0.00E+00	0.00E+00	0.00E+00	0.00E+00
947	ALL	739180.96	4036800.87	2.61E-09	25YrCancer	2.61E-09	0.00E+00	0.00E+00	0.00E+00	0.00E+00	0.00E+00	0.00E+00	0.00E+00	0.00E+00	0.00E+00	0.00E+00
948	ALL	739280.96	4036800.87	2.62E-09	25YrCancer	2.62E-09	0.00E+00	0.00E+00	0.00E+00	0.00E+00	0.00E+00	0.00E+00	0.00E+00	0.00E+00	0.00E+00	0.00E+00
949	ALL	739380.96	4036800.87	2.63E-09	25YrCancer	2.63E-09	0.00E+00	0.00E+00	0.00E+00	0.00E+00	0.00E+00	0.00E+00	0.00E+00	0.00E+00	0.00E+00	0.00E+00
950	ALL	739480.96	4036800.87	2.65E-09	25YrCancer	2.65E-09	0.00E+00	0.00E+00	0.00E+00	0.00E+00	0.00E+00	0.00E+00	0.00E+00	0.00E+00	0.00E+00	0.00E+00
951	ALL	739580.96	4036800.87	2.66E-09	25YrCancer	2.66E-09	0.00E+00	0.00E+00	0.00E+00	0.00E+00	0.00E+00	0.00E+00	0.00E+00	0.00E+00	0.00E+00	0.00E+00
952	ALL	739680.96	4036800.87	2.68E-09	25YrCancer	2.68E-09	0.00E+00	0.00E+00	0.00E+00	0.00E+00	0.00E+00	0.00E+00	0.00E+00	0.00E+00	0.00E+00	0.00E+00
953	ALL	739780.96	4036800.87	2.69E-09	25YrCancer	2.69E-09	0.00E+00	0.00E+00	0.00E+00	0.00E+00	0.00E+00	0.00E+00	0.00E+00	0.00E+00	0.00E+00	0.00E+00
954	ALL	739880.96	4036800.87	2.71E-09	25YrCancer	2.71E-09	0.00E+00	0.00E+00	0.00E+00	0.00E+00	0.00E+00	0.00E+00	0.00E+00	0.00E+00	0.00E+00	0.00E+00
955	ALL	739980.96	4036800.87	2.72E-09	25YrCancer	2.72E-09	0.00E+00	0.00E+00	0.00E+00	0.00E+00	0.00E+00	0.00E+00	0.00E+00	0.00E+00	0.00E+00	0.00E+00
956	ALL	740080.96	4036800.87	2.74E-09	25YrCancer	2.74E-09	0.00E+00	0.00E+00	0.00E+00	0.00E+00	0.00E+00	0.00E+00	0.00E+00	0.00E+00	0.00E+00	0.00E+00
957	ALL	740180.96	4036800.87	2.75E-09	25YrCancer	2.75E-09	0.00E+00	0.00E+00	0.00E+00	0.00E+00	0.00E+00	0.00E+00	0.00E+00	0.00E+00	0.00E+00	0.00E+00
958	ALL	740280.96	4036800.87	2.76E-09	25YrCancer	2.76E-09	0.00E+00	0.00E+00	0.00E+00	0.00E+00	0.00E+00	0.00E+00	0.00E+00	0.00E+00	0.00E+00	0.00E+00
959	ALL	740380.96	4036800.87	2.78E-09	25YrCancer	2.78E-09	0.00E+00	0.00E+00	0.00E+00	0.00E+00	0.00E+00	0.00E+00	0.00E+00	0.00E+00	0.00E+00	0.00E+00
960	ALL	740480.96	4036800.87	2.80E-09	25YrCancer	2.80E-09	0.00E+00	0.00E+00	0.00E+00	0.00E+00	0.00E+00	0.00E+00	0.00E+00	0.00E+00	0.00E+00	0.00E+00
961	ALL	740580.96	4036800.87	2.81E-09	25YrCancer	2.81E-09	0.00E+00	0.00E+00	0.00E+00	0.00E+00	0.00E+00	0.00E+00	0.00E+00	0.00E+00	0.00E+00	0.00E+00
962	ALL	740680.96	4036800.87	2.83E-09	25YrCancer	2.83E-09	0.00E+00	0.00E+00	0.00E+00	0.00E+00	0.00E+00	0.00E+00	0.00E+00	0.00E+00	0.00E+00	0.00E+00
963	ALL	740780.96	4036800.87	2.85E-09	25YrCancer	2.85E-09	0.00E+00	0.00E+00	0.00E+00	0.00E+00	0.00E+00	0.00E+00	0.00E+00	0.00E+00	0.00E+00	0.00E+00
964	ALL	740880.96	4036800.87	2.86E-09	25YrCancer	2.86E-09	0.00E+00	0.00E+00	0.00E+00	0.00E+00	0.00E+00	0.00E+00	0.00E+00	0.00E+00	0.00E+00	0.00E+00
965	ALL	740980.96	4036800.87	2.88E-09	25YrCancer	2.88E-09	0.00E+00	0.00E+00	0.00E+00	0.00E+00	0.00E+00	0.00E+00	0.00E+00	0.00E+00	0.00E+00	0.00E+00
966	ALL	741080.96	4036800.87	2.90E-09	25YrCancer	2.90E-09	0.00E+00	0.00E+00	0.00E+00	0.00E+00	0.00E+00	0.00E+00	0.00E+00	0.00E+00	0.00E+00	0.00E+00
967	ALL	741180.96	4036800.87	2.92E-09	25YrCancer	2.92E-09	0.00E+00	0.00E+00	0.00E+00	0.00E+00	0.00E+00	0.00E+00	0.00E+00	0.00E+00	0.00E+00	0.00E+00

968	ALL	741280.96	4036800.87	2.94E-09	25YrCancer	2.94E-09	0.00E+00	0.00E+00	0.00E+00	0.00E+00	0.00E+00	0.00E+00	0.00E+00	0.00E+00	0.00E+00	0.00E+00
969	ALL	741380.96	4036800.87	2.96E-09	25YrCancer	2.96E-09	0.00E+00	0.00E+00	0.00E+00	0.00E+00	0.00E+00	0.00E+00	0.00E+00	0.00E+00	0.00E+00	0.00E+00
970	ALL	741480.96	4036800.87	2.98E-09	25YrCancer	2.98E-09	0.00E+00	0.00E+00	0.00E+00	0.00E+00	0.00E+00	0.00E+00	0.00E+00	0.00E+00	0.00E+00	0.00E+00
971	ALL	741580.96	4036800.87	3.00E-09	25YrCancer	3.00E-09	0.00E+00	0.00E+00	0.00E+00	0.00E+00	0.00E+00	0.00E+00	0.00E+00	0.00E+00	0.00E+00	0.00E+00
972	ALL	741680.96	4036800.87	3.02E-09	25YrCancer	3.02E-09	0.00E+00	0.00E+00	0.00E+00	0.00E+00	0.00E+00	0.00E+00	0.00E+00	0.00E+00	0.00E+00	0.00E+00
973	ALL	741780.96	4036800.87	3.04E-09	25YrCancer	3.04E-09	0.00E+00	0.00E+00	0.00E+00	0.00E+00	0.00E+00	0.00E+00	0.00E+00	0.00E+00	0.00E+00	0.00E+00
974	ALL	741880.96	4036800.87	3.06E-09	25YrCancer	3.06E-09	0.00E+00	0.00E+00	0.00E+00	0.00E+00	0.00E+00	0.00E+00	0.00E+00	0.00E+00	0.00E+00	0.00E+00
975	ALL	741980.96	4036800.87	3.07E-09	25YrCancer	3.07E-09	0.00E+00	0.00E+00	0.00E+00	0.00E+00	0.00E+00	0.00E+00	0.00E+00	0.00E+00	0.00E+00	0.00E+00
976	ALL	742080.96	4036800.87	3.10E-09	25YrCancer	3.10E-09	0.00E+00	0.00E+00	0.00E+00	0.00E+00	0.00E+00	0.00E+00	0.00E+00	0.00E+00	0.00E+00	0.00E+00
977	ALL	742180.96	4036800.87	3.13E-09	25YrCancer	3.13E-09	0.00E+00	0.00E+00	0.00E+00	0.00E+00	0.00E+00	0.00E+00	0.00E+00	0.00E+00	0.00E+00	0.00E+00
978	ALL	742280.96	4036800.87	3.16E-09	25YrCancer	3.16E-09	0.00E+00	0.00E+00	0.00E+00	0.00E+00	0.00E+00	0.00E+00	0.00E+00	0.00E+00	0.00E+00	0.00E+00
979	ALL	742380.96	4036800.87	3.19E-09	25YrCancer	3.19E-09	0.00E+00	0.00E+00	0.00E+00	0.00E+00	0.00E+00	0.00E+00	0.00E+00	0.00E+00	0.00E+00	0.00E+00
980	ALL	742480.96	4036800.87	3.23E-09	25YrCancer	3.23E-09	0.00E+00	0.00E+00	0.00E+00	0.00E+00	0.00E+00	0.00E+00	0.00E+00	0.00E+00	0.00E+00	0.00E+00
981	ALL	742580.96	4036800.87	3.27E-09	25YrCancer	3.27E-09	0.00E+00	0.00E+00	0.00E+00	0.00E+00	0.00E+00	0.00E+00	0.00E+00	0.00E+00	0.00E+00	0.00E+00
982	ALL	742680.96	4036800.87	3.32E-09	25YrCancer	3.32E-09	0.00E+00	0.00E+00	0.00E+00	0.00E+00	0.00E+00	0.00E+00	0.00E+00	0.00E+00	0.00E+00	0.00E+00
983	ALL	742780.96	4036800.87	3.37E-09	25YrCancer	3.37E-09	0.00E+00	0.00E+00	0.00E+00	0.00E+00	0.00E+00	0.00E+00	0.00E+00	0.00E+00	0.00E+00	0.00E+00
984	ALL	742880.96	4036800.87	3.42E-09	25YrCancer	3.42E-09	0.00E+00	0.00E+00	0.00E+00	0.00E+00	0.00E+00	0.00E+00	0.00E+00	0.00E+00	0.00E+00	0.00E+00
985	ALL	742980.96	4036800.87	3.47E-09	25YrCancer	3.47E-09	0.00E+00	0.00E+00	0.00E+00	0.00E+00	0.00E+00	0.00E+00	0.00E+00	0.00E+00	0.00E+00	0.00E+00
986	ALL	743080.96	4036800.87	3.53E-09	25YrCancer	3.53E-09	0.00E+00	0.00E+00	0.00E+00	0.00E+00	0.00E+00	0.00E+00	0.00E+00	0.00E+00	0.00E+00	0.00E+00
987	ALL	743180.96	4036800.87	3.60E-09	25YrCancer	3.60E-09	0.00E+00	0.00E+00	0.00E+00	0.00E+00	0.00E+00	0.00E+00	0.00E+00	0.00E+00	0.00E+00	0.00E+00
988	ALL	743280.96	4036800.87	3.67E-09	25YrCancer	3.67E-09	0.00E+00	0.00E+00	0.00E+00	0.00E+00	0.00E+00	0.00E+00	0.00E+00	0.00E+00	0.00E+00	0.00E+00
989	ALL	743380.96	4036800.87	3.74E-09	25YrCancer	3.74E-09	0.00E+00	0.00E+00	0.00E+00	0.00E+00	0.00E+00	0.00E+00	0.00E+00	0.00E+00	0.00E+00	0.00E+00
990	ALL	743480.96	4036800.87	3.83E-09	25YrCancer	3.83E-09	0.00E+00	0.00E+00	0.00E+00	0.00E+00	0.00E+00	0.00E+00	0.00E+00	0.00E+00	0.00E+00	0.00E+00
991	ALL	743580.96	4036800.87	3.91E-09	25YrCancer	3.91E-09	0.00E+00	0.00E+00	0.00E+00	0.00E+00	0.00E+00	0.00E+00	0.00E+00	0.00E+00	0.00E+00	0.00E+00
992	ALL	743680.96	4036800.87	4.00E-09	25YrCancer	4.00E-09	0.00E+00	0.00E+00	0.00E+00	0.00E+00	0.00E+00	0.00E+00	0.00E+00	0.00E+00	0.00E+00	0.00E+00
993	ALL	743780.96	4036800.87	4.10E-09	25YrCancer	4.10E-09	0.00E+00	0.00E+00	0.00E+00	0.00E+00	0.00E+00	0.00E+00	0.00E+00	0.00E+00	0.00E+00	0.00E+00
994	ALL	743880.96	4036800.87	4.20E-09	25YrCancer	4.20E-09	0.00E+00	0.00E+00	0.00E+00	0.00E+00	0.00E+00	0.00E+00	0.00E+00	0.00E+00	0.00E+00	0.00E+00
995	ALL	743980.96	4036800.87	4.31E-09	25YrCancer	4.31E-09	0.00E+00	0.00E+00	0.00E+00	0.00E+00	0.00E+00	0.00E+00	0.00E+00	0.00E+00	0.00E+00	0.00E+00
996	ALL	744080.96	4036800.87	4.42E-09	25YrCancer	4.42E-09	0.00E+00	0.00E+00	0.00E+00	0.00E+00	0.00E+00	0.00E+00	0.00E+00	0.00E+00	0.00E+00	0.00E+00
997	ALL	744180.96	4036800.87	4.54E-09	25YrCancer	4.54E-09	0.00E+00	0.00E+00	0.00E+00	0.00E+00	0.00E+00	0.00E+00	0.00E+00	0.00E+00	0.00E+00	0.00E+00
998	ALL	744280.96	4036800.87	4.67E-09	25YrCancer	4.67E-09	0.00E+00	0.00E+00	0.00E+00	0.00E+00	0.00E+00	0.00E+00	0.00E+00	0.00E+00	0.00E+00	0.00E+00
999	ALL	744380.96	4036800.87	4.82E-09	25YrCancer	4.82E-09	0.00E+00	0.00E+00	0.00E+00	0.00E+00	0.00E+00	0.00E+00	0.00E+00	0.00E+00	0.00E+00	0.00E+00
1000	ALL	744480.96	4036800.87	4.97E-09	25YrCancer	4.97E-09	0.00E+00	0.00E+00	0.00E+00	0.00E+00	0.00E+00	0.00E+00	0.00E+00	0.00E+00	0.00E+00	0.00E+00
1001	ALL	744580.96	4036800.87	5.14E-09	25YrCancer	5.14E-09	0.00E+00	0.00E+00	0.00E+00	0.00E+00	0.00E+00	0.00E+00	0.00E+00	0.00E+00	0.00E+00	0.00E+00
1002	ALL	744680.96	4036800.87	5.33E-09	25YrCancer	5.33E-09	0.00E+00	0.00E+00	0.00E+00	0.00E+00	0.00E+00	0.00E+00	0.00E+00	0.00E+00	0.00E+00	0.00E+00
1003	ALL	744780.96	4036800.87	5.53E-09	25YrCancer	5.53E-09	0.00E+00	0.00E+00	0.00E+00	0.00E+00	0.00E+00	0.00E+00	0.00E+00	0.00E+00	0.00E+00	0.00E+00
1004	ALL	744880.96	4036800.87	5.77E-09	25YrCancer	5.77E-09	0.00E+00	0.00E+00	0.00E+00	0.00E+00	0.00E+00	0.00E+00	0.00E+00	0.00E+00	0.00E+00	0.00E+00
1005	ALL	744980.96	4036800.87	6.03E-09	25YrCancer	6.03E-09	0.00E+00	0.00E+00	0.00E+00	0.00E+00	0.00E+00	0.00E+00	0.00E+00	0.00E+00	0.00E+00	0.00E+00
1006	ALL	745080.96	4036800.87	6.34E-09	25YrCancer	6.34E-09	0.00E+00	0.00E+00	0.00E+00	0.00E+00	0.00E+00	0.00E+00	0.00E+00	0.00E+00	0.00E+00	0.00E+00
1007	ALL	745180.96	4036800.87	6.70E-09	25YrCancer	6.70E-09	0.00E+00	0.00E+00	0.00E+00	0.00E+00	0.00E+00	0.00E+00	0.00E+00	0.00E+00	0.00E+00	0.00E+00
1008	ALL	745280.96	4036800.87	7.11E-09	25YrCancer	7.11E-09	0.00E+00	0.00E+00	0.00E+00	0.00E+00	0.00E+00	0.00E+00	0.00E+00	0.00E+00	0.00E+00	0.00E+00
1009	ALL	745380.96	4036800.87	7.60E-09	25YrCancer	7.60E-09	0.00E+00	0.00E+00	0.00E+00	0.00E+00	0.00E+00	0.00E+00	0.00E+00	0.00E+00	0.00E+00	0.00E+00
1010	ALL	745480.96	4036800.87	8.19E-09	25YrCancer	8.19E-09	0.00E+00	0.00E+00	0.00E+00	0.00E+00	0.00E+00	0.00E+00	0.00E+00	0.00E+00	0.00E+00	0.00E+00
1011	ALL	745580.96	4036800.87	8.89E-09	25YrCancer	8.89E-09	0.00E+00	0.00E+00	0.00E+00	0.00E+00	0.00E+00	0.00E+00	0.00E+00	0.00E+00	0.00E+00	0.00E+00
1012	ALL	745680.96	4036800.87	9.72E-09	25YrCancer	9.72E-09	0.00E+00	0.00E+00	0.00E+00	0.00E+00	0.00E+00	0.00E+00	0.00E+00	0.00E+00	0.00E+00	0.00E+00
1013	ALL	745780.96	4036800.87	1.07E-08	25YrCancer	1.07E-08	0.00E+00	0.00E+00	0.00E+00	0.00E+00	0.00E+00	0.00E+00	0.00E+00	0.00E+00	0.00E+00	0.00E+00
1014	ALL	745880.96	4036800.87	1.18E-08	25YrCancer	1.18E-08	0.00E+00	0.00E+00	0.00E+00	0.00E+00	0.00E+00	0.00E+00	0.00E+00	0.00E+00	0.00E+00	0.00E+00
1015	ALL	741480.96	4036900.87	2.99E-09	25YrCancer	2.99E-09	0.00E+00	0.00E+00	0.00E+00	0.00E+00	0.00E+00	0.00E+00	0.00E+00	0.00E+00	0.00E+00	0.00E+00
1016	ALL	741580.96	4036900.87	3.01E-09	25YrCancer	3.01E-09	0.00E+00	0.00E+00	0.00E+00	0.00E+00	0.00E+00	0.00E+00	0.00E+00	0.00E+00	0.00E+00	0.00E+00
1017	ALL	741680.96	4036900.87	3.03E-09	25YrCancer	3.03E-09	0.00E+00	0.00E+00	0.00E+00	0.00E+00	0.00E+00	0.00E+00	0.00E+00	0.00E+00	0.00E+00	0.00E+00
1018	ALL	741780.96	4036900.87	3.05E-09	25YrCancer	3.05E-09	0.00E+00	0.00E+00	0.00E+00	0.00E+00	0.00E+00	0.00E+00	0.00E+00	0.00E+00	0.00E+00	0.00E+00

1019	ALL	741880.96	4036900.87	3.07E-09	25YrCancer	3.07E-09	0.00E+00	0.00E+00	0.00E+00	0.00E+00	0.00E+00	0.00E+00	0.00E+00	0.00E+00	0.00E+00	0.00E+00	0.00E+00
1020	ALL	741980.96	4036900.87	3.08E-09	25YrCancer	3.08E-09	0.00E+00	0.00E+00	0.00E+00	0.00E+00	0.00E+00	0.00E+00	0.00E+00	0.00E+00	0.00E+00	0.00E+00	0.00E+00
1021	ALL	742080.96	4036900.87	3.11E-09	25YrCancer	3.11E-09	0.00E+00	0.00E+00	0.00E+00	0.00E+00	0.00E+00	0.00E+00	0.00E+00	0.00E+00	0.00E+00	0.00E+00	0.00E+00
1022	ALL	742180.96	4036900.87	3.14E-09	25YrCancer	3.14E-09	0.00E+00	0.00E+00	0.00E+00	0.00E+00	0.00E+00	0.00E+00	0.00E+00	0.00E+00	0.00E+00	0.00E+00	0.00E+00
1023	ALL	742280.96	4036900.87	3.17E-09	25YrCancer	3.17E-09	0.00E+00	0.00E+00	0.00E+00	0.00E+00	0.00E+00	0.00E+00	0.00E+00	0.00E+00	0.00E+00	0.00E+00	0.00E+00
1024	ALL	742380.96	4036900.87	3.20E-09	25YrCancer	3.20E-09	0.00E+00	0.00E+00	0.00E+00	0.00E+00	0.00E+00	0.00E+00	0.00E+00	0.00E+00	0.00E+00	0.00E+00	0.00E+00
1025	ALL	742480.96	4036900.87	3.23E-09	25YrCancer	3.23E-09	0.00E+00	0.00E+00	0.00E+00	0.00E+00	0.00E+00	0.00E+00	0.00E+00	0.00E+00	0.00E+00	0.00E+00	0.00E+00
1026	ALL	742580.96	4036900.87	3.27E-09	25YrCancer	3.27E-09	0.00E+00	0.00E+00	0.00E+00	0.00E+00	0.00E+00	0.00E+00	0.00E+00	0.00E+00	0.00E+00	0.00E+00	0.00E+00
1027	ALL	742680.96	4036900.87	3.31E-09	25YrCancer	3.31E-09	0.00E+00	0.00E+00	0.00E+00	0.00E+00	0.00E+00	0.00E+00	0.00E+00	0.00E+00	0.00E+00	0.00E+00	0.00E+00
1028	ALL	742780.96	4036900.87	3.36E-09	25YrCancer	3.36E-09	0.00E+00	0.00E+00	0.00E+00	0.00E+00	0.00E+00	0.00E+00	0.00E+00	0.00E+00	0.00E+00	0.00E+00	0.00E+00
1029	ALL	742880.96	4036900.87	3.41E-09	25YrCancer	3.41E-09	0.00E+00	0.00E+00	0.00E+00	0.00E+00	0.00E+00	0.00E+00	0.00E+00	0.00E+00	0.00E+00	0.00E+00	0.00E+00
1030	ALL	742980.96	4036900.87	3.47E-09	25YrCancer	3.47E-09	0.00E+00	0.00E+00	0.00E+00	0.00E+00	0.00E+00	0.00E+00	0.00E+00	0.00E+00	0.00E+00	0.00E+00	0.00E+00
1031	ALL	743080.96	4036900.87	3.53E-09	25YrCancer	3.53E-09	0.00E+00	0.00E+00	0.00E+00	0.00E+00	0.00E+00	0.00E+00	0.00E+00	0.00E+00	0.00E+00	0.00E+00	0.00E+00
1032	ALL	743180.96	4036900.87	3.59E-09	25YrCancer	3.59E-09	0.00E+00	0.00E+00	0.00E+00	0.00E+00	0.00E+00	0.00E+00	0.00E+00	0.00E+00	0.00E+00	0.00E+00	0.00E+00
1033	ALL	743280.96	4036900.87	3.66E-09	25YrCancer	3.66E-09	0.00E+00	0.00E+00	0.00E+00	0.00E+00	0.00E+00	0.00E+00	0.00E+00	0.00E+00	0.00E+00	0.00E+00	0.00E+00
1034	ALL	743380.96	4036900.87	3.74E-09	25YrCancer	3.74E-09	0.00E+00	0.00E+00	0.00E+00	0.00E+00	0.00E+00	0.00E+00	0.00E+00	0.00E+00	0.00E+00	0.00E+00	0.00E+00
1035	ALL	743480.96	4036900.87	3.83E-09	25YrCancer	3.83E-09	0.00E+00	0.00E+00	0.00E+00	0.00E+00	0.00E+00	0.00E+00	0.00E+00	0.00E+00	0.00E+00	0.00E+00	0.00E+00
1036	ALL	743580.96	4036900.87	3.92E-09	25YrCancer	3.92E-09	0.00E+00	0.00E+00	0.00E+00	0.00E+00	0.00E+00	0.00E+00	0.00E+00	0.00E+00	0.00E+00	0.00E+00	0.00E+00
1037	ALL	743680.96	4036900.87	4.01E-09	25YrCancer	4.01E-09	0.00E+00	0.00E+00	0.00E+00	0.00E+00	0.00E+00	0.00E+00	0.00E+00	0.00E+00	0.00E+00	0.00E+00	0.00E+00
1038	ALL	743780.96	4036900.87	4.12E-09	25YrCancer	4.12E-09	0.00E+00	0.00E+00	0.00E+00	0.00E+00	0.00E+00	0.00E+00	0.00E+00	0.00E+00	0.00E+00	0.00E+00	0.00E+00
1039	ALL	743880.96	4036900.87	4.23E-09	25YrCancer	4.23E-09	0.00E+00	0.00E+00	0.00E+00	0.00E+00	0.00E+00	0.00E+00	0.00E+00	0.00E+00	0.00E+00	0.00E+00	0.00E+00
1040	ALL	743980.96	4036900.87	4.35E-09	25YrCancer	4.35E-09	0.00E+00	0.00E+00	0.00E+00	0.00E+00	0.00E+00	0.00E+00	0.00E+00	0.00E+00	0.00E+00	0.00E+00	0.00E+00
1041	ALL	744080.96	4036900.87	4.48E-09	25YrCancer	4.48E-09	0.00E+00	0.00E+00	0.00E+00	0.00E+00	0.00E+00	0.00E+00	0.00E+00	0.00E+00	0.00E+00	0.00E+00	0.00E+00
1042	ALL	744180.96	4036900.87	4.62E-09	25YrCancer	4.62E-09	0.00E+00	0.00E+00	0.00E+00	0.00E+00	0.00E+00	0.00E+00	0.00E+00	0.00E+00	0.00E+00	0.00E+00	0.00E+00
1043	ALL	744280.96	4036900.87	4.77E-09	25YrCancer	4.77E-09	0.00E+00	0.00E+00	0.00E+00	0.00E+00	0.00E+00	0.00E+00	0.00E+00	0.00E+00	0.00E+00	0.00E+00	0.00E+00
1044	ALL	744380.96	4036900.87	4.93E-09	25YrCancer	4.93E-09	0.00E+00	0.00E+00	0.00E+00	0.00E+00	0.00E+00	0.00E+00	0.00E+00	0.00E+00	0.00E+00	0.00E+00	0.00E+00
1045	ALL	744480.96	4036900.87	5.10E-09	25YrCancer	5.10E-09	0.00E+00	0.00E+00	0.00E+00	0.00E+00	0.00E+00	0.00E+00	0.00E+00	0.00E+00	0.00E+00	0.00E+00	0.00E+00
1046	ALL	744580.96	4036900.87	5.29E-09	25YrCancer	5.29E-09	0.00E+00	0.00E+00	0.00E+00	0.00E+00	0.00E+00	0.00E+00	0.00E+00	0.00E+00	0.00E+00	0.00E+00	0.00E+00
1047	ALL	744680.96	4036900.87	5.51E-09	25YrCancer	5.51E-09	0.00E+00	0.00E+00	0.00E+00	0.00E+00	0.00E+00	0.00E+00	0.00E+00	0.00E+00	0.00E+00	0.00E+00	0.00E+00
1048	ALL	744780.96	4036900.87	5.74E-09	25YrCancer	5.74E-09	0.00E+00	0.00E+00	0.00E+00	0.00E+00	0.00E+00	0.00E+00	0.00E+00	0.00E+00	0.00E+00	0.00E+00	0.00E+00
1049	ALL	744880.96	4036900.87	6.00E-09	25YrCancer	6.00E-09	0.00E+00	0.00E+00	0.00E+00	0.00E+00	0.00E+00	0.00E+00	0.00E+00	0.00E+00	0.00E+00	0.00E+00	0.00E+00
1050	ALL	744980.96	4036900.87	6.30E-09	25YrCancer	6.30E-09	0.00E+00	0.00E+00	0.00E+00	0.00E+00	0.00E+00	0.00E+00	0.00E+00	0.00E+00	0.00E+00	0.00E+00	0.00E+00
1051	ALL	745080.96	4036900.87	6.66E-09	25YrCancer	6.66E-09	0.00E+00	0.00E+00	0.00E+00	0.00E+00	0.00E+00	0.00E+00	0.00E+00	0.00E+00	0.00E+00	0.00E+00	0.00E+00
1052	ALL	745180.96	4036900.87	7.07E-09	25YrCancer	7.07E-09	0.00E+00	0.00E+00	0.00E+00	0.00E+00	0.00E+00	0.00E+00	0.00E+00	0.00E+00	0.00E+00	0.00E+00	0.00E+00
1053	ALL	745280.96	4036900.87	7.54E-09	25YrCancer	7.54E-09	0.00E+00	0.00E+00	0.00E+00	0.00E+00	0.00E+00	0.00E+00	0.00E+00	0.00E+00	0.00E+00	0.00E+00	0.00E+00
1054	ALL	745380.96	4036900.87	8.08E-09	25YrCancer	8.08E-09	0.00E+00	0.00E+00	0.00E+00	0.00E+00	0.00E+00	0.00E+00	0.00E+00	0.00E+00	0.00E+00	0.00E+00	0.00E+00
1055	ALL	745480.96	4036900.87	8.72E-09	25YrCancer	8.72E-09	0.00E+00	0.00E+00	0.00E+00	0.00E+00	0.00E+00	0.00E+00	0.00E+00	0.00E+00	0.00E+00	0.00E+00	0.00E+00
1056	ALL	745580.96	4036900.87	9.44E-09	25YrCancer	9.44E-09	0.00E+00	0.00E+00	0.00E+00	0.00E+00	0.00E+00	0.00E+00	0.00E+00	0.00E+00	0.00E+00	0.00E+00	0.00E+00
1057	ALL	745680.96	4036900.87	1.03E-08	25YrCancer	1.03E-08	0.00E+00	0.00E+00	0.00E+00	0.00E+00	0.00E+00	0.00E+00	0.00E+00	0.00E+00	0.00E+00	0.00E+00	0.00E+00
1058	ALL	745780.96	4036900.87	1.12E-08	25YrCancer	1.12E-08	0.00E+00	0.00E+00	0.00E+00	0.00E+00	0.00E+00	0.00E+00	0.00E+00	0.00E+00	0.00E+00	0.00E+00	0.00E+00
1059	ALL	745880.96	4036900.87	1.23E-08	25YrCancer	1.23E-08	0.00E+00	0.00E+00	0.00E+00	0.00E+00	0.00E+00	0.00E+00	0.00E+00	0.00E+00	0.00E+00	0.00E+00	0.00E+00
1060	ALL	747188.42	4034760.7	1.08E-08	25YrCancer	1.08E-08	0.00E+00	0.00E+00	0.00E+00	0.00E+00	0.00E+00	0.00E+00	0.00E+00	0.00E+00	0.00E+00	0.00E+00	0.00E+00
1061	ALL	747288.42	4034760.7	1.32E-08	25YrCancer	1.32E-08	0.00E+00	0.00E+00	0.00E+00	0.00E+00	0.00E+00	0.00E+00	0.00E+00	0.00E+00	0.00E+00	0.00E+00	0.00E+00
1062	ALL	747388.42	4034760.7	1.59E-08	25YrCancer	1.59E-08	0.00E+00	0.00E+00	0.00E+00	0.00E+00	0.00E+00	0.00E+00	0.00E+00	0.00E+00	0.00E+00	0.00E+00	0.00E+00
1063	ALL	747488.42	4034760.7	1.85E-08	25YrCancer	1.85E-08	0.00E+00	0.00E+00	0.00E+00	0.00E+00	0.00E+00	0.00E+00	0.00E+00	0.00E+00	0.00E+00	0.00E+00	0.00E+00
1064	ALL	747588.42	4034760.7	2.10E-08	25YrCancer	2.10E-08	0.00E+00	0.00E+00	0.00E+00	0.00E+00	0.00E+00	0.00E+00	0.00E+00	0.00E+00	0.00E+00	0.00E+00	0.00E+00
1065	ALL	747688.42	4034760.7	2.34E-08	25YrCancer	2.34E-08	0.00E+00	0.00E+00	0.00E+00	0.00E+00	0.00E+00	0.00E+00	0.00E+00	0.00E+00	0.00E+00	0.00E+00	0.00E+00
1066	ALL	747788.42	4034760.7	2.55E-08	25YrCancer	2.55E-08	0.00E+00	0.00E+00	0.00E+00	0.00E+00	0.00E+00	0.00E+00	0.00E+00	0.00E+00	0.00E+00	0.00E+00	0.00E+00
1067	ALL	747888.42	4034760.7	2.73E-08	25YrCancer	2.73E-08	0.00E+00	0.00E+00	0.00E+00	0.00E+00	0.00E+00	0.00E+00	0.00E+00	0.00E+00	0.00E+00	0.00E+00	0.00E+00
1068	ALL	747988.42	4034760.7	2.86E-08	25YrCancer	2.86E-08	0.00E+00	0.00E+00	0.00E+00	0.00E+00	0.00E+00	0.00E+00	0.00E+00	0.00E+00	0.00E+00	0.00E+00	0.00E+00
1069	ALL	748088.42	4034760.7	2.99E-08	25YrCancer	2.99E-08	0.00E+00	0.00E+00	0.00E+00	0.00E+00	0.00E+00	0.00E+00	0.00E+00	0.00E+00	0.00E+00	0.00E+00	0.00E+00

1070	ALL		748188.42	4034760.7	3.08E-08	25YrCancer	3.08E-08	0.00E+00	0.00E+00	0.00E+00	0.00E+00	0.00E+00	0.00E+00	0.00E+00	0.00E+00	0.00E+00	0.00E+00	0.00E+00
1071	ALL		748288.42	4034760.7	3.15E-08	25YrCancer	3.15E-08	0.00E+00	0.00E+00	0.00E+00	0.00E+00	0.00E+00	0.00E+00	0.00E+00	0.00E+00	0.00E+00	0.00E+00	0.00E+00
1072	ALL		748388.42	4034760.7	3.16E-08	25YrCancer	3.16E-08	0.00E+00	0.00E+00	0.00E+00	0.00E+00	0.00E+00	0.00E+00	0.00E+00	0.00E+00	0.00E+00	0.00E+00	0.00E+00
1073	ALL		748488.42	4034760.7	3.16E-08	25YrCancer	3.16E-08	0.00E+00	0.00E+00	0.00E+00	0.00E+00	0.00E+00	0.00E+00	0.00E+00	0.00E+00	0.00E+00	0.00E+00	0.00E+00
1074	ALL		748588.42	4034760.7	3.12E-08	25YrCancer	3.12E-08	0.00E+00	0.00E+00	0.00E+00	0.00E+00	0.00E+00	0.00E+00	0.00E+00	0.00E+00	0.00E+00	0.00E+00	0.00E+00
1075	ALL		748688.42	4034760.7	3.05E-08	25YrCancer	3.05E-08	0.00E+00	0.00E+00	0.00E+00	0.00E+00	0.00E+00	0.00E+00	0.00E+00	0.00E+00	0.00E+00	0.00E+00	0.00E+00
1076	ALL		748788.42	4034760.7	2.96E-08	25YrCancer	2.96E-08	0.00E+00	0.00E+00	0.00E+00	0.00E+00	0.00E+00	0.00E+00	0.00E+00	0.00E+00	0.00E+00	0.00E+00	0.00E+00
1077	ALL		748888.42	4034760.7	2.85E-08	25YrCancer	2.85E-08	0.00E+00	0.00E+00	0.00E+00	0.00E+00	0.00E+00	0.00E+00	0.00E+00	0.00E+00	0.00E+00	0.00E+00	0.00E+00
1078	ALL		747188.42	4034860.7	1.20E-08	25YrCancer	1.20E-08	0.00E+00	0.00E+00	0.00E+00	0.00E+00	0.00E+00	0.00E+00	0.00E+00	0.00E+00	0.00E+00	0.00E+00	0.00E+00
1079	ALL		747288.42	4034860.7	1.49E-08	25YrCancer	1.49E-08	0.00E+00	0.00E+00	0.00E+00	0.00E+00	0.00E+00	0.00E+00	0.00E+00	0.00E+00	0.00E+00	0.00E+00	0.00E+00
1080	ALL		747388.42	4034860.7	1.81E-08	25YrCancer	1.81E-08	0.00E+00	0.00E+00	0.00E+00	0.00E+00	0.00E+00	0.00E+00	0.00E+00	0.00E+00	0.00E+00	0.00E+00	0.00E+00
1081	ALL		747488.42	4034860.7	2.13E-08	25YrCancer	2.13E-08	0.00E+00	0.00E+00	0.00E+00	0.00E+00	0.00E+00	0.00E+00	0.00E+00	0.00E+00	0.00E+00	0.00E+00	0.00E+00
1082	ALL		747588.42	4034860.7	2.43E-08	25YrCancer	2.43E-08	0.00E+00	0.00E+00	0.00E+00	0.00E+00	0.00E+00	0.00E+00	0.00E+00	0.00E+00	0.00E+00	0.00E+00	0.00E+00
1083	ALL		747688.42	4034860.7	2.71E-08	25YrCancer	2.71E-08	0.00E+00	0.00E+00	0.00E+00	0.00E+00	0.00E+00	0.00E+00	0.00E+00	0.00E+00	0.00E+00	0.00E+00	0.00E+00
1084	ALL		747788.42	4034860.7	2.95E-08	25YrCancer	2.95E-08	0.00E+00	0.00E+00	0.00E+00	0.00E+00	0.00E+00	0.00E+00	0.00E+00	0.00E+00	0.00E+00	0.00E+00	0.00E+00
1085	ALL		747888.42	4034860.7	3.15E-08	25YrCancer	3.15E-08	0.00E+00	0.00E+00	0.00E+00	0.00E+00	0.00E+00	0.00E+00	0.00E+00	0.00E+00	0.00E+00	0.00E+00	0.00E+00
1086	ALL		747988.42	4034860.7	3.30E-08	25YrCancer	3.30E-08	0.00E+00	0.00E+00	0.00E+00	0.00E+00	0.00E+00	0.00E+00	0.00E+00	0.00E+00	0.00E+00	0.00E+00	0.00E+00
1087	ALL		748088.42	4034860.7	3.42E-08	25YrCancer	3.42E-08	0.00E+00	0.00E+00	0.00E+00	0.00E+00	0.00E+00	0.00E+00	0.00E+00	0.00E+00	0.00E+00	0.00E+00	0.00E+00
1088	ALL		748188.42	4034860.7	3.50E-08	25YrCancer	3.50E-08	0.00E+00	0.00E+00	0.00E+00	0.00E+00	0.00E+00	0.00E+00	0.00E+00	0.00E+00	0.00E+00	0.00E+00	0.00E+00
1089	ALL		748288.42	4034860.7	3.54E-08	25YrCancer	3.54E-08	0.00E+00	0.00E+00	0.00E+00	0.00E+00	0.00E+00	0.00E+00	0.00E+00	0.00E+00	0.00E+00	0.00E+00	0.00E+00
1090	ALL		748388.42	4034860.7	3.52E-08	25YrCancer	3.52E-08	0.00E+00	0.00E+00	0.00E+00	0.00E+00	0.00E+00	0.00E+00	0.00E+00	0.00E+00	0.00E+00	0.00E+00	0.00E+00
1091	ALL		748488.42	4034860.7	3.46E-08	25YrCancer	3.46E-08	0.00E+00	0.00E+00	0.00E+00	0.00E+00	0.00E+00	0.00E+00	0.00E+00	0.00E+00	0.00E+00	0.00E+00	0.00E+00
1092	ALL		748588.42	4034860.7	3.37E-08	25YrCancer	3.37E-08	0.00E+00	0.00E+00	0.00E+00	0.00E+00	0.00E+00	0.00E+00	0.00E+00	0.00E+00	0.00E+00	0.00E+00	0.00E+00
1093	ALL		748688.42	4034860.7	3.25E-08	25YrCancer	3.25E-08	0.00E+00	0.00E+00	0.00E+00	0.00E+00	0.00E+00	0.00E+00	0.00E+00	0.00E+00	0.00E+00	0.00E+00	0.00E+00
1094	ALL		748788.42	4034860.7	3.11E-08	25YrCancer	3.11E-08	0.00E+00	0.00E+00	0.00E+00	0.00E+00	0.00E+00	0.00E+00	0.00E+00	0.00E+00	0.00E+00	0.00E+00	0.00E+00
1095	ALL		748888.42	4034860.7	2.96E-08	25YrCancer	2.96E-08	0.00E+00	0.00E+00	0.00E+00	0.00E+00	0.00E+00	0.00E+00	0.00E+00	0.00E+00	0.00E+00	0.00E+00	0.00E+00
1096	ALL	SENS	747188.42	4034960.7	1.34E-08	25YrCancer	1.34E-08	0.00E+00	0.00E+00	0.00E+00	0.00E+00	0.00E+00	0.00E+00	0.00E+00	0.00E+00	0.00E+00	0.00E+00	0.00E+00
1097	ALL	SENS	747288.42	4034960.7	1.71E-08	25YrCancer	1.71E-08	0.00E+00	0.00E+00	0.00E+00	0.00E+00	0.00E+00	0.00E+00	0.00E+00	0.00E+00	0.00E+00	0.00E+00	0.00E+00
1098	ALL	SENS	747388.42	4034960.7	2.10E-08	25YrCancer	2.10E-08	0.00E+00	0.00E+00	0.00E+00	0.00E+00	0.00E+00	0.00E+00	0.00E+00	0.00E+00	0.00E+00	0.00E+00	0.00E+00
1099	ALL	SENS	747488.42	4034960.7	2.49E-08	25YrCancer	2.49E-08	0.00E+00	0.00E+00	0.00E+00	0.00E+00	0.00E+00	0.00E+00	0.00E+00	0.00E+00	0.00E+00	0.00E+00	0.00E+00
1100	ALL	SENS	747588.42	4034960.7	2.86E-08	25YrCancer	2.86E-08	0.00E+00	0.00E+00	0.00E+00	0.00E+00	0.00E+00	0.00E+00	0.00E+00	0.00E+00	0.00E+00	0.00E+00	0.00E+00
1101	ALL	SENS	747688.42	4034960.7	3.18E-08	25YrCancer	3.18E-08	0.00E+00	0.00E+00	0.00E+00	0.00E+00	0.00E+00	0.00E+00	0.00E+00	0.00E+00	0.00E+00	0.00E+00	0.00E+00
1102	ALL	SENS	747788.42	4034960.7	3.46E-08	25YrCancer	3.46E-08	0.00E+00	0.00E+00	0.00E+00	0.00E+00	0.00E+00	0.00E+00	0.00E+00	0.00E+00	0.00E+00	0.00E+00	0.00E+00
1103	ALL	SENS	747888.42	4034960.7	3.68E-08	25YrCancer	3.68E-08	0.00E+00	0.00E+00	0.00E+00	0.00E+00	0.00E+00	0.00E+00	0.00E+00	0.00E+00	0.00E+00	0.00E+00	0.00E+00
1104	ALL	SENS	747988.42	4034960.7	3.83E-08	25YrCancer	3.83E-08	0.00E+00	0.00E+00	0.00E+00	0.00E+00	0.00E+00	0.00E+00	0.00E+00	0.00E+00	0.00E+00	0.00E+00	0.00E+00
1105	ALL	SENS	748088.42	4034960.7	3.94E-08	25YrCancer	3.94E-08	0.00E+00	0.00E+00	0.00E+00	0.00E+00	0.00E+00	0.00E+00	0.00E+00	0.00E+00	0.00E+00	0.00E+00	0.00E+00
1106	ALL	SENS	748188.42	4034960.7	3.98E-08	25YrCancer	3.98E-08	0.00E+00	0.00E+00	0.00E+00	0.00E+00	0.00E+00	0.00E+00	0.00E+00	0.00E+00	0.00E+00	0.00E+00	0.00E+00
1107	ALL	SENS	748288.42	4034960.7	3.96E-08	25YrCancer	3.96E-08	0.00E+00	0.00E+00	0.00E+00	0.00E+00	0.00E+00	0.00E+00	0.00E+00	0.00E+00	0.00E+00	0.00E+00	0.00E+00
1108	ALL	SENS	748388.42	4034960.7	3.88E-08	25YrCancer	3.88E-08	0.00E+00	0.00E+00	0.00E+00	0.00E+00	0.00E+00	0.00E+00	0.00E+00	0.00E+00	0.00E+00	0.00E+00	0.00E+00
1109	ALL	SENS	748488.42	4034960.7	3.75E-08	25YrCancer	3.75E-08	0.00E+00	0.00E+00	0.00E+00	0.00E+00	0.00E+00	0.00E+00	0.00E+00	0.00E+00	0.00E+00	0.00E+00	0.00E+00
1110	ALL	SENS	748588.42	4034960.7	3.59E-08	25YrCancer	3.59E-08	0.00E+00	0.00E+00	0.00E+00	0.00E+00	0.00E+00	0.00E+00	0.00E+00	0.00E+00	0.00E+00	0.00E+00	0.00E+00
1111	ALL	SENS	748688.42	4034960.7	3.41E-08	25YrCancer	3.41E-08	0.00E+00	0.00E+00	0.00E+00	0.00E+00	0.00E+00	0.00E+00	0.00E+00	0.00E+00	0.00E+00	0.00E+00	0.00E+00
1112	ALL	SENS	748788.42	4034960.7	3.22E-08	25YrCancer	3.22E-08	0.00E+00	0.00E+00	0.00E+00	0.00E+00	0.00E+00	0.00E+00	0.00E+00	0.00E+00	0.00E+00	0.00E+00	0.00E+00
1113	ALL	SENS	748888.42	4034960.7	3.02E-08	25YrCancer	3.02E-08	0.00E+00	0.00E+00	0.00E+00	0.00E+00	0.00E+00	0.00E+00	0.00E+00	0.00E+00	0.00E+00	0.00E+00	0.00E+00
1114	ALL	SENS	747188.42	4035060.7	1.52E-08	25YrCancer	1.52E-08	0.00E+00	0.00E+00	0.00E+00	0.00E+00	0.00E+00	0.00E+00	0.00E+00	0.00E+00	0.00E+00	0.00E+00	0.00E+00
1115	ALL	SENS	747288.42	4035060.7	1.98E-08	25YrCancer	1.98E-08	0.00E+00	0.00E+00	0.00E+00	0.00E+00	0.00E+00	0.00E+00	0.00E+00	0.00E+00	0.00E+00	0.00E+00	0.00E+00
1116	ALL	SENS	747388.42	4035060.7	2.48E-08	25YrCancer	2.48E-08	0.00E+00	0.00E+00	0.00E+00	0.00E+00	0.00E+00	0.00E+00	0.00E+00	0.00E+00	0.00E+00	0.00E+00	0.00E+00
1117	ALL	SENS	747488.42	4035060.7	2.97E-08	25YrCancer	2.97E-08	0.00E+00	0.00E+00	0.00E+00	0.00E+00	0.00E+00	0.00E+00	0.00E+00	0.00E+00	0.00E+00	0.00E+00	0.00E+00
1118	ALL	SENS	747588.42	4035060.7	3.42E-08	25YrCancer	3.42E-08	0.00E+00	0.00E+00	0.00E+00	0.00E+00	0.00E+00	0.00E+00	0.00E+00	0.00E+00	0.00E+00	0.00E+00	0.00E+00
1119	ALL	SENS	747688.42	4035060.7	3.80E-08	25YrCancer	3.80E-08	0.00E+00	0.00E+00	0.00E+00	0.00E+00	0.00E+00	0.00E+00	0.00E+00	0.00E+00	0.00E+00	0.00E+00	0.00E+00
1120	ALL	SENS	747788.42	4035060.7	4.11E-08	25YrCancer	4.11E-08	0.00E+00	0.00E+00	0.00E+00	0.00E+00	0.00E+00	0.00E+00	0.00E+00	0.00E+00	0.00E+00	0.00E+00	0.00E+00

1121	ALL	SENS	747888.42	4035060.7	4.35E-08	25YrCancer	4.35E-08	0.00E+00	0.00E+00	0.00E+00	0.00E+00	0.00E+00	0.00E+00	0.00E+00	0.00E+00	0.00E+00	0.00E+00	0.00E+00
1122	ALL	SENS	747988.42	4035060.7	4.47E-08	25YrCancer	4.47E-08	0.00E+00	0.00E+00	0.00E+00	0.00E+00	0.00E+00	0.00E+00	0.00E+00	0.00E+00	0.00E+00	0.00E+00	0.00E+00
1123	ALL	SENS	748088.42	4035060.7	4.54E-08	25YrCancer	4.54E-08	0.00E+00	0.00E+00	0.00E+00	0.00E+00	0.00E+00	0.00E+00	0.00E+00	0.00E+00	0.00E+00	0.00E+00	0.00E+00
1124	ALL	SENS	748188.42	4035060.7	4.51E-08	25YrCancer	4.51E-08	0.00E+00	0.00E+00	0.00E+00	0.00E+00	0.00E+00	0.00E+00	0.00E+00	0.00E+00	0.00E+00	0.00E+00	0.00E+00
1125	ALL	SENS	748288.42	4035060.7	4.40E-08	25YrCancer	4.40E-08	0.00E+00	0.00E+00	0.00E+00	0.00E+00	0.00E+00	0.00E+00	0.00E+00	0.00E+00	0.00E+00	0.00E+00	0.00E+00
1126	ALL	SENS	748388.42	4035060.7	4.22E-08	25YrCancer	4.22E-08	0.00E+00	0.00E+00	0.00E+00	0.00E+00	0.00E+00	0.00E+00	0.00E+00	0.00E+00	0.00E+00	0.00E+00	0.00E+00
1127	ALL	SENS	748488.42	4035060.7	4.00E-08	25YrCancer	4.00E-08	0.00E+00	0.00E+00	0.00E+00	0.00E+00	0.00E+00	0.00E+00	0.00E+00	0.00E+00	0.00E+00	0.00E+00	0.00E+00
1128	ALL	SENS	748588.42	4035060.7	3.76E-08	25YrCancer	3.76E-08	0.00E+00	0.00E+00	0.00E+00	0.00E+00	0.00E+00	0.00E+00	0.00E+00	0.00E+00	0.00E+00	0.00E+00	0.00E+00
1129	ALL	SENS	748688.42	4035060.7	3.51E-08	25YrCancer	3.51E-08	0.00E+00	0.00E+00	0.00E+00	0.00E+00	0.00E+00	0.00E+00	0.00E+00	0.00E+00	0.00E+00	0.00E+00	0.00E+00
1130	ALL	SENS	748788.42	4035060.7	3.27E-08	25YrCancer	3.27E-08	0.00E+00	0.00E+00	0.00E+00	0.00E+00	0.00E+00	0.00E+00	0.00E+00	0.00E+00	0.00E+00	0.00E+00	0.00E+00
1131	ALL	SENS	748888.42	4035060.7	3.03E-08	25YrCancer	3.03E-08	0.00E+00	0.00E+00	0.00E+00	0.00E+00	0.00E+00	0.00E+00	0.00E+00	0.00E+00	0.00E+00	0.00E+00	0.00E+00
1132	ALL	SENS	747188.42	4035160.7	1.76E-08	25YrCancer	1.76E-08	0.00E+00	0.00E+00	0.00E+00	0.00E+00	0.00E+00	0.00E+00	0.00E+00	0.00E+00	0.00E+00	0.00E+00	0.00E+00
1133	ALL	SENS	747288.42	4035160.7	2.37E-08	25YrCancer	2.37E-08	0.00E+00	0.00E+00	0.00E+00	0.00E+00	0.00E+00	0.00E+00	0.00E+00	0.00E+00	0.00E+00	0.00E+00	0.00E+00
1134	ALL	SENS	747388.42	4035160.7	3.01E-08	25YrCancer	3.01E-08	0.00E+00	0.00E+00	0.00E+00	0.00E+00	0.00E+00	0.00E+00	0.00E+00	0.00E+00	0.00E+00	0.00E+00	0.00E+00
1135	ALL	SENS	747488.42	4035160.7	3.63E-08	25YrCancer	3.63E-08	0.00E+00	0.00E+00	0.00E+00	0.00E+00	0.00E+00	0.00E+00	0.00E+00	0.00E+00	0.00E+00	0.00E+00	0.00E+00
1136	ALL	SENS	748388.42	4035160.7	4.52E-08	25YrCancer	4.52E-08	0.00E+00	0.00E+00	0.00E+00	0.00E+00	0.00E+00	0.00E+00	0.00E+00	0.00E+00	0.00E+00	0.00E+00	0.00E+00
1137	ALL	SENS	748488.42	4035160.7	4.19E-08	25YrCancer	4.19E-08	0.00E+00	0.00E+00	0.00E+00	0.00E+00	0.00E+00	0.00E+00	0.00E+00	0.00E+00	0.00E+00	0.00E+00	0.00E+00
1138	ALL	SENS	748588.42	4035160.7	3.87E-08	25YrCancer	3.87E-08	0.00E+00	0.00E+00	0.00E+00	0.00E+00	0.00E+00	0.00E+00	0.00E+00	0.00E+00	0.00E+00	0.00E+00	0.00E+00
1139	ALL	SENS	748688.42	4035160.7	3.55E-08	25YrCancer	3.55E-08	0.00E+00	0.00E+00	0.00E+00	0.00E+00	0.00E+00	0.00E+00	0.00E+00	0.00E+00	0.00E+00	0.00E+00	0.00E+00
1140	ALL	SENS	748788.42	4035160.7	3.26E-08	25YrCancer	3.26E-08	0.00E+00	0.00E+00	0.00E+00	0.00E+00	0.00E+00	0.00E+00	0.00E+00	0.00E+00	0.00E+00	0.00E+00	0.00E+00
1141	ALL	SENS	748888.42	4035160.7	3.00E-08	25YrCancer	3.00E-08	0.00E+00	0.00E+00	0.00E+00	0.00E+00	0.00E+00	0.00E+00	0.00E+00	0.00E+00	0.00E+00	0.00E+00	0.00E+00
1142	ALL	SENS	747188.42	4035260.7	2.08E-08	25YrCancer	2.08E-08	0.00E+00	0.00E+00	0.00E+00	0.00E+00	0.00E+00	0.00E+00	0.00E+00	0.00E+00	0.00E+00	0.00E+00	0.00E+00
1143	ALL	SENS	747288.42	4035260.7	2.89E-08	25YrCancer	2.89E-08	0.00E+00	0.00E+00	0.00E+00	0.00E+00	0.00E+00	0.00E+00	0.00E+00	0.00E+00	0.00E+00	0.00E+00	0.00E+00
1144	ALL	SENS	747388.42	4035260.7	3.74E-08	25YrCancer	3.74E-08	0.00E+00	0.00E+00	0.00E+00	0.00E+00	0.00E+00	0.00E+00	0.00E+00	0.00E+00	0.00E+00	0.00E+00	0.00E+00
1145	ALL	SENS	747488.42	4035260.7	4.55E-08	25YrCancer	4.55E-08	0.00E+00	0.00E+00	0.00E+00	0.00E+00	0.00E+00	0.00E+00	0.00E+00	0.00E+00	0.00E+00	0.00E+00	0.00E+00
1146	ALL	SENS	748388.42	4035260.7	4.69E-08	25YrCancer	4.69E-08	0.00E+00	0.00E+00	0.00E+00	0.00E+00	0.00E+00	0.00E+00	0.00E+00	0.00E+00	0.00E+00	0.00E+00	0.00E+00
1147	ALL	SENS	748488.42	4035260.7	4.26E-08	25YrCancer	4.26E-08	0.00E+00	0.00E+00	0.00E+00	0.00E+00	0.00E+00	0.00E+00	0.00E+00	0.00E+00	0.00E+00	0.00E+00	0.00E+00
1148	ALL	SENS	748588.42	4035260.7	3.86E-08	25YrCancer	3.86E-08	0.00E+00	0.00E+00	0.00E+00	0.00E+00	0.00E+00	0.00E+00	0.00E+00	0.00E+00	0.00E+00	0.00E+00	0.00E+00
1149	ALL	SENS	748688.42	4035260.7	3.50E-08	25YrCancer	3.50E-08	0.00E+00	0.00E+00	0.00E+00	0.00E+00	0.00E+00	0.00E+00	0.00E+00	0.00E+00	0.00E+00	0.00E+00	0.00E+00
1150	ALL	SENS	748788.42	4035260.7	3.19E-08	25YrCancer	3.19E-08	0.00E+00	0.00E+00	0.00E+00	0.00E+00	0.00E+00	0.00E+00	0.00E+00	0.00E+00	0.00E+00	0.00E+00	0.00E+00
1151	ALL	SENS	748888.42	4035260.7	2.91E-08	25YrCancer	2.91E-08	0.00E+00	0.00E+00	0.00E+00	0.00E+00	0.00E+00	0.00E+00	0.00E+00	0.00E+00	0.00E+00	0.00E+00	0.00E+00
1152	ALL	SENS	747188.42	4035360.7	2.52E-08	25YrCancer	2.52E-08	0.00E+00	0.00E+00	0.00E+00	0.00E+00	0.00E+00	0.00E+00	0.00E+00	0.00E+00	0.00E+00	0.00E+00	0.00E+00
1153	ALL	SENS	747288.42	4035360.7	3.65E-08	25YrCancer	3.65E-08	0.00E+00	0.00E+00	0.00E+00	0.00E+00	0.00E+00	0.00E+00	0.00E+00	0.00E+00	0.00E+00	0.00E+00	0.00E+00
1154	ALL	SENS	747388.42	4035360.7	4.82E-08	25YrCancer	4.82E-08	0.00E+00	0.00E+00	0.00E+00	0.00E+00	0.00E+00	0.00E+00	0.00E+00	0.00E+00	0.00E+00	0.00E+00	0.00E+00
1155	ALL	SENS	747488.42	4035360.7	5.88E-08	25YrCancer	5.88E-08	0.00E+00	0.00E+00	0.00E+00	0.00E+00	0.00E+00	0.00E+00	0.00E+00	0.00E+00	0.00E+00	0.00E+00	0.00E+00
1156	ALL	SENS	748388.42	4035360.7	4.71E-08	25YrCancer	4.71E-08	0.00E+00	0.00E+00	0.00E+00	0.00E+00	0.00E+00	0.00E+00	0.00E+00	0.00E+00	0.00E+00	0.00E+00	0.00E+00
1157	ALL	SENS	748488.42	4035360.7	4.21E-08	25YrCancer	4.21E-08	0.00E+00	0.00E+00	0.00E+00	0.00E+00	0.00E+00	0.00E+00	0.00E+00	0.00E+00	0.00E+00	0.00E+00	0.00E+00
1158	ALL	SENS	748588.42	4035360.7	3.77E-08	25YrCancer	3.77E-08	0.00E+00	0.00E+00	0.00E+00	0.00E+00	0.00E+00	0.00E+00	0.00E+00	0.00E+00	0.00E+00	0.00E+00	0.00E+00
1159	ALL	SENS	748688.42	4035360.7	3.39E-08	25YrCancer	3.39E-08	0.00E+00	0.00E+00	0.00E+00	0.00E+00	0.00E+00	0.00E+00	0.00E+00	0.00E+00	0.00E+00	0.00E+00	0.00E+00
1160	ALL	SENS	748788.42	4035360.7	3.06E-08	25YrCancer	3.06E-08	0.00E+00	0.00E+00	0.00E+00	0.00E+00	0.00E+00	0.00E+00	0.00E+00	0.00E+00	0.00E+00	0.00E+00	0.00E+00
1161	ALL	SENS	748888.42	4035360.7	2.79E-08	25YrCancer	2.79E-08	0.00E+00	0.00E+00	0.00E+00	0.00E+00	0.00E+00	0.00E+00	0.00E+00	0.00E+00	0.00E+00	0.00E+00	0.00E+00
1162	ALL	SENS	747188.42	4035460.7	3.19E-08	25YrCancer	3.19E-08	0.00E+00	0.00E+00	0.00E+00	0.00E+00	0.00E+00	0.00E+00	0.00E+00	0.00E+00	0.00E+00	0.00E+00	0.00E+00
1163	ALL	SENS	747288.42	4035460.7	4.85E-08	25YrCancer	4.85E-08	0.00E+00	0.00E+00	0.00E+00	0.00E+00	0.00E+00	0.00E+00	0.00E+00	0.00E+00	0.00E+00	0.00E+00	0.00E+00
1164	ALL	SENS	747388.42	4035460.7	6.51E-08	25YrCancer	6.51E-08	0.00E+00	0.00E+00	0.00E+00	0.00E+00	0.00E+00	0.00E+00	0.00E+00	0.00E+00	0.00E+00	0.00E+00	0.00E+00
1165	ALL	SENS	747488.42	4035460.7	7.88E-08	25YrCancer	7.88E-08	0.00E+00	0.00E+00	0.00E+00	0.00E+00	0.00E+00	0.00E+00	0.00E+00	0.00E+00	0.00E+00	0.00E+00	0.00E+00
1166	ALL	SENS	748388.42	4035460.7	4.59E-08	25YrCancer	4.59E-08	0.00E+00	0.00E+00	0.00E+00	0.00E+00	0.00E+00	0.00E+00	0.00E+00	0.00E+00	0.00E+00	0.00E+00	0.00E+00
1167	ALL	SENS	748488.42	4035460.7	4.05E-08	25YrCancer	4.05E-08	0.00E+00	0.00E+00	0.00E+00	0.00E+00	0.00E+00	0.00E+00	0.00E+00	0.00E+00	0.00E+00	0.00E+00	0.00E+00
1168	ALL	SENS	748588.42	4035460.7	3.59E-08	25YrCancer	3.59E-08	0.00E+00	0.00E+00	0.00E+00	0.00E+00	0.00E+00	0.00E+00	0.00E+00	0.00E+00	0.00E+00	0.00E+00	0.00E+00
1169	ALL	SENS	748688.42	4035460.7	3.22E-08	25YrCancer	3.22E-08	0.00E+00	0.00E+00	0.00E+00	0.00E+00	0.00E+00	0.00E+00	0.00E+00	0.00E+00	0.00E+00	0.00E+00	0.00E+00
1170	ALL	SENS	748788.42	4035460.7	2.90E-08	25YrCancer	2.90E-08	0.00E+00	0.00E+00	0.00E+00	0.00E+00	0.00E+00	0.00E+00	0.00E+00	0.00E+00	0.00E+00	0.00E+00	0.00E+00
1171	ALL	SENS	748888.42	4035460.7	2.64E-08	25YrCancer	2.64E-08	0.00E+00	0.00E+00	0.00E+00	0.00E+00	0.00E+00	0.00E+00	0.00E+00	0.00E+00	0.00E+00	0.00E+00	0.00E+00

1172	ALL	SENS	746388.42	4035560.7	6.11E-09	25YrCancer	6.11E-09	0.00E+00	0.00E+00	0.00E+00	0.00E+00	0.00E+00	0.00E+00	0.00E+00	0.00E+00	0.00E+00	0.00E+00	0.00E+00
1173	ALL	SENS	746488.42	4035560.7	6.71E-09	25YrCancer	6.71E-09	0.00E+00	0.00E+00	0.00E+00	0.00E+00	0.00E+00	0.00E+00	0.00E+00	0.00E+00	0.00E+00	0.00E+00	0.00E+00
1174	ALL	SENS	746588.42	4035560.7	7.43E-09	25YrCancer	7.43E-09	0.00E+00	0.00E+00	0.00E+00	0.00E+00	0.00E+00	0.00E+00	0.00E+00	0.00E+00	0.00E+00	0.00E+00	0.00E+00
1175	ALL	SENS	746688.42	4035560.7	8.20E-09	25YrCancer	8.20E-09	0.00E+00	0.00E+00	0.00E+00	0.00E+00	0.00E+00	0.00E+00	0.00E+00	0.00E+00	0.00E+00	0.00E+00	0.00E+00
1176	ALL	SENS	746788.42	4035560.7	9.57E-09	25YrCancer	9.57E-09	0.00E+00	0.00E+00	0.00E+00	0.00E+00	0.00E+00	0.00E+00	0.00E+00	0.00E+00	0.00E+00	0.00E+00	0.00E+00
1177	ALL	SENS	746888.42	4035560.7	1.18E-08	25YrCancer	1.18E-08	0.00E+00	0.00E+00	0.00E+00	0.00E+00	0.00E+00	0.00E+00	0.00E+00	0.00E+00	0.00E+00	0.00E+00	0.00E+00
1178	ALL	SENS	746988.42	4035560.7	1.53E-08	25YrCancer	1.53E-08	0.00E+00	0.00E+00	0.00E+00	0.00E+00	0.00E+00	0.00E+00	0.00E+00	0.00E+00	0.00E+00	0.00E+00	0.00E+00
1179	ALL	SENS	747088.42	4035560.7	2.36E-08	25YrCancer	2.36E-08	0.00E+00	0.00E+00	0.00E+00	0.00E+00	0.00E+00	0.00E+00	0.00E+00	0.00E+00	0.00E+00	0.00E+00	0.00E+00
1180	ALL	SENS	747188.42	4035560.7	4.25E-08	25YrCancer	4.25E-08	0.00E+00	0.00E+00	0.00E+00	0.00E+00	0.00E+00	0.00E+00	0.00E+00	0.00E+00	0.00E+00	0.00E+00	0.00E+00
1181	ALL	SENS	747288.42	4035560.7	6.84E-08	25YrCancer	6.84E-08	0.00E+00	0.00E+00	0.00E+00	0.00E+00	0.00E+00	0.00E+00	0.00E+00	0.00E+00	0.00E+00	0.00E+00	0.00E+00
1182	ALL	SENS	747388.42	4035560.7	9.26E-08	25YrCancer	9.26E-08	0.00E+00	0.00E+00	0.00E+00	0.00E+00	0.00E+00	0.00E+00	0.00E+00	0.00E+00	0.00E+00	0.00E+00	0.00E+00
1183	ALL	SENS	747488.42	4035560.7	1.10E-07	25YrCancer	1.10E-07	0.00E+00	0.00E+00	0.00E+00	0.00E+00	0.00E+00	0.00E+00	0.00E+00	0.00E+00	0.00E+00	0.00E+00	0.00E+00
1184	ALL	SENS	748388.42	4035560.7	4.33E-08	25YrCancer	4.33E-08	0.00E+00	0.00E+00	0.00E+00	0.00E+00	0.00E+00	0.00E+00	0.00E+00	0.00E+00	0.00E+00	0.00E+00	0.00E+00
1185	ALL	SENS	748488.42	4035560.7	3.80E-08	25YrCancer	3.80E-08	0.00E+00	0.00E+00	0.00E+00	0.00E+00	0.00E+00	0.00E+00	0.00E+00	0.00E+00	0.00E+00	0.00E+00	0.00E+00
1186	ALL	SENS	748588.42	4035560.7	3.36E-08	25YrCancer	3.36E-08	0.00E+00	0.00E+00	0.00E+00	0.00E+00	0.00E+00	0.00E+00	0.00E+00	0.00E+00	0.00E+00	0.00E+00	0.00E+00
1187	ALL	SENS	748688.42	4035560.7	3.01E-08	25YrCancer	3.01E-08	0.00E+00	0.00E+00	0.00E+00	0.00E+00	0.00E+00	0.00E+00	0.00E+00	0.00E+00	0.00E+00	0.00E+00	0.00E+00
1188	ALL	SENS	748788.42	4035560.7	2.71E-08	25YrCancer	2.71E-08	0.00E+00	0.00E+00	0.00E+00	0.00E+00	0.00E+00	0.00E+00	0.00E+00	0.00E+00	0.00E+00	0.00E+00	0.00E+00
1189	ALL	SENS	748888.42	4035560.7	2.47E-08	25YrCancer	2.47E-08	0.00E+00	0.00E+00	0.00E+00	0.00E+00	0.00E+00	0.00E+00	0.00E+00	0.00E+00	0.00E+00	0.00E+00	0.00E+00
1190	ALL	SENS	746388.42	4035660.7	6.31E-09	25YrCancer	6.31E-09	0.00E+00	0.00E+00	0.00E+00	0.00E+00	0.00E+00	0.00E+00	0.00E+00	0.00E+00	0.00E+00	0.00E+00	0.00E+00
1191	ALL	SENS	746488.42	4035660.7	6.93E-09	25YrCancer	6.93E-09	0.00E+00	0.00E+00	0.00E+00	0.00E+00	0.00E+00	0.00E+00	0.00E+00	0.00E+00	0.00E+00	0.00E+00	0.00E+00
1192	ALL	SENS	746588.42	4035660.7	7.79E-09	25YrCancer	7.79E-09	0.00E+00	0.00E+00	0.00E+00	0.00E+00	0.00E+00	0.00E+00	0.00E+00	0.00E+00	0.00E+00	0.00E+00	0.00E+00
1193	ALL	SENS	746688.42	4035660.7	8.87E-09	25YrCancer	8.87E-09	0.00E+00	0.00E+00	0.00E+00	0.00E+00	0.00E+00	0.00E+00	0.00E+00	0.00E+00	0.00E+00	0.00E+00	0.00E+00
1194	ALL	SENS	746788.42	4035660.7	1.04E-08	25YrCancer	1.04E-08	0.00E+00	0.00E+00	0.00E+00	0.00E+00	0.00E+00	0.00E+00	0.00E+00	0.00E+00	0.00E+00	0.00E+00	0.00E+00
1195	ALL	SENS	746888.42	4035660.7	1.29E-08	25YrCancer	1.29E-08	0.00E+00	0.00E+00	0.00E+00	0.00E+00	0.00E+00	0.00E+00	0.00E+00	0.00E+00	0.00E+00	0.00E+00	0.00E+00
1196	ALL	SENS	746988.42	4035660.7	1.74E-08	25YrCancer	1.74E-08	0.00E+00	0.00E+00	0.00E+00	0.00E+00	0.00E+00	0.00E+00	0.00E+00	0.00E+00	0.00E+00	0.00E+00	0.00E+00
1197	ALL	SENS	747088.42	4035660.7	2.95E-08	25YrCancer	2.95E-08	0.00E+00	0.00E+00	0.00E+00	0.00E+00	0.00E+00	0.00E+00	0.00E+00	0.00E+00	0.00E+00	0.00E+00	0.00E+00
1198	ALL	SENS	747188.42	4035660.7	6.14E-08	25YrCancer	6.14E-08	0.00E+00	0.00E+00	0.00E+00	0.00E+00	0.00E+00	0.00E+00	0.00E+00	0.00E+00	0.00E+00	0.00E+00	0.00E+00
1199	ALL	SENS	747288.42	4035660.7	1.05E-07	25YrCancer	1.05E-07	0.00E+00	0.00E+00	0.00E+00	0.00E+00	0.00E+00	0.00E+00	0.00E+00	0.00E+00	0.00E+00	0.00E+00	0.00E+00
1200	ALL	SENS	747388.42	4035660.7	1.40E-07	25YrCancer	1.40E-07	0.00E+00	0.00E+00	0.00E+00	0.00E+00	0.00E+00	0.00E+00	0.00E+00	0.00E+00	0.00E+00	0.00E+00	0.00E+00
1201	ALL	SENS	747488.42	4035660.7	1.57E-07	25YrCancer	1.57E-07	0.00E+00	0.00E+00	0.00E+00	0.00E+00	0.00E+00	0.00E+00	0.00E+00	0.00E+00	0.00E+00	0.00E+00	0.00E+00
1202	ALL	SENS	748388.42	4035660.7	3.98E-08	25YrCancer	3.98E-08	0.00E+00	0.00E+00	0.00E+00	0.00E+00	0.00E+00	0.00E+00	0.00E+00	0.00E+00	0.00E+00	0.00E+00	0.00E+00
1203	ALL	SENS	748488.42	4035660.7	3.49E-08	25YrCancer	3.49E-08	0.00E+00	0.00E+00	0.00E+00	0.00E+00	0.00E+00	0.00E+00	0.00E+00	0.00E+00	0.00E+00	0.00E+00	0.00E+00
1204	ALL	SENS	748588.42	4035660.7	3.09E-08	25YrCancer	3.09E-08	0.00E+00	0.00E+00	0.00E+00	0.00E+00	0.00E+00	0.00E+00	0.00E+00	0.00E+00	0.00E+00	0.00E+00	0.00E+00
1205	ALL	SENS	748688.42	4035660.7	2.77E-08	25YrCancer	2.77E-08	0.00E+00	0.00E+00	0.00E+00	0.00E+00	0.00E+00	0.00E+00	0.00E+00	0.00E+00	0.00E+00	0.00E+00	0.00E+00
1206	ALL	SENS	748788.42	4035660.7	2.50E-08	25YrCancer	2.50E-08	0.00E+00	0.00E+00	0.00E+00	0.00E+00	0.00E+00	0.00E+00	0.00E+00	0.00E+00	0.00E+00	0.00E+00	0.00E+00
1207	ALL	SENS	748888.42	4035660.7	2.29E-08	25YrCancer	2.29E-08	0.00E+00	0.00E+00	0.00E+00	0.00E+00	0.00E+00	0.00E+00	0.00E+00	0.00E+00	0.00E+00	0.00E+00	0.00E+00
1208	ALL	SENS	746388.42	4035760.7	6.61E-09	25YrCancer	6.61E-09	0.00E+00	0.00E+00	0.00E+00	0.00E+00	0.00E+00	0.00E+00	0.00E+00	0.00E+00	0.00E+00	0.00E+00	0.00E+00
1209	ALL	SENS	746488.42	4035760.7	7.28E-09	25YrCancer	7.28E-09	0.00E+00	0.00E+00	0.00E+00	0.00E+00	0.00E+00	0.00E+00	0.00E+00	0.00E+00	0.00E+00	0.00E+00	0.00E+00
1210	ALL	SENS	746588.42	4035760.7	8.24E-09	25YrCancer	8.24E-09	0.00E+00	0.00E+00	0.00E+00	0.00E+00	0.00E+00	0.00E+00	0.00E+00	0.00E+00	0.00E+00	0.00E+00	0.00E+00
1211	ALL	SENS	746688.42	4035760.7	9.57E-09	25YrCancer	9.57E-09	0.00E+00	0.00E+00	0.00E+00	0.00E+00	0.00E+00	0.00E+00	0.00E+00	0.00E+00	0.00E+00	0.00E+00	0.00E+00
1212	ALL	SENS	746788.42	4035760.7	1.18E-08	25YrCancer	1.18E-08	0.00E+00	0.00E+00	0.00E+00	0.00E+00	0.00E+00	0.00E+00	0.00E+00	0.00E+00	0.00E+00	0.00E+00	0.00E+00
1213	ALL	SENS	746888.42	4035760.7	1.48E-08	25YrCancer	1.48E-08	0.00E+00	0.00E+00	0.00E+00	0.00E+00	0.00E+00	0.00E+00	0.00E+00	0.00E+00	0.00E+00	0.00E+00	0.00E+00
1214	ALL	SENS	746988.42	4035760.7	2.03E-08	25YrCancer	2.03E-08	0.00E+00	0.00E+00	0.00E+00	0.00E+00	0.00E+00	0.00E+00	0.00E+00	0.00E+00	0.00E+00	0.00E+00	0.00E+00
1215	ALL	SENS	747088.42	4035760.7	3.86E-08	25YrCancer	3.86E-08	0.00E+00	0.00E+00	0.00E+00	0.00E+00	0.00E+00	0.00E+00	0.00E+00	0.00E+00	0.00E+00	0.00E+00	0.00E+00
1216	ALL	SENS	747188.42	4035760.7	9.97E-08	25YrCancer	9.97E-08	0.00E+00	0.00E+00	0.00E+00	0.00E+00	0.00E+00	0.00E+00	0.00E+00	0.00E+00	0.00E+00	0.00E+00	0.00E+00
1217	ALL	SENS	747288.42	4035760.7	1.79E-07	25YrCancer	1.79E-07	0.00E+00	0.00E+00	0.00E+00	0.00E+00	0.00E+00	0.00E+00	0.00E+00	0.00E+00	0.00E+00	0.00E+00	0.00E+00
1218	ALL	SENS	747388.42	4035760.7	2.23E-07	25YrCancer	2.23E-07	0.00E+00	0.00E+00	0.00E+00	0.00E+00	0.00E+00	0.00E+00	0.00E+00	0.00E+00	0.00E+00	0.00E+00	0.00E+00
1219	ALL	SENS	747488.42	4035760.7	2.17E-07	25YrCancer	2.17E-07	0.00E+00	0.00E+00	0.00E+00	0.00E+00	0.00E+00	0.00E+00	0.00E+00	0.00E+00	0.00E+00	0.00E+00	0.00E+00
1220	ALL	SENS	748388.42	4035760.7	3.56E-08	25YrCancer	3.56E-08	0.00E+00	0.00E+00	0.00E+00	0.00E+00	0.00E+00	0.00E+00	0.00E+00	0.00E+00	0.00E+00	0.00E+00	0.00E+00
1221	ALL	SENS	748488.42	4035760.7	3.13E-08	25YrCancer	3.13E-08	0.00E+00	0.00E+00	0.00E+00	0.00E+00	0.00E+00	0.00E+00	0.00E+00	0.00E+00	0.00E+00	0.00E+00	0.00E+00
1222	ALL	SENS	748588.42	4035760.7	2.78E-08	25YrCancer	2.78E-08	0.00E+00	0.00E+00	0.00E+00	0.00E+00	0.00E+00	0.00E+00	0.00E+00	0.00E+00	0.00E+00	0.00E+00	0.00E+00

1223	ALL	SENS	748688.42	4035760.7	2.50E-08	25YrCancer	2.50E-08	0.00E+00	0.00E+00	0.00E+00	0.00E+00	0.00E+00	0.00E+00	0.00E+00	0.00E+00	0.00E+00	0.00E+00	0.00E+00
1224	ALL	SENS	748788.42	4035760.7	2.28E-08	25YrCancer	2.28E-08	0.00E+00	0.00E+00	0.00E+00	0.00E+00	0.00E+00	0.00E+00	0.00E+00	0.00E+00	0.00E+00	0.00E+00	0.00E+00
1225	ALL	SENS	748888.42	4035760.7	2.09E-08	25YrCancer	2.09E-08	0.00E+00	0.00E+00	0.00E+00	0.00E+00	0.00E+00	0.00E+00	0.00E+00	0.00E+00	0.00E+00	0.00E+00	0.00E+00
1226	ALL	SENS	746388.42	4035860.7	7.01E-09	25YrCancer	7.01E-09	0.00E+00	0.00E+00	0.00E+00	0.00E+00	0.00E+00	0.00E+00	0.00E+00	0.00E+00	0.00E+00	0.00E+00	0.00E+00
1227	ALL	SENS	746488.42	4035860.7	7.75E-09	25YrCancer	7.75E-09	0.00E+00	0.00E+00	0.00E+00	0.00E+00	0.00E+00	0.00E+00	0.00E+00	0.00E+00	0.00E+00	0.00E+00	0.00E+00
1228	ALL	SENS	746588.42	4035860.7	8.91E-09	25YrCancer	8.91E-09	0.00E+00	0.00E+00	0.00E+00	0.00E+00	0.00E+00	0.00E+00	0.00E+00	0.00E+00	0.00E+00	0.00E+00	0.00E+00
1229	ALL	SENS	746688.42	4035860.7	1.07E-08	25YrCancer	1.07E-08	0.00E+00	0.00E+00	0.00E+00	0.00E+00	0.00E+00	0.00E+00	0.00E+00	0.00E+00	0.00E+00	0.00E+00	0.00E+00
1230	ALL	SENS	746788.42	4035860.7	1.37E-08	25YrCancer	1.37E-08	0.00E+00	0.00E+00	0.00E+00	0.00E+00	0.00E+00	0.00E+00	0.00E+00	0.00E+00	0.00E+00	0.00E+00	0.00E+00
1231	ALL	SENS	746888.42	4035860.7	1.84E-08	25YrCancer	1.84E-08	0.00E+00	0.00E+00	0.00E+00	0.00E+00	0.00E+00	0.00E+00	0.00E+00	0.00E+00	0.00E+00	0.00E+00	0.00E+00
1232	ALL	SENS	746988.42	4035860.7	2.56E-08	25YrCancer	2.56E-08	0.00E+00	0.00E+00	0.00E+00	0.00E+00	0.00E+00	0.00E+00	0.00E+00	0.00E+00	0.00E+00	0.00E+00	0.00E+00
1233	ALL	SENS	747088.42	4035860.7	5.37E-08	25YrCancer	5.37E-08	0.00E+00	0.00E+00	0.00E+00	0.00E+00	0.00E+00	0.00E+00	0.00E+00	0.00E+00	0.00E+00	0.00E+00	0.00E+00
1234	ALL	SENS	747188.42	4035860.7	1.96E-07	25YrCancer	1.96E-07	0.00E+00	0.00E+00	0.00E+00	0.00E+00	0.00E+00	0.00E+00	0.00E+00	0.00E+00	0.00E+00	0.00E+00	0.00E+00
1235	ALL	SENS	747288.42	4035860.7	3.44E-07	25YrCancer	3.44E-07	0.00E+00	0.00E+00	0.00E+00	0.00E+00	0.00E+00	0.00E+00	0.00E+00	0.00E+00	0.00E+00	0.00E+00	0.00E+00
1236	ALL	SENS	747388.42	4035860.7	3.39E-07	25YrCancer	3.39E-07	0.00E+00	0.00E+00	0.00E+00	0.00E+00	0.00E+00	0.00E+00	0.00E+00	0.00E+00	0.00E+00	0.00E+00	0.00E+00
1237	ALL	SENS	747488.42	4035860.7	2.56E-07	25YrCancer	2.56E-07	0.00E+00	0.00E+00	0.00E+00	0.00E+00	0.00E+00	0.00E+00	0.00E+00	0.00E+00	0.00E+00	0.00E+00	0.00E+00
1238	ALL	SENS	748388.42	4035860.7	3.10E-08	25YrCancer	3.10E-08	0.00E+00	0.00E+00	0.00E+00	0.00E+00	0.00E+00	0.00E+00	0.00E+00	0.00E+00	0.00E+00	0.00E+00	0.00E+00
1239	ALL	SENS	748488.42	4035860.7	2.74E-08	25YrCancer	2.74E-08	0.00E+00	0.00E+00	0.00E+00	0.00E+00	0.00E+00	0.00E+00	0.00E+00	0.00E+00	0.00E+00	0.00E+00	0.00E+00
1240	ALL	SENS	748588.42	4035860.7	2.45E-08	25YrCancer	2.45E-08	0.00E+00	0.00E+00	0.00E+00	0.00E+00	0.00E+00	0.00E+00	0.00E+00	0.00E+00	0.00E+00	0.00E+00	0.00E+00
1241	ALL	SENS	748688.42	4035860.7	2.22E-08	25YrCancer	2.22E-08	0.00E+00	0.00E+00	0.00E+00	0.00E+00	0.00E+00	0.00E+00	0.00E+00	0.00E+00	0.00E+00	0.00E+00	0.00E+00
1242	ALL	SENS	748788.42	4035860.7	2.03E-08	25YrCancer	2.03E-08	0.00E+00	0.00E+00	0.00E+00	0.00E+00	0.00E+00	0.00E+00	0.00E+00	0.00E+00	0.00E+00	0.00E+00	0.00E+00
1243	ALL	SENS	748888.42	4035860.7	1.88E-08	25YrCancer	1.88E-08	0.00E+00	0.00E+00	0.00E+00	0.00E+00	0.00E+00	0.00E+00	0.00E+00	0.00E+00	0.00E+00	0.00E+00	0.00E+00
1244	ALL	SENS	746388.42	4035960.7	7.63E-09	25YrCancer	7.63E-09	0.00E+00	0.00E+00	0.00E+00	0.00E+00	0.00E+00	0.00E+00	0.00E+00	0.00E+00	0.00E+00	0.00E+00	0.00E+00
1245	ALL	SENS	746488.42	4035960.7	8.45E-09	25YrCancer	8.45E-09	0.00E+00	0.00E+00	0.00E+00	0.00E+00	0.00E+00	0.00E+00	0.00E+00	0.00E+00	0.00E+00	0.00E+00	0.00E+00
1246	ALL	SENS	746588.42	4035960.7	9.72E-09	25YrCancer	9.72E-09	0.00E+00	0.00E+00	0.00E+00	0.00E+00	0.00E+00	0.00E+00	0.00E+00	0.00E+00	0.00E+00	0.00E+00	0.00E+00
1247	ALL	SENS	746688.42	4035960.7	1.19E-08	25YrCancer	1.19E-08	0.00E+00	0.00E+00	0.00E+00	0.00E+00	0.00E+00	0.00E+00	0.00E+00	0.00E+00	0.00E+00	0.00E+00	0.00E+00
1248	ALL	SENS	748388.42	4035960.7	2.61E-08	25YrCancer	2.61E-08	0.00E+00	0.00E+00	0.00E+00	0.00E+00	0.00E+00	0.00E+00	0.00E+00	0.00E+00	0.00E+00	0.00E+00	0.00E+00
1249	ALL	SENS	748488.42	4035960.7	2.34E-08	25YrCancer	2.34E-08	0.00E+00	0.00E+00	0.00E+00	0.00E+00	0.00E+00	0.00E+00	0.00E+00	0.00E+00	0.00E+00	0.00E+00	0.00E+00
1250	ALL	SENS	748588.42	4035960.7	2.12E-08	25YrCancer	2.12E-08	0.00E+00	0.00E+00	0.00E+00	0.00E+00	0.00E+00	0.00E+00	0.00E+00	0.00E+00	0.00E+00	0.00E+00	0.00E+00
1251	ALL	SENS	748688.42	4035960.7	1.94E-08	25YrCancer	1.94E-08	0.00E+00	0.00E+00	0.00E+00	0.00E+00	0.00E+00	0.00E+00	0.00E+00	0.00E+00	0.00E+00	0.00E+00	0.00E+00
1252	ALL	SENS	748788.42	4035960.7	1.79E-08	25YrCancer	1.79E-08	0.00E+00	0.00E+00	0.00E+00	0.00E+00	0.00E+00	0.00E+00	0.00E+00	0.00E+00	0.00E+00	0.00E+00	0.00E+00
1253	ALL	SENS	748888.42	4035960.7	1.67E-08	25YrCancer	1.67E-08	0.00E+00	0.00E+00	0.00E+00	0.00E+00	0.00E+00	0.00E+00	0.00E+00	0.00E+00	0.00E+00	0.00E+00	0.00E+00
1254	ALL	SENS	746388.42	4036060.7	8.53E-09	25YrCancer	8.53E-09	0.00E+00	0.00E+00	0.00E+00	0.00E+00	0.00E+00	0.00E+00	0.00E+00	0.00E+00	0.00E+00	0.00E+00	0.00E+00
1255	ALL	SENS	746488.42	4036060.7	9.54E-09	25YrCancer	9.54E-09	0.00E+00	0.00E+00	0.00E+00	0.00E+00	0.00E+00	0.00E+00	0.00E+00	0.00E+00	0.00E+00	0.00E+00	0.00E+00
1256	ALL	SENS	746588.42	4036060.7	1.11E-08	25YrCancer	1.11E-08	0.00E+00	0.00E+00	0.00E+00	0.00E+00	0.00E+00	0.00E+00	0.00E+00	0.00E+00	0.00E+00	0.00E+00	0.00E+00
1257	ALL	SENS	746688.42	4036060.7	1.37E-08	25YrCancer	1.37E-08	0.00E+00	0.00E+00	0.00E+00	0.00E+00	0.00E+00	0.00E+00	0.00E+00	0.00E+00	0.00E+00	0.00E+00	0.00E+00
1258	ALL	SENS	748388.42	4036060.7	2.13E-08	25YrCancer	2.13E-08	0.00E+00	0.00E+00	0.00E+00	0.00E+00	0.00E+00	0.00E+00	0.00E+00	0.00E+00	0.00E+00	0.00E+00	0.00E+00
1259	ALL	SENS	748488.42	4036060.7	1.94E-08	25YrCancer	1.94E-08	0.00E+00	0.00E+00	0.00E+00	0.00E+00	0.00E+00	0.00E+00	0.00E+00	0.00E+00	0.00E+00	0.00E+00	0.00E+00
1260	ALL	SENS	748588.42	4036060.7	1.79E-08	25YrCancer	1.79E-08	0.00E+00	0.00E+00	0.00E+00	0.00E+00	0.00E+00	0.00E+00	0.00E+00	0.00E+00	0.00E+00	0.00E+00	0.00E+00
1261	ALL	SENS	748688.42	4036060.7	1.67E-08	25YrCancer	1.67E-08	0.00E+00	0.00E+00	0.00E+00	0.00E+00	0.00E+00	0.00E+00	0.00E+00	0.00E+00	0.00E+00	0.00E+00	0.00E+00
1262	ALL	SENS	748788.42	4036060.7	1.56E-08	25YrCancer	1.56E-08	0.00E+00	0.00E+00	0.00E+00	0.00E+00	0.00E+00	0.00E+00	0.00E+00	0.00E+00	0.00E+00	0.00E+00	0.00E+00
1263	ALL	SENS	748888.42	4036060.7	1.48E-08	25YrCancer	1.48E-08	0.00E+00	0.00E+00	0.00E+00	0.00E+00	0.00E+00	0.00E+00	0.00E+00	0.00E+00	0.00E+00	0.00E+00	0.00E+00
1264	ALL	SENS	746388.42	4036160.7	9.98E-09	25YrCancer	9.98E-09	0.00E+00	0.00E+00	0.00E+00	0.00E+00	0.00E+00	0.00E+00	0.00E+00	0.00E+00	0.00E+00	0.00E+00	0.00E+00
1265	ALL	SENS	746488.42	4036160.7	1.14E-08	25YrCancer	1.14E-08	0.00E+00	0.00E+00	0.00E+00	0.00E+00	0.00E+00	0.00E+00	0.00E+00	0.00E+00	0.00E+00	0.00E+00	0.00E+00
1266	ALL	SENS	746588.42	4036160.7	1.37E-08	25YrCancer	1.37E-08	0.00E+00	0.00E+00	0.00E+00	0.00E+00	0.00E+00	0.00E+00	0.00E+00	0.00E+00	0.00E+00	0.00E+00	0.00E+00
1267	ALL	SENS	746688.42	4036160.7	1.76E-08	25YrCancer	1.76E-08	0.00E+00	0.00E+00	0.00E+00	0.00E+00	0.00E+00	0.00E+00	0.00E+00	0.00E+00	0.00E+00	0.00E+00	0.00E+00
1268	ALL	SENS	748388.42	4036160.7	1.71E-08	25YrCancer	1.71E-08	0.00E+00	0.00E+00	0.00E+00	0.00E+00	0.00E+00	0.00E+00	0.00E+00	0.00E+00	0.00E+00	0.00E+00	0.00E+00
1269	ALL	SENS	748488.42	4036160.7	1.59E-08	25YrCancer	1.59E-08	0.00E+00	0.00E+00	0.00E+00	0.00E+00	0.00E+00	0.00E+00	0.00E+00	0.00E+00	0.00E+00	0.00E+00	0.00E+00
1270	ALL	SENS	748588.42	4036160.7	1.50E-08	25YrCancer	1.50E-08	0.00E+00	0.00E+00	0.00E+00	0.00E+00	0.00E+00	0.00E+00	0.00E+00	0.00E+00	0.00E+00	0.00E+00	0.00E+00
1271	ALL	SENS	748688.42	4036160.7	1.42E-08	25YrCancer	1.42E-08	0.00E+00	0.00E+00	0.00E+00	0.00E+00	0.00E+00	0.00E+00	0.00E+00	0.00E+00	0.00E+00	0.00E+00	0.00E+00
1272	ALL	SENS	748788.42	4036160.7	1.35E-08	25YrCancer	1.35E-08	0.00E+00	0.00E+00	0.00E+00	0.00E+00	0.00E+00	0.00E+00	0.00E+00	0.00E+00	0.00E+00	0.00E+00	0.00E+00
1273	ALL	SENS	748888.42	4036160.7	1.30E-08	25YrCancer	1.30E-08	0.00E+00	0.00E+00	0.00E+00	0.00E+00	0.00E+00	0.00E+00	0.00E+00	0.00E+00	0.00E+00	0.00E+00	0.00E+00

1274	ALL	SENS	746388.42	4036260.7	1.19E-08	25YrCancer	1.19E-08	0.00E+00	0.00E+00	0.00E+00	0.00E+00	0.00E+00	0.00E+00	0.00E+00	0.00E+00	0.00E+00	0.00E+00	0.00E+00
1275	ALL	SENS	746488.42	4036260.7	1.42E-08	25YrCancer	1.42E-08	0.00E+00	0.00E+00	0.00E+00	0.00E+00	0.00E+00	0.00E+00	0.00E+00	0.00E+00	0.00E+00	0.00E+00	0.00E+00
1276	ALL	SENS	746588.42	4036260.7	1.82E-08	25YrCancer	1.82E-08	0.00E+00	0.00E+00	0.00E+00	0.00E+00	0.00E+00	0.00E+00	0.00E+00	0.00E+00	0.00E+00	0.00E+00	0.00E+00
1277	ALL	SENS	746688.42	4036260.7	2.54E-08	25YrCancer	2.54E-08	0.00E+00	0.00E+00	0.00E+00	0.00E+00	0.00E+00	0.00E+00	0.00E+00	0.00E+00	0.00E+00	0.00E+00	0.00E+00
1278	ALL	SENS	748388.42	4036260.7	1.36E-08	25YrCancer	1.36E-08	0.00E+00	0.00E+00	0.00E+00	0.00E+00	0.00E+00	0.00E+00	0.00E+00	0.00E+00	0.00E+00	0.00E+00	0.00E+00
1279	ALL	SENS	748488.42	4036260.7	1.30E-08	25YrCancer	1.30E-08	0.00E+00	0.00E+00	0.00E+00	0.00E+00	0.00E+00	0.00E+00	0.00E+00	0.00E+00	0.00E+00	0.00E+00	0.00E+00
1280	ALL	SENS	748588.42	4036260.7	1.25E-08	25YrCancer	1.25E-08	0.00E+00	0.00E+00	0.00E+00	0.00E+00	0.00E+00	0.00E+00	0.00E+00	0.00E+00	0.00E+00	0.00E+00	0.00E+00
1281	ALL	SENS	748688.42	4036260.7	1.21E-08	25YrCancer	1.21E-08	0.00E+00	0.00E+00	0.00E+00	0.00E+00	0.00E+00	0.00E+00	0.00E+00	0.00E+00	0.00E+00	0.00E+00	0.00E+00
1282	ALL	SENS	748788.42	4036260.7	1.17E-08	25YrCancer	1.17E-08	0.00E+00	0.00E+00	0.00E+00	0.00E+00	0.00E+00	0.00E+00	0.00E+00	0.00E+00	0.00E+00	0.00E+00	0.00E+00
1283	ALL	SENS	748888.42	4036260.7	1.15E-08	25YrCancer	1.15E-08	0.00E+00	0.00E+00	0.00E+00	0.00E+00	0.00E+00	0.00E+00	0.00E+00	0.00E+00	0.00E+00	0.00E+00	0.00E+00
1284	ALL	SENS	745988.42	4036360.7	8.64E-09	25YrCancer	8.64E-09	0.00E+00	0.00E+00	0.00E+00	0.00E+00	0.00E+00	0.00E+00	0.00E+00	0.00E+00	0.00E+00	0.00E+00	0.00E+00
1285	ALL	SENS	746088.42	4036360.7	9.49E-09	25YrCancer	9.49E-09	0.00E+00	0.00E+00	0.00E+00	0.00E+00	0.00E+00	0.00E+00	0.00E+00	0.00E+00	0.00E+00	0.00E+00	0.00E+00
1286	ALL	SENS	746188.42	4036360.7	1.07E-08	25YrCancer	1.07E-08	0.00E+00	0.00E+00	0.00E+00	0.00E+00	0.00E+00	0.00E+00	0.00E+00	0.00E+00	0.00E+00	0.00E+00	0.00E+00
1287	ALL	SENS	746288.42	4036360.7	1.23E-08	25YrCancer	1.23E-08	0.00E+00	0.00E+00	0.00E+00	0.00E+00	0.00E+00	0.00E+00	0.00E+00	0.00E+00	0.00E+00	0.00E+00	0.00E+00
1288	ALL	SENS	746388.42	4036360.7	1.48E-08	25YrCancer	1.48E-08	0.00E+00	0.00E+00	0.00E+00	0.00E+00	0.00E+00	0.00E+00	0.00E+00	0.00E+00	0.00E+00	0.00E+00	0.00E+00
1289	ALL	SENS	746488.42	4036360.7	1.85E-08	25YrCancer	1.85E-08	0.00E+00	0.00E+00	0.00E+00	0.00E+00	0.00E+00	0.00E+00	0.00E+00	0.00E+00	0.00E+00	0.00E+00	0.00E+00
1290	ALL	SENS	746588.42	4036360.7	2.45E-08	25YrCancer	2.45E-08	0.00E+00	0.00E+00	0.00E+00	0.00E+00	0.00E+00	0.00E+00	0.00E+00	0.00E+00	0.00E+00	0.00E+00	0.00E+00
1291	ALL	SENS	748388.42	4036360.7	1.10E-08	25YrCancer	1.10E-08	0.00E+00	0.00E+00	0.00E+00	0.00E+00	0.00E+00	0.00E+00	0.00E+00	0.00E+00	0.00E+00	0.00E+00	0.00E+00
1292	ALL	SENS	748488.42	4036360.7	1.08E-08	25YrCancer	1.08E-08	0.00E+00	0.00E+00	0.00E+00	0.00E+00	0.00E+00	0.00E+00	0.00E+00	0.00E+00	0.00E+00	0.00E+00	0.00E+00
1293	ALL	SENS	748588.42	4036360.7	1.06E-08	25YrCancer	1.06E-08	0.00E+00	0.00E+00	0.00E+00	0.00E+00	0.00E+00	0.00E+00	0.00E+00	0.00E+00	0.00E+00	0.00E+00	0.00E+00
1294	ALL	SENS	748688.42	4036360.7	1.04E-08	25YrCancer	1.04E-08	0.00E+00	0.00E+00	0.00E+00	0.00E+00	0.00E+00	0.00E+00	0.00E+00	0.00E+00	0.00E+00	0.00E+00	0.00E+00
1295	ALL	SENS	748788.42	4036360.7	1.03E-08	25YrCancer	1.03E-08	0.00E+00	0.00E+00	0.00E+00	0.00E+00	0.00E+00	0.00E+00	0.00E+00	0.00E+00	0.00E+00	0.00E+00	0.00E+00
1296	ALL	SENS	748888.42	4036360.7	1.02E-08	25YrCancer	1.02E-08	0.00E+00	0.00E+00	0.00E+00	0.00E+00	0.00E+00	0.00E+00	0.00E+00	0.00E+00	0.00E+00	0.00E+00	0.00E+00
1297	ALL	SENS	748988.42	4036360.7	1.01E-08	25YrCancer	1.01E-08	0.00E+00	0.00E+00	0.00E+00	0.00E+00	0.00E+00	0.00E+00	0.00E+00	0.00E+00	0.00E+00	0.00E+00	0.00E+00
1298	ALL	SENS	749088.42	4036360.7	1.00E-08	25YrCancer	1.00E-08	0.00E+00	0.00E+00	0.00E+00	0.00E+00	0.00E+00	0.00E+00	0.00E+00	0.00E+00	0.00E+00	0.00E+00	0.00E+00
1299	ALL	SENS	749188.42	4036360.7	1.00E-08	25YrCancer	1.00E-08	0.00E+00	0.00E+00	0.00E+00	0.00E+00	0.00E+00	0.00E+00	0.00E+00	0.00E+00	0.00E+00	0.00E+00	0.00E+00
1300	ALL	SENS	749288.42	4036360.7	9.98E-09	25YrCancer	9.98E-09	0.00E+00	0.00E+00	0.00E+00	0.00E+00	0.00E+00	0.00E+00	0.00E+00	0.00E+00	0.00E+00	0.00E+00	0.00E+00
1301	ALL	SENS	749388.42	4036360.7	9.94E-09	25YrCancer	9.94E-09	0.00E+00	0.00E+00	0.00E+00	0.00E+00	0.00E+00	0.00E+00	0.00E+00	0.00E+00	0.00E+00	0.00E+00	0.00E+00
1302	ALL	SENS	749488.42	4036360.7	9.91E-09	25YrCancer	9.91E-09	0.00E+00	0.00E+00	0.00E+00	0.00E+00	0.00E+00	0.00E+00	0.00E+00	0.00E+00	0.00E+00	0.00E+00	0.00E+00
1303	ALL	SENS	749588.42	4036360.7	9.88E-09	25YrCancer	9.88E-09	0.00E+00	0.00E+00	0.00E+00	0.00E+00	0.00E+00	0.00E+00	0.00E+00	0.00E+00	0.00E+00	0.00E+00	0.00E+00
1304	ALL	SENS	749688.42	4036360.7	9.85E-09	25YrCancer	9.85E-09	0.00E+00	0.00E+00	0.00E+00	0.00E+00	0.00E+00	0.00E+00	0.00E+00	0.00E+00	0.00E+00	0.00E+00	0.00E+00
1305	ALL	SENS	749788.42	4036360.7	9.84E-09	25YrCancer	9.84E-09	0.00E+00	0.00E+00	0.00E+00	0.00E+00	0.00E+00	0.00E+00	0.00E+00	0.00E+00	0.00E+00	0.00E+00	0.00E+00
1306	ALL	SENS	749888.42	4036360.7	9.83E-09	25YrCancer	9.83E-09	0.00E+00	0.00E+00	0.00E+00	0.00E+00	0.00E+00	0.00E+00	0.00E+00	0.00E+00	0.00E+00	0.00E+00	0.00E+00
1307	ALL	SENS	749988.42	4036360.7	9.83E-09	25YrCancer	9.83E-09	0.00E+00	0.00E+00	0.00E+00	0.00E+00	0.00E+00	0.00E+00	0.00E+00	0.00E+00	0.00E+00	0.00E+00	0.00E+00
1308	ALL	SENS	750088.42	4036360.7	9.84E-09	25YrCancer	9.84E-09	0.00E+00	0.00E+00	0.00E+00	0.00E+00	0.00E+00	0.00E+00	0.00E+00	0.00E+00	0.00E+00	0.00E+00	0.00E+00
1309	ALL	SENS	750188.42	4036360.7	9.86E-09	25YrCancer	9.86E-09	0.00E+00	0.00E+00	0.00E+00	0.00E+00	0.00E+00	0.00E+00	0.00E+00	0.00E+00	0.00E+00	0.00E+00	0.00E+00
1310	ALL	SENS	745988.42	4036460.7	9.68E-09	25YrCancer	9.68E-09	0.00E+00	0.00E+00	0.00E+00	0.00E+00	0.00E+00	0.00E+00	0.00E+00	0.00E+00	0.00E+00	0.00E+00	0.00E+00
1311	ALL	SENS	746088.42	4036460.7	1.09E-08	25YrCancer	1.09E-08	0.00E+00	0.00E+00	0.00E+00	0.00E+00	0.00E+00	0.00E+00	0.00E+00	0.00E+00	0.00E+00	0.00E+00	0.00E+00
1312	ALL	SENS	746188.42	4036460.7	1.26E-08	25YrCancer	1.26E-08	0.00E+00	0.00E+00	0.00E+00	0.00E+00	0.00E+00	0.00E+00	0.00E+00	0.00E+00	0.00E+00	0.00E+00	0.00E+00
1313	ALL	SENS	746288.42	4036460.7	1.49E-08	25YrCancer	1.49E-08	0.00E+00	0.00E+00	0.00E+00	0.00E+00	0.00E+00	0.00E+00	0.00E+00	0.00E+00	0.00E+00	0.00E+00	0.00E+00
1314	ALL	SENS	746388.42	4036460.7	1.81E-08	25YrCancer	1.81E-08	0.00E+00	0.00E+00	0.00E+00	0.00E+00	0.00E+00	0.00E+00	0.00E+00	0.00E+00	0.00E+00	0.00E+00	0.00E+00
1315	ALL	SENS	746488.42	4036460.7	2.25E-08	25YrCancer	2.25E-08	0.00E+00	0.00E+00	0.00E+00	0.00E+00	0.00E+00	0.00E+00	0.00E+00	0.00E+00	0.00E+00	0.00E+00	0.00E+00
1316	ALL	SENS	746588.42	4036460.7	2.85E-08	25YrCancer	2.85E-08	0.00E+00	0.00E+00	0.00E+00	0.00E+00	0.00E+00	0.00E+00	0.00E+00	0.00E+00	0.00E+00	0.00E+00	0.00E+00
1317	ALL	SENS	748388.42	4036460.7	9.14E-09	25YrCancer	9.14E-09	0.00E+00	0.00E+00	0.00E+00	0.00E+00	0.00E+00	0.00E+00	0.00E+00	0.00E+00	0.00E+00	0.00E+00	0.00E+00
1318	ALL	SENS	748488.42	4036460.7	9.09E-09	25YrCancer	9.09E-09	0.00E+00	0.00E+00	0.00E+00	0.00E+00	0.00E+00	0.00E+00	0.00E+00	0.00E+00	0.00E+00	0.00E+00	0.00E+00
1319	ALL	SENS	748588.42	4036460.7	9.07E-09	25YrCancer	9.07E-09	0.00E+00	0.00E+00	0.00E+00	0.00E+00	0.00E+00	0.00E+00	0.00E+00	0.00E+00	0.00E+00	0.00E+00	0.00E+00
1320	ALL	SENS	748688.42	4036460.7	9.07E-09	25YrCancer	9.07E-09	0.00E+00	0.00E+00	0.00E+00	0.00E+00	0.00E+00	0.00E+00	0.00E+00	0.00E+00	0.00E+00	0.00E+00	0.00E+00
1321	ALL	SENS	748788.42	4036460.7	9.08E-09	25YrCancer	9.08E-09	0.00E+00	0.00E+00	0.00E+00	0.00E+00	0.00E+00	0.00E+00	0.00E+00	0.00E+00	0.00E+00	0.00E+00	0.00E+00
1322	ALL	SENS	748888.42	4036460.7	9.12E-09	25YrCancer	9.12E-09	0.00E+00	0.00E+00	0.00E+00	0.00E+00	0.00E+00	0.00E+00	0.00E+00	0.00E+00	0.00E+00	0.00E+00	0.00E+00
1323	ALL	SENS	748988.42	4036460.7	9.17E-09	25YrCancer	9.17E-09	0.00E+00	0.00E+00	0.00E+00	0.00E+00	0.00E+00	0.00E+00	0.00E+00	0.00E+00	0.00E+00	0.00E+00	0.00E+00
1324	ALL	SENS	749088.42	4036460.7	9.23E-09	25YrCancer	9.23E-09	0.00E+00	0.00E+00	0.00E+00	0.00E+00	0.00E+00	0.00E+00	0.00E+00	0.00E+00	0.00E+00	0.00E+00	0.00E+00

1325	ALL	SENS	749188.42	4036460.7	9.30E-09	25YrCancer	9.30E-09	0.00E+00	0.00E+00	0.00E+00	0.00E+00	0.00E+00	0.00E+00	0.00E+00	0.00E+00	0.00E+00	0.00E+00	0.00E+00
1326	ALL	SENS	749288.42	4036460.7	9.35E-09	25YrCancer	9.35E-09	0.00E+00	0.00E+00	0.00E+00	0.00E+00	0.00E+00	0.00E+00	0.00E+00	0.00E+00	0.00E+00	0.00E+00	0.00E+00
1327	ALL	SENS	749388.42	4036460.7	9.40E-09	25YrCancer	9.40E-09	0.00E+00	0.00E+00	0.00E+00	0.00E+00	0.00E+00	0.00E+00	0.00E+00	0.00E+00	0.00E+00	0.00E+00	0.00E+00
1328	ALL	SENS	749488.42	4036460.7	9.44E-09	25YrCancer	9.44E-09	0.00E+00	0.00E+00	0.00E+00	0.00E+00	0.00E+00	0.00E+00	0.00E+00	0.00E+00	0.00E+00	0.00E+00	0.00E+00
1329	ALL	SENS	749588.42	4036460.7	9.47E-09	25YrCancer	9.47E-09	0.00E+00	0.00E+00	0.00E+00	0.00E+00	0.00E+00	0.00E+00	0.00E+00	0.00E+00	0.00E+00	0.00E+00	0.00E+00
1330	ALL	SENS	749688.42	4036460.7	9.51E-09	25YrCancer	9.51E-09	0.00E+00	0.00E+00	0.00E+00	0.00E+00	0.00E+00	0.00E+00	0.00E+00	0.00E+00	0.00E+00	0.00E+00	0.00E+00
1331	ALL	SENS	749788.42	4036460.7	9.54E-09	25YrCancer	9.54E-09	0.00E+00	0.00E+00	0.00E+00	0.00E+00	0.00E+00	0.00E+00	0.00E+00	0.00E+00	0.00E+00	0.00E+00	0.00E+00
1332	ALL	SENS	749888.42	4036460.7	9.59E-09	25YrCancer	9.59E-09	0.00E+00	0.00E+00	0.00E+00	0.00E+00	0.00E+00	0.00E+00	0.00E+00	0.00E+00	0.00E+00	0.00E+00	0.00E+00
1333	ALL	SENS	749988.42	4036460.7	9.64E-09	25YrCancer	9.64E-09	0.00E+00	0.00E+00	0.00E+00	0.00E+00	0.00E+00	0.00E+00	0.00E+00	0.00E+00	0.00E+00	0.00E+00	0.00E+00
1334	ALL	SENS	750088.42	4036460.7	9.69E-09	25YrCancer	9.69E-09	0.00E+00	0.00E+00	0.00E+00	0.00E+00	0.00E+00	0.00E+00	0.00E+00	0.00E+00	0.00E+00	0.00E+00	0.00E+00
1335	ALL	SENS	750188.42	4036460.7	9.74E-09	25YrCancer	9.74E-09	0.00E+00	0.00E+00	0.00E+00	0.00E+00	0.00E+00	0.00E+00	0.00E+00	0.00E+00	0.00E+00	0.00E+00	0.00E+00
1336	ALL	SENS	745988.42	4036560.7	1.10E-08	25YrCancer	1.10E-08	0.00E+00	0.00E+00	0.00E+00	0.00E+00	0.00E+00	0.00E+00	0.00E+00	0.00E+00	0.00E+00	0.00E+00	0.00E+00
1337	ALL	SENS	746088.42	4036560.7	1.25E-08	25YrCancer	1.25E-08	0.00E+00	0.00E+00	0.00E+00	0.00E+00	0.00E+00	0.00E+00	0.00E+00	0.00E+00	0.00E+00	0.00E+00	0.00E+00
1338	ALL	SENS	746188.42	4036560.7	1.45E-08	25YrCancer	1.45E-08	0.00E+00	0.00E+00	0.00E+00	0.00E+00	0.00E+00	0.00E+00	0.00E+00	0.00E+00	0.00E+00	0.00E+00	0.00E+00
1339	ALL	SENS	746288.42	4036560.7	1.71E-08	25YrCancer	1.71E-08	0.00E+00	0.00E+00	0.00E+00	0.00E+00	0.00E+00	0.00E+00	0.00E+00	0.00E+00	0.00E+00	0.00E+00	0.00E+00
1340	ALL	SENS	746388.42	4036560.7	2.03E-08	25YrCancer	2.03E-08	0.00E+00	0.00E+00	0.00E+00	0.00E+00	0.00E+00	0.00E+00	0.00E+00	0.00E+00	0.00E+00	0.00E+00	0.00E+00
1341	ALL	SENS	746488.42	4036560.7	2.40E-08	25YrCancer	2.40E-08	0.00E+00	0.00E+00	0.00E+00	0.00E+00	0.00E+00	0.00E+00	0.00E+00	0.00E+00	0.00E+00	0.00E+00	0.00E+00
1342	ALL	SENS	746588.42	4036560.7	2.71E-08	25YrCancer	2.71E-08	0.00E+00	0.00E+00	0.00E+00	0.00E+00	0.00E+00	0.00E+00	0.00E+00	0.00E+00	0.00E+00	0.00E+00	0.00E+00
1343	ALL	SENS	748388.42	4036560.7	7.90E-09	25YrCancer	7.90E-09	0.00E+00	0.00E+00	0.00E+00	0.00E+00	0.00E+00	0.00E+00	0.00E+00	0.00E+00	0.00E+00	0.00E+00	0.00E+00
1344	ALL	SENS	748488.42	4036560.7	7.94E-09	25YrCancer	7.94E-09	0.00E+00	0.00E+00	0.00E+00	0.00E+00	0.00E+00	0.00E+00	0.00E+00	0.00E+00	0.00E+00	0.00E+00	0.00E+00
1345	ALL	SENS	748588.42	4036560.7	8.01E-09	25YrCancer	8.01E-09	0.00E+00	0.00E+00	0.00E+00	0.00E+00	0.00E+00	0.00E+00	0.00E+00	0.00E+00	0.00E+00	0.00E+00	0.00E+00
1346	ALL	SENS	748688.42	4036560.7	8.09E-09	25YrCancer	8.09E-09	0.00E+00	0.00E+00	0.00E+00	0.00E+00	0.00E+00	0.00E+00	0.00E+00	0.00E+00	0.00E+00	0.00E+00	0.00E+00
1347	ALL	SENS	748788.42	4036560.7	8.20E-09	25YrCancer	8.20E-09	0.00E+00	0.00E+00	0.00E+00	0.00E+00	0.00E+00	0.00E+00	0.00E+00	0.00E+00	0.00E+00	0.00E+00	0.00E+00
1348	ALL	SENS	748888.42	4036560.7	8.33E-09	25YrCancer	8.33E-09	0.00E+00	0.00E+00	0.00E+00	0.00E+00	0.00E+00	0.00E+00	0.00E+00	0.00E+00	0.00E+00	0.00E+00	0.00E+00
1349	ALL	SENS	748988.42	4036560.7	8.47E-09	25YrCancer	8.47E-09	0.00E+00	0.00E+00	0.00E+00	0.00E+00	0.00E+00	0.00E+00	0.00E+00	0.00E+00	0.00E+00	0.00E+00	0.00E+00
1350	ALL	SENS	749088.42	4036560.7	8.61E-09	25YrCancer	8.61E-09	0.00E+00	0.00E+00	0.00E+00	0.00E+00	0.00E+00	0.00E+00	0.00E+00	0.00E+00	0.00E+00	0.00E+00	0.00E+00
1351	ALL	SENS	749188.42	4036560.7	8.74E-09	25YrCancer	8.74E-09	0.00E+00	0.00E+00	0.00E+00	0.00E+00	0.00E+00	0.00E+00	0.00E+00	0.00E+00	0.00E+00	0.00E+00	0.00E+00
1352	ALL	SENS	749288.42	4036560.7	8.86E-09	25YrCancer	8.86E-09	0.00E+00	0.00E+00	0.00E+00	0.00E+00	0.00E+00	0.00E+00	0.00E+00	0.00E+00	0.00E+00	0.00E+00	0.00E+00
1353	ALL	SENS	749388.42	4036560.7	8.97E-09	25YrCancer	8.97E-09	0.00E+00	0.00E+00	0.00E+00	0.00E+00	0.00E+00	0.00E+00	0.00E+00	0.00E+00	0.00E+00	0.00E+00	0.00E+00
1354	ALL	SENS	749488.42	4036560.7	9.07E-09	25YrCancer	9.07E-09	0.00E+00	0.00E+00	0.00E+00	0.00E+00	0.00E+00	0.00E+00	0.00E+00	0.00E+00	0.00E+00	0.00E+00	0.00E+00
1355	ALL	SENS	749588.42	4036560.7	9.15E-09	25YrCancer	9.15E-09	0.00E+00	0.00E+00	0.00E+00	0.00E+00	0.00E+00	0.00E+00	0.00E+00	0.00E+00	0.00E+00	0.00E+00	0.00E+00
1356	ALL	SENS	749688.42	4036560.7	9.24E-09	25YrCancer	9.24E-09	0.00E+00	0.00E+00	0.00E+00	0.00E+00	0.00E+00	0.00E+00	0.00E+00	0.00E+00	0.00E+00	0.00E+00	0.00E+00
1357	ALL	SENS	749788.42	4036560.7	9.32E-09	25YrCancer	9.32E-09	0.00E+00	0.00E+00	0.00E+00	0.00E+00	0.00E+00	0.00E+00	0.00E+00	0.00E+00	0.00E+00	0.00E+00	0.00E+00
1358	ALL	SENS	749888.42	4036560.7	9.41E-09	25YrCancer	9.41E-09	0.00E+00	0.00E+00	0.00E+00	0.00E+00	0.00E+00	0.00E+00	0.00E+00	0.00E+00	0.00E+00	0.00E+00	0.00E+00
1359	ALL	SENS	749988.42	4036560.7	9.50E-09	25YrCancer	9.50E-09	0.00E+00	0.00E+00	0.00E+00	0.00E+00	0.00E+00	0.00E+00	0.00E+00	0.00E+00	0.00E+00	0.00E+00	0.00E+00
1360	ALL	SENS	750088.42	4036560.7	9.59E-09	25YrCancer	9.59E-09	0.00E+00	0.00E+00	0.00E+00	0.00E+00	0.00E+00	0.00E+00	0.00E+00	0.00E+00	0.00E+00	0.00E+00	0.00E+00
1361	ALL	SENS	750188.42	4036560.7	9.67E-09	25YrCancer	9.67E-09	0.00E+00	0.00E+00	0.00E+00	0.00E+00	0.00E+00	0.00E+00	0.00E+00	0.00E+00	0.00E+00	0.00E+00	0.00E+00
1362	ALL	SENS	750288.42	4036560.7	9.74E-09	25YrCancer	9.74E-09	0.00E+00	0.00E+00	0.00E+00	0.00E+00	0.00E+00	0.00E+00	0.00E+00	0.00E+00	0.00E+00	0.00E+00	0.00E+00
1363	ALL	SENS	752388.42	4036560.7	9.65E-09	25YrCancer	9.65E-09	0.00E+00	0.00E+00	0.00E+00	0.00E+00	0.00E+00	0.00E+00	0.00E+00	0.00E+00	0.00E+00	0.00E+00	0.00E+00
1364	ALL	SENS	752488.42	4036560.7	9.57E-09	25YrCancer	9.57E-09	0.00E+00	0.00E+00	0.00E+00	0.00E+00	0.00E+00	0.00E+00	0.00E+00	0.00E+00	0.00E+00	0.00E+00	0.00E+00
1365	ALL	SENS	752588.42	4036560.7	9.49E-09	25YrCancer	9.49E-09	0.00E+00	0.00E+00	0.00E+00	0.00E+00	0.00E+00	0.00E+00	0.00E+00	0.00E+00	0.00E+00	0.00E+00	0.00E+00
1366	ALL	SENS	752688.42	4036560.7	9.40E-09	25YrCancer	9.40E-09	0.00E+00	0.00E+00	0.00E+00	0.00E+00	0.00E+00	0.00E+00	0.00E+00	0.00E+00	0.00E+00	0.00E+00	0.00E+00
1367	ALL	SENS	752788.42	4036560.7	9.30E-09	25YrCancer	9.30E-09	0.00E+00	0.00E+00	0.00E+00	0.00E+00	0.00E+00	0.00E+00	0.00E+00	0.00E+00	0.00E+00	0.00E+00	0.00E+00
1368	ALL	SENS	752888.42	4036560.7	9.20E-09	25YrCancer	9.20E-09	0.00E+00	0.00E+00	0.00E+00	0.00E+00	0.00E+00	0.00E+00	0.00E+00	0.00E+00	0.00E+00	0.00E+00	0.00E+00
1369	ALL	SENS	752988.42	4036560.7	9.09E-09	25YrCancer	9.09E-09	0.00E+00	0.00E+00	0.00E+00	0.00E+00	0.00E+00	0.00E+00	0.00E+00	0.00E+00	0.00E+00	0.00E+00	0.00E+00
1370	ALL	SENS	753088.42	4036560.7	8.97E-09	25YrCancer	8.97E-09	0.00E+00	0.00E+00	0.00E+00	0.00E+00	0.00E+00	0.00E+00	0.00E+00	0.00E+00	0.00E+00	0.00E+00	0.00E+00
1371	ALL	SENS	753188.42	4036560.7	8.84E-09	25YrCancer	8.84E-09	0.00E+00	0.00E+00	0.00E+00	0.00E+00	0.00E+00	0.00E+00	0.00E+00	0.00E+00	0.00E+00	0.00E+00	0.00E+00
1372	ALL	SENS	753288.42	4036560.7	8.71E-09	25YrCancer	8.71E-09	0.00E+00	0.00E+00	0.00E+00	0.00E+00	0.00E+00	0.00E+00	0.00E+00	0.00E+00	0.00E+00	0.00E+00	0.00E+00
1373	ALL	SENS	753388.42	4036560.7	8.57E-09	25YrCancer	8.57E-09	0.00E+00	0.00E+00	0.00E+00	0.00E+00	0.00E+00	0.00E+00	0.00E+00	0.00E+00	0.00E+00	0.00E+00	0.00E+00
1374	ALL		753488.42	4036560.7	8.43E-09	25YrCancer	8.43E-09	0.00E+00	0.00E+00	0.00E+00	0.00E+00	0.00E+00	0.00E+00	0.00E+00	0.00E+00	0.00E+00	0.00E+00	0.00E+00
1375	ALL		753588.42	4036560.7	8.29E-09	25YrCancer	8.29E-09	0.00E+00	0.00E+00	0.00E+00	0.00E+00	0.00E+00	0.00E+00	0.00E+00	0.00E+00	0.00E+00	0.00E+00	0.00E+00

1376	ALL	753688.42	4036560.7	8.14E-09	25YrCancer	8.14E-09	0.00E+00	0.00E+00	0.00E+00	0.00E+00	0.00E+00	0.00E+00	0.00E+00	0.00E+00	0.00E+00	0.00E+00	0.00E+00
1377	ALL	753788.42	4036560.7	7.99E-09	25YrCancer	7.99E-09	0.00E+00	0.00E+00	0.00E+00	0.00E+00	0.00E+00	0.00E+00	0.00E+00	0.00E+00	0.00E+00	0.00E+00	0.00E+00
1378	ALL	753888.42	4036560.7	7.83E-09	25YrCancer	7.83E-09	0.00E+00	0.00E+00	0.00E+00	0.00E+00	0.00E+00	0.00E+00	0.00E+00	0.00E+00	0.00E+00	0.00E+00	0.00E+00
1379	ALL	753988.42	4036560.7	7.68E-09	25YrCancer	7.68E-09	0.00E+00	0.00E+00	0.00E+00	0.00E+00	0.00E+00	0.00E+00	0.00E+00	0.00E+00	0.00E+00	0.00E+00	0.00E+00
1380	ALL	754088.42	4036560.7	7.53E-09	25YrCancer	7.53E-09	0.00E+00	0.00E+00	0.00E+00	0.00E+00	0.00E+00	0.00E+00	0.00E+00	0.00E+00	0.00E+00	0.00E+00	0.00E+00
1381	ALL	754188.42	4036560.7	7.37E-09	25YrCancer	7.37E-09	0.00E+00	0.00E+00	0.00E+00	0.00E+00	0.00E+00	0.00E+00	0.00E+00	0.00E+00	0.00E+00	0.00E+00	0.00E+00
1382	ALL	754288.42	4036560.7	7.22E-09	25YrCancer	7.22E-09	0.00E+00	0.00E+00	0.00E+00	0.00E+00	0.00E+00	0.00E+00	0.00E+00	0.00E+00	0.00E+00	0.00E+00	0.00E+00
1383	ALL	754388.42	4036560.7	7.07E-09	25YrCancer	7.07E-09	0.00E+00	0.00E+00	0.00E+00	0.00E+00	0.00E+00	0.00E+00	0.00E+00	0.00E+00	0.00E+00	0.00E+00	0.00E+00
1384	ALL	754488.42	4036560.7	6.91E-09	25YrCancer	6.91E-09	0.00E+00	0.00E+00	0.00E+00	0.00E+00	0.00E+00	0.00E+00	0.00E+00	0.00E+00	0.00E+00	0.00E+00	0.00E+00
1385	ALL	754588.42	4036560.7	6.76E-09	25YrCancer	6.76E-09	0.00E+00	0.00E+00	0.00E+00	0.00E+00	0.00E+00	0.00E+00	0.00E+00	0.00E+00	0.00E+00	0.00E+00	0.00E+00
1386	ALL	754688.42	4036560.7	6.61E-09	25YrCancer	6.61E-09	0.00E+00	0.00E+00	0.00E+00	0.00E+00	0.00E+00	0.00E+00	0.00E+00	0.00E+00	0.00E+00	0.00E+00	0.00E+00
1387	ALL	754788.42	4036560.7	6.47E-09	25YrCancer	6.47E-09	0.00E+00	0.00E+00	0.00E+00	0.00E+00	0.00E+00	0.00E+00	0.00E+00	0.00E+00	0.00E+00	0.00E+00	0.00E+00
1388	ALL	754888.42	4036560.7	6.32E-09	25YrCancer	6.32E-09	0.00E+00	0.00E+00	0.00E+00	0.00E+00	0.00E+00	0.00E+00	0.00E+00	0.00E+00	0.00E+00	0.00E+00	0.00E+00
1389	ALL	754988.42	4036560.7	6.18E-09	25YrCancer	6.18E-09	0.00E+00	0.00E+00	0.00E+00	0.00E+00	0.00E+00	0.00E+00	0.00E+00	0.00E+00	0.00E+00	0.00E+00	0.00E+00
1390	ALL	755088.42	4036560.7	6.04E-09	25YrCancer	6.04E-09	0.00E+00	0.00E+00	0.00E+00	0.00E+00	0.00E+00	0.00E+00	0.00E+00	0.00E+00	0.00E+00	0.00E+00	0.00E+00
1391	ALL	755188.42	4036560.7	5.91E-09	25YrCancer	5.91E-09	0.00E+00	0.00E+00	0.00E+00	0.00E+00	0.00E+00	0.00E+00	0.00E+00	0.00E+00	0.00E+00	0.00E+00	0.00E+00
1392	ALL	755288.42	4036560.7	5.78E-09	25YrCancer	5.78E-09	0.00E+00	0.00E+00	0.00E+00	0.00E+00	0.00E+00	0.00E+00	0.00E+00	0.00E+00	0.00E+00	0.00E+00	0.00E+00
1393	ALL	748388.42	4036660.7	7.07E-09	25YrCancer	7.07E-09	0.00E+00	0.00E+00	0.00E+00	0.00E+00	0.00E+00	0.00E+00	0.00E+00	0.00E+00	0.00E+00	0.00E+00	0.00E+00
1394	ALL	748488.42	4036660.7	7.15E-09	25YrCancer	7.15E-09	0.00E+00	0.00E+00	0.00E+00	0.00E+00	0.00E+00	0.00E+00	0.00E+00	0.00E+00	0.00E+00	0.00E+00	0.00E+00
1395	ALL	748588.42	4036660.7	7.26E-09	25YrCancer	7.26E-09	0.00E+00	0.00E+00	0.00E+00	0.00E+00	0.00E+00	0.00E+00	0.00E+00	0.00E+00	0.00E+00	0.00E+00	0.00E+00
1396	ALL	748688.42	4036660.7	7.40E-09	25YrCancer	7.40E-09	0.00E+00	0.00E+00	0.00E+00	0.00E+00	0.00E+00	0.00E+00	0.00E+00	0.00E+00	0.00E+00	0.00E+00	0.00E+00
1397	ALL	748788.42	4036660.7	7.57E-09	25YrCancer	7.57E-09	0.00E+00	0.00E+00	0.00E+00	0.00E+00	0.00E+00	0.00E+00	0.00E+00	0.00E+00	0.00E+00	0.00E+00	0.00E+00
1398	ALL	748888.42	4036660.7	7.75E-09	25YrCancer	7.75E-09	0.00E+00	0.00E+00	0.00E+00	0.00E+00	0.00E+00	0.00E+00	0.00E+00	0.00E+00	0.00E+00	0.00E+00	0.00E+00
1399	ALL	748988.42	4036660.7	7.95E-09	25YrCancer	7.95E-09	0.00E+00	0.00E+00	0.00E+00	0.00E+00	0.00E+00	0.00E+00	0.00E+00	0.00E+00	0.00E+00	0.00E+00	0.00E+00
1400	ALL	749088.42	4036660.7	8.14E-09	25YrCancer	8.14E-09	0.00E+00	0.00E+00	0.00E+00	0.00E+00	0.00E+00	0.00E+00	0.00E+00	0.00E+00	0.00E+00	0.00E+00	0.00E+00
1401	ALL	749188.42	4036660.7	8.33E-09	25YrCancer	8.33E-09	0.00E+00	0.00E+00	0.00E+00	0.00E+00	0.00E+00	0.00E+00	0.00E+00	0.00E+00	0.00E+00	0.00E+00	0.00E+00
1402	ALL	749288.42	4036660.7	8.50E-09	25YrCancer	8.50E-09	0.00E+00	0.00E+00	0.00E+00	0.00E+00	0.00E+00	0.00E+00	0.00E+00	0.00E+00	0.00E+00	0.00E+00	0.00E+00
1403	ALL	749388.42	4036660.7	8.66E-09	25YrCancer	8.66E-09	0.00E+00	0.00E+00	0.00E+00	0.00E+00	0.00E+00	0.00E+00	0.00E+00	0.00E+00	0.00E+00	0.00E+00	0.00E+00
1404	ALL	749488.42	4036660.7	8.79E-09	25YrCancer	8.79E-09	0.00E+00	0.00E+00	0.00E+00	0.00E+00	0.00E+00	0.00E+00	0.00E+00	0.00E+00	0.00E+00	0.00E+00	0.00E+00
1405	ALL	749588.42	4036660.7	8.93E-09	25YrCancer	8.93E-09	0.00E+00	0.00E+00	0.00E+00	0.00E+00	0.00E+00	0.00E+00	0.00E+00	0.00E+00	0.00E+00	0.00E+00	0.00E+00
1406	ALL	749688.42	4036660.7	9.05E-09	25YrCancer	9.05E-09	0.00E+00	0.00E+00	0.00E+00	0.00E+00	0.00E+00	0.00E+00	0.00E+00	0.00E+00	0.00E+00	0.00E+00	0.00E+00
1407	ALL	749788.42	4036660.7	9.18E-09	25YrCancer	9.18E-09	0.00E+00	0.00E+00	0.00E+00	0.00E+00	0.00E+00	0.00E+00	0.00E+00	0.00E+00	0.00E+00	0.00E+00	0.00E+00
1408	ALL	749888.42	4036660.7	9.30E-09	25YrCancer	9.30E-09	0.00E+00	0.00E+00	0.00E+00	0.00E+00	0.00E+00	0.00E+00	0.00E+00	0.00E+00	0.00E+00	0.00E+00	0.00E+00
1409	ALL	749988.42	4036660.7	9.43E-09	25YrCancer	9.43E-09	0.00E+00	0.00E+00	0.00E+00	0.00E+00	0.00E+00	0.00E+00	0.00E+00	0.00E+00	0.00E+00	0.00E+00	0.00E+00
1410	ALL	750088.42	4036660.7	9.54E-09	25YrCancer	9.54E-09	0.00E+00	0.00E+00	0.00E+00	0.00E+00	0.00E+00	0.00E+00	0.00E+00	0.00E+00	0.00E+00	0.00E+00	0.00E+00
1411	ALL	750188.42	4036660.7	9.65E-09	25YrCancer	9.65E-09	0.00E+00	0.00E+00	0.00E+00	0.00E+00	0.00E+00	0.00E+00	0.00E+00	0.00E+00	0.00E+00	0.00E+00	0.00E+00
1412	ALL	750288.42	4036660.7	9.74E-09	25YrCancer	9.74E-09	0.00E+00	0.00E+00	0.00E+00	0.00E+00	0.00E+00	0.00E+00	0.00E+00	0.00E+00	0.00E+00	0.00E+00	0.00E+00
1413	ALL	752388.42	4036660.7	9.80E-09	25YrCancer	9.80E-09	0.00E+00	0.00E+00	0.00E+00	0.00E+00	0.00E+00	0.00E+00	0.00E+00	0.00E+00	0.00E+00	0.00E+00	0.00E+00
1414	ALL	752488.42	4036660.7	9.71E-09	25YrCancer	9.71E-09	0.00E+00	0.00E+00	0.00E+00	0.00E+00	0.00E+00	0.00E+00	0.00E+00	0.00E+00	0.00E+00	0.00E+00	0.00E+00
1415	ALL	752588.42	4036660.7	9.62E-09	25YrCancer	9.62E-09	0.00E+00	0.00E+00	0.00E+00	0.00E+00	0.00E+00	0.00E+00	0.00E+00	0.00E+00	0.00E+00	0.00E+00	0.00E+00
1416	ALL	752688.42	4036660.7	9.52E-09	25YrCancer	9.52E-09	0.00E+00	0.00E+00	0.00E+00	0.00E+00	0.00E+00	0.00E+00	0.00E+00	0.00E+00	0.00E+00	0.00E+00	0.00E+00
1417	ALL	752788.42	4036660.7	9.41E-09	25YrCancer	9.41E-09	0.00E+00	0.00E+00	0.00E+00	0.00E+00	0.00E+00	0.00E+00	0.00E+00	0.00E+00	0.00E+00	0.00E+00	0.00E+00
1418	ALL	752888.42	4036660.7	9.29E-09	25YrCancer	9.29E-09	0.00E+00	0.00E+00	0.00E+00	0.00E+00	0.00E+00	0.00E+00	0.00E+00	0.00E+00	0.00E+00	0.00E+00	0.00E+00
1419	ALL	752988.42	4036660.7	9.17E-09	25YrCancer	9.17E-09	0.00E+00	0.00E+00	0.00E+00	0.00E+00	0.00E+00	0.00E+00	0.00E+00	0.00E+00	0.00E+00	0.00E+00	0.00E+00
1420	ALL	753088.42	4036660.7	9.03E-09	25YrCancer	9.03E-09	0.00E+00	0.00E+00	0.00E+00	0.00E+00	0.00E+00	0.00E+00	0.00E+00	0.00E+00	0.00E+00	0.00E+00	0.00E+00
1421	ALL	753188.42	4036660.7	8.90E-09	25YrCancer	8.90E-09	0.00E+00	0.00E+00	0.00E+00	0.00E+00	0.00E+00	0.00E+00	0.00E+00	0.00E+00	0.00E+00	0.00E+00	0.00E+00
1422	ALL	753288.42	4036660.7	8.75E-09	25YrCancer	8.75E-09	0.00E+00	0.00E+00	0.00E+00	0.00E+00	0.00E+00	0.00E+00	0.00E+00	0.00E+00	0.00E+00	0.00E+00	0.00E+00
1423	ALL	753388.42	4036660.7	8.60E-09	25YrCancer	8.60E-09	0.00E+00	0.00E+00	0.00E+00	0.00E+00	0.00E+00	0.00E+00	0.00E+00	0.00E+00	0.00E+00	0.00E+00	0.00E+00
1424	ALL	753488.42	4036660.7	8.45E-09	25YrCancer	8.45E-09	0.00E+00	0.00E+00	0.00E+00	0.00E+00	0.00E+00	0.00E+00	0.00E+00	0.00E+00	0.00E+00	0.00E+00	0.00E+00
1425	ALL	753588.42	4036660.7	8.30E-09	25YrCancer	8.30E-09	0.00E+00	0.00E+00	0.00E+00	0.00E+00	0.00E+00	0.00E+00	0.00E+00	0.00E+00	0.00E+00	0.00E+00	0.00E+00
1426	ALL	753688.42	4036660.7	8.14E-09	25YrCancer	8.14E-09	0.00E+00	0.00E+00	0.00E+00	0.00E+00	0.00E+00	0.00E+00	0.00E+00	0.00E+00	0.00E+00	0.00E+00	0.00E+00

1427	ALL	753788.42	4036660.7	7.98E-09	25YrCancer	7.98E-09	0.00E+00	0.00E+00	0.00E+00	0.00E+00	0.00E+00	0.00E+00	0.00E+00	0.00E+00	0.00E+00	0.00E+00	0.00E+00
1428	ALL	753888.42	4036660.7	7.82E-09	25YrCancer	7.82E-09	0.00E+00	0.00E+00	0.00E+00	0.00E+00	0.00E+00	0.00E+00	0.00E+00	0.00E+00	0.00E+00	0.00E+00	0.00E+00
1429	ALL	753988.42	4036660.7	7.66E-09	25YrCancer	7.66E-09	0.00E+00	0.00E+00	0.00E+00	0.00E+00	0.00E+00	0.00E+00	0.00E+00	0.00E+00	0.00E+00	0.00E+00	0.00E+00
1430	ALL	754088.42	4036660.7	7.49E-09	25YrCancer	7.49E-09	0.00E+00	0.00E+00	0.00E+00	0.00E+00	0.00E+00	0.00E+00	0.00E+00	0.00E+00	0.00E+00	0.00E+00	0.00E+00
1431	ALL	754188.42	4036660.7	7.33E-09	25YrCancer	7.33E-09	0.00E+00	0.00E+00	0.00E+00	0.00E+00	0.00E+00	0.00E+00	0.00E+00	0.00E+00	0.00E+00	0.00E+00	0.00E+00
1432	ALL	754288.42	4036660.7	7.17E-09	25YrCancer	7.17E-09	0.00E+00	0.00E+00	0.00E+00	0.00E+00	0.00E+00	0.00E+00	0.00E+00	0.00E+00	0.00E+00	0.00E+00	0.00E+00
1433	ALL	754388.42	4036660.7	7.01E-09	25YrCancer	7.01E-09	0.00E+00	0.00E+00	0.00E+00	0.00E+00	0.00E+00	0.00E+00	0.00E+00	0.00E+00	0.00E+00	0.00E+00	0.00E+00
1434	ALL	754488.42	4036660.7	6.85E-09	25YrCancer	6.85E-09	0.00E+00	0.00E+00	0.00E+00	0.00E+00	0.00E+00	0.00E+00	0.00E+00	0.00E+00	0.00E+00	0.00E+00	0.00E+00
1435	ALL	754588.42	4036660.7	6.70E-09	25YrCancer	6.70E-09	0.00E+00	0.00E+00	0.00E+00	0.00E+00	0.00E+00	0.00E+00	0.00E+00	0.00E+00	0.00E+00	0.00E+00	0.00E+00
1436	ALL	754688.42	4036660.7	6.55E-09	25YrCancer	6.55E-09	0.00E+00	0.00E+00	0.00E+00	0.00E+00	0.00E+00	0.00E+00	0.00E+00	0.00E+00	0.00E+00	0.00E+00	0.00E+00
1437	ALL	754788.42	4036660.7	6.40E-09	25YrCancer	6.40E-09	0.00E+00	0.00E+00	0.00E+00	0.00E+00	0.00E+00	0.00E+00	0.00E+00	0.00E+00	0.00E+00	0.00E+00	0.00E+00
1438	ALL	754888.42	4036660.7	6.25E-09	25YrCancer	6.25E-09	0.00E+00	0.00E+00	0.00E+00	0.00E+00	0.00E+00	0.00E+00	0.00E+00	0.00E+00	0.00E+00	0.00E+00	0.00E+00
1439	ALL	754988.42	4036660.7	6.11E-09	25YrCancer	6.11E-09	0.00E+00	0.00E+00	0.00E+00	0.00E+00	0.00E+00	0.00E+00	0.00E+00	0.00E+00	0.00E+00	0.00E+00	0.00E+00
1440	ALL	755088.42	4036660.7	5.97E-09	25YrCancer	5.97E-09	0.00E+00	0.00E+00	0.00E+00	0.00E+00	0.00E+00	0.00E+00	0.00E+00	0.00E+00	0.00E+00	0.00E+00	0.00E+00
1441	ALL	755188.42	4036660.7	5.83E-09	25YrCancer	5.83E-09	0.00E+00	0.00E+00	0.00E+00	0.00E+00	0.00E+00	0.00E+00	0.00E+00	0.00E+00	0.00E+00	0.00E+00	0.00E+00
1442	ALL	755288.42	4036660.7	5.70E-09	25YrCancer	5.70E-09	0.00E+00	0.00E+00	0.00E+00	0.00E+00	0.00E+00	0.00E+00	0.00E+00	0.00E+00	0.00E+00	0.00E+00	0.00E+00
1443	ALL	745988.42	4036760.7	1.30E-08	25YrCancer	1.30E-08	0.00E+00	0.00E+00	0.00E+00	0.00E+00	0.00E+00	0.00E+00	0.00E+00	0.00E+00	0.00E+00	0.00E+00	0.00E+00
1444	ALL	746088.42	4036760.7	1.46E-08	25YrCancer	1.46E-08	0.00E+00	0.00E+00	0.00E+00	0.00E+00	0.00E+00	0.00E+00	0.00E+00	0.00E+00	0.00E+00	0.00E+00	0.00E+00
1445	ALL	746188.42	4036760.7	1.63E-08	25YrCancer	1.63E-08	0.00E+00	0.00E+00	0.00E+00	0.00E+00	0.00E+00	0.00E+00	0.00E+00	0.00E+00	0.00E+00	0.00E+00	0.00E+00
1446	ALL	746288.42	4036760.7	1.79E-08	25YrCancer	1.79E-08	0.00E+00	0.00E+00	0.00E+00	0.00E+00	0.00E+00	0.00E+00	0.00E+00	0.00E+00	0.00E+00	0.00E+00	0.00E+00
1447	ALL	746388.42	4036760.7	1.89E-08	25YrCancer	1.89E-08	0.00E+00	0.00E+00	0.00E+00	0.00E+00	0.00E+00	0.00E+00	0.00E+00	0.00E+00	0.00E+00	0.00E+00	0.00E+00
1448	ALL	746488.42	4036760.7	1.87E-08	25YrCancer	1.87E-08	0.00E+00	0.00E+00	0.00E+00	0.00E+00	0.00E+00	0.00E+00	0.00E+00	0.00E+00	0.00E+00	0.00E+00	0.00E+00
1449	ALL	746588.42	4036760.7	1.71E-08	25YrCancer	1.71E-08	0.00E+00	0.00E+00	0.00E+00	0.00E+00	0.00E+00	0.00E+00	0.00E+00	0.00E+00	0.00E+00	0.00E+00	0.00E+00
1450	ALL	749888.42	4036760.7	9.27E-09	25YrCancer	9.27E-09	0.00E+00	0.00E+00	0.00E+00	0.00E+00	0.00E+00	0.00E+00	0.00E+00	0.00E+00	0.00E+00	0.00E+00	0.00E+00
1451	ALL	749988.42	4036760.7	9.42E-09	25YrCancer	9.42E-09	0.00E+00	0.00E+00	0.00E+00	0.00E+00	0.00E+00	0.00E+00	0.00E+00	0.00E+00	0.00E+00	0.00E+00	0.00E+00
1452	ALL	750088.42	4036760.7	9.56E-09	25YrCancer	9.56E-09	0.00E+00	0.00E+00	0.00E+00	0.00E+00	0.00E+00	0.00E+00	0.00E+00	0.00E+00	0.00E+00	0.00E+00	0.00E+00
1453	ALL	750188.42	4036760.7	9.68E-09	25YrCancer	9.68E-09	0.00E+00	0.00E+00	0.00E+00	0.00E+00	0.00E+00	0.00E+00	0.00E+00	0.00E+00	0.00E+00	0.00E+00	0.00E+00
1454	ALL	750288.42	4036760.7	9.79E-09	25YrCancer	9.79E-09	0.00E+00	0.00E+00	0.00E+00	0.00E+00	0.00E+00	0.00E+00	0.00E+00	0.00E+00	0.00E+00	0.00E+00	0.00E+00
1455	ALL	752388.42	4036760.7	9.95E-09	25YrCancer	9.95E-09	0.00E+00	0.00E+00	0.00E+00	0.00E+00	0.00E+00	0.00E+00	0.00E+00	0.00E+00	0.00E+00	0.00E+00	0.00E+00
1456	ALL	752488.42	4036760.7	9.85E-09	25YrCancer	9.85E-09	0.00E+00	0.00E+00	0.00E+00	0.00E+00	0.00E+00	0.00E+00	0.00E+00	0.00E+00	0.00E+00	0.00E+00	0.00E+00
1457	ALL	752588.42	4036760.7	9.75E-09	25YrCancer	9.75E-09	0.00E+00	0.00E+00	0.00E+00	0.00E+00	0.00E+00	0.00E+00	0.00E+00	0.00E+00	0.00E+00	0.00E+00	0.00E+00
1458	ALL	752688.42	4036760.7	9.63E-09	25YrCancer	9.63E-09	0.00E+00	0.00E+00	0.00E+00	0.00E+00	0.00E+00	0.00E+00	0.00E+00	0.00E+00	0.00E+00	0.00E+00	0.00E+00
1459	ALL	752788.42	4036760.7	9.51E-09	25YrCancer	9.51E-09	0.00E+00	0.00E+00	0.00E+00	0.00E+00	0.00E+00	0.00E+00	0.00E+00	0.00E+00	0.00E+00	0.00E+00	0.00E+00
1460	ALL	752888.42	4036760.7	9.38E-09	25YrCancer	9.38E-09	0.00E+00	0.00E+00	0.00E+00	0.00E+00	0.00E+00	0.00E+00	0.00E+00	0.00E+00	0.00E+00	0.00E+00	0.00E+00
1461	ALL	752988.42	4036760.7	9.24E-09	25YrCancer	9.24E-09	0.00E+00	0.00E+00	0.00E+00	0.00E+00	0.00E+00	0.00E+00	0.00E+00	0.00E+00	0.00E+00	0.00E+00	0.00E+00
1462	ALL	753088.42	4036760.7	9.09E-09	25YrCancer	9.09E-09	0.00E+00	0.00E+00	0.00E+00	0.00E+00	0.00E+00	0.00E+00	0.00E+00	0.00E+00	0.00E+00	0.00E+00	0.00E+00
1463	ALL	753188.42	4036760.7	8.94E-09	25YrCancer	8.94E-09	0.00E+00	0.00E+00	0.00E+00	0.00E+00	0.00E+00	0.00E+00	0.00E+00	0.00E+00	0.00E+00	0.00E+00	0.00E+00
1464	ALL	753288.42	4036760.7	8.79E-09	25YrCancer	8.79E-09	0.00E+00	0.00E+00	0.00E+00	0.00E+00	0.00E+00	0.00E+00	0.00E+00	0.00E+00	0.00E+00	0.00E+00	0.00E+00
1465	ALL	753388.42	4036760.7	8.62E-09	25YrCancer	8.62E-09	0.00E+00	0.00E+00	0.00E+00	0.00E+00	0.00E+00	0.00E+00	0.00E+00	0.00E+00	0.00E+00	0.00E+00	0.00E+00
1466	ALL	753488.42	4036760.7	8.46E-09	25YrCancer	8.46E-09	0.00E+00	0.00E+00	0.00E+00	0.00E+00	0.00E+00	0.00E+00	0.00E+00	0.00E+00	0.00E+00	0.00E+00	0.00E+00
1467	ALL	753588.42	4036760.7	8.29E-09	25YrCancer	8.29E-09	0.00E+00	0.00E+00	0.00E+00	0.00E+00	0.00E+00	0.00E+00	0.00E+00	0.00E+00	0.00E+00	0.00E+00	0.00E+00
1468	ALL	753688.42	4036760.7	8.12E-09	25YrCancer	8.12E-09	0.00E+00	0.00E+00	0.00E+00	0.00E+00	0.00E+00	0.00E+00	0.00E+00	0.00E+00	0.00E+00	0.00E+00	0.00E+00
1469	ALL	753788.42	4036760.7	7.96E-09	25YrCancer	7.96E-09	0.00E+00	0.00E+00	0.00E+00	0.00E+00	0.00E+00	0.00E+00	0.00E+00	0.00E+00	0.00E+00	0.00E+00	0.00E+00
1470	ALL	753888.42	4036760.7	7.79E-09	25YrCancer	7.79E-09	0.00E+00	0.00E+00	0.00E+00	0.00E+00	0.00E+00	0.00E+00	0.00E+00	0.00E+00	0.00E+00	0.00E+00	0.00E+00
1471	ALL	753988.42	4036760.7	7.62E-09	25YrCancer	7.62E-09	0.00E+00	0.00E+00	0.00E+00	0.00E+00	0.00E+00	0.00E+00	0.00E+00	0.00E+00	0.00E+00	0.00E+00	0.00E+00
1472	ALL	754088.42	4036760.7	7.45E-09	25YrCancer	7.45E-09	0.00E+00	0.00E+00	0.00E+00	0.00E+00	0.00E+00	0.00E+00	0.00E+00	0.00E+00	0.00E+00	0.00E+00	0.00E+00
1473	ALL	754188.42	4036760.7	7.28E-09	25YrCancer	7.28E-09	0.00E+00	0.00E+00	0.00E+00	0.00E+00	0.00E+00	0.00E+00	0.00E+00	0.00E+00	0.00E+00	0.00E+00	0.00E+00
1474	ALL	754288.42	4036760.7	7.11E-09	25YrCancer	7.11E-09	0.00E+00	0.00E+00	0.00E+00	0.00E+00	0.00E+00	0.00E+00	0.00E+00	0.00E+00	0.00E+00	0.00E+00	0.00E+00
1475	ALL	754388.42	4036760.7	6.95E-09	25YrCancer	6.95E-09	0.00E+00	0.00E+00	0.00E+00	0.00E+00	0.00E+00	0.00E+00	0.00E+00	0.00E+00	0.00E+00	0.00E+00	0.00E+00
1476	ALL	754488.42	4036760.7	6.78E-09	25YrCancer	6.78E-09	0.00E+00	0.00E+00	0.00E+00	0.00E+00	0.00E+00	0.00E+00	0.00E+00	0.00E+00	0.00E+00	0.00E+00	0.00E+00
1477	ALL	754588.42	4036760.7	6.62E-09	25YrCancer	6.62E-09	0.00E+00	0.00E+00	0.00E+00	0.00E+00	0.00E+00	0.00E+00	0.00E+00	0.00E+00	0.00E+00	0.00E+00	0.00E+00

1478	ALL	754688.42	4036760.7	6.47E-09	25YrCancer	6.47E-09	0.00E+00	0.00E+00	0.00E+00	0.00E+00	0.00E+00	0.00E+00	0.00E+00	0.00E+00	0.00E+00	0.00E+00	0.00E+00
1479	ALL	754788.42	4036760.7	6.32E-09	25YrCancer	6.32E-09	0.00E+00	0.00E+00	0.00E+00	0.00E+00	0.00E+00	0.00E+00	0.00E+00	0.00E+00	0.00E+00	0.00E+00	0.00E+00
1480	ALL	754888.42	4036760.7	6.17E-09	25YrCancer	6.17E-09	0.00E+00	0.00E+00	0.00E+00	0.00E+00	0.00E+00	0.00E+00	0.00E+00	0.00E+00	0.00E+00	0.00E+00	0.00E+00
1481	ALL	754988.42	4036760.7	6.03E-09	25YrCancer	6.03E-09	0.00E+00	0.00E+00	0.00E+00	0.00E+00	0.00E+00	0.00E+00	0.00E+00	0.00E+00	0.00E+00	0.00E+00	0.00E+00
1482	ALL	755088.42	4036760.7	5.89E-09	25YrCancer	5.89E-09	0.00E+00	0.00E+00	0.00E+00	0.00E+00	0.00E+00	0.00E+00	0.00E+00	0.00E+00	0.00E+00	0.00E+00	0.00E+00
1483	ALL	755188.42	4036760.7	5.75E-09	25YrCancer	5.75E-09	0.00E+00	0.00E+00	0.00E+00	0.00E+00	0.00E+00	0.00E+00	0.00E+00	0.00E+00	0.00E+00	0.00E+00	0.00E+00
1484	ALL	755288.42	4036760.7	5.62E-09	25YrCancer	5.62E-09	0.00E+00	0.00E+00	0.00E+00	0.00E+00	0.00E+00	0.00E+00	0.00E+00	0.00E+00	0.00E+00	0.00E+00	0.00E+00
1485	ALL	745988.42	4036860.7	1.35E-08	25YrCancer	1.35E-08	0.00E+00	0.00E+00	0.00E+00	0.00E+00	0.00E+00	0.00E+00	0.00E+00	0.00E+00	0.00E+00	0.00E+00	0.00E+00
1486	ALL	746088.42	4036860.7	1.47E-08	25YrCancer	1.47E-08	0.00E+00	0.00E+00	0.00E+00	0.00E+00	0.00E+00	0.00E+00	0.00E+00	0.00E+00	0.00E+00	0.00E+00	0.00E+00
1487	ALL	746188.42	4036860.7	1.58E-08	25YrCancer	1.58E-08	0.00E+00	0.00E+00	0.00E+00	0.00E+00	0.00E+00	0.00E+00	0.00E+00	0.00E+00	0.00E+00	0.00E+00	0.00E+00
1488	ALL	746288.42	4036860.7	1.64E-08	25YrCancer	1.64E-08	0.00E+00	0.00E+00	0.00E+00	0.00E+00	0.00E+00	0.00E+00	0.00E+00	0.00E+00	0.00E+00	0.00E+00	0.00E+00
1489	ALL	746388.42	4036860.7	1.61E-08	25YrCancer	1.61E-08	0.00E+00	0.00E+00	0.00E+00	0.00E+00	0.00E+00	0.00E+00	0.00E+00	0.00E+00	0.00E+00	0.00E+00	0.00E+00
1490	ALL	746488.42	4036860.7	1.50E-08	25YrCancer	1.50E-08	0.00E+00	0.00E+00	0.00E+00	0.00E+00	0.00E+00	0.00E+00	0.00E+00	0.00E+00	0.00E+00	0.00E+00	0.00E+00
1491	ALL	746588.42	4036860.7	1.33E-08	25YrCancer	1.33E-08	0.00E+00	0.00E+00	0.00E+00	0.00E+00	0.00E+00	0.00E+00	0.00E+00	0.00E+00	0.00E+00	0.00E+00	0.00E+00
1492	ALL	747488.42	4036860.7	6.33E-09	25YrCancer	6.33E-09	0.00E+00	0.00E+00	0.00E+00	0.00E+00	0.00E+00	0.00E+00	0.00E+00	0.00E+00	0.00E+00	0.00E+00	0.00E+00
1493	ALL	747588.42	4036860.7	6.10E-09	25YrCancer	6.10E-09	0.00E+00	0.00E+00	0.00E+00	0.00E+00	0.00E+00	0.00E+00	0.00E+00	0.00E+00	0.00E+00	0.00E+00	0.00E+00
1494	ALL	747688.42	4036860.7	5.97E-09	25YrCancer	5.97E-09	0.00E+00	0.00E+00	0.00E+00	0.00E+00	0.00E+00	0.00E+00	0.00E+00	0.00E+00	0.00E+00	0.00E+00	0.00E+00
1495	ALL	747788.42	4036860.7	5.92E-09	25YrCancer	5.92E-09	0.00E+00	0.00E+00	0.00E+00	0.00E+00	0.00E+00	0.00E+00	0.00E+00	0.00E+00	0.00E+00	0.00E+00	0.00E+00
1496	ALL	747888.42	4036860.7	5.89E-09	25YrCancer	5.89E-09	0.00E+00	0.00E+00	0.00E+00	0.00E+00	0.00E+00	0.00E+00	0.00E+00	0.00E+00	0.00E+00	0.00E+00	0.00E+00
1497	ALL	747988.42	4036860.7	5.90E-09	25YrCancer	5.90E-09	0.00E+00	0.00E+00	0.00E+00	0.00E+00	0.00E+00	0.00E+00	0.00E+00	0.00E+00	0.00E+00	0.00E+00	0.00E+00
1498	ALL	748088.42	4036860.7	5.92E-09	25YrCancer	5.92E-09	0.00E+00	0.00E+00	0.00E+00	0.00E+00	0.00E+00	0.00E+00	0.00E+00	0.00E+00	0.00E+00	0.00E+00	0.00E+00
1499	ALL	748188.42	4036860.7	5.97E-09	25YrCancer	5.97E-09	0.00E+00	0.00E+00	0.00E+00	0.00E+00	0.00E+00	0.00E+00	0.00E+00	0.00E+00	0.00E+00	0.00E+00	0.00E+00
1500	ALL	749988.42	4036860.7	9.48E-09	25YrCancer	9.48E-09	0.00E+00	0.00E+00	0.00E+00	0.00E+00	0.00E+00	0.00E+00	0.00E+00	0.00E+00	0.00E+00	0.00E+00	0.00E+00
1501	ALL	750088.42	4036860.7	9.64E-09	25YrCancer	9.64E-09	0.00E+00	0.00E+00	0.00E+00	0.00E+00	0.00E+00	0.00E+00	0.00E+00	0.00E+00	0.00E+00	0.00E+00	0.00E+00
1502	ALL	750188.42	4036860.7	9.78E-09	25YrCancer	9.78E-09	0.00E+00	0.00E+00	0.00E+00	0.00E+00	0.00E+00	0.00E+00	0.00E+00	0.00E+00	0.00E+00	0.00E+00	0.00E+00
1503	ALL	750288.42	4036860.7	9.89E-09	25YrCancer	9.89E-09	0.00E+00	0.00E+00	0.00E+00	0.00E+00	0.00E+00	0.00E+00	0.00E+00	0.00E+00	0.00E+00	0.00E+00	0.00E+00
1504	ALL	752388.42	4036860.7	1.01E-08	25YrCancer	1.01E-08	0.00E+00	0.00E+00	0.00E+00	0.00E+00	0.00E+00	0.00E+00	0.00E+00	0.00E+00	0.00E+00	0.00E+00	0.00E+00
1505	ALL	752488.42	4036860.7	9.99E-09	25YrCancer	9.99E-09	0.00E+00	0.00E+00	0.00E+00	0.00E+00	0.00E+00	0.00E+00	0.00E+00	0.00E+00	0.00E+00	0.00E+00	0.00E+00
1506	ALL	752588.42	4036860.7	9.87E-09	25YrCancer	9.87E-09	0.00E+00	0.00E+00	0.00E+00	0.00E+00	0.00E+00	0.00E+00	0.00E+00	0.00E+00	0.00E+00	0.00E+00	0.00E+00
1507	ALL	752688.42	4036860.7	9.74E-09	25YrCancer	9.74E-09	0.00E+00	0.00E+00	0.00E+00	0.00E+00	0.00E+00	0.00E+00	0.00E+00	0.00E+00	0.00E+00	0.00E+00	0.00E+00
1508	ALL	752788.42	4036860.7	9.60E-09	25YrCancer	9.60E-09	0.00E+00	0.00E+00	0.00E+00	0.00E+00	0.00E+00	0.00E+00	0.00E+00	0.00E+00	0.00E+00	0.00E+00	0.00E+00
1509	ALL	752888.42	4036860.7	9.46E-09	25YrCancer	9.46E-09	0.00E+00	0.00E+00	0.00E+00	0.00E+00	0.00E+00	0.00E+00	0.00E+00	0.00E+00	0.00E+00	0.00E+00	0.00E+00
1510	ALL	752988.42	4036860.7	9.30E-09	25YrCancer	9.30E-09	0.00E+00	0.00E+00	0.00E+00	0.00E+00	0.00E+00	0.00E+00	0.00E+00	0.00E+00	0.00E+00	0.00E+00	0.00E+00
1511	ALL	753088.42	4036860.7	9.14E-09	25YrCancer	9.14E-09	0.00E+00	0.00E+00	0.00E+00	0.00E+00	0.00E+00	0.00E+00	0.00E+00	0.00E+00	0.00E+00	0.00E+00	0.00E+00
1512	ALL	753188.42	4036860.7	8.98E-09	25YrCancer	8.98E-09	0.00E+00	0.00E+00	0.00E+00	0.00E+00	0.00E+00	0.00E+00	0.00E+00	0.00E+00	0.00E+00	0.00E+00	0.00E+00
1513	ALL	753288.42	4036860.7	8.81E-09	25YrCancer	8.81E-09	0.00E+00	0.00E+00	0.00E+00	0.00E+00	0.00E+00	0.00E+00	0.00E+00	0.00E+00	0.00E+00	0.00E+00	0.00E+00
1514	ALL	753388.42	4036860.7	8.63E-09	25YrCancer	8.63E-09	0.00E+00	0.00E+00	0.00E+00	0.00E+00	0.00E+00	0.00E+00	0.00E+00	0.00E+00	0.00E+00	0.00E+00	0.00E+00
1515	ALL	753488.42	4036860.7	8.46E-09	25YrCancer	8.46E-09	0.00E+00	0.00E+00	0.00E+00	0.00E+00	0.00E+00	0.00E+00	0.00E+00	0.00E+00	0.00E+00	0.00E+00	0.00E+00
1516	ALL	753588.42	4036860.7	8.28E-09	25YrCancer	8.28E-09	0.00E+00	0.00E+00	0.00E+00	0.00E+00	0.00E+00	0.00E+00	0.00E+00	0.00E+00	0.00E+00	0.00E+00	0.00E+00
1517	ALL	753688.42	4036860.7	8.10E-09	25YrCancer	8.10E-09	0.00E+00	0.00E+00	0.00E+00	0.00E+00	0.00E+00	0.00E+00	0.00E+00	0.00E+00	0.00E+00	0.00E+00	0.00E+00
1518	ALL	753788.42	4036860.7	7.92E-09	25YrCancer	7.92E-09	0.00E+00	0.00E+00	0.00E+00	0.00E+00	0.00E+00	0.00E+00	0.00E+00	0.00E+00	0.00E+00	0.00E+00	0.00E+00
1519	ALL	753888.42	4036860.7	7.74E-09	25YrCancer	7.74E-09	0.00E+00	0.00E+00	0.00E+00	0.00E+00	0.00E+00	0.00E+00	0.00E+00	0.00E+00	0.00E+00	0.00E+00	0.00E+00
1520	ALL	753988.42	4036860.7	7.56E-09	25YrCancer	7.56E-09	0.00E+00	0.00E+00	0.00E+00	0.00E+00	0.00E+00	0.00E+00	0.00E+00	0.00E+00	0.00E+00	0.00E+00	0.00E+00
1521	ALL	754088.42	4036860.7	7.38E-09	25YrCancer	7.38E-09	0.00E+00	0.00E+00	0.00E+00	0.00E+00	0.00E+00	0.00E+00	0.00E+00	0.00E+00	0.00E+00	0.00E+00	0.00E+00
1522	ALL	754188.42	4036860.7	7.21E-09	25YrCancer	7.21E-09	0.00E+00	0.00E+00	0.00E+00	0.00E+00	0.00E+00	0.00E+00	0.00E+00	0.00E+00	0.00E+00	0.00E+00	0.00E+00
1523	ALL	754288.42	4036860.7	7.04E-09	25YrCancer	7.04E-09	0.00E+00	0.00E+00	0.00E+00	0.00E+00	0.00E+00	0.00E+00	0.00E+00	0.00E+00	0.00E+00	0.00E+00	0.00E+00
1524	ALL	754388.42	4036860.7	6.87E-09	25YrCancer	6.87E-09	0.00E+00	0.00E+00	0.00E+00	0.00E+00	0.00E+00	0.00E+00	0.00E+00	0.00E+00	0.00E+00	0.00E+00	0.00E+00
1525	ALL	754488.42	4036860.7	6.70E-09	25YrCancer	6.70E-09	0.00E+00	0.00E+00	0.00E+00	0.00E+00	0.00E+00	0.00E+00	0.00E+00	0.00E+00	0.00E+00	0.00E+00	0.00E+00
1526	ALL	754588.42	4036860.7	6.54E-09	25YrCancer	6.54E-09	0.00E+00	0.00E+00	0.00E+00	0.00E+00	0.00E+00	0.00E+00	0.00E+00	0.00E+00	0.00E+00	0.00E+00	0.00E+00
1527	ALL	754688.42	4036860.7	6.38E-09	25YrCancer	6.38E-09	0.00E+00	0.00E+00	0.00E+00	0.00E+00	0.00E+00	0.00E+00	0.00E+00	0.00E+00	0.00E+00	0.00E+00	0.00E+00
1528	ALL	754788.42	4036860.7	6.23E-09	25YrCancer	6.23E-09	0.00E+00	0.00E+00	0.00E+00	0.00E+00	0.00E+00	0.00E+00	0.00E+00	0.00E+00	0.00E+00	0.00E+00	0.00E+00

1529	ALL	754888.42	4036860.7	6.08E-09	25YrCancer	6.08E-09	0.00E+00	0.00E+00	0.00E+00	0.00E+00	0.00E+00	0.00E+00	0.00E+00	0.00E+00	0.00E+00	0.00E+00	0.00E+00
1530	ALL	754988.42	4036860.7	5.94E-09	25YrCancer	5.94E-09	0.00E+00	0.00E+00	0.00E+00	0.00E+00	0.00E+00	0.00E+00	0.00E+00	0.00E+00	0.00E+00	0.00E+00	0.00E+00
1531	ALL	755088.42	4036860.7	5.80E-09	25YrCancer	5.80E-09	0.00E+00	0.00E+00	0.00E+00	0.00E+00	0.00E+00	0.00E+00	0.00E+00	0.00E+00	0.00E+00	0.00E+00	0.00E+00
1532	ALL	755188.42	4036860.7	5.67E-09	25YrCancer	5.67E-09	0.00E+00	0.00E+00	0.00E+00	0.00E+00	0.00E+00	0.00E+00	0.00E+00	0.00E+00	0.00E+00	0.00E+00	0.00E+00
1533	ALL	755288.42	4036860.7	5.54E-09	25YrCancer	5.54E-09	0.00E+00	0.00E+00	0.00E+00	0.00E+00	0.00E+00	0.00E+00	0.00E+00	0.00E+00	0.00E+00	0.00E+00	0.00E+00
1534	ALL	746388.42	4036960.7	1.34E-08	25YrCancer	1.34E-08	0.00E+00	0.00E+00	0.00E+00	0.00E+00	0.00E+00	0.00E+00	0.00E+00	0.00E+00	0.00E+00	0.00E+00	0.00E+00
1535	ALL	746488.42	4036960.7	1.22E-08	25YrCancer	1.22E-08	0.00E+00	0.00E+00	0.00E+00	0.00E+00	0.00E+00	0.00E+00	0.00E+00	0.00E+00	0.00E+00	0.00E+00	0.00E+00
1536	ALL	746588.42	4036960.7	1.08E-08	25YrCancer	1.08E-08	0.00E+00	0.00E+00	0.00E+00	0.00E+00	0.00E+00	0.00E+00	0.00E+00	0.00E+00	0.00E+00	0.00E+00	0.00E+00
1537	ALL	747488.42	4036960.7	5.93E-09	25YrCancer	5.93E-09	0.00E+00	0.00E+00	0.00E+00	0.00E+00	0.00E+00	0.00E+00	0.00E+00	0.00E+00	0.00E+00	0.00E+00	0.00E+00
1538	ALL	747588.42	4036960.7	5.74E-09	25YrCancer	5.74E-09	0.00E+00	0.00E+00	0.00E+00	0.00E+00	0.00E+00	0.00E+00	0.00E+00	0.00E+00	0.00E+00	0.00E+00	0.00E+00
1539	ALL	747688.42	4036960.7	5.62E-09	25YrCancer	5.62E-09	0.00E+00	0.00E+00	0.00E+00	0.00E+00	0.00E+00	0.00E+00	0.00E+00	0.00E+00	0.00E+00	0.00E+00	0.00E+00
1540	ALL	747788.42	4036960.7	5.57E-09	25YrCancer	5.57E-09	0.00E+00	0.00E+00	0.00E+00	0.00E+00	0.00E+00	0.00E+00	0.00E+00	0.00E+00	0.00E+00	0.00E+00	0.00E+00
1541	ALL	747888.42	4036960.7	5.55E-09	25YrCancer	5.55E-09	0.00E+00	0.00E+00	0.00E+00	0.00E+00	0.00E+00	0.00E+00	0.00E+00	0.00E+00	0.00E+00	0.00E+00	0.00E+00
1542	ALL	747988.42	4036960.7	5.55E-09	25YrCancer	5.55E-09	0.00E+00	0.00E+00	0.00E+00	0.00E+00	0.00E+00	0.00E+00	0.00E+00	0.00E+00	0.00E+00	0.00E+00	0.00E+00
1543	ALL	748088.42	4036960.7	5.57E-09	25YrCancer	5.57E-09	0.00E+00	0.00E+00	0.00E+00	0.00E+00	0.00E+00	0.00E+00	0.00E+00	0.00E+00	0.00E+00	0.00E+00	0.00E+00
1544	ALL	748188.42	4036960.7	5.62E-09	25YrCancer	5.62E-09	0.00E+00	0.00E+00	0.00E+00	0.00E+00	0.00E+00	0.00E+00	0.00E+00	0.00E+00	0.00E+00	0.00E+00	0.00E+00
1545	ALL	749988.42	4036960.7	9.61E-09	25YrCancer	9.61E-09	0.00E+00	0.00E+00	0.00E+00	0.00E+00	0.00E+00	0.00E+00	0.00E+00	0.00E+00	0.00E+00	0.00E+00	0.00E+00
1546	ALL	750088.42	4036960.7	9.78E-09	25YrCancer	9.78E-09	0.00E+00	0.00E+00	0.00E+00	0.00E+00	0.00E+00	0.00E+00	0.00E+00	0.00E+00	0.00E+00	0.00E+00	0.00E+00
1547	ALL	750188.42	4036960.7	9.94E-09	25YrCancer	9.94E-09	0.00E+00	0.00E+00	0.00E+00	0.00E+00	0.00E+00	0.00E+00	0.00E+00	0.00E+00	0.00E+00	0.00E+00	0.00E+00
1548	ALL	750288.42	4036960.7	1.01E-08	25YrCancer	1.01E-08	0.00E+00	0.00E+00	0.00E+00	0.00E+00	0.00E+00	0.00E+00	0.00E+00	0.00E+00	0.00E+00	0.00E+00	0.00E+00
1549	ALL	752388.42	4036960.7	1.03E-08	25YrCancer	1.03E-08	0.00E+00	0.00E+00	0.00E+00	0.00E+00	0.00E+00	0.00E+00	0.00E+00	0.00E+00	0.00E+00	0.00E+00	0.00E+00
1550	ALL	752488.42	4036960.7	1.01E-08	25YrCancer	1.01E-08	0.00E+00	0.00E+00	0.00E+00	0.00E+00	0.00E+00	0.00E+00	0.00E+00	0.00E+00	0.00E+00	0.00E+00	0.00E+00
1551	ALL	752588.42	4036960.7	9.99E-09	25YrCancer	9.99E-09	0.00E+00	0.00E+00	0.00E+00	0.00E+00	0.00E+00	0.00E+00	0.00E+00	0.00E+00	0.00E+00	0.00E+00	0.00E+00
1552	ALL	752688.42	4036960.7	9.85E-09	25YrCancer	9.85E-09	0.00E+00	0.00E+00	0.00E+00	0.00E+00	0.00E+00	0.00E+00	0.00E+00	0.00E+00	0.00E+00	0.00E+00	0.00E+00
1553	ALL	752788.42	4036960.7	9.69E-09	25YrCancer	9.69E-09	0.00E+00	0.00E+00	0.00E+00	0.00E+00	0.00E+00	0.00E+00	0.00E+00	0.00E+00	0.00E+00	0.00E+00	0.00E+00
1554	ALL	754888.42	4036960.7	6.00E-09	25YrCancer	6.00E-09	0.00E+00	0.00E+00	0.00E+00	0.00E+00	0.00E+00	0.00E+00	0.00E+00	0.00E+00	0.00E+00	0.00E+00	0.00E+00
1555	ALL	754988.42	4036960.7	5.85E-09	25YrCancer	5.85E-09	0.00E+00	0.00E+00	0.00E+00	0.00E+00	0.00E+00	0.00E+00	0.00E+00	0.00E+00	0.00E+00	0.00E+00	0.00E+00
1556	ALL	755088.42	4036960.7	5.71E-09	25YrCancer	5.71E-09	0.00E+00	0.00E+00	0.00E+00	0.00E+00	0.00E+00	0.00E+00	0.00E+00	0.00E+00	0.00E+00	0.00E+00	0.00E+00
1557	ALL	755188.42	4036960.7	5.57E-09	25YrCancer	5.57E-09	0.00E+00	0.00E+00	0.00E+00	0.00E+00	0.00E+00	0.00E+00	0.00E+00	0.00E+00	0.00E+00	0.00E+00	0.00E+00
1558	ALL	755288.42	4036960.7	5.44E-09	25YrCancer	5.44E-09	0.00E+00	0.00E+00	0.00E+00	0.00E+00	0.00E+00	0.00E+00	0.00E+00	0.00E+00	0.00E+00	0.00E+00	0.00E+00
1559	ALL	746388.42	4037060.7	1.12E-08	25YrCancer	1.12E-08	0.00E+00	0.00E+00	0.00E+00	0.00E+00	0.00E+00	0.00E+00	0.00E+00	0.00E+00	0.00E+00	0.00E+00	0.00E+00
1560	ALL	746488.42	4037060.7	1.01E-08	25YrCancer	1.01E-08	0.00E+00	0.00E+00	0.00E+00	0.00E+00	0.00E+00	0.00E+00	0.00E+00	0.00E+00	0.00E+00	0.00E+00	0.00E+00
1561	ALL	746588.42	4037060.7	9.09E-09	25YrCancer	9.09E-09	0.00E+00	0.00E+00	0.00E+00	0.00E+00	0.00E+00	0.00E+00	0.00E+00	0.00E+00	0.00E+00	0.00E+00	0.00E+00
1562	ALL	747488.42	4037060.7	5.63E-09	25YrCancer	5.63E-09	0.00E+00	0.00E+00	0.00E+00	0.00E+00	0.00E+00	0.00E+00	0.00E+00	0.00E+00	0.00E+00	0.00E+00	0.00E+00
1563	ALL	747588.42	4037060.7	5.48E-09	25YrCancer	5.48E-09	0.00E+00	0.00E+00	0.00E+00	0.00E+00	0.00E+00	0.00E+00	0.00E+00	0.00E+00	0.00E+00	0.00E+00	0.00E+00
1564	ALL	747688.42	4037060.7	5.37E-09	25YrCancer	5.37E-09	0.00E+00	0.00E+00	0.00E+00	0.00E+00	0.00E+00	0.00E+00	0.00E+00	0.00E+00	0.00E+00	0.00E+00	0.00E+00
1565	ALL	747788.42	4037060.7	5.31E-09	25YrCancer	5.31E-09	0.00E+00	0.00E+00	0.00E+00	0.00E+00	0.00E+00	0.00E+00	0.00E+00	0.00E+00	0.00E+00	0.00E+00	0.00E+00
1566	ALL	747888.42	4037060.7	5.30E-09	25YrCancer	5.30E-09	0.00E+00	0.00E+00	0.00E+00	0.00E+00	0.00E+00	0.00E+00	0.00E+00	0.00E+00	0.00E+00	0.00E+00	0.00E+00
1567	ALL	747988.42	4037060.7	5.30E-09	25YrCancer	5.30E-09	0.00E+00	0.00E+00	0.00E+00	0.00E+00	0.00E+00	0.00E+00	0.00E+00	0.00E+00	0.00E+00	0.00E+00	0.00E+00
1568	ALL	748088.42	4037060.7	5.30E-09	25YrCancer	5.30E-09	0.00E+00	0.00E+00	0.00E+00	0.00E+00	0.00E+00	0.00E+00	0.00E+00	0.00E+00	0.00E+00	0.00E+00	0.00E+00
1569	ALL	748188.42	4037060.7	5.34E-09	25YrCancer	5.34E-09	0.00E+00	0.00E+00	0.00E+00	0.00E+00	0.00E+00	0.00E+00	0.00E+00	0.00E+00	0.00E+00	0.00E+00	0.00E+00
1570	ALL	749988.42	4037060.7	9.81E-09	25YrCancer	9.81E-09	0.00E+00	0.00E+00	0.00E+00	0.00E+00	0.00E+00	0.00E+00	0.00E+00	0.00E+00	0.00E+00	0.00E+00	0.00E+00
1571	ALL	750088.42	4037060.7	9.99E-09	25YrCancer	9.99E-09	0.00E+00	0.00E+00	0.00E+00	0.00E+00	0.00E+00	0.00E+00	0.00E+00	0.00E+00	0.00E+00	0.00E+00	0.00E+00
1572	ALL	750188.42	4037060.7	1.02E-08	25YrCancer	1.02E-08	0.00E+00	0.00E+00	0.00E+00	0.00E+00	0.00E+00	0.00E+00	0.00E+00	0.00E+00	0.00E+00	0.00E+00	0.00E+00
1573	ALL	750288.42	4037060.7	1.03E-08	25YrCancer	1.03E-08	0.00E+00	0.00E+00	0.00E+00	0.00E+00	0.00E+00	0.00E+00	0.00E+00	0.00E+00	0.00E+00	0.00E+00	0.00E+00
1574	ALL	752388.42	4037060.7	1.04E-08	25YrCancer	1.04E-08	0.00E+00	0.00E+00	0.00E+00	0.00E+00	0.00E+00	0.00E+00	0.00E+00	0.00E+00	0.00E+00	0.00E+00	0.00E+00
1575	ALL	752488.42	4037060.7	1.03E-08	25YrCancer	1.03E-08	0.00E+00	0.00E+00	0.00E+00	0.00E+00	0.00E+00	0.00E+00	0.00E+00	0.00E+00	0.00E+00	0.00E+00	0.00E+00
1576	ALL	752588.42	4037060.7	1.01E-08	25YrCancer	1.01E-08	0.00E+00	0.00E+00	0.00E+00	0.00E+00	0.00E+00	0.00E+00	0.00E+00	0.00E+00	0.00E+00	0.00E+00	0.00E+00
1577	ALL	752688.42	4037060.7	9.94E-09	25YrCancer	9.94E-09	0.00E+00	0.00E+00	0.00E+00	0.00E+00	0.00E+00	0.00E+00	0.00E+00	0.00E+00	0.00E+00	0.00E+00	0.00E+00
1578	ALL	752788.42	4037060.7	9.76E-09	25YrCancer	9.76E-09	0.00E+00	0.00E+00	0.00E+00	0.00E+00	0.00E+00	0.00E+00	0.00E+00	0.00E+00	0.00E+00	0.00E+00	0.00E+00
1579	ALL	754888.42	4037060.7	5.90E-09	25YrCancer	5.90E-09	0.00E+00	0.00E+00	0.00E+00	0.00E+00	0.00E+00	0.00E+00	0.00E+00	0.00E+00	0.00E+00	0.00E+00	0.00E+00

1580	ALL	754988.42	4037060.7	5.76E-09	25YrCancer	5.76E-09	0.00E+00	0.00E+00	0.00E+00	0.00E+00	0.00E+00	0.00E+00	0.00E+00	0.00E+00	0.00E+00	0.00E+00	0.00E+00
1581	ALL	755088.42	4037060.7	5.62E-09	25YrCancer	5.62E-09	0.00E+00	0.00E+00	0.00E+00	0.00E+00	0.00E+00	0.00E+00	0.00E+00	0.00E+00	0.00E+00	0.00E+00	0.00E+00
1582	ALL	755188.42	4037060.7	5.49E-09	25YrCancer	5.49E-09	0.00E+00	0.00E+00	0.00E+00	0.00E+00	0.00E+00	0.00E+00	0.00E+00	0.00E+00	0.00E+00	0.00E+00	0.00E+00
1583	ALL	755288.42	4037060.7	5.36E-09	25YrCancer	5.36E-09	0.00E+00	0.00E+00	0.00E+00	0.00E+00	0.00E+00	0.00E+00	0.00E+00	0.00E+00	0.00E+00	0.00E+00	0.00E+00
1584	ALL	746388.42	4037160.7	9.50E-09	25YrCancer	9.50E-09	0.00E+00	0.00E+00	0.00E+00	0.00E+00	0.00E+00	0.00E+00	0.00E+00	0.00E+00	0.00E+00	0.00E+00	0.00E+00
1585	ALL	746488.42	4037160.7	8.65E-09	25YrCancer	8.65E-09	0.00E+00	0.00E+00	0.00E+00	0.00E+00	0.00E+00	0.00E+00	0.00E+00	0.00E+00	0.00E+00	0.00E+00	0.00E+00
1586	ALL	746588.42	4037160.7	7.93E-09	25YrCancer	7.93E-09	0.00E+00	0.00E+00	0.00E+00	0.00E+00	0.00E+00	0.00E+00	0.00E+00	0.00E+00	0.00E+00	0.00E+00	0.00E+00
1587	ALL	747488.42	4037160.7	5.38E-09	25YrCancer	5.38E-09	0.00E+00	0.00E+00	0.00E+00	0.00E+00	0.00E+00	0.00E+00	0.00E+00	0.00E+00	0.00E+00	0.00E+00	0.00E+00
1588	ALL	747588.42	4037160.7	5.28E-09	25YrCancer	5.28E-09	0.00E+00	0.00E+00	0.00E+00	0.00E+00	0.00E+00	0.00E+00	0.00E+00	0.00E+00	0.00E+00	0.00E+00	0.00E+00
1589	ALL	747688.42	4037160.7	5.19E-09	25YrCancer	5.19E-09	0.00E+00	0.00E+00	0.00E+00	0.00E+00	0.00E+00	0.00E+00	0.00E+00	0.00E+00	0.00E+00	0.00E+00	0.00E+00
1590	ALL	747788.42	4037160.7	5.13E-09	25YrCancer	5.13E-09	0.00E+00	0.00E+00	0.00E+00	0.00E+00	0.00E+00	0.00E+00	0.00E+00	0.00E+00	0.00E+00	0.00E+00	0.00E+00
1591	ALL	747888.42	4037160.7	5.11E-09	25YrCancer	5.11E-09	0.00E+00	0.00E+00	0.00E+00	0.00E+00	0.00E+00	0.00E+00	0.00E+00	0.00E+00	0.00E+00	0.00E+00	0.00E+00
1592	ALL	747988.42	4037160.7	5.11E-09	25YrCancer	5.11E-09	0.00E+00	0.00E+00	0.00E+00	0.00E+00	0.00E+00	0.00E+00	0.00E+00	0.00E+00	0.00E+00	0.00E+00	0.00E+00
1593	ALL	748088.42	4037160.7	5.11E-09	25YrCancer	5.11E-09	0.00E+00	0.00E+00	0.00E+00	0.00E+00	0.00E+00	0.00E+00	0.00E+00	0.00E+00	0.00E+00	0.00E+00	0.00E+00
1594	ALL	748188.42	4037160.7	5.14E-09	25YrCancer	5.14E-09	0.00E+00	0.00E+00	0.00E+00	0.00E+00	0.00E+00	0.00E+00	0.00E+00	0.00E+00	0.00E+00	0.00E+00	0.00E+00
1595	ALL	749988.42	4037160.7	1.01E-08	25YrCancer	1.01E-08	0.00E+00	0.00E+00	0.00E+00	0.00E+00	0.00E+00	0.00E+00	0.00E+00	0.00E+00	0.00E+00	0.00E+00	0.00E+00
1596	ALL	750088.42	4037160.7	1.03E-08	25YrCancer	1.03E-08	0.00E+00	0.00E+00	0.00E+00	0.00E+00	0.00E+00	0.00E+00	0.00E+00	0.00E+00	0.00E+00	0.00E+00	0.00E+00
1597	ALL	750188.42	4037160.7	1.04E-08	25YrCancer	1.04E-08	0.00E+00	0.00E+00	0.00E+00	0.00E+00	0.00E+00	0.00E+00	0.00E+00	0.00E+00	0.00E+00	0.00E+00	0.00E+00
1598	ALL	750288.42	4037160.7	1.06E-08	25YrCancer	1.06E-08	0.00E+00	0.00E+00	0.00E+00	0.00E+00	0.00E+00	0.00E+00	0.00E+00	0.00E+00	0.00E+00	0.00E+00	0.00E+00
1599	ALL	752388.42	4037160.7	1.06E-08	25YrCancer	1.06E-08	0.00E+00	0.00E+00	0.00E+00	0.00E+00	0.00E+00	0.00E+00	0.00E+00	0.00E+00	0.00E+00	0.00E+00	0.00E+00
1600	ALL	752488.42	4037160.7	1.04E-08	25YrCancer	1.04E-08	0.00E+00	0.00E+00	0.00E+00	0.00E+00	0.00E+00	0.00E+00	0.00E+00	0.00E+00	0.00E+00	0.00E+00	0.00E+00
1601	ALL	752588.42	4037160.7	1.02E-08	25YrCancer	1.02E-08	0.00E+00	0.00E+00	0.00E+00	0.00E+00	0.00E+00	0.00E+00	0.00E+00	0.00E+00	0.00E+00	0.00E+00	0.00E+00
1602	ALL	752688.42	4037160.7	1.00E-08	25YrCancer	1.00E-08	0.00E+00	0.00E+00	0.00E+00	0.00E+00	0.00E+00	0.00E+00	0.00E+00	0.00E+00	0.00E+00	0.00E+00	0.00E+00
1603	ALL	752788.42	4037160.7	9.83E-09	25YrCancer	9.83E-09	0.00E+00	0.00E+00	0.00E+00	0.00E+00	0.00E+00	0.00E+00	0.00E+00	0.00E+00	0.00E+00	0.00E+00	0.00E+00
1604	ALL	754888.42	4037160.7	5.80E-09	25YrCancer	5.80E-09	0.00E+00	0.00E+00	0.00E+00	0.00E+00	0.00E+00	0.00E+00	0.00E+00	0.00E+00	0.00E+00	0.00E+00	0.00E+00
1605	ALL	754988.42	4037160.7	5.66E-09	25YrCancer	5.66E-09	0.00E+00	0.00E+00	0.00E+00	0.00E+00	0.00E+00	0.00E+00	0.00E+00	0.00E+00	0.00E+00	0.00E+00	0.00E+00
1606	ALL	755088.42	4037160.7	5.53E-09	25YrCancer	5.53E-09	0.00E+00	0.00E+00	0.00E+00	0.00E+00	0.00E+00	0.00E+00	0.00E+00	0.00E+00	0.00E+00	0.00E+00	0.00E+00
1607	ALL	755188.42	4037160.7	5.40E-09	25YrCancer	5.40E-09	0.00E+00	0.00E+00	0.00E+00	0.00E+00	0.00E+00	0.00E+00	0.00E+00	0.00E+00	0.00E+00	0.00E+00	0.00E+00
1608	ALL	755288.42	4037160.7	5.28E-09	25YrCancer	5.28E-09	0.00E+00	0.00E+00	0.00E+00	0.00E+00	0.00E+00	0.00E+00	0.00E+00	0.00E+00	0.00E+00	0.00E+00	0.00E+00
1609	ALL	746388.42	4037260.7	8.24E-09	25YrCancer	8.24E-09	0.00E+00	0.00E+00	0.00E+00	0.00E+00	0.00E+00	0.00E+00	0.00E+00	0.00E+00	0.00E+00	0.00E+00	0.00E+00
1610	ALL	746488.42	4037260.7	7.61E-09	25YrCancer	7.61E-09	0.00E+00	0.00E+00	0.00E+00	0.00E+00	0.00E+00	0.00E+00	0.00E+00	0.00E+00	0.00E+00	0.00E+00	0.00E+00
1611	ALL	746588.42	4037260.7	7.13E-09	25YrCancer	7.13E-09	0.00E+00	0.00E+00	0.00E+00	0.00E+00	0.00E+00	0.00E+00	0.00E+00	0.00E+00	0.00E+00	0.00E+00	0.00E+00
1612	ALL	747488.42	4037260.7	5.19E-09	25YrCancer	5.19E-09	0.00E+00	0.00E+00	0.00E+00	0.00E+00	0.00E+00	0.00E+00	0.00E+00	0.00E+00	0.00E+00	0.00E+00	0.00E+00
1613	ALL	747588.42	4037260.7	5.13E-09	25YrCancer	5.13E-09	0.00E+00	0.00E+00	0.00E+00	0.00E+00	0.00E+00	0.00E+00	0.00E+00	0.00E+00	0.00E+00	0.00E+00	0.00E+00
1614	ALL	747688.42	4037260.7	5.06E-09	25YrCancer	5.06E-09	0.00E+00	0.00E+00	0.00E+00	0.00E+00	0.00E+00	0.00E+00	0.00E+00	0.00E+00	0.00E+00	0.00E+00	0.00E+00
1615	ALL	747788.42	4037260.7	5.00E-09	25YrCancer	5.00E-09	0.00E+00	0.00E+00	0.00E+00	0.00E+00	0.00E+00	0.00E+00	0.00E+00	0.00E+00	0.00E+00	0.00E+00	0.00E+00
1616	ALL	747888.42	4037260.7	4.98E-09	25YrCancer	4.98E-09	0.00E+00	0.00E+00	0.00E+00	0.00E+00	0.00E+00	0.00E+00	0.00E+00	0.00E+00	0.00E+00	0.00E+00	0.00E+00
1617	ALL	747988.42	4037260.7	4.97E-09	25YrCancer	4.97E-09	0.00E+00	0.00E+00	0.00E+00	0.00E+00	0.00E+00	0.00E+00	0.00E+00	0.00E+00	0.00E+00	0.00E+00	0.00E+00
1618	ALL	748088.42	4037260.7	4.98E-09	25YrCancer	4.98E-09	0.00E+00	0.00E+00	0.00E+00	0.00E+00	0.00E+00	0.00E+00	0.00E+00	0.00E+00	0.00E+00	0.00E+00	0.00E+00
1619	ALL	748188.42	4037260.7	5.00E-09	25YrCancer	5.00E-09	0.00E+00	0.00E+00	0.00E+00	0.00E+00	0.00E+00	0.00E+00	0.00E+00	0.00E+00	0.00E+00	0.00E+00	0.00E+00
1620	ALL	749988.42	4037260.7	1.04E-08	25YrCancer	1.04E-08	0.00E+00	0.00E+00	0.00E+00	0.00E+00	0.00E+00	0.00E+00	0.00E+00	0.00E+00	0.00E+00	0.00E+00	0.00E+00
1621	ALL	750088.42	4037260.7	1.06E-08	25YrCancer	1.06E-08	0.00E+00	0.00E+00	0.00E+00	0.00E+00	0.00E+00	0.00E+00	0.00E+00	0.00E+00	0.00E+00	0.00E+00	0.00E+00
1622	ALL	750188.42	4037260.7	1.08E-08	25YrCancer	1.08E-08	0.00E+00	0.00E+00	0.00E+00	0.00E+00	0.00E+00	0.00E+00	0.00E+00	0.00E+00	0.00E+00	0.00E+00	0.00E+00
1623	ALL	750288.42	4037260.7	1.09E-08	25YrCancer	1.09E-08	0.00E+00	0.00E+00	0.00E+00	0.00E+00	0.00E+00	0.00E+00	0.00E+00	0.00E+00	0.00E+00	0.00E+00	0.00E+00
1624	ALL	752388.42	4037260.7	1.07E-08	25YrCancer	1.07E-08	0.00E+00	0.00E+00	0.00E+00	0.00E+00	0.00E+00	0.00E+00	0.00E+00	0.00E+00	0.00E+00	0.00E+00	0.00E+00
1625	ALL	752488.42	4037260.7	1.05E-08	25YrCancer	1.05E-08	0.00E+00	0.00E+00	0.00E+00	0.00E+00	0.00E+00	0.00E+00	0.00E+00	0.00E+00	0.00E+00	0.00E+00	0.00E+00
1626	ALL	752588.42	4037260.7	1.03E-08	25YrCancer	1.03E-08	0.00E+00	0.00E+00	0.00E+00	0.00E+00	0.00E+00	0.00E+00	0.00E+00	0.00E+00	0.00E+00	0.00E+00	0.00E+00
1627	ALL	752688.42	4037260.7	1.01E-08	25YrCancer	1.01E-08	0.00E+00	0.00E+00	0.00E+00	0.00E+00	0.00E+00	0.00E+00	0.00E+00	0.00E+00	0.00E+00	0.00E+00	0.00E+00
1628	ALL	752788.42	4037260.7	9.87E-09	25YrCancer	9.87E-09	0.00E+00	0.00E+00	0.00E+00	0.00E+00	0.00E+00	0.00E+00	0.00E+00	0.00E+00	0.00E+00	0.00E+00	0.00E+00
1629	ALL	754888.42	4037260.7	5.71E-09	25YrCancer	5.71E-09	0.00E+00	0.00E+00	0.00E+00	0.00E+00	0.00E+00	0.00E+00	0.00E+00	0.00E+00	0.00E+00	0.00E+00	0.00E+00
1630	ALL	754988.42	4037260.7	5.57E-09	25YrCancer	5.57E-09	0.00E+00	0.00E+00	0.00E+00	0.00E+00	0.00E+00	0.00E+00	0.00E+00	0.00E+00	0.00E+00	0.00E+00	0.00E+00

1631	ALL	755088.42	4037260.7	5.44E-09	25YrCancer	5.44E-09	0.00E+00	0.00E+00	0.00E+00	0.00E+00	0.00E+00	0.00E+00	0.00E+00	0.00E+00	0.00E+00	0.00E+00	0.00E+00
1632	ALL	755188.42	4037260.7	5.31E-09	25YrCancer	5.31E-09	0.00E+00	0.00E+00	0.00E+00	0.00E+00	0.00E+00	0.00E+00	0.00E+00	0.00E+00	0.00E+00	0.00E+00	0.00E+00
1633	ALL	755288.42	4037260.7	5.19E-09	25YrCancer	5.19E-09	0.00E+00	0.00E+00	0.00E+00	0.00E+00	0.00E+00	0.00E+00	0.00E+00	0.00E+00	0.00E+00	0.00E+00	0.00E+00
1634	ALL	746388.42	4037360.7	7.31E-09	25YrCancer	7.31E-09	0.00E+00	0.00E+00	0.00E+00	0.00E+00	0.00E+00	0.00E+00	0.00E+00	0.00E+00	0.00E+00	0.00E+00	0.00E+00
1635	ALL	746488.42	4037360.7	6.87E-09	25YrCancer	6.87E-09	0.00E+00	0.00E+00	0.00E+00	0.00E+00	0.00E+00	0.00E+00	0.00E+00	0.00E+00	0.00E+00	0.00E+00	0.00E+00
1636	ALL	746588.42	4037360.7	6.55E-09	25YrCancer	6.55E-09	0.00E+00	0.00E+00	0.00E+00	0.00E+00	0.00E+00	0.00E+00	0.00E+00	0.00E+00	0.00E+00	0.00E+00	0.00E+00
1637	ALL	747488.42	4037360.7	5.02E-09	25YrCancer	5.02E-09	0.00E+00	0.00E+00	0.00E+00	0.00E+00	0.00E+00	0.00E+00	0.00E+00	0.00E+00	0.00E+00	0.00E+00	0.00E+00
1638	ALL	747588.42	4037360.7	5.01E-09	25YrCancer	5.01E-09	0.00E+00	0.00E+00	0.00E+00	0.00E+00	0.00E+00	0.00E+00	0.00E+00	0.00E+00	0.00E+00	0.00E+00	0.00E+00
1639	ALL	747688.42	4037360.7	4.96E-09	25YrCancer	4.96E-09	0.00E+00	0.00E+00	0.00E+00	0.00E+00	0.00E+00	0.00E+00	0.00E+00	0.00E+00	0.00E+00	0.00E+00	0.00E+00
1640	ALL	747788.42	4037360.7	4.92E-09	25YrCancer	4.92E-09	0.00E+00	0.00E+00	0.00E+00	0.00E+00	0.00E+00	0.00E+00	0.00E+00	0.00E+00	0.00E+00	0.00E+00	0.00E+00
1641	ALL	747888.42	4037360.7	4.89E-09	25YrCancer	4.89E-09	0.00E+00	0.00E+00	0.00E+00	0.00E+00	0.00E+00	0.00E+00	0.00E+00	0.00E+00	0.00E+00	0.00E+00	0.00E+00
1642	ALL	747988.42	4037360.7	4.87E-09	25YrCancer	4.87E-09	0.00E+00	0.00E+00	0.00E+00	0.00E+00	0.00E+00	0.00E+00	0.00E+00	0.00E+00	0.00E+00	0.00E+00	0.00E+00
1643	ALL	748088.42	4037360.7	4.88E-09	25YrCancer	4.88E-09	0.00E+00	0.00E+00	0.00E+00	0.00E+00	0.00E+00	0.00E+00	0.00E+00	0.00E+00	0.00E+00	0.00E+00	0.00E+00
1644	ALL	748188.42	4037360.7	4.90E-09	25YrCancer	4.90E-09	0.00E+00	0.00E+00	0.00E+00	0.00E+00	0.00E+00	0.00E+00	0.00E+00	0.00E+00	0.00E+00	0.00E+00	0.00E+00
1645	ALL	749888.42	4037360.7	1.05E-08	25YrCancer	1.05E-08	0.00E+00	0.00E+00	0.00E+00	0.00E+00	0.00E+00	0.00E+00	0.00E+00	0.00E+00	0.00E+00	0.00E+00	0.00E+00
1646	ALL	749988.42	4037360.7	1.08E-08	25YrCancer	1.08E-08	0.00E+00	0.00E+00	0.00E+00	0.00E+00	0.00E+00	0.00E+00	0.00E+00	0.00E+00	0.00E+00	0.00E+00	0.00E+00
1647	ALL	750088.42	4037360.7	1.10E-08	25YrCancer	1.10E-08	0.00E+00	0.00E+00	0.00E+00	0.00E+00	0.00E+00	0.00E+00	0.00E+00	0.00E+00	0.00E+00	0.00E+00	0.00E+00
1648	ALL	750188.42	4037360.7	1.12E-08	25YrCancer	1.12E-08	0.00E+00	0.00E+00	0.00E+00	0.00E+00	0.00E+00	0.00E+00	0.00E+00	0.00E+00	0.00E+00	0.00E+00	0.00E+00
1649	ALL	750288.42	4037360.7	1.14E-08	25YrCancer	1.14E-08	0.00E+00	0.00E+00	0.00E+00	0.00E+00	0.00E+00	0.00E+00	0.00E+00	0.00E+00	0.00E+00	0.00E+00	0.00E+00
1650	ALL	752388.42	4037360.7	1.08E-08	25YrCancer	1.08E-08	0.00E+00	0.00E+00	0.00E+00	0.00E+00	0.00E+00	0.00E+00	0.00E+00	0.00E+00	0.00E+00	0.00E+00	0.00E+00
1651	ALL	752488.42	4037360.7	1.06E-08	25YrCancer	1.06E-08	0.00E+00	0.00E+00	0.00E+00	0.00E+00	0.00E+00	0.00E+00	0.00E+00	0.00E+00	0.00E+00	0.00E+00	0.00E+00
1652	ALL	752588.42	4037360.7	1.04E-08	25YrCancer	1.04E-08	0.00E+00	0.00E+00	0.00E+00	0.00E+00	0.00E+00	0.00E+00	0.00E+00	0.00E+00	0.00E+00	0.00E+00	0.00E+00
1653	ALL	752688.42	4037360.7	1.01E-08	25YrCancer	1.01E-08	0.00E+00	0.00E+00	0.00E+00	0.00E+00	0.00E+00	0.00E+00	0.00E+00	0.00E+00	0.00E+00	0.00E+00	0.00E+00
1654	ALL	752788.42	4037360.7	9.89E-09	25YrCancer	9.89E-09	0.00E+00	0.00E+00	0.00E+00	0.00E+00	0.00E+00	0.00E+00	0.00E+00	0.00E+00	0.00E+00	0.00E+00	0.00E+00
1655	ALL	754888.42	4037360.7	5.62E-09	25YrCancer	5.62E-09	0.00E+00	0.00E+00	0.00E+00	0.00E+00	0.00E+00	0.00E+00	0.00E+00	0.00E+00	0.00E+00	0.00E+00	0.00E+00
1656	ALL	754988.42	4037360.7	5.48E-09	25YrCancer	5.48E-09	0.00E+00	0.00E+00	0.00E+00	0.00E+00	0.00E+00	0.00E+00	0.00E+00	0.00E+00	0.00E+00	0.00E+00	0.00E+00
1657	ALL	755088.42	4037360.7	5.35E-09	25YrCancer	5.35E-09	0.00E+00	0.00E+00	0.00E+00	0.00E+00	0.00E+00	0.00E+00	0.00E+00	0.00E+00	0.00E+00	0.00E+00	0.00E+00
1658	ALL	755188.42	4037360.7	5.23E-09	25YrCancer	5.23E-09	0.00E+00	0.00E+00	0.00E+00	0.00E+00	0.00E+00	0.00E+00	0.00E+00	0.00E+00	0.00E+00	0.00E+00	0.00E+00
1659	ALL	755288.42	4037360.7	5.11E-09	25YrCancer	5.11E-09	0.00E+00	0.00E+00	0.00E+00	0.00E+00	0.00E+00	0.00E+00	0.00E+00	0.00E+00	0.00E+00	0.00E+00	0.00E+00
1660	ALL	746388.42	4037460.7	6.63E-09	25YrCancer	6.63E-09	0.00E+00	0.00E+00	0.00E+00	0.00E+00	0.00E+00	0.00E+00	0.00E+00	0.00E+00	0.00E+00	0.00E+00	0.00E+00
1661	ALL	746488.42	4037460.7	6.33E-09	25YrCancer	6.33E-09	0.00E+00	0.00E+00	0.00E+00	0.00E+00	0.00E+00	0.00E+00	0.00E+00	0.00E+00	0.00E+00	0.00E+00	0.00E+00
1662	ALL	746588.42	4037460.7	6.12E-09	25YrCancer	6.12E-09	0.00E+00	0.00E+00	0.00E+00	0.00E+00	0.00E+00	0.00E+00	0.00E+00	0.00E+00	0.00E+00	0.00E+00	0.00E+00
1663	ALL	747488.42	4037460.7	4.87E-09	25YrCancer	4.87E-09	0.00E+00	0.00E+00	0.00E+00	0.00E+00	0.00E+00	0.00E+00	0.00E+00	0.00E+00	0.00E+00	0.00E+00	0.00E+00
1664	ALL	747588.42	4037460.7	4.90E-09	25YrCancer	4.90E-09	0.00E+00	0.00E+00	0.00E+00	0.00E+00	0.00E+00	0.00E+00	0.00E+00	0.00E+00	0.00E+00	0.00E+00	0.00E+00
1665	ALL	747688.42	4037460.7	4.89E-09	25YrCancer	4.89E-09	0.00E+00	0.00E+00	0.00E+00	0.00E+00	0.00E+00	0.00E+00	0.00E+00	0.00E+00	0.00E+00	0.00E+00	0.00E+00
1666	ALL	747788.42	4037460.7	4.86E-09	25YrCancer	4.86E-09	0.00E+00	0.00E+00	0.00E+00	0.00E+00	0.00E+00	0.00E+00	0.00E+00	0.00E+00	0.00E+00	0.00E+00	0.00E+00
1667	ALL	747888.42	4037460.7	4.83E-09	25YrCancer	4.83E-09	0.00E+00	0.00E+00	0.00E+00	0.00E+00	0.00E+00	0.00E+00	0.00E+00	0.00E+00	0.00E+00	0.00E+00	0.00E+00
1668	ALL	747988.42	4037460.7	4.81E-09	25YrCancer	4.81E-09	0.00E+00	0.00E+00	0.00E+00	0.00E+00	0.00E+00	0.00E+00	0.00E+00	0.00E+00	0.00E+00	0.00E+00	0.00E+00
1669	ALL	748088.42	4037460.7	4.81E-09	25YrCancer	4.81E-09	0.00E+00	0.00E+00	0.00E+00	0.00E+00	0.00E+00	0.00E+00	0.00E+00	0.00E+00	0.00E+00	0.00E+00	0.00E+00
1670	ALL	748188.42	4037460.7	4.83E-09	25YrCancer	4.83E-09	0.00E+00	0.00E+00	0.00E+00	0.00E+00	0.00E+00	0.00E+00	0.00E+00	0.00E+00	0.00E+00	0.00E+00	0.00E+00
1671	ALL	749888.42	4037460.7	1.10E-08	25YrCancer	1.10E-08	0.00E+00	0.00E+00	0.00E+00	0.00E+00	0.00E+00	0.00E+00	0.00E+00	0.00E+00	0.00E+00	0.00E+00	0.00E+00
1672	ALL	749988.42	4037460.7	1.12E-08	25YrCancer	1.12E-08	0.00E+00	0.00E+00	0.00E+00	0.00E+00	0.00E+00	0.00E+00	0.00E+00	0.00E+00	0.00E+00	0.00E+00	0.00E+00
1673	ALL	750088.42	4037460.7	1.15E-08	25YrCancer	1.15E-08	0.00E+00	0.00E+00	0.00E+00	0.00E+00	0.00E+00	0.00E+00	0.00E+00	0.00E+00	0.00E+00	0.00E+00	0.00E+00
1674	ALL	750188.42	4037460.7	1.17E-08	25YrCancer	1.17E-08	0.00E+00	0.00E+00	0.00E+00	0.00E+00	0.00E+00	0.00E+00	0.00E+00	0.00E+00	0.00E+00	0.00E+00	0.00E+00
1675	ALL	750288.42	4037460.7	1.19E-08	25YrCancer	1.19E-08	0.00E+00	0.00E+00	0.00E+00	0.00E+00	0.00E+00	0.00E+00	0.00E+00	0.00E+00	0.00E+00	0.00E+00	0.00E+00
1676	ALL	752388.42	4037460.7	1.09E-08	25YrCancer	1.09E-08	0.00E+00	0.00E+00	0.00E+00	0.00E+00	0.00E+00	0.00E+00	0.00E+00	0.00E+00	0.00E+00	0.00E+00	0.00E+00
1677	ALL	752488.42	4037460.7	1.07E-08	25YrCancer	1.07E-08	0.00E+00	0.00E+00	0.00E+00	0.00E+00	0.00E+00	0.00E+00	0.00E+00	0.00E+00	0.00E+00	0.00E+00	0.00E+00
1678	ALL	752588.42	4037460.7	1.04E-08	25YrCancer	1.04E-08	0.00E+00	0.00E+00	0.00E+00	0.00E+00	0.00E+00	0.00E+00	0.00E+00	0.00E+00	0.00E+00	0.00E+00	0.00E+00
1679	ALL	752688.42	4037460.7	1.02E-08	25YrCancer	1.02E-08	0.00E+00	0.00E+00	0.00E+00	0.00E+00	0.00E+00	0.00E+00	0.00E+00	0.00E+00	0.00E+00	0.00E+00	0.00E+00
1680	ALL	752788.42	4037460.7	9.89E-09	25YrCancer	9.89E-09	0.00E+00	0.00E+00	0.00E+00	0.00E+00	0.00E+00	0.00E+00	0.00E+00	0.00E+00	0.00E+00	0.00E+00	0.00E+00
1681	ALL	754888.42	4037460.7	5.53E-09	25YrCancer	5.53E-09	0.00E+00	0.00E+00	0.00E+00	0.00E+00	0.00E+00	0.00E+00	0.00E+00	0.00E+00	0.00E+00	0.00E+00	0.00E+00

1682	ALL	754988.42	4037460.7	5.39E-09	25YrCancer	5.39E-09	0.00E+00	0.00E+00	0.00E+00	0.00E+00	0.00E+00	0.00E+00	0.00E+00	0.00E+00	0.00E+00	0.00E+00	0.00E+00
1683	ALL	755088.42	4037460.7	5.27E-09	25YrCancer	5.27E-09	0.00E+00	0.00E+00	0.00E+00	0.00E+00	0.00E+00	0.00E+00	0.00E+00	0.00E+00	0.00E+00	0.00E+00	0.00E+00
1684	ALL	755188.42	4037460.7	5.14E-09	25YrCancer	5.14E-09	0.00E+00	0.00E+00	0.00E+00	0.00E+00	0.00E+00	0.00E+00	0.00E+00	0.00E+00	0.00E+00	0.00E+00	0.00E+00
1685	ALL	755288.42	4037460.7	5.03E-09	25YrCancer	5.03E-09	0.00E+00	0.00E+00	0.00E+00	0.00E+00	0.00E+00	0.00E+00	0.00E+00	0.00E+00	0.00E+00	0.00E+00	0.00E+00
1686	ALL	746388.42	4037560.7	6.15E-09	25YrCancer	6.15E-09	0.00E+00	0.00E+00	0.00E+00	0.00E+00	0.00E+00	0.00E+00	0.00E+00	0.00E+00	0.00E+00	0.00E+00	0.00E+00
1687	ALL	746488.42	4037560.7	5.95E-09	25YrCancer	5.95E-09	0.00E+00	0.00E+00	0.00E+00	0.00E+00	0.00E+00	0.00E+00	0.00E+00	0.00E+00	0.00E+00	0.00E+00	0.00E+00
1688	ALL	746588.42	4037560.7	5.81E-09	25YrCancer	5.81E-09	0.00E+00	0.00E+00	0.00E+00	0.00E+00	0.00E+00	0.00E+00	0.00E+00	0.00E+00	0.00E+00	0.00E+00	0.00E+00
1689	ALL	747488.42	4037560.7	4.74E-09	25YrCancer	4.74E-09	0.00E+00	0.00E+00	0.00E+00	0.00E+00	0.00E+00	0.00E+00	0.00E+00	0.00E+00	0.00E+00	0.00E+00	0.00E+00
1690	ALL	747588.42	4037560.7	4.81E-09	25YrCancer	4.81E-09	0.00E+00	0.00E+00	0.00E+00	0.00E+00	0.00E+00	0.00E+00	0.00E+00	0.00E+00	0.00E+00	0.00E+00	0.00E+00
1691	ALL	747688.42	4037560.7	4.83E-09	25YrCancer	4.83E-09	0.00E+00	0.00E+00	0.00E+00	0.00E+00	0.00E+00	0.00E+00	0.00E+00	0.00E+00	0.00E+00	0.00E+00	0.00E+00
1692	ALL	747788.42	4037560.7	4.82E-09	25YrCancer	4.82E-09	0.00E+00	0.00E+00	0.00E+00	0.00E+00	0.00E+00	0.00E+00	0.00E+00	0.00E+00	0.00E+00	0.00E+00	0.00E+00
1693	ALL	747888.42	4037560.7	4.80E-09	25YrCancer	4.80E-09	0.00E+00	0.00E+00	0.00E+00	0.00E+00	0.00E+00	0.00E+00	0.00E+00	0.00E+00	0.00E+00	0.00E+00	0.00E+00
1694	ALL	747988.42	4037560.7	4.78E-09	25YrCancer	4.78E-09	0.00E+00	0.00E+00	0.00E+00	0.00E+00	0.00E+00	0.00E+00	0.00E+00	0.00E+00	0.00E+00	0.00E+00	0.00E+00
1695	ALL	748088.42	4037560.7	4.78E-09	25YrCancer	4.78E-09	0.00E+00	0.00E+00	0.00E+00	0.00E+00	0.00E+00	0.00E+00	0.00E+00	0.00E+00	0.00E+00	0.00E+00	0.00E+00
1696	ALL	748188.42	4037560.7	4.79E-09	25YrCancer	4.79E-09	0.00E+00	0.00E+00	0.00E+00	0.00E+00	0.00E+00	0.00E+00	0.00E+00	0.00E+00	0.00E+00	0.00E+00	0.00E+00
1697	ALL	749888.42	4037560.7	1.15E-08	25YrCancer	1.15E-08	0.00E+00	0.00E+00	0.00E+00	0.00E+00	0.00E+00	0.00E+00	0.00E+00	0.00E+00	0.00E+00	0.00E+00	0.00E+00
1698	ALL	749988.42	4037560.7	1.18E-08	25YrCancer	1.18E-08	0.00E+00	0.00E+00	0.00E+00	0.00E+00	0.00E+00	0.00E+00	0.00E+00	0.00E+00	0.00E+00	0.00E+00	0.00E+00
1699	ALL	750088.42	4037560.7	1.20E-08	25YrCancer	1.20E-08	0.00E+00	0.00E+00	0.00E+00	0.00E+00	0.00E+00	0.00E+00	0.00E+00	0.00E+00	0.00E+00	0.00E+00	0.00E+00
1700	ALL	750188.42	4037560.7	1.22E-08	25YrCancer	1.22E-08	0.00E+00	0.00E+00	0.00E+00	0.00E+00	0.00E+00	0.00E+00	0.00E+00	0.00E+00	0.00E+00	0.00E+00	0.00E+00
1701	ALL	750288.42	4037560.7	1.24E-08	25YrCancer	1.24E-08	0.00E+00	0.00E+00	0.00E+00	0.00E+00	0.00E+00	0.00E+00	0.00E+00	0.00E+00	0.00E+00	0.00E+00	0.00E+00
1702	ALL	752388.42	4037560.7	1.10E-08	25YrCancer	1.10E-08	0.00E+00	0.00E+00	0.00E+00	0.00E+00	0.00E+00	0.00E+00	0.00E+00	0.00E+00	0.00E+00	0.00E+00	0.00E+00
1703	ALL	752488.42	4037560.7	1.07E-08	25YrCancer	1.07E-08	0.00E+00	0.00E+00	0.00E+00	0.00E+00	0.00E+00	0.00E+00	0.00E+00	0.00E+00	0.00E+00	0.00E+00	0.00E+00
1704	ALL	752588.42	4037560.7	1.04E-08	25YrCancer	1.04E-08	0.00E+00	0.00E+00	0.00E+00	0.00E+00	0.00E+00	0.00E+00	0.00E+00	0.00E+00	0.00E+00	0.00E+00	0.00E+00
1705	ALL	752688.42	4037560.7	1.01E-08	25YrCancer	1.01E-08	0.00E+00	0.00E+00	0.00E+00	0.00E+00	0.00E+00	0.00E+00	0.00E+00	0.00E+00	0.00E+00	0.00E+00	0.00E+00
1706	ALL	752788.42	4037560.7	9.86E-09	25YrCancer	9.86E-09	0.00E+00	0.00E+00	0.00E+00	0.00E+00	0.00E+00	0.00E+00	0.00E+00	0.00E+00	0.00E+00	0.00E+00	0.00E+00
1707	ALL	754888.42	4037560.7	5.43E-09	25YrCancer	5.43E-09	0.00E+00	0.00E+00	0.00E+00	0.00E+00	0.00E+00	0.00E+00	0.00E+00	0.00E+00	0.00E+00	0.00E+00	0.00E+00
1708	ALL	754988.42	4037560.7	5.30E-09	25YrCancer	5.30E-09	0.00E+00	0.00E+00	0.00E+00	0.00E+00	0.00E+00	0.00E+00	0.00E+00	0.00E+00	0.00E+00	0.00E+00	0.00E+00
1709	ALL	755088.42	4037560.7	5.18E-09	25YrCancer	5.18E-09	0.00E+00	0.00E+00	0.00E+00	0.00E+00	0.00E+00	0.00E+00	0.00E+00	0.00E+00	0.00E+00	0.00E+00	0.00E+00
1710	ALL	755188.42	4037560.7	5.06E-09	25YrCancer	5.06E-09	0.00E+00	0.00E+00	0.00E+00	0.00E+00	0.00E+00	0.00E+00	0.00E+00	0.00E+00	0.00E+00	0.00E+00	0.00E+00
1711	ALL	755288.42	4037560.7	4.95E-09	25YrCancer	4.95E-09	0.00E+00	0.00E+00	0.00E+00	0.00E+00	0.00E+00	0.00E+00	0.00E+00	0.00E+00	0.00E+00	0.00E+00	0.00E+00
1712	ALL	746388.42	4037660.7	5.78E-09	25YrCancer	5.78E-09	0.00E+00	0.00E+00	0.00E+00	0.00E+00	0.00E+00	0.00E+00	0.00E+00	0.00E+00	0.00E+00	0.00E+00	0.00E+00
1713	ALL	746488.42	4037660.7	5.65E-09	25YrCancer	5.65E-09	0.00E+00	0.00E+00	0.00E+00	0.00E+00	0.00E+00	0.00E+00	0.00E+00	0.00E+00	0.00E+00	0.00E+00	0.00E+00
1714	ALL	746588.42	4037660.7	5.56E-09	25YrCancer	5.56E-09	0.00E+00	0.00E+00	0.00E+00	0.00E+00	0.00E+00	0.00E+00	0.00E+00	0.00E+00	0.00E+00	0.00E+00	0.00E+00
1715	ALL	747488.42	4037660.7	4.64E-09	25YrCancer	4.64E-09	0.00E+00	0.00E+00	0.00E+00	0.00E+00	0.00E+00	0.00E+00	0.00E+00	0.00E+00	0.00E+00	0.00E+00	0.00E+00
1716	ALL	747588.42	4037660.7	4.72E-09	25YrCancer	4.72E-09	0.00E+00	0.00E+00	0.00E+00	0.00E+00	0.00E+00	0.00E+00	0.00E+00	0.00E+00	0.00E+00	0.00E+00	0.00E+00
1717	ALL	747688.42	4037660.7	4.78E-09	25YrCancer	4.78E-09	0.00E+00	0.00E+00	0.00E+00	0.00E+00	0.00E+00	0.00E+00	0.00E+00	0.00E+00	0.00E+00	0.00E+00	0.00E+00
1718	ALL	747788.42	4037660.7	4.80E-09	25YrCancer	4.80E-09	0.00E+00	0.00E+00	0.00E+00	0.00E+00	0.00E+00	0.00E+00	0.00E+00	0.00E+00	0.00E+00	0.00E+00	0.00E+00
1719	ALL	747888.42	4037660.7	4.79E-09	25YrCancer	4.79E-09	0.00E+00	0.00E+00	0.00E+00	0.00E+00	0.00E+00	0.00E+00	0.00E+00	0.00E+00	0.00E+00	0.00E+00	0.00E+00
1720	ALL	747988.42	4037660.7	4.78E-09	25YrCancer	4.78E-09	0.00E+00	0.00E+00	0.00E+00	0.00E+00	0.00E+00	0.00E+00	0.00E+00	0.00E+00	0.00E+00	0.00E+00	0.00E+00
1721	ALL	748088.42	4037660.7	4.77E-09	25YrCancer	4.77E-09	0.00E+00	0.00E+00	0.00E+00	0.00E+00	0.00E+00	0.00E+00	0.00E+00	0.00E+00	0.00E+00	0.00E+00	0.00E+00
1722	ALL	748188.42	4037660.7	4.78E-09	25YrCancer	4.78E-09	0.00E+00	0.00E+00	0.00E+00	0.00E+00	0.00E+00	0.00E+00	0.00E+00	0.00E+00	0.00E+00	0.00E+00	0.00E+00
1723	ALL	749888.42	4037660.7	1.21E-08	25YrCancer	1.21E-08	0.00E+00	0.00E+00	0.00E+00	0.00E+00	0.00E+00	0.00E+00	0.00E+00	0.00E+00	0.00E+00	0.00E+00	0.00E+00
1724	ALL	749988.42	4037660.7	1.24E-08	25YrCancer	1.24E-08	0.00E+00	0.00E+00	0.00E+00	0.00E+00	0.00E+00	0.00E+00	0.00E+00	0.00E+00	0.00E+00	0.00E+00	0.00E+00
1725	ALL	750088.42	4037660.7	1.26E-08	25YrCancer	1.26E-08	0.00E+00	0.00E+00	0.00E+00	0.00E+00	0.00E+00	0.00E+00	0.00E+00	0.00E+00	0.00E+00	0.00E+00	0.00E+00
1726	ALL	750188.42	4037660.7	1.29E-08	25YrCancer	1.29E-08	0.00E+00	0.00E+00	0.00E+00	0.00E+00	0.00E+00	0.00E+00	0.00E+00	0.00E+00	0.00E+00	0.00E+00	0.00E+00
1727	ALL	750288.42	4037660.7	1.31E-08	25YrCancer	1.31E-08	0.00E+00	0.00E+00	0.00E+00	0.00E+00	0.00E+00	0.00E+00	0.00E+00	0.00E+00	0.00E+00	0.00E+00	0.00E+00
1728	ALL	752388.42	4037660.7	1.10E-08	25YrCancer	1.10E-08	0.00E+00	0.00E+00	0.00E+00	0.00E+00	0.00E+00	0.00E+00	0.00E+00	0.00E+00	0.00E+00	0.00E+00	0.00E+00
1729	ALL	752488.42	4037660.7	1.07E-08	25YrCancer	1.07E-08	0.00E+00	0.00E+00	0.00E+00	0.00E+00	0.00E+00	0.00E+00	0.00E+00	0.00E+00	0.00E+00	0.00E+00	0.00E+00
1730	ALL	752588.42	4037660.7	1.04E-08	25YrCancer	1.04E-08	0.00E+00	0.00E+00	0.00E+00	0.00E+00	0.00E+00	0.00E+00	0.00E+00	0.00E+00	0.00E+00	0.00E+00	0.00E+00
1731	ALL	752688.42	4037660.7	1.01E-08	25YrCancer	1.01E-08	0.00E+00	0.00E+00	0.00E+00	0.00E+00	0.00E+00	0.00E+00	0.00E+00	0.00E+00	0.00E+00	0.00E+00	0.00E+00
1732	ALL	752788.42	4037660.7	9.79E-09	25YrCancer	9.79E-09	0.00E+00	0.00E+00	0.00E+00	0.00E+00	0.00E+00	0.00E+00	0.00E+00	0.00E+00	0.00E+00	0.00E+00	0.00E+00

1733	ALL	754888.42	4037660.7	5.34E-09	25YrCancer	5.34E-09	0.00E+00	0.00E+00	0.00E+00	0.00E+00	0.00E+00	0.00E+00	0.00E+00	0.00E+00	0.00E+00	0.00E+00	0.00E+00
1734	ALL	754988.42	4037660.7	5.22E-09	25YrCancer	5.22E-09	0.00E+00	0.00E+00	0.00E+00	0.00E+00	0.00E+00	0.00E+00	0.00E+00	0.00E+00	0.00E+00	0.00E+00	0.00E+00
1735	ALL	755088.42	4037660.7	5.10E-09	25YrCancer	5.10E-09	0.00E+00	0.00E+00	0.00E+00	0.00E+00	0.00E+00	0.00E+00	0.00E+00	0.00E+00	0.00E+00	0.00E+00	0.00E+00
1736	ALL	755188.42	4037660.7	4.98E-09	25YrCancer	4.98E-09	0.00E+00	0.00E+00	0.00E+00	0.00E+00	0.00E+00	0.00E+00	0.00E+00	0.00E+00	0.00E+00	0.00E+00	0.00E+00
1737	ALL	755288.42	4037660.7	4.87E-09	25YrCancer	4.87E-09	0.00E+00	0.00E+00	0.00E+00	0.00E+00	0.00E+00	0.00E+00	0.00E+00	0.00E+00	0.00E+00	0.00E+00	0.00E+00
1738	ALL	746388.42	4037760.7	5.51E-09	25YrCancer	5.51E-09	0.00E+00	0.00E+00	0.00E+00	0.00E+00	0.00E+00	0.00E+00	0.00E+00	0.00E+00	0.00E+00	0.00E+00	0.00E+00
1739	ALL	746488.42	4037760.7	5.42E-09	25YrCancer	5.42E-09	0.00E+00	0.00E+00	0.00E+00	0.00E+00	0.00E+00	0.00E+00	0.00E+00	0.00E+00	0.00E+00	0.00E+00	0.00E+00
1740	ALL	746588.42	4037760.7	5.36E-09	25YrCancer	5.36E-09	0.00E+00	0.00E+00	0.00E+00	0.00E+00	0.00E+00	0.00E+00	0.00E+00	0.00E+00	0.00E+00	0.00E+00	0.00E+00
1741	ALL	746688.42	4037760.7	5.29E-09	25YrCancer	5.29E-09	0.00E+00	0.00E+00	0.00E+00	0.00E+00	0.00E+00	0.00E+00	0.00E+00	0.00E+00	0.00E+00	0.00E+00	0.00E+00
1742	ALL	746788.42	4037760.7	5.17E-09	25YrCancer	5.17E-09	0.00E+00	0.00E+00	0.00E+00	0.00E+00	0.00E+00	0.00E+00	0.00E+00	0.00E+00	0.00E+00	0.00E+00	0.00E+00
1743	ALL	746888.42	4037760.7	5.02E-09	25YrCancer	5.02E-09	0.00E+00	0.00E+00	0.00E+00	0.00E+00	0.00E+00	0.00E+00	0.00E+00	0.00E+00	0.00E+00	0.00E+00	0.00E+00
1744	ALL	746988.42	4037760.7	4.85E-09	25YrCancer	4.85E-09	0.00E+00	0.00E+00	0.00E+00	0.00E+00	0.00E+00	0.00E+00	0.00E+00	0.00E+00	0.00E+00	0.00E+00	0.00E+00
1745	ALL	747488.42	4037760.7	4.54E-09	25YrCancer	4.54E-09	0.00E+00	0.00E+00	0.00E+00	0.00E+00	0.00E+00	0.00E+00	0.00E+00	0.00E+00	0.00E+00	0.00E+00	0.00E+00
1746	ALL	747588.42	4037760.7	4.64E-09	25YrCancer	4.64E-09	0.00E+00	0.00E+00	0.00E+00	0.00E+00	0.00E+00	0.00E+00	0.00E+00	0.00E+00	0.00E+00	0.00E+00	0.00E+00
1747	ALL	747688.42	4037760.7	4.74E-09	25YrCancer	4.74E-09	0.00E+00	0.00E+00	0.00E+00	0.00E+00	0.00E+00	0.00E+00	0.00E+00	0.00E+00	0.00E+00	0.00E+00	0.00E+00
1748	ALL	747788.42	4037760.7	4.79E-09	25YrCancer	4.79E-09	0.00E+00	0.00E+00	0.00E+00	0.00E+00	0.00E+00	0.00E+00	0.00E+00	0.00E+00	0.00E+00	0.00E+00	0.00E+00
1749	ALL	747888.42	4037760.7	4.80E-09	25YrCancer	4.80E-09	0.00E+00	0.00E+00	0.00E+00	0.00E+00	0.00E+00	0.00E+00	0.00E+00	0.00E+00	0.00E+00	0.00E+00	0.00E+00
1750	ALL	747988.42	4037760.7	4.80E-09	25YrCancer	4.80E-09	0.00E+00	0.00E+00	0.00E+00	0.00E+00	0.00E+00	0.00E+00	0.00E+00	0.00E+00	0.00E+00	0.00E+00	0.00E+00
1751	ALL	748088.42	4037760.7	4.79E-09	25YrCancer	4.79E-09	0.00E+00	0.00E+00	0.00E+00	0.00E+00	0.00E+00	0.00E+00	0.00E+00	0.00E+00	0.00E+00	0.00E+00	0.00E+00
1752	ALL	748188.42	4037760.7	4.80E-09	25YrCancer	4.80E-09	0.00E+00	0.00E+00	0.00E+00	0.00E+00	0.00E+00	0.00E+00	0.00E+00	0.00E+00	0.00E+00	0.00E+00	0.00E+00
1753	ALL	749888.42	4037760.7	1.28E-08	25YrCancer	1.28E-08	0.00E+00	0.00E+00	0.00E+00	0.00E+00	0.00E+00	0.00E+00	0.00E+00	0.00E+00	0.00E+00	0.00E+00	0.00E+00
1754	ALL	749988.42	4037760.7	1.31E-08	25YrCancer	1.31E-08	0.00E+00	0.00E+00	0.00E+00	0.00E+00	0.00E+00	0.00E+00	0.00E+00	0.00E+00	0.00E+00	0.00E+00	0.00E+00
1755	ALL	750088.42	4037760.7	1.33E-08	25YrCancer	1.33E-08	0.00E+00	0.00E+00	0.00E+00	0.00E+00	0.00E+00	0.00E+00	0.00E+00	0.00E+00	0.00E+00	0.00E+00	0.00E+00
1756	ALL	750188.42	4037760.7	1.36E-08	25YrCancer	1.36E-08	0.00E+00	0.00E+00	0.00E+00	0.00E+00	0.00E+00	0.00E+00	0.00E+00	0.00E+00	0.00E+00	0.00E+00	0.00E+00
1757	ALL	750288.42	4037760.7	1.38E-08	25YrCancer	1.38E-08	0.00E+00	0.00E+00	0.00E+00	0.00E+00	0.00E+00	0.00E+00	0.00E+00	0.00E+00	0.00E+00	0.00E+00	0.00E+00
1758	ALL	752388.42	4037760.7	1.10E-08	25YrCancer	1.10E-08	0.00E+00	0.00E+00	0.00E+00	0.00E+00	0.00E+00	0.00E+00	0.00E+00	0.00E+00	0.00E+00	0.00E+00	0.00E+00
1759	ALL	752488.42	4037760.7	1.07E-08	25YrCancer	1.07E-08	0.00E+00	0.00E+00	0.00E+00	0.00E+00	0.00E+00	0.00E+00	0.00E+00	0.00E+00	0.00E+00	0.00E+00	0.00E+00
1760	ALL	752588.42	4037760.7	1.04E-08	25YrCancer	1.04E-08	0.00E+00	0.00E+00	0.00E+00	0.00E+00	0.00E+00	0.00E+00	0.00E+00	0.00E+00	0.00E+00	0.00E+00	0.00E+00
1761	ALL	752688.42	4037760.7	1.00E-08	25YrCancer	1.00E-08	0.00E+00	0.00E+00	0.00E+00	0.00E+00	0.00E+00	0.00E+00	0.00E+00	0.00E+00	0.00E+00	0.00E+00	0.00E+00
1762	ALL	752788.42	4037760.7	9.71E-09	25YrCancer	9.71E-09	0.00E+00	0.00E+00	0.00E+00	0.00E+00	0.00E+00	0.00E+00	0.00E+00	0.00E+00	0.00E+00	0.00E+00	0.00E+00
1763	ALL	754888.42	4037760.7	5.26E-09	25YrCancer	5.26E-09	0.00E+00	0.00E+00	0.00E+00	0.00E+00	0.00E+00	0.00E+00	0.00E+00	0.00E+00	0.00E+00	0.00E+00	0.00E+00
1764	ALL	754988.42	4037760.7	5.13E-09	25YrCancer	5.13E-09	0.00E+00	0.00E+00	0.00E+00	0.00E+00	0.00E+00	0.00E+00	0.00E+00	0.00E+00	0.00E+00	0.00E+00	0.00E+00
1765	ALL	755088.42	4037760.7	5.01E-09	25YrCancer	5.01E-09	0.00E+00	0.00E+00	0.00E+00	0.00E+00	0.00E+00	0.00E+00	0.00E+00	0.00E+00	0.00E+00	0.00E+00	0.00E+00
1766	ALL	755188.42	4037760.7	4.90E-09	25YrCancer	4.90E-09	0.00E+00	0.00E+00	0.00E+00	0.00E+00	0.00E+00	0.00E+00	0.00E+00	0.00E+00	0.00E+00	0.00E+00	0.00E+00
1767	ALL	755288.42	4037760.7	4.79E-09	25YrCancer	4.79E-09	0.00E+00	0.00E+00	0.00E+00	0.00E+00	0.00E+00	0.00E+00	0.00E+00	0.00E+00	0.00E+00	0.00E+00	0.00E+00
1768	ALL	746388.42	4037860.7	5.29E-09	25YrCancer	5.29E-09	0.00E+00	0.00E+00	0.00E+00	0.00E+00	0.00E+00	0.00E+00	0.00E+00	0.00E+00	0.00E+00	0.00E+00	0.00E+00
1769	ALL	746488.42	4037860.7	5.24E-09	25YrCancer	5.24E-09	0.00E+00	0.00E+00	0.00E+00	0.00E+00	0.00E+00	0.00E+00	0.00E+00	0.00E+00	0.00E+00	0.00E+00	0.00E+00
1770	ALL	746588.42	4037860.7	5.18E-09	25YrCancer	5.18E-09	0.00E+00	0.00E+00	0.00E+00	0.00E+00	0.00E+00	0.00E+00	0.00E+00	0.00E+00	0.00E+00	0.00E+00	0.00E+00
1771	ALL	746688.42	4037860.7	5.14E-09	25YrCancer	5.14E-09	0.00E+00	0.00E+00	0.00E+00	0.00E+00	0.00E+00	0.00E+00	0.00E+00	0.00E+00	0.00E+00	0.00E+00	0.00E+00
1772	ALL	746788.42	4037860.7	5.02E-09	25YrCancer	5.02E-09	0.00E+00	0.00E+00	0.00E+00	0.00E+00	0.00E+00	0.00E+00	0.00E+00	0.00E+00	0.00E+00	0.00E+00	0.00E+00
1773	ALL	746888.42	4037860.7	4.89E-09	25YrCancer	4.89E-09	0.00E+00	0.00E+00	0.00E+00	0.00E+00	0.00E+00	0.00E+00	0.00E+00	0.00E+00	0.00E+00	0.00E+00	0.00E+00
1774	ALL	746988.42	4037860.7	4.75E-09	25YrCancer	4.75E-09	0.00E+00	0.00E+00	0.00E+00	0.00E+00	0.00E+00	0.00E+00	0.00E+00	0.00E+00	0.00E+00	0.00E+00	0.00E+00
1775	ALL	747088.42	4037860.7	4.61E-09	25YrCancer	4.61E-09	0.00E+00	0.00E+00	0.00E+00	0.00E+00	0.00E+00	0.00E+00	0.00E+00	0.00E+00	0.00E+00	0.00E+00	0.00E+00
1776	ALL	747188.42	4037860.7	4.50E-09	25YrCancer	4.50E-09	0.00E+00	0.00E+00	0.00E+00	0.00E+00	0.00E+00	0.00E+00	0.00E+00	0.00E+00	0.00E+00	0.00E+00	0.00E+00
1777	ALL	747288.42	4037860.7	4.42E-09	25YrCancer	4.42E-09	0.00E+00	0.00E+00	0.00E+00	0.00E+00	0.00E+00	0.00E+00	0.00E+00	0.00E+00	0.00E+00	0.00E+00	0.00E+00
1778	ALL	747388.42	4037860.7	4.41E-09	25YrCancer	4.41E-09	0.00E+00	0.00E+00	0.00E+00	0.00E+00	0.00E+00	0.00E+00	0.00E+00	0.00E+00	0.00E+00	0.00E+00	0.00E+00
1779	ALL	747488.42	4037860.7	4.46E-09	25YrCancer	4.46E-09	0.00E+00	0.00E+00	0.00E+00	0.00E+00	0.00E+00	0.00E+00	0.00E+00	0.00E+00	0.00E+00	0.00E+00	0.00E+00
1780	ALL	747588.42	4037860.7	4.57E-09	25YrCancer	4.57E-09	0.00E+00	0.00E+00	0.00E+00	0.00E+00	0.00E+00	0.00E+00	0.00E+00	0.00E+00	0.00E+00	0.00E+00	0.00E+00
1781	ALL	747688.42	4037860.7	4.70E-09	25YrCancer	4.70E-09	0.00E+00	0.00E+00	0.00E+00	0.00E+00	0.00E+00	0.00E+00	0.00E+00	0.00E+00	0.00E+00	0.00E+00	0.00E+00
1782	ALL	747788.42	4037860.7	4.78E-09	25YrCancer	4.78E-09	0.00E+00	0.00E+00	0.00E+00	0.00E+00	0.00E+00	0.00E+00	0.00E+00	0.00E+00	0.00E+00	0.00E+00	0.00E+00
1783	ALL	747888.42	4037860.7	4.83E-09	25YrCancer	4.83E-09	0.00E+00	0.00E+00	0.00E+00	0.00E+00	0.00E+00	0.00E+00	0.00E+00	0.00E+00	0.00E+00	0.00E+00	0.00E+00

1784	ALL	747988.42	4037860.7	4.83E-09	25YrCancer	4.83E-09	0.00E+00	0.00E+00	0.00E+00	0.00E+00	0.00E+00	0.00E+00	0.00E+00	0.00E+00	0.00E+00	0.00E+00	0.00E+00
1785	ALL	748088.42	4037860.7	4.83E-09	25YrCancer	4.83E-09	0.00E+00	0.00E+00	0.00E+00	0.00E+00	0.00E+00	0.00E+00	0.00E+00	0.00E+00	0.00E+00	0.00E+00	0.00E+00
1786	ALL	748188.42	4037860.7	4.84E-09	25YrCancer	4.84E-09	0.00E+00	0.00E+00	0.00E+00	0.00E+00	0.00E+00	0.00E+00	0.00E+00	0.00E+00	0.00E+00	0.00E+00	0.00E+00
1787	ALL	749888.42	4037860.7	1.36E-08	25YrCancer	1.36E-08	0.00E+00	0.00E+00	0.00E+00	0.00E+00	0.00E+00	0.00E+00	0.00E+00	0.00E+00	0.00E+00	0.00E+00	0.00E+00
1788	ALL	749988.42	4037860.7	1.39E-08	25YrCancer	1.39E-08	0.00E+00	0.00E+00	0.00E+00	0.00E+00	0.00E+00	0.00E+00	0.00E+00	0.00E+00	0.00E+00	0.00E+00	0.00E+00
1789	ALL	750088.42	4037860.7	1.42E-08	25YrCancer	1.42E-08	0.00E+00	0.00E+00	0.00E+00	0.00E+00	0.00E+00	0.00E+00	0.00E+00	0.00E+00	0.00E+00	0.00E+00	0.00E+00
1790	ALL	750188.42	4037860.7	1.44E-08	25YrCancer	1.44E-08	0.00E+00	0.00E+00	0.00E+00	0.00E+00	0.00E+00	0.00E+00	0.00E+00	0.00E+00	0.00E+00	0.00E+00	0.00E+00
1791	ALL	750288.42	4037860.7	1.47E-08	25YrCancer	1.47E-08	0.00E+00	0.00E+00	0.00E+00	0.00E+00	0.00E+00	0.00E+00	0.00E+00	0.00E+00	0.00E+00	0.00E+00	0.00E+00
1792	ALL	752388.42	4037860.7	1.10E-08	25YrCancer	1.10E-08	0.00E+00	0.00E+00	0.00E+00	0.00E+00	0.00E+00	0.00E+00	0.00E+00	0.00E+00	0.00E+00	0.00E+00	0.00E+00
1793	ALL	752488.42	4037860.7	1.06E-08	25YrCancer	1.06E-08	0.00E+00	0.00E+00	0.00E+00	0.00E+00	0.00E+00	0.00E+00	0.00E+00	0.00E+00	0.00E+00	0.00E+00	0.00E+00
1794	ALL	752588.42	4037860.7	1.03E-08	25YrCancer	1.03E-08	0.00E+00	0.00E+00	0.00E+00	0.00E+00	0.00E+00	0.00E+00	0.00E+00	0.00E+00	0.00E+00	0.00E+00	0.00E+00
1795	ALL	752688.42	4037860.7	9.93E-09	25YrCancer	9.93E-09	0.00E+00	0.00E+00	0.00E+00	0.00E+00	0.00E+00	0.00E+00	0.00E+00	0.00E+00	0.00E+00	0.00E+00	0.00E+00
1796	ALL	752788.42	4037860.7	9.60E-09	25YrCancer	9.60E-09	0.00E+00	0.00E+00	0.00E+00	0.00E+00	0.00E+00	0.00E+00	0.00E+00	0.00E+00	0.00E+00	0.00E+00	0.00E+00
1797	ALL	754888.42	4037860.7	5.16E-09	25YrCancer	5.16E-09	0.00E+00	0.00E+00	0.00E+00	0.00E+00	0.00E+00	0.00E+00	0.00E+00	0.00E+00	0.00E+00	0.00E+00	0.00E+00
1798	ALL	754988.42	4037860.7	5.04E-09	25YrCancer	5.04E-09	0.00E+00	0.00E+00	0.00E+00	0.00E+00	0.00E+00	0.00E+00	0.00E+00	0.00E+00	0.00E+00	0.00E+00	0.00E+00
1799	ALL	755088.42	4037860.7	4.93E-09	25YrCancer	4.93E-09	0.00E+00	0.00E+00	0.00E+00	0.00E+00	0.00E+00	0.00E+00	0.00E+00	0.00E+00	0.00E+00	0.00E+00	0.00E+00
1800	ALL	755188.42	4037860.7	4.82E-09	25YrCancer	4.82E-09	0.00E+00	0.00E+00	0.00E+00	0.00E+00	0.00E+00	0.00E+00	0.00E+00	0.00E+00	0.00E+00	0.00E+00	0.00E+00
1801	ALL	755288.42	4037860.7	4.71E-09	25YrCancer	4.71E-09	0.00E+00	0.00E+00	0.00E+00	0.00E+00	0.00E+00	0.00E+00	0.00E+00	0.00E+00	0.00E+00	0.00E+00	0.00E+00
1802	ALL	746388.42	4037960.7	5.13E-09	25YrCancer	5.13E-09	0.00E+00	0.00E+00	0.00E+00	0.00E+00	0.00E+00	0.00E+00	0.00E+00	0.00E+00	0.00E+00	0.00E+00	0.00E+00
1803	ALL	746488.42	4037960.7	5.10E-09	25YrCancer	5.10E-09	0.00E+00	0.00E+00	0.00E+00	0.00E+00	0.00E+00	0.00E+00	0.00E+00	0.00E+00	0.00E+00	0.00E+00	0.00E+00
1804	ALL	746588.42	4037960.7	5.03E-09	25YrCancer	5.03E-09	0.00E+00	0.00E+00	0.00E+00	0.00E+00	0.00E+00	0.00E+00	0.00E+00	0.00E+00	0.00E+00	0.00E+00	0.00E+00
1805	ALL	746688.42	4037960.7	5.00E-09	25YrCancer	5.00E-09	0.00E+00	0.00E+00	0.00E+00	0.00E+00	0.00E+00	0.00E+00	0.00E+00	0.00E+00	0.00E+00	0.00E+00	0.00E+00
1806	ALL	746788.42	4037960.7	4.90E-09	25YrCancer	4.90E-09	0.00E+00	0.00E+00	0.00E+00	0.00E+00	0.00E+00	0.00E+00	0.00E+00	0.00E+00	0.00E+00	0.00E+00	0.00E+00
1807	ALL	746888.42	4037960.7	4.78E-09	25YrCancer	4.78E-09	0.00E+00	0.00E+00	0.00E+00	0.00E+00	0.00E+00	0.00E+00	0.00E+00	0.00E+00	0.00E+00	0.00E+00	0.00E+00
1808	ALL	746988.42	4037960.7	4.66E-09	25YrCancer	4.66E-09	0.00E+00	0.00E+00	0.00E+00	0.00E+00	0.00E+00	0.00E+00	0.00E+00	0.00E+00	0.00E+00	0.00E+00	0.00E+00
1809	ALL	747088.42	4037960.7	4.54E-09	25YrCancer	4.54E-09	0.00E+00	0.00E+00	0.00E+00	0.00E+00	0.00E+00	0.00E+00	0.00E+00	0.00E+00	0.00E+00	0.00E+00	0.00E+00
1810	ALL	747188.42	4037960.7	4.44E-09	25YrCancer	4.44E-09	0.00E+00	0.00E+00	0.00E+00	0.00E+00	0.00E+00	0.00E+00	0.00E+00	0.00E+00	0.00E+00	0.00E+00	0.00E+00
1811	ALL	747288.42	4037960.7	4.37E-09	25YrCancer	4.37E-09	0.00E+00	0.00E+00	0.00E+00	0.00E+00	0.00E+00	0.00E+00	0.00E+00	0.00E+00	0.00E+00	0.00E+00	0.00E+00
1812	ALL	747388.42	4037960.7	4.34E-09	25YrCancer	4.34E-09	0.00E+00	0.00E+00	0.00E+00	0.00E+00	0.00E+00	0.00E+00	0.00E+00	0.00E+00	0.00E+00	0.00E+00	0.00E+00
1813	ALL	747488.42	4037960.7	4.39E-09	25YrCancer	4.39E-09	0.00E+00	0.00E+00	0.00E+00	0.00E+00	0.00E+00	0.00E+00	0.00E+00	0.00E+00	0.00E+00	0.00E+00	0.00E+00
1814	ALL	747588.42	4037960.7	4.51E-09	25YrCancer	4.51E-09	0.00E+00	0.00E+00	0.00E+00	0.00E+00	0.00E+00	0.00E+00	0.00E+00	0.00E+00	0.00E+00	0.00E+00	0.00E+00
1815	ALL	747688.42	4037960.7	4.66E-09	25YrCancer	4.66E-09	0.00E+00	0.00E+00	0.00E+00	0.00E+00	0.00E+00	0.00E+00	0.00E+00	0.00E+00	0.00E+00	0.00E+00	0.00E+00
1816	ALL	747788.42	4037960.7	4.78E-09	25YrCancer	4.78E-09	0.00E+00	0.00E+00	0.00E+00	0.00E+00	0.00E+00	0.00E+00	0.00E+00	0.00E+00	0.00E+00	0.00E+00	0.00E+00
1817	ALL	747888.42	4037960.7	4.85E-09	25YrCancer	4.85E-09	0.00E+00	0.00E+00	0.00E+00	0.00E+00	0.00E+00	0.00E+00	0.00E+00	0.00E+00	0.00E+00	0.00E+00	0.00E+00
1818	ALL	747988.42	4037960.7	4.88E-09	25YrCancer	4.88E-09	0.00E+00	0.00E+00	0.00E+00	0.00E+00	0.00E+00	0.00E+00	0.00E+00	0.00E+00	0.00E+00	0.00E+00	0.00E+00
1819	ALL	748088.42	4037960.7	4.89E-09	25YrCancer	4.89E-09	0.00E+00	0.00E+00	0.00E+00	0.00E+00	0.00E+00	0.00E+00	0.00E+00	0.00E+00	0.00E+00	0.00E+00	0.00E+00
1820	ALL	748188.42	4037960.7	4.90E-09	25YrCancer	4.90E-09	0.00E+00	0.00E+00	0.00E+00	0.00E+00	0.00E+00	0.00E+00	0.00E+00	0.00E+00	0.00E+00	0.00E+00	0.00E+00
1821	ALL	749888.42	4037960.7	1.45E-08	25YrCancer	1.45E-08	0.00E+00	0.00E+00	0.00E+00	0.00E+00	0.00E+00	0.00E+00	0.00E+00	0.00E+00	0.00E+00	0.00E+00	0.00E+00
1822	ALL	749988.42	4037960.7	1.48E-08	25YrCancer	1.48E-08	0.00E+00	0.00E+00	0.00E+00	0.00E+00	0.00E+00	0.00E+00	0.00E+00	0.00E+00	0.00E+00	0.00E+00	0.00E+00
1823	ALL	750088.42	4037960.7	1.51E-08	25YrCancer	1.51E-08	0.00E+00	0.00E+00	0.00E+00	0.00E+00	0.00E+00	0.00E+00	0.00E+00	0.00E+00	0.00E+00	0.00E+00	0.00E+00
1824	ALL	750188.42	4037960.7	1.54E-08	25YrCancer	1.54E-08	0.00E+00	0.00E+00	0.00E+00	0.00E+00	0.00E+00	0.00E+00	0.00E+00	0.00E+00	0.00E+00	0.00E+00	0.00E+00
1825	ALL	750288.42	4037960.7	1.56E-08	25YrCancer	1.56E-08	0.00E+00	0.00E+00	0.00E+00	0.00E+00	0.00E+00	0.00E+00	0.00E+00	0.00E+00	0.00E+00	0.00E+00	0.00E+00
1826	ALL	752388.42	4037960.7	1.09E-08	25YrCancer	1.09E-08	0.00E+00	0.00E+00	0.00E+00	0.00E+00	0.00E+00	0.00E+00	0.00E+00	0.00E+00	0.00E+00	0.00E+00	0.00E+00
1827	ALL	752488.42	4037960.7	1.05E-08	25YrCancer	1.05E-08	0.00E+00	0.00E+00	0.00E+00	0.00E+00	0.00E+00	0.00E+00	0.00E+00	0.00E+00	0.00E+00	0.00E+00	0.00E+00
1828	ALL	752588.42	4037960.7	1.02E-08	25YrCancer	1.02E-08	0.00E+00	0.00E+00	0.00E+00	0.00E+00	0.00E+00	0.00E+00	0.00E+00	0.00E+00	0.00E+00	0.00E+00	0.00E+00
1829	ALL	752688.42	4037960.7	9.81E-09	25YrCancer	9.81E-09	0.00E+00	0.00E+00	0.00E+00	0.00E+00	0.00E+00	0.00E+00	0.00E+00	0.00E+00	0.00E+00	0.00E+00	0.00E+00
1830	ALL	752788.42	4037960.7	9.46E-09	25YrCancer	9.46E-09	0.00E+00	0.00E+00	0.00E+00	0.00E+00	0.00E+00	0.00E+00	0.00E+00	0.00E+00	0.00E+00	0.00E+00	0.00E+00
1831	ALL	754888.42	4037960.7	5.07E-09	25YrCancer	5.07E-09	0.00E+00	0.00E+00	0.00E+00	0.00E+00	0.00E+00	0.00E+00	0.00E+00	0.00E+00	0.00E+00	0.00E+00	0.00E+00
1832	ALL	754988.42	4037960.7	4.95E-09	25YrCancer	4.95E-09	0.00E+00	0.00E+00	0.00E+00	0.00E+00	0.00E+00	0.00E+00	0.00E+00	0.00E+00	0.00E+00	0.00E+00	0.00E+00
1833	ALL	755088.42	4037960.7	4.84E-09	25YrCancer	4.84E-09	0.00E+00	0.00E+00	0.00E+00	0.00E+00	0.00E+00	0.00E+00	0.00E+00	0.00E+00	0.00E+00	0.00E+00	0.00E+00
1834	ALL	755188.42	4037960.7	4.73E-09	25YrCancer	4.73E-09	0.00E+00	0.00E+00	0.00E+00	0.00E+00	0.00E+00	0.00E+00	0.00E+00	0.00E+00	0.00E+00	0.00E+00	0.00E+00

1835	ALL	755288.42	4037960.7	4.63E-09	25YrCancer	4.63E-09	0.00E+00	0.00E+00	0.00E+00	0.00E+00	0.00E+00	0.00E+00	0.00E+00	0.00E+00	0.00E+00	0.00E+00	0.00E+00
1836	ALL	747888.42	4038060.7	4.89E-09	25YrCancer	4.89E-09	0.00E+00	0.00E+00	0.00E+00	0.00E+00	0.00E+00	0.00E+00	0.00E+00	0.00E+00	0.00E+00	0.00E+00	0.00E+00
1837	ALL	747988.42	4038060.7	4.94E-09	25YrCancer	4.94E-09	0.00E+00	0.00E+00	0.00E+00	0.00E+00	0.00E+00	0.00E+00	0.00E+00	0.00E+00	0.00E+00	0.00E+00	0.00E+00
1838	ALL	748088.42	4038060.7	4.96E-09	25YrCancer	4.96E-09	0.00E+00	0.00E+00	0.00E+00	0.00E+00	0.00E+00	0.00E+00	0.00E+00	0.00E+00	0.00E+00	0.00E+00	0.00E+00
1839	ALL	748188.42	4038060.7	4.98E-09	25YrCancer	4.98E-09	0.00E+00	0.00E+00	0.00E+00	0.00E+00	0.00E+00	0.00E+00	0.00E+00	0.00E+00	0.00E+00	0.00E+00	0.00E+00
1840	ALL	749888.42	4038060.7	1.55E-08	25YrCancer	1.55E-08	0.00E+00	0.00E+00	0.00E+00	0.00E+00	0.00E+00	0.00E+00	0.00E+00	0.00E+00	0.00E+00	0.00E+00	0.00E+00
1841	ALL	749988.42	4038060.7	1.59E-08	25YrCancer	1.59E-08	0.00E+00	0.00E+00	0.00E+00	0.00E+00	0.00E+00	0.00E+00	0.00E+00	0.00E+00	0.00E+00	0.00E+00	0.00E+00
1842	ALL	750088.42	4038060.7	1.62E-08	25YrCancer	1.62E-08	0.00E+00	0.00E+00	0.00E+00	0.00E+00	0.00E+00	0.00E+00	0.00E+00	0.00E+00	0.00E+00	0.00E+00	0.00E+00
1843	ALL	750188.42	4038060.7	1.65E-08	25YrCancer	1.65E-08	0.00E+00	0.00E+00	0.00E+00	0.00E+00	0.00E+00	0.00E+00	0.00E+00	0.00E+00	0.00E+00	0.00E+00	0.00E+00
1844	ALL	750288.42	4038060.7	1.67E-08	25YrCancer	1.67E-08	0.00E+00	0.00E+00	0.00E+00	0.00E+00	0.00E+00	0.00E+00	0.00E+00	0.00E+00	0.00E+00	0.00E+00	0.00E+00
1845	ALL	750388.42	4038060.7	1.69E-08	25YrCancer	1.69E-08	0.00E+00	0.00E+00	0.00E+00	0.00E+00	0.00E+00	0.00E+00	0.00E+00	0.00E+00	0.00E+00	0.00E+00	0.00E+00
1846	ALL	750488.42	4038060.7	1.70E-08	25YrCancer	1.70E-08	0.00E+00	0.00E+00	0.00E+00	0.00E+00	0.00E+00	0.00E+00	0.00E+00	0.00E+00	0.00E+00	0.00E+00	0.00E+00
1847	ALL	750588.42	4038060.7	1.70E-08	25YrCancer	1.70E-08	0.00E+00	0.00E+00	0.00E+00	0.00E+00	0.00E+00	0.00E+00	0.00E+00	0.00E+00	0.00E+00	0.00E+00	0.00E+00
1848	ALL	750688.42	4038060.7	1.70E-08	25YrCancer	1.70E-08	0.00E+00	0.00E+00	0.00E+00	0.00E+00	0.00E+00	0.00E+00	0.00E+00	0.00E+00	0.00E+00	0.00E+00	0.00E+00
1849	ALL	750788.42	4038060.7	1.69E-08	25YrCancer	1.69E-08	0.00E+00	0.00E+00	0.00E+00	0.00E+00	0.00E+00	0.00E+00	0.00E+00	0.00E+00	0.00E+00	0.00E+00	0.00E+00
1850	ALL	750888.42	4038060.7	1.67E-08	25YrCancer	1.67E-08	0.00E+00	0.00E+00	0.00E+00	0.00E+00	0.00E+00	0.00E+00	0.00E+00	0.00E+00	0.00E+00	0.00E+00	0.00E+00
1851	ALL	750988.42	4038060.7	1.65E-08	25YrCancer	1.65E-08	0.00E+00	0.00E+00	0.00E+00	0.00E+00	0.00E+00	0.00E+00	0.00E+00	0.00E+00	0.00E+00	0.00E+00	0.00E+00
1852	ALL	751088.42	4038060.7	1.63E-08	25YrCancer	1.63E-08	0.00E+00	0.00E+00	0.00E+00	0.00E+00	0.00E+00	0.00E+00	0.00E+00	0.00E+00	0.00E+00	0.00E+00	0.00E+00
1853	ALL	751188.42	4038060.7	1.60E-08	25YrCancer	1.60E-08	0.00E+00	0.00E+00	0.00E+00	0.00E+00	0.00E+00	0.00E+00	0.00E+00	0.00E+00	0.00E+00	0.00E+00	0.00E+00
1854	ALL	751288.42	4038060.7	1.56E-08	25YrCancer	1.56E-08	0.00E+00	0.00E+00	0.00E+00	0.00E+00	0.00E+00	0.00E+00	0.00E+00	0.00E+00	0.00E+00	0.00E+00	0.00E+00
1855	ALL	751388.42	4038060.7	1.52E-08	25YrCancer	1.52E-08	0.00E+00	0.00E+00	0.00E+00	0.00E+00	0.00E+00	0.00E+00	0.00E+00	0.00E+00	0.00E+00	0.00E+00	0.00E+00
1856	ALL	752388.42	4038060.7	1.08E-08	25YrCancer	1.08E-08	0.00E+00	0.00E+00	0.00E+00	0.00E+00	0.00E+00	0.00E+00	0.00E+00	0.00E+00	0.00E+00	0.00E+00	0.00E+00
1857	ALL	752488.42	4038060.7	1.04E-08	25YrCancer	1.04E-08	0.00E+00	0.00E+00	0.00E+00	0.00E+00	0.00E+00	0.00E+00	0.00E+00	0.00E+00	0.00E+00	0.00E+00	0.00E+00
1858	ALL	752588.42	4038060.7	1.00E-08	25YrCancer	1.00E-08	0.00E+00	0.00E+00	0.00E+00	0.00E+00	0.00E+00	0.00E+00	0.00E+00	0.00E+00	0.00E+00	0.00E+00	0.00E+00
1859	ALL	752688.42	4038060.7	9.66E-09	25YrCancer	9.66E-09	0.00E+00	0.00E+00	0.00E+00	0.00E+00	0.00E+00	0.00E+00	0.00E+00	0.00E+00	0.00E+00	0.00E+00	0.00E+00
1860	ALL	754788.42	4038060.7	5.10E-09	25YrCancer	5.10E-09	0.00E+00	0.00E+00	0.00E+00	0.00E+00	0.00E+00	0.00E+00	0.00E+00	0.00E+00	0.00E+00	0.00E+00	0.00E+00
1861	ALL	754888.42	4038060.7	4.98E-09	25YrCancer	4.98E-09	0.00E+00	0.00E+00	0.00E+00	0.00E+00	0.00E+00	0.00E+00	0.00E+00	0.00E+00	0.00E+00	0.00E+00	0.00E+00
1862	ALL	754988.42	4038060.7	4.87E-09	25YrCancer	4.87E-09	0.00E+00	0.00E+00	0.00E+00	0.00E+00	0.00E+00	0.00E+00	0.00E+00	0.00E+00	0.00E+00	0.00E+00	0.00E+00
1863	ALL	755088.42	4038060.7	4.75E-09	25YrCancer	4.75E-09	0.00E+00	0.00E+00	0.00E+00	0.00E+00	0.00E+00	0.00E+00	0.00E+00	0.00E+00	0.00E+00	0.00E+00	0.00E+00
1864	ALL	755188.42	4038060.7	4.65E-09	25YrCancer	4.65E-09	0.00E+00	0.00E+00	0.00E+00	0.00E+00	0.00E+00	0.00E+00	0.00E+00	0.00E+00	0.00E+00	0.00E+00	0.00E+00
1865	ALL	755288.42	4038060.7	4.54E-09	25YrCancer	4.54E-09	0.00E+00	0.00E+00	0.00E+00	0.00E+00	0.00E+00	0.00E+00	0.00E+00	0.00E+00	0.00E+00	0.00E+00	0.00E+00
1866	ALL	747888.42	4038160.7	4.92E-09	25YrCancer	4.92E-09	0.00E+00	0.00E+00	0.00E+00	0.00E+00	0.00E+00	0.00E+00	0.00E+00	0.00E+00	0.00E+00	0.00E+00	0.00E+00
1867	ALL	747988.42	4038160.7	5.01E-09	25YrCancer	5.01E-09	0.00E+00	0.00E+00	0.00E+00	0.00E+00	0.00E+00	0.00E+00	0.00E+00	0.00E+00	0.00E+00	0.00E+00	0.00E+00
1868	ALL	748088.42	4038160.7	5.06E-09	25YrCancer	5.06E-09	0.00E+00	0.00E+00	0.00E+00	0.00E+00	0.00E+00	0.00E+00	0.00E+00	0.00E+00	0.00E+00	0.00E+00	0.00E+00
1869	ALL	748188.42	4038160.7	5.09E-09	25YrCancer	5.09E-09	0.00E+00	0.00E+00	0.00E+00	0.00E+00	0.00E+00	0.00E+00	0.00E+00	0.00E+00	0.00E+00	0.00E+00	0.00E+00
1870	ALL	749888.42	4038160.7	1.67E-08	25YrCancer	1.67E-08	0.00E+00	0.00E+00	0.00E+00	0.00E+00	0.00E+00	0.00E+00	0.00E+00	0.00E+00	0.00E+00	0.00E+00	0.00E+00
1871	ALL	749988.42	4038160.7	1.71E-08	25YrCancer	1.71E-08	0.00E+00	0.00E+00	0.00E+00	0.00E+00	0.00E+00	0.00E+00	0.00E+00	0.00E+00	0.00E+00	0.00E+00	0.00E+00
1872	ALL	750088.42	4038160.7	1.74E-08	25YrCancer	1.74E-08	0.00E+00	0.00E+00	0.00E+00	0.00E+00	0.00E+00	0.00E+00	0.00E+00	0.00E+00	0.00E+00	0.00E+00	0.00E+00
1873	ALL	750188.42	4038160.7	1.77E-08	25YrCancer	1.77E-08	0.00E+00	0.00E+00	0.00E+00	0.00E+00	0.00E+00	0.00E+00	0.00E+00	0.00E+00	0.00E+00	0.00E+00	0.00E+00
1874	ALL	750288.42	4038160.7	1.79E-08	25YrCancer	1.79E-08	0.00E+00	0.00E+00	0.00E+00	0.00E+00	0.00E+00	0.00E+00	0.00E+00	0.00E+00	0.00E+00	0.00E+00	0.00E+00
1875	ALL	750388.42	4038160.7	1.80E-08	25YrCancer	1.80E-08	0.00E+00	0.00E+00	0.00E+00	0.00E+00	0.00E+00	0.00E+00	0.00E+00	0.00E+00	0.00E+00	0.00E+00	0.00E+00
1876	ALL	750488.42	4038160.7	1.81E-08	25YrCancer	1.81E-08	0.00E+00	0.00E+00	0.00E+00	0.00E+00	0.00E+00	0.00E+00	0.00E+00	0.00E+00	0.00E+00	0.00E+00	0.00E+00
1877	ALL	750588.42	4038160.7	1.80E-08	25YrCancer	1.80E-08	0.00E+00	0.00E+00	0.00E+00	0.00E+00	0.00E+00	0.00E+00	0.00E+00	0.00E+00	0.00E+00	0.00E+00	0.00E+00
1878	ALL	750688.42	4038160.7	1.79E-08	25YrCancer	1.79E-08	0.00E+00	0.00E+00	0.00E+00	0.00E+00	0.00E+00	0.00E+00	0.00E+00	0.00E+00	0.00E+00	0.00E+00	0.00E+00
1879	ALL	750788.42	4038160.7	1.78E-08	25YrCancer	1.78E-08	0.00E+00	0.00E+00	0.00E+00	0.00E+00	0.00E+00	0.00E+00	0.00E+00	0.00E+00	0.00E+00	0.00E+00	0.00E+00
1880	ALL	750888.42	4038160.7	1.75E-08	25YrCancer	1.75E-08	0.00E+00	0.00E+00	0.00E+00	0.00E+00	0.00E+00	0.00E+00	0.00E+00	0.00E+00	0.00E+00	0.00E+00	0.00E+00
1881	ALL	750988.42	4038160.7	1.72E-08	25YrCancer	1.72E-08	0.00E+00	0.00E+00	0.00E+00	0.00E+00	0.00E+00	0.00E+00	0.00E+00	0.00E+00	0.00E+00	0.00E+00	0.00E+00
1882	ALL	751088.42	4038160.7	1.68E-08	25YrCancer	1.68E-08	0.00E+00	0.00E+00	0.00E+00	0.00E+00	0.00E+00	0.00E+00	0.00E+00	0.00E+00	0.00E+00	0.00E+00	0.00E+00
1883	ALL	751188.42	4038160.7	1.64E-08	25YrCancer	1.64E-08	0.00E+00	0.00E+00	0.00E+00	0.00E+00	0.00E+00	0.00E+00	0.00E+00	0.00E+00	0.00E+00	0.00E+00	0.00E+00
1884	ALL	751288.42	4038160.7	1.60E-08	25YrCancer	1.60E-08	0.00E+00	0.00E+00	0.00E+00	0.00E+00	0.00E+00	0.00E+00	0.00E+00	0.00E+00	0.00E+00	0.00E+00	0.00E+00
1885	ALL	751388.42	4038160.7	1.55E-08	25YrCancer	1.55E-08	0.00E+00	0.00E+00	0.00E+00	0.00E+00	0.00E+00	0.00E+00	0.00E+00	0.00E+00	0.00E+00	0.00E+00	0.00E+00

1886	ALL	751488.42	4038160.7	1.50E-08	25YrCancer	1.50E-08	0.00E+00	0.00E+00	0.00E+00	0.00E+00	0.00E+00	0.00E+00	0.00E+00	0.00E+00	0.00E+00	0.00E+00	0.00E+00
1887	ALL	751588.42	4038160.7	1.45E-08	25YrCancer	1.45E-08	0.00E+00	0.00E+00	0.00E+00	0.00E+00	0.00E+00	0.00E+00	0.00E+00	0.00E+00	0.00E+00	0.00E+00	0.00E+00
1888	ALL	751688.42	4038160.7	1.40E-08	25YrCancer	1.40E-08	0.00E+00	0.00E+00	0.00E+00	0.00E+00	0.00E+00	0.00E+00	0.00E+00	0.00E+00	0.00E+00	0.00E+00	0.00E+00
1889	ALL	751788.42	4038160.7	1.35E-08	25YrCancer	1.35E-08	0.00E+00	0.00E+00	0.00E+00	0.00E+00	0.00E+00	0.00E+00	0.00E+00	0.00E+00	0.00E+00	0.00E+00	0.00E+00
1890	ALL	751888.42	4038160.7	1.30E-08	25YrCancer	1.30E-08	0.00E+00	0.00E+00	0.00E+00	0.00E+00	0.00E+00	0.00E+00	0.00E+00	0.00E+00	0.00E+00	0.00E+00	0.00E+00
1891	ALL	751988.42	4038160.7	1.25E-08	25YrCancer	1.25E-08	0.00E+00	0.00E+00	0.00E+00	0.00E+00	0.00E+00	0.00E+00	0.00E+00	0.00E+00	0.00E+00	0.00E+00	0.00E+00
1892	ALL	752088.42	4038160.7	1.20E-08	25YrCancer	1.20E-08	0.00E+00	0.00E+00	0.00E+00	0.00E+00	0.00E+00	0.00E+00	0.00E+00	0.00E+00	0.00E+00	0.00E+00	0.00E+00
1893	ALL	752188.42	4038160.7	1.15E-08	25YrCancer	1.15E-08	0.00E+00	0.00E+00	0.00E+00	0.00E+00	0.00E+00	0.00E+00	0.00E+00	0.00E+00	0.00E+00	0.00E+00	0.00E+00
1894	ALL	752288.42	4038160.7	1.11E-08	25YrCancer	1.11E-08	0.00E+00	0.00E+00	0.00E+00	0.00E+00	0.00E+00	0.00E+00	0.00E+00	0.00E+00	0.00E+00	0.00E+00	0.00E+00
1895	ALL	752388.42	4038160.7	1.07E-08	25YrCancer	1.07E-08	0.00E+00	0.00E+00	0.00E+00	0.00E+00	0.00E+00	0.00E+00	0.00E+00	0.00E+00	0.00E+00	0.00E+00	0.00E+00
1896	ALL	752488.42	4038160.7	1.03E-08	25YrCancer	1.03E-08	0.00E+00	0.00E+00	0.00E+00	0.00E+00	0.00E+00	0.00E+00	0.00E+00	0.00E+00	0.00E+00	0.00E+00	0.00E+00
1897	ALL	752588.42	4038160.7	9.87E-09	25YrCancer	9.87E-09	0.00E+00	0.00E+00	0.00E+00	0.00E+00	0.00E+00	0.00E+00	0.00E+00	0.00E+00	0.00E+00	0.00E+00	0.00E+00
1898	ALL	752688.42	4038160.7	9.50E-09	25YrCancer	9.50E-09	0.00E+00	0.00E+00	0.00E+00	0.00E+00	0.00E+00	0.00E+00	0.00E+00	0.00E+00	0.00E+00	0.00E+00	0.00E+00
1899	ALL	754788.42	4038160.7	5.01E-09	25YrCancer	5.01E-09	0.00E+00	0.00E+00	0.00E+00	0.00E+00	0.00E+00	0.00E+00	0.00E+00	0.00E+00	0.00E+00	0.00E+00	0.00E+00
1900	ALL	754888.42	4038160.7	4.89E-09	25YrCancer	4.89E-09	0.00E+00	0.00E+00	0.00E+00	0.00E+00	0.00E+00	0.00E+00	0.00E+00	0.00E+00	0.00E+00	0.00E+00	0.00E+00
1901	ALL	754988.42	4038160.7	4.77E-09	25YrCancer	4.77E-09	0.00E+00	0.00E+00	0.00E+00	0.00E+00	0.00E+00	0.00E+00	0.00E+00	0.00E+00	0.00E+00	0.00E+00	0.00E+00
1902	ALL	755088.42	4038160.7	4.66E-09	25YrCancer	4.66E-09	0.00E+00	0.00E+00	0.00E+00	0.00E+00	0.00E+00	0.00E+00	0.00E+00	0.00E+00	0.00E+00	0.00E+00	0.00E+00
1903	ALL	755188.42	4038160.7	4.56E-09	25YrCancer	4.56E-09	0.00E+00	0.00E+00	0.00E+00	0.00E+00	0.00E+00	0.00E+00	0.00E+00	0.00E+00	0.00E+00	0.00E+00	0.00E+00
1904	ALL	755288.42	4038160.7	4.46E-09	25YrCancer	4.46E-09	0.00E+00	0.00E+00	0.00E+00	0.00E+00	0.00E+00	0.00E+00	0.00E+00	0.00E+00	0.00E+00	0.00E+00	0.00E+00
1905	ALL	747888.42	4038260.7	4.95E-09	25YrCancer	4.95E-09	0.00E+00	0.00E+00	0.00E+00	0.00E+00	0.00E+00	0.00E+00	0.00E+00	0.00E+00	0.00E+00	0.00E+00	0.00E+00
1906	ALL	747988.42	4038260.7	5.09E-09	25YrCancer	5.09E-09	0.00E+00	0.00E+00	0.00E+00	0.00E+00	0.00E+00	0.00E+00	0.00E+00	0.00E+00	0.00E+00	0.00E+00	0.00E+00
1907	ALL	748088.42	4038260.7	5.16E-09	25YrCancer	5.16E-09	0.00E+00	0.00E+00	0.00E+00	0.00E+00	0.00E+00	0.00E+00	0.00E+00	0.00E+00	0.00E+00	0.00E+00	0.00E+00
1908	ALL	748188.42	4038260.7	5.21E-09	25YrCancer	5.21E-09	0.00E+00	0.00E+00	0.00E+00	0.00E+00	0.00E+00	0.00E+00	0.00E+00	0.00E+00	0.00E+00	0.00E+00	0.00E+00
1909	ALL	749888.42	4038260.7	1.80E-08	25YrCancer	1.80E-08	0.00E+00	0.00E+00	0.00E+00	0.00E+00	0.00E+00	0.00E+00	0.00E+00	0.00E+00	0.00E+00	0.00E+00	0.00E+00
1910	ALL	749988.42	4038260.7	1.84E-08	25YrCancer	1.84E-08	0.00E+00	0.00E+00	0.00E+00	0.00E+00	0.00E+00	0.00E+00	0.00E+00	0.00E+00	0.00E+00	0.00E+00	0.00E+00
1911	ALL	750088.42	4038260.7	1.88E-08	25YrCancer	1.88E-08	0.00E+00	0.00E+00	0.00E+00	0.00E+00	0.00E+00	0.00E+00	0.00E+00	0.00E+00	0.00E+00	0.00E+00	0.00E+00
1912	ALL	750188.42	4038260.7	1.90E-08	25YrCancer	1.90E-08	0.00E+00	0.00E+00	0.00E+00	0.00E+00	0.00E+00	0.00E+00	0.00E+00	0.00E+00	0.00E+00	0.00E+00	0.00E+00
1913	ALL	750288.42	4038260.7	1.92E-08	25YrCancer	1.92E-08	0.00E+00	0.00E+00	0.00E+00	0.00E+00	0.00E+00	0.00E+00	0.00E+00	0.00E+00	0.00E+00	0.00E+00	0.00E+00
1914	ALL	750388.42	4038260.7	1.93E-08	25YrCancer	1.93E-08	0.00E+00	0.00E+00	0.00E+00	0.00E+00	0.00E+00	0.00E+00	0.00E+00	0.00E+00	0.00E+00	0.00E+00	0.00E+00
1915	ALL	750488.42	4038260.7	1.92E-08	25YrCancer	1.92E-08	0.00E+00	0.00E+00	0.00E+00	0.00E+00	0.00E+00	0.00E+00	0.00E+00	0.00E+00	0.00E+00	0.00E+00	0.00E+00
1916	ALL	750588.42	4038260.7	1.91E-08	25YrCancer	1.91E-08	0.00E+00	0.00E+00	0.00E+00	0.00E+00	0.00E+00	0.00E+00	0.00E+00	0.00E+00	0.00E+00	0.00E+00	0.00E+00
1917	ALL	750688.42	4038260.7	1.89E-08	25YrCancer	1.89E-08	0.00E+00	0.00E+00	0.00E+00	0.00E+00	0.00E+00	0.00E+00	0.00E+00	0.00E+00	0.00E+00	0.00E+00	0.00E+00
1918	ALL	750788.42	4038260.7	1.86E-08	25YrCancer	1.86E-08	0.00E+00	0.00E+00	0.00E+00	0.00E+00	0.00E+00	0.00E+00	0.00E+00	0.00E+00	0.00E+00	0.00E+00	0.00E+00
1919	ALL	750888.42	4038260.7	1.83E-08	25YrCancer	1.83E-08	0.00E+00	0.00E+00	0.00E+00	0.00E+00	0.00E+00	0.00E+00	0.00E+00	0.00E+00	0.00E+00	0.00E+00	0.00E+00
1920	ALL	750988.42	4038260.7	1.78E-08	25YrCancer	1.78E-08	0.00E+00	0.00E+00	0.00E+00	0.00E+00	0.00E+00	0.00E+00	0.00E+00	0.00E+00	0.00E+00	0.00E+00	0.00E+00
1921	ALL	751088.42	4038260.7	1.74E-08	25YrCancer	1.74E-08	0.00E+00	0.00E+00	0.00E+00	0.00E+00	0.00E+00	0.00E+00	0.00E+00	0.00E+00	0.00E+00	0.00E+00	0.00E+00
1922	ALL	751188.42	4038260.7	1.68E-08	25YrCancer	1.68E-08	0.00E+00	0.00E+00	0.00E+00	0.00E+00	0.00E+00	0.00E+00	0.00E+00	0.00E+00	0.00E+00	0.00E+00	0.00E+00
1923	ALL	751288.42	4038260.7	1.63E-08	25YrCancer	1.63E-08	0.00E+00	0.00E+00	0.00E+00	0.00E+00	0.00E+00	0.00E+00	0.00E+00	0.00E+00	0.00E+00	0.00E+00	0.00E+00
1924	ALL	751388.42	4038260.7	1.57E-08	25YrCancer	1.57E-08	0.00E+00	0.00E+00	0.00E+00	0.00E+00	0.00E+00	0.00E+00	0.00E+00	0.00E+00	0.00E+00	0.00E+00	0.00E+00
1925	ALL	751488.42	4038260.7	1.52E-08	25YrCancer	1.52E-08	0.00E+00	0.00E+00	0.00E+00	0.00E+00	0.00E+00	0.00E+00	0.00E+00	0.00E+00	0.00E+00	0.00E+00	0.00E+00
1926	ALL	751588.42	4038260.7	1.46E-08	25YrCancer	1.46E-08	0.00E+00	0.00E+00	0.00E+00	0.00E+00	0.00E+00	0.00E+00	0.00E+00	0.00E+00	0.00E+00	0.00E+00	0.00E+00
1927	ALL	751688.42	4038260.7	1.40E-08	25YrCancer	1.40E-08	0.00E+00	0.00E+00	0.00E+00	0.00E+00	0.00E+00	0.00E+00	0.00E+00	0.00E+00	0.00E+00	0.00E+00	0.00E+00
1928	ALL	751788.42	4038260.7	1.35E-08	25YrCancer	1.35E-08	0.00E+00	0.00E+00	0.00E+00	0.00E+00	0.00E+00	0.00E+00	0.00E+00	0.00E+00	0.00E+00	0.00E+00	0.00E+00
1929	ALL	751888.42	4038260.7	1.29E-08	25YrCancer	1.29E-08	0.00E+00	0.00E+00	0.00E+00	0.00E+00	0.00E+00	0.00E+00	0.00E+00	0.00E+00	0.00E+00	0.00E+00	0.00E+00
1930	ALL	751988.42	4038260.7	1.24E-08	25YrCancer	1.24E-08	0.00E+00	0.00E+00	0.00E+00	0.00E+00	0.00E+00	0.00E+00	0.00E+00	0.00E+00	0.00E+00	0.00E+00	0.00E+00
1931	ALL	752088.42	4038260.7	1.19E-08	25YrCancer	1.19E-08	0.00E+00	0.00E+00	0.00E+00	0.00E+00	0.00E+00	0.00E+00	0.00E+00	0.00E+00	0.00E+00	0.00E+00	0.00E+00
1932	ALL	752188.42	4038260.7	1.14E-08	25YrCancer	1.14E-08	0.00E+00	0.00E+00	0.00E+00	0.00E+00	0.00E+00	0.00E+00	0.00E+00	0.00E+00	0.00E+00	0.00E+00	0.00E+00
1933	ALL	752288.42	4038260.7	1.09E-08	25YrCancer	1.09E-08	0.00E+00	0.00E+00	0.00E+00	0.00E+00	0.00E+00	0.00E+00	0.00E+00	0.00E+00	0.00E+00	0.00E+00	0.00E+00
1934	ALL	752388.42	4038260.7	1.05E-08	25YrCancer	1.05E-08	0.00E+00	0.00E+00	0.00E+00	0.00E+00	0.00E+00	0.00E+00	0.00E+00	0.00E+00	0.00E+00	0.00E+00	0.00E+00
1935	ALL	752488.42	4038260.7	1.01E-08	25YrCancer	1.01E-08	0.00E+00	0.00E+00	0.00E+00	0.00E+00	0.00E+00	0.00E+00	0.00E+00	0.00E+00	0.00E+00	0.00E+00	0.00E+00
1936	ALL	752588.42	4038260.7	9.69E-09	25YrCancer	9.69E-09	0.00E+00	0.00E+00	0.00E+00	0.00E+00	0.00E+00	0.00E+00	0.00E+00	0.00E+00	0.00E+00	0.00E+00	0.00E+00

1937	ALL	752688.42	4038260.7	9.32E-09	25YrCancer	9.32E-09	0.00E+00	0.00E+00	0.00E+00	0.00E+00	0.00E+00	0.00E+00	0.00E+00	0.00E+00	0.00E+00	0.00E+00
1938	ALL	754788.42	4038260.7	4.91E-09	25YrCancer	4.91E-09	0.00E+00	0.00E+00	0.00E+00	0.00E+00	0.00E+00	0.00E+00	0.00E+00	0.00E+00	0.00E+00	0.00E+00
1939	ALL	754888.42	4038260.7	4.79E-09	25YrCancer	4.79E-09	0.00E+00	0.00E+00	0.00E+00	0.00E+00	0.00E+00	0.00E+00	0.00E+00	0.00E+00	0.00E+00	0.00E+00
1940	ALL	754988.42	4038260.7	4.68E-09	25YrCancer	4.68E-09	0.00E+00	0.00E+00	0.00E+00	0.00E+00	0.00E+00	0.00E+00	0.00E+00	0.00E+00	0.00E+00	0.00E+00
1941	ALL	755088.42	4038260.7	4.57E-09	25YrCancer	4.57E-09	0.00E+00	0.00E+00	0.00E+00	0.00E+00	0.00E+00	0.00E+00	0.00E+00	0.00E+00	0.00E+00	0.00E+00
1942	ALL	755188.42	4038260.7	4.47E-09	25YrCancer	4.47E-09	0.00E+00	0.00E+00	0.00E+00	0.00E+00	0.00E+00	0.00E+00	0.00E+00	0.00E+00	0.00E+00	0.00E+00
1943	ALL	755288.42	4038260.7	4.37E-09	25YrCancer	4.37E-09	0.00E+00	0.00E+00	0.00E+00	0.00E+00	0.00E+00	0.00E+00	0.00E+00	0.00E+00	0.00E+00	0.00E+00
1944	ALL	747888.42	4038360.7	4.99E-09	25YrCancer	4.99E-09	0.00E+00	0.00E+00	0.00E+00	0.00E+00	0.00E+00	0.00E+00	0.00E+00	0.00E+00	0.00E+00	0.00E+00
1945	ALL	747988.42	4038360.7	5.17E-09	25YrCancer	5.17E-09	0.00E+00	0.00E+00	0.00E+00	0.00E+00	0.00E+00	0.00E+00	0.00E+00	0.00E+00	0.00E+00	0.00E+00
1946	ALL	748088.42	4038360.7	5.28E-09	25YrCancer	5.28E-09	0.00E+00	0.00E+00	0.00E+00	0.00E+00	0.00E+00	0.00E+00	0.00E+00	0.00E+00	0.00E+00	0.00E+00
1947	ALL	748188.42	4038360.7	5.35E-09	25YrCancer	5.35E-09	0.00E+00	0.00E+00	0.00E+00	0.00E+00	0.00E+00	0.00E+00	0.00E+00	0.00E+00	0.00E+00	0.00E+00
1948	ALL	749888.42	4038360.7	1.96E-08	25YrCancer	1.96E-08	0.00E+00	0.00E+00	0.00E+00	0.00E+00	0.00E+00	0.00E+00	0.00E+00	0.00E+00	0.00E+00	0.00E+00
1949	ALL	749988.42	4038360.7	2.00E-08	25YrCancer	2.00E-08	0.00E+00	0.00E+00	0.00E+00	0.00E+00	0.00E+00	0.00E+00	0.00E+00	0.00E+00	0.00E+00	0.00E+00
1950	ALL	750088.42	4038360.7	2.03E-08	25YrCancer	2.03E-08	0.00E+00	0.00E+00	0.00E+00	0.00E+00	0.00E+00	0.00E+00	0.00E+00	0.00E+00	0.00E+00	0.00E+00
1951	ALL	750188.42	4038360.7	2.05E-08	25YrCancer	2.05E-08	0.00E+00	0.00E+00	0.00E+00	0.00E+00	0.00E+00	0.00E+00	0.00E+00	0.00E+00	0.00E+00	0.00E+00
1952	ALL	750288.42	4038360.7	2.06E-08	25YrCancer	2.06E-08	0.00E+00	0.00E+00	0.00E+00	0.00E+00	0.00E+00	0.00E+00	0.00E+00	0.00E+00	0.00E+00	0.00E+00
1953	ALL	750388.42	4038360.7	2.06E-08	25YrCancer	2.06E-08	0.00E+00	0.00E+00	0.00E+00	0.00E+00	0.00E+00	0.00E+00	0.00E+00	0.00E+00	0.00E+00	0.00E+00
1954	ALL	750488.42	4038360.7	2.05E-08	25YrCancer	2.05E-08	0.00E+00	0.00E+00	0.00E+00	0.00E+00	0.00E+00	0.00E+00	0.00E+00	0.00E+00	0.00E+00	0.00E+00
1955	ALL	750588.42	4038360.7	2.02E-08	25YrCancer	2.02E-08	0.00E+00	0.00E+00	0.00E+00	0.00E+00	0.00E+00	0.00E+00	0.00E+00	0.00E+00	0.00E+00	0.00E+00
1956	ALL	750688.42	4038360.7	1.99E-08	25YrCancer	1.99E-08	0.00E+00	0.00E+00	0.00E+00	0.00E+00	0.00E+00	0.00E+00	0.00E+00	0.00E+00	0.00E+00	0.00E+00
1957	ALL	750788.42	4038360.7	1.94E-08	25YrCancer	1.94E-08	0.00E+00	0.00E+00	0.00E+00	0.00E+00	0.00E+00	0.00E+00	0.00E+00	0.00E+00	0.00E+00	0.00E+00
1958	ALL	750888.42	4038360.7	1.89E-08	25YrCancer	1.89E-08	0.00E+00	0.00E+00	0.00E+00	0.00E+00	0.00E+00	0.00E+00	0.00E+00	0.00E+00	0.00E+00	0.00E+00
1959	ALL	750988.42	4038360.7	1.84E-08	25YrCancer	1.84E-08	0.00E+00	0.00E+00	0.00E+00	0.00E+00	0.00E+00	0.00E+00	0.00E+00	0.00E+00	0.00E+00	0.00E+00
1960	ALL	751088.42	4038360.7	1.78E-08	25YrCancer	1.78E-08	0.00E+00	0.00E+00	0.00E+00	0.00E+00	0.00E+00	0.00E+00	0.00E+00	0.00E+00	0.00E+00	0.00E+00
1961	ALL	751188.42	4038360.7	1.72E-08	25YrCancer	1.72E-08	0.00E+00	0.00E+00	0.00E+00	0.00E+00	0.00E+00	0.00E+00	0.00E+00	0.00E+00	0.00E+00	0.00E+00
1962	ALL	751288.42	4038360.7	1.65E-08	25YrCancer	1.65E-08	0.00E+00	0.00E+00	0.00E+00	0.00E+00	0.00E+00	0.00E+00	0.00E+00	0.00E+00	0.00E+00	0.00E+00
1963	ALL	751388.42	4038360.7	1.58E-08	25YrCancer	1.58E-08	0.00E+00	0.00E+00	0.00E+00	0.00E+00	0.00E+00	0.00E+00	0.00E+00	0.00E+00	0.00E+00	0.00E+00
1964	ALL	751488.42	4038360.7	1.52E-08	25YrCancer	1.52E-08	0.00E+00	0.00E+00	0.00E+00	0.00E+00	0.00E+00	0.00E+00	0.00E+00	0.00E+00	0.00E+00	0.00E+00
1965	ALL	751588.42	4038360.7	1.46E-08	25YrCancer	1.46E-08	0.00E+00	0.00E+00	0.00E+00	0.00E+00	0.00E+00	0.00E+00	0.00E+00	0.00E+00	0.00E+00	0.00E+00
1966	ALL	751688.42	4038360.7	1.39E-08	25YrCancer	1.39E-08	0.00E+00	0.00E+00	0.00E+00	0.00E+00	0.00E+00	0.00E+00	0.00E+00	0.00E+00	0.00E+00	0.00E+00
1967	ALL	751788.42	4038360.7	1.33E-08	25YrCancer	1.33E-08	0.00E+00	0.00E+00	0.00E+00	0.00E+00	0.00E+00	0.00E+00	0.00E+00	0.00E+00	0.00E+00	0.00E+00
1968	ALL	751888.42	4038360.7	1.28E-08	25YrCancer	1.28E-08	0.00E+00	0.00E+00	0.00E+00	0.00E+00	0.00E+00	0.00E+00	0.00E+00	0.00E+00	0.00E+00	0.00E+00
1969	ALL	751988.42	4038360.7	1.22E-08	25YrCancer	1.22E-08	0.00E+00	0.00E+00	0.00E+00	0.00E+00	0.00E+00	0.00E+00	0.00E+00	0.00E+00	0.00E+00	0.00E+00
1970	ALL	752088.42	4038360.7	1.17E-08	25YrCancer	1.17E-08	0.00E+00	0.00E+00	0.00E+00	0.00E+00	0.00E+00	0.00E+00	0.00E+00	0.00E+00	0.00E+00	0.00E+00
1971	ALL	752188.42	4038360.7	1.12E-08	25YrCancer	1.12E-08	0.00E+00	0.00E+00	0.00E+00	0.00E+00	0.00E+00	0.00E+00	0.00E+00	0.00E+00	0.00E+00	0.00E+00
1972	ALL	752288.42	4038360.7	1.07E-08	25YrCancer	1.07E-08	0.00E+00	0.00E+00	0.00E+00	0.00E+00	0.00E+00	0.00E+00	0.00E+00	0.00E+00	0.00E+00	0.00E+00
1973	ALL	752388.42	4038360.7	1.03E-08	25YrCancer	1.03E-08	0.00E+00	0.00E+00	0.00E+00	0.00E+00	0.00E+00	0.00E+00	0.00E+00	0.00E+00	0.00E+00	0.00E+00
1974	ALL	752488.42	4038360.7	9.88E-09	25YrCancer	9.88E-09	0.00E+00	0.00E+00	0.00E+00	0.00E+00	0.00E+00	0.00E+00	0.00E+00	0.00E+00	0.00E+00	0.00E+00
1975	ALL	752588.42	4038360.7	9.49E-09	25YrCancer	9.49E-09	0.00E+00	0.00E+00	0.00E+00	0.00E+00	0.00E+00	0.00E+00	0.00E+00	0.00E+00	0.00E+00	0.00E+00
1976	ALL	752688.42	4038360.7	9.13E-09	25YrCancer	9.13E-09	0.00E+00	0.00E+00	0.00E+00	0.00E+00	0.00E+00	0.00E+00	0.00E+00	0.00E+00	0.00E+00	0.00E+00
1977	ALL	754788.42	4038360.7	4.81E-09	25YrCancer	4.81E-09	0.00E+00	0.00E+00	0.00E+00	0.00E+00	0.00E+00	0.00E+00	0.00E+00	0.00E+00	0.00E+00	0.00E+00
1978	ALL	754888.42	4038360.7	4.70E-09	25YrCancer	4.70E-09	0.00E+00	0.00E+00	0.00E+00	0.00E+00	0.00E+00	0.00E+00	0.00E+00	0.00E+00	0.00E+00	0.00E+00
1979	ALL	754988.42	4038360.7	4.59E-09	25YrCancer	4.59E-09	0.00E+00	0.00E+00	0.00E+00	0.00E+00	0.00E+00	0.00E+00	0.00E+00	0.00E+00	0.00E+00	0.00E+00
1980	ALL	755088.42	4038360.7	4.48E-09	25YrCancer	4.48E-09	0.00E+00	0.00E+00	0.00E+00	0.00E+00	0.00E+00	0.00E+00	0.00E+00	0.00E+00	0.00E+00	0.00E+00
1981	ALL	755188.42	4038360.7	4.38E-09	25YrCancer	4.38E-09	0.00E+00	0.00E+00	0.00E+00	0.00E+00	0.00E+00	0.00E+00	0.00E+00	0.00E+00	0.00E+00	0.00E+00
1982	ALL	755288.42	4038360.7	4.29E-09	25YrCancer	4.29E-09	0.00E+00	0.00E+00	0.00E+00	0.00E+00	0.00E+00	0.00E+00	0.00E+00	0.00E+00	0.00E+00	0.00E+00
1983	ALL	747888.42	4038460.7	5.01E-09	25YrCancer	5.01E-09	0.00E+00	0.00E+00	0.00E+00	0.00E+00	0.00E+00	0.00E+00	0.00E+00	0.00E+00	0.00E+00	0.00E+00
1984	ALL	747988.42	4038460.7	5.25E-09	25YrCancer	5.25E-09	0.00E+00	0.00E+00	0.00E+00	0.00E+00	0.00E+00	0.00E+00	0.00E+00	0.00E+00	0.00E+00	0.00E+00
1985	ALL	748088.42	4038460.7	5.42E-09	25YrCancer	5.42E-09	0.00E+00	0.00E+00	0.00E+00	0.00E+00	0.00E+00	0.00E+00	0.00E+00	0.00E+00	0.00E+00	0.00E+00
1986	ALL	748188.42	4038460.7	5.52E-09	25YrCancer	5.52E-09	0.00E+00	0.00E+00	0.00E+00	0.00E+00	0.00E+00	0.00E+00	0.00E+00	0.00E+00	0.00E+00	0.00E+00
1987	ALL	749888.42	4038460.7	2.14E-08	25YrCancer	2.14E-08	0.00E+00	0.00E+00	0.00E+00	0.00E+00	0.00E+00	0.00E+00	0.00E+00	0.00E+00	0.00E+00	0.00E+00

1988	ALL	749988.42	4038460.7	2.19E-08	25YrCancer	2.19E-08	0.00E+00	0.00E+00	0.00E+00	0.00E+00	0.00E+00	0.00E+00	0.00E+00	0.00E+00	0.00E+00	0.00E+00	0.00E+00
1989	ALL	750088.42	4038460.7	2.21E-08	25YrCancer	2.21E-08	0.00E+00	0.00E+00	0.00E+00	0.00E+00	0.00E+00	0.00E+00	0.00E+00	0.00E+00	0.00E+00	0.00E+00	0.00E+00
1990	ALL	750188.42	4038460.7	2.22E-08	25YrCancer	2.22E-08	0.00E+00	0.00E+00	0.00E+00	0.00E+00	0.00E+00	0.00E+00	0.00E+00	0.00E+00	0.00E+00	0.00E+00	0.00E+00
1991	ALL	750288.42	4038460.7	2.22E-08	25YrCancer	2.22E-08	0.00E+00	0.00E+00	0.00E+00	0.00E+00	0.00E+00	0.00E+00	0.00E+00	0.00E+00	0.00E+00	0.00E+00	0.00E+00
1992	ALL	750388.42	4038460.7	2.20E-08	25YrCancer	2.20E-08	0.00E+00	0.00E+00	0.00E+00	0.00E+00	0.00E+00	0.00E+00	0.00E+00	0.00E+00	0.00E+00	0.00E+00	0.00E+00
1993	ALL	750488.42	4038460.7	2.17E-08	25YrCancer	2.17E-08	0.00E+00	0.00E+00	0.00E+00	0.00E+00	0.00E+00	0.00E+00	0.00E+00	0.00E+00	0.00E+00	0.00E+00	0.00E+00
1994	ALL	750588.42	4038460.7	2.13E-08	25YrCancer	2.13E-08	0.00E+00	0.00E+00	0.00E+00	0.00E+00	0.00E+00	0.00E+00	0.00E+00	0.00E+00	0.00E+00	0.00E+00	0.00E+00
1995	ALL	750688.42	4038460.7	2.08E-08	25YrCancer	2.08E-08	0.00E+00	0.00E+00	0.00E+00	0.00E+00	0.00E+00	0.00E+00	0.00E+00	0.00E+00	0.00E+00	0.00E+00	0.00E+00
1996	ALL	750788.42	4038460.7	2.02E-08	25YrCancer	2.02E-08	0.00E+00	0.00E+00	0.00E+00	0.00E+00	0.00E+00	0.00E+00	0.00E+00	0.00E+00	0.00E+00	0.00E+00	0.00E+00
1997	ALL	750888.42	4038460.7	1.95E-08	25YrCancer	1.95E-08	0.00E+00	0.00E+00	0.00E+00	0.00E+00	0.00E+00	0.00E+00	0.00E+00	0.00E+00	0.00E+00	0.00E+00	0.00E+00
1998	ALL	750988.42	4038460.7	1.88E-08	25YrCancer	1.88E-08	0.00E+00	0.00E+00	0.00E+00	0.00E+00	0.00E+00	0.00E+00	0.00E+00	0.00E+00	0.00E+00	0.00E+00	0.00E+00
1999	ALL	751088.42	4038460.7	1.81E-08	25YrCancer	1.81E-08	0.00E+00	0.00E+00	0.00E+00	0.00E+00	0.00E+00	0.00E+00	0.00E+00	0.00E+00	0.00E+00	0.00E+00	0.00E+00
2000	ALL	751188.42	4038460.7	1.73E-08	25YrCancer	1.73E-08	0.00E+00	0.00E+00	0.00E+00	0.00E+00	0.00E+00	0.00E+00	0.00E+00	0.00E+00	0.00E+00	0.00E+00	0.00E+00
2001	ALL	751288.42	4038460.7	1.66E-08	25YrCancer	1.66E-08	0.00E+00	0.00E+00	0.00E+00	0.00E+00	0.00E+00	0.00E+00	0.00E+00	0.00E+00	0.00E+00	0.00E+00	0.00E+00
2002	ALL	751388.42	4038460.7	1.59E-08	25YrCancer	1.59E-08	0.00E+00	0.00E+00	0.00E+00	0.00E+00	0.00E+00	0.00E+00	0.00E+00	0.00E+00	0.00E+00	0.00E+00	0.00E+00
2003	ALL	751888.42	4038460.7	1.26E-08	25YrCancer	1.26E-08	0.00E+00	0.00E+00	0.00E+00	0.00E+00	0.00E+00	0.00E+00	0.00E+00	0.00E+00	0.00E+00	0.00E+00	0.00E+00
2004	ALL	751988.42	4038460.7	1.20E-08	25YrCancer	1.20E-08	0.00E+00	0.00E+00	0.00E+00	0.00E+00	0.00E+00	0.00E+00	0.00E+00	0.00E+00	0.00E+00	0.00E+00	0.00E+00
2005	ALL	752088.42	4038460.7	1.15E-08	25YrCancer	1.15E-08	0.00E+00	0.00E+00	0.00E+00	0.00E+00	0.00E+00	0.00E+00	0.00E+00	0.00E+00	0.00E+00	0.00E+00	0.00E+00
2006	ALL	752188.42	4038460.7	1.10E-08	25YrCancer	1.10E-08	0.00E+00	0.00E+00	0.00E+00	0.00E+00	0.00E+00	0.00E+00	0.00E+00	0.00E+00	0.00E+00	0.00E+00	0.00E+00
2007	ALL	752288.42	4038460.7	1.05E-08	25YrCancer	1.05E-08	0.00E+00	0.00E+00	0.00E+00	0.00E+00	0.00E+00	0.00E+00	0.00E+00	0.00E+00	0.00E+00	0.00E+00	0.00E+00
2008	ALL	752388.42	4038460.7	1.01E-08	25YrCancer	1.01E-08	0.00E+00	0.00E+00	0.00E+00	0.00E+00	0.00E+00	0.00E+00	0.00E+00	0.00E+00	0.00E+00	0.00E+00	0.00E+00
2009	ALL	752488.42	4038460.7	9.67E-09	25YrCancer	9.67E-09	0.00E+00	0.00E+00	0.00E+00	0.00E+00	0.00E+00	0.00E+00	0.00E+00	0.00E+00	0.00E+00	0.00E+00	0.00E+00
2010	ALL	752588.42	4038460.7	9.29E-09	25YrCancer	9.29E-09	0.00E+00	0.00E+00	0.00E+00	0.00E+00	0.00E+00	0.00E+00	0.00E+00	0.00E+00	0.00E+00	0.00E+00	0.00E+00
2011	ALL	752688.42	4038460.7	8.94E-09	25YrCancer	8.94E-09	0.00E+00	0.00E+00	0.00E+00	0.00E+00	0.00E+00	0.00E+00	0.00E+00	0.00E+00	0.00E+00	0.00E+00	0.00E+00
2012	ALL	754788.42	4038460.7	4.72E-09	25YrCancer	4.72E-09	0.00E+00	0.00E+00	0.00E+00	0.00E+00	0.00E+00	0.00E+00	0.00E+00	0.00E+00	0.00E+00	0.00E+00	0.00E+00
2013	ALL	754888.42	4038460.7	4.60E-09	25YrCancer	4.60E-09	0.00E+00	0.00E+00	0.00E+00	0.00E+00	0.00E+00	0.00E+00	0.00E+00	0.00E+00	0.00E+00	0.00E+00	0.00E+00
2014	ALL	754988.42	4038460.7	4.50E-09	25YrCancer	4.50E-09	0.00E+00	0.00E+00	0.00E+00	0.00E+00	0.00E+00	0.00E+00	0.00E+00	0.00E+00	0.00E+00	0.00E+00	0.00E+00
2015	ALL	755088.42	4038460.7	4.39E-09	25YrCancer	4.39E-09	0.00E+00	0.00E+00	0.00E+00	0.00E+00	0.00E+00	0.00E+00	0.00E+00	0.00E+00	0.00E+00	0.00E+00	0.00E+00
2016	ALL	755188.42	4038460.7	4.29E-09	25YrCancer	4.29E-09	0.00E+00	0.00E+00	0.00E+00	0.00E+00	0.00E+00	0.00E+00	0.00E+00	0.00E+00	0.00E+00	0.00E+00	0.00E+00
2017	ALL	755288.42	4038460.7	4.20E-09	25YrCancer	4.20E-09	0.00E+00	0.00E+00	0.00E+00	0.00E+00	0.00E+00	0.00E+00	0.00E+00	0.00E+00	0.00E+00	0.00E+00	0.00E+00
2018	ALL	747888.42	4038560.7	5.03E-09	25YrCancer	5.03E-09	0.00E+00	0.00E+00	0.00E+00	0.00E+00	0.00E+00	0.00E+00	0.00E+00	0.00E+00	0.00E+00	0.00E+00	0.00E+00
2019	ALL	747988.42	4038560.7	5.32E-09	25YrCancer	5.32E-09	0.00E+00	0.00E+00	0.00E+00	0.00E+00	0.00E+00	0.00E+00	0.00E+00	0.00E+00	0.00E+00	0.00E+00	0.00E+00
2020	ALL	748088.42	4038560.7	5.54E-09	25YrCancer	5.54E-09	0.00E+00	0.00E+00	0.00E+00	0.00E+00	0.00E+00	0.00E+00	0.00E+00	0.00E+00	0.00E+00	0.00E+00	0.00E+00
2021	ALL	748188.42	4038560.7	5.69E-09	25YrCancer	5.69E-09	0.00E+00	0.00E+00	0.00E+00	0.00E+00	0.00E+00	0.00E+00	0.00E+00	0.00E+00	0.00E+00	0.00E+00	0.00E+00
2022	ALL	749888.42	4038560.7	2.36E-08	25YrCancer	2.36E-08	0.00E+00	0.00E+00	0.00E+00	0.00E+00	0.00E+00	0.00E+00	0.00E+00	0.00E+00	0.00E+00	0.00E+00	0.00E+00
2023	ALL	749988.42	4038560.7	2.39E-08	25YrCancer	2.39E-08	0.00E+00	0.00E+00	0.00E+00	0.00E+00	0.00E+00	0.00E+00	0.00E+00	0.00E+00	0.00E+00	0.00E+00	0.00E+00
2024	ALL	750088.42	4038560.7	2.40E-08	25YrCancer	2.40E-08	0.00E+00	0.00E+00	0.00E+00	0.00E+00	0.00E+00	0.00E+00	0.00E+00	0.00E+00	0.00E+00	0.00E+00	0.00E+00
2025	ALL	750188.42	4038560.7	2.40E-08	25YrCancer	2.40E-08	0.00E+00	0.00E+00	0.00E+00	0.00E+00	0.00E+00	0.00E+00	0.00E+00	0.00E+00	0.00E+00	0.00E+00	0.00E+00
2026	ALL	750288.42	4038560.7	2.37E-08	25YrCancer	2.37E-08	0.00E+00	0.00E+00	0.00E+00	0.00E+00	0.00E+00	0.00E+00	0.00E+00	0.00E+00	0.00E+00	0.00E+00	0.00E+00
2027	ALL	750388.42	4038560.7	2.34E-08	25YrCancer	2.34E-08	0.00E+00	0.00E+00	0.00E+00	0.00E+00	0.00E+00	0.00E+00	0.00E+00	0.00E+00	0.00E+00	0.00E+00	0.00E+00
2028	ALL	750488.42	4038560.7	2.29E-08	25YrCancer	2.29E-08	0.00E+00	0.00E+00	0.00E+00	0.00E+00	0.00E+00	0.00E+00	0.00E+00	0.00E+00	0.00E+00	0.00E+00	0.00E+00
2029	ALL	750588.42	4038560.7	2.23E-08	25YrCancer	2.23E-08	0.00E+00	0.00E+00	0.00E+00	0.00E+00	0.00E+00	0.00E+00	0.00E+00	0.00E+00	0.00E+00	0.00E+00	0.00E+00
2030	ALL	750688.42	4038560.7	2.16E-08	25YrCancer	2.16E-08	0.00E+00	0.00E+00	0.00E+00	0.00E+00	0.00E+00	0.00E+00	0.00E+00	0.00E+00	0.00E+00	0.00E+00	0.00E+00
2031	ALL	750788.42	4038560.7	2.08E-08	25YrCancer	2.08E-08	0.00E+00	0.00E+00	0.00E+00	0.00E+00	0.00E+00	0.00E+00	0.00E+00	0.00E+00	0.00E+00	0.00E+00	0.00E+00
2032	ALL	750888.42	4038560.7	2.00E-08	25YrCancer	2.00E-08	0.00E+00	0.00E+00	0.00E+00	0.00E+00	0.00E+00	0.00E+00	0.00E+00	0.00E+00	0.00E+00	0.00E+00	0.00E+00
2033	ALL	750988.42	4038560.7	1.91E-08	25YrCancer	1.91E-08	0.00E+00	0.00E+00	0.00E+00	0.00E+00	0.00E+00	0.00E+00	0.00E+00	0.00E+00	0.00E+00	0.00E+00	0.00E+00
2034	ALL	751088.42	4038560.7	1.83E-08	25YrCancer	1.83E-08	0.00E+00	0.00E+00	0.00E+00	0.00E+00	0.00E+00	0.00E+00	0.00E+00	0.00E+00	0.00E+00	0.00E+00	0.00E+00
2035	ALL	751188.42	4038560.7	1.74E-08	25YrCancer	1.74E-08	0.00E+00	0.00E+00	0.00E+00	0.00E+00	0.00E+00	0.00E+00	0.00E+00	0.00E+00	0.00E+00	0.00E+00	0.00E+00
2036	ALL	751288.42	4038560.7	1.66E-08	25YrCancer	1.66E-08	0.00E+00	0.00E+00	0.00E+00	0.00E+00	0.00E+00	0.00E+00	0.00E+00	0.00E+00	0.00E+00	0.00E+00	0.00E+00
2037	ALL	751388.42	4038560.7	1.58E-08	25YrCancer	1.58E-08	0.00E+00	0.00E+00	0.00E+00	0.00E+00	0.00E+00	0.00E+00	0.00E+00	0.00E+00	0.00E+00	0.00E+00	0.00E+00
2038	ALL	752788.42	4038560.7	8.41E-09	25YrCancer	8.41E-09	0.00E+00	0.00E+00	0.00E+00	0.00E+00	0.00E+00	0.00E+00	0.00E+00	0.00E+00	0.00E+00	0.00E+00	0.00E+00

2039	ALL	752888.42	4038560.7	8.10E-09	25YrCancer	8.10E-09	0.00E+00	0.00E+00	0.00E+00	0.00E+00	0.00E+00	0.00E+00	0.00E+00	0.00E+00	0.00E+00	0.00E+00	0.00E+00
2040	ALL	752988.42	4038560.7	7.82E-09	25YrCancer	7.82E-09	0.00E+00	0.00E+00	0.00E+00	0.00E+00	0.00E+00	0.00E+00	0.00E+00	0.00E+00	0.00E+00	0.00E+00	0.00E+00
2041	ALL	753088.42	4038560.7	7.55E-09	25YrCancer	7.55E-09	0.00E+00	0.00E+00	0.00E+00	0.00E+00	0.00E+00	0.00E+00	0.00E+00	0.00E+00	0.00E+00	0.00E+00	0.00E+00
2042	ALL	753188.42	4038560.7	7.29E-09	25YrCancer	7.29E-09	0.00E+00	0.00E+00	0.00E+00	0.00E+00	0.00E+00	0.00E+00	0.00E+00	0.00E+00	0.00E+00	0.00E+00	0.00E+00
2043	ALL	753288.42	4038560.7	7.05E-09	25YrCancer	7.05E-09	0.00E+00	0.00E+00	0.00E+00	0.00E+00	0.00E+00	0.00E+00	0.00E+00	0.00E+00	0.00E+00	0.00E+00	0.00E+00
2044	ALL	753388.42	4038560.7	6.82E-09	25YrCancer	6.82E-09	0.00E+00	0.00E+00	0.00E+00	0.00E+00	0.00E+00	0.00E+00	0.00E+00	0.00E+00	0.00E+00	0.00E+00	0.00E+00
2045	ALL	753488.42	4038560.7	6.61E-09	25YrCancer	6.61E-09	0.00E+00	0.00E+00	0.00E+00	0.00E+00	0.00E+00	0.00E+00	0.00E+00	0.00E+00	0.00E+00	0.00E+00	0.00E+00
2046	ALL	753588.42	4038560.7	6.40E-09	25YrCancer	6.40E-09	0.00E+00	0.00E+00	0.00E+00	0.00E+00	0.00E+00	0.00E+00	0.00E+00	0.00E+00	0.00E+00	0.00E+00	0.00E+00
2047	ALL	753688.42	4038560.7	6.21E-09	25YrCancer	6.21E-09	0.00E+00	0.00E+00	0.00E+00	0.00E+00	0.00E+00	0.00E+00	0.00E+00	0.00E+00	0.00E+00	0.00E+00	0.00E+00
2048	ALL	753788.42	4038560.7	6.03E-09	25YrCancer	6.03E-09	0.00E+00	0.00E+00	0.00E+00	0.00E+00	0.00E+00	0.00E+00	0.00E+00	0.00E+00	0.00E+00	0.00E+00	0.00E+00
2049	ALL	753888.42	4038560.7	5.85E-09	25YrCancer	5.85E-09	0.00E+00	0.00E+00	0.00E+00	0.00E+00	0.00E+00	0.00E+00	0.00E+00	0.00E+00	0.00E+00	0.00E+00	0.00E+00
2050	ALL	753988.42	4038560.7	5.69E-09	25YrCancer	5.69E-09	0.00E+00	0.00E+00	0.00E+00	0.00E+00	0.00E+00	0.00E+00	0.00E+00	0.00E+00	0.00E+00	0.00E+00	0.00E+00
2051	ALL	754088.42	4038560.7	5.53E-09	25YrCancer	5.53E-09	0.00E+00	0.00E+00	0.00E+00	0.00E+00	0.00E+00	0.00E+00	0.00E+00	0.00E+00	0.00E+00	0.00E+00	0.00E+00
2052	ALL	754188.42	4038560.7	5.38E-09	25YrCancer	5.38E-09	0.00E+00	0.00E+00	0.00E+00	0.00E+00	0.00E+00	0.00E+00	0.00E+00	0.00E+00	0.00E+00	0.00E+00	0.00E+00
2053	ALL	754288.42	4038560.7	5.24E-09	25YrCancer	5.24E-09	0.00E+00	0.00E+00	0.00E+00	0.00E+00	0.00E+00	0.00E+00	0.00E+00	0.00E+00	0.00E+00	0.00E+00	0.00E+00
2054	ALL	754388.42	4038560.7	5.10E-09	25YrCancer	5.10E-09	0.00E+00	0.00E+00	0.00E+00	0.00E+00	0.00E+00	0.00E+00	0.00E+00	0.00E+00	0.00E+00	0.00E+00	0.00E+00
2055	ALL	754488.42	4038560.7	4.97E-09	25YrCancer	4.97E-09	0.00E+00	0.00E+00	0.00E+00	0.00E+00	0.00E+00	0.00E+00	0.00E+00	0.00E+00	0.00E+00	0.00E+00	0.00E+00
2056	ALL	754588.42	4038560.7	4.85E-09	25YrCancer	4.85E-09	0.00E+00	0.00E+00	0.00E+00	0.00E+00	0.00E+00	0.00E+00	0.00E+00	0.00E+00	0.00E+00	0.00E+00	0.00E+00
2057	ALL	754688.42	4038560.7	4.73E-09	25YrCancer	4.73E-09	0.00E+00	0.00E+00	0.00E+00	0.00E+00	0.00E+00	0.00E+00	0.00E+00	0.00E+00	0.00E+00	0.00E+00	0.00E+00
2058	ALL	754788.42	4038560.7	4.62E-09	25YrCancer	4.62E-09	0.00E+00	0.00E+00	0.00E+00	0.00E+00	0.00E+00	0.00E+00	0.00E+00	0.00E+00	0.00E+00	0.00E+00	0.00E+00
2059	ALL	754888.42	4038560.7	4.51E-09	25YrCancer	4.51E-09	0.00E+00	0.00E+00	0.00E+00	0.00E+00	0.00E+00	0.00E+00	0.00E+00	0.00E+00	0.00E+00	0.00E+00	0.00E+00
2060	ALL	754988.42	4038560.7	4.40E-09	25YrCancer	4.40E-09	0.00E+00	0.00E+00	0.00E+00	0.00E+00	0.00E+00	0.00E+00	0.00E+00	0.00E+00	0.00E+00	0.00E+00	0.00E+00
2061	ALL	755088.42	4038560.7	4.30E-09	25YrCancer	4.30E-09	0.00E+00	0.00E+00	0.00E+00	0.00E+00	0.00E+00	0.00E+00	0.00E+00	0.00E+00	0.00E+00	0.00E+00	0.00E+00
2062	ALL	755188.42	4038560.7	4.21E-09	25YrCancer	4.21E-09	0.00E+00	0.00E+00	0.00E+00	0.00E+00	0.00E+00	0.00E+00	0.00E+00	0.00E+00	0.00E+00	0.00E+00	0.00E+00
2063	ALL	755288.42	4038560.7	4.11E-09	25YrCancer	4.11E-09	0.00E+00	0.00E+00	0.00E+00	0.00E+00	0.00E+00	0.00E+00	0.00E+00	0.00E+00	0.00E+00	0.00E+00	0.00E+00
2064	ALL	747888.42	4038660.7	5.05E-09	25YrCancer	5.05E-09	0.00E+00	0.00E+00	0.00E+00	0.00E+00	0.00E+00	0.00E+00	0.00E+00	0.00E+00	0.00E+00	0.00E+00	0.00E+00
2065	ALL	747988.42	4038660.7	5.39E-09	25YrCancer	5.39E-09	0.00E+00	0.00E+00	0.00E+00	0.00E+00	0.00E+00	0.00E+00	0.00E+00	0.00E+00	0.00E+00	0.00E+00	0.00E+00
2066	ALL	748088.42	4038660.7	5.68E-09	25YrCancer	5.68E-09	0.00E+00	0.00E+00	0.00E+00	0.00E+00	0.00E+00	0.00E+00	0.00E+00	0.00E+00	0.00E+00	0.00E+00	0.00E+00
2067	ALL	748188.42	4038660.7	5.89E-09	25YrCancer	5.89E-09	0.00E+00	0.00E+00	0.00E+00	0.00E+00	0.00E+00	0.00E+00	0.00E+00	0.00E+00	0.00E+00	0.00E+00	0.00E+00
2068	ALL	749888.42	4038660.7	2.60E-08	25YrCancer	2.60E-08	0.00E+00	0.00E+00	0.00E+00	0.00E+00	0.00E+00	0.00E+00	0.00E+00	0.00E+00	0.00E+00	0.00E+00	0.00E+00
2069	ALL	749988.42	4038660.7	2.61E-08	25YrCancer	2.61E-08	0.00E+00	0.00E+00	0.00E+00	0.00E+00	0.00E+00	0.00E+00	0.00E+00	0.00E+00	0.00E+00	0.00E+00	0.00E+00
2070	ALL	750088.42	4038660.7	2.61E-08	25YrCancer	2.61E-08	0.00E+00	0.00E+00	0.00E+00	0.00E+00	0.00E+00	0.00E+00	0.00E+00	0.00E+00	0.00E+00	0.00E+00	0.00E+00
2071	ALL	750188.42	4038660.7	2.58E-08	25YrCancer	2.58E-08	0.00E+00	0.00E+00	0.00E+00	0.00E+00	0.00E+00	0.00E+00	0.00E+00	0.00E+00	0.00E+00	0.00E+00	0.00E+00
2072	ALL	750288.42	4038660.7	2.53E-08	25YrCancer	2.53E-08	0.00E+00	0.00E+00	0.00E+00	0.00E+00	0.00E+00	0.00E+00	0.00E+00	0.00E+00	0.00E+00	0.00E+00	0.00E+00
2073	ALL	750388.42	4038660.7	2.47E-08	25YrCancer	2.47E-08	0.00E+00	0.00E+00	0.00E+00	0.00E+00	0.00E+00	0.00E+00	0.00E+00	0.00E+00	0.00E+00	0.00E+00	0.00E+00
2074	ALL	750488.42	4038660.7	2.39E-08	25YrCancer	2.39E-08	0.00E+00	0.00E+00	0.00E+00	0.00E+00	0.00E+00	0.00E+00	0.00E+00	0.00E+00	0.00E+00	0.00E+00	0.00E+00
2075	ALL	750588.42	4038660.7	2.31E-08	25YrCancer	2.31E-08	0.00E+00	0.00E+00	0.00E+00	0.00E+00	0.00E+00	0.00E+00	0.00E+00	0.00E+00	0.00E+00	0.00E+00	0.00E+00
2076	ALL	750688.42	4038660.7	2.22E-08	25YrCancer	2.22E-08	0.00E+00	0.00E+00	0.00E+00	0.00E+00	0.00E+00	0.00E+00	0.00E+00	0.00E+00	0.00E+00	0.00E+00	0.00E+00
2077	ALL	750788.42	4038660.7	2.12E-08	25YrCancer	2.12E-08	0.00E+00	0.00E+00	0.00E+00	0.00E+00	0.00E+00	0.00E+00	0.00E+00	0.00E+00	0.00E+00	0.00E+00	0.00E+00
2078	ALL	750888.42	4038660.7	2.02E-08	25YrCancer	2.02E-08	0.00E+00	0.00E+00	0.00E+00	0.00E+00	0.00E+00	0.00E+00	0.00E+00	0.00E+00	0.00E+00	0.00E+00	0.00E+00
2079	ALL	750988.42	4038660.7	1.92E-08	25YrCancer	1.92E-08	0.00E+00	0.00E+00	0.00E+00	0.00E+00	0.00E+00	0.00E+00	0.00E+00	0.00E+00	0.00E+00	0.00E+00	0.00E+00
2080	ALL	751088.42	4038660.7	1.83E-08	25YrCancer	1.83E-08	0.00E+00	0.00E+00	0.00E+00	0.00E+00	0.00E+00	0.00E+00	0.00E+00	0.00E+00	0.00E+00	0.00E+00	0.00E+00
2081	ALL	751188.42	4038660.7	1.73E-08	25YrCancer	1.73E-08	0.00E+00	0.00E+00	0.00E+00	0.00E+00	0.00E+00	0.00E+00	0.00E+00	0.00E+00	0.00E+00	0.00E+00	0.00E+00
2082	ALL	751288.42	4038660.7	1.64E-08	25YrCancer	1.64E-08	0.00E+00	0.00E+00	0.00E+00	0.00E+00	0.00E+00	0.00E+00	0.00E+00	0.00E+00	0.00E+00	0.00E+00	0.00E+00
2083	ALL	751388.42	4038660.7	1.56E-08	25YrCancer	1.56E-08	0.00E+00	0.00E+00	0.00E+00	0.00E+00	0.00E+00	0.00E+00	0.00E+00	0.00E+00	0.00E+00	0.00E+00	0.00E+00
2084	ALL	752788.42	4038660.7	8.21E-09	25YrCancer	8.21E-09	0.00E+00	0.00E+00	0.00E+00	0.00E+00	0.00E+00	0.00E+00	0.00E+00	0.00E+00	0.00E+00	0.00E+00	0.00E+00
2085	ALL	752888.42	4038660.7	7.91E-09	25YrCancer	7.91E-09	0.00E+00	0.00E+00	0.00E+00	0.00E+00	0.00E+00	0.00E+00	0.00E+00	0.00E+00	0.00E+00	0.00E+00	0.00E+00
2086	ALL	752988.42	4038660.7	7.63E-09	25YrCancer	7.63E-09	0.00E+00	0.00E+00	0.00E+00	0.00E+00	0.00E+00	0.00E+00	0.00E+00	0.00E+00	0.00E+00	0.00E+00	0.00E+00
2087	ALL	753088.42	4038660.7	7.37E-09	25YrCancer	7.37E-09	0.00E+00	0.00E+00	0.00E+00	0.00E+00	0.00E+00	0.00E+00	0.00E+00	0.00E+00	0.00E+00	0.00E+00	0.00E+00
2088	ALL	753188.42	4038660.7	7.12E-09	25YrCancer	7.12E-09	0.00E+00	0.00E+00	0.00E+00	0.00E+00	0.00E+00	0.00E+00	0.00E+00	0.00E+00	0.00E+00	0.00E+00	0.00E+00
2089	ALL	753288.42	4038660.7	6.89E-09	25YrCancer	6.89E-09	0.00E+00	0.00E+00	0.00E+00	0.00E+00	0.00E+00	0.00E+00	0.00E+00	0.00E+00	0.00E+00	0.00E+00	0.00E+00

2090	ALL	753388.42	4038660.7	6.66E-09	25YrCancer	6.66E-09	0.00E+00	0.00E+00	0.00E+00	0.00E+00	0.00E+00	0.00E+00	0.00E+00	0.00E+00	0.00E+00	0.00E+00	0.00E+00
2091	ALL	753488.42	4038660.7	6.46E-09	25YrCancer	6.46E-09	0.00E+00	0.00E+00	0.00E+00	0.00E+00	0.00E+00	0.00E+00	0.00E+00	0.00E+00	0.00E+00	0.00E+00	0.00E+00
2092	ALL	753588.42	4038660.7	6.26E-09	25YrCancer	6.26E-09	0.00E+00	0.00E+00	0.00E+00	0.00E+00	0.00E+00	0.00E+00	0.00E+00	0.00E+00	0.00E+00	0.00E+00	0.00E+00
2093	ALL	753688.42	4038660.7	6.07E-09	25YrCancer	6.07E-09	0.00E+00	0.00E+00	0.00E+00	0.00E+00	0.00E+00	0.00E+00	0.00E+00	0.00E+00	0.00E+00	0.00E+00	0.00E+00
2094	ALL	753788.42	4038660.7	5.89E-09	25YrCancer	5.89E-09	0.00E+00	0.00E+00	0.00E+00	0.00E+00	0.00E+00	0.00E+00	0.00E+00	0.00E+00	0.00E+00	0.00E+00	0.00E+00
2095	ALL	753888.42	4038660.7	5.72E-09	25YrCancer	5.72E-09	0.00E+00	0.00E+00	0.00E+00	0.00E+00	0.00E+00	0.00E+00	0.00E+00	0.00E+00	0.00E+00	0.00E+00	0.00E+00
2096	ALL	753988.42	4038660.7	5.56E-09	25YrCancer	5.56E-09	0.00E+00	0.00E+00	0.00E+00	0.00E+00	0.00E+00	0.00E+00	0.00E+00	0.00E+00	0.00E+00	0.00E+00	0.00E+00
2097	ALL	754088.42	4038660.7	5.41E-09	25YrCancer	5.41E-09	0.00E+00	0.00E+00	0.00E+00	0.00E+00	0.00E+00	0.00E+00	0.00E+00	0.00E+00	0.00E+00	0.00E+00	0.00E+00
2098	ALL	754188.42	4038660.7	5.26E-09	25YrCancer	5.26E-09	0.00E+00	0.00E+00	0.00E+00	0.00E+00	0.00E+00	0.00E+00	0.00E+00	0.00E+00	0.00E+00	0.00E+00	0.00E+00
2099	ALL	754288.42	4038660.7	5.12E-09	25YrCancer	5.12E-09	0.00E+00	0.00E+00	0.00E+00	0.00E+00	0.00E+00	0.00E+00	0.00E+00	0.00E+00	0.00E+00	0.00E+00	0.00E+00
2100	ALL	754388.42	4038660.7	4.99E-09	25YrCancer	4.99E-09	0.00E+00	0.00E+00	0.00E+00	0.00E+00	0.00E+00	0.00E+00	0.00E+00	0.00E+00	0.00E+00	0.00E+00	0.00E+00
2101	ALL	754488.42	4038660.7	4.86E-09	25YrCancer	4.86E-09	0.00E+00	0.00E+00	0.00E+00	0.00E+00	0.00E+00	0.00E+00	0.00E+00	0.00E+00	0.00E+00	0.00E+00	0.00E+00
2102	ALL	754588.42	4038660.7	4.74E-09	25YrCancer	4.74E-09	0.00E+00	0.00E+00	0.00E+00	0.00E+00	0.00E+00	0.00E+00	0.00E+00	0.00E+00	0.00E+00	0.00E+00	0.00E+00
2103	ALL	754688.42	4038660.7	4.63E-09	25YrCancer	4.63E-09	0.00E+00	0.00E+00	0.00E+00	0.00E+00	0.00E+00	0.00E+00	0.00E+00	0.00E+00	0.00E+00	0.00E+00	0.00E+00
2104	ALL	754788.42	4038660.7	4.51E-09	25YrCancer	4.51E-09	0.00E+00	0.00E+00	0.00E+00	0.00E+00	0.00E+00	0.00E+00	0.00E+00	0.00E+00	0.00E+00	0.00E+00	0.00E+00
2105	ALL	754888.42	4038660.7	4.41E-09	25YrCancer	4.41E-09	0.00E+00	0.00E+00	0.00E+00	0.00E+00	0.00E+00	0.00E+00	0.00E+00	0.00E+00	0.00E+00	0.00E+00	0.00E+00
2106	ALL	754988.42	4038660.7	4.31E-09	25YrCancer	4.31E-09	0.00E+00	0.00E+00	0.00E+00	0.00E+00	0.00E+00	0.00E+00	0.00E+00	0.00E+00	0.00E+00	0.00E+00	0.00E+00
2107	ALL	755088.42	4038660.7	4.21E-09	25YrCancer	4.21E-09	0.00E+00	0.00E+00	0.00E+00	0.00E+00	0.00E+00	0.00E+00	0.00E+00	0.00E+00	0.00E+00	0.00E+00	0.00E+00
2108	ALL	755188.42	4038660.7	4.12E-09	25YrCancer	4.12E-09	0.00E+00	0.00E+00	0.00E+00	0.00E+00	0.00E+00	0.00E+00	0.00E+00	0.00E+00	0.00E+00	0.00E+00	0.00E+00
2109	ALL	755288.42	4038660.7	4.03E-09	25YrCancer	4.03E-09	0.00E+00	0.00E+00	0.00E+00	0.00E+00	0.00E+00	0.00E+00	0.00E+00	0.00E+00	0.00E+00	0.00E+00	0.00E+00
2110	ALL	747888.42	4038760.7	5.06E-09	25YrCancer	5.06E-09	0.00E+00	0.00E+00	0.00E+00	0.00E+00	0.00E+00	0.00E+00	0.00E+00	0.00E+00	0.00E+00	0.00E+00	0.00E+00
2111	ALL	747988.42	4038760.7	5.45E-09	25YrCancer	5.45E-09	0.00E+00	0.00E+00	0.00E+00	0.00E+00	0.00E+00	0.00E+00	0.00E+00	0.00E+00	0.00E+00	0.00E+00	0.00E+00
2112	ALL	748088.42	4038760.7	5.81E-09	25YrCancer	5.81E-09	0.00E+00	0.00E+00	0.00E+00	0.00E+00	0.00E+00	0.00E+00	0.00E+00	0.00E+00	0.00E+00	0.00E+00	0.00E+00
2113	ALL	748188.42	4038760.7	6.09E-09	25YrCancer	6.09E-09	0.00E+00	0.00E+00	0.00E+00	0.00E+00	0.00E+00	0.00E+00	0.00E+00	0.00E+00	0.00E+00	0.00E+00	0.00E+00
2114	ALL	749888.42	4038760.7	2.86E-08	25YrCancer	2.86E-08	0.00E+00	0.00E+00	0.00E+00	0.00E+00	0.00E+00	0.00E+00	0.00E+00	0.00E+00	0.00E+00	0.00E+00	0.00E+00
2115	ALL	749988.42	4038760.7	2.85E-08	25YrCancer	2.85E-08	0.00E+00	0.00E+00	0.00E+00	0.00E+00	0.00E+00	0.00E+00	0.00E+00	0.00E+00	0.00E+00	0.00E+00	0.00E+00
2116	ALL	750088.42	4038760.7	2.82E-08	25YrCancer	2.82E-08	0.00E+00	0.00E+00	0.00E+00	0.00E+00	0.00E+00	0.00E+00	0.00E+00	0.00E+00	0.00E+00	0.00E+00	0.00E+00
2117	ALL	750188.42	4038760.7	2.76E-08	25YrCancer	2.76E-08	0.00E+00	0.00E+00	0.00E+00	0.00E+00	0.00E+00	0.00E+00	0.00E+00	0.00E+00	0.00E+00	0.00E+00	0.00E+00
2118	ALL	750288.42	4038760.7	2.68E-08	25YrCancer	2.68E-08	0.00E+00	0.00E+00	0.00E+00	0.00E+00	0.00E+00	0.00E+00	0.00E+00	0.00E+00	0.00E+00	0.00E+00	0.00E+00
2119	ALL	750388.42	4038760.7	2.59E-08	25YrCancer	2.59E-08	0.00E+00	0.00E+00	0.00E+00	0.00E+00	0.00E+00	0.00E+00	0.00E+00	0.00E+00	0.00E+00	0.00E+00	0.00E+00
2120	ALL	750488.42	4038760.7	2.48E-08	25YrCancer	2.48E-08	0.00E+00	0.00E+00	0.00E+00	0.00E+00	0.00E+00	0.00E+00	0.00E+00	0.00E+00	0.00E+00	0.00E+00	0.00E+00
2121	ALL	750588.42	4038760.7	2.37E-08	25YrCancer	2.37E-08	0.00E+00	0.00E+00	0.00E+00	0.00E+00	0.00E+00	0.00E+00	0.00E+00	0.00E+00	0.00E+00	0.00E+00	0.00E+00
2122	ALL	750688.42	4038760.7	2.26E-08	25YrCancer	2.26E-08	0.00E+00	0.00E+00	0.00E+00	0.00E+00	0.00E+00	0.00E+00	0.00E+00	0.00E+00	0.00E+00	0.00E+00	0.00E+00
2123	ALL	750788.42	4038760.7	2.14E-08	25YrCancer	2.14E-08	0.00E+00	0.00E+00	0.00E+00	0.00E+00	0.00E+00	0.00E+00	0.00E+00	0.00E+00	0.00E+00	0.00E+00	0.00E+00
2124	ALL	750888.42	4038760.7	2.03E-08	25YrCancer	2.03E-08	0.00E+00	0.00E+00	0.00E+00	0.00E+00	0.00E+00	0.00E+00	0.00E+00	0.00E+00	0.00E+00	0.00E+00	0.00E+00
2125	ALL	750988.42	4038760.7	1.92E-08	25YrCancer	1.92E-08	0.00E+00	0.00E+00	0.00E+00	0.00E+00	0.00E+00	0.00E+00	0.00E+00	0.00E+00	0.00E+00	0.00E+00	0.00E+00
2126	ALL	751088.42	4038760.7	1.81E-08	25YrCancer	1.81E-08	0.00E+00	0.00E+00	0.00E+00	0.00E+00	0.00E+00	0.00E+00	0.00E+00	0.00E+00	0.00E+00	0.00E+00	0.00E+00
2127	ALL	751188.42	4038760.7	1.71E-08	25YrCancer	1.71E-08	0.00E+00	0.00E+00	0.00E+00	0.00E+00	0.00E+00	0.00E+00	0.00E+00	0.00E+00	0.00E+00	0.00E+00	0.00E+00
2128	ALL	751288.42	4038760.7	1.62E-08	25YrCancer	1.62E-08	0.00E+00	0.00E+00	0.00E+00	0.00E+00	0.00E+00	0.00E+00	0.00E+00	0.00E+00	0.00E+00	0.00E+00	0.00E+00
2129	ALL	751388.42	4038760.7	1.53E-08	25YrCancer	1.53E-08	0.00E+00	0.00E+00	0.00E+00	0.00E+00	0.00E+00	0.00E+00	0.00E+00	0.00E+00	0.00E+00	0.00E+00	0.00E+00
2130	ALL	752788.42	4038760.7	8.00E-09	25YrCancer	8.00E-09	0.00E+00	0.00E+00	0.00E+00	0.00E+00	0.00E+00	0.00E+00	0.00E+00	0.00E+00	0.00E+00	0.00E+00	0.00E+00
2131	ALL	752888.42	4038760.7	7.71E-09	25YrCancer	7.71E-09	0.00E+00	0.00E+00	0.00E+00	0.00E+00	0.00E+00	0.00E+00	0.00E+00	0.00E+00	0.00E+00	0.00E+00	0.00E+00
2132	ALL	752988.42	4038760.7	7.44E-09	25YrCancer	7.44E-09	0.00E+00	0.00E+00	0.00E+00	0.00E+00	0.00E+00	0.00E+00	0.00E+00	0.00E+00	0.00E+00	0.00E+00	0.00E+00
2133	ALL	753088.42	4038760.7	7.19E-09	25YrCancer	7.19E-09	0.00E+00	0.00E+00	0.00E+00	0.00E+00	0.00E+00	0.00E+00	0.00E+00	0.00E+00	0.00E+00	0.00E+00	0.00E+00
2134	ALL	753188.42	4038760.7	6.94E-09	25YrCancer	6.94E-09	0.00E+00	0.00E+00	0.00E+00	0.00E+00	0.00E+00	0.00E+00	0.00E+00	0.00E+00	0.00E+00	0.00E+00	0.00E+00
2135	ALL	753288.42	4038760.7	6.72E-09	25YrCancer	6.72E-09	0.00E+00	0.00E+00	0.00E+00	0.00E+00	0.00E+00	0.00E+00	0.00E+00	0.00E+00	0.00E+00	0.00E+00	0.00E+00
2136	ALL	753388.42	4038760.7	6.50E-09	25YrCancer	6.50E-09	0.00E+00	0.00E+00	0.00E+00	0.00E+00	0.00E+00	0.00E+00	0.00E+00	0.00E+00	0.00E+00	0.00E+00	0.00E+00
2137	ALL	753488.42	4038760.7	6.30E-09	25YrCancer	6.30E-09	0.00E+00	0.00E+00	0.00E+00	0.00E+00	0.00E+00	0.00E+00	0.00E+00	0.00E+00	0.00E+00	0.00E+00	0.00E+00
2138	ALL	753588.42	4038760.7	6.11E-09	25YrCancer	6.11E-09	0.00E+00	0.00E+00	0.00E+00	0.00E+00	0.00E+00	0.00E+00	0.00E+00	0.00E+00	0.00E+00	0.00E+00	0.00E+00
2139	ALL	753688.42	4038760.7	5.92E-09	25YrCancer	5.92E-09	0.00E+00	0.00E+00	0.00E+00	0.00E+00	0.00E+00	0.00E+00	0.00E+00	0.00E+00	0.00E+00	0.00E+00	0.00E+00
2140	ALL	753788.42	4038760.7	5.75E-09	25YrCancer	5.75E-09	0.00E+00	0.00E+00	0.00E+00	0.00E+00	0.00E+00	0.00E+00	0.00E+00	0.00E+00	0.00E+00	0.00E+00	0.00E+00

2141	ALL	753888.42	4038760.7	5.59E-09	25YrCancer	5.59E-09	0.00E+00	0.00E+00	0.00E+00	0.00E+00	0.00E+00	0.00E+00	0.00E+00	0.00E+00	0.00E+00	0.00E+00	0.00E+00
2142	ALL	753988.42	4038760.7	5.43E-09	25YrCancer	5.43E-09	0.00E+00	0.00E+00	0.00E+00	0.00E+00	0.00E+00	0.00E+00	0.00E+00	0.00E+00	0.00E+00	0.00E+00	0.00E+00
2143	ALL	754088.42	4038760.7	5.28E-09	25YrCancer	5.28E-09	0.00E+00	0.00E+00	0.00E+00	0.00E+00	0.00E+00	0.00E+00	0.00E+00	0.00E+00	0.00E+00	0.00E+00	0.00E+00
2144	ALL	754188.42	4038760.7	5.14E-09	25YrCancer	5.14E-09	0.00E+00	0.00E+00	0.00E+00	0.00E+00	0.00E+00	0.00E+00	0.00E+00	0.00E+00	0.00E+00	0.00E+00	0.00E+00
2145	ALL	754288.42	4038760.7	5.01E-09	25YrCancer	5.01E-09	0.00E+00	0.00E+00	0.00E+00	0.00E+00	0.00E+00	0.00E+00	0.00E+00	0.00E+00	0.00E+00	0.00E+00	0.00E+00
2146	ALL	754388.42	4038760.7	4.88E-09	25YrCancer	4.88E-09	0.00E+00	0.00E+00	0.00E+00	0.00E+00	0.00E+00	0.00E+00	0.00E+00	0.00E+00	0.00E+00	0.00E+00	0.00E+00
2147	ALL	754488.42	4038760.7	4.76E-09	25YrCancer	4.76E-09	0.00E+00	0.00E+00	0.00E+00	0.00E+00	0.00E+00	0.00E+00	0.00E+00	0.00E+00	0.00E+00	0.00E+00	0.00E+00
2148	ALL	754588.42	4038760.7	4.64E-09	25YrCancer	4.64E-09	0.00E+00	0.00E+00	0.00E+00	0.00E+00	0.00E+00	0.00E+00	0.00E+00	0.00E+00	0.00E+00	0.00E+00	0.00E+00
2149	ALL	754688.42	4038760.7	4.53E-09	25YrCancer	4.53E-09	0.00E+00	0.00E+00	0.00E+00	0.00E+00	0.00E+00	0.00E+00	0.00E+00	0.00E+00	0.00E+00	0.00E+00	0.00E+00
2150	ALL	754788.42	4038760.7	4.42E-09	25YrCancer	4.42E-09	0.00E+00	0.00E+00	0.00E+00	0.00E+00	0.00E+00	0.00E+00	0.00E+00	0.00E+00	0.00E+00	0.00E+00	0.00E+00
2151	ALL	754888.42	4038760.7	4.32E-09	25YrCancer	4.32E-09	0.00E+00	0.00E+00	0.00E+00	0.00E+00	0.00E+00	0.00E+00	0.00E+00	0.00E+00	0.00E+00	0.00E+00	0.00E+00
2152	ALL	754988.42	4038760.7	4.22E-09	25YrCancer	4.22E-09	0.00E+00	0.00E+00	0.00E+00	0.00E+00	0.00E+00	0.00E+00	0.00E+00	0.00E+00	0.00E+00	0.00E+00	0.00E+00
2153	ALL	755088.42	4038760.7	4.12E-09	25YrCancer	4.12E-09	0.00E+00	0.00E+00	0.00E+00	0.00E+00	0.00E+00	0.00E+00	0.00E+00	0.00E+00	0.00E+00	0.00E+00	0.00E+00
2154	ALL	755188.42	4038760.7	4.03E-09	25YrCancer	4.03E-09	0.00E+00	0.00E+00	0.00E+00	0.00E+00	0.00E+00	0.00E+00	0.00E+00	0.00E+00	0.00E+00	0.00E+00	0.00E+00
2155	ALL	755288.42	4038760.7	3.95E-09	25YrCancer	3.95E-09	0.00E+00	0.00E+00	0.00E+00	0.00E+00	0.00E+00	0.00E+00	0.00E+00	0.00E+00	0.00E+00	0.00E+00	0.00E+00
2156	ALL	747888.42	4038860.7	5.09E-09	25YrCancer	5.09E-09	0.00E+00	0.00E+00	0.00E+00	0.00E+00	0.00E+00	0.00E+00	0.00E+00	0.00E+00	0.00E+00	0.00E+00	0.00E+00
2157	ALL	747988.42	4038860.7	5.50E-09	25YrCancer	5.50E-09	0.00E+00	0.00E+00	0.00E+00	0.00E+00	0.00E+00	0.00E+00	0.00E+00	0.00E+00	0.00E+00	0.00E+00	0.00E+00
2158	ALL	748088.42	4038860.7	5.93E-09	25YrCancer	5.93E-09	0.00E+00	0.00E+00	0.00E+00	0.00E+00	0.00E+00	0.00E+00	0.00E+00	0.00E+00	0.00E+00	0.00E+00	0.00E+00
2159	ALL	748188.42	4038860.7	6.31E-09	25YrCancer	6.31E-09	0.00E+00	0.00E+00	0.00E+00	0.00E+00	0.00E+00	0.00E+00	0.00E+00	0.00E+00	0.00E+00	0.00E+00	0.00E+00
2160	ALL	749888.42	4038860.7	3.15E-08	25YrCancer	3.15E-08	0.00E+00	0.00E+00	0.00E+00	0.00E+00	0.00E+00	0.00E+00	0.00E+00	0.00E+00	0.00E+00	0.00E+00	0.00E+00
2161	ALL	749988.42	4038860.7	3.10E-08	25YrCancer	3.10E-08	0.00E+00	0.00E+00	0.00E+00	0.00E+00	0.00E+00	0.00E+00	0.00E+00	0.00E+00	0.00E+00	0.00E+00	0.00E+00
2162	ALL	750088.42	4038860.7	3.03E-08	25YrCancer	3.03E-08	0.00E+00	0.00E+00	0.00E+00	0.00E+00	0.00E+00	0.00E+00	0.00E+00	0.00E+00	0.00E+00	0.00E+00	0.00E+00
2163	ALL	750188.42	4038860.7	2.93E-08	25YrCancer	2.93E-08	0.00E+00	0.00E+00	0.00E+00	0.00E+00	0.00E+00	0.00E+00	0.00E+00	0.00E+00	0.00E+00	0.00E+00	0.00E+00
2164	ALL	750288.42	4038860.7	2.81E-08	25YrCancer	2.81E-08	0.00E+00	0.00E+00	0.00E+00	0.00E+00	0.00E+00	0.00E+00	0.00E+00	0.00E+00	0.00E+00	0.00E+00	0.00E+00
2165	ALL	750388.42	4038860.7	2.68E-08	25YrCancer	2.68E-08	0.00E+00	0.00E+00	0.00E+00	0.00E+00	0.00E+00	0.00E+00	0.00E+00	0.00E+00	0.00E+00	0.00E+00	0.00E+00
2166	ALL	750488.42	4038860.7	2.55E-08	25YrCancer	2.55E-08	0.00E+00	0.00E+00	0.00E+00	0.00E+00	0.00E+00	0.00E+00	0.00E+00	0.00E+00	0.00E+00	0.00E+00	0.00E+00
2167	ALL	750588.42	4038860.7	2.41E-08	25YrCancer	2.41E-08	0.00E+00	0.00E+00	0.00E+00	0.00E+00	0.00E+00	0.00E+00	0.00E+00	0.00E+00	0.00E+00	0.00E+00	0.00E+00
2168	ALL	750688.42	4038860.7	2.27E-08	25YrCancer	2.27E-08	0.00E+00	0.00E+00	0.00E+00	0.00E+00	0.00E+00	0.00E+00	0.00E+00	0.00E+00	0.00E+00	0.00E+00	0.00E+00
2169	ALL	750788.42	4038860.7	2.14E-08	25YrCancer	2.14E-08	0.00E+00	0.00E+00	0.00E+00	0.00E+00	0.00E+00	0.00E+00	0.00E+00	0.00E+00	0.00E+00	0.00E+00	0.00E+00
2170	ALL	750888.42	4038860.7	2.01E-08	25YrCancer	2.01E-08	0.00E+00	0.00E+00	0.00E+00	0.00E+00	0.00E+00	0.00E+00	0.00E+00	0.00E+00	0.00E+00	0.00E+00	0.00E+00
2171	ALL	750988.42	4038860.7	1.89E-08	25YrCancer	1.89E-08	0.00E+00	0.00E+00	0.00E+00	0.00E+00	0.00E+00	0.00E+00	0.00E+00	0.00E+00	0.00E+00	0.00E+00	0.00E+00
2172	ALL	751088.42	4038860.7	1.78E-08	25YrCancer	1.78E-08	0.00E+00	0.00E+00	0.00E+00	0.00E+00	0.00E+00	0.00E+00	0.00E+00	0.00E+00	0.00E+00	0.00E+00	0.00E+00
2173	ALL	751188.42	4038860.7	1.68E-08	25YrCancer	1.68E-08	0.00E+00	0.00E+00	0.00E+00	0.00E+00	0.00E+00	0.00E+00	0.00E+00	0.00E+00	0.00E+00	0.00E+00	0.00E+00
2174	ALL	751288.42	4038860.7	1.58E-08	25YrCancer	1.58E-08	0.00E+00	0.00E+00	0.00E+00	0.00E+00	0.00E+00	0.00E+00	0.00E+00	0.00E+00	0.00E+00	0.00E+00	0.00E+00
2175	ALL	751388.42	4038860.7	1.49E-08	25YrCancer	1.49E-08	0.00E+00	0.00E+00	0.00E+00	0.00E+00	0.00E+00	0.00E+00	0.00E+00	0.00E+00	0.00E+00	0.00E+00	0.00E+00
2176	ALL	752788.42	4038860.7	7.79E-09	25YrCancer	7.79E-09	0.00E+00	0.00E+00	0.00E+00	0.00E+00	0.00E+00	0.00E+00	0.00E+00	0.00E+00	0.00E+00	0.00E+00	0.00E+00
2177	ALL	752888.42	4038860.7	7.51E-09	25YrCancer	7.51E-09	0.00E+00	0.00E+00	0.00E+00	0.00E+00	0.00E+00	0.00E+00	0.00E+00	0.00E+00	0.00E+00	0.00E+00	0.00E+00
2178	ALL	752988.42	4038860.7	7.24E-09	25YrCancer	7.24E-09	0.00E+00	0.00E+00	0.00E+00	0.00E+00	0.00E+00	0.00E+00	0.00E+00	0.00E+00	0.00E+00	0.00E+00	0.00E+00
2179	ALL	753088.42	4038860.7	7.00E-09	25YrCancer	7.00E-09	0.00E+00	0.00E+00	0.00E+00	0.00E+00	0.00E+00	0.00E+00	0.00E+00	0.00E+00	0.00E+00	0.00E+00	0.00E+00
2180	ALL	753188.42	4038860.7	6.76E-09	25YrCancer	6.76E-09	0.00E+00	0.00E+00	0.00E+00	0.00E+00	0.00E+00	0.00E+00	0.00E+00	0.00E+00	0.00E+00	0.00E+00	0.00E+00
2181	ALL	753288.42	4038860.7	6.54E-09	25YrCancer	6.54E-09	0.00E+00	0.00E+00	0.00E+00	0.00E+00	0.00E+00	0.00E+00	0.00E+00	0.00E+00	0.00E+00	0.00E+00	0.00E+00
2182	ALL	753388.42	4038860.7	6.33E-09	25YrCancer	6.33E-09	0.00E+00	0.00E+00	0.00E+00	0.00E+00	0.00E+00	0.00E+00	0.00E+00	0.00E+00	0.00E+00	0.00E+00	0.00E+00
2183	ALL	753488.42	4038860.7	6.14E-09	25YrCancer	6.14E-09	0.00E+00	0.00E+00	0.00E+00	0.00E+00	0.00E+00	0.00E+00	0.00E+00	0.00E+00	0.00E+00	0.00E+00	0.00E+00
2184	ALL	753588.42	4038860.7	5.95E-09	25YrCancer	5.95E-09	0.00E+00	0.00E+00	0.00E+00	0.00E+00	0.00E+00	0.00E+00	0.00E+00	0.00E+00	0.00E+00	0.00E+00	0.00E+00
2185	ALL	753688.42	4038860.7	5.77E-09	25YrCancer	5.77E-09	0.00E+00	0.00E+00	0.00E+00	0.00E+00	0.00E+00	0.00E+00	0.00E+00	0.00E+00	0.00E+00	0.00E+00	0.00E+00
2186	ALL	753788.42	4038860.7	5.61E-09	25YrCancer	5.61E-09	0.00E+00	0.00E+00	0.00E+00	0.00E+00	0.00E+00	0.00E+00	0.00E+00	0.00E+00	0.00E+00	0.00E+00	0.00E+00
2187	ALL	753888.42	4038860.7	5.45E-09	25YrCancer	5.45E-09	0.00E+00	0.00E+00	0.00E+00	0.00E+00	0.00E+00	0.00E+00	0.00E+00	0.00E+00	0.00E+00	0.00E+00	0.00E+00
2188	ALL	753988.42	4038860.7	5.30E-09	25YrCancer	5.30E-09	0.00E+00	0.00E+00	0.00E+00	0.00E+00	0.00E+00	0.00E+00	0.00E+00	0.00E+00	0.00E+00	0.00E+00	0.00E+00
2189	ALL	754088.42	4038860.7	5.16E-09	25YrCancer	5.16E-09	0.00E+00	0.00E+00	0.00E+00	0.00E+00	0.00E+00	0.00E+00	0.00E+00	0.00E+00	0.00E+00	0.00E+00	0.00E+00
2190	ALL	754188.42	4038860.7	5.02E-09	25YrCancer	5.02E-09	0.00E+00	0.00E+00	0.00E+00	0.00E+00	0.00E+00	0.00E+00	0.00E+00	0.00E+00	0.00E+00	0.00E+00	0.00E+00
2191	ALL	754288.42	4038860.7	4.89E-09	25YrCancer	4.89E-09	0.00E+00	0.00E+00	0.00E+00	0.00E+00	0.00E+00	0.00E+00	0.00E+00	0.00E+00	0.00E+00	0.00E+00	0.00E+00

2192	ALL	754388.42	4038860.7	4.77E-09	25YrCancer	4.77E-09	0.00E+00	0.00E+00	0.00E+00	0.00E+00	0.00E+00	0.00E+00	0.00E+00	0.00E+00	0.00E+00	0.00E+00	0.00E+00
2193	ALL	754488.42	4038860.7	4.65E-09	25YrCancer	4.65E-09	0.00E+00	0.00E+00	0.00E+00	0.00E+00	0.00E+00	0.00E+00	0.00E+00	0.00E+00	0.00E+00	0.00E+00	0.00E+00
2194	ALL	754588.42	4038860.7	4.53E-09	25YrCancer	4.53E-09	0.00E+00	0.00E+00	0.00E+00	0.00E+00	0.00E+00	0.00E+00	0.00E+00	0.00E+00	0.00E+00	0.00E+00	0.00E+00
2195	ALL	754688.42	4038860.7	4.43E-09	25YrCancer	4.43E-09	0.00E+00	0.00E+00	0.00E+00	0.00E+00	0.00E+00	0.00E+00	0.00E+00	0.00E+00	0.00E+00	0.00E+00	0.00E+00
2196	ALL	754788.42	4038860.7	4.32E-09	25YrCancer	4.32E-09	0.00E+00	0.00E+00	0.00E+00	0.00E+00	0.00E+00	0.00E+00	0.00E+00	0.00E+00	0.00E+00	0.00E+00	0.00E+00
2197	ALL	754888.42	4038860.7	4.22E-09	25YrCancer	4.22E-09	0.00E+00	0.00E+00	0.00E+00	0.00E+00	0.00E+00	0.00E+00	0.00E+00	0.00E+00	0.00E+00	0.00E+00	0.00E+00
2198	ALL	754988.42	4038860.7	4.13E-09	25YrCancer	4.13E-09	0.00E+00	0.00E+00	0.00E+00	0.00E+00	0.00E+00	0.00E+00	0.00E+00	0.00E+00	0.00E+00	0.00E+00	0.00E+00
2199	ALL	755088.42	4038860.7	4.04E-09	25YrCancer	4.04E-09	0.00E+00	0.00E+00	0.00E+00	0.00E+00	0.00E+00	0.00E+00	0.00E+00	0.00E+00	0.00E+00	0.00E+00	0.00E+00
2200	ALL	755188.42	4038860.7	3.95E-09	25YrCancer	3.95E-09	0.00E+00	0.00E+00	0.00E+00	0.00E+00	0.00E+00	0.00E+00	0.00E+00	0.00E+00	0.00E+00	0.00E+00	0.00E+00
2201	ALL	755288.42	4038860.7	3.86E-09	25YrCancer	3.86E-09	0.00E+00	0.00E+00	0.00E+00	0.00E+00	0.00E+00	0.00E+00	0.00E+00	0.00E+00	0.00E+00	0.00E+00	0.00E+00
2202	ALL	747888.42	4038960.7	5.12E-09	25YrCancer	5.12E-09	0.00E+00	0.00E+00	0.00E+00	0.00E+00	0.00E+00	0.00E+00	0.00E+00	0.00E+00	0.00E+00	0.00E+00	0.00E+00
2203	ALL	747988.42	4038960.7	5.55E-09	25YrCancer	5.55E-09	0.00E+00	0.00E+00	0.00E+00	0.00E+00	0.00E+00	0.00E+00	0.00E+00	0.00E+00	0.00E+00	0.00E+00	0.00E+00
2204	ALL	748088.42	4038960.7	6.07E-09	25YrCancer	6.07E-09	0.00E+00	0.00E+00	0.00E+00	0.00E+00	0.00E+00	0.00E+00	0.00E+00	0.00E+00	0.00E+00	0.00E+00	0.00E+00
2205	ALL	748188.42	4038960.7	6.56E-09	25YrCancer	6.56E-09	0.00E+00	0.00E+00	0.00E+00	0.00E+00	0.00E+00	0.00E+00	0.00E+00	0.00E+00	0.00E+00	0.00E+00	0.00E+00
2206	ALL	749888.42	4038960.7	3.44E-08	25YrCancer	3.44E-08	0.00E+00	0.00E+00	0.00E+00	0.00E+00	0.00E+00	0.00E+00	0.00E+00	0.00E+00	0.00E+00	0.00E+00	0.00E+00
2207	ALL	749988.42	4038960.7	3.35E-08	25YrCancer	3.35E-08	0.00E+00	0.00E+00	0.00E+00	0.00E+00	0.00E+00	0.00E+00	0.00E+00	0.00E+00	0.00E+00	0.00E+00	0.00E+00
2208	ALL	750088.42	4038960.7	3.22E-08	25YrCancer	3.22E-08	0.00E+00	0.00E+00	0.00E+00	0.00E+00	0.00E+00	0.00E+00	0.00E+00	0.00E+00	0.00E+00	0.00E+00	0.00E+00
2209	ALL	750188.42	4038960.7	3.07E-08	25YrCancer	3.07E-08	0.00E+00	0.00E+00	0.00E+00	0.00E+00	0.00E+00	0.00E+00	0.00E+00	0.00E+00	0.00E+00	0.00E+00	0.00E+00
2210	ALL	750288.42	4038960.7	2.91E-08	25YrCancer	2.91E-08	0.00E+00	0.00E+00	0.00E+00	0.00E+00	0.00E+00	0.00E+00	0.00E+00	0.00E+00	0.00E+00	0.00E+00	0.00E+00
2211	ALL	750388.42	4038960.7	2.74E-08	25YrCancer	2.74E-08	0.00E+00	0.00E+00	0.00E+00	0.00E+00	0.00E+00	0.00E+00	0.00E+00	0.00E+00	0.00E+00	0.00E+00	0.00E+00
2212	ALL	750488.42	4038960.7	2.58E-08	25YrCancer	2.58E-08	0.00E+00	0.00E+00	0.00E+00	0.00E+00	0.00E+00	0.00E+00	0.00E+00	0.00E+00	0.00E+00	0.00E+00	0.00E+00
2213	ALL	750588.42	4038960.7	2.41E-08	25YrCancer	2.41E-08	0.00E+00	0.00E+00	0.00E+00	0.00E+00	0.00E+00	0.00E+00	0.00E+00	0.00E+00	0.00E+00	0.00E+00	0.00E+00
2214	ALL	750688.42	4038960.7	2.26E-08	25YrCancer	2.26E-08	0.00E+00	0.00E+00	0.00E+00	0.00E+00	0.00E+00	0.00E+00	0.00E+00	0.00E+00	0.00E+00	0.00E+00	0.00E+00
2215	ALL	750788.42	4038960.7	2.11E-08	25YrCancer	2.11E-08	0.00E+00	0.00E+00	0.00E+00	0.00E+00	0.00E+00	0.00E+00	0.00E+00	0.00E+00	0.00E+00	0.00E+00	0.00E+00
2216	ALL	750888.42	4038960.7	1.98E-08	25YrCancer	1.98E-08	0.00E+00	0.00E+00	0.00E+00	0.00E+00	0.00E+00	0.00E+00	0.00E+00	0.00E+00	0.00E+00	0.00E+00	0.00E+00
2217	ALL	750988.42	4038960.7	1.85E-08	25YrCancer	1.85E-08	0.00E+00	0.00E+00	0.00E+00	0.00E+00	0.00E+00	0.00E+00	0.00E+00	0.00E+00	0.00E+00	0.00E+00	0.00E+00
2218	ALL	751088.42	4038960.7	1.74E-08	25YrCancer	1.74E-08	0.00E+00	0.00E+00	0.00E+00	0.00E+00	0.00E+00	0.00E+00	0.00E+00	0.00E+00	0.00E+00	0.00E+00	0.00E+00
2219	ALL	751188.42	4038960.7	1.63E-08	25YrCancer	1.63E-08	0.00E+00	0.00E+00	0.00E+00	0.00E+00	0.00E+00	0.00E+00	0.00E+00	0.00E+00	0.00E+00	0.00E+00	0.00E+00
2220	ALL	751288.42	4038960.7	1.54E-08	25YrCancer	1.54E-08	0.00E+00	0.00E+00	0.00E+00	0.00E+00	0.00E+00	0.00E+00	0.00E+00	0.00E+00	0.00E+00	0.00E+00	0.00E+00
2221	ALL	751388.42	4038960.7	1.45E-08	25YrCancer	1.45E-08	0.00E+00	0.00E+00	0.00E+00	0.00E+00	0.00E+00	0.00E+00	0.00E+00	0.00E+00	0.00E+00	0.00E+00	0.00E+00
2222	ALL	752788.42	4038960.7	7.56E-09	25YrCancer	7.56E-09	0.00E+00	0.00E+00	0.00E+00	0.00E+00	0.00E+00	0.00E+00	0.00E+00	0.00E+00	0.00E+00	0.00E+00	0.00E+00
2223	ALL	752888.42	4038960.7	7.29E-09	25YrCancer	7.29E-09	0.00E+00	0.00E+00	0.00E+00	0.00E+00	0.00E+00	0.00E+00	0.00E+00	0.00E+00	0.00E+00	0.00E+00	0.00E+00
2224	ALL	752988.42	4038960.7	7.04E-09	25YrCancer	7.04E-09	0.00E+00	0.00E+00	0.00E+00	0.00E+00	0.00E+00	0.00E+00	0.00E+00	0.00E+00	0.00E+00	0.00E+00	0.00E+00
2225	ALL	753088.42	4038960.7	6.80E-09	25YrCancer	6.80E-09	0.00E+00	0.00E+00	0.00E+00	0.00E+00	0.00E+00	0.00E+00	0.00E+00	0.00E+00	0.00E+00	0.00E+00	0.00E+00
2226	ALL	753188.42	4038960.7	6.57E-09	25YrCancer	6.57E-09	0.00E+00	0.00E+00	0.00E+00	0.00E+00	0.00E+00	0.00E+00	0.00E+00	0.00E+00	0.00E+00	0.00E+00	0.00E+00
2227	ALL	753288.42	4038960.7	6.36E-09	25YrCancer	6.36E-09	0.00E+00	0.00E+00	0.00E+00	0.00E+00	0.00E+00	0.00E+00	0.00E+00	0.00E+00	0.00E+00	0.00E+00	0.00E+00
2228	ALL	753388.42	4038960.7	6.16E-09	25YrCancer	6.16E-09	0.00E+00	0.00E+00	0.00E+00	0.00E+00	0.00E+00	0.00E+00	0.00E+00	0.00E+00	0.00E+00	0.00E+00	0.00E+00
2229	ALL	753488.42	4038960.7	5.97E-09	25YrCancer	5.97E-09	0.00E+00	0.00E+00	0.00E+00	0.00E+00	0.00E+00	0.00E+00	0.00E+00	0.00E+00	0.00E+00	0.00E+00	0.00E+00
2230	ALL	753588.42	4038960.7	5.79E-09	25YrCancer	5.79E-09	0.00E+00	0.00E+00	0.00E+00	0.00E+00	0.00E+00	0.00E+00	0.00E+00	0.00E+00	0.00E+00	0.00E+00	0.00E+00
2231	ALL	753688.42	4038960.7	5.62E-09	25YrCancer	5.62E-09	0.00E+00	0.00E+00	0.00E+00	0.00E+00	0.00E+00	0.00E+00	0.00E+00	0.00E+00	0.00E+00	0.00E+00	0.00E+00
2232	ALL	753788.42	4038960.7	5.46E-09	25YrCancer	5.46E-09	0.00E+00	0.00E+00	0.00E+00	0.00E+00	0.00E+00	0.00E+00	0.00E+00	0.00E+00	0.00E+00	0.00E+00	0.00E+00
2233	ALL	753888.42	4038960.7	5.31E-09	25YrCancer	5.31E-09	0.00E+00	0.00E+00	0.00E+00	0.00E+00	0.00E+00	0.00E+00	0.00E+00	0.00E+00	0.00E+00	0.00E+00	0.00E+00
2234	ALL	753988.42	4038960.7	5.16E-09	25YrCancer	5.16E-09	0.00E+00	0.00E+00	0.00E+00	0.00E+00	0.00E+00	0.00E+00	0.00E+00	0.00E+00	0.00E+00	0.00E+00	0.00E+00
2235	ALL	754088.42	4038960.7	5.03E-09	25YrCancer	5.03E-09	0.00E+00	0.00E+00	0.00E+00	0.00E+00	0.00E+00	0.00E+00	0.00E+00	0.00E+00	0.00E+00	0.00E+00	0.00E+00
2236	ALL	754188.42	4038960.7	4.90E-09	25YrCancer	4.90E-09	0.00E+00	0.00E+00	0.00E+00	0.00E+00	0.00E+00	0.00E+00	0.00E+00	0.00E+00	0.00E+00	0.00E+00	0.00E+00
2237	ALL	754288.42	4038960.7	4.77E-09	25YrCancer	4.77E-09	0.00E+00	0.00E+00	0.00E+00	0.00E+00	0.00E+00	0.00E+00	0.00E+00	0.00E+00	0.00E+00	0.00E+00	0.00E+00
2238	ALL	754388.42	4038960.7	4.65E-09	25YrCancer	4.65E-09	0.00E+00	0.00E+00	0.00E+00	0.00E+00	0.00E+00	0.00E+00	0.00E+00	0.00E+00	0.00E+00	0.00E+00	0.00E+00
2239	ALL	754488.42	4038960.7	4.54E-09	25YrCancer	4.54E-09	0.00E+00	0.00E+00	0.00E+00	0.00E+00	0.00E+00	0.00E+00	0.00E+00	0.00E+00	0.00E+00	0.00E+00	0.00E+00
2240	ALL	754588.42	4038960.7	4.43E-09	25YrCancer	4.43E-09	0.00E+00	0.00E+00	0.00E+00	0.00E+00	0.00E+00	0.00E+00	0.00E+00	0.00E+00	0.00E+00	0.00E+00	0.00E+00
2241	ALL	754688.42	4038960.7	4.32E-09	25YrCancer	4.32E-09	0.00E+00	0.00E+00	0.00E+00	0.00E+00	0.00E+00	0.00E+00	0.00E+00	0.00E+00	0.00E+00	0.00E+00	0.00E+00
2242	ALL	754788.42	4038960.7	4.22E-09	25YrCancer	4.22E-09	0.00E+00	0.00E+00	0.00E+00	0.00E+00	0.00E+00	0.00E+00	0.00E+00	0.00E+00	0.00E+00	0.00E+00	0.00E+00

2243	ALL	754888.42	4038960.7	4.13E-09	25YrCancer	4.13E-09	0.00E+00	0.00E+00	0.00E+00	0.00E+00	0.00E+00	0.00E+00	0.00E+00	0.00E+00	0.00E+00	0.00E+00	0.00E+00
2244	ALL	754988.42	4038960.7	4.04E-09	25YrCancer	4.04E-09	0.00E+00	0.00E+00	0.00E+00	0.00E+00	0.00E+00	0.00E+00	0.00E+00	0.00E+00	0.00E+00	0.00E+00	0.00E+00
2245	ALL	755088.42	4038960.7	3.95E-09	25YrCancer	3.95E-09	0.00E+00	0.00E+00	0.00E+00	0.00E+00	0.00E+00	0.00E+00	0.00E+00	0.00E+00	0.00E+00	0.00E+00	0.00E+00
2246	ALL	755188.42	4038960.7	3.86E-09	25YrCancer	3.86E-09	0.00E+00	0.00E+00	0.00E+00	0.00E+00	0.00E+00	0.00E+00	0.00E+00	0.00E+00	0.00E+00	0.00E+00	0.00E+00
2247	ALL	755288.42	4038960.7	3.78E-09	25YrCancer	3.78E-09	0.00E+00	0.00E+00	0.00E+00	0.00E+00	0.00E+00	0.00E+00	0.00E+00	0.00E+00	0.00E+00	0.00E+00	0.00E+00
2248	ALL	747788.42	4039060.7	4.96E-09	25YrCancer	4.96E-09	0.00E+00	0.00E+00	0.00E+00	0.00E+00	0.00E+00	0.00E+00	0.00E+00	0.00E+00	0.00E+00	0.00E+00	0.00E+00
2249	ALL	747888.42	4039060.7	5.20E-09	25YrCancer	5.20E-09	0.00E+00	0.00E+00	0.00E+00	0.00E+00	0.00E+00	0.00E+00	0.00E+00	0.00E+00	0.00E+00	0.00E+00	0.00E+00
2250	ALL	747988.42	4039060.7	5.62E-09	25YrCancer	5.62E-09	0.00E+00	0.00E+00	0.00E+00	0.00E+00	0.00E+00	0.00E+00	0.00E+00	0.00E+00	0.00E+00	0.00E+00	0.00E+00
2251	ALL	748088.42	4039060.7	6.21E-09	25YrCancer	6.21E-09	0.00E+00	0.00E+00	0.00E+00	0.00E+00	0.00E+00	0.00E+00	0.00E+00	0.00E+00	0.00E+00	0.00E+00	0.00E+00
2252	ALL	748188.42	4039060.7	6.81E-09	25YrCancer	6.81E-09	0.00E+00	0.00E+00	0.00E+00	0.00E+00	0.00E+00	0.00E+00	0.00E+00	0.00E+00	0.00E+00	0.00E+00	0.00E+00
2253	ALL	749888.42	4039060.7	3.73E-08	25YrCancer	3.73E-08	0.00E+00	0.00E+00	0.00E+00	0.00E+00	0.00E+00	0.00E+00	0.00E+00	0.00E+00	0.00E+00	0.00E+00	0.00E+00
2254	ALL	749988.42	4039060.7	3.57E-08	25YrCancer	3.57E-08	0.00E+00	0.00E+00	0.00E+00	0.00E+00	0.00E+00	0.00E+00	0.00E+00	0.00E+00	0.00E+00	0.00E+00	0.00E+00
2255	ALL	750088.42	4039060.7	3.38E-08	25YrCancer	3.38E-08	0.00E+00	0.00E+00	0.00E+00	0.00E+00	0.00E+00	0.00E+00	0.00E+00	0.00E+00	0.00E+00	0.00E+00	0.00E+00
2256	ALL	750188.42	4039060.7	3.17E-08	25YrCancer	3.17E-08	0.00E+00	0.00E+00	0.00E+00	0.00E+00	0.00E+00	0.00E+00	0.00E+00	0.00E+00	0.00E+00	0.00E+00	0.00E+00
2257	ALL	750288.42	4039060.7	2.97E-08	25YrCancer	2.97E-08	0.00E+00	0.00E+00	0.00E+00	0.00E+00	0.00E+00	0.00E+00	0.00E+00	0.00E+00	0.00E+00	0.00E+00	0.00E+00
2258	ALL	750388.42	4039060.7	2.76E-08	25YrCancer	2.76E-08	0.00E+00	0.00E+00	0.00E+00	0.00E+00	0.00E+00	0.00E+00	0.00E+00	0.00E+00	0.00E+00	0.00E+00	0.00E+00
2259	ALL	750488.42	4039060.7	2.57E-08	25YrCancer	2.57E-08	0.00E+00	0.00E+00	0.00E+00	0.00E+00	0.00E+00	0.00E+00	0.00E+00	0.00E+00	0.00E+00	0.00E+00	0.00E+00
2260	ALL	750588.42	4039060.7	2.39E-08	25YrCancer	2.39E-08	0.00E+00	0.00E+00	0.00E+00	0.00E+00	0.00E+00	0.00E+00	0.00E+00	0.00E+00	0.00E+00	0.00E+00	0.00E+00
2261	ALL	750688.42	4039060.7	2.22E-08	25YrCancer	2.22E-08	0.00E+00	0.00E+00	0.00E+00	0.00E+00	0.00E+00	0.00E+00	0.00E+00	0.00E+00	0.00E+00	0.00E+00	0.00E+00
2262	ALL	750788.42	4039060.7	2.06E-08	25YrCancer	2.06E-08	0.00E+00	0.00E+00	0.00E+00	0.00E+00	0.00E+00	0.00E+00	0.00E+00	0.00E+00	0.00E+00	0.00E+00	0.00E+00
2263	ALL	750888.42	4039060.7	1.92E-08	25YrCancer	1.92E-08	0.00E+00	0.00E+00	0.00E+00	0.00E+00	0.00E+00	0.00E+00	0.00E+00	0.00E+00	0.00E+00	0.00E+00	0.00E+00
2264	ALL	750988.42	4039060.7	1.80E-08	25YrCancer	1.80E-08	0.00E+00	0.00E+00	0.00E+00	0.00E+00	0.00E+00	0.00E+00	0.00E+00	0.00E+00	0.00E+00	0.00E+00	0.00E+00
2265	ALL	751088.42	4039060.7	1.68E-08	25YrCancer	1.68E-08	0.00E+00	0.00E+00	0.00E+00	0.00E+00	0.00E+00	0.00E+00	0.00E+00	0.00E+00	0.00E+00	0.00E+00	0.00E+00
2266	ALL	751188.42	4039060.7	1.58E-08	25YrCancer	1.58E-08	0.00E+00	0.00E+00	0.00E+00	0.00E+00	0.00E+00	0.00E+00	0.00E+00	0.00E+00	0.00E+00	0.00E+00	0.00E+00
2267	ALL	751288.42	4039060.7	1.49E-08	25YrCancer	1.49E-08	0.00E+00	0.00E+00	0.00E+00	0.00E+00	0.00E+00	0.00E+00	0.00E+00	0.00E+00	0.00E+00	0.00E+00	0.00E+00
2268	ALL	751388.42	4039060.7	1.40E-08	25YrCancer	1.40E-08	0.00E+00	0.00E+00	0.00E+00	0.00E+00	0.00E+00	0.00E+00	0.00E+00	0.00E+00	0.00E+00	0.00E+00	0.00E+00
2269	ALL	752788.42	4039060.7	7.34E-09	25YrCancer	7.34E-09	0.00E+00	0.00E+00	0.00E+00	0.00E+00	0.00E+00	0.00E+00	0.00E+00	0.00E+00	0.00E+00	0.00E+00	0.00E+00
2270	ALL	752888.42	4039060.7	7.08E-09	25YrCancer	7.08E-09	0.00E+00	0.00E+00	0.00E+00	0.00E+00	0.00E+00	0.00E+00	0.00E+00	0.00E+00	0.00E+00	0.00E+00	0.00E+00
2271	ALL	752988.42	4039060.7	6.83E-09	25YrCancer	6.83E-09	0.00E+00	0.00E+00	0.00E+00	0.00E+00	0.00E+00	0.00E+00	0.00E+00	0.00E+00	0.00E+00	0.00E+00	0.00E+00
2272	ALL	753088.42	4039060.7	6.60E-09	25YrCancer	6.60E-09	0.00E+00	0.00E+00	0.00E+00	0.00E+00	0.00E+00	0.00E+00	0.00E+00	0.00E+00	0.00E+00	0.00E+00	0.00E+00
2273	ALL	753188.42	4039060.7	6.38E-09	25YrCancer	6.38E-09	0.00E+00	0.00E+00	0.00E+00	0.00E+00	0.00E+00	0.00E+00	0.00E+00	0.00E+00	0.00E+00	0.00E+00	0.00E+00
2274	ALL	747788.42	4039160.7	5.11E-09	25YrCancer	5.11E-09	0.00E+00	0.00E+00	0.00E+00	0.00E+00	0.00E+00	0.00E+00	0.00E+00	0.00E+00	0.00E+00	0.00E+00	0.00E+00
2275	ALL	747888.42	4039160.7	5.33E-09	25YrCancer	5.33E-09	0.00E+00	0.00E+00	0.00E+00	0.00E+00	0.00E+00	0.00E+00	0.00E+00	0.00E+00	0.00E+00	0.00E+00	0.00E+00
2276	ALL	747988.42	4039160.7	5.72E-09	25YrCancer	5.72E-09	0.00E+00	0.00E+00	0.00E+00	0.00E+00	0.00E+00	0.00E+00	0.00E+00	0.00E+00	0.00E+00	0.00E+00	0.00E+00
2277	ALL	748088.42	4039160.7	6.34E-09	25YrCancer	6.34E-09	0.00E+00	0.00E+00	0.00E+00	0.00E+00	0.00E+00	0.00E+00	0.00E+00	0.00E+00	0.00E+00	0.00E+00	0.00E+00
2278	ALL	748188.42	4039160.7	7.08E-09	25YrCancer	7.08E-09	0.00E+00	0.00E+00	0.00E+00	0.00E+00	0.00E+00	0.00E+00	0.00E+00	0.00E+00	0.00E+00	0.00E+00	0.00E+00
2279	ALL	749888.42	4039160.7	3.98E-08	25YrCancer	3.98E-08	0.00E+00	0.00E+00	0.00E+00	0.00E+00	0.00E+00	0.00E+00	0.00E+00	0.00E+00	0.00E+00	0.00E+00	0.00E+00
2280	ALL	749988.42	4039160.7	3.73E-08	25YrCancer	3.73E-08	0.00E+00	0.00E+00	0.00E+00	0.00E+00	0.00E+00	0.00E+00	0.00E+00	0.00E+00	0.00E+00	0.00E+00	0.00E+00
2281	ALL	750088.42	4039160.7	3.47E-08	25YrCancer	3.47E-08	0.00E+00	0.00E+00	0.00E+00	0.00E+00	0.00E+00	0.00E+00	0.00E+00	0.00E+00	0.00E+00	0.00E+00	0.00E+00
2282	ALL	750188.42	4039160.7	3.22E-08	25YrCancer	3.22E-08	0.00E+00	0.00E+00	0.00E+00	0.00E+00	0.00E+00	0.00E+00	0.00E+00	0.00E+00	0.00E+00	0.00E+00	0.00E+00
2283	ALL	750288.42	4039160.7	2.97E-08	25YrCancer	2.97E-08	0.00E+00	0.00E+00	0.00E+00	0.00E+00	0.00E+00	0.00E+00	0.00E+00	0.00E+00	0.00E+00	0.00E+00	0.00E+00
2284	ALL	750388.42	4039160.7	2.74E-08	25YrCancer	2.74E-08	0.00E+00	0.00E+00	0.00E+00	0.00E+00	0.00E+00	0.00E+00	0.00E+00	0.00E+00	0.00E+00	0.00E+00	0.00E+00
2285	ALL	750488.42	4039160.7	2.52E-08	25YrCancer	2.52E-08	0.00E+00	0.00E+00	0.00E+00	0.00E+00	0.00E+00	0.00E+00	0.00E+00	0.00E+00	0.00E+00	0.00E+00	0.00E+00
2286	ALL	750588.42	4039160.7	2.33E-08	25YrCancer	2.33E-08	0.00E+00	0.00E+00	0.00E+00	0.00E+00	0.00E+00	0.00E+00	0.00E+00	0.00E+00	0.00E+00	0.00E+00	0.00E+00
2287	ALL	750688.42	4039160.7	2.16E-08	25YrCancer	2.16E-08	0.00E+00	0.00E+00	0.00E+00	0.00E+00	0.00E+00	0.00E+00	0.00E+00	0.00E+00	0.00E+00	0.00E+00	0.00E+00
2288	ALL	750788.42	4039160.7	2.00E-08	25YrCancer	2.00E-08	0.00E+00	0.00E+00	0.00E+00	0.00E+00	0.00E+00	0.00E+00	0.00E+00	0.00E+00	0.00E+00	0.00E+00	0.00E+00
2289	ALL	750888.42	4039160.7	1.86E-08	25YrCancer	1.86E-08	0.00E+00	0.00E+00	0.00E+00	0.00E+00	0.00E+00	0.00E+00	0.00E+00	0.00E+00	0.00E+00	0.00E+00	0.00E+00
2290	ALL	750988.42	4039160.7	1.74E-08	25YrCancer	1.74E-08	0.00E+00	0.00E+00	0.00E+00	0.00E+00	0.00E+00	0.00E+00	0.00E+00	0.00E+00	0.00E+00	0.00E+00	0.00E+00
2291	ALL	751088.42	4039160.7	1.62E-08	25YrCancer	1.62E-08	0.00E+00	0.00E+00	0.00E+00	0.00E+00	0.00E+00	0.00E+00	0.00E+00	0.00E+00	0.00E+00	0.00E+00	0.00E+00
2292	ALL	751188.42	4039160.7	1.52E-08	25YrCancer	1.52E-08	0.00E+00	0.00E+00	0.00E+00	0.00E+00	0.00E+00	0.00E+00	0.00E+00	0.00E+00	0.00E+00	0.00E+00	0.00E+00
2293	ALL	751288.42	4039160.7	1.43E-08	25YrCancer	1.43E-08	0.00E+00	0.00E+00	0.00E+00	0.00E+00	0.00E+00	0.00E+00	0.00E+00	0.00E+00	0.00E+00	0.00E+00	0.00E+00

2294	ALL	751388.42	4039160.7	1.35E-08	25YrCancer	1.35E-08	0.00E+00	0.00E+00	0.00E+00	0.00E+00	0.00E+00	0.00E+00	0.00E+00	0.00E+00	0.00E+00	0.00E+00	0.00E+00
2295	ALL	752788.42	4039160.7	7.11E-09	25YrCancer	7.11E-09	0.00E+00	0.00E+00	0.00E+00	0.00E+00	0.00E+00	0.00E+00	0.00E+00	0.00E+00	0.00E+00	0.00E+00	0.00E+00
2296	ALL	752888.42	4039160.7	6.86E-09	25YrCancer	6.86E-09	0.00E+00	0.00E+00	0.00E+00	0.00E+00	0.00E+00	0.00E+00	0.00E+00	0.00E+00	0.00E+00	0.00E+00	0.00E+00
2297	ALL	752988.42	4039160.7	6.62E-09	25YrCancer	6.62E-09	0.00E+00	0.00E+00	0.00E+00	0.00E+00	0.00E+00	0.00E+00	0.00E+00	0.00E+00	0.00E+00	0.00E+00	0.00E+00
2298	ALL	753088.42	4039160.7	6.40E-09	25YrCancer	6.40E-09	0.00E+00	0.00E+00	0.00E+00	0.00E+00	0.00E+00	0.00E+00	0.00E+00	0.00E+00	0.00E+00	0.00E+00	0.00E+00
2299	ALL	753188.42	4039160.7	6.19E-09	25YrCancer	6.19E-09	0.00E+00	0.00E+00	0.00E+00	0.00E+00	0.00E+00	0.00E+00	0.00E+00	0.00E+00	0.00E+00	0.00E+00	0.00E+00
2300	ALL	747788.42	4039260.7	5.26E-09	25YrCancer	5.26E-09	0.00E+00	0.00E+00	0.00E+00	0.00E+00	0.00E+00	0.00E+00	0.00E+00	0.00E+00	0.00E+00	0.00E+00	0.00E+00
2301	ALL	747888.42	4039260.7	5.49E-09	25YrCancer	5.49E-09	0.00E+00	0.00E+00	0.00E+00	0.00E+00	0.00E+00	0.00E+00	0.00E+00	0.00E+00	0.00E+00	0.00E+00	0.00E+00
2302	ALL	747988.42	4039260.7	5.85E-09	25YrCancer	5.85E-09	0.00E+00	0.00E+00	0.00E+00	0.00E+00	0.00E+00	0.00E+00	0.00E+00	0.00E+00	0.00E+00	0.00E+00	0.00E+00
2303	ALL	748088.42	4039260.7	6.47E-09	25YrCancer	6.47E-09	0.00E+00	0.00E+00	0.00E+00	0.00E+00	0.00E+00	0.00E+00	0.00E+00	0.00E+00	0.00E+00	0.00E+00	0.00E+00
2304	ALL	748188.42	4039260.7	7.34E-09	25YrCancer	7.34E-09	0.00E+00	0.00E+00	0.00E+00	0.00E+00	0.00E+00	0.00E+00	0.00E+00	0.00E+00	0.00E+00	0.00E+00	0.00E+00
2305	ALL	749888.42	4039260.7	4.15E-08	25YrCancer	4.15E-08	0.00E+00	0.00E+00	0.00E+00	0.00E+00	0.00E+00	0.00E+00	0.00E+00	0.00E+00	0.00E+00	0.00E+00	0.00E+00
2306	ALL	749988.42	4039260.7	3.82E-08	25YrCancer	3.82E-08	0.00E+00	0.00E+00	0.00E+00	0.00E+00	0.00E+00	0.00E+00	0.00E+00	0.00E+00	0.00E+00	0.00E+00	0.00E+00
2307	ALL	750088.42	4039260.7	3.50E-08	25YrCancer	3.50E-08	0.00E+00	0.00E+00	0.00E+00	0.00E+00	0.00E+00	0.00E+00	0.00E+00	0.00E+00	0.00E+00	0.00E+00	0.00E+00
2308	ALL	750188.42	4039260.7	3.20E-08	25YrCancer	3.20E-08	0.00E+00	0.00E+00	0.00E+00	0.00E+00	0.00E+00	0.00E+00	0.00E+00	0.00E+00	0.00E+00	0.00E+00	0.00E+00
2309	ALL	750288.42	4039260.7	2.92E-08	25YrCancer	2.92E-08	0.00E+00	0.00E+00	0.00E+00	0.00E+00	0.00E+00	0.00E+00	0.00E+00	0.00E+00	0.00E+00	0.00E+00	0.00E+00
2310	ALL	750388.42	4039260.7	2.67E-08	25YrCancer	2.67E-08	0.00E+00	0.00E+00	0.00E+00	0.00E+00	0.00E+00	0.00E+00	0.00E+00	0.00E+00	0.00E+00	0.00E+00	0.00E+00
2311	ALL	750488.42	4039260.7	2.45E-08	25YrCancer	2.45E-08	0.00E+00	0.00E+00	0.00E+00	0.00E+00	0.00E+00	0.00E+00	0.00E+00	0.00E+00	0.00E+00	0.00E+00	0.00E+00
2312	ALL	750588.42	4039260.7	2.25E-08	25YrCancer	2.25E-08	0.00E+00	0.00E+00	0.00E+00	0.00E+00	0.00E+00	0.00E+00	0.00E+00	0.00E+00	0.00E+00	0.00E+00	0.00E+00
2313	ALL	750688.42	4039260.7	2.08E-08	25YrCancer	2.08E-08	0.00E+00	0.00E+00	0.00E+00	0.00E+00	0.00E+00	0.00E+00	0.00E+00	0.00E+00	0.00E+00	0.00E+00	0.00E+00
2314	ALL	750788.42	4039260.7	1.92E-08	25YrCancer	1.92E-08	0.00E+00	0.00E+00	0.00E+00	0.00E+00	0.00E+00	0.00E+00	0.00E+00	0.00E+00	0.00E+00	0.00E+00	0.00E+00
2315	ALL	750888.42	4039260.7	1.79E-08	25YrCancer	1.79E-08	0.00E+00	0.00E+00	0.00E+00	0.00E+00	0.00E+00	0.00E+00	0.00E+00	0.00E+00	0.00E+00	0.00E+00	0.00E+00
2316	ALL	750988.42	4039260.7	1.67E-08	25YrCancer	1.67E-08	0.00E+00	0.00E+00	0.00E+00	0.00E+00	0.00E+00	0.00E+00	0.00E+00	0.00E+00	0.00E+00	0.00E+00	0.00E+00
2317	ALL	751088.42	4039260.7	1.56E-08	25YrCancer	1.56E-08	0.00E+00	0.00E+00	0.00E+00	0.00E+00	0.00E+00	0.00E+00	0.00E+00	0.00E+00	0.00E+00	0.00E+00	0.00E+00
2318	ALL	751188.42	4039260.7	1.46E-08	25YrCancer	1.46E-08	0.00E+00	0.00E+00	0.00E+00	0.00E+00	0.00E+00	0.00E+00	0.00E+00	0.00E+00	0.00E+00	0.00E+00	0.00E+00
2319	ALL	751288.42	4039260.7	1.38E-08	25YrCancer	1.38E-08	0.00E+00	0.00E+00	0.00E+00	0.00E+00	0.00E+00	0.00E+00	0.00E+00	0.00E+00	0.00E+00	0.00E+00	0.00E+00
2320	ALL	751388.42	4039260.7	1.30E-08	25YrCancer	1.30E-08	0.00E+00	0.00E+00	0.00E+00	0.00E+00	0.00E+00	0.00E+00	0.00E+00	0.00E+00	0.00E+00	0.00E+00	0.00E+00
2321	ALL	752788.42	4039260.7	6.87E-09	25YrCancer	6.87E-09	0.00E+00	0.00E+00	0.00E+00	0.00E+00	0.00E+00	0.00E+00	0.00E+00	0.00E+00	0.00E+00	0.00E+00	0.00E+00
2322	ALL	752888.42	4039260.7	6.63E-09	25YrCancer	6.63E-09	0.00E+00	0.00E+00	0.00E+00	0.00E+00	0.00E+00	0.00E+00	0.00E+00	0.00E+00	0.00E+00	0.00E+00	0.00E+00
2323	ALL	752988.42	4039260.7	6.40E-09	25YrCancer	6.40E-09	0.00E+00	0.00E+00	0.00E+00	0.00E+00	0.00E+00	0.00E+00	0.00E+00	0.00E+00	0.00E+00	0.00E+00	0.00E+00
2324	ALL	753088.42	4039260.7	6.19E-09	25YrCancer	6.19E-09	0.00E+00	0.00E+00	0.00E+00	0.00E+00	0.00E+00	0.00E+00	0.00E+00	0.00E+00	0.00E+00	0.00E+00	0.00E+00
2325	ALL	753188.42	4039260.7	5.99E-09	25YrCancer	5.99E-09	0.00E+00	0.00E+00	0.00E+00	0.00E+00	0.00E+00	0.00E+00	0.00E+00	0.00E+00	0.00E+00	0.00E+00	0.00E+00
2326	ALL	747788.42	4039360.7	5.43E-09	25YrCancer	5.43E-09	0.00E+00	0.00E+00	0.00E+00	0.00E+00	0.00E+00	0.00E+00	0.00E+00	0.00E+00	0.00E+00	0.00E+00	0.00E+00
2327	ALL	747888.42	4039360.7	5.69E-09	25YrCancer	5.69E-09	0.00E+00	0.00E+00	0.00E+00	0.00E+00	0.00E+00	0.00E+00	0.00E+00	0.00E+00	0.00E+00	0.00E+00	0.00E+00
2328	ALL	747988.42	4039360.7	6.05E-09	25YrCancer	6.05E-09	0.00E+00	0.00E+00	0.00E+00	0.00E+00	0.00E+00	0.00E+00	0.00E+00	0.00E+00	0.00E+00	0.00E+00	0.00E+00
2329	ALL	748088.42	4039360.7	6.65E-09	25YrCancer	6.65E-09	0.00E+00	0.00E+00	0.00E+00	0.00E+00	0.00E+00	0.00E+00	0.00E+00	0.00E+00	0.00E+00	0.00E+00	0.00E+00
2330	ALL	748188.42	4039360.7	7.62E-09	25YrCancer	7.62E-09	0.00E+00	0.00E+00	0.00E+00	0.00E+00	0.00E+00	0.00E+00	0.00E+00	0.00E+00	0.00E+00	0.00E+00	0.00E+00
2331	ALL	749888.42	4039360.7	4.21E-08	25YrCancer	4.21E-08	0.00E+00	0.00E+00	0.00E+00	0.00E+00	0.00E+00	0.00E+00	0.00E+00	0.00E+00	0.00E+00	0.00E+00	0.00E+00
2332	ALL	749988.42	4039360.7	3.81E-08	25YrCancer	3.81E-08	0.00E+00	0.00E+00	0.00E+00	0.00E+00	0.00E+00	0.00E+00	0.00E+00	0.00E+00	0.00E+00	0.00E+00	0.00E+00
2333	ALL	750088.42	4039360.7	3.44E-08	25YrCancer	3.44E-08	0.00E+00	0.00E+00	0.00E+00	0.00E+00	0.00E+00	0.00E+00	0.00E+00	0.00E+00	0.00E+00	0.00E+00	0.00E+00
2334	ALL	750188.42	4039360.7	3.11E-08	25YrCancer	3.11E-08	0.00E+00	0.00E+00	0.00E+00	0.00E+00	0.00E+00	0.00E+00	0.00E+00	0.00E+00	0.00E+00	0.00E+00	0.00E+00
2335	ALL	750288.42	4039360.7	2.82E-08	25YrCancer	2.82E-08	0.00E+00	0.00E+00	0.00E+00	0.00E+00	0.00E+00	0.00E+00	0.00E+00	0.00E+00	0.00E+00	0.00E+00	0.00E+00
2336	ALL	750388.42	4039360.7	2.57E-08	25YrCancer	2.57E-08	0.00E+00	0.00E+00	0.00E+00	0.00E+00	0.00E+00	0.00E+00	0.00E+00	0.00E+00	0.00E+00	0.00E+00	0.00E+00
2337	ALL	750488.42	4039360.7	2.35E-08	25YrCancer	2.35E-08	0.00E+00	0.00E+00	0.00E+00	0.00E+00	0.00E+00	0.00E+00	0.00E+00	0.00E+00	0.00E+00	0.00E+00	0.00E+00
2338	ALL	750588.42	4039360.7	2.16E-08	25YrCancer	2.16E-08	0.00E+00	0.00E+00	0.00E+00	0.00E+00	0.00E+00	0.00E+00	0.00E+00	0.00E+00	0.00E+00	0.00E+00	0.00E+00
2339	ALL	750688.42	4039360.7	1.99E-08	25YrCancer	1.99E-08	0.00E+00	0.00E+00	0.00E+00	0.00E+00	0.00E+00	0.00E+00	0.00E+00	0.00E+00	0.00E+00	0.00E+00	0.00E+00
2340	ALL	750788.42	4039360.7	1.84E-08	25YrCancer	1.84E-08	0.00E+00	0.00E+00	0.00E+00	0.00E+00	0.00E+00	0.00E+00	0.00E+00	0.00E+00	0.00E+00	0.00E+00	0.00E+00
2341	ALL	750888.42	4039360.7	1.71E-08	25YrCancer	1.71E-08	0.00E+00	0.00E+00	0.00E+00	0.00E+00	0.00E+00	0.00E+00	0.00E+00	0.00E+00	0.00E+00	0.00E+00	0.00E+00
2342	ALL	750988.42	4039360.7	1.59E-08	25YrCancer	1.59E-08	0.00E+00	0.00E+00	0.00E+00	0.00E+00	0.00E+00	0.00E+00	0.00E+00	0.00E+00	0.00E+00	0.00E+00	0.00E+00
2343	ALL	751088.42	4039360.7	1.49E-08	25YrCancer	1.49E-08	0.00E+00	0.00E+00	0.00E+00	0.00E+00	0.00E+00	0.00E+00	0.00E+00	0.00E+00	0.00E+00	0.00E+00	0.00E+00
2344	ALL	751188.42	4039360.7	1.40E-08	25YrCancer	1.40E-08	0.00E+00	0.00E+00	0.00E+00	0.00E+00	0.00E+00	0.00E+00	0.00E+00	0.00E+00	0.00E+00	0.00E+00	0.00E+00

2345	ALL	751288.42	4039360.7	1.32E-08	25YrCancer	1.32E-08	0.00E+00	0.00E+00	0.00E+00	0.00E+00	0.00E+00	0.00E+00	0.00E+00	0.00E+00	0.00E+00	0.00E+00	0.00E+00
2346	ALL	751388.42	4039360.7	1.24E-08	25YrCancer	1.24E-08	0.00E+00	0.00E+00	0.00E+00	0.00E+00	0.00E+00	0.00E+00	0.00E+00	0.00E+00	0.00E+00	0.00E+00	0.00E+00
2347	ALL	752788.42	4039360.7	6.64E-09	25YrCancer	6.64E-09	0.00E+00	0.00E+00	0.00E+00	0.00E+00	0.00E+00	0.00E+00	0.00E+00	0.00E+00	0.00E+00	0.00E+00	0.00E+00
2348	ALL	752888.42	4039360.7	6.41E-09	25YrCancer	6.41E-09	0.00E+00	0.00E+00	0.00E+00	0.00E+00	0.00E+00	0.00E+00	0.00E+00	0.00E+00	0.00E+00	0.00E+00	0.00E+00
2349	ALL	752988.42	4039360.7	6.19E-09	25YrCancer	6.19E-09	0.00E+00	0.00E+00	0.00E+00	0.00E+00	0.00E+00	0.00E+00	0.00E+00	0.00E+00	0.00E+00	0.00E+00	0.00E+00
2350	ALL	753088.42	4039360.7	5.99E-09	25YrCancer	5.99E-09	0.00E+00	0.00E+00	0.00E+00	0.00E+00	0.00E+00	0.00E+00	0.00E+00	0.00E+00	0.00E+00	0.00E+00	0.00E+00
2351	ALL	753188.42	4039360.7	5.79E-09	25YrCancer	5.79E-09	0.00E+00	0.00E+00	0.00E+00	0.00E+00	0.00E+00	0.00E+00	0.00E+00	0.00E+00	0.00E+00	0.00E+00	0.00E+00
2352	ALL	747788.42	4039460.7	5.60E-09	25YrCancer	5.60E-09	0.00E+00	0.00E+00	0.00E+00	0.00E+00	0.00E+00	0.00E+00	0.00E+00	0.00E+00	0.00E+00	0.00E+00	0.00E+00
2353	ALL	747888.42	4039460.7	5.93E-09	25YrCancer	5.93E-09	0.00E+00	0.00E+00	0.00E+00	0.00E+00	0.00E+00	0.00E+00	0.00E+00	0.00E+00	0.00E+00	0.00E+00	0.00E+00
2354	ALL	747988.42	4039460.7	6.32E-09	25YrCancer	6.32E-09	0.00E+00	0.00E+00	0.00E+00	0.00E+00	0.00E+00	0.00E+00	0.00E+00	0.00E+00	0.00E+00	0.00E+00	0.00E+00
2355	ALL	748088.42	4039460.7	6.91E-09	25YrCancer	6.91E-09	0.00E+00	0.00E+00	0.00E+00	0.00E+00	0.00E+00	0.00E+00	0.00E+00	0.00E+00	0.00E+00	0.00E+00	0.00E+00
2356	ALL	748188.42	4039460.7	7.94E-09	25YrCancer	7.94E-09	0.00E+00	0.00E+00	0.00E+00	0.00E+00	0.00E+00	0.00E+00	0.00E+00	0.00E+00	0.00E+00	0.00E+00	0.00E+00
2357	ALL	749888.42	4039460.7	4.16E-08	25YrCancer	4.16E-08	0.00E+00	0.00E+00	0.00E+00	0.00E+00	0.00E+00	0.00E+00	0.00E+00	0.00E+00	0.00E+00	0.00E+00	0.00E+00
2358	ALL	749988.42	4039460.7	3.71E-08	25YrCancer	3.71E-08	0.00E+00	0.00E+00	0.00E+00	0.00E+00	0.00E+00	0.00E+00	0.00E+00	0.00E+00	0.00E+00	0.00E+00	0.00E+00
2359	ALL	750088.42	4039460.7	3.32E-08	25YrCancer	3.32E-08	0.00E+00	0.00E+00	0.00E+00	0.00E+00	0.00E+00	0.00E+00	0.00E+00	0.00E+00	0.00E+00	0.00E+00	0.00E+00
2360	ALL	750188.42	4039460.7	2.98E-08	25YrCancer	2.98E-08	0.00E+00	0.00E+00	0.00E+00	0.00E+00	0.00E+00	0.00E+00	0.00E+00	0.00E+00	0.00E+00	0.00E+00	0.00E+00
2361	ALL	750288.42	4039460.7	2.69E-08	25YrCancer	2.69E-08	0.00E+00	0.00E+00	0.00E+00	0.00E+00	0.00E+00	0.00E+00	0.00E+00	0.00E+00	0.00E+00	0.00E+00	0.00E+00
2362	ALL	750388.42	4039460.7	2.45E-08	25YrCancer	2.45E-08	0.00E+00	0.00E+00	0.00E+00	0.00E+00	0.00E+00	0.00E+00	0.00E+00	0.00E+00	0.00E+00	0.00E+00	0.00E+00
2363	ALL	750488.42	4039460.7	2.23E-08	25YrCancer	2.23E-08	0.00E+00	0.00E+00	0.00E+00	0.00E+00	0.00E+00	0.00E+00	0.00E+00	0.00E+00	0.00E+00	0.00E+00	0.00E+00
2364	ALL	750588.42	4039460.7	2.05E-08	25YrCancer	2.05E-08	0.00E+00	0.00E+00	0.00E+00	0.00E+00	0.00E+00	0.00E+00	0.00E+00	0.00E+00	0.00E+00	0.00E+00	0.00E+00
2365	ALL	750688.42	4039460.7	1.89E-08	25YrCancer	1.89E-08	0.00E+00	0.00E+00	0.00E+00	0.00E+00	0.00E+00	0.00E+00	0.00E+00	0.00E+00	0.00E+00	0.00E+00	0.00E+00
2366	ALL	750788.42	4039460.7	1.75E-08	25YrCancer	1.75E-08	0.00E+00	0.00E+00	0.00E+00	0.00E+00	0.00E+00	0.00E+00	0.00E+00	0.00E+00	0.00E+00	0.00E+00	0.00E+00
2367	ALL	750888.42	4039460.7	1.62E-08	25YrCancer	1.62E-08	0.00E+00	0.00E+00	0.00E+00	0.00E+00	0.00E+00	0.00E+00	0.00E+00	0.00E+00	0.00E+00	0.00E+00	0.00E+00
2368	ALL	750988.42	4039460.7	1.51E-08	25YrCancer	1.51E-08	0.00E+00	0.00E+00	0.00E+00	0.00E+00	0.00E+00	0.00E+00	0.00E+00	0.00E+00	0.00E+00	0.00E+00	0.00E+00
2369	ALL	751088.42	4039460.7	1.42E-08	25YrCancer	1.42E-08	0.00E+00	0.00E+00	0.00E+00	0.00E+00	0.00E+00	0.00E+00	0.00E+00	0.00E+00	0.00E+00	0.00E+00	0.00E+00
2370	ALL	751188.42	4039460.7	1.33E-08	25YrCancer	1.33E-08	0.00E+00	0.00E+00	0.00E+00	0.00E+00	0.00E+00	0.00E+00	0.00E+00	0.00E+00	0.00E+00	0.00E+00	0.00E+00
2371	ALL	751288.42	4039460.7	1.25E-08	25YrCancer	1.25E-08	0.00E+00	0.00E+00	0.00E+00	0.00E+00	0.00E+00	0.00E+00	0.00E+00	0.00E+00	0.00E+00	0.00E+00	0.00E+00
2372	ALL	751388.42	4039460.7	1.18E-08	25YrCancer	1.18E-08	0.00E+00	0.00E+00	0.00E+00	0.00E+00	0.00E+00	0.00E+00	0.00E+00	0.00E+00	0.00E+00	0.00E+00	0.00E+00
2373	ALL	752788.42	4039460.7	6.39E-09	25YrCancer	6.39E-09	0.00E+00	0.00E+00	0.00E+00	0.00E+00	0.00E+00	0.00E+00	0.00E+00	0.00E+00	0.00E+00	0.00E+00	0.00E+00
2374	ALL	752888.42	4039460.7	6.17E-09	25YrCancer	6.17E-09	0.00E+00	0.00E+00	0.00E+00	0.00E+00	0.00E+00	0.00E+00	0.00E+00	0.00E+00	0.00E+00	0.00E+00	0.00E+00
2375	ALL	752988.42	4039460.7	5.97E-09	25YrCancer	5.97E-09	0.00E+00	0.00E+00	0.00E+00	0.00E+00	0.00E+00	0.00E+00	0.00E+00	0.00E+00	0.00E+00	0.00E+00	0.00E+00
2376	ALL	753088.42	4039460.7	5.78E-09	25YrCancer	5.78E-09	0.00E+00	0.00E+00	0.00E+00	0.00E+00	0.00E+00	0.00E+00	0.00E+00	0.00E+00	0.00E+00	0.00E+00	0.00E+00
2377	ALL	753188.42	4039460.7	5.60E-09	25YrCancer	5.60E-09	0.00E+00	0.00E+00	0.00E+00	0.00E+00	0.00E+00	0.00E+00	0.00E+00	0.00E+00	0.00E+00	0.00E+00	0.00E+00
2378	ALL	747788.42	4039560.7	5.73E-09	25YrCancer	5.73E-09	0.00E+00	0.00E+00	0.00E+00	0.00E+00	0.00E+00	0.00E+00	0.00E+00	0.00E+00	0.00E+00	0.00E+00	0.00E+00
2379	ALL	747888.42	4039560.7	6.17E-09	25YrCancer	6.17E-09	0.00E+00	0.00E+00	0.00E+00	0.00E+00	0.00E+00	0.00E+00	0.00E+00	0.00E+00	0.00E+00	0.00E+00	0.00E+00
2380	ALL	747988.42	4039560.7	6.67E-09	25YrCancer	6.67E-09	0.00E+00	0.00E+00	0.00E+00	0.00E+00	0.00E+00	0.00E+00	0.00E+00	0.00E+00	0.00E+00	0.00E+00	0.00E+00
2381	ALL	748088.42	4039560.7	7.30E-09	25YrCancer	7.30E-09	0.00E+00	0.00E+00	0.00E+00	0.00E+00	0.00E+00	0.00E+00	0.00E+00	0.00E+00	0.00E+00	0.00E+00	0.00E+00
2382	ALL	748188.42	4039560.7	8.34E-09	25YrCancer	8.34E-09	0.00E+00	0.00E+00	0.00E+00	0.00E+00	0.00E+00	0.00E+00	0.00E+00	0.00E+00	0.00E+00	0.00E+00	0.00E+00
2383	ALL	749888.42	4039560.7	3.99E-08	25YrCancer	3.99E-08	0.00E+00	0.00E+00	0.00E+00	0.00E+00	0.00E+00	0.00E+00	0.00E+00	0.00E+00	0.00E+00	0.00E+00	0.00E+00
2384	ALL	749988.42	4039560.7	3.53E-08	25YrCancer	3.53E-08	0.00E+00	0.00E+00	0.00E+00	0.00E+00	0.00E+00	0.00E+00	0.00E+00	0.00E+00	0.00E+00	0.00E+00	0.00E+00
2385	ALL	750088.42	4039560.7	3.14E-08	25YrCancer	3.14E-08	0.00E+00	0.00E+00	0.00E+00	0.00E+00	0.00E+00	0.00E+00	0.00E+00	0.00E+00	0.00E+00	0.00E+00	0.00E+00
2386	ALL	750188.42	4039560.7	2.82E-08	25YrCancer	2.82E-08	0.00E+00	0.00E+00	0.00E+00	0.00E+00	0.00E+00	0.00E+00	0.00E+00	0.00E+00	0.00E+00	0.00E+00	0.00E+00
2387	ALL	750288.42	4039560.7	2.54E-08	25YrCancer	2.54E-08	0.00E+00	0.00E+00	0.00E+00	0.00E+00	0.00E+00	0.00E+00	0.00E+00	0.00E+00	0.00E+00	0.00E+00	0.00E+00
2388	ALL	750388.42	4039560.7	2.30E-08	25YrCancer	2.30E-08	0.00E+00	0.00E+00	0.00E+00	0.00E+00	0.00E+00	0.00E+00	0.00E+00	0.00E+00	0.00E+00	0.00E+00	0.00E+00
2389	ALL	750488.42	4039560.7	2.10E-08	25YrCancer	2.10E-08	0.00E+00	0.00E+00	0.00E+00	0.00E+00	0.00E+00	0.00E+00	0.00E+00	0.00E+00	0.00E+00	0.00E+00	0.00E+00
2390	ALL	750588.42	4039560.7	1.93E-08	25YrCancer	1.93E-08	0.00E+00	0.00E+00	0.00E+00	0.00E+00	0.00E+00	0.00E+00	0.00E+00	0.00E+00	0.00E+00	0.00E+00	0.00E+00
2391	ALL	750688.42	4039560.7	1.78E-08	25YrCancer	1.78E-08	0.00E+00	0.00E+00	0.00E+00	0.00E+00	0.00E+00	0.00E+00	0.00E+00	0.00E+00	0.00E+00	0.00E+00	0.00E+00
2392	ALL	750788.42	4039560.7	1.65E-08	25YrCancer	1.65E-08	0.00E+00	0.00E+00	0.00E+00	0.00E+00	0.00E+00	0.00E+00	0.00E+00	0.00E+00	0.00E+00	0.00E+00	0.00E+00
2393	ALL	750888.42	4039560.7	1.53E-08	25YrCancer	1.53E-08	0.00E+00	0.00E+00	0.00E+00	0.00E+00	0.00E+00	0.00E+00	0.00E+00	0.00E+00	0.00E+00	0.00E+00	0.00E+00
2394	ALL	750988.42	4039560.7	1.43E-08	25YrCancer	1.43E-08	0.00E+00	0.00E+00	0.00E+00	0.00E+00	0.00E+00	0.00E+00	0.00E+00	0.00E+00	0.00E+00	0.00E+00	0.00E+00
2395	ALL	751088.42	4039560.7	1.34E-08	25YrCancer	1.34E-08	0.00E+00	0.00E+00	0.00E+00	0.00E+00	0.00E+00	0.00E+00	0.00E+00	0.00E+00	0.00E+00	0.00E+00	0.00E+00

2396	ALL	751188.42	4039560.7	1.26E-08	25YrCancer	1.26E-08	0.00E+00	0.00E+00	0.00E+00	0.00E+00	0.00E+00	0.00E+00	0.00E+00	0.00E+00	0.00E+00	0.00E+00	0.00E+00
2397	ALL	751288.42	4039560.7	1.18E-08	25YrCancer	1.18E-08	0.00E+00	0.00E+00	0.00E+00	0.00E+00	0.00E+00	0.00E+00	0.00E+00	0.00E+00	0.00E+00	0.00E+00	0.00E+00
2398	ALL	751388.42	4039560.7	1.12E-08	25YrCancer	1.12E-08	0.00E+00	0.00E+00	0.00E+00	0.00E+00	0.00E+00	0.00E+00	0.00E+00	0.00E+00	0.00E+00	0.00E+00	0.00E+00
2399	ALL	752788.42	4039560.7	6.15E-09	25YrCancer	6.15E-09	0.00E+00	0.00E+00	0.00E+00	0.00E+00	0.00E+00	0.00E+00	0.00E+00	0.00E+00	0.00E+00	0.00E+00	0.00E+00
2400	ALL	752888.42	4039560.7	5.94E-09	25YrCancer	5.94E-09	0.00E+00	0.00E+00	0.00E+00	0.00E+00	0.00E+00	0.00E+00	0.00E+00	0.00E+00	0.00E+00	0.00E+00	0.00E+00
2401	ALL	752988.42	4039560.7	5.75E-09	25YrCancer	5.75E-09	0.00E+00	0.00E+00	0.00E+00	0.00E+00	0.00E+00	0.00E+00	0.00E+00	0.00E+00	0.00E+00	0.00E+00	0.00E+00
2402	ALL	753088.42	4039560.7	5.57E-09	25YrCancer	5.57E-09	0.00E+00	0.00E+00	0.00E+00	0.00E+00	0.00E+00	0.00E+00	0.00E+00	0.00E+00	0.00E+00	0.00E+00	0.00E+00
2403	ALL	753188.42	4039560.7	5.40E-09	25YrCancer	5.40E-09	0.00E+00	0.00E+00	0.00E+00	0.00E+00	0.00E+00	0.00E+00	0.00E+00	0.00E+00	0.00E+00	0.00E+00	0.00E+00
2404	ALL	746288.42	4039660.7	4.36E-09	25YrCancer	4.36E-09	0.00E+00	0.00E+00	0.00E+00	0.00E+00	0.00E+00	0.00E+00	0.00E+00	0.00E+00	0.00E+00	0.00E+00	0.00E+00
2405	ALL	746388.42	4039660.7	4.37E-09	25YrCancer	4.37E-09	0.00E+00	0.00E+00	0.00E+00	0.00E+00	0.00E+00	0.00E+00	0.00E+00	0.00E+00	0.00E+00	0.00E+00	0.00E+00
2406	ALL	746488.42	4039660.7	4.38E-09	25YrCancer	4.38E-09	0.00E+00	0.00E+00	0.00E+00	0.00E+00	0.00E+00	0.00E+00	0.00E+00	0.00E+00	0.00E+00	0.00E+00	0.00E+00
2407	ALL	746588.42	4039660.7	4.40E-09	25YrCancer	4.40E-09	0.00E+00	0.00E+00	0.00E+00	0.00E+00	0.00E+00	0.00E+00	0.00E+00	0.00E+00	0.00E+00	0.00E+00	0.00E+00
2408	ALL	746688.42	4039660.7	4.42E-09	25YrCancer	4.42E-09	0.00E+00	0.00E+00	0.00E+00	0.00E+00	0.00E+00	0.00E+00	0.00E+00	0.00E+00	0.00E+00	0.00E+00	0.00E+00
2409	ALL	746788.42	4039660.7	4.44E-09	25YrCancer	4.44E-09	0.00E+00	0.00E+00	0.00E+00	0.00E+00	0.00E+00	0.00E+00	0.00E+00	0.00E+00	0.00E+00	0.00E+00	0.00E+00
2410	ALL	746888.42	4039660.7	4.46E-09	25YrCancer	4.46E-09	0.00E+00	0.00E+00	0.00E+00	0.00E+00	0.00E+00	0.00E+00	0.00E+00	0.00E+00	0.00E+00	0.00E+00	0.00E+00
2411	ALL	746988.42	4039660.7	4.49E-09	25YrCancer	4.49E-09	0.00E+00	0.00E+00	0.00E+00	0.00E+00	0.00E+00	0.00E+00	0.00E+00	0.00E+00	0.00E+00	0.00E+00	0.00E+00
2412	ALL	747088.42	4039660.7	4.54E-09	25YrCancer	4.54E-09	0.00E+00	0.00E+00	0.00E+00	0.00E+00	0.00E+00	0.00E+00	0.00E+00	0.00E+00	0.00E+00	0.00E+00	0.00E+00
2413	ALL	747188.42	4039660.7	4.61E-09	25YrCancer	4.61E-09	0.00E+00	0.00E+00	0.00E+00	0.00E+00	0.00E+00	0.00E+00	0.00E+00	0.00E+00	0.00E+00	0.00E+00	0.00E+00
2414	ALL	747288.42	4039660.7	4.70E-09	25YrCancer	4.70E-09	0.00E+00	0.00E+00	0.00E+00	0.00E+00	0.00E+00	0.00E+00	0.00E+00	0.00E+00	0.00E+00	0.00E+00	0.00E+00
2415	ALL	747388.42	4039660.7	4.82E-09	25YrCancer	4.82E-09	0.00E+00	0.00E+00	0.00E+00	0.00E+00	0.00E+00	0.00E+00	0.00E+00	0.00E+00	0.00E+00	0.00E+00	0.00E+00
2416	ALL	747488.42	4039660.7	4.97E-09	25YrCancer	4.97E-09	0.00E+00	0.00E+00	0.00E+00	0.00E+00	0.00E+00	0.00E+00	0.00E+00	0.00E+00	0.00E+00	0.00E+00	0.00E+00
2417	ALL	747588.42	4039660.7	5.17E-09	25YrCancer	5.17E-09	0.00E+00	0.00E+00	0.00E+00	0.00E+00	0.00E+00	0.00E+00	0.00E+00	0.00E+00	0.00E+00	0.00E+00	0.00E+00
2418	ALL	747688.42	4039660.7	5.45E-09	25YrCancer	5.45E-09	0.00E+00	0.00E+00	0.00E+00	0.00E+00	0.00E+00	0.00E+00	0.00E+00	0.00E+00	0.00E+00	0.00E+00	0.00E+00
2419	ALL	747788.42	4039660.7	5.85E-09	25YrCancer	5.85E-09	0.00E+00	0.00E+00	0.00E+00	0.00E+00	0.00E+00	0.00E+00	0.00E+00	0.00E+00	0.00E+00	0.00E+00	0.00E+00
2420	ALL	747888.42	4039660.7	6.39E-09	25YrCancer	6.39E-09	0.00E+00	0.00E+00	0.00E+00	0.00E+00	0.00E+00	0.00E+00	0.00E+00	0.00E+00	0.00E+00	0.00E+00	0.00E+00
2421	ALL	747988.42	4039660.7	7.05E-09	25YrCancer	7.05E-09	0.00E+00	0.00E+00	0.00E+00	0.00E+00	0.00E+00	0.00E+00	0.00E+00	0.00E+00	0.00E+00	0.00E+00	0.00E+00
2422	ALL	748088.42	4039660.7	7.83E-09	25YrCancer	7.83E-09	0.00E+00	0.00E+00	0.00E+00	0.00E+00	0.00E+00	0.00E+00	0.00E+00	0.00E+00	0.00E+00	0.00E+00	0.00E+00
2423	ALL	748188.42	4039660.7	8.94E-09	25YrCancer	8.94E-09	0.00E+00	0.00E+00	0.00E+00	0.00E+00	0.00E+00	0.00E+00	0.00E+00	0.00E+00	0.00E+00	0.00E+00	0.00E+00
2424	ALL	749888.42	4039660.7	3.73E-08	25YrCancer	3.73E-08	0.00E+00	0.00E+00	0.00E+00	0.00E+00	0.00E+00	0.00E+00	0.00E+00	0.00E+00	0.00E+00	0.00E+00	0.00E+00
2425	ALL	749988.42	4039660.7	3.29E-08	25YrCancer	3.29E-08	0.00E+00	0.00E+00	0.00E+00	0.00E+00	0.00E+00	0.00E+00	0.00E+00	0.00E+00	0.00E+00	0.00E+00	0.00E+00
2426	ALL	750088.42	4039660.7	2.93E-08	25YrCancer	2.93E-08	0.00E+00	0.00E+00	0.00E+00	0.00E+00	0.00E+00	0.00E+00	0.00E+00	0.00E+00	0.00E+00	0.00E+00	0.00E+00
2427	ALL	750188.42	4039660.7	2.62E-08	25YrCancer	2.62E-08	0.00E+00	0.00E+00	0.00E+00	0.00E+00	0.00E+00	0.00E+00	0.00E+00	0.00E+00	0.00E+00	0.00E+00	0.00E+00
2428	ALL	750288.42	4039660.7	2.37E-08	25YrCancer	2.37E-08	0.00E+00	0.00E+00	0.00E+00	0.00E+00	0.00E+00	0.00E+00	0.00E+00	0.00E+00	0.00E+00	0.00E+00	0.00E+00
2429	ALL	750388.42	4039660.7	2.15E-08	25YrCancer	2.15E-08	0.00E+00	0.00E+00	0.00E+00	0.00E+00	0.00E+00	0.00E+00	0.00E+00	0.00E+00	0.00E+00	0.00E+00	0.00E+00
2430	ALL	750488.42	4039660.7	1.96E-08	25YrCancer	1.96E-08	0.00E+00	0.00E+00	0.00E+00	0.00E+00	0.00E+00	0.00E+00	0.00E+00	0.00E+00	0.00E+00	0.00E+00	0.00E+00
2431	ALL	750588.42	4039660.7	1.80E-08	25YrCancer	1.80E-08	0.00E+00	0.00E+00	0.00E+00	0.00E+00	0.00E+00	0.00E+00	0.00E+00	0.00E+00	0.00E+00	0.00E+00	0.00E+00
2432	ALL	750688.42	4039660.7	1.66E-08	25YrCancer	1.66E-08	0.00E+00	0.00E+00	0.00E+00	0.00E+00	0.00E+00	0.00E+00	0.00E+00	0.00E+00	0.00E+00	0.00E+00	0.00E+00
2433	ALL	750788.42	4039660.7	1.54E-08	25YrCancer	1.54E-08	0.00E+00	0.00E+00	0.00E+00	0.00E+00	0.00E+00	0.00E+00	0.00E+00	0.00E+00	0.00E+00	0.00E+00	0.00E+00
2434	ALL	750888.42	4039660.7	1.43E-08	25YrCancer	1.43E-08	0.00E+00	0.00E+00	0.00E+00	0.00E+00	0.00E+00	0.00E+00	0.00E+00	0.00E+00	0.00E+00	0.00E+00	0.00E+00
2435	ALL	750988.42	4039660.7	1.34E-08	25YrCancer	1.34E-08	0.00E+00	0.00E+00	0.00E+00	0.00E+00	0.00E+00	0.00E+00	0.00E+00	0.00E+00	0.00E+00	0.00E+00	0.00E+00
2436	ALL	751088.42	4039660.7	1.25E-08	25YrCancer	1.25E-08	0.00E+00	0.00E+00	0.00E+00	0.00E+00	0.00E+00	0.00E+00	0.00E+00	0.00E+00	0.00E+00	0.00E+00	0.00E+00
2437	ALL	751188.42	4039660.7	1.18E-08	25YrCancer	1.18E-08	0.00E+00	0.00E+00	0.00E+00	0.00E+00	0.00E+00	0.00E+00	0.00E+00	0.00E+00	0.00E+00	0.00E+00	0.00E+00
2438	ALL	751288.42	4039660.7	1.11E-08	25YrCancer	1.11E-08	0.00E+00	0.00E+00	0.00E+00	0.00E+00	0.00E+00	0.00E+00	0.00E+00	0.00E+00	0.00E+00	0.00E+00	0.00E+00
2439	ALL	751388.42	4039660.7	1.05E-08	25YrCancer	1.05E-08	0.00E+00	0.00E+00	0.00E+00	0.00E+00	0.00E+00	0.00E+00	0.00E+00	0.00E+00	0.00E+00	0.00E+00	0.00E+00
2440	ALL	752788.42	4039660.7	5.90E-09	25YrCancer	5.90E-09	0.00E+00	0.00E+00	0.00E+00	0.00E+00	0.00E+00	0.00E+00	0.00E+00	0.00E+00	0.00E+00	0.00E+00	0.00E+00
2441	ALL	752888.42	4039660.7	5.71E-09	25YrCancer	5.71E-09	0.00E+00	0.00E+00	0.00E+00	0.00E+00	0.00E+00	0.00E+00	0.00E+00	0.00E+00	0.00E+00	0.00E+00	0.00E+00
2442	ALL	752988.42	4039660.7	5.53E-09	25YrCancer	5.53E-09	0.00E+00	0.00E+00	0.00E+00	0.00E+00	0.00E+00	0.00E+00	0.00E+00	0.00E+00	0.00E+00	0.00E+00	0.00E+00
2443	ALL	753088.42	4039660.7	5.36E-09	25YrCancer	5.36E-09	0.00E+00	0.00E+00	0.00E+00	0.00E+00	0.00E+00	0.00E+00	0.00E+00	0.00E+00	0.00E+00	0.00E+00	0.00E+00
2444	ALL	753188.42	4039660.7	5.20E-09	25YrCancer	5.20E-09	0.00E+00	0.00E+00	0.00E+00	0.00E+00	0.00E+00	0.00E+00	0.00E+00	0.00E+00	0.00E+00	0.00E+00	0.00E+00
2445	ALL	746288.42	4039760.7	4.42E-09	25YrCancer	4.42E-09	0.00E+00	0.00E+00	0.00E+00	0.00E+00	0.00E+00	0.00E+00	0.00E+00	0.00E+00	0.00E+00	0.00E+00	0.00E+00
2446	ALL	746388.42	4039760.7	4.45E-09	25YrCancer	4.45E-09	0.00E+00	0.00E+00	0.00E+00	0.00E+00	0.00E+00	0.00E+00	0.00E+00	0.00E+00	0.00E+00	0.00E+00	0.00E+00

2447	ALL	746488.42	4039760.7	4.48E-09	25YrCancer	4.48E-09	0.00E+00	0.00E+00	0.00E+00	0.00E+00	0.00E+00	0.00E+00	0.00E+00	0.00E+00	0.00E+00	0.00E+00	0.00E+00
2448	ALL	746588.42	4039760.7	4.51E-09	25YrCancer	4.51E-09	0.00E+00	0.00E+00	0.00E+00	0.00E+00	0.00E+00	0.00E+00	0.00E+00	0.00E+00	0.00E+00	0.00E+00	0.00E+00
2449	ALL	746688.42	4039760.7	4.55E-09	25YrCancer	4.55E-09	0.00E+00	0.00E+00	0.00E+00	0.00E+00	0.00E+00	0.00E+00	0.00E+00	0.00E+00	0.00E+00	0.00E+00	0.00E+00
2450	ALL	746788.42	4039760.7	4.58E-09	25YrCancer	4.58E-09	0.00E+00	0.00E+00	0.00E+00	0.00E+00	0.00E+00	0.00E+00	0.00E+00	0.00E+00	0.00E+00	0.00E+00	0.00E+00
2451	ALL	746888.42	4039760.7	4.60E-09	25YrCancer	4.60E-09	0.00E+00	0.00E+00	0.00E+00	0.00E+00	0.00E+00	0.00E+00	0.00E+00	0.00E+00	0.00E+00	0.00E+00	0.00E+00
2452	ALL	746988.42	4039760.7	4.63E-09	25YrCancer	4.63E-09	0.00E+00	0.00E+00	0.00E+00	0.00E+00	0.00E+00	0.00E+00	0.00E+00	0.00E+00	0.00E+00	0.00E+00	0.00E+00
2453	ALL	747088.42	4039760.7	4.68E-09	25YrCancer	4.68E-09	0.00E+00	0.00E+00	0.00E+00	0.00E+00	0.00E+00	0.00E+00	0.00E+00	0.00E+00	0.00E+00	0.00E+00	0.00E+00
2454	ALL	747188.42	4039760.7	4.75E-09	25YrCancer	4.75E-09	0.00E+00	0.00E+00	0.00E+00	0.00E+00	0.00E+00	0.00E+00	0.00E+00	0.00E+00	0.00E+00	0.00E+00	0.00E+00
2455	ALL	747288.42	4039760.7	4.85E-09	25YrCancer	4.85E-09	0.00E+00	0.00E+00	0.00E+00	0.00E+00	0.00E+00	0.00E+00	0.00E+00	0.00E+00	0.00E+00	0.00E+00	0.00E+00
2456	ALL	747388.42	4039760.7	4.97E-09	25YrCancer	4.97E-09	0.00E+00	0.00E+00	0.00E+00	0.00E+00	0.00E+00	0.00E+00	0.00E+00	0.00E+00	0.00E+00	0.00E+00	0.00E+00
2457	ALL	747488.42	4039760.7	5.13E-09	25YrCancer	5.13E-09	0.00E+00	0.00E+00	0.00E+00	0.00E+00	0.00E+00	0.00E+00	0.00E+00	0.00E+00	0.00E+00	0.00E+00	0.00E+00
2458	ALL	747588.42	4039760.7	5.34E-09	25YrCancer	5.34E-09	0.00E+00	0.00E+00	0.00E+00	0.00E+00	0.00E+00	0.00E+00	0.00E+00	0.00E+00	0.00E+00	0.00E+00	0.00E+00
2459	ALL	747688.42	4039760.7	5.64E-09	25YrCancer	5.64E-09	0.00E+00	0.00E+00	0.00E+00	0.00E+00	0.00E+00	0.00E+00	0.00E+00	0.00E+00	0.00E+00	0.00E+00	0.00E+00
2460	ALL	747788.42	4039760.7	6.04E-09	25YrCancer	6.04E-09	0.00E+00	0.00E+00	0.00E+00	0.00E+00	0.00E+00	0.00E+00	0.00E+00	0.00E+00	0.00E+00	0.00E+00	0.00E+00
2461	ALL	747888.42	4039760.7	6.61E-09	25YrCancer	6.61E-09	0.00E+00	0.00E+00	0.00E+00	0.00E+00	0.00E+00	0.00E+00	0.00E+00	0.00E+00	0.00E+00	0.00E+00	0.00E+00
2462	ALL	747988.42	4039760.7	7.42E-09	25YrCancer	7.42E-09	0.00E+00	0.00E+00	0.00E+00	0.00E+00	0.00E+00	0.00E+00	0.00E+00	0.00E+00	0.00E+00	0.00E+00	0.00E+00
2463	ALL	748088.42	4039760.7	8.51E-09	25YrCancer	8.51E-09	0.00E+00	0.00E+00	0.00E+00	0.00E+00	0.00E+00	0.00E+00	0.00E+00	0.00E+00	0.00E+00	0.00E+00	0.00E+00
2464	ALL	748188.42	4039760.7	9.85E-09	25YrCancer	9.85E-09	0.00E+00	0.00E+00	0.00E+00	0.00E+00	0.00E+00	0.00E+00	0.00E+00	0.00E+00	0.00E+00	0.00E+00	0.00E+00
2465	ALL	749888.42	4039760.7	3.42E-08	25YrCancer	3.42E-08	0.00E+00	0.00E+00	0.00E+00	0.00E+00	0.00E+00	0.00E+00	0.00E+00	0.00E+00	0.00E+00	0.00E+00	0.00E+00
2466	ALL	749988.42	4039760.7	3.02E-08	25YrCancer	3.02E-08	0.00E+00	0.00E+00	0.00E+00	0.00E+00	0.00E+00	0.00E+00	0.00E+00	0.00E+00	0.00E+00	0.00E+00	0.00E+00
2467	ALL	750088.42	4039760.7	2.68E-08	25YrCancer	2.68E-08	0.00E+00	0.00E+00	0.00E+00	0.00E+00	0.00E+00	0.00E+00	0.00E+00	0.00E+00	0.00E+00	0.00E+00	0.00E+00
2468	ALL	750188.42	4039760.7	2.41E-08	25YrCancer	2.41E-08	0.00E+00	0.00E+00	0.00E+00	0.00E+00	0.00E+00	0.00E+00	0.00E+00	0.00E+00	0.00E+00	0.00E+00	0.00E+00
2469	ALL	750288.42	4039760.7	2.17E-08	25YrCancer	2.17E-08	0.00E+00	0.00E+00	0.00E+00	0.00E+00	0.00E+00	0.00E+00	0.00E+00	0.00E+00	0.00E+00	0.00E+00	0.00E+00
2470	ALL	750388.42	4039760.7	1.98E-08	25YrCancer	1.98E-08	0.00E+00	0.00E+00	0.00E+00	0.00E+00	0.00E+00	0.00E+00	0.00E+00	0.00E+00	0.00E+00	0.00E+00	0.00E+00
2471	ALL	750488.42	4039760.7	1.81E-08	25YrCancer	1.81E-08	0.00E+00	0.00E+00	0.00E+00	0.00E+00	0.00E+00	0.00E+00	0.00E+00	0.00E+00	0.00E+00	0.00E+00	0.00E+00
2472	ALL	750588.42	4039760.7	1.66E-08	25YrCancer	1.66E-08	0.00E+00	0.00E+00	0.00E+00	0.00E+00	0.00E+00	0.00E+00	0.00E+00	0.00E+00	0.00E+00	0.00E+00	0.00E+00
2473	ALL	750688.42	4039760.7	1.54E-08	25YrCancer	1.54E-08	0.00E+00	0.00E+00	0.00E+00	0.00E+00	0.00E+00	0.00E+00	0.00E+00	0.00E+00	0.00E+00	0.00E+00	0.00E+00
2474	ALL	750788.42	4039760.7	1.43E-08	25YrCancer	1.43E-08	0.00E+00	0.00E+00	0.00E+00	0.00E+00	0.00E+00	0.00E+00	0.00E+00	0.00E+00	0.00E+00	0.00E+00	0.00E+00
2475	ALL	750888.42	4039760.7	1.33E-08	25YrCancer	1.33E-08	0.00E+00	0.00E+00	0.00E+00	0.00E+00	0.00E+00	0.00E+00	0.00E+00	0.00E+00	0.00E+00	0.00E+00	0.00E+00
2476	ALL	750988.42	4039760.7	1.24E-08	25YrCancer	1.24E-08	0.00E+00	0.00E+00	0.00E+00	0.00E+00	0.00E+00	0.00E+00	0.00E+00	0.00E+00	0.00E+00	0.00E+00	0.00E+00
2477	ALL	751088.42	4039760.7	1.17E-08	25YrCancer	1.17E-08	0.00E+00	0.00E+00	0.00E+00	0.00E+00	0.00E+00	0.00E+00	0.00E+00	0.00E+00	0.00E+00	0.00E+00	0.00E+00
2478	ALL	751188.42	4039760.7	1.10E-08	25YrCancer	1.10E-08	0.00E+00	0.00E+00	0.00E+00	0.00E+00	0.00E+00	0.00E+00	0.00E+00	0.00E+00	0.00E+00	0.00E+00	0.00E+00
2479	ALL	751288.42	4039760.7	1.04E-08	25YrCancer	1.04E-08	0.00E+00	0.00E+00	0.00E+00	0.00E+00	0.00E+00	0.00E+00	0.00E+00	0.00E+00	0.00E+00	0.00E+00	0.00E+00
2480	ALL	751388.42	4039760.7	9.87E-09	25YrCancer	9.87E-09	0.00E+00	0.00E+00	0.00E+00	0.00E+00	0.00E+00	0.00E+00	0.00E+00	0.00E+00	0.00E+00	0.00E+00	0.00E+00
2481	ALL	752788.42	4039760.7	5.65E-09	25YrCancer	5.65E-09	0.00E+00	0.00E+00	0.00E+00	0.00E+00	0.00E+00	0.00E+00	0.00E+00	0.00E+00	0.00E+00	0.00E+00	0.00E+00
2482	ALL	752888.42	4039760.7	5.47E-09	25YrCancer	5.47E-09	0.00E+00	0.00E+00	0.00E+00	0.00E+00	0.00E+00	0.00E+00	0.00E+00	0.00E+00	0.00E+00	0.00E+00	0.00E+00
2483	ALL	752988.42	4039760.7	5.31E-09	25YrCancer	5.31E-09	0.00E+00	0.00E+00	0.00E+00	0.00E+00	0.00E+00	0.00E+00	0.00E+00	0.00E+00	0.00E+00	0.00E+00	0.00E+00
2484	ALL	753088.42	4039760.7	5.15E-09	25YrCancer	5.15E-09	0.00E+00	0.00E+00	0.00E+00	0.00E+00	0.00E+00	0.00E+00	0.00E+00	0.00E+00	0.00E+00	0.00E+00	0.00E+00
2485	ALL	753188.42	4039760.7	5.00E-09	25YrCancer	5.00E-09	0.00E+00	0.00E+00	0.00E+00	0.00E+00	0.00E+00	0.00E+00	0.00E+00	0.00E+00	0.00E+00	0.00E+00	0.00E+00
2486	ALL	746588.42	4039860.7	4.60E-09	25YrCancer	4.60E-09	0.00E+00	0.00E+00	0.00E+00	0.00E+00	0.00E+00	0.00E+00	0.00E+00	0.00E+00	0.00E+00	0.00E+00	0.00E+00
2487	ALL	746688.42	4039860.7	4.66E-09	25YrCancer	4.66E-09	0.00E+00	0.00E+00	0.00E+00	0.00E+00	0.00E+00	0.00E+00	0.00E+00	0.00E+00	0.00E+00	0.00E+00	0.00E+00
2488	ALL	746788.42	4039860.7	4.71E-09	25YrCancer	4.71E-09	0.00E+00	0.00E+00	0.00E+00	0.00E+00	0.00E+00	0.00E+00	0.00E+00	0.00E+00	0.00E+00	0.00E+00	0.00E+00
2489	ALL	746888.42	4039860.7	4.77E-09	25YrCancer	4.77E-09	0.00E+00	0.00E+00	0.00E+00	0.00E+00	0.00E+00	0.00E+00	0.00E+00	0.00E+00	0.00E+00	0.00E+00	0.00E+00
2490	ALL	746988.42	4039860.7	4.82E-09	25YrCancer	4.82E-09	0.00E+00	0.00E+00	0.00E+00	0.00E+00	0.00E+00	0.00E+00	0.00E+00	0.00E+00	0.00E+00	0.00E+00	0.00E+00
2491	ALL	747088.42	4039860.7	4.89E-09	25YrCancer	4.89E-09	0.00E+00	0.00E+00	0.00E+00	0.00E+00	0.00E+00	0.00E+00	0.00E+00	0.00E+00	0.00E+00	0.00E+00	0.00E+00
2492	ALL	747188.42	4039860.7	4.97E-09	25YrCancer	4.97E-09	0.00E+00	0.00E+00	0.00E+00	0.00E+00	0.00E+00	0.00E+00	0.00E+00	0.00E+00	0.00E+00	0.00E+00	0.00E+00
2493	ALL	747288.42	4039860.7	5.07E-09	25YrCancer	5.07E-09	0.00E+00	0.00E+00	0.00E+00	0.00E+00	0.00E+00	0.00E+00	0.00E+00	0.00E+00	0.00E+00	0.00E+00	0.00E+00
2494	ALL	747388.42	4039860.7	5.19E-09	25YrCancer	5.19E-09	0.00E+00	0.00E+00	0.00E+00	0.00E+00	0.00E+00	0.00E+00	0.00E+00	0.00E+00	0.00E+00	0.00E+00	0.00E+00
2495	ALL	747488.42	4039860.7	5.34E-09	25YrCancer	5.34E-09	0.00E+00	0.00E+00	0.00E+00	0.00E+00	0.00E+00	0.00E+00	0.00E+00	0.00E+00	0.00E+00	0.00E+00	0.00E+00
2496	ALL	747588.42	4039860.7	5.56E-09	25YrCancer	5.56E-09	0.00E+00	0.00E+00	0.00E+00	0.00E+00	0.00E+00	0.00E+00	0.00E+00	0.00E+00	0.00E+00	0.00E+00	0.00E+00
2497	ALL	747688.42	4039860.7	5.88E-09	25YrCancer	5.88E-09	0.00E+00	0.00E+00	0.00E+00	0.00E+00	0.00E+00	0.00E+00	0.00E+00	0.00E+00	0.00E+00	0.00E+00	0.00E+00

2498	ALL	747788.42	4039860.7	6.33E-09	25YrCancer	6.33E-09	0.00E+00	0.00E+00	0.00E+00	0.00E+00	0.00E+00	0.00E+00	0.00E+00	0.00E+00	0.00E+00	0.00E+00	0.00E+00
2499	ALL	747888.42	4039860.7	6.97E-09	25YrCancer	6.97E-09	0.00E+00	0.00E+00	0.00E+00	0.00E+00	0.00E+00	0.00E+00	0.00E+00	0.00E+00	0.00E+00	0.00E+00	0.00E+00
2500	ALL	747988.42	4039860.7	7.90E-09	25YrCancer	7.90E-09	0.00E+00	0.00E+00	0.00E+00	0.00E+00	0.00E+00	0.00E+00	0.00E+00	0.00E+00	0.00E+00	0.00E+00	0.00E+00
2501	ALL	748088.42	4039860.7	9.28E-09	25YrCancer	9.28E-09	0.00E+00	0.00E+00	0.00E+00	0.00E+00	0.00E+00	0.00E+00	0.00E+00	0.00E+00	0.00E+00	0.00E+00	0.00E+00
2502	ALL	749888.42	4039860.7	3.07E-08	25YrCancer	3.07E-08	0.00E+00	0.00E+00	0.00E+00	0.00E+00	0.00E+00	0.00E+00	0.00E+00	0.00E+00	0.00E+00	0.00E+00	0.00E+00
2503	ALL	749988.42	4039860.7	2.71E-08	25YrCancer	2.71E-08	0.00E+00	0.00E+00	0.00E+00	0.00E+00	0.00E+00	0.00E+00	0.00E+00	0.00E+00	0.00E+00	0.00E+00	0.00E+00
2504	ALL	750088.42	4039860.7	2.42E-08	25YrCancer	2.42E-08	0.00E+00	0.00E+00	0.00E+00	0.00E+00	0.00E+00	0.00E+00	0.00E+00	0.00E+00	0.00E+00	0.00E+00	0.00E+00
2505	ALL	750188.42	4039860.7	2.17E-08	25YrCancer	2.17E-08	0.00E+00	0.00E+00	0.00E+00	0.00E+00	0.00E+00	0.00E+00	0.00E+00	0.00E+00	0.00E+00	0.00E+00	0.00E+00
2506	ALL	750288.42	4039860.7	1.97E-08	25YrCancer	1.97E-08	0.00E+00	0.00E+00	0.00E+00	0.00E+00	0.00E+00	0.00E+00	0.00E+00	0.00E+00	0.00E+00	0.00E+00	0.00E+00
2507	ALL	750388.42	4039860.7	1.79E-08	25YrCancer	1.79E-08	0.00E+00	0.00E+00	0.00E+00	0.00E+00	0.00E+00	0.00E+00	0.00E+00	0.00E+00	0.00E+00	0.00E+00	0.00E+00
2508	ALL	750488.42	4039860.7	1.64E-08	25YrCancer	1.64E-08	0.00E+00	0.00E+00	0.00E+00	0.00E+00	0.00E+00	0.00E+00	0.00E+00	0.00E+00	0.00E+00	0.00E+00	0.00E+00
2509	ALL	750588.42	4039860.7	1.52E-08	25YrCancer	1.52E-08	0.00E+00	0.00E+00	0.00E+00	0.00E+00	0.00E+00	0.00E+00	0.00E+00	0.00E+00	0.00E+00	0.00E+00	0.00E+00
2510	ALL	750688.42	4039860.7	1.41E-08	25YrCancer	1.41E-08	0.00E+00	0.00E+00	0.00E+00	0.00E+00	0.00E+00	0.00E+00	0.00E+00	0.00E+00	0.00E+00	0.00E+00	0.00E+00
2511	ALL	750788.42	4039860.7	1.31E-08	25YrCancer	1.31E-08	0.00E+00	0.00E+00	0.00E+00	0.00E+00	0.00E+00	0.00E+00	0.00E+00	0.00E+00	0.00E+00	0.00E+00	0.00E+00
2512	ALL	750888.42	4039860.7	1.22E-08	25YrCancer	1.22E-08	0.00E+00	0.00E+00	0.00E+00	0.00E+00	0.00E+00	0.00E+00	0.00E+00	0.00E+00	0.00E+00	0.00E+00	0.00E+00
2513	ALL	750988.42	4039860.7	1.15E-08	25YrCancer	1.15E-08	0.00E+00	0.00E+00	0.00E+00	0.00E+00	0.00E+00	0.00E+00	0.00E+00	0.00E+00	0.00E+00	0.00E+00	0.00E+00
2514	ALL	751088.42	4039860.7	1.08E-08	25YrCancer	1.08E-08	0.00E+00	0.00E+00	0.00E+00	0.00E+00	0.00E+00	0.00E+00	0.00E+00	0.00E+00	0.00E+00	0.00E+00	0.00E+00
2515	ALL	751188.42	4039860.7	1.02E-08	25YrCancer	1.02E-08	0.00E+00	0.00E+00	0.00E+00	0.00E+00	0.00E+00	0.00E+00	0.00E+00	0.00E+00	0.00E+00	0.00E+00	0.00E+00
2516	ALL	751288.42	4039860.7	9.69E-09	25YrCancer	9.69E-09	0.00E+00	0.00E+00	0.00E+00	0.00E+00	0.00E+00	0.00E+00	0.00E+00	0.00E+00	0.00E+00	0.00E+00	0.00E+00
2517	ALL	751388.42	4039860.7	9.21E-09	25YrCancer	9.21E-09	0.00E+00	0.00E+00	0.00E+00	0.00E+00	0.00E+00	0.00E+00	0.00E+00	0.00E+00	0.00E+00	0.00E+00	0.00E+00
2518	ALL	752788.42	4039860.7	5.40E-09	25YrCancer	5.40E-09	0.00E+00	0.00E+00	0.00E+00	0.00E+00	0.00E+00	0.00E+00	0.00E+00	0.00E+00	0.00E+00	0.00E+00	0.00E+00
2519	ALL	752888.42	4039860.7	5.24E-09	25YrCancer	5.24E-09	0.00E+00	0.00E+00	0.00E+00	0.00E+00	0.00E+00	0.00E+00	0.00E+00	0.00E+00	0.00E+00	0.00E+00	0.00E+00
2520	ALL	752988.42	4039860.7	5.09E-09	25YrCancer	5.09E-09	0.00E+00	0.00E+00	0.00E+00	0.00E+00	0.00E+00	0.00E+00	0.00E+00	0.00E+00	0.00E+00	0.00E+00	0.00E+00
2521	ALL	753088.42	4039860.7	4.95E-09	25YrCancer	4.95E-09	0.00E+00	0.00E+00	0.00E+00	0.00E+00	0.00E+00	0.00E+00	0.00E+00	0.00E+00	0.00E+00	0.00E+00	0.00E+00
2522	ALL	753188.42	4039860.7	4.81E-09	25YrCancer	4.81E-09	0.00E+00	0.00E+00	0.00E+00	0.00E+00	0.00E+00	0.00E+00	0.00E+00	0.00E+00	0.00E+00	0.00E+00	0.00E+00
2523	ALL	749888.42	4039960.7	2.68E-08	25YrCancer	2.68E-08	0.00E+00	0.00E+00	0.00E+00	0.00E+00	0.00E+00	0.00E+00	0.00E+00	0.00E+00	0.00E+00	0.00E+00	0.00E+00
2524	ALL	749988.42	4039960.7	2.38E-08	25YrCancer	2.38E-08	0.00E+00	0.00E+00	0.00E+00	0.00E+00	0.00E+00	0.00E+00	0.00E+00	0.00E+00	0.00E+00	0.00E+00	0.00E+00
2525	ALL	750088.42	4039960.7	2.13E-08	25YrCancer	2.13E-08	0.00E+00	0.00E+00	0.00E+00	0.00E+00	0.00E+00	0.00E+00	0.00E+00	0.00E+00	0.00E+00	0.00E+00	0.00E+00
2526	ALL	750188.42	4039960.7	1.92E-08	25YrCancer	1.92E-08	0.00E+00	0.00E+00	0.00E+00	0.00E+00	0.00E+00	0.00E+00	0.00E+00	0.00E+00	0.00E+00	0.00E+00	0.00E+00
2527	ALL	750288.42	4039960.7	1.75E-08	25YrCancer	1.75E-08	0.00E+00	0.00E+00	0.00E+00	0.00E+00	0.00E+00	0.00E+00	0.00E+00	0.00E+00	0.00E+00	0.00E+00	0.00E+00
2528	ALL	750388.42	4039960.7	1.60E-08	25YrCancer	1.60E-08	0.00E+00	0.00E+00	0.00E+00	0.00E+00	0.00E+00	0.00E+00	0.00E+00	0.00E+00	0.00E+00	0.00E+00	0.00E+00
2529	ALL	750488.42	4039960.7	1.48E-08	25YrCancer	1.48E-08	0.00E+00	0.00E+00	0.00E+00	0.00E+00	0.00E+00	0.00E+00	0.00E+00	0.00E+00	0.00E+00	0.00E+00	0.00E+00
2530	ALL	750588.42	4039960.7	1.37E-08	25YrCancer	1.37E-08	0.00E+00	0.00E+00	0.00E+00	0.00E+00	0.00E+00	0.00E+00	0.00E+00	0.00E+00	0.00E+00	0.00E+00	0.00E+00
2531	ALL	750688.42	4039960.7	1.27E-08	25YrCancer	1.27E-08	0.00E+00	0.00E+00	0.00E+00	0.00E+00	0.00E+00	0.00E+00	0.00E+00	0.00E+00	0.00E+00	0.00E+00	0.00E+00
2532	ALL	750788.42	4039960.7	1.19E-08	25YrCancer	1.19E-08	0.00E+00	0.00E+00	0.00E+00	0.00E+00	0.00E+00	0.00E+00	0.00E+00	0.00E+00	0.00E+00	0.00E+00	0.00E+00
2533	ALL	750888.42	4039960.7	1.12E-08	25YrCancer	1.12E-08	0.00E+00	0.00E+00	0.00E+00	0.00E+00	0.00E+00	0.00E+00	0.00E+00	0.00E+00	0.00E+00	0.00E+00	0.00E+00
2534	ALL	750988.42	4039960.7	1.05E-08	25YrCancer	1.05E-08	0.00E+00	0.00E+00	0.00E+00	0.00E+00	0.00E+00	0.00E+00	0.00E+00	0.00E+00	0.00E+00	0.00E+00	0.00E+00
2535	ALL	751088.42	4039960.7	9.96E-09	25YrCancer	9.96E-09	0.00E+00	0.00E+00	0.00E+00	0.00E+00	0.00E+00	0.00E+00	0.00E+00	0.00E+00	0.00E+00	0.00E+00	0.00E+00
2536	ALL	751188.42	4039960.7	9.44E-09	25YrCancer	9.44E-09	0.00E+00	0.00E+00	0.00E+00	0.00E+00	0.00E+00	0.00E+00	0.00E+00	0.00E+00	0.00E+00	0.00E+00	0.00E+00
2537	ALL	751288.42	4039960.7	8.98E-09	25YrCancer	8.98E-09	0.00E+00	0.00E+00	0.00E+00	0.00E+00	0.00E+00	0.00E+00	0.00E+00	0.00E+00	0.00E+00	0.00E+00	0.00E+00
2538	ALL	751388.42	4039960.7	8.58E-09	25YrCancer	8.58E-09	0.00E+00	0.00E+00	0.00E+00	0.00E+00	0.00E+00	0.00E+00	0.00E+00	0.00E+00	0.00E+00	0.00E+00	0.00E+00
2539	ALL	752788.42	4039960.7	5.16E-09	25YrCancer	5.16E-09	0.00E+00	0.00E+00	0.00E+00	0.00E+00	0.00E+00	0.00E+00	0.00E+00	0.00E+00	0.00E+00	0.00E+00	0.00E+00
2540	ALL	752888.42	4039960.7	5.02E-09	25YrCancer	5.02E-09	0.00E+00	0.00E+00	0.00E+00	0.00E+00	0.00E+00	0.00E+00	0.00E+00	0.00E+00	0.00E+00	0.00E+00	0.00E+00
2541	ALL	752988.42	4039960.7	4.88E-09	25YrCancer	4.88E-09	0.00E+00	0.00E+00	0.00E+00	0.00E+00	0.00E+00	0.00E+00	0.00E+00	0.00E+00	0.00E+00	0.00E+00	0.00E+00
2542	ALL	753088.42	4039960.7	4.75E-09	25YrCancer	4.75E-09	0.00E+00	0.00E+00	0.00E+00	0.00E+00	0.00E+00	0.00E+00	0.00E+00	0.00E+00	0.00E+00	0.00E+00	0.00E+00
2543	ALL	753188.42	4039960.7	4.62E-09	25YrCancer	4.62E-09	0.00E+00	0.00E+00	0.00E+00	0.00E+00	0.00E+00	0.00E+00	0.00E+00	0.00E+00	0.00E+00	0.00E+00	0.00E+00
2544	ALL	746288.42	4040060.7	4.58E-09	25YrCancer	4.58E-09	0.00E+00	0.00E+00	0.00E+00	0.00E+00	0.00E+00	0.00E+00	0.00E+00	0.00E+00	0.00E+00	0.00E+00	0.00E+00
2545	ALL	746388.42	4040060.7	4.65E-09	25YrCancer	4.65E-09	0.00E+00	0.00E+00	0.00E+00	0.00E+00	0.00E+00	0.00E+00	0.00E+00	0.00E+00	0.00E+00	0.00E+00	0.00E+00
2546	ALL	746488.42	4040060.7	4.72E-09	25YrCancer	4.72E-09	0.00E+00	0.00E+00	0.00E+00	0.00E+00	0.00E+00	0.00E+00	0.00E+00	0.00E+00	0.00E+00	0.00E+00	0.00E+00
2547	ALL	752788.42	4040060.7	4.94E-09	25YrCancer	4.94E-09	0.00E+00	0.00E+00	0.00E+00	0.00E+00	0.00E+00	0.00E+00	0.00E+00	0.00E+00	0.00E+00	0.00E+00	0.00E+00
2548	ALL	752888.42	4040060.7	4.81E-09	25YrCancer	4.81E-09	0.00E+00	0.00E+00	0.00E+00	0.00E+00	0.00E+00	0.00E+00	0.00E+00	0.00E+00	0.00E+00	0.00E+00	0.00E+00

2549	ALL	752988.42	4040060.7	4.68E-09	25YrCancer	4.68E-09	0.00E+00	0.00E+00	0.00E+00	0.00E+00	0.00E+00	0.00E+00	0.00E+00	0.00E+00	0.00E+00	0.00E+00	0.00E+00
2550	ALL	753088.42	4040060.7	4.56E-09	25YrCancer	4.56E-09	0.00E+00	0.00E+00	0.00E+00	0.00E+00	0.00E+00	0.00E+00	0.00E+00	0.00E+00	0.00E+00	0.00E+00	0.00E+00
2551	ALL	753188.42	4040060.7	4.45E-09	25YrCancer	4.45E-09	0.00E+00	0.00E+00	0.00E+00	0.00E+00	0.00E+00	0.00E+00	0.00E+00	0.00E+00	0.00E+00	0.00E+00	0.00E+00
2552	ALL	746288.42	4040160.7	4.71E-09	25YrCancer	4.71E-09	0.00E+00	0.00E+00	0.00E+00	0.00E+00	0.00E+00	0.00E+00	0.00E+00	0.00E+00	0.00E+00	0.00E+00	0.00E+00
2553	ALL	746388.42	4040160.7	4.80E-09	25YrCancer	4.80E-09	0.00E+00	0.00E+00	0.00E+00	0.00E+00	0.00E+00	0.00E+00	0.00E+00	0.00E+00	0.00E+00	0.00E+00	0.00E+00
2554	ALL	746488.42	4040160.7	4.89E-09	25YrCancer	4.89E-09	0.00E+00	0.00E+00	0.00E+00	0.00E+00	0.00E+00	0.00E+00	0.00E+00	0.00E+00	0.00E+00	0.00E+00	0.00E+00
2555	ALL	751488.42	4040160.7	7.03E-09	25YrCancer	7.03E-09	0.00E+00	0.00E+00	0.00E+00	0.00E+00	0.00E+00	0.00E+00	0.00E+00	0.00E+00	0.00E+00	0.00E+00	0.00E+00
2556	ALL	751588.42	4040160.7	6.77E-09	25YrCancer	6.77E-09	0.00E+00	0.00E+00	0.00E+00	0.00E+00	0.00E+00	0.00E+00	0.00E+00	0.00E+00	0.00E+00	0.00E+00	0.00E+00
2557	ALL	751688.42	4040160.7	6.53E-09	25YrCancer	6.53E-09	0.00E+00	0.00E+00	0.00E+00	0.00E+00	0.00E+00	0.00E+00	0.00E+00	0.00E+00	0.00E+00	0.00E+00	0.00E+00
2558	ALL	751788.42	4040160.7	6.30E-09	25YrCancer	6.30E-09	0.00E+00	0.00E+00	0.00E+00	0.00E+00	0.00E+00	0.00E+00	0.00E+00	0.00E+00	0.00E+00	0.00E+00	0.00E+00
2559	ALL	751888.42	4040160.7	6.09E-09	25YrCancer	6.09E-09	0.00E+00	0.00E+00	0.00E+00	0.00E+00	0.00E+00	0.00E+00	0.00E+00	0.00E+00	0.00E+00	0.00E+00	0.00E+00
2560	ALL	751988.42	4040160.7	5.90E-09	25YrCancer	5.90E-09	0.00E+00	0.00E+00	0.00E+00	0.00E+00	0.00E+00	0.00E+00	0.00E+00	0.00E+00	0.00E+00	0.00E+00	0.00E+00
2561	ALL	752088.42	4040160.7	5.72E-09	25YrCancer	5.72E-09	0.00E+00	0.00E+00	0.00E+00	0.00E+00	0.00E+00	0.00E+00	0.00E+00	0.00E+00	0.00E+00	0.00E+00	0.00E+00
2562	ALL	752188.42	4040160.7	5.55E-09	25YrCancer	5.55E-09	0.00E+00	0.00E+00	0.00E+00	0.00E+00	0.00E+00	0.00E+00	0.00E+00	0.00E+00	0.00E+00	0.00E+00	0.00E+00
2563	ALL	752288.42	4040160.7	5.39E-09	25YrCancer	5.39E-09	0.00E+00	0.00E+00	0.00E+00	0.00E+00	0.00E+00	0.00E+00	0.00E+00	0.00E+00	0.00E+00	0.00E+00	0.00E+00
2564	ALL	752388.42	4040160.7	5.24E-09	25YrCancer	5.24E-09	0.00E+00	0.00E+00	0.00E+00	0.00E+00	0.00E+00	0.00E+00	0.00E+00	0.00E+00	0.00E+00	0.00E+00	0.00E+00
2565	ALL	752488.42	4040160.7	5.10E-09	25YrCancer	5.10E-09	0.00E+00	0.00E+00	0.00E+00	0.00E+00	0.00E+00	0.00E+00	0.00E+00	0.00E+00	0.00E+00	0.00E+00	0.00E+00
2566	ALL	752588.42	4040160.7	4.97E-09	25YrCancer	4.97E-09	0.00E+00	0.00E+00	0.00E+00	0.00E+00	0.00E+00	0.00E+00	0.00E+00	0.00E+00	0.00E+00	0.00E+00	0.00E+00
2567	ALL	752688.42	4040160.7	4.84E-09	25YrCancer	4.84E-09	0.00E+00	0.00E+00	0.00E+00	0.00E+00	0.00E+00	0.00E+00	0.00E+00	0.00E+00	0.00E+00	0.00E+00	0.00E+00
2568	ALL	752788.42	4040160.7	4.72E-09	25YrCancer	4.72E-09	0.00E+00	0.00E+00	0.00E+00	0.00E+00	0.00E+00	0.00E+00	0.00E+00	0.00E+00	0.00E+00	0.00E+00	0.00E+00
2569	ALL	752888.42	4040160.7	4.60E-09	25YrCancer	4.60E-09	0.00E+00	0.00E+00	0.00E+00	0.00E+00	0.00E+00	0.00E+00	0.00E+00	0.00E+00	0.00E+00	0.00E+00	0.00E+00
2570	ALL	752988.42	4040160.7	4.48E-09	25YrCancer	4.48E-09	0.00E+00	0.00E+00	0.00E+00	0.00E+00	0.00E+00	0.00E+00	0.00E+00	0.00E+00	0.00E+00	0.00E+00	0.00E+00
2571	ALL	753088.42	4040160.7	4.38E-09	25YrCancer	4.38E-09	0.00E+00	0.00E+00	0.00E+00	0.00E+00	0.00E+00	0.00E+00	0.00E+00	0.00E+00	0.00E+00	0.00E+00	0.00E+00
2572	ALL	753188.42	4040160.7	4.27E-09	25YrCancer	4.27E-09	0.00E+00	0.00E+00	0.00E+00	0.00E+00	0.00E+00	0.00E+00	0.00E+00	0.00E+00	0.00E+00	0.00E+00	0.00E+00
2573	ALL	746288.42	4040260.7	4.85E-09	25YrCancer	4.85E-09	0.00E+00	0.00E+00	0.00E+00	0.00E+00	0.00E+00	0.00E+00	0.00E+00	0.00E+00	0.00E+00	0.00E+00	0.00E+00
2574	ALL	746388.42	4040260.7	4.95E-09	25YrCancer	4.95E-09	0.00E+00	0.00E+00	0.00E+00	0.00E+00	0.00E+00	0.00E+00	0.00E+00	0.00E+00	0.00E+00	0.00E+00	0.00E+00
2575	ALL	746488.42	4040260.7	5.07E-09	25YrCancer	5.07E-09	0.00E+00	0.00E+00	0.00E+00	0.00E+00	0.00E+00	0.00E+00	0.00E+00	0.00E+00	0.00E+00	0.00E+00	0.00E+00
2576	ALL	751488.42	4040260.7	6.51E-09	25YrCancer	6.51E-09	0.00E+00	0.00E+00	0.00E+00	0.00E+00	0.00E+00	0.00E+00	0.00E+00	0.00E+00	0.00E+00	0.00E+00	0.00E+00
2577	ALL	751588.42	4040260.7	6.29E-09	25YrCancer	6.29E-09	0.00E+00	0.00E+00	0.00E+00	0.00E+00	0.00E+00	0.00E+00	0.00E+00	0.00E+00	0.00E+00	0.00E+00	0.00E+00
2578	ALL	751688.42	4040260.7	6.08E-09	25YrCancer	6.08E-09	0.00E+00	0.00E+00	0.00E+00	0.00E+00	0.00E+00	0.00E+00	0.00E+00	0.00E+00	0.00E+00	0.00E+00	0.00E+00
2579	ALL	751788.42	4040260.7	5.89E-09	25YrCancer	5.89E-09	0.00E+00	0.00E+00	0.00E+00	0.00E+00	0.00E+00	0.00E+00	0.00E+00	0.00E+00	0.00E+00	0.00E+00	0.00E+00
2580	ALL	751888.42	4040260.7	5.71E-09	25YrCancer	5.71E-09	0.00E+00	0.00E+00	0.00E+00	0.00E+00	0.00E+00	0.00E+00	0.00E+00	0.00E+00	0.00E+00	0.00E+00	0.00E+00
2581	ALL	751988.42	4040260.7	5.54E-09	25YrCancer	5.54E-09	0.00E+00	0.00E+00	0.00E+00	0.00E+00	0.00E+00	0.00E+00	0.00E+00	0.00E+00	0.00E+00	0.00E+00	0.00E+00
2582	ALL	752088.42	4040260.7	5.39E-09	25YrCancer	5.39E-09	0.00E+00	0.00E+00	0.00E+00	0.00E+00	0.00E+00	0.00E+00	0.00E+00	0.00E+00	0.00E+00	0.00E+00	0.00E+00
2583	ALL	752188.42	4040260.7	5.24E-09	25YrCancer	5.24E-09	0.00E+00	0.00E+00	0.00E+00	0.00E+00	0.00E+00	0.00E+00	0.00E+00	0.00E+00	0.00E+00	0.00E+00	0.00E+00
2584	ALL	752288.42	4040260.7	5.10E-09	25YrCancer	5.10E-09	0.00E+00	0.00E+00	0.00E+00	0.00E+00	0.00E+00	0.00E+00	0.00E+00	0.00E+00	0.00E+00	0.00E+00	0.00E+00
2585	ALL	752388.42	4040260.7	4.97E-09	25YrCancer	4.97E-09	0.00E+00	0.00E+00	0.00E+00	0.00E+00	0.00E+00	0.00E+00	0.00E+00	0.00E+00	0.00E+00	0.00E+00	0.00E+00
2586	ALL	752488.42	4040260.7	4.85E-09	25YrCancer	4.85E-09	0.00E+00	0.00E+00	0.00E+00	0.00E+00	0.00E+00	0.00E+00	0.00E+00	0.00E+00	0.00E+00	0.00E+00	0.00E+00
2587	ALL	752588.42	4040260.7	4.73E-09	25YrCancer	4.73E-09	0.00E+00	0.00E+00	0.00E+00	0.00E+00	0.00E+00	0.00E+00	0.00E+00	0.00E+00	0.00E+00	0.00E+00	0.00E+00
2588	ALL	752688.42	4040260.7	4.61E-09	25YrCancer	4.61E-09	0.00E+00	0.00E+00	0.00E+00	0.00E+00	0.00E+00	0.00E+00	0.00E+00	0.00E+00	0.00E+00	0.00E+00	0.00E+00
2589	ALL	752788.42	4040260.7	4.50E-09	25YrCancer	4.50E-09	0.00E+00	0.00E+00	0.00E+00	0.00E+00	0.00E+00	0.00E+00	0.00E+00	0.00E+00	0.00E+00	0.00E+00	0.00E+00
2590	ALL	752888.42	4040260.7	4.40E-09	25YrCancer	4.40E-09	0.00E+00	0.00E+00	0.00E+00	0.00E+00	0.00E+00	0.00E+00	0.00E+00	0.00E+00	0.00E+00	0.00E+00	0.00E+00
2591	ALL	752988.42	4040260.7	4.30E-09	25YrCancer	4.30E-09	0.00E+00	0.00E+00	0.00E+00	0.00E+00	0.00E+00	0.00E+00	0.00E+00	0.00E+00	0.00E+00	0.00E+00	0.00E+00
2592	ALL	753088.42	4040260.7	4.20E-09	25YrCancer	4.20E-09	0.00E+00	0.00E+00	0.00E+00	0.00E+00	0.00E+00	0.00E+00	0.00E+00	0.00E+00	0.00E+00	0.00E+00	0.00E+00
2593	ALL	753188.42	4040260.7	4.11E-09	25YrCancer	4.11E-09	0.00E+00	0.00E+00	0.00E+00	0.00E+00	0.00E+00	0.00E+00	0.00E+00	0.00E+00	0.00E+00	0.00E+00	0.00E+00
2594	ALL	746288.42	4040360.7	4.98E-09	25YrCancer	4.98E-09	0.00E+00	0.00E+00	0.00E+00	0.00E+00	0.00E+00	0.00E+00	0.00E+00	0.00E+00	0.00E+00	0.00E+00	0.00E+00
2595	ALL	746388.42	4040360.7	5.10E-09	25YrCancer	5.10E-09	0.00E+00	0.00E+00	0.00E+00	0.00E+00	0.00E+00	0.00E+00	0.00E+00	0.00E+00	0.00E+00	0.00E+00	0.00E+00
2596	ALL	751488.42	4040360.7	6.03E-09	25YrCancer	6.03E-09	0.00E+00	0.00E+00	0.00E+00	0.00E+00	0.00E+00	0.00E+00	0.00E+00	0.00E+00	0.00E+00	0.00E+00	0.00E+00
2597	ALL	751588.42	4040360.7	5.84E-09	25YrCancer	5.84E-09	0.00E+00	0.00E+00	0.00E+00	0.00E+00	0.00E+00	0.00E+00	0.00E+00	0.00E+00	0.00E+00	0.00E+00	0.00E+00
2598	ALL	751688.42	4040360.7	5.67E-09	25YrCancer	5.67E-09	0.00E+00	0.00E+00	0.00E+00	0.00E+00	0.00E+00	0.00E+00	0.00E+00	0.00E+00	0.00E+00	0.00E+00	0.00E+00
2599	ALL	751788.42	4040360.7	5.51E-09	25YrCancer	5.51E-09	0.00E+00	0.00E+00	0.00E+00	0.00E+00	0.00E+00	0.00E+00	0.00E+00	0.00E+00	0.00E+00	0.00E+00	0.00E+00

2600	ALL	751888.42	4040360.7	5.35E-09	25YrCancer	5.35E-09	0.00E+00	0.00E+00	0.00E+00	0.00E+00	0.00E+00	0.00E+00	0.00E+00	0.00E+00	0.00E+00	0.00E+00	0.00E+00
2601	ALL	751988.42	4040360.7	5.21E-09	25YrCancer	5.21E-09	0.00E+00	0.00E+00	0.00E+00	0.00E+00	0.00E+00	0.00E+00	0.00E+00	0.00E+00	0.00E+00	0.00E+00	0.00E+00
2602	ALL	752088.42	4040360.7	5.07E-09	25YrCancer	5.07E-09	0.00E+00	0.00E+00	0.00E+00	0.00E+00	0.00E+00	0.00E+00	0.00E+00	0.00E+00	0.00E+00	0.00E+00	0.00E+00
2603	ALL	752188.42	4040360.7	4.94E-09	25YrCancer	4.94E-09	0.00E+00	0.00E+00	0.00E+00	0.00E+00	0.00E+00	0.00E+00	0.00E+00	0.00E+00	0.00E+00	0.00E+00	0.00E+00
2604	ALL	752288.42	4040360.7	4.82E-09	25YrCancer	4.82E-09	0.00E+00	0.00E+00	0.00E+00	0.00E+00	0.00E+00	0.00E+00	0.00E+00	0.00E+00	0.00E+00	0.00E+00	0.00E+00
2605	ALL	752388.42	4040360.7	4.71E-09	25YrCancer	4.71E-09	0.00E+00	0.00E+00	0.00E+00	0.00E+00	0.00E+00	0.00E+00	0.00E+00	0.00E+00	0.00E+00	0.00E+00	0.00E+00
2606	ALL	752488.42	4040360.7	4.60E-09	25YrCancer	4.60E-09	0.00E+00	0.00E+00	0.00E+00	0.00E+00	0.00E+00	0.00E+00	0.00E+00	0.00E+00	0.00E+00	0.00E+00	0.00E+00
2607	ALL	752588.42	4040360.7	4.50E-09	25YrCancer	4.50E-09	0.00E+00	0.00E+00	0.00E+00	0.00E+00	0.00E+00	0.00E+00	0.00E+00	0.00E+00	0.00E+00	0.00E+00	0.00E+00
2608	ALL	752688.42	4040360.7	4.39E-09	25YrCancer	4.39E-09	0.00E+00	0.00E+00	0.00E+00	0.00E+00	0.00E+00	0.00E+00	0.00E+00	0.00E+00	0.00E+00	0.00E+00	0.00E+00
2609	ALL	752788.42	4040360.7	4.29E-09	25YrCancer	4.29E-09	0.00E+00	0.00E+00	0.00E+00	0.00E+00	0.00E+00	0.00E+00	0.00E+00	0.00E+00	0.00E+00	0.00E+00	0.00E+00
2610	ALL	752888.42	4040360.7	4.20E-09	25YrCancer	4.20E-09	0.00E+00	0.00E+00	0.00E+00	0.00E+00	0.00E+00	0.00E+00	0.00E+00	0.00E+00	0.00E+00	0.00E+00	0.00E+00
2611	ALL	752988.42	4040360.7	4.11E-09	25YrCancer	4.11E-09	0.00E+00	0.00E+00	0.00E+00	0.00E+00	0.00E+00	0.00E+00	0.00E+00	0.00E+00	0.00E+00	0.00E+00	0.00E+00
2612	ALL	753088.42	4040360.7	4.03E-09	25YrCancer	4.03E-09	0.00E+00	0.00E+00	0.00E+00	0.00E+00	0.00E+00	0.00E+00	0.00E+00	0.00E+00	0.00E+00	0.00E+00	0.00E+00
2613	ALL	753188.42	4040360.7	3.94E-09	25YrCancer	3.94E-09	0.00E+00	0.00E+00	0.00E+00	0.00E+00	0.00E+00	0.00E+00	0.00E+00	0.00E+00	0.00E+00	0.00E+00	0.00E+00
2614	ALL	746288.42	4040460.7	5.07E-09	25YrCancer	5.07E-09	0.00E+00	0.00E+00	0.00E+00	0.00E+00	0.00E+00	0.00E+00	0.00E+00	0.00E+00	0.00E+00	0.00E+00	0.00E+00
2615	ALL	746388.42	4040460.7	5.21E-09	25YrCancer	5.21E-09	0.00E+00	0.00E+00	0.00E+00	0.00E+00	0.00E+00	0.00E+00	0.00E+00	0.00E+00	0.00E+00	0.00E+00	0.00E+00
2616	ALL	751488.42	4040460.7	5.57E-09	25YrCancer	5.57E-09	0.00E+00	0.00E+00	0.00E+00	0.00E+00	0.00E+00	0.00E+00	0.00E+00	0.00E+00	0.00E+00	0.00E+00	0.00E+00
2617	ALL	751588.42	4040460.7	5.42E-09	25YrCancer	5.42E-09	0.00E+00	0.00E+00	0.00E+00	0.00E+00	0.00E+00	0.00E+00	0.00E+00	0.00E+00	0.00E+00	0.00E+00	0.00E+00
2618	ALL	751688.42	4040460.7	5.27E-09	25YrCancer	5.27E-09	0.00E+00	0.00E+00	0.00E+00	0.00E+00	0.00E+00	0.00E+00	0.00E+00	0.00E+00	0.00E+00	0.00E+00	0.00E+00
2619	ALL	751788.42	4040460.7	5.14E-09	25YrCancer	5.14E-09	0.00E+00	0.00E+00	0.00E+00	0.00E+00	0.00E+00	0.00E+00	0.00E+00	0.00E+00	0.00E+00	0.00E+00	0.00E+00
2620	ALL	751888.42	4040460.7	5.01E-09	25YrCancer	5.01E-09	0.00E+00	0.00E+00	0.00E+00	0.00E+00	0.00E+00	0.00E+00	0.00E+00	0.00E+00	0.00E+00	0.00E+00	0.00E+00
2621	ALL	751988.42	4040460.7	4.89E-09	25YrCancer	4.89E-09	0.00E+00	0.00E+00	0.00E+00	0.00E+00	0.00E+00	0.00E+00	0.00E+00	0.00E+00	0.00E+00	0.00E+00	0.00E+00
2622	ALL	752088.42	4040460.7	4.77E-09	25YrCancer	4.77E-09	0.00E+00	0.00E+00	0.00E+00	0.00E+00	0.00E+00	0.00E+00	0.00E+00	0.00E+00	0.00E+00	0.00E+00	0.00E+00
2623	ALL	752188.42	4040460.7	4.66E-09	25YrCancer	4.66E-09	0.00E+00	0.00E+00	0.00E+00	0.00E+00	0.00E+00	0.00E+00	0.00E+00	0.00E+00	0.00E+00	0.00E+00	0.00E+00
2624	ALL	752288.42	4040460.7	4.56E-09	25YrCancer	4.56E-09	0.00E+00	0.00E+00	0.00E+00	0.00E+00	0.00E+00	0.00E+00	0.00E+00	0.00E+00	0.00E+00	0.00E+00	0.00E+00
2625	ALL	752388.42	4040460.7	4.46E-09	25YrCancer	4.46E-09	0.00E+00	0.00E+00	0.00E+00	0.00E+00	0.00E+00	0.00E+00	0.00E+00	0.00E+00	0.00E+00	0.00E+00	0.00E+00
2626	ALL	752488.42	4040460.7	4.36E-09	25YrCancer	4.36E-09	0.00E+00	0.00E+00	0.00E+00	0.00E+00	0.00E+00	0.00E+00	0.00E+00	0.00E+00	0.00E+00	0.00E+00	0.00E+00
2627	ALL	752588.42	4040460.7	4.27E-09	25YrCancer	4.27E-09	0.00E+00	0.00E+00	0.00E+00	0.00E+00	0.00E+00	0.00E+00	0.00E+00	0.00E+00	0.00E+00	0.00E+00	0.00E+00
2628	ALL	752688.42	4040460.7	4.18E-09	25YrCancer	4.18E-09	0.00E+00	0.00E+00	0.00E+00	0.00E+00	0.00E+00	0.00E+00	0.00E+00	0.00E+00	0.00E+00	0.00E+00	0.00E+00
2629	ALL	752788.42	4040460.7	4.09E-09	25YrCancer	4.09E-09	0.00E+00	0.00E+00	0.00E+00	0.00E+00	0.00E+00	0.00E+00	0.00E+00	0.00E+00	0.00E+00	0.00E+00	0.00E+00
2630	ALL	752888.42	4040460.7	4.01E-09	25YrCancer	4.01E-09	0.00E+00	0.00E+00	0.00E+00	0.00E+00	0.00E+00	0.00E+00	0.00E+00	0.00E+00	0.00E+00	0.00E+00	0.00E+00
2631	ALL	752988.42	4040460.7	3.93E-09	25YrCancer	3.93E-09	0.00E+00	0.00E+00	0.00E+00	0.00E+00	0.00E+00	0.00E+00	0.00E+00	0.00E+00	0.00E+00	0.00E+00	0.00E+00
2632	ALL	753088.42	4040460.7	3.86E-09	25YrCancer	3.86E-09	0.00E+00	0.00E+00	0.00E+00	0.00E+00	0.00E+00	0.00E+00	0.00E+00	0.00E+00	0.00E+00	0.00E+00	0.00E+00
2633	ALL	753188.42	4040460.7	3.78E-09	25YrCancer	3.78E-09	0.00E+00	0.00E+00	0.00E+00	0.00E+00	0.00E+00	0.00E+00	0.00E+00	0.00E+00	0.00E+00	0.00E+00	0.00E+00
2634	ALL	746288.42	4040560.7	5.14E-09	25YrCancer	5.14E-09	0.00E+00	0.00E+00	0.00E+00	0.00E+00	0.00E+00	0.00E+00	0.00E+00	0.00E+00	0.00E+00	0.00E+00	0.00E+00
2635	ALL	746388.42	4040560.7	5.29E-09	25YrCancer	5.29E-09	0.00E+00	0.00E+00	0.00E+00	0.00E+00	0.00E+00	0.00E+00	0.00E+00	0.00E+00	0.00E+00	0.00E+00	0.00E+00
2636	ALL	751488.42	4040560.7	5.15E-09	25YrCancer	5.15E-09	0.00E+00	0.00E+00	0.00E+00	0.00E+00	0.00E+00	0.00E+00	0.00E+00	0.00E+00	0.00E+00	0.00E+00	0.00E+00
2637	ALL	751588.42	4040560.7	5.02E-09	25YrCancer	5.02E-09	0.00E+00	0.00E+00	0.00E+00	0.00E+00	0.00E+00	0.00E+00	0.00E+00	0.00E+00	0.00E+00	0.00E+00	0.00E+00
2638	ALL	751688.42	4040560.7	4.91E-09	25YrCancer	4.91E-09	0.00E+00	0.00E+00	0.00E+00	0.00E+00	0.00E+00	0.00E+00	0.00E+00	0.00E+00	0.00E+00	0.00E+00	0.00E+00
2639	ALL	751788.42	4040560.7	4.79E-09	25YrCancer	4.79E-09	0.00E+00	0.00E+00	0.00E+00	0.00E+00	0.00E+00	0.00E+00	0.00E+00	0.00E+00	0.00E+00	0.00E+00	0.00E+00
2640	ALL	751888.42	4040560.7	4.68E-09	25YrCancer	4.68E-09	0.00E+00	0.00E+00	0.00E+00	0.00E+00	0.00E+00	0.00E+00	0.00E+00	0.00E+00	0.00E+00	0.00E+00	0.00E+00
2641	ALL	751988.42	4040560.7	4.58E-09	25YrCancer	4.58E-09	0.00E+00	0.00E+00	0.00E+00	0.00E+00	0.00E+00	0.00E+00	0.00E+00	0.00E+00	0.00E+00	0.00E+00	0.00E+00
2642	ALL	752088.42	4040560.7	4.48E-09	25YrCancer	4.48E-09	0.00E+00	0.00E+00	0.00E+00	0.00E+00	0.00E+00	0.00E+00	0.00E+00	0.00E+00	0.00E+00	0.00E+00	0.00E+00
2643	ALL	752188.42	4040560.7	4.39E-09	25YrCancer	4.39E-09	0.00E+00	0.00E+00	0.00E+00	0.00E+00	0.00E+00	0.00E+00	0.00E+00	0.00E+00	0.00E+00	0.00E+00	0.00E+00
2644	ALL	752288.42	4040560.7	4.30E-09	25YrCancer	4.30E-09	0.00E+00	0.00E+00	0.00E+00	0.00E+00	0.00E+00	0.00E+00	0.00E+00	0.00E+00	0.00E+00	0.00E+00	0.00E+00
2645	ALL	752388.42	4040560.7	4.22E-09	25YrCancer	4.22E-09	0.00E+00	0.00E+00	0.00E+00	0.00E+00	0.00E+00	0.00E+00	0.00E+00	0.00E+00	0.00E+00	0.00E+00	0.00E+00
2646	ALL	752488.42	4040560.7	4.13E-09	25YrCancer	4.13E-09	0.00E+00	0.00E+00	0.00E+00	0.00E+00	0.00E+00	0.00E+00	0.00E+00	0.00E+00	0.00E+00	0.00E+00	0.00E+00
2647	ALL	752588.42	4040560.7	4.06E-09	25YrCancer	4.06E-09	0.00E+00	0.00E+00	0.00E+00	0.00E+00	0.00E+00	0.00E+00	0.00E+00	0.00E+00	0.00E+00	0.00E+00	0.00E+00
2648	ALL	752688.42	4040560.7	3.98E-09	25YrCancer	3.98E-09	0.00E+00	0.00E+00	0.00E+00	0.00E+00	0.00E+00	0.00E+00	0.00E+00	0.00E+00	0.00E+00	0.00E+00	0.00E+00
2649	ALL	752788.42	4040560.7	3.90E-09	25YrCancer	3.90E-09	0.00E+00	0.00E+00	0.00E+00	0.00E+00	0.00E+00	0.00E+00	0.00E+00	0.00E+00	0.00E+00	0.00E+00	0.00E+00
2650	ALL	752888.42	4040560.7	3.83E-09	25YrCancer	3.83E-09	0.00E+00	0.00E+00	0.00E+00	0.00E+00	0.00E+00	0.00E+00	0.00E+00	0.00E+00	0.00E+00	0.00E+00	0.00E+00

2651	ALL	752988.42	4040560.7	3.76E-09	25YrCancer	3.76E-09	0.00E+00	0.00E+00	0.00E+00	0.00E+00	0.00E+00	0.00E+00	0.00E+00	0.00E+00	0.00E+00	0.00E+00	0.00E+00
2652	ALL	753088.42	4040560.7	3.69E-09	25YrCancer	3.69E-09	0.00E+00	0.00E+00	0.00E+00	0.00E+00	0.00E+00	0.00E+00	0.00E+00	0.00E+00	0.00E+00	0.00E+00	0.00E+00
2653	ALL	753188.42	4040560.7	3.62E-09	25YrCancer	3.62E-09	0.00E+00	0.00E+00	0.00E+00	0.00E+00	0.00E+00	0.00E+00	0.00E+00	0.00E+00	0.00E+00	0.00E+00	0.00E+00
2654	ALL	746288.42	4040660.7	5.20E-09	25YrCancer	5.20E-09	0.00E+00	0.00E+00	0.00E+00	0.00E+00	0.00E+00	0.00E+00	0.00E+00	0.00E+00	0.00E+00	0.00E+00	0.00E+00
2655	ALL	746388.42	4040660.7	5.37E-09	25YrCancer	5.37E-09	0.00E+00	0.00E+00	0.00E+00	0.00E+00	0.00E+00	0.00E+00	0.00E+00	0.00E+00	0.00E+00	0.00E+00	0.00E+00
2656	ALL	746488.42	4040660.7	5.58E-09	25YrCancer	5.58E-09	0.00E+00	0.00E+00	0.00E+00	0.00E+00	0.00E+00	0.00E+00	0.00E+00	0.00E+00	0.00E+00	0.00E+00	0.00E+00
2657	ALL	751388.42	4040660.7	4.86E-09	25YrCancer	4.86E-09	0.00E+00	0.00E+00	0.00E+00	0.00E+00	0.00E+00	0.00E+00	0.00E+00	0.00E+00	0.00E+00	0.00E+00	0.00E+00
2658	ALL	751488.42	4040660.7	4.76E-09	25YrCancer	4.76E-09	0.00E+00	0.00E+00	0.00E+00	0.00E+00	0.00E+00	0.00E+00	0.00E+00	0.00E+00	0.00E+00	0.00E+00	0.00E+00
2659	ALL	751588.42	4040660.7	4.66E-09	25YrCancer	4.66E-09	0.00E+00	0.00E+00	0.00E+00	0.00E+00	0.00E+00	0.00E+00	0.00E+00	0.00E+00	0.00E+00	0.00E+00	0.00E+00
2660	ALL	751688.42	4040660.7	4.56E-09	25YrCancer	4.56E-09	0.00E+00	0.00E+00	0.00E+00	0.00E+00	0.00E+00	0.00E+00	0.00E+00	0.00E+00	0.00E+00	0.00E+00	0.00E+00
2661	ALL	751788.42	4040660.7	4.47E-09	25YrCancer	4.47E-09	0.00E+00	0.00E+00	0.00E+00	0.00E+00	0.00E+00	0.00E+00	0.00E+00	0.00E+00	0.00E+00	0.00E+00	0.00E+00
2662	ALL	751888.42	4040660.7	4.38E-09	25YrCancer	4.38E-09	0.00E+00	0.00E+00	0.00E+00	0.00E+00	0.00E+00	0.00E+00	0.00E+00	0.00E+00	0.00E+00	0.00E+00	0.00E+00
2663	ALL	751988.42	4040660.7	4.29E-09	25YrCancer	4.29E-09	0.00E+00	0.00E+00	0.00E+00	0.00E+00	0.00E+00	0.00E+00	0.00E+00	0.00E+00	0.00E+00	0.00E+00	0.00E+00
2664	ALL	752088.42	4040660.7	4.21E-09	25YrCancer	4.21E-09	0.00E+00	0.00E+00	0.00E+00	0.00E+00	0.00E+00	0.00E+00	0.00E+00	0.00E+00	0.00E+00	0.00E+00	0.00E+00
2665	ALL	746288.42	4040760.7	5.31E-09	25YrCancer	5.31E-09	0.00E+00	0.00E+00	0.00E+00	0.00E+00	0.00E+00	0.00E+00	0.00E+00	0.00E+00	0.00E+00	0.00E+00	0.00E+00
2666	ALL	746388.42	4040760.7	5.51E-09	25YrCancer	5.51E-09	0.00E+00	0.00E+00	0.00E+00	0.00E+00	0.00E+00	0.00E+00	0.00E+00	0.00E+00	0.00E+00	0.00E+00	0.00E+00
2667	ALL	746488.42	4040760.7	5.75E-09	25YrCancer	5.75E-09	0.00E+00	0.00E+00	0.00E+00	0.00E+00	0.00E+00	0.00E+00	0.00E+00	0.00E+00	0.00E+00	0.00E+00	0.00E+00
2668	ALL	751388.42	4040760.7	4.49E-09	25YrCancer	4.49E-09	0.00E+00	0.00E+00	0.00E+00	0.00E+00	0.00E+00	0.00E+00	0.00E+00	0.00E+00	0.00E+00	0.00E+00	0.00E+00
2669	ALL	751488.42	4040760.7	4.41E-09	25YrCancer	4.41E-09	0.00E+00	0.00E+00	0.00E+00	0.00E+00	0.00E+00	0.00E+00	0.00E+00	0.00E+00	0.00E+00	0.00E+00	0.00E+00
2670	ALL	751588.42	4040760.7	4.33E-09	25YrCancer	4.33E-09	0.00E+00	0.00E+00	0.00E+00	0.00E+00	0.00E+00	0.00E+00	0.00E+00	0.00E+00	0.00E+00	0.00E+00	0.00E+00
2671	ALL	751688.42	4040760.7	4.25E-09	25YrCancer	4.25E-09	0.00E+00	0.00E+00	0.00E+00	0.00E+00	0.00E+00	0.00E+00	0.00E+00	0.00E+00	0.00E+00	0.00E+00	0.00E+00
2672	ALL	751788.42	4040760.7	4.17E-09	25YrCancer	4.17E-09	0.00E+00	0.00E+00	0.00E+00	0.00E+00	0.00E+00	0.00E+00	0.00E+00	0.00E+00	0.00E+00	0.00E+00	0.00E+00
2673	ALL	751888.42	4040760.7	4.10E-09	25YrCancer	4.10E-09	0.00E+00	0.00E+00	0.00E+00	0.00E+00	0.00E+00	0.00E+00	0.00E+00	0.00E+00	0.00E+00	0.00E+00	0.00E+00
2674	ALL	751988.42	4040760.7	4.03E-09	25YrCancer	4.03E-09	0.00E+00	0.00E+00	0.00E+00	0.00E+00	0.00E+00	0.00E+00	0.00E+00	0.00E+00	0.00E+00	0.00E+00	0.00E+00
2675	ALL	752088.42	4040760.7	3.96E-09	25YrCancer	3.96E-09	0.00E+00	0.00E+00	0.00E+00	0.00E+00	0.00E+00	0.00E+00	0.00E+00	0.00E+00	0.00E+00	0.00E+00	0.00E+00
2676	ALL	746288.42	4040860.7	5.47E-09	25YrCancer	5.47E-09	0.00E+00	0.00E+00	0.00E+00	0.00E+00	0.00E+00	0.00E+00	0.00E+00	0.00E+00	0.00E+00	0.00E+00	0.00E+00
2677	ALL	746388.42	4040860.7	5.72E-09	25YrCancer	5.72E-09	0.00E+00	0.00E+00	0.00E+00	0.00E+00	0.00E+00	0.00E+00	0.00E+00	0.00E+00	0.00E+00	0.00E+00	0.00E+00
2678	ALL	746488.42	4040860.7	6.00E-09	25YrCancer	6.00E-09	0.00E+00	0.00E+00	0.00E+00	0.00E+00	0.00E+00	0.00E+00	0.00E+00	0.00E+00	0.00E+00	0.00E+00	0.00E+00
2679	ALL	751388.42	4040860.7	4.16E-09	25YrCancer	4.16E-09	0.00E+00	0.00E+00	0.00E+00	0.00E+00	0.00E+00	0.00E+00	0.00E+00	0.00E+00	0.00E+00	0.00E+00	0.00E+00
2680	ALL	751488.42	4040860.7	4.10E-09	25YrCancer	4.10E-09	0.00E+00	0.00E+00	0.00E+00	0.00E+00	0.00E+00	0.00E+00	0.00E+00	0.00E+00	0.00E+00	0.00E+00	0.00E+00
2681	ALL	751588.42	4040860.7	4.03E-09	25YrCancer	4.03E-09	0.00E+00	0.00E+00	0.00E+00	0.00E+00	0.00E+00	0.00E+00	0.00E+00	0.00E+00	0.00E+00	0.00E+00	0.00E+00
2682	ALL	751688.42	4040860.7	3.97E-09	25YrCancer	3.97E-09	0.00E+00	0.00E+00	0.00E+00	0.00E+00	0.00E+00	0.00E+00	0.00E+00	0.00E+00	0.00E+00	0.00E+00	0.00E+00
2683	ALL	751788.42	4040860.7	3.91E-09	25YrCancer	3.91E-09	0.00E+00	0.00E+00	0.00E+00	0.00E+00	0.00E+00	0.00E+00	0.00E+00	0.00E+00	0.00E+00	0.00E+00	0.00E+00
2684	ALL	751888.42	4040860.7	3.84E-09	25YrCancer	3.84E-09	0.00E+00	0.00E+00	0.00E+00	0.00E+00	0.00E+00	0.00E+00	0.00E+00	0.00E+00	0.00E+00	0.00E+00	0.00E+00
2685	ALL	751988.42	4040860.7	3.79E-09	25YrCancer	3.79E-09	0.00E+00	0.00E+00	0.00E+00	0.00E+00	0.00E+00	0.00E+00	0.00E+00	0.00E+00	0.00E+00	0.00E+00	0.00E+00
2686	ALL	752088.42	4040860.7	3.73E-09	25YrCancer	3.73E-09	0.00E+00	0.00E+00	0.00E+00	0.00E+00	0.00E+00	0.00E+00	0.00E+00	0.00E+00	0.00E+00	0.00E+00	0.00E+00
2687	ALL	746288.42	4040960.7	5.67E-09	25YrCancer	5.67E-09	0.00E+00	0.00E+00	0.00E+00	0.00E+00	0.00E+00	0.00E+00	0.00E+00	0.00E+00	0.00E+00	0.00E+00	0.00E+00
2688	ALL	746388.42	4040960.7	5.95E-09	25YrCancer	5.95E-09	0.00E+00	0.00E+00	0.00E+00	0.00E+00	0.00E+00	0.00E+00	0.00E+00	0.00E+00	0.00E+00	0.00E+00	0.00E+00
2689	ALL	746488.42	4040960.7	6.27E-09	25YrCancer	6.27E-09	0.00E+00	0.00E+00	0.00E+00	0.00E+00	0.00E+00	0.00E+00	0.00E+00	0.00E+00	0.00E+00	0.00E+00	0.00E+00
2690	ALL	751388.42	4040960.7	3.88E-09	25YrCancer	3.88E-09	0.00E+00	0.00E+00	0.00E+00	0.00E+00	0.00E+00	0.00E+00	0.00E+00	0.00E+00	0.00E+00	0.00E+00	0.00E+00
2691	ALL	751488.42	4040960.7	3.82E-09	25YrCancer	3.82E-09	0.00E+00	0.00E+00	0.00E+00	0.00E+00	0.00E+00	0.00E+00	0.00E+00	0.00E+00	0.00E+00	0.00E+00	0.00E+00
2692	ALL	751588.42	4040960.7	3.77E-09	25YrCancer	3.77E-09	0.00E+00	0.00E+00	0.00E+00	0.00E+00	0.00E+00	0.00E+00	0.00E+00	0.00E+00	0.00E+00	0.00E+00	0.00E+00
2693	ALL	751688.42	4040960.7	3.72E-09	25YrCancer	3.72E-09	0.00E+00	0.00E+00	0.00E+00	0.00E+00	0.00E+00	0.00E+00	0.00E+00	0.00E+00	0.00E+00	0.00E+00	0.00E+00
2694	ALL	751788.42	4040960.7	3.67E-09	25YrCancer	3.67E-09	0.00E+00	0.00E+00	0.00E+00	0.00E+00	0.00E+00	0.00E+00	0.00E+00	0.00E+00	0.00E+00	0.00E+00	0.00E+00
2695	ALL	751888.42	4040960.7	3.62E-09	25YrCancer	3.62E-09	0.00E+00	0.00E+00	0.00E+00	0.00E+00	0.00E+00	0.00E+00	0.00E+00	0.00E+00	0.00E+00	0.00E+00	0.00E+00
2696	ALL	751988.42	4040960.7	3.57E-09	25YrCancer	3.57E-09	0.00E+00	0.00E+00	0.00E+00	0.00E+00	0.00E+00	0.00E+00	0.00E+00	0.00E+00	0.00E+00	0.00E+00	0.00E+00
2697	ALL	752088.42	4040960.7	3.52E-09	25YrCancer	3.52E-09	0.00E+00	0.00E+00	0.00E+00	0.00E+00	0.00E+00	0.00E+00	0.00E+00	0.00E+00	0.00E+00	0.00E+00	0.00E+00
2698	ALL	746288.42	4041060.7	5.88E-09	25YrCancer	5.88E-09	0.00E+00	0.00E+00	0.00E+00	0.00E+00	0.00E+00	0.00E+00	0.00E+00	0.00E+00	0.00E+00	0.00E+00	0.00E+00
2699	ALL	746388.42	4041060.7	6.20E-09	25YrCancer	6.20E-09	0.00E+00	0.00E+00	0.00E+00	0.00E+00	0.00E+00	0.00E+00	0.00E+00	0.00E+00	0.00E+00	0.00E+00	0.00E+00
2700	ALL	746488.42	4041060.7	6.57E-09	25YrCancer	6.57E-09	0.00E+00	0.00E+00	0.00E+00	0.00E+00	0.00E+00	0.00E+00	0.00E+00	0.00E+00	0.00E+00	0.00E+00	0.00E+00
2701	ALL	751388.42	4041060.7	3.63E-09	25YrCancer	3.63E-09	0.00E+00	0.00E+00	0.00E+00	0.00E+00	0.00E+00	0.00E+00	0.00E+00	0.00E+00	0.00E+00	0.00E+00	0.00E+00

2702	ALL	751488.42	4041060.7	3.59E-09	25YrCancer	3.59E-09	0.00E+00	0.00E+00	0.00E+00	0.00E+00	0.00E+00	0.00E+00	0.00E+00	0.00E+00	0.00E+00	0.00E+00	0.00E+00
2703	ALL	751588.42	4041060.7	3.54E-09	25YrCancer	3.54E-09	0.00E+00	0.00E+00	0.00E+00	0.00E+00	0.00E+00	0.00E+00	0.00E+00	0.00E+00	0.00E+00	0.00E+00	0.00E+00
2704	ALL	751688.42	4041060.7	3.50E-09	25YrCancer	3.50E-09	0.00E+00	0.00E+00	0.00E+00	0.00E+00	0.00E+00	0.00E+00	0.00E+00	0.00E+00	0.00E+00	0.00E+00	0.00E+00
2705	ALL	751788.42	4041060.7	3.46E-09	25YrCancer	3.46E-09	0.00E+00	0.00E+00	0.00E+00	0.00E+00	0.00E+00	0.00E+00	0.00E+00	0.00E+00	0.00E+00	0.00E+00	0.00E+00
2706	ALL	751888.42	4041060.7	3.41E-09	25YrCancer	3.41E-09	0.00E+00	0.00E+00	0.00E+00	0.00E+00	0.00E+00	0.00E+00	0.00E+00	0.00E+00	0.00E+00	0.00E+00	0.00E+00
2707	ALL	751988.42	4041060.7	3.37E-09	25YrCancer	3.37E-09	0.00E+00	0.00E+00	0.00E+00	0.00E+00	0.00E+00	0.00E+00	0.00E+00	0.00E+00	0.00E+00	0.00E+00	0.00E+00
2708	ALL	752088.42	4041060.7	3.33E-09	25YrCancer	3.33E-09	0.00E+00	0.00E+00	0.00E+00	0.00E+00	0.00E+00	0.00E+00	0.00E+00	0.00E+00	0.00E+00	0.00E+00	0.00E+00
2709	ALL	746288.42	4041160.7	6.11E-09	25YrCancer	6.11E-09	0.00E+00	0.00E+00	0.00E+00	0.00E+00	0.00E+00	0.00E+00	0.00E+00	0.00E+00	0.00E+00	0.00E+00	0.00E+00
2710	ALL	746388.42	4041160.7	6.46E-09	25YrCancer	6.46E-09	0.00E+00	0.00E+00	0.00E+00	0.00E+00	0.00E+00	0.00E+00	0.00E+00	0.00E+00	0.00E+00	0.00E+00	0.00E+00
2711	ALL	746488.42	4041160.7	6.84E-09	25YrCancer	6.84E-09	0.00E+00	0.00E+00	0.00E+00	0.00E+00	0.00E+00	0.00E+00	0.00E+00	0.00E+00	0.00E+00	0.00E+00	0.00E+00
2712	ALL	746588.42	4041160.7	7.31E-09	25YrCancer	7.31E-09	0.00E+00	0.00E+00	0.00E+00	0.00E+00	0.00E+00	0.00E+00	0.00E+00	0.00E+00	0.00E+00	0.00E+00	0.00E+00
2713	ALL	746688.42	4041160.7	7.78E-09	25YrCancer	7.78E-09	0.00E+00	0.00E+00	0.00E+00	0.00E+00	0.00E+00	0.00E+00	0.00E+00	0.00E+00	0.00E+00	0.00E+00	0.00E+00
2714	ALL	751388.42	4041160.7	3.43E-09	25YrCancer	3.43E-09	0.00E+00	0.00E+00	0.00E+00	0.00E+00	0.00E+00	0.00E+00	0.00E+00	0.00E+00	0.00E+00	0.00E+00	0.00E+00
2715	ALL	751488.42	4041160.7	3.39E-09	25YrCancer	3.39E-09	0.00E+00	0.00E+00	0.00E+00	0.00E+00	0.00E+00	0.00E+00	0.00E+00	0.00E+00	0.00E+00	0.00E+00	0.00E+00
2716	ALL	751588.42	4041160.7	3.35E-09	25YrCancer	3.35E-09	0.00E+00	0.00E+00	0.00E+00	0.00E+00	0.00E+00	0.00E+00	0.00E+00	0.00E+00	0.00E+00	0.00E+00	0.00E+00
2717	ALL	751688.42	4041160.7	3.31E-09	25YrCancer	3.31E-09	0.00E+00	0.00E+00	0.00E+00	0.00E+00	0.00E+00	0.00E+00	0.00E+00	0.00E+00	0.00E+00	0.00E+00	0.00E+00
2718	ALL	751788.42	4041160.7	3.27E-09	25YrCancer	3.27E-09	0.00E+00	0.00E+00	0.00E+00	0.00E+00	0.00E+00	0.00E+00	0.00E+00	0.00E+00	0.00E+00	0.00E+00	0.00E+00
2719	ALL	751888.42	4041160.7	3.23E-09	25YrCancer	3.23E-09	0.00E+00	0.00E+00	0.00E+00	0.00E+00	0.00E+00	0.00E+00	0.00E+00	0.00E+00	0.00E+00	0.00E+00	0.00E+00
2720	ALL	751988.42	4041160.7	3.20E-09	25YrCancer	3.20E-09	0.00E+00	0.00E+00	0.00E+00	0.00E+00	0.00E+00	0.00E+00	0.00E+00	0.00E+00	0.00E+00	0.00E+00	0.00E+00
2721	ALL	752088.42	4041160.7	3.16E-09	25YrCancer	3.16E-09	0.00E+00	0.00E+00	0.00E+00	0.00E+00	0.00E+00	0.00E+00	0.00E+00	0.00E+00	0.00E+00	0.00E+00	0.00E+00
2722	ALL	752188.42	4041160.7	3.13E-09	25YrCancer	3.13E-09	0.00E+00	0.00E+00	0.00E+00	0.00E+00	0.00E+00	0.00E+00	0.00E+00	0.00E+00	0.00E+00	0.00E+00	0.00E+00
2723	ALL	752288.42	4041160.7	3.09E-09	25YrCancer	3.09E-09	0.00E+00	0.00E+00	0.00E+00	0.00E+00	0.00E+00	0.00E+00	0.00E+00	0.00E+00	0.00E+00	0.00E+00	0.00E+00
2724	ALL	752388.42	4041160.7	3.06E-09	25YrCancer	3.06E-09	0.00E+00	0.00E+00	0.00E+00	0.00E+00	0.00E+00	0.00E+00	0.00E+00	0.00E+00	0.00E+00	0.00E+00	0.00E+00
2725	ALL	752488.42	4041160.7	3.02E-09	25YrCancer	3.02E-09	0.00E+00	0.00E+00	0.00E+00	0.00E+00	0.00E+00	0.00E+00	0.00E+00	0.00E+00	0.00E+00	0.00E+00	0.00E+00
2726	ALL	752588.42	4041160.7	2.99E-09	25YrCancer	2.99E-09	0.00E+00	0.00E+00	0.00E+00	0.00E+00	0.00E+00	0.00E+00	0.00E+00	0.00E+00	0.00E+00	0.00E+00	0.00E+00
2727	ALL	752688.42	4041160.7	2.95E-09	25YrCancer	2.95E-09	0.00E+00	0.00E+00	0.00E+00	0.00E+00	0.00E+00	0.00E+00	0.00E+00	0.00E+00	0.00E+00	0.00E+00	0.00E+00
2728	ALL	752788.42	4041160.7	2.92E-09	25YrCancer	2.92E-09	0.00E+00	0.00E+00	0.00E+00	0.00E+00	0.00E+00	0.00E+00	0.00E+00	0.00E+00	0.00E+00	0.00E+00	0.00E+00
2729	ALL	752888.42	4041160.7	2.88E-09	25YrCancer	2.88E-09	0.00E+00	0.00E+00	0.00E+00	0.00E+00	0.00E+00	0.00E+00	0.00E+00	0.00E+00	0.00E+00	0.00E+00	0.00E+00
2730	ALL	752988.42	4041160.7	2.85E-09	25YrCancer	2.85E-09	0.00E+00	0.00E+00	0.00E+00	0.00E+00	0.00E+00	0.00E+00	0.00E+00	0.00E+00	0.00E+00	0.00E+00	0.00E+00
2731	ALL	753088.42	4041160.7	2.82E-09	25YrCancer	2.82E-09	0.00E+00	0.00E+00	0.00E+00	0.00E+00	0.00E+00	0.00E+00	0.00E+00	0.00E+00	0.00E+00	0.00E+00	0.00E+00
2732	ALL	753188.42	4041160.7	2.79E-09	25YrCancer	2.79E-09	0.00E+00	0.00E+00	0.00E+00	0.00E+00	0.00E+00	0.00E+00	0.00E+00	0.00E+00	0.00E+00	0.00E+00	0.00E+00
2733	ALL	753288.42	4041160.7	2.76E-09	25YrCancer	2.76E-09	0.00E+00	0.00E+00	0.00E+00	0.00E+00	0.00E+00	0.00E+00	0.00E+00	0.00E+00	0.00E+00	0.00E+00	0.00E+00
2734	ALL	753388.42	4041160.7	2.73E-09	25YrCancer	2.73E-09	0.00E+00	0.00E+00	0.00E+00	0.00E+00	0.00E+00	0.00E+00	0.00E+00	0.00E+00	0.00E+00	0.00E+00	0.00E+00
2735	ALL	753488.42	4041160.7	2.70E-09	25YrCancer	2.70E-09	0.00E+00	0.00E+00	0.00E+00	0.00E+00	0.00E+00	0.00E+00	0.00E+00	0.00E+00	0.00E+00	0.00E+00	0.00E+00
2736	ALL	753588.42	4041160.7	2.67E-09	25YrCancer	2.67E-09	0.00E+00	0.00E+00	0.00E+00	0.00E+00	0.00E+00	0.00E+00	0.00E+00	0.00E+00	0.00E+00	0.00E+00	0.00E+00
2737	ALL	753688.42	4041160.7	2.65E-09	25YrCancer	2.65E-09	0.00E+00	0.00E+00	0.00E+00	0.00E+00	0.00E+00	0.00E+00	0.00E+00	0.00E+00	0.00E+00	0.00E+00	0.00E+00
2738	ALL	753788.42	4041160.7	2.62E-09	25YrCancer	2.62E-09	0.00E+00	0.00E+00	0.00E+00	0.00E+00	0.00E+00	0.00E+00	0.00E+00	0.00E+00	0.00E+00	0.00E+00	0.00E+00
2739	ALL	753888.42	4041160.7	2.59E-09	25YrCancer	2.59E-09	0.00E+00	0.00E+00	0.00E+00	0.00E+00	0.00E+00	0.00E+00	0.00E+00	0.00E+00	0.00E+00	0.00E+00	0.00E+00
2740	ALL	753988.42	4041160.7	2.57E-09	25YrCancer	2.57E-09	0.00E+00	0.00E+00	0.00E+00	0.00E+00	0.00E+00	0.00E+00	0.00E+00	0.00E+00	0.00E+00	0.00E+00	0.00E+00
2741	ALL	746288.42	4041260.7	6.33E-09	25YrCancer	6.33E-09	0.00E+00	0.00E+00	0.00E+00	0.00E+00	0.00E+00	0.00E+00	0.00E+00	0.00E+00	0.00E+00	0.00E+00	0.00E+00
2742	ALL	746388.42	4041260.7	6.69E-09	25YrCancer	6.69E-09	0.00E+00	0.00E+00	0.00E+00	0.00E+00	0.00E+00	0.00E+00	0.00E+00	0.00E+00	0.00E+00	0.00E+00	0.00E+00
2743	ALL	746488.42	4041260.7	7.07E-09	25YrCancer	7.07E-09	0.00E+00	0.00E+00	0.00E+00	0.00E+00	0.00E+00	0.00E+00	0.00E+00	0.00E+00	0.00E+00	0.00E+00	0.00E+00
2744	ALL	746588.42	4041260.7	7.51E-09	25YrCancer	7.51E-09	0.00E+00	0.00E+00	0.00E+00	0.00E+00	0.00E+00	0.00E+00	0.00E+00	0.00E+00	0.00E+00	0.00E+00	0.00E+00
2745	ALL	746688.42	4041260.7	7.97E-09	25YrCancer	7.97E-09	0.00E+00	0.00E+00	0.00E+00	0.00E+00	0.00E+00	0.00E+00	0.00E+00	0.00E+00	0.00E+00	0.00E+00	0.00E+00
2746	ALL	751388.42	4041260.7	3.25E-09	25YrCancer	3.25E-09	0.00E+00	0.00E+00	0.00E+00	0.00E+00	0.00E+00	0.00E+00	0.00E+00	0.00E+00	0.00E+00	0.00E+00	0.00E+00
2747	ALL	751488.42	4041260.7	3.21E-09	25YrCancer	3.21E-09	0.00E+00	0.00E+00	0.00E+00	0.00E+00	0.00E+00	0.00E+00	0.00E+00	0.00E+00	0.00E+00	0.00E+00	0.00E+00
2748	ALL	751588.42	4041260.7	3.18E-09	25YrCancer	3.18E-09	0.00E+00	0.00E+00	0.00E+00	0.00E+00	0.00E+00	0.00E+00	0.00E+00	0.00E+00	0.00E+00	0.00E+00	0.00E+00
2749	ALL	751688.42	4041260.7	3.15E-09	25YrCancer	3.15E-09	0.00E+00	0.00E+00	0.00E+00	0.00E+00	0.00E+00	0.00E+00	0.00E+00	0.00E+00	0.00E+00	0.00E+00	0.00E+00
2750	ALL	751788.42	4041260.7	3.11E-09	25YrCancer	3.11E-09	0.00E+00	0.00E+00	0.00E+00	0.00E+00	0.00E+00	0.00E+00	0.00E+00	0.00E+00	0.00E+00	0.00E+00	0.00E+00
2751	ALL	751888.42	4041260.7	3.08E-09	25YrCancer	3.08E-09	0.00E+00	0.00E+00	0.00E+00	0.00E+00	0.00E+00	0.00E+00	0.00E+00	0.00E+00	0.00E+00	0.00E+00	0.00E+00
2752	ALL	751988.42	4041260.7	3.05E-09	25YrCancer	3.05E-09	0.00E+00	0.00E+00	0.00E+00	0.00E+00	0.00E+00	0.00E+00	0.00E+00	0.00E+00	0.00E+00	0.00E+00	0.00E+00

2753	ALL	752088.42	4041260.7	3.01E-09	25YrCancer	3.01E-09	0.00E+00	0.00E+00	0.00E+00	0.00E+00	0.00E+00	0.00E+00	0.00E+00	0.00E+00	0.00E+00	0.00E+00	0.00E+00
2754	ALL	752188.42	4041260.7	2.98E-09	25YrCancer	2.98E-09	0.00E+00	0.00E+00	0.00E+00	0.00E+00	0.00E+00	0.00E+00	0.00E+00	0.00E+00	0.00E+00	0.00E+00	0.00E+00
2755	ALL	752288.42	4041260.7	2.95E-09	25YrCancer	2.95E-09	0.00E+00	0.00E+00	0.00E+00	0.00E+00	0.00E+00	0.00E+00	0.00E+00	0.00E+00	0.00E+00	0.00E+00	0.00E+00
2756	ALL	752388.42	4041260.7	2.92E-09	25YrCancer	2.92E-09	0.00E+00	0.00E+00	0.00E+00	0.00E+00	0.00E+00	0.00E+00	0.00E+00	0.00E+00	0.00E+00	0.00E+00	0.00E+00
2757	ALL	752488.42	4041260.7	2.89E-09	25YrCancer	2.89E-09	0.00E+00	0.00E+00	0.00E+00	0.00E+00	0.00E+00	0.00E+00	0.00E+00	0.00E+00	0.00E+00	0.00E+00	0.00E+00
2758	ALL	752588.42	4041260.7	2.86E-09	25YrCancer	2.86E-09	0.00E+00	0.00E+00	0.00E+00	0.00E+00	0.00E+00	0.00E+00	0.00E+00	0.00E+00	0.00E+00	0.00E+00	0.00E+00
2759	ALL	752688.42	4041260.7	2.82E-09	25YrCancer	2.82E-09	0.00E+00	0.00E+00	0.00E+00	0.00E+00	0.00E+00	0.00E+00	0.00E+00	0.00E+00	0.00E+00	0.00E+00	0.00E+00
2760	ALL	752788.42	4041260.7	2.79E-09	25YrCancer	2.79E-09	0.00E+00	0.00E+00	0.00E+00	0.00E+00	0.00E+00	0.00E+00	0.00E+00	0.00E+00	0.00E+00	0.00E+00	0.00E+00
2761	ALL	752888.42	4041260.7	2.76E-09	25YrCancer	2.76E-09	0.00E+00	0.00E+00	0.00E+00	0.00E+00	0.00E+00	0.00E+00	0.00E+00	0.00E+00	0.00E+00	0.00E+00	0.00E+00
2762	ALL	752988.42	4041260.7	2.73E-09	25YrCancer	2.73E-09	0.00E+00	0.00E+00	0.00E+00	0.00E+00	0.00E+00	0.00E+00	0.00E+00	0.00E+00	0.00E+00	0.00E+00	0.00E+00
2763	ALL	753088.42	4041260.7	2.71E-09	25YrCancer	2.71E-09	0.00E+00	0.00E+00	0.00E+00	0.00E+00	0.00E+00	0.00E+00	0.00E+00	0.00E+00	0.00E+00	0.00E+00	0.00E+00
2764	ALL	753188.42	4041260.7	2.68E-09	25YrCancer	2.68E-09	0.00E+00	0.00E+00	0.00E+00	0.00E+00	0.00E+00	0.00E+00	0.00E+00	0.00E+00	0.00E+00	0.00E+00	0.00E+00
2765	ALL	753288.42	4041260.7	2.65E-09	25YrCancer	2.65E-09	0.00E+00	0.00E+00	0.00E+00	0.00E+00	0.00E+00	0.00E+00	0.00E+00	0.00E+00	0.00E+00	0.00E+00	0.00E+00
2766	ALL	753388.42	4041260.7	2.63E-09	25YrCancer	2.63E-09	0.00E+00	0.00E+00	0.00E+00	0.00E+00	0.00E+00	0.00E+00	0.00E+00	0.00E+00	0.00E+00	0.00E+00	0.00E+00
2767	ALL	753488.42	4041260.7	2.60E-09	25YrCancer	2.60E-09	0.00E+00	0.00E+00	0.00E+00	0.00E+00	0.00E+00	0.00E+00	0.00E+00	0.00E+00	0.00E+00	0.00E+00	0.00E+00
2768	ALL	753588.42	4041260.7	2.58E-09	25YrCancer	2.58E-09	0.00E+00	0.00E+00	0.00E+00	0.00E+00	0.00E+00	0.00E+00	0.00E+00	0.00E+00	0.00E+00	0.00E+00	0.00E+00
2769	ALL	753688.42	4041260.7	2.55E-09	25YrCancer	2.55E-09	0.00E+00	0.00E+00	0.00E+00	0.00E+00	0.00E+00	0.00E+00	0.00E+00	0.00E+00	0.00E+00	0.00E+00	0.00E+00
2770	ALL	753788.42	4041260.7	2.53E-09	25YrCancer	2.53E-09	0.00E+00	0.00E+00	0.00E+00	0.00E+00	0.00E+00	0.00E+00	0.00E+00	0.00E+00	0.00E+00	0.00E+00	0.00E+00
2771	ALL	753888.42	4041260.7	2.50E-09	25YrCancer	2.50E-09	0.00E+00	0.00E+00	0.00E+00	0.00E+00	0.00E+00	0.00E+00	0.00E+00	0.00E+00	0.00E+00	0.00E+00	0.00E+00
2772	ALL	753988.42	4041260.7	2.48E-09	25YrCancer	2.48E-09	0.00E+00	0.00E+00	0.00E+00	0.00E+00	0.00E+00	0.00E+00	0.00E+00	0.00E+00	0.00E+00	0.00E+00	0.00E+00
2773	ALL	746288.42	4041360.7	6.51E-09	25YrCancer	6.51E-09	0.00E+00	0.00E+00	0.00E+00	0.00E+00	0.00E+00	0.00E+00	0.00E+00	0.00E+00	0.00E+00	0.00E+00	0.00E+00
2774	ALL	746388.42	4041360.7	6.84E-09	25YrCancer	6.84E-09	0.00E+00	0.00E+00	0.00E+00	0.00E+00	0.00E+00	0.00E+00	0.00E+00	0.00E+00	0.00E+00	0.00E+00	0.00E+00
2775	ALL	746488.42	4041360.7	7.21E-09	25YrCancer	7.21E-09	0.00E+00	0.00E+00	0.00E+00	0.00E+00	0.00E+00	0.00E+00	0.00E+00	0.00E+00	0.00E+00	0.00E+00	0.00E+00
2776	ALL	746588.42	4041360.7	7.63E-09	25YrCancer	7.63E-09	0.00E+00	0.00E+00	0.00E+00	0.00E+00	0.00E+00	0.00E+00	0.00E+00	0.00E+00	0.00E+00	0.00E+00	0.00E+00
2777	ALL	746688.42	4041360.7	8.06E-09	25YrCancer	8.06E-09	0.00E+00	0.00E+00	0.00E+00	0.00E+00	0.00E+00	0.00E+00	0.00E+00	0.00E+00	0.00E+00	0.00E+00	0.00E+00
2778	ALL	751388.42	4041360.7	3.09E-09	25YrCancer	3.09E-09	0.00E+00	0.00E+00	0.00E+00	0.00E+00	0.00E+00	0.00E+00	0.00E+00	0.00E+00	0.00E+00	0.00E+00	0.00E+00
2779	ALL	751488.42	4041360.7	3.06E-09	25YrCancer	3.06E-09	0.00E+00	0.00E+00	0.00E+00	0.00E+00	0.00E+00	0.00E+00	0.00E+00	0.00E+00	0.00E+00	0.00E+00	0.00E+00
2780	ALL	751588.42	4041360.7	3.03E-09	25YrCancer	3.03E-09	0.00E+00	0.00E+00	0.00E+00	0.00E+00	0.00E+00	0.00E+00	0.00E+00	0.00E+00	0.00E+00	0.00E+00	0.00E+00
2781	ALL	751688.42	4041360.7	3.00E-09	25YrCancer	3.00E-09	0.00E+00	0.00E+00	0.00E+00	0.00E+00	0.00E+00	0.00E+00	0.00E+00	0.00E+00	0.00E+00	0.00E+00	0.00E+00
2782	ALL	751788.42	4041360.7	2.97E-09	25YrCancer	2.97E-09	0.00E+00	0.00E+00	0.00E+00	0.00E+00	0.00E+00	0.00E+00	0.00E+00	0.00E+00	0.00E+00	0.00E+00	0.00E+00
2783	ALL	751888.42	4041360.7	2.94E-09	25YrCancer	2.94E-09	0.00E+00	0.00E+00	0.00E+00	0.00E+00	0.00E+00	0.00E+00	0.00E+00	0.00E+00	0.00E+00	0.00E+00	0.00E+00
2784	ALL	751988.42	4041360.7	2.91E-09	25YrCancer	2.91E-09	0.00E+00	0.00E+00	0.00E+00	0.00E+00	0.00E+00	0.00E+00	0.00E+00	0.00E+00	0.00E+00	0.00E+00	0.00E+00
2785	ALL	752088.42	4041360.7	2.88E-09	25YrCancer	2.88E-09	0.00E+00	0.00E+00	0.00E+00	0.00E+00	0.00E+00	0.00E+00	0.00E+00	0.00E+00	0.00E+00	0.00E+00	0.00E+00
2786	ALL	752188.42	4041360.7	2.86E-09	25YrCancer	2.86E-09	0.00E+00	0.00E+00	0.00E+00	0.00E+00	0.00E+00	0.00E+00	0.00E+00	0.00E+00	0.00E+00	0.00E+00	0.00E+00
2787	ALL	752288.42	4041360.7	2.82E-09	25YrCancer	2.82E-09	0.00E+00	0.00E+00	0.00E+00	0.00E+00	0.00E+00	0.00E+00	0.00E+00	0.00E+00	0.00E+00	0.00E+00	0.00E+00
2788	ALL	752388.42	4041360.7	2.79E-09	25YrCancer	2.79E-09	0.00E+00	0.00E+00	0.00E+00	0.00E+00	0.00E+00	0.00E+00	0.00E+00	0.00E+00	0.00E+00	0.00E+00	0.00E+00
2789	ALL	752488.42	4041360.7	2.77E-09	25YrCancer	2.77E-09	0.00E+00	0.00E+00	0.00E+00	0.00E+00	0.00E+00	0.00E+00	0.00E+00	0.00E+00	0.00E+00	0.00E+00	0.00E+00
2790	ALL	752588.42	4041360.7	2.74E-09	25YrCancer	2.74E-09	0.00E+00	0.00E+00	0.00E+00	0.00E+00	0.00E+00	0.00E+00	0.00E+00	0.00E+00	0.00E+00	0.00E+00	0.00E+00
2791	ALL	752688.42	4041360.7	2.71E-09	25YrCancer	2.71E-09	0.00E+00	0.00E+00	0.00E+00	0.00E+00	0.00E+00	0.00E+00	0.00E+00	0.00E+00	0.00E+00	0.00E+00	0.00E+00
2792	ALL	752788.42	4041360.7	2.68E-09	25YrCancer	2.68E-09	0.00E+00	0.00E+00	0.00E+00	0.00E+00	0.00E+00	0.00E+00	0.00E+00	0.00E+00	0.00E+00	0.00E+00	0.00E+00
2793	ALL	752888.42	4041360.7	2.65E-09	25YrCancer	2.65E-09	0.00E+00	0.00E+00	0.00E+00	0.00E+00	0.00E+00	0.00E+00	0.00E+00	0.00E+00	0.00E+00	0.00E+00	0.00E+00
2794	ALL	752988.42	4041360.7	2.63E-09	25YrCancer	2.63E-09	0.00E+00	0.00E+00	0.00E+00	0.00E+00	0.00E+00	0.00E+00	0.00E+00	0.00E+00	0.00E+00	0.00E+00	0.00E+00
2795	ALL	753088.42	4041360.7	2.60E-09	25YrCancer	2.60E-09	0.00E+00	0.00E+00	0.00E+00	0.00E+00	0.00E+00	0.00E+00	0.00E+00	0.00E+00	0.00E+00	0.00E+00	0.00E+00
2796	ALL	753188.42	4041360.7	2.58E-09	25YrCancer	2.58E-09	0.00E+00	0.00E+00	0.00E+00	0.00E+00	0.00E+00	0.00E+00	0.00E+00	0.00E+00	0.00E+00	0.00E+00	0.00E+00
2797	ALL	753288.42	4041360.7	2.55E-09	25YrCancer	2.55E-09	0.00E+00	0.00E+00	0.00E+00	0.00E+00	0.00E+00	0.00E+00	0.00E+00	0.00E+00	0.00E+00	0.00E+00	0.00E+00
2798	ALL	753388.42	4041360.7	2.53E-09	25YrCancer	2.53E-09	0.00E+00	0.00E+00	0.00E+00	0.00E+00	0.00E+00	0.00E+00	0.00E+00	0.00E+00	0.00E+00	0.00E+00	0.00E+00
2799	ALL	753488.42	4041360.7	2.51E-09	25YrCancer	2.51E-09	0.00E+00	0.00E+00	0.00E+00	0.00E+00	0.00E+00	0.00E+00	0.00E+00	0.00E+00	0.00E+00	0.00E+00	0.00E+00
2800	ALL	753588.42	4041360.7	2.48E-09	25YrCancer	2.48E-09	0.00E+00	0.00E+00	0.00E+00	0.00E+00	0.00E+00	0.00E+00	0.00E+00	0.00E+00	0.00E+00	0.00E+00	0.00E+00
2801	ALL	753688.42	4041360.7	2.46E-09	25YrCancer	2.46E-09	0.00E+00	0.00E+00	0.00E+00	0.00E+00	0.00E+00	0.00E+00	0.00E+00	0.00E+00	0.00E+00	0.00E+00	0.00E+00
2802	ALL	753788.42	4041360.7	2.44E-09	25YrCancer	2.44E-09	0.00E+00	0.00E+00	0.00E+00	0.00E+00	0.00E+00	0.00E+00	0.00E+00	0.00E+00	0.00E+00	0.00E+00	0.00E+00
2803	ALL	753888.42	4041360.7	2.42E-09	25YrCancer	2.42E-09	0.00E+00	0.00E+00	0.00E+00	0.00E+00	0.00E+00	0.00E+00	0.00E+00	0.00E+00	0.00E+00	0.00E+00	0.00E+00

2804	ALL	753988.42	4041360.7	2.40E-09	25YrCancer	2.40E-09	0.00E+00	0.00E+00	0.00E+00	0.00E+00	0.00E+00	0.00E+00	0.00E+00	0.00E+00	0.00E+00	0.00E+00	0.00E+00
2805	ALL	746288.42	4041460.7	6.61E-09	25YrCancer	6.61E-09	0.00E+00	0.00E+00	0.00E+00	0.00E+00	0.00E+00	0.00E+00	0.00E+00	0.00E+00	0.00E+00	0.00E+00	0.00E+00
2806	ALL	746388.42	4041460.7	6.93E-09	25YrCancer	6.93E-09	0.00E+00	0.00E+00	0.00E+00	0.00E+00	0.00E+00	0.00E+00	0.00E+00	0.00E+00	0.00E+00	0.00E+00	0.00E+00
2807	ALL	746488.42	4041460.7	7.28E-09	25YrCancer	7.28E-09	0.00E+00	0.00E+00	0.00E+00	0.00E+00	0.00E+00	0.00E+00	0.00E+00	0.00E+00	0.00E+00	0.00E+00	0.00E+00
2808	ALL	746588.42	4041460.7	7.65E-09	25YrCancer	7.65E-09	0.00E+00	0.00E+00	0.00E+00	0.00E+00	0.00E+00	0.00E+00	0.00E+00	0.00E+00	0.00E+00	0.00E+00	0.00E+00
2809	ALL	746688.42	4041460.7	8.05E-09	25YrCancer	8.05E-09	0.00E+00	0.00E+00	0.00E+00	0.00E+00	0.00E+00	0.00E+00	0.00E+00	0.00E+00	0.00E+00	0.00E+00	0.00E+00
2810	ALL	751388.42	4041460.7	2.95E-09	25YrCancer	2.95E-09	0.00E+00	0.00E+00	0.00E+00	0.00E+00	0.00E+00	0.00E+00	0.00E+00	0.00E+00	0.00E+00	0.00E+00	0.00E+00
2811	ALL	751488.42	4041460.7	2.93E-09	25YrCancer	2.93E-09	0.00E+00	0.00E+00	0.00E+00	0.00E+00	0.00E+00	0.00E+00	0.00E+00	0.00E+00	0.00E+00	0.00E+00	0.00E+00
2812	ALL	751588.42	4041460.7	2.90E-09	25YrCancer	2.90E-09	0.00E+00	0.00E+00	0.00E+00	0.00E+00	0.00E+00	0.00E+00	0.00E+00	0.00E+00	0.00E+00	0.00E+00	0.00E+00
2813	ALL	751688.42	4041460.7	2.88E-09	25YrCancer	2.88E-09	0.00E+00	0.00E+00	0.00E+00	0.00E+00	0.00E+00	0.00E+00	0.00E+00	0.00E+00	0.00E+00	0.00E+00	0.00E+00
2814	ALL	751788.42	4041460.7	2.85E-09	25YrCancer	2.85E-09	0.00E+00	0.00E+00	0.00E+00	0.00E+00	0.00E+00	0.00E+00	0.00E+00	0.00E+00	0.00E+00	0.00E+00	0.00E+00
2815	ALL	751888.42	4041460.7	2.82E-09	25YrCancer	2.82E-09	0.00E+00	0.00E+00	0.00E+00	0.00E+00	0.00E+00	0.00E+00	0.00E+00	0.00E+00	0.00E+00	0.00E+00	0.00E+00
2816	ALL	751988.42	4041460.7	2.79E-09	25YrCancer	2.79E-09	0.00E+00	0.00E+00	0.00E+00	0.00E+00	0.00E+00	0.00E+00	0.00E+00	0.00E+00	0.00E+00	0.00E+00	0.00E+00
2817	ALL	752088.42	4041460.7	2.77E-09	25YrCancer	2.77E-09	0.00E+00	0.00E+00	0.00E+00	0.00E+00	0.00E+00	0.00E+00	0.00E+00	0.00E+00	0.00E+00	0.00E+00	0.00E+00
2818	ALL	752188.42	4041460.7	2.74E-09	25YrCancer	2.74E-09	0.00E+00	0.00E+00	0.00E+00	0.00E+00	0.00E+00	0.00E+00	0.00E+00	0.00E+00	0.00E+00	0.00E+00	0.00E+00
2819	ALL	752288.42	4041460.7	2.71E-09	25YrCancer	2.71E-09	0.00E+00	0.00E+00	0.00E+00	0.00E+00	0.00E+00	0.00E+00	0.00E+00	0.00E+00	0.00E+00	0.00E+00	0.00E+00
2820	ALL	752388.42	4041460.7	2.68E-09	25YrCancer	2.68E-09	0.00E+00	0.00E+00	0.00E+00	0.00E+00	0.00E+00	0.00E+00	0.00E+00	0.00E+00	0.00E+00	0.00E+00	0.00E+00
2821	ALL	752488.42	4041460.7	2.66E-09	25YrCancer	2.66E-09	0.00E+00	0.00E+00	0.00E+00	0.00E+00	0.00E+00	0.00E+00	0.00E+00	0.00E+00	0.00E+00	0.00E+00	0.00E+00
2822	ALL	752588.42	4041460.7	2.63E-09	25YrCancer	2.63E-09	0.00E+00	0.00E+00	0.00E+00	0.00E+00	0.00E+00	0.00E+00	0.00E+00	0.00E+00	0.00E+00	0.00E+00	0.00E+00
2823	ALL	752688.42	4041460.7	2.61E-09	25YrCancer	2.61E-09	0.00E+00	0.00E+00	0.00E+00	0.00E+00	0.00E+00	0.00E+00	0.00E+00	0.00E+00	0.00E+00	0.00E+00	0.00E+00
2824	ALL	752788.42	4041460.7	2.58E-09	25YrCancer	2.58E-09	0.00E+00	0.00E+00	0.00E+00	0.00E+00	0.00E+00	0.00E+00	0.00E+00	0.00E+00	0.00E+00	0.00E+00	0.00E+00
2825	ALL	752888.42	4041460.7	2.55E-09	25YrCancer	2.55E-09	0.00E+00	0.00E+00	0.00E+00	0.00E+00	0.00E+00	0.00E+00	0.00E+00	0.00E+00	0.00E+00	0.00E+00	0.00E+00
2826	ALL	752988.42	4041460.7	2.53E-09	25YrCancer	2.53E-09	0.00E+00	0.00E+00	0.00E+00	0.00E+00	0.00E+00	0.00E+00	0.00E+00	0.00E+00	0.00E+00	0.00E+00	0.00E+00
2827	ALL	753088.42	4041460.7	2.50E-09	25YrCancer	2.50E-09	0.00E+00	0.00E+00	0.00E+00	0.00E+00	0.00E+00	0.00E+00	0.00E+00	0.00E+00	0.00E+00	0.00E+00	0.00E+00
2828	ALL	753188.42	4041460.7	2.48E-09	25YrCancer	2.48E-09	0.00E+00	0.00E+00	0.00E+00	0.00E+00	0.00E+00	0.00E+00	0.00E+00	0.00E+00	0.00E+00	0.00E+00	0.00E+00
2829	ALL	753288.42	4041460.7	2.46E-09	25YrCancer	2.46E-09	0.00E+00	0.00E+00	0.00E+00	0.00E+00	0.00E+00	0.00E+00	0.00E+00	0.00E+00	0.00E+00	0.00E+00	0.00E+00
2830	ALL	753388.42	4041460.7	2.44E-09	25YrCancer	2.44E-09	0.00E+00	0.00E+00	0.00E+00	0.00E+00	0.00E+00	0.00E+00	0.00E+00	0.00E+00	0.00E+00	0.00E+00	0.00E+00
2831	ALL	753488.42	4041460.7	2.42E-09	25YrCancer	2.42E-09	0.00E+00	0.00E+00	0.00E+00	0.00E+00	0.00E+00	0.00E+00	0.00E+00	0.00E+00	0.00E+00	0.00E+00	0.00E+00
2832	ALL	753588.42	4041460.7	2.40E-09	25YrCancer	2.40E-09	0.00E+00	0.00E+00	0.00E+00	0.00E+00	0.00E+00	0.00E+00	0.00E+00	0.00E+00	0.00E+00	0.00E+00	0.00E+00
2833	ALL	753688.42	4041460.7	2.38E-09	25YrCancer	2.38E-09	0.00E+00	0.00E+00	0.00E+00	0.00E+00	0.00E+00	0.00E+00	0.00E+00	0.00E+00	0.00E+00	0.00E+00	0.00E+00
2834	ALL	753788.42	4041460.7	2.36E-09	25YrCancer	2.36E-09	0.00E+00	0.00E+00	0.00E+00	0.00E+00	0.00E+00	0.00E+00	0.00E+00	0.00E+00	0.00E+00	0.00E+00	0.00E+00
2835	ALL	753888.42	4041460.7	2.34E-09	25YrCancer	2.34E-09	0.00E+00	0.00E+00	0.00E+00	0.00E+00	0.00E+00	0.00E+00	0.00E+00	0.00E+00	0.00E+00	0.00E+00	0.00E+00
2836	ALL	753988.42	4041460.7	2.32E-09	25YrCancer	2.32E-09	0.00E+00	0.00E+00	0.00E+00	0.00E+00	0.00E+00	0.00E+00	0.00E+00	0.00E+00	0.00E+00	0.00E+00	0.00E+00
2837	ALL	746288.42	4041560.7	6.67E-09	25YrCancer	6.67E-09	0.00E+00	0.00E+00	0.00E+00	0.00E+00	0.00E+00	0.00E+00	0.00E+00	0.00E+00	0.00E+00	0.00E+00	0.00E+00
2838	ALL	746388.42	4041560.7	6.97E-09	25YrCancer	6.97E-09	0.00E+00	0.00E+00	0.00E+00	0.00E+00	0.00E+00	0.00E+00	0.00E+00	0.00E+00	0.00E+00	0.00E+00	0.00E+00
2839	ALL	746488.42	4041560.7	7.30E-09	25YrCancer	7.30E-09	0.00E+00	0.00E+00	0.00E+00	0.00E+00	0.00E+00	0.00E+00	0.00E+00	0.00E+00	0.00E+00	0.00E+00	0.00E+00
2840	ALL	746588.42	4041560.7	7.63E-09	25YrCancer	7.63E-09	0.00E+00	0.00E+00	0.00E+00	0.00E+00	0.00E+00	0.00E+00	0.00E+00	0.00E+00	0.00E+00	0.00E+00	0.00E+00
2841	ALL	746688.42	4041560.7	7.95E-09	25YrCancer	7.95E-09	0.00E+00	0.00E+00	0.00E+00	0.00E+00	0.00E+00	0.00E+00	0.00E+00	0.00E+00	0.00E+00	0.00E+00	0.00E+00
2842	ALL	746788.42	4041560.7	8.24E-09	25YrCancer	8.24E-09	0.00E+00	0.00E+00	0.00E+00	0.00E+00	0.00E+00	0.00E+00	0.00E+00	0.00E+00	0.00E+00	0.00E+00	0.00E+00
2843	ALL	746888.42	4041560.7	8.45E-09	25YrCancer	8.45E-09	0.00E+00	0.00E+00	0.00E+00	0.00E+00	0.00E+00	0.00E+00	0.00E+00	0.00E+00	0.00E+00	0.00E+00	0.00E+00
2844	ALL	746988.42	4041560.7	8.57E-09	25YrCancer	8.57E-09	0.00E+00	0.00E+00	0.00E+00	0.00E+00	0.00E+00	0.00E+00	0.00E+00	0.00E+00	0.00E+00	0.00E+00	0.00E+00
2845	ALL	747088.42	4041560.7	8.55E-09	25YrCancer	8.55E-09	0.00E+00	0.00E+00	0.00E+00	0.00E+00	0.00E+00	0.00E+00	0.00E+00	0.00E+00	0.00E+00	0.00E+00	0.00E+00
2846	ALL	747188.42	4041560.7	8.40E-09	25YrCancer	8.40E-09	0.00E+00	0.00E+00	0.00E+00	0.00E+00	0.00E+00	0.00E+00	0.00E+00	0.00E+00	0.00E+00	0.00E+00	0.00E+00
2847	ALL	747288.42	4041560.7	8.14E-09	25YrCancer	8.14E-09	0.00E+00	0.00E+00	0.00E+00	0.00E+00	0.00E+00	0.00E+00	0.00E+00	0.00E+00	0.00E+00	0.00E+00	0.00E+00
2848	ALL	747388.42	4041560.7	7.78E-09	25YrCancer	7.78E-09	0.00E+00	0.00E+00	0.00E+00	0.00E+00	0.00E+00	0.00E+00	0.00E+00	0.00E+00	0.00E+00	0.00E+00	0.00E+00
2849	ALL	747488.42	4041560.7	7.35E-09	25YrCancer	7.35E-09	0.00E+00	0.00E+00	0.00E+00	0.00E+00	0.00E+00	0.00E+00	0.00E+00	0.00E+00	0.00E+00	0.00E+00	0.00E+00
2850	ALL	747588.42	4041560.7	6.86E-09	25YrCancer	6.86E-09	0.00E+00	0.00E+00	0.00E+00	0.00E+00	0.00E+00	0.00E+00	0.00E+00	0.00E+00	0.00E+00	0.00E+00	0.00E+00
2851	ALL	747688.42	4041560.7	6.34E-09	25YrCancer	6.34E-09	0.00E+00	0.00E+00	0.00E+00	0.00E+00	0.00E+00	0.00E+00	0.00E+00	0.00E+00	0.00E+00	0.00E+00	0.00E+00
2852	ALL	747788.42	4041560.7	5.87E-09	25YrCancer	5.87E-09	0.00E+00	0.00E+00	0.00E+00	0.00E+00	0.00E+00	0.00E+00	0.00E+00	0.00E+00	0.00E+00	0.00E+00	0.00E+00
2853	ALL	747888.42	4041560.7	5.50E-09	25YrCancer	5.50E-09	0.00E+00	0.00E+00	0.00E+00	0.00E+00	0.00E+00	0.00E+00	0.00E+00	0.00E+00	0.00E+00	0.00E+00	0.00E+00
2854	ALL	747988.42	4041560.7	5.21E-09	25YrCancer	5.21E-09	0.00E+00	0.00E+00	0.00E+00	0.00E+00	0.00E+00	0.00E+00	0.00E+00	0.00E+00	0.00E+00	0.00E+00	0.00E+00

2855	ALL	748088.42	4041560.7	4.95E-09	25YrCancer	4.95E-09	0.00E+00	0.00E+00	0.00E+00	0.00E+00	0.00E+00	0.00E+00	0.00E+00	0.00E+00	0.00E+00	0.00E+00	0.00E+00
2856	ALL	751388.42	4041560.7	2.83E-09	25YrCancer	2.83E-09	0.00E+00	0.00E+00	0.00E+00	0.00E+00	0.00E+00	0.00E+00	0.00E+00	0.00E+00	0.00E+00	0.00E+00	0.00E+00
2857	ALL	751488.42	4041560.7	2.81E-09	25YrCancer	2.81E-09	0.00E+00	0.00E+00	0.00E+00	0.00E+00	0.00E+00	0.00E+00	0.00E+00	0.00E+00	0.00E+00	0.00E+00	0.00E+00
2858	ALL	751588.42	4041560.7	2.79E-09	25YrCancer	2.79E-09	0.00E+00	0.00E+00	0.00E+00	0.00E+00	0.00E+00	0.00E+00	0.00E+00	0.00E+00	0.00E+00	0.00E+00	0.00E+00
2859	ALL	751688.42	4041560.7	2.76E-09	25YrCancer	2.76E-09	0.00E+00	0.00E+00	0.00E+00	0.00E+00	0.00E+00	0.00E+00	0.00E+00	0.00E+00	0.00E+00	0.00E+00	0.00E+00
2860	ALL	751788.42	4041560.7	2.74E-09	25YrCancer	2.74E-09	0.00E+00	0.00E+00	0.00E+00	0.00E+00	0.00E+00	0.00E+00	0.00E+00	0.00E+00	0.00E+00	0.00E+00	0.00E+00
2861	ALL	751888.42	4041560.7	2.71E-09	25YrCancer	2.71E-09	0.00E+00	0.00E+00	0.00E+00	0.00E+00	0.00E+00	0.00E+00	0.00E+00	0.00E+00	0.00E+00	0.00E+00	0.00E+00
2862	ALL	751988.42	4041560.7	2.69E-09	25YrCancer	2.69E-09	0.00E+00	0.00E+00	0.00E+00	0.00E+00	0.00E+00	0.00E+00	0.00E+00	0.00E+00	0.00E+00	0.00E+00	0.00E+00
2863	ALL	752088.42	4041560.7	2.66E-09	25YrCancer	2.66E-09	0.00E+00	0.00E+00	0.00E+00	0.00E+00	0.00E+00	0.00E+00	0.00E+00	0.00E+00	0.00E+00	0.00E+00	0.00E+00
2864	ALL	752188.42	4041560.7	2.64E-09	25YrCancer	2.64E-09	0.00E+00	0.00E+00	0.00E+00	0.00E+00	0.00E+00	0.00E+00	0.00E+00	0.00E+00	0.00E+00	0.00E+00	0.00E+00
2865	ALL	752288.42	4041560.7	2.62E-09	25YrCancer	2.62E-09	0.00E+00	0.00E+00	0.00E+00	0.00E+00	0.00E+00	0.00E+00	0.00E+00	0.00E+00	0.00E+00	0.00E+00	0.00E+00
2866	ALL	752388.42	4041560.7	2.59E-09	25YrCancer	2.59E-09	0.00E+00	0.00E+00	0.00E+00	0.00E+00	0.00E+00	0.00E+00	0.00E+00	0.00E+00	0.00E+00	0.00E+00	0.00E+00
2867	ALL	752488.42	4041560.7	2.56E-09	25YrCancer	2.56E-09	0.00E+00	0.00E+00	0.00E+00	0.00E+00	0.00E+00	0.00E+00	0.00E+00	0.00E+00	0.00E+00	0.00E+00	0.00E+00
2868	ALL	752588.42	4041560.7	2.54E-09	25YrCancer	2.54E-09	0.00E+00	0.00E+00	0.00E+00	0.00E+00	0.00E+00	0.00E+00	0.00E+00	0.00E+00	0.00E+00	0.00E+00	0.00E+00
2869	ALL	752688.42	4041560.7	2.51E-09	25YrCancer	2.51E-09	0.00E+00	0.00E+00	0.00E+00	0.00E+00	0.00E+00	0.00E+00	0.00E+00	0.00E+00	0.00E+00	0.00E+00	0.00E+00
2870	ALL	752788.42	4041560.7	2.49E-09	25YrCancer	2.49E-09	0.00E+00	0.00E+00	0.00E+00	0.00E+00	0.00E+00	0.00E+00	0.00E+00	0.00E+00	0.00E+00	0.00E+00	0.00E+00
2871	ALL	752888.42	4041560.7	2.46E-09	25YrCancer	2.46E-09	0.00E+00	0.00E+00	0.00E+00	0.00E+00	0.00E+00	0.00E+00	0.00E+00	0.00E+00	0.00E+00	0.00E+00	0.00E+00
2872	ALL	752988.42	4041560.7	2.44E-09	25YrCancer	2.44E-09	0.00E+00	0.00E+00	0.00E+00	0.00E+00	0.00E+00	0.00E+00	0.00E+00	0.00E+00	0.00E+00	0.00E+00	0.00E+00
2873	ALL	753088.42	4041560.7	2.42E-09	25YrCancer	2.42E-09	0.00E+00	0.00E+00	0.00E+00	0.00E+00	0.00E+00	0.00E+00	0.00E+00	0.00E+00	0.00E+00	0.00E+00	0.00E+00
2874	ALL	753188.42	4041560.7	2.40E-09	25YrCancer	2.40E-09	0.00E+00	0.00E+00	0.00E+00	0.00E+00	0.00E+00	0.00E+00	0.00E+00	0.00E+00	0.00E+00	0.00E+00	0.00E+00
2875	ALL	753288.42	4041560.7	2.38E-09	25YrCancer	2.38E-09	0.00E+00	0.00E+00	0.00E+00	0.00E+00	0.00E+00	0.00E+00	0.00E+00	0.00E+00	0.00E+00	0.00E+00	0.00E+00
2876	ALL	753388.42	4041560.7	2.36E-09	25YrCancer	2.36E-09	0.00E+00	0.00E+00	0.00E+00	0.00E+00	0.00E+00	0.00E+00	0.00E+00	0.00E+00	0.00E+00	0.00E+00	0.00E+00
2877	ALL	753488.42	4041560.7	2.34E-09	25YrCancer	2.34E-09	0.00E+00	0.00E+00	0.00E+00	0.00E+00	0.00E+00	0.00E+00	0.00E+00	0.00E+00	0.00E+00	0.00E+00	0.00E+00
2878	ALL	753588.42	4041560.7	2.32E-09	25YrCancer	2.32E-09	0.00E+00	0.00E+00	0.00E+00	0.00E+00	0.00E+00	0.00E+00	0.00E+00	0.00E+00	0.00E+00	0.00E+00	0.00E+00
2879	ALL	753688.42	4041560.7	2.30E-09	25YrCancer	2.30E-09	0.00E+00	0.00E+00	0.00E+00	0.00E+00	0.00E+00	0.00E+00	0.00E+00	0.00E+00	0.00E+00	0.00E+00	0.00E+00
2880	ALL	753788.42	4041560.7	2.28E-09	25YrCancer	2.28E-09	0.00E+00	0.00E+00	0.00E+00	0.00E+00	0.00E+00	0.00E+00	0.00E+00	0.00E+00	0.00E+00	0.00E+00	0.00E+00
2881	ALL	753888.42	4041560.7	2.27E-09	25YrCancer	2.27E-09	0.00E+00	0.00E+00	0.00E+00	0.00E+00	0.00E+00	0.00E+00	0.00E+00	0.00E+00	0.00E+00	0.00E+00	0.00E+00
2882	ALL	753988.42	4041560.7	2.25E-09	25YrCancer	2.25E-09	0.00E+00	0.00E+00	0.00E+00	0.00E+00	0.00E+00	0.00E+00	0.00E+00	0.00E+00	0.00E+00	0.00E+00	0.00E+00
2883	ALL	746288.42	4041660.7	6.67E-09	25YrCancer	6.67E-09	0.00E+00	0.00E+00	0.00E+00	0.00E+00	0.00E+00	0.00E+00	0.00E+00	0.00E+00	0.00E+00	0.00E+00	0.00E+00
2884	ALL	746388.42	4041660.7	6.95E-09	25YrCancer	6.95E-09	0.00E+00	0.00E+00	0.00E+00	0.00E+00	0.00E+00	0.00E+00	0.00E+00	0.00E+00	0.00E+00	0.00E+00	0.00E+00
2885	ALL	746488.42	4041660.7	7.23E-09	25YrCancer	7.23E-09	0.00E+00	0.00E+00	0.00E+00	0.00E+00	0.00E+00	0.00E+00	0.00E+00	0.00E+00	0.00E+00	0.00E+00	0.00E+00
2886	ALL	746588.42	4041660.7	7.50E-09	25YrCancer	7.50E-09	0.00E+00	0.00E+00	0.00E+00	0.00E+00	0.00E+00	0.00E+00	0.00E+00	0.00E+00	0.00E+00	0.00E+00	0.00E+00
2887	ALL	746688.42	4041660.7	7.73E-09	25YrCancer	7.73E-09	0.00E+00	0.00E+00	0.00E+00	0.00E+00	0.00E+00	0.00E+00	0.00E+00	0.00E+00	0.00E+00	0.00E+00	0.00E+00
2888	ALL	746788.42	4041660.7	7.90E-09	25YrCancer	7.90E-09	0.00E+00	0.00E+00	0.00E+00	0.00E+00	0.00E+00	0.00E+00	0.00E+00	0.00E+00	0.00E+00	0.00E+00	0.00E+00
2889	ALL	746888.42	4041660.7	7.96E-09	25YrCancer	7.96E-09	0.00E+00	0.00E+00	0.00E+00	0.00E+00	0.00E+00	0.00E+00	0.00E+00	0.00E+00	0.00E+00	0.00E+00	0.00E+00
2890	ALL	746988.42	4041660.7	7.93E-09	25YrCancer	7.93E-09	0.00E+00	0.00E+00	0.00E+00	0.00E+00	0.00E+00	0.00E+00	0.00E+00	0.00E+00	0.00E+00	0.00E+00	0.00E+00
2891	ALL	747088.42	4041660.7	7.79E-09	25YrCancer	7.79E-09	0.00E+00	0.00E+00	0.00E+00	0.00E+00	0.00E+00	0.00E+00	0.00E+00	0.00E+00	0.00E+00	0.00E+00	0.00E+00
2892	ALL	747188.42	4041660.7	7.56E-09	25YrCancer	7.56E-09	0.00E+00	0.00E+00	0.00E+00	0.00E+00	0.00E+00	0.00E+00	0.00E+00	0.00E+00	0.00E+00	0.00E+00	0.00E+00
2893	ALL	747288.42	4041660.7	7.27E-09	25YrCancer	7.27E-09	0.00E+00	0.00E+00	0.00E+00	0.00E+00	0.00E+00	0.00E+00	0.00E+00	0.00E+00	0.00E+00	0.00E+00	0.00E+00
2894	ALL	747388.42	4041660.7	6.92E-09	25YrCancer	6.92E-09	0.00E+00	0.00E+00	0.00E+00	0.00E+00	0.00E+00	0.00E+00	0.00E+00	0.00E+00	0.00E+00	0.00E+00	0.00E+00
2895	ALL	747488.42	4041660.7	6.51E-09	25YrCancer	6.51E-09	0.00E+00	0.00E+00	0.00E+00	0.00E+00	0.00E+00	0.00E+00	0.00E+00	0.00E+00	0.00E+00	0.00E+00	0.00E+00
2896	ALL	747588.42	4041660.7	6.08E-09	25YrCancer	6.08E-09	0.00E+00	0.00E+00	0.00E+00	0.00E+00	0.00E+00	0.00E+00	0.00E+00	0.00E+00	0.00E+00	0.00E+00	0.00E+00
2897	ALL	747688.42	4041660.7	5.66E-09	25YrCancer	5.66E-09	0.00E+00	0.00E+00	0.00E+00	0.00E+00	0.00E+00	0.00E+00	0.00E+00	0.00E+00	0.00E+00	0.00E+00	0.00E+00
2898	ALL	747788.42	4041660.7	5.31E-09	25YrCancer	5.31E-09	0.00E+00	0.00E+00	0.00E+00	0.00E+00	0.00E+00	0.00E+00	0.00E+00	0.00E+00	0.00E+00	0.00E+00	0.00E+00
2899	ALL	747888.42	4041660.7	5.04E-09	25YrCancer	5.04E-09	0.00E+00	0.00E+00	0.00E+00	0.00E+00	0.00E+00	0.00E+00	0.00E+00	0.00E+00	0.00E+00	0.00E+00	0.00E+00
2900	ALL	747988.42	4041660.7	4.82E-09	25YrCancer	4.82E-09	0.00E+00	0.00E+00	0.00E+00	0.00E+00	0.00E+00	0.00E+00	0.00E+00	0.00E+00	0.00E+00	0.00E+00	0.00E+00
2901	ALL	748088.42	4041660.7	4.61E-09	25YrCancer	4.61E-09	0.00E+00	0.00E+00	0.00E+00	0.00E+00	0.00E+00	0.00E+00	0.00E+00	0.00E+00	0.00E+00	0.00E+00	0.00E+00
2902	ALL	748188.42	4041660.7	4.37E-09	25YrCancer	4.37E-09	0.00E+00	0.00E+00	0.00E+00	0.00E+00	0.00E+00	0.00E+00	0.00E+00	0.00E+00	0.00E+00	0.00E+00	0.00E+00
2903	ALL	748288.42	4041660.7	4.14E-09	25YrCancer	4.14E-09	0.00E+00	0.00E+00	0.00E+00	0.00E+00	0.00E+00	0.00E+00	0.00E+00	0.00E+00	0.00E+00	0.00E+00	0.00E+00
2904	ALL	748388.42	4041660.7	3.91E-09	25YrCancer	3.91E-09	0.00E+00	0.00E+00	0.00E+00	0.00E+00	0.00E+00	0.00E+00	0.00E+00	0.00E+00	0.00E+00	0.00E+00	0.00E+00
2905	ALL	748488.42	4041660.7	3.71E-09	25YrCancer	3.71E-09	0.00E+00	0.00E+00	0.00E+00	0.00E+00	0.00E+00	0.00E+00	0.00E+00	0.00E+00	0.00E+00	0.00E+00	0.00E+00

2906	ALL	751388.42	4041660.7	2.72E-09	25YrCancer	2.72E-09	0.00E+00	0.00E+00	0.00E+00	0.00E+00	0.00E+00	0.00E+00	0.00E+00	0.00E+00	0.00E+00	0.00E+00	0.00E+00
2907	ALL	751488.42	4041660.7	2.70E-09	25YrCancer	2.70E-09	0.00E+00	0.00E+00	0.00E+00	0.00E+00	0.00E+00	0.00E+00	0.00E+00	0.00E+00	0.00E+00	0.00E+00	0.00E+00
2908	ALL	751588.42	4041660.7	2.68E-09	25YrCancer	2.68E-09	0.00E+00	0.00E+00	0.00E+00	0.00E+00	0.00E+00	0.00E+00	0.00E+00	0.00E+00	0.00E+00	0.00E+00	0.00E+00
2909	ALL	751688.42	4041660.7	2.66E-09	25YrCancer	2.66E-09	0.00E+00	0.00E+00	0.00E+00	0.00E+00	0.00E+00	0.00E+00	0.00E+00	0.00E+00	0.00E+00	0.00E+00	0.00E+00
2910	ALL	751788.42	4041660.7	2.64E-09	25YrCancer	2.64E-09	0.00E+00	0.00E+00	0.00E+00	0.00E+00	0.00E+00	0.00E+00	0.00E+00	0.00E+00	0.00E+00	0.00E+00	0.00E+00
2911	ALL	751888.42	4041660.7	2.61E-09	25YrCancer	2.61E-09	0.00E+00	0.00E+00	0.00E+00	0.00E+00	0.00E+00	0.00E+00	0.00E+00	0.00E+00	0.00E+00	0.00E+00	0.00E+00
2912	ALL	751988.42	4041660.7	2.59E-09	25YrCancer	2.59E-09	0.00E+00	0.00E+00	0.00E+00	0.00E+00	0.00E+00	0.00E+00	0.00E+00	0.00E+00	0.00E+00	0.00E+00	0.00E+00
2913	ALL	752088.42	4041660.7	2.57E-09	25YrCancer	2.57E-09	0.00E+00	0.00E+00	0.00E+00	0.00E+00	0.00E+00	0.00E+00	0.00E+00	0.00E+00	0.00E+00	0.00E+00	0.00E+00
2914	ALL	752188.42	4041660.7	2.55E-09	25YrCancer	2.55E-09	0.00E+00	0.00E+00	0.00E+00	0.00E+00	0.00E+00	0.00E+00	0.00E+00	0.00E+00	0.00E+00	0.00E+00	0.00E+00
2915	ALL	752288.42	4041660.7	2.53E-09	25YrCancer	2.53E-09	0.00E+00	0.00E+00	0.00E+00	0.00E+00	0.00E+00	0.00E+00	0.00E+00	0.00E+00	0.00E+00	0.00E+00	0.00E+00
2916	ALL	752388.42	4041660.7	2.50E-09	25YrCancer	2.50E-09	0.00E+00	0.00E+00	0.00E+00	0.00E+00	0.00E+00	0.00E+00	0.00E+00	0.00E+00	0.00E+00	0.00E+00	0.00E+00
2917	ALL	752488.42	4041660.7	2.48E-09	25YrCancer	2.48E-09	0.00E+00	0.00E+00	0.00E+00	0.00E+00	0.00E+00	0.00E+00	0.00E+00	0.00E+00	0.00E+00	0.00E+00	0.00E+00
2918	ALL	752588.42	4041660.7	2.45E-09	25YrCancer	2.45E-09	0.00E+00	0.00E+00	0.00E+00	0.00E+00	0.00E+00	0.00E+00	0.00E+00	0.00E+00	0.00E+00	0.00E+00	0.00E+00
2919	ALL	752688.42	4041660.7	2.43E-09	25YrCancer	2.43E-09	0.00E+00	0.00E+00	0.00E+00	0.00E+00	0.00E+00	0.00E+00	0.00E+00	0.00E+00	0.00E+00	0.00E+00	0.00E+00
2920	ALL	752788.42	4041660.7	2.41E-09	25YrCancer	2.41E-09	0.00E+00	0.00E+00	0.00E+00	0.00E+00	0.00E+00	0.00E+00	0.00E+00	0.00E+00	0.00E+00	0.00E+00	0.00E+00
2921	ALL	752888.42	4041660.7	2.38E-09	25YrCancer	2.38E-09	0.00E+00	0.00E+00	0.00E+00	0.00E+00	0.00E+00	0.00E+00	0.00E+00	0.00E+00	0.00E+00	0.00E+00	0.00E+00
2922	ALL	752988.42	4041660.7	2.36E-09	25YrCancer	2.36E-09	0.00E+00	0.00E+00	0.00E+00	0.00E+00	0.00E+00	0.00E+00	0.00E+00	0.00E+00	0.00E+00	0.00E+00	0.00E+00
2923	ALL	753088.42	4041660.7	2.34E-09	25YrCancer	2.34E-09	0.00E+00	0.00E+00	0.00E+00	0.00E+00	0.00E+00	0.00E+00	0.00E+00	0.00E+00	0.00E+00	0.00E+00	0.00E+00
2924	ALL	753188.42	4041660.7	2.32E-09	25YrCancer	2.32E-09	0.00E+00	0.00E+00	0.00E+00	0.00E+00	0.00E+00	0.00E+00	0.00E+00	0.00E+00	0.00E+00	0.00E+00	0.00E+00
2925	ALL	753288.42	4041660.7	2.30E-09	25YrCancer	2.30E-09	0.00E+00	0.00E+00	0.00E+00	0.00E+00	0.00E+00	0.00E+00	0.00E+00	0.00E+00	0.00E+00	0.00E+00	0.00E+00
2926	ALL	753388.42	4041660.7	2.28E-09	25YrCancer	2.28E-09	0.00E+00	0.00E+00	0.00E+00	0.00E+00	0.00E+00	0.00E+00	0.00E+00	0.00E+00	0.00E+00	0.00E+00	0.00E+00
2927	ALL	753488.42	4041660.7	2.26E-09	25YrCancer	2.26E-09	0.00E+00	0.00E+00	0.00E+00	0.00E+00	0.00E+00	0.00E+00	0.00E+00	0.00E+00	0.00E+00	0.00E+00	0.00E+00
2928	ALL	753588.42	4041660.7	2.25E-09	25YrCancer	2.25E-09	0.00E+00	0.00E+00	0.00E+00	0.00E+00	0.00E+00	0.00E+00	0.00E+00	0.00E+00	0.00E+00	0.00E+00	0.00E+00
2929	ALL	753688.42	4041660.7	2.23E-09	25YrCancer	2.23E-09	0.00E+00	0.00E+00	0.00E+00	0.00E+00	0.00E+00	0.00E+00	0.00E+00	0.00E+00	0.00E+00	0.00E+00	0.00E+00
2930	ALL	753788.42	4041660.7	2.21E-09	25YrCancer	2.21E-09	0.00E+00	0.00E+00	0.00E+00	0.00E+00	0.00E+00	0.00E+00	0.00E+00	0.00E+00	0.00E+00	0.00E+00	0.00E+00
2931	ALL	753888.42	4041660.7	2.20E-09	25YrCancer	2.20E-09	0.00E+00	0.00E+00	0.00E+00	0.00E+00	0.00E+00	0.00E+00	0.00E+00	0.00E+00	0.00E+00	0.00E+00	0.00E+00
2932	ALL	753988.42	4041660.7	2.18E-09	25YrCancer	2.18E-09	0.00E+00	0.00E+00	0.00E+00	0.00E+00	0.00E+00	0.00E+00	0.00E+00	0.00E+00	0.00E+00	0.00E+00	0.00E+00
2933	ALL	746288.42	4041760.7	6.62E-09	25YrCancer	6.62E-09	0.00E+00	0.00E+00	0.00E+00	0.00E+00	0.00E+00	0.00E+00	0.00E+00	0.00E+00	0.00E+00	0.00E+00	0.00E+00
2934	ALL	746388.42	4041760.7	6.87E-09	25YrCancer	6.87E-09	0.00E+00	0.00E+00	0.00E+00	0.00E+00	0.00E+00	0.00E+00	0.00E+00	0.00E+00	0.00E+00	0.00E+00	0.00E+00
2935	ALL	746488.42	4041760.7	7.10E-09	25YrCancer	7.10E-09	0.00E+00	0.00E+00	0.00E+00	0.00E+00	0.00E+00	0.00E+00	0.00E+00	0.00E+00	0.00E+00	0.00E+00	0.00E+00
2936	ALL	746588.42	4041760.7	7.28E-09	25YrCancer	7.28E-09	0.00E+00	0.00E+00	0.00E+00	0.00E+00	0.00E+00	0.00E+00	0.00E+00	0.00E+00	0.00E+00	0.00E+00	0.00E+00
2937	ALL	746688.42	4041760.7	7.41E-09	25YrCancer	7.41E-09	0.00E+00	0.00E+00	0.00E+00	0.00E+00	0.00E+00	0.00E+00	0.00E+00	0.00E+00	0.00E+00	0.00E+00	0.00E+00
2938	ALL	746788.42	4041760.7	7.45E-09	25YrCancer	7.45E-09	0.00E+00	0.00E+00	0.00E+00	0.00E+00	0.00E+00	0.00E+00	0.00E+00	0.00E+00	0.00E+00	0.00E+00	0.00E+00
2939	ALL	746888.42	4041760.7	7.39E-09	25YrCancer	7.39E-09	0.00E+00	0.00E+00	0.00E+00	0.00E+00	0.00E+00	0.00E+00	0.00E+00	0.00E+00	0.00E+00	0.00E+00	0.00E+00
2940	ALL	746988.42	4041760.7	7.27E-09	25YrCancer	7.27E-09	0.00E+00	0.00E+00	0.00E+00	0.00E+00	0.00E+00	0.00E+00	0.00E+00	0.00E+00	0.00E+00	0.00E+00	0.00E+00
2941	ALL	747088.42	4041760.7	7.07E-09	25YrCancer	7.07E-09	0.00E+00	0.00E+00	0.00E+00	0.00E+00	0.00E+00	0.00E+00	0.00E+00	0.00E+00	0.00E+00	0.00E+00	0.00E+00
2942	ALL	747188.42	4041760.7	6.82E-09	25YrCancer	6.82E-09	0.00E+00	0.00E+00	0.00E+00	0.00E+00	0.00E+00	0.00E+00	0.00E+00	0.00E+00	0.00E+00	0.00E+00	0.00E+00
2943	ALL	747288.42	4041760.7	6.52E-09	25YrCancer	6.52E-09	0.00E+00	0.00E+00	0.00E+00	0.00E+00	0.00E+00	0.00E+00	0.00E+00	0.00E+00	0.00E+00	0.00E+00	0.00E+00
2944	ALL	747388.42	4041760.7	6.18E-09	25YrCancer	6.18E-09	0.00E+00	0.00E+00	0.00E+00	0.00E+00	0.00E+00	0.00E+00	0.00E+00	0.00E+00	0.00E+00	0.00E+00	0.00E+00
2945	ALL	747488.42	4041760.7	5.82E-09	25YrCancer	5.82E-09	0.00E+00	0.00E+00	0.00E+00	0.00E+00	0.00E+00	0.00E+00	0.00E+00	0.00E+00	0.00E+00	0.00E+00	0.00E+00
2946	ALL	747588.42	4041760.7	5.46E-09	25YrCancer	5.46E-09	0.00E+00	0.00E+00	0.00E+00	0.00E+00	0.00E+00	0.00E+00	0.00E+00	0.00E+00	0.00E+00	0.00E+00	0.00E+00
2947	ALL	747688.42	4041760.7	5.14E-09	25YrCancer	5.14E-09	0.00E+00	0.00E+00	0.00E+00	0.00E+00	0.00E+00	0.00E+00	0.00E+00	0.00E+00	0.00E+00	0.00E+00	0.00E+00
2948	ALL	747788.42	4041760.7	4.88E-09	25YrCancer	4.88E-09	0.00E+00	0.00E+00	0.00E+00	0.00E+00	0.00E+00	0.00E+00	0.00E+00	0.00E+00	0.00E+00	0.00E+00	0.00E+00
2949	ALL	747888.42	4041760.7	4.68E-09	25YrCancer	4.68E-09	0.00E+00	0.00E+00	0.00E+00	0.00E+00	0.00E+00	0.00E+00	0.00E+00	0.00E+00	0.00E+00	0.00E+00	0.00E+00
2950	ALL	747988.42	4041760.7	4.51E-09	25YrCancer	4.51E-09	0.00E+00	0.00E+00	0.00E+00	0.00E+00	0.00E+00	0.00E+00	0.00E+00	0.00E+00	0.00E+00	0.00E+00	0.00E+00
2951	ALL	748088.42	4041760.7	4.32E-09	25YrCancer	4.32E-09	0.00E+00	0.00E+00	0.00E+00	0.00E+00	0.00E+00	0.00E+00	0.00E+00	0.00E+00	0.00E+00	0.00E+00	0.00E+00
2952	ALL	748188.42	4041760.7	4.12E-09	25YrCancer	4.12E-09	0.00E+00	0.00E+00	0.00E+00	0.00E+00	0.00E+00	0.00E+00	0.00E+00	0.00E+00	0.00E+00	0.00E+00	0.00E+00
2953	ALL	748288.42	4041760.7	3.91E-09	25YrCancer	3.91E-09	0.00E+00	0.00E+00	0.00E+00	0.00E+00	0.00E+00	0.00E+00	0.00E+00	0.00E+00	0.00E+00	0.00E+00	0.00E+00
2954	ALL	748388.42	4041760.7	3.71E-09	25YrCancer	3.71E-09	0.00E+00	0.00E+00	0.00E+00	0.00E+00	0.00E+00	0.00E+00	0.00E+00	0.00E+00	0.00E+00	0.00E+00	0.00E+00
2955	ALL	748488.42	4041760.7	3.53E-09	25YrCancer	3.53E-09	0.00E+00	0.00E+00	0.00E+00	0.00E+00	0.00E+00	0.00E+00	0.00E+00	0.00E+00	0.00E+00	0.00E+00	0.00E+00
2956	ALL	753588.42	4041760.7	2.18E-09	25YrCancer	2.18E-09	0.00E+00	0.00E+00	0.00E+00	0.00E+00	0.00E+00	0.00E+00	0.00E+00	0.00E+00	0.00E+00	0.00E+00	0.00E+00

2957	ALL	753688.42	4041760.7	2.17E-09	25YrCancer	2.17E-09	0.00E+00	0.00E+00	0.00E+00	0.00E+00	0.00E+00	0.00E+00	0.00E+00	0.00E+00	0.00E+00	0.00E+00	0.00E+00
2958	ALL	753788.42	4041760.7	2.15E-09	25YrCancer	2.15E-09	0.00E+00	0.00E+00	0.00E+00	0.00E+00	0.00E+00	0.00E+00	0.00E+00	0.00E+00	0.00E+00	0.00E+00	0.00E+00
2959	ALL	753888.42	4041760.7	2.14E-09	25YrCancer	2.14E-09	0.00E+00	0.00E+00	0.00E+00	0.00E+00	0.00E+00	0.00E+00	0.00E+00	0.00E+00	0.00E+00	0.00E+00	0.00E+00
2960	ALL	753988.42	4041760.7	2.12E-09	25YrCancer	2.12E-09	0.00E+00	0.00E+00	0.00E+00	0.00E+00	0.00E+00	0.00E+00	0.00E+00	0.00E+00	0.00E+00	0.00E+00	0.00E+00
2961	ALL	746288.42	4041860.7	6.53E-09	25YrCancer	6.53E-09	0.00E+00	0.00E+00	0.00E+00	0.00E+00	0.00E+00	0.00E+00	0.00E+00	0.00E+00	0.00E+00	0.00E+00	0.00E+00
2962	ALL	746388.42	4041860.7	6.72E-09	25YrCancer	6.72E-09	0.00E+00	0.00E+00	0.00E+00	0.00E+00	0.00E+00	0.00E+00	0.00E+00	0.00E+00	0.00E+00	0.00E+00	0.00E+00
2963	ALL	746488.42	4041860.7	6.88E-09	25YrCancer	6.88E-09	0.00E+00	0.00E+00	0.00E+00	0.00E+00	0.00E+00	0.00E+00	0.00E+00	0.00E+00	0.00E+00	0.00E+00	0.00E+00
2964	ALL	746588.42	4041860.7	6.97E-09	25YrCancer	6.97E-09	0.00E+00	0.00E+00	0.00E+00	0.00E+00	0.00E+00	0.00E+00	0.00E+00	0.00E+00	0.00E+00	0.00E+00	0.00E+00
2965	ALL	746688.42	4041860.7	6.99E-09	25YrCancer	6.99E-09	0.00E+00	0.00E+00	0.00E+00	0.00E+00	0.00E+00	0.00E+00	0.00E+00	0.00E+00	0.00E+00	0.00E+00	0.00E+00
2966	ALL	746788.42	4041860.7	6.94E-09	25YrCancer	6.94E-09	0.00E+00	0.00E+00	0.00E+00	0.00E+00	0.00E+00	0.00E+00	0.00E+00	0.00E+00	0.00E+00	0.00E+00	0.00E+00
2967	ALL	746888.42	4041860.7	6.81E-09	25YrCancer	6.81E-09	0.00E+00	0.00E+00	0.00E+00	0.00E+00	0.00E+00	0.00E+00	0.00E+00	0.00E+00	0.00E+00	0.00E+00	0.00E+00
2968	ALL	746988.42	4041860.7	6.64E-09	25YrCancer	6.64E-09	0.00E+00	0.00E+00	0.00E+00	0.00E+00	0.00E+00	0.00E+00	0.00E+00	0.00E+00	0.00E+00	0.00E+00	0.00E+00
2969	ALL	747088.42	4041860.7	6.42E-09	25YrCancer	6.42E-09	0.00E+00	0.00E+00	0.00E+00	0.00E+00	0.00E+00	0.00E+00	0.00E+00	0.00E+00	0.00E+00	0.00E+00	0.00E+00
2970	ALL	747188.42	4041860.7	6.17E-09	25YrCancer	6.17E-09	0.00E+00	0.00E+00	0.00E+00	0.00E+00	0.00E+00	0.00E+00	0.00E+00	0.00E+00	0.00E+00	0.00E+00	0.00E+00
2971	ALL	747288.42	4041860.7	5.88E-09	25YrCancer	5.88E-09	0.00E+00	0.00E+00	0.00E+00	0.00E+00	0.00E+00	0.00E+00	0.00E+00	0.00E+00	0.00E+00	0.00E+00	0.00E+00
2972	ALL	747388.42	4041860.7	5.57E-09	25YrCancer	5.57E-09	0.00E+00	0.00E+00	0.00E+00	0.00E+00	0.00E+00	0.00E+00	0.00E+00	0.00E+00	0.00E+00	0.00E+00	0.00E+00
2973	ALL	747488.42	4041860.7	5.26E-09	25YrCancer	5.26E-09	0.00E+00	0.00E+00	0.00E+00	0.00E+00	0.00E+00	0.00E+00	0.00E+00	0.00E+00	0.00E+00	0.00E+00	0.00E+00
2974	ALL	747588.42	4041860.7	4.97E-09	25YrCancer	4.97E-09	0.00E+00	0.00E+00	0.00E+00	0.00E+00	0.00E+00	0.00E+00	0.00E+00	0.00E+00	0.00E+00	0.00E+00	0.00E+00
2975	ALL	747688.42	4041860.7	4.73E-09	25YrCancer	4.73E-09	0.00E+00	0.00E+00	0.00E+00	0.00E+00	0.00E+00	0.00E+00	0.00E+00	0.00E+00	0.00E+00	0.00E+00	0.00E+00
2976	ALL	747788.42	4041860.7	4.53E-09	25YrCancer	4.53E-09	0.00E+00	0.00E+00	0.00E+00	0.00E+00	0.00E+00	0.00E+00	0.00E+00	0.00E+00	0.00E+00	0.00E+00	0.00E+00
2977	ALL	747888.42	4041860.7	4.38E-09	25YrCancer	4.38E-09	0.00E+00	0.00E+00	0.00E+00	0.00E+00	0.00E+00	0.00E+00	0.00E+00	0.00E+00	0.00E+00	0.00E+00	0.00E+00
2978	ALL	747988.42	4041860.7	4.24E-09	25YrCancer	4.24E-09	0.00E+00	0.00E+00	0.00E+00	0.00E+00	0.00E+00	0.00E+00	0.00E+00	0.00E+00	0.00E+00	0.00E+00	0.00E+00
2979	ALL	748088.42	4041860.7	4.08E-09	25YrCancer	4.08E-09	0.00E+00	0.00E+00	0.00E+00	0.00E+00	0.00E+00	0.00E+00	0.00E+00	0.00E+00	0.00E+00	0.00E+00	0.00E+00
2980	ALL	748188.42	4041860.7	3.89E-09	25YrCancer	3.89E-09	0.00E+00	0.00E+00	0.00E+00	0.00E+00	0.00E+00	0.00E+00	0.00E+00	0.00E+00	0.00E+00	0.00E+00	0.00E+00
2981	ALL	748288.42	4041860.7	3.71E-09	25YrCancer	3.71E-09	0.00E+00	0.00E+00	0.00E+00	0.00E+00	0.00E+00	0.00E+00	0.00E+00	0.00E+00	0.00E+00	0.00E+00	0.00E+00
2982	ALL	748388.42	4041860.7	3.53E-09	25YrCancer	3.53E-09	0.00E+00	0.00E+00	0.00E+00	0.00E+00	0.00E+00	0.00E+00	0.00E+00	0.00E+00	0.00E+00	0.00E+00	0.00E+00
2983	ALL	748488.42	4041860.7	3.37E-09	25YrCancer	3.37E-09	0.00E+00	0.00E+00	0.00E+00	0.00E+00	0.00E+00	0.00E+00	0.00E+00	0.00E+00	0.00E+00	0.00E+00	0.00E+00
2984	ALL	753488.42	4041860.7	2.14E-09	25YrCancer	2.14E-09	0.00E+00	0.00E+00	0.00E+00	0.00E+00	0.00E+00	0.00E+00	0.00E+00	0.00E+00	0.00E+00	0.00E+00	0.00E+00
2985	ALL	753588.42	4041860.7	2.12E-09	25YrCancer	2.12E-09	0.00E+00	0.00E+00	0.00E+00	0.00E+00	0.00E+00	0.00E+00	0.00E+00	0.00E+00	0.00E+00	0.00E+00	0.00E+00
2986	ALL	753688.42	4041860.7	2.11E-09	25YrCancer	2.11E-09	0.00E+00	0.00E+00	0.00E+00	0.00E+00	0.00E+00	0.00E+00	0.00E+00	0.00E+00	0.00E+00	0.00E+00	0.00E+00
2987	ALL	753788.42	4041860.7	2.09E-09	25YrCancer	2.09E-09	0.00E+00	0.00E+00	0.00E+00	0.00E+00	0.00E+00	0.00E+00	0.00E+00	0.00E+00	0.00E+00	0.00E+00	0.00E+00
2988	ALL	753888.42	4041860.7	2.08E-09	25YrCancer	2.08E-09	0.00E+00	0.00E+00	0.00E+00	0.00E+00	0.00E+00	0.00E+00	0.00E+00	0.00E+00	0.00E+00	0.00E+00	0.00E+00
2989	ALL	753988.42	4041860.7	2.07E-09	25YrCancer	2.07E-09	0.00E+00	0.00E+00	0.00E+00	0.00E+00	0.00E+00	0.00E+00	0.00E+00	0.00E+00	0.00E+00	0.00E+00	0.00E+00
2990	ALL	748188.42	4041960.7	3.70E-09	25YrCancer	3.70E-09	0.00E+00	0.00E+00	0.00E+00	0.00E+00	0.00E+00	0.00E+00	0.00E+00	0.00E+00	0.00E+00	0.00E+00	0.00E+00
2991	ALL	748288.42	4041960.7	3.54E-09	25YrCancer	3.54E-09	0.00E+00	0.00E+00	0.00E+00	0.00E+00	0.00E+00	0.00E+00	0.00E+00	0.00E+00	0.00E+00	0.00E+00	0.00E+00
2992	ALL	748388.42	4041960.7	3.38E-09	25YrCancer	3.38E-09	0.00E+00	0.00E+00	0.00E+00	0.00E+00	0.00E+00	0.00E+00	0.00E+00	0.00E+00	0.00E+00	0.00E+00	0.00E+00
2993	ALL	748488.42	4041960.7	3.23E-09	25YrCancer	3.23E-09	0.00E+00	0.00E+00	0.00E+00	0.00E+00	0.00E+00	0.00E+00	0.00E+00	0.00E+00	0.00E+00	0.00E+00	0.00E+00
2994	ALL	753488.42	4041960.7	2.08E-09	25YrCancer	2.08E-09	0.00E+00	0.00E+00	0.00E+00	0.00E+00	0.00E+00	0.00E+00	0.00E+00	0.00E+00	0.00E+00	0.00E+00	0.00E+00
2995	ALL	753588.42	4041960.7	2.07E-09	25YrCancer	2.07E-09	0.00E+00	0.00E+00	0.00E+00	0.00E+00	0.00E+00	0.00E+00	0.00E+00	0.00E+00	0.00E+00	0.00E+00	0.00E+00
2996	ALL	753688.42	4041960.7	2.05E-09	25YrCancer	2.05E-09	0.00E+00	0.00E+00	0.00E+00	0.00E+00	0.00E+00	0.00E+00	0.00E+00	0.00E+00	0.00E+00	0.00E+00	0.00E+00
2997	ALL	753788.42	4041960.7	2.04E-09	25YrCancer	2.04E-09	0.00E+00	0.00E+00	0.00E+00	0.00E+00	0.00E+00	0.00E+00	0.00E+00	0.00E+00	0.00E+00	0.00E+00	0.00E+00
2998	ALL	753888.42	4041960.7	2.03E-09	25YrCancer	2.03E-09	0.00E+00	0.00E+00	0.00E+00	0.00E+00	0.00E+00	0.00E+00	0.00E+00	0.00E+00	0.00E+00	0.00E+00	0.00E+00
2999	ALL	753988.42	4041960.7	2.01E-09	25YrCancer	2.01E-09	0.00E+00	0.00E+00	0.00E+00	0.00E+00	0.00E+00	0.00E+00	0.00E+00	0.00E+00	0.00E+00	0.00E+00	0.00E+00
3000	ALL	748188.42	4042060.7	3.52E-09	25YrCancer	3.52E-09	0.00E+00	0.00E+00	0.00E+00	0.00E+00	0.00E+00	0.00E+00	0.00E+00	0.00E+00	0.00E+00	0.00E+00	0.00E+00
3001	ALL	748288.42	4042060.7	3.38E-09	25YrCancer	3.38E-09	0.00E+00	0.00E+00	0.00E+00	0.00E+00	0.00E+00	0.00E+00	0.00E+00	0.00E+00	0.00E+00	0.00E+00	0.00E+00
3002	ALL	748388.42	4042060.7	3.24E-09	25YrCancer	3.24E-09	0.00E+00	0.00E+00	0.00E+00	0.00E+00	0.00E+00	0.00E+00	0.00E+00	0.00E+00	0.00E+00	0.00E+00	0.00E+00
3003	ALL	748488.42	4042060.7	3.10E-09	25YrCancer	3.10E-09	0.00E+00	0.00E+00	0.00E+00	0.00E+00	0.00E+00	0.00E+00	0.00E+00	0.00E+00	0.00E+00	0.00E+00	0.00E+00
3004	ALL	753488.42	4042060.7	2.03E-09	25YrCancer	2.03E-09	0.00E+00	0.00E+00	0.00E+00	0.00E+00	0.00E+00	0.00E+00	0.00E+00	0.00E+00	0.00E+00	0.00E+00	0.00E+00
3005	ALL	753588.42	4042060.7	2.02E-09	25YrCancer	2.02E-09	0.00E+00	0.00E+00	0.00E+00	0.00E+00	0.00E+00	0.00E+00	0.00E+00	0.00E+00	0.00E+00	0.00E+00	0.00E+00
3006	ALL	753688.42	4042060.7	2.01E-09	25YrCancer	2.01E-09	0.00E+00	0.00E+00	0.00E+00	0.00E+00	0.00E+00	0.00E+00	0.00E+00	0.00E+00	0.00E+00	0.00E+00	0.00E+00
3007	ALL	753788.42	4042060.7	1.99E-09	25YrCancer	1.99E-09	0.00E+00	0.00E+00	0.00E+00	0.00E+00	0.00E+00	0.00E+00	0.00E+00	0.00E+00	0.00E+00	0.00E+00	0.00E+00

3008	ALL	753888.42	4042060.7	1.98E-09	25YrCancer	1.98E-09	0.00E+00	0.00E+00	0.00E+00	0.00E+00	0.00E+00	0.00E+00	0.00E+00	0.00E+00	0.00E+00	0.00E+00	0.00E+00
3009	ALL	753988.42	4042060.7	1.96E-09	25YrCancer	1.96E-09	0.00E+00	0.00E+00	0.00E+00	0.00E+00	0.00E+00	0.00E+00	0.00E+00	0.00E+00	0.00E+00	0.00E+00	0.00E+00
3010	ALL	748188.42	4042160.7	3.37E-09	25YrCancer	3.37E-09	0.00E+00	0.00E+00	0.00E+00	0.00E+00	0.00E+00	0.00E+00	0.00E+00	0.00E+00	0.00E+00	0.00E+00	0.00E+00
3011	ALL	748288.42	4042160.7	3.24E-09	25YrCancer	3.24E-09	0.00E+00	0.00E+00	0.00E+00	0.00E+00	0.00E+00	0.00E+00	0.00E+00	0.00E+00	0.00E+00	0.00E+00	0.00E+00
3012	ALL	748388.42	4042160.7	3.11E-09	25YrCancer	3.11E-09	0.00E+00	0.00E+00	0.00E+00	0.00E+00	0.00E+00	0.00E+00	0.00E+00	0.00E+00	0.00E+00	0.00E+00	0.00E+00
3013	ALL	748488.42	4042160.7	2.98E-09	25YrCancer	2.98E-09	0.00E+00	0.00E+00	0.00E+00	0.00E+00	0.00E+00	0.00E+00	0.00E+00	0.00E+00	0.00E+00	0.00E+00	0.00E+00
3014	ALL	753488.42	4042160.7	1.99E-09	25YrCancer	1.99E-09	0.00E+00	0.00E+00	0.00E+00	0.00E+00	0.00E+00	0.00E+00	0.00E+00	0.00E+00	0.00E+00	0.00E+00	0.00E+00
3015	ALL	753588.42	4042160.7	1.97E-09	25YrCancer	1.97E-09	0.00E+00	0.00E+00	0.00E+00	0.00E+00	0.00E+00	0.00E+00	0.00E+00	0.00E+00	0.00E+00	0.00E+00	0.00E+00
3016	ALL	753688.42	4042160.7	1.96E-09	25YrCancer	1.96E-09	0.00E+00	0.00E+00	0.00E+00	0.00E+00	0.00E+00	0.00E+00	0.00E+00	0.00E+00	0.00E+00	0.00E+00	0.00E+00
3017	ALL	753788.42	4042160.7	1.95E-09	25YrCancer	1.95E-09	0.00E+00	0.00E+00	0.00E+00	0.00E+00	0.00E+00	0.00E+00	0.00E+00	0.00E+00	0.00E+00	0.00E+00	0.00E+00
3018	ALL	753888.42	4042160.7	1.93E-09	25YrCancer	1.93E-09	0.00E+00	0.00E+00	0.00E+00	0.00E+00	0.00E+00	0.00E+00	0.00E+00	0.00E+00	0.00E+00	0.00E+00	0.00E+00
3019	ALL	753988.42	4042160.7	1.92E-09	25YrCancer	1.92E-09	0.00E+00	0.00E+00	0.00E+00	0.00E+00	0.00E+00	0.00E+00	0.00E+00	0.00E+00	0.00E+00	0.00E+00	0.00E+00
3020	ALL	748188.42	4042260.7	3.23E-09	25YrCancer	3.23E-09	0.00E+00	0.00E+00	0.00E+00	0.00E+00	0.00E+00	0.00E+00	0.00E+00	0.00E+00	0.00E+00	0.00E+00	0.00E+00
3021	ALL	748288.42	4042260.7	3.11E-09	25YrCancer	3.11E-09	0.00E+00	0.00E+00	0.00E+00	0.00E+00	0.00E+00	0.00E+00	0.00E+00	0.00E+00	0.00E+00	0.00E+00	0.00E+00
3022	ALL	748388.42	4042260.7	2.99E-09	25YrCancer	2.99E-09	0.00E+00	0.00E+00	0.00E+00	0.00E+00	0.00E+00	0.00E+00	0.00E+00	0.00E+00	0.00E+00	0.00E+00	0.00E+00
3023	ALL	748488.42	4042260.7	2.87E-09	25YrCancer	2.87E-09	0.00E+00	0.00E+00	0.00E+00	0.00E+00	0.00E+00	0.00E+00	0.00E+00	0.00E+00	0.00E+00	0.00E+00	0.00E+00
3024	ALL	753488.42	4042260.7	1.94E-09	25YrCancer	1.94E-09	0.00E+00	0.00E+00	0.00E+00	0.00E+00	0.00E+00	0.00E+00	0.00E+00	0.00E+00	0.00E+00	0.00E+00	0.00E+00
3025	ALL	753588.42	4042260.7	1.93E-09	25YrCancer	1.93E-09	0.00E+00	0.00E+00	0.00E+00	0.00E+00	0.00E+00	0.00E+00	0.00E+00	0.00E+00	0.00E+00	0.00E+00	0.00E+00
3026	ALL	753688.42	4042260.7	1.92E-09	25YrCancer	1.92E-09	0.00E+00	0.00E+00	0.00E+00	0.00E+00	0.00E+00	0.00E+00	0.00E+00	0.00E+00	0.00E+00	0.00E+00	0.00E+00
3027	ALL	753788.42	4042260.7	1.90E-09	25YrCancer	1.90E-09	0.00E+00	0.00E+00	0.00E+00	0.00E+00	0.00E+00	0.00E+00	0.00E+00	0.00E+00	0.00E+00	0.00E+00	0.00E+00
3028	ALL	753888.42	4042260.7	1.89E-09	25YrCancer	1.89E-09	0.00E+00	0.00E+00	0.00E+00	0.00E+00	0.00E+00	0.00E+00	0.00E+00	0.00E+00	0.00E+00	0.00E+00	0.00E+00
3029	ALL	753988.42	4042260.7	1.88E-09	25YrCancer	1.88E-09	0.00E+00	0.00E+00	0.00E+00	0.00E+00	0.00E+00	0.00E+00	0.00E+00	0.00E+00	0.00E+00	0.00E+00	0.00E+00
3030	ALL	748188.42	4042360.7	3.10E-09	25YrCancer	3.10E-09	0.00E+00	0.00E+00	0.00E+00	0.00E+00	0.00E+00	0.00E+00	0.00E+00	0.00E+00	0.00E+00	0.00E+00	0.00E+00
3031	ALL	748288.42	4042360.7	2.99E-09	25YrCancer	2.99E-09	0.00E+00	0.00E+00	0.00E+00	0.00E+00	0.00E+00	0.00E+00	0.00E+00	0.00E+00	0.00E+00	0.00E+00	0.00E+00
3032	ALL	748388.42	4042360.7	2.88E-09	25YrCancer	2.88E-09	0.00E+00	0.00E+00	0.00E+00	0.00E+00	0.00E+00	0.00E+00	0.00E+00	0.00E+00	0.00E+00	0.00E+00	0.00E+00
3033	ALL	748488.42	4042360.7	2.77E-09	25YrCancer	2.77E-09	0.00E+00	0.00E+00	0.00E+00	0.00E+00	0.00E+00	0.00E+00	0.00E+00	0.00E+00	0.00E+00	0.00E+00	0.00E+00
3034	ALL	753488.42	4042360.7	1.90E-09	25YrCancer	1.90E-09	0.00E+00	0.00E+00	0.00E+00	0.00E+00	0.00E+00	0.00E+00	0.00E+00	0.00E+00	0.00E+00	0.00E+00	0.00E+00
3035	ALL	753588.42	4042360.7	1.89E-09	25YrCancer	1.89E-09	0.00E+00	0.00E+00	0.00E+00	0.00E+00	0.00E+00	0.00E+00	0.00E+00	0.00E+00	0.00E+00	0.00E+00	0.00E+00
3036	ALL	753688.42	4042360.7	1.88E-09	25YrCancer	1.88E-09	0.00E+00	0.00E+00	0.00E+00	0.00E+00	0.00E+00	0.00E+00	0.00E+00	0.00E+00	0.00E+00	0.00E+00	0.00E+00
3037	ALL	753788.42	4042360.7	1.86E-09	25YrCancer	1.86E-09	0.00E+00	0.00E+00	0.00E+00	0.00E+00	0.00E+00	0.00E+00	0.00E+00	0.00E+00	0.00E+00	0.00E+00	0.00E+00
3038	ALL	753888.42	4042360.7	1.85E-09	25YrCancer	1.85E-09	0.00E+00	0.00E+00	0.00E+00	0.00E+00	0.00E+00	0.00E+00	0.00E+00	0.00E+00	0.00E+00	0.00E+00	0.00E+00
3039	ALL	753988.42	4042360.7	1.84E-09	25YrCancer	1.84E-09	0.00E+00	0.00E+00	0.00E+00	0.00E+00	0.00E+00	0.00E+00	0.00E+00	0.00E+00	0.00E+00	0.00E+00	0.00E+00
3040	ALL	748188.42	4042460.7	2.99E-09	25YrCancer	2.99E-09	0.00E+00	0.00E+00	0.00E+00	0.00E+00	0.00E+00	0.00E+00	0.00E+00	0.00E+00	0.00E+00	0.00E+00	0.00E+00
3041	ALL	748288.42	4042460.7	2.88E-09	25YrCancer	2.88E-09	0.00E+00	0.00E+00	0.00E+00	0.00E+00	0.00E+00	0.00E+00	0.00E+00	0.00E+00	0.00E+00	0.00E+00	0.00E+00
3042	ALL	748388.42	4042460.7	2.78E-09	25YrCancer	2.78E-09	0.00E+00	0.00E+00	0.00E+00	0.00E+00	0.00E+00	0.00E+00	0.00E+00	0.00E+00	0.00E+00	0.00E+00	0.00E+00
3043	ALL	748488.42	4042460.7	2.68E-09	25YrCancer	2.68E-09	0.00E+00	0.00E+00	0.00E+00	0.00E+00	0.00E+00	0.00E+00	0.00E+00	0.00E+00	0.00E+00	0.00E+00	0.00E+00
3044	ALL	753488.42	4042460.7	1.85E-09	25YrCancer	1.85E-09	0.00E+00	0.00E+00	0.00E+00	0.00E+00	0.00E+00	0.00E+00	0.00E+00	0.00E+00	0.00E+00	0.00E+00	0.00E+00
3045	ALL	753588.42	4042460.7	1.84E-09	25YrCancer	1.84E-09	0.00E+00	0.00E+00	0.00E+00	0.00E+00	0.00E+00	0.00E+00	0.00E+00	0.00E+00	0.00E+00	0.00E+00	0.00E+00
3046	ALL	753688.42	4042460.7	1.84E-09	25YrCancer	1.84E-09	0.00E+00	0.00E+00	0.00E+00	0.00E+00	0.00E+00	0.00E+00	0.00E+00	0.00E+00	0.00E+00	0.00E+00	0.00E+00
3047	ALL	753788.42	4042460.7	1.82E-09	25YrCancer	1.82E-09	0.00E+00	0.00E+00	0.00E+00	0.00E+00	0.00E+00	0.00E+00	0.00E+00	0.00E+00	0.00E+00	0.00E+00	0.00E+00
3048	ALL	753888.42	4042460.7	1.81E-09	25YrCancer	1.81E-09	0.00E+00	0.00E+00	0.00E+00	0.00E+00	0.00E+00	0.00E+00	0.00E+00	0.00E+00	0.00E+00	0.00E+00	0.00E+00
3049	ALL	753988.42	4042460.7	1.80E-09	25YrCancer	1.80E-09	0.00E+00	0.00E+00	0.00E+00	0.00E+00	0.00E+00	0.00E+00	0.00E+00	0.00E+00	0.00E+00	0.00E+00	0.00E+00
3050	ALL	748188.42	4042560.7	2.88E-09	25YrCancer	2.88E-09	0.00E+00	0.00E+00	0.00E+00	0.00E+00	0.00E+00	0.00E+00	0.00E+00	0.00E+00	0.00E+00	0.00E+00	0.00E+00
3051	ALL	748288.42	4042560.7	2.79E-09	25YrCancer	2.79E-09	0.00E+00	0.00E+00	0.00E+00	0.00E+00	0.00E+00	0.00E+00	0.00E+00	0.00E+00	0.00E+00	0.00E+00	0.00E+00
3052	ALL	748388.42	4042560.7	2.69E-09	25YrCancer	2.69E-09	0.00E+00	0.00E+00	0.00E+00	0.00E+00	0.00E+00	0.00E+00	0.00E+00	0.00E+00	0.00E+00	0.00E+00	0.00E+00
3053	ALL	748488.42	4042560.7	2.60E-09	25YrCancer	2.60E-09	0.00E+00	0.00E+00	0.00E+00	0.00E+00	0.00E+00	0.00E+00	0.00E+00	0.00E+00	0.00E+00	0.00E+00	0.00E+00
3054	ALL	753488.42	4042560.7	1.81E-09	25YrCancer	1.81E-09	0.00E+00	0.00E+00	0.00E+00	0.00E+00	0.00E+00	0.00E+00	0.00E+00	0.00E+00	0.00E+00	0.00E+00	0.00E+00
3055	ALL	753588.42	4042560.7	1.80E-09	25YrCancer	1.80E-09	0.00E+00	0.00E+00	0.00E+00	0.00E+00	0.00E+00	0.00E+00	0.00E+00	0.00E+00	0.00E+00	0.00E+00	0.00E+00
3056	ALL	753688.42	4042560.7	1.79E-09	25YrCancer	1.79E-09	0.00E+00	0.00E+00	0.00E+00	0.00E+00	0.00E+00	0.00E+00	0.00E+00	0.00E+00	0.00E+00	0.00E+00	0.00E+00
3057	ALL	753788.42	4042560.7	1.79E-09	25YrCancer	1.79E-09	0.00E+00	0.00E+00	0.00E+00	0.00E+00	0.00E+00	0.00E+00	0.00E+00	0.00E+00	0.00E+00	0.00E+00	0.00E+00
3058	ALL	753888.42	4042560.7	1.78E-09	25YrCancer	1.78E-09	0.00E+00	0.00E+00	0.00E+00	0.00E+00	0.00E+00	0.00E+00	0.00E+00	0.00E+00	0.00E+00	0.00E+00	0.00E+00

3059	ALL	753988.42	4042560.7	1.77E-09	25YrCancer	1.77E-09	0.00E+00	0.00E+00	0.00E+00	0.00E+00	0.00E+00	0.00E+00	0.00E+00	0.00E+00	0.00E+00	0.00E+00	0.00E+00
3060	ALL	748188.42	4042660.7	2.78E-09	25YrCancer	2.78E-09	0.00E+00	0.00E+00	0.00E+00	0.00E+00	0.00E+00	0.00E+00	0.00E+00	0.00E+00	0.00E+00	0.00E+00	0.00E+00
3061	ALL	748288.42	4042660.7	2.70E-09	25YrCancer	2.70E-09	0.00E+00	0.00E+00	0.00E+00	0.00E+00	0.00E+00	0.00E+00	0.00E+00	0.00E+00	0.00E+00	0.00E+00	0.00E+00
3062	ALL	748388.42	4042660.7	2.60E-09	25YrCancer	2.60E-09	0.00E+00	0.00E+00	0.00E+00	0.00E+00	0.00E+00	0.00E+00	0.00E+00	0.00E+00	0.00E+00	0.00E+00	0.00E+00
3063	ALL	748488.42	4042660.7	2.52E-09	25YrCancer	2.52E-09	0.00E+00	0.00E+00	0.00E+00	0.00E+00	0.00E+00	0.00E+00	0.00E+00	0.00E+00	0.00E+00	0.00E+00	0.00E+00
3064	ALL	753488.42	4042660.7	1.77E-09	25YrCancer	1.77E-09	0.00E+00	0.00E+00	0.00E+00	0.00E+00	0.00E+00	0.00E+00	0.00E+00	0.00E+00	0.00E+00	0.00E+00	0.00E+00
3065	ALL	753588.42	4042660.7	1.76E-09	25YrCancer	1.76E-09	0.00E+00	0.00E+00	0.00E+00	0.00E+00	0.00E+00	0.00E+00	0.00E+00	0.00E+00	0.00E+00	0.00E+00	0.00E+00
3066	ALL	753688.42	4042660.7	1.75E-09	25YrCancer	1.75E-09	0.00E+00	0.00E+00	0.00E+00	0.00E+00	0.00E+00	0.00E+00	0.00E+00	0.00E+00	0.00E+00	0.00E+00	0.00E+00
3067	ALL	753788.42	4042660.7	1.74E-09	25YrCancer	1.74E-09	0.00E+00	0.00E+00	0.00E+00	0.00E+00	0.00E+00	0.00E+00	0.00E+00	0.00E+00	0.00E+00	0.00E+00	0.00E+00
3068	ALL	753888.42	4042660.7	1.74E-09	25YrCancer	1.74E-09	0.00E+00	0.00E+00	0.00E+00	0.00E+00	0.00E+00	0.00E+00	0.00E+00	0.00E+00	0.00E+00	0.00E+00	0.00E+00
3069	ALL	753988.42	4042660.7	1.73E-09	25YrCancer	1.73E-09	0.00E+00	0.00E+00	0.00E+00	0.00E+00	0.00E+00	0.00E+00	0.00E+00	0.00E+00	0.00E+00	0.00E+00	0.00E+00
3070	ALL	748188.42	4042760.7	2.69E-09	25YrCancer	2.69E-09	0.00E+00	0.00E+00	0.00E+00	0.00E+00	0.00E+00	0.00E+00	0.00E+00	0.00E+00	0.00E+00	0.00E+00	0.00E+00
3071	ALL	748288.42	4042760.7	2.61E-09	25YrCancer	2.61E-09	0.00E+00	0.00E+00	0.00E+00	0.00E+00	0.00E+00	0.00E+00	0.00E+00	0.00E+00	0.00E+00	0.00E+00	0.00E+00
3072	ALL	748388.42	4042760.7	2.52E-09	25YrCancer	2.52E-09	0.00E+00	0.00E+00	0.00E+00	0.00E+00	0.00E+00	0.00E+00	0.00E+00	0.00E+00	0.00E+00	0.00E+00	0.00E+00
3073	ALL	748488.42	4042760.7	2.44E-09	25YrCancer	2.44E-09	0.00E+00	0.00E+00	0.00E+00	0.00E+00	0.00E+00	0.00E+00	0.00E+00	0.00E+00	0.00E+00	0.00E+00	0.00E+00
3074	ALL	753488.42	4042760.7	1.74E-09	25YrCancer	1.74E-09	0.00E+00	0.00E+00	0.00E+00	0.00E+00	0.00E+00	0.00E+00	0.00E+00	0.00E+00	0.00E+00	0.00E+00	0.00E+00
3075	ALL	753588.42	4042760.7	1.73E-09	25YrCancer	1.73E-09	0.00E+00	0.00E+00	0.00E+00	0.00E+00	0.00E+00	0.00E+00	0.00E+00	0.00E+00	0.00E+00	0.00E+00	0.00E+00
3076	ALL	753688.42	4042760.7	1.72E-09	25YrCancer	1.72E-09	0.00E+00	0.00E+00	0.00E+00	0.00E+00	0.00E+00	0.00E+00	0.00E+00	0.00E+00	0.00E+00	0.00E+00	0.00E+00
3077	ALL	753788.42	4042760.7	1.71E-09	25YrCancer	1.71E-09	0.00E+00	0.00E+00	0.00E+00	0.00E+00	0.00E+00	0.00E+00	0.00E+00	0.00E+00	0.00E+00	0.00E+00	0.00E+00
3078	ALL	753888.42	4042760.7	1.70E-09	25YrCancer	1.70E-09	0.00E+00	0.00E+00	0.00E+00	0.00E+00	0.00E+00	0.00E+00	0.00E+00	0.00E+00	0.00E+00	0.00E+00	0.00E+00
3079	ALL	753988.42	4042760.7	1.69E-09	25YrCancer	1.69E-09	0.00E+00	0.00E+00	0.00E+00	0.00E+00	0.00E+00	0.00E+00	0.00E+00	0.00E+00	0.00E+00	0.00E+00	0.00E+00
3080	ALL	748188.42	4042860.7	2.61E-09	25YrCancer	2.61E-09	0.00E+00	0.00E+00	0.00E+00	0.00E+00	0.00E+00	0.00E+00	0.00E+00	0.00E+00	0.00E+00	0.00E+00	0.00E+00
3081	ALL	748288.42	4042860.7	2.53E-09	25YrCancer	2.53E-09	0.00E+00	0.00E+00	0.00E+00	0.00E+00	0.00E+00	0.00E+00	0.00E+00	0.00E+00	0.00E+00	0.00E+00	0.00E+00
3082	ALL	748388.42	4042860.7	2.45E-09	25YrCancer	2.45E-09	0.00E+00	0.00E+00	0.00E+00	0.00E+00	0.00E+00	0.00E+00	0.00E+00	0.00E+00	0.00E+00	0.00E+00	0.00E+00
3083	ALL	748488.42	4042860.7	2.38E-09	25YrCancer	2.38E-09	0.00E+00	0.00E+00	0.00E+00	0.00E+00	0.00E+00	0.00E+00	0.00E+00	0.00E+00	0.00E+00	0.00E+00	0.00E+00
3084	ALL	753488.42	4042860.7	1.71E-09	25YrCancer	1.71E-09	0.00E+00	0.00E+00	0.00E+00	0.00E+00	0.00E+00	0.00E+00	0.00E+00	0.00E+00	0.00E+00	0.00E+00	0.00E+00
3085	ALL	753588.42	4042860.7	1.70E-09	25YrCancer	1.70E-09	0.00E+00	0.00E+00	0.00E+00	0.00E+00	0.00E+00	0.00E+00	0.00E+00	0.00E+00	0.00E+00	0.00E+00	0.00E+00
3086	ALL	753688.42	4042860.7	1.69E-09	25YrCancer	1.69E-09	0.00E+00	0.00E+00	0.00E+00	0.00E+00	0.00E+00	0.00E+00	0.00E+00	0.00E+00	0.00E+00	0.00E+00	0.00E+00
3087	ALL	753788.42	4042860.7	1.68E-09	25YrCancer	1.68E-09	0.00E+00	0.00E+00	0.00E+00	0.00E+00	0.00E+00	0.00E+00	0.00E+00	0.00E+00	0.00E+00	0.00E+00	0.00E+00
3088	ALL	753888.42	4042860.7	1.67E-09	25YrCancer	1.67E-09	0.00E+00	0.00E+00	0.00E+00	0.00E+00	0.00E+00	0.00E+00	0.00E+00	0.00E+00	0.00E+00	0.00E+00	0.00E+00
3089	ALL	753988.42	4042860.7	1.66E-09	25YrCancer	1.66E-09	0.00E+00	0.00E+00	0.00E+00	0.00E+00	0.00E+00	0.00E+00	0.00E+00	0.00E+00	0.00E+00	0.00E+00	0.00E+00
3090	ALL	748188.42	4042960.7	2.53E-09	25YrCancer	2.53E-09	0.00E+00	0.00E+00	0.00E+00	0.00E+00	0.00E+00	0.00E+00	0.00E+00	0.00E+00	0.00E+00	0.00E+00	0.00E+00
3091	ALL	748288.42	4042960.7	2.46E-09	25YrCancer	2.46E-09	0.00E+00	0.00E+00	0.00E+00	0.00E+00	0.00E+00	0.00E+00	0.00E+00	0.00E+00	0.00E+00	0.00E+00	0.00E+00
3092	ALL	748388.42	4042960.7	2.39E-09	25YrCancer	2.39E-09	0.00E+00	0.00E+00	0.00E+00	0.00E+00	0.00E+00	0.00E+00	0.00E+00	0.00E+00	0.00E+00	0.00E+00	0.00E+00
3093	ALL	748488.42	4042960.7	2.31E-09	25YrCancer	2.31E-09	0.00E+00	0.00E+00	0.00E+00	0.00E+00	0.00E+00	0.00E+00	0.00E+00	0.00E+00	0.00E+00	0.00E+00	0.00E+00
3094	ALL	753488.42	4042960.7	1.68E-09	25YrCancer	1.68E-09	0.00E+00	0.00E+00	0.00E+00	0.00E+00	0.00E+00	0.00E+00	0.00E+00	0.00E+00	0.00E+00	0.00E+00	0.00E+00
3095	ALL	753588.42	4042960.7	1.67E-09	25YrCancer	1.67E-09	0.00E+00	0.00E+00	0.00E+00	0.00E+00	0.00E+00	0.00E+00	0.00E+00	0.00E+00	0.00E+00	0.00E+00	0.00E+00
3096	ALL	753688.42	4042960.7	1.66E-09	25YrCancer	1.66E-09	0.00E+00	0.00E+00	0.00E+00	0.00E+00	0.00E+00	0.00E+00	0.00E+00	0.00E+00	0.00E+00	0.00E+00	0.00E+00
3097	ALL	753788.42	4042960.7	1.65E-09	25YrCancer	1.65E-09	0.00E+00	0.00E+00	0.00E+00	0.00E+00	0.00E+00	0.00E+00	0.00E+00	0.00E+00	0.00E+00	0.00E+00	0.00E+00
3098	ALL	753888.42	4042960.7	1.64E-09	25YrCancer	1.64E-09	0.00E+00	0.00E+00	0.00E+00	0.00E+00	0.00E+00	0.00E+00	0.00E+00	0.00E+00	0.00E+00	0.00E+00	0.00E+00
3099	ALL	753988.42	4042960.7	1.63E-09	25YrCancer	1.63E-09	0.00E+00	0.00E+00	0.00E+00	0.00E+00	0.00E+00	0.00E+00	0.00E+00	0.00E+00	0.00E+00	0.00E+00	0.00E+00
3100	ALL	748188.42	4043060.7	2.46E-09	25YrCancer	2.46E-09	0.00E+00	0.00E+00	0.00E+00	0.00E+00	0.00E+00	0.00E+00	0.00E+00	0.00E+00	0.00E+00	0.00E+00	0.00E+00
3101	ALL	748288.42	4043060.7	2.39E-09	25YrCancer	2.39E-09	0.00E+00	0.00E+00	0.00E+00	0.00E+00	0.00E+00	0.00E+00	0.00E+00	0.00E+00	0.00E+00	0.00E+00	0.00E+00
3102	ALL	748388.42	4043060.7	2.32E-09	25YrCancer	2.32E-09	0.00E+00	0.00E+00	0.00E+00	0.00E+00	0.00E+00	0.00E+00	0.00E+00	0.00E+00	0.00E+00	0.00E+00	0.00E+00
3103	ALL	748488.42	4043060.7	2.25E-09	25YrCancer	2.25E-09	0.00E+00	0.00E+00	0.00E+00	0.00E+00	0.00E+00	0.00E+00	0.00E+00	0.00E+00	0.00E+00	0.00E+00	0.00E+00
3104	ALL	753488.42	4043060.7	1.66E-09	25YrCancer	1.66E-09	0.00E+00	0.00E+00	0.00E+00	0.00E+00	0.00E+00	0.00E+00	0.00E+00	0.00E+00	0.00E+00	0.00E+00	0.00E+00
3105	ALL	753588.42	4043060.7	1.65E-09	25YrCancer	1.65E-09	0.00E+00	0.00E+00	0.00E+00	0.00E+00	0.00E+00	0.00E+00	0.00E+00	0.00E+00	0.00E+00	0.00E+00	0.00E+00
3106	ALL	753688.42	4043060.7	1.63E-09	25YrCancer	1.63E-09	0.00E+00	0.00E+00	0.00E+00	0.00E+00	0.00E+00	0.00E+00	0.00E+00	0.00E+00	0.00E+00	0.00E+00	0.00E+00
3107	ALL	753788.42	4043060.7	1.62E-09	25YrCancer	1.62E-09	0.00E+00	0.00E+00	0.00E+00	0.00E+00	0.00E+00	0.00E+00	0.00E+00	0.00E+00	0.00E+00	0.00E+00	0.00E+00
3108	ALL	753888.42	4043060.7	1.61E-09	25YrCancer	1.61E-09	0.00E+00	0.00E+00	0.00E+00	0.00E+00	0.00E+00	0.00E+00	0.00E+00	0.00E+00	0.00E+00	0.00E+00	0.00E+00
3109	ALL	753988.42	4043060.7	1.60E-09	25YrCancer	1.60E-09	0.00E+00	0.00E+00	0.00E+00	0.00E+00	0.00E+00	0.00E+00	0.00E+00	0.00E+00	0.00E+00	0.00E+00	0.00E+00

3110	ALL	748188.42	4043160.7	2.40E-09	25YrCancer	2.40E-09	0.00E+00	0.00E+00	0.00E+00	0.00E+00	0.00E+00	0.00E+00	0.00E+00	0.00E+00	0.00E+00	0.00E+00	0.00E+00
3111	ALL	748288.42	4043160.7	2.33E-09	25YrCancer	2.33E-09	0.00E+00	0.00E+00	0.00E+00	0.00E+00	0.00E+00	0.00E+00	0.00E+00	0.00E+00	0.00E+00	0.00E+00	0.00E+00
3112	ALL	748388.42	4043160.7	2.26E-09	25YrCancer	2.26E-09	0.00E+00	0.00E+00	0.00E+00	0.00E+00	0.00E+00	0.00E+00	0.00E+00	0.00E+00	0.00E+00	0.00E+00	0.00E+00
3113	ALL	748488.42	4043160.7	2.20E-09	25YrCancer	2.20E-09	0.00E+00	0.00E+00	0.00E+00	0.00E+00	0.00E+00	0.00E+00	0.00E+00	0.00E+00	0.00E+00	0.00E+00	0.00E+00
3114	ALL	753488.42	4043160.7	1.64E-09	25YrCancer	1.64E-09	0.00E+00	0.00E+00	0.00E+00	0.00E+00	0.00E+00	0.00E+00	0.00E+00	0.00E+00	0.00E+00	0.00E+00	0.00E+00
3115	ALL	753588.42	4043160.7	1.62E-09	25YrCancer	1.62E-09	0.00E+00	0.00E+00	0.00E+00	0.00E+00	0.00E+00	0.00E+00	0.00E+00	0.00E+00	0.00E+00	0.00E+00	0.00E+00
3116	ALL	753688.42	4043160.7	1.61E-09	25YrCancer	1.61E-09	0.00E+00	0.00E+00	0.00E+00	0.00E+00	0.00E+00	0.00E+00	0.00E+00	0.00E+00	0.00E+00	0.00E+00	0.00E+00
3117	ALL	753788.42	4043160.7	1.60E-09	25YrCancer	1.60E-09	0.00E+00	0.00E+00	0.00E+00	0.00E+00	0.00E+00	0.00E+00	0.00E+00	0.00E+00	0.00E+00	0.00E+00	0.00E+00
3118	ALL	753888.42	4043160.7	1.59E-09	25YrCancer	1.59E-09	0.00E+00	0.00E+00	0.00E+00	0.00E+00	0.00E+00	0.00E+00	0.00E+00	0.00E+00	0.00E+00	0.00E+00	0.00E+00
3119	ALL	753988.42	4043160.7	1.58E-09	25YrCancer	1.58E-09	0.00E+00	0.00E+00	0.00E+00	0.00E+00	0.00E+00	0.00E+00	0.00E+00	0.00E+00	0.00E+00	0.00E+00	0.00E+00
3120	ALL	748188.42	4043260.7	2.33E-09	25YrCancer	2.33E-09	0.00E+00	0.00E+00	0.00E+00	0.00E+00	0.00E+00	0.00E+00	0.00E+00	0.00E+00	0.00E+00	0.00E+00	0.00E+00
3121	ALL	748288.42	4043260.7	2.27E-09	25YrCancer	2.27E-09	0.00E+00	0.00E+00	0.00E+00	0.00E+00	0.00E+00	0.00E+00	0.00E+00	0.00E+00	0.00E+00	0.00E+00	0.00E+00
3122	ALL	748388.42	4043260.7	2.21E-09	25YrCancer	2.21E-09	0.00E+00	0.00E+00	0.00E+00	0.00E+00	0.00E+00	0.00E+00	0.00E+00	0.00E+00	0.00E+00	0.00E+00	0.00E+00
3123	ALL	748488.42	4043260.7	2.15E-09	25YrCancer	2.15E-09	0.00E+00	0.00E+00	0.00E+00	0.00E+00	0.00E+00	0.00E+00	0.00E+00	0.00E+00	0.00E+00	0.00E+00	0.00E+00
3124	ALL	753488.42	4043260.7	1.62E-09	25YrCancer	1.62E-09	0.00E+00	0.00E+00	0.00E+00	0.00E+00	0.00E+00	0.00E+00	0.00E+00	0.00E+00	0.00E+00	0.00E+00	0.00E+00
3125	ALL	753588.42	4043260.7	1.60E-09	25YrCancer	1.60E-09	0.00E+00	0.00E+00	0.00E+00	0.00E+00	0.00E+00	0.00E+00	0.00E+00	0.00E+00	0.00E+00	0.00E+00	0.00E+00
3126	ALL	753688.42	4043260.7	1.59E-09	25YrCancer	1.59E-09	0.00E+00	0.00E+00	0.00E+00	0.00E+00	0.00E+00	0.00E+00	0.00E+00	0.00E+00	0.00E+00	0.00E+00	0.00E+00
3127	ALL	753788.42	4043260.7	1.58E-09	25YrCancer	1.58E-09	0.00E+00	0.00E+00	0.00E+00	0.00E+00	0.00E+00	0.00E+00	0.00E+00	0.00E+00	0.00E+00	0.00E+00	0.00E+00
3128	ALL	753888.42	4043260.7	1.57E-09	25YrCancer	1.57E-09	0.00E+00	0.00E+00	0.00E+00	0.00E+00	0.00E+00	0.00E+00	0.00E+00	0.00E+00	0.00E+00	0.00E+00	0.00E+00
3129	ALL	753988.42	4043260.7	1.55E-09	25YrCancer	1.55E-09	0.00E+00	0.00E+00	0.00E+00	0.00E+00	0.00E+00	0.00E+00	0.00E+00	0.00E+00	0.00E+00	0.00E+00	0.00E+00
3130	ALL	748188.42	4043360.7	2.28E-09	25YrCancer	2.28E-09	0.00E+00	0.00E+00	0.00E+00	0.00E+00	0.00E+00	0.00E+00	0.00E+00	0.00E+00	0.00E+00	0.00E+00	0.00E+00
3131	ALL	748288.42	4043360.7	2.22E-09	25YrCancer	2.22E-09	0.00E+00	0.00E+00	0.00E+00	0.00E+00	0.00E+00	0.00E+00	0.00E+00	0.00E+00	0.00E+00	0.00E+00	0.00E+00
3132	ALL	748388.42	4043360.7	2.16E-09	25YrCancer	2.16E-09	0.00E+00	0.00E+00	0.00E+00	0.00E+00	0.00E+00	0.00E+00	0.00E+00	0.00E+00	0.00E+00	0.00E+00	0.00E+00
3133	ALL	748488.42	4043360.7	2.10E-09	25YrCancer	2.10E-09	0.00E+00	0.00E+00	0.00E+00	0.00E+00	0.00E+00	0.00E+00	0.00E+00	0.00E+00	0.00E+00	0.00E+00	0.00E+00
3134	ALL	752688.42	4043360.7	1.62E-09	25YrCancer	1.62E-09	0.00E+00	0.00E+00	0.00E+00	0.00E+00	0.00E+00	0.00E+00	0.00E+00	0.00E+00	0.00E+00	0.00E+00	0.00E+00
3135	ALL	752788.42	4043360.7	1.62E-09	25YrCancer	1.62E-09	0.00E+00	0.00E+00	0.00E+00	0.00E+00	0.00E+00	0.00E+00	0.00E+00	0.00E+00	0.00E+00	0.00E+00	0.00E+00
3136	ALL	752888.42	4043360.7	1.62E-09	25YrCancer	1.62E-09	0.00E+00	0.00E+00	0.00E+00	0.00E+00	0.00E+00	0.00E+00	0.00E+00	0.00E+00	0.00E+00	0.00E+00	0.00E+00
3137	ALL	752988.42	4043360.7	1.62E-09	25YrCancer	1.62E-09	0.00E+00	0.00E+00	0.00E+00	0.00E+00	0.00E+00	0.00E+00	0.00E+00	0.00E+00	0.00E+00	0.00E+00	0.00E+00
3138	ALL	753088.42	4043360.7	1.62E-09	25YrCancer	1.62E-09	0.00E+00	0.00E+00	0.00E+00	0.00E+00	0.00E+00	0.00E+00	0.00E+00	0.00E+00	0.00E+00	0.00E+00	0.00E+00
3139	ALL	753188.42	4043360.7	1.62E-09	25YrCancer	1.62E-09	0.00E+00	0.00E+00	0.00E+00	0.00E+00	0.00E+00	0.00E+00	0.00E+00	0.00E+00	0.00E+00	0.00E+00	0.00E+00
3140	ALL	753488.42	4043360.7	1.59E-09	25YrCancer	1.59E-09	0.00E+00	0.00E+00	0.00E+00	0.00E+00	0.00E+00	0.00E+00	0.00E+00	0.00E+00	0.00E+00	0.00E+00	0.00E+00
3141	ALL	753588.42	4043360.7	1.58E-09	25YrCancer	1.58E-09	0.00E+00	0.00E+00	0.00E+00	0.00E+00	0.00E+00	0.00E+00	0.00E+00	0.00E+00	0.00E+00	0.00E+00	0.00E+00
3142	ALL	753688.42	4043360.7	1.57E-09	25YrCancer	1.57E-09	0.00E+00	0.00E+00	0.00E+00	0.00E+00	0.00E+00	0.00E+00	0.00E+00	0.00E+00	0.00E+00	0.00E+00	0.00E+00
3143	ALL	753788.42	4043360.7	1.56E-09	25YrCancer	1.56E-09	0.00E+00	0.00E+00	0.00E+00	0.00E+00	0.00E+00	0.00E+00	0.00E+00	0.00E+00	0.00E+00	0.00E+00	0.00E+00
3144	ALL	753888.42	4043360.7	1.55E-09	25YrCancer	1.55E-09	0.00E+00	0.00E+00	0.00E+00	0.00E+00	0.00E+00	0.00E+00	0.00E+00	0.00E+00	0.00E+00	0.00E+00	0.00E+00
3145	ALL	753988.42	4043360.7	1.53E-09	25YrCancer	1.53E-09	0.00E+00	0.00E+00	0.00E+00	0.00E+00	0.00E+00	0.00E+00	0.00E+00	0.00E+00	0.00E+00	0.00E+00	0.00E+00
3146	ALL	748188.42	4043460.7	2.22E-09	25YrCancer	2.22E-09	0.00E+00	0.00E+00	0.00E+00	0.00E+00	0.00E+00	0.00E+00	0.00E+00	0.00E+00	0.00E+00	0.00E+00	0.00E+00
3147	ALL	748288.42	4043460.7	2.16E-09	25YrCancer	2.16E-09	0.00E+00	0.00E+00	0.00E+00	0.00E+00	0.00E+00	0.00E+00	0.00E+00	0.00E+00	0.00E+00	0.00E+00	0.00E+00
3148	ALL	748388.42	4043460.7	2.11E-09	25YrCancer	2.11E-09	0.00E+00	0.00E+00	0.00E+00	0.00E+00	0.00E+00	0.00E+00	0.00E+00	0.00E+00	0.00E+00	0.00E+00	0.00E+00
3149	ALL	748488.42	4043460.7	2.05E-09	25YrCancer	2.05E-09	0.00E+00	0.00E+00	0.00E+00	0.00E+00	0.00E+00	0.00E+00	0.00E+00	0.00E+00	0.00E+00	0.00E+00	0.00E+00
3150	ALL	752688.42	4043460.7	1.57E-09	25YrCancer	1.57E-09	0.00E+00	0.00E+00	0.00E+00	0.00E+00	0.00E+00	0.00E+00	0.00E+00	0.00E+00	0.00E+00	0.00E+00	0.00E+00
3151	ALL	752788.42	4043460.7	1.58E-09	25YrCancer	1.58E-09	0.00E+00	0.00E+00	0.00E+00	0.00E+00	0.00E+00	0.00E+00	0.00E+00	0.00E+00	0.00E+00	0.00E+00	0.00E+00
3152	ALL	752888.42	4043460.7	1.58E-09	25YrCancer	1.58E-09	0.00E+00	0.00E+00	0.00E+00	0.00E+00	0.00E+00	0.00E+00	0.00E+00	0.00E+00	0.00E+00	0.00E+00	0.00E+00
3153	ALL	752988.42	4043460.7	1.58E-09	25YrCancer	1.58E-09	0.00E+00	0.00E+00	0.00E+00	0.00E+00	0.00E+00	0.00E+00	0.00E+00	0.00E+00	0.00E+00	0.00E+00	0.00E+00
3154	ALL	753088.42	4043460.7	1.58E-09	25YrCancer	1.58E-09	0.00E+00	0.00E+00	0.00E+00	0.00E+00	0.00E+00	0.00E+00	0.00E+00	0.00E+00	0.00E+00	0.00E+00	0.00E+00
3155	ALL	753188.42	4043460.7	1.58E-09	25YrCancer	1.58E-09	0.00E+00	0.00E+00	0.00E+00	0.00E+00	0.00E+00	0.00E+00	0.00E+00	0.00E+00	0.00E+00	0.00E+00	0.00E+00
3156	ALL	753288.42	4043460.7	1.58E-09	25YrCancer	1.58E-09	0.00E+00	0.00E+00	0.00E+00	0.00E+00	0.00E+00	0.00E+00	0.00E+00	0.00E+00	0.00E+00	0.00E+00	0.00E+00
3157	ALL	753388.42	4043460.7	1.57E-09	25YrCancer	1.57E-09	0.00E+00	0.00E+00	0.00E+00	0.00E+00	0.00E+00	0.00E+00	0.00E+00	0.00E+00	0.00E+00	0.00E+00	0.00E+00
3158	ALL	753488.42	4043460.7	1.57E-09	25YrCancer	1.57E-09	0.00E+00	0.00E+00	0.00E+00	0.00E+00	0.00E+00	0.00E+00	0.00E+00	0.00E+00	0.00E+00	0.00E+00	0.00E+00
3159	ALL	753588.42	4043460.7	1.56E-09	25YrCancer	1.56E-09	0.00E+00	0.00E+00	0.00E+00	0.00E+00	0.00E+00	0.00E+00	0.00E+00	0.00E+00	0.00E+00	0.00E+00	0.00E+00
3160	ALL	753688.42	4043460.7	1.55E-09	25YrCancer	1.55E-09	0.00E+00	0.00E+00	0.00E+00	0.00E+00	0.00E+00	0.00E+00	0.00E+00	0.00E+00	0.00E+00	0.00E+00	0.00E+00

3161	ALL	753788.42	4043460.7	1.54E-09	25YrCancer	1.54E-09	0.00E+00	0.00E+00	0.00E+00	0.00E+00	0.00E+00	0.00E+00	0.00E+00	0.00E+00	0.00E+00	0.00E+00	0.00E+00
3162	ALL	753888.42	4043460.7	1.53E-09	25YrCancer	1.53E-09	0.00E+00	0.00E+00	0.00E+00	0.00E+00	0.00E+00	0.00E+00	0.00E+00	0.00E+00	0.00E+00	0.00E+00	0.00E+00
3163	ALL	753988.42	4043460.7	1.51E-09	25YrCancer	1.51E-09	0.00E+00	0.00E+00	0.00E+00	0.00E+00	0.00E+00	0.00E+00	0.00E+00	0.00E+00	0.00E+00	0.00E+00	0.00E+00
3164	ALL	748188.42	4043560.7	2.17E-09	25YrCancer	2.17E-09	0.00E+00	0.00E+00	0.00E+00	0.00E+00	0.00E+00	0.00E+00	0.00E+00	0.00E+00	0.00E+00	0.00E+00	0.00E+00
3165	ALL	748288.42	4043560.7	2.11E-09	25YrCancer	2.11E-09	0.00E+00	0.00E+00	0.00E+00	0.00E+00	0.00E+00	0.00E+00	0.00E+00	0.00E+00	0.00E+00	0.00E+00	0.00E+00
3166	ALL	748388.42	4043560.7	2.06E-09	25YrCancer	2.06E-09	0.00E+00	0.00E+00	0.00E+00	0.00E+00	0.00E+00	0.00E+00	0.00E+00	0.00E+00	0.00E+00	0.00E+00	0.00E+00
3167	ALL	748488.42	4043560.7	2.01E-09	25YrCancer	2.01E-09	0.00E+00	0.00E+00	0.00E+00	0.00E+00	0.00E+00	0.00E+00	0.00E+00	0.00E+00	0.00E+00	0.00E+00	0.00E+00
3168	ALL	752688.42	4043560.7	1.53E-09	25YrCancer	1.53E-09	0.00E+00	0.00E+00	0.00E+00	0.00E+00	0.00E+00	0.00E+00	0.00E+00	0.00E+00	0.00E+00	0.00E+00	0.00E+00
3169	ALL	752788.42	4043560.7	1.54E-09	25YrCancer	1.54E-09	0.00E+00	0.00E+00	0.00E+00	0.00E+00	0.00E+00	0.00E+00	0.00E+00	0.00E+00	0.00E+00	0.00E+00	0.00E+00
3170	ALL	752888.42	4043560.7	1.54E-09	25YrCancer	1.54E-09	0.00E+00	0.00E+00	0.00E+00	0.00E+00	0.00E+00	0.00E+00	0.00E+00	0.00E+00	0.00E+00	0.00E+00	0.00E+00
3171	ALL	752988.42	4043560.7	1.54E-09	25YrCancer	1.54E-09	0.00E+00	0.00E+00	0.00E+00	0.00E+00	0.00E+00	0.00E+00	0.00E+00	0.00E+00	0.00E+00	0.00E+00	0.00E+00
3172	ALL	753088.42	4043560.7	1.55E-09	25YrCancer	1.55E-09	0.00E+00	0.00E+00	0.00E+00	0.00E+00	0.00E+00	0.00E+00	0.00E+00	0.00E+00	0.00E+00	0.00E+00	0.00E+00
3173	ALL	753188.42	4043560.7	1.55E-09	25YrCancer	1.55E-09	0.00E+00	0.00E+00	0.00E+00	0.00E+00	0.00E+00	0.00E+00	0.00E+00	0.00E+00	0.00E+00	0.00E+00	0.00E+00
3174	ALL	753288.42	4043560.7	1.55E-09	25YrCancer	1.55E-09	0.00E+00	0.00E+00	0.00E+00	0.00E+00	0.00E+00	0.00E+00	0.00E+00	0.00E+00	0.00E+00	0.00E+00	0.00E+00
3175	ALL	753388.42	4043560.7	1.54E-09	25YrCancer	1.54E-09	0.00E+00	0.00E+00	0.00E+00	0.00E+00	0.00E+00	0.00E+00	0.00E+00	0.00E+00	0.00E+00	0.00E+00	0.00E+00
3176	ALL	753488.42	4043560.7	1.54E-09	25YrCancer	1.54E-09	0.00E+00	0.00E+00	0.00E+00	0.00E+00	0.00E+00	0.00E+00	0.00E+00	0.00E+00	0.00E+00	0.00E+00	0.00E+00
3177	ALL	753588.42	4043560.7	1.53E-09	25YrCancer	1.53E-09	0.00E+00	0.00E+00	0.00E+00	0.00E+00	0.00E+00	0.00E+00	0.00E+00	0.00E+00	0.00E+00	0.00E+00	0.00E+00
3178	ALL	753688.42	4043560.7	1.53E-09	25YrCancer	1.53E-09	0.00E+00	0.00E+00	0.00E+00	0.00E+00	0.00E+00	0.00E+00	0.00E+00	0.00E+00	0.00E+00	0.00E+00	0.00E+00
3179	ALL	753788.42	4043560.7	1.52E-09	25YrCancer	1.52E-09	0.00E+00	0.00E+00	0.00E+00	0.00E+00	0.00E+00	0.00E+00	0.00E+00	0.00E+00	0.00E+00	0.00E+00	0.00E+00
3180	ALL	753888.42	4043560.7	1.51E-09	25YrCancer	1.51E-09	0.00E+00	0.00E+00	0.00E+00	0.00E+00	0.00E+00	0.00E+00	0.00E+00	0.00E+00	0.00E+00	0.00E+00	0.00E+00
3181	ALL	753988.42	4043560.7	1.50E-09	25YrCancer	1.50E-09	0.00E+00	0.00E+00	0.00E+00	0.00E+00	0.00E+00	0.00E+00	0.00E+00	0.00E+00	0.00E+00	0.00E+00	0.00E+00
3182	ALL	748188.42	4043660.7	2.12E-09	25YrCancer	2.12E-09	0.00E+00	0.00E+00	0.00E+00	0.00E+00	0.00E+00	0.00E+00	0.00E+00	0.00E+00	0.00E+00	0.00E+00	0.00E+00
3183	ALL	748288.42	4043660.7	2.07E-09	25YrCancer	2.07E-09	0.00E+00	0.00E+00	0.00E+00	0.00E+00	0.00E+00	0.00E+00	0.00E+00	0.00E+00	0.00E+00	0.00E+00	0.00E+00
3184	ALL	748388.42	4043660.7	2.01E-09	25YrCancer	2.01E-09	0.00E+00	0.00E+00	0.00E+00	0.00E+00	0.00E+00	0.00E+00	0.00E+00	0.00E+00	0.00E+00	0.00E+00	0.00E+00
3185	ALL	748488.42	4043660.7	1.96E-09	25YrCancer	1.96E-09	0.00E+00	0.00E+00	0.00E+00	0.00E+00	0.00E+00	0.00E+00	0.00E+00	0.00E+00	0.00E+00	0.00E+00	0.00E+00
3186	ALL	752688.42	4043660.7	1.49E-09	25YrCancer	1.49E-09	0.00E+00	0.00E+00	0.00E+00	0.00E+00	0.00E+00	0.00E+00	0.00E+00	0.00E+00	0.00E+00	0.00E+00	0.00E+00
3187	ALL	752788.42	4043660.7	1.50E-09	25YrCancer	1.50E-09	0.00E+00	0.00E+00	0.00E+00	0.00E+00	0.00E+00	0.00E+00	0.00E+00	0.00E+00	0.00E+00	0.00E+00	0.00E+00
3188	ALL	752888.42	4043660.7	1.50E-09	25YrCancer	1.50E-09	0.00E+00	0.00E+00	0.00E+00	0.00E+00	0.00E+00	0.00E+00	0.00E+00	0.00E+00	0.00E+00	0.00E+00	0.00E+00
3189	ALL	752988.42	4043660.7	1.51E-09	25YrCancer	1.51E-09	0.00E+00	0.00E+00	0.00E+00	0.00E+00	0.00E+00	0.00E+00	0.00E+00	0.00E+00	0.00E+00	0.00E+00	0.00E+00
3190	ALL	753088.42	4043660.7	1.51E-09	25YrCancer	1.51E-09	0.00E+00	0.00E+00	0.00E+00	0.00E+00	0.00E+00	0.00E+00	0.00E+00	0.00E+00	0.00E+00	0.00E+00	0.00E+00
3191	ALL	753188.42	4043660.7	1.51E-09	25YrCancer	1.51E-09	0.00E+00	0.00E+00	0.00E+00	0.00E+00	0.00E+00	0.00E+00	0.00E+00	0.00E+00	0.00E+00	0.00E+00	0.00E+00
3192	ALL	753288.42	4043660.7	1.51E-09	25YrCancer	1.51E-09	0.00E+00	0.00E+00	0.00E+00	0.00E+00	0.00E+00	0.00E+00	0.00E+00	0.00E+00	0.00E+00	0.00E+00	0.00E+00
3193	ALL	753388.42	4043660.7	1.51E-09	25YrCancer	1.51E-09	0.00E+00	0.00E+00	0.00E+00	0.00E+00	0.00E+00	0.00E+00	0.00E+00	0.00E+00	0.00E+00	0.00E+00	0.00E+00
3194	ALL	753488.42	4043660.7	1.51E-09	25YrCancer	1.51E-09	0.00E+00	0.00E+00	0.00E+00	0.00E+00	0.00E+00	0.00E+00	0.00E+00	0.00E+00	0.00E+00	0.00E+00	0.00E+00
3195	ALL	753588.42	4043660.7	1.51E-09	25YrCancer	1.51E-09	0.00E+00	0.00E+00	0.00E+00	0.00E+00	0.00E+00	0.00E+00	0.00E+00	0.00E+00	0.00E+00	0.00E+00	0.00E+00
3196	ALL	753688.42	4043660.7	1.50E-09	25YrCancer	1.50E-09	0.00E+00	0.00E+00	0.00E+00	0.00E+00	0.00E+00	0.00E+00	0.00E+00	0.00E+00	0.00E+00	0.00E+00	0.00E+00
3197	ALL	753788.42	4043660.7	1.50E-09	25YrCancer	1.50E-09	0.00E+00	0.00E+00	0.00E+00	0.00E+00	0.00E+00	0.00E+00	0.00E+00	0.00E+00	0.00E+00	0.00E+00	0.00E+00
3198	ALL	753888.42	4043660.7	1.49E-09	25YrCancer	1.49E-09	0.00E+00	0.00E+00	0.00E+00	0.00E+00	0.00E+00	0.00E+00	0.00E+00	0.00E+00	0.00E+00	0.00E+00	0.00E+00
3199	ALL	753988.42	4043660.7	1.48E-09	25YrCancer	1.48E-09	0.00E+00	0.00E+00	0.00E+00	0.00E+00	0.00E+00	0.00E+00	0.00E+00	0.00E+00	0.00E+00	0.00E+00	0.00E+00
3200	ALL	748188.42	4043760.7	2.07E-09	25YrCancer	2.07E-09	0.00E+00	0.00E+00	0.00E+00	0.00E+00	0.00E+00	0.00E+00	0.00E+00	0.00E+00	0.00E+00	0.00E+00	0.00E+00
3201	ALL	748288.42	4043760.7	2.02E-09	25YrCancer	2.02E-09	0.00E+00	0.00E+00	0.00E+00	0.00E+00	0.00E+00	0.00E+00	0.00E+00	0.00E+00	0.00E+00	0.00E+00	0.00E+00
3202	ALL	748388.42	4043760.7	1.97E-09	25YrCancer	1.97E-09	0.00E+00	0.00E+00	0.00E+00	0.00E+00	0.00E+00	0.00E+00	0.00E+00	0.00E+00	0.00E+00	0.00E+00	0.00E+00
3203	ALL	748488.42	4043760.7	1.92E-09	25YrCancer	1.92E-09	0.00E+00	0.00E+00	0.00E+00	0.00E+00	0.00E+00	0.00E+00	0.00E+00	0.00E+00	0.00E+00	0.00E+00	0.00E+00
3204	ALL	752688.42	4043760.7	1.45E-09	25YrCancer	1.45E-09	0.00E+00	0.00E+00	0.00E+00	0.00E+00	0.00E+00	0.00E+00	0.00E+00	0.00E+00	0.00E+00	0.00E+00	0.00E+00
3205	ALL	752788.42	4043760.7	1.46E-09	25YrCancer	1.46E-09	0.00E+00	0.00E+00	0.00E+00	0.00E+00	0.00E+00	0.00E+00	0.00E+00	0.00E+00	0.00E+00	0.00E+00	0.00E+00
3206	ALL	752888.42	4043760.7	1.46E-09	25YrCancer	1.46E-09	0.00E+00	0.00E+00	0.00E+00	0.00E+00	0.00E+00	0.00E+00	0.00E+00	0.00E+00	0.00E+00	0.00E+00	0.00E+00
3207	ALL	752988.42	4043760.7	1.47E-09	25YrCancer	1.47E-09	0.00E+00	0.00E+00	0.00E+00	0.00E+00	0.00E+00	0.00E+00	0.00E+00	0.00E+00	0.00E+00	0.00E+00	0.00E+00
3208	ALL	753088.42	4043760.7	1.47E-09	25YrCancer	1.47E-09	0.00E+00	0.00E+00	0.00E+00	0.00E+00	0.00E+00	0.00E+00	0.00E+00	0.00E+00	0.00E+00	0.00E+00	0.00E+00
3209	ALL	753188.42	4043760.7	1.48E-09	25YrCancer	1.48E-09	0.00E+00	0.00E+00	0.00E+00	0.00E+00	0.00E+00	0.00E+00	0.00E+00	0.00E+00	0.00E+00	0.00E+00	0.00E+00
3210	ALL	753288.42	4043760.7	1.48E-09	25YrCancer	1.48E-09	0.00E+00	0.00E+00	0.00E+00	0.00E+00	0.00E+00	0.00E+00	0.00E+00	0.00E+00	0.00E+00	0.00E+00	0.00E+00
3211	ALL	753388.42	4043760.7	1.48E-09	25YrCancer	1.48E-09	0.00E+00	0.00E+00	0.00E+00	0.00E+00	0.00E+00	0.00E+00	0.00E+00	0.00E+00	0.00E+00	0.00E+00	0.00E+00

3212	ALL	753488.42	4043760.7	1.48E-09	25YrCancer	1.48E-09	0.00E+00	0.00E+00	0.00E+00	0.00E+00	0.00E+00	0.00E+00	0.00E+00	0.00E+00	0.00E+00	0.00E+00	0.00E+00
3213	ALL	753588.42	4043760.7	1.48E-09	25YrCancer	1.48E-09	0.00E+00	0.00E+00	0.00E+00	0.00E+00	0.00E+00	0.00E+00	0.00E+00	0.00E+00	0.00E+00	0.00E+00	0.00E+00
3214	ALL	753688.42	4043760.7	1.48E-09	25YrCancer	1.48E-09	0.00E+00	0.00E+00	0.00E+00	0.00E+00	0.00E+00	0.00E+00	0.00E+00	0.00E+00	0.00E+00	0.00E+00	0.00E+00
3215	ALL	753788.42	4043760.7	1.47E-09	25YrCancer	1.47E-09	0.00E+00	0.00E+00	0.00E+00	0.00E+00	0.00E+00	0.00E+00	0.00E+00	0.00E+00	0.00E+00	0.00E+00	0.00E+00
3216	ALL	753888.42	4043760.7	1.47E-09	25YrCancer	1.47E-09	0.00E+00	0.00E+00	0.00E+00	0.00E+00	0.00E+00	0.00E+00	0.00E+00	0.00E+00	0.00E+00	0.00E+00	0.00E+00
3217	ALL	753988.42	4043760.7	1.46E-09	25YrCancer	1.46E-09	0.00E+00	0.00E+00	0.00E+00	0.00E+00	0.00E+00	0.00E+00	0.00E+00	0.00E+00	0.00E+00	0.00E+00	0.00E+00
3218	ALL	748188.42	4043860.7	2.02E-09	25YrCancer	2.02E-09	0.00E+00	0.00E+00	0.00E+00	0.00E+00	0.00E+00	0.00E+00	0.00E+00	0.00E+00	0.00E+00	0.00E+00	0.00E+00
3219	ALL	748288.42	4043860.7	1.98E-09	25YrCancer	1.98E-09	0.00E+00	0.00E+00	0.00E+00	0.00E+00	0.00E+00	0.00E+00	0.00E+00	0.00E+00	0.00E+00	0.00E+00	0.00E+00
3220	ALL	748388.42	4043860.7	1.93E-09	25YrCancer	1.93E-09	0.00E+00	0.00E+00	0.00E+00	0.00E+00	0.00E+00	0.00E+00	0.00E+00	0.00E+00	0.00E+00	0.00E+00	0.00E+00
3221	ALL	748488.42	4043860.7	1.89E-09	25YrCancer	1.89E-09	0.00E+00	0.00E+00	0.00E+00	0.00E+00	0.00E+00	0.00E+00	0.00E+00	0.00E+00	0.00E+00	0.00E+00	0.00E+00
3222	ALL	752688.42	4043860.7	1.42E-09	25YrCancer	1.42E-09	0.00E+00	0.00E+00	0.00E+00	0.00E+00	0.00E+00	0.00E+00	0.00E+00	0.00E+00	0.00E+00	0.00E+00	0.00E+00
3223	ALL	752788.42	4043860.7	1.42E-09	25YrCancer	1.42E-09	0.00E+00	0.00E+00	0.00E+00	0.00E+00	0.00E+00	0.00E+00	0.00E+00	0.00E+00	0.00E+00	0.00E+00	0.00E+00
3224	ALL	752888.42	4043860.7	1.43E-09	25YrCancer	1.43E-09	0.00E+00	0.00E+00	0.00E+00	0.00E+00	0.00E+00	0.00E+00	0.00E+00	0.00E+00	0.00E+00	0.00E+00	0.00E+00
3225	ALL	752988.42	4043860.7	1.43E-09	25YrCancer	1.43E-09	0.00E+00	0.00E+00	0.00E+00	0.00E+00	0.00E+00	0.00E+00	0.00E+00	0.00E+00	0.00E+00	0.00E+00	0.00E+00
3226	ALL	748088.42	4043960.7	2.02E-09	25YrCancer	2.02E-09	0.00E+00	0.00E+00	0.00E+00	0.00E+00	0.00E+00	0.00E+00	0.00E+00	0.00E+00	0.00E+00	0.00E+00	0.00E+00
3227	ALL	748188.42	4043960.7	1.98E-09	25YrCancer	1.98E-09	0.00E+00	0.00E+00	0.00E+00	0.00E+00	0.00E+00	0.00E+00	0.00E+00	0.00E+00	0.00E+00	0.00E+00	0.00E+00
3228	ALL	748288.42	4043960.7	1.93E-09	25YrCancer	1.93E-09	0.00E+00	0.00E+00	0.00E+00	0.00E+00	0.00E+00	0.00E+00	0.00E+00	0.00E+00	0.00E+00	0.00E+00	0.00E+00
3229	ALL	748388.42	4043960.7	1.89E-09	25YrCancer	1.89E-09	0.00E+00	0.00E+00	0.00E+00	0.00E+00	0.00E+00	0.00E+00	0.00E+00	0.00E+00	0.00E+00	0.00E+00	0.00E+00
3230	ALL	748488.42	4043960.7	1.85E-09	25YrCancer	1.85E-09	0.00E+00	0.00E+00	0.00E+00	0.00E+00	0.00E+00	0.00E+00	0.00E+00	0.00E+00	0.00E+00	0.00E+00	0.00E+00
3231	ALL	752688.42	4043960.7	1.39E-09	25YrCancer	1.39E-09	0.00E+00	0.00E+00	0.00E+00	0.00E+00	0.00E+00	0.00E+00	0.00E+00	0.00E+00	0.00E+00	0.00E+00	0.00E+00
3232	ALL	752788.42	4043960.7	1.39E-09	25YrCancer	1.39E-09	0.00E+00	0.00E+00	0.00E+00	0.00E+00	0.00E+00	0.00E+00	0.00E+00	0.00E+00	0.00E+00	0.00E+00	0.00E+00
3233	ALL	752888.42	4043960.7	1.39E-09	25YrCancer	1.39E-09	0.00E+00	0.00E+00	0.00E+00	0.00E+00	0.00E+00	0.00E+00	0.00E+00	0.00E+00	0.00E+00	0.00E+00	0.00E+00
3234	ALL	752988.42	4043960.7	1.40E-09	25YrCancer	1.40E-09	0.00E+00	0.00E+00	0.00E+00	0.00E+00	0.00E+00	0.00E+00	0.00E+00	0.00E+00	0.00E+00	0.00E+00	0.00E+00
3235	ALL	748088.42	4044060.7	1.97E-09	25YrCancer	1.97E-09	0.00E+00	0.00E+00	0.00E+00	0.00E+00	0.00E+00	0.00E+00	0.00E+00	0.00E+00	0.00E+00	0.00E+00	0.00E+00
3236	ALL	748188.42	4044060.7	1.94E-09	25YrCancer	1.94E-09	0.00E+00	0.00E+00	0.00E+00	0.00E+00	0.00E+00	0.00E+00	0.00E+00	0.00E+00	0.00E+00	0.00E+00	0.00E+00
3237	ALL	748288.42	4044060.7	1.89E-09	25YrCancer	1.89E-09	0.00E+00	0.00E+00	0.00E+00	0.00E+00	0.00E+00	0.00E+00	0.00E+00	0.00E+00	0.00E+00	0.00E+00	0.00E+00
3238	ALL	748388.42	4044060.7	1.85E-09	25YrCancer	1.85E-09	0.00E+00	0.00E+00	0.00E+00	0.00E+00	0.00E+00	0.00E+00	0.00E+00	0.00E+00	0.00E+00	0.00E+00	0.00E+00
3239	ALL	748488.42	4044060.7	1.81E-09	25YrCancer	1.81E-09	0.00E+00	0.00E+00	0.00E+00	0.00E+00	0.00E+00	0.00E+00	0.00E+00	0.00E+00	0.00E+00	0.00E+00	0.00E+00
3240	ALL	752688.42	4044060.7	1.36E-09	25YrCancer	1.36E-09	0.00E+00	0.00E+00	0.00E+00	0.00E+00	0.00E+00	0.00E+00	0.00E+00	0.00E+00	0.00E+00	0.00E+00	0.00E+00
3241	ALL	752788.42	4044060.7	1.36E-09	25YrCancer	1.36E-09	0.00E+00	0.00E+00	0.00E+00	0.00E+00	0.00E+00	0.00E+00	0.00E+00	0.00E+00	0.00E+00	0.00E+00	0.00E+00
3242	ALL	752888.42	4044060.7	1.36E-09	25YrCancer	1.36E-09	0.00E+00	0.00E+00	0.00E+00	0.00E+00	0.00E+00	0.00E+00	0.00E+00	0.00E+00	0.00E+00	0.00E+00	0.00E+00
3243	ALL	752988.42	4044060.7	1.37E-09	25YrCancer	1.37E-09	0.00E+00	0.00E+00	0.00E+00	0.00E+00	0.00E+00	0.00E+00	0.00E+00	0.00E+00	0.00E+00	0.00E+00	0.00E+00
3244	ALL	748088.42	4044160.7	1.93E-09	25YrCancer	1.93E-09	0.00E+00	0.00E+00	0.00E+00	0.00E+00	0.00E+00	0.00E+00	0.00E+00	0.00E+00	0.00E+00	0.00E+00	0.00E+00
3245	ALL	748188.42	4044160.7	1.90E-09	25YrCancer	1.90E-09	0.00E+00	0.00E+00	0.00E+00	0.00E+00	0.00E+00	0.00E+00	0.00E+00	0.00E+00	0.00E+00	0.00E+00	0.00E+00
3246	ALL	748288.42	4044160.7	1.85E-09	25YrCancer	1.85E-09	0.00E+00	0.00E+00	0.00E+00	0.00E+00	0.00E+00	0.00E+00	0.00E+00	0.00E+00	0.00E+00	0.00E+00	0.00E+00
3247	ALL	748388.42	4044160.7	1.81E-09	25YrCancer	1.81E-09	0.00E+00	0.00E+00	0.00E+00	0.00E+00	0.00E+00	0.00E+00	0.00E+00	0.00E+00	0.00E+00	0.00E+00	0.00E+00
3248	ALL	748488.42	4044160.7	1.78E-09	25YrCancer	1.78E-09	0.00E+00	0.00E+00	0.00E+00	0.00E+00	0.00E+00	0.00E+00	0.00E+00	0.00E+00	0.00E+00	0.00E+00	0.00E+00
3249	ALL	752688.42	4044160.7	1.33E-09	25YrCancer	1.33E-09	0.00E+00	0.00E+00	0.00E+00	0.00E+00	0.00E+00	0.00E+00	0.00E+00	0.00E+00	0.00E+00	0.00E+00	0.00E+00
3250	ALL	752788.42	4044160.7	1.33E-09	25YrCancer	1.33E-09	0.00E+00	0.00E+00	0.00E+00	0.00E+00	0.00E+00	0.00E+00	0.00E+00	0.00E+00	0.00E+00	0.00E+00	0.00E+00
3251	ALL	752888.42	4044160.7	1.34E-09	25YrCancer	1.34E-09	0.00E+00	0.00E+00	0.00E+00	0.00E+00	0.00E+00	0.00E+00	0.00E+00	0.00E+00	0.00E+00	0.00E+00	0.00E+00
3252	ALL	752988.42	4044160.7	1.34E-09	25YrCancer	1.34E-09	0.00E+00	0.00E+00	0.00E+00	0.00E+00	0.00E+00	0.00E+00	0.00E+00	0.00E+00	0.00E+00	0.00E+00	0.00E+00
3253	ALL	748088.42	4044260.7	1.89E-09	25YrCancer	1.89E-09	0.00E+00	0.00E+00	0.00E+00	0.00E+00	0.00E+00	0.00E+00	0.00E+00	0.00E+00	0.00E+00	0.00E+00	0.00E+00
3254	ALL	748188.42	4044260.7	1.86E-09	25YrCancer	1.86E-09	0.00E+00	0.00E+00	0.00E+00	0.00E+00	0.00E+00	0.00E+00	0.00E+00	0.00E+00	0.00E+00	0.00E+00	0.00E+00
3255	ALL	748288.42	4044260.7	1.82E-09	25YrCancer	1.82E-09	0.00E+00	0.00E+00	0.00E+00	0.00E+00	0.00E+00	0.00E+00	0.00E+00	0.00E+00	0.00E+00	0.00E+00	0.00E+00
3256	ALL	748388.42	4044260.7	1.78E-09	25YrCancer	1.78E-09	0.00E+00	0.00E+00	0.00E+00	0.00E+00	0.00E+00	0.00E+00	0.00E+00	0.00E+00	0.00E+00	0.00E+00	0.00E+00
3257	ALL	748488.42	4044260.7	1.74E-09	25YrCancer	1.74E-09	0.00E+00	0.00E+00	0.00E+00	0.00E+00	0.00E+00	0.00E+00	0.00E+00	0.00E+00	0.00E+00	0.00E+00	0.00E+00
3258	ALL	752688.42	4044260.7	1.30E-09	25YrCancer	1.30E-09	0.00E+00	0.00E+00	0.00E+00	0.00E+00	0.00E+00	0.00E+00	0.00E+00	0.00E+00	0.00E+00	0.00E+00	0.00E+00
3259	ALL	752788.42	4044260.7	1.30E-09	25YrCancer	1.30E-09	0.00E+00	0.00E+00	0.00E+00	0.00E+00	0.00E+00	0.00E+00	0.00E+00	0.00E+00	0.00E+00	0.00E+00	0.00E+00
3260	ALL	752888.42	4044260.7	1.31E-09	25YrCancer	1.31E-09	0.00E+00	0.00E+00	0.00E+00	0.00E+00	0.00E+00	0.00E+00	0.00E+00	0.00E+00	0.00E+00	0.00E+00	0.00E+00
3261	ALL	752988.42	4044260.7	1.31E-09	25YrCancer	1.31E-09	0.00E+00	0.00E+00	0.00E+00	0.00E+00	0.00E+00	0.00E+00	0.00E+00	0.00E+00	0.00E+00	0.00E+00	0.00E+00
3262	ALL	748088.42	4044360.7	1.85E-09	25YrCancer	1.85E-09	0.00E+00	0.00E+00	0.00E+00	0.00E+00	0.00E+00	0.00E+00	0.00E+00	0.00E+00	0.00E+00	0.00E+00	0.00E+00

3263	ALL	748188.42	4044360.7	1.82E-09	25YrCancer	1.82E-09	0.00E+00	0.00E+00	0.00E+00	0.00E+00	0.00E+00	0.00E+00	0.00E+00	0.00E+00	0.00E+00	0.00E+00	0.00E+00
3264	ALL	748288.42	4044360.7	1.78E-09	25YrCancer	1.78E-09	0.00E+00	0.00E+00	0.00E+00	0.00E+00	0.00E+00	0.00E+00	0.00E+00	0.00E+00	0.00E+00	0.00E+00	0.00E+00
3265	ALL	748388.42	4044360.7	1.74E-09	25YrCancer	1.74E-09	0.00E+00	0.00E+00	0.00E+00	0.00E+00	0.00E+00	0.00E+00	0.00E+00	0.00E+00	0.00E+00	0.00E+00	0.00E+00
3266	ALL	748488.42	4044360.7	1.71E-09	25YrCancer	1.71E-09	0.00E+00	0.00E+00	0.00E+00	0.00E+00	0.00E+00	0.00E+00	0.00E+00	0.00E+00	0.00E+00	0.00E+00	0.00E+00
3267	ALL	752688.42	4044360.7	1.28E-09	25YrCancer	1.28E-09	0.00E+00	0.00E+00	0.00E+00	0.00E+00	0.00E+00	0.00E+00	0.00E+00	0.00E+00	0.00E+00	0.00E+00	0.00E+00
3268	ALL	752788.42	4044360.7	1.28E-09	25YrCancer	1.28E-09	0.00E+00	0.00E+00	0.00E+00	0.00E+00	0.00E+00	0.00E+00	0.00E+00	0.00E+00	0.00E+00	0.00E+00	0.00E+00
3269	ALL	752888.42	4044360.7	1.28E-09	25YrCancer	1.28E-09	0.00E+00	0.00E+00	0.00E+00	0.00E+00	0.00E+00	0.00E+00	0.00E+00	0.00E+00	0.00E+00	0.00E+00	0.00E+00
3270	ALL	752988.42	4044360.7	1.28E-09	25YrCancer	1.28E-09	0.00E+00	0.00E+00	0.00E+00	0.00E+00	0.00E+00	0.00E+00	0.00E+00	0.00E+00	0.00E+00	0.00E+00	0.00E+00
3271	ALL	748088.42	4044460.7	1.82E-09	25YrCancer	1.82E-09	0.00E+00	0.00E+00	0.00E+00	0.00E+00	0.00E+00	0.00E+00	0.00E+00	0.00E+00	0.00E+00	0.00E+00	0.00E+00
3272	ALL	748188.42	4044460.7	1.78E-09	25YrCancer	1.78E-09	0.00E+00	0.00E+00	0.00E+00	0.00E+00	0.00E+00	0.00E+00	0.00E+00	0.00E+00	0.00E+00	0.00E+00	0.00E+00
3273	ALL	748288.42	4044460.7	1.75E-09	25YrCancer	1.75E-09	0.00E+00	0.00E+00	0.00E+00	0.00E+00	0.00E+00	0.00E+00	0.00E+00	0.00E+00	0.00E+00	0.00E+00	0.00E+00
3274	ALL	748388.42	4044460.7	1.71E-09	25YrCancer	1.71E-09	0.00E+00	0.00E+00	0.00E+00	0.00E+00	0.00E+00	0.00E+00	0.00E+00	0.00E+00	0.00E+00	0.00E+00	0.00E+00
3275	ALL	748488.42	4044460.7	1.68E-09	25YrCancer	1.68E-09	0.00E+00	0.00E+00	0.00E+00	0.00E+00	0.00E+00	0.00E+00	0.00E+00	0.00E+00	0.00E+00	0.00E+00	0.00E+00
3276	ALL	752688.42	4044460.7	1.25E-09	25YrCancer	1.25E-09	0.00E+00	0.00E+00	0.00E+00	0.00E+00	0.00E+00	0.00E+00	0.00E+00	0.00E+00	0.00E+00	0.00E+00	0.00E+00
3277	ALL	752788.42	4044460.7	1.26E-09	25YrCancer	1.26E-09	0.00E+00	0.00E+00	0.00E+00	0.00E+00	0.00E+00	0.00E+00	0.00E+00	0.00E+00	0.00E+00	0.00E+00	0.00E+00
3278	ALL	752888.42	4044460.7	1.26E-09	25YrCancer	1.26E-09	0.00E+00	0.00E+00	0.00E+00	0.00E+00	0.00E+00	0.00E+00	0.00E+00	0.00E+00	0.00E+00	0.00E+00	0.00E+00
3279	ALL	752988.42	4044460.7	1.26E-09	25YrCancer	1.26E-09	0.00E+00	0.00E+00	0.00E+00	0.00E+00	0.00E+00	0.00E+00	0.00E+00	0.00E+00	0.00E+00	0.00E+00	0.00E+00
3280	ALL	748088.42	4044560.7	1.78E-09	25YrCancer	1.78E-09	0.00E+00	0.00E+00	0.00E+00	0.00E+00	0.00E+00	0.00E+00	0.00E+00	0.00E+00	0.00E+00	0.00E+00	0.00E+00
3281	ALL	748188.42	4044560.7	1.75E-09	25YrCancer	1.75E-09	0.00E+00	0.00E+00	0.00E+00	0.00E+00	0.00E+00	0.00E+00	0.00E+00	0.00E+00	0.00E+00	0.00E+00	0.00E+00
3282	ALL	748288.42	4044560.7	1.71E-09	25YrCancer	1.71E-09	0.00E+00	0.00E+00	0.00E+00	0.00E+00	0.00E+00	0.00E+00	0.00E+00	0.00E+00	0.00E+00	0.00E+00	0.00E+00
3283	ALL	748388.42	4044560.7	1.68E-09	25YrCancer	1.68E-09	0.00E+00	0.00E+00	0.00E+00	0.00E+00	0.00E+00	0.00E+00	0.00E+00	0.00E+00	0.00E+00	0.00E+00	0.00E+00
3284	ALL	748488.42	4044560.7	1.64E-09	25YrCancer	1.64E-09	0.00E+00	0.00E+00	0.00E+00	0.00E+00	0.00E+00	0.00E+00	0.00E+00	0.00E+00	0.00E+00	0.00E+00	0.00E+00
3285	ALL	752688.42	4044560.7	1.23E-09	25YrCancer	1.23E-09	0.00E+00	0.00E+00	0.00E+00	0.00E+00	0.00E+00	0.00E+00	0.00E+00	0.00E+00	0.00E+00	0.00E+00	0.00E+00
3286	ALL	752788.42	4044560.7	1.23E-09	25YrCancer	1.23E-09	0.00E+00	0.00E+00	0.00E+00	0.00E+00	0.00E+00	0.00E+00	0.00E+00	0.00E+00	0.00E+00	0.00E+00	0.00E+00
3287	ALL	752888.42	4044560.7	1.24E-09	25YrCancer	1.24E-09	0.00E+00	0.00E+00	0.00E+00	0.00E+00	0.00E+00	0.00E+00	0.00E+00	0.00E+00	0.00E+00	0.00E+00	0.00E+00
3288	ALL	752988.42	4044560.7	1.24E-09	25YrCancer	1.24E-09	0.00E+00	0.00E+00	0.00E+00	0.00E+00	0.00E+00	0.00E+00	0.00E+00	0.00E+00	0.00E+00	0.00E+00	0.00E+00
3289	ALL	748088.42	4044660.7	1.74E-09	25YrCancer	1.74E-09	0.00E+00	0.00E+00	0.00E+00	0.00E+00	0.00E+00	0.00E+00	0.00E+00	0.00E+00	0.00E+00	0.00E+00	0.00E+00
3290	ALL	748188.42	4044660.7	1.71E-09	25YrCancer	1.71E-09	0.00E+00	0.00E+00	0.00E+00	0.00E+00	0.00E+00	0.00E+00	0.00E+00	0.00E+00	0.00E+00	0.00E+00	0.00E+00
3291	ALL	748288.42	4044660.7	1.68E-09	25YrCancer	1.68E-09	0.00E+00	0.00E+00	0.00E+00	0.00E+00	0.00E+00	0.00E+00	0.00E+00	0.00E+00	0.00E+00	0.00E+00	0.00E+00
3292	ALL	748388.42	4044660.7	1.65E-09	25YrCancer	1.65E-09	0.00E+00	0.00E+00	0.00E+00	0.00E+00	0.00E+00	0.00E+00	0.00E+00	0.00E+00	0.00E+00	0.00E+00	0.00E+00
3293	ALL	748488.42	4044660.7	1.62E-09	25YrCancer	1.62E-09	0.00E+00	0.00E+00	0.00E+00	0.00E+00	0.00E+00	0.00E+00	0.00E+00	0.00E+00	0.00E+00	0.00E+00	0.00E+00
3294	ALL	752688.42	4044660.7	1.21E-09	25YrCancer	1.21E-09	0.00E+00	0.00E+00	0.00E+00	0.00E+00	0.00E+00	0.00E+00	0.00E+00	0.00E+00	0.00E+00	0.00E+00	0.00E+00
3295	ALL	752788.42	4044660.7	1.21E-09	25YrCancer	1.21E-09	0.00E+00	0.00E+00	0.00E+00	0.00E+00	0.00E+00	0.00E+00	0.00E+00	0.00E+00	0.00E+00	0.00E+00	0.00E+00
3296	ALL	752888.42	4044660.7	1.21E-09	25YrCancer	1.21E-09	0.00E+00	0.00E+00	0.00E+00	0.00E+00	0.00E+00	0.00E+00	0.00E+00	0.00E+00	0.00E+00	0.00E+00	0.00E+00
3297	ALL	752988.42	4044660.7	1.22E-09	25YrCancer	1.22E-09	0.00E+00	0.00E+00	0.00E+00	0.00E+00	0.00E+00	0.00E+00	0.00E+00	0.00E+00	0.00E+00	0.00E+00	0.00E+00
3298	ALL	748088.42	4044760.7	1.71E-09	25YrCancer	1.71E-09	0.00E+00	0.00E+00	0.00E+00	0.00E+00	0.00E+00	0.00E+00	0.00E+00	0.00E+00	0.00E+00	0.00E+00	0.00E+00
3299	ALL	748188.42	4044760.7	1.68E-09	25YrCancer	1.68E-09	0.00E+00	0.00E+00	0.00E+00	0.00E+00	0.00E+00	0.00E+00	0.00E+00	0.00E+00	0.00E+00	0.00E+00	0.00E+00
3300	ALL	748288.42	4044760.7	1.65E-09	25YrCancer	1.65E-09	0.00E+00	0.00E+00	0.00E+00	0.00E+00	0.00E+00	0.00E+00	0.00E+00	0.00E+00	0.00E+00	0.00E+00	0.00E+00
3301	ALL	748388.42	4044760.7	1.62E-09	25YrCancer	1.62E-09	0.00E+00	0.00E+00	0.00E+00	0.00E+00	0.00E+00	0.00E+00	0.00E+00	0.00E+00	0.00E+00	0.00E+00	0.00E+00
3302	ALL	748488.42	4044760.7	1.59E-09	25YrCancer	1.59E-09	0.00E+00	0.00E+00	0.00E+00	0.00E+00	0.00E+00	0.00E+00	0.00E+00	0.00E+00	0.00E+00	0.00E+00	0.00E+00
3303	ALL	752688.42	4044760.7	1.20E-09	25YrCancer	1.20E-09	0.00E+00	0.00E+00	0.00E+00	0.00E+00	0.00E+00	0.00E+00	0.00E+00	0.00E+00	0.00E+00	0.00E+00	0.00E+00
3304	ALL	752788.42	4044760.7	1.20E-09	25YrCancer	1.20E-09	0.00E+00	0.00E+00	0.00E+00	0.00E+00	0.00E+00	0.00E+00	0.00E+00	0.00E+00	0.00E+00	0.00E+00	0.00E+00
3305	ALL	752888.42	4044760.7	1.19E-09	25YrCancer	1.19E-09	0.00E+00	0.00E+00	0.00E+00	0.00E+00	0.00E+00	0.00E+00	0.00E+00	0.00E+00	0.00E+00	0.00E+00	0.00E+00
3306	ALL	752988.42	4044760.7	1.20E-09	25YrCancer	1.20E-09	0.00E+00	0.00E+00	0.00E+00	0.00E+00	0.00E+00	0.00E+00	0.00E+00	0.00E+00	0.00E+00	0.00E+00	0.00E+00
3307	ALL	748088.42	4044860.7	1.68E-09	25YrCancer	1.68E-09	0.00E+00	0.00E+00	0.00E+00	0.00E+00	0.00E+00	0.00E+00	0.00E+00	0.00E+00	0.00E+00	0.00E+00	0.00E+00
3308	ALL	748188.42	4044860.7	1.65E-09	25YrCancer	1.65E-09	0.00E+00	0.00E+00	0.00E+00	0.00E+00	0.00E+00	0.00E+00	0.00E+00	0.00E+00	0.00E+00	0.00E+00	0.00E+00
3309	ALL	748288.42	4044860.7	1.62E-09	25YrCancer	1.62E-09	0.00E+00	0.00E+00	0.00E+00	0.00E+00	0.00E+00	0.00E+00	0.00E+00	0.00E+00	0.00E+00	0.00E+00	0.00E+00
3310	ALL	748388.42	4044860.7	1.59E-09	25YrCancer	1.59E-09	0.00E+00	0.00E+00	0.00E+00	0.00E+00	0.00E+00	0.00E+00	0.00E+00	0.00E+00	0.00E+00	0.00E+00	0.00E+00
3311	ALL	750188.42	4044860.7	1.37E-09	25YrCancer	1.37E-09	0.00E+00	0.00E+00	0.00E+00	0.00E+00	0.00E+00	0.00E+00	0.00E+00	0.00E+00	0.00E+00	0.00E+00	0.00E+00
3312	ALL	752688.42	4044860.7	1.18E-09	25YrCancer	1.18E-09	0.00E+00	0.00E+00	0.00E+00	0.00E+00	0.00E+00	0.00E+00	0.00E+00	0.00E+00	0.00E+00	0.00E+00	0.00E+00
3313	ALL	752788.42	4044860.7	1.18E-09	25YrCancer	1.18E-09	0.00E+00	0.00E+00	0.00E+00	0.00E+00	0.00E+00	0.00E+00	0.00E+00	0.00E+00	0.00E+00	0.00E+00	0.00E+00

3314	ALL	752888.42	4044860.7	1.18E-09	25YrCancer	1.18E-09	0.00E+00	0.00E+00	0.00E+00	0.00E+00	0.00E+00	0.00E+00	0.00E+00	0.00E+00	0.00E+00	0.00E+00	0.00E+00
3315	ALL	752988.42	4044860.7	1.18E-09	25YrCancer	1.18E-09	0.00E+00	0.00E+00	0.00E+00	0.00E+00	0.00E+00	0.00E+00	0.00E+00	0.00E+00	0.00E+00	0.00E+00	0.00E+00
3316	ALL	748088.42	4044960.7	1.65E-09	25YrCancer	1.65E-09	0.00E+00	0.00E+00	0.00E+00	0.00E+00	0.00E+00	0.00E+00	0.00E+00	0.00E+00	0.00E+00	0.00E+00	0.00E+00
3317	ALL	748188.42	4044960.7	1.62E-09	25YrCancer	1.62E-09	0.00E+00	0.00E+00	0.00E+00	0.00E+00	0.00E+00	0.00E+00	0.00E+00	0.00E+00	0.00E+00	0.00E+00	0.00E+00
3318	ALL	748288.42	4044960.7	1.60E-09	25YrCancer	1.60E-09	0.00E+00	0.00E+00	0.00E+00	0.00E+00	0.00E+00	0.00E+00	0.00E+00	0.00E+00	0.00E+00	0.00E+00	0.00E+00
3319	ALL	748388.42	4044960.7	1.57E-09	25YrCancer	1.57E-09	0.00E+00	0.00E+00	0.00E+00	0.00E+00	0.00E+00	0.00E+00	0.00E+00	0.00E+00	0.00E+00	0.00E+00	0.00E+00
3320	ALL	750188.42	4044960.7	1.36E-09	25YrCancer	1.36E-09	0.00E+00	0.00E+00	0.00E+00	0.00E+00	0.00E+00	0.00E+00	0.00E+00	0.00E+00	0.00E+00	0.00E+00	0.00E+00
3321	ALL	750288.42	4044960.7	1.34E-09	25YrCancer	1.34E-09	0.00E+00	0.00E+00	0.00E+00	0.00E+00	0.00E+00	0.00E+00	0.00E+00	0.00E+00	0.00E+00	0.00E+00	0.00E+00
3322	ALL	750388.42	4044960.7	1.33E-09	25YrCancer	1.33E-09	0.00E+00	0.00E+00	0.00E+00	0.00E+00	0.00E+00	0.00E+00	0.00E+00	0.00E+00	0.00E+00	0.00E+00	0.00E+00
3323	ALL	750488.42	4044960.7	1.31E-09	25YrCancer	1.31E-09	0.00E+00	0.00E+00	0.00E+00	0.00E+00	0.00E+00	0.00E+00	0.00E+00	0.00E+00	0.00E+00	0.00E+00	0.00E+00
3324	ALL	750588.42	4044960.7	1.29E-09	25YrCancer	1.29E-09	0.00E+00	0.00E+00	0.00E+00	0.00E+00	0.00E+00	0.00E+00	0.00E+00	0.00E+00	0.00E+00	0.00E+00	0.00E+00
3325	ALL	750688.42	4044960.7	1.26E-09	25YrCancer	1.26E-09	0.00E+00	0.00E+00	0.00E+00	0.00E+00	0.00E+00	0.00E+00	0.00E+00	0.00E+00	0.00E+00	0.00E+00	0.00E+00
3326	ALL	750788.42	4044960.7	1.24E-09	25YrCancer	1.24E-09	0.00E+00	0.00E+00	0.00E+00	0.00E+00	0.00E+00	0.00E+00	0.00E+00	0.00E+00	0.00E+00	0.00E+00	0.00E+00
3327	ALL	750888.42	4044960.7	1.23E-09	25YrCancer	1.23E-09	0.00E+00	0.00E+00	0.00E+00	0.00E+00	0.00E+00	0.00E+00	0.00E+00	0.00E+00	0.00E+00	0.00E+00	0.00E+00
3328	ALL	750988.42	4044960.7	1.21E-09	25YrCancer	1.21E-09	0.00E+00	0.00E+00	0.00E+00	0.00E+00	0.00E+00	0.00E+00	0.00E+00	0.00E+00	0.00E+00	0.00E+00	0.00E+00
3329	ALL	751088.42	4044960.7	1.20E-09	25YrCancer	1.20E-09	0.00E+00	0.00E+00	0.00E+00	0.00E+00	0.00E+00	0.00E+00	0.00E+00	0.00E+00	0.00E+00	0.00E+00	0.00E+00
3330	ALL	751188.42	4044960.7	1.19E-09	25YrCancer	1.19E-09	0.00E+00	0.00E+00	0.00E+00	0.00E+00	0.00E+00	0.00E+00	0.00E+00	0.00E+00	0.00E+00	0.00E+00	0.00E+00
3331	ALL	751288.42	4044960.7	1.18E-09	25YrCancer	1.18E-09	0.00E+00	0.00E+00	0.00E+00	0.00E+00	0.00E+00	0.00E+00	0.00E+00	0.00E+00	0.00E+00	0.00E+00	0.00E+00
3332	ALL	751388.42	4044960.7	1.18E-09	25YrCancer	1.18E-09	0.00E+00	0.00E+00	0.00E+00	0.00E+00	0.00E+00	0.00E+00	0.00E+00	0.00E+00	0.00E+00	0.00E+00	0.00E+00
3333	ALL	751488.42	4044960.7	1.17E-09	25YrCancer	1.17E-09	0.00E+00	0.00E+00	0.00E+00	0.00E+00	0.00E+00	0.00E+00	0.00E+00	0.00E+00	0.00E+00	0.00E+00	0.00E+00
3334	ALL	751588.42	4044960.7	1.17E-09	25YrCancer	1.17E-09	0.00E+00	0.00E+00	0.00E+00	0.00E+00	0.00E+00	0.00E+00	0.00E+00	0.00E+00	0.00E+00	0.00E+00	0.00E+00
3335	ALL	751688.42	4044960.7	1.17E-09	25YrCancer	1.17E-09	0.00E+00	0.00E+00	0.00E+00	0.00E+00	0.00E+00	0.00E+00	0.00E+00	0.00E+00	0.00E+00	0.00E+00	0.00E+00
3336	ALL	751788.42	4044960.7	1.18E-09	25YrCancer	1.18E-09	0.00E+00	0.00E+00	0.00E+00	0.00E+00	0.00E+00	0.00E+00	0.00E+00	0.00E+00	0.00E+00	0.00E+00	0.00E+00
3337	ALL	751888.42	4044960.7	1.17E-09	25YrCancer	1.17E-09	0.00E+00	0.00E+00	0.00E+00	0.00E+00	0.00E+00	0.00E+00	0.00E+00	0.00E+00	0.00E+00	0.00E+00	0.00E+00
3338	ALL	751988.42	4044960.7	1.17E-09	25YrCancer	1.17E-09	0.00E+00	0.00E+00	0.00E+00	0.00E+00	0.00E+00	0.00E+00	0.00E+00	0.00E+00	0.00E+00	0.00E+00	0.00E+00
3339	ALL	752088.42	4044960.7	1.17E-09	25YrCancer	1.17E-09	0.00E+00	0.00E+00	0.00E+00	0.00E+00	0.00E+00	0.00E+00	0.00E+00	0.00E+00	0.00E+00	0.00E+00	0.00E+00
3340	ALL	752188.42	4044960.7	1.17E-09	25YrCancer	1.17E-09	0.00E+00	0.00E+00	0.00E+00	0.00E+00	0.00E+00	0.00E+00	0.00E+00	0.00E+00	0.00E+00	0.00E+00	0.00E+00
3341	ALL	752288.42	4044960.7	1.17E-09	25YrCancer	1.17E-09	0.00E+00	0.00E+00	0.00E+00	0.00E+00	0.00E+00	0.00E+00	0.00E+00	0.00E+00	0.00E+00	0.00E+00	0.00E+00
3342	ALL	752388.42	4044960.7	1.17E-09	25YrCancer	1.17E-09	0.00E+00	0.00E+00	0.00E+00	0.00E+00	0.00E+00	0.00E+00	0.00E+00	0.00E+00	0.00E+00	0.00E+00	0.00E+00
3343	ALL	752488.42	4044960.7	1.17E-09	25YrCancer	1.17E-09	0.00E+00	0.00E+00	0.00E+00	0.00E+00	0.00E+00	0.00E+00	0.00E+00	0.00E+00	0.00E+00	0.00E+00	0.00E+00
3344	ALL	752588.42	4044960.7	1.17E-09	25YrCancer	1.17E-09	0.00E+00	0.00E+00	0.00E+00	0.00E+00	0.00E+00	0.00E+00	0.00E+00	0.00E+00	0.00E+00	0.00E+00	0.00E+00
3345	ALL	752688.42	4044960.7	1.16E-09	25YrCancer	1.16E-09	0.00E+00	0.00E+00	0.00E+00	0.00E+00	0.00E+00	0.00E+00	0.00E+00	0.00E+00	0.00E+00	0.00E+00	0.00E+00
3346	ALL	752788.42	4044960.7	1.16E-09	25YrCancer	1.16E-09	0.00E+00	0.00E+00	0.00E+00	0.00E+00	0.00E+00	0.00E+00	0.00E+00	0.00E+00	0.00E+00	0.00E+00	0.00E+00
3347	ALL	752888.42	4044960.7	1.16E-09	25YrCancer	1.16E-09	0.00E+00	0.00E+00	0.00E+00	0.00E+00	0.00E+00	0.00E+00	0.00E+00	0.00E+00	0.00E+00	0.00E+00	0.00E+00
3348	ALL	752988.42	4044960.7	1.16E-09	25YrCancer	1.16E-09	0.00E+00	0.00E+00	0.00E+00	0.00E+00	0.00E+00	0.00E+00	0.00E+00	0.00E+00	0.00E+00	0.00E+00	0.00E+00
3349	ALL	748088.42	4045060.7	1.62E-09	25YrCancer	1.62E-09	0.00E+00	0.00E+00	0.00E+00	0.00E+00	0.00E+00	0.00E+00	0.00E+00	0.00E+00	0.00E+00	0.00E+00	0.00E+00
3350	ALL	748188.42	4045060.7	1.59E-09	25YrCancer	1.59E-09	0.00E+00	0.00E+00	0.00E+00	0.00E+00	0.00E+00	0.00E+00	0.00E+00	0.00E+00	0.00E+00	0.00E+00	0.00E+00
3351	ALL	748288.42	4045060.7	1.57E-09	25YrCancer	1.57E-09	0.00E+00	0.00E+00	0.00E+00	0.00E+00	0.00E+00	0.00E+00	0.00E+00	0.00E+00	0.00E+00	0.00E+00	0.00E+00
3352	ALL	748388.42	4045060.7	1.54E-09	25YrCancer	1.54E-09	0.00E+00	0.00E+00	0.00E+00	0.00E+00	0.00E+00	0.00E+00	0.00E+00	0.00E+00	0.00E+00	0.00E+00	0.00E+00
3353	ALL	750188.42	4045060.7	1.34E-09	25YrCancer	1.34E-09	0.00E+00	0.00E+00	0.00E+00	0.00E+00	0.00E+00	0.00E+00	0.00E+00	0.00E+00	0.00E+00	0.00E+00	0.00E+00
3354	ALL	750288.42	4045060.7	1.33E-09	25YrCancer	1.33E-09	0.00E+00	0.00E+00	0.00E+00	0.00E+00	0.00E+00	0.00E+00	0.00E+00	0.00E+00	0.00E+00	0.00E+00	0.00E+00
3355	ALL	750388.42	4045060.7	1.32E-09	25YrCancer	1.32E-09	0.00E+00	0.00E+00	0.00E+00	0.00E+00	0.00E+00	0.00E+00	0.00E+00	0.00E+00	0.00E+00	0.00E+00	0.00E+00
3356	ALL	750488.42	4045060.7	1.30E-09	25YrCancer	1.30E-09	0.00E+00	0.00E+00	0.00E+00	0.00E+00	0.00E+00	0.00E+00	0.00E+00	0.00E+00	0.00E+00	0.00E+00	0.00E+00
3357	ALL	750588.42	4045060.7	1.28E-09	25YrCancer	1.28E-09	0.00E+00	0.00E+00	0.00E+00	0.00E+00	0.00E+00	0.00E+00	0.00E+00	0.00E+00	0.00E+00	0.00E+00	0.00E+00
3358	ALL	750688.42	4045060.7	1.26E-09	25YrCancer	1.26E-09	0.00E+00	0.00E+00	0.00E+00	0.00E+00	0.00E+00	0.00E+00	0.00E+00	0.00E+00	0.00E+00	0.00E+00	0.00E+00
3359	ALL	750788.42	4045060.7	1.24E-09	25YrCancer	1.24E-09	0.00E+00	0.00E+00	0.00E+00	0.00E+00	0.00E+00	0.00E+00	0.00E+00	0.00E+00	0.00E+00	0.00E+00	0.00E+00
3360	ALL	750888.42	4045060.7	1.22E-09	25YrCancer	1.22E-09	0.00E+00	0.00E+00	0.00E+00	0.00E+00	0.00E+00	0.00E+00	0.00E+00	0.00E+00	0.00E+00	0.00E+00	0.00E+00
3361	ALL	750988.42	4045060.7	1.20E-09	25YrCancer	1.20E-09	0.00E+00	0.00E+00	0.00E+00	0.00E+00	0.00E+00	0.00E+00	0.00E+00	0.00E+00	0.00E+00	0.00E+00	0.00E+00
3362	ALL	751088.42	4045060.7	1.19E-09	25YrCancer	1.19E-09	0.00E+00	0.00E+00	0.00E+00	0.00E+00	0.00E+00	0.00E+00	0.00E+00	0.00E+00	0.00E+00	0.00E+00	0.00E+00
3363	ALL	751188.42	4045060.7	1.18E-09	25YrCancer	1.18E-09	0.00E+00	0.00E+00	0.00E+00	0.00E+00	0.00E+00	0.00E+00	0.00E+00	0.00E+00	0.00E+00	0.00E+00	0.00E+00
3364	ALL	751288.42	4045060.7	1.17E-09	25YrCancer	1.17E-09	0.00E+00	0.00E+00	0.00E+00	0.00E+00	0.00E+00	0.00E+00	0.00E+00	0.00E+00	0.00E+00	0.00E+00	0.00E+00

3365	ALL	751388.42	4045060.7	1.16E-09	25YrCancer	1.16E-09	0.00E+00	0.00E+00	0.00E+00	0.00E+00	0.00E+00	0.00E+00	0.00E+00	0.00E+00	0.00E+00	0.00E+00	0.00E+00
3366	ALL	751488.42	4045060.7	1.16E-09	25YrCancer	1.16E-09	0.00E+00	0.00E+00	0.00E+00	0.00E+00	0.00E+00	0.00E+00	0.00E+00	0.00E+00	0.00E+00	0.00E+00	0.00E+00
3367	ALL	751588.42	4045060.7	1.16E-09	25YrCancer	1.16E-09	0.00E+00	0.00E+00	0.00E+00	0.00E+00	0.00E+00	0.00E+00	0.00E+00	0.00E+00	0.00E+00	0.00E+00	0.00E+00
3368	ALL	751688.42	4045060.7	1.16E-09	25YrCancer	1.16E-09	0.00E+00	0.00E+00	0.00E+00	0.00E+00	0.00E+00	0.00E+00	0.00E+00	0.00E+00	0.00E+00	0.00E+00	0.00E+00
3369	ALL	751788.42	4045060.7	1.16E-09	25YrCancer	1.16E-09	0.00E+00	0.00E+00	0.00E+00	0.00E+00	0.00E+00	0.00E+00	0.00E+00	0.00E+00	0.00E+00	0.00E+00	0.00E+00
3370	ALL	751888.42	4045060.7	1.16E-09	25YrCancer	1.16E-09	0.00E+00	0.00E+00	0.00E+00	0.00E+00	0.00E+00	0.00E+00	0.00E+00	0.00E+00	0.00E+00	0.00E+00	0.00E+00
3371	ALL	751988.42	4045060.7	1.16E-09	25YrCancer	1.16E-09	0.00E+00	0.00E+00	0.00E+00	0.00E+00	0.00E+00	0.00E+00	0.00E+00	0.00E+00	0.00E+00	0.00E+00	0.00E+00
3372	ALL	752088.42	4045060.7	1.16E-09	25YrCancer	1.16E-09	0.00E+00	0.00E+00	0.00E+00	0.00E+00	0.00E+00	0.00E+00	0.00E+00	0.00E+00	0.00E+00	0.00E+00	0.00E+00
3373	ALL	752188.42	4045060.7	1.16E-09	25YrCancer	1.16E-09	0.00E+00	0.00E+00	0.00E+00	0.00E+00	0.00E+00	0.00E+00	0.00E+00	0.00E+00	0.00E+00	0.00E+00	0.00E+00
3374	ALL	752288.42	4045060.7	1.16E-09	25YrCancer	1.16E-09	0.00E+00	0.00E+00	0.00E+00	0.00E+00	0.00E+00	0.00E+00	0.00E+00	0.00E+00	0.00E+00	0.00E+00	0.00E+00
3375	ALL	752388.42	4045060.7	1.16E-09	25YrCancer	1.16E-09	0.00E+00	0.00E+00	0.00E+00	0.00E+00	0.00E+00	0.00E+00	0.00E+00	0.00E+00	0.00E+00	0.00E+00	0.00E+00
3376	ALL	752488.42	4045060.7	1.15E-09	25YrCancer	1.15E-09	0.00E+00	0.00E+00	0.00E+00	0.00E+00	0.00E+00	0.00E+00	0.00E+00	0.00E+00	0.00E+00	0.00E+00	0.00E+00
3377	ALL	752588.42	4045060.7	1.15E-09	25YrCancer	1.15E-09	0.00E+00	0.00E+00	0.00E+00	0.00E+00	0.00E+00	0.00E+00	0.00E+00	0.00E+00	0.00E+00	0.00E+00	0.00E+00
3378	ALL	752688.42	4045060.7	1.15E-09	25YrCancer	1.15E-09	0.00E+00	0.00E+00	0.00E+00	0.00E+00	0.00E+00	0.00E+00	0.00E+00	0.00E+00	0.00E+00	0.00E+00	0.00E+00
3379	ALL	752788.42	4045060.7	1.15E-09	25YrCancer	1.15E-09	0.00E+00	0.00E+00	0.00E+00	0.00E+00	0.00E+00	0.00E+00	0.00E+00	0.00E+00	0.00E+00	0.00E+00	0.00E+00
3380	ALL	752888.42	4045060.7	1.14E-09	25YrCancer	1.14E-09	0.00E+00	0.00E+00	0.00E+00	0.00E+00	0.00E+00	0.00E+00	0.00E+00	0.00E+00	0.00E+00	0.00E+00	0.00E+00
3381	ALL	752988.42	4045060.7	1.14E-09	25YrCancer	1.14E-09	0.00E+00	0.00E+00	0.00E+00	0.00E+00	0.00E+00	0.00E+00	0.00E+00	0.00E+00	0.00E+00	0.00E+00	0.00E+00
3382	ALL	748088.42	4045160.7	1.59E-09	25YrCancer	1.59E-09	0.00E+00	0.00E+00	0.00E+00	0.00E+00	0.00E+00	0.00E+00	0.00E+00	0.00E+00	0.00E+00	0.00E+00	0.00E+00
3383	ALL	748188.42	4045160.7	1.57E-09	25YrCancer	1.57E-09	0.00E+00	0.00E+00	0.00E+00	0.00E+00	0.00E+00	0.00E+00	0.00E+00	0.00E+00	0.00E+00	0.00E+00	0.00E+00
3384	ALL	748288.42	4045160.7	1.54E-09	25YrCancer	1.54E-09	0.00E+00	0.00E+00	0.00E+00	0.00E+00	0.00E+00	0.00E+00	0.00E+00	0.00E+00	0.00E+00	0.00E+00	0.00E+00
3385	ALL	748388.42	4045160.7	1.52E-09	25YrCancer	1.52E-09	0.00E+00	0.00E+00	0.00E+00	0.00E+00	0.00E+00	0.00E+00	0.00E+00	0.00E+00	0.00E+00	0.00E+00	0.00E+00
3386	ALL	750188.42	4045160.7	1.32E-09	25YrCancer	1.32E-09	0.00E+00	0.00E+00	0.00E+00	0.00E+00	0.00E+00	0.00E+00	0.00E+00	0.00E+00	0.00E+00	0.00E+00	0.00E+00
3387	ALL	750288.42	4045160.7	1.32E-09	25YrCancer	1.32E-09	0.00E+00	0.00E+00	0.00E+00	0.00E+00	0.00E+00	0.00E+00	0.00E+00	0.00E+00	0.00E+00	0.00E+00	0.00E+00
3388	ALL	750388.42	4045160.7	1.30E-09	25YrCancer	1.30E-09	0.00E+00	0.00E+00	0.00E+00	0.00E+00	0.00E+00	0.00E+00	0.00E+00	0.00E+00	0.00E+00	0.00E+00	0.00E+00
3389	ALL	750488.42	4045160.7	1.29E-09	25YrCancer	1.29E-09	0.00E+00	0.00E+00	0.00E+00	0.00E+00	0.00E+00	0.00E+00	0.00E+00	0.00E+00	0.00E+00	0.00E+00	0.00E+00
3390	ALL	750588.42	4045160.7	1.27E-09	25YrCancer	1.27E-09	0.00E+00	0.00E+00	0.00E+00	0.00E+00	0.00E+00	0.00E+00	0.00E+00	0.00E+00	0.00E+00	0.00E+00	0.00E+00
3391	ALL	750688.42	4045160.7	1.25E-09	25YrCancer	1.25E-09	0.00E+00	0.00E+00	0.00E+00	0.00E+00	0.00E+00	0.00E+00	0.00E+00	0.00E+00	0.00E+00	0.00E+00	0.00E+00
3392	ALL	750788.42	4045160.7	1.23E-09	25YrCancer	1.23E-09	0.00E+00	0.00E+00	0.00E+00	0.00E+00	0.00E+00	0.00E+00	0.00E+00	0.00E+00	0.00E+00	0.00E+00	0.00E+00
3393	ALL	750888.42	4045160.7	1.21E-09	25YrCancer	1.21E-09	0.00E+00	0.00E+00	0.00E+00	0.00E+00	0.00E+00	0.00E+00	0.00E+00	0.00E+00	0.00E+00	0.00E+00	0.00E+00
3394	ALL	750988.42	4045160.7	1.19E-09	25YrCancer	1.19E-09	0.00E+00	0.00E+00	0.00E+00	0.00E+00	0.00E+00	0.00E+00	0.00E+00	0.00E+00	0.00E+00	0.00E+00	0.00E+00
3395	ALL	751088.42	4045160.7	1.18E-09	25YrCancer	1.18E-09	0.00E+00	0.00E+00	0.00E+00	0.00E+00	0.00E+00	0.00E+00	0.00E+00	0.00E+00	0.00E+00	0.00E+00	0.00E+00
3396	ALL	751188.42	4045160.7	1.17E-09	25YrCancer	1.17E-09	0.00E+00	0.00E+00	0.00E+00	0.00E+00	0.00E+00	0.00E+00	0.00E+00	0.00E+00	0.00E+00	0.00E+00	0.00E+00
3397	ALL	751288.42	4045160.7	1.16E-09	25YrCancer	1.16E-09	0.00E+00	0.00E+00	0.00E+00	0.00E+00	0.00E+00	0.00E+00	0.00E+00	0.00E+00	0.00E+00	0.00E+00	0.00E+00
3398	ALL	751388.42	4045160.7	1.15E-09	25YrCancer	1.15E-09	0.00E+00	0.00E+00	0.00E+00	0.00E+00	0.00E+00	0.00E+00	0.00E+00	0.00E+00	0.00E+00	0.00E+00	0.00E+00
3399	ALL	751488.42	4045160.7	1.15E-09	25YrCancer	1.15E-09	0.00E+00	0.00E+00	0.00E+00	0.00E+00	0.00E+00	0.00E+00	0.00E+00	0.00E+00	0.00E+00	0.00E+00	0.00E+00
3400	ALL	751588.42	4045160.7	1.14E-09	25YrCancer	1.14E-09	0.00E+00	0.00E+00	0.00E+00	0.00E+00	0.00E+00	0.00E+00	0.00E+00	0.00E+00	0.00E+00	0.00E+00	0.00E+00
3401	ALL	751688.42	4045160.7	1.14E-09	25YrCancer	1.14E-09	0.00E+00	0.00E+00	0.00E+00	0.00E+00	0.00E+00	0.00E+00	0.00E+00	0.00E+00	0.00E+00	0.00E+00	0.00E+00
3402	ALL	751788.42	4045160.7	1.14E-09	25YrCancer	1.14E-09	0.00E+00	0.00E+00	0.00E+00	0.00E+00	0.00E+00	0.00E+00	0.00E+00	0.00E+00	0.00E+00	0.00E+00	0.00E+00
3403	ALL	751888.42	4045160.7	1.14E-09	25YrCancer	1.14E-09	0.00E+00	0.00E+00	0.00E+00	0.00E+00	0.00E+00	0.00E+00	0.00E+00	0.00E+00	0.00E+00	0.00E+00	0.00E+00
3404	ALL	751988.42	4045160.7	1.14E-09	25YrCancer	1.14E-09	0.00E+00	0.00E+00	0.00E+00	0.00E+00	0.00E+00	0.00E+00	0.00E+00	0.00E+00	0.00E+00	0.00E+00	0.00E+00
3405	ALL	752088.42	4045160.7	1.14E-09	25YrCancer	1.14E-09	0.00E+00	0.00E+00	0.00E+00	0.00E+00	0.00E+00	0.00E+00	0.00E+00	0.00E+00	0.00E+00	0.00E+00	0.00E+00
3406	ALL	752188.42	4045160.7	1.14E-09	25YrCancer	1.14E-09	0.00E+00	0.00E+00	0.00E+00	0.00E+00	0.00E+00	0.00E+00	0.00E+00	0.00E+00	0.00E+00	0.00E+00	0.00E+00
3407	ALL	752288.42	4045160.7	1.14E-09	25YrCancer	1.14E-09	0.00E+00	0.00E+00	0.00E+00	0.00E+00	0.00E+00	0.00E+00	0.00E+00	0.00E+00	0.00E+00	0.00E+00	0.00E+00
3408	ALL	752388.42	4045160.7	1.14E-09	25YrCancer	1.14E-09	0.00E+00	0.00E+00	0.00E+00	0.00E+00	0.00E+00	0.00E+00	0.00E+00	0.00E+00	0.00E+00	0.00E+00	0.00E+00
3409	ALL	752488.42	4045160.7	1.14E-09	25YrCancer	1.14E-09	0.00E+00	0.00E+00	0.00E+00	0.00E+00	0.00E+00	0.00E+00	0.00E+00	0.00E+00	0.00E+00	0.00E+00	0.00E+00
3410	ALL	752588.42	4045160.7	1.14E-09	25YrCancer	1.14E-09	0.00E+00	0.00E+00	0.00E+00	0.00E+00	0.00E+00	0.00E+00	0.00E+00	0.00E+00	0.00E+00	0.00E+00	0.00E+00
3411	ALL	752688.42	4045160.7	1.13E-09	25YrCancer	1.13E-09	0.00E+00	0.00E+00	0.00E+00	0.00E+00	0.00E+00	0.00E+00	0.00E+00	0.00E+00	0.00E+00	0.00E+00	0.00E+00
3412	ALL	752788.42	4045160.7	1.13E-09	25YrCancer	1.13E-09	0.00E+00	0.00E+00	0.00E+00	0.00E+00	0.00E+00	0.00E+00	0.00E+00	0.00E+00	0.00E+00	0.00E+00	0.00E+00
3413	ALL	752888.42	4045160.7	1.13E-09	25YrCancer	1.13E-09	0.00E+00	0.00E+00	0.00E+00	0.00E+00	0.00E+00	0.00E+00	0.00E+00	0.00E+00	0.00E+00	0.00E+00	0.00E+00
3414	ALL	752988.42	4045160.7	1.13E-09	25YrCancer	1.13E-09	0.00E+00	0.00E+00	0.00E+00	0.00E+00	0.00E+00	0.00E+00	0.00E+00	0.00E+00	0.00E+00	0.00E+00	0.00E+00
3415	ALL	748088.42	4045260.7	1.57E-09	25YrCancer	1.57E-09	0.00E+00	0.00E+00	0.00E+00	0.00E+00	0.00E+00	0.00E+00	0.00E+00	0.00E+00	0.00E+00	0.00E+00	0.00E+00

3416	ALL	748188.42	4045260.7	1.54E-09	25YrCancer	1.54E-09	0.00E+00	0.00E+00	0.00E+00	0.00E+00	0.00E+00	0.00E+00	0.00E+00	0.00E+00	0.00E+00	0.00E+00	0.00E+00
3417	ALL	748288.42	4045260.7	1.52E-09	25YrCancer	1.52E-09	0.00E+00	0.00E+00	0.00E+00	0.00E+00	0.00E+00	0.00E+00	0.00E+00	0.00E+00	0.00E+00	0.00E+00	0.00E+00
3418	ALL	748388.42	4045260.7	1.50E-09	25YrCancer	1.50E-09	0.00E+00	0.00E+00	0.00E+00	0.00E+00	0.00E+00	0.00E+00	0.00E+00	0.00E+00	0.00E+00	0.00E+00	0.00E+00
3419	ALL	750188.42	4045260.7	1.31E-09	25YrCancer	1.31E-09	0.00E+00	0.00E+00	0.00E+00	0.00E+00	0.00E+00	0.00E+00	0.00E+00	0.00E+00	0.00E+00	0.00E+00	0.00E+00
3420	ALL	750288.42	4045260.7	1.30E-09	25YrCancer	1.30E-09	0.00E+00	0.00E+00	0.00E+00	0.00E+00	0.00E+00	0.00E+00	0.00E+00	0.00E+00	0.00E+00	0.00E+00	0.00E+00
3421	ALL	750388.42	4045260.7	1.29E-09	25YrCancer	1.29E-09	0.00E+00	0.00E+00	0.00E+00	0.00E+00	0.00E+00	0.00E+00	0.00E+00	0.00E+00	0.00E+00	0.00E+00	0.00E+00
3422	ALL	750488.42	4045260.7	1.28E-09	25YrCancer	1.28E-09	0.00E+00	0.00E+00	0.00E+00	0.00E+00	0.00E+00	0.00E+00	0.00E+00	0.00E+00	0.00E+00	0.00E+00	0.00E+00
3423	ALL	750588.42	4045260.7	1.26E-09	25YrCancer	1.26E-09	0.00E+00	0.00E+00	0.00E+00	0.00E+00	0.00E+00	0.00E+00	0.00E+00	0.00E+00	0.00E+00	0.00E+00	0.00E+00
3424	ALL	750688.42	4045260.7	1.24E-09	25YrCancer	1.24E-09	0.00E+00	0.00E+00	0.00E+00	0.00E+00	0.00E+00	0.00E+00	0.00E+00	0.00E+00	0.00E+00	0.00E+00	0.00E+00
3425	ALL	750788.42	4045260.7	1.22E-09	25YrCancer	1.22E-09	0.00E+00	0.00E+00	0.00E+00	0.00E+00	0.00E+00	0.00E+00	0.00E+00	0.00E+00	0.00E+00	0.00E+00	0.00E+00
3426	ALL	750888.42	4045260.7	1.20E-09	25YrCancer	1.20E-09	0.00E+00	0.00E+00	0.00E+00	0.00E+00	0.00E+00	0.00E+00	0.00E+00	0.00E+00	0.00E+00	0.00E+00	0.00E+00
3427	ALL	750988.42	4045260.7	1.19E-09	25YrCancer	1.19E-09	0.00E+00	0.00E+00	0.00E+00	0.00E+00	0.00E+00	0.00E+00	0.00E+00	0.00E+00	0.00E+00	0.00E+00	0.00E+00
3428	ALL	751088.42	4045260.7	1.17E-09	25YrCancer	1.17E-09	0.00E+00	0.00E+00	0.00E+00	0.00E+00	0.00E+00	0.00E+00	0.00E+00	0.00E+00	0.00E+00	0.00E+00	0.00E+00
3429	ALL	751188.42	4045260.7	1.16E-09	25YrCancer	1.16E-09	0.00E+00	0.00E+00	0.00E+00	0.00E+00	0.00E+00	0.00E+00	0.00E+00	0.00E+00	0.00E+00	0.00E+00	0.00E+00
3430	ALL	751288.42	4045260.7	1.15E-09	25YrCancer	1.15E-09	0.00E+00	0.00E+00	0.00E+00	0.00E+00	0.00E+00	0.00E+00	0.00E+00	0.00E+00	0.00E+00	0.00E+00	0.00E+00
3431	ALL	751388.42	4045260.7	1.14E-09	25YrCancer	1.14E-09	0.00E+00	0.00E+00	0.00E+00	0.00E+00	0.00E+00	0.00E+00	0.00E+00	0.00E+00	0.00E+00	0.00E+00	0.00E+00
3432	ALL	751488.42	4045260.7	1.13E-09	25YrCancer	1.13E-09	0.00E+00	0.00E+00	0.00E+00	0.00E+00	0.00E+00	0.00E+00	0.00E+00	0.00E+00	0.00E+00	0.00E+00	0.00E+00
3433	ALL	751588.42	4045260.7	1.13E-09	25YrCancer	1.13E-09	0.00E+00	0.00E+00	0.00E+00	0.00E+00	0.00E+00	0.00E+00	0.00E+00	0.00E+00	0.00E+00	0.00E+00	0.00E+00
3434	ALL	751688.42	4045260.7	1.13E-09	25YrCancer	1.13E-09	0.00E+00	0.00E+00	0.00E+00	0.00E+00	0.00E+00	0.00E+00	0.00E+00	0.00E+00	0.00E+00	0.00E+00	0.00E+00
3435	ALL	751788.42	4045260.7	1.13E-09	25YrCancer	1.13E-09	0.00E+00	0.00E+00	0.00E+00	0.00E+00	0.00E+00	0.00E+00	0.00E+00	0.00E+00	0.00E+00	0.00E+00	0.00E+00
3436	ALL	751888.42	4045260.7	1.13E-09	25YrCancer	1.13E-09	0.00E+00	0.00E+00	0.00E+00	0.00E+00	0.00E+00	0.00E+00	0.00E+00	0.00E+00	0.00E+00	0.00E+00	0.00E+00
3437	ALL	751988.42	4045260.7	1.13E-09	25YrCancer	1.13E-09	0.00E+00	0.00E+00	0.00E+00	0.00E+00	0.00E+00	0.00E+00	0.00E+00	0.00E+00	0.00E+00	0.00E+00	0.00E+00
3438	ALL	752088.42	4045260.7	1.13E-09	25YrCancer	1.13E-09	0.00E+00	0.00E+00	0.00E+00	0.00E+00	0.00E+00	0.00E+00	0.00E+00	0.00E+00	0.00E+00	0.00E+00	0.00E+00
3439	ALL	752188.42	4045260.7	1.13E-09	25YrCancer	1.13E-09	0.00E+00	0.00E+00	0.00E+00	0.00E+00	0.00E+00	0.00E+00	0.00E+00	0.00E+00	0.00E+00	0.00E+00	0.00E+00
3440	ALL	752288.42	4045260.7	1.13E-09	25YrCancer	1.13E-09	0.00E+00	0.00E+00	0.00E+00	0.00E+00	0.00E+00	0.00E+00	0.00E+00	0.00E+00	0.00E+00	0.00E+00	0.00E+00
3441	ALL	752388.42	4045260.7	1.13E-09	25YrCancer	1.13E-09	0.00E+00	0.00E+00	0.00E+00	0.00E+00	0.00E+00	0.00E+00	0.00E+00	0.00E+00	0.00E+00	0.00E+00	0.00E+00
3442	ALL	752488.42	4045260.7	1.13E-09	25YrCancer	1.13E-09	0.00E+00	0.00E+00	0.00E+00	0.00E+00	0.00E+00	0.00E+00	0.00E+00	0.00E+00	0.00E+00	0.00E+00	0.00E+00
3443	ALL	752588.42	4045260.7	1.12E-09	25YrCancer	1.12E-09	0.00E+00	0.00E+00	0.00E+00	0.00E+00	0.00E+00	0.00E+00	0.00E+00	0.00E+00	0.00E+00	0.00E+00	0.00E+00
3444	ALL	752688.42	4045260.7	1.12E-09	25YrCancer	1.12E-09	0.00E+00	0.00E+00	0.00E+00	0.00E+00	0.00E+00	0.00E+00	0.00E+00	0.00E+00	0.00E+00	0.00E+00	0.00E+00
3445	ALL	752788.42	4045260.7	1.12E-09	25YrCancer	1.12E-09	0.00E+00	0.00E+00	0.00E+00	0.00E+00	0.00E+00	0.00E+00	0.00E+00	0.00E+00	0.00E+00	0.00E+00	0.00E+00
3446	ALL	752888.42	4045260.7	1.12E-09	25YrCancer	1.12E-09	0.00E+00	0.00E+00	0.00E+00	0.00E+00	0.00E+00	0.00E+00	0.00E+00	0.00E+00	0.00E+00	0.00E+00	0.00E+00
3447	ALL	752988.42	4045260.7	1.11E-09	25YrCancer	1.11E-09	0.00E+00	0.00E+00	0.00E+00	0.00E+00	0.00E+00	0.00E+00	0.00E+00	0.00E+00	0.00E+00	0.00E+00	0.00E+00
3448	ALL	748088.42	4045360.7	1.54E-09	25YrCancer	1.54E-09	0.00E+00	0.00E+00	0.00E+00	0.00E+00	0.00E+00	0.00E+00	0.00E+00	0.00E+00	0.00E+00	0.00E+00	0.00E+00
3449	ALL	748188.42	4045360.7	1.52E-09	25YrCancer	1.52E-09	0.00E+00	0.00E+00	0.00E+00	0.00E+00	0.00E+00	0.00E+00	0.00E+00	0.00E+00	0.00E+00	0.00E+00	0.00E+00
3450	ALL	748288.42	4045360.7	1.49E-09	25YrCancer	1.49E-09	0.00E+00	0.00E+00	0.00E+00	0.00E+00	0.00E+00	0.00E+00	0.00E+00	0.00E+00	0.00E+00	0.00E+00	0.00E+00
3451	ALL	748388.42	4045360.7	1.47E-09	25YrCancer	1.47E-09	0.00E+00	0.00E+00	0.00E+00	0.00E+00	0.00E+00	0.00E+00	0.00E+00	0.00E+00	0.00E+00	0.00E+00	0.00E+00
3452	ALL	750188.42	4045360.7	1.29E-09	25YrCancer	1.29E-09	0.00E+00	0.00E+00	0.00E+00	0.00E+00	0.00E+00	0.00E+00	0.00E+00	0.00E+00	0.00E+00	0.00E+00	0.00E+00
3453	ALL	750288.42	4045360.7	1.29E-09	25YrCancer	1.29E-09	0.00E+00	0.00E+00	0.00E+00	0.00E+00	0.00E+00	0.00E+00	0.00E+00	0.00E+00	0.00E+00	0.00E+00	0.00E+00
3454	ALL	750388.42	4045360.7	1.28E-09	25YrCancer	1.28E-09	0.00E+00	0.00E+00	0.00E+00	0.00E+00	0.00E+00	0.00E+00	0.00E+00	0.00E+00	0.00E+00	0.00E+00	0.00E+00
3455	ALL	750488.42	4045360.7	1.27E-09	25YrCancer	1.27E-09	0.00E+00	0.00E+00	0.00E+00	0.00E+00	0.00E+00	0.00E+00	0.00E+00	0.00E+00	0.00E+00	0.00E+00	0.00E+00
3456	ALL	748088.42	4045460.7	1.52E-09	25YrCancer	1.52E-09	0.00E+00	0.00E+00	0.00E+00	0.00E+00	0.00E+00	0.00E+00	0.00E+00	0.00E+00	0.00E+00	0.00E+00	0.00E+00
3457	ALL	748188.42	4045460.7	1.49E-09	25YrCancer	1.49E-09	0.00E+00	0.00E+00	0.00E+00	0.00E+00	0.00E+00	0.00E+00	0.00E+00	0.00E+00	0.00E+00	0.00E+00	0.00E+00
3458	ALL	748288.42	4045460.7	1.47E-09	25YrCancer	1.47E-09	0.00E+00	0.00E+00	0.00E+00	0.00E+00	0.00E+00	0.00E+00	0.00E+00	0.00E+00	0.00E+00	0.00E+00	0.00E+00
3459	ALL	748388.42	4045460.7	1.45E-09	25YrCancer	1.45E-09	0.00E+00	0.00E+00	0.00E+00	0.00E+00	0.00E+00	0.00E+00	0.00E+00	0.00E+00	0.00E+00	0.00E+00	0.00E+00
3460	ALL	750188.42	4045460.7	1.27E-09	25YrCancer	1.27E-09	0.00E+00	0.00E+00	0.00E+00	0.00E+00	0.00E+00	0.00E+00	0.00E+00	0.00E+00	0.00E+00	0.00E+00	0.00E+00
3461	ALL	750288.42	4045460.7	1.27E-09	25YrCancer	1.27E-09	0.00E+00	0.00E+00	0.00E+00	0.00E+00	0.00E+00	0.00E+00	0.00E+00	0.00E+00	0.00E+00	0.00E+00	0.00E+00
3462	ALL	750388.42	4045460.7	1.27E-09	25YrCancer	1.27E-09	0.00E+00	0.00E+00	0.00E+00	0.00E+00	0.00E+00	0.00E+00	0.00E+00	0.00E+00	0.00E+00	0.00E+00	0.00E+00
3463	ALL	750488.42	4045460.7	1.26E-09	25YrCancer	1.26E-09	0.00E+00	0.00E+00	0.00E+00	0.00E+00	0.00E+00	0.00E+00	0.00E+00	0.00E+00	0.00E+00	0.00E+00	0.00E+00
3464	ALL	748088.42	4045560.7	1.49E-09	25YrCancer	1.49E-09	0.00E+00	0.00E+00	0.00E+00	0.00E+00	0.00E+00	0.00E+00	0.00E+00	0.00E+00	0.00E+00	0.00E+00	0.00E+00
3465	ALL	748188.42	4045560.7	1.47E-09	25YrCancer	1.47E-09	0.00E+00	0.00E+00	0.00E+00	0.00E+00	0.00E+00	0.00E+00	0.00E+00	0.00E+00	0.00E+00	0.00E+00	0.00E+00
3466	ALL	748288.42	4045560.7	1.45E-09	25YrCancer	1.45E-09	0.00E+00	0.00E+00	0.00E+00	0.00E+00	0.00E+00	0.00E+00	0.00E+00	0.00E+00	0.00E+00	0.00E+00	0.00E+00

3467	ALL	748388.42	4045560.7	1.43E-09	25YrCancer	1.43E-09	0.00E+00	0.00E+00	0.00E+00	0.00E+00	0.00E+00	0.00E+00	0.00E+00	0.00E+00	0.00E+00	0.00E+00	0.00E+00
3468	ALL	750188.42	4045560.7	1.26E-09	25YrCancer	1.26E-09	0.00E+00	0.00E+00	0.00E+00	0.00E+00	0.00E+00	0.00E+00	0.00E+00	0.00E+00	0.00E+00	0.00E+00	0.00E+00
3469	ALL	750288.42	4045560.7	1.26E-09	25YrCancer	1.26E-09	0.00E+00	0.00E+00	0.00E+00	0.00E+00	0.00E+00	0.00E+00	0.00E+00	0.00E+00	0.00E+00	0.00E+00	0.00E+00
3470	ALL	750388.42	4045560.7	1.25E-09	25YrCancer	1.25E-09	0.00E+00	0.00E+00	0.00E+00	0.00E+00	0.00E+00	0.00E+00	0.00E+00	0.00E+00	0.00E+00	0.00E+00	0.00E+00
3471	ALL	750488.42	4045560.7	1.24E-09	25YrCancer	1.24E-09	0.00E+00	0.00E+00	0.00E+00	0.00E+00	0.00E+00	0.00E+00	0.00E+00	0.00E+00	0.00E+00	0.00E+00	0.00E+00
3472	ALL	748088.42	4045660.7	1.47E-09	25YrCancer	1.47E-09	0.00E+00	0.00E+00	0.00E+00	0.00E+00	0.00E+00	0.00E+00	0.00E+00	0.00E+00	0.00E+00	0.00E+00	0.00E+00
3473	ALL	748188.42	4045660.7	1.45E-09	25YrCancer	1.45E-09	0.00E+00	0.00E+00	0.00E+00	0.00E+00	0.00E+00	0.00E+00	0.00E+00	0.00E+00	0.00E+00	0.00E+00	0.00E+00
3474	ALL	748288.42	4045660.7	1.43E-09	25YrCancer	1.43E-09	0.00E+00	0.00E+00	0.00E+00	0.00E+00	0.00E+00	0.00E+00	0.00E+00	0.00E+00	0.00E+00	0.00E+00	0.00E+00
3475	ALL	748388.42	4045660.7	1.40E-09	25YrCancer	1.40E-09	0.00E+00	0.00E+00	0.00E+00	0.00E+00	0.00E+00	0.00E+00	0.00E+00	0.00E+00	0.00E+00	0.00E+00	0.00E+00
3476	ALL	748488.42	4045660.7	1.39E-09	25YrCancer	1.39E-09	0.00E+00	0.00E+00	0.00E+00	0.00E+00	0.00E+00	0.00E+00	0.00E+00	0.00E+00	0.00E+00	0.00E+00	0.00E+00
3477	ALL	748588.42	4045660.7	1.37E-09	25YrCancer	1.37E-09	0.00E+00	0.00E+00	0.00E+00	0.00E+00	0.00E+00	0.00E+00	0.00E+00	0.00E+00	0.00E+00	0.00E+00	0.00E+00
3478	ALL	748688.42	4045660.7	1.35E-09	25YrCancer	1.35E-09	0.00E+00	0.00E+00	0.00E+00	0.00E+00	0.00E+00	0.00E+00	0.00E+00	0.00E+00	0.00E+00	0.00E+00	0.00E+00
3479	ALL	748788.42	4045660.7	1.34E-09	25YrCancer	1.34E-09	0.00E+00	0.00E+00	0.00E+00	0.00E+00	0.00E+00	0.00E+00	0.00E+00	0.00E+00	0.00E+00	0.00E+00	0.00E+00
3480	ALL	748888.42	4045660.7	1.32E-09	25YrCancer	1.32E-09	0.00E+00	0.00E+00	0.00E+00	0.00E+00	0.00E+00	0.00E+00	0.00E+00	0.00E+00	0.00E+00	0.00E+00	0.00E+00
3481	ALL	748988.42	4045660.7	1.31E-09	25YrCancer	1.31E-09	0.00E+00	0.00E+00	0.00E+00	0.00E+00	0.00E+00	0.00E+00	0.00E+00	0.00E+00	0.00E+00	0.00E+00	0.00E+00
3482	ALL	749088.42	4045660.7	1.29E-09	25YrCancer	1.29E-09	0.00E+00	0.00E+00	0.00E+00	0.00E+00	0.00E+00	0.00E+00	0.00E+00	0.00E+00	0.00E+00	0.00E+00	0.00E+00
3483	ALL	749188.42	4045660.7	1.28E-09	25YrCancer	1.28E-09	0.00E+00	0.00E+00	0.00E+00	0.00E+00	0.00E+00	0.00E+00	0.00E+00	0.00E+00	0.00E+00	0.00E+00	0.00E+00
3484	ALL	749288.42	4045660.7	1.27E-09	25YrCancer	1.27E-09	0.00E+00	0.00E+00	0.00E+00	0.00E+00	0.00E+00	0.00E+00	0.00E+00	0.00E+00	0.00E+00	0.00E+00	0.00E+00
3485	ALL	749388.42	4045660.7	1.25E-09	25YrCancer	1.25E-09	0.00E+00	0.00E+00	0.00E+00	0.00E+00	0.00E+00	0.00E+00	0.00E+00	0.00E+00	0.00E+00	0.00E+00	0.00E+00
3486	ALL	749488.42	4045660.7	1.24E-09	25YrCancer	1.24E-09	0.00E+00	0.00E+00	0.00E+00	0.00E+00	0.00E+00	0.00E+00	0.00E+00	0.00E+00	0.00E+00	0.00E+00	0.00E+00
3487	ALL	749588.42	4045660.7	1.23E-09	25YrCancer	1.23E-09	0.00E+00	0.00E+00	0.00E+00	0.00E+00	0.00E+00	0.00E+00	0.00E+00	0.00E+00	0.00E+00	0.00E+00	0.00E+00
3488	ALL	749688.42	4045660.7	1.23E-09	25YrCancer	1.23E-09	0.00E+00	0.00E+00	0.00E+00	0.00E+00	0.00E+00	0.00E+00	0.00E+00	0.00E+00	0.00E+00	0.00E+00	0.00E+00
3489	ALL	749788.42	4045660.7	1.23E-09	25YrCancer	1.23E-09	0.00E+00	0.00E+00	0.00E+00	0.00E+00	0.00E+00	0.00E+00	0.00E+00	0.00E+00	0.00E+00	0.00E+00	0.00E+00
3490	ALL	749888.42	4045660.7	1.23E-09	25YrCancer	1.23E-09	0.00E+00	0.00E+00	0.00E+00	0.00E+00	0.00E+00	0.00E+00	0.00E+00	0.00E+00	0.00E+00	0.00E+00	0.00E+00
3491	ALL	749988.42	4045660.7	1.23E-09	25YrCancer	1.23E-09	0.00E+00	0.00E+00	0.00E+00	0.00E+00	0.00E+00	0.00E+00	0.00E+00	0.00E+00	0.00E+00	0.00E+00	0.00E+00
3492	ALL	750088.42	4045660.7	1.24E-09	25YrCancer	1.24E-09	0.00E+00	0.00E+00	0.00E+00	0.00E+00	0.00E+00	0.00E+00	0.00E+00	0.00E+00	0.00E+00	0.00E+00	0.00E+00
3493	ALL	750188.42	4045660.7	1.24E-09	25YrCancer	1.24E-09	0.00E+00	0.00E+00	0.00E+00	0.00E+00	0.00E+00	0.00E+00	0.00E+00	0.00E+00	0.00E+00	0.00E+00	0.00E+00
3494	ALL	750288.42	4045660.7	1.24E-09	25YrCancer	1.24E-09	0.00E+00	0.00E+00	0.00E+00	0.00E+00	0.00E+00	0.00E+00	0.00E+00	0.00E+00	0.00E+00	0.00E+00	0.00E+00
3495	ALL	750388.42	4045660.7	1.24E-09	25YrCancer	1.24E-09	0.00E+00	0.00E+00	0.00E+00	0.00E+00	0.00E+00	0.00E+00	0.00E+00	0.00E+00	0.00E+00	0.00E+00	0.00E+00
3496	ALL	750488.42	4045660.7	1.23E-09	25YrCancer	1.23E-09	0.00E+00	0.00E+00	0.00E+00	0.00E+00	0.00E+00	0.00E+00	0.00E+00	0.00E+00	0.00E+00	0.00E+00	0.00E+00
3497	ALL	748088.42	4045760.7	1.44E-09	25YrCancer	1.44E-09	0.00E+00	0.00E+00	0.00E+00	0.00E+00	0.00E+00	0.00E+00	0.00E+00	0.00E+00	0.00E+00	0.00E+00	0.00E+00
3498	ALL	748188.42	4045760.7	1.42E-09	25YrCancer	1.42E-09	0.00E+00	0.00E+00	0.00E+00	0.00E+00	0.00E+00	0.00E+00	0.00E+00	0.00E+00	0.00E+00	0.00E+00	0.00E+00
3499	ALL	748288.42	4045760.7	1.40E-09	25YrCancer	1.40E-09	0.00E+00	0.00E+00	0.00E+00	0.00E+00	0.00E+00	0.00E+00	0.00E+00	0.00E+00	0.00E+00	0.00E+00	0.00E+00
3500	ALL	748388.42	4045760.7	1.38E-09	25YrCancer	1.38E-09	0.00E+00	0.00E+00	0.00E+00	0.00E+00	0.00E+00	0.00E+00	0.00E+00	0.00E+00	0.00E+00	0.00E+00	0.00E+00
3501	ALL	748488.42	4045760.7	1.37E-09	25YrCancer	1.37E-09	0.00E+00	0.00E+00	0.00E+00	0.00E+00	0.00E+00	0.00E+00	0.00E+00	0.00E+00	0.00E+00	0.00E+00	0.00E+00
3502	ALL	748588.42	4045760.7	1.35E-09	25YrCancer	1.35E-09	0.00E+00	0.00E+00	0.00E+00	0.00E+00	0.00E+00	0.00E+00	0.00E+00	0.00E+00	0.00E+00	0.00E+00	0.00E+00
3503	ALL	748688.42	4045760.7	1.33E-09	25YrCancer	1.33E-09	0.00E+00	0.00E+00	0.00E+00	0.00E+00	0.00E+00	0.00E+00	0.00E+00	0.00E+00	0.00E+00	0.00E+00	0.00E+00
3504	ALL	748788.42	4045760.7	1.32E-09	25YrCancer	1.32E-09	0.00E+00	0.00E+00	0.00E+00	0.00E+00	0.00E+00	0.00E+00	0.00E+00	0.00E+00	0.00E+00	0.00E+00	0.00E+00
3505	ALL	748888.42	4045760.7	1.30E-09	25YrCancer	1.30E-09	0.00E+00	0.00E+00	0.00E+00	0.00E+00	0.00E+00	0.00E+00	0.00E+00	0.00E+00	0.00E+00	0.00E+00	0.00E+00
3506	ALL	748988.42	4045760.7	1.29E-09	25YrCancer	1.29E-09	0.00E+00	0.00E+00	0.00E+00	0.00E+00	0.00E+00	0.00E+00	0.00E+00	0.00E+00	0.00E+00	0.00E+00	0.00E+00
3507	ALL	749088.42	4045760.7	1.28E-09	25YrCancer	1.28E-09	0.00E+00	0.00E+00	0.00E+00	0.00E+00	0.00E+00	0.00E+00	0.00E+00	0.00E+00	0.00E+00	0.00E+00	0.00E+00
3508	ALL	749188.42	4045760.7	1.26E-09	25YrCancer	1.26E-09	0.00E+00	0.00E+00	0.00E+00	0.00E+00	0.00E+00	0.00E+00	0.00E+00	0.00E+00	0.00E+00	0.00E+00	0.00E+00
3509	ALL	749288.42	4045760.7	1.25E-09	25YrCancer	1.25E-09	0.00E+00	0.00E+00	0.00E+00	0.00E+00	0.00E+00	0.00E+00	0.00E+00	0.00E+00	0.00E+00	0.00E+00	0.00E+00
3510	ALL	749388.42	4045760.7	1.24E-09	25YrCancer	1.24E-09	0.00E+00	0.00E+00	0.00E+00	0.00E+00	0.00E+00	0.00E+00	0.00E+00	0.00E+00	0.00E+00	0.00E+00	0.00E+00
3511	ALL	749488.42	4045760.7	1.23E-09	25YrCancer	1.23E-09	0.00E+00	0.00E+00	0.00E+00	0.00E+00	0.00E+00	0.00E+00	0.00E+00	0.00E+00	0.00E+00	0.00E+00	0.00E+00
3512	ALL	749588.42	4045760.7	1.22E-09	25YrCancer	1.22E-09	0.00E+00	0.00E+00	0.00E+00	0.00E+00	0.00E+00	0.00E+00	0.00E+00	0.00E+00	0.00E+00	0.00E+00	0.00E+00
3513	ALL	749688.42	4045760.7	1.21E-09	25YrCancer	1.21E-09	0.00E+00	0.00E+00	0.00E+00	0.00E+00	0.00E+00	0.00E+00	0.00E+00	0.00E+00	0.00E+00	0.00E+00	0.00E+00
3514	ALL	749788.42	4045760.7	1.21E-09	25YrCancer	1.21E-09	0.00E+00	0.00E+00	0.00E+00	0.00E+00	0.00E+00	0.00E+00	0.00E+00	0.00E+00	0.00E+00	0.00E+00	0.00E+00
3515	ALL	749888.42	4045760.7	1.21E-09	25YrCancer	1.21E-09	0.00E+00	0.00E+00	0.00E+00	0.00E+00	0.00E+00	0.00E+00	0.00E+00	0.00E+00	0.00E+00	0.00E+00	0.00E+00
3516	ALL	749988.42	4045760.7	1.22E-09	25YrCancer	1.22E-09	0.00E+00	0.00E+00	0.00E+00	0.00E+00	0.00E+00	0.00E+00	0.00E+00	0.00E+00	0.00E+00	0.00E+00	0.00E+00
3517	ALL	750088.42	4045760.7	1.22E-09	25YrCancer	1.22E-09	0.00E+00	0.00E+00	0.00E+00	0.00E+00	0.00E+00	0.00E+00	0.00E+00	0.00E+00	0.00E+00	0.00E+00	0.00E+00

3518	ALL	750188.42	4045760.7	1.22E-09	25YrCancer	1.22E-09	0.00E+00	0.00E+00	0.00E+00	0.00E+00	0.00E+00	0.00E+00	0.00E+00	0.00E+00	0.00E+00	0.00E+00	0.00E+00
3519	ALL	750288.42	4045760.7	1.23E-09	25YrCancer	1.23E-09	0.00E+00	0.00E+00	0.00E+00	0.00E+00	0.00E+00	0.00E+00	0.00E+00	0.00E+00	0.00E+00	0.00E+00	0.00E+00
3520	ALL	750388.42	4045760.7	1.22E-09	25YrCancer	1.22E-09	0.00E+00	0.00E+00	0.00E+00	0.00E+00	0.00E+00	0.00E+00	0.00E+00	0.00E+00	0.00E+00	0.00E+00	0.00E+00
3521	ALL	750488.42	4045760.7	1.22E-09	25YrCancer	1.22E-09	0.00E+00	0.00E+00	0.00E+00	0.00E+00	0.00E+00	0.00E+00	0.00E+00	0.00E+00	0.00E+00	0.00E+00	0.00E+00
3522	ALL	748088.42	4045860.7	1.42E-09	25YrCancer	1.42E-09	0.00E+00	0.00E+00	0.00E+00	0.00E+00	0.00E+00	0.00E+00	0.00E+00	0.00E+00	0.00E+00	0.00E+00	0.00E+00
3523	ALL	748188.42	4045860.7	1.40E-09	25YrCancer	1.40E-09	0.00E+00	0.00E+00	0.00E+00	0.00E+00	0.00E+00	0.00E+00	0.00E+00	0.00E+00	0.00E+00	0.00E+00	0.00E+00
3524	ALL	748288.42	4045860.7	1.38E-09	25YrCancer	1.38E-09	0.00E+00	0.00E+00	0.00E+00	0.00E+00	0.00E+00	0.00E+00	0.00E+00	0.00E+00	0.00E+00	0.00E+00	0.00E+00
3525	ALL	748388.42	4045860.7	1.36E-09	25YrCancer	1.36E-09	0.00E+00	0.00E+00	0.00E+00	0.00E+00	0.00E+00	0.00E+00	0.00E+00	0.00E+00	0.00E+00	0.00E+00	0.00E+00
3526	ALL	748488.42	4045860.7	1.35E-09	25YrCancer	1.35E-09	0.00E+00	0.00E+00	0.00E+00	0.00E+00	0.00E+00	0.00E+00	0.00E+00	0.00E+00	0.00E+00	0.00E+00	0.00E+00
3527	ALL	748588.42	4045860.7	1.33E-09	25YrCancer	1.33E-09	0.00E+00	0.00E+00	0.00E+00	0.00E+00	0.00E+00	0.00E+00	0.00E+00	0.00E+00	0.00E+00	0.00E+00	0.00E+00
3528	ALL	748688.42	4045860.7	1.31E-09	25YrCancer	1.31E-09	0.00E+00	0.00E+00	0.00E+00	0.00E+00	0.00E+00	0.00E+00	0.00E+00	0.00E+00	0.00E+00	0.00E+00	0.00E+00
3529	ALL	748788.42	4045860.7	1.30E-09	25YrCancer	1.30E-09	0.00E+00	0.00E+00	0.00E+00	0.00E+00	0.00E+00	0.00E+00	0.00E+00	0.00E+00	0.00E+00	0.00E+00	0.00E+00
3530	ALL	748888.42	4045860.7	1.29E-09	25YrCancer	1.29E-09	0.00E+00	0.00E+00	0.00E+00	0.00E+00	0.00E+00	0.00E+00	0.00E+00	0.00E+00	0.00E+00	0.00E+00	0.00E+00
3531	ALL	748988.42	4045860.7	1.27E-09	25YrCancer	1.27E-09	0.00E+00	0.00E+00	0.00E+00	0.00E+00	0.00E+00	0.00E+00	0.00E+00	0.00E+00	0.00E+00	0.00E+00	0.00E+00
3532	ALL	749088.42	4045860.7	1.26E-09	25YrCancer	1.26E-09	0.00E+00	0.00E+00	0.00E+00	0.00E+00	0.00E+00	0.00E+00	0.00E+00	0.00E+00	0.00E+00	0.00E+00	0.00E+00
3533	ALL	749188.42	4045860.7	1.25E-09	25YrCancer	1.25E-09	0.00E+00	0.00E+00	0.00E+00	0.00E+00	0.00E+00	0.00E+00	0.00E+00	0.00E+00	0.00E+00	0.00E+00	0.00E+00
3534	ALL	749288.42	4045860.7	1.24E-09	25YrCancer	1.24E-09	0.00E+00	0.00E+00	0.00E+00	0.00E+00	0.00E+00	0.00E+00	0.00E+00	0.00E+00	0.00E+00	0.00E+00	0.00E+00
3535	ALL	749388.42	4045860.7	1.22E-09	25YrCancer	1.22E-09	0.00E+00	0.00E+00	0.00E+00	0.00E+00	0.00E+00	0.00E+00	0.00E+00	0.00E+00	0.00E+00	0.00E+00	0.00E+00
3536	ALL	749488.42	4045860.7	1.21E-09	25YrCancer	1.21E-09	0.00E+00	0.00E+00	0.00E+00	0.00E+00	0.00E+00	0.00E+00	0.00E+00	0.00E+00	0.00E+00	0.00E+00	0.00E+00
3537	ALL	749588.42	4045860.7	1.20E-09	25YrCancer	1.20E-09	0.00E+00	0.00E+00	0.00E+00	0.00E+00	0.00E+00	0.00E+00	0.00E+00	0.00E+00	0.00E+00	0.00E+00	0.00E+00
3538	ALL	749688.42	4045860.7	1.20E-09	25YrCancer	1.20E-09	0.00E+00	0.00E+00	0.00E+00	0.00E+00	0.00E+00	0.00E+00	0.00E+00	0.00E+00	0.00E+00	0.00E+00	0.00E+00
3539	ALL	749788.42	4045860.7	1.19E-09	25YrCancer	1.19E-09	0.00E+00	0.00E+00	0.00E+00	0.00E+00	0.00E+00	0.00E+00	0.00E+00	0.00E+00	0.00E+00	0.00E+00	0.00E+00
3540	ALL	749888.42	4045860.7	1.20E-09	25YrCancer	1.20E-09	0.00E+00	0.00E+00	0.00E+00	0.00E+00	0.00E+00	0.00E+00	0.00E+00	0.00E+00	0.00E+00	0.00E+00	0.00E+00
3541	ALL	749988.42	4045860.7	1.20E-09	25YrCancer	1.20E-09	0.00E+00	0.00E+00	0.00E+00	0.00E+00	0.00E+00	0.00E+00	0.00E+00	0.00E+00	0.00E+00	0.00E+00	0.00E+00
3542	ALL	750088.42	4045860.7	1.20E-09	25YrCancer	1.20E-09	0.00E+00	0.00E+00	0.00E+00	0.00E+00	0.00E+00	0.00E+00	0.00E+00	0.00E+00	0.00E+00	0.00E+00	0.00E+00
3543	ALL	750188.42	4045860.7	1.21E-09	25YrCancer	1.21E-09	0.00E+00	0.00E+00	0.00E+00	0.00E+00	0.00E+00	0.00E+00	0.00E+00	0.00E+00	0.00E+00	0.00E+00	0.00E+00
3544	ALL	750288.42	4045860.7	1.21E-09	25YrCancer	1.21E-09	0.00E+00	0.00E+00	0.00E+00	0.00E+00	0.00E+00	0.00E+00	0.00E+00	0.00E+00	0.00E+00	0.00E+00	0.00E+00
3545	ALL	750388.42	4045860.7	1.21E-09	25YrCancer	1.21E-09	0.00E+00	0.00E+00	0.00E+00	0.00E+00	0.00E+00	0.00E+00	0.00E+00	0.00E+00	0.00E+00	0.00E+00	0.00E+00
3546	ALL	750488.42	4045860.7	1.20E-09	25YrCancer	1.20E-09	0.00E+00	0.00E+00	0.00E+00	0.00E+00	0.00E+00	0.00E+00	0.00E+00	0.00E+00	0.00E+00	0.00E+00	0.00E+00
3547	ALL	745916	4035023	4.38E-09	25YrCancer	4.38E-09	0.00E+00	0.00E+00	0.00E+00	0.00E+00	0.00E+00	0.00E+00	0.00E+00	0.00E+00	0.00E+00	0.00E+00	0.00E+00
3548	ALL	745966	4035023	4.46E-09	25YrCancer	4.46E-09	0.00E+00	0.00E+00	0.00E+00	0.00E+00	0.00E+00	0.00E+00	0.00E+00	0.00E+00	0.00E+00	0.00E+00	0.00E+00
3549	ALL	746016	4035023	4.53E-09	25YrCancer	4.53E-09	0.00E+00	0.00E+00	0.00E+00	0.00E+00	0.00E+00	0.00E+00	0.00E+00	0.00E+00	0.00E+00	0.00E+00	0.00E+00
3550	ALL	746066	4035023	4.61E-09	25YrCancer	4.61E-09	0.00E+00	0.00E+00	0.00E+00	0.00E+00	0.00E+00	0.00E+00	0.00E+00	0.00E+00	0.00E+00	0.00E+00	0.00E+00
3551	ALL	746116	4035023	4.70E-09	25YrCancer	4.70E-09	0.00E+00	0.00E+00	0.00E+00	0.00E+00	0.00E+00	0.00E+00	0.00E+00	0.00E+00	0.00E+00	0.00E+00	0.00E+00
3552	ALL	746166	4035023	4.78E-09	25YrCancer	4.78E-09	0.00E+00	0.00E+00	0.00E+00	0.00E+00	0.00E+00	0.00E+00	0.00E+00	0.00E+00	0.00E+00	0.00E+00	0.00E+00
3553	ALL	746216	4035023	4.87E-09	25YrCancer	4.87E-09	0.00E+00	0.00E+00	0.00E+00	0.00E+00	0.00E+00	0.00E+00	0.00E+00	0.00E+00	0.00E+00	0.00E+00	0.00E+00
3554	ALL	746266	4035023	4.97E-09	25YrCancer	4.97E-09	0.00E+00	0.00E+00	0.00E+00	0.00E+00	0.00E+00	0.00E+00	0.00E+00	0.00E+00	0.00E+00	0.00E+00	0.00E+00
3555	ALL	746316	4035023	5.07E-09	25YrCancer	5.07E-09	0.00E+00	0.00E+00	0.00E+00	0.00E+00	0.00E+00	0.00E+00	0.00E+00	0.00E+00	0.00E+00	0.00E+00	0.00E+00
3556	ALL	746366	4035023	5.17E-09	25YrCancer	5.17E-09	0.00E+00	0.00E+00	0.00E+00	0.00E+00	0.00E+00	0.00E+00	0.00E+00	0.00E+00	0.00E+00	0.00E+00	0.00E+00
3557	ALL	745916	4035073	4.41E-09	25YrCancer	4.41E-09	0.00E+00	0.00E+00	0.00E+00	0.00E+00	0.00E+00	0.00E+00	0.00E+00	0.00E+00	0.00E+00	0.00E+00	0.00E+00
3558	ALL	745966	4035073	4.47E-09	25YrCancer	4.47E-09	0.00E+00	0.00E+00	0.00E+00	0.00E+00	0.00E+00	0.00E+00	0.00E+00	0.00E+00	0.00E+00	0.00E+00	0.00E+00
3559	ALL	746016	4035073	4.57E-09	25YrCancer	4.57E-09	0.00E+00	0.00E+00	0.00E+00	0.00E+00	0.00E+00	0.00E+00	0.00E+00	0.00E+00	0.00E+00	0.00E+00	0.00E+00
3560	ALL	746066	4035073	4.66E-09	25YrCancer	4.66E-09	0.00E+00	0.00E+00	0.00E+00	0.00E+00	0.00E+00	0.00E+00	0.00E+00	0.00E+00	0.00E+00	0.00E+00	0.00E+00
3561	ALL	746116	4035073	4.74E-09	25YrCancer	4.74E-09	0.00E+00	0.00E+00	0.00E+00	0.00E+00	0.00E+00	0.00E+00	0.00E+00	0.00E+00	0.00E+00	0.00E+00	0.00E+00
3562	ALL	746166	4035073	4.88E-09	25YrCancer	4.88E-09	0.00E+00	0.00E+00	0.00E+00	0.00E+00	0.00E+00	0.00E+00	0.00E+00	0.00E+00	0.00E+00	0.00E+00	0.00E+00
3563	ALL	746216	4035073	4.99E-09	25YrCancer	4.99E-09	0.00E+00	0.00E+00	0.00E+00	0.00E+00	0.00E+00	0.00E+00	0.00E+00	0.00E+00	0.00E+00	0.00E+00	0.00E+00
3564	ALL	746266	4035073	5.09E-09	25YrCancer	5.09E-09	0.00E+00	0.00E+00	0.00E+00	0.00E+00	0.00E+00	0.00E+00	0.00E+00	0.00E+00	0.00E+00	0.00E+00	0.00E+00
3565	ALL	746316	4035073	5.19E-09	25YrCancer	5.19E-09	0.00E+00	0.00E+00	0.00E+00	0.00E+00	0.00E+00	0.00E+00	0.00E+00	0.00E+00	0.00E+00	0.00E+00	0.00E+00
3566	ALL	746366	4035073	5.33E-09	25YrCancer	5.33E-09	0.00E+00	0.00E+00	0.00E+00	0.00E+00	0.00E+00	0.00E+00	0.00E+00	0.00E+00	0.00E+00	0.00E+00	0.00E+00
3567	ALL	745916	4035123	4.43E-09	25YrCancer	4.43E-09	0.00E+00	0.00E+00	0.00E+00	0.00E+00	0.00E+00	0.00E+00	0.00E+00	0.00E+00	0.00E+00	0.00E+00	0.00E+00
3568	ALL	745966	4035123	4.50E-09	25YrCancer	4.50E-09	0.00E+00	0.00E+00	0.00E+00	0.00E+00	0.00E+00	0.00E+00	0.00E+00	0.00E+00	0.00E+00	0.00E+00	0.00E+00

3569	ALL	746016	4035123	4.59E-09	25YrCancer	4.59E-09	0.00E+00	0.00E+00	0.00E+00	0.00E+00	0.00E+00	0.00E+00	0.00E+00	0.00E+00	0.00E+00	0.00E+00	0.00E+00
3570	ALL	746066	4035123	4.70E-09	25YrCancer	4.70E-09	0.00E+00	0.00E+00	0.00E+00	0.00E+00	0.00E+00	0.00E+00	0.00E+00	0.00E+00	0.00E+00	0.00E+00	0.00E+00
3571	ALL	746116	4035123	4.79E-09	25YrCancer	4.79E-09	0.00E+00	0.00E+00	0.00E+00	0.00E+00	0.00E+00	0.00E+00	0.00E+00	0.00E+00	0.00E+00	0.00E+00	0.00E+00
3572	ALL	746166	4035123	4.94E-09	25YrCancer	4.94E-09	0.00E+00	0.00E+00	0.00E+00	0.00E+00	0.00E+00	0.00E+00	0.00E+00	0.00E+00	0.00E+00	0.00E+00	0.00E+00
3573	ALL	746216	4035123	5.03E-09	25YrCancer	5.03E-09	0.00E+00	0.00E+00	0.00E+00	0.00E+00	0.00E+00	0.00E+00	0.00E+00	0.00E+00	0.00E+00	0.00E+00	0.00E+00
3574	ALL	746266	4035123	5.13E-09	25YrCancer	5.13E-09	0.00E+00	0.00E+00	0.00E+00	0.00E+00	0.00E+00	0.00E+00	0.00E+00	0.00E+00	0.00E+00	0.00E+00	0.00E+00
3575	ALL	746316	4035123	5.24E-09	25YrCancer	5.24E-09	0.00E+00	0.00E+00	0.00E+00	0.00E+00	0.00E+00	0.00E+00	0.00E+00	0.00E+00	0.00E+00	0.00E+00	0.00E+00
3576	ALL	746366	4035123	5.49E-09	25YrCancer	5.49E-09	0.00E+00	0.00E+00	0.00E+00	0.00E+00	0.00E+00	0.00E+00	0.00E+00	0.00E+00	0.00E+00	0.00E+00	0.00E+00
3577	ALL	745916	4035173	4.45E-09	25YrCancer	4.45E-09	0.00E+00	0.00E+00	0.00E+00	0.00E+00	0.00E+00	0.00E+00	0.00E+00	0.00E+00	0.00E+00	0.00E+00	0.00E+00
3578	ALL	745966	4035173	4.52E-09	25YrCancer	4.52E-09	0.00E+00	0.00E+00	0.00E+00	0.00E+00	0.00E+00	0.00E+00	0.00E+00	0.00E+00	0.00E+00	0.00E+00	0.00E+00
3579	ALL	746016	4035173	4.62E-09	25YrCancer	4.62E-09	0.00E+00	0.00E+00	0.00E+00	0.00E+00	0.00E+00	0.00E+00	0.00E+00	0.00E+00	0.00E+00	0.00E+00	0.00E+00
3580	ALL	746066	4035173	4.74E-09	25YrCancer	4.74E-09	0.00E+00	0.00E+00	0.00E+00	0.00E+00	0.00E+00	0.00E+00	0.00E+00	0.00E+00	0.00E+00	0.00E+00	0.00E+00
3581	ALL	746116	4035173	4.85E-09	25YrCancer	4.85E-09	0.00E+00	0.00E+00	0.00E+00	0.00E+00	0.00E+00	0.00E+00	0.00E+00	0.00E+00	0.00E+00	0.00E+00	0.00E+00
3582	ALL	746166	4035173	4.99E-09	25YrCancer	4.99E-09	0.00E+00	0.00E+00	0.00E+00	0.00E+00	0.00E+00	0.00E+00	0.00E+00	0.00E+00	0.00E+00	0.00E+00	0.00E+00
3583	ALL	746216	4035173	5.12E-09	25YrCancer	5.12E-09	0.00E+00	0.00E+00	0.00E+00	0.00E+00	0.00E+00	0.00E+00	0.00E+00	0.00E+00	0.00E+00	0.00E+00	0.00E+00
3584	ALL	746266	4035173	5.24E-09	25YrCancer	5.24E-09	0.00E+00	0.00E+00	0.00E+00	0.00E+00	0.00E+00	0.00E+00	0.00E+00	0.00E+00	0.00E+00	0.00E+00	0.00E+00
3585	ALL	746316	4035173	5.36E-09	25YrCancer	5.36E-09	0.00E+00	0.00E+00	0.00E+00	0.00E+00	0.00E+00	0.00E+00	0.00E+00	0.00E+00	0.00E+00	0.00E+00	0.00E+00
3586	ALL	746366	4035173	5.56E-09	25YrCancer	5.56E-09	0.00E+00	0.00E+00	0.00E+00	0.00E+00	0.00E+00	0.00E+00	0.00E+00	0.00E+00	0.00E+00	0.00E+00	0.00E+00
3587	ALL	745916	4035223	4.47E-09	25YrCancer	4.47E-09	0.00E+00	0.00E+00	0.00E+00	0.00E+00	0.00E+00	0.00E+00	0.00E+00	0.00E+00	0.00E+00	0.00E+00	0.00E+00
3588	ALL	745966	4035223	4.54E-09	25YrCancer	4.54E-09	0.00E+00	0.00E+00	0.00E+00	0.00E+00	0.00E+00	0.00E+00	0.00E+00	0.00E+00	0.00E+00	0.00E+00	0.00E+00
3589	ALL	746016	4035223	4.66E-09	25YrCancer	4.66E-09	0.00E+00	0.00E+00	0.00E+00	0.00E+00	0.00E+00	0.00E+00	0.00E+00	0.00E+00	0.00E+00	0.00E+00	0.00E+00
3590	ALL	746066	4035223	4.77E-09	25YrCancer	4.77E-09	0.00E+00	0.00E+00	0.00E+00	0.00E+00	0.00E+00	0.00E+00	0.00E+00	0.00E+00	0.00E+00	0.00E+00	0.00E+00
3591	ALL	746116	4035223	4.89E-09	25YrCancer	4.89E-09	0.00E+00	0.00E+00	0.00E+00	0.00E+00	0.00E+00	0.00E+00	0.00E+00	0.00E+00	0.00E+00	0.00E+00	0.00E+00
3592	ALL	746166	4035223	5.02E-09	25YrCancer	5.02E-09	0.00E+00	0.00E+00	0.00E+00	0.00E+00	0.00E+00	0.00E+00	0.00E+00	0.00E+00	0.00E+00	0.00E+00	0.00E+00
3593	ALL	746216	4035223	5.14E-09	25YrCancer	5.14E-09	0.00E+00	0.00E+00	0.00E+00	0.00E+00	0.00E+00	0.00E+00	0.00E+00	0.00E+00	0.00E+00	0.00E+00	0.00E+00
3594	ALL	746266	4035223	5.27E-09	25YrCancer	5.27E-09	0.00E+00	0.00E+00	0.00E+00	0.00E+00	0.00E+00	0.00E+00	0.00E+00	0.00E+00	0.00E+00	0.00E+00	0.00E+00
3595	ALL	746316	4035223	5.41E-09	25YrCancer	5.41E-09	0.00E+00	0.00E+00	0.00E+00	0.00E+00	0.00E+00	0.00E+00	0.00E+00	0.00E+00	0.00E+00	0.00E+00	0.00E+00
3596	ALL	746366	4035223	5.59E-09	25YrCancer	5.59E-09	0.00E+00	0.00E+00	0.00E+00	0.00E+00	0.00E+00	0.00E+00	0.00E+00	0.00E+00	0.00E+00	0.00E+00	0.00E+00
3597	ALL	745916	4035273	4.48E-09	25YrCancer	4.48E-09	0.00E+00	0.00E+00	0.00E+00	0.00E+00	0.00E+00	0.00E+00	0.00E+00	0.00E+00	0.00E+00	0.00E+00	0.00E+00
3598	ALL	745966	4035273	4.57E-09	25YrCancer	4.57E-09	0.00E+00	0.00E+00	0.00E+00	0.00E+00	0.00E+00	0.00E+00	0.00E+00	0.00E+00	0.00E+00	0.00E+00	0.00E+00
3599	ALL	746016	4035273	4.68E-09	25YrCancer	4.68E-09	0.00E+00	0.00E+00	0.00E+00	0.00E+00	0.00E+00	0.00E+00	0.00E+00	0.00E+00	0.00E+00	0.00E+00	0.00E+00
3600	ALL	746066	4035273	4.79E-09	25YrCancer	4.79E-09	0.00E+00	0.00E+00	0.00E+00	0.00E+00	0.00E+00	0.00E+00	0.00E+00	0.00E+00	0.00E+00	0.00E+00	0.00E+00
3601	ALL	746116	4035273	4.91E-09	25YrCancer	4.91E-09	0.00E+00	0.00E+00	0.00E+00	0.00E+00	0.00E+00	0.00E+00	0.00E+00	0.00E+00	0.00E+00	0.00E+00	0.00E+00
3602	ALL	746166	4035273	5.07E-09	25YrCancer	5.07E-09	0.00E+00	0.00E+00	0.00E+00	0.00E+00	0.00E+00	0.00E+00	0.00E+00	0.00E+00	0.00E+00	0.00E+00	0.00E+00
3603	ALL	746216	4035273	5.21E-09	25YrCancer	5.21E-09	0.00E+00	0.00E+00	0.00E+00	0.00E+00	0.00E+00	0.00E+00	0.00E+00	0.00E+00	0.00E+00	0.00E+00	0.00E+00
3604	ALL	746266	4035273	5.35E-09	25YrCancer	5.35E-09	0.00E+00	0.00E+00	0.00E+00	0.00E+00	0.00E+00	0.00E+00	0.00E+00	0.00E+00	0.00E+00	0.00E+00	0.00E+00
3605	ALL	746316	4035273	5.50E-09	25YrCancer	5.50E-09	0.00E+00	0.00E+00	0.00E+00	0.00E+00	0.00E+00	0.00E+00	0.00E+00	0.00E+00	0.00E+00	0.00E+00	0.00E+00
3606	ALL	746366	4035273	5.67E-09	25YrCancer	5.67E-09	0.00E+00	0.00E+00	0.00E+00	0.00E+00	0.00E+00	0.00E+00	0.00E+00	0.00E+00	0.00E+00	0.00E+00	0.00E+00
3607	ALL	745916	4035323	4.50E-09	25YrCancer	4.50E-09	0.00E+00	0.00E+00	0.00E+00	0.00E+00	0.00E+00	0.00E+00	0.00E+00	0.00E+00	0.00E+00	0.00E+00	0.00E+00
3608	ALL	745966	4035323	4.59E-09	25YrCancer	4.59E-09	0.00E+00	0.00E+00	0.00E+00	0.00E+00	0.00E+00	0.00E+00	0.00E+00	0.00E+00	0.00E+00	0.00E+00	0.00E+00
3609	ALL	746016	4035323	4.71E-09	25YrCancer	4.71E-09	0.00E+00	0.00E+00	0.00E+00	0.00E+00	0.00E+00	0.00E+00	0.00E+00	0.00E+00	0.00E+00	0.00E+00	0.00E+00
3610	ALL	746066	4035323	4.80E-09	25YrCancer	4.80E-09	0.00E+00	0.00E+00	0.00E+00	0.00E+00	0.00E+00	0.00E+00	0.00E+00	0.00E+00	0.00E+00	0.00E+00	0.00E+00
3611	ALL	746116	4035323	4.90E-09	25YrCancer	4.90E-09	0.00E+00	0.00E+00	0.00E+00	0.00E+00	0.00E+00	0.00E+00	0.00E+00	0.00E+00	0.00E+00	0.00E+00	0.00E+00
3612	ALL	746166	4035323	5.08E-09	25YrCancer	5.08E-09	0.00E+00	0.00E+00	0.00E+00	0.00E+00	0.00E+00	0.00E+00	0.00E+00	0.00E+00	0.00E+00	0.00E+00	0.00E+00
3613	ALL	746216	4035323	5.23E-09	25YrCancer	5.23E-09	0.00E+00	0.00E+00	0.00E+00	0.00E+00	0.00E+00	0.00E+00	0.00E+00	0.00E+00	0.00E+00	0.00E+00	0.00E+00
3614	ALL	746266	4035323	5.39E-09	25YrCancer	5.39E-09	0.00E+00	0.00E+00	0.00E+00	0.00E+00	0.00E+00	0.00E+00	0.00E+00	0.00E+00	0.00E+00	0.00E+00	0.00E+00
3615	ALL	746316	4035323	5.56E-09	25YrCancer	5.56E-09	0.00E+00	0.00E+00	0.00E+00	0.00E+00	0.00E+00	0.00E+00	0.00E+00	0.00E+00	0.00E+00	0.00E+00	0.00E+00
3616	ALL	746366	4035323	5.73E-09	25YrCancer	5.73E-09	0.00E+00	0.00E+00	0.00E+00	0.00E+00	0.00E+00	0.00E+00	0.00E+00	0.00E+00	0.00E+00	0.00E+00	0.00E+00
3617	ALL	745916	4035373	4.54E-09	25YrCancer	4.54E-09	0.00E+00	0.00E+00	0.00E+00	0.00E+00	0.00E+00	0.00E+00	0.00E+00	0.00E+00	0.00E+00	0.00E+00	0.00E+00
3618	ALL	745966	4035373	4.63E-09	25YrCancer	4.63E-09	0.00E+00	0.00E+00	0.00E+00	0.00E+00	0.00E+00	0.00E+00	0.00E+00	0.00E+00	0.00E+00	0.00E+00	0.00E+00
3619	ALL	746016	4035373	4.74E-09	25YrCancer	4.74E-09	0.00E+00	0.00E+00	0.00E+00	0.00E+00	0.00E+00	0.00E+00	0.00E+00	0.00E+00	0.00E+00	0.00E+00	0.00E+00

3620	ALL	746066	4035373	4.81E-09	25YrCancer	4.81E-09	0.00E+00	0.00E+00	0.00E+00	0.00E+00	0.00E+00	0.00E+00	0.00E+00	0.00E+00	0.00E+00	0.00E+00	0.00E+00
3621	ALL	746116	4035373	4.92E-09	25YrCancer	4.92E-09	0.00E+00	0.00E+00	0.00E+00	0.00E+00	0.00E+00	0.00E+00	0.00E+00	0.00E+00	0.00E+00	0.00E+00	0.00E+00
3622	ALL	746166	4035373	5.10E-09	25YrCancer	5.10E-09	0.00E+00	0.00E+00	0.00E+00	0.00E+00	0.00E+00	0.00E+00	0.00E+00	0.00E+00	0.00E+00	0.00E+00	0.00E+00
3623	ALL	746216	4035373	5.25E-09	25YrCancer	5.25E-09	0.00E+00	0.00E+00	0.00E+00	0.00E+00	0.00E+00	0.00E+00	0.00E+00	0.00E+00	0.00E+00	0.00E+00	0.00E+00
3624	ALL	746266	4035373	5.41E-09	25YrCancer	5.41E-09	0.00E+00	0.00E+00	0.00E+00	0.00E+00	0.00E+00	0.00E+00	0.00E+00	0.00E+00	0.00E+00	0.00E+00	0.00E+00
3625	ALL	746316	4035373	5.59E-09	25YrCancer	5.59E-09	0.00E+00	0.00E+00	0.00E+00	0.00E+00	0.00E+00	0.00E+00	0.00E+00	0.00E+00	0.00E+00	0.00E+00	0.00E+00
3626	ALL	746366	4035373	5.81E-09	25YrCancer	5.81E-09	0.00E+00	0.00E+00	0.00E+00	0.00E+00	0.00E+00	0.00E+00	0.00E+00	0.00E+00	0.00E+00	0.00E+00	0.00E+00
3627	ALL	745916	4035423	4.59E-09	25YrCancer	4.59E-09	0.00E+00	0.00E+00	0.00E+00	0.00E+00	0.00E+00	0.00E+00	0.00E+00	0.00E+00	0.00E+00	0.00E+00	0.00E+00
3628	ALL	745966	4035423	4.68E-09	25YrCancer	4.68E-09	0.00E+00	0.00E+00	0.00E+00	0.00E+00	0.00E+00	0.00E+00	0.00E+00	0.00E+00	0.00E+00	0.00E+00	0.00E+00
3629	ALL	746016	4035423	4.78E-09	25YrCancer	4.78E-09	0.00E+00	0.00E+00	0.00E+00	0.00E+00	0.00E+00	0.00E+00	0.00E+00	0.00E+00	0.00E+00	0.00E+00	0.00E+00
3630	ALL	746066	4035423	4.86E-09	25YrCancer	4.86E-09	0.00E+00	0.00E+00	0.00E+00	0.00E+00	0.00E+00	0.00E+00	0.00E+00	0.00E+00	0.00E+00	0.00E+00	0.00E+00
3631	ALL	746116	4035423	4.97E-09	25YrCancer	4.97E-09	0.00E+00	0.00E+00	0.00E+00	0.00E+00	0.00E+00	0.00E+00	0.00E+00	0.00E+00	0.00E+00	0.00E+00	0.00E+00
3632	ALL	746166	4035423	5.14E-09	25YrCancer	5.14E-09	0.00E+00	0.00E+00	0.00E+00	0.00E+00	0.00E+00	0.00E+00	0.00E+00	0.00E+00	0.00E+00	0.00E+00	0.00E+00
3633	ALL	746216	4035423	5.30E-09	25YrCancer	5.30E-09	0.00E+00	0.00E+00	0.00E+00	0.00E+00	0.00E+00	0.00E+00	0.00E+00	0.00E+00	0.00E+00	0.00E+00	0.00E+00
3634	ALL	746266	4035423	5.48E-09	25YrCancer	5.48E-09	0.00E+00	0.00E+00	0.00E+00	0.00E+00	0.00E+00	0.00E+00	0.00E+00	0.00E+00	0.00E+00	0.00E+00	0.00E+00
3635	ALL	746316	4035423	5.68E-09	25YrCancer	5.68E-09	0.00E+00	0.00E+00	0.00E+00	0.00E+00	0.00E+00	0.00E+00	0.00E+00	0.00E+00	0.00E+00	0.00E+00	0.00E+00
3636	ALL	746366	4035423	5.84E-09	25YrCancer	5.84E-09	0.00E+00	0.00E+00	0.00E+00	0.00E+00	0.00E+00	0.00E+00	0.00E+00	0.00E+00	0.00E+00	0.00E+00	0.00E+00
3637	ALL	745916	4035473	4.65E-09	25YrCancer	4.65E-09	0.00E+00	0.00E+00	0.00E+00	0.00E+00	0.00E+00	0.00E+00	0.00E+00	0.00E+00	0.00E+00	0.00E+00	0.00E+00
3638	ALL	745966	4035473	4.77E-09	25YrCancer	4.77E-09	0.00E+00	0.00E+00	0.00E+00	0.00E+00	0.00E+00	0.00E+00	0.00E+00	0.00E+00	0.00E+00	0.00E+00	0.00E+00
3639	ALL	746016	4035473	4.84E-09	25YrCancer	4.84E-09	0.00E+00	0.00E+00	0.00E+00	0.00E+00	0.00E+00	0.00E+00	0.00E+00	0.00E+00	0.00E+00	0.00E+00	0.00E+00
3640	ALL	746066	4035473	4.94E-09	25YrCancer	4.94E-09	0.00E+00	0.00E+00	0.00E+00	0.00E+00	0.00E+00	0.00E+00	0.00E+00	0.00E+00	0.00E+00	0.00E+00	0.00E+00
3641	ALL	746116	4035473	5.05E-09	25YrCancer	5.05E-09	0.00E+00	0.00E+00	0.00E+00	0.00E+00	0.00E+00	0.00E+00	0.00E+00	0.00E+00	0.00E+00	0.00E+00	0.00E+00
3642	ALL	746166	4035473	5.16E-09	25YrCancer	5.16E-09	0.00E+00	0.00E+00	0.00E+00	0.00E+00	0.00E+00	0.00E+00	0.00E+00	0.00E+00	0.00E+00	0.00E+00	0.00E+00
3643	ALL	746216	4035473	5.31E-09	25YrCancer	5.31E-09	0.00E+00	0.00E+00	0.00E+00	0.00E+00	0.00E+00	0.00E+00	0.00E+00	0.00E+00	0.00E+00	0.00E+00	0.00E+00
3644	ALL	746266	4035473	5.49E-09	25YrCancer	5.49E-09	0.00E+00	0.00E+00	0.00E+00	0.00E+00	0.00E+00	0.00E+00	0.00E+00	0.00E+00	0.00E+00	0.00E+00	0.00E+00
3645	ALL	746316	4035473	5.70E-09	25YrCancer	5.70E-09	0.00E+00	0.00E+00	0.00E+00	0.00E+00	0.00E+00	0.00E+00	0.00E+00	0.00E+00	0.00E+00	0.00E+00	0.00E+00
3646	ALL	746366	4035473	5.89E-09	25YrCancer	5.89E-09	0.00E+00	0.00E+00	0.00E+00	0.00E+00	0.00E+00	0.00E+00	0.00E+00	0.00E+00	0.00E+00	0.00E+00	0.00E+00
3647	ALL	746762.33	4034654.27	6.28E-09	25YrCancer	6.28E-09	0.00E+00	0.00E+00	0.00E+00	0.00E+00	0.00E+00	0.00E+00	0.00E+00	0.00E+00	0.00E+00	0.00E+00	0.00E+00
3648	ALL	746812.33	4034654.27	6.48E-09	25YrCancer	6.48E-09	0.00E+00	0.00E+00	0.00E+00	0.00E+00	0.00E+00	0.00E+00	0.00E+00	0.00E+00	0.00E+00	0.00E+00	0.00E+00
3649	ALL	746862.33	4034654.27	6.66E-09	25YrCancer	6.66E-09	0.00E+00	0.00E+00	0.00E+00	0.00E+00	0.00E+00	0.00E+00	0.00E+00	0.00E+00	0.00E+00	0.00E+00	0.00E+00
3650	ALL	746912.33	4034654.27	6.89E-09	25YrCancer	6.89E-09	0.00E+00	0.00E+00	0.00E+00	0.00E+00	0.00E+00	0.00E+00	0.00E+00	0.00E+00	0.00E+00	0.00E+00	0.00E+00
3651	ALL	746962.33	4034654.27	7.17E-09	25YrCancer	7.17E-09	0.00E+00	0.00E+00	0.00E+00	0.00E+00	0.00E+00	0.00E+00	0.00E+00	0.00E+00	0.00E+00	0.00E+00	0.00E+00
3652	ALL	746762.33	4034704.27	6.43E-09	25YrCancer	6.43E-09	0.00E+00	0.00E+00	0.00E+00	0.00E+00	0.00E+00	0.00E+00	0.00E+00	0.00E+00	0.00E+00	0.00E+00	0.00E+00
3653	ALL	746812.33	4034704.27	6.58E-09	25YrCancer	6.58E-09	0.00E+00	0.00E+00	0.00E+00	0.00E+00	0.00E+00	0.00E+00	0.00E+00	0.00E+00	0.00E+00	0.00E+00	0.00E+00
3654	ALL	746862.33	4034704.27	6.82E-09	25YrCancer	6.82E-09	0.00E+00	0.00E+00	0.00E+00	0.00E+00	0.00E+00	0.00E+00	0.00E+00	0.00E+00	0.00E+00	0.00E+00	0.00E+00
3655	ALL	746912.33	4034704.27	7.07E-09	25YrCancer	7.07E-09	0.00E+00	0.00E+00	0.00E+00	0.00E+00	0.00E+00	0.00E+00	0.00E+00	0.00E+00	0.00E+00	0.00E+00	0.00E+00
3656	ALL	746962.33	4034704.27	7.37E-09	25YrCancer	7.37E-09	0.00E+00	0.00E+00	0.00E+00	0.00E+00	0.00E+00	0.00E+00	0.00E+00	0.00E+00	0.00E+00	0.00E+00	0.00E+00
3657	ALL	746762.33	4034754.27	6.56E-09	25YrCancer	6.56E-09	0.00E+00	0.00E+00	0.00E+00	0.00E+00	0.00E+00	0.00E+00	0.00E+00	0.00E+00	0.00E+00	0.00E+00	0.00E+00
3658	ALL	746812.33	4034754.27	6.74E-09	25YrCancer	6.74E-09	0.00E+00	0.00E+00	0.00E+00	0.00E+00	0.00E+00	0.00E+00	0.00E+00	0.00E+00	0.00E+00	0.00E+00	0.00E+00
3659	ALL	746862.33	4034754.27	6.99E-09	25YrCancer	6.99E-09	0.00E+00	0.00E+00	0.00E+00	0.00E+00	0.00E+00	0.00E+00	0.00E+00	0.00E+00	0.00E+00	0.00E+00	0.00E+00
3660	ALL	746912.33	4034754.27	7.27E-09	25YrCancer	7.27E-09	0.00E+00	0.00E+00	0.00E+00	0.00E+00	0.00E+00	0.00E+00	0.00E+00	0.00E+00	0.00E+00	0.00E+00	0.00E+00
3661	ALL	746962.33	4034754.27	7.59E-09	25YrCancer	7.59E-09	0.00E+00	0.00E+00	0.00E+00	0.00E+00	0.00E+00	0.00E+00	0.00E+00	0.00E+00	0.00E+00	0.00E+00	0.00E+00
3662	ALL	746762.33	4034804.27	6.67E-09	25YrCancer	6.67E-09	0.00E+00	0.00E+00	0.00E+00	0.00E+00	0.00E+00	0.00E+00	0.00E+00	0.00E+00	0.00E+00	0.00E+00	0.00E+00
3663	ALL	746812.33	4034804.27	6.89E-09	25YrCancer	6.89E-09	0.00E+00	0.00E+00	0.00E+00	0.00E+00	0.00E+00	0.00E+00	0.00E+00	0.00E+00	0.00E+00	0.00E+00	0.00E+00
3664	ALL	746862.33	4034804.27	7.17E-09	25YrCancer	7.17E-09	0.00E+00	0.00E+00	0.00E+00	0.00E+00	0.00E+00	0.00E+00	0.00E+00	0.00E+00	0.00E+00	0.00E+00	0.00E+00
3665	ALL	746912.33	4034804.27	7.47E-09	25YrCancer	7.47E-09	0.00E+00	0.00E+00	0.00E+00	0.00E+00	0.00E+00	0.00E+00	0.00E+00	0.00E+00	0.00E+00	0.00E+00	0.00E+00
3666	ALL	746962.33	4034804.27	7.82E-09	25YrCancer	7.82E-09	0.00E+00	0.00E+00	0.00E+00	0.00E+00	0.00E+00	0.00E+00	0.00E+00	0.00E+00	0.00E+00	0.00E+00	0.00E+00
3667	ALL	746762.33	4034854.27	6.80E-09	25YrCancer	6.80E-09	0.00E+00	0.00E+00	0.00E+00	0.00E+00	0.00E+00	0.00E+00	0.00E+00	0.00E+00	0.00E+00	0.00E+00	0.00E+00
3668	ALL	746812.33	4034854.27	7.07E-09	25YrCancer	7.07E-09	0.00E+00	0.00E+00	0.00E+00	0.00E+00	0.00E+00	0.00E+00	0.00E+00	0.00E+00	0.00E+00	0.00E+00	0.00E+00
3669	ALL	746862.33	4034854.27	7.36E-09	25YrCancer	7.36E-09	0.00E+00	0.00E+00	0.00E+00	0.00E+00	0.00E+00	0.00E+00	0.00E+00	0.00E+00	0.00E+00	0.00E+00	0.00E+00
3670	ALL	746912.33	4034854.27	7.68E-09	25YrCancer	7.68E-09	0.00E+00	0.00E+00	0.00E+00	0.00E+00	0.00E+00	0.00E+00	0.00E+00	0.00E+00	0.00E+00	0.00E+00	0.00E+00

3671	ALL	746962.33	4034854.27	8.06E-09	25YrCancer	8.06E-09	0.00E+00	0.00E+00	0.00E+00	0.00E+00	0.00E+00	0.00E+00	0.00E+00	0.00E+00	0.00E+00	0.00E+00	0.00E+00
3672	ALL	746762.33	4034904.27	6.90E-09	25YrCancer	6.90E-09	0.00E+00	0.00E+00	0.00E+00	0.00E+00	0.00E+00	0.00E+00	0.00E+00	0.00E+00	0.00E+00	0.00E+00	0.00E+00
3673	ALL	746812.33	4034904.27	7.18E-09	25YrCancer	7.18E-09	0.00E+00	0.00E+00	0.00E+00	0.00E+00	0.00E+00	0.00E+00	0.00E+00	0.00E+00	0.00E+00	0.00E+00	0.00E+00
3674	ALL	746862.33	4034904.27	7.55E-09	25YrCancer	7.55E-09	0.00E+00	0.00E+00	0.00E+00	0.00E+00	0.00E+00	0.00E+00	0.00E+00	0.00E+00	0.00E+00	0.00E+00	0.00E+00
3675	ALL	746912.33	4034904.27	7.91E-09	25YrCancer	7.91E-09	0.00E+00	0.00E+00	0.00E+00	0.00E+00	0.00E+00	0.00E+00	0.00E+00	0.00E+00	0.00E+00	0.00E+00	0.00E+00
3676	ALL	746962.33	4034904.27	8.31E-09	25YrCancer	8.31E-09	0.00E+00	0.00E+00	0.00E+00	0.00E+00	0.00E+00	0.00E+00	0.00E+00	0.00E+00	0.00E+00	0.00E+00	0.00E+00
3677	ALL	746762.33	4034954.27	7.05E-09	25YrCancer	7.05E-09	0.00E+00	0.00E+00	0.00E+00	0.00E+00	0.00E+00	0.00E+00	0.00E+00	0.00E+00	0.00E+00	0.00E+00	0.00E+00
3678	ALL	746812.33	4034954.27	7.40E-09	25YrCancer	7.40E-09	0.00E+00	0.00E+00	0.00E+00	0.00E+00	0.00E+00	0.00E+00	0.00E+00	0.00E+00	0.00E+00	0.00E+00	0.00E+00
3679	ALL	746862.33	4034954.27	7.75E-09	25YrCancer	7.75E-09	0.00E+00	0.00E+00	0.00E+00	0.00E+00	0.00E+00	0.00E+00	0.00E+00	0.00E+00	0.00E+00	0.00E+00	0.00E+00
3680	ALL	746912.33	4034954.27	8.14E-09	25YrCancer	8.14E-09	0.00E+00	0.00E+00	0.00E+00	0.00E+00	0.00E+00	0.00E+00	0.00E+00	0.00E+00	0.00E+00	0.00E+00	0.00E+00
3681	ALL	746962.33	4034954.27	8.58E-09	25YrCancer	8.58E-09	0.00E+00	0.00E+00	0.00E+00	0.00E+00	0.00E+00	0.00E+00	0.00E+00	0.00E+00	0.00E+00	0.00E+00	0.00E+00
3682	ALL	746762.33	4035004.27	7.15E-09	25YrCancer	7.15E-09	0.00E+00	0.00E+00	0.00E+00	0.00E+00	0.00E+00	0.00E+00	0.00E+00	0.00E+00	0.00E+00	0.00E+00	0.00E+00
3683	ALL	746812.33	4035004.27	7.49E-09	25YrCancer	7.49E-09	0.00E+00	0.00E+00	0.00E+00	0.00E+00	0.00E+00	0.00E+00	0.00E+00	0.00E+00	0.00E+00	0.00E+00	0.00E+00
3684	ALL	746862.33	4035004.27	7.91E-09	25YrCancer	7.91E-09	0.00E+00	0.00E+00	0.00E+00	0.00E+00	0.00E+00	0.00E+00	0.00E+00	0.00E+00	0.00E+00	0.00E+00	0.00E+00
3685	ALL	746912.33	4035004.27	8.35E-09	25YrCancer	8.35E-09	0.00E+00	0.00E+00	0.00E+00	0.00E+00	0.00E+00	0.00E+00	0.00E+00	0.00E+00	0.00E+00	0.00E+00	0.00E+00
3686	ALL	746962.33	4035004.27	8.87E-09	25YrCancer	8.87E-09	0.00E+00	0.00E+00	0.00E+00	0.00E+00	0.00E+00	0.00E+00	0.00E+00	0.00E+00	0.00E+00	0.00E+00	0.00E+00
3687	ALL	746762.33	4035054.27	7.26E-09	25YrCancer	7.26E-09	0.00E+00	0.00E+00	0.00E+00	0.00E+00	0.00E+00	0.00E+00	0.00E+00	0.00E+00	0.00E+00	0.00E+00	0.00E+00
3688	ALL	746812.33	4035054.27	7.67E-09	25YrCancer	7.67E-09	0.00E+00	0.00E+00	0.00E+00	0.00E+00	0.00E+00	0.00E+00	0.00E+00	0.00E+00	0.00E+00	0.00E+00	0.00E+00
3689	ALL	746862.33	4035054.27	8.08E-09	25YrCancer	8.08E-09	0.00E+00	0.00E+00	0.00E+00	0.00E+00	0.00E+00	0.00E+00	0.00E+00	0.00E+00	0.00E+00	0.00E+00	0.00E+00
3690	ALL	746912.33	4035054.27	8.54E-09	25YrCancer	8.54E-09	0.00E+00	0.00E+00	0.00E+00	0.00E+00	0.00E+00	0.00E+00	0.00E+00	0.00E+00	0.00E+00	0.00E+00	0.00E+00
3691	ALL	746962.33	4035054.27	9.18E-09	25YrCancer	9.18E-09	0.00E+00	0.00E+00	0.00E+00	0.00E+00	0.00E+00	0.00E+00	0.00E+00	0.00E+00	0.00E+00	0.00E+00	0.00E+00
3692	ALL	747420	4038175	4.28E-09	25YrCancer	4.28E-09	0.00E+00	0.00E+00	0.00E+00	0.00E+00	0.00E+00	0.00E+00	0.00E+00	0.00E+00	0.00E+00	0.00E+00	0.00E+00
3693	ALL	747470	4038175	4.29E-09	25YrCancer	4.29E-09	0.00E+00	0.00E+00	0.00E+00	0.00E+00	0.00E+00	0.00E+00	0.00E+00	0.00E+00	0.00E+00	0.00E+00	0.00E+00
3694	ALL	747520	4038175	4.32E-09	25YrCancer	4.32E-09	0.00E+00	0.00E+00	0.00E+00	0.00E+00	0.00E+00	0.00E+00	0.00E+00	0.00E+00	0.00E+00	0.00E+00	0.00E+00
3695	ALL	747420	4038225	4.27E-09	25YrCancer	4.27E-09	0.00E+00	0.00E+00	0.00E+00	0.00E+00	0.00E+00	0.00E+00	0.00E+00	0.00E+00	0.00E+00	0.00E+00	0.00E+00
3696	ALL	747470	4038225	4.28E-09	25YrCancer	4.28E-09	0.00E+00	0.00E+00	0.00E+00	0.00E+00	0.00E+00	0.00E+00	0.00E+00	0.00E+00	0.00E+00	0.00E+00	0.00E+00
3697	ALL	747520	4038225	4.31E-09	25YrCancer	4.31E-09	0.00E+00	0.00E+00	0.00E+00	0.00E+00	0.00E+00	0.00E+00	0.00E+00	0.00E+00	0.00E+00	0.00E+00	0.00E+00
3698	ALL	747420	4038275	4.27E-09	25YrCancer	4.27E-09	0.00E+00	0.00E+00	0.00E+00	0.00E+00	0.00E+00	0.00E+00	0.00E+00	0.00E+00	0.00E+00	0.00E+00	0.00E+00
3699	ALL	747470	4038275	4.28E-09	25YrCancer	4.28E-09	0.00E+00	0.00E+00	0.00E+00	0.00E+00	0.00E+00	0.00E+00	0.00E+00	0.00E+00	0.00E+00	0.00E+00	0.00E+00
3700	ALL	747520	4038275	4.30E-09	25YrCancer	4.30E-09	0.00E+00	0.00E+00	0.00E+00	0.00E+00	0.00E+00	0.00E+00	0.00E+00	0.00E+00	0.00E+00	0.00E+00	0.00E+00
3701	ALL	747420	4038325	4.28E-09	25YrCancer	4.28E-09	0.00E+00	0.00E+00	0.00E+00	0.00E+00	0.00E+00	0.00E+00	0.00E+00	0.00E+00	0.00E+00	0.00E+00	0.00E+00
3702	ALL	747470	4038325	4.28E-09	25YrCancer	4.28E-09	0.00E+00	0.00E+00	0.00E+00	0.00E+00	0.00E+00	0.00E+00	0.00E+00	0.00E+00	0.00E+00	0.00E+00	0.00E+00
3703	ALL	747520	4038325	4.30E-09	25YrCancer	4.30E-09	0.00E+00	0.00E+00	0.00E+00	0.00E+00	0.00E+00	0.00E+00	0.00E+00	0.00E+00	0.00E+00	0.00E+00	0.00E+00
3704	ALL	746279	4039819	4.43E-09	25YrCancer	4.43E-09	0.00E+00	0.00E+00	0.00E+00	0.00E+00	0.00E+00	0.00E+00	0.00E+00	0.00E+00	0.00E+00	0.00E+00	0.00E+00
3705	ALL	746329	4039819	4.45E-09	25YrCancer	4.45E-09	0.00E+00	0.00E+00	0.00E+00	0.00E+00	0.00E+00	0.00E+00	0.00E+00	0.00E+00	0.00E+00	0.00E+00	0.00E+00
3706	ALL	746379	4039819	4.47E-09	25YrCancer	4.47E-09	0.00E+00	0.00E+00	0.00E+00	0.00E+00	0.00E+00	0.00E+00	0.00E+00	0.00E+00	0.00E+00	0.00E+00	0.00E+00
3707	ALL	746429	4039819	4.49E-09	25YrCancer	4.49E-09	0.00E+00	0.00E+00	0.00E+00	0.00E+00	0.00E+00	0.00E+00	0.00E+00	0.00E+00	0.00E+00	0.00E+00	0.00E+00
3708	ALL	746479	4039819	4.52E-09	25YrCancer	4.52E-09	0.00E+00	0.00E+00	0.00E+00	0.00E+00	0.00E+00	0.00E+00	0.00E+00	0.00E+00	0.00E+00	0.00E+00	0.00E+00
3709	ALL	746529	4039819	4.54E-09	25YrCancer	4.54E-09	0.00E+00	0.00E+00	0.00E+00	0.00E+00	0.00E+00	0.00E+00	0.00E+00	0.00E+00	0.00E+00	0.00E+00	0.00E+00
3710	ALL	746279	4039869	4.45E-09	25YrCancer	4.45E-09	0.00E+00	0.00E+00	0.00E+00	0.00E+00	0.00E+00	0.00E+00	0.00E+00	0.00E+00	0.00E+00	0.00E+00	0.00E+00
3711	ALL	746329	4039869	4.47E-09	25YrCancer	4.47E-09	0.00E+00	0.00E+00	0.00E+00	0.00E+00	0.00E+00	0.00E+00	0.00E+00	0.00E+00	0.00E+00	0.00E+00	0.00E+00
3712	ALL	746379	4039869	4.49E-09	25YrCancer	4.49E-09	0.00E+00	0.00E+00	0.00E+00	0.00E+00	0.00E+00	0.00E+00	0.00E+00	0.00E+00	0.00E+00	0.00E+00	0.00E+00
3713	ALL	746429	4039869	4.52E-09	25YrCancer	4.52E-09	0.00E+00	0.00E+00	0.00E+00	0.00E+00	0.00E+00	0.00E+00	0.00E+00	0.00E+00	0.00E+00	0.00E+00	0.00E+00
3714	ALL	746479	4039869	4.54E-09	25YrCancer	4.54E-09	0.00E+00	0.00E+00	0.00E+00	0.00E+00	0.00E+00	0.00E+00	0.00E+00	0.00E+00	0.00E+00	0.00E+00	0.00E+00
3715	ALL	746529	4039869	4.57E-09	25YrCancer	4.57E-09	0.00E+00	0.00E+00	0.00E+00	0.00E+00	0.00E+00	0.00E+00	0.00E+00	0.00E+00	0.00E+00	0.00E+00	0.00E+00
3716	ALL	746279	4039919	4.46E-09	25YrCancer	4.46E-09	0.00E+00	0.00E+00	0.00E+00	0.00E+00	0.00E+00	0.00E+00	0.00E+00	0.00E+00	0.00E+00	0.00E+00	0.00E+00
3717	ALL	746329	4039919	4.48E-09	25YrCancer	4.48E-09	0.00E+00	0.00E+00	0.00E+00	0.00E+00	0.00E+00	0.00E+00	0.00E+00	0.00E+00	0.00E+00	0.00E+00	0.00E+00
3718	ALL	746379	4039919	4.51E-09	25YrCancer	4.51E-09	0.00E+00	0.00E+00	0.00E+00	0.00E+00	0.00E+00	0.00E+00	0.00E+00	0.00E+00	0.00E+00	0.00E+00	0.00E+00
3719	ALL	746429	4039919	4.54E-09	25YrCancer	4.54E-09	0.00E+00	0.00E+00	0.00E+00	0.00E+00	0.00E+00	0.00E+00	0.00E+00	0.00E+00	0.00E+00	0.00E+00	0.00E+00
3720	ALL	746479	4039919	4.57E-09	25YrCancer	4.57E-09	0.00E+00	0.00E+00	0.00E+00	0.00E+00	0.00E+00	0.00E+00	0.00E+00	0.00E+00	0.00E+00	0.00E+00	0.00E+00
3721	ALL	746529	4039919	4.60E-09	25YrCancer	4.60E-09	0.00E+00	0.00E+00	0.00E+00	0.00E+00	0.00E+00	0.00E+00	0.00E+00	0.00E+00	0.00E+00	0.00E+00	0.00E+00

3722	ALL	746279	4039969	4.49E-09	25YrCancer	4.49E-09	0.00E+00	0.00E+00	0.00E+00	0.00E+00	0.00E+00	0.00E+00	0.00E+00	0.00E+00	0.00E+00	0.00E+00	0.00E+00
3723	ALL	746329	4039969	4.51E-09	25YrCancer	4.51E-09	0.00E+00	0.00E+00	0.00E+00	0.00E+00	0.00E+00	0.00E+00	0.00E+00	0.00E+00	0.00E+00	0.00E+00	0.00E+00
3724	ALL	746379	4039969	4.54E-09	25YrCancer	4.54E-09	0.00E+00	0.00E+00	0.00E+00	0.00E+00	0.00E+00	0.00E+00	0.00E+00	0.00E+00	0.00E+00	0.00E+00	0.00E+00
3725	ALL	746429	4039969	4.57E-09	25YrCancer	4.57E-09	0.00E+00	0.00E+00	0.00E+00	0.00E+00	0.00E+00	0.00E+00	0.00E+00	0.00E+00	0.00E+00	0.00E+00	0.00E+00
3726	ALL	746479	4039969	4.61E-09	25YrCancer	4.61E-09	0.00E+00	0.00E+00	0.00E+00	0.00E+00	0.00E+00	0.00E+00	0.00E+00	0.00E+00	0.00E+00	0.00E+00	0.00E+00
3727	ALL	746529	4039969	4.64E-09	25YrCancer	4.64E-09	0.00E+00	0.00E+00	0.00E+00	0.00E+00	0.00E+00	0.00E+00	0.00E+00	0.00E+00	0.00E+00	0.00E+00	0.00E+00
3728	ALL	746279	4040019	4.53E-09	25YrCancer	4.53E-09	0.00E+00	0.00E+00	0.00E+00	0.00E+00	0.00E+00	0.00E+00	0.00E+00	0.00E+00	0.00E+00	0.00E+00	0.00E+00
3729	ALL	746329	4040019	4.56E-09	25YrCancer	4.56E-09	0.00E+00	0.00E+00	0.00E+00	0.00E+00	0.00E+00	0.00E+00	0.00E+00	0.00E+00	0.00E+00	0.00E+00	0.00E+00
3730	ALL	746379	4040019	4.59E-09	25YrCancer	4.59E-09	0.00E+00	0.00E+00	0.00E+00	0.00E+00	0.00E+00	0.00E+00	0.00E+00	0.00E+00	0.00E+00	0.00E+00	0.00E+00
3731	ALL	746429	4040019	4.62E-09	25YrCancer	4.62E-09	0.00E+00	0.00E+00	0.00E+00	0.00E+00	0.00E+00	0.00E+00	0.00E+00	0.00E+00	0.00E+00	0.00E+00	0.00E+00
3732	ALL	746479	4040019	4.66E-09	25YrCancer	4.66E-09	0.00E+00	0.00E+00	0.00E+00	0.00E+00	0.00E+00	0.00E+00	0.00E+00	0.00E+00	0.00E+00	0.00E+00	0.00E+00
3733	ALL	746529	4040019	4.69E-09	25YrCancer	4.69E-09	0.00E+00	0.00E+00	0.00E+00	0.00E+00	0.00E+00	0.00E+00	0.00E+00	0.00E+00	0.00E+00	0.00E+00	0.00E+00
3734	ALL	746566	4040066	4.79E-09	25YrCancer	4.79E-09	0.00E+00	0.00E+00	0.00E+00	0.00E+00	0.00E+00	0.00E+00	0.00E+00	0.00E+00	0.00E+00	0.00E+00	0.00E+00
3735	ALL	746576	4040066	4.80E-09	25YrCancer	4.80E-09	0.00E+00	0.00E+00	0.00E+00	0.00E+00	0.00E+00	0.00E+00	0.00E+00	0.00E+00	0.00E+00	0.00E+00	0.00E+00
3736	ALL	746586	4040066	4.81E-09	25YrCancer	4.81E-09	0.00E+00	0.00E+00	0.00E+00	0.00E+00	0.00E+00	0.00E+00	0.00E+00	0.00E+00	0.00E+00	0.00E+00	0.00E+00
3737	ALL	746596	4040066	4.82E-09	25YrCancer	4.82E-09	0.00E+00	0.00E+00	0.00E+00	0.00E+00	0.00E+00	0.00E+00	0.00E+00	0.00E+00	0.00E+00	0.00E+00	0.00E+00
3738	ALL	746606	4040066	4.83E-09	25YrCancer	4.83E-09	0.00E+00	0.00E+00	0.00E+00	0.00E+00	0.00E+00	0.00E+00	0.00E+00	0.00E+00	0.00E+00	0.00E+00	0.00E+00
3739	ALL	746616	4040066	4.84E-09	25YrCancer	4.84E-09	0.00E+00	0.00E+00	0.00E+00	0.00E+00	0.00E+00	0.00E+00	0.00E+00	0.00E+00	0.00E+00	0.00E+00	0.00E+00
3740	ALL	746566	4040076	4.81E-09	25YrCancer	4.81E-09	0.00E+00	0.00E+00	0.00E+00	0.00E+00	0.00E+00	0.00E+00	0.00E+00	0.00E+00	0.00E+00	0.00E+00	0.00E+00
3741	ALL	746576	4040076	4.82E-09	25YrCancer	4.82E-09	0.00E+00	0.00E+00	0.00E+00	0.00E+00	0.00E+00	0.00E+00	0.00E+00	0.00E+00	0.00E+00	0.00E+00	0.00E+00
3742	ALL	746586	4040076	4.83E-09	25YrCancer	4.83E-09	0.00E+00	0.00E+00	0.00E+00	0.00E+00	0.00E+00	0.00E+00	0.00E+00	0.00E+00	0.00E+00	0.00E+00	0.00E+00
3743	ALL	746596	4040076	4.84E-09	25YrCancer	4.84E-09	0.00E+00	0.00E+00	0.00E+00	0.00E+00	0.00E+00	0.00E+00	0.00E+00	0.00E+00	0.00E+00	0.00E+00	0.00E+00
3744	ALL	746606	4040076	4.84E-09	25YrCancer	4.84E-09	0.00E+00	0.00E+00	0.00E+00	0.00E+00	0.00E+00	0.00E+00	0.00E+00	0.00E+00	0.00E+00	0.00E+00	0.00E+00
3745	ALL	746616	4040076	4.85E-09	25YrCancer	4.85E-09	0.00E+00	0.00E+00	0.00E+00	0.00E+00	0.00E+00	0.00E+00	0.00E+00	0.00E+00	0.00E+00	0.00E+00	0.00E+00
3746	ALL	746566	4040086	4.82E-09	25YrCancer	4.82E-09	0.00E+00	0.00E+00	0.00E+00	0.00E+00	0.00E+00	0.00E+00	0.00E+00	0.00E+00	0.00E+00	0.00E+00	0.00E+00
3747	ALL	746576	4040086	4.83E-09	25YrCancer	4.83E-09	0.00E+00	0.00E+00	0.00E+00	0.00E+00	0.00E+00	0.00E+00	0.00E+00	0.00E+00	0.00E+00	0.00E+00	0.00E+00
3748	ALL	746586	4040086	4.84E-09	25YrCancer	4.84E-09	0.00E+00	0.00E+00	0.00E+00	0.00E+00	0.00E+00	0.00E+00	0.00E+00	0.00E+00	0.00E+00	0.00E+00	0.00E+00
3749	ALL	746596	4040086	4.85E-09	25YrCancer	4.85E-09	0.00E+00	0.00E+00	0.00E+00	0.00E+00	0.00E+00	0.00E+00	0.00E+00	0.00E+00	0.00E+00	0.00E+00	0.00E+00
3750	ALL	746606	4040086	4.86E-09	25YrCancer	4.86E-09	0.00E+00	0.00E+00	0.00E+00	0.00E+00	0.00E+00	0.00E+00	0.00E+00	0.00E+00	0.00E+00	0.00E+00	0.00E+00
3751	ALL	746616	4040086	4.87E-09	25YrCancer	4.87E-09	0.00E+00	0.00E+00	0.00E+00	0.00E+00	0.00E+00	0.00E+00	0.00E+00	0.00E+00	0.00E+00	0.00E+00	0.00E+00
3752	ALL	746566	4040096	4.84E-09	25YrCancer	4.84E-09	0.00E+00	0.00E+00	0.00E+00	0.00E+00	0.00E+00	0.00E+00	0.00E+00	0.00E+00	0.00E+00	0.00E+00	0.00E+00
3753	ALL	746576	4040096	4.85E-09	25YrCancer	4.85E-09	0.00E+00	0.00E+00	0.00E+00	0.00E+00	0.00E+00	0.00E+00	0.00E+00	0.00E+00	0.00E+00	0.00E+00	0.00E+00
3754	ALL	746586	4040096	4.86E-09	25YrCancer	4.86E-09	0.00E+00	0.00E+00	0.00E+00	0.00E+00	0.00E+00	0.00E+00	0.00E+00	0.00E+00	0.00E+00	0.00E+00	0.00E+00
3755	ALL	746596	4040096	4.87E-09	25YrCancer	4.87E-09	0.00E+00	0.00E+00	0.00E+00	0.00E+00	0.00E+00	0.00E+00	0.00E+00	0.00E+00	0.00E+00	0.00E+00	0.00E+00
3756	ALL	746606	4040096	4.88E-09	25YrCancer	4.88E-09	0.00E+00	0.00E+00	0.00E+00	0.00E+00	0.00E+00	0.00E+00	0.00E+00	0.00E+00	0.00E+00	0.00E+00	0.00E+00
3757	ALL	746616	4040096	4.89E-09	25YrCancer	4.89E-09	0.00E+00	0.00E+00	0.00E+00	0.00E+00	0.00E+00	0.00E+00	0.00E+00	0.00E+00	0.00E+00	0.00E+00	0.00E+00
3758	ALL	746566	4040106	4.86E-09	25YrCancer	4.86E-09	0.00E+00	0.00E+00	0.00E+00	0.00E+00	0.00E+00	0.00E+00	0.00E+00	0.00E+00	0.00E+00	0.00E+00	0.00E+00
3759	ALL	746576	4040106	4.87E-09	25YrCancer	4.87E-09	0.00E+00	0.00E+00	0.00E+00	0.00E+00	0.00E+00	0.00E+00	0.00E+00	0.00E+00	0.00E+00	0.00E+00	0.00E+00
3760	ALL	746586	4040106	4.88E-09	25YrCancer	4.88E-09	0.00E+00	0.00E+00	0.00E+00	0.00E+00	0.00E+00	0.00E+00	0.00E+00	0.00E+00	0.00E+00	0.00E+00	0.00E+00
3761	ALL	746596	4040106	4.89E-09	25YrCancer	4.89E-09	0.00E+00	0.00E+00	0.00E+00	0.00E+00	0.00E+00	0.00E+00	0.00E+00	0.00E+00	0.00E+00	0.00E+00	0.00E+00
3762	ALL	746606	4040106	4.90E-09	25YrCancer	4.90E-09	0.00E+00	0.00E+00	0.00E+00	0.00E+00	0.00E+00	0.00E+00	0.00E+00	0.00E+00	0.00E+00	0.00E+00	0.00E+00
3763	ALL	746616	4040106	4.91E-09	25YrCancer	4.91E-09	0.00E+00	0.00E+00	0.00E+00	0.00E+00	0.00E+00	0.00E+00	0.00E+00	0.00E+00	0.00E+00	0.00E+00	0.00E+00
3764	ALL	746566	4040116	4.88E-09	25YrCancer	4.88E-09	0.00E+00	0.00E+00	0.00E+00	0.00E+00	0.00E+00	0.00E+00	0.00E+00	0.00E+00	0.00E+00	0.00E+00	0.00E+00
3765	ALL	746576	4040116	4.89E-09	25YrCancer	4.89E-09	0.00E+00	0.00E+00	0.00E+00	0.00E+00	0.00E+00	0.00E+00	0.00E+00	0.00E+00	0.00E+00	0.00E+00	0.00E+00
3766	ALL	746586	4040116	4.90E-09	25YrCancer	4.90E-09	0.00E+00	0.00E+00	0.00E+00	0.00E+00	0.00E+00	0.00E+00	0.00E+00	0.00E+00	0.00E+00	0.00E+00	0.00E+00
3767	ALL	746596	4040116	4.91E-09	25YrCancer	4.91E-09	0.00E+00	0.00E+00	0.00E+00	0.00E+00	0.00E+00	0.00E+00	0.00E+00	0.00E+00	0.00E+00	0.00E+00	0.00E+00
3768	ALL	746606	4040116	4.92E-09	25YrCancer	4.92E-09	0.00E+00	0.00E+00	0.00E+00	0.00E+00	0.00E+00	0.00E+00	0.00E+00	0.00E+00	0.00E+00	0.00E+00	0.00E+00
3769	ALL	746616	4040116	4.93E-09	25YrCancer	4.93E-09	0.00E+00	0.00E+00	0.00E+00	0.00E+00	0.00E+00	0.00E+00	0.00E+00	0.00E+00	0.00E+00	0.00E+00	0.00E+00
3770	ALL	746566	4040126	4.90E-09	25YrCancer	4.90E-09	0.00E+00	0.00E+00	0.00E+00	0.00E+00	0.00E+00	0.00E+00	0.00E+00	0.00E+00	0.00E+00	0.00E+00	0.00E+00
3771	ALL	746576	4040126	4.91E-09	25YrCancer	4.91E-09	0.00E+00	0.00E+00	0.00E+00	0.00E+00	0.00E+00	0.00E+00	0.00E+00	0.00E+00	0.00E+00	0.00E+00	0.00E+00
3772	ALL	746586	4040126	4.92E-09	25YrCancer	4.92E-09	0.00E+00	0.00E+00	0.00E+00	0.00E+00	0.00E+00	0.00E+00	0.00E+00	0.00E+00	0.00E+00	0.00E+00	0.00E+00

3773	ALL	746596	4040126	4.93E-09	25YrCancer	4.93E-09	0.00E+00	0.00E+00	0.00E+00	0.00E+00	0.00E+00	0.00E+00	0.00E+00	0.00E+00	0.00E+00	0.00E+00	0.00E+00
3774	ALL	746606	4040126	4.94E-09	25YrCancer	4.94E-09	0.00E+00	0.00E+00	0.00E+00	0.00E+00	0.00E+00	0.00E+00	0.00E+00	0.00E+00	0.00E+00	0.00E+00	0.00E+00
3775	ALL	746616	4040126	4.95E-09	25YrCancer	4.95E-09	0.00E+00	0.00E+00	0.00E+00	0.00E+00	0.00E+00	0.00E+00	0.00E+00	0.00E+00	0.00E+00	0.00E+00	0.00E+00
3776	ALL	746566	4040136	4.92E-09	25YrCancer	4.92E-09	0.00E+00	0.00E+00	0.00E+00	0.00E+00	0.00E+00	0.00E+00	0.00E+00	0.00E+00	0.00E+00	0.00E+00	0.00E+00
3777	ALL	746576	4040136	4.93E-09	25YrCancer	4.93E-09	0.00E+00	0.00E+00	0.00E+00	0.00E+00	0.00E+00	0.00E+00	0.00E+00	0.00E+00	0.00E+00	0.00E+00	0.00E+00
3778	ALL	746586	4040136	4.94E-09	25YrCancer	4.94E-09	0.00E+00	0.00E+00	0.00E+00	0.00E+00	0.00E+00	0.00E+00	0.00E+00	0.00E+00	0.00E+00	0.00E+00	0.00E+00
3779	ALL	746596	4040136	4.95E-09	25YrCancer	4.95E-09	0.00E+00	0.00E+00	0.00E+00	0.00E+00	0.00E+00	0.00E+00	0.00E+00	0.00E+00	0.00E+00	0.00E+00	0.00E+00
3780	ALL	746606	4040136	4.96E-09	25YrCancer	4.96E-09	0.00E+00	0.00E+00	0.00E+00	0.00E+00	0.00E+00	0.00E+00	0.00E+00	0.00E+00	0.00E+00	0.00E+00	0.00E+00
3781	ALL	746616	4040136	4.97E-09	25YrCancer	4.97E-09	0.00E+00	0.00E+00	0.00E+00	0.00E+00	0.00E+00	0.00E+00	0.00E+00	0.00E+00	0.00E+00	0.00E+00	0.00E+00
3782	ALL	746566	4040146	4.94E-09	25YrCancer	4.94E-09	0.00E+00	0.00E+00	0.00E+00	0.00E+00	0.00E+00	0.00E+00	0.00E+00	0.00E+00	0.00E+00	0.00E+00	0.00E+00
3783	ALL	746576	4040146	4.95E-09	25YrCancer	4.95E-09	0.00E+00	0.00E+00	0.00E+00	0.00E+00	0.00E+00	0.00E+00	0.00E+00	0.00E+00	0.00E+00	0.00E+00	0.00E+00
3784	ALL	746586	4040146	4.96E-09	25YrCancer	4.96E-09	0.00E+00	0.00E+00	0.00E+00	0.00E+00	0.00E+00	0.00E+00	0.00E+00	0.00E+00	0.00E+00	0.00E+00	0.00E+00
3785	ALL	746596	4040146	4.97E-09	25YrCancer	4.97E-09	0.00E+00	0.00E+00	0.00E+00	0.00E+00	0.00E+00	0.00E+00	0.00E+00	0.00E+00	0.00E+00	0.00E+00	0.00E+00
3786	ALL	746606	4040146	4.98E-09	25YrCancer	4.98E-09	0.00E+00	0.00E+00	0.00E+00	0.00E+00	0.00E+00	0.00E+00	0.00E+00	0.00E+00	0.00E+00	0.00E+00	0.00E+00
3787	ALL	746616	4040146	4.99E-09	25YrCancer	4.99E-09	0.00E+00	0.00E+00	0.00E+00	0.00E+00	0.00E+00	0.00E+00	0.00E+00	0.00E+00	0.00E+00	0.00E+00	0.00E+00
3788	ALL	746566	4040156	4.96E-09	25YrCancer	4.96E-09	0.00E+00	0.00E+00	0.00E+00	0.00E+00	0.00E+00	0.00E+00	0.00E+00	0.00E+00	0.00E+00	0.00E+00	0.00E+00
3789	ALL	746576	4040156	4.97E-09	25YrCancer	4.97E-09	0.00E+00	0.00E+00	0.00E+00	0.00E+00	0.00E+00	0.00E+00	0.00E+00	0.00E+00	0.00E+00	0.00E+00	0.00E+00
3790	ALL	746586	4040156	4.98E-09	25YrCancer	4.98E-09	0.00E+00	0.00E+00	0.00E+00	0.00E+00	0.00E+00	0.00E+00	0.00E+00	0.00E+00	0.00E+00	0.00E+00	0.00E+00
3791	ALL	746596	4040156	4.99E-09	25YrCancer	4.99E-09	0.00E+00	0.00E+00	0.00E+00	0.00E+00	0.00E+00	0.00E+00	0.00E+00	0.00E+00	0.00E+00	0.00E+00	0.00E+00
3792	ALL	746606	4040156	5.00E-09	25YrCancer	5.00E-09	0.00E+00	0.00E+00	0.00E+00	0.00E+00	0.00E+00	0.00E+00	0.00E+00	0.00E+00	0.00E+00	0.00E+00	0.00E+00
3793	ALL	746616	4040156	5.01E-09	25YrCancer	5.01E-09	0.00E+00	0.00E+00	0.00E+00	0.00E+00	0.00E+00	0.00E+00	0.00E+00	0.00E+00	0.00E+00	0.00E+00	0.00E+00
3794	ALL	746566	4040166	4.98E-09	25YrCancer	4.98E-09	0.00E+00	0.00E+00	0.00E+00	0.00E+00	0.00E+00	0.00E+00	0.00E+00	0.00E+00	0.00E+00	0.00E+00	0.00E+00
3795	ALL	746576	4040166	4.99E-09	25YrCancer	4.99E-09	0.00E+00	0.00E+00	0.00E+00	0.00E+00	0.00E+00	0.00E+00	0.00E+00	0.00E+00	0.00E+00	0.00E+00	0.00E+00
3796	ALL	746586	4040166	5.00E-09	25YrCancer	5.00E-09	0.00E+00	0.00E+00	0.00E+00	0.00E+00	0.00E+00	0.00E+00	0.00E+00	0.00E+00	0.00E+00	0.00E+00	0.00E+00
3797	ALL	746596	4040166	5.01E-09	25YrCancer	5.01E-09	0.00E+00	0.00E+00	0.00E+00	0.00E+00	0.00E+00	0.00E+00	0.00E+00	0.00E+00	0.00E+00	0.00E+00	0.00E+00
3798	ALL	746606	4040166	5.03E-09	25YrCancer	5.03E-09	0.00E+00	0.00E+00	0.00E+00	0.00E+00	0.00E+00	0.00E+00	0.00E+00	0.00E+00	0.00E+00	0.00E+00	0.00E+00
3799	ALL	746616	4040166	5.04E-09	25YrCancer	5.04E-09	0.00E+00	0.00E+00	0.00E+00	0.00E+00	0.00E+00	0.00E+00	0.00E+00	0.00E+00	0.00E+00	0.00E+00	0.00E+00
3800	ALL	746559.72	4040315.67	5.26E-09	25YrCancer	5.26E-09	0.00E+00	0.00E+00	0.00E+00	0.00E+00	0.00E+00	0.00E+00	0.00E+00	0.00E+00	0.00E+00	0.00E+00	0.00E+00
3801	ALL	746569.72	4040315.67	5.28E-09	25YrCancer	5.28E-09	0.00E+00	0.00E+00	0.00E+00	0.00E+00	0.00E+00	0.00E+00	0.00E+00	0.00E+00	0.00E+00	0.00E+00	0.00E+00
3802	ALL	746579.72	4040315.67	5.30E-09	25YrCancer	5.30E-09	0.00E+00	0.00E+00	0.00E+00	0.00E+00	0.00E+00	0.00E+00	0.00E+00	0.00E+00	0.00E+00	0.00E+00	0.00E+00
3803	ALL	746589.72	4040315.67	5.31E-09	25YrCancer	5.31E-09	0.00E+00	0.00E+00	0.00E+00	0.00E+00	0.00E+00	0.00E+00	0.00E+00	0.00E+00	0.00E+00	0.00E+00	0.00E+00
3804	ALL	746599.72	4040315.67	5.33E-09	25YrCancer	5.33E-09	0.00E+00	0.00E+00	0.00E+00	0.00E+00	0.00E+00	0.00E+00	0.00E+00	0.00E+00	0.00E+00	0.00E+00	0.00E+00
3805	ALL	746609.72	4040315.67	5.34E-09	25YrCancer	5.34E-09	0.00E+00	0.00E+00	0.00E+00	0.00E+00	0.00E+00	0.00E+00	0.00E+00	0.00E+00	0.00E+00	0.00E+00	0.00E+00
3806	ALL	746619.72	4040315.67	5.36E-09	25YrCancer	5.36E-09	0.00E+00	0.00E+00	0.00E+00	0.00E+00	0.00E+00	0.00E+00	0.00E+00	0.00E+00	0.00E+00	0.00E+00	0.00E+00
3807	ALL	746559.72	4040325.67	5.28E-09	25YrCancer	5.28E-09	0.00E+00	0.00E+00	0.00E+00	0.00E+00	0.00E+00	0.00E+00	0.00E+00	0.00E+00	0.00E+00	0.00E+00	0.00E+00
3808	ALL	746569.72	4040325.67	5.30E-09	25YrCancer	5.30E-09	0.00E+00	0.00E+00	0.00E+00	0.00E+00	0.00E+00	0.00E+00	0.00E+00	0.00E+00	0.00E+00	0.00E+00	0.00E+00
3809	ALL	746579.72	4040325.67	5.32E-09	25YrCancer	5.32E-09	0.00E+00	0.00E+00	0.00E+00	0.00E+00	0.00E+00	0.00E+00	0.00E+00	0.00E+00	0.00E+00	0.00E+00	0.00E+00
3810	ALL	746589.72	4040325.67	5.34E-09	25YrCancer	5.34E-09	0.00E+00	0.00E+00	0.00E+00	0.00E+00	0.00E+00	0.00E+00	0.00E+00	0.00E+00	0.00E+00	0.00E+00	0.00E+00
3811	ALL	746599.72	4040325.67	5.35E-09	25YrCancer	5.35E-09	0.00E+00	0.00E+00	0.00E+00	0.00E+00	0.00E+00	0.00E+00	0.00E+00	0.00E+00	0.00E+00	0.00E+00	0.00E+00
3812	ALL	746609.72	4040325.67	5.36E-09	25YrCancer	5.36E-09	0.00E+00	0.00E+00	0.00E+00	0.00E+00	0.00E+00	0.00E+00	0.00E+00	0.00E+00	0.00E+00	0.00E+00	0.00E+00
3813	ALL	746619.72	4040325.67	5.38E-09	25YrCancer	5.38E-09	0.00E+00	0.00E+00	0.00E+00	0.00E+00	0.00E+00	0.00E+00	0.00E+00	0.00E+00	0.00E+00	0.00E+00	0.00E+00
3814	ALL	746559.72	4040335.67	5.29E-09	25YrCancer	5.29E-09	0.00E+00	0.00E+00	0.00E+00	0.00E+00	0.00E+00	0.00E+00	0.00E+00	0.00E+00	0.00E+00	0.00E+00	0.00E+00
3815	ALL	746569.72	4040335.67	5.32E-09	25YrCancer	5.32E-09	0.00E+00	0.00E+00	0.00E+00	0.00E+00	0.00E+00	0.00E+00	0.00E+00	0.00E+00	0.00E+00	0.00E+00	0.00E+00
3816	ALL	746579.72	4040335.67	5.34E-09	25YrCancer	5.34E-09	0.00E+00	0.00E+00	0.00E+00	0.00E+00	0.00E+00	0.00E+00	0.00E+00	0.00E+00	0.00E+00	0.00E+00	0.00E+00
3817	ALL	746589.72	4040335.67	5.35E-09	25YrCancer	5.35E-09	0.00E+00	0.00E+00	0.00E+00	0.00E+00	0.00E+00	0.00E+00	0.00E+00	0.00E+00	0.00E+00	0.00E+00	0.00E+00
3818	ALL	746599.72	4040335.67	5.37E-09	25YrCancer	5.37E-09	0.00E+00	0.00E+00	0.00E+00	0.00E+00	0.00E+00	0.00E+00	0.00E+00	0.00E+00	0.00E+00	0.00E+00	0.00E+00
3819	ALL	746609.72	4040335.67	5.38E-09	25YrCancer	5.38E-09	0.00E+00	0.00E+00	0.00E+00	0.00E+00	0.00E+00	0.00E+00	0.00E+00	0.00E+00	0.00E+00	0.00E+00	0.00E+00
3820	ALL	746619.72	4040335.67	5.40E-09	25YrCancer	5.40E-09	0.00E+00	0.00E+00	0.00E+00	0.00E+00	0.00E+00	0.00E+00	0.00E+00	0.00E+00	0.00E+00	0.00E+00	0.00E+00
3821	ALL	746559.72	4040345.67	5.31E-09	25YrCancer	5.31E-09	0.00E+00	0.00E+00	0.00E+00	0.00E+00	0.00E+00	0.00E+00	0.00E+00	0.00E+00	0.00E+00	0.00E+00	0.00E+00
3822	ALL	746569.72	4040345.67	5.33E-09	25YrCancer	5.33E-09	0.00E+00	0.00E+00	0.00E+00	0.00E+00	0.00E+00	0.00E+00	0.00E+00	0.00E+00	0.00E+00	0.00E+00	0.00E+00
3823	ALL	746579.72	4040345.67	5.35E-09	25YrCancer	5.35E-09	0.00E+00	0.00E+00	0.00E+00	0.00E+00	0.00E+00	0.00E+00	0.00E+00	0.00E+00	0.00E+00	0.00E+00	0.00E+00

3824	ALL	746589.72	4040345.67	5.37E-09	25YrCancer	5.37E-09	0.00E+00	0.00E+00	0.00E+00	0.00E+00	0.00E+00	0.00E+00	0.00E+00	0.00E+00	0.00E+00	0.00E+00	0.00E+00
3825	ALL	746599.72	4040345.67	5.38E-09	25YrCancer	5.38E-09	0.00E+00	0.00E+00	0.00E+00	0.00E+00	0.00E+00	0.00E+00	0.00E+00	0.00E+00	0.00E+00	0.00E+00	0.00E+00
3826	ALL	746609.72	4040345.67	5.40E-09	25YrCancer	5.40E-09	0.00E+00	0.00E+00	0.00E+00	0.00E+00	0.00E+00	0.00E+00	0.00E+00	0.00E+00	0.00E+00	0.00E+00	0.00E+00
3827	ALL	746619.72	4040345.67	5.41E-09	25YrCancer	5.41E-09	0.00E+00	0.00E+00	0.00E+00	0.00E+00	0.00E+00	0.00E+00	0.00E+00	0.00E+00	0.00E+00	0.00E+00	0.00E+00
3828	ALL	746559.72	4040355.67	5.33E-09	25YrCancer	5.33E-09	0.00E+00	0.00E+00	0.00E+00	0.00E+00	0.00E+00	0.00E+00	0.00E+00	0.00E+00	0.00E+00	0.00E+00	0.00E+00
3829	ALL	746569.72	4040355.67	5.35E-09	25YrCancer	5.35E-09	0.00E+00	0.00E+00	0.00E+00	0.00E+00	0.00E+00	0.00E+00	0.00E+00	0.00E+00	0.00E+00	0.00E+00	0.00E+00
3830	ALL	746579.72	4040355.67	5.37E-09	25YrCancer	5.37E-09	0.00E+00	0.00E+00	0.00E+00	0.00E+00	0.00E+00	0.00E+00	0.00E+00	0.00E+00	0.00E+00	0.00E+00	0.00E+00
3831	ALL	746589.72	4040355.67	5.39E-09	25YrCancer	5.39E-09	0.00E+00	0.00E+00	0.00E+00	0.00E+00	0.00E+00	0.00E+00	0.00E+00	0.00E+00	0.00E+00	0.00E+00	0.00E+00
3832	ALL	746599.72	4040355.67	5.40E-09	25YrCancer	5.40E-09	0.00E+00	0.00E+00	0.00E+00	0.00E+00	0.00E+00	0.00E+00	0.00E+00	0.00E+00	0.00E+00	0.00E+00	0.00E+00
3833	ALL	746609.72	4040355.67	5.42E-09	25YrCancer	5.42E-09	0.00E+00	0.00E+00	0.00E+00	0.00E+00	0.00E+00	0.00E+00	0.00E+00	0.00E+00	0.00E+00	0.00E+00	0.00E+00
3834	ALL	746619.72	4040355.67	5.43E-09	25YrCancer	5.43E-09	0.00E+00	0.00E+00	0.00E+00	0.00E+00	0.00E+00	0.00E+00	0.00E+00	0.00E+00	0.00E+00	0.00E+00	0.00E+00
3835	ALL	746554	4040469	5.47E-09	25YrCancer	5.47E-09	0.00E+00	0.00E+00	0.00E+00	0.00E+00	0.00E+00	0.00E+00	0.00E+00	0.00E+00	0.00E+00	0.00E+00	0.00E+00
3836	ALL	746564	4040469	5.49E-09	25YrCancer	5.49E-09	0.00E+00	0.00E+00	0.00E+00	0.00E+00	0.00E+00	0.00E+00	0.00E+00	0.00E+00	0.00E+00	0.00E+00	0.00E+00
3837	ALL	746574	4040469	5.51E-09	25YrCancer	5.51E-09	0.00E+00	0.00E+00	0.00E+00	0.00E+00	0.00E+00	0.00E+00	0.00E+00	0.00E+00	0.00E+00	0.00E+00	0.00E+00
3838	ALL	746584	4040469	5.53E-09	25YrCancer	5.53E-09	0.00E+00	0.00E+00	0.00E+00	0.00E+00	0.00E+00	0.00E+00	0.00E+00	0.00E+00	0.00E+00	0.00E+00	0.00E+00
3839	ALL	746594	4040469	5.55E-09	25YrCancer	5.55E-09	0.00E+00	0.00E+00	0.00E+00	0.00E+00	0.00E+00	0.00E+00	0.00E+00	0.00E+00	0.00E+00	0.00E+00	0.00E+00
3840	ALL	746604	4040469	5.57E-09	25YrCancer	5.57E-09	0.00E+00	0.00E+00	0.00E+00	0.00E+00	0.00E+00	0.00E+00	0.00E+00	0.00E+00	0.00E+00	0.00E+00	0.00E+00
3841	ALL	746614	4040469	5.58E-09	25YrCancer	5.58E-09	0.00E+00	0.00E+00	0.00E+00	0.00E+00	0.00E+00	0.00E+00	0.00E+00	0.00E+00	0.00E+00	0.00E+00	0.00E+00
3842	ALL	746624	4040469	5.60E-09	25YrCancer	5.60E-09	0.00E+00	0.00E+00	0.00E+00	0.00E+00	0.00E+00	0.00E+00	0.00E+00	0.00E+00	0.00E+00	0.00E+00	0.00E+00
3843	ALL	746634	4040469	5.62E-09	25YrCancer	5.62E-09	0.00E+00	0.00E+00	0.00E+00	0.00E+00	0.00E+00	0.00E+00	0.00E+00	0.00E+00	0.00E+00	0.00E+00	0.00E+00
3844	ALL	746554	4040479	5.48E-09	25YrCancer	5.48E-09	0.00E+00	0.00E+00	0.00E+00	0.00E+00	0.00E+00	0.00E+00	0.00E+00	0.00E+00	0.00E+00	0.00E+00	0.00E+00
3845	ALL	746564	4040479	5.51E-09	25YrCancer	5.51E-09	0.00E+00	0.00E+00	0.00E+00	0.00E+00	0.00E+00	0.00E+00	0.00E+00	0.00E+00	0.00E+00	0.00E+00	0.00E+00
3846	ALL	746574	4040479	5.53E-09	25YrCancer	5.53E-09	0.00E+00	0.00E+00	0.00E+00	0.00E+00	0.00E+00	0.00E+00	0.00E+00	0.00E+00	0.00E+00	0.00E+00	0.00E+00
3847	ALL	746584	4040479	5.55E-09	25YrCancer	5.55E-09	0.00E+00	0.00E+00	0.00E+00	0.00E+00	0.00E+00	0.00E+00	0.00E+00	0.00E+00	0.00E+00	0.00E+00	0.00E+00
3848	ALL	746594	4040479	5.56E-09	25YrCancer	5.56E-09	0.00E+00	0.00E+00	0.00E+00	0.00E+00	0.00E+00	0.00E+00	0.00E+00	0.00E+00	0.00E+00	0.00E+00	0.00E+00
3849	ALL	746604	4040479	5.58E-09	25YrCancer	5.58E-09	0.00E+00	0.00E+00	0.00E+00	0.00E+00	0.00E+00	0.00E+00	0.00E+00	0.00E+00	0.00E+00	0.00E+00	0.00E+00
3850	ALL	746614	4040479	5.59E-09	25YrCancer	5.59E-09	0.00E+00	0.00E+00	0.00E+00	0.00E+00	0.00E+00	0.00E+00	0.00E+00	0.00E+00	0.00E+00	0.00E+00	0.00E+00
3851	ALL	746624	4040479	5.62E-09	25YrCancer	5.62E-09	0.00E+00	0.00E+00	0.00E+00	0.00E+00	0.00E+00	0.00E+00	0.00E+00	0.00E+00	0.00E+00	0.00E+00	0.00E+00
3852	ALL	746634	4040479	5.64E-09	25YrCancer	5.64E-09	0.00E+00	0.00E+00	0.00E+00	0.00E+00	0.00E+00	0.00E+00	0.00E+00	0.00E+00	0.00E+00	0.00E+00	0.00E+00
3853	ALL	746554	4040489	5.49E-09	25YrCancer	5.49E-09	0.00E+00	0.00E+00	0.00E+00	0.00E+00	0.00E+00	0.00E+00	0.00E+00	0.00E+00	0.00E+00	0.00E+00	0.00E+00
3854	ALL	746564	4040489	5.52E-09	25YrCancer	5.52E-09	0.00E+00	0.00E+00	0.00E+00	0.00E+00	0.00E+00	0.00E+00	0.00E+00	0.00E+00	0.00E+00	0.00E+00	0.00E+00
3855	ALL	746574	4040489	5.54E-09	25YrCancer	5.54E-09	0.00E+00	0.00E+00	0.00E+00	0.00E+00	0.00E+00	0.00E+00	0.00E+00	0.00E+00	0.00E+00	0.00E+00	0.00E+00
3856	ALL	746584	4040489	5.56E-09	25YrCancer	5.56E-09	0.00E+00	0.00E+00	0.00E+00	0.00E+00	0.00E+00	0.00E+00	0.00E+00	0.00E+00	0.00E+00	0.00E+00	0.00E+00
3857	ALL	746594	4040489	5.58E-09	25YrCancer	5.58E-09	0.00E+00	0.00E+00	0.00E+00	0.00E+00	0.00E+00	0.00E+00	0.00E+00	0.00E+00	0.00E+00	0.00E+00	0.00E+00
3858	ALL	746604	4040489	5.59E-09	25YrCancer	5.59E-09	0.00E+00	0.00E+00	0.00E+00	0.00E+00	0.00E+00	0.00E+00	0.00E+00	0.00E+00	0.00E+00	0.00E+00	0.00E+00
3859	ALL	746614	4040489	5.61E-09	25YrCancer	5.61E-09	0.00E+00	0.00E+00	0.00E+00	0.00E+00	0.00E+00	0.00E+00	0.00E+00	0.00E+00	0.00E+00	0.00E+00	0.00E+00
3860	ALL	746624	4040489	5.63E-09	25YrCancer	5.63E-09	0.00E+00	0.00E+00	0.00E+00	0.00E+00	0.00E+00	0.00E+00	0.00E+00	0.00E+00	0.00E+00	0.00E+00	0.00E+00
3861	ALL	746634	4040489	5.65E-09	25YrCancer	5.65E-09	0.00E+00	0.00E+00	0.00E+00	0.00E+00	0.00E+00	0.00E+00	0.00E+00	0.00E+00	0.00E+00	0.00E+00	0.00E+00
3862	ALL	746554	4040499	5.50E-09	25YrCancer	5.50E-09	0.00E+00	0.00E+00	0.00E+00	0.00E+00	0.00E+00	0.00E+00	0.00E+00	0.00E+00	0.00E+00	0.00E+00	0.00E+00
3863	ALL	746564	4040499	5.53E-09	25YrCancer	5.53E-09	0.00E+00	0.00E+00	0.00E+00	0.00E+00	0.00E+00	0.00E+00	0.00E+00	0.00E+00	0.00E+00	0.00E+00	0.00E+00
3864	ALL	746574	4040499	5.55E-09	25YrCancer	5.55E-09	0.00E+00	0.00E+00	0.00E+00	0.00E+00	0.00E+00	0.00E+00	0.00E+00	0.00E+00	0.00E+00	0.00E+00	0.00E+00
3865	ALL	746584	4040499	5.57E-09	25YrCancer	5.57E-09	0.00E+00	0.00E+00	0.00E+00	0.00E+00	0.00E+00	0.00E+00	0.00E+00	0.00E+00	0.00E+00	0.00E+00	0.00E+00
3866	ALL	746594	4040499	5.59E-09	25YrCancer	5.59E-09	0.00E+00	0.00E+00	0.00E+00	0.00E+00	0.00E+00	0.00E+00	0.00E+00	0.00E+00	0.00E+00	0.00E+00	0.00E+00
3867	ALL	746604	4040499	5.61E-09	25YrCancer	5.61E-09	0.00E+00	0.00E+00	0.00E+00	0.00E+00	0.00E+00	0.00E+00	0.00E+00	0.00E+00	0.00E+00	0.00E+00	0.00E+00
3868	ALL	746614	4040499	5.62E-09	25YrCancer	5.62E-09	0.00E+00	0.00E+00	0.00E+00	0.00E+00	0.00E+00	0.00E+00	0.00E+00	0.00E+00	0.00E+00	0.00E+00	0.00E+00
3869	ALL	746624	4040499	5.64E-09	25YrCancer	5.64E-09	0.00E+00	0.00E+00	0.00E+00	0.00E+00	0.00E+00	0.00E+00	0.00E+00	0.00E+00	0.00E+00	0.00E+00	0.00E+00
3870	ALL	746634	4040499	5.66E-09	25YrCancer	5.66E-09	0.00E+00	0.00E+00	0.00E+00	0.00E+00	0.00E+00	0.00E+00	0.00E+00	0.00E+00	0.00E+00	0.00E+00	0.00E+00
3871	ALL	746554	4040509	5.51E-09	25YrCancer	5.51E-09	0.00E+00	0.00E+00	0.00E+00	0.00E+00	0.00E+00	0.00E+00	0.00E+00	0.00E+00	0.00E+00	0.00E+00	0.00E+00
3872	ALL	746564	4040509	5.54E-09	25YrCancer	5.54E-09	0.00E+00	0.00E+00	0.00E+00	0.00E+00	0.00E+00	0.00E+00	0.00E+00	0.00E+00	0.00E+00	0.00E+00	0.00E+00
3873	ALL	746574	4040509	5.57E-09	25YrCancer	5.57E-09	0.00E+00	0.00E+00	0.00E+00	0.00E+00	0.00E+00	0.00E+00	0.00E+00	0.00E+00	0.00E+00	0.00E+00	0.00E+00
3874	ALL	746584	4040509	5.59E-09	25YrCancer	5.59E-09	0.00E+00	0.00E+00	0.00E+00	0.00E+00	0.00E+00	0.00E+00	0.00E+00	0.00E+00	0.00E+00	0.00E+00	0.00E+00

3875	ALL	746594	4040509	5.60E-09	25YrCancer	5.60E-09	0.00E+00	0.00E+00	0.00E+00	0.00E+00	0.00E+00	0.00E+00	0.00E+00	0.00E+00	0.00E+00	0.00E+00	0.00E+00
3876	ALL	746604	4040509	5.62E-09	25YrCancer	5.62E-09	0.00E+00	0.00E+00	0.00E+00	0.00E+00	0.00E+00	0.00E+00	0.00E+00	0.00E+00	0.00E+00	0.00E+00	0.00E+00
3877	ALL	746614	4040509	5.63E-09	25YrCancer	5.63E-09	0.00E+00	0.00E+00	0.00E+00	0.00E+00	0.00E+00	0.00E+00	0.00E+00	0.00E+00	0.00E+00	0.00E+00	0.00E+00
3878	ALL	746624	4040509	5.65E-09	25YrCancer	5.65E-09	0.00E+00	0.00E+00	0.00E+00	0.00E+00	0.00E+00	0.00E+00	0.00E+00	0.00E+00	0.00E+00	0.00E+00	0.00E+00
3879	ALL	746634	4040509	5.67E-09	25YrCancer	5.67E-09	0.00E+00	0.00E+00	0.00E+00	0.00E+00	0.00E+00	0.00E+00	0.00E+00	0.00E+00	0.00E+00	0.00E+00	0.00E+00
3880	ALL	746554	4040519	5.52E-09	25YrCancer	5.52E-09	0.00E+00	0.00E+00	0.00E+00	0.00E+00	0.00E+00	0.00E+00	0.00E+00	0.00E+00	0.00E+00	0.00E+00	0.00E+00
3881	ALL	746564	4040519	5.55E-09	25YrCancer	5.55E-09	0.00E+00	0.00E+00	0.00E+00	0.00E+00	0.00E+00	0.00E+00	0.00E+00	0.00E+00	0.00E+00	0.00E+00	0.00E+00
3882	ALL	746574	4040519	5.58E-09	25YrCancer	5.58E-09	0.00E+00	0.00E+00	0.00E+00	0.00E+00	0.00E+00	0.00E+00	0.00E+00	0.00E+00	0.00E+00	0.00E+00	0.00E+00
3883	ALL	746584	4040519	5.60E-09	25YrCancer	5.60E-09	0.00E+00	0.00E+00	0.00E+00	0.00E+00	0.00E+00	0.00E+00	0.00E+00	0.00E+00	0.00E+00	0.00E+00	0.00E+00
3884	ALL	746594	4040519	5.61E-09	25YrCancer	5.61E-09	0.00E+00	0.00E+00	0.00E+00	0.00E+00	0.00E+00	0.00E+00	0.00E+00	0.00E+00	0.00E+00	0.00E+00	0.00E+00
3885	ALL	746604	4040519	5.63E-09	25YrCancer	5.63E-09	0.00E+00	0.00E+00	0.00E+00	0.00E+00	0.00E+00	0.00E+00	0.00E+00	0.00E+00	0.00E+00	0.00E+00	0.00E+00
3886	ALL	746614	4040519	5.65E-09	25YrCancer	5.65E-09	0.00E+00	0.00E+00	0.00E+00	0.00E+00	0.00E+00	0.00E+00	0.00E+00	0.00E+00	0.00E+00	0.00E+00	0.00E+00
3887	ALL	746624	4040519	5.67E-09	25YrCancer	5.67E-09	0.00E+00	0.00E+00	0.00E+00	0.00E+00	0.00E+00	0.00E+00	0.00E+00	0.00E+00	0.00E+00	0.00E+00	0.00E+00
3888	ALL	746634	4040519	5.69E-09	25YrCancer	5.69E-09	0.00E+00	0.00E+00	0.00E+00	0.00E+00	0.00E+00	0.00E+00	0.00E+00	0.00E+00	0.00E+00	0.00E+00	0.00E+00
3889	ALL	746491	4040326	5.18E-09	25YrCancer	5.18E-09	0.00E+00	0.00E+00	0.00E+00	0.00E+00	0.00E+00	0.00E+00	0.00E+00	0.00E+00	0.00E+00	0.00E+00	0.00E+00
3890	ALL	746501	4040326	5.20E-09	25YrCancer	5.20E-09	0.00E+00	0.00E+00	0.00E+00	0.00E+00	0.00E+00	0.00E+00	0.00E+00	0.00E+00	0.00E+00	0.00E+00	0.00E+00
3891	ALL	746511	4040326	5.21E-09	25YrCancer	5.21E-09	0.00E+00	0.00E+00	0.00E+00	0.00E+00	0.00E+00	0.00E+00	0.00E+00	0.00E+00	0.00E+00	0.00E+00	0.00E+00
3892	ALL	746521	4040326	5.22E-09	25YrCancer	5.22E-09	0.00E+00	0.00E+00	0.00E+00	0.00E+00	0.00E+00	0.00E+00	0.00E+00	0.00E+00	0.00E+00	0.00E+00	0.00E+00
3893	ALL	746531	4040326	5.24E-09	25YrCancer	5.24E-09	0.00E+00	0.00E+00	0.00E+00	0.00E+00	0.00E+00	0.00E+00	0.00E+00	0.00E+00	0.00E+00	0.00E+00	0.00E+00
3894	ALL	746541	4040326	5.25E-09	25YrCancer	5.25E-09	0.00E+00	0.00E+00	0.00E+00	0.00E+00	0.00E+00	0.00E+00	0.00E+00	0.00E+00	0.00E+00	0.00E+00	0.00E+00
3895	ALL	746491	4040336	5.20E-09	25YrCancer	5.20E-09	0.00E+00	0.00E+00	0.00E+00	0.00E+00	0.00E+00	0.00E+00	0.00E+00	0.00E+00	0.00E+00	0.00E+00	0.00E+00
3896	ALL	746501	4040336	5.21E-09	25YrCancer	5.21E-09	0.00E+00	0.00E+00	0.00E+00	0.00E+00	0.00E+00	0.00E+00	0.00E+00	0.00E+00	0.00E+00	0.00E+00	0.00E+00
3897	ALL	746511	4040336	5.23E-09	25YrCancer	5.23E-09	0.00E+00	0.00E+00	0.00E+00	0.00E+00	0.00E+00	0.00E+00	0.00E+00	0.00E+00	0.00E+00	0.00E+00	0.00E+00
3898	ALL	746521	4040336	5.24E-09	25YrCancer	5.24E-09	0.00E+00	0.00E+00	0.00E+00	0.00E+00	0.00E+00	0.00E+00	0.00E+00	0.00E+00	0.00E+00	0.00E+00	0.00E+00
3899	ALL	746531	4040336	5.26E-09	25YrCancer	5.26E-09	0.00E+00	0.00E+00	0.00E+00	0.00E+00	0.00E+00	0.00E+00	0.00E+00	0.00E+00	0.00E+00	0.00E+00	0.00E+00
3900	ALL	746541	4040336	5.27E-09	25YrCancer	5.27E-09	0.00E+00	0.00E+00	0.00E+00	0.00E+00	0.00E+00	0.00E+00	0.00E+00	0.00E+00	0.00E+00	0.00E+00	0.00E+00
3901	ALL	746491	4040346	5.22E-09	25YrCancer	5.22E-09	0.00E+00	0.00E+00	0.00E+00	0.00E+00	0.00E+00	0.00E+00	0.00E+00	0.00E+00	0.00E+00	0.00E+00	0.00E+00
3902	ALL	746501	4040346	5.23E-09	25YrCancer	5.23E-09	0.00E+00	0.00E+00	0.00E+00	0.00E+00	0.00E+00	0.00E+00	0.00E+00	0.00E+00	0.00E+00	0.00E+00	0.00E+00
3903	ALL	746511	4040346	5.24E-09	25YrCancer	5.24E-09	0.00E+00	0.00E+00	0.00E+00	0.00E+00	0.00E+00	0.00E+00	0.00E+00	0.00E+00	0.00E+00	0.00E+00	0.00E+00
3904	ALL	746521	4040346	5.25E-09	25YrCancer	5.25E-09	0.00E+00	0.00E+00	0.00E+00	0.00E+00	0.00E+00	0.00E+00	0.00E+00	0.00E+00	0.00E+00	0.00E+00	0.00E+00
3905	ALL	746531	4040346	5.27E-09	25YrCancer	5.27E-09	0.00E+00	0.00E+00	0.00E+00	0.00E+00	0.00E+00	0.00E+00	0.00E+00	0.00E+00	0.00E+00	0.00E+00	0.00E+00
3906	ALL	746541	4040346	5.29E-09	25YrCancer	5.29E-09	0.00E+00	0.00E+00	0.00E+00	0.00E+00	0.00E+00	0.00E+00	0.00E+00	0.00E+00	0.00E+00	0.00E+00	0.00E+00
3907	ALL	746491	4040356	5.23E-09	25YrCancer	5.23E-09	0.00E+00	0.00E+00	0.00E+00	0.00E+00	0.00E+00	0.00E+00	0.00E+00	0.00E+00	0.00E+00	0.00E+00	0.00E+00
3908	ALL	746501	4040356	5.24E-09	25YrCancer	5.24E-09	0.00E+00	0.00E+00	0.00E+00	0.00E+00	0.00E+00	0.00E+00	0.00E+00	0.00E+00	0.00E+00	0.00E+00	0.00E+00
3909	ALL	746511	4040356	5.26E-09	25YrCancer	5.26E-09	0.00E+00	0.00E+00	0.00E+00	0.00E+00	0.00E+00	0.00E+00	0.00E+00	0.00E+00	0.00E+00	0.00E+00	0.00E+00
3910	ALL	746521	4040356	5.27E-09	25YrCancer	5.27E-09	0.00E+00	0.00E+00	0.00E+00	0.00E+00	0.00E+00	0.00E+00	0.00E+00	0.00E+00	0.00E+00	0.00E+00	0.00E+00
3911	ALL	746531	4040356	5.29E-09	25YrCancer	5.29E-09	0.00E+00	0.00E+00	0.00E+00	0.00E+00	0.00E+00	0.00E+00	0.00E+00	0.00E+00	0.00E+00	0.00E+00	0.00E+00
3912	ALL	746541	4040356	5.30E-09	25YrCancer	5.30E-09	0.00E+00	0.00E+00	0.00E+00	0.00E+00	0.00E+00	0.00E+00	0.00E+00	0.00E+00	0.00E+00	0.00E+00	0.00E+00
3913	ALL	746491	4040366	5.25E-09	25YrCancer	5.25E-09	0.00E+00	0.00E+00	0.00E+00	0.00E+00	0.00E+00	0.00E+00	0.00E+00	0.00E+00	0.00E+00	0.00E+00	0.00E+00
3914	ALL	746501	4040366	5.26E-09	25YrCancer	5.26E-09	0.00E+00	0.00E+00	0.00E+00	0.00E+00	0.00E+00	0.00E+00	0.00E+00	0.00E+00	0.00E+00	0.00E+00	0.00E+00
3915	ALL	746511	4040366	5.27E-09	25YrCancer	5.27E-09	0.00E+00	0.00E+00	0.00E+00	0.00E+00	0.00E+00	0.00E+00	0.00E+00	0.00E+00	0.00E+00	0.00E+00	0.00E+00
3916	ALL	746521	4040366	5.29E-09	25YrCancer	5.29E-09	0.00E+00	0.00E+00	0.00E+00	0.00E+00	0.00E+00	0.00E+00	0.00E+00	0.00E+00	0.00E+00	0.00E+00	0.00E+00
3917	ALL	746531	4040366	5.30E-09	25YrCancer	5.30E-09	0.00E+00	0.00E+00	0.00E+00	0.00E+00	0.00E+00	0.00E+00	0.00E+00	0.00E+00	0.00E+00	0.00E+00	0.00E+00
3918	ALL	746541	4040366	5.32E-09	25YrCancer	5.32E-09	0.00E+00	0.00E+00	0.00E+00	0.00E+00	0.00E+00	0.00E+00	0.00E+00	0.00E+00	0.00E+00	0.00E+00	0.00E+00
3919	ALL	746491	4040376	5.26E-09	25YrCancer	5.26E-09	0.00E+00	0.00E+00	0.00E+00	0.00E+00	0.00E+00	0.00E+00	0.00E+00	0.00E+00	0.00E+00	0.00E+00	0.00E+00
3920	ALL	746501	4040376	5.27E-09	25YrCancer	5.27E-09	0.00E+00	0.00E+00	0.00E+00	0.00E+00	0.00E+00	0.00E+00	0.00E+00	0.00E+00	0.00E+00	0.00E+00	0.00E+00
3921	ALL	746511	4040376	5.29E-09	25YrCancer	5.29E-09	0.00E+00	0.00E+00	0.00E+00	0.00E+00	0.00E+00	0.00E+00	0.00E+00	0.00E+00	0.00E+00	0.00E+00	0.00E+00
3922	ALL	746521	4040376	5.30E-09	25YrCancer	5.30E-09	0.00E+00	0.00E+00	0.00E+00	0.00E+00	0.00E+00	0.00E+00	0.00E+00	0.00E+00	0.00E+00	0.00E+00	0.00E+00
3923	ALL	746531	4040376	5.32E-09	25YrCancer	5.32E-09	0.00E+00	0.00E+00	0.00E+00	0.00E+00	0.00E+00	0.00E+00	0.00E+00	0.00E+00	0.00E+00	0.00E+00	0.00E+00
3924	ALL	746541	4040376	5.33E-09	25YrCancer	5.33E-09	0.00E+00	0.00E+00	0.00E+00	0.00E+00	0.00E+00	0.00E+00	0.00E+00	0.00E+00	0.00E+00	0.00E+00	0.00E+00
3925	ALL	746491	4040386	5.27E-09	25YrCancer	5.27E-09	0.00E+00	0.00E+00	0.00E+00	0.00E+00	0.00E+00	0.00E+00	0.00E+00	0.00E+00	0.00E+00	0.00E+00	0.00E+00

3926	ALL	746501	4040386	5.29E-09	25YrCancer	5.29E-09	0.00E+00	0.00E+00	0.00E+00	0.00E+00	0.00E+00	0.00E+00	0.00E+00	0.00E+00	0.00E+00	0.00E+00	0.00E+00
3927	ALL	746511	4040386	5.30E-09	25YrCancer	5.30E-09	0.00E+00	0.00E+00	0.00E+00	0.00E+00	0.00E+00	0.00E+00	0.00E+00	0.00E+00	0.00E+00	0.00E+00	0.00E+00
3928	ALL	746521	4040386	5.32E-09	25YrCancer	5.32E-09	0.00E+00	0.00E+00	0.00E+00	0.00E+00	0.00E+00	0.00E+00	0.00E+00	0.00E+00	0.00E+00	0.00E+00	0.00E+00
3929	ALL	746531	4040386	5.33E-09	25YrCancer	5.33E-09	0.00E+00	0.00E+00	0.00E+00	0.00E+00	0.00E+00	0.00E+00	0.00E+00	0.00E+00	0.00E+00	0.00E+00	0.00E+00
3930	ALL	746541	4040386	5.35E-09	25YrCancer	5.35E-09	0.00E+00	0.00E+00	0.00E+00	0.00E+00	0.00E+00	0.00E+00	0.00E+00	0.00E+00	0.00E+00	0.00E+00	0.00E+00
3931	ALL	746491	4040396	5.29E-09	25YrCancer	5.29E-09	0.00E+00	0.00E+00	0.00E+00	0.00E+00	0.00E+00	0.00E+00	0.00E+00	0.00E+00	0.00E+00	0.00E+00	0.00E+00
3932	ALL	746501	4040396	5.30E-09	25YrCancer	5.30E-09	0.00E+00	0.00E+00	0.00E+00	0.00E+00	0.00E+00	0.00E+00	0.00E+00	0.00E+00	0.00E+00	0.00E+00	0.00E+00
3933	ALL	746511	4040396	5.32E-09	25YrCancer	5.32E-09	0.00E+00	0.00E+00	0.00E+00	0.00E+00	0.00E+00	0.00E+00	0.00E+00	0.00E+00	0.00E+00	0.00E+00	0.00E+00
3934	ALL	746521	4040396	5.33E-09	25YrCancer	5.33E-09	0.00E+00	0.00E+00	0.00E+00	0.00E+00	0.00E+00	0.00E+00	0.00E+00	0.00E+00	0.00E+00	0.00E+00	0.00E+00
3935	ALL	746531	4040396	5.35E-09	25YrCancer	5.35E-09	0.00E+00	0.00E+00	0.00E+00	0.00E+00	0.00E+00	0.00E+00	0.00E+00	0.00E+00	0.00E+00	0.00E+00	0.00E+00
3936	ALL	746541	4040396	5.36E-09	25YrCancer	5.36E-09	0.00E+00	0.00E+00	0.00E+00	0.00E+00	0.00E+00	0.00E+00	0.00E+00	0.00E+00	0.00E+00	0.00E+00	0.00E+00
3937	ALL	746491	4040406	5.30E-09	25YrCancer	5.30E-09	0.00E+00	0.00E+00	0.00E+00	0.00E+00	0.00E+00	0.00E+00	0.00E+00	0.00E+00	0.00E+00	0.00E+00	0.00E+00
3938	ALL	746501	4040406	5.32E-09	25YrCancer	5.32E-09	0.00E+00	0.00E+00	0.00E+00	0.00E+00	0.00E+00	0.00E+00	0.00E+00	0.00E+00	0.00E+00	0.00E+00	0.00E+00
3939	ALL	746511	4040406	5.34E-09	25YrCancer	5.34E-09	0.00E+00	0.00E+00	0.00E+00	0.00E+00	0.00E+00	0.00E+00	0.00E+00	0.00E+00	0.00E+00	0.00E+00	0.00E+00
3940	ALL	746521	4040406	5.35E-09	25YrCancer	5.35E-09	0.00E+00	0.00E+00	0.00E+00	0.00E+00	0.00E+00	0.00E+00	0.00E+00	0.00E+00	0.00E+00	0.00E+00	0.00E+00
3941	ALL	746531	4040406	5.37E-09	25YrCancer	5.37E-09	0.00E+00	0.00E+00	0.00E+00	0.00E+00	0.00E+00	0.00E+00	0.00E+00	0.00E+00	0.00E+00	0.00E+00	0.00E+00
3942	ALL	746541	4040406	5.38E-09	25YrCancer	5.38E-09	0.00E+00	0.00E+00	0.00E+00	0.00E+00	0.00E+00	0.00E+00	0.00E+00	0.00E+00	0.00E+00	0.00E+00	0.00E+00
3943	ALL	746491	4040416	5.31E-09	25YrCancer	5.31E-09	0.00E+00	0.00E+00	0.00E+00	0.00E+00	0.00E+00	0.00E+00	0.00E+00	0.00E+00	0.00E+00	0.00E+00	0.00E+00
3944	ALL	746501	4040416	5.33E-09	25YrCancer	5.33E-09	0.00E+00	0.00E+00	0.00E+00	0.00E+00	0.00E+00	0.00E+00	0.00E+00	0.00E+00	0.00E+00	0.00E+00	0.00E+00
3945	ALL	746511	4040416	5.35E-09	25YrCancer	5.35E-09	0.00E+00	0.00E+00	0.00E+00	0.00E+00	0.00E+00	0.00E+00	0.00E+00	0.00E+00	0.00E+00	0.00E+00	0.00E+00
3946	ALL	746521	4040416	5.36E-09	25YrCancer	5.36E-09	0.00E+00	0.00E+00	0.00E+00	0.00E+00	0.00E+00	0.00E+00	0.00E+00	0.00E+00	0.00E+00	0.00E+00	0.00E+00
3947	ALL	746531	4040416	5.38E-09	25YrCancer	5.38E-09	0.00E+00	0.00E+00	0.00E+00	0.00E+00	0.00E+00	0.00E+00	0.00E+00	0.00E+00	0.00E+00	0.00E+00	0.00E+00
3948	ALL	746541	4040416	5.39E-09	25YrCancer	5.39E-09	0.00E+00	0.00E+00	0.00E+00	0.00E+00	0.00E+00	0.00E+00	0.00E+00	0.00E+00	0.00E+00	0.00E+00	0.00E+00
3949	ALL	746491	4040426	5.32E-09	25YrCancer	5.32E-09	0.00E+00	0.00E+00	0.00E+00	0.00E+00	0.00E+00	0.00E+00	0.00E+00	0.00E+00	0.00E+00	0.00E+00	0.00E+00
3950	ALL	746501	4040426	5.34E-09	25YrCancer	5.34E-09	0.00E+00	0.00E+00	0.00E+00	0.00E+00	0.00E+00	0.00E+00	0.00E+00	0.00E+00	0.00E+00	0.00E+00	0.00E+00
3951	ALL	746511	4040426	5.36E-09	25YrCancer	5.36E-09	0.00E+00	0.00E+00	0.00E+00	0.00E+00	0.00E+00	0.00E+00	0.00E+00	0.00E+00	0.00E+00	0.00E+00	0.00E+00
3952	ALL	746521	4040426	5.37E-09	25YrCancer	5.37E-09	0.00E+00	0.00E+00	0.00E+00	0.00E+00	0.00E+00	0.00E+00	0.00E+00	0.00E+00	0.00E+00	0.00E+00	0.00E+00
3953	ALL	746531	4040426	5.39E-09	25YrCancer	5.39E-09	0.00E+00	0.00E+00	0.00E+00	0.00E+00	0.00E+00	0.00E+00	0.00E+00	0.00E+00	0.00E+00	0.00E+00	0.00E+00
3954	ALL	746541	4040426	5.40E-09	25YrCancer	5.40E-09	0.00E+00	0.00E+00	0.00E+00	0.00E+00	0.00E+00	0.00E+00	0.00E+00	0.00E+00	0.00E+00	0.00E+00	0.00E+00
3955	ALL	746491	4040436	5.34E-09	25YrCancer	5.34E-09	0.00E+00	0.00E+00	0.00E+00	0.00E+00	0.00E+00	0.00E+00	0.00E+00	0.00E+00	0.00E+00	0.00E+00	0.00E+00
3956	ALL	746501	4040436	5.35E-09	25YrCancer	5.35E-09	0.00E+00	0.00E+00	0.00E+00	0.00E+00	0.00E+00	0.00E+00	0.00E+00	0.00E+00	0.00E+00	0.00E+00	0.00E+00
3957	ALL	746511	4040436	5.36E-09	25YrCancer	5.36E-09	0.00E+00	0.00E+00	0.00E+00	0.00E+00	0.00E+00	0.00E+00	0.00E+00	0.00E+00	0.00E+00	0.00E+00	0.00E+00
3958	ALL	746521	4040436	5.38E-09	25YrCancer	5.38E-09	0.00E+00	0.00E+00	0.00E+00	0.00E+00	0.00E+00	0.00E+00	0.00E+00	0.00E+00	0.00E+00	0.00E+00	0.00E+00
3959	ALL	746531	4040436	5.40E-09	25YrCancer	5.40E-09	0.00E+00	0.00E+00	0.00E+00	0.00E+00	0.00E+00	0.00E+00	0.00E+00	0.00E+00	0.00E+00	0.00E+00	0.00E+00
3960	ALL	746541	4040436	5.41E-09	25YrCancer	5.41E-09	0.00E+00	0.00E+00	0.00E+00	0.00E+00	0.00E+00	0.00E+00	0.00E+00	0.00E+00	0.00E+00	0.00E+00	0.00E+00
3961	ALL	746491	4040446	5.35E-09	25YrCancer	5.35E-09	0.00E+00	0.00E+00	0.00E+00	0.00E+00	0.00E+00	0.00E+00	0.00E+00	0.00E+00	0.00E+00	0.00E+00	0.00E+00
3962	ALL	746501	4040446	5.36E-09	25YrCancer	5.36E-09	0.00E+00	0.00E+00	0.00E+00	0.00E+00	0.00E+00	0.00E+00	0.00E+00	0.00E+00	0.00E+00	0.00E+00	0.00E+00
3963	ALL	746511	4040446	5.38E-09	25YrCancer	5.38E-09	0.00E+00	0.00E+00	0.00E+00	0.00E+00	0.00E+00	0.00E+00	0.00E+00	0.00E+00	0.00E+00	0.00E+00	0.00E+00
3964	ALL	746521	4040446	5.39E-09	25YrCancer	5.39E-09	0.00E+00	0.00E+00	0.00E+00	0.00E+00	0.00E+00	0.00E+00	0.00E+00	0.00E+00	0.00E+00	0.00E+00	0.00E+00
3965	ALL	746531	4040446	5.41E-09	25YrCancer	5.41E-09	0.00E+00	0.00E+00	0.00E+00	0.00E+00	0.00E+00	0.00E+00	0.00E+00	0.00E+00	0.00E+00	0.00E+00	0.00E+00
3966	ALL	746541	4040446	5.42E-09	25YrCancer	5.42E-09	0.00E+00	0.00E+00	0.00E+00	0.00E+00	0.00E+00	0.00E+00	0.00E+00	0.00E+00	0.00E+00	0.00E+00	0.00E+00
3967	ALL	746491	4040456	5.36E-09	25YrCancer	5.36E-09	0.00E+00	0.00E+00	0.00E+00	0.00E+00	0.00E+00	0.00E+00	0.00E+00	0.00E+00	0.00E+00	0.00E+00	0.00E+00
3968	ALL	746501	4040456	5.37E-09	25YrCancer	5.37E-09	0.00E+00	0.00E+00	0.00E+00	0.00E+00	0.00E+00	0.00E+00	0.00E+00	0.00E+00	0.00E+00	0.00E+00	0.00E+00
3969	ALL	746511	4040456	5.39E-09	25YrCancer	5.39E-09	0.00E+00	0.00E+00	0.00E+00	0.00E+00	0.00E+00	0.00E+00	0.00E+00	0.00E+00	0.00E+00	0.00E+00	0.00E+00
3970	ALL	746521	4040456	5.40E-09	25YrCancer	5.40E-09	0.00E+00	0.00E+00	0.00E+00	0.00E+00	0.00E+00	0.00E+00	0.00E+00	0.00E+00	0.00E+00	0.00E+00	0.00E+00
3971	ALL	746531	4040456	5.42E-09	25YrCancer	5.42E-09	0.00E+00	0.00E+00	0.00E+00	0.00E+00	0.00E+00	0.00E+00	0.00E+00	0.00E+00	0.00E+00	0.00E+00	0.00E+00
3972	ALL	746541	4040456	5.44E-09	25YrCancer	5.44E-09	0.00E+00	0.00E+00	0.00E+00	0.00E+00	0.00E+00	0.00E+00	0.00E+00	0.00E+00	0.00E+00	0.00E+00	0.00E+00
3973	ALL	746491	4040466	5.37E-09	25YrCancer	5.37E-09	0.00E+00	0.00E+00	0.00E+00	0.00E+00	0.00E+00	0.00E+00	0.00E+00	0.00E+00	0.00E+00	0.00E+00	0.00E+00
3974	ALL	746501	4040466	5.38E-09	25YrCancer	5.38E-09	0.00E+00	0.00E+00	0.00E+00	0.00E+00	0.00E+00	0.00E+00	0.00E+00	0.00E+00	0.00E+00	0.00E+00	0.00E+00
3975	ALL	746511	4040466	5.40E-09	25YrCancer	5.40E-09	0.00E+00	0.00E+00	0.00E+00	0.00E+00	0.00E+00	0.00E+00	0.00E+00	0.00E+00	0.00E+00	0.00E+00	0.00E+00
3976	ALL	746521	4040466	5.42E-09	25YrCancer	5.42E-09	0.00E+00	0.00E+00	0.00E+00	0.00E+00	0.00E+00	0.00E+00	0.00E+00	0.00E+00	0.00E+00	0.00E+00	0.00E+00

3977	ALL	746531	4040466	5.44E-09	25YrCancer	5.44E-09	0.00E+00	0.00E+00	0.00E+00	0.00E+00	0.00E+00	0.00E+00	0.00E+00	0.00E+00	0.00E+00	0.00E+00	0.00E+00
3978	ALL	746541	4040466	5.45E-09	25YrCancer	5.45E-09	0.00E+00	0.00E+00	0.00E+00	0.00E+00	0.00E+00	0.00E+00	0.00E+00	0.00E+00	0.00E+00	0.00E+00	0.00E+00
3979	ALL	746491	4040476	5.38E-09	25YrCancer	5.38E-09	0.00E+00	0.00E+00	0.00E+00	0.00E+00	0.00E+00	0.00E+00	0.00E+00	0.00E+00	0.00E+00	0.00E+00	0.00E+00
3980	ALL	746501	4040476	5.39E-09	25YrCancer	5.39E-09	0.00E+00	0.00E+00	0.00E+00	0.00E+00	0.00E+00	0.00E+00	0.00E+00	0.00E+00	0.00E+00	0.00E+00	0.00E+00
3981	ALL	746511	4040476	5.41E-09	25YrCancer	5.41E-09	0.00E+00	0.00E+00	0.00E+00	0.00E+00	0.00E+00	0.00E+00	0.00E+00	0.00E+00	0.00E+00	0.00E+00	0.00E+00
3982	ALL	746521	4040476	5.43E-09	25YrCancer	5.43E-09	0.00E+00	0.00E+00	0.00E+00	0.00E+00	0.00E+00	0.00E+00	0.00E+00	0.00E+00	0.00E+00	0.00E+00	0.00E+00
3983	ALL	746531	4040476	5.45E-09	25YrCancer	5.45E-09	0.00E+00	0.00E+00	0.00E+00	0.00E+00	0.00E+00	0.00E+00	0.00E+00	0.00E+00	0.00E+00	0.00E+00	0.00E+00
3984	ALL	746541	4040476	5.46E-09	25YrCancer	5.46E-09	0.00E+00	0.00E+00	0.00E+00	0.00E+00	0.00E+00	0.00E+00	0.00E+00	0.00E+00	0.00E+00	0.00E+00	0.00E+00
3985	ALL	746491	4040486	5.39E-09	25YrCancer	5.39E-09	0.00E+00	0.00E+00	0.00E+00	0.00E+00	0.00E+00	0.00E+00	0.00E+00	0.00E+00	0.00E+00	0.00E+00	0.00E+00
3986	ALL	746501	4040486	5.40E-09	25YrCancer	5.40E-09	0.00E+00	0.00E+00	0.00E+00	0.00E+00	0.00E+00	0.00E+00	0.00E+00	0.00E+00	0.00E+00	0.00E+00	0.00E+00
3987	ALL	746511	4040486	5.42E-09	25YrCancer	5.42E-09	0.00E+00	0.00E+00	0.00E+00	0.00E+00	0.00E+00	0.00E+00	0.00E+00	0.00E+00	0.00E+00	0.00E+00	0.00E+00
3988	ALL	746521	4040486	5.44E-09	25YrCancer	5.44E-09	0.00E+00	0.00E+00	0.00E+00	0.00E+00	0.00E+00	0.00E+00	0.00E+00	0.00E+00	0.00E+00	0.00E+00	0.00E+00
3989	ALL	746531	4040486	5.45E-09	25YrCancer	5.45E-09	0.00E+00	0.00E+00	0.00E+00	0.00E+00	0.00E+00	0.00E+00	0.00E+00	0.00E+00	0.00E+00	0.00E+00	0.00E+00
3990	ALL	746541	4040486	5.47E-09	25YrCancer	5.47E-09	0.00E+00	0.00E+00	0.00E+00	0.00E+00	0.00E+00	0.00E+00	0.00E+00	0.00E+00	0.00E+00	0.00E+00	0.00E+00
3991	ALL	746491	4040496	5.39E-09	25YrCancer	5.39E-09	0.00E+00	0.00E+00	0.00E+00	0.00E+00	0.00E+00	0.00E+00	0.00E+00	0.00E+00	0.00E+00	0.00E+00	0.00E+00
3992	ALL	746501	4040496	5.41E-09	25YrCancer	5.41E-09	0.00E+00	0.00E+00	0.00E+00	0.00E+00	0.00E+00	0.00E+00	0.00E+00	0.00E+00	0.00E+00	0.00E+00	0.00E+00
3993	ALL	746511	4040496	5.43E-09	25YrCancer	5.43E-09	0.00E+00	0.00E+00	0.00E+00	0.00E+00	0.00E+00	0.00E+00	0.00E+00	0.00E+00	0.00E+00	0.00E+00	0.00E+00
3994	ALL	746521	4040496	5.45E-09	25YrCancer	5.45E-09	0.00E+00	0.00E+00	0.00E+00	0.00E+00	0.00E+00	0.00E+00	0.00E+00	0.00E+00	0.00E+00	0.00E+00	0.00E+00
3995	ALL	746531	4040496	5.46E-09	25YrCancer	5.46E-09	0.00E+00	0.00E+00	0.00E+00	0.00E+00	0.00E+00	0.00E+00	0.00E+00	0.00E+00	0.00E+00	0.00E+00	0.00E+00
3996	ALL	746541	4040496	5.48E-09	25YrCancer	5.48E-09	0.00E+00	0.00E+00	0.00E+00	0.00E+00	0.00E+00	0.00E+00	0.00E+00	0.00E+00	0.00E+00	0.00E+00	0.00E+00
3997	ALL	746491	4040506	5.40E-09	25YrCancer	5.40E-09	0.00E+00	0.00E+00	0.00E+00	0.00E+00	0.00E+00	0.00E+00	0.00E+00	0.00E+00	0.00E+00	0.00E+00	0.00E+00
3998	ALL	746501	4040506	5.42E-09	25YrCancer	5.42E-09	0.00E+00	0.00E+00	0.00E+00	0.00E+00	0.00E+00	0.00E+00	0.00E+00	0.00E+00	0.00E+00	0.00E+00	0.00E+00
3999	ALL	746511	4040506	5.44E-09	25YrCancer	5.44E-09	0.00E+00	0.00E+00	0.00E+00	0.00E+00	0.00E+00	0.00E+00	0.00E+00	0.00E+00	0.00E+00	0.00E+00	0.00E+00
4000	ALL	746521	4040506	5.45E-09	25YrCancer	5.45E-09	0.00E+00	0.00E+00	0.00E+00	0.00E+00	0.00E+00	0.00E+00	0.00E+00	0.00E+00	0.00E+00	0.00E+00	0.00E+00
4001	ALL	746531	4040506	5.47E-09	25YrCancer	5.47E-09	0.00E+00	0.00E+00	0.00E+00	0.00E+00	0.00E+00	0.00E+00	0.00E+00	0.00E+00	0.00E+00	0.00E+00	0.00E+00
4002	ALL	746541	4040506	5.49E-09	25YrCancer	5.49E-09	0.00E+00	0.00E+00	0.00E+00	0.00E+00	0.00E+00	0.00E+00	0.00E+00	0.00E+00	0.00E+00	0.00E+00	0.00E+00
4003	ALL	746491	4040516	5.41E-09	25YrCancer	5.41E-09	0.00E+00	0.00E+00	0.00E+00	0.00E+00	0.00E+00	0.00E+00	0.00E+00	0.00E+00	0.00E+00	0.00E+00	0.00E+00
4004	ALL	746501	4040516	5.43E-09	25YrCancer	5.43E-09	0.00E+00	0.00E+00	0.00E+00	0.00E+00	0.00E+00	0.00E+00	0.00E+00	0.00E+00	0.00E+00	0.00E+00	0.00E+00
4005	ALL	746511	4040516	5.45E-09	25YrCancer	5.45E-09	0.00E+00	0.00E+00	0.00E+00	0.00E+00	0.00E+00	0.00E+00	0.00E+00	0.00E+00	0.00E+00	0.00E+00	0.00E+00
4006	ALL	746521	4040516	5.46E-09	25YrCancer	5.46E-09	0.00E+00	0.00E+00	0.00E+00	0.00E+00	0.00E+00	0.00E+00	0.00E+00	0.00E+00	0.00E+00	0.00E+00	0.00E+00
4007	ALL	746531	4040516	5.48E-09	25YrCancer	5.48E-09	0.00E+00	0.00E+00	0.00E+00	0.00E+00	0.00E+00	0.00E+00	0.00E+00	0.00E+00	0.00E+00	0.00E+00	0.00E+00
4008	ALL	746541	4040516	5.50E-09	25YrCancer	5.50E-09	0.00E+00	0.00E+00	0.00E+00	0.00E+00	0.00E+00	0.00E+00	0.00E+00	0.00E+00	0.00E+00	0.00E+00	0.00E+00
4009	ALL	746491	4040526	5.42E-09	25YrCancer	5.42E-09	0.00E+00	0.00E+00	0.00E+00	0.00E+00	0.00E+00	0.00E+00	0.00E+00	0.00E+00	0.00E+00	0.00E+00	0.00E+00
4010	ALL	746501	4040526	5.44E-09	25YrCancer	5.44E-09	0.00E+00	0.00E+00	0.00E+00	0.00E+00	0.00E+00	0.00E+00	0.00E+00	0.00E+00	0.00E+00	0.00E+00	0.00E+00
4011	ALL	746511	4040526	5.46E-09	25YrCancer	5.46E-09	0.00E+00	0.00E+00	0.00E+00	0.00E+00	0.00E+00	0.00E+00	0.00E+00	0.00E+00	0.00E+00	0.00E+00	0.00E+00
4012	ALL	746521	4040526	5.47E-09	25YrCancer	5.47E-09	0.00E+00	0.00E+00	0.00E+00	0.00E+00	0.00E+00	0.00E+00	0.00E+00	0.00E+00	0.00E+00	0.00E+00	0.00E+00
4013	ALL	746531	4040526	5.49E-09	25YrCancer	5.49E-09	0.00E+00	0.00E+00	0.00E+00	0.00E+00	0.00E+00	0.00E+00	0.00E+00	0.00E+00	0.00E+00	0.00E+00	0.00E+00
4014	ALL	746541	4040526	5.51E-09	25YrCancer	5.51E-09	0.00E+00	0.00E+00	0.00E+00	0.00E+00	0.00E+00	0.00E+00	0.00E+00	0.00E+00	0.00E+00	0.00E+00	0.00E+00
4015	ALL	746491	4040536	5.43E-09	25YrCancer	5.43E-09	0.00E+00	0.00E+00	0.00E+00	0.00E+00	0.00E+00	0.00E+00	0.00E+00	0.00E+00	0.00E+00	0.00E+00	0.00E+00
4016	ALL	746501	4040536	5.45E-09	25YrCancer	5.45E-09	0.00E+00	0.00E+00	0.00E+00	0.00E+00	0.00E+00	0.00E+00	0.00E+00	0.00E+00	0.00E+00	0.00E+00	0.00E+00
4017	ALL	746511	4040536	5.47E-09	25YrCancer	5.47E-09	0.00E+00	0.00E+00	0.00E+00	0.00E+00	0.00E+00	0.00E+00	0.00E+00	0.00E+00	0.00E+00	0.00E+00	0.00E+00
4018	ALL	746521	4040536	5.48E-09	25YrCancer	5.48E-09	0.00E+00	0.00E+00	0.00E+00	0.00E+00	0.00E+00	0.00E+00	0.00E+00	0.00E+00	0.00E+00	0.00E+00	0.00E+00
4019	ALL	746531	4040536	5.50E-09	25YrCancer	5.50E-09	0.00E+00	0.00E+00	0.00E+00	0.00E+00	0.00E+00	0.00E+00	0.00E+00	0.00E+00	0.00E+00	0.00E+00	0.00E+00
4020	ALL	746541	4040536	5.52E-09	25YrCancer	5.52E-09	0.00E+00	0.00E+00	0.00E+00	0.00E+00	0.00E+00	0.00E+00	0.00E+00	0.00E+00	0.00E+00	0.00E+00	0.00E+00
4021	ALL	746491	4040546	5.44E-09	25YrCancer	5.44E-09	0.00E+00	0.00E+00	0.00E+00	0.00E+00	0.00E+00	0.00E+00	0.00E+00	0.00E+00	0.00E+00	0.00E+00	0.00E+00
4022	ALL	746501	4040546	5.46E-09	25YrCancer	5.46E-09	0.00E+00	0.00E+00	0.00E+00	0.00E+00	0.00E+00	0.00E+00	0.00E+00	0.00E+00	0.00E+00	0.00E+00	0.00E+00
4023	ALL	746511	4040546	5.48E-09	25YrCancer	5.48E-09	0.00E+00	0.00E+00	0.00E+00	0.00E+00	0.00E+00	0.00E+00	0.00E+00	0.00E+00	0.00E+00	0.00E+00	0.00E+00
4024	ALL	746521	4040546	5.49E-09	25YrCancer	5.49E-09	0.00E+00	0.00E+00	0.00E+00	0.00E+00	0.00E+00	0.00E+00	0.00E+00	0.00E+00	0.00E+00	0.00E+00	0.00E+00
4025	ALL	746531	4040546	5.51E-09	25YrCancer	5.51E-09	0.00E+00	0.00E+00	0.00E+00	0.00E+00	0.00E+00	0.00E+00	0.00E+00	0.00E+00	0.00E+00	0.00E+00	0.00E+00
4026	ALL	746541	4040546	5.53E-09	25YrCancer	5.53E-09	0.00E+00	0.00E+00	0.00E+00	0.00E+00	0.00E+00	0.00E+00	0.00E+00	0.00E+00	0.00E+00	0.00E+00	0.00E+00
4027	ALL	746491	4040556	5.45E-09	25YrCancer	5.45E-09	0.00E+00	0.00E+00	0.00E+00	0.00E+00	0.00E+00	0.00E+00	0.00E+00	0.00E+00	0.00E+00	0.00E+00	0.00E+00

4028	ALL	746501	4040556	5.47E-09	25YrCancer	5.47E-09	0.00E+00	0.00E+00	0.00E+00	0.00E+00	0.00E+00	0.00E+00	0.00E+00	0.00E+00	0.00E+00	0.00E+00	0.00E+00
4029	ALL	746511	4040556	5.49E-09	25YrCancer	5.49E-09	0.00E+00	0.00E+00	0.00E+00	0.00E+00	0.00E+00	0.00E+00	0.00E+00	0.00E+00	0.00E+00	0.00E+00	0.00E+00
4030	ALL	746521	4040556	5.50E-09	25YrCancer	5.50E-09	0.00E+00	0.00E+00	0.00E+00	0.00E+00	0.00E+00	0.00E+00	0.00E+00	0.00E+00	0.00E+00	0.00E+00	0.00E+00
4031	ALL	746531	4040556	5.52E-09	25YrCancer	5.52E-09	0.00E+00	0.00E+00	0.00E+00	0.00E+00	0.00E+00	0.00E+00	0.00E+00	0.00E+00	0.00E+00	0.00E+00	0.00E+00
4032	ALL	746541	4040556	5.54E-09	25YrCancer	5.54E-09	0.00E+00	0.00E+00	0.00E+00	0.00E+00	0.00E+00	0.00E+00	0.00E+00	0.00E+00	0.00E+00	0.00E+00	0.00E+00
4033	ALL	746491	4040566	5.46E-09	25YrCancer	5.46E-09	0.00E+00	0.00E+00	0.00E+00	0.00E+00	0.00E+00	0.00E+00	0.00E+00	0.00E+00	0.00E+00	0.00E+00	0.00E+00
4034	ALL	746501	4040566	5.48E-09	25YrCancer	5.48E-09	0.00E+00	0.00E+00	0.00E+00	0.00E+00	0.00E+00	0.00E+00	0.00E+00	0.00E+00	0.00E+00	0.00E+00	0.00E+00
4035	ALL	746511	4040566	5.50E-09	25YrCancer	5.50E-09	0.00E+00	0.00E+00	0.00E+00	0.00E+00	0.00E+00	0.00E+00	0.00E+00	0.00E+00	0.00E+00	0.00E+00	0.00E+00
4036	ALL	746521	4040566	5.52E-09	25YrCancer	5.52E-09	0.00E+00	0.00E+00	0.00E+00	0.00E+00	0.00E+00	0.00E+00	0.00E+00	0.00E+00	0.00E+00	0.00E+00	0.00E+00
4037	ALL	746531	4040566	5.54E-09	25YrCancer	5.54E-09	0.00E+00	0.00E+00	0.00E+00	0.00E+00	0.00E+00	0.00E+00	0.00E+00	0.00E+00	0.00E+00	0.00E+00	0.00E+00
4038	ALL	746541	4040566	5.55E-09	25YrCancer	5.55E-09	0.00E+00	0.00E+00	0.00E+00	0.00E+00	0.00E+00	0.00E+00	0.00E+00	0.00E+00	0.00E+00	0.00E+00	0.00E+00
4039	ALL	746548	4041125	7.01E-09	25YrCancer	7.01E-09	0.00E+00	0.00E+00	0.00E+00	0.00E+00	0.00E+00	0.00E+00	0.00E+00	0.00E+00	0.00E+00	0.00E+00	0.00E+00
4040	ALL	746573	4041125	7.13E-09	25YrCancer	7.13E-09	0.00E+00	0.00E+00	0.00E+00	0.00E+00	0.00E+00	0.00E+00	0.00E+00	0.00E+00	0.00E+00	0.00E+00	0.00E+00
4041	ALL	746598	4041125	7.25E-09	25YrCancer	7.25E-09	0.00E+00	0.00E+00	0.00E+00	0.00E+00	0.00E+00	0.00E+00	0.00E+00	0.00E+00	0.00E+00	0.00E+00	0.00E+00
4042	ALL	746623	4041125	7.37E-09	25YrCancer	7.37E-09	0.00E+00	0.00E+00	0.00E+00	0.00E+00	0.00E+00	0.00E+00	0.00E+00	0.00E+00	0.00E+00	0.00E+00	0.00E+00
4043	ALL	746648	4041125	7.49E-09	25YrCancer	7.49E-09	0.00E+00	0.00E+00	0.00E+00	0.00E+00	0.00E+00	0.00E+00	0.00E+00	0.00E+00	0.00E+00	0.00E+00	0.00E+00
4044	ALL	746673	4041125	7.62E-09	25YrCancer	7.62E-09	0.00E+00	0.00E+00	0.00E+00	0.00E+00	0.00E+00	0.00E+00	0.00E+00	0.00E+00	0.00E+00	0.00E+00	0.00E+00
4045	ALL	746698	4041125	7.75E-09	25YrCancer	7.75E-09	0.00E+00	0.00E+00	0.00E+00	0.00E+00	0.00E+00	0.00E+00	0.00E+00	0.00E+00	0.00E+00	0.00E+00	0.00E+00
4046	ALL	746723	4041125	7.88E-09	25YrCancer	7.88E-09	0.00E+00	0.00E+00	0.00E+00	0.00E+00	0.00E+00	0.00E+00	0.00E+00	0.00E+00	0.00E+00	0.00E+00	0.00E+00
4047	ALL	746548	4041150	7.08E-09	25YrCancer	7.08E-09	0.00E+00	0.00E+00	0.00E+00	0.00E+00	0.00E+00	0.00E+00	0.00E+00	0.00E+00	0.00E+00	0.00E+00	0.00E+00
4048	ALL	746573	4041150	7.20E-09	25YrCancer	7.20E-09	0.00E+00	0.00E+00	0.00E+00	0.00E+00	0.00E+00	0.00E+00	0.00E+00	0.00E+00	0.00E+00	0.00E+00	0.00E+00
4049	ALL	746598	4041150	7.32E-09	25YrCancer	7.32E-09	0.00E+00	0.00E+00	0.00E+00	0.00E+00	0.00E+00	0.00E+00	0.00E+00	0.00E+00	0.00E+00	0.00E+00	0.00E+00
4050	ALL	746623	4041150	7.44E-09	25YrCancer	7.44E-09	0.00E+00	0.00E+00	0.00E+00	0.00E+00	0.00E+00	0.00E+00	0.00E+00	0.00E+00	0.00E+00	0.00E+00	0.00E+00
4051	ALL	746648	4041150	7.56E-09	25YrCancer	7.56E-09	0.00E+00	0.00E+00	0.00E+00	0.00E+00	0.00E+00	0.00E+00	0.00E+00	0.00E+00	0.00E+00	0.00E+00	0.00E+00
4052	ALL	746673	4041150	7.69E-09	25YrCancer	7.69E-09	0.00E+00	0.00E+00	0.00E+00	0.00E+00	0.00E+00	0.00E+00	0.00E+00	0.00E+00	0.00E+00	0.00E+00	0.00E+00
4053	ALL	746698	4041150	7.81E-09	25YrCancer	7.81E-09	0.00E+00	0.00E+00	0.00E+00	0.00E+00	0.00E+00	0.00E+00	0.00E+00	0.00E+00	0.00E+00	0.00E+00	0.00E+00
4054	ALL	746723	4041150	7.95E-09	25YrCancer	7.95E-09	0.00E+00	0.00E+00	0.00E+00	0.00E+00	0.00E+00	0.00E+00	0.00E+00	0.00E+00	0.00E+00	0.00E+00	0.00E+00
4055	ALL	746548	4041175	7.15E-09	25YrCancer	7.15E-09	0.00E+00	0.00E+00	0.00E+00	0.00E+00	0.00E+00	0.00E+00	0.00E+00	0.00E+00	0.00E+00	0.00E+00	0.00E+00
4056	ALL	746573	4041175	7.27E-09	25YrCancer	7.27E-09	0.00E+00	0.00E+00	0.00E+00	0.00E+00	0.00E+00	0.00E+00	0.00E+00	0.00E+00	0.00E+00	0.00E+00	0.00E+00
4057	ALL	746598	4041175	7.38E-09	25YrCancer	7.38E-09	0.00E+00	0.00E+00	0.00E+00	0.00E+00	0.00E+00	0.00E+00	0.00E+00	0.00E+00	0.00E+00	0.00E+00	0.00E+00
4058	ALL	746623	4041175	7.50E-09	25YrCancer	7.50E-09	0.00E+00	0.00E+00	0.00E+00	0.00E+00	0.00E+00	0.00E+00	0.00E+00	0.00E+00	0.00E+00	0.00E+00	0.00E+00
4059	ALL	746648	4041175	7.62E-09	25YrCancer	7.62E-09	0.00E+00	0.00E+00	0.00E+00	0.00E+00	0.00E+00	0.00E+00	0.00E+00	0.00E+00	0.00E+00	0.00E+00	0.00E+00
4060	ALL	746673	4041175	7.75E-09	25YrCancer	7.75E-09	0.00E+00	0.00E+00	0.00E+00	0.00E+00	0.00E+00	0.00E+00	0.00E+00	0.00E+00	0.00E+00	0.00E+00	0.00E+00
4061	ALL	746698	4041175	7.86E-09	25YrCancer	7.86E-09	0.00E+00	0.00E+00	0.00E+00	0.00E+00	0.00E+00	0.00E+00	0.00E+00	0.00E+00	0.00E+00	0.00E+00	0.00E+00
4062	ALL	746723	4041175	8.00E-09	25YrCancer	8.00E-09	0.00E+00	0.00E+00	0.00E+00	0.00E+00	0.00E+00	0.00E+00	0.00E+00	0.00E+00	0.00E+00	0.00E+00	0.00E+00
4063	ALL	746548	4041200	7.21E-09	25YrCancer	7.21E-09	0.00E+00	0.00E+00	0.00E+00	0.00E+00	0.00E+00	0.00E+00	0.00E+00	0.00E+00	0.00E+00	0.00E+00	0.00E+00
4064	ALL	746573	4041200	7.33E-09	25YrCancer	7.33E-09	0.00E+00	0.00E+00	0.00E+00	0.00E+00	0.00E+00	0.00E+00	0.00E+00	0.00E+00	0.00E+00	0.00E+00	0.00E+00
4065	ALL	746598	4041200	7.44E-09	25YrCancer	7.44E-09	0.00E+00	0.00E+00	0.00E+00	0.00E+00	0.00E+00	0.00E+00	0.00E+00	0.00E+00	0.00E+00	0.00E+00	0.00E+00
4066	ALL	746623	4041200	7.56E-09	25YrCancer	7.56E-09	0.00E+00	0.00E+00	0.00E+00	0.00E+00	0.00E+00	0.00E+00	0.00E+00	0.00E+00	0.00E+00	0.00E+00	0.00E+00
4067	ALL	746648	4041200	7.68E-09	25YrCancer	7.68E-09	0.00E+00	0.00E+00	0.00E+00	0.00E+00	0.00E+00	0.00E+00	0.00E+00	0.00E+00	0.00E+00	0.00E+00	0.00E+00
4068	ALL	746673	4041200	7.81E-09	25YrCancer	7.81E-09	0.00E+00	0.00E+00	0.00E+00	0.00E+00	0.00E+00	0.00E+00	0.00E+00	0.00E+00	0.00E+00	0.00E+00	0.00E+00
4069	ALL	746698	4041200	7.91E-09	25YrCancer	7.91E-09	0.00E+00	0.00E+00	0.00E+00	0.00E+00	0.00E+00	0.00E+00	0.00E+00	0.00E+00	0.00E+00	0.00E+00	0.00E+00
4070	ALL	746723	4041200	8.05E-09	25YrCancer	8.05E-09	0.00E+00	0.00E+00	0.00E+00	0.00E+00	0.00E+00	0.00E+00	0.00E+00	0.00E+00	0.00E+00	0.00E+00	0.00E+00
4071	ALL	746548	4041225	7.26E-09	25YrCancer	7.26E-09	0.00E+00	0.00E+00	0.00E+00	0.00E+00	0.00E+00	0.00E+00	0.00E+00	0.00E+00	0.00E+00	0.00E+00	0.00E+00
4072	ALL	746573	4041225	7.38E-09	25YrCancer	7.38E-09	0.00E+00	0.00E+00	0.00E+00	0.00E+00	0.00E+00	0.00E+00	0.00E+00	0.00E+00	0.00E+00	0.00E+00	0.00E+00
4073	ALL	746598	4041225	7.49E-09	25YrCancer	7.49E-09	0.00E+00	0.00E+00	0.00E+00	0.00E+00	0.00E+00	0.00E+00	0.00E+00	0.00E+00	0.00E+00	0.00E+00	0.00E+00
4074	ALL	746623	4041225	7.61E-09	25YrCancer	7.61E-09	0.00E+00	0.00E+00	0.00E+00	0.00E+00	0.00E+00	0.00E+00	0.00E+00	0.00E+00	0.00E+00	0.00E+00	0.00E+00
4075	ALL	746648	4041225	7.73E-09	25YrCancer	7.73E-09	0.00E+00	0.00E+00	0.00E+00	0.00E+00	0.00E+00	0.00E+00	0.00E+00	0.00E+00	0.00E+00	0.00E+00	0.00E+00
4076	ALL	746673	4041225	7.85E-09	25YrCancer	7.85E-09	0.00E+00	0.00E+00	0.00E+00	0.00E+00	0.00E+00	0.00E+00	0.00E+00	0.00E+00	0.00E+00	0.00E+00	0.00E+00
4077	ALL	746698	4041225	7.96E-09	25YrCancer	7.96E-09	0.00E+00	0.00E+00	0.00E+00	0.00E+00	0.00E+00	0.00E+00	0.00E+00	0.00E+00	0.00E+00	0.00E+00	0.00E+00
4078	ALL	746723	4041225	8.09E-09	25YrCancer	8.09E-09	0.00E+00	0.00E+00	0.00E+00	0.00E+00	0.00E+00	0.00E+00	0.00E+00	0.00E+00	0.00E+00	0.00E+00	0.00E+00

4079	ALL	746548	4041250	7.31E-09	25YrCancer	7.31E-09	0.00E+00	0.00E+00	0.00E+00	0.00E+00	0.00E+00	0.00E+00	0.00E+00	0.00E+00	0.00E+00	0.00E+00	0.00E+00
4080	ALL	746573	4041250	7.43E-09	25YrCancer	7.43E-09	0.00E+00	0.00E+00	0.00E+00	0.00E+00	0.00E+00	0.00E+00	0.00E+00	0.00E+00	0.00E+00	0.00E+00	0.00E+00
4081	ALL	746598	4041250	7.54E-09	25YrCancer	7.54E-09	0.00E+00	0.00E+00	0.00E+00	0.00E+00	0.00E+00	0.00E+00	0.00E+00	0.00E+00	0.00E+00	0.00E+00	0.00E+00
4082	ALL	746623	4041250	7.65E-09	25YrCancer	7.65E-09	0.00E+00	0.00E+00	0.00E+00	0.00E+00	0.00E+00	0.00E+00	0.00E+00	0.00E+00	0.00E+00	0.00E+00	0.00E+00
4083	ALL	746648	4041250	7.77E-09	25YrCancer	7.77E-09	0.00E+00	0.00E+00	0.00E+00	0.00E+00	0.00E+00	0.00E+00	0.00E+00	0.00E+00	0.00E+00	0.00E+00	0.00E+00
4084	ALL	746673	4041250	7.88E-09	25YrCancer	7.88E-09	0.00E+00	0.00E+00	0.00E+00	0.00E+00	0.00E+00	0.00E+00	0.00E+00	0.00E+00	0.00E+00	0.00E+00	0.00E+00
4085	ALL	746698	4041250	8.01E-09	25YrCancer	8.01E-09	0.00E+00	0.00E+00	0.00E+00	0.00E+00	0.00E+00	0.00E+00	0.00E+00	0.00E+00	0.00E+00	0.00E+00	0.00E+00
4086	ALL	746723	4041250	8.13E-09	25YrCancer	8.13E-09	0.00E+00	0.00E+00	0.00E+00	0.00E+00	0.00E+00	0.00E+00	0.00E+00	0.00E+00	0.00E+00	0.00E+00	0.00E+00
4087	ALL	746548	4041275	7.35E-09	25YrCancer	7.35E-09	0.00E+00	0.00E+00	0.00E+00	0.00E+00	0.00E+00	0.00E+00	0.00E+00	0.00E+00	0.00E+00	0.00E+00	0.00E+00
4088	ALL	746573	4041275	7.47E-09	25YrCancer	7.47E-09	0.00E+00	0.00E+00	0.00E+00	0.00E+00	0.00E+00	0.00E+00	0.00E+00	0.00E+00	0.00E+00	0.00E+00	0.00E+00
4089	ALL	746598	4041275	7.58E-09	25YrCancer	7.58E-09	0.00E+00	0.00E+00	0.00E+00	0.00E+00	0.00E+00	0.00E+00	0.00E+00	0.00E+00	0.00E+00	0.00E+00	0.00E+00
4090	ALL	746623	4041275	7.69E-09	25YrCancer	7.69E-09	0.00E+00	0.00E+00	0.00E+00	0.00E+00	0.00E+00	0.00E+00	0.00E+00	0.00E+00	0.00E+00	0.00E+00	0.00E+00
4091	ALL	746648	4041275	7.80E-09	25YrCancer	7.80E-09	0.00E+00	0.00E+00	0.00E+00	0.00E+00	0.00E+00	0.00E+00	0.00E+00	0.00E+00	0.00E+00	0.00E+00	0.00E+00
4092	ALL	746673	4041275	7.92E-09	25YrCancer	7.92E-09	0.00E+00	0.00E+00	0.00E+00	0.00E+00	0.00E+00	0.00E+00	0.00E+00	0.00E+00	0.00E+00	0.00E+00	0.00E+00
4093	ALL	746698	4041275	8.04E-09	25YrCancer	8.04E-09	0.00E+00	0.00E+00	0.00E+00	0.00E+00	0.00E+00	0.00E+00	0.00E+00	0.00E+00	0.00E+00	0.00E+00	0.00E+00
4094	ALL	746723	4041275	8.16E-09	25YrCancer	8.16E-09	0.00E+00	0.00E+00	0.00E+00	0.00E+00	0.00E+00	0.00E+00	0.00E+00	0.00E+00	0.00E+00	0.00E+00	0.00E+00
4095	ALL	746548	4041300	7.39E-09	25YrCancer	7.39E-09	0.00E+00	0.00E+00	0.00E+00	0.00E+00	0.00E+00	0.00E+00	0.00E+00	0.00E+00	0.00E+00	0.00E+00	0.00E+00
4096	ALL	746573	4041300	7.50E-09	25YrCancer	7.50E-09	0.00E+00	0.00E+00	0.00E+00	0.00E+00	0.00E+00	0.00E+00	0.00E+00	0.00E+00	0.00E+00	0.00E+00	0.00E+00
4097	ALL	746598	4041300	7.61E-09	25YrCancer	7.61E-09	0.00E+00	0.00E+00	0.00E+00	0.00E+00	0.00E+00	0.00E+00	0.00E+00	0.00E+00	0.00E+00	0.00E+00	0.00E+00
4098	ALL	746623	4041300	7.72E-09	25YrCancer	7.72E-09	0.00E+00	0.00E+00	0.00E+00	0.00E+00	0.00E+00	0.00E+00	0.00E+00	0.00E+00	0.00E+00	0.00E+00	0.00E+00
4099	ALL	746648	4041300	7.83E-09	25YrCancer	7.83E-09	0.00E+00	0.00E+00	0.00E+00	0.00E+00	0.00E+00	0.00E+00	0.00E+00	0.00E+00	0.00E+00	0.00E+00	0.00E+00
4100	ALL	746673	4041300	7.95E-09	25YrCancer	7.95E-09	0.00E+00	0.00E+00	0.00E+00	0.00E+00	0.00E+00	0.00E+00	0.00E+00	0.00E+00	0.00E+00	0.00E+00	0.00E+00
4101	ALL	746698	4041300	8.07E-09	25YrCancer	8.07E-09	0.00E+00	0.00E+00	0.00E+00	0.00E+00	0.00E+00	0.00E+00	0.00E+00	0.00E+00	0.00E+00	0.00E+00	0.00E+00
4102	ALL	746723	4041300	8.19E-09	25YrCancer	8.19E-09	0.00E+00	0.00E+00	0.00E+00	0.00E+00	0.00E+00	0.00E+00	0.00E+00	0.00E+00	0.00E+00	0.00E+00	0.00E+00
4103	ALL	746561.71	4041116.1	7.05E-09	25YrCancer	7.05E-09	0.00E+00	0.00E+00	0.00E+00	0.00E+00	0.00E+00	0.00E+00	0.00E+00	0.00E+00	0.00E+00	0.00E+00	0.00E+00
4104	ALL	746586.71	4041116.1	7.17E-09	25YrCancer	7.17E-09	0.00E+00	0.00E+00	0.00E+00	0.00E+00	0.00E+00	0.00E+00	0.00E+00	0.00E+00	0.00E+00	0.00E+00	0.00E+00
4105	ALL	746611.71	4041116.1	7.29E-09	25YrCancer	7.29E-09	0.00E+00	0.00E+00	0.00E+00	0.00E+00	0.00E+00	0.00E+00	0.00E+00	0.00E+00	0.00E+00	0.00E+00	0.00E+00
4106	ALL	746561.71	4041141.1	7.12E-09	25YrCancer	7.12E-09	0.00E+00	0.00E+00	0.00E+00	0.00E+00	0.00E+00	0.00E+00	0.00E+00	0.00E+00	0.00E+00	0.00E+00	0.00E+00
4107	ALL	746586.71	4041141.1	7.24E-09	25YrCancer	7.24E-09	0.00E+00	0.00E+00	0.00E+00	0.00E+00	0.00E+00	0.00E+00	0.00E+00	0.00E+00	0.00E+00	0.00E+00	0.00E+00
4108	ALL	746611.71	4041141.1	7.36E-09	25YrCancer	7.36E-09	0.00E+00	0.00E+00	0.00E+00	0.00E+00	0.00E+00	0.00E+00	0.00E+00	0.00E+00	0.00E+00	0.00E+00	0.00E+00
4109	ALL	746561.71	4041166.1	7.20E-09	25YrCancer	7.20E-09	0.00E+00	0.00E+00	0.00E+00	0.00E+00	0.00E+00	0.00E+00	0.00E+00	0.00E+00	0.00E+00	0.00E+00	0.00E+00
4110	ALL	746586.71	4041166.1	7.31E-09	25YrCancer	7.31E-09	0.00E+00	0.00E+00	0.00E+00	0.00E+00	0.00E+00	0.00E+00	0.00E+00	0.00E+00	0.00E+00	0.00E+00	0.00E+00
4111	ALL	746611.71	4041166.1	7.43E-09	25YrCancer	7.43E-09	0.00E+00	0.00E+00	0.00E+00	0.00E+00	0.00E+00	0.00E+00	0.00E+00	0.00E+00	0.00E+00	0.00E+00	0.00E+00
4112	ALL	732066.53	4034602.91	8.61E-09	25YrCancer	8.61E-09	0.00E+00	0.00E+00	0.00E+00	0.00E+00	0.00E+00	0.00E+00	0.00E+00	0.00E+00	0.00E+00	0.00E+00	0.00E+00
4113	ALL	732091.13	4033774.4	6.81E-09	25YrCancer	6.81E-09	0.00E+00	0.00E+00	0.00E+00	0.00E+00	0.00E+00	0.00E+00	0.00E+00	0.00E+00	0.00E+00	0.00E+00	0.00E+00
4114	ALL	733692.71	4033824.33	2.34E-07	25YrCancer	2.34E-07	0.00E+00	0.00E+00	0.00E+00	0.00E+00	0.00E+00	0.00E+00	0.00E+00	0.00E+00	0.00E+00	0.00E+00	0.00E+00
4115	ALL	733674.04	4034495.29	7.60E-09	25YrCancer	7.60E-09	0.00E+00	0.00E+00	0.00E+00	0.00E+00	0.00E+00	0.00E+00	0.00E+00	0.00E+00	0.00E+00	0.00E+00	0.00E+00
4116	ALL	734110.13	4034487.33	6.73E-09	25YrCancer	6.73E-09	0.00E+00	0.00E+00	0.00E+00	0.00E+00	0.00E+00	0.00E+00	0.00E+00	0.00E+00	0.00E+00	0.00E+00	0.00E+00
4117	ALL	734257.24	4034696.21	4.78E-09	25YrCancer	4.78E-09	0.00E+00	0.00E+00	0.00E+00	0.00E+00	0.00E+00	0.00E+00	0.00E+00	0.00E+00	0.00E+00	0.00E+00	0.00E+00
4118	ALL	734627.91	4034703.99	4.79E-09	25YrCancer	4.79E-09	0.00E+00	0.00E+00	0.00E+00	0.00E+00	0.00E+00	0.00E+00	0.00E+00	0.00E+00	0.00E+00	0.00E+00	0.00E+00
4119	ALL	735392.15	4035430.99	2.99E-09	25YrCancer	2.99E-09	0.00E+00	0.00E+00	0.00E+00	0.00E+00	0.00E+00	0.00E+00	0.00E+00	0.00E+00	0.00E+00	0.00E+00	0.00E+00
4120	ALL	737808.42	4035430.09	2.99E-09	25YrCancer	2.99E-09	0.00E+00	0.00E+00	0.00E+00	0.00E+00	0.00E+00	0.00E+00	0.00E+00	0.00E+00	0.00E+00	0.00E+00	0.00E+00
4121	ALL	738465.19	4036541.12	2.59E-09	25YrCancer	2.59E-09	0.00E+00	0.00E+00	0.00E+00	0.00E+00	0.00E+00	0.00E+00	0.00E+00	0.00E+00	0.00E+00	0.00E+00	0.00E+00
4122	ALL	738750.39	4036380.31	2.68E-09	25YrCancer	2.68E-09	0.00E+00	0.00E+00	0.00E+00	0.00E+00	0.00E+00	0.00E+00	0.00E+00	0.00E+00	0.00E+00	0.00E+00	0.00E+00
4123	ALL	742069.46	4036499.23	3.05E-09	25YrCancer	3.05E-09	0.00E+00	0.00E+00	0.00E+00	0.00E+00	0.00E+00	0.00E+00	0.00E+00	0.00E+00	0.00E+00	0.00E+00	0.00E+00
4124	ALL	745283.68	4036598.92	6.37E-09	25YrCancer	6.37E-09	0.00E+00	0.00E+00	0.00E+00	0.00E+00	0.00E+00	0.00E+00	0.00E+00	0.00E+00	0.00E+00	0.00E+00	0.00E+00
4125	ALL	746673.96	4036659.94	2.02E-08	25YrCancer	2.02E-08	0.00E+00	0.00E+00	0.00E+00	0.00E+00	0.00E+00	0.00E+00	0.00E+00	0.00E+00	0.00E+00	0.00E+00	0.00E+00
4126	ALL	746708.07	4035860.27	1.11E-08	25YrCancer	1.11E-08	0.00E+00	0.00E+00	0.00E+00	0.00E+00	0.00E+00	0.00E+00	0.00E+00	0.00E+00	0.00E+00	0.00E+00	0.00E+00
4127	ALL	747515.51	4035882.35	2.30E-07	25YrCancer	2.30E-07	0.00E+00	0.00E+00	0.00E+00	0.00E+00	0.00E+00	0.00E+00	0.00E+00	0.00E+00	0.00E+00	0.00E+00	0.00E+00
4128	ALL	747536.38	4035076.16	3.29E-08	25YrCancer	3.29E-08	0.00E+00	0.00E+00	0.00E+00	0.00E+00	0.00E+00	0.00E+00	0.00E+00	0.00E+00	0.00E+00	0.00E+00	0.00E+00
4129	ALL	748342.31	4035116.19	4.52E-08	25YrCancer	4.52E-08	0.00E+00	0.00E+00	0.00E+00	0.00E+00	0.00E+00	0.00E+00	0.00E+00	0.00E+00	0.00E+00	0.00E+00	0.00E+00

4130	ALL	748310.9	4036726.09	6.64E-09	25YrCancer	6.64E-09	0.00E+00	0.00E+00	0.00E+00	0.00E+00	0.00E+00	0.00E+00	0.00E+00	0.00E+00	0.00E+00	0.00E+00	0.00E+00
4131	ALL	749907.56	4036767.46	9.31E-09	25YrCancer	9.31E-09	0.00E+00	0.00E+00	0.00E+00	0.00E+00	0.00E+00	0.00E+00	0.00E+00	0.00E+00	0.00E+00	0.00E+00	0.00E+00
4132	ALL	749811.98	4039992.18	2.82E-08	25YrCancer	2.82E-08	0.00E+00	0.00E+00	0.00E+00	0.00E+00	0.00E+00	0.00E+00	0.00E+00	0.00E+00	0.00E+00	0.00E+00	0.00E+00
4133	ALL	751400.39	4040064.69	7.84E-09	25YrCancer	7.84E-09	0.00E+00	0.00E+00	0.00E+00	0.00E+00	0.00E+00	0.00E+00	0.00E+00	0.00E+00	0.00E+00	0.00E+00	0.00E+00
4134	ALL	751462.23	4038438.34	1.54E-08	25YrCancer	1.54E-08	0.00E+00	0.00E+00	0.00E+00	0.00E+00	0.00E+00	0.00E+00	0.00E+00	0.00E+00	0.00E+00	0.00E+00	0.00E+00
4135	ALL	752772.2	4038498.22	8.59E-09	25YrCancer	8.59E-09	0.00E+00	0.00E+00	0.00E+00	0.00E+00	0.00E+00	0.00E+00	0.00E+00	0.00E+00	0.00E+00	0.00E+00	0.00E+00
4136	ALL	752832.11	4036888.4	9.57E-09	25YrCancer	9.57E-09	0.00E+00	0.00E+00	0.00E+00	0.00E+00	0.00E+00	0.00E+00	0.00E+00	0.00E+00	0.00E+00	0.00E+00	0.00E+00
4137	ALL	754818.78	4036951.87	6.11E-09	25YrCancer	6.11E-09	0.00E+00	0.00E+00	0.00E+00	0.00E+00	0.00E+00	0.00E+00	0.00E+00	0.00E+00	0.00E+00	0.00E+00	0.00E+00
4138	ALL	754771.03	4038559.27	4.64E-09	25YrCancer	4.64E-09	0.00E+00	0.00E+00	0.00E+00	0.00E+00	0.00E+00	0.00E+00	0.00E+00	0.00E+00	0.00E+00	0.00E+00	0.00E+00
4139	ALL	752787.25	4038507.84	8.52E-09	25YrCancer	8.52E-09	0.00E+00	0.00E+00	0.00E+00	0.00E+00	0.00E+00	0.00E+00	0.00E+00	0.00E+00	0.00E+00	0.00E+00	0.00E+00
4140	ALL	752734.04	4040110.04	4.90E-09	25YrCancer	4.90E-09	0.00E+00	0.00E+00	0.00E+00	0.00E+00	0.00E+00	0.00E+00	0.00E+00	0.00E+00	0.00E+00	0.00E+00	0.00E+00
4141	ALL	751403.83	4040076.27	7.79E-09	25YrCancer	7.79E-09	0.00E+00	0.00E+00	0.00E+00	0.00E+00	0.00E+00	0.00E+00	0.00E+00	0.00E+00	0.00E+00	0.00E+00	0.00E+00
4142	ALL	751355.71	4041673.39	2.72E-09	25YrCancer	2.72E-09	0.00E+00	0.00E+00	0.00E+00	0.00E+00	0.00E+00	0.00E+00	0.00E+00	0.00E+00	0.00E+00	0.00E+00	0.00E+00
4143	ALL	753494.58	4041753.1	2.20E-09	25YrCancer	2.20E-09	0.00E+00	0.00E+00	0.00E+00	0.00E+00	0.00E+00	0.00E+00	0.00E+00	0.00E+00	0.00E+00	0.00E+00	0.00E+00
4144	ALL	753492.55	4041789.93	2.18E-09	25YrCancer	2.18E-09	0.00E+00	0.00E+00	0.00E+00	0.00E+00	0.00E+00	0.00E+00	0.00E+00	0.00E+00	0.00E+00	0.00E+00	0.00E+00
4145	ALL	753430	4043372.28	1.60E-09	25YrCancer	1.60E-09	0.00E+00	0.00E+00	0.00E+00	0.00E+00	0.00E+00	0.00E+00	0.00E+00	0.00E+00	0.00E+00	0.00E+00	0.00E+00
4146	ALL	752608.63	4043340.49	1.62E-09	25YrCancer	1.62E-09	0.00E+00	0.00E+00	0.00E+00	0.00E+00	0.00E+00	0.00E+00	0.00E+00	0.00E+00	0.00E+00	0.00E+00	0.00E+00
4147	ALL	752588.7	4044954.02	1.17E-09	25YrCancer	1.17E-09	0.00E+00	0.00E+00	0.00E+00	0.00E+00	0.00E+00	0.00E+00	0.00E+00	0.00E+00	0.00E+00	0.00E+00	0.00E+00
4148	ALL	751182.35	4044928.16	1.20E-09	25YrCancer	1.20E-09	0.00E+00	0.00E+00	0.00E+00	0.00E+00	0.00E+00	0.00E+00	0.00E+00	0.00E+00	0.00E+00	0.00E+00	0.00E+00
4149	ALL	750128.34	4044862.62	1.38E-09	25YrCancer	1.38E-09	0.00E+00	0.00E+00	0.00E+00	0.00E+00	0.00E+00	0.00E+00	0.00E+00	0.00E+00	0.00E+00	0.00E+00	0.00E+00
4150	ALL	750113.01	4045660.82	1.24E-09	25YrCancer	1.24E-09	0.00E+00	0.00E+00	0.00E+00	0.00E+00	0.00E+00	0.00E+00	0.00E+00	0.00E+00	0.00E+00	0.00E+00	0.00E+00
4151	ALL	748466.7	4045588.02	1.41E-09	25YrCancer	1.41E-09	0.00E+00	0.00E+00	0.00E+00	0.00E+00	0.00E+00	0.00E+00	0.00E+00	0.00E+00	0.00E+00	0.00E+00	0.00E+00
4152	ALL	748517.04	4043182.11	2.18E-09	25YrCancer	2.18E-09	0.00E+00	0.00E+00	0.00E+00	0.00E+00	0.00E+00	0.00E+00	0.00E+00	0.00E+00	0.00E+00	0.00E+00	0.00E+00
4153	ALL	748555.57	4041574.8	3.76E-09	25YrCancer	3.76E-09	0.00E+00	0.00E+00	0.00E+00	0.00E+00	0.00E+00	0.00E+00	0.00E+00	0.00E+00	0.00E+00	0.00E+00	0.00E+00
4154	ALL	748134.63	4041563.3	4.83E-09	25YrCancer	4.83E-09	0.00E+00	0.00E+00	0.00E+00	0.00E+00	0.00E+00	0.00E+00	0.00E+00	0.00E+00	0.00E+00	0.00E+00	0.00E+00
4155	ALL	747727.94	4041548.19	6.23E-09	25YrCancer	6.23E-09	0.00E+00	0.00E+00	0.00E+00	0.00E+00	0.00E+00	0.00E+00	0.00E+00	0.00E+00	0.00E+00	0.00E+00	0.00E+00
4156	ALL	746738.41	4041515.68	8.17E-09	25YrCancer	8.17E-09	0.00E+00	0.00E+00	0.00E+00	0.00E+00	0.00E+00	0.00E+00	0.00E+00	0.00E+00	0.00E+00	0.00E+00	0.00E+00
4157	ALL	746735.92	4041120.52	7.93E-09	25YrCancer	7.93E-09	0.00E+00	0.00E+00	0.00E+00	0.00E+00	0.00E+00	0.00E+00	0.00E+00	0.00E+00	0.00E+00	0.00E+00	0.00E+00
4158	ALL	746543.23	4041110.63	6.95E-09	25YrCancer	6.95E-09	0.00E+00	0.00E+00	0.00E+00	0.00E+00	0.00E+00	0.00E+00	0.00E+00	0.00E+00	0.00E+00	0.00E+00	0.00E+00
4159	ALL	746547.66	4040518.95	5.51E-09	25YrCancer	5.51E-09	0.00E+00	0.00E+00	0.00E+00	0.00E+00	0.00E+00	0.00E+00	0.00E+00	0.00E+00	0.00E+00	0.00E+00	0.00E+00
4160	ALL	746633.93	4040521.31	5.69E-09	25YrCancer	5.69E-09	0.00E+00	0.00E+00	0.00E+00	0.00E+00	0.00E+00	0.00E+00	0.00E+00	0.00E+00	0.00E+00	0.00E+00	0.00E+00
4161	ALL	746634.88	4040467.3	5.62E-09	25YrCancer	5.62E-09	0.00E+00	0.00E+00	0.00E+00	0.00E+00	0.00E+00	0.00E+00	0.00E+00	0.00E+00	0.00E+00	0.00E+00	0.00E+00
4162	ALL	746550.33	4040468.06	5.46E-09	25YrCancer	5.46E-09	0.00E+00	0.00E+00	0.00E+00	0.00E+00	0.00E+00	0.00E+00	0.00E+00	0.00E+00	0.00E+00	0.00E+00	0.00E+00
4163	ALL	746553.92	4040355.79	5.32E-09	25YrCancer	5.32E-09	0.00E+00	0.00E+00	0.00E+00	0.00E+00	0.00E+00	0.00E+00	0.00E+00	0.00E+00	0.00E+00	0.00E+00	0.00E+00
4164	ALL	746620.22	4040356.68	5.43E-09	25YrCancer	5.43E-09	0.00E+00	0.00E+00	0.00E+00	0.00E+00	0.00E+00	0.00E+00	0.00E+00	0.00E+00	0.00E+00	0.00E+00	0.00E+00
4165	ALL	746621.12	4040314.75	5.36E-09	25YrCancer	5.36E-09	0.00E+00	0.00E+00	0.00E+00	0.00E+00	0.00E+00	0.00E+00	0.00E+00	0.00E+00	0.00E+00	0.00E+00	0.00E+00
4166	ALL	746554.62	4040315.5	5.25E-09	25YrCancer	5.25E-09	0.00E+00	0.00E+00	0.00E+00	0.00E+00	0.00E+00	0.00E+00	0.00E+00	0.00E+00	0.00E+00	0.00E+00	0.00E+00
4167	ALL	746560.36	4040168.37	4.97E-09	25YrCancer	4.97E-09	0.00E+00	0.00E+00	0.00E+00	0.00E+00	0.00E+00	0.00E+00	0.00E+00	0.00E+00	0.00E+00	0.00E+00	0.00E+00
4168	ALL	746603.42	4040169.72	5.03E-09	25YrCancer	5.03E-09	0.00E+00	0.00E+00	0.00E+00	0.00E+00	0.00E+00	0.00E+00	0.00E+00	0.00E+00	0.00E+00	0.00E+00	0.00E+00
4169	ALL	746617.4	4040169.94	5.05E-09	25YrCancer	5.05E-09	0.00E+00	0.00E+00	0.00E+00	0.00E+00	0.00E+00	0.00E+00	0.00E+00	0.00E+00	0.00E+00	0.00E+00	0.00E+00
4170	ALL	746619.21	4040066.32	4.84E-09	25YrCancer	4.84E-09	0.00E+00	0.00E+00	0.00E+00	0.00E+00	0.00E+00	0.00E+00	0.00E+00	0.00E+00	0.00E+00	0.00E+00	0.00E+00
4171	ALL	746619.25	4040065.57	4.84E-09	25YrCancer	4.84E-09	0.00E+00	0.00E+00	0.00E+00	0.00E+00	0.00E+00	0.00E+00	0.00E+00	0.00E+00	0.00E+00	0.00E+00	0.00E+00
4172	ALL	746566.34	4040064.96	4.79E-09	25YrCancer	4.79E-09	0.00E+00	0.00E+00	0.00E+00	0.00E+00	0.00E+00	0.00E+00	0.00E+00	0.00E+00	0.00E+00	0.00E+00	0.00E+00
4173	ALL	746573	4039885.4	4.61E-09	25YrCancer	4.61E-09	0.00E+00	0.00E+00	0.00E+00	0.00E+00	0.00E+00	0.00E+00	0.00E+00	0.00E+00	0.00E+00	0.00E+00	0.00E+00
4174	ALL	748187.61	4039939.79	1.24E-08	25YrCancer	1.24E-08	0.00E+00	0.00E+00	0.00E+00	0.00E+00	0.00E+00	0.00E+00	0.00E+00	0.00E+00	0.00E+00	0.00E+00	0.00E+00
4175	ALL	748269.93	4036790.15	6.30E-09	25YrCancer	6.30E-09	0.00E+00	0.00E+00	0.00E+00	0.00E+00	0.00E+00	0.00E+00	0.00E+00	0.00E+00	0.00E+00	0.00E+00	0.00E+00
4176	ALL	747485.7	4036764.65	6.85E-09	25YrCancer	6.85E-09	0.00E+00	0.00E+00	0.00E+00	0.00E+00	0.00E+00	0.00E+00	0.00E+00	0.00E+00	0.00E+00	0.00E+00	0.00E+00
4177	ALL	747441.54	4037774.89	4.50E-09	25YrCancer	4.50E-09	0.00E+00	0.00E+00	0.00E+00	0.00E+00	0.00E+00	0.00E+00	0.00E+00	0.00E+00	0.00E+00	0.00E+00	0.00E+00
4178	ALL	746636.18	4037748.26	5.30E-09	25YrCancer	5.30E-09	0.00E+00	0.00E+00	0.00E+00	0.00E+00	0.00E+00	0.00E+00	0.00E+00	0.00E+00	0.00E+00	0.00E+00	0.00E+00
4179	ALL	746670.69	4036745.26	1.57E-08	25YrCancer	1.57E-08	0.00E+00	0.00E+00	0.00E+00	0.00E+00	0.00E+00	0.00E+00	0.00E+00	0.00E+00	0.00E+00	0.00E+00	0.00E+00
4180	ALL	745738.29	4036714.6	9.63E-09	25YrCancer	9.63E-09	0.00E+00	0.00E+00	0.00E+00	0.00E+00	0.00E+00	0.00E+00	0.00E+00	0.00E+00	0.00E+00	0.00E+00	0.00E+00

4181	ALL	738770.04	4036473.6	2.65E-09	25YrCancer	2.65E-09	0.00E+00	0.00E+00	0.00E+00	0.00E+00	0.00E+00	0.00E+00	0.00E+00	0.00E+00	0.00E+00	0.00E+00	0.00E+00
4182	ALL	738439.61	4036664.66	2.55E-09	25YrCancer	2.55E-09	0.00E+00	0.00E+00	0.00E+00	0.00E+00	0.00E+00	0.00E+00	0.00E+00	0.00E+00	0.00E+00	0.00E+00	0.00E+00
4183	ALL	737829.88	4035658.81	2.89E-09	25YrCancer	2.89E-09	0.00E+00	0.00E+00	0.00E+00	0.00E+00	0.00E+00	0.00E+00	0.00E+00	0.00E+00	0.00E+00	0.00E+00	0.00E+00
4184	ALL	737743.73	4035513.27	2.96E-09	25YrCancer	2.96E-09	0.00E+00	0.00E+00	0.00E+00	0.00E+00	0.00E+00	0.00E+00	0.00E+00	0.00E+00	0.00E+00	0.00E+00	0.00E+00
4185	ALL	737022.12	4035512.85	2.94E-09	25YrCancer	2.94E-09	0.00E+00	0.00E+00	0.00E+00	0.00E+00	0.00E+00	0.00E+00	0.00E+00	0.00E+00	0.00E+00	0.00E+00	0.00E+00
4186	ALL	735339.16	4035512.23	2.90E-09	25YrCancer	2.90E-09	0.00E+00	0.00E+00	0.00E+00	0.00E+00	0.00E+00	0.00E+00	0.00E+00	0.00E+00	0.00E+00	0.00E+00	0.00E+00
4187	ALL	734620.84	4034828.06	4.20E-09	25YrCancer	4.20E-09	0.00E+00	0.00E+00	0.00E+00	0.00E+00	0.00E+00	0.00E+00	0.00E+00	0.00E+00	0.00E+00	0.00E+00	0.00E+00
4188	ALL	734199.14	4034810.78	4.16E-09	25YrCancer	4.16E-09	0.00E+00	0.00E+00	0.00E+00	0.00E+00	0.00E+00	0.00E+00	0.00E+00	0.00E+00	0.00E+00	0.00E+00	0.00E+00
4189	ALL	734063.26	4034590.76	5.54E-09	25YrCancer	5.54E-09	0.00E+00	0.00E+00	0.00E+00	0.00E+00	0.00E+00	0.00E+00	0.00E+00	0.00E+00	0.00E+00	0.00E+00	0.00E+00
4190	ALL	733671.38	4034584.06	6.41E-09	25YrCancer	6.41E-09	0.00E+00	0.00E+00	0.00E+00	0.00E+00	0.00E+00	0.00E+00	0.00E+00	0.00E+00	0.00E+00	0.00E+00	0.00E+00
4191	ALL	733670.9	4034611.62	6.12E-09	25YrCancer	6.12E-09	0.00E+00	0.00E+00	0.00E+00	0.00E+00	0.00E+00	0.00E+00	0.00E+00	0.00E+00	0.00E+00	0.00E+00	0.00E+00
4192	ALL	733666.71	4034642.68	5.84E-09	25YrCancer	5.84E-09	0.00E+00	0.00E+00	0.00E+00	0.00E+00	0.00E+00	0.00E+00	0.00E+00	0.00E+00	0.00E+00	0.00E+00	0.00E+00
4193	ALL	732743.17	4034617.72	2.32E-08	25YrCancer	2.32E-08	0.00E+00	0.00E+00	0.00E+00	0.00E+00	0.00E+00	0.00E+00	0.00E+00	0.00E+00	0.00E+00	0.00E+00	0.00E+00
4194	ALL	732071.45	4034437.21	7.65E-09	25YrCancer	7.65E-09	0.00E+00	0.00E+00	0.00E+00	0.00E+00	0.00E+00	0.00E+00	0.00E+00	0.00E+00	0.00E+00	0.00E+00	0.00E+00
4195	ALL	732076.37	4034271.51	7.23E-09	25YrCancer	7.23E-09	0.00E+00	0.00E+00	0.00E+00	0.00E+00	0.00E+00	0.00E+00	0.00E+00	0.00E+00	0.00E+00	0.00E+00	0.00E+00
4196	ALL	732081.29	4034105.8	7.41E-09	25YrCancer	7.41E-09	0.00E+00	0.00E+00	0.00E+00	0.00E+00	0.00E+00	0.00E+00	0.00E+00	0.00E+00	0.00E+00	0.00E+00	0.00E+00
4197	ALL	732086.21	4033940.1	7.42E-09	25YrCancer	7.42E-09	0.00E+00	0.00E+00	0.00E+00	0.00E+00	0.00E+00	0.00E+00	0.00E+00	0.00E+00	0.00E+00	0.00E+00	0.00E+00
4198	ALL	732269.08	4033779.95	6.30E-09	25YrCancer	6.30E-09	0.00E+00	0.00E+00	0.00E+00	0.00E+00	0.00E+00	0.00E+00	0.00E+00	0.00E+00	0.00E+00	0.00E+00	0.00E+00
4199	ALL	732447.04	4033785.5	6.13E-09	25YrCancer	6.13E-09	0.00E+00	0.00E+00	0.00E+00	0.00E+00	0.00E+00	0.00E+00	0.00E+00	0.00E+00	0.00E+00	0.00E+00	0.00E+00
4200	ALL	732624.99	4033791.04	6.22E-09	25YrCancer	6.22E-09	0.00E+00	0.00E+00	0.00E+00	0.00E+00	0.00E+00	0.00E+00	0.00E+00	0.00E+00	0.00E+00	0.00E+00	0.00E+00
4201	ALL	732802.94	4033796.59	7.06E-09	25YrCancer	7.06E-09	0.00E+00	0.00E+00	0.00E+00	0.00E+00	0.00E+00	0.00E+00	0.00E+00	0.00E+00	0.00E+00	0.00E+00	0.00E+00
4202	ALL	732980.9	4033802.14	9.65E-09	25YrCancer	9.65E-09	0.00E+00	0.00E+00	0.00E+00	0.00E+00	0.00E+00	0.00E+00	0.00E+00	0.00E+00	0.00E+00	0.00E+00	0.00E+00
4203	ALL	733158.85	4033807.69	1.60E-08	25YrCancer	1.60E-08	0.00E+00	0.00E+00	0.00E+00	0.00E+00	0.00E+00	0.00E+00	0.00E+00	0.00E+00	0.00E+00	0.00E+00	0.00E+00
4204	ALL	733336.8	4033813.23	7.51E-08	25YrCancer	7.51E-08	0.00E+00	0.00E+00	0.00E+00	0.00E+00	0.00E+00	0.00E+00	0.00E+00	0.00E+00	0.00E+00	0.00E+00	0.00E+00
4205	ALL	733514.76	4033818.78	2.71E-07	25YrCancer	2.71E-07	0.00E+00	0.00E+00	0.00E+00	0.00E+00	0.00E+00	0.00E+00	0.00E+00	0.00E+00	0.00E+00	0.00E+00	0.00E+00
4206	ALL	733688.04	4033992.07	1.81E-07	25YrCancer	1.81E-07	0.00E+00	0.00E+00	0.00E+00	0.00E+00	0.00E+00	0.00E+00	0.00E+00	0.00E+00	0.00E+00	0.00E+00	0.00E+00
4207	ALL	733683.38	4034159.81	4.27E-08	25YrCancer	4.27E-08	0.00E+00	0.00E+00	0.00E+00	0.00E+00	0.00E+00	0.00E+00	0.00E+00	0.00E+00	0.00E+00	0.00E+00	0.00E+00
4208	ALL	733678.71	4034327.55	1.18E-08	25YrCancer	1.18E-08	0.00E+00	0.00E+00	0.00E+00	0.00E+00	0.00E+00	0.00E+00	0.00E+00	0.00E+00	0.00E+00	0.00E+00	0.00E+00
4209	ALL	733819.4	4034492.64	6.90E-09	25YrCancer	6.90E-09	0.00E+00	0.00E+00	0.00E+00	0.00E+00	0.00E+00	0.00E+00	0.00E+00	0.00E+00	0.00E+00	0.00E+00	0.00E+00
4210	ALL	733964.77	4034489.98	6.71E-09	25YrCancer	6.71E-09	0.00E+00	0.00E+00	0.00E+00	0.00E+00	0.00E+00	0.00E+00	0.00E+00	0.00E+00	0.00E+00	0.00E+00	0.00E+00
4211	ALL	734183.69	4034591.77	5.53E-09	25YrCancer	5.53E-09	0.00E+00	0.00E+00	0.00E+00	0.00E+00	0.00E+00	0.00E+00	0.00E+00	0.00E+00	0.00E+00	0.00E+00	0.00E+00
4212	ALL	734442.57	4034700.1	4.79E-09	25YrCancer	4.79E-09	0.00E+00	0.00E+00	0.00E+00	0.00E+00	0.00E+00	0.00E+00	0.00E+00	0.00E+00	0.00E+00	0.00E+00	0.00E+00
4213	ALL	734755.28	4034825.16	4.22E-09	25YrCancer	4.22E-09	0.00E+00	0.00E+00	0.00E+00	0.00E+00	0.00E+00	0.00E+00	0.00E+00	0.00E+00	0.00E+00	0.00E+00	0.00E+00
4214	ALL	734882.66	4034946.32	3.81E-09	25YrCancer	3.81E-09	0.00E+00	0.00E+00	0.00E+00	0.00E+00	0.00E+00	0.00E+00	0.00E+00	0.00E+00	0.00E+00	0.00E+00	0.00E+00
4215	ALL	735010.03	4035067.49	3.53E-09	25YrCancer	3.53E-09	0.00E+00	0.00E+00	0.00E+00	0.00E+00	0.00E+00	0.00E+00	0.00E+00	0.00E+00	0.00E+00	0.00E+00	0.00E+00
4216	ALL	735137.4	4035188.66	3.31E-09	25YrCancer	3.31E-09	0.00E+00	0.00E+00	0.00E+00	0.00E+00	0.00E+00	0.00E+00	0.00E+00	0.00E+00	0.00E+00	0.00E+00	0.00E+00
4217	ALL	735264.78	4035309.82	3.13E-09	25YrCancer	3.13E-09	0.00E+00	0.00E+00	0.00E+00	0.00E+00	0.00E+00	0.00E+00	0.00E+00	0.00E+00	0.00E+00	0.00E+00	0.00E+00
4218	ALL	735578.02	4035430.92	3.00E-09	25YrCancer	3.00E-09	0.00E+00	0.00E+00	0.00E+00	0.00E+00	0.00E+00	0.00E+00	0.00E+00	0.00E+00	0.00E+00	0.00E+00	0.00E+00
4219	ALL	735763.88	4035430.85	2.99E-09	25YrCancer	2.99E-09	0.00E+00	0.00E+00	0.00E+00	0.00E+00	0.00E+00	0.00E+00	0.00E+00	0.00E+00	0.00E+00	0.00E+00	0.00E+00
4220	ALL	735949.75	4035430.78	2.99E-09	25YrCancer	2.99E-09	0.00E+00	0.00E+00	0.00E+00	0.00E+00	0.00E+00	0.00E+00	0.00E+00	0.00E+00	0.00E+00	0.00E+00	0.00E+00
4221	ALL	736135.62	4035430.71	2.99E-09	25YrCancer	2.99E-09	0.00E+00	0.00E+00	0.00E+00	0.00E+00	0.00E+00	0.00E+00	0.00E+00	0.00E+00	0.00E+00	0.00E+00	0.00E+00
4222	ALL	736321.48	4035430.64	2.98E-09	25YrCancer	2.98E-09	0.00E+00	0.00E+00	0.00E+00	0.00E+00	0.00E+00	0.00E+00	0.00E+00	0.00E+00	0.00E+00	0.00E+00	0.00E+00
4223	ALL	736507.35	4035430.57	2.99E-09	25YrCancer	2.99E-09	0.00E+00	0.00E+00	0.00E+00	0.00E+00	0.00E+00	0.00E+00	0.00E+00	0.00E+00	0.00E+00	0.00E+00	0.00E+00
4224	ALL	736693.22	4035430.51	2.99E-09	25YrCancer	2.99E-09	0.00E+00	0.00E+00	0.00E+00	0.00E+00	0.00E+00	0.00E+00	0.00E+00	0.00E+00	0.00E+00	0.00E+00	0.00E+00
4225	ALL	736879.09	4035430.44	2.99E-09	25YrCancer	2.99E-09	0.00E+00	0.00E+00	0.00E+00	0.00E+00	0.00E+00	0.00E+00	0.00E+00	0.00E+00	0.00E+00	0.00E+00	0.00E+00
4226	ALL	737064.95	4035430.37	2.99E-09	25YrCancer	2.99E-09	0.00E+00	0.00E+00	0.00E+00	0.00E+00	0.00E+00	0.00E+00	0.00E+00	0.00E+00	0.00E+00	0.00E+00	0.00E+00
4227	ALL	737250.82	4035430.3	2.99E-09	25YrCancer	2.99E-09	0.00E+00	0.00E+00	0.00E+00	0.00E+00	0.00E+00	0.00E+00	0.00E+00	0.00E+00	0.00E+00	0.00E+00	0.00E+00
4228	ALL	737436.69	4035430.23	2.99E-09	25YrCancer	2.99E-09	0.00E+00	0.00E+00	0.00E+00	0.00E+00	0.00E+00	0.00E+00	0.00E+00	0.00E+00	0.00E+00	0.00E+00	0.00E+00
4229	ALL	737622.55	4035430.16	2.99E-09	25YrCancer	2.99E-09	0.00E+00	0.00E+00	0.00E+00	0.00E+00	0.00E+00	0.00E+00	0.00E+00	0.00E+00	0.00E+00	0.00E+00	0.00E+00
4230	ALL	737902.24	4035588.81	2.92E-09	25YrCancer	2.92E-09	0.00E+00	0.00E+00	0.00E+00	0.00E+00	0.00E+00	0.00E+00	0.00E+00	0.00E+00	0.00E+00	0.00E+00	0.00E+00
4231	ALL	737996.07	4035747.53	2.86E-09	25YrCancer	2.86E-09	0.00E+00	0.00E+00	0.00E+00	0.00E+00	0.00E+00	0.00E+00	0.00E+00	0.00E+00	0.00E+00	0.00E+00	0.00E+00

4232	ALL	738089.89	4035906.25	2.81E-09	25YrCancer	2.81E-09	0.00E+00	0.00E+00	0.00E+00	0.00E+00	0.00E+00	0.00E+00	0.00E+00	0.00E+00	0.00E+00	0.00E+00	0.00E+00
4233	ALL	738183.72	4036064.96	2.75E-09	25YrCancer	2.75E-09	0.00E+00	0.00E+00	0.00E+00	0.00E+00	0.00E+00	0.00E+00	0.00E+00	0.00E+00	0.00E+00	0.00E+00	0.00E+00
4234	ALL	738277.54	4036223.68	2.69E-09	25YrCancer	2.69E-09	0.00E+00	0.00E+00	0.00E+00	0.00E+00	0.00E+00	0.00E+00	0.00E+00	0.00E+00	0.00E+00	0.00E+00	0.00E+00
4235	ALL	738371.37	4036382.4	2.64E-09	25YrCancer	2.64E-09	0.00E+00	0.00E+00	0.00E+00	0.00E+00	0.00E+00	0.00E+00	0.00E+00	0.00E+00	0.00E+00	0.00E+00	0.00E+00
4236	ALL	738607.79	4036460.71	2.64E-09	25YrCancer	2.64E-09	0.00E+00	0.00E+00	0.00E+00	0.00E+00	0.00E+00	0.00E+00	0.00E+00	0.00E+00	0.00E+00	0.00E+00	0.00E+00
4237	ALL	738945.63	4036387.31	2.70E-09	25YrCancer	2.70E-09	0.00E+00	0.00E+00	0.00E+00	0.00E+00	0.00E+00	0.00E+00	0.00E+00	0.00E+00	0.00E+00	0.00E+00	0.00E+00
4238	ALL	739140.87	4036394.3	2.71E-09	25YrCancer	2.71E-09	0.00E+00	0.00E+00	0.00E+00	0.00E+00	0.00E+00	0.00E+00	0.00E+00	0.00E+00	0.00E+00	0.00E+00	0.00E+00
4239	ALL	739336.11	4036401.3	2.72E-09	25YrCancer	2.72E-09	0.00E+00	0.00E+00	0.00E+00	0.00E+00	0.00E+00	0.00E+00	0.00E+00	0.00E+00	0.00E+00	0.00E+00	0.00E+00
4240	ALL	739531.35	4036408.29	2.73E-09	25YrCancer	2.73E-09	0.00E+00	0.00E+00	0.00E+00	0.00E+00	0.00E+00	0.00E+00	0.00E+00	0.00E+00	0.00E+00	0.00E+00	0.00E+00
4241	ALL	739726.59	4036415.29	2.74E-09	25YrCancer	2.74E-09	0.00E+00	0.00E+00	0.00E+00	0.00E+00	0.00E+00	0.00E+00	0.00E+00	0.00E+00	0.00E+00	0.00E+00	0.00E+00
4242	ALL	739921.83	4036422.28	2.75E-09	25YrCancer	2.75E-09	0.00E+00	0.00E+00	0.00E+00	0.00E+00	0.00E+00	0.00E+00	0.00E+00	0.00E+00	0.00E+00	0.00E+00	0.00E+00
4243	ALL	740117.07	4036429.28	2.76E-09	25YrCancer	2.76E-09	0.00E+00	0.00E+00	0.00E+00	0.00E+00	0.00E+00	0.00E+00	0.00E+00	0.00E+00	0.00E+00	0.00E+00	0.00E+00
4244	ALL	740312.31	4036436.27	2.77E-09	25YrCancer	2.77E-09	0.00E+00	0.00E+00	0.00E+00	0.00E+00	0.00E+00	0.00E+00	0.00E+00	0.00E+00	0.00E+00	0.00E+00	0.00E+00
4245	ALL	740507.54	4036443.27	2.78E-09	25YrCancer	2.78E-09	0.00E+00	0.00E+00	0.00E+00	0.00E+00	0.00E+00	0.00E+00	0.00E+00	0.00E+00	0.00E+00	0.00E+00	0.00E+00
4246	ALL	740702.78	4036450.26	2.80E-09	25YrCancer	2.80E-09	0.00E+00	0.00E+00	0.00E+00	0.00E+00	0.00E+00	0.00E+00	0.00E+00	0.00E+00	0.00E+00	0.00E+00	0.00E+00
4247	ALL	740898.02	4036457.26	2.82E-09	25YrCancer	2.82E-09	0.00E+00	0.00E+00	0.00E+00	0.00E+00	0.00E+00	0.00E+00	0.00E+00	0.00E+00	0.00E+00	0.00E+00	0.00E+00
4248	ALL	741093.26	4036464.25	2.85E-09	25YrCancer	2.85E-09	0.00E+00	0.00E+00	0.00E+00	0.00E+00	0.00E+00	0.00E+00	0.00E+00	0.00E+00	0.00E+00	0.00E+00	0.00E+00
4249	ALL	741288.5	4036471.25	2.88E-09	25YrCancer	2.88E-09	0.00E+00	0.00E+00	0.00E+00	0.00E+00	0.00E+00	0.00E+00	0.00E+00	0.00E+00	0.00E+00	0.00E+00	0.00E+00
4250	ALL	741483.74	4036478.24	2.92E-09	25YrCancer	2.92E-09	0.00E+00	0.00E+00	0.00E+00	0.00E+00	0.00E+00	0.00E+00	0.00E+00	0.00E+00	0.00E+00	0.00E+00	0.00E+00
4251	ALL	741678.98	4036485.24	2.96E-09	25YrCancer	2.96E-09	0.00E+00	0.00E+00	0.00E+00	0.00E+00	0.00E+00	0.00E+00	0.00E+00	0.00E+00	0.00E+00	0.00E+00	0.00E+00
4252	ALL	741874.22	4036492.23	3.00E-09	25YrCancer	3.00E-09	0.00E+00	0.00E+00	0.00E+00	0.00E+00	0.00E+00	0.00E+00	0.00E+00	0.00E+00	0.00E+00	0.00E+00	0.00E+00
4253	ALL	742258.53	4036505.09	3.12E-09	25YrCancer	3.12E-09	0.00E+00	0.00E+00	0.00E+00	0.00E+00	0.00E+00	0.00E+00	0.00E+00	0.00E+00	0.00E+00	0.00E+00	0.00E+00
4254	ALL	742447.6	4036510.96	3.20E-09	25YrCancer	3.20E-09	0.00E+00	0.00E+00	0.00E+00	0.00E+00	0.00E+00	0.00E+00	0.00E+00	0.00E+00	0.00E+00	0.00E+00	0.00E+00
4255	ALL	742636.68	4036516.82	3.29E-09	25YrCancer	3.29E-09	0.00E+00	0.00E+00	0.00E+00	0.00E+00	0.00E+00	0.00E+00	0.00E+00	0.00E+00	0.00E+00	0.00E+00	0.00E+00
4256	ALL	742825.75	4036522.69	3.39E-09	25YrCancer	3.39E-09	0.00E+00	0.00E+00	0.00E+00	0.00E+00	0.00E+00	0.00E+00	0.00E+00	0.00E+00	0.00E+00	0.00E+00	0.00E+00
4257	ALL	743014.82	4036528.55	3.51E-09	25YrCancer	3.51E-09	0.00E+00	0.00E+00	0.00E+00	0.00E+00	0.00E+00	0.00E+00	0.00E+00	0.00E+00	0.00E+00	0.00E+00	0.00E+00
4258	ALL	743203.89	4036534.41	3.63E-09	25YrCancer	3.63E-09	0.00E+00	0.00E+00	0.00E+00	0.00E+00	0.00E+00	0.00E+00	0.00E+00	0.00E+00	0.00E+00	0.00E+00	0.00E+00
4259	ALL	743392.96	4036540.28	3.77E-09	25YrCancer	3.77E-09	0.00E+00	0.00E+00	0.00E+00	0.00E+00	0.00E+00	0.00E+00	0.00E+00	0.00E+00	0.00E+00	0.00E+00	0.00E+00
4260	ALL	743582.03	4036546.14	3.92E-09	25YrCancer	3.92E-09	0.00E+00	0.00E+00	0.00E+00	0.00E+00	0.00E+00	0.00E+00	0.00E+00	0.00E+00	0.00E+00	0.00E+00	0.00E+00
4261	ALL	743771.11	4036552.01	4.07E-09	25YrCancer	4.07E-09	0.00E+00	0.00E+00	0.00E+00	0.00E+00	0.00E+00	0.00E+00	0.00E+00	0.00E+00	0.00E+00	0.00E+00	0.00E+00
4262	ALL	743960.18	4036557.87	4.24E-09	25YrCancer	4.24E-09	0.00E+00	0.00E+00	0.00E+00	0.00E+00	0.00E+00	0.00E+00	0.00E+00	0.00E+00	0.00E+00	0.00E+00	0.00E+00
4263	ALL	744149.25	4036563.74	4.42E-09	25YrCancer	4.42E-09	0.00E+00	0.00E+00	0.00E+00	0.00E+00	0.00E+00	0.00E+00	0.00E+00	0.00E+00	0.00E+00	0.00E+00	0.00E+00
4264	ALL	744338.32	4036569.6	4.61E-09	25YrCancer	4.61E-09	0.00E+00	0.00E+00	0.00E+00	0.00E+00	0.00E+00	0.00E+00	0.00E+00	0.00E+00	0.00E+00	0.00E+00	0.00E+00
4265	ALL	744527.39	4036575.46	4.83E-09	25YrCancer	4.83E-09	0.00E+00	0.00E+00	0.00E+00	0.00E+00	0.00E+00	0.00E+00	0.00E+00	0.00E+00	0.00E+00	0.00E+00	0.00E+00
4266	ALL	744716.46	4036581.33	5.08E-09	25YrCancer	5.08E-09	0.00E+00	0.00E+00	0.00E+00	0.00E+00	0.00E+00	0.00E+00	0.00E+00	0.00E+00	0.00E+00	0.00E+00	0.00E+00
4267	ALL	744905.54	4036587.19	5.41E-09	25YrCancer	5.41E-09	0.00E+00	0.00E+00	0.00E+00	0.00E+00	0.00E+00	0.00E+00	0.00E+00	0.00E+00	0.00E+00	0.00E+00	0.00E+00
4268	ALL	745094.61	4036593.06	5.82E-09	25YrCancer	5.82E-09	0.00E+00	0.00E+00	0.00E+00	0.00E+00	0.00E+00	0.00E+00	0.00E+00	0.00E+00	0.00E+00	0.00E+00	0.00E+00
4269	ALL	745482.29	4036607.64	7.18E-09	25YrCancer	7.18E-09	0.00E+00	0.00E+00	0.00E+00	0.00E+00	0.00E+00	0.00E+00	0.00E+00	0.00E+00	0.00E+00	0.00E+00	0.00E+00
4270	ALL	745680.9	4036616.35	8.38E-09	25YrCancer	8.38E-09	0.00E+00	0.00E+00	0.00E+00	0.00E+00	0.00E+00	0.00E+00	0.00E+00	0.00E+00	0.00E+00	0.00E+00	0.00E+00
4271	ALL	745879.51	4036625.07	1.03E-08	25YrCancer	1.03E-08	0.00E+00	0.00E+00	0.00E+00	0.00E+00	0.00E+00	0.00E+00	0.00E+00	0.00E+00	0.00E+00	0.00E+00	0.00E+00
4272	ALL	746078.13	4036633.79	1.33E-08	25YrCancer	1.33E-08	0.00E+00	0.00E+00	0.00E+00	0.00E+00	0.00E+00	0.00E+00	0.00E+00	0.00E+00	0.00E+00	0.00E+00	0.00E+00
4273	ALL	746276.74	4036642.51	1.78E-08	25YrCancer	1.78E-08	0.00E+00	0.00E+00	0.00E+00	0.00E+00	0.00E+00	0.00E+00	0.00E+00	0.00E+00	0.00E+00	0.00E+00	0.00E+00
4274	ALL	746475.35	4036651.22	2.24E-08	25YrCancer	2.24E-08	0.00E+00	0.00E+00	0.00E+00	0.00E+00	0.00E+00	0.00E+00	0.00E+00	0.00E+00	0.00E+00	0.00E+00	0.00E+00
4275	ALL	746680.78	4036500.01	3.20E-08	25YrCancer	3.20E-08	0.00E+00	0.00E+00	0.00E+00	0.00E+00	0.00E+00	0.00E+00	0.00E+00	0.00E+00	0.00E+00	0.00E+00	0.00E+00
4276	ALL	746687.6	4036340.07	3.24E-08	25YrCancer	3.24E-08	0.00E+00	0.00E+00	0.00E+00	0.00E+00	0.00E+00	0.00E+00	0.00E+00	0.00E+00	0.00E+00	0.00E+00	0.00E+00
4277	ALL	746694.43	4036180.14	1.90E-08	25YrCancer	1.90E-08	0.00E+00	0.00E+00	0.00E+00	0.00E+00	0.00E+00	0.00E+00	0.00E+00	0.00E+00	0.00E+00	0.00E+00	0.00E+00
4278	ALL	746701.25	4036020.2	1.31E-08	25YrCancer	1.31E-08	0.00E+00	0.00E+00	0.00E+00	0.00E+00	0.00E+00	0.00E+00	0.00E+00	0.00E+00	0.00E+00	0.00E+00	0.00E+00
4279	ALL	746869.56	4035864.69	1.75E-08	25YrCancer	1.75E-08	0.00E+00	0.00E+00	0.00E+00	0.00E+00	0.00E+00	0.00E+00	0.00E+00	0.00E+00	0.00E+00	0.00E+00	0.00E+00
4280	ALL	747031.05	4035869.1	3.22E-08	25YrCancer	3.22E-08	0.00E+00	0.00E+00	0.00E+00	0.00E+00	0.00E+00	0.00E+00	0.00E+00	0.00E+00	0.00E+00	0.00E+00	0.00E+00
4281	ALL	747192.53	4035873.52	2.27E-07	25YrCancer	2.27E-07	0.00E+00	0.00E+00	0.00E+00	0.00E+00	0.00E+00	0.00E+00	0.00E+00	0.00E+00	0.00E+00	0.00E+00	0.00E+00
4282	ALL	747354.02	4035877.93	3.83E-07	25YrCancer	3.83E-07	0.00E+00	0.00E+00	0.00E+00	0.00E+00	0.00E+00	0.00E+00	0.00E+00	0.00E+00	0.00E+00	0.00E+00	0.00E+00

4283	ALL	747519.68	4035721.11	1.88E-07	25YrCancer	1.88E-07	0.00E+00	0.00E+00	0.00E+00	0.00E+00	0.00E+00	0.00E+00	0.00E+00	0.00E+00	0.00E+00	0.00E+00	0.00E+00
4284	ALL	747523.86	4035559.87	1.13E-07	25YrCancer	1.13E-07	0.00E+00	0.00E+00	0.00E+00	0.00E+00	0.00E+00	0.00E+00	0.00E+00	0.00E+00	0.00E+00	0.00E+00	0.00E+00
4285	ALL	747528.03	4035398.64	6.92E-08	25YrCancer	6.92E-08	0.00E+00	0.00E+00	0.00E+00	0.00E+00	0.00E+00	0.00E+00	0.00E+00	0.00E+00	0.00E+00	0.00E+00	0.00E+00
4286	ALL	747532.21	4035237.4	4.60E-08	25YrCancer	4.60E-08	0.00E+00	0.00E+00	0.00E+00	0.00E+00	0.00E+00	0.00E+00	0.00E+00	0.00E+00	0.00E+00	0.00E+00	0.00E+00
4287	ALL	747697.57	4035084.17	4.01E-08	25YrCancer	4.01E-08	0.00E+00	0.00E+00	0.00E+00	0.00E+00	0.00E+00	0.00E+00	0.00E+00	0.00E+00	0.00E+00	0.00E+00	0.00E+00
4288	ALL	747858.75	4035092.17	4.53E-08	25YrCancer	4.53E-08	0.00E+00	0.00E+00	0.00E+00	0.00E+00	0.00E+00	0.00E+00	0.00E+00	0.00E+00	0.00E+00	0.00E+00	0.00E+00
4289	ALL	748019.94	4035100.18	4.80E-08	25YrCancer	4.80E-08	0.00E+00	0.00E+00	0.00E+00	0.00E+00	0.00E+00	0.00E+00	0.00E+00	0.00E+00	0.00E+00	0.00E+00	0.00E+00
4290	ALL	748181.12	4035108.18	4.79E-08	25YrCancer	4.79E-08	0.00E+00	0.00E+00	0.00E+00	0.00E+00	0.00E+00	0.00E+00	0.00E+00	0.00E+00	0.00E+00	0.00E+00	0.00E+00
4291	ALL	748338.82	4035295.07	4.96E-08	25YrCancer	4.96E-08	0.00E+00	0.00E+00	0.00E+00	0.00E+00	0.00E+00	0.00E+00	0.00E+00	0.00E+00	0.00E+00	0.00E+00	0.00E+00
4292	ALL	748335.33	4035473.95	4.90E-08	25YrCancer	4.90E-08	0.00E+00	0.00E+00	0.00E+00	0.00E+00	0.00E+00	0.00E+00	0.00E+00	0.00E+00	0.00E+00	0.00E+00	0.00E+00
4293	ALL	748331.84	4035652.82	4.35E-08	25YrCancer	4.35E-08	0.00E+00	0.00E+00	0.00E+00	0.00E+00	0.00E+00	0.00E+00	0.00E+00	0.00E+00	0.00E+00	0.00E+00	0.00E+00
4294	ALL	748328.35	4035831.7	3.52E-08	25YrCancer	3.52E-08	0.00E+00	0.00E+00	0.00E+00	0.00E+00	0.00E+00	0.00E+00	0.00E+00	0.00E+00	0.00E+00	0.00E+00	0.00E+00
4295	ALL	748324.86	4036010.58	2.55E-08	25YrCancer	2.55E-08	0.00E+00	0.00E+00	0.00E+00	0.00E+00	0.00E+00	0.00E+00	0.00E+00	0.00E+00	0.00E+00	0.00E+00	0.00E+00
4296	ALL	748321.37	4036189.46	1.67E-08	25YrCancer	1.67E-08	0.00E+00	0.00E+00	0.00E+00	0.00E+00	0.00E+00	0.00E+00	0.00E+00	0.00E+00	0.00E+00	0.00E+00	0.00E+00
4297	ALL	748317.88	4036368.33	1.10E-08	25YrCancer	1.10E-08	0.00E+00	0.00E+00	0.00E+00	0.00E+00	0.00E+00	0.00E+00	0.00E+00	0.00E+00	0.00E+00	0.00E+00	0.00E+00
4298	ALL	748314.39	4036547.21	8.03E-09	25YrCancer	8.03E-09	0.00E+00	0.00E+00	0.00E+00	0.00E+00	0.00E+00	0.00E+00	0.00E+00	0.00E+00	0.00E+00	0.00E+00	0.00E+00
4299	ALL	748510.48	4036731.26	6.78E-09	25YrCancer	6.78E-09	0.00E+00	0.00E+00	0.00E+00	0.00E+00	0.00E+00	0.00E+00	0.00E+00	0.00E+00	0.00E+00	0.00E+00	0.00E+00
4300	ALL	748710.07	4036736.43	7.06E-09	25YrCancer	7.06E-09	0.00E+00	0.00E+00	0.00E+00	0.00E+00	0.00E+00	0.00E+00	0.00E+00	0.00E+00	0.00E+00	0.00E+00	0.00E+00
4301	ALL	748909.65	4036741.6	7.47E-09	25YrCancer	7.47E-09	0.00E+00	0.00E+00	0.00E+00	0.00E+00	0.00E+00	0.00E+00	0.00E+00	0.00E+00	0.00E+00	0.00E+00	0.00E+00
4302	ALL	749109.23	4036746.77	7.92E-09	25YrCancer	7.92E-09	0.00E+00	0.00E+00	0.00E+00	0.00E+00	0.00E+00	0.00E+00	0.00E+00	0.00E+00	0.00E+00	0.00E+00	0.00E+00
4303	ALL	749308.81	4036751.95	8.32E-09	25YrCancer	8.32E-09	0.00E+00	0.00E+00	0.00E+00	0.00E+00	0.00E+00	0.00E+00	0.00E+00	0.00E+00	0.00E+00	0.00E+00	0.00E+00
4304	ALL	749508.4	4036757.12	8.66E-09	25YrCancer	8.66E-09	0.00E+00	0.00E+00	0.00E+00	0.00E+00	0.00E+00	0.00E+00	0.00E+00	0.00E+00	0.00E+00	0.00E+00	0.00E+00
4305	ALL	749707.98	4036762.29	8.99E-09	25YrCancer	8.99E-09	0.00E+00	0.00E+00	0.00E+00	0.00E+00	0.00E+00	0.00E+00	0.00E+00	0.00E+00	0.00E+00	0.00E+00	0.00E+00
4306	ALL	749901.94	4036957.15	9.44E-09	25YrCancer	9.44E-09	0.00E+00	0.00E+00	0.00E+00	0.00E+00	0.00E+00	0.00E+00	0.00E+00	0.00E+00	0.00E+00	0.00E+00	0.00E+00
4307	ALL	749896.32	4037146.84	9.84E-09	25YrCancer	9.84E-09	0.00E+00	0.00E+00	0.00E+00	0.00E+00	0.00E+00	0.00E+00	0.00E+00	0.00E+00	0.00E+00	0.00E+00	0.00E+00
4308	ALL	749890.69	4037336.53	1.05E-08	25YrCancer	1.05E-08	0.00E+00	0.00E+00	0.00E+00	0.00E+00	0.00E+00	0.00E+00	0.00E+00	0.00E+00	0.00E+00	0.00E+00	0.00E+00
4309	ALL	749885.07	4037526.22	1.13E-08	25YrCancer	1.13E-08	0.00E+00	0.00E+00	0.00E+00	0.00E+00	0.00E+00	0.00E+00	0.00E+00	0.00E+00	0.00E+00	0.00E+00	0.00E+00
4310	ALL	749879.45	4037715.91	1.24E-08	25YrCancer	1.24E-08	0.00E+00	0.00E+00	0.00E+00	0.00E+00	0.00E+00	0.00E+00	0.00E+00	0.00E+00	0.00E+00	0.00E+00	0.00E+00
4311	ALL	749873.83	4037905.6	1.39E-08	25YrCancer	1.39E-08	0.00E+00	0.00E+00	0.00E+00	0.00E+00	0.00E+00	0.00E+00	0.00E+00	0.00E+00	0.00E+00	0.00E+00	0.00E+00
4312	ALL	749868.2	4038095.29	1.58E-08	25YrCancer	1.58E-08	0.00E+00	0.00E+00	0.00E+00	0.00E+00	0.00E+00	0.00E+00	0.00E+00	0.00E+00	0.00E+00	0.00E+00	0.00E+00
4313	ALL	749862.58	4038284.98	1.83E-08	25YrCancer	1.83E-08	0.00E+00	0.00E+00	0.00E+00	0.00E+00	0.00E+00	0.00E+00	0.00E+00	0.00E+00	0.00E+00	0.00E+00	0.00E+00
4314	ALL	749856.96	4038474.66	2.16E-08	25YrCancer	2.16E-08	0.00E+00	0.00E+00	0.00E+00	0.00E+00	0.00E+00	0.00E+00	0.00E+00	0.00E+00	0.00E+00	0.00E+00	0.00E+00
4315	ALL	749851.34	4038664.35	2.59E-08	25YrCancer	2.59E-08	0.00E+00	0.00E+00	0.00E+00	0.00E+00	0.00E+00	0.00E+00	0.00E+00	0.00E+00	0.00E+00	0.00E+00	0.00E+00
4316	ALL	749845.71	4038854.04	3.14E-08	25YrCancer	3.14E-08	0.00E+00	0.00E+00	0.00E+00	0.00E+00	0.00E+00	0.00E+00	0.00E+00	0.00E+00	0.00E+00	0.00E+00	0.00E+00
4317	ALL	749840.09	4039043.73	3.75E-08	25YrCancer	3.75E-08	0.00E+00	0.00E+00	0.00E+00	0.00E+00	0.00E+00	0.00E+00	0.00E+00	0.00E+00	0.00E+00	0.00E+00	0.00E+00
4318	ALL	749834.47	4039233.42	4.28E-08	25YrCancer	4.28E-08	0.00E+00	0.00E+00	0.00E+00	0.00E+00	0.00E+00	0.00E+00	0.00E+00	0.00E+00	0.00E+00	0.00E+00	0.00E+00
4319	ALL	749828.85	4039423.11	4.48E-08	25YrCancer	4.48E-08	0.00E+00	0.00E+00	0.00E+00	0.00E+00	0.00E+00	0.00E+00	0.00E+00	0.00E+00	0.00E+00	0.00E+00	0.00E+00
4320	ALL	749823.22	4039612.8	4.21E-08	25YrCancer	4.21E-08	0.00E+00	0.00E+00	0.00E+00	0.00E+00	0.00E+00	0.00E+00	0.00E+00	0.00E+00	0.00E+00	0.00E+00	0.00E+00
4321	ALL	749817.6	4039802.49	3.61E-08	25YrCancer	3.61E-08	0.00E+00	0.00E+00	0.00E+00	0.00E+00	0.00E+00	0.00E+00	0.00E+00	0.00E+00	0.00E+00	0.00E+00	0.00E+00
4322	ALL	750010.53	4040001.24	2.19E-08	25YrCancer	2.19E-08	0.00E+00	0.00E+00	0.00E+00	0.00E+00	0.00E+00	0.00E+00	0.00E+00	0.00E+00	0.00E+00	0.00E+00	0.00E+00
4323	ALL	750209.08	4040010.31	1.76E-08	25YrCancer	1.76E-08	0.00E+00	0.00E+00	0.00E+00	0.00E+00	0.00E+00	0.00E+00	0.00E+00	0.00E+00	0.00E+00	0.00E+00	0.00E+00
4324	ALL	750407.63	4040019.37	1.47E-08	25YrCancer	1.47E-08	0.00E+00	0.00E+00	0.00E+00	0.00E+00	0.00E+00	0.00E+00	0.00E+00	0.00E+00	0.00E+00	0.00E+00	0.00E+00
4325	ALL	750606.19	4040028.44	1.25E-08	25YrCancer	1.25E-08	0.00E+00	0.00E+00	0.00E+00	0.00E+00	0.00E+00	0.00E+00	0.00E+00	0.00E+00	0.00E+00	0.00E+00	0.00E+00
4326	ALL	750804.74	4040037.5	1.09E-08	25YrCancer	1.09E-08	0.00E+00	0.00E+00	0.00E+00	0.00E+00	0.00E+00	0.00E+00	0.00E+00	0.00E+00	0.00E+00	0.00E+00	0.00E+00
4327	ALL	751003.29	4040046.56	9.67E-09	25YrCancer	9.67E-09	0.00E+00	0.00E+00	0.00E+00	0.00E+00	0.00E+00	0.00E+00	0.00E+00	0.00E+00	0.00E+00	0.00E+00	0.00E+00
4328	ALL	751201.84	4040055.63	8.67E-09	25YrCancer	8.67E-09	0.00E+00	0.00E+00	0.00E+00	0.00E+00	0.00E+00	0.00E+00	0.00E+00	0.00E+00	0.00E+00	0.00E+00	0.00E+00
4329	ALL	751407.26	4039883.98	8.97E-09	25YrCancer	8.97E-09	0.00E+00	0.00E+00	0.00E+00	0.00E+00	0.00E+00	0.00E+00	0.00E+00	0.00E+00	0.00E+00	0.00E+00	0.00E+00
4330	ALL	751414.13	4039703.28	1.01E-08	25YrCancer	1.01E-08	0.00E+00	0.00E+00	0.00E+00	0.00E+00	0.00E+00	0.00E+00	0.00E+00	0.00E+00	0.00E+00	0.00E+00	0.00E+00
4331	ALL	751421	4039522.57	1.12E-08	25YrCancer	1.12E-08	0.00E+00	0.00E+00	0.00E+00	0.00E+00	0.00E+00	0.00E+00	0.00E+00	0.00E+00	0.00E+00	0.00E+00	0.00E+00
4332	ALL	751427.87	4039341.87	1.23E-08	25YrCancer	1.23E-08	0.00E+00	0.00E+00	0.00E+00	0.00E+00	0.00E+00	0.00E+00	0.00E+00	0.00E+00	0.00E+00	0.00E+00	0.00E+00
4333	ALL	751434.75	4039161.16	1.32E-08	25YrCancer	1.32E-08	0.00E+00	0.00E+00	0.00E+00	0.00E+00	0.00E+00	0.00E+00	0.00E+00	0.00E+00	0.00E+00	0.00E+00	0.00E+00

4334	ALL	751441.62	4038980.46	1.40E-08	25YrCancer	1.40E-08	0.00E+00	0.00E+00	0.00E+00	0.00E+00	0.00E+00	0.00E+00	0.00E+00	0.00E+00	0.00E+00	0.00E+00	0.00E+00
4335	ALL	751448.49	4038799.75	1.46E-08	25YrCancer	1.46E-08	0.00E+00	0.00E+00	0.00E+00	0.00E+00	0.00E+00	0.00E+00	0.00E+00	0.00E+00	0.00E+00	0.00E+00	0.00E+00
4336	ALL	751455.36	4038619.05	1.51E-08	25YrCancer	1.51E-08	0.00E+00	0.00E+00	0.00E+00	0.00E+00	0.00E+00	0.00E+00	0.00E+00	0.00E+00	0.00E+00	0.00E+00	0.00E+00
4337	ALL	751649.37	4038446.89	1.41E-08	25YrCancer	1.41E-08	0.00E+00	0.00E+00	0.00E+00	0.00E+00	0.00E+00	0.00E+00	0.00E+00	0.00E+00	0.00E+00	0.00E+00	0.00E+00
4338	ALL	751836.51	4038455.45	1.29E-08	25YrCancer	1.29E-08	0.00E+00	0.00E+00	0.00E+00	0.00E+00	0.00E+00	0.00E+00	0.00E+00	0.00E+00	0.00E+00	0.00E+00	0.00E+00
4339	ALL	752023.65	4038464	1.18E-08	25YrCancer	1.18E-08	0.00E+00	0.00E+00	0.00E+00	0.00E+00	0.00E+00	0.00E+00	0.00E+00	0.00E+00	0.00E+00	0.00E+00	0.00E+00
4340	ALL	752210.78	4038472.56	1.08E-08	25YrCancer	1.08E-08	0.00E+00	0.00E+00	0.00E+00	0.00E+00	0.00E+00	0.00E+00	0.00E+00	0.00E+00	0.00E+00	0.00E+00	0.00E+00
4341	ALL	752397.92	4038481.11	9.99E-09	25YrCancer	9.99E-09	0.00E+00	0.00E+00	0.00E+00	0.00E+00	0.00E+00	0.00E+00	0.00E+00	0.00E+00	0.00E+00	0.00E+00	0.00E+00
4342	ALL	752585.06	4038489.67	9.24E-09	25YrCancer	9.24E-09	0.00E+00	0.00E+00	0.00E+00	0.00E+00	0.00E+00	0.00E+00	0.00E+00	0.00E+00	0.00E+00	0.00E+00	0.00E+00
4343	ALL	752778.86	4038319.35	8.90E-09	25YrCancer	8.90E-09	0.00E+00	0.00E+00	0.00E+00	0.00E+00	0.00E+00	0.00E+00	0.00E+00	0.00E+00	0.00E+00	0.00E+00	0.00E+00
4344	ALL	752785.51	4038140.48	9.19E-09	25YrCancer	9.19E-09	0.00E+00	0.00E+00	0.00E+00	0.00E+00	0.00E+00	0.00E+00	0.00E+00	0.00E+00	0.00E+00	0.00E+00	0.00E+00
4345	ALL	752792.17	4037961.61	9.45E-09	25YrCancer	9.45E-09	0.00E+00	0.00E+00	0.00E+00	0.00E+00	0.00E+00	0.00E+00	0.00E+00	0.00E+00	0.00E+00	0.00E+00	0.00E+00
4346	ALL	752798.83	4037782.74	9.65E-09	25YrCancer	9.65E-09	0.00E+00	0.00E+00	0.00E+00	0.00E+00	0.00E+00	0.00E+00	0.00E+00	0.00E+00	0.00E+00	0.00E+00	0.00E+00
4347	ALL	752805.48	4037603.88	9.78E-09	25YrCancer	9.78E-09	0.00E+00	0.00E+00	0.00E+00	0.00E+00	0.00E+00	0.00E+00	0.00E+00	0.00E+00	0.00E+00	0.00E+00	0.00E+00
4348	ALL	752812.14	4037425.01	9.83E-09	25YrCancer	9.83E-09	0.00E+00	0.00E+00	0.00E+00	0.00E+00	0.00E+00	0.00E+00	0.00E+00	0.00E+00	0.00E+00	0.00E+00	0.00E+00
4349	ALL	752818.8	4037246.14	9.80E-09	25YrCancer	9.80E-09	0.00E+00	0.00E+00	0.00E+00	0.00E+00	0.00E+00	0.00E+00	0.00E+00	0.00E+00	0.00E+00	0.00E+00	0.00E+00
4350	ALL	752825.45	4037067.27	9.70E-09	25YrCancer	9.70E-09	0.00E+00	0.00E+00	0.00E+00	0.00E+00	0.00E+00	0.00E+00	0.00E+00	0.00E+00	0.00E+00	0.00E+00	0.00E+00
4351	ALL	753030.78	4036894.75	9.25E-09	25YrCancer	9.25E-09	0.00E+00	0.00E+00	0.00E+00	0.00E+00	0.00E+00	0.00E+00	0.00E+00	0.00E+00	0.00E+00	0.00E+00	0.00E+00
4352	ALL	753229.44	4036901.09	8.91E-09	25YrCancer	8.91E-09	0.00E+00	0.00E+00	0.00E+00	0.00E+00	0.00E+00	0.00E+00	0.00E+00	0.00E+00	0.00E+00	0.00E+00	0.00E+00
4353	ALL	753428.11	4036907.44	8.56E-09	25YrCancer	8.56E-09	0.00E+00	0.00E+00	0.00E+00	0.00E+00	0.00E+00	0.00E+00	0.00E+00	0.00E+00	0.00E+00	0.00E+00	0.00E+00
4354	ALL	753626.78	4036913.79	8.19E-09	25YrCancer	8.19E-09	0.00E+00	0.00E+00	0.00E+00	0.00E+00	0.00E+00	0.00E+00	0.00E+00	0.00E+00	0.00E+00	0.00E+00	0.00E+00
4355	ALL	753825.45	4036920.13	7.82E-09	25YrCancer	7.82E-09	0.00E+00	0.00E+00	0.00E+00	0.00E+00	0.00E+00	0.00E+00	0.00E+00	0.00E+00	0.00E+00	0.00E+00	0.00E+00
4356	ALL	754024.11	4036926.48	7.45E-09	25YrCancer	7.45E-09	0.00E+00	0.00E+00	0.00E+00	0.00E+00	0.00E+00	0.00E+00	0.00E+00	0.00E+00	0.00E+00	0.00E+00	0.00E+00
4357	ALL	754222.78	4036932.83	7.09E-09	25YrCancer	7.09E-09	0.00E+00	0.00E+00	0.00E+00	0.00E+00	0.00E+00	0.00E+00	0.00E+00	0.00E+00	0.00E+00	0.00E+00	0.00E+00
4358	ALL	754421.45	4036939.18	6.75E-09	25YrCancer	6.75E-09	0.00E+00	0.00E+00	0.00E+00	0.00E+00	0.00E+00	0.00E+00	0.00E+00	0.00E+00	0.00E+00	0.00E+00	0.00E+00
4359	ALL	754620.11	4036945.52	6.42E-09	25YrCancer	6.42E-09	0.00E+00	0.00E+00	0.00E+00	0.00E+00	0.00E+00	0.00E+00	0.00E+00	0.00E+00	0.00E+00	0.00E+00	0.00E+00
4360	ALL	754813.47	4037130.47	5.94E-09	25YrCancer	5.94E-09	0.00E+00	0.00E+00	0.00E+00	0.00E+00	0.00E+00	0.00E+00	0.00E+00	0.00E+00	0.00E+00	0.00E+00	0.00E+00
4361	ALL	754808.17	4037309.07	5.77E-09	25YrCancer	5.77E-09	0.00E+00	0.00E+00	0.00E+00	0.00E+00	0.00E+00	0.00E+00	0.00E+00	0.00E+00	0.00E+00	0.00E+00	0.00E+00
4362	ALL	754802.86	4037487.67	5.61E-09	25YrCancer	5.61E-09	0.00E+00	0.00E+00	0.00E+00	0.00E+00	0.00E+00	0.00E+00	0.00E+00	0.00E+00	0.00E+00	0.00E+00	0.00E+00
4363	ALL	754797.56	4037666.27	5.45E-09	25YrCancer	5.45E-09	0.00E+00	0.00E+00	0.00E+00	0.00E+00	0.00E+00	0.00E+00	0.00E+00	0.00E+00	0.00E+00	0.00E+00	0.00E+00
4364	ALL	754792.25	4037844.87	5.29E-09	25YrCancer	5.29E-09	0.00E+00	0.00E+00	0.00E+00	0.00E+00	0.00E+00	0.00E+00	0.00E+00	0.00E+00	0.00E+00	0.00E+00	0.00E+00
4365	ALL	754786.95	4038023.47	5.14E-09	25YrCancer	5.14E-09	0.00E+00	0.00E+00	0.00E+00	0.00E+00	0.00E+00	0.00E+00	0.00E+00	0.00E+00	0.00E+00	0.00E+00	0.00E+00
4366	ALL	754781.64	4038202.07	4.97E-09	25YrCancer	4.97E-09	0.00E+00	0.00E+00	0.00E+00	0.00E+00	0.00E+00	0.00E+00	0.00E+00	0.00E+00	0.00E+00	0.00E+00	0.00E+00
4367	ALL	754776.34	4038380.67	4.81E-09	25YrCancer	4.81E-09	0.00E+00	0.00E+00	0.00E+00	0.00E+00	0.00E+00	0.00E+00	0.00E+00	0.00E+00	0.00E+00	0.00E+00	0.00E+00
4368	ALL	754572.65	4038554.13	4.88E-09	25YrCancer	4.88E-09	0.00E+00	0.00E+00	0.00E+00	0.00E+00	0.00E+00	0.00E+00	0.00E+00	0.00E+00	0.00E+00	0.00E+00	0.00E+00
4369	ALL	754374.27	4038548.98	5.14E-09	25YrCancer	5.14E-09	0.00E+00	0.00E+00	0.00E+00	0.00E+00	0.00E+00	0.00E+00	0.00E+00	0.00E+00	0.00E+00	0.00E+00	0.00E+00
4370	ALL	754175.9	4038543.84	5.42E-09	25YrCancer	5.42E-09	0.00E+00	0.00E+00	0.00E+00	0.00E+00	0.00E+00	0.00E+00	0.00E+00	0.00E+00	0.00E+00	0.00E+00	0.00E+00
4371	ALL	753977.52	4038538.7	5.74E-09	25YrCancer	5.74E-09	0.00E+00	0.00E+00	0.00E+00	0.00E+00	0.00E+00	0.00E+00	0.00E+00	0.00E+00	0.00E+00	0.00E+00	0.00E+00
4372	ALL	753779.14	4038533.55	6.08E-09	25YrCancer	6.08E-09	0.00E+00	0.00E+00	0.00E+00	0.00E+00	0.00E+00	0.00E+00	0.00E+00	0.00E+00	0.00E+00	0.00E+00	0.00E+00
4373	ALL	753580.76	4038528.41	6.47E-09	25YrCancer	6.47E-09	0.00E+00	0.00E+00	0.00E+00	0.00E+00	0.00E+00	0.00E+00	0.00E+00	0.00E+00	0.00E+00	0.00E+00	0.00E+00
4374	ALL	753382.38	4038523.27	6.89E-09	25YrCancer	6.89E-09	0.00E+00	0.00E+00	0.00E+00	0.00E+00	0.00E+00	0.00E+00	0.00E+00	0.00E+00	0.00E+00	0.00E+00	0.00E+00
4375	ALL	753184.01	4038518.13	7.37E-09	25YrCancer	7.37E-09	0.00E+00	0.00E+00	0.00E+00	0.00E+00	0.00E+00	0.00E+00	0.00E+00	0.00E+00	0.00E+00	0.00E+00	0.00E+00
4376	ALL	752985.63	4038512.98	7.91E-09	25YrCancer	7.91E-09	0.00E+00	0.00E+00	0.00E+00	0.00E+00	0.00E+00	0.00E+00	0.00E+00	0.00E+00	0.00E+00	0.00E+00	0.00E+00
4377	ALL	752781.34	4038685.86	8.18E-09	25YrCancer	8.18E-09	0.00E+00	0.00E+00	0.00E+00	0.00E+00	0.00E+00	0.00E+00	0.00E+00	0.00E+00	0.00E+00	0.00E+00	0.00E+00
4378	ALL	752775.43	4038863.88	7.82E-09	25YrCancer	7.82E-09	0.00E+00	0.00E+00	0.00E+00	0.00E+00	0.00E+00	0.00E+00	0.00E+00	0.00E+00	0.00E+00	0.00E+00	0.00E+00
4379	ALL	752769.51	4039041.91	7.43E-09	25YrCancer	7.43E-09	0.00E+00	0.00E+00	0.00E+00	0.00E+00	0.00E+00	0.00E+00	0.00E+00	0.00E+00	0.00E+00	0.00E+00	0.00E+00
4380	ALL	752763.6	4039219.93	7.03E-09	25YrCancer	7.03E-09	0.00E+00	0.00E+00	0.00E+00	0.00E+00	0.00E+00	0.00E+00	0.00E+00	0.00E+00	0.00E+00	0.00E+00	0.00E+00
4381	ALL	752757.69	4039397.95	6.62E-09	25YrCancer	6.62E-09	0.00E+00	0.00E+00	0.00E+00	0.00E+00	0.00E+00	0.00E+00	0.00E+00	0.00E+00	0.00E+00	0.00E+00	0.00E+00
4382	ALL	752751.78	4039575.97	6.19E-09	25YrCancer	6.19E-09	0.00E+00	0.00E+00	0.00E+00	0.00E+00	0.00E+00	0.00E+00	0.00E+00	0.00E+00	0.00E+00	0.00E+00	0.00E+00
4383	ALL	752745.86	4039754	5.75E-09	25YrCancer	5.75E-09	0.00E+00	0.00E+00	0.00E+00	0.00E+00	0.00E+00	0.00E+00	0.00E+00	0.00E+00	0.00E+00	0.00E+00	0.00E+00
4384	ALL	752739.95	4039932.02	5.31E-09	25YrCancer	5.31E-09	0.00E+00	0.00E+00	0.00E+00	0.00E+00	0.00E+00	0.00E+00	0.00E+00	0.00E+00	0.00E+00	0.00E+00	0.00E+00

4385	ALL	752544.01	4040105.22	5.17E-09	25YrCancer	5.17E-09	0.00E+00	0.00E+00	0.00E+00	0.00E+00	0.00E+00	0.00E+00	0.00E+00	0.00E+00	0.00E+00	0.00E+00
4386	ALL	752353.98	4040100.39	5.47E-09	25YrCancer	5.47E-09	0.00E+00	0.00E+00	0.00E+00	0.00E+00	0.00E+00	0.00E+00	0.00E+00	0.00E+00	0.00E+00	0.00E+00
4387	ALL	752163.95	4040095.57	5.80E-09	25YrCancer	5.80E-09	0.00E+00	0.00E+00	0.00E+00	0.00E+00	0.00E+00	0.00E+00	0.00E+00	0.00E+00	0.00E+00	0.00E+00
4388	ALL	751973.92	4040090.74	6.19E-09	25YrCancer	6.19E-09	0.00E+00	0.00E+00	0.00E+00	0.00E+00	0.00E+00	0.00E+00	0.00E+00	0.00E+00	0.00E+00	0.00E+00
4389	ALL	751783.89	4040085.92	6.63E-09	25YrCancer	6.63E-09	0.00E+00	0.00E+00	0.00E+00	0.00E+00	0.00E+00	0.00E+00	0.00E+00	0.00E+00	0.00E+00	0.00E+00
4390	ALL	751593.86	4040081.09	7.15E-09	25YrCancer	7.15E-09	0.00E+00	0.00E+00	0.00E+00	0.00E+00	0.00E+00	0.00E+00	0.00E+00	0.00E+00	0.00E+00	0.00E+00
4391	ALL	751397.81	4040275.91	6.65E-09	25YrCancer	6.65E-09	0.00E+00	0.00E+00	0.00E+00	0.00E+00	0.00E+00	0.00E+00	0.00E+00	0.00E+00	0.00E+00	0.00E+00
4392	ALL	751391.8	4040475.55	5.66E-09	25YrCancer	5.66E-09	0.00E+00	0.00E+00	0.00E+00	0.00E+00	0.00E+00	0.00E+00	0.00E+00	0.00E+00	0.00E+00	0.00E+00
4393	ALL	751385.78	4040675.19	4.81E-09	25YrCancer	4.81E-09	0.00E+00	0.00E+00	0.00E+00	0.00E+00	0.00E+00	0.00E+00	0.00E+00	0.00E+00	0.00E+00	0.00E+00
4394	ALL	751379.77	4040874.83	4.13E-09	25YrCancer	4.13E-09	0.00E+00	0.00E+00	0.00E+00	0.00E+00	0.00E+00	0.00E+00	0.00E+00	0.00E+00	0.00E+00	0.00E+00
4395	ALL	751373.76	4041074.47	3.61E-09	25YrCancer	3.61E-09	0.00E+00	0.00E+00	0.00E+00	0.00E+00	0.00E+00	0.00E+00	0.00E+00	0.00E+00	0.00E+00	0.00E+00
4396	ALL	751367.74	4041274.11	3.23E-09	25YrCancer	3.23E-09	0.00E+00	0.00E+00	0.00E+00	0.00E+00	0.00E+00	0.00E+00	0.00E+00	0.00E+00	0.00E+00	0.00E+00
4397	ALL	751361.72	4041473.75	2.94E-09	25YrCancer	2.94E-09	0.00E+00	0.00E+00	0.00E+00	0.00E+00	0.00E+00	0.00E+00	0.00E+00	0.00E+00	0.00E+00	0.00E+00
4398	ALL	751550.15	4041680.64	2.67E-09	25YrCancer	2.67E-09	0.00E+00	0.00E+00	0.00E+00	0.00E+00	0.00E+00	0.00E+00	0.00E+00	0.00E+00	0.00E+00	0.00E+00
4399	ALL	751744.6	4041687.88	2.62E-09	25YrCancer	2.62E-09	0.00E+00	0.00E+00	0.00E+00	0.00E+00	0.00E+00	0.00E+00	0.00E+00	0.00E+00	0.00E+00	0.00E+00
4400	ALL	751939.04	4041695.13	2.57E-09	25YrCancer	2.57E-09	0.00E+00	0.00E+00	0.00E+00	0.00E+00	0.00E+00	0.00E+00	0.00E+00	0.00E+00	0.00E+00	0.00E+00
4401	ALL	752133.48	4041702.38	2.53E-09	25YrCancer	2.53E-09	0.00E+00	0.00E+00	0.00E+00	0.00E+00	0.00E+00	0.00E+00	0.00E+00	0.00E+00	0.00E+00	0.00E+00
4402	ALL	752327.92	4041709.62	2.48E-09	25YrCancer	2.48E-09	0.00E+00	0.00E+00	0.00E+00	0.00E+00	0.00E+00	0.00E+00	0.00E+00	0.00E+00	0.00E+00	0.00E+00
4403	ALL	752522.37	4041716.87	2.43E-09	25YrCancer	2.43E-09	0.00E+00	0.00E+00	0.00E+00	0.00E+00	0.00E+00	0.00E+00	0.00E+00	0.00E+00	0.00E+00	0.00E+00
4404	ALL	752716.81	4041724.11	2.38E-09	25YrCancer	2.38E-09	0.00E+00	0.00E+00	0.00E+00	0.00E+00	0.00E+00	0.00E+00	0.00E+00	0.00E+00	0.00E+00	0.00E+00
4405	ALL	752911.25	4041731.36	2.33E-09	25YrCancer	2.33E-09	0.00E+00	0.00E+00	0.00E+00	0.00E+00	0.00E+00	0.00E+00	0.00E+00	0.00E+00	0.00E+00	0.00E+00
4406	ALL	753105.69	4041738.61	2.28E-09	25YrCancer	2.28E-09	0.00E+00	0.00E+00	0.00E+00	0.00E+00	0.00E+00	0.00E+00	0.00E+00	0.00E+00	0.00E+00	0.00E+00
4407	ALL	753300.14	4041745.85	2.24E-09	25YrCancer	2.24E-09	0.00E+00	0.00E+00	0.00E+00	0.00E+00	0.00E+00	0.00E+00	0.00E+00	0.00E+00	0.00E+00	0.00E+00
4408	ALL	753484.73	4041987.72	2.07E-09	25YrCancer	2.07E-09	0.00E+00	0.00E+00	0.00E+00	0.00E+00	0.00E+00	0.00E+00	0.00E+00	0.00E+00	0.00E+00	0.00E+00
4409	ALL	753476.91	4042185.52	1.97E-09	25YrCancer	1.97E-09	0.00E+00	0.00E+00	0.00E+00	0.00E+00	0.00E+00	0.00E+00	0.00E+00	0.00E+00	0.00E+00	0.00E+00
4410	ALL	753469.09	4042383.31	1.89E-09	25YrCancer	1.89E-09	0.00E+00	0.00E+00	0.00E+00	0.00E+00	0.00E+00	0.00E+00	0.00E+00	0.00E+00	0.00E+00	0.00E+00
4411	ALL	753461.28	4042581.1	1.81E-09	25YrCancer	1.81E-09	0.00E+00	0.00E+00	0.00E+00	0.00E+00	0.00E+00	0.00E+00	0.00E+00	0.00E+00	0.00E+00	0.00E+00
4412	ALL	753453.46	4042778.9	1.74E-09	25YrCancer	1.74E-09	0.00E+00	0.00E+00	0.00E+00	0.00E+00	0.00E+00	0.00E+00	0.00E+00	0.00E+00	0.00E+00	0.00E+00
4413	ALL	753445.64	4042976.69	1.68E-09	25YrCancer	1.68E-09	0.00E+00	0.00E+00	0.00E+00	0.00E+00	0.00E+00	0.00E+00	0.00E+00	0.00E+00	0.00E+00	0.00E+00
4414	ALL	753437.82	4043174.49	1.64E-09	25YrCancer	1.64E-09	0.00E+00	0.00E+00	0.00E+00	0.00E+00	0.00E+00	0.00E+00	0.00E+00	0.00E+00	0.00E+00	0.00E+00
4415	ALL	753265.73	4043365.92	1.61E-09	25YrCancer	1.61E-09	0.00E+00	0.00E+00	0.00E+00	0.00E+00	0.00E+00	0.00E+00	0.00E+00	0.00E+00	0.00E+00	0.00E+00
4416	ALL	753101.45	4043359.56	1.62E-09	25YrCancer	1.62E-09	0.00E+00	0.00E+00	0.00E+00	0.00E+00	0.00E+00	0.00E+00	0.00E+00	0.00E+00	0.00E+00	0.00E+00
4417	ALL	752937.18	4043353.21	1.63E-09	25YrCancer	1.63E-09	0.00E+00	0.00E+00	0.00E+00	0.00E+00	0.00E+00	0.00E+00	0.00E+00	0.00E+00	0.00E+00	0.00E+00
4418	ALL	752772.9	4043346.85	1.63E-09	25YrCancer	1.63E-09	0.00E+00	0.00E+00	0.00E+00	0.00E+00	0.00E+00	0.00E+00	0.00E+00	0.00E+00	0.00E+00	0.00E+00
4419	ALL	752606.42	4043519.77	1.54E-09	25YrCancer	1.54E-09	0.00E+00	0.00E+00	0.00E+00	0.00E+00	0.00E+00	0.00E+00	0.00E+00	0.00E+00	0.00E+00	0.00E+00
4420	ALL	752604.2	4043699.05	1.47E-09	25YrCancer	1.47E-09	0.00E+00	0.00E+00	0.00E+00	0.00E+00	0.00E+00	0.00E+00	0.00E+00	0.00E+00	0.00E+00	0.00E+00
4421	ALL	752601.99	4043878.33	1.41E-09	25YrCancer	1.41E-09	0.00E+00	0.00E+00	0.00E+00	0.00E+00	0.00E+00	0.00E+00	0.00E+00	0.00E+00	0.00E+00	0.00E+00
4422	ALL	752599.77	4044057.61	1.35E-09	25YrCancer	1.35E-09	0.00E+00	0.00E+00	0.00E+00	0.00E+00	0.00E+00	0.00E+00	0.00E+00	0.00E+00	0.00E+00	0.00E+00
4423	ALL	752597.56	4044236.9	1.31E-09	25YrCancer	1.31E-09	0.00E+00	0.00E+00	0.00E+00	0.00E+00	0.00E+00	0.00E+00	0.00E+00	0.00E+00	0.00E+00	0.00E+00
4424	ALL	752595.34	4044416.18	1.26E-09	25YrCancer	1.26E-09	0.00E+00	0.00E+00	0.00E+00	0.00E+00	0.00E+00	0.00E+00	0.00E+00	0.00E+00	0.00E+00	0.00E+00
4425	ALL	752593.13	4044595.46	1.23E-09	25YrCancer	1.23E-09	0.00E+00	0.00E+00	0.00E+00	0.00E+00	0.00E+00	0.00E+00	0.00E+00	0.00E+00	0.00E+00	0.00E+00
4426	ALL	752590.91	4044774.74	1.20E-09	25YrCancer	1.20E-09	0.00E+00	0.00E+00	0.00E+00	0.00E+00	0.00E+00	0.00E+00	0.00E+00	0.00E+00	0.00E+00	0.00E+00
4427	ALL	752412.91	4044950.79	1.17E-09	25YrCancer	1.17E-09	0.00E+00	0.00E+00	0.00E+00	0.00E+00	0.00E+00	0.00E+00	0.00E+00	0.00E+00	0.00E+00	0.00E+00
4428	ALL	752237.11	4044947.56	1.18E-09	25YrCancer	1.18E-09	0.00E+00	0.00E+00	0.00E+00	0.00E+00	0.00E+00	0.00E+00	0.00E+00	0.00E+00	0.00E+00	0.00E+00
4429	ALL	752061.32	4044944.32	1.18E-09	25YrCancer	1.18E-09	0.00E+00	0.00E+00	0.00E+00	0.00E+00	0.00E+00	0.00E+00	0.00E+00	0.00E+00	0.00E+00	0.00E+00
4430	ALL	751885.52	4044941.09	1.18E-09	25YrCancer	1.18E-09	0.00E+00	0.00E+00	0.00E+00	0.00E+00	0.00E+00	0.00E+00	0.00E+00	0.00E+00	0.00E+00	0.00E+00
4431	ALL	751709.73	4044937.86	1.18E-09	25YrCancer	1.18E-09	0.00E+00	0.00E+00	0.00E+00	0.00E+00	0.00E+00	0.00E+00	0.00E+00	0.00E+00	0.00E+00	0.00E+00
4432	ALL	751533.94	4044934.63	1.18E-09	25YrCancer	1.18E-09	0.00E+00	0.00E+00	0.00E+00	0.00E+00	0.00E+00	0.00E+00	0.00E+00	0.00E+00	0.00E+00	0.00E+00
4433	ALL	751358.14	4044931.39	1.18E-09	25YrCancer	1.18E-09	0.00E+00	0.00E+00	0.00E+00	0.00E+00	0.00E+00	0.00E+00	0.00E+00	0.00E+00	0.00E+00	0.00E+00
4434	ALL	751006.68	4044917.24	1.22E-09	25YrCancer	1.22E-09	0.00E+00	0.00E+00	0.00E+00	0.00E+00	0.00E+00	0.00E+00	0.00E+00	0.00E+00	0.00E+00	0.00E+00
4435	ALL	750831.01	4044906.31	1.24E-09	25YrCancer	1.24E-09	0.00E+00	0.00E+00	0.00E+00	0.00E+00	0.00E+00	0.00E+00	0.00E+00	0.00E+00	0.00E+00	0.00E+00

4436	ALL	750655.34	4044895.39	1.28E-09	25YrCancer	1.28E-09	0.00E+00	0.00E+00	0.00E+00	0.00E+00	0.00E+00	0.00E+00	0.00E+00	0.00E+00	0.00E+00	0.00E+00
4437	ALL	750479.68	4044884.47	1.32E-09	25YrCancer	1.32E-09	0.00E+00	0.00E+00	0.00E+00	0.00E+00	0.00E+00	0.00E+00	0.00E+00	0.00E+00	0.00E+00	0.00E+00
4438	ALL	750304.01	4044873.54	1.35E-09	25YrCancer	1.35E-09	0.00E+00	0.00E+00	0.00E+00	0.00E+00	0.00E+00	0.00E+00	0.00E+00	0.00E+00	0.00E+00	0.00E+00
4439	ALL	750124.51	4045062.17	1.35E-09	25YrCancer	1.35E-09	0.00E+00	0.00E+00	0.00E+00	0.00E+00	0.00E+00	0.00E+00	0.00E+00	0.00E+00	0.00E+00	0.00E+00
4440	ALL	750120.68	4045261.72	1.31E-09	25YrCancer	1.31E-09	0.00E+00	0.00E+00	0.00E+00	0.00E+00	0.00E+00	0.00E+00	0.00E+00	0.00E+00	0.00E+00	0.00E+00
4441	ALL	750116.84	4045461.27	1.27E-09	25YrCancer	1.27E-09	0.00E+00	0.00E+00	0.00E+00	0.00E+00	0.00E+00	0.00E+00	0.00E+00	0.00E+00	0.00E+00	0.00E+00
4442	ALL	749930.09	4045652.73	1.23E-09	25YrCancer	1.23E-09	0.00E+00	0.00E+00	0.00E+00	0.00E+00	0.00E+00	0.00E+00	0.00E+00	0.00E+00	0.00E+00	0.00E+00
4443	ALL	749747.16	4045644.64	1.23E-09	25YrCancer	1.23E-09	0.00E+00	0.00E+00	0.00E+00	0.00E+00	0.00E+00	0.00E+00	0.00E+00	0.00E+00	0.00E+00	0.00E+00
4444	ALL	749564.24	4045636.55	1.24E-09	25YrCancer	1.24E-09	0.00E+00	0.00E+00	0.00E+00	0.00E+00	0.00E+00	0.00E+00	0.00E+00	0.00E+00	0.00E+00	0.00E+00
4445	ALL	749381.32	4045628.46	1.26E-09	25YrCancer	1.26E-09	0.00E+00	0.00E+00	0.00E+00	0.00E+00	0.00E+00	0.00E+00	0.00E+00	0.00E+00	0.00E+00	0.00E+00
4446	ALL	749198.39	4045620.38	1.29E-09	25YrCancer	1.29E-09	0.00E+00	0.00E+00	0.00E+00	0.00E+00	0.00E+00	0.00E+00	0.00E+00	0.00E+00	0.00E+00	0.00E+00
4447	ALL	749015.47	4045612.29	1.31E-09	25YrCancer	1.31E-09	0.00E+00	0.00E+00	0.00E+00	0.00E+00	0.00E+00	0.00E+00	0.00E+00	0.00E+00	0.00E+00	0.00E+00
4448	ALL	748832.55	4045604.2	1.34E-09	25YrCancer	1.34E-09	0.00E+00	0.00E+00	0.00E+00	0.00E+00	0.00E+00	0.00E+00	0.00E+00	0.00E+00	0.00E+00	0.00E+00
4449	ALL	748649.62	4045596.11	1.37E-09	25YrCancer	1.37E-09	0.00E+00	0.00E+00	0.00E+00	0.00E+00	0.00E+00	0.00E+00	0.00E+00	0.00E+00	0.00E+00	0.00E+00
4450	ALL	748470.57	4045402.95	1.45E-09	25YrCancer	1.45E-09	0.00E+00	0.00E+00	0.00E+00	0.00E+00	0.00E+00	0.00E+00	0.00E+00	0.00E+00	0.00E+00	0.00E+00
4451	ALL	748474.44	4045217.88	1.49E-09	25YrCancer	1.49E-09	0.00E+00	0.00E+00	0.00E+00	0.00E+00	0.00E+00	0.00E+00	0.00E+00	0.00E+00	0.00E+00	0.00E+00
4452	ALL	748478.32	4045032.81	1.53E-09	25YrCancer	1.53E-09	0.00E+00	0.00E+00	0.00E+00	0.00E+00	0.00E+00	0.00E+00	0.00E+00	0.00E+00	0.00E+00	0.00E+00
4453	ALL	748482.19	4044847.74	1.57E-09	25YrCancer	1.57E-09	0.00E+00	0.00E+00	0.00E+00	0.00E+00	0.00E+00	0.00E+00	0.00E+00	0.00E+00	0.00E+00	0.00E+00
4454	ALL	748486.06	4044662.67	1.62E-09	25YrCancer	1.62E-09	0.00E+00	0.00E+00	0.00E+00	0.00E+00	0.00E+00	0.00E+00	0.00E+00	0.00E+00	0.00E+00	0.00E+00
4455	ALL	748489.93	4044477.6	1.68E-09	25YrCancer	1.68E-09	0.00E+00	0.00E+00	0.00E+00	0.00E+00	0.00E+00	0.00E+00	0.00E+00	0.00E+00	0.00E+00	0.00E+00
4456	ALL	748493.81	4044292.53	1.73E-09	25YrCancer	1.73E-09	0.00E+00	0.00E+00	0.00E+00	0.00E+00	0.00E+00	0.00E+00	0.00E+00	0.00E+00	0.00E+00	0.00E+00
4457	ALL	748497.68	4044107.46	1.79E-09	25YrCancer	1.79E-09	0.00E+00	0.00E+00	0.00E+00	0.00E+00	0.00E+00	0.00E+00	0.00E+00	0.00E+00	0.00E+00	0.00E+00
4458	ALL	748501.55	4043922.39	1.86E-09	25YrCancer	1.86E-09	0.00E+00	0.00E+00	0.00E+00	0.00E+00	0.00E+00	0.00E+00	0.00E+00	0.00E+00	0.00E+00	0.00E+00
4459	ALL	748505.42	4043737.32	1.93E-09	25YrCancer	1.93E-09	0.00E+00	0.00E+00	0.00E+00	0.00E+00	0.00E+00	0.00E+00	0.00E+00	0.00E+00	0.00E+00	0.00E+00
4460	ALL	748509.3	4043552.25	2.00E-09	25YrCancer	2.00E-09	0.00E+00	0.00E+00	0.00E+00	0.00E+00	0.00E+00	0.00E+00	0.00E+00	0.00E+00	0.00E+00	0.00E+00
4461	ALL	748513.17	4043367.18	2.08E-09	25YrCancer	2.08E-09	0.00E+00	0.00E+00	0.00E+00	0.00E+00	0.00E+00	0.00E+00	0.00E+00	0.00E+00	0.00E+00	0.00E+00
4462	ALL	748521.32	4043003.52	2.27E-09	25YrCancer	2.27E-09	0.00E+00	0.00E+00	0.00E+00	0.00E+00	0.00E+00	0.00E+00	0.00E+00	0.00E+00	0.00E+00	0.00E+00
4463	ALL	748525.6	4042824.93	2.37E-09	25YrCancer	2.37E-09	0.00E+00	0.00E+00	0.00E+00	0.00E+00	0.00E+00	0.00E+00	0.00E+00	0.00E+00	0.00E+00	0.00E+00
4464	ALL	748529.88	4042646.34	2.49E-09	25YrCancer	2.49E-09	0.00E+00	0.00E+00	0.00E+00	0.00E+00	0.00E+00	0.00E+00	0.00E+00	0.00E+00	0.00E+00	0.00E+00
4465	ALL	748534.16	4042467.75	2.63E-09	25YrCancer	2.63E-09	0.00E+00	0.00E+00	0.00E+00	0.00E+00	0.00E+00	0.00E+00	0.00E+00	0.00E+00	0.00E+00	0.00E+00
4466	ALL	748538.45	4042289.16	2.79E-09	25YrCancer	2.79E-09	0.00E+00	0.00E+00	0.00E+00	0.00E+00	0.00E+00	0.00E+00	0.00E+00	0.00E+00	0.00E+00	0.00E+00
4467	ALL	748542.73	4042110.57	2.97E-09	25YrCancer	2.97E-09	0.00E+00	0.00E+00	0.00E+00	0.00E+00	0.00E+00	0.00E+00	0.00E+00	0.00E+00	0.00E+00	0.00E+00
4468	ALL	748547.01	4041931.98	3.19E-09	25YrCancer	3.19E-09	0.00E+00	0.00E+00	0.00E+00	0.00E+00	0.00E+00	0.00E+00	0.00E+00	0.00E+00	0.00E+00	0.00E+00
4469	ALL	748551.29	4041753.39	3.44E-09	25YrCancer	3.44E-09	0.00E+00	0.00E+00	0.00E+00	0.00E+00	0.00E+00	0.00E+00	0.00E+00	0.00E+00	0.00E+00	0.00E+00
4470	ALL	748415.26	4041570.97	4.06E-09	25YrCancer	4.06E-09	0.00E+00	0.00E+00	0.00E+00	0.00E+00	0.00E+00	0.00E+00	0.00E+00	0.00E+00	0.00E+00	0.00E+00
4471	ALL	748274.94	4041567.13	4.42E-09	25YrCancer	4.42E-09	0.00E+00	0.00E+00	0.00E+00	0.00E+00	0.00E+00	0.00E+00	0.00E+00	0.00E+00	0.00E+00	0.00E+00
4472	ALL	747999.07	4041558.26	5.19E-09	25YrCancer	5.19E-09	0.00E+00	0.00E+00	0.00E+00	0.00E+00	0.00E+00	0.00E+00	0.00E+00	0.00E+00	0.00E+00	0.00E+00
4473	ALL	747863.5	4041553.23	5.62E-09	25YrCancer	5.62E-09	0.00E+00	0.00E+00	0.00E+00	0.00E+00	0.00E+00	0.00E+00	0.00E+00	0.00E+00	0.00E+00	0.00E+00
4474	ALL	747530.03	4041541.69	7.33E-09	25YrCancer	7.33E-09	0.00E+00	0.00E+00	0.00E+00	0.00E+00	0.00E+00	0.00E+00	0.00E+00	0.00E+00	0.00E+00	0.00E+00
4475	ALL	747332.13	4041535.19	8.23E-09	25YrCancer	8.23E-09	0.00E+00	0.00E+00	0.00E+00	0.00E+00	0.00E+00	0.00E+00	0.00E+00	0.00E+00	0.00E+00	0.00E+00
4476	ALL	747134.22	4041528.68	8.76E-09	25YrCancer	8.76E-09	0.00E+00	0.00E+00	0.00E+00	0.00E+00	0.00E+00	0.00E+00	0.00E+00	0.00E+00	0.00E+00	0.00E+00
4477	ALL	746936.32	4041522.18	8.70E-09	25YrCancer	8.70E-09	0.00E+00	0.00E+00	0.00E+00	0.00E+00	0.00E+00	0.00E+00	0.00E+00	0.00E+00	0.00E+00	0.00E+00
4478	ALL	746737.17	4041318.1	8.26E-09	25YrCancer	8.26E-09	0.00E+00	0.00E+00	0.00E+00	0.00E+00	0.00E+00	0.00E+00	0.00E+00	0.00E+00	0.00E+00	0.00E+00
4479	ALL	746544.71	4040913.4	6.30E-09	25YrCancer	6.30E-09	0.00E+00	0.00E+00	0.00E+00	0.00E+00	0.00E+00	0.00E+00	0.00E+00	0.00E+00	0.00E+00	0.00E+00
4480	ALL	746546.18	4040716.18	5.78E-09	25YrCancer	5.78E-09	0.00E+00	0.00E+00	0.00E+00	0.00E+00	0.00E+00	0.00E+00	0.00E+00	0.00E+00	0.00E+00	0.00E+00
4481	ALL	746752.4	4039891.44	4.73E-09	25YrCancer	4.73E-09	0.00E+00	0.00E+00	0.00E+00	0.00E+00	0.00E+00	0.00E+00	0.00E+00	0.00E+00	0.00E+00	0.00E+00
4482	ALL	746931.8	4039897.49	4.85E-09	25YrCancer	4.85E-09	0.00E+00	0.00E+00	0.00E+00	0.00E+00	0.00E+00	0.00E+00	0.00E+00	0.00E+00	0.00E+00	0.00E+00
4483	ALL	747111.2	4039903.53	5.00E-09	25YrCancer	5.00E-09	0.00E+00	0.00E+00	0.00E+00	0.00E+00	0.00E+00	0.00E+00	0.00E+00	0.00E+00	0.00E+00	0.00E+00
4484	ALL	747290.6	4039909.57	5.21E-09	25YrCancer	5.21E-09	0.00E+00	0.00E+00	0.00E+00	0.00E+00	0.00E+00	0.00E+00	0.00E+00	0.00E+00	0.00E+00	0.00E+00
4485	ALL	747470.01	4039915.62	5.49E-09	25YrCancer	5.49E-09	0.00E+00	0.00E+00	0.00E+00	0.00E+00	0.00E+00	0.00E+00	0.00E+00	0.00E+00	0.00E+00	0.00E+00
4486	ALL	747649.41	4039921.66	5.95E-09	25YrCancer	5.95E-09	0.00E+00	0.00E+00	0.00E+00	0.00E+00	0.00E+00	0.00E+00	0.00E+00	0.00E+00	0.00E+00	0.00E+00

4487	ALL	747828.81	4039927.7	6.82E-09	25YrCancer	6.82E-09	0.00E+00	0.00E+00	0.00E+00	0.00E+00	0.00E+00	0.00E+00	0.00E+00	0.00E+00	0.00E+00	0.00E+00	0.00E+00
4488	ALL	748008.21	4039933.75	8.63E-09	25YrCancer	8.63E-09	0.00E+00	0.00E+00	0.00E+00	0.00E+00	0.00E+00	0.00E+00	0.00E+00	0.00E+00	0.00E+00	0.00E+00	0.00E+00
4489	ALL	748192.76	4039742.94	9.73E-09	25YrCancer	9.73E-09	0.00E+00	0.00E+00	0.00E+00	0.00E+00	0.00E+00	0.00E+00	0.00E+00	0.00E+00	0.00E+00	0.00E+00	0.00E+00
4490	ALL	748197.9	4039546.08	8.40E-09	25YrCancer	8.40E-09	0.00E+00	0.00E+00	0.00E+00	0.00E+00	0.00E+00	0.00E+00	0.00E+00	0.00E+00	0.00E+00	0.00E+00	0.00E+00
4491	ALL	748203.05	4039349.23	7.75E-09	25YrCancer	7.75E-09	0.00E+00	0.00E+00	0.00E+00	0.00E+00	0.00E+00	0.00E+00	0.00E+00	0.00E+00	0.00E+00	0.00E+00	0.00E+00
4492	ALL	748208.19	4039152.38	7.21E-09	25YrCancer	7.21E-09	0.00E+00	0.00E+00	0.00E+00	0.00E+00	0.00E+00	0.00E+00	0.00E+00	0.00E+00	0.00E+00	0.00E+00	0.00E+00
4493	ALL	748213.33	4038955.53	6.66E-09	25YrCancer	6.66E-09	0.00E+00	0.00E+00	0.00E+00	0.00E+00	0.00E+00	0.00E+00	0.00E+00	0.00E+00	0.00E+00	0.00E+00	0.00E+00
4494	ALL	748218.48	4038758.67	6.17E-09	25YrCancer	6.17E-09	0.00E+00	0.00E+00	0.00E+00	0.00E+00	0.00E+00	0.00E+00	0.00E+00	0.00E+00	0.00E+00	0.00E+00	0.00E+00
4495	ALL	748223.63	4038561.82	5.75E-09	25YrCancer	5.75E-09	0.00E+00	0.00E+00	0.00E+00	0.00E+00	0.00E+00	0.00E+00	0.00E+00	0.00E+00	0.00E+00	0.00E+00	0.00E+00
4496	ALL	748228.77	4038364.97	5.40E-09	25YrCancer	5.40E-09	0.00E+00	0.00E+00	0.00E+00	0.00E+00	0.00E+00	0.00E+00	0.00E+00	0.00E+00	0.00E+00	0.00E+00	0.00E+00
4497	ALL	748233.92	4038168.12	5.12E-09	25YrCancer	5.12E-09	0.00E+00	0.00E+00	0.00E+00	0.00E+00	0.00E+00	0.00E+00	0.00E+00	0.00E+00	0.00E+00	0.00E+00	0.00E+00
4498	ALL	748239.06	4037971.27	4.93E-09	25YrCancer	4.93E-09	0.00E+00	0.00E+00	0.00E+00	0.00E+00	0.00E+00	0.00E+00	0.00E+00	0.00E+00	0.00E+00	0.00E+00	0.00E+00
4499	ALL	748244.21	4037774.41	4.83E-09	25YrCancer	4.83E-09	0.00E+00	0.00E+00	0.00E+00	0.00E+00	0.00E+00	0.00E+00	0.00E+00	0.00E+00	0.00E+00	0.00E+00	0.00E+00
4500	ALL	748249.35	4037577.56	4.82E-09	25YrCancer	4.82E-09	0.00E+00	0.00E+00	0.00E+00	0.00E+00	0.00E+00	0.00E+00	0.00E+00	0.00E+00	0.00E+00	0.00E+00	0.00E+00
4501	ALL	748254.49	4037380.71	4.91E-09	25YrCancer	4.91E-09	0.00E+00	0.00E+00	0.00E+00	0.00E+00	0.00E+00	0.00E+00	0.00E+00	0.00E+00	0.00E+00	0.00E+00	0.00E+00
4502	ALL	748259.64	4037183.85	5.14E-09	25YrCancer	5.14E-09	0.00E+00	0.00E+00	0.00E+00	0.00E+00	0.00E+00	0.00E+00	0.00E+00	0.00E+00	0.00E+00	0.00E+00	0.00E+00
4503	ALL	748264.79	4036987	5.60E-09	25YrCancer	5.60E-09	0.00E+00	0.00E+00	0.00E+00	0.00E+00	0.00E+00	0.00E+00	0.00E+00	0.00E+00	0.00E+00	0.00E+00	0.00E+00
4504	ALL	748073.87	4036783.77	6.26E-09	25YrCancer	6.26E-09	0.00E+00	0.00E+00	0.00E+00	0.00E+00	0.00E+00	0.00E+00	0.00E+00	0.00E+00	0.00E+00	0.00E+00	0.00E+00
4505	ALL	747877.81	4036777.4	6.27E-09	25YrCancer	6.27E-09	0.00E+00	0.00E+00	0.00E+00	0.00E+00	0.00E+00	0.00E+00	0.00E+00	0.00E+00	0.00E+00	0.00E+00	0.00E+00
4506	ALL	747681.76	4036771.02	6.41E-09	25YrCancer	6.41E-09	0.00E+00	0.00E+00	0.00E+00	0.00E+00	0.00E+00	0.00E+00	0.00E+00	0.00E+00	0.00E+00	0.00E+00	0.00E+00
4507	ALL	747478.34	4036933.02	6.06E-09	25YrCancer	6.06E-09	0.00E+00	0.00E+00	0.00E+00	0.00E+00	0.00E+00	0.00E+00	0.00E+00	0.00E+00	0.00E+00	0.00E+00	0.00E+00
4508	ALL	747470.98	4037101.4	5.54E-09	25YrCancer	5.54E-09	0.00E+00	0.00E+00	0.00E+00	0.00E+00	0.00E+00	0.00E+00	0.00E+00	0.00E+00	0.00E+00	0.00E+00	0.00E+00
4509	ALL	747463.62	4037269.77	5.18E-09	25YrCancer	5.18E-09	0.00E+00	0.00E+00	0.00E+00	0.00E+00	0.00E+00	0.00E+00	0.00E+00	0.00E+00	0.00E+00	0.00E+00	0.00E+00
4510	ALL	747456.26	4037438.14	4.89E-09	25YrCancer	4.89E-09	0.00E+00	0.00E+00	0.00E+00	0.00E+00	0.00E+00	0.00E+00	0.00E+00	0.00E+00	0.00E+00	0.00E+00	0.00E+00
4511	ALL	747448.9	4037606.52	4.67E-09	25YrCancer	4.67E-09	0.00E+00	0.00E+00	0.00E+00	0.00E+00	0.00E+00	0.00E+00	0.00E+00	0.00E+00	0.00E+00	0.00E+00	0.00E+00
4512	ALL	747280.47	4037769.56	4.49E-09	25YrCancer	4.49E-09	0.00E+00	0.00E+00	0.00E+00	0.00E+00	0.00E+00	0.00E+00	0.00E+00	0.00E+00	0.00E+00	0.00E+00	0.00E+00
4513	ALL	747119.4	4037764.24	4.65E-09	25YrCancer	4.65E-09	0.00E+00	0.00E+00	0.00E+00	0.00E+00	0.00E+00	0.00E+00	0.00E+00	0.00E+00	0.00E+00	0.00E+00	0.00E+00
4514	ALL	746958.32	4037758.91	4.91E-09	25YrCancer	4.91E-09	0.00E+00	0.00E+00	0.00E+00	0.00E+00	0.00E+00	0.00E+00	0.00E+00	0.00E+00	0.00E+00	0.00E+00	0.00E+00
4515	ALL	746797.25	4037753.59	5.17E-09	25YrCancer	5.17E-09	0.00E+00	0.00E+00	0.00E+00	0.00E+00	0.00E+00	0.00E+00	0.00E+00	0.00E+00	0.00E+00	0.00E+00	0.00E+00
4516	ALL	746641.93	4037581.09	5.64E-09	25YrCancer	5.64E-09	0.00E+00	0.00E+00	0.00E+00	0.00E+00	0.00E+00	0.00E+00	0.00E+00	0.00E+00	0.00E+00	0.00E+00	0.00E+00
4517	ALL	746647.68	4037413.93	6.15E-09	25YrCancer	6.15E-09	0.00E+00	0.00E+00	0.00E+00	0.00E+00	0.00E+00	0.00E+00	0.00E+00	0.00E+00	0.00E+00	0.00E+00	0.00E+00
4518	ALL	746653.44	4037246.76	6.91E-09	25YrCancer	6.91E-09	0.00E+00	0.00E+00	0.00E+00	0.00E+00	0.00E+00	0.00E+00	0.00E+00	0.00E+00	0.00E+00	0.00E+00	0.00E+00
4519	ALL	746659.19	4037079.59	8.20E-09	25YrCancer	8.20E-09	0.00E+00	0.00E+00	0.00E+00	0.00E+00	0.00E+00	0.00E+00	0.00E+00	0.00E+00	0.00E+00	0.00E+00	0.00E+00
4520	ALL	746664.94	4036912.43	1.06E-08	25YrCancer	1.06E-08	0.00E+00	0.00E+00	0.00E+00	0.00E+00	0.00E+00	0.00E+00	0.00E+00	0.00E+00	0.00E+00	0.00E+00	0.00E+00
4521	ALL	746484.21	4036739.13	1.96E-08	25YrCancer	1.96E-08	0.00E+00	0.00E+00	0.00E+00	0.00E+00	0.00E+00	0.00E+00	0.00E+00	0.00E+00	0.00E+00	0.00E+00	0.00E+00
4522	ALL	746297.73	4036733	1.83E-08	25YrCancer	1.83E-08	0.00E+00	0.00E+00	0.00E+00	0.00E+00	0.00E+00	0.00E+00	0.00E+00	0.00E+00	0.00E+00	0.00E+00	0.00E+00
4523	ALL	746111.25	4036726.86	1.48E-08	25YrCancer	1.48E-08	0.00E+00	0.00E+00	0.00E+00	0.00E+00	0.00E+00	0.00E+00	0.00E+00	0.00E+00	0.00E+00	0.00E+00	0.00E+00
4524	ALL	745924.77	4036720.73	1.18E-08	25YrCancer	1.18E-08	0.00E+00	0.00E+00	0.00E+00	0.00E+00	0.00E+00	0.00E+00	0.00E+00	0.00E+00	0.00E+00	0.00E+00	0.00E+00
4525	ALL	745539.2	4036707.71	8.03E-09	25YrCancer	8.03E-09	0.00E+00	0.00E+00	0.00E+00	0.00E+00	0.00E+00	0.00E+00	0.00E+00	0.00E+00	0.00E+00	0.00E+00	0.00E+00
4526	ALL	745340.1	4036700.83	6.95E-09	25YrCancer	6.95E-09	0.00E+00	0.00E+00	0.00E+00	0.00E+00	0.00E+00	0.00E+00	0.00E+00	0.00E+00	0.00E+00	0.00E+00	0.00E+00
4527	ALL	745141.01	4036693.94	6.21E-09	25YrCancer	6.21E-09	0.00E+00	0.00E+00	0.00E+00	0.00E+00	0.00E+00	0.00E+00	0.00E+00	0.00E+00	0.00E+00	0.00E+00	0.00E+00
4528	ALL	744941.92	4036687.06	5.66E-09	25YrCancer	5.66E-09	0.00E+00	0.00E+00	0.00E+00	0.00E+00	0.00E+00	0.00E+00	0.00E+00	0.00E+00	0.00E+00	0.00E+00	0.00E+00
4529	ALL	744742.83	4036680.17	5.24E-09	25YrCancer	5.24E-09	0.00E+00	0.00E+00	0.00E+00	0.00E+00	0.00E+00	0.00E+00	0.00E+00	0.00E+00	0.00E+00	0.00E+00	0.00E+00
4530	ALL	744543.73	4036673.29	4.92E-09	25YrCancer	4.92E-09	0.00E+00	0.00E+00	0.00E+00	0.00E+00	0.00E+00	0.00E+00	0.00E+00	0.00E+00	0.00E+00	0.00E+00	0.00E+00
4531	ALL	744344.64	4036666.4	4.66E-09	25YrCancer	4.66E-09	0.00E+00	0.00E+00	0.00E+00	0.00E+00	0.00E+00	0.00E+00	0.00E+00	0.00E+00	0.00E+00	0.00E+00	0.00E+00
4532	ALL	744145.55	4036659.51	4.44E-09	25YrCancer	4.44E-09	0.00E+00	0.00E+00	0.00E+00	0.00E+00	0.00E+00	0.00E+00	0.00E+00	0.00E+00	0.00E+00	0.00E+00	0.00E+00
4533	ALL	743946.45	4036652.63	4.24E-09	25YrCancer	4.24E-09	0.00E+00	0.00E+00	0.00E+00	0.00E+00	0.00E+00	0.00E+00	0.00E+00	0.00E+00	0.00E+00	0.00E+00	0.00E+00
4534	ALL	743747.36	4036645.74	4.06E-09	25YrCancer	4.06E-09	0.00E+00	0.00E+00	0.00E+00	0.00E+00	0.00E+00	0.00E+00	0.00E+00	0.00E+00	0.00E+00	0.00E+00	0.00E+00
4535	ALL	743548.27	4036638.86	3.89E-09	25YrCancer	3.89E-09	0.00E+00	0.00E+00	0.00E+00	0.00E+00	0.00E+00	0.00E+00	0.00E+00	0.00E+00	0.00E+00	0.00E+00	0.00E+00
4536	ALL	743349.18	4036631.97	3.74E-09	25YrCancer	3.74E-09	0.00E+00	0.00E+00	0.00E+00	0.00E+00	0.00E+00	0.00E+00	0.00E+00	0.00E+00	0.00E+00	0.00E+00	0.00E+00
4537	ALL	743150.08	4036625.09	3.60E-09	25YrCancer	3.60E-09	0.00E+00	0.00E+00	0.00E+00	0.00E+00	0.00E+00	0.00E+00	0.00E+00	0.00E+00	0.00E+00	0.00E+00	0.00E+00

4538	ALL	742950.99	4036618.2	3.47E-09	25YrCancer	3.47E-09	0.00E+00	0.00E+00	0.00E+00	0.00E+00	0.00E+00	0.00E+00	0.00E+00	0.00E+00	0.00E+00	0.00E+00	0.00E+00
4539	ALL	742751.9	4036611.31	3.36E-09	25YrCancer	3.36E-09	0.00E+00	0.00E+00	0.00E+00	0.00E+00	0.00E+00	0.00E+00	0.00E+00	0.00E+00	0.00E+00	0.00E+00	0.00E+00
4540	ALL	742552.8	4036604.43	3.26E-09	25YrCancer	3.26E-09	0.00E+00	0.00E+00	0.00E+00	0.00E+00	0.00E+00	0.00E+00	0.00E+00	0.00E+00	0.00E+00	0.00E+00	0.00E+00
4541	ALL	742353.71	4036597.54	3.17E-09	25YrCancer	3.17E-09	0.00E+00	0.00E+00	0.00E+00	0.00E+00	0.00E+00	0.00E+00	0.00E+00	0.00E+00	0.00E+00	0.00E+00	0.00E+00
4542	ALL	742154.62	4036590.66	3.09E-09	25YrCancer	3.09E-09	0.00E+00	0.00E+00	0.00E+00	0.00E+00	0.00E+00	0.00E+00	0.00E+00	0.00E+00	0.00E+00	0.00E+00	0.00E+00
4543	ALL	741955.53	4036583.77	3.03E-09	25YrCancer	3.03E-09	0.00E+00	0.00E+00	0.00E+00	0.00E+00	0.00E+00	0.00E+00	0.00E+00	0.00E+00	0.00E+00	0.00E+00	0.00E+00
4544	ALL	741756.43	4036576.89	2.99E-09	25YrCancer	2.99E-09	0.00E+00	0.00E+00	0.00E+00	0.00E+00	0.00E+00	0.00E+00	0.00E+00	0.00E+00	0.00E+00	0.00E+00	0.00E+00
4545	ALL	741557.34	4036570	2.95E-09	25YrCancer	2.95E-09	0.00E+00	0.00E+00	0.00E+00	0.00E+00	0.00E+00	0.00E+00	0.00E+00	0.00E+00	0.00E+00	0.00E+00	0.00E+00
4546	ALL	741358.25	4036563.11	2.90E-09	25YrCancer	2.90E-09	0.00E+00	0.00E+00	0.00E+00	0.00E+00	0.00E+00	0.00E+00	0.00E+00	0.00E+00	0.00E+00	0.00E+00	0.00E+00
4547	ALL	741159.15	4036556.23	2.87E-09	25YrCancer	2.87E-09	0.00E+00	0.00E+00	0.00E+00	0.00E+00	0.00E+00	0.00E+00	0.00E+00	0.00E+00	0.00E+00	0.00E+00	0.00E+00
4548	ALL	740960.06	4036549.34	2.84E-09	25YrCancer	2.84E-09	0.00E+00	0.00E+00	0.00E+00	0.00E+00	0.00E+00	0.00E+00	0.00E+00	0.00E+00	0.00E+00	0.00E+00	0.00E+00
4549	ALL	740760.97	4036542.46	2.81E-09	25YrCancer	2.81E-09	0.00E+00	0.00E+00	0.00E+00	0.00E+00	0.00E+00	0.00E+00	0.00E+00	0.00E+00	0.00E+00	0.00E+00	0.00E+00
4550	ALL	740561.88	4036535.57	2.79E-09	25YrCancer	2.79E-09	0.00E+00	0.00E+00	0.00E+00	0.00E+00	0.00E+00	0.00E+00	0.00E+00	0.00E+00	0.00E+00	0.00E+00	0.00E+00
4551	ALL	740362.78	4036528.69	2.77E-09	25YrCancer	2.77E-09	0.00E+00	0.00E+00	0.00E+00	0.00E+00	0.00E+00	0.00E+00	0.00E+00	0.00E+00	0.00E+00	0.00E+00	0.00E+00
4552	ALL	740163.69	4036521.8	2.76E-09	25YrCancer	2.76E-09	0.00E+00	0.00E+00	0.00E+00	0.00E+00	0.00E+00	0.00E+00	0.00E+00	0.00E+00	0.00E+00	0.00E+00	0.00E+00
4553	ALL	739964.6	4036514.91	2.75E-09	25YrCancer	2.75E-09	0.00E+00	0.00E+00	0.00E+00	0.00E+00	0.00E+00	0.00E+00	0.00E+00	0.00E+00	0.00E+00	0.00E+00	0.00E+00
4554	ALL	739765.5	4036508.03	2.73E-09	25YrCancer	2.73E-09	0.00E+00	0.00E+00	0.00E+00	0.00E+00	0.00E+00	0.00E+00	0.00E+00	0.00E+00	0.00E+00	0.00E+00	0.00E+00
4555	ALL	739566.41	4036501.14	2.71E-09	25YrCancer	2.71E-09	0.00E+00	0.00E+00	0.00E+00	0.00E+00	0.00E+00	0.00E+00	0.00E+00	0.00E+00	0.00E+00	0.00E+00	0.00E+00
4556	ALL	739367.32	4036494.26	2.70E-09	25YrCancer	2.70E-09	0.00E+00	0.00E+00	0.00E+00	0.00E+00	0.00E+00	0.00E+00	0.00E+00	0.00E+00	0.00E+00	0.00E+00	0.00E+00
4557	ALL	739168.23	4036487.37	2.69E-09	25YrCancer	2.69E-09	0.00E+00	0.00E+00	0.00E+00	0.00E+00	0.00E+00	0.00E+00	0.00E+00	0.00E+00	0.00E+00	0.00E+00	0.00E+00
4558	ALL	738969.13	4036480.49	2.67E-09	25YrCancer	2.67E-09	0.00E+00	0.00E+00	0.00E+00	0.00E+00	0.00E+00	0.00E+00	0.00E+00	0.00E+00	0.00E+00	0.00E+00	0.00E+00
4559	ALL	738604.82	4036569.13	2.60E-09	25YrCancer	2.60E-09	0.00E+00	0.00E+00	0.00E+00	0.00E+00	0.00E+00	0.00E+00	0.00E+00	0.00E+00	0.00E+00	0.00E+00	0.00E+00
4560	ALL	738337.99	4036497.02	2.59E-09	25YrCancer	2.59E-09	0.00E+00	0.00E+00	0.00E+00	0.00E+00	0.00E+00	0.00E+00	0.00E+00	0.00E+00	0.00E+00	0.00E+00	0.00E+00
4561	ALL	738236.37	4036329.38	2.64E-09	25YrCancer	2.64E-09	0.00E+00	0.00E+00	0.00E+00	0.00E+00	0.00E+00	0.00E+00	0.00E+00	0.00E+00	0.00E+00	0.00E+00	0.00E+00
4562	ALL	738134.74	4036161.74	2.70E-09	25YrCancer	2.70E-09	0.00E+00	0.00E+00	0.00E+00	0.00E+00	0.00E+00	0.00E+00	0.00E+00	0.00E+00	0.00E+00	0.00E+00	0.00E+00
4563	ALL	738033.12	4035994.09	2.77E-09	25YrCancer	2.77E-09	0.00E+00	0.00E+00	0.00E+00	0.00E+00	0.00E+00	0.00E+00	0.00E+00	0.00E+00	0.00E+00	0.00E+00	0.00E+00
4564	ALL	737931.5	4035826.45	2.83E-09	25YrCancer	2.83E-09	0.00E+00	0.00E+00	0.00E+00	0.00E+00	0.00E+00	0.00E+00	0.00E+00	0.00E+00	0.00E+00	0.00E+00	0.00E+00
4565	ALL	737563.33	4035513.17	2.95E-09	25YrCancer	2.95E-09	0.00E+00	0.00E+00	0.00E+00	0.00E+00	0.00E+00	0.00E+00	0.00E+00	0.00E+00	0.00E+00	0.00E+00	0.00E+00
4566	ALL	737382.93	4035513.06	2.95E-09	25YrCancer	2.95E-09	0.00E+00	0.00E+00	0.00E+00	0.00E+00	0.00E+00	0.00E+00	0.00E+00	0.00E+00	0.00E+00	0.00E+00	0.00E+00
4567	ALL	737202.52	4035512.96	2.95E-09	25YrCancer	2.95E-09	0.00E+00	0.00E+00	0.00E+00	0.00E+00	0.00E+00	0.00E+00	0.00E+00	0.00E+00	0.00E+00	0.00E+00	0.00E+00
4568	ALL	736835.12	4035512.78	2.94E-09	25YrCancer	2.94E-09	0.00E+00	0.00E+00	0.00E+00	0.00E+00	0.00E+00	0.00E+00	0.00E+00	0.00E+00	0.00E+00	0.00E+00	0.00E+00
4569	ALL	736648.13	4035512.71	2.93E-09	25YrCancer	2.93E-09	0.00E+00	0.00E+00	0.00E+00	0.00E+00	0.00E+00	0.00E+00	0.00E+00	0.00E+00	0.00E+00	0.00E+00	0.00E+00
4570	ALL	736461.13	4035512.64	2.93E-09	25YrCancer	2.93E-09	0.00E+00	0.00E+00	0.00E+00	0.00E+00	0.00E+00	0.00E+00	0.00E+00	0.00E+00	0.00E+00	0.00E+00	0.00E+00
4571	ALL	736274.14	4035512.57	2.92E-09	25YrCancer	2.92E-09	0.00E+00	0.00E+00	0.00E+00	0.00E+00	0.00E+00	0.00E+00	0.00E+00	0.00E+00	0.00E+00	0.00E+00	0.00E+00
4572	ALL	736087.14	4035512.51	2.92E-09	25YrCancer	2.92E-09	0.00E+00	0.00E+00	0.00E+00	0.00E+00	0.00E+00	0.00E+00	0.00E+00	0.00E+00	0.00E+00	0.00E+00	0.00E+00
4573	ALL	735900.15	4035512.44	2.92E-09	25YrCancer	2.92E-09	0.00E+00	0.00E+00	0.00E+00	0.00E+00	0.00E+00	0.00E+00	0.00E+00	0.00E+00	0.00E+00	0.00E+00	0.00E+00
4574	ALL	735713.15	4035512.37	2.92E-09	25YrCancer	2.92E-09	0.00E+00	0.00E+00	0.00E+00	0.00E+00	0.00E+00	0.00E+00	0.00E+00	0.00E+00	0.00E+00	0.00E+00	0.00E+00
4575	ALL	735526.16	4035512.3	2.92E-09	25YrCancer	2.92E-09	0.00E+00	0.00E+00	0.00E+00	0.00E+00	0.00E+00	0.00E+00	0.00E+00	0.00E+00	0.00E+00	0.00E+00	0.00E+00
4576	ALL	735195.5	4035375.4	3.04E-09	25YrCancer	3.04E-09	0.00E+00	0.00E+00	0.00E+00	0.00E+00	0.00E+00	0.00E+00	0.00E+00	0.00E+00	0.00E+00	0.00E+00	0.00E+00
4577	ALL	735051.83	4035238.56	3.23E-09	25YrCancer	3.23E-09	0.00E+00	0.00E+00	0.00E+00	0.00E+00	0.00E+00	0.00E+00	0.00E+00	0.00E+00	0.00E+00	0.00E+00	0.00E+00
4578	ALL	734908.17	4035101.73	3.45E-09	25YrCancer	3.45E-09	0.00E+00	0.00E+00	0.00E+00	0.00E+00	0.00E+00	0.00E+00	0.00E+00	0.00E+00	0.00E+00	0.00E+00	0.00E+00
4579	ALL	734764.5	4034964.89	3.77E-09	25YrCancer	3.77E-09	0.00E+00	0.00E+00	0.00E+00	0.00E+00	0.00E+00	0.00E+00	0.00E+00	0.00E+00	0.00E+00	0.00E+00	0.00E+00
4580	ALL	734480.27	4034822.3	4.21E-09	25YrCancer	4.21E-09	0.00E+00	0.00E+00	0.00E+00	0.00E+00	0.00E+00	0.00E+00	0.00E+00	0.00E+00	0.00E+00	0.00E+00	0.00E+00
4581	ALL	734339.71	4034816.54	4.19E-09	25YrCancer	4.19E-09	0.00E+00	0.00E+00	0.00E+00	0.00E+00	0.00E+00	0.00E+00	0.00E+00	0.00E+00	0.00E+00	0.00E+00	0.00E+00
4582	ALL	734131.2	4034700.77	4.73E-09	25YrCancer	4.73E-09	0.00E+00	0.00E+00	0.00E+00	0.00E+00	0.00E+00	0.00E+00	0.00E+00	0.00E+00	0.00E+00	0.00E+00	0.00E+00
4583	ALL	733867.32	4034587.41	5.72E-09	25YrCancer	5.72E-09	0.00E+00	0.00E+00	0.00E+00	0.00E+00	0.00E+00	0.00E+00	0.00E+00	0.00E+00	0.00E+00	0.00E+00	0.00E+00
4584	ALL	733482	4034637.69	7.09E-09	25YrCancer	7.09E-09	0.00E+00	0.00E+00	0.00E+00	0.00E+00	0.00E+00	0.00E+00	0.00E+00	0.00E+00	0.00E+00	0.00E+00	0.00E+00
4585	ALL	733297.29	4034632.7	8.37E-09	25YrCancer	8.37E-09	0.00E+00	0.00E+00	0.00E+00	0.00E+00	0.00E+00	0.00E+00	0.00E+00	0.00E+00	0.00E+00	0.00E+00	0.00E+00
4586	ALL	733112.59	4034627.7	1.17E-08	25YrCancer	1.17E-08	0.00E+00	0.00E+00	0.00E+00	0.00E+00	0.00E+00	0.00E+00	0.00E+00	0.00E+00	0.00E+00	0.00E+00	0.00E+00
4587	ALL	732927.88	4034622.71	1.95E-08	25YrCancer	1.95E-08	0.00E+00	0.00E+00	0.00E+00	0.00E+00	0.00E+00	0.00E+00	0.00E+00	0.00E+00	0.00E+00	0.00E+00	0.00E+00
4588	ALL	732574.01	4034614.02	1.88E-08	25YrCancer	1.88E-08	0.00E+00	0.00E+00	0.00E+00	0.00E+00	0.00E+00	0.00E+00	0.00E+00	0.00E+00	0.00E+00	0.00E+00	0.00E+00

4589	ALL	732404.85	4034610.32	1.40E-08	25YrCancer	1.40E-08	0.00E+00	0.00E+00	0.00E+00	0.00E+00	0.00E+00	0.00E+00	0.00E+00	0.00E+00	0.00E+00	0.00E+00	0.00E+00
4590	ALL	732235.69	4034606.61	1.06E-08	25YrCancer	1.06E-08	0.00E+00	0.00E+00	0.00E+00	0.00E+00	0.00E+00	0.00E+00	0.00E+00	0.00E+00	0.00E+00	0.00E+00	0.00E+00

*HARP - HRACalc v21081 3/18/2024 7:11:41 PM - Chronic Risk - Input File: C:\HARP2\Projects\DARDEN CLEAN ENERGY PROJECT\hra\Darden_Permit_Resi_HRAInput.hra

REC	GRP	NETID	X	Y	SCENARIO	CV	CNS	IMMUN	KIDNEY	GILV	REPRO/DEVEL	RESP	SKIN	EYE	BONE/TEETH	ENDO	BLOOD	ODOR	GENERAL	MAXHI
1	ALL		732073	4033492	NonCancerChronicDerive	0.00E+00	2.23E-09	0.00E+00	0.00E+00	0.00E+00	1.53E-07	2.25E-05	0.00E+00	7.20E-09	0.00E+00	0.00E+00	9.47E-07	0.00E+00	0.00E+00	2.25E-05
2	ALL		732173	4033492	NonCancerChronicDerive	0.00E+00	2.15E-09	0.00E+00	0.00E+00	0.00E+00	1.52E-07	2.22E-05	0.00E+00	6.97E-09	0.00E+00	0.00E+00	9.16E-07	0.00E+00	0.00E+00	2.22E-05
3	ALL		732273	4033492	NonCancerChronicDerive	0.00E+00	2.01E-09	0.00E+00	0.00E+00	0.00E+00	1.45E-07	2.12E-05	0.00E+00	6.49E-09	0.00E+00	0.00E+00	8.53E-07	0.00E+00	0.00E+00	2.12E-05
4	ALL		732373	4033492	NonCancerChronicDerive	0.00E+00	1.98E-09	0.00E+00	0.00E+00	0.00E+00	1.46E-07	2.12E-05	0.00E+00	6.42E-09	0.00E+00	0.00E+00	8.45E-07	0.00E+00	0.00E+00	2.12E-05
5	ALL		732473	4033492	NonCancerChronicDerive	0.00E+00	1.99E-09	0.00E+00	0.00E+00	0.00E+00	1.47E-07	2.14E-05	0.00E+00	6.45E-09	0.00E+00	0.00E+00	8.48E-07	0.00E+00	0.00E+00	2.14E-05
6	ALL		732573	4033492	NonCancerChronicDerive	0.00E+00	2.03E-09	0.00E+00	0.00E+00	0.00E+00	1.50E-07	2.18E-05	0.00E+00	6.56E-09	0.00E+00	0.00E+00	8.62E-07	0.00E+00	0.00E+00	2.18E-05
7	ALL		732673	4033492	NonCancerChronicDerive	0.00E+00	2.06E-09	0.00E+00	0.00E+00	0.00E+00	1.54E-07	2.21E-05	0.00E+00	6.68E-09	0.00E+00	0.00E+00	8.78E-07	0.00E+00	0.00E+00	2.21E-05
8	ALL		732773	4033492	NonCancerChronicDerive	0.00E+00	2.17E-09	0.00E+00	0.00E+00	0.00E+00	1.61E-07	2.30E-05	0.00E+00	7.02E-09	0.00E+00	0.00E+00	9.23E-07	0.00E+00	0.00E+00	2.30E-05
9	ALL		732873	4033492	NonCancerChronicDerive	0.00E+00	2.31E-09	0.00E+00	0.00E+00	0.00E+00	1.71E-07	2.45E-05	0.00E+00	7.49E-09	0.00E+00	0.00E+00	9.85E-07	0.00E+00	0.00E+00	2.45E-05
10	ALL		732973	4033492	NonCancerChronicDerive	0.00E+00	2.60E-09	0.00E+00	0.00E+00	0.00E+00	1.93E-07	2.75E-05	0.00E+00	8.42E-09	0.00E+00	0.00E+00	1.11E-06	0.00E+00	0.00E+00	2.75E-05
11	ALL		733073	4033492	NonCancerChronicDerive	0.00E+00	3.21E-09	0.00E+00	0.00E+00	0.00E+00	2.34E-07	3.35E-05	0.00E+00	1.04E-08	0.00E+00	0.00E+00	1.36E-06	0.00E+00	0.00E+00	3.35E-05
12	ALL		733173	4033492	NonCancerChronicDerive	0.00E+00	4.14E-09	0.00E+00	0.00E+00	0.00E+00	2.94E-07	4.24E-05	0.00E+00	1.34E-08	0.00E+00	0.00E+00	1.76E-06	0.00E+00	0.00E+00	4.24E-05
13	ALL		733273	4033492	NonCancerChronicDerive	0.00E+00	6.30E-09	0.00E+00	0.00E+00	0.00E+00	4.32E-07	6.27E-05	0.00E+00	2.04E-08	0.00E+00	0.00E+00	2.68E-06	0.00E+00	0.00E+00	6.27E-05
14	ALL		733373	4033492	NonCancerChronicDerive	0.00E+00	1.17E-08	0.00E+00	0.00E+00	0.00E+00	7.77E-07	1.13E-04	0.00E+00	3.79E-08	0.00E+00	0.00E+00	4.98E-06	0.00E+00	0.00E+00	1.13E-04
15	ALL		733473	4033492	NonCancerChronicDerive	0.00E+00	1.99E-08	0.00E+00	0.00E+00	0.00E+00	1.30E-06	1.89E-04	0.00E+00	6.45E-08	0.00E+00	0.00E+00	8.48E-06	0.00E+00	0.00E+00	1.89E-04
16	ALL		733573	4033492	NonCancerChronicDerive	0.00E+00	2.78E-08	0.00E+00	0.00E+00	0.00E+00	1.80E-06	2.60E-04	0.00E+00	8.98E-08	0.00E+00	0.00E+00	1.18E-05	0.00E+00	0.00E+00	2.60E-04
17	ALL		733673	4033492	NonCancerChronicDerive	0.00E+00	3.38E-08	0.00E+00	0.00E+00	0.00E+00	2.19E-06	3.16E-04	0.00E+00	1.09E-07	0.00E+00	0.00E+00	1.44E-05	0.00E+00	0.00E+00	3.16E-04
18	ALL		733773	4033492	NonCancerChronicDerive	0.00E+00	3.76E-08	0.00E+00	0.00E+00	0.00E+00	2.44E-06	3.51E-04	0.00E+00	1.22E-07	0.00E+00	0.00E+00	1.60E-05	0.00E+00	0.00E+00	3.51E-04
19	ALL		733873	4033492	NonCancerChronicDerive	0.00E+00	3.89E-08	0.00E+00	0.00E+00	0.00E+00	2.54E-06	3.63E-04	0.00E+00	1.26E-07	0.00E+00	0.00E+00	1.66E-05	0.00E+00	0.00E+00	3.63E-04
20	ALL		733973	4033492	NonCancerChronicDerive	0.00E+00	3.78E-08	0.00E+00	0.00E+00	0.00E+00	2.48E-06	3.53E-04	0.00E+00	1.22E-07	0.00E+00	0.00E+00	1.61E-05	0.00E+00	0.00E+00	3.53E-04
21	ALL		734073	4033492	NonCancerChronicDerive	0.00E+00	3.49E-08	0.00E+00	0.00E+00	0.00E+00	2.31E-06	3.27E-04	0.00E+00	1.13E-07	0.00E+00	0.00E+00	1.49E-05	0.00E+00	0.00E+00	3.27E-04
22	ALL		732073	4033592	NonCancerChronicDerive	0.00E+00	2.23E-09	0.00E+00	0.00E+00	0.00E+00	1.56E-07	2.28E-05	0.00E+00	7.23E-09	0.00E+00	0.00E+00	9.50E-07	0.00E+00	0.00E+00	2.28E-05
23	ALL		732173	4033592	NonCancerChronicDerive	0.00E+00	2.14E-09	0.00E+00	0.00E+00	0.00E+00	1.53E-07	2.24E-05	0.00E+00	6.94E-09	0.00E+00	0.00E+00	9.12E-07	0.00E+00	0.00E+00	2.24E-05
24	ALL		732273	4033592	NonCancerChronicDerive	0.00E+00	2.10E-09	0.00E+00	0.00E+00	0.00E+00	1.53E-07	2.23E-05	0.00E+00	6.80E-09	0.00E+00	0.00E+00	8.94E-07	0.00E+00	0.00E+00	2.23E-05
25	ALL		732373	4033592	NonCancerChronicDerive	0.00E+00	2.09E-09	0.00E+00	0.00E+00	0.00E+00	1.55E-07	2.24E-05	0.00E+00	6.76E-09	0.00E+00	0.00E+00	8.89E-07	0.00E+00	0.00E+00	2.24E-05
26	ALL		732473	4033592	NonCancerChronicDerive	0.00E+00	2.08E-09	0.00E+00	0.00E+00	0.00E+00	1.56E-07	2.25E-05	0.00E+00	6.74E-09	0.00E+00	0.00E+00	8.85E-07	0.00E+00	0.00E+00	2.25E-05
27	ALL		732573	4033592	NonCancerChronicDerive	0.00E+00	2.10E-09	0.00E+00	0.00E+00	0.00E+00	1.58E-07	2.27E-05	0.00E+00	6.79E-09	0.00E+00	0.00E+00	8.93E-07	0.00E+00	0.00E+00	2.27E-05
28	ALL		732673	4033592	NonCancerChronicDerive	0.00E+00	2.20E-09	0.00E+00	0.00E+00	0.00E+00	1.65E-07	2.38E-05	0.00E+00	7.13E-09	0.00E+00	0.00E+00	9.38E-07	0.00E+00	0.00E+00	2.38E-05
29	ALL		732773	4033592	NonCancerChronicDerive	0.00E+00	2.35E-09	0.00E+00	0.00E+00	0.00E+00	1.75E-07	2.51E-05	0.00E+00	7.61E-09	0.00E+00	0.00E+00	1.00E-06	0.00E+00	0.00E+00	2.51E-05
30	ALL		732873	4033592	NonCancerChronicDerive	0.00E+00	2.54E-09	0.00E+00	0.00E+00	0.00E+00	1.88E-07	2.69E-05	0.00E+00	8.22E-09	0.00E+00	0.00E+00	1.08E-06	0.00E+00	0.00E+00	2.69E-05
31	ALL		732973	4033592	NonCancerChronicDerive	0.00E+00	2.84E-09	0.00E+00	0.00E+00	0.00E+00	2.10E-07	2.99E-05	0.00E+00	9.19E-09	0.00E+00	0.00E+00	1.21E-06	0.00E+00	0.00E+00	2.99E-05
32	ALL		733073	4033592	NonCancerChronicDerive	0.00E+00	3.47E-09	0.00E+00	0.00E+00	0.00E+00	2.54E-07	3.63E-05	0.00E+00	1.12E-08	0.00E+00	0.00E+00	1.48E-06	0.00E+00	0.00E+00	3.63E-05
33	ALL		733173	4033592	NonCancerChronicDerive	0.00E+00	4.64E-09	0.00E+00	0.00E+00	0.00E+00	3.30E-07	4.76E-05	0.00E+00	1.50E-08	0.00E+00	0.00E+00	1.98E-06	0.00E+00	0.00E+00	4.76E-05
34	ALL		733273	4033592	NonCancerChronicDerive	0.00E+00	7.55E-09	0.00E+00	0.00E+00	0.00E+00	5.15E-07	7.52E-05	0.00E+00	2.45E-08	0.00E+00	0.00E+00	3.21E-06	0.00E+00	0.00E+00	7.52E-05
35	ALL		733373	4033592	NonCancerChronicDerive	0.00E+00	1.59E-08	0.00E+00	0.00E+00	0.00E+00	1.05E-06	1.53E-04	0.00E+00	5.15E-08	0.00E+00	0.00E+00	6.76E-06	0.00E+00	0.00E+00	1.53E-04
36	ALL		733473	4033592	NonCancerChronicDerive	0.00E+00	2.90E-08	0.00E+00	0.00E+00	0.00E+00	1.87E-06	2.73E-04	0.00E+00	9.38E-08	0.00E+00	0.00E+00	1.23E-05	0.00E+00	0.00E+00	2.73E-04
37	ALL		733573	4033592	NonCancerChronicDerive	0.00E+00	4.02E-08	0.00E+00	0.00E+00	0.00E+00	2.59E-06	3.76E-04	0.00E+00	1.30E-07	0.00E+00	0.00E+00	1.71E-05	0.00E+00	0.00E+00	3.76E-04
38	ALL		733673	4033592	NonCancerChronicDerive	0.00E+00	4.77E-08	0.00E+00	0.00E+00	0.00E+00	3.07E-06	4.45E-04	0.00E+00	1.54E-07	0.00E+00	0.00E+00	2.03E-05	0.00E+00	0.00E+00	4.45E-04
39	ALL		733773	4033592	NonCancerChronicDerive	0.00E+00	5.03E-08	0.00E+00	0.00E+00	0.00E+00	3.26E-06	4.69E-04	0.00E+00	1.63E-07	0.00E+00	0.00E+00	2.14E-05	0.00E+00	0.00E+00	4.69E-04
40	ALL		733873	4033592	NonCancerChronicDerive	0.00E+00	4.83E-08	0.00E+00	0.00E+00	0.00E+00	3.15E-06	4.51E-04	0.00E+00	1.56E-07	0.00E+00	0.00E+00	2.06E-05	0.00E+00	0.00E+00	4.51E-04
41	ALL		733973	4033592	NonCancerChronicDerive	0.00E+00	4.34E-08	0.00E+00	0.00E+00	0.00E+00	2.86E-06	4.07E-04	0.00E+00	1.41E-07	0.00E+00	0.00E+00	1.85E-05	0.00E+00	0.00E+00	4.07E-04
42	ALL		734073	4033592	NonCancerChronicDerive	0.00E+00	3.75E-08	0.00E+00	0.00E+00	0.00E+00	2.50E-06	3.53E-04	0.00E+00	1.22E-07	0.00E+00	0.00E+00	1.60E-05	0.00E+00	0.00E+00	3.53E-04
43	ALL		732073	4033692	NonCancerChronicDerive	0.00E+00	2.61E-09	0.00E+00	0.00E+00	0.00E+00	1.76E-07	2.58E-05	0.00E+00	8.44E-09	0.00E+00	0.00E+00	1.11E-06	0.00E+00	0.00E+00	2.58E-05
44	ALL		732173	4033692	NonCancerChronicDerive	0.00E+00	2.38E-09	0.00E+00	0.00E+00	0.00E+00	1.68E-07	2.45E-05	0.00E+00	7.70E-09	0.00E+00	0.00E+00	1.01E-06	0.00E+00	0.00E+00	2.45E-05
45	ALL		732273	4033692	NonCancerChronicDerive	0.00E+00	2.31E-09	0.00E+00	0.00E+00	0.00E+00	1.67E-07	2.44E-05	0.00E+00	7.48E-09	0.00E+00	0.00E+00	9.83E-07	0.00E+00	0.00E+00	2.44E-05
46	ALL		732373	4033692	NonCancerChronicDerive	0.00E+00	2.24E-09	0.00E+00	0.00E+00	0.00E+00	1.66E-07	2.41E-05	0.00E+00	7.26E-09	0.00E+00	0.00E+00	9.54E-07	0.00E+00	0.00E+00	2.41E-05
47	ALL		732473	4033692	NonCancerChronicDerive	0.00E+00	2.20E-09	0.00E+00	0.00E+00	0.00E+00	1.66E-07	2.40E-05	0.00E+00	7.12E-09	0.00E+00	0.00E+00	9.36E-07	0.00E+00	0.00E+00	2.40E-05
48	ALL		732573	4033692	NonCancerChronicDerive	0.00E+00	2.20E-09	0.00E+00	0.00E+00	0.00E+00	1.68E-07	2.41E-05	0.00E+00	7.13E-09	0.00E+00	0.00E+00	9.38E-07	0.00E+00	0.00E+00	2.41E-05
49	ALL		732673	4033692	NonCancerChronicDerive	0.00E+00	2.28E-09	0.00E+00	0.00E+00	0.00E+00	1.74E-07	2.48E-05	0.00E+00	7.40E-09	0.00E+00	0.00E+00	9.72E-07	0.00E+00	0.00E+00	2.48E-05
50	ALL		732773	4033692	NonCancerChronicDerive	0.00E+00	2.49E-09	0.00E+00	0.00E+00	0.00E+00	1.88E-07	2.68E-05	0.00E+00	8.06E-09	0.00E+00	0.00E+00	1.06E-06	0.00E+00	0.00E+00	2.68E-05
51	ALL		732873	4033692	NonCancerChronicDerive	0.00E+00	2.80E-09	0.00E+00	0.00E+00	0.00E+00	2.08E-07	2.96E-05	0.00E+00	9.05E-09	0.00E+00	0.00E+00	1.19E-06	0.00E+00	0.00E+00	2.96E-05

52	ALL	732973	4033692	NonCancerChronicDerive	0.00E+00	3.20E-09	0.00E+00	0.00E+00	0.00E+00	2.35E-07	3.35E-05	0.00E+00	1.04E-08	0.00E+00	0.00E+00	1.36E-06	0.00E+00	0.00E+00	3.35E-05
53	ALL	733073	4033692	NonCancerChronicDerive	0.00E+00	3.89E-09	0.00E+00	0.00E+00	0.00E+00	2.85E-07	4.05E-05	0.00E+00	1.26E-08	0.00E+00	0.00E+00	1.65E-06	0.00E+00	0.00E+00	4.05E-05
54	ALL	733173	4033692	NonCancerChronicDerive	0.00E+00	5.34E-09	0.00E+00	0.00E+00	0.00E+00	3.79E-07	5.48E-05	0.00E+00	1.73E-08	0.00E+00	0.00E+00	2.27E-06	0.00E+00	0.00E+00	5.48E-05
55	ALL	733273	4033692	NonCancerChronicDerive	0.00E+00	9.38E-09	0.00E+00	0.00E+00	0.00E+00	6.36E-07	9.35E-05	0.00E+00	3.03E-08	0.00E+00	0.00E+00	3.99E-06	0.00E+00	0.00E+00	9.35E-05
56	ALL	733373	4033692	NonCancerChronicDerive	0.00E+00	2.36E-08	0.00E+00	0.00E+00	0.00E+00	1.53E-06	2.27E-04	0.00E+00	7.65E-08	0.00E+00	0.00E+00	1.01E-05	0.00E+00	0.00E+00	2.27E-04
57	ALL	733473	4033692	NonCancerChronicDerive	0.00E+00	4.57E-08	0.00E+00	0.00E+00	0.00E+00	2.92E-06	4.30E-04	0.00E+00	1.48E-07	0.00E+00	0.00E+00	1.95E-05	0.00E+00	0.00E+00	4.30E-04
58	ALL	733573	4033692	NonCancerChronicDerive	0.00E+00	6.20E-08	0.00E+00	0.00E+00	0.00E+00	3.96E-06	5.79E-04	0.00E+00	2.01E-07	0.00E+00	0.00E+00	2.64E-05	0.00E+00	0.00E+00	5.79E-04
59	ALL	733673	4033692	NonCancerChronicDerive	0.00E+00	6.85E-08	0.00E+00	0.00E+00	0.00E+00	4.39E-06	6.38E-04	0.00E+00	2.22E-07	0.00E+00	0.00E+00	2.92E-05	0.00E+00	0.00E+00	6.38E-04
60	ALL	733773	4033692	NonCancerChronicDerive	0.00E+00	6.48E-08	0.00E+00	0.00E+00	0.00E+00	4.20E-06	6.05E-04	0.00E+00	2.10E-07	0.00E+00	0.00E+00	2.76E-05	0.00E+00	0.00E+00	6.05E-04
61	ALL	733873	4033692	NonCancerChronicDerive	0.00E+00	5.58E-08	0.00E+00	0.00E+00	0.00E+00	3.66E-06	5.23E-04	0.00E+00	1.81E-07	0.00E+00	0.00E+00	2.37E-05	0.00E+00	0.00E+00	5.23E-04
62	ALL	733973	4033692	NonCancerChronicDerive	0.00E+00	4.58E-08	0.00E+00	0.00E+00	0.00E+00	3.05E-06	4.32E-04	0.00E+00	1.48E-07	0.00E+00	0.00E+00	1.95E-05	0.00E+00	0.00E+00	4.32E-04
63	ALL	734073	4033692	NonCancerChronicDerive	0.00E+00	3.71E-08	0.00E+00	0.00E+00	0.00E+00	2.51E-06	3.53E-04	0.00E+00	1.20E-07	0.00E+00	0.00E+00	1.58E-05	0.00E+00	0.00E+00	3.53E-04
64	ALL	732073	4033792	NonCancerChronicDerive	0.00E+00	2.75E-09	0.00E+00	0.00E+00	0.00E+00	1.86E-07	2.72E-05	0.00E+00	8.89E-09	0.00E+00	0.00E+00	1.17E-06	0.00E+00	0.00E+00	2.72E-05
65	ALL	732373	4033792	NonCancerChronicDerive	0.00E+00	2.37E-09	0.00E+00	0.00E+00	0.00E+00	1.75E-07	2.55E-05	0.00E+00	7.67E-09	0.00E+00	0.00E+00	1.01E-06	0.00E+00	0.00E+00	2.55E-05
66	ALL	732473	4033792	NonCancerChronicDerive	0.00E+00	2.33E-09	0.00E+00	0.00E+00	0.00E+00	1.77E-07	2.55E-05	0.00E+00	7.56E-09	0.00E+00	0.00E+00	9.94E-07	0.00E+00	0.00E+00	2.55E-05
67	ALL	732573	4033792	NonCancerChronicDerive	0.00E+00	2.36E-09	0.00E+00	0.00E+00	0.00E+00	1.81E-07	2.59E-05	0.00E+00	7.63E-09	0.00E+00	0.00E+00	1.00E-06	0.00E+00	0.00E+00	2.59E-05
68	ALL	732673	4033792	NonCancerChronicDerive	0.00E+00	2.44E-09	0.00E+00	0.00E+00	0.00E+00	1.88E-07	2.67E-05	0.00E+00	7.89E-09	0.00E+00	0.00E+00	1.04E-06	0.00E+00	0.00E+00	2.67E-05
69	ALL	732773	4033792	NonCancerChronicDerive	0.00E+00	2.64E-09	0.00E+00	0.00E+00	0.00E+00	2.02E-07	2.86E-05	0.00E+00	8.56E-09	0.00E+00	0.00E+00	1.13E-06	0.00E+00	0.00E+00	2.86E-05
70	ALL	732873	4033792	NonCancerChronicDerive	0.00E+00	3.05E-09	0.00E+00	0.00E+00	0.00E+00	2.28E-07	3.23E-05	0.00E+00	9.86E-09	0.00E+00	0.00E+00	1.30E-06	0.00E+00	0.00E+00	3.23E-05
71	ALL	732973	4033792	NonCancerChronicDerive	0.00E+00	3.69E-09	0.00E+00	0.00E+00	0.00E+00	2.69E-07	3.83E-05	0.00E+00	1.19E-08	0.00E+00	0.00E+00	1.57E-06	0.00E+00	0.00E+00	3.83E-05
72	ALL	733073	4033792	NonCancerChronicDerive	0.00E+00	4.62E-09	0.00E+00	0.00E+00	0.00E+00	3.34E-07	4.76E-05	0.00E+00	1.50E-08	0.00E+00	0.00E+00	1.97E-06	0.00E+00	0.00E+00	4.76E-05
73	ALL	733173	4033792	NonCancerChronicDerive	0.00E+00	6.44E-09	0.00E+00	0.00E+00	0.00E+00	4.55E-07	6.56E-05	0.00E+00	2.08E-08	0.00E+00	0.00E+00	2.74E-06	0.00E+00	0.00E+00	6.56E-05
74	ALL	733273	4033792	NonCancerChronicDerive	0.00E+00	1.21E-08	0.00E+00	0.00E+00	0.00E+00	8.13E-07	1.21E-04	0.00E+00	3.90E-08	0.00E+00	0.00E+00	5.13E-06	0.00E+00	0.00E+00	1.21E-04
75	ALL	733373	4033792	NonCancerChronicDerive	0.00E+00	3.93E-08	0.00E+00	0.00E+00	0.00E+00	2.51E-06	3.78E-04	0.00E+00	1.27E-07	0.00E+00	0.00E+00	1.67E-05	0.00E+00	0.00E+00	3.78E-04
76	ALL	733473	4033792	NonCancerChronicDerive	0.00E+00	8.09E-08	0.00E+00	0.00E+00	0.00E+00	5.11E-06	7.61E-04	0.00E+00	2.62E-07	0.00E+00	0.00E+00	3.44E-05	0.00E+00	0.00E+00	7.61E-04
77	ALL	733573	4033792	NonCancerChronicDerive	0.00E+00	1.00E-07	0.00E+00	0.00E+00	0.00E+00	6.35E-06	9.36E-04	0.00E+00	3.25E-07	0.00E+00	0.00E+00	4.27E-05	0.00E+00	0.00E+00	9.36E-04
78	ALL	733673	4033792	NonCancerChronicDerive	0.00E+00	9.34E-08	0.00E+00	0.00E+00	0.00E+00	5.99E-06	8.71E-04	0.00E+00	3.02E-07	0.00E+00	0.00E+00	3.98E-05	0.00E+00	0.00E+00	8.71E-04
79	ALL	733773	4033792	NonCancerChronicDerive	0.00E+00	7.45E-08	0.00E+00	0.00E+00	0.00E+00	4.87E-06	6.99E-04	0.00E+00	2.41E-07	0.00E+00	0.00E+00	3.17E-05	0.00E+00	0.00E+00	6.99E-04
80	ALL	733873	4033792	NonCancerChronicDerive	0.00E+00	5.67E-08	0.00E+00	0.00E+00	0.00E+00	3.79E-06	5.37E-04	0.00E+00	1.83E-07	0.00E+00	0.00E+00	2.41E-05	0.00E+00	0.00E+00	5.37E-04
81	ALL	733973	4033792	NonCancerChronicDerive	0.00E+00	4.32E-08	0.00E+00	0.00E+00	0.00E+00	2.95E-06	4.13E-04	0.00E+00	1.40E-07	0.00E+00	0.00E+00	1.84E-05	0.00E+00	0.00E+00	4.13E-04
82	ALL	734073	4033792	NonCancerChronicDerive	0.00E+00	3.36E-08	0.00E+00	0.00E+00	0.00E+00	2.33E-06	3.25E-04	0.00E+00	1.09E-07	0.00E+00	0.00E+00	1.43E-05	0.00E+00	0.00E+00	3.25E-04
83	ALL	732073	4033892	NonCancerChronicDerive	0.00E+00	2.90E-09	0.00E+00	0.00E+00	0.00E+00	1.96E-07	2.85E-05	0.00E+00	9.40E-09	0.00E+00	0.00E+00	1.24E-06	0.00E+00	0.00E+00	2.85E-05
84	ALL	733773	4033892	NonCancerChronicDerive	0.00E+00	6.96E-08	0.00E+00	0.00E+00	0.00E+00	4.69E-06	6.65E-04	0.00E+00	2.25E-07	0.00E+00	0.00E+00	2.96E-05	0.00E+00	0.00E+00	6.65E-04
85	ALL	733873	4033892	NonCancerChronicDerive	0.00E+00	4.88E-08	0.00E+00	0.00E+00	0.00E+00	3.39E-06	4.75E-04	0.00E+00	1.58E-07	0.00E+00	0.00E+00	2.08E-05	0.00E+00	0.00E+00	4.75E-04
86	ALL	733973	4033892	NonCancerChronicDerive	0.00E+00	3.59E-08	0.00E+00	0.00E+00	0.00E+00	2.55E-06	3.54E-04	0.00E+00	1.16E-07	0.00E+00	0.00E+00	1.53E-05	0.00E+00	0.00E+00	3.54E-04
87	ALL	734073	4033892	NonCancerChronicDerive	0.00E+00	2.76E-08	0.00E+00	0.00E+00	0.00E+00	1.99E-06	2.75E-04	0.00E+00	8.94E-08	0.00E+00	0.00E+00	1.18E-05	0.00E+00	0.00E+00	2.75E-04
88	ALL	732073	4033992	NonCancerChronicDerive	0.00E+00	2.86E-09	0.00E+00	0.00E+00	0.00E+00	1.97E-07	2.86E-05	0.00E+00	9.27E-09	0.00E+00	0.00E+00	1.22E-06	0.00E+00	0.00E+00	2.86E-05
89	ALL	733773	4033992	NonCancerChronicDerive	0.00E+00	5.00E-08	0.00E+00	0.00E+00	0.00E+00	3.62E-06	5.05E-04	0.00E+00	1.62E-07	0.00E+00	0.00E+00	2.13E-05	0.00E+00	0.00E+00	5.05E-04
90	ALL	733873	4033992	NonCancerChronicDerive	0.00E+00	3.50E-08	0.00E+00	0.00E+00	0.00E+00	2.61E-06	3.60E-04	0.00E+00	1.13E-07	0.00E+00	0.00E+00	1.49E-05	0.00E+00	0.00E+00	3.60E-04
91	ALL	733973	4033992	NonCancerChronicDerive	0.00E+00	2.61E-08	0.00E+00	0.00E+00	0.00E+00	1.98E-06	2.71E-04	0.00E+00	8.46E-08	0.00E+00	0.00E+00	1.11E-05	0.00E+00	0.00E+00	2.71E-04
92	ALL	734073	4033992	NonCancerChronicDerive	0.00E+00	2.05E-08	0.00E+00	0.00E+00	0.00E+00	1.56E-06	2.13E-04	0.00E+00	6.63E-08	0.00E+00	0.00E+00	8.72E-06	0.00E+00	0.00E+00	2.13E-04
93	ALL	732073	4034092	NonCancerChronicDerive	0.00E+00	2.93E-09	0.00E+00	0.00E+00	0.00E+00	2.03E-07	2.93E-05	0.00E+00	9.48E-09	0.00E+00	0.00E+00	1.25E-06	0.00E+00	0.00E+00	2.93E-05
94	ALL	733773	4034092	NonCancerChronicDerive	0.00E+00	2.62E-08	0.00E+00	0.00E+00	0.00E+00	2.25E-06	3.02E-04	0.00E+00	8.47E-08	0.00E+00	0.00E+00	1.11E-05	0.00E+00	0.00E+00	3.02E-04
95	ALL	733873	4034092	NonCancerChronicDerive	0.00E+00	2.01E-08	0.00E+00	0.00E+00	0.00E+00	1.71E-06	2.30E-04	0.00E+00	6.51E-08	0.00E+00	0.00E+00	8.55E-06	0.00E+00	0.00E+00	2.30E-04
96	ALL	733973	4034092	NonCancerChronicDerive	0.00E+00	1.62E-08	0.00E+00	0.00E+00	0.00E+00	1.35E-06	1.82E-04	0.00E+00	5.24E-08	0.00E+00	0.00E+00	6.88E-06	0.00E+00	0.00E+00	1.82E-04
97	ALL	734073	4034092	NonCancerChronicDerive	0.00E+00	1.35E-08	0.00E+00	0.00E+00	0.00E+00	1.10E-06	1.49E-04	0.00E+00	4.36E-08	0.00E+00	0.00E+00	5.73E-06	0.00E+00	0.00E+00	1.49E-04
98	ALL	732073	4034192	NonCancerChronicDerive	0.00E+00	2.86E-09	0.00E+00	0.00E+00	0.00E+00	2.03E-07	2.94E-05	0.00E+00	9.26E-09	0.00E+00	0.00E+00	1.22E-06	0.00E+00	0.00E+00	2.94E-05
99	ALL	733773	4034192	NonCancerChronicDerive	0.00E+00	1.07E-08	0.00E+00	0.00E+00	0.00E+00	1.28E-06	1.59E-04	0.00E+00	3.47E-08	0.00E+00	0.00E+00	4.57E-06	0.00E+00	0.00E+00	1.59E-04
100	ALL	733873	4034192	NonCancerChronicDerive	0.00E+00	9.80E-09	0.00E+00	0.00E+00	0.00E+00	1.03E-06	1.32E-04	0.00E+00	3.17E-08	0.00E+00	0.00E+00	4.17E-06	0.00E+00	0.00E+00	1.32E-04
101	ALL	733973	4034192	NonCancerChronicDerive	0.00E+00	8.93E-09	0.00E+00	0.00E+00	0.00E+00	8.61E-07	1.13E-04	0.00E+00	2.89E-08	0.00E+00	0.00E+00	3.80E-06	0.00E+00	0.00E+00	1.13E-04
102	ALL	734073	4034192	NonCancerChronicDerive	0.00E+00	8.14E-09	0.00E+00	0.00E+00	0.00E+00	7.40E-07	9.82E-05	0.00E+00	2.64E-08	0.00E+00	0.00E+00	3.46E-06	0.00E+00	0.00E+00	9.82E-05
103	ALL	732073	4034292	NonCancerChronicDerive	0.00E+00	2.81E-09	0.00E+00	0.00E+00	0.00E+00	2.02E-07	2.92E-05	0.00E+00	9.09E-09	0.00E+00	0.00E+00	1.20E-06	0.00E+00	0.00E+00	2.92E-05
104	ALL	733773	4034292	NonCancerChronicDerive	0.00E+00	5.16E-09	0.00E+00	0.00E+00	0.00E+00	7.94E-07	9.35E-05	0.00E+00	1.67E-08	0.00E+00	0.00E+00	2.20E-06	0.00E+00	0.00E+00	9.35E-05

105	ALL	733873	4034292	NonCancerChronicDerive	0.00E+00	5.11E-09	0.00E+00	0.00E+00	0.00E+00	6.49E-07	7.97E-05	0.00E+00	1.66E-08	0.00E+00	0.00E+00	2.18E-06	0.00E+00	0.00E+00	7.97E-05
106	ALL	733973	4034292	NonCancerChronicDerive	0.00E+00	5.06E-09	0.00E+00	0.00E+00	0.00E+00	5.62E-07	7.12E-05	0.00E+00	1.64E-08	0.00E+00	0.00E+00	2.15E-06	0.00E+00	0.00E+00	7.12E-05
107	ALL	734073	4034292	NonCancerChronicDerive	0.00E+00	4.97E-09	0.00E+00	0.00E+00	0.00E+00	5.02E-07	6.52E-05	0.00E+00	1.61E-08	0.00E+00	0.00E+00	2.12E-06	0.00E+00	0.00E+00	6.52E-05
108	ALL	734173	4034292	NonCancerChronicDerive	0.00E+00	4.84E-09	0.00E+00	0.00E+00	0.00E+00	4.57E-07	6.03E-05	0.00E+00	1.57E-08	0.00E+00	0.00E+00	2.06E-06	0.00E+00	0.00E+00	6.03E-05
109	ALL	732073	4034392	NonCancerChronicDerive	0.00E+00	2.84E-09	0.00E+00	0.00E+00	0.00E+00	2.06E-07	2.96E-05	0.00E+00	9.20E-09	0.00E+00	0.00E+00	1.21E-06	0.00E+00	0.00E+00	2.96E-05
110	ALL	733773	4034392	NonCancerChronicDerive	0.00E+00	3.49E-09	0.00E+00	0.00E+00	0.00E+00	5.24E-07	6.17E-05	0.00E+00	1.13E-08	0.00E+00	0.00E+00	1.49E-06	0.00E+00	0.00E+00	6.17E-05
111	ALL	733873	4034392	NonCancerChronicDerive	0.00E+00	3.38E-09	0.00E+00	0.00E+00	0.00E+00	4.42E-07	5.38E-05	0.00E+00	1.10E-08	0.00E+00	0.00E+00	1.44E-06	0.00E+00	0.00E+00	5.38E-05
112	ALL	733973	4034392	NonCancerChronicDerive	0.00E+00	3.37E-09	0.00E+00	0.00E+00	0.00E+00	3.92E-07	4.91E-05	0.00E+00	1.09E-08	0.00E+00	0.00E+00	1.43E-06	0.00E+00	0.00E+00	4.91E-05
113	ALL	734073	4034392	NonCancerChronicDerive	0.00E+00	3.37E-09	0.00E+00	0.00E+00	0.00E+00	3.58E-07	4.59E-05	0.00E+00	1.09E-08	0.00E+00	0.00E+00	1.44E-06	0.00E+00	0.00E+00	4.59E-05
114	ALL	734173	4034392	NonCancerChronicDerive	0.00E+00	3.38E-09	0.00E+00	0.00E+00	0.00E+00	3.34E-07	4.36E-05	0.00E+00	1.09E-08	0.00E+00	0.00E+00	1.44E-06	0.00E+00	0.00E+00	4.36E-05
115	ALL	734273	4034392	NonCancerChronicDerive	0.00E+00	3.36E-09	0.00E+00	0.00E+00	0.00E+00	3.15E-07	4.17E-05	0.00E+00	1.09E-08	0.00E+00	0.00E+00	1.43E-06	0.00E+00	0.00E+00	4.17E-05
116	ALL	732073	4034492	NonCancerChronicDerive	0.00E+00	3.04E-09	0.00E+00	0.00E+00	0.00E+00	2.20E-07	3.16E-05	0.00E+00	9.84E-09	0.00E+00	0.00E+00	1.29E-06	0.00E+00	0.00E+00	3.16E-05
117	ALL	734173	4034492	NonCancerChronicDerive	0.00E+00	2.60E-09	0.00E+00	0.00E+00	0.00E+00	2.56E-07	3.35E-05	0.00E+00	8.40E-09	0.00E+00	0.00E+00	1.10E-06	0.00E+00	0.00E+00	3.35E-05
118	ALL	734273	4034492	NonCancerChronicDerive	0.00E+00	2.61E-09	0.00E+00	0.00E+00	0.00E+00	2.46E-07	3.25E-05	0.00E+00	8.44E-09	0.00E+00	0.00E+00	1.11E-06	0.00E+00	0.00E+00	3.25E-05
119	ALL	734373	4034492	NonCancerChronicDerive	0.00E+00	2.61E-09	0.00E+00	0.00E+00	0.00E+00	2.37E-07	3.16E-05	0.00E+00	8.45E-09	0.00E+00	0.00E+00	1.11E-06	0.00E+00	0.00E+00	3.16E-05
120	ALL	734473	4034492	NonCancerChronicDerive	0.00E+00	2.61E-09	0.00E+00	0.00E+00	0.00E+00	2.29E-07	3.09E-05	0.00E+00	8.44E-09	0.00E+00	0.00E+00	1.11E-06	0.00E+00	0.00E+00	3.09E-05
121	ALL	734573	4034492	NonCancerChronicDerive	0.00E+00	2.60E-09	0.00E+00	0.00E+00	0.00E+00	2.22E-07	3.01E-05	0.00E+00	8.41E-09	0.00E+00	0.00E+00	1.11E-06	0.00E+00	0.00E+00	3.01E-05
122	ALL	734673	4034492	NonCancerChronicDerive	0.00E+00	2.58E-09	0.00E+00	0.00E+00	0.00E+00	2.15E-07	2.93E-05	0.00E+00	8.34E-09	0.00E+00	0.00E+00	1.10E-06	0.00E+00	0.00E+00	2.93E-05
123	ALL	734773	4034492	NonCancerChronicDerive	0.00E+00	2.55E-09	0.00E+00	0.00E+00	0.00E+00	2.08E-07	2.86E-05	0.00E+00	8.25E-09	0.00E+00	0.00E+00	1.08E-06	0.00E+00	0.00E+00	2.86E-05
124	ALL	734873	4034492	NonCancerChronicDerive	0.00E+00	2.51E-09	0.00E+00	0.00E+00	0.00E+00	2.02E-07	2.78E-05	0.00E+00	8.14E-09	0.00E+00	0.00E+00	1.07E-06	0.00E+00	0.00E+00	2.78E-05
125	ALL	732073	4034592	NonCancerChronicDerive	0.00E+00	3.35E-09	0.00E+00	0.00E+00	0.00E+00	2.40E-07	3.45E-05	0.00E+00	1.09E-08	0.00E+00	0.00E+00	1.43E-06	0.00E+00	0.00E+00	3.45E-05
126	ALL	733773	4034592	NonCancerChronicDerive	0.00E+00	2.34E-09	0.00E+00	0.00E+00	0.00E+00	2.41E-07	3.07E-05	0.00E+00	7.59E-09	0.00E+00	0.00E+00	9.97E-07	0.00E+00	0.00E+00	3.07E-05
127	ALL	733873	4034592	NonCancerChronicDerive	0.00E+00	2.23E-09	0.00E+00	0.00E+00	0.00E+00	2.28E-07	2.93E-05	0.00E+00	7.23E-09	0.00E+00	0.00E+00	9.50E-07	0.00E+00	0.00E+00	2.93E-05
128	ALL	733973	4034592	NonCancerChronicDerive	0.00E+00	2.18E-09	0.00E+00	0.00E+00	0.00E+00	2.18E-07	2.83E-05	0.00E+00	7.05E-09	0.00E+00	0.00E+00	9.26E-07	0.00E+00	0.00E+00	2.83E-05
129	ALL	734273	4034592	NonCancerChronicDerive	0.00E+00	2.16E-09	0.00E+00	0.00E+00	0.00E+00	1.99E-07	2.65E-05	0.00E+00	6.99E-09	0.00E+00	0.00E+00	9.19E-07	0.00E+00	0.00E+00	2.65E-05
130	ALL	734373	4034592	NonCancerChronicDerive	0.00E+00	2.17E-09	0.00E+00	0.00E+00	0.00E+00	1.94E-07	2.60E-05	0.00E+00	7.02E-09	0.00E+00	0.00E+00	9.23E-07	0.00E+00	0.00E+00	2.60E-05
131	ALL	734473	4034592	NonCancerChronicDerive	0.00E+00	2.18E-09	0.00E+00	0.00E+00	0.00E+00	1.90E-07	2.57E-05	0.00E+00	7.05E-09	0.00E+00	0.00E+00	9.27E-07	0.00E+00	0.00E+00	2.57E-05
132	ALL	734573	4034592	NonCancerChronicDerive	0.00E+00	2.18E-09	0.00E+00	0.00E+00	0.00E+00	1.86E-07	2.53E-05	0.00E+00	7.06E-09	0.00E+00	0.00E+00	9.28E-07	0.00E+00	0.00E+00	2.53E-05
133	ALL	734673	4034592	NonCancerChronicDerive	0.00E+00	2.18E-09	0.00E+00	0.00E+00	0.00E+00	1.82E-07	2.49E-05	0.00E+00	7.05E-09	0.00E+00	0.00E+00	9.27E-07	0.00E+00	0.00E+00	2.49E-05
134	ALL	734773	4034592	NonCancerChronicDerive	0.00E+00	2.17E-09	0.00E+00	0.00E+00	0.00E+00	1.78E-07	2.44E-05	0.00E+00	7.03E-09	0.00E+00	0.00E+00	9.24E-07	0.00E+00	0.00E+00	2.44E-05
135	ALL	734873	4034592	NonCancerChronicDerive	0.00E+00	2.16E-09	0.00E+00	0.00E+00	0.00E+00	1.74E-07	2.40E-05	0.00E+00	6.98E-09	0.00E+00	0.00E+00	9.18E-07	0.00E+00	0.00E+00	2.40E-05
136	ALL	734973	4034592	NonCancerChronicDerive	0.00E+00	2.14E-09	0.00E+00	0.00E+00	0.00E+00	1.70E-07	2.35E-05	0.00E+00	6.92E-09	0.00E+00	0.00E+00	9.10E-07	0.00E+00	0.00E+00	2.35E-05
137	ALL	732073	4034692	NonCancerChronicDerive	0.00E+00	3.76E-09	0.00E+00	0.00E+00	0.00E+00	2.65E-07	3.81E-05	0.00E+00	1.22E-08	0.00E+00	0.00E+00	1.60E-06	0.00E+00	0.00E+00	3.81E-05
138	ALL	732173	4034692	NonCancerChronicDerive	0.00E+00	4.15E-09	0.00E+00	0.00E+00	0.00E+00	2.95E-07	4.24E-05	0.00E+00	1.34E-08	0.00E+00	0.00E+00	1.77E-06	0.00E+00	0.00E+00	4.24E-05
139	ALL	732273	4034692	NonCancerChronicDerive	0.00E+00	4.76E-09	0.00E+00	0.00E+00	0.00E+00	3.38E-07	4.86E-05	0.00E+00	1.54E-08	0.00E+00	0.00E+00	2.03E-06	0.00E+00	0.00E+00	4.86E-05
140	ALL	732373	4034692	NonCancerChronicDerive	0.00E+00	5.53E-09	0.00E+00	0.00E+00	0.00E+00	3.93E-07	5.65E-05	0.00E+00	1.79E-08	0.00E+00	0.00E+00	2.35E-06	0.00E+00	0.00E+00	5.65E-05
141	ALL	732473	4034692	NonCancerChronicDerive	0.00E+00	6.47E-09	0.00E+00	0.00E+00	0.00E+00	4.61E-07	6.61E-05	0.00E+00	2.09E-08	0.00E+00	0.00E+00	2.75E-06	0.00E+00	0.00E+00	6.61E-05
142	ALL	732573	4034692	NonCancerChronicDerive	0.00E+00	7.40E-09	0.00E+00	0.00E+00	0.00E+00	5.33E-07	7.62E-05	0.00E+00	2.40E-08	0.00E+00	0.00E+00	3.15E-06	0.00E+00	0.00E+00	7.62E-05
143	ALL	732673	4034692	NonCancerChronicDerive	0.00E+00	7.99E-09	0.00E+00	0.00E+00	0.00E+00	5.93E-07	8.38E-05	0.00E+00	2.59E-08	0.00E+00	0.00E+00	3.40E-06	0.00E+00	0.00E+00	8.38E-05
144	ALL	732773	4034692	NonCancerChronicDerive	0.00E+00	7.87E-09	0.00E+00	0.00E+00	0.00E+00	6.21E-07	8.58E-05	0.00E+00	2.55E-08	0.00E+00	0.00E+00	3.35E-06	0.00E+00	0.00E+00	8.58E-05
145	ALL	732873	4034692	NonCancerChronicDerive	0.00E+00	6.69E-09	0.00E+00	0.00E+00	0.00E+00	6.04E-07	8.00E-05	0.00E+00	2.17E-08	0.00E+00	0.00E+00	2.85E-06	0.00E+00	0.00E+00	8.00E-05
146	ALL	732973	4034692	NonCancerChronicDerive	0.00E+00	5.35E-09	0.00E+00	0.00E+00	0.00E+00	5.75E-07	7.27E-05	0.00E+00	1.73E-08	0.00E+00	0.00E+00	2.28E-06	0.00E+00	0.00E+00	7.27E-05
147	ALL	733073	4034692	NonCancerChronicDerive	0.00E+00	4.17E-09	0.00E+00	0.00E+00	0.00E+00	5.02E-07	6.18E-05	0.00E+00	1.35E-08	0.00E+00	0.00E+00	1.77E-06	0.00E+00	0.00E+00	6.18E-05
148	ALL	733173	4034692	NonCancerChronicDerive	0.00E+00	3.41E-09	0.00E+00	0.00E+00	0.00E+00	3.80E-07	4.77E-05	0.00E+00	1.10E-08	0.00E+00	0.00E+00	1.45E-06	0.00E+00	0.00E+00	4.77E-05
149	ALL	733273	4034692	NonCancerChronicDerive	0.00E+00	2.99E-09	0.00E+00	0.00E+00	0.00E+00	3.07E-07	3.92E-05	0.00E+00	9.68E-09	0.00E+00	0.00E+00	1.27E-06	0.00E+00	0.00E+00	3.92E-05
150	ALL	733373	4034692	NonCancerChronicDerive	0.00E+00	2.76E-09	0.00E+00	0.00E+00	0.00E+00	2.70E-07	3.48E-05	0.00E+00	8.94E-09	0.00E+00	0.00E+00	1.17E-06	0.00E+00	0.00E+00	3.48E-05
151	ALL	733473	4034692	NonCancerChronicDerive	0.00E+00	2.58E-09	0.00E+00	0.00E+00	0.00E+00	2.39E-07	3.12E-05	0.00E+00	8.35E-09	0.00E+00	0.00E+00	1.10E-06	0.00E+00	0.00E+00	3.12E-05
152	ALL	733573	4034692	NonCancerChronicDerive	0.00E+00	2.37E-09	0.00E+00	0.00E+00	0.00E+00	2.16E-07	2.83E-05	0.00E+00	7.66E-09	0.00E+00	0.00E+00	1.01E-06	0.00E+00	0.00E+00	2.83E-05
153	ALL	733673	4034692	NonCancerChronicDerive	0.00E+00	2.16E-09	0.00E+00	0.00E+00	0.00E+00	2.02E-07	2.63E-05	0.00E+00	7.01E-09	0.00E+00	0.00E+00	9.21E-07	0.00E+00	0.00E+00	2.63E-05
154	ALL	733773	4034692	NonCancerChronicDerive	0.00E+00	2.03E-09	0.00E+00	0.00E+00	0.00E+00	1.91E-07	2.48E-05	0.00E+00	6.56E-09	0.00E+00	0.00E+00	8.62E-07	0.00E+00	0.00E+00	2.48E-05
155	ALL	733873	4034692	NonCancerChronicDerive	0.00E+00	1.94E-09	0.00E+00	0.00E+00	0.00E+00	1.83E-07	2.39E-05	0.00E+00	6.29E-09	0.00E+00	0.00E+00	8.27E-07	0.00E+00	0.00E+00	2.39E-05
156	ALL	733973	4034692	NonCancerChronicDerive	0.00E+00	1.90E-09	0.00E+00	0.00E+00	0.00E+00	1.78E-07	2.33E-05	0.00E+00	6.14E-09	0.00E+00	0.00E+00	8.07E-07	0.00E+00	0.00E+00	2.33E-05
157	ALL	734073	4034692	NonCancerChronicDerive	0.00E+00	1.87E-09	0.00E+00	0.00E+00	0.00E+00	1.73E-07	2.29E-05	0.00E+00	6.07E-09	0.00E+00	0.00E+00	7.98E-07	0.00E+00	0.00E+00	2.29E-05

158	ALL	734273	4034692	NonCancerChronicDerive	0.00E+00	1.88E-09	0.00E+00	0.00E+00	0.00E+00	1.67E-07	2.24E-05	0.00E+00	6.08E-09	0.00E+00	0.00E+00	7.99E-07	0.00E+00	0.00E+00	2.24E-05
159	ALL	734373	4034692	NonCancerChronicDerive	0.00E+00	1.89E-09	0.00E+00	0.00E+00	0.00E+00	1.65E-07	2.22E-05	0.00E+00	6.10E-09	0.00E+00	0.00E+00	8.02E-07	0.00E+00	0.00E+00	2.22E-05
160	ALL	734473	4034692	NonCancerChronicDerive	0.00E+00	1.89E-09	0.00E+00	0.00E+00	0.00E+00	1.62E-07	2.20E-05	0.00E+00	6.13E-09	0.00E+00	0.00E+00	8.06E-07	0.00E+00	0.00E+00	2.20E-05
161	ALL	734573	4034692	NonCancerChronicDerive	0.00E+00	1.90E-09	0.00E+00	0.00E+00	0.00E+00	1.60E-07	2.18E-05	0.00E+00	6.15E-09	0.00E+00	0.00E+00	8.08E-07	0.00E+00	0.00E+00	2.18E-05
162	ALL	734673	4034692	NonCancerChronicDerive	0.00E+00	1.90E-09	0.00E+00	0.00E+00	0.00E+00	1.58E-07	2.16E-05	0.00E+00	6.16E-09	0.00E+00	0.00E+00	8.10E-07	0.00E+00	0.00E+00	2.16E-05
163	ALL	734773	4034692	NonCancerChronicDerive	0.00E+00	1.90E-09	0.00E+00	0.00E+00	0.00E+00	1.55E-07	2.13E-05	0.00E+00	6.16E-09	0.00E+00	0.00E+00	8.10E-07	0.00E+00	0.00E+00	2.13E-05
164	ALL	734873	4034692	NonCancerChronicDerive	0.00E+00	1.90E-09	0.00E+00	0.00E+00	0.00E+00	1.53E-07	2.10E-05	0.00E+00	6.15E-09	0.00E+00	0.00E+00	8.08E-07	0.00E+00	0.00E+00	2.10E-05
165	ALL	734973	4034692	NonCancerChronicDerive	0.00E+00	1.89E-09	0.00E+00	0.00E+00	0.00E+00	1.50E-07	2.07E-05	0.00E+00	6.12E-09	0.00E+00	0.00E+00	8.05E-07	0.00E+00	0.00E+00	2.07E-05
166	ALL	732073	4034792	NonCancerChronicDerive	0.00E+00	3.98E-09	0.00E+00	0.00E+00	0.00E+00	2.81E-07	4.03E-05	0.00E+00	1.29E-08	0.00E+00	0.00E+00	1.69E-06	0.00E+00	0.00E+00	4.03E-05
167	ALL	732173	4034792	NonCancerChronicDerive	0.00E+00	4.43E-09	0.00E+00	0.00E+00	0.00E+00	3.14E-07	4.51E-05	0.00E+00	1.43E-08	0.00E+00	0.00E+00	1.89E-06	0.00E+00	0.00E+00	4.51E-05
168	ALL	732273	4034792	NonCancerChronicDerive	0.00E+00	5.02E-09	0.00E+00	0.00E+00	0.00E+00	3.58E-07	5.13E-05	0.00E+00	1.63E-08	0.00E+00	0.00E+00	2.14E-06	0.00E+00	0.00E+00	5.13E-05
169	ALL	732373	4034792	NonCancerChronicDerive	0.00E+00	5.69E-09	0.00E+00	0.00E+00	0.00E+00	4.09E-07	5.84E-05	0.00E+00	1.84E-08	0.00E+00	0.00E+00	2.42E-06	0.00E+00	0.00E+00	5.84E-05
170	ALL	732473	4034792	NonCancerChronicDerive	0.00E+00	6.33E-09	0.00E+00	0.00E+00	0.00E+00	4.61E-07	6.54E-05	0.00E+00	2.05E-08	0.00E+00	0.00E+00	2.69E-06	0.00E+00	0.00E+00	6.54E-05
171	ALL	732573	4034792	NonCancerChronicDerive	0.00E+00	6.74E-09	0.00E+00	0.00E+00	0.00E+00	5.04E-07	7.08E-05	0.00E+00	2.18E-08	0.00E+00	0.00E+00	2.87E-06	0.00E+00	0.00E+00	7.08E-05
172	ALL	732673	4034792	NonCancerChronicDerive	0.00E+00	6.60E-09	0.00E+00	0.00E+00	0.00E+00	5.20E-07	7.18E-05	0.00E+00	2.14E-08	0.00E+00	0.00E+00	2.81E-06	0.00E+00	0.00E+00	7.18E-05
173	ALL	732773	4034792	NonCancerChronicDerive	0.00E+00	5.87E-09	0.00E+00	0.00E+00	0.00E+00	5.05E-07	6.78E-05	0.00E+00	1.90E-08	0.00E+00	0.00E+00	2.50E-06	0.00E+00	0.00E+00	6.78E-05
174	ALL	732873	4034792	NonCancerChronicDerive	0.00E+00	4.88E-09	0.00E+00	0.00E+00	0.00E+00	4.69E-07	6.09E-05	0.00E+00	1.58E-08	0.00E+00	0.00E+00	2.08E-06	0.00E+00	0.00E+00	6.09E-05
175	ALL	732973	4034792	NonCancerChronicDerive	0.00E+00	3.95E-09	0.00E+00	0.00E+00	0.00E+00	4.13E-07	5.25E-05	0.00E+00	1.28E-08	0.00E+00	0.00E+00	1.68E-06	0.00E+00	0.00E+00	5.25E-05
176	ALL	733073	4034792	NonCancerChronicDerive	0.00E+00	3.25E-09	0.00E+00	0.00E+00	0.00E+00	3.35E-07	4.29E-05	0.00E+00	1.05E-08	0.00E+00	0.00E+00	1.38E-06	0.00E+00	0.00E+00	4.29E-05
177	ALL	733173	4034792	NonCancerChronicDerive	0.00E+00	2.79E-09	0.00E+00	0.00E+00	0.00E+00	2.75E-07	3.56E-05	0.00E+00	9.02E-09	0.00E+00	0.00E+00	1.19E-06	0.00E+00	0.00E+00	3.56E-05
178	ALL	733273	4034792	NonCancerChronicDerive	0.00E+00	2.50E-09	0.00E+00	0.00E+00	0.00E+00	2.36E-07	3.08E-05	0.00E+00	8.09E-09	0.00E+00	0.00E+00	1.06E-06	0.00E+00	0.00E+00	3.08E-05
179	ALL	733373	4034792	NonCancerChronicDerive	0.00E+00	2.33E-09	0.00E+00	0.00E+00	0.00E+00	2.13E-07	2.80E-05	0.00E+00	7.55E-09	0.00E+00	0.00E+00	9.93E-07	0.00E+00	0.00E+00	2.80E-05
180	ALL	733473	4034792	NonCancerChronicDerive	0.00E+00	2.20E-09	0.00E+00	0.00E+00	0.00E+00	1.95E-07	2.58E-05	0.00E+00	7.12E-09	0.00E+00	0.00E+00	9.36E-07	0.00E+00	0.00E+00	2.58E-05
181	ALL	733573	4034792	NonCancerChronicDerive	0.00E+00	2.06E-09	0.00E+00	0.00E+00	0.00E+00	1.80E-07	2.39E-05	0.00E+00	6.67E-09	0.00E+00	0.00E+00	8.77E-07	0.00E+00	0.00E+00	2.39E-05
182	ALL	733673	4034792	NonCancerChronicDerive	0.00E+00	1.91E-09	0.00E+00	0.00E+00	0.00E+00	1.69E-07	2.23E-05	0.00E+00	6.19E-09	0.00E+00	0.00E+00	8.14E-07	0.00E+00	0.00E+00	2.23E-05
183	ALL	733773	4034792	NonCancerChronicDerive	0.00E+00	1.80E-09	0.00E+00	0.00E+00	0.00E+00	1.62E-07	2.13E-05	0.00E+00	5.81E-09	0.00E+00	0.00E+00	7.64E-07	0.00E+00	0.00E+00	2.13E-05
184	ALL	733873	4034792	NonCancerChronicDerive	0.00E+00	1.73E-09	0.00E+00	0.00E+00	0.00E+00	1.57E-07	2.06E-05	0.00E+00	5.59E-09	0.00E+00	0.00E+00	7.35E-07	0.00E+00	0.00E+00	2.06E-05
185	ALL	733973	4034792	NonCancerChronicDerive	0.00E+00	1.69E-09	0.00E+00	0.00E+00	0.00E+00	1.53E-07	2.02E-05	0.00E+00	5.46E-09	0.00E+00	0.00E+00	7.18E-07	0.00E+00	0.00E+00	2.02E-05
186	ALL	734073	4034792	NonCancerChronicDerive	0.00E+00	1.67E-09	0.00E+00	0.00E+00	0.00E+00	1.49E-07	1.98E-05	0.00E+00	5.40E-09	0.00E+00	0.00E+00	7.10E-07	0.00E+00	0.00E+00	1.98E-05
187	ALL	734173	4034792	NonCancerChronicDerive	0.00E+00	1.67E-09	0.00E+00	0.00E+00	0.00E+00	1.47E-07	1.97E-05	0.00E+00	5.40E-09	0.00E+00	0.00E+00	7.10E-07	0.00E+00	0.00E+00	1.97E-05
188	ALL	734773	4034792	NonCancerChronicDerive	0.00E+00	1.71E-09	0.00E+00	0.00E+00	0.00E+00	1.38E-07	1.90E-05	0.00E+00	5.53E-09	0.00E+00	0.00E+00	7.28E-07	0.00E+00	0.00E+00	1.90E-05
189	ALL	734873	4034792	NonCancerChronicDerive	0.00E+00	1.71E-09	0.00E+00	0.00E+00	0.00E+00	1.36E-07	1.88E-05	0.00E+00	5.53E-09	0.00E+00	0.00E+00	7.27E-07	0.00E+00	0.00E+00	1.88E-05
190	ALL	734973	4034792	NonCancerChronicDerive	0.00E+00	1.71E-09	0.00E+00	0.00E+00	0.00E+00	1.35E-07	1.86E-05	0.00E+00	5.52E-09	0.00E+00	0.00E+00	7.26E-07	0.00E+00	0.00E+00	1.86E-05
191	ALL	735073	4034792	NonCancerChronicDerive	0.00E+00	1.70E-09	0.00E+00	0.00E+00	0.00E+00	1.33E-07	1.84E-05	0.00E+00	5.51E-09	0.00E+00	0.00E+00	7.25E-07	0.00E+00	0.00E+00	1.84E-05
192	ALL	732073	4034892	NonCancerChronicDerive	0.00E+00	4.14E-09	0.00E+00	0.00E+00	0.00E+00	2.92E-07	4.18E-05	0.00E+00	1.34E-08	0.00E+00	0.00E+00	1.76E-06	0.00E+00	0.00E+00	4.18E-05
193	ALL	732173	4034892	NonCancerChronicDerive	0.00E+00	4.54E-09	0.00E+00	0.00E+00	0.00E+00	3.25E-07	4.63E-05	0.00E+00	1.47E-08	0.00E+00	0.00E+00	1.93E-06	0.00E+00	0.00E+00	4.63E-05
194	ALL	732273	4034892	NonCancerChronicDerive	0.00E+00	5.01E-09	0.00E+00	0.00E+00	0.00E+00	3.61E-07	5.13E-05	0.00E+00	1.62E-08	0.00E+00	0.00E+00	2.13E-06	0.00E+00	0.00E+00	5.13E-05
195	ALL	732373	4034892	NonCancerChronicDerive	0.00E+00	5.41E-09	0.00E+00	0.00E+00	0.00E+00	3.97E-07	5.60E-05	0.00E+00	1.75E-08	0.00E+00	0.00E+00	2.30E-06	0.00E+00	0.00E+00	5.60E-05
196	ALL	732473	4034892	NonCancerChronicDerive	0.00E+00	5.66E-09	0.00E+00	0.00E+00	0.00E+00	4.25E-07	5.95E-05	0.00E+00	1.83E-08	0.00E+00	0.00E+00	2.41E-06	0.00E+00	0.00E+00	5.95E-05
197	ALL	732573	4034892	NonCancerChronicDerive	0.00E+00	5.66E-09	0.00E+00	0.00E+00	0.00E+00	4.42E-07	6.11E-05	0.00E+00	1.83E-08	0.00E+00	0.00E+00	2.41E-06	0.00E+00	0.00E+00	6.11E-05
198	ALL	732673	4034892	NonCancerChronicDerive	0.00E+00	5.20E-09	0.00E+00	0.00E+00	0.00E+00	4.32E-07	5.85E-05	0.00E+00	1.68E-08	0.00E+00	0.00E+00	2.21E-06	0.00E+00	0.00E+00	5.85E-05
199	ALL	732773	4034892	NonCancerChronicDerive	0.00E+00	4.45E-09	0.00E+00	0.00E+00	0.00E+00	3.99E-07	5.28E-05	0.00E+00	1.44E-08	0.00E+00	0.00E+00	1.89E-06	0.00E+00	0.00E+00	5.28E-05
200	ALL	732873	4034892	NonCancerChronicDerive	0.00E+00	3.73E-09	0.00E+00	0.00E+00	0.00E+00	3.55E-07	4.62E-05	0.00E+00	1.21E-08	0.00E+00	0.00E+00	1.59E-06	0.00E+00	0.00E+00	4.62E-05
201	ALL	732973	4034892	NonCancerChronicDerive	0.00E+00	3.12E-09	0.00E+00	0.00E+00	0.00E+00	3.02E-07	3.93E-05	0.00E+00	1.01E-08	0.00E+00	0.00E+00	1.33E-06	0.00E+00	0.00E+00	3.93E-05
202	ALL	733073	4034892	NonCancerChronicDerive	0.00E+00	2.69E-09	0.00E+00	0.00E+00	0.00E+00	2.53E-07	3.32E-05	0.00E+00	8.70E-09	0.00E+00	0.00E+00	1.14E-06	0.00E+00	0.00E+00	3.32E-05
203	ALL	733173	4034892	NonCancerChronicDerive	0.00E+00	2.37E-09	0.00E+00	0.00E+00	0.00E+00	2.20E-07	2.90E-05	0.00E+00	7.68E-09	0.00E+00	0.00E+00	1.01E-06	0.00E+00	0.00E+00	2.90E-05
204	ALL	733273	4034892	NonCancerChronicDerive	0.00E+00	2.16E-09	0.00E+00	0.00E+00	0.00E+00	1.95E-07	2.59E-05	0.00E+00	7.00E-09	0.00E+00	0.00E+00	9.21E-07	0.00E+00	0.00E+00	2.59E-05
205	ALL	733373	4034892	NonCancerChronicDerive	0.00E+00	2.03E-09	0.00E+00	0.00E+00	0.00E+00	1.79E-07	2.38E-05	0.00E+00	6.58E-09	0.00E+00	0.00E+00	8.66E-07	0.00E+00	0.00E+00	2.38E-05
206	ALL	733473	4034892	NonCancerChronicDerive	0.00E+00	1.93E-09	0.00E+00	0.00E+00	0.00E+00	1.67E-07	2.23E-05	0.00E+00	6.25E-09	0.00E+00	0.00E+00	8.22E-07	0.00E+00	0.00E+00	2.23E-05
207	ALL	733573	4034892	NonCancerChronicDerive	0.00E+00	1.84E-09	0.00E+00	0.00E+00	0.00E+00	1.57E-07	2.09E-05	0.00E+00	5.95E-09	0.00E+00	0.00E+00	7.82E-07	0.00E+00	0.00E+00	2.09E-05
208	ALL	733673	4034892	NonCancerChronicDerive	0.00E+00	1.73E-09	0.00E+00	0.00E+00	0.00E+00	1.48E-07	1.97E-05	0.00E+00	5.59E-09	0.00E+00	0.00E+00	7.35E-07	0.00E+00	0.00E+00	1.97E-05
209	ALL	733773	4034892	NonCancerChronicDerive	0.00E+00	1.63E-09	0.00E+00	0.00E+00	0.00E+00	1.41E-07	1.87E-05	0.00E+00	5.27E-09	0.00E+00	0.00E+00	6.93E-07	0.00E+00	0.00E+00	1.87E-05
210	ALL	733873	4034892	NonCancerChronicDerive	0.00E+00	1.56E-09	0.00E+00	0.00E+00	0.00E+00	1.37E-07	1.82E-05	0.00E+00	5.06E-09	0.00E+00	0.00E+00	6.66E-07	0.00E+00	0.00E+00	1.82E-05

211	ALL	733973	4034892	NonCancerChronicDerive	0.00E+00	1.53E-09	0.00E+00	0.00E+00	0.00E+00	1.35E-07	1.79E-05	0.00E+00	4.95E-09	0.00E+00	0.00E+00	6.50E-07	0.00E+00	0.00E+00	1.79E-05
212	ALL	734073	4034892	NonCancerChronicDerive	0.00E+00	1.51E-09	0.00E+00	0.00E+00	0.00E+00	1.33E-07	1.77E-05	0.00E+00	4.90E-09	0.00E+00	0.00E+00	6.44E-07	0.00E+00	0.00E+00	1.77E-05
213	ALL	734173	4034892	NonCancerChronicDerive	0.00E+00	1.51E-09	0.00E+00	0.00E+00	0.00E+00	1.31E-07	1.75E-05	0.00E+00	4.89E-09	0.00E+00	0.00E+00	6.43E-07	0.00E+00	0.00E+00	1.75E-05
214	ALL	734273	4034892	NonCancerChronicDerive	0.00E+00	1.52E-09	0.00E+00	0.00E+00	0.00E+00	1.29E-07	1.75E-05	0.00E+00	4.92E-09	0.00E+00	0.00E+00	6.46E-07	0.00E+00	0.00E+00	1.75E-05
215	ALL	734373	4034892	NonCancerChronicDerive	0.00E+00	1.53E-09	0.00E+00	0.00E+00	0.00E+00	1.29E-07	1.75E-05	0.00E+00	4.96E-09	0.00E+00	0.00E+00	6.52E-07	0.00E+00	0.00E+00	1.75E-05
216	ALL	734473	4034892	NonCancerChronicDerive	0.00E+00	1.55E-09	0.00E+00	0.00E+00	0.00E+00	1.28E-07	1.75E-05	0.00E+00	5.01E-09	0.00E+00	0.00E+00	6.58E-07	0.00E+00	0.00E+00	1.75E-05
217	ALL	734573	4034892	NonCancerChronicDerive	0.00E+00	1.56E-09	0.00E+00	0.00E+00	0.00E+00	1.27E-07	1.75E-05	0.00E+00	5.04E-09	0.00E+00	0.00E+00	6.63E-07	0.00E+00	0.00E+00	1.75E-05
218	ALL	734673	4034892	NonCancerChronicDerive	0.00E+00	1.56E-09	0.00E+00	0.00E+00	0.00E+00	1.26E-07	1.74E-05	0.00E+00	5.06E-09	0.00E+00	0.00E+00	6.65E-07	0.00E+00	0.00E+00	1.74E-05
219	ALL	734873	4034892	NonCancerChronicDerive	0.00E+00	1.57E-09	0.00E+00	0.00E+00	0.00E+00	1.24E-07	1.71E-05	0.00E+00	5.07E-09	0.00E+00	0.00E+00	6.67E-07	0.00E+00	0.00E+00	1.71E-05
220	ALL	734973	4034892	NonCancerChronicDerive	0.00E+00	1.57E-09	0.00E+00	0.00E+00	0.00E+00	1.23E-07	1.70E-05	0.00E+00	5.07E-09	0.00E+00	0.00E+00	6.67E-07	0.00E+00	0.00E+00	1.70E-05
221	ALL	735073	4034892	NonCancerChronicDerive	0.00E+00	1.57E-09	0.00E+00	0.00E+00	0.00E+00	1.22E-07	1.69E-05	0.00E+00	5.07E-09	0.00E+00	0.00E+00	6.67E-07	0.00E+00	0.00E+00	1.69E-05
222	ALL	735173	4034892	NonCancerChronicDerive	0.00E+00	1.57E-09	0.00E+00	0.00E+00	0.00E+00	1.20E-07	1.67E-05	0.00E+00	5.07E-09	0.00E+00	0.00E+00	6.66E-07	0.00E+00	0.00E+00	1.67E-05
223	ALL	732073	4034992	NonCancerChronicDerive	0.00E+00	4.16E-09	0.00E+00	0.00E+00	0.00E+00	2.97E-07	4.22E-05	0.00E+00	1.35E-08	0.00E+00	0.00E+00	1.77E-06	0.00E+00	0.00E+00	4.22E-05
224	ALL	732173	4034992	NonCancerChronicDerive	0.00E+00	4.48E-09	0.00E+00	0.00E+00	0.00E+00	3.24E-07	4.58E-05	0.00E+00	1.45E-08	0.00E+00	0.00E+00	1.91E-06	0.00E+00	0.00E+00	4.58E-05
225	ALL	732273	4034992	NonCancerChronicDerive	0.00E+00	4.74E-09	0.00E+00	0.00E+00	0.00E+00	3.48E-07	4.90E-05	0.00E+00	1.53E-08	0.00E+00	0.00E+00	2.02E-06	0.00E+00	0.00E+00	4.90E-05
226	ALL	732373	4034992	NonCancerChronicDerive	0.00E+00	4.86E-09	0.00E+00	0.00E+00	0.00E+00	3.64E-07	5.09E-05	0.00E+00	1.57E-08	0.00E+00	0.00E+00	2.07E-06	0.00E+00	0.00E+00	5.09E-05
227	ALL	732473	4034992	NonCancerChronicDerive	0.00E+00	4.81E-09	0.00E+00	0.00E+00	0.00E+00	3.73E-07	5.15E-05	0.00E+00	1.56E-08	0.00E+00	0.00E+00	2.05E-06	0.00E+00	0.00E+00	5.15E-05
228	ALL	732573	4034992	NonCancerChronicDerive	0.00E+00	4.62E-09	0.00E+00	0.00E+00	0.00E+00	3.72E-07	5.08E-05	0.00E+00	1.49E-08	0.00E+00	0.00E+00	1.96E-06	0.00E+00	0.00E+00	5.08E-05
229	ALL	732673	4034992	NonCancerChronicDerive	0.00E+00	4.14E-09	0.00E+00	0.00E+00	0.00E+00	3.51E-07	4.72E-05	0.00E+00	1.34E-08	0.00E+00	0.00E+00	1.76E-06	0.00E+00	0.00E+00	4.72E-05
230	ALL	732773	4034992	NonCancerChronicDerive	0.00E+00	3.52E-09	0.00E+00	0.00E+00	0.00E+00	3.14E-07	4.16E-05	0.00E+00	1.14E-08	0.00E+00	0.00E+00	1.50E-06	0.00E+00	0.00E+00	4.16E-05
231	ALL	732873	4034992	NonCancerChronicDerive	0.00E+00	3.00E-09	0.00E+00	0.00E+00	0.00E+00	2.76E-07	3.63E-05	0.00E+00	9.70E-09	0.00E+00	0.00E+00	1.28E-06	0.00E+00	0.00E+00	3.63E-05
232	ALL	732973	4034992	NonCancerChronicDerive	0.00E+00	2.61E-09	0.00E+00	0.00E+00	0.00E+00	2.37E-07	3.13E-05	0.00E+00	8.43E-09	0.00E+00	0.00E+00	1.11E-06	0.00E+00	0.00E+00	3.13E-05
233	ALL	733073	4034992	NonCancerChronicDerive	0.00E+00	2.31E-09	0.00E+00	0.00E+00	0.00E+00	2.07E-07	2.76E-05	0.00E+00	7.48E-09	0.00E+00	0.00E+00	9.83E-07	0.00E+00	0.00E+00	2.76E-05
234	ALL	733173	4034992	NonCancerChronicDerive	0.00E+00	2.08E-09	0.00E+00	0.00E+00	0.00E+00	1.86E-07	2.47E-05	0.00E+00	6.74E-09	0.00E+00	0.00E+00	8.85E-07	0.00E+00	0.00E+00	2.47E-05
235	ALL	733273	4034992	NonCancerChronicDerive	0.00E+00	1.93E-09	0.00E+00	0.00E+00	0.00E+00	1.69E-07	2.26E-05	0.00E+00	6.24E-09	0.00E+00	0.00E+00	8.20E-07	0.00E+00	0.00E+00	2.26E-05
236	ALL	733373	4034992	NonCancerChronicDerive	0.00E+00	1.82E-09	0.00E+00	0.00E+00	0.00E+00	1.56E-07	2.09E-05	0.00E+00	5.89E-09	0.00E+00	0.00E+00	7.75E-07	0.00E+00	0.00E+00	2.09E-05
237	ALL	733473	4034992	NonCancerChronicDerive	0.00E+00	1.74E-09	0.00E+00	0.00E+00	0.00E+00	1.48E-07	1.98E-05	0.00E+00	5.62E-09	0.00E+00	0.00E+00	7.39E-07	0.00E+00	0.00E+00	1.98E-05
238	ALL	733573	4034992	NonCancerChronicDerive	0.00E+00	1.67E-09	0.00E+00	0.00E+00	0.00E+00	1.40E-07	1.88E-05	0.00E+00	5.39E-09	0.00E+00	0.00E+00	7.09E-07	0.00E+00	0.00E+00	1.88E-05
239	ALL	733673	4034992	NonCancerChronicDerive	0.00E+00	1.59E-09	0.00E+00	0.00E+00	0.00E+00	1.33E-07	1.78E-05	0.00E+00	5.13E-09	0.00E+00	0.00E+00	6.74E-07	0.00E+00	0.00E+00	1.78E-05
240	ALL	733773	4034992	NonCancerChronicDerive	0.00E+00	1.50E-09	0.00E+00	0.00E+00	0.00E+00	1.27E-07	1.69E-05	0.00E+00	4.87E-09	0.00E+00	0.00E+00	6.40E-07	0.00E+00	0.00E+00	1.69E-05
241	ALL	733873	4034992	NonCancerChronicDerive	0.00E+00	1.44E-09	0.00E+00	0.00E+00	0.00E+00	1.23E-07	1.64E-05	0.00E+00	4.66E-09	0.00E+00	0.00E+00	6.13E-07	0.00E+00	0.00E+00	1.64E-05
242	ALL	733973	4034992	NonCancerChronicDerive	0.00E+00	1.41E-09	0.00E+00	0.00E+00	0.00E+00	1.21E-07	1.61E-05	0.00E+00	4.55E-09	0.00E+00	0.00E+00	5.99E-07	0.00E+00	0.00E+00	1.61E-05
243	ALL	734073	4034992	NonCancerChronicDerive	0.00E+00	1.39E-09	0.00E+00	0.00E+00	0.00E+00	1.20E-07	1.60E-05	0.00E+00	4.51E-09	0.00E+00	0.00E+00	5.93E-07	0.00E+00	0.00E+00	1.60E-05
244	ALL	734173	4034992	NonCancerChronicDerive	0.00E+00	1.39E-09	0.00E+00	0.00E+00	0.00E+00	1.19E-07	1.59E-05	0.00E+00	4.50E-09	0.00E+00	0.00E+00	5.92E-07	0.00E+00	0.00E+00	1.59E-05
245	ALL	734273	4034992	NonCancerChronicDerive	0.00E+00	1.39E-09	0.00E+00	0.00E+00	0.00E+00	1.18E-07	1.59E-05	0.00E+00	4.51E-09	0.00E+00	0.00E+00	5.93E-07	0.00E+00	0.00E+00	1.59E-05
246	ALL	734373	4034992	NonCancerChronicDerive	0.00E+00	1.41E-09	0.00E+00	0.00E+00	0.00E+00	1.17E-07	1.59E-05	0.00E+00	4.55E-09	0.00E+00	0.00E+00	5.99E-07	0.00E+00	0.00E+00	1.59E-05
247	ALL	734473	4034992	NonCancerChronicDerive	0.00E+00	1.42E-09	0.00E+00	0.00E+00	0.00E+00	1.17E-07	1.60E-05	0.00E+00	4.61E-09	0.00E+00	0.00E+00	6.06E-07	0.00E+00	0.00E+00	1.60E-05
248	ALL	734573	4034992	NonCancerChronicDerive	0.00E+00	1.44E-09	0.00E+00	0.00E+00	0.00E+00	1.16E-07	1.60E-05	0.00E+00	4.66E-09	0.00E+00	0.00E+00	6.13E-07	0.00E+00	0.00E+00	1.60E-05
249	ALL	734673	4034992	NonCancerChronicDerive	0.00E+00	1.45E-09	0.00E+00	0.00E+00	0.00E+00	1.16E-07	1.60E-05	0.00E+00	4.69E-09	0.00E+00	0.00E+00	6.16E-07	0.00E+00	0.00E+00	1.60E-05
250	ALL	734773	4034992	NonCancerChronicDerive	0.00E+00	1.45E-09	0.00E+00	0.00E+00	0.00E+00	1.15E-07	1.59E-05	0.00E+00	4.71E-09	0.00E+00	0.00E+00	6.19E-07	0.00E+00	0.00E+00	1.59E-05
251	ALL	734973	4034992	NonCancerChronicDerive	0.00E+00	1.46E-09	0.00E+00	0.00E+00	0.00E+00	1.13E-07	1.58E-05	0.00E+00	4.73E-09	0.00E+00	0.00E+00	6.22E-07	0.00E+00	0.00E+00	1.58E-05
252	ALL	735073	4034992	NonCancerChronicDerive	0.00E+00	1.46E-09	0.00E+00	0.00E+00	0.00E+00	1.13E-07	1.57E-05	0.00E+00	4.74E-09	0.00E+00	0.00E+00	6.22E-07	0.00E+00	0.00E+00	1.57E-05
253	ALL	735173	4034992	NonCancerChronicDerive	0.00E+00	1.46E-09	0.00E+00	0.00E+00	0.00E+00	1.12E-07	1.55E-05	0.00E+00	4.73E-09	0.00E+00	0.00E+00	6.22E-07	0.00E+00	0.00E+00	1.55E-05
254	ALL	735273	4034992	NonCancerChronicDerive	0.00E+00	1.46E-09	0.00E+00	0.00E+00	0.00E+00	1.11E-07	1.54E-05	0.00E+00	4.73E-09	0.00E+00	0.00E+00	6.21E-07	0.00E+00	0.00E+00	1.54E-05
255	ALL	734073	4035092	NonCancerChronicDerive	0.00E+00	1.30E-09	0.00E+00	0.00E+00	0.00E+00	1.09E-07	1.46E-05	0.00E+00	4.20E-09	0.00E+00	0.00E+00	5.52E-07	0.00E+00	0.00E+00	1.46E-05
256	ALL	734173	4035092	NonCancerChronicDerive	0.00E+00	1.29E-09	0.00E+00	0.00E+00	0.00E+00	1.09E-07	1.46E-05	0.00E+00	4.19E-09	0.00E+00	0.00E+00	5.51E-07	0.00E+00	0.00E+00	1.46E-05
257	ALL	734273	4035092	NonCancerChronicDerive	0.00E+00	1.30E-09	0.00E+00	0.00E+00	0.00E+00	1.08E-07	1.46E-05	0.00E+00	4.20E-09	0.00E+00	0.00E+00	5.52E-07	0.00E+00	0.00E+00	1.46E-05
258	ALL	734373	4035092	NonCancerChronicDerive	0.00E+00	1.31E-09	0.00E+00	0.00E+00	0.00E+00	1.08E-07	1.47E-05	0.00E+00	4.23E-09	0.00E+00	0.00E+00	5.56E-07	0.00E+00	0.00E+00	1.47E-05
259	ALL	734473	4035092	NonCancerChronicDerive	0.00E+00	1.32E-09	0.00E+00	0.00E+00	0.00E+00	1.08E-07	1.47E-05	0.00E+00	4.28E-09	0.00E+00	0.00E+00	5.62E-07	0.00E+00	0.00E+00	1.47E-05
260	ALL	734573	4035092	NonCancerChronicDerive	0.00E+00	1.34E-09	0.00E+00	0.00E+00	0.00E+00	1.08E-07	1.48E-05	0.00E+00	4.33E-09	0.00E+00	0.00E+00	5.69E-07	0.00E+00	0.00E+00	1.48E-05
261	ALL	734673	4035092	NonCancerChronicDerive	0.00E+00	1.35E-09	0.00E+00	0.00E+00	0.00E+00	1.07E-07	1.48E-05	0.00E+00	4.37E-09	0.00E+00	0.00E+00	5.74E-07	0.00E+00	0.00E+00	1.48E-05
262	ALL	734773	4035092	NonCancerChronicDerive	0.00E+00	1.36E-09	0.00E+00	0.00E+00	0.00E+00	1.07E-07	1.48E-05	0.00E+00	4.41E-09	0.00E+00	0.00E+00	5.80E-07	0.00E+00	0.00E+00	1.48E-05
263	ALL	734873	4035092	NonCancerChronicDerive	0.00E+00	1.37E-09	0.00E+00	0.00E+00	0.00E+00	1.07E-07	1.48E-05	0.00E+00	4.43E-09	0.00E+00	0.00E+00	5.83E-07	0.00E+00	0.00E+00	1.48E-05

264	ALL	735073	4035092	NonCancerChronicDerive	0.00E+00	1.38E-09	0.00E+00	0.00E+00	0.00E+00	1.06E-07	1.47E-05	0.00E+00	4.47E-09	0.00E+00	0.00E+00	5.87E-07	0.00E+00	0.00E+00	1.47E-05
265	ALL	735173	4035092	NonCancerChronicDerive	0.00E+00	1.38E-09	0.00E+00	0.00E+00	0.00E+00	1.05E-07	1.46E-05	0.00E+00	4.47E-09	0.00E+00	0.00E+00	5.88E-07	0.00E+00	0.00E+00	1.46E-05
266	ALL	735273	4035092	NonCancerChronicDerive	0.00E+00	1.38E-09	0.00E+00	0.00E+00	0.00E+00	1.04E-07	1.45E-05	0.00E+00	4.46E-09	0.00E+00	0.00E+00	5.86E-07	0.00E+00	0.00E+00	1.45E-05
267	ALL	735373	4035092	NonCancerChronicDerive	0.00E+00	1.38E-09	0.00E+00	0.00E+00	0.00E+00	1.03E-07	1.44E-05	0.00E+00	4.46E-09	0.00E+00	0.00E+00	5.86E-07	0.00E+00	0.00E+00	1.44E-05
268	ALL	734073	4035192	NonCancerChronicDerive	0.00E+00	1.22E-09	0.00E+00	0.00E+00	0.00E+00	1.01E-07	1.36E-05	0.00E+00	3.95E-09	0.00E+00	0.00E+00	5.20E-07	0.00E+00	0.00E+00	1.36E-05
269	ALL	734173	4035192	NonCancerChronicDerive	0.00E+00	1.22E-09	0.00E+00	0.00E+00	0.00E+00	1.00E-07	1.35E-05	0.00E+00	3.94E-09	0.00E+00	0.00E+00	5.18E-07	0.00E+00	0.00E+00	1.35E-05
270	ALL	734273	4035192	NonCancerChronicDerive	0.00E+00	1.22E-09	0.00E+00	0.00E+00	0.00E+00	1.00E-07	1.36E-05	0.00E+00	3.95E-09	0.00E+00	0.00E+00	5.20E-07	0.00E+00	0.00E+00	1.36E-05
271	ALL	734373	4035192	NonCancerChronicDerive	0.00E+00	1.23E-09	0.00E+00	0.00E+00	0.00E+00	1.00E-07	1.36E-05	0.00E+00	3.98E-09	0.00E+00	0.00E+00	5.23E-07	0.00E+00	0.00E+00	1.36E-05
272	ALL	734473	4035192	NonCancerChronicDerive	0.00E+00	1.24E-09	0.00E+00	0.00E+00	0.00E+00	1.00E-07	1.37E-05	0.00E+00	4.01E-09	0.00E+00	0.00E+00	5.27E-07	0.00E+00	0.00E+00	1.37E-05
273	ALL	734573	4035192	NonCancerChronicDerive	0.00E+00	1.25E-09	0.00E+00	0.00E+00	0.00E+00	1.00E-07	1.38E-05	0.00E+00	4.05E-09	0.00E+00	0.00E+00	5.32E-07	0.00E+00	0.00E+00	1.38E-05
274	ALL	734673	4035192	NonCancerChronicDerive	0.00E+00	1.26E-09	0.00E+00	0.00E+00	0.00E+00	1.00E-07	1.38E-05	0.00E+00	4.09E-09	0.00E+00	0.00E+00	5.38E-07	0.00E+00	0.00E+00	1.38E-05
275	ALL	734773	4035192	NonCancerChronicDerive	0.00E+00	1.28E-09	0.00E+00	0.00E+00	0.00E+00	1.00E-07	1.39E-05	0.00E+00	4.15E-09	0.00E+00	0.00E+00	5.45E-07	0.00E+00	0.00E+00	1.39E-05
276	ALL	734873	4035192	NonCancerChronicDerive	0.00E+00	1.29E-09	0.00E+00	0.00E+00	0.00E+00	1.00E-07	1.39E-05	0.00E+00	4.19E-09	0.00E+00	0.00E+00	5.50E-07	0.00E+00	0.00E+00	1.39E-05
277	ALL	734973	4035192	NonCancerChronicDerive	0.00E+00	1.30E-09	0.00E+00	0.00E+00	0.00E+00	1.00E-07	1.39E-05	0.00E+00	4.22E-09	0.00E+00	0.00E+00	5.55E-07	0.00E+00	0.00E+00	1.39E-05
278	ALL	735173	4035192	NonCancerChronicDerive	0.00E+00	1.31E-09	0.00E+00	0.00E+00	0.00E+00	9.93E-08	1.38E-05	0.00E+00	4.25E-09	0.00E+00	0.00E+00	5.59E-07	0.00E+00	0.00E+00	1.38E-05
279	ALL	735273	4035192	NonCancerChronicDerive	0.00E+00	1.31E-09	0.00E+00	0.00E+00	0.00E+00	9.86E-08	1.38E-05	0.00E+00	4.25E-09	0.00E+00	0.00E+00	5.58E-07	0.00E+00	0.00E+00	1.38E-05
280	ALL	735373	4035192	NonCancerChronicDerive	0.00E+00	1.31E-09	0.00E+00	0.00E+00	0.00E+00	9.80E-08	1.37E-05	0.00E+00	4.25E-09	0.00E+00	0.00E+00	5.58E-07	0.00E+00	0.00E+00	1.37E-05
281	ALL	735473	4035192	NonCancerChronicDerive	0.00E+00	1.31E-09	0.00E+00	0.00E+00	0.00E+00	9.75E-08	1.36E-05	0.00E+00	4.25E-09	0.00E+00	0.00E+00	5.58E-07	0.00E+00	0.00E+00	1.36E-05
282	ALL	735573	4035192	NonCancerChronicDerive	0.00E+00	1.31E-09	0.00E+00	0.00E+00	0.00E+00	9.70E-08	1.35E-05	0.00E+00	4.25E-09	0.00E+00	0.00E+00	5.58E-07	0.00E+00	0.00E+00	1.35E-05
283	ALL	735673	4035192	NonCancerChronicDerive	0.00E+00	1.31E-09	0.00E+00	0.00E+00	0.00E+00	9.65E-08	1.35E-05	0.00E+00	4.25E-09	0.00E+00	0.00E+00	5.58E-07	0.00E+00	0.00E+00	1.35E-05
284	ALL	735773	4035192	NonCancerChronicDerive	0.00E+00	1.31E-09	0.00E+00	0.00E+00	0.00E+00	9.60E-08	1.34E-05	0.00E+00	4.25E-09	0.00E+00	0.00E+00	5.58E-07	0.00E+00	0.00E+00	1.34E-05
285	ALL	735873	4035192	NonCancerChronicDerive	0.00E+00	1.31E-09	0.00E+00	0.00E+00	0.00E+00	9.55E-08	1.33E-05	0.00E+00	4.24E-09	0.00E+00	0.00E+00	5.58E-07	0.00E+00	0.00E+00	1.33E-05
286	ALL	735973	4035192	NonCancerChronicDerive	0.00E+00	1.31E-09	0.00E+00	0.00E+00	0.00E+00	9.51E-08	1.33E-05	0.00E+00	4.24E-09	0.00E+00	0.00E+00	5.57E-07	0.00E+00	0.00E+00	1.33E-05
287	ALL	736073	4035192	NonCancerChronicDerive	0.00E+00	1.31E-09	0.00E+00	0.00E+00	0.00E+00	9.46E-08	1.32E-05	0.00E+00	4.24E-09	0.00E+00	0.00E+00	5.57E-07	0.00E+00	0.00E+00	1.32E-05
288	ALL	736173	4035192	NonCancerChronicDerive	0.00E+00	1.31E-09	0.00E+00	0.00E+00	0.00E+00	9.41E-08	1.32E-05	0.00E+00	4.23E-09	0.00E+00	0.00E+00	5.56E-07	0.00E+00	0.00E+00	1.32E-05
289	ALL	736273	4035192	NonCancerChronicDerive	0.00E+00	1.30E-09	0.00E+00	0.00E+00	0.00E+00	9.36E-08	1.31E-05	0.00E+00	4.22E-09	0.00E+00	0.00E+00	5.55E-07	0.00E+00	0.00E+00	1.31E-05
290	ALL	736373	4035192	NonCancerChronicDerive	0.00E+00	1.30E-09	0.00E+00	0.00E+00	0.00E+00	9.32E-08	1.31E-05	0.00E+00	4.21E-09	0.00E+00	0.00E+00	5.54E-07	0.00E+00	0.00E+00	1.31E-05
291	ALL	736473	4035192	NonCancerChronicDerive	0.00E+00	1.30E-09	0.00E+00	0.00E+00	0.00E+00	9.27E-08	1.30E-05	0.00E+00	4.21E-09	0.00E+00	0.00E+00	5.53E-07	0.00E+00	0.00E+00	1.30E-05
292	ALL	736573	4035192	NonCancerChronicDerive	0.00E+00	1.30E-09	0.00E+00	0.00E+00	0.00E+00	9.23E-08	1.30E-05	0.00E+00	4.20E-09	0.00E+00	0.00E+00	5.52E-07	0.00E+00	0.00E+00	1.30E-05
293	ALL	736673	4035192	NonCancerChronicDerive	0.00E+00	1.30E-09	0.00E+00	0.00E+00	0.00E+00	9.19E-08	1.29E-05	0.00E+00	4.19E-09	0.00E+00	0.00E+00	5.51E-07	0.00E+00	0.00E+00	1.29E-05
294	ALL	736773	4035192	NonCancerChronicDerive	0.00E+00	1.29E-09	0.00E+00	0.00E+00	0.00E+00	9.15E-08	1.29E-05	0.00E+00	4.19E-09	0.00E+00	0.00E+00	5.50E-07	0.00E+00	0.00E+00	1.29E-05
295	ALL	736873	4035192	NonCancerChronicDerive	0.00E+00	1.29E-09	0.00E+00	0.00E+00	0.00E+00	9.11E-08	1.28E-05	0.00E+00	4.18E-09	0.00E+00	0.00E+00	5.49E-07	0.00E+00	0.00E+00	1.28E-05
296	ALL	736973	4035192	NonCancerChronicDerive	0.00E+00	1.29E-09	0.00E+00	0.00E+00	0.00E+00	9.07E-08	1.28E-05	0.00E+00	4.17E-09	0.00E+00	0.00E+00	5.48E-07	0.00E+00	0.00E+00	1.28E-05
297	ALL	737073	4035192	NonCancerChronicDerive	0.00E+00	1.29E-09	0.00E+00	0.00E+00	0.00E+00	9.04E-08	1.27E-05	0.00E+00	4.16E-09	0.00E+00	0.00E+00	5.47E-07	0.00E+00	0.00E+00	1.27E-05
298	ALL	737173	4035192	NonCancerChronicDerive	0.00E+00	1.28E-09	0.00E+00	0.00E+00	0.00E+00	9.01E-08	1.27E-05	0.00E+00	4.16E-09	0.00E+00	0.00E+00	5.46E-07	0.00E+00	0.00E+00	1.27E-05
299	ALL	737273	4035192	NonCancerChronicDerive	0.00E+00	1.28E-09	0.00E+00	0.00E+00	0.00E+00	8.97E-08	1.26E-05	0.00E+00	4.15E-09	0.00E+00	0.00E+00	5.45E-07	0.00E+00	0.00E+00	1.26E-05
300	ALL	737373	4035192	NonCancerChronicDerive	0.00E+00	1.28E-09	0.00E+00	0.00E+00	0.00E+00	8.94E-08	1.26E-05	0.00E+00	4.14E-09	0.00E+00	0.00E+00	5.44E-07	0.00E+00	0.00E+00	1.26E-05
301	ALL	737473	4035192	NonCancerChronicDerive	0.00E+00	1.28E-09	0.00E+00	0.00E+00	0.00E+00	8.90E-08	1.26E-05	0.00E+00	4.13E-09	0.00E+00	0.00E+00	5.43E-07	0.00E+00	0.00E+00	1.26E-05
302	ALL	737573	4035192	NonCancerChronicDerive	0.00E+00	1.27E-09	0.00E+00	0.00E+00	0.00E+00	8.87E-08	1.25E-05	0.00E+00	4.12E-09	0.00E+00	0.00E+00	5.41E-07	0.00E+00	0.00E+00	1.25E-05
303	ALL	737673	4035192	NonCancerChronicDerive	0.00E+00	1.27E-09	0.00E+00	0.00E+00	0.00E+00	8.83E-08	1.25E-05	0.00E+00	4.11E-09	0.00E+00	0.00E+00	5.40E-07	0.00E+00	0.00E+00	1.25E-05
304	ALL	737773	4035192	NonCancerChronicDerive	0.00E+00	1.27E-09	0.00E+00	0.00E+00	0.00E+00	8.80E-08	1.24E-05	0.00E+00	4.10E-09	0.00E+00	0.00E+00	5.38E-07	0.00E+00	0.00E+00	1.24E-05
305	ALL	737873	4035192	NonCancerChronicDerive	0.00E+00	1.26E-09	0.00E+00	0.00E+00	0.00E+00	8.77E-08	1.24E-05	0.00E+00	4.08E-09	0.00E+00	0.00E+00	5.37E-07	0.00E+00	0.00E+00	1.24E-05
306	ALL	737973	4035192	NonCancerChronicDerive	0.00E+00	1.26E-09	0.00E+00	0.00E+00	0.00E+00	8.73E-08	1.24E-05	0.00E+00	4.07E-09	0.00E+00	0.00E+00	5.35E-07	0.00E+00	0.00E+00	1.24E-05
307	ALL	734673	4035292	NonCancerChronicDerive	0.00E+00	1.19E-09	0.00E+00	0.00E+00	0.00E+00	9.42E-08	1.29E-05	0.00E+00	3.85E-09	0.00E+00	0.00E+00	5.06E-07	0.00E+00	0.00E+00	1.29E-05
308	ALL	734773	4035292	NonCancerChronicDerive	0.00E+00	1.21E-09	0.00E+00	0.00E+00	0.00E+00	9.45E-08	1.30E-05	0.00E+00	3.91E-09	0.00E+00	0.00E+00	5.14E-07	0.00E+00	0.00E+00	1.30E-05
309	ALL	734873	4035292	NonCancerChronicDerive	0.00E+00	1.22E-09	0.00E+00	0.00E+00	0.00E+00	9.47E-08	1.31E-05	0.00E+00	3.96E-09	0.00E+00	0.00E+00	5.21E-07	0.00E+00	0.00E+00	1.31E-05
310	ALL	734973	4035292	NonCancerChronicDerive	0.00E+00	1.24E-09	0.00E+00	0.00E+00	0.00E+00	9.48E-08	1.32E-05	0.00E+00	4.01E-09	0.00E+00	0.00E+00	5.27E-07	0.00E+00	0.00E+00	1.32E-05
311	ALL	735073	4035292	NonCancerChronicDerive	0.00E+00	1.25E-09	0.00E+00	0.00E+00	0.00E+00	9.48E-08	1.32E-05	0.00E+00	4.04E-09	0.00E+00	0.00E+00	5.31E-07	0.00E+00	0.00E+00	1.32E-05
312	ALL	735273	4035292	NonCancerChronicDerive	0.00E+00	1.26E-09	0.00E+00	0.00E+00	0.00E+00	9.42E-08	1.32E-05	0.00E+00	4.07E-09	0.00E+00	0.00E+00	5.35E-07	0.00E+00	0.00E+00	1.32E-05
313	ALL	735373	4035292	NonCancerChronicDerive	0.00E+00	1.26E-09	0.00E+00	0.00E+00	0.00E+00	9.37E-08	1.31E-05	0.00E+00	4.08E-09	0.00E+00	0.00E+00	5.36E-07	0.00E+00	0.00E+00	1.31E-05
314	ALL	735473	4035292	NonCancerChronicDerive	0.00E+00	1.26E-09	0.00E+00	0.00E+00	0.00E+00	9.32E-08	1.30E-05	0.00E+00	4.08E-09	0.00E+00	0.00E+00	5.36E-07	0.00E+00	0.00E+00	1.30E-05
315	ALL	735573	4035292	NonCancerChronicDerive	0.00E+00	1.26E-09	0.00E+00	0.00E+00	0.00E+00	9.28E-08	1.30E-05	0.00E+00	4.08E-09	0.00E+00	0.00E+00	5.36E-07	0.00E+00	0.00E+00	1.30E-05
316	ALL	735673	4035292	NonCancerChronicDerive	0.00E+00	1.26E-09	0.00E+00	0.00E+00	0.00E+00	9.23E-08	1.29E-05	0.00E+00	4.08E-09	0.00E+00	0.00E+00	5.36E-07	0.00E+00	0.00E+00	1.29E-05

317	ALL	735773	4035292	NonCancerChronicDerive	0.00E+00	1.26E-09	0.00E+00	0.00E+00	0.00E+00	9.19E-08	1.29E-05	0.00E+00	4.08E-09	0.00E+00	0.00E+00	5.36E-07	0.00E+00	0.00E+00	1.29E-05
318	ALL	735873	4035292	NonCancerChronicDerive	0.00E+00	1.26E-09	0.00E+00	0.00E+00	0.00E+00	9.16E-08	1.28E-05	0.00E+00	4.08E-09	0.00E+00	0.00E+00	5.36E-07	0.00E+00	0.00E+00	1.28E-05
319	ALL	735973	4035292	NonCancerChronicDerive	0.00E+00	1.26E-09	0.00E+00	0.00E+00	0.00E+00	9.13E-08	1.28E-05	0.00E+00	4.08E-09	0.00E+00	0.00E+00	5.37E-07	0.00E+00	0.00E+00	1.28E-05
320	ALL	736073	4035292	NonCancerChronicDerive	0.00E+00	1.26E-09	0.00E+00	0.00E+00	0.00E+00	9.09E-08	1.27E-05	0.00E+00	4.08E-09	0.00E+00	0.00E+00	5.37E-07	0.00E+00	0.00E+00	1.27E-05
321	ALL	736173	4035292	NonCancerChronicDerive	0.00E+00	1.26E-09	0.00E+00	0.00E+00	0.00E+00	9.06E-08	1.27E-05	0.00E+00	4.08E-09	0.00E+00	0.00E+00	5.37E-07	0.00E+00	0.00E+00	1.27E-05
322	ALL	736273	4035292	NonCancerChronicDerive	0.00E+00	1.26E-09	0.00E+00	0.00E+00	0.00E+00	9.02E-08	1.26E-05	0.00E+00	4.08E-09	0.00E+00	0.00E+00	5.36E-07	0.00E+00	0.00E+00	1.26E-05
323	ALL	736373	4035292	NonCancerChronicDerive	0.00E+00	1.26E-09	0.00E+00	0.00E+00	0.00E+00	8.99E-08	1.26E-05	0.00E+00	4.08E-09	0.00E+00	0.00E+00	5.36E-07	0.00E+00	0.00E+00	1.26E-05
324	ALL	736473	4035292	NonCancerChronicDerive	0.00E+00	1.26E-09	0.00E+00	0.00E+00	0.00E+00	8.96E-08	1.26E-05	0.00E+00	4.08E-09	0.00E+00	0.00E+00	5.36E-07	0.00E+00	0.00E+00	1.26E-05
325	ALL	736573	4035292	NonCancerChronicDerive	0.00E+00	1.26E-09	0.00E+00	0.00E+00	0.00E+00	8.93E-08	1.25E-05	0.00E+00	4.07E-09	0.00E+00	0.00E+00	5.35E-07	0.00E+00	0.00E+00	1.25E-05
326	ALL	736673	4035292	NonCancerChronicDerive	0.00E+00	1.26E-09	0.00E+00	0.00E+00	0.00E+00	8.90E-08	1.25E-05	0.00E+00	4.07E-09	0.00E+00	0.00E+00	5.35E-07	0.00E+00	0.00E+00	1.25E-05
327	ALL	736773	4035292	NonCancerChronicDerive	0.00E+00	1.26E-09	0.00E+00	0.00E+00	0.00E+00	8.87E-08	1.25E-05	0.00E+00	4.07E-09	0.00E+00	0.00E+00	5.35E-07	0.00E+00	0.00E+00	1.25E-05
328	ALL	736873	4035292	NonCancerChronicDerive	0.00E+00	1.25E-09	0.00E+00	0.00E+00	0.00E+00	8.84E-08	1.24E-05	0.00E+00	4.06E-09	0.00E+00	0.00E+00	5.34E-07	0.00E+00	0.00E+00	1.24E-05
329	ALL	736973	4035292	NonCancerChronicDerive	0.00E+00	1.25E-09	0.00E+00	0.00E+00	0.00E+00	8.81E-08	1.24E-05	0.00E+00	4.06E-09	0.00E+00	0.00E+00	5.33E-07	0.00E+00	0.00E+00	1.24E-05
330	ALL	737073	4035292	NonCancerChronicDerive	0.00E+00	1.25E-09	0.00E+00	0.00E+00	0.00E+00	8.78E-08	1.24E-05	0.00E+00	4.05E-09	0.00E+00	0.00E+00	5.33E-07	0.00E+00	0.00E+00	1.24E-05
331	ALL	737173	4035292	NonCancerChronicDerive	0.00E+00	1.25E-09	0.00E+00	0.00E+00	0.00E+00	8.76E-08	1.23E-05	0.00E+00	4.05E-09	0.00E+00	0.00E+00	5.32E-07	0.00E+00	0.00E+00	1.23E-05
332	ALL	737273	4035292	NonCancerChronicDerive	0.00E+00	1.25E-09	0.00E+00	0.00E+00	0.00E+00	8.74E-08	1.23E-05	0.00E+00	4.04E-09	0.00E+00	0.00E+00	5.32E-07	0.00E+00	0.00E+00	1.23E-05
333	ALL	737373	4035292	NonCancerChronicDerive	0.00E+00	1.25E-09	0.00E+00	0.00E+00	0.00E+00	8.71E-08	1.23E-05	0.00E+00	4.04E-09	0.00E+00	0.00E+00	5.31E-07	0.00E+00	0.00E+00	1.23E-05
334	ALL	737473	4035292	NonCancerChronicDerive	0.00E+00	1.25E-09	0.00E+00	0.00E+00	0.00E+00	8.69E-08	1.23E-05	0.00E+00	4.03E-09	0.00E+00	0.00E+00	5.30E-07	0.00E+00	0.00E+00	1.23E-05
335	ALL	737573	4035292	NonCancerChronicDerive	0.00E+00	1.24E-09	0.00E+00	0.00E+00	0.00E+00	8.66E-08	1.22E-05	0.00E+00	4.03E-09	0.00E+00	0.00E+00	5.29E-07	0.00E+00	0.00E+00	1.22E-05
336	ALL	737673	4035292	NonCancerChronicDerive	0.00E+00	1.24E-09	0.00E+00	0.00E+00	0.00E+00	8.63E-08	1.22E-05	0.00E+00	4.02E-09	0.00E+00	0.00E+00	5.28E-07	0.00E+00	0.00E+00	1.22E-05
337	ALL	737773	4035292	NonCancerChronicDerive	0.00E+00	1.24E-09	0.00E+00	0.00E+00	0.00E+00	8.61E-08	1.22E-05	0.00E+00	4.01E-09	0.00E+00	0.00E+00	5.27E-07	0.00E+00	0.00E+00	1.22E-05
338	ALL	737873	4035292	NonCancerChronicDerive	0.00E+00	1.24E-09	0.00E+00	0.00E+00	0.00E+00	8.58E-08	1.21E-05	0.00E+00	4.00E-09	0.00E+00	0.00E+00	5.26E-07	0.00E+00	0.00E+00	1.21E-05
339	ALL	737973	4035292	NonCancerChronicDerive	0.00E+00	1.23E-09	0.00E+00	0.00E+00	0.00E+00	8.56E-08	1.21E-05	0.00E+00	4.00E-09	0.00E+00	0.00E+00	5.25E-07	0.00E+00	0.00E+00	1.21E-05
340	ALL	734873	4035392	NonCancerChronicDerive	0.00E+00	1.16E-09	0.00E+00	0.00E+00	0.00E+00	8.98E-08	1.24E-05	0.00E+00	3.76E-09	0.00E+00	0.00E+00	4.94E-07	0.00E+00	0.00E+00	1.24E-05
341	ALL	734973	4035392	NonCancerChronicDerive	0.00E+00	1.18E-09	0.00E+00	0.00E+00	0.00E+00	9.01E-08	1.25E-05	0.00E+00	3.81E-09	0.00E+00	0.00E+00	5.00E-07	0.00E+00	0.00E+00	1.25E-05
342	ALL	735073	4035392	NonCancerChronicDerive	0.00E+00	1.19E-09	0.00E+00	0.00E+00	0.00E+00	9.03E-08	1.26E-05	0.00E+00	3.85E-09	0.00E+00	0.00E+00	5.06E-07	0.00E+00	0.00E+00	1.26E-05
343	ALL	735173	4035392	NonCancerChronicDerive	0.00E+00	1.20E-09	0.00E+00	0.00E+00	0.00E+00	9.03E-08	1.26E-05	0.00E+00	3.88E-09	0.00E+00	0.00E+00	5.11E-07	0.00E+00	0.00E+00	1.26E-05
344	ALL	735373	4035392	NonCancerChronicDerive	0.00E+00	1.21E-09	0.00E+00	0.00E+00	0.00E+00	9.00E-08	1.26E-05	0.00E+00	3.93E-09	0.00E+00	0.00E+00	5.16E-07	0.00E+00	0.00E+00	1.26E-05
345	ALL	735473	4035392	NonCancerChronicDerive	0.00E+00	1.22E-09	0.00E+00	0.00E+00	0.00E+00	8.97E-08	1.25E-05	0.00E+00	3.94E-09	0.00E+00	0.00E+00	5.17E-07	0.00E+00	0.00E+00	1.25E-05
346	ALL	735573	4035392	NonCancerChronicDerive	0.00E+00	1.22E-09	0.00E+00	0.00E+00	0.00E+00	8.93E-08	1.25E-05	0.00E+00	3.94E-09	0.00E+00	0.00E+00	5.18E-07	0.00E+00	0.00E+00	1.25E-05
347	ALL	735673	4035392	NonCancerChronicDerive	0.00E+00	1.22E-09	0.00E+00	0.00E+00	0.00E+00	8.89E-08	1.24E-05	0.00E+00	3.94E-09	0.00E+00	0.00E+00	5.18E-07	0.00E+00	0.00E+00	1.24E-05
348	ALL	735773	4035392	NonCancerChronicDerive	0.00E+00	1.22E-09	0.00E+00	0.00E+00	0.00E+00	8.86E-08	1.24E-05	0.00E+00	3.94E-09	0.00E+00	0.00E+00	5.18E-07	0.00E+00	0.00E+00	1.24E-05
349	ALL	735873	4035392	NonCancerChronicDerive	0.00E+00	1.22E-09	0.00E+00	0.00E+00	0.00E+00	8.83E-08	1.24E-05	0.00E+00	3.94E-09	0.00E+00	0.00E+00	5.18E-07	0.00E+00	0.00E+00	1.24E-05
350	ALL	735973	4035392	NonCancerChronicDerive	0.00E+00	1.22E-09	0.00E+00	0.00E+00	0.00E+00	8.80E-08	1.23E-05	0.00E+00	3.95E-09	0.00E+00	0.00E+00	5.19E-07	0.00E+00	0.00E+00	1.23E-05
351	ALL	736073	4035392	NonCancerChronicDerive	0.00E+00	1.22E-09	0.00E+00	0.00E+00	0.00E+00	8.78E-08	1.23E-05	0.00E+00	3.95E-09	0.00E+00	0.00E+00	5.19E-07	0.00E+00	0.00E+00	1.23E-05
352	ALL	736173	4035392	NonCancerChronicDerive	0.00E+00	1.22E-09	0.00E+00	0.00E+00	0.00E+00	8.75E-08	1.23E-05	0.00E+00	3.95E-09	0.00E+00	0.00E+00	5.20E-07	0.00E+00	0.00E+00	1.23E-05
353	ALL	736273	4035392	NonCancerChronicDerive	0.00E+00	1.22E-09	0.00E+00	0.00E+00	0.00E+00	8.72E-08	1.22E-05	0.00E+00	3.95E-09	0.00E+00	0.00E+00	5.20E-07	0.00E+00	0.00E+00	1.22E-05
354	ALL	736373	4035392	NonCancerChronicDerive	0.00E+00	1.22E-09	0.00E+00	0.00E+00	0.00E+00	8.70E-08	1.22E-05	0.00E+00	3.96E-09	0.00E+00	0.00E+00	5.20E-07	0.00E+00	0.00E+00	1.22E-05
355	ALL	736473	4035392	NonCancerChronicDerive	0.00E+00	1.22E-09	0.00E+00	0.00E+00	0.00E+00	8.68E-08	1.22E-05	0.00E+00	3.96E-09	0.00E+00	0.00E+00	5.20E-07	0.00E+00	0.00E+00	1.22E-05
356	ALL	736573	4035392	NonCancerChronicDerive	0.00E+00	1.22E-09	0.00E+00	0.00E+00	0.00E+00	8.66E-08	1.22E-05	0.00E+00	3.96E-09	0.00E+00	0.00E+00	5.21E-07	0.00E+00	0.00E+00	1.22E-05
357	ALL	736673	4035392	NonCancerChronicDerive	0.00E+00	1.22E-09	0.00E+00	0.00E+00	0.00E+00	8.65E-08	1.22E-05	0.00E+00	3.96E-09	0.00E+00	0.00E+00	5.21E-07	0.00E+00	0.00E+00	1.22E-05
358	ALL	736773	4035392	NonCancerChronicDerive	0.00E+00	1.22E-09	0.00E+00	0.00E+00	0.00E+00	8.63E-08	1.21E-05	0.00E+00	3.96E-09	0.00E+00	0.00E+00	5.21E-07	0.00E+00	0.00E+00	1.21E-05
359	ALL	736873	4035392	NonCancerChronicDerive	0.00E+00	1.22E-09	0.00E+00	0.00E+00	0.00E+00	8.61E-08	1.21E-05	0.00E+00	3.96E-09	0.00E+00	0.00E+00	5.21E-07	0.00E+00	0.00E+00	1.21E-05
360	ALL	736973	4035392	NonCancerChronicDerive	0.00E+00	1.22E-09	0.00E+00	0.00E+00	0.00E+00	8.59E-08	1.21E-05	0.00E+00	3.96E-09	0.00E+00	0.00E+00	5.21E-07	0.00E+00	0.00E+00	1.21E-05
361	ALL	737073	4035392	NonCancerChronicDerive	0.00E+00	1.22E-09	0.00E+00	0.00E+00	0.00E+00	8.57E-08	1.21E-05	0.00E+00	3.96E-09	0.00E+00	0.00E+00	5.21E-07	0.00E+00	0.00E+00	1.21E-05
362	ALL	737173	4035392	NonCancerChronicDerive	0.00E+00	1.22E-09	0.00E+00	0.00E+00	0.00E+00	8.55E-08	1.21E-05	0.00E+00	3.96E-09	0.00E+00	0.00E+00	5.20E-07	0.00E+00	0.00E+00	1.21E-05
363	ALL	737273	4035392	NonCancerChronicDerive	0.00E+00	1.22E-09	0.00E+00	0.00E+00	0.00E+00	8.53E-08	1.20E-05	0.00E+00	3.96E-09	0.00E+00	0.00E+00	5.20E-07	0.00E+00	0.00E+00	1.20E-05
364	ALL	737373	4035392	NonCancerChronicDerive	0.00E+00	1.22E-09	0.00E+00	0.00E+00	0.00E+00	8.51E-08	1.20E-05	0.00E+00	3.95E-09	0.00E+00	0.00E+00	5.19E-07	0.00E+00	0.00E+00	1.20E-05
365	ALL	737473	4035392	NonCancerChronicDerive	0.00E+00	1.22E-09	0.00E+00	0.00E+00	0.00E+00	8.49E-08	1.20E-05	0.00E+00	3.95E-09	0.00E+00	0.00E+00	5.19E-07	0.00E+00	0.00E+00	1.20E-05
366	ALL	737573	4035392	NonCancerChronicDerive	0.00E+00	1.22E-09	0.00E+00	0.00E+00	0.00E+00	8.48E-08	1.20E-05	0.00E+00	3.95E-09	0.00E+00	0.00E+00	5.19E-07	0.00E+00	0.00E+00	1.20E-05
367	ALL	737673	4035392	NonCancerChronicDerive	0.00E+00	1.22E-09	0.00E+00	0.00E+00	0.00E+00	8.46E-08	1.20E-05	0.00E+00	3.94E-09	0.00E+00	0.00E+00	5.18E-07	0.00E+00	0.00E+00	1.20E-05
368	ALL	737773	4035392	NonCancerChronicDerive	0.00E+00	1.22E-09	0.00E+00	0.00E+00	0.00E+00	8.44E-08	1.20E-05	0.00E+00	3.94E-09	0.00E+00	0.00E+00	5.18E-07	0.00E+00	0.00E+00	1.20E-05
369	ALL	737873	4035392	NonCancerChronicDerive	0.00E+00	1.22E-09	0.00E+00	0.00E+00	0.00E+00	8.43E-08	1.19E-05	0.00E+00	3.94E-09	0.00E+00	0.00E+00	5.17E-07	0.00E+00	0.00E+00	1.19E-05

370	ALL	737973	4035392	NonCancerChronicDerive	0.00E+00	1.21E-09	0.00E+00	0.00E+00	0.00E+00	8.41E-08	1.19E-05	0.00E+00	3.93E-09	0.00E+00	0.00E+00	5.17E-07	0.00E+00	0.00E+00	1.19E-05
371	ALL	734973	4035492	NonCancerChronicDerive	0.00E+00	1.12E-09	0.00E+00	0.00E+00	0.00E+00	8.57E-08	1.19E-05	0.00E+00	3.63E-09	0.00E+00	0.00E+00	4.77E-07	0.00E+00	0.00E+00	1.19E-05
372	ALL	735073	4035492	NonCancerChronicDerive	0.00E+00	1.13E-09	0.00E+00	0.00E+00	0.00E+00	8.61E-08	1.19E-05	0.00E+00	3.67E-09	0.00E+00	0.00E+00	4.83E-07	0.00E+00	0.00E+00	1.19E-05
373	ALL	735173	4035492	NonCancerChronicDerive	0.00E+00	1.15E-09	0.00E+00	0.00E+00	0.00E+00	8.64E-08	1.20E-05	0.00E+00	3.72E-09	0.00E+00	0.00E+00	4.89E-07	0.00E+00	0.00E+00	1.20E-05
374	ALL	735273	4035492	NonCancerChronicDerive	0.00E+00	1.16E-09	0.00E+00	0.00E+00	0.00E+00	8.67E-08	1.21E-05	0.00E+00	3.76E-09	0.00E+00	0.00E+00	4.94E-07	0.00E+00	0.00E+00	1.21E-05
375	ALL	737873	4035492	NonCancerChronicDerive	0.00E+00	1.20E-09	0.00E+00	0.00E+00	0.00E+00	8.29E-08	1.18E-05	0.00E+00	3.88E-09	0.00E+00	0.00E+00	5.09E-07	0.00E+00	0.00E+00	1.18E-05
376	ALL	737973	4035492	NonCancerChronicDerive	0.00E+00	1.20E-09	0.00E+00	0.00E+00	0.00E+00	8.27E-08	1.17E-05	0.00E+00	3.87E-09	0.00E+00	0.00E+00	5.09E-07	0.00E+00	0.00E+00	1.17E-05
377	ALL	735073	4035592	NonCancerChronicDerive	0.00E+00	1.08E-09	0.00E+00	0.00E+00	0.00E+00	8.22E-08	1.14E-05	0.00E+00	3.51E-09	0.00E+00	0.00E+00	4.61E-07	0.00E+00	0.00E+00	1.14E-05
378	ALL	735173	4035592	NonCancerChronicDerive	0.00E+00	1.10E-09	0.00E+00	0.00E+00	0.00E+00	8.27E-08	1.15E-05	0.00E+00	3.56E-09	0.00E+00	0.00E+00	4.67E-07	0.00E+00	0.00E+00	1.15E-05
379	ALL	735273	4035592	NonCancerChronicDerive	0.00E+00	1.11E-09	0.00E+00	0.00E+00	0.00E+00	8.32E-08	1.16E-05	0.00E+00	3.61E-09	0.00E+00	0.00E+00	4.74E-07	0.00E+00	0.00E+00	1.16E-05
380	ALL	735373	4035592	NonCancerChronicDerive	0.00E+00	1.13E-09	0.00E+00	0.00E+00	0.00E+00	8.35E-08	1.17E-05	0.00E+00	3.65E-09	0.00E+00	0.00E+00	4.80E-07	0.00E+00	0.00E+00	1.17E-05
381	ALL	735473	4035592	NonCancerChronicDerive	0.00E+00	1.14E-09	0.00E+00	0.00E+00	0.00E+00	8.37E-08	1.17E-05	0.00E+00	3.68E-09	0.00E+00	0.00E+00	4.84E-07	0.00E+00	0.00E+00	1.17E-05
382	ALL	735573	4035592	NonCancerChronicDerive	0.00E+00	1.14E-09	0.00E+00	0.00E+00	0.00E+00	8.37E-08	1.17E-05	0.00E+00	3.70E-09	0.00E+00	0.00E+00	4.87E-07	0.00E+00	0.00E+00	1.17E-05
383	ALL	735673	4035592	NonCancerChronicDerive	0.00E+00	1.15E-09	0.00E+00	0.00E+00	0.00E+00	8.35E-08	1.17E-05	0.00E+00	3.72E-09	0.00E+00	0.00E+00	4.89E-07	0.00E+00	0.00E+00	1.17E-05
384	ALL	735773	4035592	NonCancerChronicDerive	0.00E+00	1.15E-09	0.00E+00	0.00E+00	0.00E+00	8.32E-08	1.17E-05	0.00E+00	3.72E-09	0.00E+00	0.00E+00	4.89E-07	0.00E+00	0.00E+00	1.17E-05
385	ALL	735873	4035592	NonCancerChronicDerive	0.00E+00	1.15E-09	0.00E+00	0.00E+00	0.00E+00	8.30E-08	1.16E-05	0.00E+00	3.73E-09	0.00E+00	0.00E+00	4.90E-07	0.00E+00	0.00E+00	1.16E-05
386	ALL	735973	4035592	NonCancerChronicDerive	0.00E+00	1.15E-09	0.00E+00	0.00E+00	0.00E+00	8.28E-08	1.16E-05	0.00E+00	3.73E-09	0.00E+00	0.00E+00	4.90E-07	0.00E+00	0.00E+00	1.16E-05
387	ALL	736073	4035592	NonCancerChronicDerive	0.00E+00	1.15E-09	0.00E+00	0.00E+00	0.00E+00	8.26E-08	1.16E-05	0.00E+00	3.73E-09	0.00E+00	0.00E+00	4.91E-07	0.00E+00	0.00E+00	1.16E-05
388	ALL	736173	4035592	NonCancerChronicDerive	0.00E+00	1.16E-09	0.00E+00	0.00E+00	0.00E+00	8.24E-08	1.16E-05	0.00E+00	3.74E-09	0.00E+00	0.00E+00	4.92E-07	0.00E+00	0.00E+00	1.16E-05
389	ALL	736273	4035592	NonCancerChronicDerive	0.00E+00	1.16E-09	0.00E+00	0.00E+00	0.00E+00	8.23E-08	1.16E-05	0.00E+00	3.74E-09	0.00E+00	0.00E+00	4.92E-07	0.00E+00	0.00E+00	1.16E-05
390	ALL	736373	4035592	NonCancerChronicDerive	0.00E+00	1.16E-09	0.00E+00	0.00E+00	0.00E+00	8.22E-08	1.15E-05	0.00E+00	3.75E-09	0.00E+00	0.00E+00	4.93E-07	0.00E+00	0.00E+00	1.15E-05
391	ALL	736473	4035592	NonCancerChronicDerive	0.00E+00	1.16E-09	0.00E+00	0.00E+00	0.00E+00	8.21E-08	1.15E-05	0.00E+00	3.76E-09	0.00E+00	0.00E+00	4.94E-07	0.00E+00	0.00E+00	1.15E-05
392	ALL	736573	4035592	NonCancerChronicDerive	0.00E+00	1.16E-09	0.00E+00	0.00E+00	0.00E+00	8.21E-08	1.15E-05	0.00E+00	3.77E-09	0.00E+00	0.00E+00	4.95E-07	0.00E+00	0.00E+00	1.15E-05
393	ALL	736673	4035592	NonCancerChronicDerive	0.00E+00	1.17E-09	0.00E+00	0.00E+00	0.00E+00	8.20E-08	1.15E-05	0.00E+00	3.77E-09	0.00E+00	0.00E+00	4.96E-07	0.00E+00	0.00E+00	1.15E-05
394	ALL	736773	4035592	NonCancerChronicDerive	0.00E+00	1.17E-09	0.00E+00	0.00E+00	0.00E+00	8.20E-08	1.16E-05	0.00E+00	3.78E-09	0.00E+00	0.00E+00	4.97E-07	0.00E+00	0.00E+00	1.16E-05
395	ALL	736873	4035592	NonCancerChronicDerive	0.00E+00	1.17E-09	0.00E+00	0.00E+00	0.00E+00	8.20E-08	1.16E-05	0.00E+00	3.79E-09	0.00E+00	0.00E+00	4.98E-07	0.00E+00	0.00E+00	1.16E-05
396	ALL	736973	4035592	NonCancerChronicDerive	0.00E+00	1.17E-09	0.00E+00	0.00E+00	0.00E+00	8.20E-08	1.16E-05	0.00E+00	3.80E-09	0.00E+00	0.00E+00	4.99E-07	0.00E+00	0.00E+00	1.16E-05
397	ALL	737073	4035592	NonCancerChronicDerive	0.00E+00	1.17E-09	0.00E+00	0.00E+00	0.00E+00	8.20E-08	1.16E-05	0.00E+00	3.80E-09	0.00E+00	0.00E+00	5.00E-07	0.00E+00	0.00E+00	1.16E-05
398	ALL	737173	4035592	NonCancerChronicDerive	0.00E+00	1.18E-09	0.00E+00	0.00E+00	0.00E+00	8.19E-08	1.16E-05	0.00E+00	3.81E-09	0.00E+00	0.00E+00	5.00E-07	0.00E+00	0.00E+00	1.16E-05
399	ALL	737273	4035592	NonCancerChronicDerive	0.00E+00	1.18E-09	0.00E+00	0.00E+00	0.00E+00	8.19E-08	1.16E-05	0.00E+00	3.81E-09	0.00E+00	0.00E+00	5.01E-07	0.00E+00	0.00E+00	1.16E-05
400	ALL	737373	4035592	NonCancerChronicDerive	0.00E+00	1.18E-09	0.00E+00	0.00E+00	0.00E+00	8.18E-08	1.16E-05	0.00E+00	3.81E-09	0.00E+00	0.00E+00	5.01E-07	0.00E+00	0.00E+00	1.16E-05
401	ALL	737473	4035592	NonCancerChronicDerive	0.00E+00	1.18E-09	0.00E+00	0.00E+00	0.00E+00	8.18E-08	1.16E-05	0.00E+00	3.82E-09	0.00E+00	0.00E+00	5.02E-07	0.00E+00	0.00E+00	1.16E-05
402	ALL	737573	4035592	NonCancerChronicDerive	0.00E+00	1.18E-09	0.00E+00	0.00E+00	0.00E+00	8.17E-08	1.16E-05	0.00E+00	3.82E-09	0.00E+00	0.00E+00	5.02E-07	0.00E+00	0.00E+00	1.16E-05
403	ALL	737673	4035592	NonCancerChronicDerive	0.00E+00	1.18E-09	0.00E+00	0.00E+00	0.00E+00	8.17E-08	1.16E-05	0.00E+00	3.82E-09	0.00E+00	0.00E+00	5.02E-07	0.00E+00	0.00E+00	1.16E-05
404	ALL	737773	4035592	NonCancerChronicDerive	0.00E+00	1.18E-09	0.00E+00	0.00E+00	0.00E+00	8.16E-08	1.16E-05	0.00E+00	3.82E-09	0.00E+00	0.00E+00	5.02E-07	0.00E+00	0.00E+00	1.16E-05
405	ALL	737973	4035592	NonCancerChronicDerive	0.00E+00	1.18E-09	0.00E+00	0.00E+00	0.00E+00	8.15E-08	1.16E-05	0.00E+00	3.82E-09	0.00E+00	0.00E+00	5.02E-07	0.00E+00	0.00E+00	1.16E-05
406	ALL	735273	4035692	NonCancerChronicDerive	0.00E+00	1.07E-09	0.00E+00	0.00E+00	0.00E+00	7.97E-08	1.11E-05	0.00E+00	3.46E-09	0.00E+00	0.00E+00	4.54E-07	0.00E+00	0.00E+00	1.11E-05
407	ALL	735373	4035692	NonCancerChronicDerive	0.00E+00	1.08E-09	0.00E+00	0.00E+00	0.00E+00	8.02E-08	1.12E-05	0.00E+00	3.50E-09	0.00E+00	0.00E+00	4.61E-07	0.00E+00	0.00E+00	1.12E-05
408	ALL	735473	4035692	NonCancerChronicDerive	0.00E+00	1.10E-09	0.00E+00	0.00E+00	0.00E+00	8.07E-08	1.13E-05	0.00E+00	3.55E-09	0.00E+00	0.00E+00	4.66E-07	0.00E+00	0.00E+00	1.13E-05
409	ALL	735573	4035692	NonCancerChronicDerive	0.00E+00	1.11E-09	0.00E+00	0.00E+00	0.00E+00	8.09E-08	1.13E-05	0.00E+00	3.58E-09	0.00E+00	0.00E+00	4.71E-07	0.00E+00	0.00E+00	1.13E-05
410	ALL	735673	4035692	NonCancerChronicDerive	0.00E+00	1.11E-09	0.00E+00	0.00E+00	0.00E+00	8.10E-08	1.14E-05	0.00E+00	3.61E-09	0.00E+00	0.00E+00	4.74E-07	0.00E+00	0.00E+00	1.14E-05
411	ALL	735773	4035692	NonCancerChronicDerive	0.00E+00	1.12E-09	0.00E+00	0.00E+00	0.00E+00	8.09E-08	1.14E-05	0.00E+00	3.62E-09	0.00E+00	0.00E+00	4.76E-07	0.00E+00	0.00E+00	1.14E-05
412	ALL	735873	4035692	NonCancerChronicDerive	0.00E+00	1.12E-09	0.00E+00	0.00E+00	0.00E+00	8.08E-08	1.13E-05	0.00E+00	3.63E-09	0.00E+00	0.00E+00	4.77E-07	0.00E+00	0.00E+00	1.13E-05
413	ALL	735973	4035692	NonCancerChronicDerive	0.00E+00	1.12E-09	0.00E+00	0.00E+00	0.00E+00	8.07E-08	1.13E-05	0.00E+00	3.64E-09	0.00E+00	0.00E+00	4.78E-07	0.00E+00	0.00E+00	1.13E-05
414	ALL	736073	4035692	NonCancerChronicDerive	0.00E+00	1.13E-09	0.00E+00	0.00E+00	0.00E+00	8.06E-08	1.13E-05	0.00E+00	3.65E-09	0.00E+00	0.00E+00	4.80E-07	0.00E+00	0.00E+00	1.13E-05
415	ALL	736173	4035692	NonCancerChronicDerive	0.00E+00	1.13E-09	0.00E+00	0.00E+00	0.00E+00	8.04E-08	1.13E-05	0.00E+00	3.65E-09	0.00E+00	0.00E+00	4.80E-07	0.00E+00	0.00E+00	1.13E-05
416	ALL	736273	4035692	NonCancerChronicDerive	0.00E+00	1.13E-09	0.00E+00	0.00E+00	0.00E+00	8.03E-08	1.13E-05	0.00E+00	3.66E-09	0.00E+00	0.00E+00	4.81E-07	0.00E+00	0.00E+00	1.13E-05
417	ALL	736373	4035692	NonCancerChronicDerive	0.00E+00	1.13E-09	0.00E+00	0.00E+00	0.00E+00	8.02E-08	1.13E-05	0.00E+00	3.66E-09	0.00E+00	0.00E+00	4.82E-07	0.00E+00	0.00E+00	1.13E-05
418	ALL	736473	4035692	NonCancerChronicDerive	0.00E+00	1.13E-09	0.00E+00	0.00E+00	0.00E+00	8.01E-08	1.13E-05	0.00E+00	3.67E-09	0.00E+00	0.00E+00	4.83E-07	0.00E+00	0.00E+00	1.13E-05
419	ALL	736573	4035692	NonCancerChronicDerive	0.00E+00	1.14E-09	0.00E+00	0.00E+00	0.00E+00	8.01E-08	1.13E-05	0.00E+00	3.68E-09	0.00E+00	0.00E+00	4.84E-07	0.00E+00	0.00E+00	1.13E-05
420	ALL	736673	4035692	NonCancerChronicDerive	0.00E+00	1.14E-09	0.00E+00	0.00E+00	0.00E+00	8.01E-08	1.13E-05	0.00E+00	3.69E-09	0.00E+00	0.00E+00	4.85E-07	0.00E+00	0.00E+00	1.13E-05
421	ALL	736773	4035692	NonCancerChronicDerive	0.00E+00	1.14E-09	0.00E+00	0.00E+00	0.00E+00	8.01E-08	1.13E-05	0.00E+00	3.70E-09	0.00E+00	0.00E+00	4.86E-07	0.00E+00	0.00E+00	1.13E-05
422	ALL	736873	4035692	NonCancerChronicDerive	0.00E+00	1.15E-09	0.00E+00	0.00E+00	0.00E+00	8.01E-08	1.13E-05	0.00E+00	3.71E-09	0.00E+00	0.00E+00	4.87E-07	0.00E+00	0.00E+00	1.13E-05

423	ALL	736973	4035692	NonCancerChronicDerive	0.00E+00	1.15E-09	0.00E+00	0.00E+00	0.00E+00	8.02E-08	1.13E-05	0.00E+00	3.72E-09	0.00E+00	0.00E+00	4.89E-07	0.00E+00	0.00E+00	1.13E-05
424	ALL	737073	4035692	NonCancerChronicDerive	0.00E+00	1.15E-09	0.00E+00	0.00E+00	0.00E+00	8.02E-08	1.13E-05	0.00E+00	3.73E-09	0.00E+00	0.00E+00	4.90E-07	0.00E+00	0.00E+00	1.13E-05
425	ALL	737173	4035692	NonCancerChronicDerive	0.00E+00	1.15E-09	0.00E+00	0.00E+00	0.00E+00	8.02E-08	1.13E-05	0.00E+00	3.73E-09	0.00E+00	0.00E+00	4.91E-07	0.00E+00	0.00E+00	1.13E-05
426	ALL	737273	4035692	NonCancerChronicDerive	0.00E+00	1.16E-09	0.00E+00	0.00E+00	0.00E+00	8.02E-08	1.14E-05	0.00E+00	3.74E-09	0.00E+00	0.00E+00	4.92E-07	0.00E+00	0.00E+00	1.14E-05
427	ALL	737373	4035692	NonCancerChronicDerive	0.00E+00	1.16E-09	0.00E+00	0.00E+00	0.00E+00	8.03E-08	1.14E-05	0.00E+00	3.75E-09	0.00E+00	0.00E+00	4.92E-07	0.00E+00	0.00E+00	1.14E-05
428	ALL	737473	4035692	NonCancerChronicDerive	0.00E+00	1.16E-09	0.00E+00	0.00E+00	0.00E+00	8.03E-08	1.14E-05	0.00E+00	3.75E-09	0.00E+00	0.00E+00	4.93E-07	0.00E+00	0.00E+00	1.14E-05
429	ALL	737573	4035692	NonCancerChronicDerive	0.00E+00	1.16E-09	0.00E+00	0.00E+00	0.00E+00	8.03E-08	1.14E-05	0.00E+00	3.76E-09	0.00E+00	0.00E+00	4.94E-07	0.00E+00	0.00E+00	1.14E-05
430	ALL	737673	4035692	NonCancerChronicDerive	0.00E+00	1.16E-09	0.00E+00	0.00E+00	0.00E+00	8.03E-08	1.14E-05	0.00E+00	3.76E-09	0.00E+00	0.00E+00	4.94E-07	0.00E+00	0.00E+00	1.14E-05
431	ALL	737773	4035692	NonCancerChronicDerive	0.00E+00	1.16E-09	0.00E+00	0.00E+00	0.00E+00	8.03E-08	1.14E-05	0.00E+00	3.76E-09	0.00E+00	0.00E+00	4.95E-07	0.00E+00	0.00E+00	1.14E-05
432	ALL	737973	4035692	NonCancerChronicDerive	0.00E+00	1.16E-09	0.00E+00	0.00E+00	0.00E+00	8.03E-08	1.14E-05	0.00E+00	3.77E-09	0.00E+00	0.00E+00	4.95E-07	0.00E+00	0.00E+00	1.14E-05
433	ALL	735373	4035792	NonCancerChronicDerive	0.00E+00	1.04E-09	0.00E+00	0.00E+00	0.00E+00	7.72E-08	1.07E-05	0.00E+00	3.37E-09	0.00E+00	0.00E+00	4.43E-07	0.00E+00	0.00E+00	1.07E-05
434	ALL	735473	4035792	NonCancerChronicDerive	0.00E+00	1.06E-09	0.00E+00	0.00E+00	0.00E+00	7.77E-08	1.08E-05	0.00E+00	3.42E-09	0.00E+00	0.00E+00	4.49E-07	0.00E+00	0.00E+00	1.08E-05
435	ALL	735573	4035792	NonCancerChronicDerive	0.00E+00	1.07E-09	0.00E+00	0.00E+00	0.00E+00	7.82E-08	1.09E-05	0.00E+00	3.46E-09	0.00E+00	0.00E+00	4.54E-07	0.00E+00	0.00E+00	1.09E-05
436	ALL	735673	4035792	NonCancerChronicDerive	0.00E+00	1.08E-09	0.00E+00	0.00E+00	0.00E+00	7.85E-08	1.10E-05	0.00E+00	3.49E-09	0.00E+00	0.00E+00	4.59E-07	0.00E+00	0.00E+00	1.10E-05
437	ALL	735773	4035792	NonCancerChronicDerive	0.00E+00	1.09E-09	0.00E+00	0.00E+00	0.00E+00	7.87E-08	1.10E-05	0.00E+00	3.52E-09	0.00E+00	0.00E+00	4.63E-07	0.00E+00	0.00E+00	1.10E-05
438	ALL	735873	4035792	NonCancerChronicDerive	0.00E+00	1.09E-09	0.00E+00	0.00E+00	0.00E+00	7.87E-08	1.11E-05	0.00E+00	3.54E-09	0.00E+00	0.00E+00	4.65E-07	0.00E+00	0.00E+00	1.11E-05
439	ALL	735973	4035792	NonCancerChronicDerive	0.00E+00	1.10E-09	0.00E+00	0.00E+00	0.00E+00	7.88E-08	1.11E-05	0.00E+00	3.56E-09	0.00E+00	0.00E+00	4.68E-07	0.00E+00	0.00E+00	1.11E-05
440	ALL	736073	4035792	NonCancerChronicDerive	0.00E+00	1.10E-09	0.00E+00	0.00E+00	0.00E+00	7.87E-08	1.11E-05	0.00E+00	3.57E-09	0.00E+00	0.00E+00	4.69E-07	0.00E+00	0.00E+00	1.11E-05
441	ALL	736173	4035792	NonCancerChronicDerive	0.00E+00	1.11E-09	0.00E+00	0.00E+00	0.00E+00	7.87E-08	1.11E-05	0.00E+00	3.58E-09	0.00E+00	0.00E+00	4.70E-07	0.00E+00	0.00E+00	1.11E-05
442	ALL	736273	4035792	NonCancerChronicDerive	0.00E+00	1.11E-09	0.00E+00	0.00E+00	0.00E+00	7.85E-08	1.11E-05	0.00E+00	3.58E-09	0.00E+00	0.00E+00	4.71E-07	0.00E+00	0.00E+00	1.11E-05
443	ALL	736373	4035792	NonCancerChronicDerive	0.00E+00	1.11E-09	0.00E+00	0.00E+00	0.00E+00	7.84E-08	1.10E-05	0.00E+00	3.59E-09	0.00E+00	0.00E+00	4.72E-07	0.00E+00	0.00E+00	1.10E-05
444	ALL	736473	4035792	NonCancerChronicDerive	0.00E+00	1.11E-09	0.00E+00	0.00E+00	0.00E+00	7.83E-08	1.10E-05	0.00E+00	3.59E-09	0.00E+00	0.00E+00	4.72E-07	0.00E+00	0.00E+00	1.10E-05
445	ALL	736573	4035792	NonCancerChronicDerive	0.00E+00	1.11E-09	0.00E+00	0.00E+00	0.00E+00	7.83E-08	1.10E-05	0.00E+00	3.60E-09	0.00E+00	0.00E+00	4.73E-07	0.00E+00	0.00E+00	1.10E-05
446	ALL	736673	4035792	NonCancerChronicDerive	0.00E+00	1.12E-09	0.00E+00	0.00E+00	0.00E+00	7.83E-08	1.10E-05	0.00E+00	3.61E-09	0.00E+00	0.00E+00	4.75E-07	0.00E+00	0.00E+00	1.10E-05
447	ALL	736773	4035792	NonCancerChronicDerive	0.00E+00	1.12E-09	0.00E+00	0.00E+00	0.00E+00	7.83E-08	1.11E-05	0.00E+00	3.62E-09	0.00E+00	0.00E+00	4.76E-07	0.00E+00	0.00E+00	1.11E-05
448	ALL	736873	4035792	NonCancerChronicDerive	0.00E+00	1.12E-09	0.00E+00	0.00E+00	0.00E+00	7.84E-08	1.11E-05	0.00E+00	3.63E-09	0.00E+00	0.00E+00	4.77E-07	0.00E+00	0.00E+00	1.11E-05
449	ALL	736973	4035792	NonCancerChronicDerive	0.00E+00	1.13E-09	0.00E+00	0.00E+00	0.00E+00	7.85E-08	1.11E-05	0.00E+00	3.64E-09	0.00E+00	0.00E+00	4.79E-07	0.00E+00	0.00E+00	1.11E-05
450	ALL	737073	4035792	NonCancerChronicDerive	0.00E+00	1.13E-09	0.00E+00	0.00E+00	0.00E+00	7.86E-08	1.11E-05	0.00E+00	3.65E-09	0.00E+00	0.00E+00	4.80E-07	0.00E+00	0.00E+00	1.11E-05
451	ALL	737173	4035792	NonCancerChronicDerive	0.00E+00	1.13E-09	0.00E+00	0.00E+00	0.00E+00	7.86E-08	1.11E-05	0.00E+00	3.66E-09	0.00E+00	0.00E+00	4.81E-07	0.00E+00	0.00E+00	1.11E-05
452	ALL	737273	4035792	NonCancerChronicDerive	0.00E+00	1.13E-09	0.00E+00	0.00E+00	0.00E+00	7.87E-08	1.11E-05	0.00E+00	3.67E-09	0.00E+00	0.00E+00	4.82E-07	0.00E+00	0.00E+00	1.11E-05
453	ALL	737373	4035792	NonCancerChronicDerive	0.00E+00	1.14E-09	0.00E+00	0.00E+00	0.00E+00	7.87E-08	1.11E-05	0.00E+00	3.68E-09	0.00E+00	0.00E+00	4.83E-07	0.00E+00	0.00E+00	1.11E-05
454	ALL	737473	4035792	NonCancerChronicDerive	0.00E+00	1.14E-09	0.00E+00	0.00E+00	0.00E+00	7.88E-08	1.12E-05	0.00E+00	3.69E-09	0.00E+00	0.00E+00	4.85E-07	0.00E+00	0.00E+00	1.12E-05
455	ALL	737573	4035792	NonCancerChronicDerive	0.00E+00	1.14E-09	0.00E+00	0.00E+00	0.00E+00	7.89E-08	1.12E-05	0.00E+00	3.69E-09	0.00E+00	0.00E+00	4.86E-07	0.00E+00	0.00E+00	1.12E-05
456	ALL	737673	4035792	NonCancerChronicDerive	0.00E+00	1.14E-09	0.00E+00	0.00E+00	0.00E+00	7.90E-08	1.12E-05	0.00E+00	3.70E-09	0.00E+00	0.00E+00	4.87E-07	0.00E+00	0.00E+00	1.12E-05
457	ALL	737773	4035792	NonCancerChronicDerive	0.00E+00	1.15E-09	0.00E+00	0.00E+00	0.00E+00	7.90E-08	1.12E-05	0.00E+00	3.71E-09	0.00E+00	0.00E+00	4.87E-07	0.00E+00	0.00E+00	1.12E-05
458	ALL	737873	4035792	NonCancerChronicDerive	0.00E+00	1.15E-09	0.00E+00	0.00E+00	0.00E+00	7.91E-08	1.12E-05	0.00E+00	3.71E-09	0.00E+00	0.00E+00	4.88E-07	0.00E+00	0.00E+00	1.12E-05
459	ALL	735473	4035892	NonCancerChronicDerive	0.00E+00	1.02E-09	0.00E+00	0.00E+00	0.00E+00	7.49E-08	1.04E-05	0.00E+00	3.29E-09	0.00E+00	0.00E+00	4.33E-07	0.00E+00	0.00E+00	1.04E-05
460	ALL	735573	4035892	NonCancerChronicDerive	0.00E+00	1.03E-09	0.00E+00	0.00E+00	0.00E+00	7.55E-08	1.05E-05	0.00E+00	3.34E-09	0.00E+00	0.00E+00	4.39E-07	0.00E+00	0.00E+00	1.05E-05
461	ALL	735673	4035892	NonCancerChronicDerive	0.00E+00	1.04E-09	0.00E+00	0.00E+00	0.00E+00	7.60E-08	1.06E-05	0.00E+00	3.38E-09	0.00E+00	0.00E+00	4.44E-07	0.00E+00	0.00E+00	1.06E-05
462	ALL	735773	4035892	NonCancerChronicDerive	0.00E+00	1.05E-09	0.00E+00	0.00E+00	0.00E+00	7.64E-08	1.07E-05	0.00E+00	3.41E-09	0.00E+00	0.00E+00	4.49E-07	0.00E+00	0.00E+00	1.07E-05
463	ALL	735873	4035892	NonCancerChronicDerive	0.00E+00	1.06E-09	0.00E+00	0.00E+00	0.00E+00	7.66E-08	1.08E-05	0.00E+00	3.44E-09	0.00E+00	0.00E+00	4.52E-07	0.00E+00	0.00E+00	1.08E-05
464	ALL	735973	4035892	NonCancerChronicDerive	0.00E+00	1.07E-09	0.00E+00	0.00E+00	0.00E+00	7.69E-08	1.08E-05	0.00E+00	3.47E-09	0.00E+00	0.00E+00	4.56E-07	0.00E+00	0.00E+00	1.08E-05
465	ALL	736073	4035892	NonCancerChronicDerive	0.00E+00	1.08E-09	0.00E+00	0.00E+00	0.00E+00	7.70E-08	1.08E-05	0.00E+00	3.49E-09	0.00E+00	0.00E+00	4.59E-07	0.00E+00	0.00E+00	1.08E-05
466	ALL	736173	4035892	NonCancerChronicDerive	0.00E+00	1.08E-09	0.00E+00	0.00E+00	0.00E+00	7.70E-08	1.08E-05	0.00E+00	3.50E-09	0.00E+00	0.00E+00	4.60E-07	0.00E+00	0.00E+00	1.08E-05
467	ALL	736273	4035892	NonCancerChronicDerive	0.00E+00	1.08E-09	0.00E+00	0.00E+00	0.00E+00	7.69E-08	1.08E-05	0.00E+00	3.51E-09	0.00E+00	0.00E+00	4.62E-07	0.00E+00	0.00E+00	1.08E-05
468	ALL	736373	4035892	NonCancerChronicDerive	0.00E+00	1.09E-09	0.00E+00	0.00E+00	0.00E+00	7.68E-08	1.08E-05	0.00E+00	3.52E-09	0.00E+00	0.00E+00	4.62E-07	0.00E+00	0.00E+00	1.08E-05
469	ALL	736473	4035892	NonCancerChronicDerive	0.00E+00	1.09E-09	0.00E+00	0.00E+00	0.00E+00	7.67E-08	1.08E-05	0.00E+00	3.52E-09	0.00E+00	0.00E+00	4.63E-07	0.00E+00	0.00E+00	1.08E-05
470	ALL	736573	4035892	NonCancerChronicDerive	0.00E+00	1.09E-09	0.00E+00	0.00E+00	0.00E+00	7.67E-08	1.08E-05	0.00E+00	3.53E-09	0.00E+00	0.00E+00	4.64E-07	0.00E+00	0.00E+00	1.08E-05
471	ALL	736673	4035892	NonCancerChronicDerive	0.00E+00	1.09E-09	0.00E+00	0.00E+00	0.00E+00	7.67E-08	1.08E-05	0.00E+00	3.54E-09	0.00E+00	0.00E+00	4.65E-07	0.00E+00	0.00E+00	1.08E-05
472	ALL	736773	4035892	NonCancerChronicDerive	0.00E+00	1.10E-09	0.00E+00	0.00E+00	0.00E+00	7.67E-08	1.08E-05	0.00E+00	3.55E-09	0.00E+00	0.00E+00	4.66E-07	0.00E+00	0.00E+00	1.08E-05
473	ALL	736873	4035892	NonCancerChronicDerive	0.00E+00	1.10E-09	0.00E+00	0.00E+00	0.00E+00	7.68E-08	1.08E-05	0.00E+00	3.56E-09	0.00E+00	0.00E+00	4.67E-07	0.00E+00	0.00E+00	1.08E-05
474	ALL	736973	4035892	NonCancerChronicDerive	0.00E+00	1.10E-09	0.00E+00	0.00E+00	0.00E+00	7.69E-08	1.09E-05	0.00E+00	3.57E-09	0.00E+00	0.00E+00	4.69E-07	0.00E+00	0.00E+00	1.09E-05
475	ALL	737073	4035892	NonCancerChronicDerive	0.00E+00	1.11E-09	0.00E+00	0.00E+00	0.00E+00	7.70E-08	1.09E-05	0.00E+00	3.58E-09	0.00E+00	0.00E+00	4.70E-07	0.00E+00	0.00E+00	1.09E-05

476	ALL	737173	4035892	NonCancerChronicDerive	0.00E+00	1.11E-09	0.00E+00	0.00E+00	0.00E+00	7.70E-08	1.09E-05	0.00E+00	3.59E-09	0.00E+00	0.00E+00	4.71E-07	0.00E+00	0.00E+00	1.09E-05
477	ALL	737273	4035892	NonCancerChronicDerive	0.00E+00	1.11E-09	0.00E+00	0.00E+00	0.00E+00	7.71E-08	1.09E-05	0.00E+00	3.60E-09	0.00E+00	0.00E+00	4.73E-07	0.00E+00	0.00E+00	1.09E-05
478	ALL	737373	4035892	NonCancerChronicDerive	0.00E+00	1.11E-09	0.00E+00	0.00E+00	0.00E+00	7.72E-08	1.09E-05	0.00E+00	3.61E-09	0.00E+00	0.00E+00	4.74E-07	0.00E+00	0.00E+00	1.09E-05
479	ALL	737473	4035892	NonCancerChronicDerive	0.00E+00	1.12E-09	0.00E+00	0.00E+00	0.00E+00	7.73E-08	1.10E-05	0.00E+00	3.62E-09	0.00E+00	0.00E+00	4.76E-07	0.00E+00	0.00E+00	1.10E-05
480	ALL	737573	4035892	NonCancerChronicDerive	0.00E+00	1.12E-09	0.00E+00	0.00E+00	0.00E+00	7.75E-08	1.10E-05	0.00E+00	3.63E-09	0.00E+00	0.00E+00	4.77E-07	0.00E+00	0.00E+00	1.10E-05
481	ALL	737673	4035892	NonCancerChronicDerive	0.00E+00	1.12E-09	0.00E+00	0.00E+00	0.00E+00	7.76E-08	1.10E-05	0.00E+00	3.64E-09	0.00E+00	0.00E+00	4.78E-07	0.00E+00	0.00E+00	1.10E-05
482	ALL	737773	4035892	NonCancerChronicDerive	0.00E+00	1.13E-09	0.00E+00	0.00E+00	0.00E+00	7.77E-08	1.10E-05	0.00E+00	3.65E-09	0.00E+00	0.00E+00	4.80E-07	0.00E+00	0.00E+00	1.10E-05
483	ALL	737873	4035892	NonCancerChronicDerive	0.00E+00	1.13E-09	0.00E+00	0.00E+00	0.00E+00	7.78E-08	1.11E-05	0.00E+00	3.66E-09	0.00E+00	0.00E+00	4.81E-07	0.00E+00	0.00E+00	1.11E-05
484	ALL	737973	4035892	NonCancerChronicDerive	0.00E+00	1.13E-09	0.00E+00	0.00E+00	0.00E+00	7.79E-08	1.11E-05	0.00E+00	3.66E-09	0.00E+00	0.00E+00	4.81E-07	0.00E+00	0.00E+00	1.11E-05
485	ALL	737573	4035992	NonCancerChronicDerive	0.00E+00	1.10E-09	0.00E+00	0.00E+00	0.00E+00	7.61E-08	1.08E-05	0.00E+00	3.56E-09	0.00E+00	0.00E+00	4.68E-07	0.00E+00	0.00E+00	1.08E-05
486	ALL	737673	4035992	NonCancerChronicDerive	0.00E+00	1.10E-09	0.00E+00	0.00E+00	0.00E+00	7.63E-08	1.08E-05	0.00E+00	3.58E-09	0.00E+00	0.00E+00	4.70E-07	0.00E+00	0.00E+00	1.08E-05
487	ALL	737773	4035992	NonCancerChronicDerive	0.00E+00	1.11E-09	0.00E+00	0.00E+00	0.00E+00	7.64E-08	1.09E-05	0.00E+00	3.59E-09	0.00E+00	0.00E+00	4.72E-07	0.00E+00	0.00E+00	1.09E-05
488	ALL	737873	4035992	NonCancerChronicDerive	0.00E+00	1.11E-09	0.00E+00	0.00E+00	0.00E+00	7.66E-08	1.09E-05	0.00E+00	3.60E-09	0.00E+00	0.00E+00	4.73E-07	0.00E+00	0.00E+00	1.09E-05
489	ALL	737973	4035992	NonCancerChronicDerive	0.00E+00	1.11E-09	0.00E+00	0.00E+00	0.00E+00	7.67E-08	1.09E-05	0.00E+00	3.61E-09	0.00E+00	0.00E+00	4.74E-07	0.00E+00	0.00E+00	1.09E-05
490	ALL	737573	4036092	NonCancerChronicDerive	0.00E+00	1.08E-09	0.00E+00	0.00E+00	0.00E+00	7.47E-08	1.06E-05	0.00E+00	3.50E-09	0.00E+00	0.00E+00	4.60E-07	0.00E+00	0.00E+00	1.06E-05
491	ALL	737673	4036092	NonCancerChronicDerive	0.00E+00	1.08E-09	0.00E+00	0.00E+00	0.00E+00	7.49E-08	1.06E-05	0.00E+00	3.51E-09	0.00E+00	0.00E+00	4.62E-07	0.00E+00	0.00E+00	1.06E-05
492	ALL	737773	4036092	NonCancerChronicDerive	0.00E+00	1.09E-09	0.00E+00	0.00E+00	0.00E+00	7.51E-08	1.07E-05	0.00E+00	3.52E-09	0.00E+00	0.00E+00	4.63E-07	0.00E+00	0.00E+00	1.07E-05
493	ALL	737873	4036092	NonCancerChronicDerive	0.00E+00	1.09E-09	0.00E+00	0.00E+00	0.00E+00	7.53E-08	1.07E-05	0.00E+00	3.53E-09	0.00E+00	0.00E+00	4.65E-07	0.00E+00	0.00E+00	1.07E-05
494	ALL	737973	4036092	NonCancerChronicDerive	0.00E+00	1.10E-09	0.00E+00	0.00E+00	0.00E+00	7.55E-08	1.07E-05	0.00E+00	3.55E-09	0.00E+00	0.00E+00	4.66E-07	0.00E+00	0.00E+00	1.07E-05
495	ALL	737573	4036192	NonCancerChronicDerive	0.00E+00	1.06E-09	0.00E+00	0.00E+00	0.00E+00	7.35E-08	1.04E-05	0.00E+00	3.44E-09	0.00E+00	0.00E+00	4.52E-07	0.00E+00	0.00E+00	1.04E-05
496	ALL	737673	4036192	NonCancerChronicDerive	0.00E+00	1.07E-09	0.00E+00	0.00E+00	0.00E+00	7.37E-08	1.05E-05	0.00E+00	3.45E-09	0.00E+00	0.00E+00	4.53E-07	0.00E+00	0.00E+00	1.05E-05
497	ALL	737773	4036192	NonCancerChronicDerive	0.00E+00	1.07E-09	0.00E+00	0.00E+00	0.00E+00	7.39E-08	1.05E-05	0.00E+00	3.46E-09	0.00E+00	0.00E+00	4.55E-07	0.00E+00	0.00E+00	1.05E-05
498	ALL	737873	4036192	NonCancerChronicDerive	0.00E+00	1.07E-09	0.00E+00	0.00E+00	0.00E+00	7.40E-08	1.05E-05	0.00E+00	3.47E-09	0.00E+00	0.00E+00	4.57E-07	0.00E+00	0.00E+00	1.05E-05
499	ALL	737973	4036192	NonCancerChronicDerive	0.00E+00	1.08E-09	0.00E+00	0.00E+00	0.00E+00	7.42E-08	1.06E-05	0.00E+00	3.49E-09	0.00E+00	0.00E+00	4.58E-07	0.00E+00	0.00E+00	1.06E-05
500	ALL	737573	4036292	NonCancerChronicDerive	0.00E+00	1.04E-09	0.00E+00	0.00E+00	0.00E+00	7.23E-08	1.03E-05	0.00E+00	3.38E-09	0.00E+00	0.00E+00	4.44E-07	0.00E+00	0.00E+00	1.03E-05
501	ALL	737673	4036292	NonCancerChronicDerive	0.00E+00	1.05E-09	0.00E+00	0.00E+00	0.00E+00	7.25E-08	1.03E-05	0.00E+00	3.39E-09	0.00E+00	0.00E+00	4.46E-07	0.00E+00	0.00E+00	1.03E-05
502	ALL	737773	4036292	NonCancerChronicDerive	0.00E+00	1.05E-09	0.00E+00	0.00E+00	0.00E+00	7.27E-08	1.03E-05	0.00E+00	3.40E-09	0.00E+00	0.00E+00	4.47E-07	0.00E+00	0.00E+00	1.03E-05
503	ALL	737873	4036292	NonCancerChronicDerive	0.00E+00	1.05E-09	0.00E+00	0.00E+00	0.00E+00	7.29E-08	1.04E-05	0.00E+00	3.41E-09	0.00E+00	0.00E+00	4.49E-07	0.00E+00	0.00E+00	1.04E-05
504	ALL	737973	4036292	NonCancerChronicDerive	0.00E+00	1.06E-09	0.00E+00	0.00E+00	0.00E+00	7.31E-08	1.04E-05	0.00E+00	3.43E-09	0.00E+00	0.00E+00	4.51E-07	0.00E+00	0.00E+00	1.04E-05
505	ALL	738080.96	4035200.87	NonCancerChronicDerive	0.00E+00	1.25E-09	0.00E+00	0.00E+00	0.00E+00	8.68E-08	1.23E-05	0.00E+00	4.05E-09	0.00E+00	0.00E+00	5.33E-07	0.00E+00	0.00E+00	1.23E-05
506	ALL	738180.96	4035200.87	NonCancerChronicDerive	0.00E+00	1.25E-09	0.00E+00	0.00E+00	0.00E+00	8.64E-08	1.22E-05	0.00E+00	4.04E-09	0.00E+00	0.00E+00	5.31E-07	0.00E+00	0.00E+00	1.22E-05
507	ALL	738280.96	4035200.87	NonCancerChronicDerive	0.00E+00	1.24E-09	0.00E+00	0.00E+00	0.00E+00	8.61E-08	1.22E-05	0.00E+00	4.03E-09	0.00E+00	0.00E+00	5.29E-07	0.00E+00	0.00E+00	1.22E-05
508	ALL	738080.96	4035300.87	NonCancerChronicDerive	0.00E+00	1.23E-09	0.00E+00	0.00E+00	0.00E+00	8.52E-08	1.21E-05	0.00E+00	3.98E-09	0.00E+00	0.00E+00	5.23E-07	0.00E+00	0.00E+00	1.21E-05
509	ALL	738180.96	4035300.87	NonCancerChronicDerive	0.00E+00	1.23E-09	0.00E+00	0.00E+00	0.00E+00	8.49E-08	1.20E-05	0.00E+00	3.97E-09	0.00E+00	0.00E+00	5.22E-07	0.00E+00	0.00E+00	1.20E-05
510	ALL	738280.96	4035300.87	NonCancerChronicDerive	0.00E+00	1.22E-09	0.00E+00	0.00E+00	0.00E+00	8.46E-08	1.20E-05	0.00E+00	3.96E-09	0.00E+00	0.00E+00	5.21E-07	0.00E+00	0.00E+00	1.20E-05
511	ALL	738380.96	4035300.87	NonCancerChronicDerive	0.00E+00	1.22E-09	0.00E+00	0.00E+00	0.00E+00	8.44E-08	1.20E-05	0.00E+00	3.95E-09	0.00E+00	0.00E+00	5.19E-07	0.00E+00	0.00E+00	1.20E-05
512	ALL	738080.96	4035400.87	NonCancerChronicDerive	0.00E+00	1.21E-09	0.00E+00	0.00E+00	0.00E+00	8.37E-08	1.19E-05	0.00E+00	3.92E-09	0.00E+00	0.00E+00	5.15E-07	0.00E+00	0.00E+00	1.19E-05
513	ALL	738180.96	4035400.87	NonCancerChronicDerive	0.00E+00	1.21E-09	0.00E+00	0.00E+00	0.00E+00	8.35E-08	1.19E-05	0.00E+00	3.91E-09	0.00E+00	0.00E+00	5.14E-07	0.00E+00	0.00E+00	1.19E-05
514	ALL	738280.96	4035400.87	NonCancerChronicDerive	0.00E+00	1.21E-09	0.00E+00	0.00E+00	0.00E+00	8.34E-08	1.18E-05	0.00E+00	3.91E-09	0.00E+00	0.00E+00	5.13E-07	0.00E+00	0.00E+00	1.18E-05
515	ALL	738380.96	4035400.87	NonCancerChronicDerive	0.00E+00	1.20E-09	0.00E+00	0.00E+00	0.00E+00	8.32E-08	1.18E-05	0.00E+00	3.90E-09	0.00E+00	0.00E+00	5.12E-07	0.00E+00	0.00E+00	1.18E-05
516	ALL	738480.96	4035400.87	NonCancerChronicDerive	0.00E+00	1.20E-09	0.00E+00	0.00E+00	0.00E+00	8.30E-08	1.18E-05	0.00E+00	3.89E-09	0.00E+00	0.00E+00	5.11E-07	0.00E+00	0.00E+00	1.18E-05
517	ALL	738080.96	4035500.87	NonCancerChronicDerive	0.00E+00	1.19E-09	0.00E+00	0.00E+00	0.00E+00	8.25E-08	1.17E-05	0.00E+00	3.86E-09	0.00E+00	0.00E+00	5.08E-07	0.00E+00	0.00E+00	1.17E-05
518	ALL	738180.96	4035500.87	NonCancerChronicDerive	0.00E+00	1.19E-09	0.00E+00	0.00E+00	0.00E+00	8.23E-08	1.17E-05	0.00E+00	3.86E-09	0.00E+00	0.00E+00	5.08E-07	0.00E+00	0.00E+00	1.17E-05
519	ALL	738280.96	4035500.87	NonCancerChronicDerive	0.00E+00	1.19E-09	0.00E+00	0.00E+00	0.00E+00	8.22E-08	1.17E-05	0.00E+00	3.86E-09	0.00E+00	0.00E+00	5.07E-07	0.00E+00	0.00E+00	1.17E-05
520	ALL	738380.96	4035500.87	NonCancerChronicDerive	0.00E+00	1.19E-09	0.00E+00	0.00E+00	0.00E+00	8.21E-08	1.17E-05	0.00E+00	3.85E-09	0.00E+00	0.00E+00	5.07E-07	0.00E+00	0.00E+00	1.17E-05
521	ALL	738480.96	4035500.87	NonCancerChronicDerive	0.00E+00	1.19E-09	0.00E+00	0.00E+00	0.00E+00	8.20E-08	1.17E-05	0.00E+00	3.85E-09	0.00E+00	0.00E+00	5.06E-07	0.00E+00	0.00E+00	1.17E-05
522	ALL	738580.96	4035500.87	NonCancerChronicDerive	0.00E+00	1.19E-09	0.00E+00	0.00E+00	0.00E+00	8.18E-08	1.16E-05	0.00E+00	3.84E-09	0.00E+00	0.00E+00	5.05E-07	0.00E+00	0.00E+00	1.16E-05
523	ALL	738080.96	4035600.87	NonCancerChronicDerive	0.00E+00	1.18E-09	0.00E+00	0.00E+00	0.00E+00	8.13E-08	1.16E-05	0.00E+00	3.81E-09	0.00E+00	0.00E+00	5.01E-07	0.00E+00	0.00E+00	1.16E-05
524	ALL	738180.96	4035600.87	NonCancerChronicDerive	0.00E+00	1.18E-09	0.00E+00	0.00E+00	0.00E+00	8.12E-08	1.16E-05	0.00E+00	3.81E-09	0.00E+00	0.00E+00	5.01E-07	0.00E+00	0.00E+00	1.16E-05
525	ALL	738280.96	4035600.87	NonCancerChronicDerive	0.00E+00	1.18E-09	0.00E+00	0.00E+00	0.00E+00	8.12E-08	1.15E-05	0.00E+00	3.81E-09	0.00E+00	0.00E+00	5.01E-07	0.00E+00	0.00E+00	1.15E-05
526	ALL	738380.96	4035600.87	NonCancerChronicDerive	0.00E+00	1.18E-09	0.00E+00	0.00E+00	0.00E+00	8.11E-08	1.15E-05	0.00E+00	3.81E-09	0.00E+00	0.00E+00	5.01E-07	0.00E+00	0.00E+00	1.15E-05
527	ALL	738480.96	4035600.87	NonCancerChronicDerive	0.00E+00	1.18E-09	0.00E+00	0.00E+00	0.00E+00	8.10E-08	1.15E-05	0.00E+00	3.81E-09	0.00E+00	0.00E+00	5.01E-07	0.00E+00	0.00E+00	1.15E-05
528	ALL	738580.96	4035600.87	NonCancerChronicDerive	0.00E+00	1.18E-09	0.00E+00	0.00E+00	0.00E+00	8.10E-08	1.15E-05	0.00E+00	3.81E-09	0.00E+00	0.00E+00	5.01E-07	0.00E+00	0.00E+00	1.15E-05

529	ALL	738080.96	4035700.87	NonCancerChronicDerive	0.00E+00	1.16E-09	0.00E+00	0.00E+00	0.00E+00	8.02E-08	1.14E-05	0.00E+00	3.77E-09	0.00E+00	0.00E+00	4.95E-07	0.00E+00	0.00E+00	1.14E-05
530	ALL	738180.96	4035700.87	NonCancerChronicDerive	0.00E+00	1.16E-09	0.00E+00	0.00E+00	0.00E+00	8.01E-08	1.14E-05	0.00E+00	3.77E-09	0.00E+00	0.00E+00	4.95E-07	0.00E+00	0.00E+00	1.14E-05
531	ALL	738280.96	4035700.87	NonCancerChronicDerive	0.00E+00	1.16E-09	0.00E+00	0.00E+00	0.00E+00	8.01E-08	1.14E-05	0.00E+00	3.77E-09	0.00E+00	0.00E+00	4.96E-07	0.00E+00	0.00E+00	1.14E-05
532	ALL	738380.96	4035700.87	NonCancerChronicDerive	0.00E+00	1.17E-09	0.00E+00	0.00E+00	0.00E+00	8.01E-08	1.14E-05	0.00E+00	3.77E-09	0.00E+00	0.00E+00	4.96E-07	0.00E+00	0.00E+00	1.14E-05
533	ALL	738480.96	4035700.87	NonCancerChronicDerive	0.00E+00	1.16E-09	0.00E+00	0.00E+00	0.00E+00	8.01E-08	1.14E-05	0.00E+00	3.77E-09	0.00E+00	0.00E+00	4.96E-07	0.00E+00	0.00E+00	1.14E-05
534	ALL	738580.96	4035700.87	NonCancerChronicDerive	0.00E+00	1.17E-09	0.00E+00	0.00E+00	0.00E+00	8.01E-08	1.14E-05	0.00E+00	3.77E-09	0.00E+00	0.00E+00	4.96E-07	0.00E+00	0.00E+00	1.14E-05
535	ALL	738080.96	4035800.87	NonCancerChronicDerive	0.00E+00	1.15E-09	0.00E+00	0.00E+00	0.00E+00	7.90E-08	1.13E-05	0.00E+00	3.72E-09	0.00E+00	0.00E+00	4.89E-07	0.00E+00	0.00E+00	1.13E-05
536	ALL	738180.96	4035800.87	NonCancerChronicDerive	0.00E+00	1.15E-09	0.00E+00	0.00E+00	0.00E+00	7.91E-08	1.13E-05	0.00E+00	3.72E-09	0.00E+00	0.00E+00	4.89E-07	0.00E+00	0.00E+00	1.13E-05
537	ALL	738280.96	4035800.87	NonCancerChronicDerive	0.00E+00	1.15E-09	0.00E+00	0.00E+00	0.00E+00	7.91E-08	1.13E-05	0.00E+00	3.72E-09	0.00E+00	0.00E+00	4.90E-07	0.00E+00	0.00E+00	1.13E-05
538	ALL	738380.96	4035800.87	NonCancerChronicDerive	0.00E+00	1.15E-09	0.00E+00	0.00E+00	0.00E+00	7.91E-08	1.13E-05	0.00E+00	3.73E-09	0.00E+00	0.00E+00	4.90E-07	0.00E+00	0.00E+00	1.13E-05
539	ALL	738480.96	4035800.87	NonCancerChronicDerive	0.00E+00	1.15E-09	0.00E+00	0.00E+00	0.00E+00	7.92E-08	1.13E-05	0.00E+00	3.73E-09	0.00E+00	0.00E+00	4.90E-07	0.00E+00	0.00E+00	1.13E-05
540	ALL	738580.96	4035800.87	NonCancerChronicDerive	0.00E+00	1.15E-09	0.00E+00	0.00E+00	0.00E+00	7.92E-08	1.13E-05	0.00E+00	3.74E-09	0.00E+00	0.00E+00	4.91E-07	0.00E+00	0.00E+00	1.13E-05
541	ALL	738180.96	4035900.87	NonCancerChronicDerive	0.00E+00	1.13E-09	0.00E+00	0.00E+00	0.00E+00	7.80E-08	1.11E-05	0.00E+00	3.67E-09	0.00E+00	0.00E+00	4.82E-07	0.00E+00	0.00E+00	1.11E-05
542	ALL	738280.96	4035900.87	NonCancerChronicDerive	0.00E+00	1.14E-09	0.00E+00	0.00E+00	0.00E+00	7.80E-08	1.11E-05	0.00E+00	3.68E-09	0.00E+00	0.00E+00	4.83E-07	0.00E+00	0.00E+00	1.11E-05
543	ALL	738380.96	4035900.87	NonCancerChronicDerive	0.00E+00	1.14E-09	0.00E+00	0.00E+00	0.00E+00	7.81E-08	1.11E-05	0.00E+00	3.68E-09	0.00E+00	0.00E+00	4.84E-07	0.00E+00	0.00E+00	1.11E-05
544	ALL	738480.96	4035900.87	NonCancerChronicDerive	0.00E+00	1.14E-09	0.00E+00	0.00E+00	0.00E+00	7.82E-08	1.12E-05	0.00E+00	3.69E-09	0.00E+00	0.00E+00	4.85E-07	0.00E+00	0.00E+00	1.12E-05
545	ALL	738580.96	4035900.87	NonCancerChronicDerive	0.00E+00	1.14E-09	0.00E+00	0.00E+00	0.00E+00	7.83E-08	1.12E-05	0.00E+00	3.69E-09	0.00E+00	0.00E+00	4.85E-07	0.00E+00	0.00E+00	1.12E-05
546	ALL	738180.96	4036000.87	NonCancerChronicDerive	0.00E+00	1.12E-09	0.00E+00	0.00E+00	0.00E+00	7.68E-08	1.10E-05	0.00E+00	3.62E-09	0.00E+00	0.00E+00	4.75E-07	0.00E+00	0.00E+00	1.10E-05
547	ALL	738280.96	4036000.87	NonCancerChronicDerive	0.00E+00	1.12E-09	0.00E+00	0.00E+00	0.00E+00	7.70E-08	1.10E-05	0.00E+00	3.63E-09	0.00E+00	0.00E+00	4.77E-07	0.00E+00	0.00E+00	1.10E-05
548	ALL	738380.96	4036000.87	NonCancerChronicDerive	0.00E+00	1.12E-09	0.00E+00	0.00E+00	0.00E+00	7.71E-08	1.10E-05	0.00E+00	3.63E-09	0.00E+00	0.00E+00	4.78E-07	0.00E+00	0.00E+00	1.10E-05
549	ALL	738480.96	4036000.87	NonCancerChronicDerive	0.00E+00	1.12E-09	0.00E+00	0.00E+00	0.00E+00	7.72E-08	1.10E-05	0.00E+00	3.64E-09	0.00E+00	0.00E+00	4.79E-07	0.00E+00	0.00E+00	1.10E-05
550	ALL	738580.96	4036000.87	NonCancerChronicDerive	0.00E+00	1.13E-09	0.00E+00	0.00E+00	0.00E+00	7.73E-08	1.10E-05	0.00E+00	3.65E-09	0.00E+00	0.00E+00	4.79E-07	0.00E+00	0.00E+00	1.10E-05
551	ALL	738080.96	4036100.87	NonCancerChronicDerive	0.00E+00	1.10E-09	0.00E+00	0.00E+00	0.00E+00	7.55E-08	1.08E-05	0.00E+00	3.55E-09	0.00E+00	0.00E+00	4.67E-07	0.00E+00	0.00E+00	1.08E-05
552	ALL	738280.96	4036100.87	NonCancerChronicDerive	0.00E+00	1.10E-09	0.00E+00	0.00E+00	0.00E+00	7.59E-08	1.08E-05	0.00E+00	3.57E-09	0.00E+00	0.00E+00	4.70E-07	0.00E+00	0.00E+00	1.08E-05
553	ALL	738380.96	4036100.87	NonCancerChronicDerive	0.00E+00	1.11E-09	0.00E+00	0.00E+00	0.00E+00	7.60E-08	1.08E-05	0.00E+00	3.58E-09	0.00E+00	0.00E+00	4.71E-07	0.00E+00	0.00E+00	1.08E-05
554	ALL	738480.96	4036100.87	NonCancerChronicDerive	0.00E+00	1.11E-09	0.00E+00	0.00E+00	0.00E+00	7.63E-08	1.09E-05	0.00E+00	3.60E-09	0.00E+00	0.00E+00	4.73E-07	0.00E+00	0.00E+00	1.09E-05
555	ALL	738580.96	4036100.87	NonCancerChronicDerive	0.00E+00	1.11E-09	0.00E+00	0.00E+00	0.00E+00	7.63E-08	1.09E-05	0.00E+00	3.60E-09	0.00E+00	0.00E+00	4.73E-07	0.00E+00	0.00E+00	1.09E-05
556	ALL	738680.96	4036100.87	NonCancerChronicDerive	0.00E+00	1.11E-09	0.00E+00	0.00E+00	0.00E+00	7.65E-08	1.09E-05	0.00E+00	3.61E-09	0.00E+00	0.00E+00	4.74E-07	0.00E+00	0.00E+00	1.09E-05
557	ALL	738780.96	4036100.87	NonCancerChronicDerive	0.00E+00	1.12E-09	0.00E+00	0.00E+00	0.00E+00	7.66E-08	1.10E-05	0.00E+00	3.61E-09	0.00E+00	0.00E+00	4.75E-07	0.00E+00	0.00E+00	1.10E-05
558	ALL	738880.96	4036100.87	NonCancerChronicDerive	0.00E+00	1.12E-09	0.00E+00	0.00E+00	0.00E+00	7.67E-08	1.10E-05	0.00E+00	3.62E-09	0.00E+00	0.00E+00	4.75E-07	0.00E+00	0.00E+00	1.10E-05
559	ALL	738980.96	4036100.87	NonCancerChronicDerive	0.00E+00	1.12E-09	0.00E+00	0.00E+00	0.00E+00	7.68E-08	1.10E-05	0.00E+00	3.62E-09	0.00E+00	0.00E+00	4.76E-07	0.00E+00	0.00E+00	1.10E-05
560	ALL	739080.96	4036100.87	NonCancerChronicDerive	0.00E+00	1.12E-09	0.00E+00	0.00E+00	0.00E+00	7.69E-08	1.10E-05	0.00E+00	3.62E-09	0.00E+00	0.00E+00	4.76E-07	0.00E+00	0.00E+00	1.10E-05
561	ALL	739180.96	4036100.87	NonCancerChronicDerive	0.00E+00	1.12E-09	0.00E+00	0.00E+00	0.00E+00	7.69E-08	1.10E-05	0.00E+00	3.62E-09	0.00E+00	0.00E+00	4.77E-07	0.00E+00	0.00E+00	1.10E-05
562	ALL	739280.96	4036100.87	NonCancerChronicDerive	0.00E+00	1.12E-09	0.00E+00	0.00E+00	0.00E+00	7.70E-08	1.10E-05	0.00E+00	3.63E-09	0.00E+00	0.00E+00	4.77E-07	0.00E+00	0.00E+00	1.10E-05
563	ALL	739380.96	4036100.87	NonCancerChronicDerive	0.00E+00	1.12E-09	0.00E+00	0.00E+00	0.00E+00	7.70E-08	1.10E-05	0.00E+00	3.62E-09	0.00E+00	0.00E+00	4.76E-07	0.00E+00	0.00E+00	1.10E-05
564	ALL	739480.96	4036100.87	NonCancerChronicDerive	0.00E+00	1.12E-09	0.00E+00	0.00E+00	0.00E+00	7.69E-08	1.10E-05	0.00E+00	3.62E-09	0.00E+00	0.00E+00	4.75E-07	0.00E+00	0.00E+00	1.10E-05
565	ALL	739580.96	4036100.87	NonCancerChronicDerive	0.00E+00	1.12E-09	0.00E+00	0.00E+00	0.00E+00	7.68E-08	1.10E-05	0.00E+00	3.61E-09	0.00E+00	0.00E+00	4.75E-07	0.00E+00	0.00E+00	1.10E-05
566	ALL	739680.96	4036100.87	NonCancerChronicDerive	0.00E+00	1.11E-09	0.00E+00	0.00E+00	0.00E+00	7.68E-08	1.10E-05	0.00E+00	3.61E-09	0.00E+00	0.00E+00	4.74E-07	0.00E+00	0.00E+00	1.10E-05
567	ALL	739780.96	4036100.87	NonCancerChronicDerive	0.00E+00	1.11E-09	0.00E+00	0.00E+00	0.00E+00	7.68E-08	1.10E-05	0.00E+00	3.60E-09	0.00E+00	0.00E+00	4.73E-07	0.00E+00	0.00E+00	1.10E-05
568	ALL	739880.96	4036100.87	NonCancerChronicDerive	0.00E+00	1.11E-09	0.00E+00	0.00E+00	0.00E+00	7.67E-08	1.10E-05	0.00E+00	3.59E-09	0.00E+00	0.00E+00	4.72E-07	0.00E+00	0.00E+00	1.10E-05
569	ALL	739980.96	4036100.87	NonCancerChronicDerive	0.00E+00	1.11E-09	0.00E+00	0.00E+00	0.00E+00	7.67E-08	1.10E-05	0.00E+00	3.59E-09	0.00E+00	0.00E+00	4.72E-07	0.00E+00	0.00E+00	1.10E-05
570	ALL	740080.96	4036100.87	NonCancerChronicDerive	0.00E+00	1.11E-09	0.00E+00	0.00E+00	0.00E+00	7.67E-08	1.10E-05	0.00E+00	3.59E-09	0.00E+00	0.00E+00	4.72E-07	0.00E+00	0.00E+00	1.10E-05
571	ALL	740180.96	4036100.87	NonCancerChronicDerive	0.00E+00	1.11E-09	0.00E+00	0.00E+00	0.00E+00	7.68E-08	1.10E-05	0.00E+00	3.59E-09	0.00E+00	0.00E+00	4.72E-07	0.00E+00	0.00E+00	1.10E-05
572	ALL	740280.96	4036100.87	NonCancerChronicDerive	0.00E+00	1.11E-09	0.00E+00	0.00E+00	0.00E+00	7.68E-08	1.11E-05	0.00E+00	3.59E-09	0.00E+00	0.00E+00	4.71E-07	0.00E+00	0.00E+00	1.11E-05
573	ALL	740380.96	4036100.87	NonCancerChronicDerive	0.00E+00	1.11E-09	0.00E+00	0.00E+00	0.00E+00	7.69E-08	1.11E-05	0.00E+00	3.59E-09	0.00E+00	0.00E+00	4.71E-07	0.00E+00	0.00E+00	1.11E-05
574	ALL	740480.96	4036100.87	NonCancerChronicDerive	0.00E+00	1.11E-09	0.00E+00	0.00E+00	0.00E+00	7.70E-08	1.11E-05	0.00E+00	3.59E-09	0.00E+00	0.00E+00	4.72E-07	0.00E+00	0.00E+00	1.11E-05
575	ALL	740580.96	4036100.87	NonCancerChronicDerive	0.00E+00	1.11E-09	0.00E+00	0.00E+00	0.00E+00	7.72E-08	1.11E-05	0.00E+00	3.59E-09	0.00E+00	0.00E+00	4.72E-07	0.00E+00	0.00E+00	1.11E-05
576	ALL	740680.96	4036100.87	NonCancerChronicDerive	0.00E+00	1.11E-09	0.00E+00	0.00E+00	0.00E+00	7.73E-08	1.11E-05	0.00E+00	3.60E-09	0.00E+00	0.00E+00	4.73E-07	0.00E+00	0.00E+00	1.11E-05
577	ALL	740780.96	4036100.87	NonCancerChronicDerive	0.00E+00	1.12E-09	0.00E+00	0.00E+00	0.00E+00	7.77E-08	1.12E-05	0.00E+00	3.62E-09	0.00E+00	0.00E+00	4.75E-07	0.00E+00	0.00E+00	1.12E-05
578	ALL	740880.96	4036100.87	NonCancerChronicDerive	0.00E+00	1.12E-09	0.00E+00	0.00E+00	0.00E+00	7.79E-08	1.12E-05	0.00E+00	3.62E-09	0.00E+00	0.00E+00	4.76E-07	0.00E+00	0.00E+00	1.12E-05
579	ALL	740980.96	4036100.87	NonCancerChronicDerive	0.00E+00	1.12E-09	0.00E+00	0.00E+00	0.00E+00	7.82E-08	1.13E-05	0.00E+00	3.63E-09	0.00E+00	0.00E+00	4.77E-07	0.00E+00	0.00E+00	1.13E-05
580	ALL	741080.96	4036100.87	NonCancerChronicDerive	0.00E+00	1.12E-09	0.00E+00	0.00E+00	0.00E+00	7.84E-08	1.13E-05	0.00E+00	3.64E-09	0.00E+00	0.00E+00	4.78E-07	0.00E+00	0.00E+00	1.13E-05
581	ALL	741180.96	4036100.87	NonCancerChronicDerive	0.00E+00	1.13E-09	0.00E+00	0.00E+00	0.00E+00	7.87E-08	1.13E-05	0.00E+00	3.65E-09	0.00E+00	0.00E+00	4.79E-07	0.00E+00	0.00E+00	1.13E-05

582	ALL	741280.96	4036100.87	NonCancerChronicDerive	0.00E+00	1.13E-09	0.00E+00	0.00E+00	0.00E+00	7.91E-08	1.14E-05	0.00E+00	3.66E-09	0.00E+00	0.00E+00	4.81E-07	0.00E+00	0.00E+00	1.14E-05
583	ALL	741380.96	4036100.87	NonCancerChronicDerive	0.00E+00	1.14E-09	0.00E+00	0.00E+00	0.00E+00	7.96E-08	1.15E-05	0.00E+00	3.68E-09	0.00E+00	0.00E+00	4.84E-07	0.00E+00	0.00E+00	1.15E-05
584	ALL	741480.96	4036100.87	NonCancerChronicDerive	0.00E+00	1.14E-09	0.00E+00	0.00E+00	0.00E+00	8.02E-08	1.15E-05	0.00E+00	3.71E-09	0.00E+00	0.00E+00	4.87E-07	0.00E+00	0.00E+00	1.15E-05
585	ALL	741580.96	4036100.87	NonCancerChronicDerive	0.00E+00	1.15E-09	0.00E+00	0.00E+00	0.00E+00	8.09E-08	1.16E-05	0.00E+00	3.74E-09	0.00E+00	0.00E+00	4.91E-07	0.00E+00	0.00E+00	1.16E-05
586	ALL	741680.96	4036100.87	NonCancerChronicDerive	0.00E+00	1.17E-09	0.00E+00	0.00E+00	0.00E+00	8.16E-08	1.18E-05	0.00E+00	3.77E-09	0.00E+00	0.00E+00	4.96E-07	0.00E+00	0.00E+00	1.18E-05
587	ALL	741780.96	4036100.87	NonCancerChronicDerive	0.00E+00	1.18E-09	0.00E+00	0.00E+00	0.00E+00	8.24E-08	1.19E-05	0.00E+00	3.80E-09	0.00E+00	0.00E+00	5.00E-07	0.00E+00	0.00E+00	1.19E-05
588	ALL	741880.96	4036100.87	NonCancerChronicDerive	0.00E+00	1.18E-09	0.00E+00	0.00E+00	0.00E+00	8.31E-08	1.20E-05	0.00E+00	3.83E-09	0.00E+00	0.00E+00	5.03E-07	0.00E+00	0.00E+00	1.20E-05
589	ALL	741980.96	4036100.87	NonCancerChronicDerive	0.00E+00	1.18E-09	0.00E+00	0.00E+00	0.00E+00	8.34E-08	1.20E-05	0.00E+00	3.83E-09	0.00E+00	0.00E+00	5.04E-07	0.00E+00	0.00E+00	1.20E-05
590	ALL	738080.96	4036200.87	NonCancerChronicDerive	0.00E+00	1.08E-09	0.00E+00	0.00E+00	0.00E+00	7.43E-08	1.06E-05	0.00E+00	3.49E-09	0.00E+00	0.00E+00	4.59E-07	0.00E+00	0.00E+00	1.06E-05
591	ALL	738280.96	4036200.87	NonCancerChronicDerive	0.00E+00	1.09E-09	0.00E+00	0.00E+00	0.00E+00	7.48E-08	1.07E-05	0.00E+00	3.52E-09	0.00E+00	0.00E+00	4.62E-07	0.00E+00	0.00E+00	1.07E-05
592	ALL	738380.96	4036200.87	NonCancerChronicDerive	0.00E+00	1.09E-09	0.00E+00	0.00E+00	0.00E+00	7.50E-08	1.07E-05	0.00E+00	3.53E-09	0.00E+00	0.00E+00	4.64E-07	0.00E+00	0.00E+00	1.07E-05
593	ALL	738480.96	4036200.87	NonCancerChronicDerive	0.00E+00	1.09E-09	0.00E+00	0.00E+00	0.00E+00	7.52E-08	1.07E-05	0.00E+00	3.54E-09	0.00E+00	0.00E+00	4.66E-07	0.00E+00	0.00E+00	1.07E-05
594	ALL	738580.96	4036200.87	NonCancerChronicDerive	0.00E+00	1.10E-09	0.00E+00	0.00E+00	0.00E+00	7.53E-08	1.08E-05	0.00E+00	3.55E-09	0.00E+00	0.00E+00	4.66E-07	0.00E+00	0.00E+00	1.08E-05
595	ALL	738680.96	4036200.87	NonCancerChronicDerive	0.00E+00	1.10E-09	0.00E+00	0.00E+00	0.00E+00	7.55E-08	1.08E-05	0.00E+00	3.56E-09	0.00E+00	0.00E+00	4.68E-07	0.00E+00	0.00E+00	1.08E-05
596	ALL	738780.96	4036200.87	NonCancerChronicDerive	0.00E+00	1.10E-09	0.00E+00	0.00E+00	0.00E+00	7.57E-08	1.08E-05	0.00E+00	3.57E-09	0.00E+00	0.00E+00	4.69E-07	0.00E+00	0.00E+00	1.08E-05
597	ALL	738880.96	4036200.87	NonCancerChronicDerive	0.00E+00	1.10E-09	0.00E+00	0.00E+00	0.00E+00	7.58E-08	1.09E-05	0.00E+00	3.57E-09	0.00E+00	0.00E+00	4.70E-07	0.00E+00	0.00E+00	1.09E-05
598	ALL	738980.96	4036200.87	NonCancerChronicDerive	0.00E+00	1.11E-09	0.00E+00	0.00E+00	0.00E+00	7.59E-08	1.09E-05	0.00E+00	3.58E-09	0.00E+00	0.00E+00	4.70E-07	0.00E+00	0.00E+00	1.09E-05
599	ALL	739080.96	4036200.87	NonCancerChronicDerive	0.00E+00	1.11E-09	0.00E+00	0.00E+00	0.00E+00	7.61E-08	1.09E-05	0.00E+00	3.58E-09	0.00E+00	0.00E+00	4.71E-07	0.00E+00	0.00E+00	1.09E-05
600	ALL	739180.96	4036200.87	NonCancerChronicDerive	0.00E+00	1.11E-09	0.00E+00	0.00E+00	0.00E+00	7.62E-08	1.09E-05	0.00E+00	3.59E-09	0.00E+00	0.00E+00	4.72E-07	0.00E+00	0.00E+00	1.09E-05
601	ALL	739280.96	4036200.87	NonCancerChronicDerive	0.00E+00	1.11E-09	0.00E+00	0.00E+00	0.00E+00	7.63E-08	1.09E-05	0.00E+00	3.59E-09	0.00E+00	0.00E+00	4.72E-07	0.00E+00	0.00E+00	1.09E-05
602	ALL	739380.96	4036200.87	NonCancerChronicDerive	0.00E+00	1.11E-09	0.00E+00	0.00E+00	0.00E+00	7.63E-08	1.10E-05	0.00E+00	3.59E-09	0.00E+00	0.00E+00	4.72E-07	0.00E+00	0.00E+00	1.10E-05
603	ALL	739480.96	4036200.87	NonCancerChronicDerive	0.00E+00	1.11E-09	0.00E+00	0.00E+00	0.00E+00	7.63E-08	1.10E-05	0.00E+00	3.58E-09	0.00E+00	0.00E+00	4.71E-07	0.00E+00	0.00E+00	1.10E-05
604	ALL	739580.96	4036200.87	NonCancerChronicDerive	0.00E+00	1.11E-09	0.00E+00	0.00E+00	0.00E+00	7.63E-08	1.10E-05	0.00E+00	3.58E-09	0.00E+00	0.00E+00	4.71E-07	0.00E+00	0.00E+00	1.10E-05
605	ALL	739680.96	4036200.87	NonCancerChronicDerive	0.00E+00	1.11E-09	0.00E+00	0.00E+00	0.00E+00	7.63E-08	1.10E-05	0.00E+00	3.58E-09	0.00E+00	0.00E+00	4.71E-07	0.00E+00	0.00E+00	1.10E-05
606	ALL	739780.96	4036200.87	NonCancerChronicDerive	0.00E+00	1.10E-09	0.00E+00	0.00E+00	0.00E+00	7.63E-08	1.10E-05	0.00E+00	3.58E-09	0.00E+00	0.00E+00	4.70E-07	0.00E+00	0.00E+00	1.10E-05
607	ALL	739880.96	4036200.87	NonCancerChronicDerive	0.00E+00	1.10E-09	0.00E+00	0.00E+00	0.00E+00	7.63E-08	1.10E-05	0.00E+00	3.57E-09	0.00E+00	0.00E+00	4.70E-07	0.00E+00	0.00E+00	1.10E-05
608	ALL	739980.96	4036200.87	NonCancerChronicDerive	0.00E+00	1.10E-09	0.00E+00	0.00E+00	0.00E+00	7.64E-08	1.10E-05	0.00E+00	3.57E-09	0.00E+00	0.00E+00	4.70E-07	0.00E+00	0.00E+00	1.10E-05
609	ALL	740080.96	4036200.87	NonCancerChronicDerive	0.00E+00	1.10E-09	0.00E+00	0.00E+00	0.00E+00	7.64E-08	1.10E-05	0.00E+00	3.57E-09	0.00E+00	0.00E+00	4.70E-07	0.00E+00	0.00E+00	1.10E-05
610	ALL	740180.96	4036200.87	NonCancerChronicDerive	0.00E+00	1.10E-09	0.00E+00	0.00E+00	0.00E+00	7.65E-08	1.10E-05	0.00E+00	3.57E-09	0.00E+00	0.00E+00	4.70E-07	0.00E+00	0.00E+00	1.10E-05
611	ALL	740280.96	4036200.87	NonCancerChronicDerive	0.00E+00	1.10E-09	0.00E+00	0.00E+00	0.00E+00	7.66E-08	1.10E-05	0.00E+00	3.58E-09	0.00E+00	0.00E+00	4.70E-07	0.00E+00	0.00E+00	1.10E-05
612	ALL	740380.96	4036200.87	NonCancerChronicDerive	0.00E+00	1.11E-09	0.00E+00	0.00E+00	0.00E+00	7.67E-08	1.10E-05	0.00E+00	3.58E-09	0.00E+00	0.00E+00	4.70E-07	0.00E+00	0.00E+00	1.10E-05
613	ALL	740480.96	4036200.87	NonCancerChronicDerive	0.00E+00	1.11E-09	0.00E+00	0.00E+00	0.00E+00	7.68E-08	1.11E-05	0.00E+00	3.58E-09	0.00E+00	0.00E+00	4.70E-07	0.00E+00	0.00E+00	1.11E-05
614	ALL	740580.96	4036200.87	NonCancerChronicDerive	0.00E+00	1.11E-09	0.00E+00	0.00E+00	0.00E+00	7.70E-08	1.11E-05	0.00E+00	3.59E-09	0.00E+00	0.00E+00	4.71E-07	0.00E+00	0.00E+00	1.11E-05
615	ALL	740680.96	4036200.87	NonCancerChronicDerive	0.00E+00	1.11E-09	0.00E+00	0.00E+00	0.00E+00	7.73E-08	1.11E-05	0.00E+00	3.60E-09	0.00E+00	0.00E+00	4.73E-07	0.00E+00	0.00E+00	1.11E-05
616	ALL	740780.96	4036200.87	NonCancerChronicDerive	0.00E+00	1.11E-09	0.00E+00	0.00E+00	0.00E+00	7.76E-08	1.12E-05	0.00E+00	3.60E-09	0.00E+00	0.00E+00	4.74E-07	0.00E+00	0.00E+00	1.12E-05
617	ALL	740880.96	4036200.87	NonCancerChronicDerive	0.00E+00	1.12E-09	0.00E+00	0.00E+00	0.00E+00	7.79E-08	1.12E-05	0.00E+00	3.62E-09	0.00E+00	0.00E+00	4.75E-07	0.00E+00	0.00E+00	1.12E-05
618	ALL	740980.96	4036200.87	NonCancerChronicDerive	0.00E+00	1.12E-09	0.00E+00	0.00E+00	0.00E+00	7.81E-08	1.12E-05	0.00E+00	3.62E-09	0.00E+00	0.00E+00	4.76E-07	0.00E+00	0.00E+00	1.12E-05
619	ALL	741080.96	4036200.87	NonCancerChronicDerive	0.00E+00	1.12E-09	0.00E+00	0.00E+00	0.00E+00	7.83E-08	1.13E-05	0.00E+00	3.63E-09	0.00E+00	0.00E+00	4.77E-07	0.00E+00	0.00E+00	1.13E-05
620	ALL	741180.96	4036200.87	NonCancerChronicDerive	0.00E+00	1.12E-09	0.00E+00	0.00E+00	0.00E+00	7.86E-08	1.13E-05	0.00E+00	3.64E-09	0.00E+00	0.00E+00	4.78E-07	0.00E+00	0.00E+00	1.13E-05
621	ALL	741280.96	4036200.87	NonCancerChronicDerive	0.00E+00	1.13E-09	0.00E+00	0.00E+00	0.00E+00	7.90E-08	1.14E-05	0.00E+00	3.65E-09	0.00E+00	0.00E+00	4.80E-07	0.00E+00	0.00E+00	1.14E-05
622	ALL	741380.96	4036200.87	NonCancerChronicDerive	0.00E+00	1.14E-09	0.00E+00	0.00E+00	0.00E+00	7.95E-08	1.14E-05	0.00E+00	3.68E-09	0.00E+00	0.00E+00	4.83E-07	0.00E+00	0.00E+00	1.14E-05
623	ALL	741480.96	4036200.87	NonCancerChronicDerive	0.00E+00	1.14E-09	0.00E+00	0.00E+00	0.00E+00	8.01E-08	1.15E-05	0.00E+00	3.70E-09	0.00E+00	0.00E+00	4.87E-07	0.00E+00	0.00E+00	1.15E-05
624	ALL	741580.96	4036200.87	NonCancerChronicDerive	0.00E+00	1.15E-09	0.00E+00	0.00E+00	0.00E+00	8.08E-08	1.16E-05	0.00E+00	3.73E-09	0.00E+00	0.00E+00	4.91E-07	0.00E+00	0.00E+00	1.16E-05
625	ALL	741680.96	4036200.87	NonCancerChronicDerive	0.00E+00	1.16E-09	0.00E+00	0.00E+00	0.00E+00	8.16E-08	1.17E-05	0.00E+00	3.77E-09	0.00E+00	0.00E+00	4.95E-07	0.00E+00	0.00E+00	1.17E-05
626	ALL	741780.96	4036200.87	NonCancerChronicDerive	0.00E+00	1.17E-09	0.00E+00	0.00E+00	0.00E+00	8.23E-08	1.18E-05	0.00E+00	3.80E-09	0.00E+00	0.00E+00	5.00E-07	0.00E+00	0.00E+00	1.18E-05
627	ALL	741880.96	4036200.87	NonCancerChronicDerive	0.00E+00	1.18E-09	0.00E+00	0.00E+00	0.00E+00	8.29E-08	1.19E-05	0.00E+00	3.82E-09	0.00E+00	0.00E+00	5.02E-07	0.00E+00	0.00E+00	1.19E-05
628	ALL	741980.96	4036200.87	NonCancerChronicDerive	0.00E+00	1.18E-09	0.00E+00	0.00E+00	0.00E+00	8.32E-08	1.20E-05	0.00E+00	3.82E-09	0.00E+00	0.00E+00	5.02E-07	0.00E+00	0.00E+00	1.20E-05
629	ALL	742080.96	4036200.87	NonCancerChronicDerive	0.00E+00	1.19E-09	0.00E+00	0.00E+00	0.00E+00	8.41E-08	1.21E-05	0.00E+00	3.86E-09	0.00E+00	0.00E+00	5.08E-07	0.00E+00	0.00E+00	1.21E-05
630	ALL	738080.96	4036300.87	NonCancerChronicDerive	0.00E+00	1.06E-09	0.00E+00	0.00E+00	0.00E+00	7.32E-08	1.04E-05	0.00E+00	3.44E-09	0.00E+00	0.00E+00	4.52E-07	0.00E+00	0.00E+00	1.04E-05
631	ALL	738180.96	4036300.87	NonCancerChronicDerive	0.00E+00	1.07E-09	0.00E+00	0.00E+00	0.00E+00	7.34E-08	1.05E-05	0.00E+00	3.45E-09	0.00E+00	0.00E+00	4.53E-07	0.00E+00	0.00E+00	1.05E-05
632	ALL	738380.96	4036300.87	NonCancerChronicDerive	0.00E+00	1.07E-09	0.00E+00	0.00E+00	0.00E+00	7.39E-08	1.05E-05	0.00E+00	3.47E-09	0.00E+00	0.00E+00	4.57E-07	0.00E+00	0.00E+00	1.05E-05
633	ALL	738480.96	4036300.87	NonCancerChronicDerive	0.00E+00	1.08E-09	0.00E+00	0.00E+00	0.00E+00	7.41E-08	1.06E-05	0.00E+00	3.49E-09	0.00E+00	0.00E+00	4.58E-07	0.00E+00	0.00E+00	1.06E-05
634	ALL	738580.96	4036300.87	NonCancerChronicDerive	0.00E+00	1.08E-09	0.00E+00	0.00E+00	0.00E+00	7.43E-08	1.06E-05	0.00E+00	3.50E-09	0.00E+00	0.00E+00	4.60E-07	0.00E+00	0.00E+00	1.06E-05

635	ALL	738680.96	4036300.87	NonCancerChronicDerive	0.00E+00	1.08E-09	0.00E+00	0.00E+00	0.00E+00	7.46E-08	1.07E-05	0.00E+00	3.51E-09	0.00E+00	0.00E+00	4.61E-07	0.00E+00	0.00E+00	1.07E-05
636	ALL	738780.96	4036300.87	NonCancerChronicDerive	0.00E+00	1.09E-09	0.00E+00	0.00E+00	0.00E+00	7.48E-08	1.07E-05	0.00E+00	3.52E-09	0.00E+00	0.00E+00	4.63E-07	0.00E+00	0.00E+00	1.07E-05
637	ALL	738880.96	4036300.87	NonCancerChronicDerive	0.00E+00	1.09E-09	0.00E+00	0.00E+00	0.00E+00	7.50E-08	1.07E-05	0.00E+00	3.53E-09	0.00E+00	0.00E+00	4.64E-07	0.00E+00	0.00E+00	1.07E-05
638	ALL	738980.96	4036300.87	NonCancerChronicDerive	0.00E+00	1.09E-09	0.00E+00	0.00E+00	0.00E+00	7.51E-08	1.08E-05	0.00E+00	3.54E-09	0.00E+00	0.00E+00	4.65E-07	0.00E+00	0.00E+00	1.08E-05
639	ALL	739080.96	4036300.87	NonCancerChronicDerive	0.00E+00	1.10E-09	0.00E+00	0.00E+00	0.00E+00	7.53E-08	1.08E-05	0.00E+00	3.54E-09	0.00E+00	0.00E+00	4.66E-07	0.00E+00	0.00E+00	1.08E-05
640	ALL	739180.96	4036300.87	NonCancerChronicDerive	0.00E+00	1.10E-09	0.00E+00	0.00E+00	0.00E+00	7.54E-08	1.08E-05	0.00E+00	3.55E-09	0.00E+00	0.00E+00	4.67E-07	0.00E+00	0.00E+00	1.08E-05
641	ALL	739280.96	4036300.87	NonCancerChronicDerive	0.00E+00	1.10E-09	0.00E+00	0.00E+00	0.00E+00	7.56E-08	1.08E-05	0.00E+00	3.55E-09	0.00E+00	0.00E+00	4.67E-07	0.00E+00	0.00E+00	1.08E-05
642	ALL	739380.96	4036300.87	NonCancerChronicDerive	0.00E+00	1.10E-09	0.00E+00	0.00E+00	0.00E+00	7.57E-08	1.09E-05	0.00E+00	3.56E-09	0.00E+00	0.00E+00	4.68E-07	0.00E+00	0.00E+00	1.09E-05
643	ALL	739480.96	4036300.87	NonCancerChronicDerive	0.00E+00	1.10E-09	0.00E+00	0.00E+00	0.00E+00	7.57E-08	1.09E-05	0.00E+00	3.55E-09	0.00E+00	0.00E+00	4.67E-07	0.00E+00	0.00E+00	1.09E-05
644	ALL	739580.96	4036300.87	NonCancerChronicDerive	0.00E+00	1.10E-09	0.00E+00	0.00E+00	0.00E+00	7.58E-08	1.09E-05	0.00E+00	3.56E-09	0.00E+00	0.00E+00	4.67E-07	0.00E+00	0.00E+00	1.09E-05
645	ALL	739680.96	4036300.87	NonCancerChronicDerive	0.00E+00	1.10E-09	0.00E+00	0.00E+00	0.00E+00	7.58E-08	1.09E-05	0.00E+00	3.56E-09	0.00E+00	0.00E+00	4.68E-07	0.00E+00	0.00E+00	1.09E-05
646	ALL	739780.96	4036300.87	NonCancerChronicDerive	0.00E+00	1.10E-09	0.00E+00	0.00E+00	0.00E+00	7.59E-08	1.09E-05	0.00E+00	3.55E-09	0.00E+00	0.00E+00	4.67E-07	0.00E+00	0.00E+00	1.09E-05
647	ALL	739880.96	4036300.87	NonCancerChronicDerive	0.00E+00	1.10E-09	0.00E+00	0.00E+00	0.00E+00	7.60E-08	1.09E-05	0.00E+00	3.56E-09	0.00E+00	0.00E+00	4.67E-07	0.00E+00	0.00E+00	1.09E-05
648	ALL	739980.96	4036300.87	NonCancerChronicDerive	0.00E+00	1.10E-09	0.00E+00	0.00E+00	0.00E+00	7.61E-08	1.09E-05	0.00E+00	3.56E-09	0.00E+00	0.00E+00	4.68E-07	0.00E+00	0.00E+00	1.09E-05
649	ALL	740080.96	4036300.87	NonCancerChronicDerive	0.00E+00	1.10E-09	0.00E+00	0.00E+00	0.00E+00	7.62E-08	1.10E-05	0.00E+00	3.56E-09	0.00E+00	0.00E+00	4.68E-07	0.00E+00	0.00E+00	1.10E-05
650	ALL	740180.96	4036300.87	NonCancerChronicDerive	0.00E+00	1.10E-09	0.00E+00	0.00E+00	0.00E+00	7.64E-08	1.10E-05	0.00E+00	3.56E-09	0.00E+00	0.00E+00	4.69E-07	0.00E+00	0.00E+00	1.10E-05
651	ALL	740280.96	4036300.87	NonCancerChronicDerive	0.00E+00	1.10E-09	0.00E+00	0.00E+00	0.00E+00	7.65E-08	1.10E-05	0.00E+00	3.57E-09	0.00E+00	0.00E+00	4.69E-07	0.00E+00	0.00E+00	1.10E-05
652	ALL	740380.96	4036300.87	NonCancerChronicDerive	0.00E+00	1.10E-09	0.00E+00	0.00E+00	0.00E+00	7.67E-08	1.10E-05	0.00E+00	3.57E-09	0.00E+00	0.00E+00	4.70E-07	0.00E+00	0.00E+00	1.10E-05
653	ALL	740480.96	4036300.87	NonCancerChronicDerive	0.00E+00	1.11E-09	0.00E+00	0.00E+00	0.00E+00	7.69E-08	1.11E-05	0.00E+00	3.58E-09	0.00E+00	0.00E+00	4.71E-07	0.00E+00	0.00E+00	1.11E-05
654	ALL	740580.96	4036300.87	NonCancerChronicDerive	0.00E+00	1.11E-09	0.00E+00	0.00E+00	0.00E+00	7.70E-08	1.11E-05	0.00E+00	3.58E-09	0.00E+00	0.00E+00	4.71E-07	0.00E+00	0.00E+00	1.11E-05
655	ALL	740680.96	4036300.87	NonCancerChronicDerive	0.00E+00	1.11E-09	0.00E+00	0.00E+00	0.00E+00	7.73E-08	1.11E-05	0.00E+00	3.59E-09	0.00E+00	0.00E+00	4.72E-07	0.00E+00	0.00E+00	1.11E-05
656	ALL	740780.96	4036300.87	NonCancerChronicDerive	0.00E+00	1.11E-09	0.00E+00	0.00E+00	0.00E+00	7.76E-08	1.12E-05	0.00E+00	3.61E-09	0.00E+00	0.00E+00	4.74E-07	0.00E+00	0.00E+00	1.12E-05
657	ALL	740880.96	4036300.87	NonCancerChronicDerive	0.00E+00	1.11E-09	0.00E+00	0.00E+00	0.00E+00	7.78E-08	1.12E-05	0.00E+00	3.61E-09	0.00E+00	0.00E+00	4.74E-07	0.00E+00	0.00E+00	1.12E-05
658	ALL	740980.96	4036300.87	NonCancerChronicDerive	0.00E+00	1.12E-09	0.00E+00	0.00E+00	0.00E+00	7.81E-08	1.12E-05	0.00E+00	3.62E-09	0.00E+00	0.00E+00	4.76E-07	0.00E+00	0.00E+00	1.12E-05
659	ALL	741080.96	4036300.87	NonCancerChronicDerive	0.00E+00	1.12E-09	0.00E+00	0.00E+00	0.00E+00	7.84E-08	1.13E-05	0.00E+00	3.63E-09	0.00E+00	0.00E+00	4.77E-07	0.00E+00	0.00E+00	1.13E-05
660	ALL	741180.96	4036300.87	NonCancerChronicDerive	0.00E+00	1.13E-09	0.00E+00	0.00E+00	0.00E+00	7.88E-08	1.13E-05	0.00E+00	3.64E-09	0.00E+00	0.00E+00	4.79E-07	0.00E+00	0.00E+00	1.13E-05
661	ALL	741280.96	4036300.87	NonCancerChronicDerive	0.00E+00	1.13E-09	0.00E+00	0.00E+00	0.00E+00	7.92E-08	1.14E-05	0.00E+00	3.66E-09	0.00E+00	0.00E+00	4.81E-07	0.00E+00	0.00E+00	1.14E-05
662	ALL	741380.96	4036300.87	NonCancerChronicDerive	0.00E+00	1.14E-09	0.00E+00	0.00E+00	0.00E+00	7.97E-08	1.15E-05	0.00E+00	3.68E-09	0.00E+00	0.00E+00	4.84E-07	0.00E+00	0.00E+00	1.15E-05
663	ALL	741480.96	4036300.87	NonCancerChronicDerive	0.00E+00	1.15E-09	0.00E+00	0.00E+00	0.00E+00	8.03E-08	1.15E-05	0.00E+00	3.71E-09	0.00E+00	0.00E+00	4.87E-07	0.00E+00	0.00E+00	1.15E-05
664	ALL	741580.96	4036300.87	NonCancerChronicDerive	0.00E+00	1.15E-09	0.00E+00	0.00E+00	0.00E+00	8.10E-08	1.16E-05	0.00E+00	3.74E-09	0.00E+00	0.00E+00	4.91E-07	0.00E+00	0.00E+00	1.16E-05
665	ALL	741680.96	4036300.87	NonCancerChronicDerive	0.00E+00	1.16E-09	0.00E+00	0.00E+00	0.00E+00	8.17E-08	1.17E-05	0.00E+00	3.77E-09	0.00E+00	0.00E+00	4.96E-07	0.00E+00	0.00E+00	1.17E-05
666	ALL	741780.96	4036300.87	NonCancerChronicDerive	0.00E+00	1.17E-09	0.00E+00	0.00E+00	0.00E+00	8.24E-08	1.19E-05	0.00E+00	3.80E-09	0.00E+00	0.00E+00	5.00E-07	0.00E+00	0.00E+00	1.19E-05
667	ALL	741880.96	4036300.87	NonCancerChronicDerive	0.00E+00	1.18E-09	0.00E+00	0.00E+00	0.00E+00	8.29E-08	1.19E-05	0.00E+00	3.81E-09	0.00E+00	0.00E+00	5.01E-07	0.00E+00	0.00E+00	1.19E-05
668	ALL	741980.96	4036300.87	NonCancerChronicDerive	0.00E+00	1.18E-09	0.00E+00	0.00E+00	0.00E+00	8.33E-08	1.20E-05	0.00E+00	3.82E-09	0.00E+00	0.00E+00	5.02E-07	0.00E+00	0.00E+00	1.20E-05
669	ALL	742080.96	4036300.87	NonCancerChronicDerive	0.00E+00	1.19E-09	0.00E+00	0.00E+00	0.00E+00	8.42E-08	1.21E-05	0.00E+00	3.86E-09	0.00E+00	0.00E+00	5.08E-07	0.00E+00	0.00E+00	1.21E-05
670	ALL	742180.96	4036300.87	NonCancerChronicDerive	0.00E+00	1.21E-09	0.00E+00	0.00E+00	0.00E+00	8.52E-08	1.23E-05	0.00E+00	3.91E-09	0.00E+00	0.00E+00	5.13E-07	0.00E+00	0.00E+00	1.23E-05
671	ALL	742280.96	4036300.87	NonCancerChronicDerive	0.00E+00	1.22E-09	0.00E+00	0.00E+00	0.00E+00	8.63E-08	1.24E-05	0.00E+00	3.95E-09	0.00E+00	0.00E+00	5.20E-07	0.00E+00	0.00E+00	1.24E-05
672	ALL	742380.96	4036300.87	NonCancerChronicDerive	0.00E+00	1.24E-09	0.00E+00	0.00E+00	0.00E+00	8.75E-08	1.26E-05	0.00E+00	4.01E-09	0.00E+00	0.00E+00	5.27E-07	0.00E+00	0.00E+00	1.26E-05
673	ALL	742480.96	4036300.87	NonCancerChronicDerive	0.00E+00	1.25E-09	0.00E+00	0.00E+00	0.00E+00	8.87E-08	1.28E-05	0.00E+00	4.06E-09	0.00E+00	0.00E+00	5.34E-07	0.00E+00	0.00E+00	1.28E-05
674	ALL	742580.96	4036300.87	NonCancerChronicDerive	0.00E+00	1.27E-09	0.00E+00	0.00E+00	0.00E+00	9.00E-08	1.30E-05	0.00E+00	4.12E-09	0.00E+00	0.00E+00	5.41E-07	0.00E+00	0.00E+00	1.30E-05
675	ALL	742680.96	4036300.87	NonCancerChronicDerive	0.00E+00	1.29E-09	0.00E+00	0.00E+00	0.00E+00	9.14E-08	1.32E-05	0.00E+00	4.17E-09	0.00E+00	0.00E+00	5.49E-07	0.00E+00	0.00E+00	1.32E-05
676	ALL	742780.96	4036300.87	NonCancerChronicDerive	0.00E+00	1.31E-09	0.00E+00	0.00E+00	0.00E+00	9.28E-08	1.34E-05	0.00E+00	4.24E-09	0.00E+00	0.00E+00	5.57E-07	0.00E+00	0.00E+00	1.34E-05
677	ALL	742880.96	4036300.87	NonCancerChronicDerive	0.00E+00	1.33E-09	0.00E+00	0.00E+00	0.00E+00	9.44E-08	1.36E-05	0.00E+00	4.30E-09	0.00E+00	0.00E+00	5.66E-07	0.00E+00	0.00E+00	1.36E-05
678	ALL	742980.96	4036300.87	NonCancerChronicDerive	0.00E+00	1.35E-09	0.00E+00	0.00E+00	0.00E+00	9.60E-08	1.39E-05	0.00E+00	4.37E-09	0.00E+00	0.00E+00	5.75E-07	0.00E+00	0.00E+00	1.39E-05
679	ALL	743080.96	4036300.87	NonCancerChronicDerive	0.00E+00	1.37E-09	0.00E+00	0.00E+00	0.00E+00	9.77E-08	1.41E-05	0.00E+00	4.45E-09	0.00E+00	0.00E+00	5.84E-07	0.00E+00	0.00E+00	1.41E-05
680	ALL	743180.96	4036300.87	NonCancerChronicDerive	0.00E+00	1.40E-09	0.00E+00	0.00E+00	0.00E+00	9.94E-08	1.44E-05	0.00E+00	4.52E-09	0.00E+00	0.00E+00	5.94E-07	0.00E+00	0.00E+00	1.44E-05
681	ALL	743280.96	4036300.87	NonCancerChronicDerive	0.00E+00	1.42E-09	0.00E+00	0.00E+00	0.00E+00	1.01E-07	1.46E-05	0.00E+00	4.60E-09	0.00E+00	0.00E+00	6.04E-07	0.00E+00	0.00E+00	1.46E-05
682	ALL	743380.96	4036300.87	NonCancerChronicDerive	0.00E+00	1.44E-09	0.00E+00	0.00E+00	0.00E+00	1.03E-07	1.49E-05	0.00E+00	4.68E-09	0.00E+00	0.00E+00	6.15E-07	0.00E+00	0.00E+00	1.49E-05
683	ALL	743480.96	4036300.87	NonCancerChronicDerive	0.00E+00	1.47E-09	0.00E+00	0.00E+00	0.00E+00	1.05E-07	1.52E-05	0.00E+00	4.76E-09	0.00E+00	0.00E+00	6.25E-07	0.00E+00	0.00E+00	1.52E-05
684	ALL	743580.96	4036300.87	NonCancerChronicDerive	0.00E+00	1.50E-09	0.00E+00	0.00E+00	0.00E+00	1.07E-07	1.55E-05	0.00E+00	4.84E-09	0.00E+00	0.00E+00	6.36E-07	0.00E+00	0.00E+00	1.55E-05
685	ALL	743680.96	4036300.87	NonCancerChronicDerive	0.00E+00	1.52E-09	0.00E+00	0.00E+00	0.00E+00	1.09E-07	1.58E-05	0.00E+00	4.93E-09	0.00E+00	0.00E+00	6.47E-07	0.00E+00	0.00E+00	1.58E-05
686	ALL	743780.96	4036300.87	NonCancerChronicDerive	0.00E+00	1.55E-09	0.00E+00	0.00E+00	0.00E+00	1.11E-07	1.61E-05	0.00E+00	5.01E-09	0.00E+00	0.00E+00	6.59E-07	0.00E+00	0.00E+00	1.61E-05
687	ALL	743880.96	4036300.87	NonCancerChronicDerive	0.00E+00	1.58E-09	0.00E+00	0.00E+00	0.00E+00	1.14E-07	1.64E-05	0.00E+00	5.10E-09	0.00E+00	0.00E+00	6.71E-07	0.00E+00	0.00E+00	1.64E-05

688	ALL		743980.96	4036300.87	NonCancerChronicDerive	0.00E+00	1.61E-09	0.00E+00	0.00E+00	0.00E+00	1.16E-07	1.67E-05	0.00E+00	5.20E-09	0.00E+00	0.00E+00	6.83E-07	0.00E+00	0.00E+00	1.67E-05
689	ALL		744080.96	4036300.87	NonCancerChronicDerive	0.00E+00	1.64E-09	0.00E+00	0.00E+00	0.00E+00	1.19E-07	1.71E-05	0.00E+00	5.29E-09	0.00E+00	0.00E+00	6.96E-07	0.00E+00	0.00E+00	1.71E-05
690	ALL		744180.96	4036300.87	NonCancerChronicDerive	0.00E+00	1.67E-09	0.00E+00	0.00E+00	0.00E+00	1.21E-07	1.75E-05	0.00E+00	5.39E-09	0.00E+00	0.00E+00	7.09E-07	0.00E+00	0.00E+00	1.75E-05
691	ALL		744280.96	4036300.87	NonCancerChronicDerive	0.00E+00	1.70E-09	0.00E+00	0.00E+00	0.00E+00	1.24E-07	1.78E-05	0.00E+00	5.50E-09	0.00E+00	0.00E+00	7.23E-07	0.00E+00	0.00E+00	1.78E-05
692	ALL		744380.96	4036300.87	NonCancerChronicDerive	0.00E+00	1.73E-09	0.00E+00	0.00E+00	0.00E+00	1.27E-07	1.82E-05	0.00E+00	5.61E-09	0.00E+00	0.00E+00	7.37E-07	0.00E+00	0.00E+00	1.82E-05
693	ALL		744480.96	4036300.87	NonCancerChronicDerive	0.00E+00	1.77E-09	0.00E+00	0.00E+00	0.00E+00	1.30E-07	1.87E-05	0.00E+00	5.73E-09	0.00E+00	0.00E+00	7.53E-07	0.00E+00	0.00E+00	1.87E-05
694	ALL		738080.96	4036400.87	NonCancerChronicDerive	0.00E+00	1.04E-09	0.00E+00	0.00E+00	0.00E+00	7.21E-08	1.03E-05	0.00E+00	3.38E-09	0.00E+00	0.00E+00	4.44E-07	0.00E+00	0.00E+00	1.03E-05
695	ALL		738180.96	4036400.87	NonCancerChronicDerive	0.00E+00	1.05E-09	0.00E+00	0.00E+00	0.00E+00	7.23E-08	1.03E-05	0.00E+00	3.39E-09	0.00E+00	0.00E+00	4.46E-07	0.00E+00	0.00E+00	1.03E-05
696	ALL		738280.96	4036400.87	NonCancerChronicDerive	0.00E+00	1.05E-09	0.00E+00	0.00E+00	0.00E+00	7.26E-08	1.04E-05	0.00E+00	3.41E-09	0.00E+00	0.00E+00	4.48E-07	0.00E+00	0.00E+00	1.04E-05
697	ALL		738480.96	4036400.87	NonCancerChronicDerive	0.00E+00	1.06E-09	0.00E+00	0.00E+00	0.00E+00	7.31E-08	1.04E-05	0.00E+00	3.43E-09	0.00E+00	0.00E+00	4.51E-07	0.00E+00	0.00E+00	1.04E-05
698	ALL		738580.96	4036400.87	NonCancerChronicDerive	0.00E+00	1.06E-09	0.00E+00	0.00E+00	0.00E+00	7.33E-08	1.05E-05	0.00E+00	3.45E-09	0.00E+00	0.00E+00	4.53E-07	0.00E+00	0.00E+00	1.05E-05
699	ALL		738680.96	4036400.87	NonCancerChronicDerive	0.00E+00	1.07E-09	0.00E+00	0.00E+00	0.00E+00	7.36E-08	1.05E-05	0.00E+00	3.46E-09	0.00E+00	0.00E+00	4.55E-07	0.00E+00	0.00E+00	1.05E-05
700	ALL		739380.96	4036400.87	NonCancerChronicDerive	0.00E+00	1.09E-09	0.00E+00	0.00E+00	0.00E+00	7.50E-08	1.08E-05	0.00E+00	3.52E-09	0.00E+00	0.00E+00	4.63E-07	0.00E+00	0.00E+00	1.08E-05
701	ALL		739480.96	4036400.87	NonCancerChronicDerive	0.00E+00	1.09E-09	0.00E+00	0.00E+00	0.00E+00	7.50E-08	1.08E-05	0.00E+00	3.52E-09	0.00E+00	0.00E+00	4.63E-07	0.00E+00	0.00E+00	1.08E-05
702	ALL		739580.96	4036400.87	NonCancerChronicDerive	0.00E+00	1.09E-09	0.00E+00	0.00E+00	0.00E+00	7.52E-08	1.08E-05	0.00E+00	3.52E-09	0.00E+00	0.00E+00	4.63E-07	0.00E+00	0.00E+00	1.08E-05
703	ALL		739680.96	4036400.87	NonCancerChronicDerive	0.00E+00	1.09E-09	0.00E+00	0.00E+00	0.00E+00	7.53E-08	1.08E-05	0.00E+00	3.53E-09	0.00E+00	0.00E+00	4.64E-07	0.00E+00	0.00E+00	1.08E-05
704	ALL		739780.96	4036400.87	NonCancerChronicDerive	0.00E+00	1.09E-09	0.00E+00	0.00E+00	0.00E+00	7.54E-08	1.08E-05	0.00E+00	3.53E-09	0.00E+00	0.00E+00	4.64E-07	0.00E+00	0.00E+00	1.08E-05
705	ALL		739880.96	4036400.87	NonCancerChronicDerive	0.00E+00	1.09E-09	0.00E+00	0.00E+00	0.00E+00	7.56E-08	1.09E-05	0.00E+00	3.54E-09	0.00E+00	0.00E+00	4.65E-07	0.00E+00	0.00E+00	1.09E-05
706	ALL		739980.96	4036400.87	NonCancerChronicDerive	0.00E+00	1.09E-09	0.00E+00	0.00E+00	0.00E+00	7.58E-08	1.09E-05	0.00E+00	3.54E-09	0.00E+00	0.00E+00	4.66E-07	0.00E+00	0.00E+00	1.09E-05
707	ALL		740080.96	4036400.87	NonCancerChronicDerive	0.00E+00	1.10E-09	0.00E+00	0.00E+00	0.00E+00	7.60E-08	1.09E-05	0.00E+00	3.55E-09	0.00E+00	0.00E+00	4.66E-07	0.00E+00	0.00E+00	1.09E-05
708	ALL		740180.96	4036400.87	NonCancerChronicDerive	0.00E+00	1.10E-09	0.00E+00	0.00E+00	0.00E+00	7.63E-08	1.10E-05	0.00E+00	3.56E-09	0.00E+00	0.00E+00	4.68E-07	0.00E+00	0.00E+00	1.10E-05
709	ALL		740280.96	4036400.87	NonCancerChronicDerive	0.00E+00	1.10E-09	0.00E+00	0.00E+00	0.00E+00	7.64E-08	1.10E-05	0.00E+00	3.56E-09	0.00E+00	0.00E+00	4.68E-07	0.00E+00	0.00E+00	1.10E-05
710	ALL		740380.96	4036400.87	NonCancerChronicDerive	0.00E+00	1.10E-09	0.00E+00	0.00E+00	0.00E+00	7.66E-08	1.10E-05	0.00E+00	3.57E-09	0.00E+00	0.00E+00	4.69E-07	0.00E+00	0.00E+00	1.10E-05
711	ALL		740480.96	4036400.87	NonCancerChronicDerive	0.00E+00	1.11E-09	0.00E+00	0.00E+00	0.00E+00	7.69E-08	1.11E-05	0.00E+00	3.58E-09	0.00E+00	0.00E+00	4.70E-07	0.00E+00	0.00E+00	1.11E-05
712	ALL		740580.96	4036400.87	NonCancerChronicDerive	0.00E+00	1.11E-09	0.00E+00	0.00E+00	0.00E+00	7.71E-08	1.11E-05	0.00E+00	3.58E-09	0.00E+00	0.00E+00	4.71E-07	0.00E+00	0.00E+00	1.11E-05
713	ALL		740680.96	4036400.87	NonCancerChronicDerive	0.00E+00	1.11E-09	0.00E+00	0.00E+00	0.00E+00	7.74E-08	1.11E-05	0.00E+00	3.59E-09	0.00E+00	0.00E+00	4.73E-07	0.00E+00	0.00E+00	1.11E-05
714	ALL		740780.96	4036400.87	NonCancerChronicDerive	0.00E+00	1.12E-09	0.00E+00	0.00E+00	0.00E+00	7.78E-08	1.12E-05	0.00E+00	3.61E-09	0.00E+00	0.00E+00	4.75E-07	0.00E+00	0.00E+00	1.12E-05
715	ALL		740880.96	4036400.87	NonCancerChronicDerive	0.00E+00	1.12E-09	0.00E+00	0.00E+00	0.00E+00	7.82E-08	1.12E-05	0.00E+00	3.63E-09	0.00E+00	0.00E+00	4.77E-07	0.00E+00	0.00E+00	1.12E-05
716	ALL		740980.96	4036400.87	NonCancerChronicDerive	0.00E+00	1.12E-09	0.00E+00	0.00E+00	0.00E+00	7.83E-08	1.13E-05	0.00E+00	3.63E-09	0.00E+00	0.00E+00	4.77E-07	0.00E+00	0.00E+00	1.13E-05
717	ALL		741080.96	4036400.87	NonCancerChronicDerive	0.00E+00	1.12E-09	0.00E+00	0.00E+00	0.00E+00	7.87E-08	1.13E-05	0.00E+00	3.64E-09	0.00E+00	0.00E+00	4.79E-07	0.00E+00	0.00E+00	1.13E-05
718	ALL		741180.96	4036400.87	NonCancerChronicDerive	0.00E+00	1.13E-09	0.00E+00	0.00E+00	0.00E+00	7.91E-08	1.14E-05	0.00E+00	3.66E-09	0.00E+00	0.00E+00	4.80E-07	0.00E+00	0.00E+00	1.14E-05
719	ALL		741280.96	4036400.87	NonCancerChronicDerive	0.00E+00	1.13E-09	0.00E+00	0.00E+00	0.00E+00	7.95E-08	1.14E-05	0.00E+00	3.67E-09	0.00E+00	0.00E+00	4.83E-07	0.00E+00	0.00E+00	1.14E-05
720	ALL		741380.96	4036400.87	NonCancerChronicDerive	0.00E+00	1.14E-09	0.00E+00	0.00E+00	0.00E+00	8.01E-08	1.15E-05	0.00E+00	3.70E-09	0.00E+00	0.00E+00	4.86E-07	0.00E+00	0.00E+00	1.15E-05
721	ALL	SENS	741480.96	4036400.87	NonCancerChronicDerive	0.00E+00	1.15E-09	0.00E+00	0.00E+00	0.00E+00	8.07E-08	1.16E-05	0.00E+00	3.72E-09	0.00E+00	0.00E+00	4.89E-07	0.00E+00	0.00E+00	1.16E-05
722	ALL		741580.96	4036400.87	NonCancerChronicDerive	0.00E+00	1.16E-09	0.00E+00	0.00E+00	0.00E+00	8.13E-08	1.17E-05	0.00E+00	3.75E-09	0.00E+00	0.00E+00	4.93E-07	0.00E+00	0.00E+00	1.17E-05
723	ALL		741680.96	4036400.87	NonCancerChronicDerive	0.00E+00	1.17E-09	0.00E+00	0.00E+00	0.00E+00	8.20E-08	1.18E-05	0.00E+00	3.78E-09	0.00E+00	0.00E+00	4.97E-07	0.00E+00	0.00E+00	1.18E-05
724	ALL		741780.96	4036400.87	NonCancerChronicDerive	0.00E+00	1.18E-09	0.00E+00	0.00E+00	0.00E+00	8.27E-08	1.19E-05	0.00E+00	3.81E-09	0.00E+00	0.00E+00	5.01E-07	0.00E+00	0.00E+00	1.19E-05
725	ALL		741880.96	4036400.87	NonCancerChronicDerive	0.00E+00	1.18E-09	0.00E+00	0.00E+00	0.00E+00	8.31E-08	1.20E-05	0.00E+00	3.82E-09	0.00E+00	0.00E+00	5.02E-07	0.00E+00	0.00E+00	1.20E-05
726	ALL		741980.96	4036400.87	NonCancerChronicDerive	0.00E+00	1.18E-09	0.00E+00	0.00E+00	0.00E+00	8.35E-08	1.20E-05	0.00E+00	3.83E-09	0.00E+00	0.00E+00	5.03E-07	0.00E+00	0.00E+00	1.20E-05
727	ALL		742080.96	4036400.87	NonCancerChronicDerive	0.00E+00	1.20E-09	0.00E+00	0.00E+00	0.00E+00	8.45E-08	1.22E-05	0.00E+00	3.87E-09	0.00E+00	0.00E+00	5.09E-07	0.00E+00	0.00E+00	1.22E-05
728	ALL		742180.96	4036400.87	NonCancerChronicDerive	0.00E+00	1.21E-09	0.00E+00	0.00E+00	0.00E+00	8.55E-08	1.23E-05	0.00E+00	3.91E-09	0.00E+00	0.00E+00	5.15E-07	0.00E+00	0.00E+00	1.23E-05
729	ALL		742280.96	4036400.87	NonCancerChronicDerive	0.00E+00	1.22E-09	0.00E+00	0.00E+00	0.00E+00	8.66E-08	1.25E-05	0.00E+00	3.96E-09	0.00E+00	0.00E+00	5.21E-07	0.00E+00	0.00E+00	1.25E-05
730	ALL		742380.96	4036400.87	NonCancerChronicDerive	0.00E+00	1.24E-09	0.00E+00	0.00E+00	0.00E+00	8.78E-08	1.26E-05	0.00E+00	4.01E-09	0.00E+00	0.00E+00	5.28E-07	0.00E+00	0.00E+00	1.26E-05
731	ALL		742480.96	4036400.87	NonCancerChronicDerive	0.00E+00	1.26E-09	0.00E+00	0.00E+00	0.00E+00	8.90E-08	1.28E-05	0.00E+00	4.07E-09	0.00E+00	0.00E+00	5.35E-07	0.00E+00	0.00E+00	1.28E-05
732	ALL		742580.96	4036400.87	NonCancerChronicDerive	0.00E+00	1.28E-09	0.00E+00	0.00E+00	0.00E+00	9.03E-08	1.30E-05	0.00E+00	4.13E-09	0.00E+00	0.00E+00	5.43E-07	0.00E+00	0.00E+00	1.30E-05
733	ALL		742680.96	4036400.87	NonCancerChronicDerive	0.00E+00	1.29E-09	0.00E+00	0.00E+00	0.00E+00	9.17E-08	1.32E-05	0.00E+00	4.19E-09	0.00E+00	0.00E+00	5.50E-07	0.00E+00	0.00E+00	1.32E-05
734	ALL		742780.96	4036400.87	NonCancerChronicDerive	0.00E+00	1.31E-09	0.00E+00	0.00E+00	0.00E+00	9.32E-08	1.34E-05	0.00E+00	4.25E-09	0.00E+00	0.00E+00	5.59E-07	0.00E+00	0.00E+00	1.34E-05
735	ALL		742880.96	4036400.87	NonCancerChronicDerive	0.00E+00	1.34E-09	0.00E+00	0.00E+00	0.00E+00	9.48E-08	1.37E-05	0.00E+00	4.32E-09	0.00E+00	0.00E+00	5.68E-07	0.00E+00	0.00E+00	1.37E-05
736	ALL		742980.96	4036400.87	NonCancerChronicDerive	0.00E+00	1.36E-09	0.00E+00	0.00E+00	0.00E+00	9.65E-08	1.39E-05	0.00E+00	4.40E-09	0.00E+00	0.00E+00	5.78E-07	0.00E+00	0.00E+00	1.39E-05
737	ALL		743080.96	4036400.87	NonCancerChronicDerive	0.00E+00	1.38E-09	0.00E+00	0.00E+00	0.00E+00	9.82E-08	1.42E-05	0.00E+00	4.47E-09	0.00E+00	0.00E+00	5.88E-07	0.00E+00	0.00E+00	1.42E-05
738	ALL		743180.96	4036400.87	NonCancerChronicDerive	0.00E+00	1.41E-09	0.00E+00	0.00E+00	0.00E+00	1.00E-07	1.44E-05	0.00E+00	4.55E-09	0.00E+00	0.00E+00	5.99E-07	0.00E+00	0.00E+00	1.44E-05
739	ALL		743280.96	4036400.87	NonCancerChronicDerive	0.00E+00	1.43E-09	0.00E+00	0.00E+00	0.00E+00	1.02E-07	1.47E-05	0.00E+00	4.63E-09	0.00E+00	0.00E+00	6.09E-07	0.00E+00	0.00E+00	1.47E-05
740	ALL		743380.96	4036400.87	NonCancerChronicDerive	0.00E+00	1.46E-09	0.00E+00	0.00E+00	0.00E+00	1.04E-07	1.50E-05	0.00E+00	4.72E-09	0.00E+00	0.00E+00	6.20E-07	0.00E+00	0.00E+00	1.50E-05

741	ALL	743480.96	4036400.87	NonCancerChronicDerive	0.00E+00	1.49E-09	0.00E+00	0.00E+00	0.00E+00	1.06E-07	1.53E-05	0.00E+00	4.81E-09	0.00E+00	0.00E+00	6.32E-07	0.00E+00	0.00E+00	1.53E-05
742	ALL	743580.96	4036400.87	NonCancerChronicDerive	0.00E+00	1.51E-09	0.00E+00	0.00E+00	0.00E+00	1.08E-07	1.56E-05	0.00E+00	4.90E-09	0.00E+00	0.00E+00	6.44E-07	0.00E+00	0.00E+00	1.56E-05
743	ALL	743680.96	4036400.87	NonCancerChronicDerive	0.00E+00	1.54E-09	0.00E+00	0.00E+00	0.00E+00	1.10E-07	1.59E-05	0.00E+00	4.99E-09	0.00E+00	0.00E+00	6.56E-07	0.00E+00	0.00E+00	1.59E-05
744	ALL	743780.96	4036400.87	NonCancerChronicDerive	0.00E+00	1.57E-09	0.00E+00	0.00E+00	0.00E+00	1.13E-07	1.63E-05	0.00E+00	5.09E-09	0.00E+00	0.00E+00	6.69E-07	0.00E+00	0.00E+00	1.63E-05
745	ALL	743880.96	4036400.87	NonCancerChronicDerive	0.00E+00	1.60E-09	0.00E+00	0.00E+00	0.00E+00	1.15E-07	1.66E-05	0.00E+00	5.18E-09	0.00E+00	0.00E+00	6.82E-07	0.00E+00	0.00E+00	1.66E-05
746	ALL	743980.96	4036400.87	NonCancerChronicDerive	0.00E+00	1.63E-09	0.00E+00	0.00E+00	0.00E+00	1.18E-07	1.70E-05	0.00E+00	5.29E-09	0.00E+00	0.00E+00	6.95E-07	0.00E+00	0.00E+00	1.70E-05
747	ALL	744080.96	4036400.87	NonCancerChronicDerive	0.00E+00	1.67E-09	0.00E+00	0.00E+00	0.00E+00	1.20E-07	1.74E-05	0.00E+00	5.39E-09	0.00E+00	0.00E+00	7.09E-07	0.00E+00	0.00E+00	1.74E-05
748	ALL	744180.96	4036400.87	NonCancerChronicDerive	0.00E+00	1.70E-09	0.00E+00	0.00E+00	0.00E+00	1.23E-07	1.77E-05	0.00E+00	5.50E-09	0.00E+00	0.00E+00	7.23E-07	0.00E+00	0.00E+00	1.77E-05
749	ALL	744280.96	4036400.87	NonCancerChronicDerive	0.00E+00	1.73E-09	0.00E+00	0.00E+00	0.00E+00	1.26E-07	1.81E-05	0.00E+00	5.61E-09	0.00E+00	0.00E+00	7.38E-07	0.00E+00	0.00E+00	1.81E-05
750	ALL	744380.96	4036400.87	NonCancerChronicDerive	0.00E+00	1.77E-09	0.00E+00	0.00E+00	0.00E+00	1.29E-07	1.86E-05	0.00E+00	5.73E-09	0.00E+00	0.00E+00	7.53E-07	0.00E+00	0.00E+00	1.86E-05
751	ALL	744480.96	4036400.87	NonCancerChronicDerive	0.00E+00	1.81E-09	0.00E+00	0.00E+00	0.00E+00	1.32E-07	1.90E-05	0.00E+00	5.86E-09	0.00E+00	0.00E+00	7.70E-07	0.00E+00	0.00E+00	1.90E-05
752	ALL	744580.96	4036400.87	NonCancerChronicDerive	0.00E+00	1.85E-09	0.00E+00	0.00E+00	0.00E+00	1.36E-07	1.95E-05	0.00E+00	5.99E-09	0.00E+00	0.00E+00	7.88E-07	0.00E+00	0.00E+00	1.95E-05
753	ALL	744680.96	4036400.87	NonCancerChronicDerive	0.00E+00	1.90E-09	0.00E+00	0.00E+00	0.00E+00	1.39E-07	2.01E-05	0.00E+00	6.14E-09	0.00E+00	0.00E+00	8.07E-07	0.00E+00	0.00E+00	2.01E-05
754	ALL	744780.96	4036400.87	NonCancerChronicDerive	0.00E+00	1.95E-09	0.00E+00	0.00E+00	0.00E+00	1.43E-07	2.06E-05	0.00E+00	6.30E-09	0.00E+00	0.00E+00	8.28E-07	0.00E+00	0.00E+00	2.06E-05
755	ALL	744880.96	4036400.87	NonCancerChronicDerive	0.00E+00	2.00E-09	0.00E+00	0.00E+00	0.00E+00	1.48E-07	2.13E-05	0.00E+00	6.47E-09	0.00E+00	0.00E+00	8.51E-07	0.00E+00	0.00E+00	2.13E-05
756	ALL	744980.96	4036400.87	NonCancerChronicDerive	0.00E+00	2.06E-09	0.00E+00	0.00E+00	0.00E+00	1.53E-07	2.19E-05	0.00E+00	6.67E-09	0.00E+00	0.00E+00	8.76E-07	0.00E+00	0.00E+00	2.19E-05
757	ALL	745080.96	4036400.87	NonCancerChronicDerive	0.00E+00	2.12E-09	0.00E+00	0.00E+00	0.00E+00	1.58E-07	2.26E-05	0.00E+00	6.87E-09	0.00E+00	0.00E+00	9.03E-07	0.00E+00	0.00E+00	2.26E-05
758	ALL	745180.96	4036400.87	NonCancerChronicDerive	0.00E+00	2.20E-09	0.00E+00	0.00E+00	0.00E+00	1.64E-07	2.35E-05	0.00E+00	7.11E-09	0.00E+00	0.00E+00	9.35E-07	0.00E+00	0.00E+00	2.35E-05
759	ALL	745280.96	4036400.87	NonCancerChronicDerive	0.00E+00	2.28E-09	0.00E+00	0.00E+00	0.00E+00	1.70E-07	2.44E-05	0.00E+00	7.37E-09	0.00E+00	0.00E+00	9.69E-07	0.00E+00	0.00E+00	2.44E-05
760	ALL	745380.96	4036400.87	NonCancerChronicDerive	0.00E+00	2.37E-09	0.00E+00	0.00E+00	0.00E+00	1.77E-07	2.54E-05	0.00E+00	7.67E-09	0.00E+00	0.00E+00	1.01E-06	0.00E+00	0.00E+00	2.54E-05
761	ALL	745480.96	4036400.87	NonCancerChronicDerive	0.00E+00	2.47E-09	0.00E+00	0.00E+00	0.00E+00	1.85E-07	2.65E-05	0.00E+00	8.00E-09	0.00E+00	0.00E+00	1.05E-06	0.00E+00	0.00E+00	2.65E-05
762	ALL	745580.96	4036400.87	NonCancerChronicDerive	0.00E+00	2.59E-09	0.00E+00	0.00E+00	0.00E+00	1.94E-07	2.78E-05	0.00E+00	8.40E-09	0.00E+00	0.00E+00	1.10E-06	0.00E+00	0.00E+00	2.78E-05
763	ALL	745680.96	4036400.87	NonCancerChronicDerive	0.00E+00	2.74E-09	0.00E+00	0.00E+00	0.00E+00	2.04E-07	2.93E-05	0.00E+00	8.88E-09	0.00E+00	0.00E+00	1.17E-06	0.00E+00	0.00E+00	2.93E-05
764	ALL	745780.96	4036400.87	NonCancerChronicDerive	0.00E+00	2.92E-09	0.00E+00	0.00E+00	0.00E+00	2.17E-07	3.12E-05	0.00E+00	9.46E-09	0.00E+00	0.00E+00	1.24E-06	0.00E+00	0.00E+00	3.12E-05
765	ALL	745880.96	4036400.87	NonCancerChronicDerive	0.00E+00	3.16E-09	0.00E+00	0.00E+00	0.00E+00	2.34E-07	3.37E-05	0.00E+00	1.02E-08	0.00E+00	0.00E+00	1.35E-06	0.00E+00	0.00E+00	3.37E-05
766	ALL	738080.96	4036500.87	NonCancerChronicDerive	0.00E+00	1.03E-09	0.00E+00	0.00E+00	0.00E+00	7.12E-08	1.01E-05	0.00E+00	3.34E-09	0.00E+00	0.00E+00	4.39E-07	0.00E+00	0.00E+00	1.01E-05
767	ALL	738180.96	4036500.87	NonCancerChronicDerive	0.00E+00	1.03E-09	0.00E+00	0.00E+00	0.00E+00	7.14E-08	1.02E-05	0.00E+00	3.35E-09	0.00E+00	0.00E+00	4.40E-07	0.00E+00	0.00E+00	1.02E-05
768	ALL	738280.96	4036500.87	NonCancerChronicDerive	0.00E+00	1.04E-09	0.00E+00	0.00E+00	0.00E+00	7.16E-08	1.02E-05	0.00E+00	3.36E-09	0.00E+00	0.00E+00	4.42E-07	0.00E+00	0.00E+00	1.02E-05
769	ALL	738480.96	4036500.87	NonCancerChronicDerive	0.00E+00	1.05E-09	0.00E+00	0.00E+00	0.00E+00	7.21E-08	1.03E-05	0.00E+00	3.39E-09	0.00E+00	0.00E+00	4.45E-07	0.00E+00	0.00E+00	1.03E-05
770	ALL	738780.96	4036500.87	NonCancerChronicDerive	0.00E+00	1.06E-09	0.00E+00	0.00E+00	0.00E+00	7.30E-08	1.04E-05	0.00E+00	3.43E-09	0.00E+00	0.00E+00	4.51E-07	0.00E+00	0.00E+00	1.04E-05
771	ALL	738880.96	4036500.87	NonCancerChronicDerive	0.00E+00	1.06E-09	0.00E+00	0.00E+00	0.00E+00	7.33E-08	1.05E-05	0.00E+00	3.45E-09	0.00E+00	0.00E+00	4.53E-07	0.00E+00	0.00E+00	1.05E-05
772	ALL	738980.96	4036500.87	NonCancerChronicDerive	0.00E+00	1.07E-09	0.00E+00	0.00E+00	0.00E+00	7.35E-08	1.05E-05	0.00E+00	3.46E-09	0.00E+00	0.00E+00	4.54E-07	0.00E+00	0.00E+00	1.05E-05
773	ALL	739080.96	4036500.87	NonCancerChronicDerive	0.00E+00	1.07E-09	0.00E+00	0.00E+00	0.00E+00	7.38E-08	1.06E-05	0.00E+00	3.47E-09	0.00E+00	0.00E+00	4.56E-07	0.00E+00	0.00E+00	1.06E-05
774	ALL	739180.96	4036500.87	NonCancerChronicDerive	0.00E+00	1.07E-09	0.00E+00	0.00E+00	0.00E+00	7.40E-08	1.06E-05	0.00E+00	3.48E-09	0.00E+00	0.00E+00	4.57E-07	0.00E+00	0.00E+00	1.06E-05
775	ALL	739280.96	4036500.87	NonCancerChronicDerive	0.00E+00	1.08E-09	0.00E+00	0.00E+00	0.00E+00	7.42E-08	1.06E-05	0.00E+00	3.48E-09	0.00E+00	0.00E+00	4.58E-07	0.00E+00	0.00E+00	1.06E-05
776	ALL	739380.96	4036500.87	NonCancerChronicDerive	0.00E+00	1.08E-09	0.00E+00	0.00E+00	0.00E+00	7.43E-08	1.07E-05	0.00E+00	3.49E-09	0.00E+00	0.00E+00	4.58E-07	0.00E+00	0.00E+00	1.07E-05
777	ALL	739480.96	4036500.87	NonCancerChronicDerive	0.00E+00	1.08E-09	0.00E+00	0.00E+00	0.00E+00	7.45E-08	1.07E-05	0.00E+00	3.49E-09	0.00E+00	0.00E+00	4.59E-07	0.00E+00	0.00E+00	1.07E-05
778	ALL	742280.96	4036500.87	NonCancerChronicDerive	0.00E+00	1.23E-09	0.00E+00	0.00E+00	0.00E+00	8.71E-08	1.25E-05	0.00E+00	3.98E-09	0.00E+00	0.00E+00	5.23E-07	0.00E+00	0.00E+00	1.25E-05
779	ALL	742380.96	4036500.87	NonCancerChronicDerive	0.00E+00	1.25E-09	0.00E+00	0.00E+00	0.00E+00	8.82E-08	1.27E-05	0.00E+00	4.03E-09	0.00E+00	0.00E+00	5.30E-07	0.00E+00	0.00E+00	1.27E-05
780	ALL	742480.96	4036500.87	NonCancerChronicDerive	0.00E+00	1.26E-09	0.00E+00	0.00E+00	0.00E+00	8.95E-08	1.29E-05	0.00E+00	4.09E-09	0.00E+00	0.00E+00	5.37E-07	0.00E+00	0.00E+00	1.29E-05
781	ALL	742580.96	4036500.87	NonCancerChronicDerive	0.00E+00	1.28E-09	0.00E+00	0.00E+00	0.00E+00	9.08E-08	1.31E-05	0.00E+00	4.14E-09	0.00E+00	0.00E+00	5.45E-07	0.00E+00	0.00E+00	1.31E-05
782	ALL	742680.96	4036500.87	NonCancerChronicDerive	0.00E+00	1.30E-09	0.00E+00	0.00E+00	0.00E+00	9.22E-08	1.33E-05	0.00E+00	4.20E-09	0.00E+00	0.00E+00	5.52E-07	0.00E+00	0.00E+00	1.33E-05
783	ALL	742780.96	4036500.87	NonCancerChronicDerive	0.00E+00	1.32E-09	0.00E+00	0.00E+00	0.00E+00	9.37E-08	1.35E-05	0.00E+00	4.27E-09	0.00E+00	0.00E+00	5.61E-07	0.00E+00	0.00E+00	1.35E-05
784	ALL	742880.96	4036500.87	NonCancerChronicDerive	0.00E+00	1.34E-09	0.00E+00	0.00E+00	0.00E+00	9.53E-08	1.37E-05	0.00E+00	4.34E-09	0.00E+00	0.00E+00	5.71E-07	0.00E+00	0.00E+00	1.37E-05
785	ALL	742980.96	4036500.87	NonCancerChronicDerive	0.00E+00	1.36E-09	0.00E+00	0.00E+00	0.00E+00	9.70E-08	1.40E-05	0.00E+00	4.42E-09	0.00E+00	0.00E+00	5.81E-07	0.00E+00	0.00E+00	1.40E-05
786	ALL	743080.96	4036500.87	NonCancerChronicDerive	0.00E+00	1.39E-09	0.00E+00	0.00E+00	0.00E+00	9.88E-08	1.42E-05	0.00E+00	4.49E-09	0.00E+00	0.00E+00	5.91E-07	0.00E+00	0.00E+00	1.42E-05
787	ALL	743180.96	4036500.87	NonCancerChronicDerive	0.00E+00	1.41E-09	0.00E+00	0.00E+00	0.00E+00	1.01E-07	1.45E-05	0.00E+00	4.58E-09	0.00E+00	0.00E+00	6.02E-07	0.00E+00	0.00E+00	1.45E-05
788	ALL	743280.96	4036500.87	NonCancerChronicDerive	0.00E+00	1.44E-09	0.00E+00	0.00E+00	0.00E+00	1.03E-07	1.48E-05	0.00E+00	4.66E-09	0.00E+00	0.00E+00	6.13E-07	0.00E+00	0.00E+00	1.48E-05
789	ALL	743380.96	4036500.87	NonCancerChronicDerive	0.00E+00	1.47E-09	0.00E+00	0.00E+00	0.00E+00	1.05E-07	1.51E-05	0.00E+00	4.75E-09	0.00E+00	0.00E+00	6.25E-07	0.00E+00	0.00E+00	1.51E-05
790	ALL	743480.96	4036500.87	NonCancerChronicDerive	0.00E+00	1.50E-09	0.00E+00	0.00E+00	0.00E+00	1.07E-07	1.54E-05	0.00E+00	4.85E-09	0.00E+00	0.00E+00	6.37E-07	0.00E+00	0.00E+00	1.54E-05
791	ALL	743580.96	4036500.87	NonCancerChronicDerive	0.00E+00	1.53E-09	0.00E+00	0.00E+00	0.00E+00	1.09E-07	1.57E-05	0.00E+00	4.94E-09	0.00E+00	0.00E+00	6.49E-07	0.00E+00	0.00E+00	1.57E-05
792	ALL	743680.96	4036500.87	NonCancerChronicDerive	0.00E+00	1.56E-09	0.00E+00	0.00E+00	0.00E+00	1.11E-07	1.61E-05	0.00E+00	5.04E-09	0.00E+00	0.00E+00	6.62E-07	0.00E+00	0.00E+00	1.61E-05
793	ALL	743780.96	4036500.87	NonCancerChronicDerive	0.00E+00	1.59E-09	0.00E+00	0.00E+00	0.00E+00	1.14E-07	1.64E-05	0.00E+00	5.14E-09	0.00E+00	0.00E+00	6.76E-07	0.00E+00	0.00E+00	1.64E-05

794	ALL	743880.96	4036500.87	NonCancerChronicDerive	0.00E+00	1.62E-09	0.00E+00	0.00E+00	0.00E+00	1.16E-07	1.68E-05	0.00E+00	5.24E-09	0.00E+00	0.00E+00	6.89E-07	0.00E+00	0.00E+00	1.68E-05
795	ALL	743980.96	4036500.87	NonCancerChronicDerive	0.00E+00	1.65E-09	0.00E+00	0.00E+00	0.00E+00	1.19E-07	1.71E-05	0.00E+00	5.35E-09	0.00E+00	0.00E+00	7.03E-07	0.00E+00	0.00E+00	1.71E-05
796	ALL	744080.96	4036500.87	NonCancerChronicDerive	0.00E+00	1.69E-09	0.00E+00	0.00E+00	0.00E+00	1.22E-07	1.75E-05	0.00E+00	5.46E-09	0.00E+00	0.00E+00	7.18E-07	0.00E+00	0.00E+00	1.75E-05
797	ALL	744180.96	4036500.87	NonCancerChronicDerive	0.00E+00	1.72E-09	0.00E+00	0.00E+00	0.00E+00	1.25E-07	1.79E-05	0.00E+00	5.57E-09	0.00E+00	0.00E+00	7.33E-07	0.00E+00	0.00E+00	1.79E-05
798	ALL	744280.96	4036500.87	NonCancerChronicDerive	0.00E+00	1.76E-09	0.00E+00	0.00E+00	0.00E+00	1.28E-07	1.84E-05	0.00E+00	5.69E-09	0.00E+00	0.00E+00	7.48E-07	0.00E+00	0.00E+00	1.84E-05
799	ALL	744380.96	4036500.87	NonCancerChronicDerive	0.00E+00	1.80E-09	0.00E+00	0.00E+00	0.00E+00	1.31E-07	1.88E-05	0.00E+00	5.82E-09	0.00E+00	0.00E+00	7.64E-07	0.00E+00	0.00E+00	1.88E-05
800	ALL	744480.96	4036500.87	NonCancerChronicDerive	0.00E+00	1.84E-09	0.00E+00	0.00E+00	0.00E+00	1.34E-07	1.93E-05	0.00E+00	5.95E-09	0.00E+00	0.00E+00	7.82E-07	0.00E+00	0.00E+00	1.93E-05
801	ALL	744580.96	4036500.87	NonCancerChronicDerive	0.00E+00	1.88E-09	0.00E+00	0.00E+00	0.00E+00	1.38E-07	1.98E-05	0.00E+00	6.09E-09	0.00E+00	0.00E+00	8.00E-07	0.00E+00	0.00E+00	1.98E-05
802	ALL	744680.96	4036500.87	NonCancerChronicDerive	0.00E+00	1.93E-09	0.00E+00	0.00E+00	0.00E+00	1.42E-07	2.03E-05	0.00E+00	6.24E-09	0.00E+00	0.00E+00	8.21E-07	0.00E+00	0.00E+00	2.03E-05
803	ALL	744780.96	4036500.87	NonCancerChronicDerive	0.00E+00	1.98E-09	0.00E+00	0.00E+00	0.00E+00	1.46E-07	2.09E-05	0.00E+00	6.41E-09	0.00E+00	0.00E+00	8.43E-07	0.00E+00	0.00E+00	2.09E-05
804	ALL	744880.96	4036500.87	NonCancerChronicDerive	0.00E+00	2.04E-09	0.00E+00	0.00E+00	0.00E+00	1.51E-07	2.16E-05	0.00E+00	6.60E-09	0.00E+00	0.00E+00	8.68E-07	0.00E+00	0.00E+00	2.16E-05
805	ALL	744980.96	4036500.87	NonCancerChronicDerive	0.00E+00	2.11E-09	0.00E+00	0.00E+00	0.00E+00	1.56E-07	2.24E-05	0.00E+00	6.81E-09	0.00E+00	0.00E+00	8.96E-07	0.00E+00	0.00E+00	2.24E-05
806	ALL	745080.96	4036500.87	NonCancerChronicDerive	0.00E+00	2.18E-09	0.00E+00	0.00E+00	0.00E+00	1.62E-07	2.32E-05	0.00E+00	7.05E-09	0.00E+00	0.00E+00	9.26E-07	0.00E+00	0.00E+00	2.32E-05
807	ALL	745180.96	4036500.87	NonCancerChronicDerive	0.00E+00	2.26E-09	0.00E+00	0.00E+00	0.00E+00	1.68E-07	2.41E-05	0.00E+00	7.32E-09	0.00E+00	0.00E+00	9.62E-07	0.00E+00	0.00E+00	2.41E-05
808	ALL	745280.96	4036500.87	NonCancerChronicDerive	0.00E+00	2.36E-09	0.00E+00	0.00E+00	0.00E+00	1.76E-07	2.51E-05	0.00E+00	7.63E-09	0.00E+00	0.00E+00	1.00E-06	0.00E+00	0.00E+00	2.51E-05
809	ALL	745380.96	4036500.87	NonCancerChronicDerive	0.00E+00	2.47E-09	0.00E+00	0.00E+00	0.00E+00	1.84E-07	2.63E-05	0.00E+00	7.99E-09	0.00E+00	0.00E+00	1.05E-06	0.00E+00	0.00E+00	2.63E-05
810	ALL	745480.96	4036500.87	NonCancerChronicDerive	0.00E+00	2.60E-09	0.00E+00	0.00E+00	0.00E+00	1.94E-07	2.77E-05	0.00E+00	8.41E-09	0.00E+00	0.00E+00	1.11E-06	0.00E+00	0.00E+00	2.77E-05
811	ALL	745580.96	4036500.87	NonCancerChronicDerive	0.00E+00	2.75E-09	0.00E+00	0.00E+00	0.00E+00	2.05E-07	2.94E-05	0.00E+00	8.92E-09	0.00E+00	0.00E+00	1.17E-06	0.00E+00	0.00E+00	2.94E-05
812	ALL	745680.96	4036500.87	NonCancerChronicDerive	0.00E+00	2.95E-09	0.00E+00	0.00E+00	0.00E+00	2.19E-07	3.14E-05	0.00E+00	9.54E-09	0.00E+00	0.00E+00	1.25E-06	0.00E+00	0.00E+00	3.14E-05
813	ALL	745780.96	4036500.87	NonCancerChronicDerive	0.00E+00	3.19E-09	0.00E+00	0.00E+00	0.00E+00	2.36E-07	3.38E-05	0.00E+00	1.03E-08	0.00E+00	0.00E+00	1.36E-06	0.00E+00	0.00E+00	3.38E-05
814	ALL	745880.96	4036500.87	NonCancerChronicDerive	0.00E+00	3.52E-09	0.00E+00	0.00E+00	0.00E+00	2.59E-07	3.72E-05	0.00E+00	1.14E-08	0.00E+00	0.00E+00	1.50E-06	0.00E+00	0.00E+00	3.72E-05
815	ALL	738080.96	4036600.87	NonCancerChronicDerive	0.00E+00	1.02E-09	0.00E+00	0.00E+00	0.00E+00	7.04E-08	1.00E-05	0.00E+00	3.30E-09	0.00E+00	0.00E+00	4.34E-07	0.00E+00	0.00E+00	1.00E-05
816	ALL	738180.96	4036600.87	NonCancerChronicDerive	0.00E+00	1.02E-09	0.00E+00	0.00E+00	0.00E+00	7.06E-08	1.01E-05	0.00E+00	3.31E-09	0.00E+00	0.00E+00	4.35E-07	0.00E+00	0.00E+00	1.01E-05
817	ALL	738280.96	4036600.87	NonCancerChronicDerive	0.00E+00	1.03E-09	0.00E+00	0.00E+00	0.00E+00	7.08E-08	1.01E-05	0.00E+00	3.32E-09	0.00E+00	0.00E+00	4.36E-07	0.00E+00	0.00E+00	1.01E-05
818	ALL	738380.96	4036600.87	NonCancerChronicDerive	0.00E+00	1.03E-09	0.00E+00	0.00E+00	0.00E+00	7.10E-08	1.01E-05	0.00E+00	3.33E-09	0.00E+00	0.00E+00	4.38E-07	0.00E+00	0.00E+00	1.01E-05
819	ALL	738580.96	4036600.87	NonCancerChronicDerive	0.00E+00	1.04E-09	0.00E+00	0.00E+00	0.00E+00	7.15E-08	1.02E-05	0.00E+00	3.36E-09	0.00E+00	0.00E+00	4.41E-07	0.00E+00	0.00E+00	1.02E-05
820	ALL	738680.96	4036600.87	NonCancerChronicDerive	0.00E+00	1.04E-09	0.00E+00	0.00E+00	0.00E+00	7.18E-08	1.03E-05	0.00E+00	3.37E-09	0.00E+00	0.00E+00	4.44E-07	0.00E+00	0.00E+00	1.03E-05
821	ALL	738780.96	4036600.87	NonCancerChronicDerive	0.00E+00	1.05E-09	0.00E+00	0.00E+00	0.00E+00	7.22E-08	1.03E-05	0.00E+00	3.39E-09	0.00E+00	0.00E+00	4.46E-07	0.00E+00	0.00E+00	1.03E-05
822	ALL	738880.96	4036600.87	NonCancerChronicDerive	0.00E+00	1.05E-09	0.00E+00	0.00E+00	0.00E+00	7.25E-08	1.04E-05	0.00E+00	3.40E-09	0.00E+00	0.00E+00	4.48E-07	0.00E+00	0.00E+00	1.04E-05
823	ALL	738980.96	4036600.87	NonCancerChronicDerive	0.00E+00	1.06E-09	0.00E+00	0.00E+00	0.00E+00	7.27E-08	1.04E-05	0.00E+00	3.42E-09	0.00E+00	0.00E+00	4.49E-07	0.00E+00	0.00E+00	1.04E-05
824	ALL	739080.96	4036600.87	NonCancerChronicDerive	0.00E+00	1.06E-09	0.00E+00	0.00E+00	0.00E+00	7.30E-08	1.05E-05	0.00E+00	3.43E-09	0.00E+00	0.00E+00	4.51E-07	0.00E+00	0.00E+00	1.05E-05
825	ALL	739180.96	4036600.87	NonCancerChronicDerive	0.00E+00	1.06E-09	0.00E+00	0.00E+00	0.00E+00	7.33E-08	1.05E-05	0.00E+00	3.44E-09	0.00E+00	0.00E+00	4.53E-07	0.00E+00	0.00E+00	1.05E-05
826	ALL	739280.96	4036600.87	NonCancerChronicDerive	0.00E+00	1.07E-09	0.00E+00	0.00E+00	0.00E+00	7.35E-08	1.05E-05	0.00E+00	3.45E-09	0.00E+00	0.00E+00	4.54E-07	0.00E+00	0.00E+00	1.05E-05
827	ALL	739380.96	4036600.87	NonCancerChronicDerive	0.00E+00	1.07E-09	0.00E+00	0.00E+00	0.00E+00	7.37E-08	1.06E-05	0.00E+00	3.46E-09	0.00E+00	0.00E+00	4.54E-07	0.00E+00	0.00E+00	1.06E-05
828	ALL	739480.96	4036600.87	NonCancerChronicDerive	0.00E+00	1.07E-09	0.00E+00	0.00E+00	0.00E+00	7.40E-08	1.06E-05	0.00E+00	3.47E-09	0.00E+00	0.00E+00	4.56E-07	0.00E+00	0.00E+00	1.06E-05
829	ALL	739580.96	4036600.87	NonCancerChronicDerive	0.00E+00	1.07E-09	0.00E+00	0.00E+00	0.00E+00	7.42E-08	1.07E-05	0.00E+00	3.48E-09	0.00E+00	0.00E+00	4.57E-07	0.00E+00	0.00E+00	1.07E-05
830	ALL	739680.96	4036600.87	NonCancerChronicDerive	0.00E+00	1.08E-09	0.00E+00	0.00E+00	0.00E+00	7.45E-08	1.07E-05	0.00E+00	3.49E-09	0.00E+00	0.00E+00	4.59E-07	0.00E+00	0.00E+00	1.07E-05
831	ALL	739780.96	4036600.87	NonCancerChronicDerive	0.00E+00	1.08E-09	0.00E+00	0.00E+00	0.00E+00	7.48E-08	1.07E-05	0.00E+00	3.50E-09	0.00E+00	0.00E+00	4.60E-07	0.00E+00	0.00E+00	1.07E-05
832	ALL	739880.96	4036600.87	NonCancerChronicDerive	0.00E+00	1.09E-09	0.00E+00	0.00E+00	0.00E+00	7.52E-08	1.08E-05	0.00E+00	3.52E-09	0.00E+00	0.00E+00	4.62E-07	0.00E+00	0.00E+00	1.08E-05
833	ALL	739980.96	4036600.87	NonCancerChronicDerive	0.00E+00	1.09E-09	0.00E+00	0.00E+00	0.00E+00	7.55E-08	1.08E-05	0.00E+00	3.53E-09	0.00E+00	0.00E+00	4.64E-07	0.00E+00	0.00E+00	1.08E-05
834	ALL	740080.96	4036600.87	NonCancerChronicDerive	0.00E+00	1.09E-09	0.00E+00	0.00E+00	0.00E+00	7.58E-08	1.09E-05	0.00E+00	3.54E-09	0.00E+00	0.00E+00	4.65E-07	0.00E+00	0.00E+00	1.09E-05
835	ALL	740180.96	4036600.87	NonCancerChronicDerive	0.00E+00	1.10E-09	0.00E+00	0.00E+00	0.00E+00	7.60E-08	1.09E-05	0.00E+00	3.55E-09	0.00E+00	0.00E+00	4.66E-07	0.00E+00	0.00E+00	1.09E-05
836	ALL	740280.96	4036600.87	NonCancerChronicDerive	0.00E+00	1.10E-09	0.00E+00	0.00E+00	0.00E+00	7.62E-08	1.10E-05	0.00E+00	3.55E-09	0.00E+00	0.00E+00	4.67E-07	0.00E+00	0.00E+00	1.10E-05
837	ALL	740380.96	4036600.87	NonCancerChronicDerive	0.00E+00	1.10E-09	0.00E+00	0.00E+00	0.00E+00	7.65E-08	1.10E-05	0.00E+00	3.56E-09	0.00E+00	0.00E+00	4.68E-07	0.00E+00	0.00E+00	1.10E-05
838	ALL	740480.96	4036600.87	NonCancerChronicDerive	0.00E+00	1.11E-09	0.00E+00	0.00E+00	0.00E+00	7.69E-08	1.11E-05	0.00E+00	3.58E-09	0.00E+00	0.00E+00	4.70E-07	0.00E+00	0.00E+00	1.11E-05
839	ALL	740580.96	4036600.87	NonCancerChronicDerive	0.00E+00	1.11E-09	0.00E+00	0.00E+00	0.00E+00	7.73E-08	1.11E-05	0.00E+00	3.59E-09	0.00E+00	0.00E+00	4.72E-07	0.00E+00	0.00E+00	1.11E-05
840	ALL	740680.96	4036600.87	NonCancerChronicDerive	0.00E+00	1.11E-09	0.00E+00	0.00E+00	0.00E+00	7.77E-08	1.12E-05	0.00E+00	3.61E-09	0.00E+00	0.00E+00	4.74E-07	0.00E+00	0.00E+00	1.12E-05
841	ALL	740780.96	4036600.87	NonCancerChronicDerive	0.00E+00	1.12E-09	0.00E+00	0.00E+00	0.00E+00	7.81E-08	1.12E-05	0.00E+00	3.62E-09	0.00E+00	0.00E+00	4.76E-07	0.00E+00	0.00E+00	1.12E-05
842	ALL	740880.96	4036600.87	NonCancerChronicDerive	0.00E+00	1.12E-09	0.00E+00	0.00E+00	0.00E+00	7.85E-08	1.13E-05	0.00E+00	3.64E-09	0.00E+00	0.00E+00	4.78E-07	0.00E+00	0.00E+00	1.13E-05
843	ALL	740980.96	4036600.87	NonCancerChronicDerive	0.00E+00	1.13E-09	0.00E+00	0.00E+00	0.00E+00	7.90E-08	1.13E-05	0.00E+00	3.66E-09	0.00E+00	0.00E+00	4.81E-07	0.00E+00	0.00E+00	1.13E-05
844	ALL	741080.96	4036600.87	NonCancerChronicDerive	0.00E+00	1.14E-09	0.00E+00	0.00E+00	0.00E+00	7.95E-08	1.14E-05	0.00E+00	3.68E-09	0.00E+00	0.00E+00	4.84E-07	0.00E+00	0.00E+00	1.14E-05
845	ALL	741180.96	4036600.87	NonCancerChronicDerive	0.00E+00	1.14E-09	0.00E+00	0.00E+00	0.00E+00	8.00E-08	1.15E-05	0.00E+00	3.70E-09	0.00E+00	0.00E+00	4.86E-07	0.00E+00	0.00E+00	1.15E-05
846	ALL	741280.96	4036600.87	NonCancerChronicDerive	0.00E+00	1.15E-09	0.00E+00	0.00E+00	0.00E+00	8.05E-08	1.16E-05	0.00E+00	3.72E-09	0.00E+00	0.00E+00	4.88E-07	0.00E+00	0.00E+00	1.16E-05

847	ALL	741380.96	4036600.87	NonCancerChronicDerive	0.00E+00	1.15E-09	0.00E+00	0.00E+00	0.00E+00	8.09E-08	1.16E-05	0.00E+00	3.73E-09	0.00E+00	0.00E+00	4.91E-07	0.00E+00	0.00E+00	1.16E-05
848	ALL	741480.96	4036600.87	NonCancerChronicDerive	0.00E+00	1.16E-09	0.00E+00	0.00E+00	0.00E+00	8.16E-08	1.17E-05	0.00E+00	3.76E-09	0.00E+00	0.00E+00	4.94E-07	0.00E+00	0.00E+00	1.17E-05
849	ALL	741580.96	4036600.87	NonCancerChronicDerive	0.00E+00	1.17E-09	0.00E+00	0.00E+00	0.00E+00	8.22E-08	1.18E-05	0.00E+00	3.78E-09	0.00E+00	0.00E+00	4.98E-07	0.00E+00	0.00E+00	1.18E-05
850	ALL	741680.96	4036600.87	NonCancerChronicDerive	0.00E+00	1.18E-09	0.00E+00	0.00E+00	0.00E+00	8.29E-08	1.19E-05	0.00E+00	3.81E-09	0.00E+00	0.00E+00	5.01E-07	0.00E+00	0.00E+00	1.19E-05
851	ALL	741780.96	4036600.87	NonCancerChronicDerive	0.00E+00	1.19E-09	0.00E+00	0.00E+00	0.00E+00	8.36E-08	1.20E-05	0.00E+00	3.84E-09	0.00E+00	0.00E+00	5.05E-07	0.00E+00	0.00E+00	1.20E-05
852	ALL	741880.96	4036600.87	NonCancerChronicDerive	0.00E+00	1.19E-09	0.00E+00	0.00E+00	0.00E+00	8.40E-08	1.21E-05	0.00E+00	3.86E-09	0.00E+00	0.00E+00	5.07E-07	0.00E+00	0.00E+00	1.21E-05
853	ALL	741980.96	4036600.87	NonCancerChronicDerive	0.00E+00	1.20E-09	0.00E+00	0.00E+00	0.00E+00	8.46E-08	1.22E-05	0.00E+00	3.87E-09	0.00E+00	0.00E+00	5.09E-07	0.00E+00	0.00E+00	1.22E-05
854	ALL	742080.96	4036600.87	NonCancerChronicDerive	0.00E+00	1.21E-09	0.00E+00	0.00E+00	0.00E+00	8.55E-08	1.23E-05	0.00E+00	3.91E-09	0.00E+00	0.00E+00	5.14E-07	0.00E+00	0.00E+00	1.23E-05
855	ALL	742180.96	4036600.87	NonCancerChronicDerive	0.00E+00	1.22E-09	0.00E+00	0.00E+00	0.00E+00	8.65E-08	1.24E-05	0.00E+00	3.95E-09	0.00E+00	0.00E+00	5.20E-07	0.00E+00	0.00E+00	1.24E-05
856	ALL	742280.96	4036600.87	NonCancerChronicDerive	0.00E+00	1.24E-09	0.00E+00	0.00E+00	0.00E+00	8.76E-08	1.26E-05	0.00E+00	4.00E-09	0.00E+00	0.00E+00	5.26E-07	0.00E+00	0.00E+00	1.26E-05
857	ALL	745380.96	4036600.87	NonCancerChronicDerive	0.00E+00	2.61E-09	0.00E+00	0.00E+00	0.00E+00	1.93E-07	2.77E-05	0.00E+00	8.45E-09	0.00E+00	0.00E+00	1.11E-06	0.00E+00	0.00E+00	2.77E-05
858	ALL	745480.96	4036600.87	NonCancerChronicDerive	0.00E+00	2.77E-09	0.00E+00	0.00E+00	0.00E+00	2.05E-07	2.94E-05	0.00E+00	8.98E-09	0.00E+00	0.00E+00	1.18E-06	0.00E+00	0.00E+00	2.94E-05
859	ALL	745580.96	4036600.87	NonCancerChronicDerive	0.00E+00	2.97E-09	0.00E+00	0.00E+00	0.00E+00	2.19E-07	3.14E-05	0.00E+00	9.61E-09	0.00E+00	0.00E+00	1.26E-06	0.00E+00	0.00E+00	3.14E-05
860	ALL	745680.96	4036600.87	NonCancerChronicDerive	0.00E+00	3.21E-09	0.00E+00	0.00E+00	0.00E+00	2.37E-07	3.39E-05	0.00E+00	1.04E-08	0.00E+00	0.00E+00	1.37E-06	0.00E+00	0.00E+00	3.39E-05
861	ALL	745780.96	4036600.87	NonCancerChronicDerive	0.00E+00	3.52E-09	0.00E+00	0.00E+00	0.00E+00	2.58E-07	3.70E-05	0.00E+00	1.14E-08	0.00E+00	0.00E+00	1.50E-06	0.00E+00	0.00E+00	3.70E-05
862	ALL	745880.96	4036600.87	NonCancerChronicDerive	0.00E+00	3.94E-09	0.00E+00	0.00E+00	0.00E+00	2.87E-07	4.13E-05	0.00E+00	1.27E-08	0.00E+00	0.00E+00	1.68E-06	0.00E+00	0.00E+00	4.13E-05
863	ALL	745980.96	4036600.87	NonCancerChronicDerive	0.00E+00	4.43E-09	0.00E+00	0.00E+00	0.00E+00	3.20E-07	4.61E-05	0.00E+00	1.43E-08	0.00E+00	0.00E+00	1.89E-06	0.00E+00	0.00E+00	4.61E-05
864	ALL	738080.96	4036700.87	NonCancerChronicDerive	0.00E+00	1.01E-09	0.00E+00	0.00E+00	0.00E+00	6.97E-08	9.94E-06	0.00E+00	3.27E-09	0.00E+00	0.00E+00	4.30E-07	0.00E+00	0.00E+00	9.94E-06
865	ALL	738180.96	4036700.87	NonCancerChronicDerive	0.00E+00	1.01E-09	0.00E+00	0.00E+00	0.00E+00	6.99E-08	9.97E-06	0.00E+00	3.28E-09	0.00E+00	0.00E+00	4.31E-07	0.00E+00	0.00E+00	9.97E-06
866	ALL	738280.96	4036700.87	NonCancerChronicDerive	0.00E+00	1.02E-09	0.00E+00	0.00E+00	0.00E+00	7.01E-08	1.00E-05	0.00E+00	3.29E-09	0.00E+00	0.00E+00	4.32E-07	0.00E+00	0.00E+00	1.00E-05
867	ALL	738380.96	4036700.87	NonCancerChronicDerive	0.00E+00	1.02E-09	0.00E+00	0.00E+00	0.00E+00	7.03E-08	1.00E-05	0.00E+00	3.30E-09	0.00E+00	0.00E+00	4.34E-07	0.00E+00	0.00E+00	1.00E-05
868	ALL	738480.96	4036700.87	NonCancerChronicDerive	0.00E+00	1.02E-09	0.00E+00	0.00E+00	0.00E+00	7.05E-08	1.01E-05	0.00E+00	3.31E-09	0.00E+00	0.00E+00	4.35E-07	0.00E+00	0.00E+00	1.01E-05
869	ALL	738580.96	4036700.87	NonCancerChronicDerive	0.00E+00	1.03E-09	0.00E+00	0.00E+00	0.00E+00	7.07E-08	1.01E-05	0.00E+00	3.32E-09	0.00E+00	0.00E+00	4.36E-07	0.00E+00	0.00E+00	1.01E-05
870	ALL	738680.96	4036700.87	NonCancerChronicDerive	0.00E+00	1.03E-09	0.00E+00	0.00E+00	0.00E+00	7.11E-08	1.02E-05	0.00E+00	3.34E-09	0.00E+00	0.00E+00	4.39E-07	0.00E+00	0.00E+00	1.02E-05
871	ALL	738780.96	4036700.87	NonCancerChronicDerive	0.00E+00	1.04E-09	0.00E+00	0.00E+00	0.00E+00	7.14E-08	1.02E-05	0.00E+00	3.35E-09	0.00E+00	0.00E+00	4.41E-07	0.00E+00	0.00E+00	1.02E-05
872	ALL	738880.96	4036700.87	NonCancerChronicDerive	0.00E+00	1.04E-09	0.00E+00	0.00E+00	0.00E+00	7.17E-08	1.03E-05	0.00E+00	3.37E-09	0.00E+00	0.00E+00	4.43E-07	0.00E+00	0.00E+00	1.03E-05
873	ALL	738980.96	4036700.87	NonCancerChronicDerive	0.00E+00	1.04E-09	0.00E+00	0.00E+00	0.00E+00	7.20E-08	1.03E-05	0.00E+00	3.38E-09	0.00E+00	0.00E+00	4.45E-07	0.00E+00	0.00E+00	1.03E-05
874	ALL	739080.96	4036700.87	NonCancerChronicDerive	0.00E+00	1.05E-09	0.00E+00	0.00E+00	0.00E+00	7.23E-08	1.04E-05	0.00E+00	3.40E-09	0.00E+00	0.00E+00	4.46E-07	0.00E+00	0.00E+00	1.04E-05
875	ALL	739180.96	4036700.87	NonCancerChronicDerive	0.00E+00	1.05E-09	0.00E+00	0.00E+00	0.00E+00	7.26E-08	1.04E-05	0.00E+00	3.41E-09	0.00E+00	0.00E+00	4.48E-07	0.00E+00	0.00E+00	1.04E-05
876	ALL	739280.96	4036700.87	NonCancerChronicDerive	0.00E+00	1.06E-09	0.00E+00	0.00E+00	0.00E+00	7.29E-08	1.05E-05	0.00E+00	3.42E-09	0.00E+00	0.00E+00	4.50E-07	0.00E+00	0.00E+00	1.05E-05
877	ALL	739380.96	4036700.87	NonCancerChronicDerive	0.00E+00	1.06E-09	0.00E+00	0.00E+00	0.00E+00	7.31E-08	1.05E-05	0.00E+00	3.43E-09	0.00E+00	0.00E+00	4.51E-07	0.00E+00	0.00E+00	1.05E-05
878	ALL	739480.96	4036700.87	NonCancerChronicDerive	0.00E+00	1.06E-09	0.00E+00	0.00E+00	0.00E+00	7.34E-08	1.05E-05	0.00E+00	3.44E-09	0.00E+00	0.00E+00	4.53E-07	0.00E+00	0.00E+00	1.05E-05
879	ALL	739580.96	4036700.87	NonCancerChronicDerive	0.00E+00	1.07E-09	0.00E+00	0.00E+00	0.00E+00	7.38E-08	1.06E-05	0.00E+00	3.46E-09	0.00E+00	0.00E+00	4.54E-07	0.00E+00	0.00E+00	1.06E-05
880	ALL	739680.96	4036700.87	NonCancerChronicDerive	0.00E+00	1.07E-09	0.00E+00	0.00E+00	0.00E+00	7.41E-08	1.06E-05	0.00E+00	3.47E-09	0.00E+00	0.00E+00	4.56E-07	0.00E+00	0.00E+00	1.06E-05
881	ALL	739780.96	4036700.87	NonCancerChronicDerive	0.00E+00	1.08E-09	0.00E+00	0.00E+00	0.00E+00	7.44E-08	1.07E-05	0.00E+00	3.49E-09	0.00E+00	0.00E+00	4.58E-07	0.00E+00	0.00E+00	1.07E-05
882	ALL	739880.96	4036700.87	NonCancerChronicDerive	0.00E+00	1.08E-09	0.00E+00	0.00E+00	0.00E+00	7.49E-08	1.08E-05	0.00E+00	3.50E-09	0.00E+00	0.00E+00	4.61E-07	0.00E+00	0.00E+00	1.08E-05
883	ALL	739980.96	4036700.87	NonCancerChronicDerive	0.00E+00	1.09E-09	0.00E+00	0.00E+00	0.00E+00	7.53E-08	1.08E-05	0.00E+00	3.52E-09	0.00E+00	0.00E+00	4.63E-07	0.00E+00	0.00E+00	1.08E-05
884	ALL	740080.96	4036700.87	NonCancerChronicDerive	0.00E+00	1.09E-09	0.00E+00	0.00E+00	0.00E+00	7.56E-08	1.09E-05	0.00E+00	3.53E-09	0.00E+00	0.00E+00	4.65E-07	0.00E+00	0.00E+00	1.09E-05
885	ALL	740180.96	4036700.87	NonCancerChronicDerive	0.00E+00	1.09E-09	0.00E+00	0.00E+00	0.00E+00	7.59E-08	1.09E-05	0.00E+00	3.54E-09	0.00E+00	0.00E+00	4.66E-07	0.00E+00	0.00E+00	1.09E-05
886	ALL	740280.96	4036700.87	NonCancerChronicDerive	0.00E+00	1.10E-09	0.00E+00	0.00E+00	0.00E+00	7.62E-08	1.10E-05	0.00E+00	3.55E-09	0.00E+00	0.00E+00	4.67E-07	0.00E+00	0.00E+00	1.10E-05
887	ALL	740380.96	4036700.87	NonCancerChronicDerive	0.00E+00	1.10E-09	0.00E+00	0.00E+00	0.00E+00	7.66E-08	1.10E-05	0.00E+00	3.57E-09	0.00E+00	0.00E+00	4.69E-07	0.00E+00	0.00E+00	1.10E-05
888	ALL	740480.96	4036700.87	NonCancerChronicDerive	0.00E+00	1.11E-09	0.00E+00	0.00E+00	0.00E+00	7.70E-08	1.11E-05	0.00E+00	3.59E-09	0.00E+00	0.00E+00	4.72E-07	0.00E+00	0.00E+00	1.11E-05
889	ALL	740580.96	4036700.87	NonCancerChronicDerive	0.00E+00	1.11E-09	0.00E+00	0.00E+00	0.00E+00	7.75E-08	1.11E-05	0.00E+00	3.61E-09	0.00E+00	0.00E+00	4.74E-07	0.00E+00	0.00E+00	1.11E-05
890	ALL	740680.96	4036700.87	NonCancerChronicDerive	0.00E+00	1.12E-09	0.00E+00	0.00E+00	0.00E+00	7.79E-08	1.12E-05	0.00E+00	3.62E-09	0.00E+00	0.00E+00	4.76E-07	0.00E+00	0.00E+00	1.12E-05
891	ALL	740780.96	4036700.87	NonCancerChronicDerive	0.00E+00	1.12E-09	0.00E+00	0.00E+00	0.00E+00	7.84E-08	1.13E-05	0.00E+00	3.64E-09	0.00E+00	0.00E+00	4.78E-07	0.00E+00	0.00E+00	1.13E-05
892	ALL	740880.96	4036700.87	NonCancerChronicDerive	0.00E+00	1.13E-09	0.00E+00	0.00E+00	0.00E+00	7.88E-08	1.13E-05	0.00E+00	3.66E-09	0.00E+00	0.00E+00	4.81E-07	0.00E+00	0.00E+00	1.13E-05
893	ALL	740980.96	4036700.87	NonCancerChronicDerive	0.00E+00	1.14E-09	0.00E+00	0.00E+00	0.00E+00	7.94E-08	1.14E-05	0.00E+00	3.68E-09	0.00E+00	0.00E+00	4.84E-07	0.00E+00	0.00E+00	1.14E-05
894	ALL	741080.96	4036700.87	NonCancerChronicDerive	0.00E+00	1.14E-09	0.00E+00	0.00E+00	0.00E+00	7.99E-08	1.15E-05	0.00E+00	3.70E-09	0.00E+00	0.00E+00	4.87E-07	0.00E+00	0.00E+00	1.15E-05
895	ALL	741180.96	4036700.87	NonCancerChronicDerive	0.00E+00	1.15E-09	0.00E+00	0.00E+00	0.00E+00	8.04E-08	1.16E-05	0.00E+00	3.72E-09	0.00E+00	0.00E+00	4.89E-07	0.00E+00	0.00E+00	1.16E-05
896	ALL	741280.96	4036700.87	NonCancerChronicDerive	0.00E+00	1.16E-09	0.00E+00	0.00E+00	0.00E+00	8.10E-08	1.16E-05	0.00E+00	3.74E-09	0.00E+00	0.00E+00	4.92E-07	0.00E+00	0.00E+00	1.16E-05
897	ALL	741380.96	4036700.87	NonCancerChronicDerive	0.00E+00	1.16E-09	0.00E+00	0.00E+00	0.00E+00	8.15E-08	1.17E-05	0.00E+00	3.76E-09	0.00E+00	0.00E+00	4.95E-07	0.00E+00	0.00E+00	1.17E-05
898	ALL	741480.96	4036700.87	NonCancerChronicDerive	0.00E+00	1.17E-09	0.00E+00	0.00E+00	0.00E+00	8.21E-08	1.18E-05	0.00E+00	3.79E-09	0.00E+00	0.00E+00	4.98E-07	0.00E+00	0.00E+00	1.18E-05
899	ALL	741580.96	4036700.87	NonCancerChronicDerive	0.00E+00	1.18E-09	0.00E+00	0.00E+00	0.00E+00	8.27E-08	1.19E-05	0.00E+00	3.81E-09	0.00E+00	0.00E+00	5.01E-07	0.00E+00	0.00E+00	1.19E-05

900	ALL	741680.96	4036700.87	NonCancerChronicDerive	0.00E+00	1.19E-09	0.00E+00	0.00E+00	0.00E+00	8.34E-08	1.20E-05	0.00E+00	3.84E-09	0.00E+00	0.00E+00	5.05E-07	0.00E+00	0.00E+00	1.20E-05
901	ALL	741780.96	4036700.87	NonCancerChronicDerive	0.00E+00	1.20E-09	0.00E+00	0.00E+00	0.00E+00	8.42E-08	1.21E-05	0.00E+00	3.87E-09	0.00E+00	0.00E+00	5.09E-07	0.00E+00	0.00E+00	1.21E-05
902	ALL	741880.96	4036700.87	NonCancerChronicDerive	0.00E+00	1.20E-09	0.00E+00	0.00E+00	0.00E+00	8.46E-08	1.22E-05	0.00E+00	3.88E-09	0.00E+00	0.00E+00	5.10E-07	0.00E+00	0.00E+00	1.22E-05
903	ALL	741980.96	4036700.87	NonCancerChronicDerive	0.00E+00	1.20E-09	0.00E+00	0.00E+00	0.00E+00	8.51E-08	1.22E-05	0.00E+00	3.90E-09	0.00E+00	0.00E+00	5.12E-07	0.00E+00	0.00E+00	1.22E-05
904	ALL	742080.96	4036700.87	NonCancerChronicDerive	0.00E+00	1.22E-09	0.00E+00	0.00E+00	0.00E+00	8.60E-08	1.24E-05	0.00E+00	3.93E-09	0.00E+00	0.00E+00	5.17E-07	0.00E+00	0.00E+00	1.24E-05
905	ALL	742180.96	4036700.87	NonCancerChronicDerive	0.00E+00	1.23E-09	0.00E+00	0.00E+00	0.00E+00	8.70E-08	1.25E-05	0.00E+00	3.97E-09	0.00E+00	0.00E+00	5.22E-07	0.00E+00	0.00E+00	1.25E-05
906	ALL	742280.96	4036700.87	NonCancerChronicDerive	0.00E+00	1.24E-09	0.00E+00	0.00E+00	0.00E+00	8.80E-08	1.26E-05	0.00E+00	4.02E-09	0.00E+00	0.00E+00	5.28E-07	0.00E+00	0.00E+00	1.26E-05
907	ALL	742380.96	4036700.87	NonCancerChronicDerive	0.00E+00	1.25E-09	0.00E+00	0.00E+00	0.00E+00	8.90E-08	1.28E-05	0.00E+00	4.06E-09	0.00E+00	0.00E+00	5.34E-07	0.00E+00	0.00E+00	1.28E-05
908	ALL	742480.96	4036700.87	NonCancerChronicDerive	0.00E+00	1.27E-09	0.00E+00	0.00E+00	0.00E+00	9.02E-08	1.30E-05	0.00E+00	4.11E-09	0.00E+00	0.00E+00	5.41E-07	0.00E+00	0.00E+00	1.30E-05
909	ALL	742580.96	4036700.87	NonCancerChronicDerive	0.00E+00	1.29E-09	0.00E+00	0.00E+00	0.00E+00	9.15E-08	1.32E-05	0.00E+00	4.17E-09	0.00E+00	0.00E+00	5.48E-07	0.00E+00	0.00E+00	1.32E-05
910	ALL	742680.96	4036700.87	NonCancerChronicDerive	0.00E+00	1.30E-09	0.00E+00	0.00E+00	0.00E+00	9.28E-08	1.33E-05	0.00E+00	4.22E-09	0.00E+00	0.00E+00	5.55E-07	0.00E+00	0.00E+00	1.33E-05
911	ALL	742780.96	4036700.87	NonCancerChronicDerive	0.00E+00	1.32E-09	0.00E+00	0.00E+00	0.00E+00	9.42E-08	1.36E-05	0.00E+00	4.28E-09	0.00E+00	0.00E+00	5.63E-07	0.00E+00	0.00E+00	1.36E-05
912	ALL	742880.96	4036700.87	NonCancerChronicDerive	0.00E+00	1.34E-09	0.00E+00	0.00E+00	0.00E+00	9.58E-08	1.38E-05	0.00E+00	4.35E-09	0.00E+00	0.00E+00	5.72E-07	0.00E+00	0.00E+00	1.38E-05
913	ALL	742980.96	4036700.87	NonCancerChronicDerive	0.00E+00	1.37E-09	0.00E+00	0.00E+00	0.00E+00	9.75E-08	1.40E-05	0.00E+00	4.42E-09	0.00E+00	0.00E+00	5.82E-07	0.00E+00	0.00E+00	1.40E-05
914	ALL	743080.96	4036700.87	NonCancerChronicDerive	0.00E+00	1.39E-09	0.00E+00	0.00E+00	0.00E+00	9.92E-08	1.43E-05	0.00E+00	4.50E-09	0.00E+00	0.00E+00	5.92E-07	0.00E+00	0.00E+00	1.43E-05
915	ALL	743180.96	4036700.87	NonCancerChronicDerive	0.00E+00	1.42E-09	0.00E+00	0.00E+00	0.00E+00	1.01E-07	1.45E-05	0.00E+00	4.58E-09	0.00E+00	0.00E+00	6.02E-07	0.00E+00	0.00E+00	1.45E-05
916	ALL	743280.96	4036700.87	NonCancerChronicDerive	0.00E+00	1.44E-09	0.00E+00	0.00E+00	0.00E+00	1.03E-07	1.48E-05	0.00E+00	4.67E-09	0.00E+00	0.00E+00	6.14E-07	0.00E+00	0.00E+00	1.48E-05
917	ALL	743380.96	4036700.87	NonCancerChronicDerive	0.00E+00	1.47E-09	0.00E+00	0.00E+00	0.00E+00	1.05E-07	1.51E-05	0.00E+00	4.76E-09	0.00E+00	0.00E+00	6.26E-07	0.00E+00	0.00E+00	1.51E-05
918	ALL	743480.96	4036700.87	NonCancerChronicDerive	0.00E+00	1.50E-09	0.00E+00	0.00E+00	0.00E+00	1.07E-07	1.55E-05	0.00E+00	4.86E-09	0.00E+00	0.00E+00	6.38E-07	0.00E+00	0.00E+00	1.55E-05
919	ALL	743580.96	4036700.87	NonCancerChronicDerive	0.00E+00	1.53E-09	0.00E+00	0.00E+00	0.00E+00	1.10E-07	1.58E-05	0.00E+00	4.96E-09	0.00E+00	0.00E+00	6.52E-07	0.00E+00	0.00E+00	1.58E-05
920	ALL	743680.96	4036700.87	NonCancerChronicDerive	0.00E+00	1.56E-09	0.00E+00	0.00E+00	0.00E+00	1.12E-07	1.62E-05	0.00E+00	5.06E-09	0.00E+00	0.00E+00	6.65E-07	0.00E+00	0.00E+00	1.62E-05
921	ALL	743780.96	4036700.87	NonCancerChronicDerive	0.00E+00	1.60E-09	0.00E+00	0.00E+00	0.00E+00	1.15E-07	1.65E-05	0.00E+00	5.17E-09	0.00E+00	0.00E+00	6.80E-07	0.00E+00	0.00E+00	1.65E-05
922	ALL	743880.96	4036700.87	NonCancerChronicDerive	0.00E+00	1.63E-09	0.00E+00	0.00E+00	0.00E+00	1.18E-07	1.69E-05	0.00E+00	5.29E-09	0.00E+00	0.00E+00	6.95E-07	0.00E+00	0.00E+00	1.69E-05
923	ALL	743980.96	4036700.87	NonCancerChronicDerive	0.00E+00	1.67E-09	0.00E+00	0.00E+00	0.00E+00	1.21E-07	1.73E-05	0.00E+00	5.41E-09	0.00E+00	0.00E+00	7.11E-07	0.00E+00	0.00E+00	1.73E-05
924	ALL	744080.96	4036700.87	NonCancerChronicDerive	0.00E+00	1.71E-09	0.00E+00	0.00E+00	0.00E+00	1.24E-07	1.78E-05	0.00E+00	5.53E-09	0.00E+00	0.00E+00	7.28E-07	0.00E+00	0.00E+00	1.78E-05
925	ALL	744180.96	4036700.87	NonCancerChronicDerive	0.00E+00	1.75E-09	0.00E+00	0.00E+00	0.00E+00	1.27E-07	1.82E-05	0.00E+00	5.67E-09	0.00E+00	0.00E+00	7.45E-07	0.00E+00	0.00E+00	1.82E-05
926	ALL	744280.96	4036700.87	NonCancerChronicDerive	0.00E+00	1.79E-09	0.00E+00	0.00E+00	0.00E+00	1.30E-07	1.87E-05	0.00E+00	5.81E-09	0.00E+00	0.00E+00	7.64E-07	0.00E+00	0.00E+00	1.87E-05
927	ALL	744380.96	4036700.87	NonCancerChronicDerive	0.00E+00	1.84E-09	0.00E+00	0.00E+00	0.00E+00	1.34E-07	1.92E-05	0.00E+00	5.96E-09	0.00E+00	0.00E+00	7.84E-07	0.00E+00	0.00E+00	1.92E-05
928	ALL	744480.96	4036700.87	NonCancerChronicDerive	0.00E+00	1.89E-09	0.00E+00	0.00E+00	0.00E+00	1.38E-07	1.98E-05	0.00E+00	6.13E-09	0.00E+00	0.00E+00	8.05E-07	0.00E+00	0.00E+00	1.98E-05
929	ALL	744580.96	4036700.87	NonCancerChronicDerive	0.00E+00	1.95E-09	0.00E+00	0.00E+00	0.00E+00	1.42E-07	2.04E-05	0.00E+00	6.31E-09	0.00E+00	0.00E+00	8.29E-07	0.00E+00	0.00E+00	2.04E-05
930	ALL	744680.96	4036700.87	NonCancerChronicDerive	0.00E+00	2.01E-09	0.00E+00	0.00E+00	0.00E+00	1.47E-07	2.11E-05	0.00E+00	6.51E-09	0.00E+00	0.00E+00	8.56E-07	0.00E+00	0.00E+00	2.11E-05
931	ALL	744780.96	4036700.87	NonCancerChronicDerive	0.00E+00	2.08E-09	0.00E+00	0.00E+00	0.00E+00	1.53E-07	2.19E-05	0.00E+00	6.73E-09	0.00E+00	0.00E+00	8.85E-07	0.00E+00	0.00E+00	2.19E-05
932	ALL	744880.96	4036700.87	NonCancerChronicDerive	0.00E+00	2.16E-09	0.00E+00	0.00E+00	0.00E+00	1.59E-07	2.27E-05	0.00E+00	6.99E-09	0.00E+00	0.00E+00	9.19E-07	0.00E+00	0.00E+00	2.27E-05
933	ALL	744980.96	4036700.87	NonCancerChronicDerive	0.00E+00	2.25E-09	0.00E+00	0.00E+00	0.00E+00	1.65E-07	2.37E-05	0.00E+00	7.28E-09	0.00E+00	0.00E+00	9.57E-07	0.00E+00	0.00E+00	2.37E-05
934	ALL	745080.96	4036700.87	NonCancerChronicDerive	0.00E+00	2.35E-09	0.00E+00	0.00E+00	0.00E+00	1.73E-07	2.48E-05	0.00E+00	7.62E-09	0.00E+00	0.00E+00	1.00E-06	0.00E+00	0.00E+00	2.48E-05
935	ALL	745180.96	4036700.87	NonCancerChronicDerive	0.00E+00	2.47E-09	0.00E+00	0.00E+00	0.00E+00	1.82E-07	2.61E-05	0.00E+00	8.01E-09	0.00E+00	0.00E+00	1.05E-06	0.00E+00	0.00E+00	2.61E-05
936	ALL	738080.96	4036800.87	NonCancerChronicDerive	0.00E+00	1.00E-09	0.00E+00	0.00E+00	0.00E+00	6.92E-08	9.87E-06	0.00E+00	3.25E-09	0.00E+00	0.00E+00	4.27E-07	0.00E+00	0.00E+00	9.87E-06
937	ALL	738180.96	4036800.87	NonCancerChronicDerive	0.00E+00	1.01E-09	0.00E+00	0.00E+00	0.00E+00	6.94E-08	9.90E-06	0.00E+00	3.26E-09	0.00E+00	0.00E+00	4.28E-07	0.00E+00	0.00E+00	9.90E-06
938	ALL	738280.96	4036800.87	NonCancerChronicDerive	0.00E+00	1.01E-09	0.00E+00	0.00E+00	0.00E+00	6.96E-08	9.93E-06	0.00E+00	3.27E-09	0.00E+00	0.00E+00	4.29E-07	0.00E+00	0.00E+00	9.93E-06
939	ALL	738380.96	4036800.87	NonCancerChronicDerive	0.00E+00	1.01E-09	0.00E+00	0.00E+00	0.00E+00	6.98E-08	9.96E-06	0.00E+00	3.27E-09	0.00E+00	0.00E+00	4.30E-07	0.00E+00	0.00E+00	9.96E-06
940	ALL	738480.96	4036800.87	NonCancerChronicDerive	0.00E+00	1.01E-09	0.00E+00	0.00E+00	0.00E+00	6.99E-08	9.99E-06	0.00E+00	3.28E-09	0.00E+00	0.00E+00	4.32E-07	0.00E+00	0.00E+00	9.99E-06
941	ALL	738580.96	4036800.87	NonCancerChronicDerive	0.00E+00	1.02E-09	0.00E+00	0.00E+00	0.00E+00	7.01E-08	1.00E-05	0.00E+00	3.29E-09	0.00E+00	0.00E+00	4.33E-07	0.00E+00	0.00E+00	1.00E-05
942	ALL	738680.96	4036800.87	NonCancerChronicDerive	0.00E+00	1.02E-09	0.00E+00	0.00E+00	0.00E+00	7.05E-08	1.01E-05	0.00E+00	3.31E-09	0.00E+00	0.00E+00	4.35E-07	0.00E+00	0.00E+00	1.01E-05
943	ALL	738780.96	4036800.87	NonCancerChronicDerive	0.00E+00	1.03E-09	0.00E+00	0.00E+00	0.00E+00	7.08E-08	1.01E-05	0.00E+00	3.32E-09	0.00E+00	0.00E+00	4.37E-07	0.00E+00	0.00E+00	1.01E-05
944	ALL	738880.96	4036800.87	NonCancerChronicDerive	0.00E+00	1.03E-09	0.00E+00	0.00E+00	0.00E+00	7.11E-08	1.02E-05	0.00E+00	3.34E-09	0.00E+00	0.00E+00	4.39E-07	0.00E+00	0.00E+00	1.02E-05
945	ALL	738980.96	4036800.87	NonCancerChronicDerive	0.00E+00	1.04E-09	0.00E+00	0.00E+00	0.00E+00	7.13E-08	1.02E-05	0.00E+00	3.35E-09	0.00E+00	0.00E+00	4.40E-07	0.00E+00	0.00E+00	1.02E-05
946	ALL	739080.96	4036800.87	NonCancerChronicDerive	0.00E+00	1.04E-09	0.00E+00	0.00E+00	0.00E+00	7.17E-08	1.03E-05	0.00E+00	3.36E-09	0.00E+00	0.00E+00	4.42E-07	0.00E+00	0.00E+00	1.03E-05
947	ALL	739180.96	4036800.87	NonCancerChronicDerive	0.00E+00	1.04E-09	0.00E+00	0.00E+00	0.00E+00	7.19E-08	1.03E-05	0.00E+00	3.38E-09	0.00E+00	0.00E+00	4.44E-07	0.00E+00	0.00E+00	1.03E-05
948	ALL	739280.96	4036800.87	NonCancerChronicDerive	0.00E+00	1.05E-09	0.00E+00	0.00E+00	0.00E+00	7.23E-08	1.04E-05	0.00E+00	3.39E-09	0.00E+00	0.00E+00	4.46E-07	0.00E+00	0.00E+00	1.04E-05
949	ALL	739380.96	4036800.87	NonCancerChronicDerive	0.00E+00	1.05E-09	0.00E+00	0.00E+00	0.00E+00	7.25E-08	1.04E-05	0.00E+00	3.40E-09	0.00E+00	0.00E+00	4.47E-07	0.00E+00	0.00E+00	1.04E-05
950	ALL	739480.96	4036800.87	NonCancerChronicDerive	0.00E+00	1.06E-09	0.00E+00	0.00E+00	0.00E+00	7.29E-08	1.05E-05	0.00E+00	3.42E-09	0.00E+00	0.00E+00	4.49E-07	0.00E+00	0.00E+00	1.05E-05
951	ALL	739580.96	4036800.87	NonCancerChronicDerive	0.00E+00	1.06E-09	0.00E+00	0.00E+00	0.00E+00	7.33E-08	1.05E-05	0.00E+00	3.44E-09	0.00E+00	0.00E+00	4.52E-07	0.00E+00	0.00E+00	1.05E-05
952	ALL	739680.96	4036800.87	NonCancerChronicDerive	0.00E+00	1.07E-09	0.00E+00	0.00E+00	0.00E+00	7.37E-08	1.06E-05	0.00E+00	3.45E-09	0.00E+00	0.00E+00	4.54E-07	0.00E+00	0.00E+00	1.06E-05

953	ALL	739780.96	4036800.87	NonCancerChronicDerive	0.00E+00	1.07E-09	0.00E+00	0.00E+00	0.00E+00	7.41E-08	1.06E-05	0.00E+00	3.47E-09	0.00E+00	0.00E+00	4.56E-07	0.00E+00	0.00E+00	1.06E-05
954	ALL	739880.96	4036800.87	NonCancerChronicDerive	0.00E+00	1.08E-09	0.00E+00	0.00E+00	0.00E+00	7.45E-08	1.07E-05	0.00E+00	3.49E-09	0.00E+00	0.00E+00	4.59E-07	0.00E+00	0.00E+00	1.07E-05
955	ALL	739980.96	4036800.87	NonCancerChronicDerive	0.00E+00	1.08E-09	0.00E+00	0.00E+00	0.00E+00	7.49E-08	1.08E-05	0.00E+00	3.51E-09	0.00E+00	0.00E+00	4.61E-07	0.00E+00	0.00E+00	1.08E-05
956	ALL	740080.96	4036800.87	NonCancerChronicDerive	0.00E+00	1.09E-09	0.00E+00	0.00E+00	0.00E+00	7.53E-08	1.08E-05	0.00E+00	3.52E-09	0.00E+00	0.00E+00	4.63E-07	0.00E+00	0.00E+00	1.08E-05
957	ALL	740180.96	4036800.87	NonCancerChronicDerive	0.00E+00	1.09E-09	0.00E+00	0.00E+00	0.00E+00	7.57E-08	1.09E-05	0.00E+00	3.54E-09	0.00E+00	0.00E+00	4.65E-07	0.00E+00	0.00E+00	1.09E-05
958	ALL	740280.96	4036800.87	NonCancerChronicDerive	0.00E+00	1.10E-09	0.00E+00	0.00E+00	0.00E+00	7.61E-08	1.09E-05	0.00E+00	3.55E-09	0.00E+00	0.00E+00	4.67E-07	0.00E+00	0.00E+00	1.09E-05
959	ALL	740380.96	4036800.87	NonCancerChronicDerive	0.00E+00	1.10E-09	0.00E+00	0.00E+00	0.00E+00	7.65E-08	1.10E-05	0.00E+00	3.57E-09	0.00E+00	0.00E+00	4.69E-07	0.00E+00	0.00E+00	1.10E-05
960	ALL	740480.96	4036800.87	NonCancerChronicDerive	0.00E+00	1.11E-09	0.00E+00	0.00E+00	0.00E+00	7.70E-08	1.11E-05	0.00E+00	3.59E-09	0.00E+00	0.00E+00	4.72E-07	0.00E+00	0.00E+00	1.11E-05
961	ALL	740580.96	4036800.87	NonCancerChronicDerive	0.00E+00	1.12E-09	0.00E+00	0.00E+00	0.00E+00	7.75E-08	1.12E-05	0.00E+00	3.61E-09	0.00E+00	0.00E+00	4.75E-07	0.00E+00	0.00E+00	1.12E-05
962	ALL	740680.96	4036800.87	NonCancerChronicDerive	0.00E+00	1.12E-09	0.00E+00	0.00E+00	0.00E+00	7.80E-08	1.12E-05	0.00E+00	3.63E-09	0.00E+00	0.00E+00	4.77E-07	0.00E+00	0.00E+00	1.12E-05
963	ALL	740780.96	4036800.87	NonCancerChronicDerive	0.00E+00	1.13E-09	0.00E+00	0.00E+00	0.00E+00	7.85E-08	1.13E-05	0.00E+00	3.65E-09	0.00E+00	0.00E+00	4.80E-07	0.00E+00	0.00E+00	1.13E-05
964	ALL	740880.96	4036800.87	NonCancerChronicDerive	0.00E+00	1.13E-09	0.00E+00	0.00E+00	0.00E+00	7.90E-08	1.14E-05	0.00E+00	3.67E-09	0.00E+00	0.00E+00	4.83E-07	0.00E+00	0.00E+00	1.14E-05
965	ALL	740980.96	4036800.87	NonCancerChronicDerive	0.00E+00	1.14E-09	0.00E+00	0.00E+00	0.00E+00	7.96E-08	1.15E-05	0.00E+00	3.70E-09	0.00E+00	0.00E+00	4.86E-07	0.00E+00	0.00E+00	1.15E-05
966	ALL	741080.96	4036800.87	NonCancerChronicDerive	0.00E+00	1.15E-09	0.00E+00	0.00E+00	0.00E+00	8.02E-08	1.15E-05	0.00E+00	3.72E-09	0.00E+00	0.00E+00	4.89E-07	0.00E+00	0.00E+00	1.15E-05
967	ALL	741180.96	4036800.87	NonCancerChronicDerive	0.00E+00	1.16E-09	0.00E+00	0.00E+00	0.00E+00	8.08E-08	1.16E-05	0.00E+00	3.74E-09	0.00E+00	0.00E+00	4.92E-07	0.00E+00	0.00E+00	1.16E-05
968	ALL	741280.96	4036800.87	NonCancerChronicDerive	0.00E+00	1.16E-09	0.00E+00	0.00E+00	0.00E+00	8.13E-08	1.17E-05	0.00E+00	3.76E-09	0.00E+00	0.00E+00	4.95E-07	0.00E+00	0.00E+00	1.17E-05
969	ALL	741380.96	4036800.87	NonCancerChronicDerive	0.00E+00	1.17E-09	0.00E+00	0.00E+00	0.00E+00	8.19E-08	1.18E-05	0.00E+00	3.79E-09	0.00E+00	0.00E+00	4.98E-07	0.00E+00	0.00E+00	1.18E-05
970	ALL	741480.96	4036800.87	NonCancerChronicDerive	0.00E+00	1.18E-09	0.00E+00	0.00E+00	0.00E+00	8.25E-08	1.19E-05	0.00E+00	3.81E-09	0.00E+00	0.00E+00	5.01E-07	0.00E+00	0.00E+00	1.19E-05
971	ALL	741580.96	4036800.87	NonCancerChronicDerive	0.00E+00	1.19E-09	0.00E+00	0.00E+00	0.00E+00	8.32E-08	1.20E-05	0.00E+00	3.84E-09	0.00E+00	0.00E+00	5.04E-07	0.00E+00	0.00E+00	1.20E-05
972	ALL	741680.96	4036800.87	NonCancerChronicDerive	0.00E+00	1.19E-09	0.00E+00	0.00E+00	0.00E+00	8.38E-08	1.20E-05	0.00E+00	3.86E-09	0.00E+00	0.00E+00	5.08E-07	0.00E+00	0.00E+00	1.20E-05
973	ALL	741780.96	4036800.87	NonCancerChronicDerive	0.00E+00	1.20E-09	0.00E+00	0.00E+00	0.00E+00	8.46E-08	1.22E-05	0.00E+00	3.89E-09	0.00E+00	0.00E+00	5.12E-07	0.00E+00	0.00E+00	1.22E-05
974	ALL	741880.96	4036800.87	NonCancerChronicDerive	0.00E+00	1.21E-09	0.00E+00	0.00E+00	0.00E+00	8.50E-08	1.22E-05	0.00E+00	3.90E-09	0.00E+00	0.00E+00	5.13E-07	0.00E+00	0.00E+00	1.22E-05
975	ALL	741980.96	4036800.87	NonCancerChronicDerive	0.00E+00	1.21E-09	0.00E+00	0.00E+00	0.00E+00	8.55E-08	1.23E-05	0.00E+00	3.92E-09	0.00E+00	0.00E+00	5.15E-07	0.00E+00	0.00E+00	1.23E-05
976	ALL	742080.96	4036800.87	NonCancerChronicDerive	0.00E+00	1.22E-09	0.00E+00	0.00E+00	0.00E+00	8.64E-08	1.24E-05	0.00E+00	3.95E-09	0.00E+00	0.00E+00	5.19E-07	0.00E+00	0.00E+00	1.24E-05
977	ALL	742180.96	4036800.87	NonCancerChronicDerive	0.00E+00	1.23E-09	0.00E+00	0.00E+00	0.00E+00	8.72E-08	1.25E-05	0.00E+00	3.99E-09	0.00E+00	0.00E+00	5.24E-07	0.00E+00	0.00E+00	1.25E-05
978	ALL	742280.96	4036800.87	NonCancerChronicDerive	0.00E+00	1.24E-09	0.00E+00	0.00E+00	0.00E+00	8.82E-08	1.27E-05	0.00E+00	4.03E-09	0.00E+00	0.00E+00	5.29E-07	0.00E+00	0.00E+00	1.27E-05
979	ALL	742380.96	4036800.87	NonCancerChronicDerive	0.00E+00	1.26E-09	0.00E+00	0.00E+00	0.00E+00	8.92E-08	1.28E-05	0.00E+00	4.07E-09	0.00E+00	0.00E+00	5.35E-07	0.00E+00	0.00E+00	1.28E-05
980	ALL	742480.96	4036800.87	NonCancerChronicDerive	0.00E+00	1.27E-09	0.00E+00	0.00E+00	0.00E+00	9.03E-08	1.30E-05	0.00E+00	4.12E-09	0.00E+00	0.00E+00	5.41E-07	0.00E+00	0.00E+00	1.30E-05
981	ALL	742580.96	4036800.87	NonCancerChronicDerive	0.00E+00	1.29E-09	0.00E+00	0.00E+00	0.00E+00	9.15E-08	1.32E-05	0.00E+00	4.17E-09	0.00E+00	0.00E+00	5.48E-07	0.00E+00	0.00E+00	1.32E-05
982	ALL	742680.96	4036800.87	NonCancerChronicDerive	0.00E+00	1.30E-09	0.00E+00	0.00E+00	0.00E+00	9.28E-08	1.33E-05	0.00E+00	4.22E-09	0.00E+00	0.00E+00	5.55E-07	0.00E+00	0.00E+00	1.33E-05
983	ALL	742780.96	4036800.87	NonCancerChronicDerive	0.00E+00	1.32E-09	0.00E+00	0.00E+00	0.00E+00	9.42E-08	1.35E-05	0.00E+00	4.28E-09	0.00E+00	0.00E+00	5.63E-07	0.00E+00	0.00E+00	1.35E-05
984	ALL	742880.96	4036800.87	NonCancerChronicDerive	0.00E+00	1.34E-09	0.00E+00	0.00E+00	0.00E+00	9.57E-08	1.38E-05	0.00E+00	4.34E-09	0.00E+00	0.00E+00	5.71E-07	0.00E+00	0.00E+00	1.38E-05
985	ALL	742980.96	4036800.87	NonCancerChronicDerive	0.00E+00	1.36E-09	0.00E+00	0.00E+00	0.00E+00	9.73E-08	1.40E-05	0.00E+00	4.41E-09	0.00E+00	0.00E+00	5.80E-07	0.00E+00	0.00E+00	1.40E-05
986	ALL	743080.96	4036800.87	NonCancerChronicDerive	0.00E+00	1.39E-09	0.00E+00	0.00E+00	0.00E+00	9.91E-08	1.42E-05	0.00E+00	4.49E-09	0.00E+00	0.00E+00	5.90E-07	0.00E+00	0.00E+00	1.42E-05
987	ALL	743180.96	4036800.87	NonCancerChronicDerive	0.00E+00	1.41E-09	0.00E+00	0.00E+00	0.00E+00	1.01E-07	1.45E-05	0.00E+00	4.57E-09	0.00E+00	0.00E+00	6.00E-07	0.00E+00	0.00E+00	1.45E-05
988	ALL	743280.96	4036800.87	NonCancerChronicDerive	0.00E+00	1.44E-09	0.00E+00	0.00E+00	0.00E+00	1.03E-07	1.48E-05	0.00E+00	4.66E-09	0.00E+00	0.00E+00	6.12E-07	0.00E+00	0.00E+00	1.48E-05
989	ALL	743380.96	4036800.87	NonCancerChronicDerive	0.00E+00	1.47E-09	0.00E+00	0.00E+00	0.00E+00	1.05E-07	1.51E-05	0.00E+00	4.75E-09	0.00E+00	0.00E+00	6.24E-07	0.00E+00	0.00E+00	1.51E-05
990	ALL	743480.96	4036800.87	NonCancerChronicDerive	0.00E+00	1.50E-09	0.00E+00	0.00E+00	0.00E+00	1.07E-07	1.55E-05	0.00E+00	4.85E-09	0.00E+00	0.00E+00	6.37E-07	0.00E+00	0.00E+00	1.55E-05
991	ALL	743580.96	4036800.87	NonCancerChronicDerive	0.00E+00	1.53E-09	0.00E+00	0.00E+00	0.00E+00	1.10E-07	1.58E-05	0.00E+00	4.95E-09	0.00E+00	0.00E+00	6.51E-07	0.00E+00	0.00E+00	1.58E-05
992	ALL	743680.96	4036800.87	NonCancerChronicDerive	0.00E+00	1.56E-09	0.00E+00	0.00E+00	0.00E+00	1.13E-07	1.62E-05	0.00E+00	5.07E-09	0.00E+00	0.00E+00	6.66E-07	0.00E+00	0.00E+00	1.62E-05
993	ALL	743780.96	4036800.87	NonCancerChronicDerive	0.00E+00	1.60E-09	0.00E+00	0.00E+00	0.00E+00	1.15E-07	1.66E-05	0.00E+00	5.18E-09	0.00E+00	0.00E+00	6.82E-07	0.00E+00	0.00E+00	1.66E-05
994	ALL	743880.96	4036800.87	NonCancerChronicDerive	0.00E+00	1.64E-09	0.00E+00	0.00E+00	0.00E+00	1.18E-07	1.70E-05	0.00E+00	5.31E-09	0.00E+00	0.00E+00	6.98E-07	0.00E+00	0.00E+00	1.70E-05
995	ALL	743980.96	4036800.87	NonCancerChronicDerive	0.00E+00	1.68E-09	0.00E+00	0.00E+00	0.00E+00	1.21E-07	1.75E-05	0.00E+00	5.45E-09	0.00E+00	0.00E+00	7.16E-07	0.00E+00	0.00E+00	1.75E-05
996	ALL	744080.96	4036800.87	NonCancerChronicDerive	0.00E+00	1.73E-09	0.00E+00	0.00E+00	0.00E+00	1.25E-07	1.79E-05	0.00E+00	5.59E-09	0.00E+00	0.00E+00	7.35E-07	0.00E+00	0.00E+00	1.79E-05
997	ALL	744180.96	4036800.87	NonCancerChronicDerive	0.00E+00	1.77E-09	0.00E+00	0.00E+00	0.00E+00	1.28E-07	1.84E-05	0.00E+00	5.74E-09	0.00E+00	0.00E+00	7.55E-07	0.00E+00	0.00E+00	1.84E-05
998	ALL	744280.96	4036800.87	NonCancerChronicDerive	0.00E+00	1.82E-09	0.00E+00	0.00E+00	0.00E+00	1.32E-07	1.90E-05	0.00E+00	5.91E-09	0.00E+00	0.00E+00	7.76E-07	0.00E+00	0.00E+00	1.90E-05
999	ALL	744380.96	4036800.87	NonCancerChronicDerive	0.00E+00	1.88E-09	0.00E+00	0.00E+00	0.00E+00	1.36E-07	1.96E-05	0.00E+00	6.08E-09	0.00E+00	0.00E+00	8.00E-07	0.00E+00	0.00E+00	1.96E-05
1000	ALL	744480.96	4036800.87	NonCancerChronicDerive	0.00E+00	1.94E-09	0.00E+00	0.00E+00	0.00E+00	1.41E-07	2.02E-05	0.00E+00	6.28E-09	0.00E+00	0.00E+00	8.25E-07	0.00E+00	0.00E+00	2.02E-05
1001	ALL	744580.96	4036800.87	NonCancerChronicDerive	0.00E+00	2.00E-09	0.00E+00	0.00E+00	0.00E+00	1.46E-07	2.09E-05	0.00E+00	6.49E-09	0.00E+00	0.00E+00	8.53E-07	0.00E+00	0.00E+00	2.09E-05
1002	ALL	744680.96	4036800.87	NonCancerChronicDerive	0.00E+00	2.08E-09	0.00E+00	0.00E+00	0.00E+00	1.52E-07	2.17E-05	0.00E+00	6.72E-09	0.00E+00	0.00E+00	8.84E-07	0.00E+00	0.00E+00	2.17E-05
1003	ALL	744780.96	4036800.87	NonCancerChronicDerive	0.00E+00	2.16E-09	0.00E+00	0.00E+00	0.00E+00	1.58E-07	2.26E-05	0.00E+00	6.98E-09	0.00E+00	0.00E+00	9.18E-07	0.00E+00	0.00E+00	2.26E-05
1004	ALL	744880.96	4036800.87	NonCancerChronicDerive	0.00E+00	2.25E-09	0.00E+00	0.00E+00	0.00E+00	1.65E-07	2.36E-05	0.00E+00	7.28E-09	0.00E+00	0.00E+00	9.57E-07	0.00E+00	0.00E+00	2.36E-05
1005	ALL	744980.96	4036800.87	NonCancerChronicDerive	0.00E+00	2.35E-09	0.00E+00	0.00E+00	0.00E+00	1.72E-07	2.47E-05	0.00E+00	7.61E-09	0.00E+00	0.00E+00	1.00E-06	0.00E+00	0.00E+00	2.47E-05

1006	ALL	745080.96	4036800.87	NonCancerChronicDerive	0.00E+00	2.47E-09	0.00E+00	0.00E+00	0.00E+00	1.81E-07	2.59E-05	0.00E+00	8.00E-09	0.00E+00	0.00E+00	1.05E-06	0.00E+00	0.00E+00	2.59E-05
1007	ALL	745180.96	4036800.87	NonCancerChronicDerive	0.00E+00	2.61E-09	0.00E+00	0.00E+00	0.00E+00	1.92E-07	2.74E-05	0.00E+00	8.46E-09	0.00E+00	0.00E+00	1.11E-06	0.00E+00	0.00E+00	2.74E-05
1008	ALL	745280.96	4036800.87	NonCancerChronicDerive	0.00E+00	2.78E-09	0.00E+00	0.00E+00	0.00E+00	2.03E-07	2.91E-05	0.00E+00	8.99E-09	0.00E+00	0.00E+00	1.18E-06	0.00E+00	0.00E+00	2.91E-05
1009	ALL	745380.96	4036800.87	NonCancerChronicDerive	0.00E+00	2.97E-09	0.00E+00	0.00E+00	0.00E+00	2.17E-07	3.11E-05	0.00E+00	9.62E-09	0.00E+00	0.00E+00	1.26E-06	0.00E+00	0.00E+00	3.11E-05
1010	ALL	745480.96	4036800.87	NonCancerChronicDerive	0.00E+00	3.20E-09	0.00E+00	0.00E+00	0.00E+00	2.34E-07	3.35E-05	0.00E+00	1.04E-08	0.00E+00	0.00E+00	1.36E-06	0.00E+00	0.00E+00	3.35E-05
1011	ALL	745580.96	4036800.87	NonCancerChronicDerive	0.00E+00	3.48E-09	0.00E+00	0.00E+00	0.00E+00	2.53E-07	3.63E-05	0.00E+00	1.13E-08	0.00E+00	0.00E+00	1.48E-06	0.00E+00	0.00E+00	3.63E-05
1012	ALL	745680.96	4036800.87	NonCancerChronicDerive	0.00E+00	3.81E-09	0.00E+00	0.00E+00	0.00E+00	2.76E-07	3.96E-05	0.00E+00	1.23E-08	0.00E+00	0.00E+00	1.62E-06	0.00E+00	0.00E+00	3.96E-05
1013	ALL	745780.96	4036800.87	NonCancerChronicDerive	0.00E+00	4.19E-09	0.00E+00	0.00E+00	0.00E+00	3.03E-07	4.34E-05	0.00E+00	1.36E-08	0.00E+00	0.00E+00	1.78E-06	0.00E+00	0.00E+00	4.34E-05
1014	ALL	745880.96	4036800.87	NonCancerChronicDerive	0.00E+00	4.65E-09	0.00E+00	0.00E+00	0.00E+00	3.35E-07	4.80E-05	0.00E+00	1.50E-08	0.00E+00	0.00E+00	1.98E-06	0.00E+00	0.00E+00	4.80E-05
1015	ALL	741480.96	4036900.87	NonCancerChronicDerive	0.00E+00	1.18E-09	0.00E+00	0.00E+00	0.00E+00	8.27E-08	1.19E-05	0.00E+00	3.82E-09	0.00E+00	0.00E+00	5.03E-07	0.00E+00	0.00E+00	1.19E-05
1016	ALL	741580.96	4036900.87	NonCancerChronicDerive	0.00E+00	1.19E-09	0.00E+00	0.00E+00	0.00E+00	8.34E-08	1.20E-05	0.00E+00	3.85E-09	0.00E+00	0.00E+00	5.06E-07	0.00E+00	0.00E+00	1.20E-05
1017	ALL	741680.96	4036900.87	NonCancerChronicDerive	0.00E+00	1.20E-09	0.00E+00	0.00E+00	0.00E+00	8.41E-08	1.21E-05	0.00E+00	3.88E-09	0.00E+00	0.00E+00	5.10E-07	0.00E+00	0.00E+00	1.21E-05
1018	ALL	741780.96	4036900.87	NonCancerChronicDerive	0.00E+00	1.21E-09	0.00E+00	0.00E+00	0.00E+00	8.48E-08	1.22E-05	0.00E+00	3.91E-09	0.00E+00	0.00E+00	5.14E-07	0.00E+00	0.00E+00	1.22E-05
1019	ALL	741880.96	4036900.87	NonCancerChronicDerive	0.00E+00	1.21E-09	0.00E+00	0.00E+00	0.00E+00	8.53E-08	1.23E-05	0.00E+00	3.92E-09	0.00E+00	0.00E+00	5.16E-07	0.00E+00	0.00E+00	1.23E-05
1020	ALL	741980.96	4036900.87	NonCancerChronicDerive	0.00E+00	1.21E-09	0.00E+00	0.00E+00	0.00E+00	8.58E-08	1.23E-05	0.00E+00	3.93E-09	0.00E+00	0.00E+00	5.17E-07	0.00E+00	0.00E+00	1.23E-05
1021	ALL	742080.96	4036900.87	NonCancerChronicDerive	0.00E+00	1.22E-09	0.00E+00	0.00E+00	0.00E+00	8.66E-08	1.24E-05	0.00E+00	3.96E-09	0.00E+00	0.00E+00	5.21E-07	0.00E+00	0.00E+00	1.24E-05
1022	ALL	742180.96	4036900.87	NonCancerChronicDerive	0.00E+00	1.23E-09	0.00E+00	0.00E+00	0.00E+00	8.75E-08	1.26E-05	0.00E+00	4.00E-09	0.00E+00	0.00E+00	5.25E-07	0.00E+00	0.00E+00	1.26E-05
1023	ALL	742280.96	4036900.87	NonCancerChronicDerive	0.00E+00	1.25E-09	0.00E+00	0.00E+00	0.00E+00	8.84E-08	1.27E-05	0.00E+00	4.03E-09	0.00E+00	0.00E+00	5.30E-07	0.00E+00	0.00E+00	1.27E-05
1024	ALL	742380.96	4036900.87	NonCancerChronicDerive	0.00E+00	1.26E-09	0.00E+00	0.00E+00	0.00E+00	8.94E-08	1.28E-05	0.00E+00	4.07E-09	0.00E+00	0.00E+00	5.36E-07	0.00E+00	0.00E+00	1.28E-05
1025	ALL	742480.96	4036900.87	NonCancerChronicDerive	0.00E+00	1.27E-09	0.00E+00	0.00E+00	0.00E+00	9.04E-08	1.30E-05	0.00E+00	4.12E-09	0.00E+00	0.00E+00	5.41E-07	0.00E+00	0.00E+00	1.30E-05
1026	ALL	742580.96	4036900.87	NonCancerChronicDerive	0.00E+00	1.29E-09	0.00E+00	0.00E+00	0.00E+00	9.16E-08	1.32E-05	0.00E+00	4.16E-09	0.00E+00	0.00E+00	5.47E-07	0.00E+00	0.00E+00	1.32E-05
1027	ALL	742680.96	4036900.87	NonCancerChronicDerive	0.00E+00	1.30E-09	0.00E+00	0.00E+00	0.00E+00	9.28E-08	1.33E-05	0.00E+00	4.22E-09	0.00E+00	0.00E+00	5.54E-07	0.00E+00	0.00E+00	1.33E-05
1028	ALL	742780.96	4036900.87	NonCancerChronicDerive	0.00E+00	1.32E-09	0.00E+00	0.00E+00	0.00E+00	9.42E-08	1.35E-05	0.00E+00	4.28E-09	0.00E+00	0.00E+00	5.62E-07	0.00E+00	0.00E+00	1.35E-05
1029	ALL	742880.96	4036900.87	NonCancerChronicDerive	0.00E+00	1.34E-09	0.00E+00	0.00E+00	0.00E+00	9.57E-08	1.37E-05	0.00E+00	4.34E-09	0.00E+00	0.00E+00	5.70E-07	0.00E+00	0.00E+00	1.37E-05
1030	ALL	742980.96	4036900.87	NonCancerChronicDerive	0.00E+00	1.36E-09	0.00E+00	0.00E+00	0.00E+00	9.73E-08	1.40E-05	0.00E+00	4.41E-09	0.00E+00	0.00E+00	5.79E-07	0.00E+00	0.00E+00	1.40E-05
1031	ALL	743080.96	4036900.87	NonCancerChronicDerive	0.00E+00	1.38E-09	0.00E+00	0.00E+00	0.00E+00	9.90E-08	1.42E-05	0.00E+00	4.48E-09	0.00E+00	0.00E+00	5.89E-07	0.00E+00	0.00E+00	1.42E-05
1032	ALL	743180.96	4036900.87	NonCancerChronicDerive	0.00E+00	1.41E-09	0.00E+00	0.00E+00	0.00E+00	1.01E-07	1.45E-05	0.00E+00	4.56E-09	0.00E+00	0.00E+00	6.00E-07	0.00E+00	0.00E+00	1.45E-05
1033	ALL	743280.96	4036900.87	NonCancerChronicDerive	0.00E+00	1.44E-09	0.00E+00	0.00E+00	0.00E+00	1.03E-07	1.48E-05	0.00E+00	4.65E-09	0.00E+00	0.00E+00	6.11E-07	0.00E+00	0.00E+00	1.48E-05
1034	ALL	743380.96	4036900.87	NonCancerChronicDerive	0.00E+00	1.47E-09	0.00E+00	0.00E+00	0.00E+00	1.05E-07	1.51E-05	0.00E+00	4.75E-09	0.00E+00	0.00E+00	6.24E-07	0.00E+00	0.00E+00	1.51E-05
1035	ALL	743480.96	4036900.87	NonCancerChronicDerive	0.00E+00	1.50E-09	0.00E+00	0.00E+00	0.00E+00	1.08E-07	1.55E-05	0.00E+00	4.85E-09	0.00E+00	0.00E+00	6.38E-07	0.00E+00	0.00E+00	1.55E-05
1036	ALL	743580.96	4036900.87	NonCancerChronicDerive	0.00E+00	1.53E-09	0.00E+00	0.00E+00	0.00E+00	1.10E-07	1.58E-05	0.00E+00	4.97E-09	0.00E+00	0.00E+00	6.53E-07	0.00E+00	0.00E+00	1.58E-05
1037	ALL	743680.96	4036900.87	NonCancerChronicDerive	0.00E+00	1.57E-09	0.00E+00	0.00E+00	0.00E+00	1.13E-07	1.62E-05	0.00E+00	5.09E-09	0.00E+00	0.00E+00	6.69E-07	0.00E+00	0.00E+00	1.62E-05
1038	ALL	743780.96	4036900.87	NonCancerChronicDerive	0.00E+00	1.61E-09	0.00E+00	0.00E+00	0.00E+00	1.16E-07	1.67E-05	0.00E+00	5.22E-09	0.00E+00	0.00E+00	6.86E-07	0.00E+00	0.00E+00	1.67E-05
1039	ALL	743880.96	4036900.87	NonCancerChronicDerive	0.00E+00	1.66E-09	0.00E+00	0.00E+00	0.00E+00	1.19E-07	1.71E-05	0.00E+00	5.36E-09	0.00E+00	0.00E+00	7.05E-07	0.00E+00	0.00E+00	1.71E-05
1040	ALL	743980.96	4036900.87	NonCancerChronicDerive	0.00E+00	1.70E-09	0.00E+00	0.00E+00	0.00E+00	1.23E-07	1.76E-05	0.00E+00	5.51E-09	0.00E+00	0.00E+00	7.24E-07	0.00E+00	0.00E+00	1.76E-05
1041	ALL	744080.96	4036900.87	NonCancerChronicDerive	0.00E+00	1.75E-09	0.00E+00	0.00E+00	0.00E+00	1.27E-07	1.82E-05	0.00E+00	5.67E-09	0.00E+00	0.00E+00	7.46E-07	0.00E+00	0.00E+00	1.82E-05
1042	ALL	744180.96	4036900.87	NonCancerChronicDerive	0.00E+00	1.81E-09	0.00E+00	0.00E+00	0.00E+00	1.31E-07	1.87E-05	0.00E+00	5.85E-09	0.00E+00	0.00E+00	7.69E-07	0.00E+00	0.00E+00	1.87E-05
1043	ALL	744280.96	4036900.87	NonCancerChronicDerive	0.00E+00	1.86E-09	0.00E+00	0.00E+00	0.00E+00	1.35E-07	1.93E-05	0.00E+00	6.03E-09	0.00E+00	0.00E+00	7.93E-07	0.00E+00	0.00E+00	1.93E-05
1044	ALL	744380.96	4036900.87	NonCancerChronicDerive	0.00E+00	1.93E-09	0.00E+00	0.00E+00	0.00E+00	1.40E-07	2.00E-05	0.00E+00	6.24E-09	0.00E+00	0.00E+00	8.20E-07	0.00E+00	0.00E+00	2.00E-05
1045	ALL	744480.96	4036900.87	NonCancerChronicDerive	0.00E+00	1.99E-09	0.00E+00	0.00E+00	0.00E+00	1.45E-07	2.07E-05	0.00E+00	6.46E-09	0.00E+00	0.00E+00	8.49E-07	0.00E+00	0.00E+00	2.07E-05
1046	ALL	744580.96	4036900.87	NonCancerChronicDerive	0.00E+00	2.07E-09	0.00E+00	0.00E+00	0.00E+00	1.50E-07	2.15E-05	0.00E+00	6.70E-09	0.00E+00	0.00E+00	8.80E-07	0.00E+00	0.00E+00	2.15E-05
1047	ALL	744680.96	4036900.87	NonCancerChronicDerive	0.00E+00	2.15E-09	0.00E+00	0.00E+00	0.00E+00	1.56E-07	2.24E-05	0.00E+00	6.96E-09	0.00E+00	0.00E+00	9.15E-07	0.00E+00	0.00E+00	2.24E-05
1048	ALL	744780.96	4036900.87	NonCancerChronicDerive	0.00E+00	2.24E-09	0.00E+00	0.00E+00	0.00E+00	1.63E-07	2.34E-05	0.00E+00	7.26E-09	0.00E+00	0.00E+00	9.54E-07	0.00E+00	0.00E+00	2.34E-05
1049	ALL	744880.96	4036900.87	NonCancerChronicDerive	0.00E+00	2.35E-09	0.00E+00	0.00E+00	0.00E+00	1.71E-07	2.45E-05	0.00E+00	7.59E-09	0.00E+00	0.00E+00	9.98E-07	0.00E+00	0.00E+00	2.45E-05
1050	ALL	744980.96	4036900.87	NonCancerChronicDerive	0.00E+00	2.46E-09	0.00E+00	0.00E+00	0.00E+00	1.80E-07	2.57E-05	0.00E+00	7.98E-09	0.00E+00	0.00E+00	1.05E-06	0.00E+00	0.00E+00	2.57E-05
1051	ALL	745080.96	4036900.87	NonCancerChronicDerive	0.00E+00	2.60E-09	0.00E+00	0.00E+00	0.00E+00	1.90E-07	2.72E-05	0.00E+00	8.43E-09	0.00E+00	0.00E+00	1.11E-06	0.00E+00	0.00E+00	2.72E-05
1052	ALL	745180.96	4036900.87	NonCancerChronicDerive	0.00E+00	2.77E-09	0.00E+00	0.00E+00	0.00E+00	2.02E-07	2.88E-05	0.00E+00	8.95E-09	0.00E+00	0.00E+00	1.18E-06	0.00E+00	0.00E+00	2.88E-05
1053	ALL	745280.96	4036900.87	NonCancerChronicDerive	0.00E+00	2.95E-09	0.00E+00	0.00E+00	0.00E+00	2.15E-07	3.07E-05	0.00E+00	9.56E-09	0.00E+00	0.00E+00	1.26E-06	0.00E+00	0.00E+00	3.07E-05
1054	ALL	745380.96	4036900.87	NonCancerChronicDerive	0.00E+00	3.17E-09	0.00E+00	0.00E+00	0.00E+00	2.31E-07	3.29E-05	0.00E+00	1.03E-08	0.00E+00	0.00E+00	1.35E-06	0.00E+00	0.00E+00	3.29E-05
1055	ALL	745480.96	4036900.87	NonCancerChronicDerive	0.00E+00	3.42E-09	0.00E+00	0.00E+00	0.00E+00	2.48E-07	3.55E-05	0.00E+00	1.11E-08	0.00E+00	0.00E+00	1.46E-06	0.00E+00	0.00E+00	3.55E-05
1056	ALL	745580.96	4036900.87	NonCancerChronicDerive	0.00E+00	3.71E-09	0.00E+00	0.00E+00	0.00E+00	2.69E-07	3.84E-05	0.00E+00	1.20E-08	0.00E+00	0.00E+00	1.58E-06	0.00E+00	0.00E+00	3.84E-05
1057	ALL	745680.96	4036900.87	NonCancerChronicDerive	0.00E+00	4.03E-09	0.00E+00	0.00E+00	0.00E+00	2.92E-07	4.17E-05	0.00E+00	1.31E-08	0.00E+00	0.00E+00	1.72E-06	0.00E+00	0.00E+00	4.17E-05
1058	ALL	745780.96	4036900.87	NonCancerChronicDerive	0.00E+00	4.41E-09	0.00E+00	0.00E+00	0.00E+00	3.19E-07	4.55E-05	0.00E+00	1.43E-08	0.00E+00	0.00E+00	1.87E-06	0.00E+00	0.00E+00	4.55E-05

1059	ALL	745880.96	4036900.87	NonCancerChronicDerive	0.00E+00	4.83E-09	0.00E+00	0.00E+00	0.00E+00	3.49E-07	4.98E-05	0.00E+00	1.56E-08	0.00E+00	0.00E+00	2.05E-06	0.00E+00	0.00E+00	4.98E-05
1060	ALL	747188.42	4034760.7	NonCancerChronicDerive	0.00E+00	4.36E-09	0.00E+00	0.00E+00	0.00E+00	2.97E-07	4.26E-05	0.00E+00	1.41E-08	0.00E+00	0.00E+00	1.85E-06	0.00E+00	0.00E+00	4.26E-05
1061	ALL	747288.42	4034760.7	NonCancerChronicDerive	0.00E+00	5.35E-09	0.00E+00	0.00E+00	0.00E+00	3.60E-07	5.16E-05	0.00E+00	1.73E-08	0.00E+00	0.00E+00	2.28E-06	0.00E+00	0.00E+00	5.16E-05
1062	ALL	747388.42	4034760.7	NonCancerChronicDerive	0.00E+00	6.44E-09	0.00E+00	0.00E+00	0.00E+00	4.30E-07	6.15E-05	0.00E+00	2.09E-08	0.00E+00	0.00E+00	2.74E-06	0.00E+00	0.00E+00	6.15E-05
1063	ALL	747488.42	4034760.7	NonCancerChronicDerive	0.00E+00	7.53E-09	0.00E+00	0.00E+00	0.00E+00	4.99E-07	7.13E-05	0.00E+00	2.44E-08	0.00E+00	0.00E+00	3.21E-06	0.00E+00	0.00E+00	7.13E-05
1064	ALL	747588.42	4034760.7	NonCancerChronicDerive	0.00E+00	8.59E-09	0.00E+00	0.00E+00	0.00E+00	5.65E-07	8.08E-05	0.00E+00	2.78E-08	0.00E+00	0.00E+00	3.65E-06	0.00E+00	0.00E+00	8.08E-05
1065	ALL	747688.42	4034760.7	NonCancerChronicDerive	0.00E+00	9.57E-09	0.00E+00	0.00E+00	0.00E+00	6.27E-07	8.97E-05	0.00E+00	3.10E-08	0.00E+00	0.00E+00	4.07E-06	0.00E+00	0.00E+00	8.97E-05
1066	ALL	747788.42	4034760.7	NonCancerChronicDerive	0.00E+00	1.04E-08	0.00E+00	0.00E+00	0.00E+00	6.82E-07	9.76E-05	0.00E+00	3.38E-08	0.00E+00	0.00E+00	4.45E-06	0.00E+00	0.00E+00	9.76E-05
1067	ALL	747888.42	4034760.7	NonCancerChronicDerive	0.00E+00	1.12E-08	0.00E+00	0.00E+00	0.00E+00	7.30E-07	1.04E-04	0.00E+00	3.62E-08	0.00E+00	0.00E+00	4.76E-06	0.00E+00	0.00E+00	1.04E-04
1068	ALL	747988.42	4034760.7	NonCancerChronicDerive	0.00E+00	1.18E-08	0.00E+00	0.00E+00	0.00E+00	7.66E-07	1.09E-04	0.00E+00	3.81E-08	0.00E+00	0.00E+00	5.01E-06	0.00E+00	0.00E+00	1.09E-04
1069	ALL	748088.42	4034760.7	NonCancerChronicDerive	0.00E+00	1.23E-08	0.00E+00	0.00E+00	0.00E+00	7.99E-07	1.14E-04	0.00E+00	3.98E-08	0.00E+00	0.00E+00	5.23E-06	0.00E+00	0.00E+00	1.14E-04
1070	ALL	748188.42	4034760.7	NonCancerChronicDerive	0.00E+00	1.27E-08	0.00E+00	0.00E+00	0.00E+00	8.24E-07	1.18E-04	0.00E+00	4.11E-08	0.00E+00	0.00E+00	5.40E-06	0.00E+00	0.00E+00	1.18E-04
1071	ALL	748288.42	4034760.7	NonCancerChronicDerive	0.00E+00	1.30E-08	0.00E+00	0.00E+00	0.00E+00	8.42E-07	1.20E-04	0.00E+00	4.20E-08	0.00E+00	0.00E+00	5.52E-06	0.00E+00	0.00E+00	1.20E-04
1072	ALL	748388.42	4034760.7	NonCancerChronicDerive	0.00E+00	1.30E-08	0.00E+00	0.00E+00	0.00E+00	8.47E-07	1.21E-04	0.00E+00	4.22E-08	0.00E+00	0.00E+00	5.55E-06	0.00E+00	0.00E+00	1.21E-04
1073	ALL	748488.42	4034760.7	NonCancerChronicDerive	0.00E+00	1.30E-08	0.00E+00	0.00E+00	0.00E+00	8.47E-07	1.21E-04	0.00E+00	4.22E-08	0.00E+00	0.00E+00	5.55E-06	0.00E+00	0.00E+00	1.21E-04
1074	ALL	748588.42	4034760.7	NonCancerChronicDerive	0.00E+00	1.29E-08	0.00E+00	0.00E+00	0.00E+00	8.38E-07	1.19E-04	0.00E+00	4.17E-08	0.00E+00	0.00E+00	5.48E-06	0.00E+00	0.00E+00	1.19E-04
1075	ALL	748688.42	4034760.7	NonCancerChronicDerive	0.00E+00	1.26E-08	0.00E+00	0.00E+00	0.00E+00	8.22E-07	1.17E-04	0.00E+00	4.08E-08	0.00E+00	0.00E+00	5.36E-06	0.00E+00	0.00E+00	1.17E-04
1076	ALL	748788.42	4034760.7	NonCancerChronicDerive	0.00E+00	1.22E-08	0.00E+00	0.00E+00	0.00E+00	8.00E-07	1.14E-04	0.00E+00	3.96E-08	0.00E+00	0.00E+00	5.21E-06	0.00E+00	0.00E+00	1.14E-04
1077	ALL	748888.42	4034760.7	NonCancerChronicDerive	0.00E+00	1.18E-08	0.00E+00	0.00E+00	0.00E+00	7.73E-07	1.10E-04	0.00E+00	3.82E-08	0.00E+00	0.00E+00	5.02E-06	0.00E+00	0.00E+00	1.10E-04
1078	ALL	747188.42	4034860.7	NonCancerChronicDerive	0.00E+00	4.82E-09	0.00E+00	0.00E+00	0.00E+00	3.28E-07	4.70E-05	0.00E+00	1.56E-08	0.00E+00	0.00E+00	2.05E-06	0.00E+00	0.00E+00	4.70E-05
1079	ALL	747288.42	4034860.7	NonCancerChronicDerive	0.00E+00	6.03E-09	0.00E+00	0.00E+00	0.00E+00	4.05E-07	5.80E-05	0.00E+00	1.95E-08	0.00E+00	0.00E+00	2.57E-06	0.00E+00	0.00E+00	5.80E-05
1080	ALL	747388.42	4034860.7	NonCancerChronicDerive	0.00E+00	7.36E-09	0.00E+00	0.00E+00	0.00E+00	4.89E-07	7.00E-05	0.00E+00	2.38E-08	0.00E+00	0.00E+00	3.13E-06	0.00E+00	0.00E+00	7.00E-05
1081	ALL	747488.42	4034860.7	NonCancerChronicDerive	0.00E+00	8.68E-09	0.00E+00	0.00E+00	0.00E+00	5.72E-07	8.19E-05	0.00E+00	2.81E-08	0.00E+00	0.00E+00	3.69E-06	0.00E+00	0.00E+00	8.19E-05
1082	ALL	747588.42	4034860.7	NonCancerChronicDerive	0.00E+00	9.94E-09	0.00E+00	0.00E+00	0.00E+00	6.51E-07	9.32E-05	0.00E+00	3.22E-08	0.00E+00	0.00E+00	4.23E-06	0.00E+00	0.00E+00	9.32E-05
1083	ALL	747688.42	4034860.7	NonCancerChronicDerive	0.00E+00	1.11E-08	0.00E+00	0.00E+00	0.00E+00	7.24E-07	1.04E-04	0.00E+00	3.59E-08	0.00E+00	0.00E+00	4.72E-06	0.00E+00	0.00E+00	1.04E-04
1084	ALL	747788.42	4034860.7	NonCancerChronicDerive	0.00E+00	1.21E-08	0.00E+00	0.00E+00	0.00E+00	7.87E-07	1.13E-04	0.00E+00	3.91E-08	0.00E+00	0.00E+00	5.15E-06	0.00E+00	0.00E+00	1.13E-04
1085	ALL	747888.42	4034860.7	NonCancerChronicDerive	0.00E+00	1.29E-08	0.00E+00	0.00E+00	0.00E+00	8.40E-07	1.20E-04	0.00E+00	4.19E-08	0.00E+00	0.00E+00	5.50E-06	0.00E+00	0.00E+00	1.20E-04
1086	ALL	747988.42	4034860.7	NonCancerChronicDerive	0.00E+00	1.35E-08	0.00E+00	0.00E+00	0.00E+00	8.78E-07	1.26E-04	0.00E+00	4.38E-08	0.00E+00	0.00E+00	5.76E-06	0.00E+00	0.00E+00	1.26E-04
1087	ALL	748088.42	4034860.7	NonCancerChronicDerive	0.00E+00	1.41E-08	0.00E+00	0.00E+00	0.00E+00	9.12E-07	1.30E-04	0.00E+00	4.56E-08	0.00E+00	0.00E+00	5.99E-06	0.00E+00	0.00E+00	1.30E-04
1088	ALL	748188.42	4034860.7	NonCancerChronicDerive	0.00E+00	1.44E-08	0.00E+00	0.00E+00	0.00E+00	9.34E-07	1.34E-04	0.00E+00	4.67E-08	0.00E+00	0.00E+00	6.14E-06	0.00E+00	0.00E+00	1.34E-04
1089	ALL	748288.42	4034860.7	NonCancerChronicDerive	0.00E+00	1.46E-08	0.00E+00	0.00E+00	0.00E+00	9.45E-07	1.35E-04	0.00E+00	4.72E-08	0.00E+00	0.00E+00	6.21E-06	0.00E+00	0.00E+00	1.35E-04
1090	ALL	748388.42	4034860.7	NonCancerChronicDerive	0.00E+00	1.45E-08	0.00E+00	0.00E+00	0.00E+00	9.40E-07	1.34E-04	0.00E+00	4.69E-08	0.00E+00	0.00E+00	6.17E-06	0.00E+00	0.00E+00	1.34E-04
1091	ALL	748488.42	4034860.7	NonCancerChronicDerive	0.00E+00	1.43E-08	0.00E+00	0.00E+00	0.00E+00	9.28E-07	1.32E-04	0.00E+00	4.62E-08	0.00E+00	0.00E+00	6.08E-06	0.00E+00	0.00E+00	1.32E-04
1092	ALL	748588.42	4034860.7	NonCancerChronicDerive	0.00E+00	1.39E-08	0.00E+00	0.00E+00	0.00E+00	9.06E-07	1.29E-04	0.00E+00	4.51E-08	0.00E+00	0.00E+00	5.92E-06	0.00E+00	0.00E+00	1.29E-04
1093	ALL	748688.42	4034860.7	NonCancerChronicDerive	0.00E+00	1.34E-08	0.00E+00	0.00E+00	0.00E+00	8.76E-07	1.25E-04	0.00E+00	4.35E-08	0.00E+00	0.00E+00	5.72E-06	0.00E+00	0.00E+00	1.25E-04
1094	ALL	748788.42	4034860.7	NonCancerChronicDerive	0.00E+00	1.29E-08	0.00E+00	0.00E+00	0.00E+00	8.42E-07	1.19E-04	0.00E+00	4.16E-08	0.00E+00	0.00E+00	5.47E-06	0.00E+00	0.00E+00	1.19E-04
1095	ALL	748888.42	4034860.7	NonCancerChronicDerive	0.00E+00	1.22E-08	0.00E+00	0.00E+00	0.00E+00	8.04E-07	1.14E-04	0.00E+00	3.96E-08	0.00E+00	0.00E+00	5.21E-06	0.00E+00	0.00E+00	1.14E-04
1096	ALL	747188.42	4034960.7	NonCancerChronicDerive	0.00E+00	5.38E-09	0.00E+00	0.00E+00	0.00E+00	3.65E-07	5.24E-05	0.00E+00	1.74E-08	0.00E+00	0.00E+00	2.29E-06	0.00E+00	0.00E+00	5.24E-05
1097	ALL	747288.42	4034960.7	NonCancerChronicDerive	0.00E+00	6.90E-09	0.00E+00	0.00E+00	0.00E+00	4.61E-07	6.62E-05	0.00E+00	2.23E-08	0.00E+00	0.00E+00	2.93E-06	0.00E+00	0.00E+00	6.62E-05
1098	ALL	747388.42	4034960.7	NonCancerChronicDerive	0.00E+00	8.54E-09	0.00E+00	0.00E+00	0.00E+00	5.64E-07	8.10E-05	0.00E+00	2.76E-08	0.00E+00	0.00E+00	3.63E-06	0.00E+00	0.00E+00	8.10E-05
1099	ALL	747488.42	4034960.7	NonCancerChronicDerive	0.00E+00	1.02E-08	0.00E+00	0.00E+00	0.00E+00	6.66E-07	9.55E-05	0.00E+00	3.29E-08	0.00E+00	0.00E+00	4.32E-06	0.00E+00	0.00E+00	9.55E-05
1100	ALL	747588.42	4034960.7	NonCancerChronicDerive	0.00E+00	1.17E-08	0.00E+00	0.00E+00	0.00E+00	7.61E-07	1.09E-04	0.00E+00	3.78E-08	0.00E+00	0.00E+00	4.97E-06	0.00E+00	0.00E+00	1.09E-04
1101	ALL	747688.42	4034960.7	NonCancerChronicDerive	0.00E+00	1.30E-08	0.00E+00	0.00E+00	0.00E+00	8.47E-07	1.21E-04	0.00E+00	4.22E-08	0.00E+00	0.00E+00	5.55E-06	0.00E+00	0.00E+00	1.21E-04
1102	ALL	747788.42	4034960.7	NonCancerChronicDerive	0.00E+00	1.42E-08	0.00E+00	0.00E+00	0.00E+00	9.19E-07	1.32E-04	0.00E+00	4.59E-08	0.00E+00	0.00E+00	6.03E-06	0.00E+00	0.00E+00	1.32E-04
1103	ALL	747888.42	4034960.7	NonCancerChronicDerive	0.00E+00	1.51E-08	0.00E+00	0.00E+00	0.00E+00	9.77E-07	1.40E-04	0.00E+00	4.89E-08	0.00E+00	0.00E+00	6.43E-06	0.00E+00	0.00E+00	1.40E-04
1104	ALL	747988.42	4034960.7	NonCancerChronicDerive	0.00E+00	1.57E-08	0.00E+00	0.00E+00	0.00E+00	1.02E-06	1.46E-04	0.00E+00	5.09E-08	0.00E+00	0.00E+00	6.70E-06	0.00E+00	0.00E+00	1.46E-04
1105	ALL	748088.42	4034960.7	NonCancerChronicDerive	0.00E+00	1.62E-08	0.00E+00	0.00E+00	0.00E+00	1.05E-06	1.50E-04	0.00E+00	5.24E-08	0.00E+00	0.00E+00	6.89E-06	0.00E+00	0.00E+00	1.50E-04
1106	ALL	748188.42	4034960.7	NonCancerChronicDerive	0.00E+00	1.64E-08	0.00E+00	0.00E+00	0.00E+00	1.06E-06	1.52E-04	0.00E+00	5.31E-08	0.00E+00	0.00E+00	6.98E-06	0.00E+00	0.00E+00	1.52E-04
1107	ALL	748288.42	4034960.7	NonCancerChronicDerive	0.00E+00	1.63E-08	0.00E+00	0.00E+00	0.00E+00	1.06E-06	1.51E-04	0.00E+00	5.29E-08	0.00E+00	0.00E+00	6.95E-06	0.00E+00	0.00E+00	1.51E-04
1108	ALL	748388.42	4034960.7	NonCancerChronicDerive	0.00E+00	1.60E-08	0.00E+00	0.00E+00	0.00E+00	1.04E-06	1.48E-04	0.00E+00	5.18E-08	0.00E+00	0.00E+00	6.81E-06	0.00E+00	0.00E+00	1.48E-04
1109	ALL	748488.42	4034960.7	NonCancerChronicDerive	0.00E+00	1.55E-08	0.00E+00	0.00E+00	0.00E+00	1.01E-06	1.43E-04	0.00E+00	5.02E-08	0.00E+00	0.00E+00	6.60E-06	0.00E+00	0.00E+00	1.43E-04
1110	ALL	748588.42	4034960.7	NonCancerChronicDerive	0.00E+00	1.49E-08	0.00E+00	0.00E+00	0.00E+00	9.67E-07	1.38E-04	0.00E+00	4.81E-08	0.00E+00	0.00E+00	6.32E-06	0.00E+00	0.00E+00	1.38E-04
1111	ALL	748688.42	4034960.7	NonCancerChronicDerive	0.00E+00	1.41E-08	0.00E+00	0.00E+00	0.00E+00	9.22E-07	1.31E-04	0.00E+00	4.57E-08	0.00E+00	0.00E+00	6.00E-06	0.00E+00	0.00E+00	1.31E-04

1112	ALL	748788.42	4034960.7	NonCancerChronicDerive	0.00E+00	1.33E-08	0.00E+00	0.00E+00	0.00E+00	8.73E-07	1.24E-04	0.00E+00	4.31E-08	0.00E+00	0.00E+00	5.67E-06	0.00E+00	0.00E+00	1.24E-04
1113	ALL	748888.42	4034960.7	NonCancerChronicDerive	0.00E+00	1.25E-08	0.00E+00	0.00E+00	0.00E+00	8.24E-07	1.17E-04	0.00E+00	4.05E-08	0.00E+00	0.00E+00	5.32E-06	0.00E+00	0.00E+00	1.17E-04
1114	ALL	747188.42	4035060.7	NonCancerChronicDerive	0.00E+00	6.11E-09	0.00E+00	0.00E+00	0.00E+00	4.13E-07	5.94E-05	0.00E+00	1.98E-08	0.00E+00	0.00E+00	2.60E-06	0.00E+00	0.00E+00	5.94E-05
1115	ALL	747288.42	4035060.7	NonCancerChronicDerive	0.00E+00	8.03E-09	0.00E+00	0.00E+00	0.00E+00	5.33E-07	7.67E-05	0.00E+00	2.60E-08	0.00E+00	0.00E+00	3.41E-06	0.00E+00	0.00E+00	7.67E-05
1116	ALL	747388.42	4035060.7	NonCancerChronicDerive	0.00E+00	1.01E-08	0.00E+00	0.00E+00	0.00E+00	6.63E-07	9.54E-05	0.00E+00	3.27E-08	0.00E+00	0.00E+00	4.30E-06	0.00E+00	0.00E+00	9.54E-05
1117	ALL	747488.42	4035060.7	NonCancerChronicDerive	0.00E+00	1.21E-08	0.00E+00	0.00E+00	0.00E+00	7.89E-07	1.13E-04	0.00E+00	3.92E-08	0.00E+00	0.00E+00	5.16E-06	0.00E+00	0.00E+00	1.13E-04
1118	ALL	747588.42	4035060.7	NonCancerChronicDerive	0.00E+00	1.40E-08	0.00E+00	0.00E+00	0.00E+00	9.06E-07	1.30E-04	0.00E+00	4.52E-08	0.00E+00	0.00E+00	5.95E-06	0.00E+00	0.00E+00	1.30E-04
1119	ALL	747688.42	4035060.7	NonCancerChronicDerive	0.00E+00	1.56E-08	0.00E+00	0.00E+00	0.00E+00	1.01E-06	1.45E-04	0.00E+00	5.04E-08	0.00E+00	0.00E+00	6.63E-06	0.00E+00	0.00E+00	1.45E-04
1120	ALL	747788.42	4035060.7	NonCancerChronicDerive	0.00E+00	1.69E-08	0.00E+00	0.00E+00	0.00E+00	1.09E-06	1.56E-04	0.00E+00	5.46E-08	0.00E+00	0.00E+00	7.18E-06	0.00E+00	0.00E+00	1.56E-04
1121	ALL	747888.42	4035060.7	NonCancerChronicDerive	0.00E+00	1.79E-08	0.00E+00	0.00E+00	0.00E+00	1.15E-06	1.65E-04	0.00E+00	5.78E-08	0.00E+00	0.00E+00	7.60E-06	0.00E+00	0.00E+00	1.65E-04
1122	ALL	747988.42	4035060.7	NonCancerChronicDerive	0.00E+00	1.84E-08	0.00E+00	0.00E+00	0.00E+00	1.18E-06	1.70E-04	0.00E+00	5.96E-08	0.00E+00	0.00E+00	7.83E-06	0.00E+00	0.00E+00	1.70E-04
1123	ALL	748088.42	4035060.7	NonCancerChronicDerive	0.00E+00	1.87E-08	0.00E+00	0.00E+00	0.00E+00	1.20E-06	1.72E-04	0.00E+00	6.05E-08	0.00E+00	0.00E+00	7.95E-06	0.00E+00	0.00E+00	1.72E-04
1124	ALL	748188.42	4035060.7	NonCancerChronicDerive	0.00E+00	1.86E-08	0.00E+00	0.00E+00	0.00E+00	1.20E-06	1.71E-04	0.00E+00	6.01E-08	0.00E+00	0.00E+00	7.91E-06	0.00E+00	0.00E+00	1.71E-04
1125	ALL	748288.42	4035060.7	NonCancerChronicDerive	0.00E+00	1.82E-08	0.00E+00	0.00E+00	0.00E+00	1.17E-06	1.67E-04	0.00E+00	5.88E-08	0.00E+00	0.00E+00	7.72E-06	0.00E+00	0.00E+00	1.67E-04
1126	ALL	748388.42	4035060.7	NonCancerChronicDerive	0.00E+00	1.74E-08	0.00E+00	0.00E+00	0.00E+00	1.13E-06	1.61E-04	0.00E+00	5.64E-08	0.00E+00	0.00E+00	7.41E-06	0.00E+00	0.00E+00	1.61E-04
1127	ALL	748488.42	4035060.7	NonCancerChronicDerive	0.00E+00	1.65E-08	0.00E+00	0.00E+00	0.00E+00	1.08E-06	1.53E-04	0.00E+00	5.36E-08	0.00E+00	0.00E+00	7.04E-06	0.00E+00	0.00E+00	1.53E-04
1128	ALL	748588.42	4035060.7	NonCancerChronicDerive	0.00E+00	1.56E-08	0.00E+00	0.00E+00	0.00E+00	1.02E-06	1.44E-04	0.00E+00	5.04E-08	0.00E+00	0.00E+00	6.62E-06	0.00E+00	0.00E+00	1.44E-04
1129	ALL	748688.42	4035060.7	NonCancerChronicDerive	0.00E+00	1.45E-08	0.00E+00	0.00E+00	0.00E+00	9.54E-07	1.35E-04	0.00E+00	4.71E-08	0.00E+00	0.00E+00	6.19E-06	0.00E+00	0.00E+00	1.35E-04
1130	ALL	748788.42	4035060.7	NonCancerChronicDerive	0.00E+00	1.35E-08	0.00E+00	0.00E+00	0.00E+00	8.91E-07	1.26E-04	0.00E+00	4.38E-08	0.00E+00	0.00E+00	5.76E-06	0.00E+00	0.00E+00	1.26E-04
1131	ALL	748888.42	4035060.7	NonCancerChronicDerive	0.00E+00	1.26E-08	0.00E+00	0.00E+00	0.00E+00	8.31E-07	1.17E-04	0.00E+00	4.07E-08	0.00E+00	0.00E+00	5.35E-06	0.00E+00	0.00E+00	1.17E-04
1132	ALL	747188.42	4035160.7	NonCancerChronicDerive	0.00E+00	7.06E-09	0.00E+00	0.00E+00	0.00E+00	4.75E-07	6.84E-05	0.00E+00	2.28E-08	0.00E+00	0.00E+00	3.00E-06	0.00E+00	0.00E+00	6.84E-05
1133	ALL	747288.42	4035160.7	NonCancerChronicDerive	0.00E+00	9.56E-09	0.00E+00	0.00E+00	0.00E+00	6.32E-07	9.11E-05	0.00E+00	3.10E-08	0.00E+00	0.00E+00	4.07E-06	0.00E+00	0.00E+00	9.11E-05
1134	ALL	747388.42	4035160.7	NonCancerChronicDerive	0.00E+00	1.22E-08	0.00E+00	0.00E+00	0.00E+00	7.99E-07	1.15E-04	0.00E+00	3.96E-08	0.00E+00	0.00E+00	5.21E-06	0.00E+00	0.00E+00	1.15E-04
1135	ALL	747488.42	4035160.7	NonCancerChronicDerive	0.00E+00	1.48E-08	0.00E+00	0.00E+00	0.00E+00	9.59E-07	1.38E-04	0.00E+00	4.79E-08	0.00E+00	0.00E+00	6.30E-06	0.00E+00	0.00E+00	1.38E-04
1136	ALL	748388.42	4035160.7	NonCancerChronicDerive	0.00E+00	1.87E-08	0.00E+00	0.00E+00	0.00E+00	1.21E-06	1.72E-04	0.00E+00	6.04E-08	0.00E+00	0.00E+00	7.94E-06	0.00E+00	0.00E+00	1.72E-04
1137	ALL	748488.42	4035160.7	NonCancerChronicDerive	0.00E+00	1.73E-08	0.00E+00	0.00E+00	0.00E+00	1.13E-06	1.61E-04	0.00E+00	5.61E-08	0.00E+00	0.00E+00	7.38E-06	0.00E+00	0.00E+00	1.61E-04
1138	ALL	748588.42	4035160.7	NonCancerChronicDerive	0.00E+00	1.60E-08	0.00E+00	0.00E+00	0.00E+00	1.05E-06	1.49E-04	0.00E+00	5.18E-08	0.00E+00	0.00E+00	6.81E-06	0.00E+00	0.00E+00	1.49E-04
1139	ALL	748688.42	4035160.7	NonCancerChronicDerive	0.00E+00	1.47E-08	0.00E+00	0.00E+00	0.00E+00	9.69E-07	1.37E-04	0.00E+00	4.76E-08	0.00E+00	0.00E+00	6.26E-06	0.00E+00	0.00E+00	1.37E-04
1140	ALL	748788.42	4035160.7	NonCancerChronicDerive	0.00E+00	1.35E-08	0.00E+00	0.00E+00	0.00E+00	8.94E-07	1.26E-04	0.00E+00	4.37E-08	0.00E+00	0.00E+00	5.75E-06	0.00E+00	0.00E+00	1.26E-04
1141	ALL	748888.42	4035160.7	NonCancerChronicDerive	0.00E+00	1.24E-08	0.00E+00	0.00E+00	0.00E+00	8.26E-07	1.16E-04	0.00E+00	4.02E-08	0.00E+00	0.00E+00	5.28E-06	0.00E+00	0.00E+00	1.16E-04
1142	ALL	747188.42	4035260.7	NonCancerChronicDerive	0.00E+00	8.32E-09	0.00E+00	0.00E+00	0.00E+00	5.56E-07	8.04E-05	0.00E+00	2.69E-08	0.00E+00	0.00E+00	3.54E-06	0.00E+00	0.00E+00	8.04E-05
1143	ALL	747288.42	4035260.7	NonCancerChronicDerive	0.00E+00	1.17E-08	0.00E+00	0.00E+00	0.00E+00	7.65E-07	1.11E-04	0.00E+00	3.78E-08	0.00E+00	0.00E+00	4.97E-06	0.00E+00	0.00E+00	1.11E-04
1144	ALL	747388.42	4035260.7	NonCancerChronicDerive	0.00E+00	1.52E-08	0.00E+00	0.00E+00	0.00E+00	9.86E-07	1.42E-04	0.00E+00	4.93E-08	0.00E+00	0.00E+00	6.48E-06	0.00E+00	0.00E+00	1.42E-04
1145	ALL	747488.42	4035260.7	NonCancerChronicDerive	0.00E+00	1.85E-08	0.00E+00	0.00E+00	0.00E+00	1.19E-06	1.72E-04	0.00E+00	6.00E-08	0.00E+00	0.00E+00	7.89E-06	0.00E+00	0.00E+00	1.72E-04
1146	ALL	748388.42	4035260.7	NonCancerChronicDerive	0.00E+00	1.94E-08	0.00E+00	0.00E+00	0.00E+00	1.26E-06	1.79E-04	0.00E+00	6.28E-08	0.00E+00	0.00E+00	8.25E-06	0.00E+00	0.00E+00	1.79E-04
1147	ALL	748488.42	4035260.7	NonCancerChronicDerive	0.00E+00	1.76E-08	0.00E+00	0.00E+00	0.00E+00	1.16E-06	1.64E-04	0.00E+00	5.71E-08	0.00E+00	0.00E+00	7.51E-06	0.00E+00	0.00E+00	1.64E-04
1148	ALL	748588.42	4035260.7	NonCancerChronicDerive	0.00E+00	1.60E-08	0.00E+00	0.00E+00	0.00E+00	1.05E-06	1.49E-04	0.00E+00	5.18E-08	0.00E+00	0.00E+00	6.81E-06	0.00E+00	0.00E+00	1.49E-04
1149	ALL	748688.42	4035260.7	NonCancerChronicDerive	0.00E+00	1.45E-08	0.00E+00	0.00E+00	0.00E+00	9.62E-07	1.36E-04	0.00E+00	4.70E-08	0.00E+00	0.00E+00	6.17E-06	0.00E+00	0.00E+00	1.36E-04
1150	ALL	748788.42	4035260.7	NonCancerChronicDerive	0.00E+00	1.32E-08	0.00E+00	0.00E+00	0.00E+00	8.80E-07	1.24E-04	0.00E+00	4.27E-08	0.00E+00	0.00E+00	5.61E-06	0.00E+00	0.00E+00	1.24E-04
1151	ALL	748888.42	4035260.7	NonCancerChronicDerive	0.00E+00	1.20E-08	0.00E+00	0.00E+00	0.00E+00	8.07E-07	1.13E-04	0.00E+00	3.90E-08	0.00E+00	0.00E+00	5.12E-06	0.00E+00	0.00E+00	1.13E-04
1152	ALL	747188.42	4035360.7	NonCancerChronicDerive	0.00E+00	1.01E-08	0.00E+00	0.00E+00	0.00E+00	6.69E-07	9.70E-05	0.00E+00	3.26E-08	0.00E+00	0.00E+00	4.29E-06	0.00E+00	0.00E+00	9.70E-05
1153	ALL	747288.42	4035360.7	NonCancerChronicDerive	0.00E+00	1.47E-08	0.00E+00	0.00E+00	0.00E+00	9.58E-07	1.39E-04	0.00E+00	4.77E-08	0.00E+00	0.00E+00	6.27E-06	0.00E+00	0.00E+00	1.39E-04
1154	ALL	747388.42	4035360.7	NonCancerChronicDerive	0.00E+00	1.96E-08	0.00E+00	0.00E+00	0.00E+00	1.26E-06	1.82E-04	0.00E+00	6.34E-08	0.00E+00	0.00E+00	8.33E-06	0.00E+00	0.00E+00	1.82E-04
1155	ALL	747488.42	4035360.7	NonCancerChronicDerive	0.00E+00	2.40E-08	0.00E+00	0.00E+00	0.00E+00	1.53E-06	2.22E-04	0.00E+00	7.76E-08	0.00E+00	0.00E+00	1.02E-05	0.00E+00	0.00E+00	2.22E-04
1156	ALL	748388.42	4035360.7	NonCancerChronicDerive	0.00E+00	1.95E-08	0.00E+00	0.00E+00	0.00E+00	1.28E-06	1.81E-04	0.00E+00	6.32E-08	0.00E+00	0.00E+00	8.30E-06	0.00E+00	0.00E+00	1.81E-04
1157	ALL	748488.42	4035360.7	NonCancerChronicDerive	0.00E+00	1.74E-08	0.00E+00	0.00E+00	0.00E+00	1.15E-06	1.63E-04	0.00E+00	5.64E-08	0.00E+00	0.00E+00	7.42E-06	0.00E+00	0.00E+00	1.63E-04
1158	ALL	748588.42	4035360.7	NonCancerChronicDerive	0.00E+00	1.56E-08	0.00E+00	0.00E+00	0.00E+00	1.04E-06	1.46E-04	0.00E+00	5.05E-08	0.00E+00	0.00E+00	6.64E-06	0.00E+00	0.00E+00	1.46E-04
1159	ALL	748688.42	4035360.7	NonCancerChronicDerive	0.00E+00	1.40E-08	0.00E+00	0.00E+00	0.00E+00	9.37E-07	1.32E-04	0.00E+00	4.54E-08	0.00E+00	0.00E+00	5.97E-06	0.00E+00	0.00E+00	1.32E-04
1160	ALL	748788.42	4035360.7	NonCancerChronicDerive	0.00E+00	1.27E-08	0.00E+00	0.00E+00	0.00E+00	8.52E-07	1.20E-04	0.00E+00	4.10E-08	0.00E+00	0.00E+00	5.39E-06	0.00E+00	0.00E+00	1.20E-04
1161	ALL	748888.42	4035360.7	NonCancerChronicDerive	0.00E+00	1.15E-08	0.00E+00	0.00E+00	0.00E+00	7.79E-07	1.09E-04	0.00E+00	3.73E-08	0.00E+00	0.00E+00	4.90E-06	0.00E+00	0.00E+00	1.09E-04
1162	ALL	747188.42	4035460.7	NonCancerChronicDerive	0.00E+00	1.27E-08	0.00E+00	0.00E+00	0.00E+00	8.37E-07	1.22E-04	0.00E+00	4.12E-08	0.00E+00	0.00E+00	5.42E-06	0.00E+00	0.00E+00	1.22E-04
1163	ALL	747288.42	4035460.7	NonCancerChronicDerive	0.00E+00	1.96E-08	0.00E+00	0.00E+00	0.00E+00	1.26E-06	1.83E-04	0.00E+00	6.33E-08	0.00E+00	0.00E+00	8.32E-06	0.00E+00	0.00E+00	1.83E-04
1164	ALL	747388.42	4035460.7	NonCancerChronicDerive	0.00E+00	2.64E-08	0.00E+00	0.00E+00	0.00E+00	1.68E-06	2.45E-04	0.00E+00	8.56E-08	0.00E+00	0.00E+00	1.12E-05	0.00E+00	0.00E+00	2.45E-04

1165	ALL	747488.42	4035460.7	NonCancerChronicDerive	0.00E+00	3.21E-08	0.00E+00	0.00E+00	0.00E+00	2.03E-06	2.96E-04	0.00E+00	1.04E-07	0.00E+00	0.00E+00	1.37E-05	0.00E+00	0.00E+00	2.96E-04
1166	ALL	748388.42	4035460.7	NonCancerChronicDerive	0.00E+00	1.90E-08	0.00E+00	0.00E+00	0.00E+00	1.25E-06	1.77E-04	0.00E+00	6.15E-08	0.00E+00	0.00E+00	8.08E-06	0.00E+00	0.00E+00	1.77E-04
1167	ALL	748488.42	4035460.7	NonCancerChronicDerive	0.00E+00	1.67E-08	0.00E+00	0.00E+00	0.00E+00	1.12E-06	1.57E-04	0.00E+00	5.42E-08	0.00E+00	0.00E+00	7.13E-06	0.00E+00	0.00E+00	1.57E-04
1168	ALL	748588.42	4035460.7	NonCancerChronicDerive	0.00E+00	1.49E-08	0.00E+00	0.00E+00	0.00E+00	9.97E-07	1.40E-04	0.00E+00	4.81E-08	0.00E+00	0.00E+00	6.33E-06	0.00E+00	0.00E+00	1.40E-04
1169	ALL	748688.42	4035460.7	NonCancerChronicDerive	0.00E+00	1.33E-08	0.00E+00	0.00E+00	0.00E+00	8.98E-07	1.26E-04	0.00E+00	4.31E-08	0.00E+00	0.00E+00	5.66E-06	0.00E+00	0.00E+00	1.26E-04
1170	ALL	748788.42	4035460.7	NonCancerChronicDerive	0.00E+00	1.20E-08	0.00E+00	0.00E+00	0.00E+00	8.14E-07	1.14E-04	0.00E+00	3.88E-08	0.00E+00	0.00E+00	5.10E-06	0.00E+00	0.00E+00	1.14E-04
1171	ALL	748888.42	4035460.7	NonCancerChronicDerive	0.00E+00	1.09E-08	0.00E+00	0.00E+00	0.00E+00	7.43E-07	1.04E-04	0.00E+00	3.53E-08	0.00E+00	0.00E+00	4.64E-06	0.00E+00	0.00E+00	1.04E-04
1172	ALL	746388.42	4035560.7	NonCancerChronicDerive	0.00E+00	2.38E-09	0.00E+00	0.00E+00	0.00E+00	1.78E-07	2.54E-05	0.00E+00	7.71E-09	0.00E+00	0.00E+00	1.01E-06	0.00E+00	0.00E+00	2.54E-05
1173	ALL	746488.42	4035560.7	NonCancerChronicDerive	0.00E+00	2.62E-09	0.00E+00	0.00E+00	0.00E+00	1.95E-07	2.78E-05	0.00E+00	8.47E-09	0.00E+00	0.00E+00	1.11E-06	0.00E+00	0.00E+00	2.78E-05
1174	ALL	746588.42	4035560.7	NonCancerChronicDerive	0.00E+00	2.90E-09	0.00E+00	0.00E+00	0.00E+00	2.15E-07	3.06E-05	0.00E+00	9.39E-09	0.00E+00	0.00E+00	1.23E-06	0.00E+00	0.00E+00	3.06E-05
1175	ALL	746688.42	4035560.7	NonCancerChronicDerive	0.00E+00	3.21E-09	0.00E+00	0.00E+00	0.00E+00	2.34E-07	3.35E-05	0.00E+00	1.04E-08	0.00E+00	0.00E+00	1.36E-06	0.00E+00	0.00E+00	3.35E-05
1176	ALL	746788.42	4035560.7	NonCancerChronicDerive	0.00E+00	3.74E-09	0.00E+00	0.00E+00	0.00E+00	2.70E-07	3.88E-05	0.00E+00	1.21E-08	0.00E+00	0.00E+00	1.59E-06	0.00E+00	0.00E+00	3.88E-05
1177	ALL	746888.42	4035560.7	NonCancerChronicDerive	0.00E+00	4.60E-09	0.00E+00	0.00E+00	0.00E+00	3.26E-07	4.73E-05	0.00E+00	1.49E-08	0.00E+00	0.00E+00	1.96E-06	0.00E+00	0.00E+00	4.73E-05
1178	ALL	746988.42	4035560.7	NonCancerChronicDerive	0.00E+00	5.96E-09	0.00E+00	0.00E+00	0.00E+00	4.16E-07	6.06E-05	0.00E+00	1.93E-08	0.00E+00	0.00E+00	2.54E-06	0.00E+00	0.00E+00	6.06E-05
1179	ALL	747088.42	4035560.7	NonCancerChronicDerive	0.00E+00	9.26E-09	0.00E+00	0.00E+00	0.00E+00	6.26E-07	9.16E-05	0.00E+00	3.00E-08	0.00E+00	0.00E+00	3.94E-06	0.00E+00	0.00E+00	9.16E-05
1180	ALL	747188.42	4035560.7	NonCancerChronicDerive	0.00E+00	1.69E-08	0.00E+00	0.00E+00	0.00E+00	1.10E-06	1.62E-04	0.00E+00	5.48E-08	0.00E+00	0.00E+00	7.20E-06	0.00E+00	0.00E+00	1.62E-04
1181	ALL	747288.42	4035560.7	NonCancerChronicDerive	0.00E+00	2.75E-08	0.00E+00	0.00E+00	0.00E+00	1.75E-06	2.57E-04	0.00E+00	8.91E-08	0.00E+00	0.00E+00	1.17E-05	0.00E+00	0.00E+00	2.57E-04
1182	ALL	747388.42	4035560.7	NonCancerChronicDerive	0.00E+00	3.75E-08	0.00E+00	0.00E+00	0.00E+00	2.37E-06	3.46E-04	0.00E+00	1.21E-07	0.00E+00	0.00E+00	1.60E-05	0.00E+00	0.00E+00	3.46E-04
1183	ALL	747488.42	4035560.7	NonCancerChronicDerive	0.00E+00	4.47E-08	0.00E+00	0.00E+00	0.00E+00	2.81E-06	4.10E-04	0.00E+00	1.45E-07	0.00E+00	0.00E+00	1.90E-05	0.00E+00	0.00E+00	4.10E-04
1184	ALL	748388.42	4035560.7	NonCancerChronicDerive	0.00E+00	1.79E-08	0.00E+00	0.00E+00	0.00E+00	1.20E-06	1.69E-04	0.00E+00	5.80E-08	0.00E+00	0.00E+00	7.63E-06	0.00E+00	0.00E+00	1.69E-04
1185	ALL	748488.42	4035560.7	NonCancerChronicDerive	0.00E+00	1.57E-08	0.00E+00	0.00E+00	0.00E+00	1.06E-06	1.49E-04	0.00E+00	5.08E-08	0.00E+00	0.00E+00	6.68E-06	0.00E+00	0.00E+00	1.49E-04
1186	ALL	748588.42	4035560.7	NonCancerChronicDerive	0.00E+00	1.39E-08	0.00E+00	0.00E+00	0.00E+00	9.43E-07	1.32E-04	0.00E+00	4.50E-08	0.00E+00	0.00E+00	5.91E-06	0.00E+00	0.00E+00	1.32E-04
1187	ALL	748688.42	4035560.7	NonCancerChronicDerive	0.00E+00	1.24E-08	0.00E+00	0.00E+00	0.00E+00	8.47E-07	1.19E-04	0.00E+00	4.02E-08	0.00E+00	0.00E+00	5.28E-06	0.00E+00	0.00E+00	1.19E-04
1188	ALL	748788.42	4035560.7	NonCancerChronicDerive	0.00E+00	1.12E-08	0.00E+00	0.00E+00	0.00E+00	7.68E-07	1.07E-04	0.00E+00	3.62E-08	0.00E+00	0.00E+00	4.77E-06	0.00E+00	0.00E+00	1.07E-04
1189	ALL	748888.42	4035560.7	NonCancerChronicDerive	0.00E+00	1.02E-08	0.00E+00	0.00E+00	0.00E+00	7.01E-07	9.80E-05	0.00E+00	3.30E-08	0.00E+00	0.00E+00	4.34E-06	0.00E+00	0.00E+00	9.80E-05
1190	ALL	746388.42	4035660.7	NonCancerChronicDerive	0.00E+00	2.46E-09	0.00E+00	0.00E+00	0.00E+00	1.85E-07	2.62E-05	0.00E+00	7.97E-09	0.00E+00	0.00E+00	1.05E-06	0.00E+00	0.00E+00	2.62E-05
1191	ALL	746488.42	4035660.7	NonCancerChronicDerive	0.00E+00	2.71E-09	0.00E+00	0.00E+00	0.00E+00	2.03E-07	2.88E-05	0.00E+00	8.77E-09	0.00E+00	0.00E+00	1.15E-06	0.00E+00	0.00E+00	2.88E-05
1192	ALL	746588.42	4035660.7	NonCancerChronicDerive	0.00E+00	3.05E-09	0.00E+00	0.00E+00	0.00E+00	2.26E-07	3.22E-05	0.00E+00	9.87E-09	0.00E+00	0.00E+00	1.30E-06	0.00E+00	0.00E+00	3.22E-05
1193	ALL	746688.42	4035660.7	NonCancerChronicDerive	0.00E+00	3.47E-09	0.00E+00	0.00E+00	0.00E+00	2.54E-07	3.63E-05	0.00E+00	1.12E-08	0.00E+00	0.00E+00	1.48E-06	0.00E+00	0.00E+00	3.63E-05
1194	ALL	746788.42	4035660.7	NonCancerChronicDerive	0.00E+00	4.08E-09	0.00E+00	0.00E+00	0.00E+00	2.94E-07	4.22E-05	0.00E+00	1.32E-08	0.00E+00	0.00E+00	1.74E-06	0.00E+00	0.00E+00	4.22E-05
1195	ALL	746888.42	4035660.7	NonCancerChronicDerive	0.00E+00	5.05E-09	0.00E+00	0.00E+00	0.00E+00	3.59E-07	5.19E-05	0.00E+00	1.64E-08	0.00E+00	0.00E+00	2.15E-06	0.00E+00	0.00E+00	5.19E-05
1196	ALL	746988.42	4035660.7	NonCancerChronicDerive	0.00E+00	6.76E-09	0.00E+00	0.00E+00	0.00E+00	4.71E-07	6.88E-05	0.00E+00	2.19E-08	0.00E+00	0.00E+00	2.88E-06	0.00E+00	0.00E+00	6.88E-05
1197	ALL	747088.42	4035660.7	NonCancerChronicDerive	0.00E+00	1.15E-08	0.00E+00	0.00E+00	0.00E+00	7.72E-07	1.14E-04	0.00E+00	3.73E-08	0.00E+00	0.00E+00	4.90E-06	0.00E+00	0.00E+00	1.14E-04
1198	ALL	747188.42	4035660.7	NonCancerChronicDerive	0.00E+00	2.43E-08	0.00E+00	0.00E+00	0.00E+00	1.56E-06	2.31E-04	0.00E+00	7.87E-08	0.00E+00	0.00E+00	1.03E-05	0.00E+00	0.00E+00	2.31E-04
1199	ALL	747288.42	4035660.7	NonCancerChronicDerive	0.00E+00	4.20E-08	0.00E+00	0.00E+00	0.00E+00	2.64E-06	3.90E-04	0.00E+00	1.36E-07	0.00E+00	0.00E+00	1.79E-05	0.00E+00	0.00E+00	3.90E-04
1200	ALL	747388.42	4035660.7	NonCancerChronicDerive	0.00E+00	5.65E-08	0.00E+00	0.00E+00	0.00E+00	3.54E-06	5.20E-04	0.00E+00	1.83E-07	0.00E+00	0.00E+00	2.40E-05	0.00E+00	0.00E+00	5.20E-04
1201	ALL	747488.42	4035660.7	NonCancerChronicDerive	0.00E+00	6.36E-08	0.00E+00	0.00E+00	0.00E+00	3.98E-06	5.83E-04	0.00E+00	2.06E-07	0.00E+00	0.00E+00	2.71E-05	0.00E+00	0.00E+00	5.83E-04
1202	ALL	748388.42	4035660.7	NonCancerChronicDerive	0.00E+00	1.64E-08	0.00E+00	0.00E+00	0.00E+00	1.11E-06	1.56E-04	0.00E+00	5.32E-08	0.00E+00	0.00E+00	7.00E-06	0.00E+00	0.00E+00	1.56E-04
1203	ALL	748488.42	4035660.7	NonCancerChronicDerive	0.00E+00	1.44E-08	0.00E+00	0.00E+00	0.00E+00	9.83E-07	1.38E-04	0.00E+00	4.66E-08	0.00E+00	0.00E+00	6.12E-06	0.00E+00	0.00E+00	1.38E-04
1204	ALL	748588.42	4035660.7	NonCancerChronicDerive	0.00E+00	1.27E-08	0.00E+00	0.00E+00	0.00E+00	8.76E-07	1.23E-04	0.00E+00	4.12E-08	0.00E+00	0.00E+00	5.42E-06	0.00E+00	0.00E+00	1.23E-04
1205	ALL	748688.42	4035660.7	NonCancerChronicDerive	0.00E+00	1.14E-08	0.00E+00	0.00E+00	0.00E+00	7.88E-07	1.10E-04	0.00E+00	3.69E-08	0.00E+00	0.00E+00	4.85E-06	0.00E+00	0.00E+00	1.10E-04
1206	ALL	748788.42	4035660.7	NonCancerChronicDerive	0.00E+00	1.03E-08	0.00E+00	0.00E+00	0.00E+00	7.14E-07	9.98E-05	0.00E+00	3.34E-08	0.00E+00	0.00E+00	4.39E-06	0.00E+00	0.00E+00	9.98E-05
1207	ALL	748888.42	4035660.7	NonCancerChronicDerive	0.00E+00	9.40E-09	0.00E+00	0.00E+00	0.00E+00	6.53E-07	9.13E-05	0.00E+00	3.04E-08	0.00E+00	0.00E+00	4.00E-06	0.00E+00	0.00E+00	9.13E-05
1208	ALL	746388.42	4035760.7	NonCancerChronicDerive	0.00E+00	2.58E-09	0.00E+00	0.00E+00	0.00E+00	1.94E-07	2.75E-05	0.00E+00	8.35E-09	0.00E+00	0.00E+00	1.10E-06	0.00E+00	0.00E+00	2.75E-05
1209	ALL	746488.42	4035760.7	NonCancerChronicDerive	0.00E+00	2.86E-09	0.00E+00	0.00E+00	0.00E+00	2.14E-07	3.03E-05	0.00E+00	9.24E-09	0.00E+00	0.00E+00	1.22E-06	0.00E+00	0.00E+00	3.03E-05
1210	ALL	746588.42	4035760.7	NonCancerChronicDerive	0.00E+00	3.24E-09	0.00E+00	0.00E+00	0.00E+00	2.41E-07	3.41E-05	0.00E+00	1.05E-08	0.00E+00	0.00E+00	1.38E-06	0.00E+00	0.00E+00	3.41E-05
1211	ALL	746688.42	4035760.7	NonCancerChronicDerive	0.00E+00	3.77E-09	0.00E+00	0.00E+00	0.00E+00	2.76E-07	3.92E-05	0.00E+00	1.22E-08	0.00E+00	0.00E+00	1.60E-06	0.00E+00	0.00E+00	3.92E-05
1212	ALL	746788.42	4035760.7	NonCancerChronicDerive	0.00E+00	4.64E-09	0.00E+00	0.00E+00	0.00E+00	3.33E-07	4.77E-05	0.00E+00	1.50E-08	0.00E+00	0.00E+00	1.97E-06	0.00E+00	0.00E+00	4.77E-05
1213	ALL	746888.42	4035760.7	NonCancerChronicDerive	0.00E+00	5.81E-09	0.00E+00	0.00E+00	0.00E+00	4.11E-07	5.94E-05	0.00E+00	1.88E-08	0.00E+00	0.00E+00	2.47E-06	0.00E+00	0.00E+00	5.94E-05
1214	ALL	746988.42	4035760.7	NonCancerChronicDerive	0.00E+00	7.91E-09	0.00E+00	0.00E+00	0.00E+00	5.50E-07	8.04E-05	0.00E+00	2.56E-08	0.00E+00	0.00E+00	3.37E-06	0.00E+00	0.00E+00	8.04E-05
1215	ALL	747088.42	4035760.7	NonCancerChronicDerive	0.00E+00	1.49E-08	0.00E+00	0.00E+00	0.00E+00	9.91E-07	1.48E-04	0.00E+00	4.83E-08	0.00E+00	0.00E+00	6.35E-06	0.00E+00	0.00E+00	1.48E-04
1216	ALL	747188.42	4035760.7	NonCancerChronicDerive	0.00E+00	3.91E-08	0.00E+00	0.00E+00	0.00E+00	2.47E-06	3.72E-04	0.00E+00	1.27E-07	0.00E+00	0.00E+00	1.66E-05	0.00E+00	0.00E+00	3.72E-04
1217	ALL	747288.42	4035760.7	NonCancerChronicDerive	0.00E+00	7.12E-08	0.00E+00	0.00E+00	0.00E+00	4.44E-06	6.61E-04	0.00E+00	2.31E-07	0.00E+00	0.00E+00	3.03E-05	0.00E+00	0.00E+00	6.61E-04

1218	ALL	747388.42	4035760.7	NonCancerChronicDerive	0.00E+00	8.97E-08	0.00E+00	0.00E+00	0.00E+00	5.57E-06	8.24E-04	0.00E+00	2.90E-07	0.00E+00	0.00E+00	3.82E-05	0.00E+00	0.00E+00	8.24E-04
1219	ALL	747488.42	4035760.7	NonCancerChronicDerive	0.00E+00	8.80E-08	0.00E+00	0.00E+00	0.00E+00	5.48E-06	8.03E-04	0.00E+00	2.85E-07	0.00E+00	0.00E+00	3.74E-05	0.00E+00	0.00E+00	8.03E-04
1220	ALL	748388.42	4035760.7	NonCancerChronicDerive	0.00E+00	1.47E-08	0.00E+00	0.00E+00	0.00E+00	1.01E-06	1.42E-04	0.00E+00	4.75E-08	0.00E+00	0.00E+00	6.24E-06	0.00E+00	0.00E+00	1.42E-04
1221	ALL	748488.42	4035760.7	NonCancerChronicDerive	0.00E+00	1.29E-08	0.00E+00	0.00E+00	0.00E+00	8.95E-07	1.25E-04	0.00E+00	4.17E-08	0.00E+00	0.00E+00	5.48E-06	0.00E+00	0.00E+00	1.25E-04
1222	ALL	748588.42	4035760.7	NonCancerChronicDerive	0.00E+00	1.14E-08	0.00E+00	0.00E+00	0.00E+00	7.99E-07	1.11E-04	0.00E+00	3.70E-08	0.00E+00	0.00E+00	4.87E-06	0.00E+00	0.00E+00	1.11E-04
1223	ALL	748688.42	4035760.7	NonCancerChronicDerive	0.00E+00	1.03E-08	0.00E+00	0.00E+00	0.00E+00	7.20E-07	1.00E-04	0.00E+00	3.33E-08	0.00E+00	0.00E+00	4.37E-06	0.00E+00	0.00E+00	1.00E-04
1224	ALL	748788.42	4035760.7	NonCancerChronicDerive	0.00E+00	9.33E-09	0.00E+00	0.00E+00	0.00E+00	6.55E-07	9.14E-05	0.00E+00	3.02E-08	0.00E+00	0.00E+00	3.97E-06	0.00E+00	0.00E+00	9.14E-05
1225	ALL	748888.42	4035760.7	NonCancerChronicDerive	0.00E+00	8.55E-09	0.00E+00	0.00E+00	0.00E+00	6.00E-07	8.39E-05	0.00E+00	2.77E-08	0.00E+00	0.00E+00	3.64E-06	0.00E+00	0.00E+00	8.39E-05
1226	ALL	746388.42	4035860.7	NonCancerChronicDerive	0.00E+00	2.73E-09	0.00E+00	0.00E+00	0.00E+00	2.06E-07	2.92E-05	0.00E+00	8.84E-09	0.00E+00	0.00E+00	1.16E-06	0.00E+00	0.00E+00	2.92E-05
1227	ALL	746488.42	4035860.7	NonCancerChronicDerive	0.00E+00	3.04E-09	0.00E+00	0.00E+00	0.00E+00	2.28E-07	3.22E-05	0.00E+00	9.83E-09	0.00E+00	0.00E+00	1.29E-06	0.00E+00	0.00E+00	3.22E-05
1228	ALL	746588.42	4035860.7	NonCancerChronicDerive	0.00E+00	3.50E-09	0.00E+00	0.00E+00	0.00E+00	2.61E-07	3.68E-05	0.00E+00	1.13E-08	0.00E+00	0.00E+00	1.49E-06	0.00E+00	0.00E+00	3.68E-05
1229	ALL	746688.42	4035860.7	NonCancerChronicDerive	0.00E+00	4.21E-09	0.00E+00	0.00E+00	0.00E+00	3.08E-07	4.37E-05	0.00E+00	1.36E-08	0.00E+00	0.00E+00	1.79E-06	0.00E+00	0.00E+00	4.37E-05
1230	ALL	746788.42	4035860.7	NonCancerChronicDerive	0.00E+00	5.43E-09	0.00E+00	0.00E+00	0.00E+00	3.87E-07	5.54E-05	0.00E+00	1.76E-08	0.00E+00	0.00E+00	2.31E-06	0.00E+00	0.00E+00	5.54E-05
1231	ALL	746888.42	4035860.7	NonCancerChronicDerive	0.00E+00	7.21E-09	0.00E+00	0.00E+00	0.00E+00	5.04E-07	7.30E-05	0.00E+00	2.33E-08	0.00E+00	0.00E+00	3.07E-06	0.00E+00	0.00E+00	7.30E-05
1232	ALL	746988.42	4035860.7	NonCancerChronicDerive	0.00E+00	9.95E-09	0.00E+00	0.00E+00	0.00E+00	6.85E-07	1.00E-04	0.00E+00	3.22E-08	0.00E+00	0.00E+00	4.23E-06	0.00E+00	0.00E+00	1.00E-04
1233	ALL	747088.42	4035860.7	NonCancerChronicDerive	0.00E+00	2.04E-08	0.00E+00	0.00E+00	0.00E+00	1.34E-06	2.04E-04	0.00E+00	6.61E-08	0.00E+00	0.00E+00	8.69E-06	0.00E+00	0.00E+00	2.04E-04
1234	ALL	747188.42	4035860.7	NonCancerChronicDerive	0.00E+00	7.60E-08	0.00E+00	0.00E+00	0.00E+00	4.73E-06	7.24E-04	0.00E+00	2.46E-07	0.00E+00	0.00E+00	3.24E-05	0.00E+00	0.00E+00	7.24E-04
1235	ALL	747288.42	4035860.7	NonCancerChronicDerive	0.00E+00	1.36E-07	0.00E+00	0.00E+00	0.00E+00	8.36E-06	1.26E-03	0.00E+00	4.39E-07	0.00E+00	0.00E+00	5.77E-05	0.00E+00	0.00E+00	1.26E-03
1236	ALL	747388.42	4035860.7	NonCancerChronicDerive	0.00E+00	1.36E-07	0.00E+00	0.00E+00	0.00E+00	8.42E-06	1.25E-03	0.00E+00	4.41E-07	0.00E+00	0.00E+00	5.80E-05	0.00E+00	0.00E+00	1.25E-03
1237	ALL	747488.42	4035860.7	NonCancerChronicDerive	0.00E+00	1.04E-07	0.00E+00	0.00E+00	0.00E+00	6.48E-06	9.48E-04	0.00E+00	3.37E-07	0.00E+00	0.00E+00	4.43E-05	0.00E+00	0.00E+00	9.48E-04
1238	ALL	748388.42	4035860.7	NonCancerChronicDerive	0.00E+00	1.27E-08	0.00E+00	0.00E+00	0.00E+00	8.95E-07	1.25E-04	0.00E+00	4.11E-08	0.00E+00	0.00E+00	5.40E-06	0.00E+00	0.00E+00	1.25E-04
1239	ALL	748488.42	4035860.7	NonCancerChronicDerive	0.00E+00	1.12E-08	0.00E+00	0.00E+00	0.00E+00	7.94E-07	1.11E-04	0.00E+00	3.63E-08	0.00E+00	0.00E+00	4.77E-06	0.00E+00	0.00E+00	1.11E-04
1240	ALL	748588.42	4035860.7	NonCancerChronicDerive	0.00E+00	1.00E-08	0.00E+00	0.00E+00	0.00E+00	7.12E-07	9.93E-05	0.00E+00	3.25E-08	0.00E+00	0.00E+00	4.27E-06	0.00E+00	0.00E+00	9.93E-05
1241	ALL	748688.42	4035860.7	NonCancerChronicDerive	0.00E+00	9.07E-09	0.00E+00	0.00E+00	0.00E+00	6.46E-07	9.00E-05	0.00E+00	2.94E-08	0.00E+00	0.00E+00	3.86E-06	0.00E+00	0.00E+00	9.00E-05
1242	ALL	748788.42	4035860.7	NonCancerChronicDerive	0.00E+00	8.30E-09	0.00E+00	0.00E+00	0.00E+00	5.90E-07	8.24E-05	0.00E+00	2.69E-08	0.00E+00	0.00E+00	3.53E-06	0.00E+00	0.00E+00	8.24E-05
1243	ALL	748888.42	4035860.7	NonCancerChronicDerive	0.00E+00	7.66E-09	0.00E+00	0.00E+00	0.00E+00	5.45E-07	7.61E-05	0.00E+00	2.48E-08	0.00E+00	0.00E+00	3.26E-06	0.00E+00	0.00E+00	7.61E-05
1244	ALL	746388.42	4035960.7	NonCancerChronicDerive	0.00E+00	2.96E-09	0.00E+00	0.00E+00	0.00E+00	2.23E-07	3.17E-05	0.00E+00	9.58E-09	0.00E+00	0.00E+00	1.26E-06	0.00E+00	0.00E+00	3.17E-05
1245	ALL	746488.42	4035960.7	NonCancerChronicDerive	0.00E+00	3.29E-09	0.00E+00	0.00E+00	0.00E+00	2.46E-07	3.50E-05	0.00E+00	1.07E-08	0.00E+00	0.00E+00	1.40E-06	0.00E+00	0.00E+00	3.50E-05
1246	ALL	746588.42	4035960.7	NonCancerChronicDerive	0.00E+00	3.82E-09	0.00E+00	0.00E+00	0.00E+00	2.83E-07	4.01E-05	0.00E+00	1.24E-08	0.00E+00	0.00E+00	1.62E-06	0.00E+00	0.00E+00	4.01E-05
1247	ALL	746688.42	4035960.7	NonCancerChronicDerive	0.00E+00	4.68E-09	0.00E+00	0.00E+00	0.00E+00	3.41E-07	4.85E-05	0.00E+00	1.51E-08	0.00E+00	0.00E+00	1.99E-06	0.00E+00	0.00E+00	4.85E-05
1248	ALL	748388.42	4035960.7	NonCancerChronicDerive	0.00E+00	1.06E-08	0.00E+00	0.00E+00	0.00E+00	7.69E-07	1.07E-04	0.00E+00	3.44E-08	0.00E+00	0.00E+00	4.52E-06	0.00E+00	0.00E+00	1.07E-04
1249	ALL	748488.42	4035960.7	NonCancerChronicDerive	0.00E+00	9.49E-09	0.00E+00	0.00E+00	0.00E+00	6.89E-07	9.58E-05	0.00E+00	3.07E-08	0.00E+00	0.00E+00	4.04E-06	0.00E+00	0.00E+00	9.58E-05
1250	ALL	748588.42	4035960.7	NonCancerChronicDerive	0.00E+00	8.59E-09	0.00E+00	0.00E+00	0.00E+00	6.23E-07	8.68E-05	0.00E+00	2.78E-08	0.00E+00	0.00E+00	3.66E-06	0.00E+00	0.00E+00	8.68E-05
1251	ALL	748688.42	4035960.7	NonCancerChronicDerive	0.00E+00	7.86E-09	0.00E+00	0.00E+00	0.00E+00	5.70E-07	7.94E-05	0.00E+00	2.55E-08	0.00E+00	0.00E+00	3.35E-06	0.00E+00	0.00E+00	7.94E-05
1252	ALL	748788.42	4035960.7	NonCancerChronicDerive	0.00E+00	7.27E-09	0.00E+00	0.00E+00	0.00E+00	5.25E-07	7.33E-05	0.00E+00	2.35E-08	0.00E+00	0.00E+00	3.09E-06	0.00E+00	0.00E+00	7.33E-05
1253	ALL	748888.42	4035960.7	NonCancerChronicDerive	0.00E+00	6.78E-09	0.00E+00	0.00E+00	0.00E+00	4.89E-07	6.82E-05	0.00E+00	2.20E-08	0.00E+00	0.00E+00	2.89E-06	0.00E+00	0.00E+00	6.82E-05
1254	ALL	746388.42	4036060.7	NonCancerChronicDerive	0.00E+00	3.30E-09	0.00E+00	0.00E+00	0.00E+00	2.47E-07	3.53E-05	0.00E+00	1.07E-08	0.00E+00	0.00E+00	1.40E-06	0.00E+00	0.00E+00	3.53E-05
1255	ALL	746488.42	4036060.7	NonCancerChronicDerive	0.00E+00	3.71E-09	0.00E+00	0.00E+00	0.00E+00	2.75E-07	3.93E-05	0.00E+00	1.20E-08	0.00E+00	0.00E+00	1.58E-06	0.00E+00	0.00E+00	3.93E-05
1256	ALL	746588.42	4036060.7	NonCancerChronicDerive	0.00E+00	4.33E-09	0.00E+00	0.00E+00	0.00E+00	3.18E-07	4.54E-05	0.00E+00	1.40E-08	0.00E+00	0.00E+00	1.84E-06	0.00E+00	0.00E+00	4.54E-05
1257	ALL	746688.42	4036060.7	NonCancerChronicDerive	0.00E+00	5.38E-09	0.00E+00	0.00E+00	0.00E+00	3.90E-07	5.56E-05	0.00E+00	1.74E-08	0.00E+00	0.00E+00	2.29E-06	0.00E+00	0.00E+00	5.56E-05
1258	ALL	748388.42	4036060.7	NonCancerChronicDerive	0.00E+00	8.58E-09	0.00E+00	0.00E+00	0.00E+00	6.43E-07	8.91E-05	0.00E+00	2.78E-08	0.00E+00	0.00E+00	3.65E-06	0.00E+00	0.00E+00	8.91E-05
1259	ALL	748488.42	4036060.7	NonCancerChronicDerive	0.00E+00	7.82E-09	0.00E+00	0.00E+00	0.00E+00	5.84E-07	8.11E-05	0.00E+00	2.53E-08	0.00E+00	0.00E+00	3.33E-06	0.00E+00	0.00E+00	8.11E-05
1260	ALL	748588.42	4036060.7	NonCancerChronicDerive	0.00E+00	7.21E-09	0.00E+00	0.00E+00	0.00E+00	5.36E-07	7.45E-05	0.00E+00	2.33E-08	0.00E+00	0.00E+00	3.07E-06	0.00E+00	0.00E+00	7.45E-05
1261	ALL	748688.42	4036060.7	NonCancerChronicDerive	0.00E+00	6.70E-09	0.00E+00	0.00E+00	0.00E+00	4.96E-07	6.90E-05	0.00E+00	2.17E-08	0.00E+00	0.00E+00	2.85E-06	0.00E+00	0.00E+00	6.90E-05
1262	ALL	748788.42	4036060.7	NonCancerChronicDerive	0.00E+00	6.29E-09	0.00E+00	0.00E+00	0.00E+00	4.63E-07	6.45E-05	0.00E+00	2.04E-08	0.00E+00	0.00E+00	2.68E-06	0.00E+00	0.00E+00	6.45E-05
1263	ALL	748888.42	4036060.7	NonCancerChronicDerive	0.00E+00	5.95E-09	0.00E+00	0.00E+00	0.00E+00	4.35E-07	6.08E-05	0.00E+00	1.93E-08	0.00E+00	0.00E+00	2.53E-06	0.00E+00	0.00E+00	6.08E-05
1264	ALL	746388.42	4036160.7	NonCancerChronicDerive	0.00E+00	3.85E-09	0.00E+00	0.00E+00	0.00E+00	2.85E-07	4.10E-05	0.00E+00	1.25E-08	0.00E+00	0.00E+00	1.64E-06	0.00E+00	0.00E+00	4.10E-05
1265	ALL	746488.42	4036160.7	NonCancerChronicDerive	0.00E+00	4.42E-09	0.00E+00	0.00E+00	0.00E+00	3.23E-07	4.65E-05	0.00E+00	1.43E-08	0.00E+00	0.00E+00	1.88E-06	0.00E+00	0.00E+00	4.65E-05
1266	ALL	746588.42	4036160.7	NonCancerChronicDerive	0.00E+00	5.32E-09	0.00E+00	0.00E+00	0.00E+00	3.82E-07	5.53E-05	0.00E+00	1.72E-08	0.00E+00	0.00E+00	2.26E-06	0.00E+00	0.00E+00	5.53E-05
1267	ALL	746688.42	4036160.7	NonCancerChronicDerive	0.00E+00	6.86E-09	0.00E+00	0.00E+00	0.00E+00	4.86E-07	7.03E-05	0.00E+00	2.22E-08	0.00E+00	0.00E+00	2.92E-06	0.00E+00	0.00E+00	7.03E-05
1268	ALL	748388.42	4036160.7	NonCancerChronicDerive	0.00E+00	6.80E-09	0.00E+00	0.00E+00	0.00E+00	5.30E-07	7.31E-05	0.00E+00	2.20E-08	0.00E+00	0.00E+00	2.89E-06	0.00E+00	0.00E+00	7.31E-05
1269	ALL	748488.42	4036160.7	NonCancerChronicDerive	0.00E+00	6.35E-09	0.00E+00	0.00E+00	0.00E+00	4.90E-07	6.78E-05	0.00E+00	2.06E-08	0.00E+00	0.00E+00	2.70E-06	0.00E+00	0.00E+00	6.78E-05
1270	ALL	748588.42	4036160.7	NonCancerChronicDerive	0.00E+00	5.98E-09	0.00E+00	0.00E+00	0.00E+00	4.57E-07	6.34E-05	0.00E+00	1.94E-08	0.00E+00	0.00E+00	2.55E-06	0.00E+00	0.00E+00	6.34E-05

1271	ALL	748688.42	4036160.7	NonCancerChronicDerive	0.00E+00	5.67E-09	0.00E+00	0.00E+00	0.00E+00	4.30E-07	5.97E-05	0.00E+00	1.84E-08	0.00E+00	0.00E+00	2.41E-06	0.00E+00	0.00E+00	5.97E-05
1272	ALL	748788.42	4036160.7	NonCancerChronicDerive	0.00E+00	5.42E-09	0.00E+00	0.00E+00	0.00E+00	4.06E-07	5.66E-05	0.00E+00	1.75E-08	0.00E+00	0.00E+00	2.30E-06	0.00E+00	0.00E+00	5.66E-05
1273	ALL	748888.42	4036160.7	NonCancerChronicDerive	0.00E+00	5.20E-09	0.00E+00	0.00E+00	0.00E+00	3.87E-07	5.40E-05	0.00E+00	1.68E-08	0.00E+00	0.00E+00	2.21E-06	0.00E+00	0.00E+00	5.40E-05
1274	ALL	746388.42	4036260.7	NonCancerChronicDerive	0.00E+00	4.58E-09	0.00E+00	0.00E+00	0.00E+00	3.34E-07	4.82E-05	0.00E+00	1.48E-08	0.00E+00	0.00E+00	1.95E-06	0.00E+00	0.00E+00	4.82E-05
1275	ALL	746488.42	4036260.7	NonCancerChronicDerive	0.00E+00	5.51E-09	0.00E+00	0.00E+00	0.00E+00	3.94E-07	5.72E-05	0.00E+00	1.78E-08	0.00E+00	0.00E+00	2.34E-06	0.00E+00	0.00E+00	5.72E-05
1276	ALL	746588.42	4036260.7	NonCancerChronicDerive	0.00E+00	7.05E-09	0.00E+00	0.00E+00	0.00E+00	4.93E-07	7.21E-05	0.00E+00	2.28E-08	0.00E+00	0.00E+00	3.00E-06	0.00E+00	0.00E+00	7.21E-05
1277	ALL	746688.42	4036260.7	NonCancerChronicDerive	0.00E+00	9.82E-09	0.00E+00	0.00E+00	0.00E+00	6.73E-07	9.91E-05	0.00E+00	3.18E-08	0.00E+00	0.00E+00	4.18E-06	0.00E+00	0.00E+00	9.91E-05
1278	ALL	748388.42	4036260.7	NonCancerChronicDerive	0.00E+00	5.37E-09	0.00E+00	0.00E+00	0.00E+00	4.37E-07	5.99E-05	0.00E+00	1.74E-08	0.00E+00	0.00E+00	2.28E-06	0.00E+00	0.00E+00	5.99E-05
1279	ALL	748488.42	4036260.7	NonCancerChronicDerive	0.00E+00	5.15E-09	0.00E+00	0.00E+00	0.00E+00	4.12E-07	5.67E-05	0.00E+00	1.67E-08	0.00E+00	0.00E+00	2.19E-06	0.00E+00	0.00E+00	5.67E-05
1280	ALL	748588.42	4036260.7	NonCancerChronicDerive	0.00E+00	4.96E-09	0.00E+00	0.00E+00	0.00E+00	3.90E-07	5.39E-05	0.00E+00	1.60E-08	0.00E+00	0.00E+00	2.11E-06	0.00E+00	0.00E+00	5.39E-05
1281	ALL	748688.42	4036260.7	NonCancerChronicDerive	0.00E+00	4.80E-09	0.00E+00	0.00E+00	0.00E+00	3.72E-07	5.16E-05	0.00E+00	1.55E-08	0.00E+00	0.00E+00	2.04E-06	0.00E+00	0.00E+00	5.16E-05
1282	ALL	748788.42	4036260.7	NonCancerChronicDerive	0.00E+00	4.67E-09	0.00E+00	0.00E+00	0.00E+00	3.57E-07	4.97E-05	0.00E+00	1.51E-08	0.00E+00	0.00E+00	1.99E-06	0.00E+00	0.00E+00	4.97E-05
1283	ALL	748888.42	4036260.7	NonCancerChronicDerive	0.00E+00	4.56E-09	0.00E+00	0.00E+00	0.00E+00	3.45E-07	4.81E-05	0.00E+00	1.48E-08	0.00E+00	0.00E+00	1.94E-06	0.00E+00	0.00E+00	4.81E-05
1284	ALL	745988.42	4036360.7	NonCancerChronicDerive	0.00E+00	3.33E-09	0.00E+00	0.00E+00	0.00E+00	2.46E-07	3.55E-05	0.00E+00	1.08E-08	0.00E+00	0.00E+00	1.42E-06	0.00E+00	0.00E+00	3.55E-05
1285	ALL	746088.42	4036360.7	NonCancerChronicDerive	0.00E+00	3.66E-09	0.00E+00	0.00E+00	0.00E+00	2.69E-07	3.88E-05	0.00E+00	1.19E-08	0.00E+00	0.00E+00	1.56E-06	0.00E+00	0.00E+00	3.88E-05
1286	ALL	746188.42	4036360.7	NonCancerChronicDerive	0.00E+00	4.12E-09	0.00E+00	0.00E+00	0.00E+00	3.00E-07	4.34E-05	0.00E+00	1.33E-08	0.00E+00	0.00E+00	1.75E-06	0.00E+00	0.00E+00	4.34E-05
1287	ALL	746288.42	4036360.7	NonCancerChronicDerive	0.00E+00	4.76E-09	0.00E+00	0.00E+00	0.00E+00	3.43E-07	4.97E-05	0.00E+00	1.54E-08	0.00E+00	0.00E+00	2.03E-06	0.00E+00	0.00E+00	4.97E-05
1288	ALL	746388.42	4036360.7	NonCancerChronicDerive	0.00E+00	5.72E-09	0.00E+00	0.00E+00	0.00E+00	4.06E-07	5.91E-05	0.00E+00	1.85E-08	0.00E+00	0.00E+00	2.43E-06	0.00E+00	0.00E+00	5.91E-05
1289	ALL	746488.42	4036360.7	NonCancerChronicDerive	0.00E+00	7.18E-09	0.00E+00	0.00E+00	0.00E+00	5.01E-07	7.34E-05	0.00E+00	2.33E-08	0.00E+00	0.00E+00	3.06E-06	0.00E+00	0.00E+00	7.34E-05
1290	ALL	746588.42	4036360.7	NonCancerChronicDerive	0.00E+00	9.49E-09	0.00E+00	0.00E+00	0.00E+00	6.49E-07	9.58E-05	0.00E+00	3.07E-08	0.00E+00	0.00E+00	4.04E-06	0.00E+00	0.00E+00	9.58E-05
1291	ALL	748388.42	4036360.7	NonCancerChronicDerive	0.00E+00	4.30E-09	0.00E+00	0.00E+00	0.00E+00	3.65E-07	4.97E-05	0.00E+00	1.39E-08	0.00E+00	0.00E+00	1.83E-06	0.00E+00	0.00E+00	4.97E-05
1292	ALL	748488.42	4036360.7	NonCancerChronicDerive	0.00E+00	4.22E-09	0.00E+00	0.00E+00	0.00E+00	3.49E-07	4.78E-05	0.00E+00	1.37E-08	0.00E+00	0.00E+00	1.79E-06	0.00E+00	0.00E+00	4.78E-05
1293	ALL	748588.42	4036360.7	NonCancerChronicDerive	0.00E+00	4.15E-09	0.00E+00	0.00E+00	0.00E+00	3.36E-07	4.62E-05	0.00E+00	1.34E-08	0.00E+00	0.00E+00	1.77E-06	0.00E+00	0.00E+00	4.62E-05
1294	ALL	748688.42	4036360.7	NonCancerChronicDerive	0.00E+00	4.10E-09	0.00E+00	0.00E+00	0.00E+00	3.25E-07	4.50E-05	0.00E+00	1.33E-08	0.00E+00	0.00E+00	1.74E-06	0.00E+00	0.00E+00	4.50E-05
1295	ALL	748788.42	4036360.7	NonCancerChronicDerive	0.00E+00	4.05E-09	0.00E+00	0.00E+00	0.00E+00	3.16E-07	4.39E-05	0.00E+00	1.31E-08	0.00E+00	0.00E+00	1.73E-06	0.00E+00	0.00E+00	4.39E-05
1296	ALL	748888.42	4036360.7	NonCancerChronicDerive	0.00E+00	4.03E-09	0.00E+00	0.00E+00	0.00E+00	3.09E-07	4.30E-05	0.00E+00	1.30E-08	0.00E+00	0.00E+00	1.71E-06	0.00E+00	0.00E+00	4.30E-05
1297	ALL	748988.42	4036360.7	NonCancerChronicDerive	0.00E+00	4.01E-09	0.00E+00	0.00E+00	0.00E+00	3.03E-07	4.23E-05	0.00E+00	1.30E-08	0.00E+00	0.00E+00	1.71E-06	0.00E+00	0.00E+00	4.23E-05
1298	ALL	749088.42	4036360.7	NonCancerChronicDerive	0.00E+00	4.00E-09	0.00E+00	0.00E+00	0.00E+00	2.98E-07	4.17E-05	0.00E+00	1.29E-08	0.00E+00	0.00E+00	1.70E-06	0.00E+00	0.00E+00	4.17E-05
1299	ALL	749188.42	4036360.7	NonCancerChronicDerive	0.00E+00	3.99E-09	0.00E+00	0.00E+00	0.00E+00	2.94E-07	4.13E-05	0.00E+00	1.29E-08	0.00E+00	0.00E+00	1.70E-06	0.00E+00	0.00E+00	4.13E-05
1300	ALL	749288.42	4036360.7	NonCancerChronicDerive	0.00E+00	3.99E-09	0.00E+00	0.00E+00	0.00E+00	2.90E-07	4.09E-05	0.00E+00	1.29E-08	0.00E+00	0.00E+00	1.70E-06	0.00E+00	0.00E+00	4.09E-05
1301	ALL	749388.42	4036360.7	NonCancerChronicDerive	0.00E+00	3.98E-09	0.00E+00	0.00E+00	0.00E+00	2.87E-07	4.05E-05	0.00E+00	1.29E-08	0.00E+00	0.00E+00	1.70E-06	0.00E+00	0.00E+00	4.05E-05
1302	ALL	749488.42	4036360.7	NonCancerChronicDerive	0.00E+00	3.98E-09	0.00E+00	0.00E+00	0.00E+00	2.84E-07	4.01E-05	0.00E+00	1.29E-08	0.00E+00	0.00E+00	1.69E-06	0.00E+00	0.00E+00	4.01E-05
1303	ALL	749588.42	4036360.7	NonCancerChronicDerive	0.00E+00	3.97E-09	0.00E+00	0.00E+00	0.00E+00	2.82E-07	3.98E-05	0.00E+00	1.29E-08	0.00E+00	0.00E+00	1.69E-06	0.00E+00	0.00E+00	3.98E-05
1304	ALL	749688.42	4036360.7	NonCancerChronicDerive	0.00E+00	3.97E-09	0.00E+00	0.00E+00	0.00E+00	2.80E-07	3.96E-05	0.00E+00	1.28E-08	0.00E+00	0.00E+00	1.69E-06	0.00E+00	0.00E+00	3.96E-05
1305	ALL	749788.42	4036360.7	NonCancerChronicDerive	0.00E+00	3.97E-09	0.00E+00	0.00E+00	0.00E+00	2.78E-07	3.94E-05	0.00E+00	1.28E-08	0.00E+00	0.00E+00	1.69E-06	0.00E+00	0.00E+00	3.94E-05
1306	ALL	749888.42	4036360.7	NonCancerChronicDerive	0.00E+00	3.97E-09	0.00E+00	0.00E+00	0.00E+00	2.77E-07	3.92E-05	0.00E+00	1.28E-08	0.00E+00	0.00E+00	1.69E-06	0.00E+00	0.00E+00	3.92E-05
1307	ALL	749988.42	4036360.7	NonCancerChronicDerive	0.00E+00	3.97E-09	0.00E+00	0.00E+00	0.00E+00	2.77E-07	3.92E-05	0.00E+00	1.29E-08	0.00E+00	0.00E+00	1.69E-06	0.00E+00	0.00E+00	3.92E-05
1308	ALL	750088.42	4036360.7	NonCancerChronicDerive	0.00E+00	3.98E-09	0.00E+00	0.00E+00	0.00E+00	2.77E-07	3.92E-05	0.00E+00	1.29E-08	0.00E+00	0.00E+00	1.69E-06	0.00E+00	0.00E+00	3.92E-05
1309	ALL	750188.42	4036360.7	NonCancerChronicDerive	0.00E+00	3.99E-09	0.00E+00	0.00E+00	0.00E+00	2.77E-07	3.92E-05	0.00E+00	1.29E-08	0.00E+00	0.00E+00	1.70E-06	0.00E+00	0.00E+00	3.92E-05
1310	ALL	745988.42	4036460.7	NonCancerChronicDerive	0.00E+00	3.75E-09	0.00E+00	0.00E+00	0.00E+00	2.74E-07	3.95E-05	0.00E+00	1.21E-08	0.00E+00	0.00E+00	1.60E-06	0.00E+00	0.00E+00	3.95E-05
1311	ALL	746088.42	4036460.7	NonCancerChronicDerive	0.00E+00	4.22E-09	0.00E+00	0.00E+00	0.00E+00	3.06E-07	4.42E-05	0.00E+00	1.37E-08	0.00E+00	0.00E+00	1.80E-06	0.00E+00	0.00E+00	4.42E-05
1312	ALL	746188.42	4036460.7	NonCancerChronicDerive	0.00E+00	4.87E-09	0.00E+00	0.00E+00	0.00E+00	3.49E-07	5.05E-05	0.00E+00	1.58E-08	0.00E+00	0.00E+00	2.07E-06	0.00E+00	0.00E+00	5.05E-05
1313	ALL	746288.42	4036460.7	NonCancerChronicDerive	0.00E+00	5.77E-09	0.00E+00	0.00E+00	0.00E+00	4.07E-07	5.93E-05	0.00E+00	1.87E-08	0.00E+00	0.00E+00	2.46E-06	0.00E+00	0.00E+00	5.93E-05
1314	ALL	746388.42	4036460.7	NonCancerChronicDerive	0.00E+00	7.02E-09	0.00E+00	0.00E+00	0.00E+00	4.89E-07	7.15E-05	0.00E+00	2.27E-08	0.00E+00	0.00E+00	2.99E-06	0.00E+00	0.00E+00	7.15E-05
1315	ALL	746488.42	4036460.7	NonCancerChronicDerive	0.00E+00	8.76E-09	0.00E+00	0.00E+00	0.00E+00	6.02E-07	8.84E-05	0.00E+00	2.84E-08	0.00E+00	0.00E+00	3.73E-06	0.00E+00	0.00E+00	8.84E-05
1316	ALL	746588.42	4036460.7	NonCancerChronicDerive	0.00E+00	1.11E-08	0.00E+00	0.00E+00	0.00E+00	7.53E-07	1.11E-04	0.00E+00	3.58E-08	0.00E+00	0.00E+00	4.71E-06	0.00E+00	0.00E+00	1.11E-04
1317	ALL	748388.42	4036460.7	NonCancerChronicDerive	0.00E+00	3.56E-09	0.00E+00	0.00E+00	0.00E+00	3.13E-07	4.22E-05	0.00E+00	1.15E-08	0.00E+00	0.00E+00	1.51E-06	0.00E+00	0.00E+00	4.22E-05
1318	ALL	748488.42	4036460.7	NonCancerChronicDerive	0.00E+00	3.55E-09	0.00E+00	0.00E+00	0.00E+00	3.02E-07	4.12E-05	0.00E+00	1.15E-08	0.00E+00	0.00E+00	1.51E-06	0.00E+00	0.00E+00	4.12E-05
1319	ALL	748588.42	4036460.7	NonCancerChronicDerive	0.00E+00	3.55E-09	0.00E+00	0.00E+00	0.00E+00	2.94E-07	4.03E-05	0.00E+00	1.15E-08	0.00E+00	0.00E+00	1.51E-06	0.00E+00	0.00E+00	4.03E-05
1320	ALL	748688.42	4036460.7	NonCancerChronicDerive	0.00E+00	3.56E-09	0.00E+00	0.00E+00	0.00E+00	2.88E-07	3.97E-05	0.00E+00	1.15E-08	0.00E+00	0.00E+00	1.51E-06	0.00E+00	0.00E+00	3.97E-05
1321	ALL	748788.42	4036460.7	NonCancerChronicDerive	0.00E+00	3.58E-09	0.00E+00	0.00E+00	0.00E+00	2.83E-07	3.92E-05	0.00E+00	1.16E-08	0.00E+00	0.00E+00	1.52E-06	0.00E+00	0.00E+00	3.92E-05
1322	ALL	748888.42	4036460.7	NonCancerChronicDerive	0.00E+00	3.60E-09	0.00E+00	0.00E+00	0.00E+00	2.80E-07	3.89E-05	0.00E+00	1.17E-08	0.00E+00	0.00E+00	1.53E-06	0.00E+00	0.00E+00	3.89E-05
1323	ALL	748988.42	4036460.7	NonCancerChronicDerive	0.00E+00	3.63E-09	0.00E+00	0.00E+00	0.00E+00	2.77E-07	3.87E-05	0.00E+00	1.18E-08	0.00E+00	0.00E+00	1.55E-06	0.00E+00	0.00E+00	3.87E-05

1324	ALL	749088.42	4036460.7	NonCancerChronicDerive	0.00E+00	3.67E-09	0.00E+00	0.00E+00	0.00E+00	2.75E-07	3.85E-05	0.00E+00	1.19E-08	0.00E+00	0.00E+00	1.56E-06	0.00E+00	0.00E+00	3.85E-05
1325	ALL	749188.42	4036460.7	NonCancerChronicDerive	0.00E+00	3.70E-09	0.00E+00	0.00E+00	0.00E+00	2.74E-07	3.85E-05	0.00E+00	1.20E-08	0.00E+00	0.00E+00	1.58E-06	0.00E+00	0.00E+00	3.85E-05
1326	ALL	749288.42	4036460.7	NonCancerChronicDerive	0.00E+00	3.74E-09	0.00E+00	0.00E+00	0.00E+00	2.73E-07	3.84E-05	0.00E+00	1.21E-08	0.00E+00	0.00E+00	1.59E-06	0.00E+00	0.00E+00	3.84E-05
1327	ALL	749388.42	4036460.7	NonCancerChronicDerive	0.00E+00	3.76E-09	0.00E+00	0.00E+00	0.00E+00	2.72E-07	3.83E-05	0.00E+00	1.22E-08	0.00E+00	0.00E+00	1.60E-06	0.00E+00	0.00E+00	3.83E-05
1328	ALL	749488.42	4036460.7	NonCancerChronicDerive	0.00E+00	3.78E-09	0.00E+00	0.00E+00	0.00E+00	2.71E-07	3.82E-05	0.00E+00	1.23E-08	0.00E+00	0.00E+00	1.61E-06	0.00E+00	0.00E+00	3.82E-05
1329	ALL	749588.42	4036460.7	NonCancerChronicDerive	0.00E+00	3.81E-09	0.00E+00	0.00E+00	0.00E+00	2.70E-07	3.82E-05	0.00E+00	1.23E-08	0.00E+00	0.00E+00	1.62E-06	0.00E+00	0.00E+00	3.82E-05
1330	ALL	749688.42	4036460.7	NonCancerChronicDerive	0.00E+00	3.83E-09	0.00E+00	0.00E+00	0.00E+00	2.70E-07	3.82E-05	0.00E+00	1.24E-08	0.00E+00	0.00E+00	1.63E-06	0.00E+00	0.00E+00	3.82E-05
1331	ALL	749788.42	4036460.7	NonCancerChronicDerive	0.00E+00	3.85E-09	0.00E+00	0.00E+00	0.00E+00	2.70E-07	3.82E-05	0.00E+00	1.25E-08	0.00E+00	0.00E+00	1.64E-06	0.00E+00	0.00E+00	3.82E-05
1332	ALL	749888.42	4036460.7	NonCancerChronicDerive	0.00E+00	3.87E-09	0.00E+00	0.00E+00	0.00E+00	2.70E-07	3.83E-05	0.00E+00	1.25E-08	0.00E+00	0.00E+00	1.65E-06	0.00E+00	0.00E+00	3.83E-05
1333	ALL	749988.42	4036460.7	NonCancerChronicDerive	0.00E+00	3.89E-09	0.00E+00	0.00E+00	0.00E+00	2.71E-07	3.84E-05	0.00E+00	1.26E-08	0.00E+00	0.00E+00	1.66E-06	0.00E+00	0.00E+00	3.84E-05
1334	ALL	750088.42	4036460.7	NonCancerChronicDerive	0.00E+00	3.92E-09	0.00E+00	0.00E+00	0.00E+00	2.72E-07	3.85E-05	0.00E+00	1.27E-08	0.00E+00	0.00E+00	1.67E-06	0.00E+00	0.00E+00	3.85E-05
1335	ALL	750188.42	4036460.7	NonCancerChronicDerive	0.00E+00	3.94E-09	0.00E+00	0.00E+00	0.00E+00	2.73E-07	3.87E-05	0.00E+00	1.28E-08	0.00E+00	0.00E+00	1.68E-06	0.00E+00	0.00E+00	3.87E-05
1336	ALL	745988.42	4036560.7	NonCancerChronicDerive	0.00E+00	4.26E-09	0.00E+00	0.00E+00	0.00E+00	3.09E-07	4.45E-05	0.00E+00	1.38E-08	0.00E+00	0.00E+00	1.81E-06	0.00E+00	0.00E+00	4.45E-05
1337	ALL	746088.42	4036560.7	NonCancerChronicDerive	0.00E+00	4.87E-09	0.00E+00	0.00E+00	0.00E+00	3.49E-07	5.04E-05	0.00E+00	1.58E-08	0.00E+00	0.00E+00	2.07E-06	0.00E+00	0.00E+00	5.04E-05
1338	ALL	746188.42	4036560.7	NonCancerChronicDerive	0.00E+00	5.65E-09	0.00E+00	0.00E+00	0.00E+00	4.00E-07	5.80E-05	0.00E+00	1.83E-08	0.00E+00	0.00E+00	2.40E-06	0.00E+00	0.00E+00	5.80E-05
1339	ALL	746288.42	4036560.7	NonCancerChronicDerive	0.00E+00	6.66E-09	0.00E+00	0.00E+00	0.00E+00	4.66E-07	6.78E-05	0.00E+00	2.16E-08	0.00E+00	0.00E+00	2.83E-06	0.00E+00	0.00E+00	6.78E-05
1340	ALL	746388.42	4036560.7	NonCancerChronicDerive	0.00E+00	7.93E-09	0.00E+00	0.00E+00	0.00E+00	5.48E-07	8.00E-05	0.00E+00	2.57E-08	0.00E+00	0.00E+00	3.37E-06	0.00E+00	0.00E+00	8.00E-05
1341	ALL	746488.42	4036560.7	NonCancerChronicDerive	0.00E+00	9.39E-09	0.00E+00	0.00E+00	0.00E+00	6.45E-07	9.44E-05	0.00E+00	3.04E-08	0.00E+00	0.00E+00	4.00E-06	0.00E+00	0.00E+00	9.44E-05
1342	ALL	746588.42	4036560.7	NonCancerChronicDerive	0.00E+00	1.06E-08	0.00E+00	0.00E+00	0.00E+00	7.35E-07	1.07E-04	0.00E+00	3.44E-08	0.00E+00	0.00E+00	4.52E-06	0.00E+00	0.00E+00	1.07E-04
1343	ALL	748388.42	4036560.7	NonCancerChronicDerive	0.00E+00	3.07E-09	0.00E+00	0.00E+00	0.00E+00	2.75E-07	3.70E-05	0.00E+00	9.93E-09	0.00E+00	0.00E+00	1.30E-06	0.00E+00	0.00E+00	3.70E-05
1344	ALL	748488.42	4036560.7	NonCancerChronicDerive	0.00E+00	3.09E-09	0.00E+00	0.00E+00	0.00E+00	2.68E-07	3.63E-05	0.00E+00	1.00E-08	0.00E+00	0.00E+00	1.32E-06	0.00E+00	0.00E+00	3.63E-05
1345	ALL	748588.42	4036560.7	NonCancerChronicDerive	0.00E+00	3.13E-09	0.00E+00	0.00E+00	0.00E+00	2.63E-07	3.59E-05	0.00E+00	1.01E-08	0.00E+00	0.00E+00	1.33E-06	0.00E+00	0.00E+00	3.59E-05
1346	ALL	748688.42	4036560.7	NonCancerChronicDerive	0.00E+00	3.17E-09	0.00E+00	0.00E+00	0.00E+00	2.59E-07	3.57E-05	0.00E+00	1.03E-08	0.00E+00	0.00E+00	1.35E-06	0.00E+00	0.00E+00	3.57E-05
1347	ALL	748788.42	4036560.7	NonCancerChronicDerive	0.00E+00	3.22E-09	0.00E+00	0.00E+00	0.00E+00	2.57E-07	3.56E-05	0.00E+00	1.04E-08	0.00E+00	0.00E+00	1.37E-06	0.00E+00	0.00E+00	3.56E-05
1348	ALL	748888.42	4036560.7	NonCancerChronicDerive	0.00E+00	3.28E-09	0.00E+00	0.00E+00	0.00E+00	2.57E-07	3.56E-05	0.00E+00	1.06E-08	0.00E+00	0.00E+00	1.40E-06	0.00E+00	0.00E+00	3.56E-05
1349	ALL	748988.42	4036560.7	NonCancerChronicDerive	0.00E+00	3.35E-09	0.00E+00	0.00E+00	0.00E+00	2.57E-07	3.58E-05	0.00E+00	1.08E-08	0.00E+00	0.00E+00	1.43E-06	0.00E+00	0.00E+00	3.58E-05
1350	ALL	749088.42	4036560.7	NonCancerChronicDerive	0.00E+00	3.42E-09	0.00E+00	0.00E+00	0.00E+00	2.57E-07	3.60E-05	0.00E+00	1.11E-08	0.00E+00	0.00E+00	1.45E-06	0.00E+00	0.00E+00	3.60E-05
1351	ALL	749188.42	4036560.7	NonCancerChronicDerive	0.00E+00	3.48E-09	0.00E+00	0.00E+00	0.00E+00	2.58E-07	3.62E-05	0.00E+00	1.13E-08	0.00E+00	0.00E+00	1.48E-06	0.00E+00	0.00E+00	3.62E-05
1352	ALL	749288.42	4036560.7	NonCancerChronicDerive	0.00E+00	3.54E-09	0.00E+00	0.00E+00	0.00E+00	2.59E-07	3.64E-05	0.00E+00	1.14E-08	0.00E+00	0.00E+00	1.50E-06	0.00E+00	0.00E+00	3.64E-05
1353	ALL	749388.42	4036560.7	NonCancerChronicDerive	0.00E+00	3.59E-09	0.00E+00	0.00E+00	0.00E+00	2.59E-07	3.66E-05	0.00E+00	1.16E-08	0.00E+00	0.00E+00	1.53E-06	0.00E+00	0.00E+00	3.66E-05
1354	ALL	749488.42	4036560.7	NonCancerChronicDerive	0.00E+00	3.63E-09	0.00E+00	0.00E+00	0.00E+00	2.60E-07	3.67E-05	0.00E+00	1.18E-08	0.00E+00	0.00E+00	1.55E-06	0.00E+00	0.00E+00	3.67E-05
1355	ALL	749588.42	4036560.7	NonCancerChronicDerive	0.00E+00	3.68E-09	0.00E+00	0.00E+00	0.00E+00	2.61E-07	3.69E-05	0.00E+00	1.19E-08	0.00E+00	0.00E+00	1.56E-06	0.00E+00	0.00E+00	3.69E-05
1356	ALL	749688.42	4036560.7	NonCancerChronicDerive	0.00E+00	3.72E-09	0.00E+00	0.00E+00	0.00E+00	2.62E-07	3.71E-05	0.00E+00	1.20E-08	0.00E+00	0.00E+00	1.58E-06	0.00E+00	0.00E+00	3.71E-05
1357	ALL	749788.42	4036560.7	NonCancerChronicDerive	0.00E+00	3.76E-09	0.00E+00	0.00E+00	0.00E+00	2.63E-07	3.73E-05	0.00E+00	1.22E-08	0.00E+00	0.00E+00	1.60E-06	0.00E+00	0.00E+00	3.73E-05
1358	ALL	749888.42	4036560.7	NonCancerChronicDerive	0.00E+00	3.80E-09	0.00E+00	0.00E+00	0.00E+00	2.65E-07	3.75E-05	0.00E+00	1.23E-08	0.00E+00	0.00E+00	1.62E-06	0.00E+00	0.00E+00	3.75E-05
1359	ALL	749988.42	4036560.7	NonCancerChronicDerive	0.00E+00	3.84E-09	0.00E+00	0.00E+00	0.00E+00	2.67E-07	3.78E-05	0.00E+00	1.24E-08	0.00E+00	0.00E+00	1.63E-06	0.00E+00	0.00E+00	3.78E-05
1360	ALL	750088.42	4036560.7	NonCancerChronicDerive	0.00E+00	3.88E-09	0.00E+00	0.00E+00	0.00E+00	2.69E-07	3.81E-05	0.00E+00	1.26E-08	0.00E+00	0.00E+00	1.65E-06	0.00E+00	0.00E+00	3.81E-05
1361	ALL	750188.42	4036560.7	NonCancerChronicDerive	0.00E+00	3.92E-09	0.00E+00	0.00E+00	0.00E+00	2.71E-07	3.84E-05	0.00E+00	1.27E-08	0.00E+00	0.00E+00	1.67E-06	0.00E+00	0.00E+00	3.84E-05
1362	ALL	750288.42	4036560.7	NonCancerChronicDerive	0.00E+00	3.95E-09	0.00E+00	0.00E+00	0.00E+00	2.73E-07	3.86E-05	0.00E+00	1.28E-08	0.00E+00	0.00E+00	1.68E-06	0.00E+00	0.00E+00	3.86E-05
1363	ALL	752388.42	4036560.7	NonCancerChronicDerive	0.00E+00	3.96E-09	0.00E+00	0.00E+00	0.00E+00	2.70E-07	3.81E-05	0.00E+00	1.28E-08	0.00E+00	0.00E+00	1.68E-06	0.00E+00	0.00E+00	3.81E-05
1364	ALL	752488.42	4036560.7	NonCancerChronicDerive	0.00E+00	3.93E-09	0.00E+00	0.00E+00	0.00E+00	2.69E-07	3.78E-05	0.00E+00	1.27E-08	0.00E+00	0.00E+00	1.67E-06	0.00E+00	0.00E+00	3.78E-05
1365	ALL	752588.42	4036560.7	NonCancerChronicDerive	0.00E+00	3.90E-09	0.00E+00	0.00E+00	0.00E+00	2.66E-07	3.75E-05	0.00E+00	1.26E-08	0.00E+00	0.00E+00	1.66E-06	0.00E+00	0.00E+00	3.75E-05
1366	ALL	752688.42	4036560.7	NonCancerChronicDerive	0.00E+00	3.86E-09	0.00E+00	0.00E+00	0.00E+00	2.64E-07	3.71E-05	0.00E+00	1.25E-08	0.00E+00	0.00E+00	1.64E-06	0.00E+00	0.00E+00	3.71E-05
1367	ALL	752788.42	4036560.7	NonCancerChronicDerive	0.00E+00	3.82E-09	0.00E+00	0.00E+00	0.00E+00	2.61E-07	3.68E-05	0.00E+00	1.24E-08	0.00E+00	0.00E+00	1.63E-06	0.00E+00	0.00E+00	3.68E-05
1368	ALL	752888.42	4036560.7	NonCancerChronicDerive	0.00E+00	3.78E-09	0.00E+00	0.00E+00	0.00E+00	2.59E-07	3.64E-05	0.00E+00	1.22E-08	0.00E+00	0.00E+00	1.61E-06	0.00E+00	0.00E+00	3.64E-05
1369	ALL	752988.42	4036560.7	NonCancerChronicDerive	0.00E+00	3.73E-09	0.00E+00	0.00E+00	0.00E+00	2.56E-07	3.59E-05	0.00E+00	1.21E-08	0.00E+00	0.00E+00	1.59E-06	0.00E+00	0.00E+00	3.59E-05
1370	ALL	753088.42	4036560.7	NonCancerChronicDerive	0.00E+00	3.68E-09	0.00E+00	0.00E+00	0.00E+00	2.53E-07	3.55E-05	0.00E+00	1.19E-08	0.00E+00	0.00E+00	1.57E-06	0.00E+00	0.00E+00	3.55E-05
1371	ALL	753188.42	4036560.7	NonCancerChronicDerive	0.00E+00	3.63E-09	0.00E+00	0.00E+00	0.00E+00	2.49E-07	3.50E-05	0.00E+00	1.18E-08	0.00E+00	0.00E+00	1.55E-06	0.00E+00	0.00E+00	3.50E-05
1372	ALL	753288.42	4036560.7	NonCancerChronicDerive	0.00E+00	3.58E-09	0.00E+00	0.00E+00	0.00E+00	2.46E-07	3.45E-05	0.00E+00	1.16E-08	0.00E+00	0.00E+00	1.52E-06	0.00E+00	0.00E+00	3.45E-05
1373	ALL	753388.42	4036560.7	NonCancerChronicDerive	0.00E+00	3.52E-09	0.00E+00	0.00E+00	0.00E+00	2.42E-07	3.40E-05	0.00E+00	1.14E-08	0.00E+00	0.00E+00	1.50E-06	0.00E+00	0.00E+00	3.40E-05
1374	ALL	753488.42	4036560.7	NonCancerChronicDerive	0.00E+00	3.47E-09	0.00E+00	0.00E+00	0.00E+00	2.39E-07	3.34E-05	0.00E+00	1.12E-08	0.00E+00	0.00E+00	1.47E-06	0.00E+00	0.00E+00	3.34E-05
1375	ALL	753588.42	4036560.7	NonCancerChronicDerive	0.00E+00	3.41E-09	0.00E+00	0.00E+00	0.00E+00	2.35E-07	3.29E-05	0.00E+00	1.10E-08	0.00E+00	0.00E+00	1.45E-06	0.00E+00	0.00E+00	3.29E-05
1376	ALL	753688.42	4036560.7	NonCancerChronicDerive	0.00E+00	3.35E-09	0.00E+00	0.00E+00	0.00E+00	2.31E-07	3.23E-05	0.00E+00	1.08E-08	0.00E+00	0.00E+00	1.42E-06	0.00E+00	0.00E+00	3.23E-05

1377	ALL	753788.42	4036560.7	NonCancerChronicDerive	0.00E+00	3.28E-09	0.00E+00	0.00E+00	0.00E+00	2.27E-07	3.17E-05	0.00E+00	1.06E-08	0.00E+00	0.00E+00	1.40E-06	0.00E+00	0.00E+00	3.17E-05
1378	ALL	753888.42	4036560.7	NonCancerChronicDerive	0.00E+00	3.22E-09	0.00E+00	0.00E+00	0.00E+00	2.22E-07	3.11E-05	0.00E+00	1.04E-08	0.00E+00	0.00E+00	1.37E-06	0.00E+00	0.00E+00	3.11E-05
1379	ALL	753988.42	4036560.7	NonCancerChronicDerive	0.00E+00	3.16E-09	0.00E+00	0.00E+00	0.00E+00	2.18E-07	3.05E-05	0.00E+00	1.02E-08	0.00E+00	0.00E+00	1.34E-06	0.00E+00	0.00E+00	3.05E-05
1380	ALL	754088.42	4036560.7	NonCancerChronicDerive	0.00E+00	3.10E-09	0.00E+00	0.00E+00	0.00E+00	2.14E-07	2.99E-05	0.00E+00	1.00E-08	0.00E+00	0.00E+00	1.32E-06	0.00E+00	0.00E+00	2.99E-05
1381	ALL	754188.42	4036560.7	NonCancerChronicDerive	0.00E+00	3.03E-09	0.00E+00	0.00E+00	0.00E+00	2.10E-07	2.93E-05	0.00E+00	9.82E-09	0.00E+00	0.00E+00	1.29E-06	0.00E+00	0.00E+00	2.93E-05
1382	ALL	754288.42	4036560.7	NonCancerChronicDerive	0.00E+00	2.97E-09	0.00E+00	0.00E+00	0.00E+00	2.06E-07	2.87E-05	0.00E+00	9.61E-09	0.00E+00	0.00E+00	1.26E-06	0.00E+00	0.00E+00	2.87E-05
1383	ALL	754388.42	4036560.7	NonCancerChronicDerive	0.00E+00	2.91E-09	0.00E+00	0.00E+00	0.00E+00	2.01E-07	2.81E-05	0.00E+00	9.41E-09	0.00E+00	0.00E+00	1.24E-06	0.00E+00	0.00E+00	2.81E-05
1384	ALL	754488.42	4036560.7	NonCancerChronicDerive	0.00E+00	2.84E-09	0.00E+00	0.00E+00	0.00E+00	1.97E-07	2.75E-05	0.00E+00	9.21E-09	0.00E+00	0.00E+00	1.21E-06	0.00E+00	0.00E+00	2.75E-05
1385	ALL	754588.42	4036560.7	NonCancerChronicDerive	0.00E+00	2.78E-09	0.00E+00	0.00E+00	0.00E+00	1.93E-07	2.69E-05	0.00E+00	9.00E-09	0.00E+00	0.00E+00	1.18E-06	0.00E+00	0.00E+00	2.69E-05
1386	ALL	754688.42	4036560.7	NonCancerChronicDerive	0.00E+00	2.72E-09	0.00E+00	0.00E+00	0.00E+00	1.89E-07	2.64E-05	0.00E+00	8.81E-09	0.00E+00	0.00E+00	1.16E-06	0.00E+00	0.00E+00	2.64E-05
1387	ALL	754788.42	4036560.7	NonCancerChronicDerive	0.00E+00	2.66E-09	0.00E+00	0.00E+00	0.00E+00	1.84E-07	2.58E-05	0.00E+00	8.61E-09	0.00E+00	0.00E+00	1.13E-06	0.00E+00	0.00E+00	2.58E-05
1388	ALL	754888.42	4036560.7	NonCancerChronicDerive	0.00E+00	2.60E-09	0.00E+00	0.00E+00	0.00E+00	1.80E-07	2.52E-05	0.00E+00	8.42E-09	0.00E+00	0.00E+00	1.11E-06	0.00E+00	0.00E+00	2.52E-05
1389	ALL	754988.42	4036560.7	NonCancerChronicDerive	0.00E+00	2.54E-09	0.00E+00	0.00E+00	0.00E+00	1.76E-07	2.46E-05	0.00E+00	8.23E-09	0.00E+00	0.00E+00	1.08E-06	0.00E+00	0.00E+00	2.46E-05
1390	ALL	755088.42	4036560.7	NonCancerChronicDerive	0.00E+00	2.49E-09	0.00E+00	0.00E+00	0.00E+00	1.72E-07	2.41E-05	0.00E+00	8.05E-09	0.00E+00	0.00E+00	1.06E-06	0.00E+00	0.00E+00	2.41E-05
1391	ALL	755188.42	4036560.7	NonCancerChronicDerive	0.00E+00	2.43E-09	0.00E+00	0.00E+00	0.00E+00	1.69E-07	2.36E-05	0.00E+00	7.87E-09	0.00E+00	0.00E+00	1.03E-06	0.00E+00	0.00E+00	2.36E-05
1392	ALL	755288.42	4036560.7	NonCancerChronicDerive	0.00E+00	2.38E-09	0.00E+00	0.00E+00	0.00E+00	1.65E-07	2.30E-05	0.00E+00	7.69E-09	0.00E+00	0.00E+00	1.01E-06	0.00E+00	0.00E+00	2.30E-05
1393	ALL	748388.42	4036660.7	NonCancerChronicDerive	0.00E+00	2.74E-09	0.00E+00	0.00E+00	0.00E+00	2.47E-07	3.32E-05	0.00E+00	8.87E-09	0.00E+00	0.00E+00	1.17E-06	0.00E+00	0.00E+00	3.32E-05
1394	ALL	748488.42	4036660.7	NonCancerChronicDerive	0.00E+00	2.78E-09	0.00E+00	0.00E+00	0.00E+00	2.42E-07	3.28E-05	0.00E+00	9.00E-09	0.00E+00	0.00E+00	1.18E-06	0.00E+00	0.00E+00	3.28E-05
1395	ALL	748588.42	4036660.7	NonCancerChronicDerive	0.00E+00	2.83E-09	0.00E+00	0.00E+00	0.00E+00	2.39E-07	3.27E-05	0.00E+00	9.18E-09	0.00E+00	0.00E+00	1.21E-06	0.00E+00	0.00E+00	3.27E-05
1396	ALL	748688.42	4036660.7	NonCancerChronicDerive	0.00E+00	2.90E-09	0.00E+00	0.00E+00	0.00E+00	2.38E-07	3.27E-05	0.00E+00	9.38E-09	0.00E+00	0.00E+00	1.23E-06	0.00E+00	0.00E+00	3.27E-05
1397	ALL	748788.42	4036660.7	NonCancerChronicDerive	0.00E+00	2.97E-09	0.00E+00	0.00E+00	0.00E+00	2.38E-07	3.29E-05	0.00E+00	9.62E-09	0.00E+00	0.00E+00	1.27E-06	0.00E+00	0.00E+00	3.29E-05
1398	ALL	748888.42	4036660.7	NonCancerChronicDerive	0.00E+00	3.06E-09	0.00E+00	0.00E+00	0.00E+00	2.39E-07	3.32E-05	0.00E+00	9.89E-09	0.00E+00	0.00E+00	1.30E-06	0.00E+00	0.00E+00	3.32E-05
1399	ALL	748988.42	4036660.7	NonCancerChronicDerive	0.00E+00	3.14E-09	0.00E+00	0.00E+00	0.00E+00	2.41E-07	3.36E-05	0.00E+00	1.02E-08	0.00E+00	0.00E+00	1.34E-06	0.00E+00	0.00E+00	3.36E-05
1400	ALL	749088.42	4036660.7	NonCancerChronicDerive	0.00E+00	3.23E-09	0.00E+00	0.00E+00	0.00E+00	2.43E-07	3.40E-05	0.00E+00	1.05E-08	0.00E+00	0.00E+00	1.38E-06	0.00E+00	0.00E+00	3.40E-05
1401	ALL	749188.42	4036660.7	NonCancerChronicDerive	0.00E+00	3.32E-09	0.00E+00	0.00E+00	0.00E+00	2.46E-07	3.45E-05	0.00E+00	1.07E-08	0.00E+00	0.00E+00	1.41E-06	0.00E+00	0.00E+00	3.45E-05
1402	ALL	749288.42	4036660.7	NonCancerChronicDerive	0.00E+00	3.39E-09	0.00E+00	0.00E+00	0.00E+00	2.48E-07	3.49E-05	0.00E+00	1.10E-08	0.00E+00	0.00E+00	1.44E-06	0.00E+00	0.00E+00	3.49E-05
1403	ALL	749388.42	4036660.7	NonCancerChronicDerive	0.00E+00	3.46E-09	0.00E+00	0.00E+00	0.00E+00	2.50E-07	3.52E-05	0.00E+00	1.12E-08	0.00E+00	0.00E+00	1.47E-06	0.00E+00	0.00E+00	3.52E-05
1404	ALL	749488.42	4036660.7	NonCancerChronicDerive	0.00E+00	3.53E-09	0.00E+00	0.00E+00	0.00E+00	2.52E-07	3.56E-05	0.00E+00	1.14E-08	0.00E+00	0.00E+00	1.50E-06	0.00E+00	0.00E+00	3.56E-05
1405	ALL	749588.42	4036660.7	NonCancerChronicDerive	0.00E+00	3.59E-09	0.00E+00	0.00E+00	0.00E+00	2.54E-07	3.59E-05	0.00E+00	1.16E-08	0.00E+00	0.00E+00	1.53E-06	0.00E+00	0.00E+00	3.59E-05
1406	ALL	749688.42	4036660.7	NonCancerChronicDerive	0.00E+00	3.65E-09	0.00E+00	0.00E+00	0.00E+00	2.56E-07	3.63E-05	0.00E+00	1.18E-08	0.00E+00	0.00E+00	1.55E-06	0.00E+00	0.00E+00	3.63E-05
1407	ALL	749788.42	4036660.7	NonCancerChronicDerive	0.00E+00	3.70E-09	0.00E+00	0.00E+00	0.00E+00	2.59E-07	3.67E-05	0.00E+00	1.20E-08	0.00E+00	0.00E+00	1.58E-06	0.00E+00	0.00E+00	3.67E-05
1408	ALL	749888.42	4036660.7	NonCancerChronicDerive	0.00E+00	3.76E-09	0.00E+00	0.00E+00	0.00E+00	2.62E-07	3.71E-05	0.00E+00	1.22E-08	0.00E+00	0.00E+00	1.60E-06	0.00E+00	0.00E+00	3.71E-05
1409	ALL	749988.42	4036660.7	NonCancerChronicDerive	0.00E+00	3.81E-09	0.00E+00	0.00E+00	0.00E+00	2.65E-07	3.75E-05	0.00E+00	1.23E-08	0.00E+00	0.00E+00	1.62E-06	0.00E+00	0.00E+00	3.75E-05
1410	ALL	750088.42	4036660.7	NonCancerChronicDerive	0.00E+00	3.86E-09	0.00E+00	0.00E+00	0.00E+00	2.68E-07	3.79E-05	0.00E+00	1.25E-08	0.00E+00	0.00E+00	1.64E-06	0.00E+00	0.00E+00	3.79E-05
1411	ALL	750188.42	4036660.7	NonCancerChronicDerive	0.00E+00	3.91E-09	0.00E+00	0.00E+00	0.00E+00	2.70E-07	3.83E-05	0.00E+00	1.27E-08	0.00E+00	0.00E+00	1.66E-06	0.00E+00	0.00E+00	3.83E-05
1412	ALL	750288.42	4036660.7	NonCancerChronicDerive	0.00E+00	3.95E-09	0.00E+00	0.00E+00	0.00E+00	2.73E-07	3.86E-05	0.00E+00	1.28E-08	0.00E+00	0.00E+00	1.68E-06	0.00E+00	0.00E+00	3.86E-05
1413	ALL	752388.42	4036660.7	NonCancerChronicDerive	0.00E+00	4.02E-09	0.00E+00	0.00E+00	0.00E+00	2.75E-07	3.87E-05	0.00E+00	1.30E-08	0.00E+00	0.00E+00	1.71E-06	0.00E+00	0.00E+00	3.87E-05
1414	ALL	752488.42	4036660.7	NonCancerChronicDerive	0.00E+00	3.99E-09	0.00E+00	0.00E+00	0.00E+00	2.73E-07	3.84E-05	0.00E+00	1.29E-08	0.00E+00	0.00E+00	1.70E-06	0.00E+00	0.00E+00	3.84E-05
1415	ALL	752588.42	4036660.7	NonCancerChronicDerive	0.00E+00	3.95E-09	0.00E+00	0.00E+00	0.00E+00	2.70E-07	3.80E-05	0.00E+00	1.28E-08	0.00E+00	0.00E+00	1.68E-06	0.00E+00	0.00E+00	3.80E-05
1416	ALL	752688.42	4036660.7	NonCancerChronicDerive	0.00E+00	3.91E-09	0.00E+00	0.00E+00	0.00E+00	2.68E-07	3.76E-05	0.00E+00	1.27E-08	0.00E+00	0.00E+00	1.66E-06	0.00E+00	0.00E+00	3.76E-05
1417	ALL	752788.42	4036660.7	NonCancerChronicDerive	0.00E+00	3.86E-09	0.00E+00	0.00E+00	0.00E+00	2.65E-07	3.72E-05	0.00E+00	1.25E-08	0.00E+00	0.00E+00	1.64E-06	0.00E+00	0.00E+00	3.72E-05
1418	ALL	752888.42	4036660.7	NonCancerChronicDerive	0.00E+00	3.82E-09	0.00E+00	0.00E+00	0.00E+00	2.62E-07	3.68E-05	0.00E+00	1.24E-08	0.00E+00	0.00E+00	1.62E-06	0.00E+00	0.00E+00	3.68E-05
1419	ALL	752988.42	4036660.7	NonCancerChronicDerive	0.00E+00	3.77E-09	0.00E+00	0.00E+00	0.00E+00	2.59E-07	3.63E-05	0.00E+00	1.22E-08	0.00E+00	0.00E+00	1.60E-06	0.00E+00	0.00E+00	3.63E-05
1420	ALL	753088.42	4036660.7	NonCancerChronicDerive	0.00E+00	3.71E-09	0.00E+00	0.00E+00	0.00E+00	2.55E-07	3.58E-05	0.00E+00	1.20E-08	0.00E+00	0.00E+00	1.58E-06	0.00E+00	0.00E+00	3.58E-05
1421	ALL	753188.42	4036660.7	NonCancerChronicDerive	0.00E+00	3.66E-09	0.00E+00	0.00E+00	0.00E+00	2.52E-07	3.53E-05	0.00E+00	1.18E-08	0.00E+00	0.00E+00	1.56E-06	0.00E+00	0.00E+00	3.53E-05
1422	ALL	753288.42	4036660.7	NonCancerChronicDerive	0.00E+00	3.60E-09	0.00E+00	0.00E+00	0.00E+00	2.48E-07	3.47E-05	0.00E+00	1.16E-08	0.00E+00	0.00E+00	1.53E-06	0.00E+00	0.00E+00	3.47E-05
1423	ALL	753388.42	4036660.7	NonCancerChronicDerive	0.00E+00	3.54E-09	0.00E+00	0.00E+00	0.00E+00	2.44E-07	3.42E-05	0.00E+00	1.15E-08	0.00E+00	0.00E+00	1.51E-06	0.00E+00	0.00E+00	3.42E-05
1424	ALL	753488.42	4036660.7	NonCancerChronicDerive	0.00E+00	3.48E-09	0.00E+00	0.00E+00	0.00E+00	2.40E-07	3.36E-05	0.00E+00	1.13E-08	0.00E+00	0.00E+00	1.48E-06	0.00E+00	0.00E+00	3.36E-05
1425	ALL	753588.42	4036660.7	NonCancerChronicDerive	0.00E+00	3.41E-09	0.00E+00	0.00E+00	0.00E+00	2.36E-07	3.30E-05	0.00E+00	1.10E-08	0.00E+00	0.00E+00	1.45E-06	0.00E+00	0.00E+00	3.30E-05
1426	ALL	753688.42	4036660.7	NonCancerChronicDerive	0.00E+00	3.35E-09	0.00E+00	0.00E+00	0.00E+00	2.31E-07	3.24E-05	0.00E+00	1.08E-08	0.00E+00	0.00E+00	1.42E-06	0.00E+00	0.00E+00	3.24E-05
1427	ALL	753788.42	4036660.7	NonCancerChronicDerive	0.00E+00	3.28E-09	0.00E+00	0.00E+00	0.00E+00	2.27E-07	3.17E-05	0.00E+00	1.06E-08	0.00E+00	0.00E+00	1.40E-06	0.00E+00	0.00E+00	3.17E-05
1428	ALL	753888.42	4036660.7	NonCancerChronicDerive	0.00E+00	3.22E-09	0.00E+00	0.00E+00	0.00E+00	2.22E-07	3.11E-05	0.00E+00	1.04E-08	0.00E+00	0.00E+00	1.37E-06	0.00E+00	0.00E+00	3.11E-05
1429	ALL	753988.42	4036660.7	NonCancerChronicDerive	0.00E+00	3.15E-09	0.00E+00	0.00E+00	0.00E+00	2.18E-07	3.05E-05	0.00E+00	1.02E-08	0.00E+00	0.00E+00	1.34E-06	0.00E+00	0.00E+00	3.05E-05

1430	ALL	754088.42	4036660.7	NonCancerChronicDerive	0.00E+00	3.08E-09	0.00E+00	0.00E+00	0.00E+00	2.14E-07	2.99E-05	0.00E+00	9.98E-09	0.00E+00	0.00E+00	1.31E-06	0.00E+00	0.00E+00	2.99E-05
1431	ALL	754188.42	4036660.7	NonCancerChronicDerive	0.00E+00	3.02E-09	0.00E+00	0.00E+00	0.00E+00	2.09E-07	2.92E-05	0.00E+00	9.76E-09	0.00E+00	0.00E+00	1.28E-06	0.00E+00	0.00E+00	2.92E-05
1432	ALL	754288.42	4036660.7	NonCancerChronicDerive	0.00E+00	2.95E-09	0.00E+00	0.00E+00	0.00E+00	2.05E-07	2.86E-05	0.00E+00	9.55E-09	0.00E+00	0.00E+00	1.26E-06	0.00E+00	0.00E+00	2.86E-05
1433	ALL	754388.42	4036660.7	NonCancerChronicDerive	0.00E+00	2.88E-09	0.00E+00	0.00E+00	0.00E+00	2.00E-07	2.80E-05	0.00E+00	9.34E-09	0.00E+00	0.00E+00	1.23E-06	0.00E+00	0.00E+00	2.80E-05
1434	ALL	754488.42	4036660.7	NonCancerChronicDerive	0.00E+00	2.82E-09	0.00E+00	0.00E+00	0.00E+00	1.96E-07	2.73E-05	0.00E+00	9.13E-09	0.00E+00	0.00E+00	1.20E-06	0.00E+00	0.00E+00	2.73E-05
1435	ALL	754588.42	4036660.7	NonCancerChronicDerive	0.00E+00	2.76E-09	0.00E+00	0.00E+00	0.00E+00	1.91E-07	2.67E-05	0.00E+00	8.92E-09	0.00E+00	0.00E+00	1.17E-06	0.00E+00	0.00E+00	2.67E-05
1436	ALL	754688.42	4036660.7	NonCancerChronicDerive	0.00E+00	2.69E-09	0.00E+00	0.00E+00	0.00E+00	1.87E-07	2.61E-05	0.00E+00	8.72E-09	0.00E+00	0.00E+00	1.15E-06	0.00E+00	0.00E+00	2.61E-05
1437	ALL	754788.42	4036660.7	NonCancerChronicDerive	0.00E+00	2.63E-09	0.00E+00	0.00E+00	0.00E+00	1.83E-07	2.55E-05	0.00E+00	8.52E-09	0.00E+00	0.00E+00	1.12E-06	0.00E+00	0.00E+00	2.55E-05
1438	ALL	754888.42	4036660.7	NonCancerChronicDerive	0.00E+00	2.57E-09	0.00E+00	0.00E+00	0.00E+00	1.79E-07	2.49E-05	0.00E+00	8.32E-09	0.00E+00	0.00E+00	1.09E-06	0.00E+00	0.00E+00	2.49E-05
1439	ALL	754988.42	4036660.7	NonCancerChronicDerive	0.00E+00	2.51E-09	0.00E+00	0.00E+00	0.00E+00	1.75E-07	2.44E-05	0.00E+00	8.13E-09	0.00E+00	0.00E+00	1.07E-06	0.00E+00	0.00E+00	2.44E-05
1440	ALL	755088.42	4036660.7	NonCancerChronicDerive	0.00E+00	2.45E-09	0.00E+00	0.00E+00	0.00E+00	1.71E-07	2.38E-05	0.00E+00	7.95E-09	0.00E+00	0.00E+00	1.04E-06	0.00E+00	0.00E+00	2.38E-05
1441	ALL	755188.42	4036660.7	NonCancerChronicDerive	0.00E+00	2.40E-09	0.00E+00	0.00E+00	0.00E+00	1.67E-07	2.33E-05	0.00E+00	7.77E-09	0.00E+00	0.00E+00	1.02E-06	0.00E+00	0.00E+00	2.33E-05
1442	ALL	755288.42	4036660.7	NonCancerChronicDerive	0.00E+00	2.35E-09	0.00E+00	0.00E+00	0.00E+00	1.63E-07	2.28E-05	0.00E+00	7.59E-09	0.00E+00	0.00E+00	9.98E-07	0.00E+00	0.00E+00	2.28E-05
1443	ALL	745988.42	4036760.7	NonCancerChronicDerive	0.00E+00	5.12E-09	0.00E+00	0.00E+00	0.00E+00	3.68E-07	5.27E-05	0.00E+00	1.66E-08	0.00E+00	0.00E+00	2.18E-06	0.00E+00	0.00E+00	5.27E-05
1444	ALL	746088.42	4036760.7	NonCancerChronicDerive	0.00E+00	5.74E-09	0.00E+00	0.00E+00	0.00E+00	4.10E-07	5.89E-05	0.00E+00	1.86E-08	0.00E+00	0.00E+00	2.44E-06	0.00E+00	0.00E+00	5.89E-05
1445	ALL	746188.42	4036760.7	NonCancerChronicDerive	0.00E+00	6.42E-09	0.00E+00	0.00E+00	0.00E+00	4.58E-07	6.57E-05	0.00E+00	2.08E-08	0.00E+00	0.00E+00	2.73E-06	0.00E+00	0.00E+00	6.57E-05
1446	ALL	746288.42	4036760.7	NonCancerChronicDerive	0.00E+00	7.06E-09	0.00E+00	0.00E+00	0.00E+00	5.05E-07	7.24E-05	0.00E+00	2.29E-08	0.00E+00	0.00E+00	3.01E-06	0.00E+00	0.00E+00	7.24E-05
1447	ALL	746388.42	4036760.7	NonCancerChronicDerive	0.00E+00	7.46E-09	0.00E+00	0.00E+00	0.00E+00	5.40E-07	7.70E-05	0.00E+00	2.42E-08	0.00E+00	0.00E+00	3.18E-06	0.00E+00	0.00E+00	7.70E-05
1448	ALL	746488.42	4036760.7	NonCancerChronicDerive	0.00E+00	7.39E-09	0.00E+00	0.00E+00	0.00E+00	5.51E-07	7.75E-05	0.00E+00	2.39E-08	0.00E+00	0.00E+00	3.14E-06	0.00E+00	0.00E+00	7.75E-05
1449	ALL	746588.42	4036760.7	NonCancerChronicDerive	0.00E+00	6.77E-09	0.00E+00	0.00E+00	0.00E+00	5.41E-07	7.44E-05	0.00E+00	2.19E-08	0.00E+00	0.00E+00	2.88E-06	0.00E+00	0.00E+00	7.44E-05
1450	ALL	749888.42	4036760.7	NonCancerChronicDerive	0.00E+00	3.75E-09	0.00E+00	0.00E+00	0.00E+00	2.60E-07	3.69E-05	0.00E+00	1.21E-08	0.00E+00	0.00E+00	1.59E-06	0.00E+00	0.00E+00	3.69E-05
1451	ALL	749988.42	4036760.7	NonCancerChronicDerive	0.00E+00	3.81E-09	0.00E+00	0.00E+00	0.00E+00	2.64E-07	3.74E-05	0.00E+00	1.23E-08	0.00E+00	0.00E+00	1.62E-06	0.00E+00	0.00E+00	3.74E-05
1452	ALL	750088.42	4036760.7	NonCancerChronicDerive	0.00E+00	3.87E-09	0.00E+00	0.00E+00	0.00E+00	2.68E-07	3.79E-05	0.00E+00	1.25E-08	0.00E+00	0.00E+00	1.65E-06	0.00E+00	0.00E+00	3.79E-05
1453	ALL	750188.42	4036760.7	NonCancerChronicDerive	0.00E+00	3.93E-09	0.00E+00	0.00E+00	0.00E+00	2.71E-07	3.84E-05	0.00E+00	1.27E-08	0.00E+00	0.00E+00	1.67E-06	0.00E+00	0.00E+00	3.84E-05
1454	ALL	750288.42	4036760.7	NonCancerChronicDerive	0.00E+00	3.97E-09	0.00E+00	0.00E+00	0.00E+00	2.74E-07	3.88E-05	0.00E+00	1.29E-08	0.00E+00	0.00E+00	1.69E-06	0.00E+00	0.00E+00	3.88E-05
1455	ALL	752388.42	4036760.7	NonCancerChronicDerive	0.00E+00	4.09E-09	0.00E+00	0.00E+00	0.00E+00	2.80E-07	3.93E-05	0.00E+00	1.32E-08	0.00E+00	0.00E+00	1.74E-06	0.00E+00	0.00E+00	3.93E-05
1456	ALL	752488.42	4036760.7	NonCancerChronicDerive	0.00E+00	4.05E-09	0.00E+00	0.00E+00	0.00E+00	2.77E-07	3.90E-05	0.00E+00	1.31E-08	0.00E+00	0.00E+00	1.72E-06	0.00E+00	0.00E+00	3.90E-05
1457	ALL	752588.42	4036760.7	NonCancerChronicDerive	0.00E+00	4.00E-09	0.00E+00	0.00E+00	0.00E+00	2.75E-07	3.86E-05	0.00E+00	1.30E-08	0.00E+00	0.00E+00	1.70E-06	0.00E+00	0.00E+00	3.86E-05
1458	ALL	752688.42	4036760.7	NonCancerChronicDerive	0.00E+00	3.96E-09	0.00E+00	0.00E+00	0.00E+00	2.72E-07	3.81E-05	0.00E+00	1.28E-08	0.00E+00	0.00E+00	1.68E-06	0.00E+00	0.00E+00	3.81E-05
1459	ALL	752788.42	4036760.7	NonCancerChronicDerive	0.00E+00	3.91E-09	0.00E+00	0.00E+00	0.00E+00	2.68E-07	3.77E-05	0.00E+00	1.26E-08	0.00E+00	0.00E+00	1.66E-06	0.00E+00	0.00E+00	3.77E-05
1460	ALL	752888.42	4036760.7	NonCancerChronicDerive	0.00E+00	3.85E-09	0.00E+00	0.00E+00	0.00E+00	2.65E-07	3.72E-05	0.00E+00	1.25E-08	0.00E+00	0.00E+00	1.64E-06	0.00E+00	0.00E+00	3.72E-05
1461	ALL	752988.42	4036760.7	NonCancerChronicDerive	0.00E+00	3.80E-09	0.00E+00	0.00E+00	0.00E+00	2.61E-07	3.66E-05	0.00E+00	1.23E-08	0.00E+00	0.00E+00	1.62E-06	0.00E+00	0.00E+00	3.66E-05
1462	ALL	753088.42	4036760.7	NonCancerChronicDerive	0.00E+00	3.74E-09	0.00E+00	0.00E+00	0.00E+00	2.57E-07	3.61E-05	0.00E+00	1.21E-08	0.00E+00	0.00E+00	1.59E-06	0.00E+00	0.00E+00	3.61E-05
1463	ALL	753188.42	4036760.7	NonCancerChronicDerive	0.00E+00	3.68E-09	0.00E+00	0.00E+00	0.00E+00	2.53E-07	3.55E-05	0.00E+00	1.19E-08	0.00E+00	0.00E+00	1.56E-06	0.00E+00	0.00E+00	3.55E-05
1464	ALL	753288.42	4036760.7	NonCancerChronicDerive	0.00E+00	3.61E-09	0.00E+00	0.00E+00	0.00E+00	2.49E-07	3.49E-05	0.00E+00	1.17E-08	0.00E+00	0.00E+00	1.54E-06	0.00E+00	0.00E+00	3.49E-05
1465	ALL	753388.42	4036760.7	NonCancerChronicDerive	0.00E+00	3.55E-09	0.00E+00	0.00E+00	0.00E+00	2.45E-07	3.43E-05	0.00E+00	1.15E-08	0.00E+00	0.00E+00	1.51E-06	0.00E+00	0.00E+00	3.43E-05
1466	ALL	753488.42	4036760.7	NonCancerChronicDerive	0.00E+00	3.48E-09	0.00E+00	0.00E+00	0.00E+00	2.41E-07	3.37E-05	0.00E+00	1.13E-08	0.00E+00	0.00E+00	1.48E-06	0.00E+00	0.00E+00	3.37E-05
1467	ALL	753588.42	4036760.7	NonCancerChronicDerive	0.00E+00	3.41E-09	0.00E+00	0.00E+00	0.00E+00	2.36E-07	3.30E-05	0.00E+00	1.10E-08	0.00E+00	0.00E+00	1.45E-06	0.00E+00	0.00E+00	3.30E-05
1468	ALL	753688.42	4036760.7	NonCancerChronicDerive	0.00E+00	3.34E-09	0.00E+00	0.00E+00	0.00E+00	2.31E-07	3.24E-05	0.00E+00	1.08E-08	0.00E+00	0.00E+00	1.42E-06	0.00E+00	0.00E+00	3.24E-05
1469	ALL	753788.42	4036760.7	NonCancerChronicDerive	0.00E+00	3.27E-09	0.00E+00	0.00E+00	0.00E+00	2.27E-07	3.17E-05	0.00E+00	1.06E-08	0.00E+00	0.00E+00	1.39E-06	0.00E+00	0.00E+00	3.17E-05
1470	ALL	753888.42	4036760.7	NonCancerChronicDerive	0.00E+00	3.20E-09	0.00E+00	0.00E+00	0.00E+00	2.22E-07	3.10E-05	0.00E+00	1.04E-08	0.00E+00	0.00E+00	1.36E-06	0.00E+00	0.00E+00	3.10E-05
1471	ALL	753988.42	4036760.7	NonCancerChronicDerive	0.00E+00	3.13E-09	0.00E+00	0.00E+00	0.00E+00	2.17E-07	3.04E-05	0.00E+00	1.01E-08	0.00E+00	0.00E+00	1.33E-06	0.00E+00	0.00E+00	3.04E-05
1472	ALL	754088.42	4036760.7	NonCancerChronicDerive	0.00E+00	3.06E-09	0.00E+00	0.00E+00	0.00E+00	2.13E-07	2.97E-05	0.00E+00	9.91E-09	0.00E+00	0.00E+00	1.30E-06	0.00E+00	0.00E+00	2.97E-05
1473	ALL	754188.42	4036760.7	NonCancerChronicDerive	0.00E+00	2.99E-09	0.00E+00	0.00E+00	0.00E+00	2.08E-07	2.91E-05	0.00E+00	9.69E-09	0.00E+00	0.00E+00	1.27E-06	0.00E+00	0.00E+00	2.91E-05
1474	ALL	754288.42	4036760.7	NonCancerChronicDerive	0.00E+00	2.92E-09	0.00E+00	0.00E+00	0.00E+00	2.03E-07	2.84E-05	0.00E+00	9.47E-09	0.00E+00	0.00E+00	1.24E-06	0.00E+00	0.00E+00	2.84E-05
1475	ALL	754388.42	4036760.7	NonCancerChronicDerive	0.00E+00	2.86E-09	0.00E+00	0.00E+00	0.00E+00	1.99E-07	2.77E-05	0.00E+00	9.25E-09	0.00E+00	0.00E+00	1.22E-06	0.00E+00	0.00E+00	2.77E-05
1476	ALL	754488.42	4036760.7	NonCancerChronicDerive	0.00E+00	2.79E-09	0.00E+00	0.00E+00	0.00E+00	1.94E-07	2.71E-05	0.00E+00	9.03E-09	0.00E+00	0.00E+00	1.19E-06	0.00E+00	0.00E+00	2.71E-05
1477	ALL	754588.42	4036760.7	NonCancerChronicDerive	0.00E+00	2.73E-09	0.00E+00	0.00E+00	0.00E+00	1.90E-07	2.65E-05	0.00E+00	8.82E-09	0.00E+00	0.00E+00	1.16E-06	0.00E+00	0.00E+00	2.65E-05
1478	ALL	754688.42	4036760.7	NonCancerChronicDerive	0.00E+00	2.66E-09	0.00E+00	0.00E+00	0.00E+00	1.85E-07	2.59E-05	0.00E+00	8.61E-09	0.00E+00	0.00E+00	1.13E-06	0.00E+00	0.00E+00	2.59E-05
1479	ALL	754788.42	4036760.7	NonCancerChronicDerive	0.00E+00	2.60E-09	0.00E+00	0.00E+00	0.00E+00	1.81E-07	2.52E-05	0.00E+00	8.41E-09	0.00E+00	0.00E+00	1.11E-06	0.00E+00	0.00E+00	2.52E-05
1480	ALL	754888.42	4036760.7	NonCancerChronicDerive	0.00E+00	2.54E-09	0.00E+00	0.00E+00	0.00E+00	1.77E-07	2.47E-05	0.00E+00	8.21E-09	0.00E+00	0.00E+00	1.08E-06	0.00E+00	0.00E+00	2.47E-05
1481	ALL	754988.42	4036760.7	NonCancerChronicDerive	0.00E+00	2.48E-09	0.00E+00	0.00E+00	0.00E+00	1.73E-07	2.41E-05	0.00E+00	8.02E-09	0.00E+00	0.00E+00	1.05E-06	0.00E+00	0.00E+00	2.41E-05
1482	ALL	755088.42	4036760.7	NonCancerChronicDerive	0.00E+00	2.42E-09	0.00E+00	0.00E+00	0.00E+00	1.69E-07	2.35E-05	0.00E+00	7.84E-09	0.00E+00	0.00E+00	1.03E-06	0.00E+00	0.00E+00	2.35E-05

1483	ALL	755188.42	4036760.7	NonCancerChronicDerive	0.00E+00	2.37E-09	0.00E+00	0.00E+00	0.00E+00	1.65E-07	2.30E-05	0.00E+00	7.66E-09	0.00E+00	0.00E+00	1.01E-06	0.00E+00	0.00E+00	2.30E-05
1484	ALL	755288.42	4036760.7	NonCancerChronicDerive	0.00E+00	2.31E-09	0.00E+00	0.00E+00	0.00E+00	1.61E-07	2.24E-05	0.00E+00	7.48E-09	0.00E+00	0.00E+00	9.83E-07	0.00E+00	0.00E+00	2.24E-05
1485	ALL	745988.42	4036860.7	NonCancerChronicDerive	0.00E+00	5.30E-09	0.00E+00	0.00E+00	0.00E+00	3.83E-07	5.47E-05	0.00E+00	1.72E-08	0.00E+00	0.00E+00	2.25E-06	0.00E+00	0.00E+00	5.47E-05
1486	ALL	746088.42	4036860.7	NonCancerChronicDerive	0.00E+00	5.80E-09	0.00E+00	0.00E+00	0.00E+00	4.20E-07	5.99E-05	0.00E+00	1.88E-08	0.00E+00	0.00E+00	2.47E-06	0.00E+00	0.00E+00	5.99E-05
1487	ALL	746188.42	4036860.7	NonCancerChronicDerive	0.00E+00	6.24E-09	0.00E+00	0.00E+00	0.00E+00	4.56E-07	6.47E-05	0.00E+00	2.02E-08	0.00E+00	0.00E+00	2.66E-06	0.00E+00	0.00E+00	6.47E-05
1488	ALL	746288.42	4036860.7	NonCancerChronicDerive	0.00E+00	6.48E-09	0.00E+00	0.00E+00	0.00E+00	4.82E-07	6.79E-05	0.00E+00	2.10E-08	0.00E+00	0.00E+00	2.76E-06	0.00E+00	0.00E+00	6.79E-05
1489	ALL	746388.42	4036860.7	NonCancerChronicDerive	0.00E+00	6.39E-09	0.00E+00	0.00E+00	0.00E+00	4.93E-07	6.86E-05	0.00E+00	2.07E-08	0.00E+00	0.00E+00	2.72E-06	0.00E+00	0.00E+00	6.86E-05
1490	ALL	746488.42	4036860.7	NonCancerChronicDerive	0.00E+00	5.96E-09	0.00E+00	0.00E+00	0.00E+00	4.94E-07	6.71E-05	0.00E+00	1.93E-08	0.00E+00	0.00E+00	2.54E-06	0.00E+00	0.00E+00	6.71E-05
1491	ALL	746588.42	4036860.7	NonCancerChronicDerive	0.00E+00	5.28E-09	0.00E+00	0.00E+00	0.00E+00	5.07E-07	6.60E-05	0.00E+00	1.71E-08	0.00E+00	0.00E+00	2.25E-06	0.00E+00	0.00E+00	6.60E-05
1492	ALL	747488.42	4036860.7	NonCancerChronicDerive	0.00E+00	2.48E-09	0.00E+00	0.00E+00	0.00E+00	3.36E-07	4.03E-05	0.00E+00	8.04E-09	0.00E+00	0.00E+00	1.06E-06	0.00E+00	0.00E+00	4.03E-05
1493	ALL	747588.42	4036860.7	NonCancerChronicDerive	0.00E+00	2.39E-09	0.00E+00	0.00E+00	0.00E+00	3.02E-07	3.68E-05	0.00E+00	7.74E-09	0.00E+00	0.00E+00	1.02E-06	0.00E+00	0.00E+00	3.68E-05
1494	ALL	747688.42	4036860.7	NonCancerChronicDerive	0.00E+00	2.34E-09	0.00E+00	0.00E+00	0.00E+00	2.77E-07	3.43E-05	0.00E+00	7.56E-09	0.00E+00	0.00E+00	9.94E-07	0.00E+00	0.00E+00	3.43E-05
1495	ALL	747788.42	4036860.7	NonCancerChronicDerive	0.00E+00	2.31E-09	0.00E+00	0.00E+00	0.00E+00	2.58E-07	3.25E-05	0.00E+00	7.48E-09	0.00E+00	0.00E+00	9.83E-07	0.00E+00	0.00E+00	3.25E-05
1496	ALL	747888.42	4036860.7	NonCancerChronicDerive	0.00E+00	2.29E-09	0.00E+00	0.00E+00	0.00E+00	2.43E-07	3.11E-05	0.00E+00	7.42E-09	0.00E+00	0.00E+00	9.76E-07	0.00E+00	0.00E+00	3.11E-05
1497	ALL	747988.42	4036860.7	NonCancerChronicDerive	0.00E+00	2.29E-09	0.00E+00	0.00E+00	0.00E+00	2.32E-07	3.01E-05	0.00E+00	7.40E-09	0.00E+00	0.00E+00	9.73E-07	0.00E+00	0.00E+00	3.01E-05
1498	ALL	748088.42	4036860.7	NonCancerChronicDerive	0.00E+00	2.29E-09	0.00E+00	0.00E+00	0.00E+00	2.23E-07	2.93E-05	0.00E+00	7.42E-09	0.00E+00	0.00E+00	9.76E-07	0.00E+00	0.00E+00	2.93E-05
1499	ALL	748188.42	4036860.7	NonCancerChronicDerive	0.00E+00	2.31E-09	0.00E+00	0.00E+00	0.00E+00	2.16E-07	2.88E-05	0.00E+00	7.47E-09	0.00E+00	0.00E+00	9.82E-07	0.00E+00	0.00E+00	2.88E-05
1500	ALL	749988.42	4036860.7	NonCancerChronicDerive	0.00E+00	3.84E-09	0.00E+00	0.00E+00	0.00E+00	2.65E-07	3.76E-05	0.00E+00	1.24E-08	0.00E+00	0.00E+00	1.63E-06	0.00E+00	0.00E+00	3.76E-05
1501	ALL	750088.42	4036860.7	NonCancerChronicDerive	0.00E+00	3.91E-09	0.00E+00	0.00E+00	0.00E+00	2.69E-07	3.82E-05	0.00E+00	1.26E-08	0.00E+00	0.00E+00	1.66E-06	0.00E+00	0.00E+00	3.82E-05
1502	ALL	750188.42	4036860.7	NonCancerChronicDerive	0.00E+00	3.97E-09	0.00E+00	0.00E+00	0.00E+00	2.73E-07	3.87E-05	0.00E+00	1.28E-08	0.00E+00	0.00E+00	1.69E-06	0.00E+00	0.00E+00	3.87E-05
1503	ALL	750288.42	4036860.7	NonCancerChronicDerive	0.00E+00	4.02E-09	0.00E+00	0.00E+00	0.00E+00	2.77E-07	3.92E-05	0.00E+00	1.30E-08	0.00E+00	0.00E+00	1.71E-06	0.00E+00	0.00E+00	3.92E-05
1504	ALL	752388.42	4036860.7	NonCancerChronicDerive	0.00E+00	4.15E-09	0.00E+00	0.00E+00	0.00E+00	2.85E-07	4.00E-05	0.00E+00	1.34E-08	0.00E+00	0.00E+00	1.77E-06	0.00E+00	0.00E+00	4.00E-05
1505	ALL	752488.42	4036860.7	NonCancerChronicDerive	0.00E+00	4.11E-09	0.00E+00	0.00E+00	0.00E+00	2.82E-07	3.96E-05	0.00E+00	1.33E-08	0.00E+00	0.00E+00	1.75E-06	0.00E+00	0.00E+00	3.96E-05
1506	ALL	752588.42	4036860.7	NonCancerChronicDerive	0.00E+00	4.06E-09	0.00E+00	0.00E+00	0.00E+00	2.79E-07	3.91E-05	0.00E+00	1.31E-08	0.00E+00	0.00E+00	1.73E-06	0.00E+00	0.00E+00	3.91E-05
1507	ALL	752688.42	4036860.7	NonCancerChronicDerive	0.00E+00	4.01E-09	0.00E+00	0.00E+00	0.00E+00	2.75E-07	3.86E-05	0.00E+00	1.30E-08	0.00E+00	0.00E+00	1.70E-06	0.00E+00	0.00E+00	3.86E-05
1508	ALL	752788.42	4036860.7	NonCancerChronicDerive	0.00E+00	3.95E-09	0.00E+00	0.00E+00	0.00E+00	2.72E-07	3.81E-05	0.00E+00	1.28E-08	0.00E+00	0.00E+00	1.68E-06	0.00E+00	0.00E+00	3.81E-05
1509	ALL	752888.42	4036860.7	NonCancerChronicDerive	0.00E+00	3.89E-09	0.00E+00	0.00E+00	0.00E+00	2.68E-07	3.75E-05	0.00E+00	1.26E-08	0.00E+00	0.00E+00	1.65E-06	0.00E+00	0.00E+00	3.75E-05
1510	ALL	752988.42	4036860.7	NonCancerChronicDerive	0.00E+00	3.83E-09	0.00E+00	0.00E+00	0.00E+00	2.64E-07	3.70E-05	0.00E+00	1.24E-08	0.00E+00	0.00E+00	1.63E-06	0.00E+00	0.00E+00	3.70E-05
1511	ALL	753088.42	4036860.7	NonCancerChronicDerive	0.00E+00	3.76E-09	0.00E+00	0.00E+00	0.00E+00	2.60E-07	3.63E-05	0.00E+00	1.22E-08	0.00E+00	0.00E+00	1.60E-06	0.00E+00	0.00E+00	3.63E-05
1512	ALL	753188.42	4036860.7	NonCancerChronicDerive	0.00E+00	3.69E-09	0.00E+00	0.00E+00	0.00E+00	2.55E-07	3.57E-05	0.00E+00	1.20E-08	0.00E+00	0.00E+00	1.57E-06	0.00E+00	0.00E+00	3.57E-05
1513	ALL	753288.42	4036860.7	NonCancerChronicDerive	0.00E+00	3.62E-09	0.00E+00	0.00E+00	0.00E+00	2.51E-07	3.51E-05	0.00E+00	1.17E-08	0.00E+00	0.00E+00	1.54E-06	0.00E+00	0.00E+00	3.51E-05
1514	ALL	753388.42	4036860.7	NonCancerChronicDerive	0.00E+00	3.55E-09	0.00E+00	0.00E+00	0.00E+00	2.46E-07	3.44E-05	0.00E+00	1.15E-08	0.00E+00	0.00E+00	1.51E-06	0.00E+00	0.00E+00	3.44E-05
1515	ALL	753488.42	4036860.7	NonCancerChronicDerive	0.00E+00	3.48E-09	0.00E+00	0.00E+00	0.00E+00	2.41E-07	3.37E-05	0.00E+00	1.13E-08	0.00E+00	0.00E+00	1.48E-06	0.00E+00	0.00E+00	3.37E-05
1516	ALL	753588.42	4036860.7	NonCancerChronicDerive	0.00E+00	3.41E-09	0.00E+00	0.00E+00	0.00E+00	2.36E-07	3.30E-05	0.00E+00	1.10E-08	0.00E+00	0.00E+00	1.45E-06	0.00E+00	0.00E+00	3.30E-05
1517	ALL	753688.42	4036860.7	NonCancerChronicDerive	0.00E+00	3.33E-09	0.00E+00	0.00E+00	0.00E+00	2.31E-07	3.23E-05	0.00E+00	1.08E-08	0.00E+00	0.00E+00	1.42E-06	0.00E+00	0.00E+00	3.23E-05
1518	ALL	753788.42	4036860.7	NonCancerChronicDerive	0.00E+00	3.26E-09	0.00E+00	0.00E+00	0.00E+00	2.26E-07	3.16E-05	0.00E+00	1.05E-08	0.00E+00	0.00E+00	1.39E-06	0.00E+00	0.00E+00	3.16E-05
1519	ALL	753888.42	4036860.7	NonCancerChronicDerive	0.00E+00	3.18E-09	0.00E+00	0.00E+00	0.00E+00	2.21E-07	3.09E-05	0.00E+00	1.03E-08	0.00E+00	0.00E+00	1.36E-06	0.00E+00	0.00E+00	3.09E-05
1520	ALL	753988.42	4036860.7	NonCancerChronicDerive	0.00E+00	3.11E-09	0.00E+00	0.00E+00	0.00E+00	2.16E-07	3.02E-05	0.00E+00	1.01E-08	0.00E+00	0.00E+00	1.32E-06	0.00E+00	0.00E+00	3.02E-05
1521	ALL	754088.42	4036860.7	NonCancerChronicDerive	0.00E+00	3.04E-09	0.00E+00	0.00E+00	0.00E+00	2.12E-07	2.95E-05	0.00E+00	9.83E-09	0.00E+00	0.00E+00	1.29E-06	0.00E+00	0.00E+00	2.95E-05
1522	ALL	754188.42	4036860.7	NonCancerChronicDerive	0.00E+00	2.97E-09	0.00E+00	0.00E+00	0.00E+00	2.07E-07	2.88E-05	0.00E+00	9.60E-09	0.00E+00	0.00E+00	1.26E-06	0.00E+00	0.00E+00	2.88E-05
1523	ALL	754288.42	4036860.7	NonCancerChronicDerive	0.00E+00	2.90E-09	0.00E+00	0.00E+00	0.00E+00	2.02E-07	2.81E-05	0.00E+00	9.37E-09	0.00E+00	0.00E+00	1.23E-06	0.00E+00	0.00E+00	2.81E-05
1524	ALL	754388.42	4036860.7	NonCancerChronicDerive	0.00E+00	2.83E-09	0.00E+00	0.00E+00	0.00E+00	1.97E-07	2.75E-05	0.00E+00	9.15E-09	0.00E+00	0.00E+00	1.20E-06	0.00E+00	0.00E+00	2.75E-05
1525	ALL	754488.42	4036860.7	NonCancerChronicDerive	0.00E+00	2.76E-09	0.00E+00	0.00E+00	0.00E+00	1.92E-07	2.68E-05	0.00E+00	8.93E-09	0.00E+00	0.00E+00	1.17E-06	0.00E+00	0.00E+00	2.68E-05
1526	ALL	754588.42	4036860.7	NonCancerChronicDerive	0.00E+00	2.69E-09	0.00E+00	0.00E+00	0.00E+00	1.88E-07	2.62E-05	0.00E+00	8.71E-09	0.00E+00	0.00E+00	1.15E-06	0.00E+00	0.00E+00	2.62E-05
1527	ALL	754688.42	4036860.7	NonCancerChronicDerive	0.00E+00	2.63E-09	0.00E+00	0.00E+00	0.00E+00	1.83E-07	2.55E-05	0.00E+00	8.50E-09	0.00E+00	0.00E+00	1.12E-06	0.00E+00	0.00E+00	2.55E-05
1528	ALL	754788.42	4036860.7	NonCancerChronicDerive	0.00E+00	2.56E-09	0.00E+00	0.00E+00	0.00E+00	1.79E-07	2.49E-05	0.00E+00	8.30E-09	0.00E+00	0.00E+00	1.09E-06	0.00E+00	0.00E+00	2.49E-05
1529	ALL	754888.42	4036860.7	NonCancerChronicDerive	0.00E+00	2.50E-09	0.00E+00	0.00E+00	0.00E+00	1.74E-07	2.43E-05	0.00E+00	8.10E-09	0.00E+00	0.00E+00	1.06E-06	0.00E+00	0.00E+00	2.43E-05
1530	ALL	754988.42	4036860.7	NonCancerChronicDerive	0.00E+00	2.44E-09	0.00E+00	0.00E+00	0.00E+00	1.70E-07	2.38E-05	0.00E+00	7.91E-09	0.00E+00	0.00E+00	1.04E-06	0.00E+00	0.00E+00	2.38E-05
1531	ALL	755088.42	4036860.7	NonCancerChronicDerive	0.00E+00	2.39E-09	0.00E+00	0.00E+00	0.00E+00	1.66E-07	2.32E-05	0.00E+00	7.72E-09	0.00E+00	0.00E+00	1.02E-06	0.00E+00	0.00E+00	2.32E-05
1532	ALL	755188.42	4036860.7	NonCancerChronicDerive	0.00E+00	2.33E-09	0.00E+00	0.00E+00	0.00E+00	1.62E-07	2.27E-05	0.00E+00	7.54E-09	0.00E+00	0.00E+00	9.91E-07	0.00E+00	0.00E+00	2.27E-05
1533	ALL	755288.42	4036860.7	NonCancerChronicDerive	0.00E+00	2.28E-09	0.00E+00	0.00E+00	0.00E+00	1.59E-07	2.21E-05	0.00E+00	7.37E-09	0.00E+00	0.00E+00	9.69E-07	0.00E+00	0.00E+00	2.21E-05
1534	ALL	746388.42	4036960.7	NonCancerChronicDerive	0.00E+00	5.32E-09	0.00E+00	0.00E+00	0.00E+00	4.52E-07	6.09E-05	0.00E+00	1.72E-08	0.00E+00	0.00E+00	2.26E-06	0.00E+00	0.00E+00	6.09E-05
1535	ALL	746488.42	4036960.7	NonCancerChronicDerive	0.00E+00	4.82E-09	0.00E+00	0.00E+00	0.00E+00	4.71E-07	6.10E-05	0.00E+00	1.56E-08	0.00E+00	0.00E+00	2.05E-06	0.00E+00	0.00E+00	6.10E-05

1536	ALL	746588.42	4036960.7	NonCancerChronicDerive	0.00E+00	4.25E-09	0.00E+00	0.00E+00	0.00E+00	5.40E-07	6.56E-05	0.00E+00	1.38E-08	0.00E+00	0.00E+00	1.81E-06	0.00E+00	0.00E+00	6.56E-05
1537	ALL	747488.42	4036960.7	NonCancerChronicDerive	0.00E+00	2.33E-09	0.00E+00	0.00E+00	0.00E+00	2.61E-07	3.28E-05	0.00E+00	7.53E-09	0.00E+00	0.00E+00	9.90E-07	0.00E+00	0.00E+00	3.28E-05
1538	ALL	747588.42	4036960.7	NonCancerChronicDerive	0.00E+00	2.25E-09	0.00E+00	0.00E+00	0.00E+00	2.47E-07	3.11E-05	0.00E+00	7.29E-09	0.00E+00	0.00E+00	9.58E-07	0.00E+00	0.00E+00	3.11E-05
1539	ALL	747688.42	4036960.7	NonCancerChronicDerive	0.00E+00	2.20E-09	0.00E+00	0.00E+00	0.00E+00	2.34E-07	2.98E-05	0.00E+00	7.13E-09	0.00E+00	0.00E+00	9.37E-07	0.00E+00	0.00E+00	2.98E-05
1540	ALL	747788.42	4036960.7	NonCancerChronicDerive	0.00E+00	2.18E-09	0.00E+00	0.00E+00	0.00E+00	2.24E-07	2.88E-05	0.00E+00	7.05E-09	0.00E+00	0.00E+00	9.27E-07	0.00E+00	0.00E+00	2.88E-05
1541	ALL	747888.42	4036960.7	NonCancerChronicDerive	0.00E+00	2.17E-09	0.00E+00	0.00E+00	0.00E+00	2.15E-07	2.80E-05	0.00E+00	7.01E-09	0.00E+00	0.00E+00	9.22E-07	0.00E+00	0.00E+00	2.80E-05
1542	ALL	747988.42	4036960.7	NonCancerChronicDerive	0.00E+00	2.16E-09	0.00E+00	0.00E+00	0.00E+00	2.08E-07	2.73E-05	0.00E+00	6.99E-09	0.00E+00	0.00E+00	9.19E-07	0.00E+00	0.00E+00	2.73E-05
1543	ALL	748088.42	4036960.7	NonCancerChronicDerive	0.00E+00	2.16E-09	0.00E+00	0.00E+00	0.00E+00	2.02E-07	2.68E-05	0.00E+00	7.00E-09	0.00E+00	0.00E+00	9.20E-07	0.00E+00	0.00E+00	2.68E-05
1544	ALL	748188.42	4036960.7	NonCancerChronicDerive	0.00E+00	2.18E-09	0.00E+00	0.00E+00	0.00E+00	1.98E-07	2.65E-05	0.00E+00	7.05E-09	0.00E+00	0.00E+00	9.27E-07	0.00E+00	0.00E+00	2.65E-05
1545	ALL	749988.42	4036960.7	NonCancerChronicDerive	0.00E+00	3.90E-09	0.00E+00	0.00E+00	0.00E+00	2.68E-07	3.80E-05	0.00E+00	1.26E-08	0.00E+00	0.00E+00	1.66E-06	0.00E+00	0.00E+00	3.80E-05
1546	ALL	750088.42	4036960.7	NonCancerChronicDerive	0.00E+00	3.97E-09	0.00E+00	0.00E+00	0.00E+00	2.73E-07	3.87E-05	0.00E+00	1.29E-08	0.00E+00	0.00E+00	1.69E-06	0.00E+00	0.00E+00	3.87E-05
1547	ALL	750188.42	4036960.7	NonCancerChronicDerive	0.00E+00	4.04E-09	0.00E+00	0.00E+00	0.00E+00	2.77E-07	3.93E-05	0.00E+00	1.31E-08	0.00E+00	0.00E+00	1.72E-06	0.00E+00	0.00E+00	3.93E-05
1548	ALL	750288.42	4036960.7	NonCancerChronicDerive	0.00E+00	4.09E-09	0.00E+00	0.00E+00	0.00E+00	2.81E-07	3.98E-05	0.00E+00	1.32E-08	0.00E+00	0.00E+00	1.74E-06	0.00E+00	0.00E+00	3.98E-05
1549	ALL	752388.42	4036960.7	NonCancerChronicDerive	0.00E+00	4.22E-09	0.00E+00	0.00E+00	0.00E+00	2.90E-07	4.06E-05	0.00E+00	1.37E-08	0.00E+00	0.00E+00	1.80E-06	0.00E+00	0.00E+00	4.06E-05
1550	ALL	752488.42	4036960.7	NonCancerChronicDerive	0.00E+00	4.17E-09	0.00E+00	0.00E+00	0.00E+00	2.86E-07	4.02E-05	0.00E+00	1.35E-08	0.00E+00	0.00E+00	1.77E-06	0.00E+00	0.00E+00	4.02E-05
1551	ALL	752588.42	4036960.7	NonCancerChronicDerive	0.00E+00	4.11E-09	0.00E+00	0.00E+00	0.00E+00	2.83E-07	3.96E-05	0.00E+00	1.33E-08	0.00E+00	0.00E+00	1.75E-06	0.00E+00	0.00E+00	3.96E-05
1552	ALL	752688.42	4036960.7	NonCancerChronicDerive	0.00E+00	4.05E-09	0.00E+00	0.00E+00	0.00E+00	2.79E-07	3.91E-05	0.00E+00	1.31E-08	0.00E+00	0.00E+00	1.72E-06	0.00E+00	0.00E+00	3.91E-05
1553	ALL	752788.42	4036960.7	NonCancerChronicDerive	0.00E+00	3.98E-09	0.00E+00	0.00E+00	0.00E+00	2.75E-07	3.85E-05	0.00E+00	1.29E-08	0.00E+00	0.00E+00	1.70E-06	0.00E+00	0.00E+00	3.85E-05
1554	ALL	754888.42	4036960.7	NonCancerChronicDerive	0.00E+00	2.47E-09	0.00E+00	0.00E+00	0.00E+00	1.72E-07	2.40E-05	0.00E+00	7.98E-09	0.00E+00	0.00E+00	1.05E-06	0.00E+00	0.00E+00	2.40E-05
1555	ALL	754988.42	4036960.7	NonCancerChronicDerive	0.00E+00	2.41E-09	0.00E+00	0.00E+00	0.00E+00	1.68E-07	2.34E-05	0.00E+00	7.79E-09	0.00E+00	0.00E+00	1.02E-06	0.00E+00	0.00E+00	2.34E-05
1556	ALL	755088.42	4036960.7	NonCancerChronicDerive	0.00E+00	2.35E-09	0.00E+00	0.00E+00	0.00E+00	1.64E-07	2.29E-05	0.00E+00	7.60E-09	0.00E+00	0.00E+00	9.99E-07	0.00E+00	0.00E+00	2.29E-05
1557	ALL	755188.42	4036960.7	NonCancerChronicDerive	0.00E+00	2.29E-09	0.00E+00	0.00E+00	0.00E+00	1.60E-07	2.23E-05	0.00E+00	7.42E-09	0.00E+00	0.00E+00	9.75E-07	0.00E+00	0.00E+00	2.23E-05
1558	ALL	755288.42	4036960.7	NonCancerChronicDerive	0.00E+00	2.24E-09	0.00E+00	0.00E+00	0.00E+00	1.56E-07	2.18E-05	0.00E+00	7.24E-09	0.00E+00	0.00E+00	9.52E-07	0.00E+00	0.00E+00	2.18E-05
1559	ALL	746388.42	4037060.7	NonCancerChronicDerive	0.00E+00	4.43E-09	0.00E+00	0.00E+00	0.00E+00	4.28E-07	5.56E-05	0.00E+00	1.44E-08	0.00E+00	0.00E+00	1.89E-06	0.00E+00	0.00E+00	5.56E-05
1560	ALL	746488.42	4037060.7	NonCancerChronicDerive	0.00E+00	4.00E-09	0.00E+00	0.00E+00	0.00E+00	4.60E-07	5.72E-05	0.00E+00	1.29E-08	0.00E+00	0.00E+00	1.70E-06	0.00E+00	0.00E+00	5.72E-05
1561	ALL	746588.42	4037060.7	NonCancerChronicDerive	0.00E+00	3.57E-09	0.00E+00	0.00E+00	0.00E+00	5.06E-07	6.01E-05	0.00E+00	1.16E-08	0.00E+00	0.00E+00	1.52E-06	0.00E+00	0.00E+00	6.01E-05
1562	ALL	747488.42	4037060.7	NonCancerChronicDerive	0.00E+00	2.21E-09	0.00E+00	0.00E+00	0.00E+00	2.18E-07	2.84E-05	0.00E+00	7.14E-09	0.00E+00	0.00E+00	9.39E-07	0.00E+00	0.00E+00	2.84E-05
1563	ALL	747588.42	4037060.7	NonCancerChronicDerive	0.00E+00	2.15E-09	0.00E+00	0.00E+00	0.00E+00	2.11E-07	2.74E-05	0.00E+00	6.96E-09	0.00E+00	0.00E+00	9.15E-07	0.00E+00	0.00E+00	2.74E-05
1564	ALL	747688.42	4037060.7	NonCancerChronicDerive	0.00E+00	2.11E-09	0.00E+00	0.00E+00	0.00E+00	2.04E-07	2.66E-05	0.00E+00	6.81E-09	0.00E+00	0.00E+00	8.96E-07	0.00E+00	0.00E+00	2.66E-05
1565	ALL	747788.42	4037060.7	NonCancerChronicDerive	0.00E+00	2.08E-09	0.00E+00	0.00E+00	0.00E+00	1.98E-07	2.60E-05	0.00E+00	6.73E-09	0.00E+00	0.00E+00	8.85E-07	0.00E+00	0.00E+00	2.60E-05
1566	ALL	747888.42	4037060.7	NonCancerChronicDerive	0.00E+00	2.07E-09	0.00E+00	0.00E+00	0.00E+00	1.93E-07	2.56E-05	0.00E+00	6.70E-09	0.00E+00	0.00E+00	8.81E-07	0.00E+00	0.00E+00	2.56E-05
1567	ALL	747988.42	4037060.7	NonCancerChronicDerive	0.00E+00	2.07E-09	0.00E+00	0.00E+00	0.00E+00	1.89E-07	2.52E-05	0.00E+00	6.69E-09	0.00E+00	0.00E+00	8.79E-07	0.00E+00	0.00E+00	2.52E-05
1568	ALL	748088.42	4037060.7	NonCancerChronicDerive	0.00E+00	2.07E-09	0.00E+00	0.00E+00	0.00E+00	1.85E-07	2.49E-05	0.00E+00	6.69E-09	0.00E+00	0.00E+00	8.80E-07	0.00E+00	0.00E+00	2.49E-05
1569	ALL	748188.42	4037060.7	NonCancerChronicDerive	0.00E+00	2.08E-09	0.00E+00	0.00E+00	0.00E+00	1.83E-07	2.47E-05	0.00E+00	6.73E-09	0.00E+00	0.00E+00	8.85E-07	0.00E+00	0.00E+00	2.47E-05
1570	ALL	749988.42	4037060.7	NonCancerChronicDerive	0.00E+00	3.98E-09	0.00E+00	0.00E+00	0.00E+00	2.73E-07	3.87E-05	0.00E+00	1.29E-08	0.00E+00	0.00E+00	1.69E-06	0.00E+00	0.00E+00	3.87E-05
1571	ALL	750088.42	4037060.7	NonCancerChronicDerive	0.00E+00	4.06E-09	0.00E+00	0.00E+00	0.00E+00	2.78E-07	3.94E-05	0.00E+00	1.31E-08	0.00E+00	0.00E+00	1.73E-06	0.00E+00	0.00E+00	3.94E-05
1572	ALL	750188.42	4037060.7	NonCancerChronicDerive	0.00E+00	4.13E-09	0.00E+00	0.00E+00	0.00E+00	2.83E-07	4.01E-05	0.00E+00	1.34E-08	0.00E+00	0.00E+00	1.76E-06	0.00E+00	0.00E+00	4.01E-05
1573	ALL	750288.42	4037060.7	NonCancerChronicDerive	0.00E+00	4.19E-09	0.00E+00	0.00E+00	0.00E+00	2.87E-07	4.06E-05	0.00E+00	1.36E-08	0.00E+00	0.00E+00	1.78E-06	0.00E+00	0.00E+00	4.06E-05
1574	ALL	752388.42	4037060.7	NonCancerChronicDerive	0.00E+00	4.28E-09	0.00E+00	0.00E+00	0.00E+00	2.95E-07	4.13E-05	0.00E+00	1.39E-08	0.00E+00	0.00E+00	1.82E-06	0.00E+00	0.00E+00	4.13E-05
1575	ALL	752488.42	4037060.7	NonCancerChronicDerive	0.00E+00	4.22E-09	0.00E+00	0.00E+00	0.00E+00	2.91E-07	4.08E-05	0.00E+00	1.37E-08	0.00E+00	0.00E+00	1.80E-06	0.00E+00	0.00E+00	4.08E-05
1576	ALL	752588.42	4037060.7	NonCancerChronicDerive	0.00E+00	4.16E-09	0.00E+00	0.00E+00	0.00E+00	2.87E-07	4.02E-05	0.00E+00	1.35E-08	0.00E+00	0.00E+00	1.77E-06	0.00E+00	0.00E+00	4.02E-05
1577	ALL	752688.42	4037060.7	NonCancerChronicDerive	0.00E+00	4.09E-09	0.00E+00	0.00E+00	0.00E+00	2.82E-07	3.95E-05	0.00E+00	1.32E-08	0.00E+00	0.00E+00	1.74E-06	0.00E+00	0.00E+00	3.95E-05
1578	ALL	752788.42	4037060.7	NonCancerChronicDerive	0.00E+00	4.02E-09	0.00E+00	0.00E+00	0.00E+00	2.78E-07	3.89E-05	0.00E+00	1.30E-08	0.00E+00	0.00E+00	1.71E-06	0.00E+00	0.00E+00	3.89E-05
1579	ALL	754888.42	4037060.7	NonCancerChronicDerive	0.00E+00	2.43E-09	0.00E+00	0.00E+00	0.00E+00	1.70E-07	2.36E-05	0.00E+00	7.85E-09	0.00E+00	0.00E+00	1.03E-06	0.00E+00	0.00E+00	2.36E-05
1580	ALL	754988.42	4037060.7	NonCancerChronicDerive	0.00E+00	2.37E-09	0.00E+00	0.00E+00	0.00E+00	1.65E-07	2.31E-05	0.00E+00	7.66E-09	0.00E+00	0.00E+00	1.01E-06	0.00E+00	0.00E+00	2.31E-05
1581	ALL	755088.42	4037060.7	NonCancerChronicDerive	0.00E+00	2.31E-09	0.00E+00	0.00E+00	0.00E+00	1.61E-07	2.25E-05	0.00E+00	7.48E-09	0.00E+00	0.00E+00	9.83E-07	0.00E+00	0.00E+00	2.25E-05
1582	ALL	755188.42	4037060.7	NonCancerChronicDerive	0.00E+00	2.26E-09	0.00E+00	0.00E+00	0.00E+00	1.58E-07	2.20E-05	0.00E+00	7.30E-09	0.00E+00	0.00E+00	9.60E-07	0.00E+00	0.00E+00	2.20E-05
1583	ALL	755288.42	4037060.7	NonCancerChronicDerive	0.00E+00	2.20E-09	0.00E+00	0.00E+00	0.00E+00	1.54E-07	2.15E-05	0.00E+00	7.13E-09	0.00E+00	0.00E+00	9.38E-07	0.00E+00	0.00E+00	2.15E-05
1584	ALL	746388.42	4037160.7	NonCancerChronicDerive	0.00E+00	3.76E-09	0.00E+00	0.00E+00	0.00E+00	3.96E-07	5.03E-05	0.00E+00	1.22E-08	0.00E+00	0.00E+00	1.60E-06	0.00E+00	0.00E+00	5.03E-05
1585	ALL	746488.42	4037160.7	NonCancerChronicDerive	0.00E+00	3.41E-09	0.00E+00	0.00E+00	0.00E+00	4.05E-07	5.00E-05	0.00E+00	1.10E-08	0.00E+00	0.00E+00	1.45E-06	0.00E+00	0.00E+00	5.00E-05
1586	ALL	746588.42	4037160.7	NonCancerChronicDerive	0.00E+00	3.11E-09	0.00E+00	0.00E+00	0.00E+00	3.88E-07	4.74E-05	0.00E+00	1.01E-08	0.00E+00	0.00E+00	1.32E-06	0.00E+00	0.00E+00	4.74E-05
1587	ALL	747488.42	4037160.7	NonCancerChronicDerive	0.00E+00	2.11E-09	0.00E+00	0.00E+00	0.00E+00	1.95E-07	2.59E-05	0.00E+00	6.83E-09	0.00E+00	0.00E+00	8.98E-07	0.00E+00	0.00E+00	2.59E-05
1588	ALL	747588.42	4037160.7	NonCancerChronicDerive	0.00E+00	2.07E-09	0.00E+00	0.00E+00	0.00E+00	1.90E-07	2.52E-05	0.00E+00	6.71E-09	0.00E+00	0.00E+00	8.82E-07	0.00E+00	0.00E+00	2.52E-05

1589	ALL	747688.42	4037160.7	NonCancerChronicDerive	0.00E+00	2.03E-09	0.00E+00	0.00E+00	0.00E+00	1.85E-07	2.46E-05	0.00E+00	6.59E-09	0.00E+00	0.00E+00	8.66E-07	0.00E+00	0.00E+00	2.46E-05
1590	ALL	747788.42	4037160.7	NonCancerChronicDerive	0.00E+00	2.01E-09	0.00E+00	0.00E+00	0.00E+00	1.81E-07	2.42E-05	0.00E+00	6.51E-09	0.00E+00	0.00E+00	8.55E-07	0.00E+00	0.00E+00	2.42E-05
1591	ALL	747888.42	4037160.7	NonCancerChronicDerive	0.00E+00	2.00E-09	0.00E+00	0.00E+00	0.00E+00	1.78E-07	2.38E-05	0.00E+00	6.47E-09	0.00E+00	0.00E+00	8.51E-07	0.00E+00	0.00E+00	2.38E-05
1592	ALL	747988.42	4037160.7	NonCancerChronicDerive	0.00E+00	2.00E-09	0.00E+00	0.00E+00	0.00E+00	1.75E-07	2.36E-05	0.00E+00	6.46E-09	0.00E+00	0.00E+00	8.50E-07	0.00E+00	0.00E+00	2.36E-05
1593	ALL	748088.42	4037160.7	NonCancerChronicDerive	0.00E+00	2.00E-09	0.00E+00	0.00E+00	0.00E+00	1.73E-07	2.34E-05	0.00E+00	6.46E-09	0.00E+00	0.00E+00	8.50E-07	0.00E+00	0.00E+00	2.34E-05
1594	ALL	748188.42	4037160.7	NonCancerChronicDerive	0.00E+00	2.01E-09	0.00E+00	0.00E+00	0.00E+00	1.71E-07	2.32E-05	0.00E+00	6.49E-09	0.00E+00	0.00E+00	8.53E-07	0.00E+00	0.00E+00	2.32E-05
1595	ALL	749988.42	4037160.7	NonCancerChronicDerive	0.00E+00	4.09E-09	0.00E+00	0.00E+00	0.00E+00	2.79E-07	3.96E-05	0.00E+00	1.32E-08	0.00E+00	0.00E+00	1.74E-06	0.00E+00	0.00E+00	3.96E-05
1596	ALL	750088.42	4037160.7	NonCancerChronicDerive	0.00E+00	4.18E-09	0.00E+00	0.00E+00	0.00E+00	2.85E-07	4.04E-05	0.00E+00	1.35E-08	0.00E+00	0.00E+00	1.78E-06	0.00E+00	0.00E+00	4.04E-05
1597	ALL	750188.42	4037160.7	NonCancerChronicDerive	0.00E+00	4.25E-09	0.00E+00	0.00E+00	0.00E+00	2.90E-07	4.11E-05	0.00E+00	1.38E-08	0.00E+00	0.00E+00	1.81E-06	0.00E+00	0.00E+00	4.11E-05
1598	ALL	750288.42	4037160.7	NonCancerChronicDerive	0.00E+00	4.31E-09	0.00E+00	0.00E+00	0.00E+00	2.95E-07	4.17E-05	0.00E+00	1.40E-08	0.00E+00	0.00E+00	1.84E-06	0.00E+00	0.00E+00	4.17E-05
1599	ALL	752388.42	4037160.7	NonCancerChronicDerive	0.00E+00	4.35E-09	0.00E+00	0.00E+00	0.00E+00	3.00E-07	4.20E-05	0.00E+00	1.41E-08	0.00E+00	0.00E+00	1.85E-06	0.00E+00	0.00E+00	4.20E-05
1600	ALL	752488.42	4037160.7	NonCancerChronicDerive	0.00E+00	4.28E-09	0.00E+00	0.00E+00	0.00E+00	2.95E-07	4.13E-05	0.00E+00	1.38E-08	0.00E+00	0.00E+00	1.82E-06	0.00E+00	0.00E+00	4.13E-05
1601	ALL	752588.42	4037160.7	NonCancerChronicDerive	0.00E+00	4.20E-09	0.00E+00	0.00E+00	0.00E+00	2.91E-07	4.07E-05	0.00E+00	1.36E-08	0.00E+00	0.00E+00	1.79E-06	0.00E+00	0.00E+00	4.07E-05
1602	ALL	752688.42	4037160.7	NonCancerChronicDerive	0.00E+00	4.12E-09	0.00E+00	0.00E+00	0.00E+00	2.86E-07	3.99E-05	0.00E+00	1.34E-08	0.00E+00	0.00E+00	1.76E-06	0.00E+00	0.00E+00	3.99E-05
1603	ALL	752788.42	4037160.7	NonCancerChronicDerive	0.00E+00	4.04E-09	0.00E+00	0.00E+00	0.00E+00	2.80E-07	3.92E-05	0.00E+00	1.31E-08	0.00E+00	0.00E+00	1.72E-06	0.00E+00	0.00E+00	3.92E-05
1604	ALL	754888.42	4037160.7	NonCancerChronicDerive	0.00E+00	2.39E-09	0.00E+00	0.00E+00	0.00E+00	1.67E-07	2.33E-05	0.00E+00	7.72E-09	0.00E+00	0.00E+00	1.02E-06	0.00E+00	0.00E+00	2.33E-05
1605	ALL	754988.42	4037160.7	NonCancerChronicDerive	0.00E+00	2.33E-09	0.00E+00	0.00E+00	0.00E+00	1.63E-07	2.27E-05	0.00E+00	7.54E-09	0.00E+00	0.00E+00	9.91E-07	0.00E+00	0.00E+00	2.27E-05
1606	ALL	755088.42	4037160.7	NonCancerChronicDerive	0.00E+00	2.27E-09	0.00E+00	0.00E+00	0.00E+00	1.59E-07	2.22E-05	0.00E+00	7.36E-09	0.00E+00	0.00E+00	9.67E-07	0.00E+00	0.00E+00	2.22E-05
1607	ALL	755188.42	4037160.7	NonCancerChronicDerive	0.00E+00	2.22E-09	0.00E+00	0.00E+00	0.00E+00	1.55E-07	2.16E-05	0.00E+00	7.18E-09	0.00E+00	0.00E+00	9.44E-07	0.00E+00	0.00E+00	2.16E-05
1608	ALL	755288.42	4037160.7	NonCancerChronicDerive	0.00E+00	2.17E-09	0.00E+00	0.00E+00	0.00E+00	1.51E-07	2.11E-05	0.00E+00	7.02E-09	0.00E+00	0.00E+00	9.22E-07	0.00E+00	0.00E+00	2.11E-05
1609	ALL	746388.42	4037260.7	NonCancerChronicDerive	0.00E+00	3.25E-09	0.00E+00	0.00E+00	0.00E+00	3.45E-07	4.38E-05	0.00E+00	1.05E-08	0.00E+00	0.00E+00	1.38E-06	0.00E+00	0.00E+00	4.38E-05
1610	ALL	746488.42	4037260.7	NonCancerChronicDerive	0.00E+00	2.99E-09	0.00E+00	0.00E+00	0.00E+00	3.29E-07	4.14E-05	0.00E+00	9.69E-09	0.00E+00	0.00E+00	1.27E-06	0.00E+00	0.00E+00	4.14E-05
1611	ALL	746588.42	4037260.7	NonCancerChronicDerive	0.00E+00	2.79E-09	0.00E+00	0.00E+00	0.00E+00	2.98E-07	3.80E-05	0.00E+00	9.04E-09	0.00E+00	0.00E+00	1.19E-06	0.00E+00	0.00E+00	3.80E-05
1612	ALL	747488.42	4037260.7	NonCancerChronicDerive	0.00E+00	2.03E-09	0.00E+00	0.00E+00	0.00E+00	1.79E-07	2.41E-05	0.00E+00	6.57E-09	0.00E+00	0.00E+00	8.64E-07	0.00E+00	0.00E+00	2.41E-05
1613	ALL	747588.42	4037260.7	NonCancerChronicDerive	0.00E+00	2.01E-09	0.00E+00	0.00E+00	0.00E+00	1.77E-07	2.38E-05	0.00E+00	6.51E-09	0.00E+00	0.00E+00	8.55E-07	0.00E+00	0.00E+00	2.38E-05
1614	ALL	747688.42	4037260.7	NonCancerChronicDerive	0.00E+00	1.98E-09	0.00E+00	0.00E+00	0.00E+00	1.74E-07	2.34E-05	0.00E+00	6.42E-09	0.00E+00	0.00E+00	8.44E-07	0.00E+00	0.00E+00	2.34E-05
1615	ALL	747788.42	4037260.7	NonCancerChronicDerive	0.00E+00	1.96E-09	0.00E+00	0.00E+00	0.00E+00	1.71E-07	2.30E-05	0.00E+00	6.35E-09	0.00E+00	0.00E+00	8.35E-07	0.00E+00	0.00E+00	2.30E-05
1616	ALL	747888.42	4037260.7	NonCancerChronicDerive	0.00E+00	1.95E-09	0.00E+00	0.00E+00	0.00E+00	1.68E-07	2.27E-05	0.00E+00	6.31E-09	0.00E+00	0.00E+00	8.29E-07	0.00E+00	0.00E+00	2.27E-05
1617	ALL	747988.42	4037260.7	NonCancerChronicDerive	0.00E+00	1.94E-09	0.00E+00	0.00E+00	0.00E+00	1.65E-07	2.25E-05	0.00E+00	6.30E-09	0.00E+00	0.00E+00	8.28E-07	0.00E+00	0.00E+00	2.25E-05
1618	ALL	748088.42	4037260.7	NonCancerChronicDerive	0.00E+00	1.95E-09	0.00E+00	0.00E+00	0.00E+00	1.63E-07	2.23E-05	0.00E+00	6.30E-09	0.00E+00	0.00E+00	8.28E-07	0.00E+00	0.00E+00	2.23E-05
1619	ALL	748188.42	4037260.7	NonCancerChronicDerive	0.00E+00	1.95E-09	0.00E+00	0.00E+00	0.00E+00	1.62E-07	2.22E-05	0.00E+00	6.32E-09	0.00E+00	0.00E+00	8.31E-07	0.00E+00	0.00E+00	2.22E-05
1620	ALL	749988.42	4037260.7	NonCancerChronicDerive	0.00E+00	4.23E-09	0.00E+00	0.00E+00	0.00E+00	2.87E-07	4.08E-05	0.00E+00	1.37E-08	0.00E+00	0.00E+00	1.80E-06	0.00E+00	0.00E+00	4.08E-05
1621	ALL	750088.42	4037260.7	NonCancerChronicDerive	0.00E+00	4.32E-09	0.00E+00	0.00E+00	0.00E+00	2.94E-07	4.16E-05	0.00E+00	1.40E-08	0.00E+00	0.00E+00	1.84E-06	0.00E+00	0.00E+00	4.16E-05
1622	ALL	750188.42	4037260.7	NonCancerChronicDerive	0.00E+00	4.40E-09	0.00E+00	0.00E+00	0.00E+00	2.99E-07	4.24E-05	0.00E+00	1.42E-08	0.00E+00	0.00E+00	1.87E-06	0.00E+00	0.00E+00	4.24E-05
1623	ALL	750288.42	4037260.7	NonCancerChronicDerive	0.00E+00	4.46E-09	0.00E+00	0.00E+00	0.00E+00	3.04E-07	4.30E-05	0.00E+00	1.44E-08	0.00E+00	0.00E+00	1.90E-06	0.00E+00	0.00E+00	4.30E-05
1624	ALL	752388.42	4037260.7	NonCancerChronicDerive	0.00E+00	4.41E-09	0.00E+00	0.00E+00	0.00E+00	3.05E-07	4.26E-05	0.00E+00	1.43E-08	0.00E+00	0.00E+00	1.87E-06	0.00E+00	0.00E+00	4.26E-05
1625	ALL	752488.42	4037260.7	NonCancerChronicDerive	0.00E+00	4.32E-09	0.00E+00	0.00E+00	0.00E+00	2.99E-07	4.19E-05	0.00E+00	1.40E-08	0.00E+00	0.00E+00	1.84E-06	0.00E+00	0.00E+00	4.19E-05
1626	ALL	752588.42	4037260.7	NonCancerChronicDerive	0.00E+00	4.24E-09	0.00E+00	0.00E+00	0.00E+00	2.94E-07	4.11E-05	0.00E+00	1.37E-08	0.00E+00	0.00E+00	1.80E-06	0.00E+00	0.00E+00	4.11E-05
1627	ALL	752688.42	4037260.7	NonCancerChronicDerive	0.00E+00	4.15E-09	0.00E+00	0.00E+00	0.00E+00	2.89E-07	4.03E-05	0.00E+00	1.34E-08	0.00E+00	0.00E+00	1.77E-06	0.00E+00	0.00E+00	4.03E-05
1628	ALL	752788.42	4037260.7	NonCancerChronicDerive	0.00E+00	4.06E-09	0.00E+00	0.00E+00	0.00E+00	2.83E-07	3.94E-05	0.00E+00	1.31E-08	0.00E+00	0.00E+00	1.73E-06	0.00E+00	0.00E+00	3.94E-05
1629	ALL	754888.42	4037260.7	NonCancerChronicDerive	0.00E+00	2.35E-09	0.00E+00	0.00E+00	0.00E+00	1.64E-07	2.29E-05	0.00E+00	7.59E-09	0.00E+00	0.00E+00	9.98E-07	0.00E+00	0.00E+00	2.29E-05
1630	ALL	754988.42	4037260.7	NonCancerChronicDerive	0.00E+00	2.29E-09	0.00E+00	0.00E+00	0.00E+00	1.60E-07	2.24E-05	0.00E+00	7.41E-09	0.00E+00	0.00E+00	9.74E-07	0.00E+00	0.00E+00	2.24E-05
1631	ALL	755088.42	4037260.7	NonCancerChronicDerive	0.00E+00	2.24E-09	0.00E+00	0.00E+00	0.00E+00	1.56E-07	2.18E-05	0.00E+00	7.24E-09	0.00E+00	0.00E+00	9.51E-07	0.00E+00	0.00E+00	2.18E-05
1632	ALL	755188.42	4037260.7	NonCancerChronicDerive	0.00E+00	2.18E-09	0.00E+00	0.00E+00	0.00E+00	1.53E-07	2.13E-05	0.00E+00	7.07E-09	0.00E+00	0.00E+00	9.29E-07	0.00E+00	0.00E+00	2.13E-05
1633	ALL	755288.42	4037260.7	NonCancerChronicDerive	0.00E+00	2.13E-09	0.00E+00	0.00E+00	0.00E+00	1.49E-07	2.08E-05	0.00E+00	6.90E-09	0.00E+00	0.00E+00	9.07E-07	0.00E+00	0.00E+00	2.08E-05
1634	ALL	746388.42	4037360.7	NonCancerChronicDerive	0.00E+00	2.88E-09	0.00E+00	0.00E+00	0.00E+00	2.90E-07	3.74E-05	0.00E+00	9.33E-09	0.00E+00	0.00E+00	1.23E-06	0.00E+00	0.00E+00	3.74E-05
1635	ALL	746488.42	4037360.7	NonCancerChronicDerive	0.00E+00	2.70E-09	0.00E+00	0.00E+00	0.00E+00	2.69E-07	3.48E-05	0.00E+00	8.74E-09	0.00E+00	0.00E+00	1.15E-06	0.00E+00	0.00E+00	3.48E-05
1636	ALL	746588.42	4037360.7	NonCancerChronicDerive	0.00E+00	2.56E-09	0.00E+00	0.00E+00	0.00E+00	2.47E-07	3.24E-05	0.00E+00	8.29E-09	0.00E+00	0.00E+00	1.09E-06	0.00E+00	0.00E+00	3.24E-05
1637	ALL	747488.42	4037360.7	NonCancerChronicDerive	0.00E+00	1.96E-09	0.00E+00	0.00E+00	0.00E+00	1.67E-07	2.27E-05	0.00E+00	6.35E-09	0.00E+00	0.00E+00	8.35E-07	0.00E+00	0.00E+00	2.27E-05
1638	ALL	747588.42	4037360.7	NonCancerChronicDerive	0.00E+00	1.96E-09	0.00E+00	0.00E+00	0.00E+00	1.67E-07	2.27E-05	0.00E+00	6.34E-09	0.00E+00	0.00E+00	8.34E-07	0.00E+00	0.00E+00	2.27E-05
1639	ALL	747688.42	4037360.7	NonCancerChronicDerive	0.00E+00	1.94E-09	0.00E+00	0.00E+00	0.00E+00	1.66E-07	2.25E-05	0.00E+00	6.29E-09	0.00E+00	0.00E+00	8.27E-07	0.00E+00	0.00E+00	2.25E-05
1640	ALL	747788.42	4037360.7	NonCancerChronicDerive	0.00E+00	1.93E-09	0.00E+00	0.00E+00	0.00E+00	1.63E-07	2.22E-05	0.00E+00	6.24E-09	0.00E+00	0.00E+00	8.20E-07	0.00E+00	0.00E+00	2.22E-05
1641	ALL	747888.42	4037360.7	NonCancerChronicDerive	0.00E+00	1.91E-09	0.00E+00	0.00E+00	0.00E+00	1.61E-07	2.19E-05	0.00E+00	6.20E-09	0.00E+00	0.00E+00	8.15E-07	0.00E+00	0.00E+00	2.19E-05

1642	ALL	747988.42	4037360.7	NonCancerChronicDerive	0.00E+00	1.91E-09	0.00E+00	0.00E+00	0.00E+00	1.59E-07	2.17E-05	0.00E+00	6.18E-09	0.00E+00	0.00E+00	8.12E-07	0.00E+00	0.00E+00	2.17E-05
1643	ALL	748088.42	4037360.7	NonCancerChronicDerive	0.00E+00	1.91E-09	0.00E+00	0.00E+00	0.00E+00	1.57E-07	2.16E-05	0.00E+00	6.18E-09	0.00E+00	0.00E+00	8.12E-07	0.00E+00	0.00E+00	2.16E-05
1644	ALL	748188.42	4037360.7	NonCancerChronicDerive	0.00E+00	1.92E-09	0.00E+00	0.00E+00	0.00E+00	1.56E-07	2.15E-05	0.00E+00	6.21E-09	0.00E+00	0.00E+00	8.16E-07	0.00E+00	0.00E+00	2.15E-05
1645	ALL	749888.42	4037360.7	NonCancerChronicDerive	0.00E+00	4.29E-09	0.00E+00	0.00E+00	0.00E+00	2.90E-07	4.13E-05	0.00E+00	1.39E-08	0.00E+00	0.00E+00	1.83E-06	0.00E+00	0.00E+00	4.13E-05
1646	ALL	749988.42	4037360.7	NonCancerChronicDerive	0.00E+00	4.39E-09	0.00E+00	0.00E+00	0.00E+00	2.97E-07	4.22E-05	0.00E+00	1.42E-08	0.00E+00	0.00E+00	1.87E-06	0.00E+00	0.00E+00	4.22E-05
1647	ALL	750088.42	4037360.7	NonCancerChronicDerive	0.00E+00	4.48E-09	0.00E+00	0.00E+00	0.00E+00	3.04E-07	4.31E-05	0.00E+00	1.45E-08	0.00E+00	0.00E+00	1.91E-06	0.00E+00	0.00E+00	4.31E-05
1648	ALL	750188.42	4037360.7	NonCancerChronicDerive	0.00E+00	4.57E-09	0.00E+00	0.00E+00	0.00E+00	3.10E-07	4.39E-05	0.00E+00	1.48E-08	0.00E+00	0.00E+00	1.94E-06	0.00E+00	0.00E+00	4.39E-05
1649	ALL	750288.42	4037360.7	NonCancerChronicDerive	0.00E+00	4.64E-09	0.00E+00	0.00E+00	0.00E+00	3.15E-07	4.46E-05	0.00E+00	1.50E-08	0.00E+00	0.00E+00	1.97E-06	0.00E+00	0.00E+00	4.46E-05
1650	ALL	752388.42	4037360.7	NonCancerChronicDerive	0.00E+00	4.46E-09	0.00E+00	0.00E+00	0.00E+00	3.09E-07	4.32E-05	0.00E+00	1.44E-08	0.00E+00	0.00E+00	1.90E-06	0.00E+00	0.00E+00	4.32E-05
1651	ALL	752488.42	4037360.7	NonCancerChronicDerive	0.00E+00	4.36E-09	0.00E+00	0.00E+00	0.00E+00	3.03E-07	4.23E-05	0.00E+00	1.41E-08	0.00E+00	0.00E+00	1.86E-06	0.00E+00	0.00E+00	4.23E-05
1652	ALL	752588.42	4037360.7	NonCancerChronicDerive	0.00E+00	4.27E-09	0.00E+00	0.00E+00	0.00E+00	2.97E-07	4.14E-05	0.00E+00	1.38E-08	0.00E+00	0.00E+00	1.82E-06	0.00E+00	0.00E+00	4.14E-05
1653	ALL	752688.42	4037360.7	NonCancerChronicDerive	0.00E+00	4.17E-09	0.00E+00	0.00E+00	0.00E+00	2.91E-07	4.05E-05	0.00E+00	1.35E-08	0.00E+00	0.00E+00	1.78E-06	0.00E+00	0.00E+00	4.05E-05
1654	ALL	752788.42	4037360.7	NonCancerChronicDerive	0.00E+00	4.07E-09	0.00E+00	0.00E+00	0.00E+00	2.84E-07	3.96E-05	0.00E+00	1.32E-08	0.00E+00	0.00E+00	1.73E-06	0.00E+00	0.00E+00	3.96E-05
1655	ALL	754888.42	4037360.7	NonCancerChronicDerive	0.00E+00	2.31E-09	0.00E+00	0.00E+00	0.00E+00	1.62E-07	2.26E-05	0.00E+00	7.47E-09	0.00E+00	0.00E+00	9.82E-07	0.00E+00	0.00E+00	2.26E-05
1656	ALL	754988.42	4037360.7	NonCancerChronicDerive	0.00E+00	2.25E-09	0.00E+00	0.00E+00	0.00E+00	1.58E-07	2.20E-05	0.00E+00	7.29E-09	0.00E+00	0.00E+00	9.58E-07	0.00E+00	0.00E+00	2.20E-05
1657	ALL	755088.42	4037360.7	NonCancerChronicDerive	0.00E+00	2.20E-09	0.00E+00	0.00E+00	0.00E+00	1.54E-07	2.15E-05	0.00E+00	7.11E-09	0.00E+00	0.00E+00	9.35E-07	0.00E+00	0.00E+00	2.15E-05
1658	ALL	755188.42	4037360.7	NonCancerChronicDerive	0.00E+00	2.15E-09	0.00E+00	0.00E+00	0.00E+00	1.50E-07	2.10E-05	0.00E+00	6.95E-09	0.00E+00	0.00E+00	9.13E-07	0.00E+00	0.00E+00	2.10E-05
1659	ALL	755288.42	4037360.7	NonCancerChronicDerive	0.00E+00	2.10E-09	0.00E+00	0.00E+00	0.00E+00	1.47E-07	2.05E-05	0.00E+00	6.79E-09	0.00E+00	0.00E+00	8.92E-07	0.00E+00	0.00E+00	2.05E-05
1660	ALL	746388.42	4037460.7	NonCancerChronicDerive	0.00E+00	2.61E-09	0.00E+00	0.00E+00	0.00E+00	2.47E-07	3.24E-05	0.00E+00	8.45E-09	0.00E+00	0.00E+00	1.11E-06	0.00E+00	0.00E+00	3.24E-05
1661	ALL	746488.42	4037460.7	NonCancerChronicDerive	0.00E+00	2.48E-09	0.00E+00	0.00E+00	0.00E+00	2.30E-07	3.04E-05	0.00E+00	8.03E-09	0.00E+00	0.00E+00	1.06E-06	0.00E+00	0.00E+00	3.04E-05
1662	ALL	746588.42	4037460.7	NonCancerChronicDerive	0.00E+00	2.39E-09	0.00E+00	0.00E+00	0.00E+00	2.17E-07	2.90E-05	0.00E+00	7.73E-09	0.00E+00	0.00E+00	1.02E-06	0.00E+00	0.00E+00	2.90E-05
1663	ALL	747488.42	4037460.7	NonCancerChronicDerive	0.00E+00	1.90E-09	0.00E+00	0.00E+00	0.00E+00	1.58E-07	2.16E-05	0.00E+00	6.17E-09	0.00E+00	0.00E+00	8.10E-07	0.00E+00	0.00E+00	2.16E-05
1664	ALL	747588.42	4037460.7	NonCancerChronicDerive	0.00E+00	1.92E-09	0.00E+00	0.00E+00	0.00E+00	1.59E-07	2.18E-05	0.00E+00	6.20E-09	0.00E+00	0.00E+00	8.16E-07	0.00E+00	0.00E+00	2.18E-05
1665	ALL	747688.42	4037460.7	NonCancerChronicDerive	0.00E+00	1.91E-09	0.00E+00	0.00E+00	0.00E+00	1.58E-07	2.17E-05	0.00E+00	6.20E-09	0.00E+00	0.00E+00	8.14E-07	0.00E+00	0.00E+00	2.17E-05
1666	ALL	747788.42	4037460.7	NonCancerChronicDerive	0.00E+00	1.90E-09	0.00E+00	0.00E+00	0.00E+00	1.58E-07	2.16E-05	0.00E+00	6.16E-09	0.00E+00	0.00E+00	8.10E-07	0.00E+00	0.00E+00	2.16E-05
1667	ALL	747888.42	4037460.7	NonCancerChronicDerive	0.00E+00	1.89E-09	0.00E+00	0.00E+00	0.00E+00	1.56E-07	2.14E-05	0.00E+00	6.13E-09	0.00E+00	0.00E+00	8.06E-07	0.00E+00	0.00E+00	2.14E-05
1668	ALL	747988.42	4037460.7	NonCancerChronicDerive	0.00E+00	1.89E-09	0.00E+00	0.00E+00	0.00E+00	1.54E-07	2.12E-05	0.00E+00	6.11E-09	0.00E+00	0.00E+00	8.03E-07	0.00E+00	0.00E+00	2.12E-05
1669	ALL	748088.42	4037460.7	NonCancerChronicDerive	0.00E+00	1.89E-09	0.00E+00	0.00E+00	0.00E+00	1.53E-07	2.11E-05	0.00E+00	6.10E-09	0.00E+00	0.00E+00	8.02E-07	0.00E+00	0.00E+00	2.11E-05
1670	ALL	748188.42	4037460.7	NonCancerChronicDerive	0.00E+00	1.89E-09	0.00E+00	0.00E+00	0.00E+00	1.52E-07	2.10E-05	0.00E+00	6.13E-09	0.00E+00	0.00E+00	8.06E-07	0.00E+00	0.00E+00	2.10E-05
1671	ALL	749888.42	4037460.7	NonCancerChronicDerive	0.00E+00	4.47E-09	0.00E+00	0.00E+00	0.00E+00	3.01E-07	4.29E-05	0.00E+00	1.45E-08	0.00E+00	0.00E+00	1.90E-06	0.00E+00	0.00E+00	4.29E-05
1672	ALL	749988.42	4037460.7	NonCancerChronicDerive	0.00E+00	4.58E-09	0.00E+00	0.00E+00	0.00E+00	3.09E-07	4.39E-05	0.00E+00	1.48E-08	0.00E+00	0.00E+00	1.95E-06	0.00E+00	0.00E+00	4.39E-05
1673	ALL	750088.42	4037460.7	NonCancerChronicDerive	0.00E+00	4.68E-09	0.00E+00	0.00E+00	0.00E+00	3.16E-07	4.49E-05	0.00E+00	1.51E-08	0.00E+00	0.00E+00	1.99E-06	0.00E+00	0.00E+00	4.49E-05
1674	ALL	750188.42	4037460.7	NonCancerChronicDerive	0.00E+00	4.77E-09	0.00E+00	0.00E+00	0.00E+00	3.22E-07	4.57E-05	0.00E+00	1.54E-08	0.00E+00	0.00E+00	2.03E-06	0.00E+00	0.00E+00	4.57E-05
1675	ALL	750288.42	4037460.7	NonCancerChronicDerive	0.00E+00	4.84E-09	0.00E+00	0.00E+00	0.00E+00	3.28E-07	4.65E-05	0.00E+00	1.57E-08	0.00E+00	0.00E+00	2.06E-06	0.00E+00	0.00E+00	4.65E-05
1676	ALL	752388.42	4037460.7	NonCancerChronicDerive	0.00E+00	4.50E-09	0.00E+00	0.00E+00	0.00E+00	3.13E-07	4.37E-05	0.00E+00	1.46E-08	0.00E+00	0.00E+00	1.91E-06	0.00E+00	0.00E+00	4.37E-05
1677	ALL	752488.42	4037460.7	NonCancerChronicDerive	0.00E+00	4.39E-09	0.00E+00	0.00E+00	0.00E+00	3.06E-07	4.27E-05	0.00E+00	1.42E-08	0.00E+00	0.00E+00	1.87E-06	0.00E+00	0.00E+00	4.27E-05
1678	ALL	752588.42	4037460.7	NonCancerChronicDerive	0.00E+00	4.29E-09	0.00E+00	0.00E+00	0.00E+00	3.00E-07	4.17E-05	0.00E+00	1.39E-08	0.00E+00	0.00E+00	1.82E-06	0.00E+00	0.00E+00	4.17E-05
1679	ALL	752688.42	4037460.7	NonCancerChronicDerive	0.00E+00	4.18E-09	0.00E+00	0.00E+00	0.00E+00	2.92E-07	4.07E-05	0.00E+00	1.35E-08	0.00E+00	0.00E+00	1.78E-06	0.00E+00	0.00E+00	4.07E-05
1680	ALL	752788.42	4037460.7	NonCancerChronicDerive	0.00E+00	4.07E-09	0.00E+00	0.00E+00	0.00E+00	2.85E-07	3.97E-05	0.00E+00	1.32E-08	0.00E+00	0.00E+00	1.73E-06	0.00E+00	0.00E+00	3.97E-05
1681	ALL	754888.42	4037460.7	NonCancerChronicDerive	0.00E+00	2.27E-09	0.00E+00	0.00E+00	0.00E+00	1.59E-07	2.22E-05	0.00E+00	7.34E-09	0.00E+00	0.00E+00	9.65E-07	0.00E+00	0.00E+00	2.22E-05
1682	ALL	754988.42	4037460.7	NonCancerChronicDerive	0.00E+00	2.21E-09	0.00E+00	0.00E+00	0.00E+00	1.55E-07	2.16E-05	0.00E+00	7.16E-09	0.00E+00	0.00E+00	9.42E-07	0.00E+00	0.00E+00	2.16E-05
1683	ALL	755088.42	4037460.7	NonCancerChronicDerive	0.00E+00	2.16E-09	0.00E+00	0.00E+00	0.00E+00	1.51E-07	2.11E-05	0.00E+00	7.00E-09	0.00E+00	0.00E+00	9.20E-07	0.00E+00	0.00E+00	2.11E-05
1684	ALL	755188.42	4037460.7	NonCancerChronicDerive	0.00E+00	2.11E-09	0.00E+00	0.00E+00	0.00E+00	1.48E-07	2.06E-05	0.00E+00	6.83E-09	0.00E+00	0.00E+00	8.98E-07	0.00E+00	0.00E+00	2.06E-05
1685	ALL	755288.42	4037460.7	NonCancerChronicDerive	0.00E+00	2.06E-09	0.00E+00	0.00E+00	0.00E+00	1.44E-07	2.01E-05	0.00E+00	6.68E-09	0.00E+00	0.00E+00	8.78E-07	0.00E+00	0.00E+00	2.01E-05
1686	ALL	746388.42	4037560.7	NonCancerChronicDerive	0.00E+00	2.41E-09	0.00E+00	0.00E+00	0.00E+00	2.17E-07	2.89E-05	0.00E+00	7.81E-09	0.00E+00	0.00E+00	1.03E-06	0.00E+00	0.00E+00	2.89E-05
1687	ALL	746488.42	4037560.7	NonCancerChronicDerive	0.00E+00	2.33E-09	0.00E+00	0.00E+00	0.00E+00	2.05E-07	2.76E-05	0.00E+00	7.53E-09	0.00E+00	0.00E+00	9.90E-07	0.00E+00	0.00E+00	2.76E-05
1688	ALL	746588.42	4037560.7	NonCancerChronicDerive	0.00E+00	2.26E-09	0.00E+00	0.00E+00	0.00E+00	1.98E-07	2.68E-05	0.00E+00	7.33E-09	0.00E+00	0.00E+00	9.64E-07	0.00E+00	0.00E+00	2.68E-05
1689	ALL	747488.42	4037560.7	NonCancerChronicDerive	0.00E+00	1.85E-09	0.00E+00	0.00E+00	0.00E+00	1.51E-07	2.08E-05	0.00E+00	6.00E-09	0.00E+00	0.00E+00	7.89E-07	0.00E+00	0.00E+00	2.08E-05
1690	ALL	747588.42	4037560.7	NonCancerChronicDerive	0.00E+00	1.88E-09	0.00E+00	0.00E+00	0.00E+00	1.52E-07	2.10E-05	0.00E+00	6.08E-09	0.00E+00	0.00E+00	7.99E-07	0.00E+00	0.00E+00	2.10E-05
1691	ALL	747688.42	4037560.7	NonCancerChronicDerive	0.00E+00	1.89E-09	0.00E+00	0.00E+00	0.00E+00	1.53E-07	2.11E-05	0.00E+00	6.12E-09	0.00E+00	0.00E+00	8.04E-07	0.00E+00	0.00E+00	2.11E-05
1692	ALL	747788.42	4037560.7	NonCancerChronicDerive	0.00E+00	1.89E-09	0.00E+00	0.00E+00	0.00E+00	1.53E-07	2.11E-05	0.00E+00	6.11E-09	0.00E+00	0.00E+00	8.03E-07	0.00E+00	0.00E+00	2.11E-05
1693	ALL	747888.42	4037560.7	NonCancerChronicDerive	0.00E+00	1.88E-09	0.00E+00	0.00E+00	0.00E+00	1.52E-07	2.10E-05	0.00E+00	6.09E-09	0.00E+00	0.00E+00	8.01E-07	0.00E+00	0.00E+00	2.10E-05
1694	ALL	747988.42	4037560.7	NonCancerChronicDerive	0.00E+00	1.88E-09	0.00E+00	0.00E+00	0.00E+00	1.51E-07	2.09E-05	0.00E+00	6.07E-09	0.00E+00	0.00E+00	7.98E-07	0.00E+00	0.00E+00	2.09E-05

1695	ALL	748088.42	4037560.7	NonCancerChronicDerive	0.00E+00	1.87E-09	0.00E+00	0.00E+00	0.00E+00	1.50E-07	2.08E-05	0.00E+00	6.07E-09	0.00E+00	0.00E+00	7.97E-07	0.00E+00	0.00E+00	2.08E-05
1696	ALL	748188.42	4037560.7	NonCancerChronicDerive	0.00E+00	1.88E-09	0.00E+00	0.00E+00	0.00E+00	1.49E-07	2.07E-05	0.00E+00	6.09E-09	0.00E+00	0.00E+00	8.01E-07	0.00E+00	0.00E+00	2.07E-05
1697	ALL	749888.42	4037560.7	NonCancerChronicDerive	0.00E+00	4.69E-09	0.00E+00	0.00E+00	0.00E+00	3.15E-07	4.48E-05	0.00E+00	1.52E-08	0.00E+00	0.00E+00	2.00E-06	0.00E+00	0.00E+00	4.48E-05
1698	ALL	749988.42	4037560.7	NonCancerChronicDerive	0.00E+00	4.80E-09	0.00E+00	0.00E+00	0.00E+00	3.23E-07	4.59E-05	0.00E+00	1.55E-08	0.00E+00	0.00E+00	2.04E-06	0.00E+00	0.00E+00	4.59E-05
1699	ALL	750088.42	4037560.7	NonCancerChronicDerive	0.00E+00	4.90E-09	0.00E+00	0.00E+00	0.00E+00	3.30E-07	4.69E-05	0.00E+00	1.59E-08	0.00E+00	0.00E+00	2.09E-06	0.00E+00	0.00E+00	4.69E-05
1700	ALL	750188.42	4037560.7	NonCancerChronicDerive	0.00E+00	5.00E-09	0.00E+00	0.00E+00	0.00E+00	3.37E-07	4.78E-05	0.00E+00	1.62E-08	0.00E+00	0.00E+00	2.13E-06	0.00E+00	0.00E+00	4.78E-05
1701	ALL	750288.42	4037560.7	NonCancerChronicDerive	0.00E+00	5.08E-09	0.00E+00	0.00E+00	0.00E+00	3.43E-07	4.86E-05	0.00E+00	1.64E-08	0.00E+00	0.00E+00	2.16E-06	0.00E+00	0.00E+00	4.86E-05
1702	ALL	752388.42	4037560.7	NonCancerChronicDerive	0.00E+00	4.53E-09	0.00E+00	0.00E+00	0.00E+00	3.16E-07	4.41E-05	0.00E+00	1.47E-08	0.00E+00	0.00E+00	1.93E-06	0.00E+00	0.00E+00	4.41E-05
1703	ALL	752488.42	4037560.7	NonCancerChronicDerive	0.00E+00	4.41E-09	0.00E+00	0.00E+00	0.00E+00	3.09E-07	4.30E-05	0.00E+00	1.43E-08	0.00E+00	0.00E+00	1.88E-06	0.00E+00	0.00E+00	4.30E-05
1704	ALL	752588.42	4037560.7	NonCancerChronicDerive	0.00E+00	4.29E-09	0.00E+00	0.00E+00	0.00E+00	3.01E-07	4.19E-05	0.00E+00	1.39E-08	0.00E+00	0.00E+00	1.83E-06	0.00E+00	0.00E+00	4.19E-05
1705	ALL	752688.42	4037560.7	NonCancerChronicDerive	0.00E+00	4.18E-09	0.00E+00	0.00E+00	0.00E+00	2.93E-07	4.08E-05	0.00E+00	1.35E-08	0.00E+00	0.00E+00	1.78E-06	0.00E+00	0.00E+00	4.08E-05
1706	ALL	752788.42	4037560.7	NonCancerChronicDerive	0.00E+00	4.06E-09	0.00E+00	0.00E+00	0.00E+00	2.86E-07	3.97E-05	0.00E+00	1.31E-08	0.00E+00	0.00E+00	1.73E-06	0.00E+00	0.00E+00	3.97E-05
1707	ALL	754888.42	4037560.7	NonCancerChronicDerive	0.00E+00	2.23E-09	0.00E+00	0.00E+00	0.00E+00	1.57E-07	2.18E-05	0.00E+00	7.22E-09	0.00E+00	0.00E+00	9.49E-07	0.00E+00	0.00E+00	2.18E-05
1708	ALL	754988.42	4037560.7	NonCancerChronicDerive	0.00E+00	2.18E-09	0.00E+00	0.00E+00	0.00E+00	1.53E-07	2.13E-05	0.00E+00	7.04E-09	0.00E+00	0.00E+00	9.26E-07	0.00E+00	0.00E+00	2.13E-05
1709	ALL	755088.42	4037560.7	NonCancerChronicDerive	0.00E+00	2.12E-09	0.00E+00	0.00E+00	0.00E+00	1.49E-07	2.08E-05	0.00E+00	6.88E-09	0.00E+00	0.00E+00	9.04E-07	0.00E+00	0.00E+00	2.08E-05
1710	ALL	755188.42	4037560.7	NonCancerChronicDerive	0.00E+00	2.08E-09	0.00E+00	0.00E+00	0.00E+00	1.45E-07	2.03E-05	0.00E+00	6.72E-09	0.00E+00	0.00E+00	8.83E-07	0.00E+00	0.00E+00	2.03E-05
1711	ALL	755288.42	4037560.7	NonCancerChronicDerive	0.00E+00	2.03E-09	0.00E+00	0.00E+00	0.00E+00	1.42E-07	1.98E-05	0.00E+00	6.57E-09	0.00E+00	0.00E+00	8.63E-07	0.00E+00	0.00E+00	1.98E-05
1712	ALL	746388.42	4037660.7	NonCancerChronicDerive	0.00E+00	2.26E-09	0.00E+00	0.00E+00	0.00E+00	1.95E-07	2.64E-05	0.00E+00	7.33E-09	0.00E+00	0.00E+00	9.64E-07	0.00E+00	0.00E+00	2.64E-05
1713	ALL	746488.42	4037660.7	NonCancerChronicDerive	0.00E+00	2.21E-09	0.00E+00	0.00E+00	0.00E+00	1.89E-07	2.56E-05	0.00E+00	7.14E-09	0.00E+00	0.00E+00	9.39E-07	0.00E+00	0.00E+00	2.56E-05
1714	ALL	746588.42	4037660.7	NonCancerChronicDerive	0.00E+00	2.16E-09	0.00E+00	0.00E+00	0.00E+00	1.85E-07	2.52E-05	0.00E+00	6.99E-09	0.00E+00	0.00E+00	9.19E-07	0.00E+00	0.00E+00	2.52E-05
1715	ALL	747488.42	4037660.7	NonCancerChronicDerive	0.00E+00	1.81E-09	0.00E+00	0.00E+00	0.00E+00	1.45E-07	2.01E-05	0.00E+00	5.86E-09	0.00E+00	0.00E+00	7.71E-07	0.00E+00	0.00E+00	2.01E-05
1716	ALL	747588.42	4037660.7	NonCancerChronicDerive	0.00E+00	1.84E-09	0.00E+00	0.00E+00	0.00E+00	1.47E-07	2.04E-05	0.00E+00	5.97E-09	0.00E+00	0.00E+00	7.85E-07	0.00E+00	0.00E+00	2.04E-05
1717	ALL	747688.42	4037660.7	NonCancerChronicDerive	0.00E+00	1.87E-09	0.00E+00	0.00E+00	0.00E+00	1.49E-07	2.07E-05	0.00E+00	6.05E-09	0.00E+00	0.00E+00	7.95E-07	0.00E+00	0.00E+00	2.07E-05
1718	ALL	747788.42	4037660.7	NonCancerChronicDerive	0.00E+00	1.88E-09	0.00E+00	0.00E+00	0.00E+00	1.49E-07	2.07E-05	0.00E+00	6.08E-09	0.00E+00	0.00E+00	7.99E-07	0.00E+00	0.00E+00	2.07E-05
1719	ALL	747888.42	4037660.7	NonCancerChronicDerive	0.00E+00	1.88E-09	0.00E+00	0.00E+00	0.00E+00	1.49E-07	2.07E-05	0.00E+00	6.08E-09	0.00E+00	0.00E+00	7.99E-07	0.00E+00	0.00E+00	2.07E-05
1720	ALL	747988.42	4037660.7	NonCancerChronicDerive	0.00E+00	1.87E-09	0.00E+00	0.00E+00	0.00E+00	1.49E-07	2.06E-05	0.00E+00	6.07E-09	0.00E+00	0.00E+00	7.97E-07	0.00E+00	0.00E+00	2.06E-05
1721	ALL	748088.42	4037660.7	NonCancerChronicDerive	0.00E+00	1.87E-09	0.00E+00	0.00E+00	0.00E+00	1.48E-07	2.06E-05	0.00E+00	6.06E-09	0.00E+00	0.00E+00	7.97E-07	0.00E+00	0.00E+00	2.06E-05
1722	ALL	748188.42	4037660.7	NonCancerChronicDerive	0.00E+00	1.88E-09	0.00E+00	0.00E+00	0.00E+00	1.48E-07	2.05E-05	0.00E+00	6.08E-09	0.00E+00	0.00E+00	8.00E-07	0.00E+00	0.00E+00	2.05E-05
1723	ALL	749888.42	4037660.7	NonCancerChronicDerive	0.00E+00	4.94E-09	0.00E+00	0.00E+00	0.00E+00	3.30E-07	4.70E-05	0.00E+00	1.60E-08	0.00E+00	0.00E+00	2.10E-06	0.00E+00	0.00E+00	4.70E-05
1724	ALL	749988.42	4037660.7	NonCancerChronicDerive	0.00E+00	5.05E-09	0.00E+00	0.00E+00	0.00E+00	3.38E-07	4.82E-05	0.00E+00	1.64E-08	0.00E+00	0.00E+00	2.15E-06	0.00E+00	0.00E+00	4.82E-05
1725	ALL	750088.42	4037660.7	NonCancerChronicDerive	0.00E+00	5.16E-09	0.00E+00	0.00E+00	0.00E+00	3.47E-07	4.92E-05	0.00E+00	1.67E-08	0.00E+00	0.00E+00	2.20E-06	0.00E+00	0.00E+00	4.92E-05
1726	ALL	750188.42	4037660.7	NonCancerChronicDerive	0.00E+00	5.26E-09	0.00E+00	0.00E+00	0.00E+00	3.54E-07	5.02E-05	0.00E+00	1.70E-08	0.00E+00	0.00E+00	2.24E-06	0.00E+00	0.00E+00	5.02E-05
1727	ALL	750288.42	4037660.7	NonCancerChronicDerive	0.00E+00	5.35E-09	0.00E+00	0.00E+00	0.00E+00	3.61E-07	5.11E-05	0.00E+00	1.73E-08	0.00E+00	0.00E+00	2.28E-06	0.00E+00	0.00E+00	5.11E-05
1728	ALL	752388.42	4037660.7	NonCancerChronicDerive	0.00E+00	4.55E-09	0.00E+00	0.00E+00	0.00E+00	3.19E-07	4.44E-05	0.00E+00	1.47E-08	0.00E+00	0.00E+00	1.93E-06	0.00E+00	0.00E+00	4.44E-05
1729	ALL	752488.42	4037660.7	NonCancerChronicDerive	0.00E+00	4.42E-09	0.00E+00	0.00E+00	0.00E+00	3.11E-07	4.32E-05	0.00E+00	1.43E-08	0.00E+00	0.00E+00	1.88E-06	0.00E+00	0.00E+00	4.32E-05
1730	ALL	752588.42	4037660.7	NonCancerChronicDerive	0.00E+00	4.29E-09	0.00E+00	0.00E+00	0.00E+00	3.02E-07	4.20E-05	0.00E+00	1.39E-08	0.00E+00	0.00E+00	1.83E-06	0.00E+00	0.00E+00	4.20E-05
1731	ALL	752688.42	4037660.7	NonCancerChronicDerive	0.00E+00	4.16E-09	0.00E+00	0.00E+00	0.00E+00	2.94E-07	4.08E-05	0.00E+00	1.35E-08	0.00E+00	0.00E+00	1.77E-06	0.00E+00	0.00E+00	4.08E-05
1732	ALL	752788.42	4037660.7	NonCancerChronicDerive	0.00E+00	4.03E-09	0.00E+00	0.00E+00	0.00E+00	2.85E-07	3.96E-05	0.00E+00	1.31E-08	0.00E+00	0.00E+00	1.72E-06	0.00E+00	0.00E+00	3.96E-05
1733	ALL	754888.42	4037660.7	NonCancerChronicDerive	0.00E+00	2.19E-09	0.00E+00	0.00E+00	0.00E+00	1.54E-07	2.15E-05	0.00E+00	7.09E-09	0.00E+00	0.00E+00	9.33E-07	0.00E+00	0.00E+00	2.15E-05
1734	ALL	754988.42	4037660.7	NonCancerChronicDerive	0.00E+00	2.14E-09	0.00E+00	0.00E+00	0.00E+00	1.50E-07	2.09E-05	0.00E+00	6.92E-09	0.00E+00	0.00E+00	9.10E-07	0.00E+00	0.00E+00	2.09E-05
1735	ALL	755088.42	4037660.7	NonCancerChronicDerive	0.00E+00	2.09E-09	0.00E+00	0.00E+00	0.00E+00	1.46E-07	2.04E-05	0.00E+00	6.76E-09	0.00E+00	0.00E+00	8.89E-07	0.00E+00	0.00E+00	2.04E-05
1736	ALL	755188.42	4037660.7	NonCancerChronicDerive	0.00E+00	2.04E-09	0.00E+00	0.00E+00	0.00E+00	1.43E-07	2.00E-05	0.00E+00	6.61E-09	0.00E+00	0.00E+00	8.69E-07	0.00E+00	0.00E+00	2.00E-05
1737	ALL	755288.42	4037660.7	NonCancerChronicDerive	0.00E+00	1.99E-09	0.00E+00	0.00E+00	0.00E+00	1.39E-07	1.95E-05	0.00E+00	6.46E-09	0.00E+00	0.00E+00	8.49E-07	0.00E+00	0.00E+00	1.95E-05
1738	ALL	746388.42	4037760.7	NonCancerChronicDerive	0.00E+00	2.15E-09	0.00E+00	0.00E+00	0.00E+00	1.80E-07	2.46E-05	0.00E+00	6.97E-09	0.00E+00	0.00E+00	9.16E-07	0.00E+00	0.00E+00	2.46E-05
1739	ALL	746488.42	4037760.7	NonCancerChronicDerive	0.00E+00	2.11E-09	0.00E+00	0.00E+00	0.00E+00	1.77E-07	2.42E-05	0.00E+00	6.84E-09	0.00E+00	0.00E+00	8.99E-07	0.00E+00	0.00E+00	2.42E-05
1740	ALL	746588.42	4037760.7	NonCancerChronicDerive	0.00E+00	2.08E-09	0.00E+00	0.00E+00	0.00E+00	1.75E-07	2.40E-05	0.00E+00	6.74E-09	0.00E+00	0.00E+00	8.86E-07	0.00E+00	0.00E+00	2.40E-05
1741	ALL	746688.42	4037760.7	NonCancerChronicDerive	0.00E+00	2.05E-09	0.00E+00	0.00E+00	0.00E+00	1.72E-07	2.37E-05	0.00E+00	6.63E-09	0.00E+00	0.00E+00	8.72E-07	0.00E+00	0.00E+00	2.37E-05
1742	ALL	746788.42	4037760.7	NonCancerChronicDerive	0.00E+00	2.00E-09	0.00E+00	0.00E+00	0.00E+00	1.67E-07	2.30E-05	0.00E+00	6.47E-09	0.00E+00	0.00E+00	8.50E-07	0.00E+00	0.00E+00	2.30E-05
1743	ALL	746888.42	4037760.7	NonCancerChronicDerive	0.00E+00	1.94E-09	0.00E+00	0.00E+00	0.00E+00	1.60E-07	2.22E-05	0.00E+00	6.28E-09	0.00E+00	0.00E+00	8.25E-07	0.00E+00	0.00E+00	2.22E-05
1744	ALL	746988.42	4037760.7	NonCancerChronicDerive	0.00E+00	1.88E-09	0.00E+00	0.00E+00	0.00E+00	1.54E-07	2.14E-05	0.00E+00	6.08E-09	0.00E+00	0.00E+00	7.99E-07	0.00E+00	0.00E+00	2.14E-05
1745	ALL	747488.42	4037760.7	NonCancerChronicDerive	0.00E+00	1.77E-09	0.00E+00	0.00E+00	0.00E+00	1.41E-07	1.96E-05	0.00E+00	5.74E-09	0.00E+00	0.00E+00	7.55E-07	0.00E+00	0.00E+00	1.96E-05
1746	ALL	747588.42	4037760.7	NonCancerChronicDerive	0.00E+00	1.81E-09	0.00E+00	0.00E+00	0.00E+00	1.43E-07	1.99E-05	0.00E+00	5.87E-09	0.00E+00	0.00E+00	7.72E-07	0.00E+00	0.00E+00	1.99E-05
1747	ALL	747688.42	4037760.7	NonCancerChronicDerive	0.00E+00	1.85E-09	0.00E+00	0.00E+00	0.00E+00	1.45E-07	2.03E-05	0.00E+00	5.99E-09	0.00E+00	0.00E+00	7.88E-07	0.00E+00	0.00E+00	2.03E-05

1748	ALL	747788.42	4037760.7	NonCancerChronicDerive	0.00E+00	1.87E-09	0.00E+00	0.00E+00	0.00E+00	1.46E-07	2.05E-05	0.00E+00	6.06E-09	0.00E+00	0.00E+00	7.97E-07	0.00E+00	0.00E+00	2.05E-05
1749	ALL	747888.42	4037760.7	NonCancerChronicDerive	0.00E+00	1.88E-09	0.00E+00	0.00E+00	0.00E+00	1.47E-07	2.05E-05	0.00E+00	6.09E-09	0.00E+00	0.00E+00	8.00E-07	0.00E+00	0.00E+00	2.05E-05
1750	ALL	747988.42	4037760.7	NonCancerChronicDerive	0.00E+00	1.88E-09	0.00E+00	0.00E+00	0.00E+00	1.47E-07	2.05E-05	0.00E+00	6.09E-09	0.00E+00	0.00E+00	8.00E-07	0.00E+00	0.00E+00	2.05E-05
1751	ALL	748088.42	4037760.7	NonCancerChronicDerive	0.00E+00	1.88E-09	0.00E+00	0.00E+00	0.00E+00	1.47E-07	2.04E-05	0.00E+00	6.08E-09	0.00E+00	0.00E+00	8.00E-07	0.00E+00	0.00E+00	2.04E-05
1752	ALL	748188.42	4037760.7	NonCancerChronicDerive	0.00E+00	1.89E-09	0.00E+00	0.00E+00	0.00E+00	1.47E-07	2.05E-05	0.00E+00	6.11E-09	0.00E+00	0.00E+00	8.03E-07	0.00E+00	0.00E+00	2.05E-05
1753	ALL	749888.42	4037760.7	NonCancerChronicDerive	0.00E+00	5.22E-09	0.00E+00	0.00E+00	0.00E+00	3.48E-07	4.96E-05	0.00E+00	1.69E-08	0.00E+00	0.00E+00	2.22E-06	0.00E+00	0.00E+00	4.96E-05
1754	ALL	749988.42	4037760.7	NonCancerChronicDerive	0.00E+00	5.34E-09	0.00E+00	0.00E+00	0.00E+00	3.57E-07	5.08E-05	0.00E+00	1.73E-08	0.00E+00	0.00E+00	2.27E-06	0.00E+00	0.00E+00	5.08E-05
1755	ALL	750088.42	4037760.7	NonCancerChronicDerive	0.00E+00	5.46E-09	0.00E+00	0.00E+00	0.00E+00	3.66E-07	5.20E-05	0.00E+00	1.77E-08	0.00E+00	0.00E+00	2.32E-06	0.00E+00	0.00E+00	5.20E-05
1756	ALL	750188.42	4037760.7	NonCancerChronicDerive	0.00E+00	5.56E-09	0.00E+00	0.00E+00	0.00E+00	3.74E-07	5.30E-05	0.00E+00	1.80E-08	0.00E+00	0.00E+00	2.37E-06	0.00E+00	0.00E+00	5.30E-05
1757	ALL	750288.42	4037760.7	NonCancerChronicDerive	0.00E+00	5.66E-09	0.00E+00	0.00E+00	0.00E+00	3.81E-07	5.40E-05	0.00E+00	1.83E-08	0.00E+00	0.00E+00	2.41E-06	0.00E+00	0.00E+00	5.40E-05
1758	ALL	752388.42	4037760.7	NonCancerChronicDerive	0.00E+00	4.55E-09	0.00E+00	0.00E+00	0.00E+00	3.21E-07	4.45E-05	0.00E+00	1.47E-08	0.00E+00	0.00E+00	1.94E-06	0.00E+00	0.00E+00	4.45E-05
1759	ALL	752488.42	4037760.7	NonCancerChronicDerive	0.00E+00	4.41E-09	0.00E+00	0.00E+00	0.00E+00	3.11E-07	4.32E-05	0.00E+00	1.43E-08	0.00E+00	0.00E+00	1.88E-06	0.00E+00	0.00E+00	4.32E-05
1760	ALL	752588.42	4037760.7	NonCancerChronicDerive	0.00E+00	4.27E-09	0.00E+00	0.00E+00	0.00E+00	3.02E-07	4.19E-05	0.00E+00	1.38E-08	0.00E+00	0.00E+00	1.82E-06	0.00E+00	0.00E+00	4.19E-05
1761	ALL	752688.42	4037760.7	NonCancerChronicDerive	0.00E+00	4.13E-09	0.00E+00	0.00E+00	0.00E+00	2.93E-07	4.06E-05	0.00E+00	1.34E-08	0.00E+00	0.00E+00	1.76E-06	0.00E+00	0.00E+00	4.06E-05
1762	ALL	752788.42	4037760.7	NonCancerChronicDerive	0.00E+00	4.00E-09	0.00E+00	0.00E+00	0.00E+00	2.84E-07	3.93E-05	0.00E+00	1.29E-08	0.00E+00	0.00E+00	1.70E-06	0.00E+00	0.00E+00	3.93E-05
1763	ALL	754888.42	4037760.7	NonCancerChronicDerive	0.00E+00	2.15E-09	0.00E+00	0.00E+00	0.00E+00	1.51E-07	2.11E-05	0.00E+00	6.97E-09	0.00E+00	0.00E+00	9.16E-07	0.00E+00	0.00E+00	2.11E-05
1764	ALL	754988.42	4037760.7	NonCancerChronicDerive	0.00E+00	2.10E-09	0.00E+00	0.00E+00	0.00E+00	1.47E-07	2.06E-05	0.00E+00	6.80E-09	0.00E+00	0.00E+00	8.95E-07	0.00E+00	0.00E+00	2.06E-05
1765	ALL	755088.42	4037760.7	NonCancerChronicDerive	0.00E+00	2.05E-09	0.00E+00	0.00E+00	0.00E+00	1.44E-07	2.01E-05	0.00E+00	6.65E-09	0.00E+00	0.00E+00	8.74E-07	0.00E+00	0.00E+00	2.01E-05
1766	ALL	755188.42	4037760.7	NonCancerChronicDerive	0.00E+00	2.01E-09	0.00E+00	0.00E+00	0.00E+00	1.40E-07	1.96E-05	0.00E+00	6.49E-09	0.00E+00	0.00E+00	8.54E-07	0.00E+00	0.00E+00	1.96E-05
1767	ALL	755288.42	4037760.7	NonCancerChronicDerive	0.00E+00	1.96E-09	0.00E+00	0.00E+00	0.00E+00	1.37E-07	1.92E-05	0.00E+00	6.35E-09	0.00E+00	0.00E+00	8.34E-07	0.00E+00	0.00E+00	1.92E-05
1768	ALL	746388.42	4037860.7	NonCancerChronicDerive	0.00E+00	2.06E-09	0.00E+00	0.00E+00	0.00E+00	1.69E-07	2.34E-05	0.00E+00	6.68E-09	0.00E+00	0.00E+00	8.78E-07	0.00E+00	0.00E+00	2.34E-05
1769	ALL	746488.42	4037860.7	NonCancerChronicDerive	0.00E+00	2.04E-09	0.00E+00	0.00E+00	0.00E+00	1.68E-07	2.32E-05	0.00E+00	6.60E-09	0.00E+00	0.00E+00	8.67E-07	0.00E+00	0.00E+00	2.32E-05
1770	ALL	746588.42	4037860.7	NonCancerChronicDerive	0.00E+00	2.01E-09	0.00E+00	0.00E+00	0.00E+00	1.66E-07	2.29E-05	0.00E+00	6.50E-09	0.00E+00	0.00E+00	8.55E-07	0.00E+00	0.00E+00	2.29E-05
1771	ALL	746688.42	4037860.7	NonCancerChronicDerive	0.00E+00	1.99E-09	0.00E+00	0.00E+00	0.00E+00	1.64E-07	2.27E-05	0.00E+00	6.44E-09	0.00E+00	0.00E+00	8.46E-07	0.00E+00	0.00E+00	2.27E-05
1772	ALL	746788.42	4037860.7	NonCancerChronicDerive	0.00E+00	1.94E-09	0.00E+00	0.00E+00	0.00E+00	1.59E-07	2.21E-05	0.00E+00	6.28E-09	0.00E+00	0.00E+00	8.26E-07	0.00E+00	0.00E+00	2.21E-05
1773	ALL	746888.42	4037860.7	NonCancerChronicDerive	0.00E+00	1.89E-09	0.00E+00	0.00E+00	0.00E+00	1.54E-07	2.14E-05	0.00E+00	6.12E-09	0.00E+00	0.00E+00	8.04E-07	0.00E+00	0.00E+00	2.14E-05
1774	ALL	746988.42	4037860.7	NonCancerChronicDerive	0.00E+00	1.84E-09	0.00E+00	0.00E+00	0.00E+00	1.49E-07	2.07E-05	0.00E+00	5.95E-09	0.00E+00	0.00E+00	7.82E-07	0.00E+00	0.00E+00	2.07E-05
1775	ALL	747088.42	4037860.7	NonCancerChronicDerive	0.00E+00	1.79E-09	0.00E+00	0.00E+00	0.00E+00	1.44E-07	2.01E-05	0.00E+00	5.79E-09	0.00E+00	0.00E+00	7.61E-07	0.00E+00	0.00E+00	2.01E-05
1776	ALL	747188.42	4037860.7	NonCancerChronicDerive	0.00E+00	1.75E-09	0.00E+00	0.00E+00	0.00E+00	1.41E-07	1.96E-05	0.00E+00	5.66E-09	0.00E+00	0.00E+00	7.44E-07	0.00E+00	0.00E+00	1.96E-05
1777	ALL	747288.42	4037860.7	NonCancerChronicDerive	0.00E+00	1.72E-09	0.00E+00	0.00E+00	0.00E+00	1.39E-07	1.92E-05	0.00E+00	5.58E-09	0.00E+00	0.00E+00	7.33E-07	0.00E+00	0.00E+00	1.92E-05
1778	ALL	747388.42	4037860.7	NonCancerChronicDerive	0.00E+00	1.72E-09	0.00E+00	0.00E+00	0.00E+00	1.37E-07	1.91E-05	0.00E+00	5.56E-09	0.00E+00	0.00E+00	7.31E-07	0.00E+00	0.00E+00	1.91E-05
1779	ALL	747488.42	4037860.7	NonCancerChronicDerive	0.00E+00	1.74E-09	0.00E+00	0.00E+00	0.00E+00	1.37E-07	1.92E-05	0.00E+00	5.64E-09	0.00E+00	0.00E+00	7.41E-07	0.00E+00	0.00E+00	1.92E-05
1780	ALL	747588.42	4037860.7	NonCancerChronicDerive	0.00E+00	1.79E-09	0.00E+00	0.00E+00	0.00E+00	1.39E-07	1.95E-05	0.00E+00	5.78E-09	0.00E+00	0.00E+00	7.60E-07	0.00E+00	0.00E+00	1.95E-05
1781	ALL	747688.42	4037860.7	NonCancerChronicDerive	0.00E+00	1.83E-09	0.00E+00	0.00E+00	0.00E+00	1.42E-07	2.00E-05	0.00E+00	5.94E-09	0.00E+00	0.00E+00	7.80E-07	0.00E+00	0.00E+00	2.00E-05
1782	ALL	747788.42	4037860.7	NonCancerChronicDerive	0.00E+00	1.87E-09	0.00E+00	0.00E+00	0.00E+00	1.44E-07	2.03E-05	0.00E+00	6.05E-09	0.00E+00	0.00E+00	7.95E-07	0.00E+00	0.00E+00	2.03E-05
1783	ALL	747888.42	4037860.7	NonCancerChronicDerive	0.00E+00	1.89E-09	0.00E+00	0.00E+00	0.00E+00	1.45E-07	2.04E-05	0.00E+00	6.11E-09	0.00E+00	0.00E+00	8.03E-07	0.00E+00	0.00E+00	2.04E-05
1784	ALL	747988.42	4037860.7	NonCancerChronicDerive	0.00E+00	1.89E-09	0.00E+00	0.00E+00	0.00E+00	1.46E-07	2.04E-05	0.00E+00	6.13E-09	0.00E+00	0.00E+00	8.06E-07	0.00E+00	0.00E+00	2.04E-05
1785	ALL	748088.42	4037860.7	NonCancerChronicDerive	0.00E+00	1.90E-09	0.00E+00	0.00E+00	0.00E+00	1.46E-07	2.04E-05	0.00E+00	6.14E-09	0.00E+00	0.00E+00	8.07E-07	0.00E+00	0.00E+00	2.04E-05
1786	ALL	748188.42	4037860.7	NonCancerChronicDerive	0.00E+00	1.90E-09	0.00E+00	0.00E+00	0.00E+00	1.46E-07	2.05E-05	0.00E+00	6.16E-09	0.00E+00	0.00E+00	8.10E-07	0.00E+00	0.00E+00	2.05E-05
1787	ALL	749888.42	4037860.7	NonCancerChronicDerive	0.00E+00	5.55E-09	0.00E+00	0.00E+00	0.00E+00	3.68E-07	5.25E-05	0.00E+00	1.80E-08	0.00E+00	0.00E+00	2.36E-06	0.00E+00	0.00E+00	5.25E-05
1788	ALL	749988.42	4037860.7	NonCancerChronicDerive	0.00E+00	5.68E-09	0.00E+00	0.00E+00	0.00E+00	3.79E-07	5.39E-05	0.00E+00	1.84E-08	0.00E+00	0.00E+00	2.42E-06	0.00E+00	0.00E+00	5.39E-05
1789	ALL	750088.42	4037860.7	NonCancerChronicDerive	0.00E+00	5.80E-09	0.00E+00	0.00E+00	0.00E+00	3.88E-07	5.51E-05	0.00E+00	1.88E-08	0.00E+00	0.00E+00	2.47E-06	0.00E+00	0.00E+00	5.51E-05
1790	ALL	750188.42	4037860.7	NonCancerChronicDerive	0.00E+00	5.91E-09	0.00E+00	0.00E+00	0.00E+00	3.96E-07	5.62E-05	0.00E+00	1.91E-08	0.00E+00	0.00E+00	2.52E-06	0.00E+00	0.00E+00	5.62E-05
1791	ALL	750288.42	4037860.7	NonCancerChronicDerive	0.00E+00	6.01E-09	0.00E+00	0.00E+00	0.00E+00	4.04E-07	5.72E-05	0.00E+00	1.95E-08	0.00E+00	0.00E+00	2.56E-06	0.00E+00	0.00E+00	5.72E-05
1792	ALL	752388.42	4037860.7	NonCancerChronicDerive	0.00E+00	4.53E-09	0.00E+00	0.00E+00	0.00E+00	3.21E-07	4.45E-05	0.00E+00	1.47E-08	0.00E+00	0.00E+00	1.93E-06	0.00E+00	0.00E+00	4.45E-05
1793	ALL	752488.42	4037860.7	NonCancerChronicDerive	0.00E+00	4.38E-09	0.00E+00	0.00E+00	0.00E+00	3.11E-07	4.31E-05	0.00E+00	1.42E-08	0.00E+00	0.00E+00	1.86E-06	0.00E+00	0.00E+00	4.31E-05
1794	ALL	752588.42	4037860.7	NonCancerChronicDerive	0.00E+00	4.23E-09	0.00E+00	0.00E+00	0.00E+00	3.01E-07	4.17E-05	0.00E+00	1.37E-08	0.00E+00	0.00E+00	1.80E-06	0.00E+00	0.00E+00	4.17E-05
1795	ALL	752688.42	4037860.7	NonCancerChronicDerive	0.00E+00	4.09E-09	0.00E+00	0.00E+00	0.00E+00	2.91E-07	4.03E-05	0.00E+00	1.32E-08	0.00E+00	0.00E+00	1.74E-06	0.00E+00	0.00E+00	4.03E-05
1796	ALL	752788.42	4037860.7	NonCancerChronicDerive	0.00E+00	3.95E-09	0.00E+00	0.00E+00	0.00E+00	2.82E-07	3.90E-05	0.00E+00	1.28E-08	0.00E+00	0.00E+00	1.68E-06	0.00E+00	0.00E+00	3.90E-05
1797	ALL	754888.42	4037860.7	NonCancerChronicDerive	0.00E+00	2.12E-09	0.00E+00	0.00E+00	0.00E+00	1.49E-07	2.07E-05	0.00E+00	6.85E-09	0.00E+00	0.00E+00	9.00E-07	0.00E+00	0.00E+00	2.07E-05
1798	ALL	754988.42	4037860.7	NonCancerChronicDerive	0.00E+00	2.07E-09	0.00E+00	0.00E+00	0.00E+00	1.45E-07	2.02E-05	0.00E+00	6.69E-09	0.00E+00	0.00E+00	8.79E-07	0.00E+00	0.00E+00	2.02E-05
1799	ALL	755088.42	4037860.7	NonCancerChronicDerive	0.00E+00	2.02E-09	0.00E+00	0.00E+00	0.00E+00	1.41E-07	1.98E-05	0.00E+00	6.53E-09	0.00E+00	0.00E+00	8.58E-07	0.00E+00	0.00E+00	1.98E-05
1800	ALL	755188.42	4037860.7	NonCancerChronicDerive	0.00E+00	1.97E-09	0.00E+00	0.00E+00	0.00E+00	1.38E-07	1.93E-05	0.00E+00	6.38E-09	0.00E+00	0.00E+00	8.39E-07	0.00E+00	0.00E+00	1.93E-05

1801	ALL	755288.42	4037860.7	NonCancerChronicDerive	0.00E+00	1.93E-09	0.00E+00	0.00E+00	0.00E+00	1.35E-07	1.89E-05	0.00E+00	6.24E-09	0.00E+00	0.00E+00	8.20E-07	0.00E+00	0.00E+00	1.89E-05
1802	ALL	746388.42	4037960.7	NonCancerChronicDerive	0.00E+00	2.00E-09	0.00E+00	0.00E+00	0.00E+00	1.61E-07	2.24E-05	0.00E+00	6.46E-09	0.00E+00	0.00E+00	8.49E-07	0.00E+00	0.00E+00	2.24E-05
1803	ALL	746488.42	4037960.7	NonCancerChronicDerive	0.00E+00	1.98E-09	0.00E+00	0.00E+00	0.00E+00	1.61E-07	2.23E-05	0.00E+00	6.41E-09	0.00E+00	0.00E+00	8.42E-07	0.00E+00	0.00E+00	2.23E-05
1804	ALL	746588.42	4037960.7	NonCancerChronicDerive	0.00E+00	1.95E-09	0.00E+00	0.00E+00	0.00E+00	1.59E-07	2.20E-05	0.00E+00	6.30E-09	0.00E+00	0.00E+00	8.28E-07	0.00E+00	0.00E+00	2.20E-05
1805	ALL	746688.42	4037960.7	NonCancerChronicDerive	0.00E+00	1.93E-09	0.00E+00	0.00E+00	0.00E+00	1.57E-07	2.19E-05	0.00E+00	6.26E-09	0.00E+00	0.00E+00	8.23E-07	0.00E+00	0.00E+00	2.19E-05
1806	ALL	746788.42	4037960.7	NonCancerChronicDerive	0.00E+00	1.89E-09	0.00E+00	0.00E+00	0.00E+00	1.53E-07	2.14E-05	0.00E+00	6.12E-09	0.00E+00	0.00E+00	8.05E-07	0.00E+00	0.00E+00	2.14E-05
1807	ALL	746888.42	4037960.7	NonCancerChronicDerive	0.00E+00	1.85E-09	0.00E+00	0.00E+00	0.00E+00	1.49E-07	2.08E-05	0.00E+00	5.98E-09	0.00E+00	0.00E+00	7.86E-07	0.00E+00	0.00E+00	2.08E-05
1808	ALL	746988.42	4037960.7	NonCancerChronicDerive	0.00E+00	1.80E-09	0.00E+00	0.00E+00	0.00E+00	1.45E-07	2.02E-05	0.00E+00	5.84E-09	0.00E+00	0.00E+00	7.67E-07	0.00E+00	0.00E+00	2.02E-05
1809	ALL	747088.42	4037960.7	NonCancerChronicDerive	0.00E+00	1.76E-09	0.00E+00	0.00E+00	0.00E+00	1.41E-07	1.97E-05	0.00E+00	5.70E-09	0.00E+00	0.00E+00	7.49E-07	0.00E+00	0.00E+00	1.97E-05
1810	ALL	747188.42	4037960.7	NonCancerChronicDerive	0.00E+00	1.72E-09	0.00E+00	0.00E+00	0.00E+00	1.38E-07	1.92E-05	0.00E+00	5.58E-09	0.00E+00	0.00E+00	7.34E-07	0.00E+00	0.00E+00	1.92E-05
1811	ALL	747288.42	4037960.7	NonCancerChronicDerive	0.00E+00	1.70E-09	0.00E+00	0.00E+00	0.00E+00	1.36E-07	1.89E-05	0.00E+00	5.50E-09	0.00E+00	0.00E+00	7.23E-07	0.00E+00	0.00E+00	1.89E-05
1812	ALL	747388.42	4037960.7	NonCancerChronicDerive	0.00E+00	1.69E-09	0.00E+00	0.00E+00	0.00E+00	1.35E-07	1.87E-05	0.00E+00	5.48E-09	0.00E+00	0.00E+00	7.21E-07	0.00E+00	0.00E+00	1.87E-05
1813	ALL	747488.42	4037960.7	NonCancerChronicDerive	0.00E+00	1.71E-09	0.00E+00	0.00E+00	0.00E+00	1.35E-07	1.88E-05	0.00E+00	5.55E-09	0.00E+00	0.00E+00	7.29E-07	0.00E+00	0.00E+00	1.88E-05
1814	ALL	747588.42	4037960.7	NonCancerChronicDerive	0.00E+00	1.76E-09	0.00E+00	0.00E+00	0.00E+00	1.37E-07	1.92E-05	0.00E+00	5.70E-09	0.00E+00	0.00E+00	7.49E-07	0.00E+00	0.00E+00	1.92E-05
1815	ALL	747688.42	4037960.7	NonCancerChronicDerive	0.00E+00	1.82E-09	0.00E+00	0.00E+00	0.00E+00	1.40E-07	1.97E-05	0.00E+00	5.88E-09	0.00E+00	0.00E+00	7.73E-07	0.00E+00	0.00E+00	1.97E-05
1816	ALL	747788.42	4037960.7	NonCancerChronicDerive	0.00E+00	1.87E-09	0.00E+00	0.00E+00	0.00E+00	1.43E-07	2.01E-05	0.00E+00	6.04E-09	0.00E+00	0.00E+00	7.94E-07	0.00E+00	0.00E+00	2.01E-05
1817	ALL	747888.42	4037960.7	NonCancerChronicDerive	0.00E+00	1.90E-09	0.00E+00	0.00E+00	0.00E+00	1.45E-07	2.04E-05	0.00E+00	6.14E-09	0.00E+00	0.00E+00	8.07E-07	0.00E+00	0.00E+00	2.04E-05
1818	ALL	747988.42	4037960.7	NonCancerChronicDerive	0.00E+00	1.91E-09	0.00E+00	0.00E+00	0.00E+00	1.46E-07	2.05E-05	0.00E+00	6.19E-09	0.00E+00	0.00E+00	8.13E-07	0.00E+00	0.00E+00	2.05E-05
1819	ALL	748088.42	4037960.7	NonCancerChronicDerive	0.00E+00	1.92E-09	0.00E+00	0.00E+00	0.00E+00	1.46E-07	2.05E-05	0.00E+00	6.21E-09	0.00E+00	0.00E+00	8.16E-07	0.00E+00	0.00E+00	2.05E-05
1820	ALL	748188.42	4037960.7	NonCancerChronicDerive	0.00E+00	1.93E-09	0.00E+00	0.00E+00	0.00E+00	1.47E-07	2.06E-05	0.00E+00	6.24E-09	0.00E+00	0.00E+00	8.20E-07	0.00E+00	0.00E+00	2.06E-05
1821	ALL	749888.42	4037960.7	NonCancerChronicDerive	0.00E+00	5.92E-09	0.00E+00	0.00E+00	0.00E+00	3.92E-07	5.59E-05	0.00E+00	1.92E-08	0.00E+00	0.00E+00	2.52E-06	0.00E+00	0.00E+00	5.59E-05
1822	ALL	749988.42	4037960.7	NonCancerChronicDerive	0.00E+00	6.06E-09	0.00E+00	0.00E+00	0.00E+00	4.03E-07	5.74E-05	0.00E+00	1.96E-08	0.00E+00	0.00E+00	2.58E-06	0.00E+00	0.00E+00	5.74E-05
1823	ALL	750088.42	4037960.7	NonCancerChronicDerive	0.00E+00	6.19E-09	0.00E+00	0.00E+00	0.00E+00	4.13E-07	5.87E-05	0.00E+00	2.00E-08	0.00E+00	0.00E+00	2.64E-06	0.00E+00	0.00E+00	5.87E-05
1824	ALL	750188.42	4037960.7	NonCancerChronicDerive	0.00E+00	6.31E-09	0.00E+00	0.00E+00	0.00E+00	4.22E-07	5.99E-05	0.00E+00	2.04E-08	0.00E+00	0.00E+00	2.68E-06	0.00E+00	0.00E+00	5.99E-05
1825	ALL	750288.42	4037960.7	NonCancerChronicDerive	0.00E+00	6.41E-09	0.00E+00	0.00E+00	0.00E+00	4.30E-07	6.09E-05	0.00E+00	2.07E-08	0.00E+00	0.00E+00	2.73E-06	0.00E+00	0.00E+00	6.09E-05
1826	ALL	752388.42	4037960.7	NonCancerChronicDerive	0.00E+00	4.50E-09	0.00E+00	0.00E+00	0.00E+00	3.21E-07	4.44E-05	0.00E+00	1.46E-08	0.00E+00	0.00E+00	1.92E-06	0.00E+00	0.00E+00	4.44E-05
1827	ALL	752488.42	4037960.7	NonCancerChronicDerive	0.00E+00	4.34E-09	0.00E+00	0.00E+00	0.00E+00	3.10E-07	4.29E-05	0.00E+00	1.41E-08	0.00E+00	0.00E+00	1.85E-06	0.00E+00	0.00E+00	4.29E-05
1828	ALL	752588.42	4037960.7	NonCancerChronicDerive	0.00E+00	4.19E-09	0.00E+00	0.00E+00	0.00E+00	3.00E-07	4.14E-05	0.00E+00	1.36E-08	0.00E+00	0.00E+00	1.78E-06	0.00E+00	0.00E+00	4.14E-05
1829	ALL	752688.42	4037960.7	NonCancerChronicDerive	0.00E+00	4.04E-09	0.00E+00	0.00E+00	0.00E+00	2.89E-07	4.00E-05	0.00E+00	1.31E-08	0.00E+00	0.00E+00	1.72E-06	0.00E+00	0.00E+00	4.00E-05
1830	ALL	752788.42	4037960.7	NonCancerChronicDerive	0.00E+00	3.89E-09	0.00E+00	0.00E+00	0.00E+00	2.79E-07	3.86E-05	0.00E+00	1.26E-08	0.00E+00	0.00E+00	1.66E-06	0.00E+00	0.00E+00	3.86E-05
1831	ALL	754888.42	4037960.7	NonCancerChronicDerive	0.00E+00	2.08E-09	0.00E+00	0.00E+00	0.00E+00	1.46E-07	2.04E-05	0.00E+00	6.72E-09	0.00E+00	0.00E+00	8.84E-07	0.00E+00	0.00E+00	2.04E-05
1832	ALL	754988.42	4037960.7	NonCancerChronicDerive	0.00E+00	2.03E-09	0.00E+00	0.00E+00	0.00E+00	1.42E-07	1.99E-05	0.00E+00	6.56E-09	0.00E+00	0.00E+00	8.63E-07	0.00E+00	0.00E+00	1.99E-05
1833	ALL	755088.42	4037960.7	NonCancerChronicDerive	0.00E+00	1.98E-09	0.00E+00	0.00E+00	0.00E+00	1.39E-07	1.94E-05	0.00E+00	6.41E-09	0.00E+00	0.00E+00	8.43E-07	0.00E+00	0.00E+00	1.94E-05
1834	ALL	755188.42	4037960.7	NonCancerChronicDerive	0.00E+00	1.94E-09	0.00E+00	0.00E+00	0.00E+00	1.36E-07	1.90E-05	0.00E+00	6.26E-09	0.00E+00	0.00E+00	8.23E-07	0.00E+00	0.00E+00	1.90E-05
1835	ALL	755288.42	4037960.7	NonCancerChronicDerive	0.00E+00	1.89E-09	0.00E+00	0.00E+00	0.00E+00	1.32E-07	1.85E-05	0.00E+00	6.12E-09	0.00E+00	0.00E+00	8.05E-07	0.00E+00	0.00E+00	1.85E-05
1836	ALL	747888.42	4038060.7	NonCancerChronicDerive	0.00E+00	1.91E-09	0.00E+00	0.00E+00	0.00E+00	1.44E-07	2.04E-05	0.00E+00	6.18E-09	0.00E+00	0.00E+00	8.12E-07	0.00E+00	0.00E+00	2.04E-05
1837	ALL	747988.42	4038060.7	NonCancerChronicDerive	0.00E+00	1.93E-09	0.00E+00	0.00E+00	0.00E+00	1.46E-07	2.06E-05	0.00E+00	6.26E-09	0.00E+00	0.00E+00	8.23E-07	0.00E+00	0.00E+00	2.06E-05
1838	ALL	748088.42	4038060.7	NonCancerChronicDerive	0.00E+00	1.95E-09	0.00E+00	0.00E+00	0.00E+00	1.47E-07	2.07E-05	0.00E+00	6.30E-09	0.00E+00	0.00E+00	8.29E-07	0.00E+00	0.00E+00	2.07E-05
1839	ALL	748188.42	4038060.7	NonCancerChronicDerive	0.00E+00	1.96E-09	0.00E+00	0.00E+00	0.00E+00	1.48E-07	2.08E-05	0.00E+00	6.34E-09	0.00E+00	0.00E+00	8.34E-07	0.00E+00	0.00E+00	2.08E-05
1840	ALL	749888.42	4038060.7	NonCancerChronicDerive	0.00E+00	6.34E-09	0.00E+00	0.00E+00	0.00E+00	4.19E-07	5.98E-05	0.00E+00	2.05E-08	0.00E+00	0.00E+00	2.70E-06	0.00E+00	0.00E+00	5.98E-05
1841	ALL	749988.42	4038060.7	NonCancerChronicDerive	0.00E+00	6.50E-09	0.00E+00	0.00E+00	0.00E+00	4.31E-07	6.14E-05	0.00E+00	2.11E-08	0.00E+00	0.00E+00	2.77E-06	0.00E+00	0.00E+00	6.14E-05
1842	ALL	750088.42	4038060.7	NonCancerChronicDerive	0.00E+00	6.64E-09	0.00E+00	0.00E+00	0.00E+00	4.42E-07	6.28E-05	0.00E+00	2.15E-08	0.00E+00	0.00E+00	2.83E-06	0.00E+00	0.00E+00	6.28E-05
1843	ALL	750188.42	4038060.7	NonCancerChronicDerive	0.00E+00	6.76E-09	0.00E+00	0.00E+00	0.00E+00	4.52E-07	6.40E-05	0.00E+00	2.19E-08	0.00E+00	0.00E+00	2.88E-06	0.00E+00	0.00E+00	6.40E-05
1844	ALL	750288.42	4038060.7	NonCancerChronicDerive	0.00E+00	6.85E-09	0.00E+00	0.00E+00	0.00E+00	4.60E-07	6.50E-05	0.00E+00	2.22E-08	0.00E+00	0.00E+00	2.92E-06	0.00E+00	0.00E+00	6.50E-05
1845	ALL	750388.42	4038060.7	NonCancerChronicDerive	0.00E+00	6.93E-09	0.00E+00	0.00E+00	0.00E+00	4.66E-07	6.58E-05	0.00E+00	2.24E-08	0.00E+00	0.00E+00	2.95E-06	0.00E+00	0.00E+00	6.58E-05
1846	ALL	750488.42	4038060.7	NonCancerChronicDerive	0.00E+00	6.98E-09	0.00E+00	0.00E+00	0.00E+00	4.71E-07	6.64E-05	0.00E+00	2.26E-08	0.00E+00	0.00E+00	2.97E-06	0.00E+00	0.00E+00	6.64E-05
1847	ALL	750588.42	4038060.7	NonCancerChronicDerive	0.00E+00	7.00E-09	0.00E+00	0.00E+00	0.00E+00	4.74E-07	6.68E-05	0.00E+00	2.27E-08	0.00E+00	0.00E+00	2.98E-06	0.00E+00	0.00E+00	6.68E-05
1848	ALL	750688.42	4038060.7	NonCancerChronicDerive	0.00E+00	6.99E-09	0.00E+00	0.00E+00	0.00E+00	4.75E-07	6.68E-05	0.00E+00	2.26E-08	0.00E+00	0.00E+00	2.98E-06	0.00E+00	0.00E+00	6.68E-05
1849	ALL	750788.42	4038060.7	NonCancerChronicDerive	0.00E+00	6.96E-09	0.00E+00	0.00E+00	0.00E+00	4.74E-07	6.66E-05	0.00E+00	2.25E-08	0.00E+00	0.00E+00	2.96E-06	0.00E+00	0.00E+00	6.66E-05
1850	ALL	750888.42	4038060.7	NonCancerChronicDerive	0.00E+00	6.90E-09	0.00E+00	0.00E+00	0.00E+00	4.72E-07	6.61E-05	0.00E+00	2.23E-08	0.00E+00	0.00E+00	2.94E-06	0.00E+00	0.00E+00	6.61E-05
1851	ALL	750988.42	4038060.7	NonCancerChronicDerive	0.00E+00	6.81E-09	0.00E+00	0.00E+00	0.00E+00	4.67E-07	6.54E-05	0.00E+00	2.21E-08	0.00E+00	0.00E+00	2.90E-06	0.00E+00	0.00E+00	6.54E-05
1852	ALL	751088.42	4038060.7	NonCancerChronicDerive	0.00E+00	6.71E-09	0.00E+00	0.00E+00	0.00E+00	4.61E-07	6.45E-05	0.00E+00	2.17E-08	0.00E+00	0.00E+00	2.85E-06	0.00E+00	0.00E+00	6.45E-05
1853	ALL	751188.42	4038060.7	NonCancerChronicDerive	0.00E+00	6.58E-09	0.00E+00	0.00E+00	0.00E+00	4.54E-07	6.34E-05	0.00E+00	2.13E-08	0.00E+00	0.00E+00	2.80E-06	0.00E+00	0.00E+00	6.34E-05

1854	ALL	751288.42	4038060.7	NonCancerChronicDerive	0.00E+00	6.44E-09	0.00E+00	0.00E+00	0.00E+00	4.46E-07	6.22E-05	0.00E+00	2.08E-08	0.00E+00	0.00E+00	2.74E-06	0.00E+00	0.00E+00	6.22E-05
1855	ALL	751388.42	4038060.7	NonCancerChronicDerive	0.00E+00	6.28E-09	0.00E+00	0.00E+00	0.00E+00	4.36E-07	6.08E-05	0.00E+00	2.03E-08	0.00E+00	0.00E+00	2.67E-06	0.00E+00	0.00E+00	6.08E-05
1856	ALL	752388.42	4038060.7	NonCancerChronicDerive	0.00E+00	4.46E-09	0.00E+00	0.00E+00	0.00E+00	3.20E-07	4.41E-05	0.00E+00	1.44E-08	0.00E+00	0.00E+00	1.90E-06	0.00E+00	0.00E+00	4.41E-05
1857	ALL	752488.42	4038060.7	NonCancerChronicDerive	0.00E+00	4.29E-09	0.00E+00	0.00E+00	0.00E+00	3.08E-07	4.25E-05	0.00E+00	1.39E-08	0.00E+00	0.00E+00	1.83E-06	0.00E+00	0.00E+00	4.25E-05
1858	ALL	752588.42	4038060.7	NonCancerChronicDerive	0.00E+00	4.13E-09	0.00E+00	0.00E+00	0.00E+00	2.97E-07	4.10E-05	0.00E+00	1.34E-08	0.00E+00	0.00E+00	1.76E-06	0.00E+00	0.00E+00	4.10E-05
1859	ALL	752688.42	4038060.7	NonCancerChronicDerive	0.00E+00	3.98E-09	0.00E+00	0.00E+00	0.00E+00	2.86E-07	3.95E-05	0.00E+00	1.29E-08	0.00E+00	0.00E+00	1.69E-06	0.00E+00	0.00E+00	3.95E-05
1860	ALL	754788.42	4038060.7	NonCancerChronicDerive	0.00E+00	2.09E-09	0.00E+00	0.00E+00	0.00E+00	1.47E-07	2.05E-05	0.00E+00	6.75E-09	0.00E+00	0.00E+00	8.88E-07	0.00E+00	0.00E+00	2.05E-05
1861	ALL	754888.42	4038060.7	NonCancerChronicDerive	0.00E+00	2.04E-09	0.00E+00	0.00E+00	0.00E+00	1.43E-07	2.00E-05	0.00E+00	6.59E-09	0.00E+00	0.00E+00	8.67E-07	0.00E+00	0.00E+00	2.00E-05
1862	ALL	754988.42	4038060.7	NonCancerChronicDerive	0.00E+00	1.99E-09	0.00E+00	0.00E+00	0.00E+00	1.40E-07	1.95E-05	0.00E+00	6.44E-09	0.00E+00	0.00E+00	8.47E-07	0.00E+00	0.00E+00	1.95E-05
1863	ALL	755088.42	4038060.7	NonCancerChronicDerive	0.00E+00	1.94E-09	0.00E+00	0.00E+00	0.00E+00	1.36E-07	1.91E-05	0.00E+00	6.29E-09	0.00E+00	0.00E+00	8.27E-07	0.00E+00	0.00E+00	1.91E-05
1864	ALL	755188.42	4038060.7	NonCancerChronicDerive	0.00E+00	1.90E-09	0.00E+00	0.00E+00	0.00E+00	1.33E-07	1.86E-05	0.00E+00	6.15E-09	0.00E+00	0.00E+00	8.08E-07	0.00E+00	0.00E+00	1.86E-05
1865	ALL	755288.42	4038060.7	NonCancerChronicDerive	0.00E+00	1.86E-09	0.00E+00	0.00E+00	0.00E+00	1.30E-07	1.82E-05	0.00E+00	6.01E-09	0.00E+00	0.00E+00	7.90E-07	0.00E+00	0.00E+00	1.82E-05
1866	ALL	747888.42	4038160.7	NonCancerChronicDerive	0.00E+00	1.92E-09	0.00E+00	0.00E+00	0.00E+00	1.44E-07	2.05E-05	0.00E+00	6.22E-09	0.00E+00	0.00E+00	8.17E-07	0.00E+00	0.00E+00	2.05E-05
1867	ALL	747988.42	4038160.7	NonCancerChronicDerive	0.00E+00	1.96E-09	0.00E+00	0.00E+00	0.00E+00	1.47E-07	2.08E-05	0.00E+00	6.34E-09	0.00E+00	0.00E+00	8.34E-07	0.00E+00	0.00E+00	2.08E-05
1868	ALL	748088.42	4038160.7	NonCancerChronicDerive	0.00E+00	1.98E-09	0.00E+00	0.00E+00	0.00E+00	1.48E-07	2.10E-05	0.00E+00	6.42E-09	0.00E+00	0.00E+00	8.43E-07	0.00E+00	0.00E+00	2.10E-05
1869	ALL	748188.42	4038160.7	NonCancerChronicDerive	0.00E+00	2.00E-09	0.00E+00	0.00E+00	0.00E+00	1.49E-07	2.11E-05	0.00E+00	6.47E-09	0.00E+00	0.00E+00	8.51E-07	0.00E+00	0.00E+00	2.11E-05
1870	ALL	749888.42	4038160.7	NonCancerChronicDerive	0.00E+00	6.83E-09	0.00E+00	0.00E+00	0.00E+00	4.50E-07	6.42E-05	0.00E+00	2.21E-08	0.00E+00	0.00E+00	2.91E-06	0.00E+00	0.00E+00	6.42E-05
1871	ALL	749988.42	4038160.7	NonCancerChronicDerive	0.00E+00	7.00E-09	0.00E+00	0.00E+00	0.00E+00	4.64E-07	6.60E-05	0.00E+00	2.27E-08	0.00E+00	0.00E+00	2.98E-06	0.00E+00	0.00E+00	6.60E-05
1872	ALL	750088.42	4038160.7	NonCancerChronicDerive	0.00E+00	7.15E-09	0.00E+00	0.00E+00	0.00E+00	4.75E-07	6.75E-05	0.00E+00	2.31E-08	0.00E+00	0.00E+00	3.04E-06	0.00E+00	0.00E+00	6.75E-05
1873	ALL	750188.42	4038160.7	NonCancerChronicDerive	0.00E+00	7.26E-09	0.00E+00	0.00E+00	0.00E+00	4.85E-07	6.87E-05	0.00E+00	2.35E-08	0.00E+00	0.00E+00	3.09E-06	0.00E+00	0.00E+00	6.87E-05
1874	ALL	750288.42	4038160.7	NonCancerChronicDerive	0.00E+00	7.35E-09	0.00E+00	0.00E+00	0.00E+00	4.93E-07	6.97E-05	0.00E+00	2.38E-08	0.00E+00	0.00E+00	3.13E-06	0.00E+00	0.00E+00	6.97E-05
1875	ALL	750388.42	4038160.7	NonCancerChronicDerive	0.00E+00	7.41E-09	0.00E+00	0.00E+00	0.00E+00	4.99E-07	7.04E-05	0.00E+00	2.40E-08	0.00E+00	0.00E+00	3.15E-06	0.00E+00	0.00E+00	7.04E-05
1876	ALL	750488.42	4038160.7	NonCancerChronicDerive	0.00E+00	7.44E-09	0.00E+00	0.00E+00	0.00E+00	5.02E-07	7.08E-05	0.00E+00	2.41E-08	0.00E+00	0.00E+00	3.16E-06	0.00E+00	0.00E+00	7.08E-05
1877	ALL	750588.42	4038160.7	NonCancerChronicDerive	0.00E+00	7.43E-09	0.00E+00	0.00E+00	0.00E+00	5.04E-07	7.09E-05	0.00E+00	2.41E-08	0.00E+00	0.00E+00	3.16E-06	0.00E+00	0.00E+00	7.09E-05
1878	ALL	750688.42	4038160.7	NonCancerChronicDerive	0.00E+00	7.39E-09	0.00E+00	0.00E+00	0.00E+00	5.03E-07	7.07E-05	0.00E+00	2.39E-08	0.00E+00	0.00E+00	3.15E-06	0.00E+00	0.00E+00	7.07E-05
1879	ALL	750788.42	4038160.7	NonCancerChronicDerive	0.00E+00	7.32E-09	0.00E+00	0.00E+00	0.00E+00	5.00E-07	7.01E-05	0.00E+00	2.37E-08	0.00E+00	0.00E+00	3.12E-06	0.00E+00	0.00E+00	7.01E-05
1880	ALL	750888.42	4038160.7	NonCancerChronicDerive	0.00E+00	7.22E-09	0.00E+00	0.00E+00	0.00E+00	4.95E-07	6.93E-05	0.00E+00	2.34E-08	0.00E+00	0.00E+00	3.07E-06	0.00E+00	0.00E+00	6.93E-05
1881	ALL	750988.42	4038160.7	NonCancerChronicDerive	0.00E+00	7.10E-09	0.00E+00	0.00E+00	0.00E+00	4.88E-07	6.82E-05	0.00E+00	2.30E-08	0.00E+00	0.00E+00	3.02E-06	0.00E+00	0.00E+00	6.82E-05
1882	ALL	751088.42	4038160.7	NonCancerChronicDerive	0.00E+00	6.95E-09	0.00E+00	0.00E+00	0.00E+00	4.80E-07	6.70E-05	0.00E+00	2.25E-08	0.00E+00	0.00E+00	2.96E-06	0.00E+00	0.00E+00	6.70E-05
1883	ALL	751188.42	4038160.7	NonCancerChronicDerive	0.00E+00	6.78E-09	0.00E+00	0.00E+00	0.00E+00	4.70E-07	6.55E-05	0.00E+00	2.19E-08	0.00E+00	0.00E+00	2.88E-06	0.00E+00	0.00E+00	6.55E-05
1884	ALL	751288.42	4038160.7	NonCancerChronicDerive	0.00E+00	6.60E-09	0.00E+00	0.00E+00	0.00E+00	4.59E-07	6.39E-05	0.00E+00	2.14E-08	0.00E+00	0.00E+00	2.81E-06	0.00E+00	0.00E+00	6.39E-05
1885	ALL	751388.42	4038160.7	NonCancerChronicDerive	0.00E+00	6.40E-09	0.00E+00	0.00E+00	0.00E+00	4.48E-07	6.22E-05	0.00E+00	2.07E-08	0.00E+00	0.00E+00	2.72E-06	0.00E+00	0.00E+00	6.22E-05
1886	ALL	751488.42	4038160.7	NonCancerChronicDerive	0.00E+00	6.20E-09	0.00E+00	0.00E+00	0.00E+00	4.35E-07	6.04E-05	0.00E+00	2.01E-08	0.00E+00	0.00E+00	2.64E-06	0.00E+00	0.00E+00	6.04E-05
1887	ALL	751588.42	4038160.7	NonCancerChronicDerive	0.00E+00	5.99E-09	0.00E+00	0.00E+00	0.00E+00	4.22E-07	5.86E-05	0.00E+00	1.94E-08	0.00E+00	0.00E+00	2.55E-06	0.00E+00	0.00E+00	5.86E-05
1888	ALL	751688.42	4038160.7	NonCancerChronicDerive	0.00E+00	5.78E-09	0.00E+00	0.00E+00	0.00E+00	4.09E-07	5.67E-05	0.00E+00	1.87E-08	0.00E+00	0.00E+00	2.46E-06	0.00E+00	0.00E+00	5.67E-05
1889	ALL	751788.42	4038160.7	NonCancerChronicDerive	0.00E+00	5.57E-09	0.00E+00	0.00E+00	0.00E+00	3.96E-07	5.48E-05	0.00E+00	1.80E-08	0.00E+00	0.00E+00	2.37E-06	0.00E+00	0.00E+00	5.48E-05
1890	ALL	751888.42	4038160.7	NonCancerChronicDerive	0.00E+00	5.36E-09	0.00E+00	0.00E+00	0.00E+00	3.82E-07	5.28E-05	0.00E+00	1.74E-08	0.00E+00	0.00E+00	2.28E-06	0.00E+00	0.00E+00	5.28E-05
1891	ALL	751988.42	4038160.7	NonCancerChronicDerive	0.00E+00	5.15E-09	0.00E+00	0.00E+00	0.00E+00	3.69E-07	5.09E-05	0.00E+00	1.67E-08	0.00E+00	0.00E+00	2.19E-06	0.00E+00	0.00E+00	5.09E-05
1892	ALL	752088.42	4038160.7	NonCancerChronicDerive	0.00E+00	4.95E-09	0.00E+00	0.00E+00	0.00E+00	3.55E-07	4.90E-05	0.00E+00	1.60E-08	0.00E+00	0.00E+00	2.11E-06	0.00E+00	0.00E+00	4.90E-05
1893	ALL	752188.42	4038160.7	NonCancerChronicDerive	0.00E+00	4.76E-09	0.00E+00	0.00E+00	0.00E+00	3.42E-07	4.72E-05	0.00E+00	1.54E-08	0.00E+00	0.00E+00	2.03E-06	0.00E+00	0.00E+00	4.72E-05
1894	ALL	752288.42	4038160.7	NonCancerChronicDerive	0.00E+00	4.57E-09	0.00E+00	0.00E+00	0.00E+00	3.30E-07	4.54E-05	0.00E+00	1.48E-08	0.00E+00	0.00E+00	1.95E-06	0.00E+00	0.00E+00	4.54E-05
1895	ALL	752388.42	4038160.7	NonCancerChronicDerive	0.00E+00	4.39E-09	0.00E+00	0.00E+00	0.00E+00	3.17E-07	4.37E-05	0.00E+00	1.42E-08	0.00E+00	0.00E+00	1.87E-06	0.00E+00	0.00E+00	4.37E-05
1896	ALL	752488.42	4038160.7	NonCancerChronicDerive	0.00E+00	4.22E-09	0.00E+00	0.00E+00	0.00E+00	3.05E-07	4.20E-05	0.00E+00	1.37E-08	0.00E+00	0.00E+00	1.80E-06	0.00E+00	0.00E+00	4.20E-05
1897	ALL	752588.42	4038160.7	NonCancerChronicDerive	0.00E+00	4.06E-09	0.00E+00	0.00E+00	0.00E+00	2.93E-07	4.04E-05	0.00E+00	1.31E-08	0.00E+00	0.00E+00	1.73E-06	0.00E+00	0.00E+00	4.04E-05
1898	ALL	752688.42	4038160.7	NonCancerChronicDerive	0.00E+00	3.91E-09	0.00E+00	0.00E+00	0.00E+00	2.82E-07	3.89E-05	0.00E+00	1.26E-08	0.00E+00	0.00E+00	1.66E-06	0.00E+00	0.00E+00	3.89E-05
1899	ALL	754788.42	4038160.7	NonCancerChronicDerive	0.00E+00	2.05E-09	0.00E+00	0.00E+00	0.00E+00	1.44E-07	2.01E-05	0.00E+00	6.62E-09	0.00E+00	0.00E+00	8.71E-07	0.00E+00	0.00E+00	2.01E-05
1900	ALL	754888.42	4038160.7	NonCancerChronicDerive	0.00E+00	2.00E-09	0.00E+00	0.00E+00	0.00E+00	1.40E-07	1.96E-05	0.00E+00	6.47E-09	0.00E+00	0.00E+00	8.50E-07	0.00E+00	0.00E+00	1.96E-05
1901	ALL	754988.42	4038160.7	NonCancerChronicDerive	0.00E+00	1.95E-09	0.00E+00	0.00E+00	0.00E+00	1.37E-07	1.92E-05	0.00E+00	6.31E-09	0.00E+00	0.00E+00	8.30E-07	0.00E+00	0.00E+00	1.92E-05
1902	ALL	755088.42	4038160.7	NonCancerChronicDerive	0.00E+00	1.91E-09	0.00E+00	0.00E+00	0.00E+00	1.34E-07	1.87E-05	0.00E+00	6.17E-09	0.00E+00	0.00E+00	8.11E-07	0.00E+00	0.00E+00	1.87E-05
1903	ALL	755188.42	4038160.7	NonCancerChronicDerive	0.00E+00	1.86E-09	0.00E+00	0.00E+00	0.00E+00	1.30E-07	1.83E-05	0.00E+00	6.03E-09	0.00E+00	0.00E+00	7.92E-07	0.00E+00	0.00E+00	1.83E-05
1904	ALL	755288.42	4038160.7	NonCancerChronicDerive	0.00E+00	1.82E-09	0.00E+00	0.00E+00	0.00E+00	1.27E-07	1.79E-05	0.00E+00	5.89E-09	0.00E+00	0.00E+00	7.74E-07	0.00E+00	0.00E+00	1.79E-05
1905	ALL	747888.42	4038260.7	NonCancerChronicDerive	0.00E+00	1.93E-09	0.00E+00	0.00E+00	0.00E+00	1.45E-07	2.05E-05	0.00E+00	6.25E-09	0.00E+00	0.00E+00	8.22E-07	0.00E+00	0.00E+00	2.05E-05
1906	ALL	747988.42	4038260.7	NonCancerChronicDerive	0.00E+00	1.99E-09	0.00E+00	0.00E+00	0.00E+00	1.48E-07	2.10E-05	0.00E+00	6.43E-09	0.00E+00	0.00E+00	8.46E-07	0.00E+00	0.00E+00	2.10E-05

1907	ALL	748088.42	4038260.7	NonCancerChronicDerive	0.00E+00	2.02E-09	0.00E+00	0.00E+00	0.00E+00	1.50E-07	2.13E-05	0.00E+00	6.55E-09	0.00E+00	0.00E+00	8.60E-07	0.00E+00	0.00E+00	2.13E-05
1908	ALL	748188.42	4038260.7	NonCancerChronicDerive	0.00E+00	2.05E-09	0.00E+00	0.00E+00	0.00E+00	1.52E-07	2.15E-05	0.00E+00	6.63E-09	0.00E+00	0.00E+00	8.71E-07	0.00E+00	0.00E+00	2.15E-05
1909	ALL	749888.42	4038260.7	NonCancerChronicDerive	0.00E+00	7.40E-09	0.00E+00	0.00E+00	0.00E+00	4.87E-07	6.94E-05	0.00E+00	2.40E-08	0.00E+00	0.00E+00	3.15E-06	0.00E+00	0.00E+00	6.94E-05
1910	ALL	749988.42	4038260.7	NonCancerChronicDerive	0.00E+00	7.57E-09	0.00E+00	0.00E+00	0.00E+00	5.01E-07	7.12E-05	0.00E+00	2.45E-08	0.00E+00	0.00E+00	3.22E-06	0.00E+00	0.00E+00	7.12E-05
1911	ALL	750088.42	4038260.7	NonCancerChronicDerive	0.00E+00	7.72E-09	0.00E+00	0.00E+00	0.00E+00	5.13E-07	7.28E-05	0.00E+00	2.50E-08	0.00E+00	0.00E+00	3.28E-06	0.00E+00	0.00E+00	7.28E-05
1912	ALL	750188.42	4038260.7	NonCancerChronicDerive	0.00E+00	7.83E-09	0.00E+00	0.00E+00	0.00E+00	5.22E-07	7.40E-05	0.00E+00	2.53E-08	0.00E+00	0.00E+00	3.33E-06	0.00E+00	0.00E+00	7.40E-05
1913	ALL	750288.42	4038260.7	NonCancerChronicDerive	0.00E+00	7.90E-09	0.00E+00	0.00E+00	0.00E+00	5.30E-07	7.49E-05	0.00E+00	2.56E-08	0.00E+00	0.00E+00	3.36E-06	0.00E+00	0.00E+00	7.49E-05
1914	ALL	750388.42	4038260.7	NonCancerChronicDerive	0.00E+00	7.93E-09	0.00E+00	0.00E+00	0.00E+00	5.34E-07	7.53E-05	0.00E+00	2.57E-08	0.00E+00	0.00E+00	3.38E-06	0.00E+00	0.00E+00	7.53E-05
1915	ALL	750488.42	4038260.7	NonCancerChronicDerive	0.00E+00	7.92E-09	0.00E+00	0.00E+00	0.00E+00	5.36E-07	7.55E-05	0.00E+00	2.57E-08	0.00E+00	0.00E+00	3.37E-06	0.00E+00	0.00E+00	7.55E-05
1916	ALL	750588.42	4038260.7	NonCancerChronicDerive	0.00E+00	7.88E-09	0.00E+00	0.00E+00	0.00E+00	5.36E-07	7.52E-05	0.00E+00	2.55E-08	0.00E+00	0.00E+00	3.35E-06	0.00E+00	0.00E+00	7.52E-05
1917	ALL	750688.42	4038260.7	NonCancerChronicDerive	0.00E+00	7.80E-09	0.00E+00	0.00E+00	0.00E+00	5.32E-07	7.46E-05	0.00E+00	2.52E-08	0.00E+00	0.00E+00	3.32E-06	0.00E+00	0.00E+00	7.46E-05
1918	ALL	750788.42	4038260.7	NonCancerChronicDerive	0.00E+00	7.68E-09	0.00E+00	0.00E+00	0.00E+00	5.26E-07	7.37E-05	0.00E+00	2.49E-08	0.00E+00	0.00E+00	3.27E-06	0.00E+00	0.00E+00	7.37E-05
1919	ALL	750888.42	4038260.7	NonCancerChronicDerive	0.00E+00	7.53E-09	0.00E+00	0.00E+00	0.00E+00	5.18E-07	7.24E-05	0.00E+00	2.44E-08	0.00E+00	0.00E+00	3.21E-06	0.00E+00	0.00E+00	7.24E-05
1920	ALL	750988.42	4038260.7	NonCancerChronicDerive	0.00E+00	7.36E-09	0.00E+00	0.00E+00	0.00E+00	5.08E-07	7.10E-05	0.00E+00	2.38E-08	0.00E+00	0.00E+00	3.13E-06	0.00E+00	0.00E+00	7.10E-05
1921	ALL	751088.42	4038260.7	NonCancerChronicDerive	0.00E+00	7.16E-09	0.00E+00	0.00E+00	0.00E+00	4.97E-07	6.93E-05	0.00E+00	2.32E-08	0.00E+00	0.00E+00	3.05E-06	0.00E+00	0.00E+00	6.93E-05
1922	ALL	751188.42	4038260.7	NonCancerChronicDerive	0.00E+00	6.95E-09	0.00E+00	0.00E+00	0.00E+00	4.85E-07	6.74E-05	0.00E+00	2.25E-08	0.00E+00	0.00E+00	2.96E-06	0.00E+00	0.00E+00	6.74E-05
1923	ALL	751288.42	4038260.7	NonCancerChronicDerive	0.00E+00	6.73E-09	0.00E+00	0.00E+00	0.00E+00	4.71E-07	6.55E-05	0.00E+00	2.18E-08	0.00E+00	0.00E+00	2.86E-06	0.00E+00	0.00E+00	6.55E-05
1924	ALL	751388.42	4038260.7	NonCancerChronicDerive	0.00E+00	6.49E-09	0.00E+00	0.00E+00	0.00E+00	4.57E-07	6.34E-05	0.00E+00	2.10E-08	0.00E+00	0.00E+00	2.76E-06	0.00E+00	0.00E+00	6.34E-05
1925	ALL	751488.42	4038260.7	NonCancerChronicDerive	0.00E+00	6.26E-09	0.00E+00	0.00E+00	0.00E+00	4.43E-07	6.13E-05	0.00E+00	2.03E-08	0.00E+00	0.00E+00	2.66E-06	0.00E+00	0.00E+00	6.13E-05
1926	ALL	751588.42	4038260.7	NonCancerChronicDerive	0.00E+00	6.02E-09	0.00E+00	0.00E+00	0.00E+00	4.28E-07	5.91E-05	0.00E+00	1.95E-08	0.00E+00	0.00E+00	2.56E-06	0.00E+00	0.00E+00	5.91E-05
1927	ALL	751688.42	4038260.7	NonCancerChronicDerive	0.00E+00	5.78E-09	0.00E+00	0.00E+00	0.00E+00	4.13E-07	5.70E-05	0.00E+00	1.87E-08	0.00E+00	0.00E+00	2.46E-06	0.00E+00	0.00E+00	5.70E-05
1928	ALL	751788.42	4038260.7	NonCancerChronicDerive	0.00E+00	5.55E-09	0.00E+00	0.00E+00	0.00E+00	3.98E-07	5.49E-05	0.00E+00	1.80E-08	0.00E+00	0.00E+00	2.36E-06	0.00E+00	0.00E+00	5.49E-05
1929	ALL	751888.42	4038260.7	NonCancerChronicDerive	0.00E+00	5.32E-09	0.00E+00	0.00E+00	0.00E+00	3.83E-07	5.28E-05	0.00E+00	1.72E-08	0.00E+00	0.00E+00	2.27E-06	0.00E+00	0.00E+00	5.28E-05
1930	ALL	751988.42	4038260.7	NonCancerChronicDerive	0.00E+00	5.10E-09	0.00E+00	0.00E+00	0.00E+00	3.68E-07	5.07E-05	0.00E+00	1.65E-08	0.00E+00	0.00E+00	2.17E-06	0.00E+00	0.00E+00	5.07E-05
1931	ALL	752088.42	4038260.7	NonCancerChronicDerive	0.00E+00	4.89E-09	0.00E+00	0.00E+00	0.00E+00	3.54E-07	4.87E-05	0.00E+00	1.58E-08	0.00E+00	0.00E+00	2.08E-06	0.00E+00	0.00E+00	4.87E-05
1932	ALL	752188.42	4038260.7	NonCancerChronicDerive	0.00E+00	4.69E-09	0.00E+00	0.00E+00	0.00E+00	3.40E-07	4.68E-05	0.00E+00	1.52E-08	0.00E+00	0.00E+00	2.00E-06	0.00E+00	0.00E+00	4.68E-05
1933	ALL	752288.42	4038260.7	NonCancerChronicDerive	0.00E+00	4.50E-09	0.00E+00	0.00E+00	0.00E+00	3.27E-07	4.49E-05	0.00E+00	1.46E-08	0.00E+00	0.00E+00	1.92E-06	0.00E+00	0.00E+00	4.49E-05
1934	ALL	752388.42	4038260.7	NonCancerChronicDerive	0.00E+00	4.32E-09	0.00E+00	0.00E+00	0.00E+00	3.14E-07	4.31E-05	0.00E+00	1.40E-08	0.00E+00	0.00E+00	1.84E-06	0.00E+00	0.00E+00	4.31E-05
1935	ALL	752488.42	4038260.7	NonCancerChronicDerive	0.00E+00	4.15E-09	0.00E+00	0.00E+00	0.00E+00	3.01E-07	4.14E-05	0.00E+00	1.34E-08	0.00E+00	0.00E+00	1.76E-06	0.00E+00	0.00E+00	4.14E-05
1936	ALL	752588.42	4038260.7	NonCancerChronicDerive	0.00E+00	3.98E-09	0.00E+00	0.00E+00	0.00E+00	2.89E-07	3.98E-05	0.00E+00	1.29E-08	0.00E+00	0.00E+00	1.70E-06	0.00E+00	0.00E+00	3.98E-05
1937	ALL	752688.42	4038260.7	NonCancerChronicDerive	0.00E+00	3.83E-09	0.00E+00	0.00E+00	0.00E+00	2.78E-07	3.83E-05	0.00E+00	1.24E-08	0.00E+00	0.00E+00	1.63E-06	0.00E+00	0.00E+00	3.83E-05
1938	ALL	754788.42	4038260.7	NonCancerChronicDerive	0.00E+00	2.01E-09	0.00E+00	0.00E+00	0.00E+00	1.41E-07	1.97E-05	0.00E+00	6.49E-09	0.00E+00	0.00E+00	8.53E-07	0.00E+00	0.00E+00	1.97E-05
1939	ALL	754888.42	4038260.7	NonCancerChronicDerive	0.00E+00	1.96E-09	0.00E+00	0.00E+00	0.00E+00	1.38E-07	1.93E-05	0.00E+00	6.33E-09	0.00E+00	0.00E+00	8.33E-07	0.00E+00	0.00E+00	1.93E-05
1940	ALL	754988.42	4038260.7	NonCancerChronicDerive	0.00E+00	1.91E-09	0.00E+00	0.00E+00	0.00E+00	1.34E-07	1.88E-05	0.00E+00	6.19E-09	0.00E+00	0.00E+00	8.13E-07	0.00E+00	0.00E+00	1.88E-05
1941	ALL	755088.42	4038260.7	NonCancerChronicDerive	0.00E+00	1.87E-09	0.00E+00	0.00E+00	0.00E+00	1.31E-07	1.84E-05	0.00E+00	6.04E-09	0.00E+00	0.00E+00	7.94E-07	0.00E+00	0.00E+00	1.84E-05
1942	ALL	755188.42	4038260.7	NonCancerChronicDerive	0.00E+00	1.82E-09	0.00E+00	0.00E+00	0.00E+00	1.28E-07	1.79E-05	0.00E+00	5.90E-09	0.00E+00	0.00E+00	7.76E-07	0.00E+00	0.00E+00	1.79E-05
1943	ALL	755288.42	4038260.7	NonCancerChronicDerive	0.00E+00	1.78E-09	0.00E+00	0.00E+00	0.00E+00	1.25E-07	1.75E-05	0.00E+00	5.77E-09	0.00E+00	0.00E+00	7.59E-07	0.00E+00	0.00E+00	1.75E-05
1944	ALL	747888.42	4038360.7	NonCancerChronicDerive	0.00E+00	1.94E-09	0.00E+00	0.00E+00	0.00E+00	1.45E-07	2.06E-05	0.00E+00	6.29E-09	0.00E+00	0.00E+00	8.27E-07	0.00E+00	0.00E+00	2.06E-05
1945	ALL	747988.42	4038360.7	NonCancerChronicDerive	0.00E+00	2.02E-09	0.00E+00	0.00E+00	0.00E+00	1.50E-07	2.13E-05	0.00E+00	6.53E-09	0.00E+00	0.00E+00	8.59E-07	0.00E+00	0.00E+00	2.13E-05
1946	ALL	748088.42	4038360.7	NonCancerChronicDerive	0.00E+00	2.07E-09	0.00E+00	0.00E+00	0.00E+00	1.53E-07	2.17E-05	0.00E+00	6.69E-09	0.00E+00	0.00E+00	8.80E-07	0.00E+00	0.00E+00	2.17E-05
1947	ALL	748188.42	4038360.7	NonCancerChronicDerive	0.00E+00	2.10E-09	0.00E+00	0.00E+00	0.00E+00	1.55E-07	2.20E-05	0.00E+00	6.80E-09	0.00E+00	0.00E+00	8.94E-07	0.00E+00	0.00E+00	2.20E-05
1948	ALL	749888.42	4038360.7	NonCancerChronicDerive	0.00E+00	8.06E-09	0.00E+00	0.00E+00	0.00E+00	5.29E-07	7.54E-05	0.00E+00	2.61E-08	0.00E+00	0.00E+00	3.43E-06	0.00E+00	0.00E+00	7.54E-05
1949	ALL	749988.42	4038360.7	NonCancerChronicDerive	0.00E+00	8.23E-09	0.00E+00	0.00E+00	0.00E+00	5.43E-07	7.73E-05	0.00E+00	2.66E-08	0.00E+00	0.00E+00	3.50E-06	0.00E+00	0.00E+00	7.73E-05
1950	ALL	750088.42	4038360.7	NonCancerChronicDerive	0.00E+00	8.36E-09	0.00E+00	0.00E+00	0.00E+00	5.55E-07	7.88E-05	0.00E+00	2.71E-08	0.00E+00	0.00E+00	3.56E-06	0.00E+00	0.00E+00	7.88E-05
1951	ALL	750188.42	4038360.7	NonCancerChronicDerive	0.00E+00	8.45E-09	0.00E+00	0.00E+00	0.00E+00	5.64E-07	7.98E-05	0.00E+00	2.74E-08	0.00E+00	0.00E+00	3.60E-06	0.00E+00	0.00E+00	7.98E-05
1952	ALL	750288.42	4038360.7	NonCancerChronicDerive	0.00E+00	8.50E-09	0.00E+00	0.00E+00	0.00E+00	5.70E-07	8.05E-05	0.00E+00	2.75E-08	0.00E+00	0.00E+00	3.62E-06	0.00E+00	0.00E+00	8.05E-05
1953	ALL	750388.42	4038360.7	NonCancerChronicDerive	0.00E+00	8.49E-09	0.00E+00	0.00E+00	0.00E+00	5.73E-07	8.07E-05	0.00E+00	2.75E-08	0.00E+00	0.00E+00	3.61E-06	0.00E+00	0.00E+00	8.07E-05
1954	ALL	750488.42	4038360.7	NonCancerChronicDerive	0.00E+00	8.43E-09	0.00E+00	0.00E+00	0.00E+00	5.72E-07	8.04E-05	0.00E+00	2.73E-08	0.00E+00	0.00E+00	3.59E-06	0.00E+00	0.00E+00	8.04E-05
1955	ALL	750588.42	4038360.7	NonCancerChronicDerive	0.00E+00	8.34E-09	0.00E+00	0.00E+00	0.00E+00	5.68E-07	7.97E-05	0.00E+00	2.70E-08	0.00E+00	0.00E+00	3.55E-06	0.00E+00	0.00E+00	7.97E-05
1956	ALL	750688.42	4038360.7	NonCancerChronicDerive	0.00E+00	8.20E-09	0.00E+00	0.00E+00	0.00E+00	5.61E-07	7.86E-05	0.00E+00	2.65E-08	0.00E+00	0.00E+00	3.49E-06	0.00E+00	0.00E+00	7.86E-05
1957	ALL	750788.42	4038360.7	NonCancerChronicDerive	0.00E+00	8.02E-09	0.00E+00	0.00E+00	0.00E+00	5.52E-07	7.72E-05	0.00E+00	2.60E-08	0.00E+00	0.00E+00	3.41E-06	0.00E+00	0.00E+00	7.72E-05
1958	ALL	750888.42	4038360.7	NonCancerChronicDerive	0.00E+00	7.82E-09	0.00E+00	0.00E+00	0.00E+00	5.41E-07	7.54E-05	0.00E+00	2.53E-08	0.00E+00	0.00E+00	3.33E-06	0.00E+00	0.00E+00	7.54E-05
1959	ALL	750988.42	4038360.7	NonCancerChronicDerive	0.00E+00	7.59E-09	0.00E+00	0.00E+00	0.00E+00	5.28E-07	7.35E-05	0.00E+00	2.46E-08	0.00E+00	0.00E+00	3.23E-06	0.00E+00	0.00E+00	7.35E-05

1960	ALL	751088.42	4038360.7	NonCancerChronicDerive	0.00E+00	7.34E-09	0.00E+00	0.00E+00	0.00E+00	5.13E-07	7.13E-05	0.00E+00	2.38E-08	0.00E+00	0.00E+00	3.12E-06	0.00E+00	0.00E+00	7.13E-05
1961	ALL	751188.42	4038360.7	NonCancerChronicDerive	0.00E+00	7.08E-09	0.00E+00	0.00E+00	0.00E+00	4.98E-07	6.90E-05	0.00E+00	2.29E-08	0.00E+00	0.00E+00	3.01E-06	0.00E+00	0.00E+00	6.90E-05
1962	ALL	751288.42	4038360.7	NonCancerChronicDerive	0.00E+00	6.81E-09	0.00E+00	0.00E+00	0.00E+00	4.82E-07	6.67E-05	0.00E+00	2.21E-08	0.00E+00	0.00E+00	2.90E-06	0.00E+00	0.00E+00	6.67E-05
1963	ALL	751388.42	4038360.7	NonCancerChronicDerive	0.00E+00	6.54E-09	0.00E+00	0.00E+00	0.00E+00	4.65E-07	6.43E-05	0.00E+00	2.12E-08	0.00E+00	0.00E+00	2.78E-06	0.00E+00	0.00E+00	6.43E-05
1964	ALL	751488.42	4038360.7	NonCancerChronicDerive	0.00E+00	6.27E-09	0.00E+00	0.00E+00	0.00E+00	4.48E-07	6.19E-05	0.00E+00	2.03E-08	0.00E+00	0.00E+00	2.67E-06	0.00E+00	0.00E+00	6.19E-05
1965	ALL	751588.42	4038360.7	NonCancerChronicDerive	0.00E+00	6.01E-09	0.00E+00	0.00E+00	0.00E+00	4.31E-07	5.94E-05	0.00E+00	1.95E-08	0.00E+00	0.00E+00	2.56E-06	0.00E+00	0.00E+00	5.94E-05
1966	ALL	751688.42	4038360.7	NonCancerChronicDerive	0.00E+00	5.75E-09	0.00E+00	0.00E+00	0.00E+00	4.15E-07	5.71E-05	0.00E+00	1.86E-08	0.00E+00	0.00E+00	2.45E-06	0.00E+00	0.00E+00	5.71E-05
1967	ALL	751788.42	4038360.7	NonCancerChronicDerive	0.00E+00	5.50E-09	0.00E+00	0.00E+00	0.00E+00	3.98E-07	5.47E-05	0.00E+00	1.78E-08	0.00E+00	0.00E+00	2.34E-06	0.00E+00	0.00E+00	5.47E-05
1968	ALL	751888.42	4038360.7	NonCancerChronicDerive	0.00E+00	5.26E-09	0.00E+00	0.00E+00	0.00E+00	3.82E-07	5.25E-05	0.00E+00	1.70E-08	0.00E+00	0.00E+00	2.24E-06	0.00E+00	0.00E+00	5.25E-05
1969	ALL	751988.42	4038360.7	NonCancerChronicDerive	0.00E+00	5.03E-09	0.00E+00	0.00E+00	0.00E+00	3.66E-07	5.03E-05	0.00E+00	1.63E-08	0.00E+00	0.00E+00	2.14E-06	0.00E+00	0.00E+00	5.03E-05
1970	ALL	752088.42	4038360.7	NonCancerChronicDerive	0.00E+00	4.82E-09	0.00E+00	0.00E+00	0.00E+00	3.51E-07	4.82E-05	0.00E+00	1.56E-08	0.00E+00	0.00E+00	2.05E-06	0.00E+00	0.00E+00	4.82E-05
1971	ALL	752188.42	4038360.7	NonCancerChronicDerive	0.00E+00	4.61E-09	0.00E+00	0.00E+00	0.00E+00	3.36E-07	4.62E-05	0.00E+00	1.49E-08	0.00E+00	0.00E+00	1.96E-06	0.00E+00	0.00E+00	4.62E-05
1972	ALL	752288.42	4038360.7	NonCancerChronicDerive	0.00E+00	4.42E-09	0.00E+00	0.00E+00	0.00E+00	3.22E-07	4.43E-05	0.00E+00	1.43E-08	0.00E+00	0.00E+00	1.88E-06	0.00E+00	0.00E+00	4.43E-05
1973	ALL	752388.42	4038360.7	NonCancerChronicDerive	0.00E+00	4.24E-09	0.00E+00	0.00E+00	0.00E+00	3.09E-07	4.25E-05	0.00E+00	1.37E-08	0.00E+00	0.00E+00	1.80E-06	0.00E+00	0.00E+00	4.25E-05
1974	ALL	752488.42	4038360.7	NonCancerChronicDerive	0.00E+00	4.06E-09	0.00E+00	0.00E+00	0.00E+00	2.97E-07	4.08E-05	0.00E+00	1.32E-08	0.00E+00	0.00E+00	1.73E-06	0.00E+00	0.00E+00	4.08E-05
1975	ALL	752588.42	4038360.7	NonCancerChronicDerive	0.00E+00	3.90E-09	0.00E+00	0.00E+00	0.00E+00	2.85E-07	3.91E-05	0.00E+00	1.26E-08	0.00E+00	0.00E+00	1.66E-06	0.00E+00	0.00E+00	3.91E-05
1976	ALL	752688.42	4038360.7	NonCancerChronicDerive	0.00E+00	3.75E-09	0.00E+00	0.00E+00	0.00E+00	2.73E-07	3.76E-05	0.00E+00	1.21E-08	0.00E+00	0.00E+00	1.60E-06	0.00E+00	0.00E+00	3.76E-05
1977	ALL	754788.42	4038360.7	NonCancerChronicDerive	0.00E+00	1.96E-09	0.00E+00	0.00E+00	0.00E+00	1.38E-07	1.94E-05	0.00E+00	6.36E-09	0.00E+00	0.00E+00	8.36E-07	0.00E+00	0.00E+00	1.94E-05
1978	ALL	754888.42	4038360.7	NonCancerChronicDerive	0.00E+00	1.92E-09	0.00E+00	0.00E+00	0.00E+00	1.35E-07	1.89E-05	0.00E+00	6.20E-09	0.00E+00	0.00E+00	8.15E-07	0.00E+00	0.00E+00	1.89E-05
1979	ALL	754988.42	4038360.7	NonCancerChronicDerive	0.00E+00	1.87E-09	0.00E+00	0.00E+00	0.00E+00	1.31E-07	1.84E-05	0.00E+00	6.06E-09	0.00E+00	0.00E+00	7.96E-07	0.00E+00	0.00E+00	1.84E-05
1980	ALL	755088.42	4038360.7	NonCancerChronicDerive	0.00E+00	1.83E-09	0.00E+00	0.00E+00	0.00E+00	1.28E-07	1.80E-05	0.00E+00	5.92E-09	0.00E+00	0.00E+00	7.78E-07	0.00E+00	0.00E+00	1.80E-05
1981	ALL	755188.42	4038360.7	NonCancerChronicDerive	0.00E+00	1.79E-09	0.00E+00	0.00E+00	0.00E+00	1.25E-07	1.76E-05	0.00E+00	5.78E-09	0.00E+00	0.00E+00	7.60E-07	0.00E+00	0.00E+00	1.76E-05
1982	ALL	755288.42	4038360.7	NonCancerChronicDerive	0.00E+00	1.75E-09	0.00E+00	0.00E+00	0.00E+00	1.22E-07	1.72E-05	0.00E+00	5.65E-09	0.00E+00	0.00E+00	7.43E-07	0.00E+00	0.00E+00	1.72E-05
1983	ALL	747888.42	4038460.7	NonCancerChronicDerive	0.00E+00	1.95E-09	0.00E+00	0.00E+00	0.00E+00	1.46E-07	2.07E-05	0.00E+00	6.32E-09	0.00E+00	0.00E+00	8.31E-07	0.00E+00	0.00E+00	2.07E-05
1984	ALL	747988.42	4038460.7	NonCancerChronicDerive	0.00E+00	2.05E-09	0.00E+00	0.00E+00	0.00E+00	1.51E-07	2.16E-05	0.00E+00	6.63E-09	0.00E+00	0.00E+00	8.71E-07	0.00E+00	0.00E+00	2.16E-05
1985	ALL	748088.42	4038460.7	NonCancerChronicDerive	0.00E+00	2.12E-09	0.00E+00	0.00E+00	0.00E+00	1.56E-07	2.22E-05	0.00E+00	6.85E-09	0.00E+00	0.00E+00	9.00E-07	0.00E+00	0.00E+00	2.22E-05
1986	ALL	748188.42	4038460.7	NonCancerChronicDerive	0.00E+00	2.16E-09	0.00E+00	0.00E+00	0.00E+00	1.59E-07	2.26E-05	0.00E+00	7.01E-09	0.00E+00	0.00E+00	9.21E-07	0.00E+00	0.00E+00	2.26E-05
1987	ALL	749888.42	4038460.7	NonCancerChronicDerive	0.00E+00	8.81E-09	0.00E+00	0.00E+00	0.00E+00	5.78E-07	8.24E-05	0.00E+00	2.85E-08	0.00E+00	0.00E+00	3.75E-06	0.00E+00	0.00E+00	8.24E-05
1988	ALL	749988.42	4038460.7	NonCancerChronicDerive	0.00E+00	8.99E-09	0.00E+00	0.00E+00	0.00E+00	5.93E-07	8.43E-05	0.00E+00	2.91E-08	0.00E+00	0.00E+00	3.82E-06	0.00E+00	0.00E+00	8.43E-05
1989	ALL	750088.42	4038460.7	NonCancerChronicDerive	0.00E+00	9.09E-09	0.00E+00	0.00E+00	0.00E+00	6.04E-07	8.56E-05	0.00E+00	2.94E-08	0.00E+00	0.00E+00	3.87E-06	0.00E+00	0.00E+00	8.56E-05
1990	ALL	750188.42	4038460.7	NonCancerChronicDerive	0.00E+00	9.14E-09	0.00E+00	0.00E+00	0.00E+00	6.10E-07	8.63E-05	0.00E+00	2.96E-08	0.00E+00	0.00E+00	3.89E-06	0.00E+00	0.00E+00	8.63E-05
1991	ALL	750288.42	4038460.7	NonCancerChronicDerive	0.00E+00	9.13E-09	0.00E+00	0.00E+00	0.00E+00	6.14E-07	8.65E-05	0.00E+00	2.96E-08	0.00E+00	0.00E+00	3.89E-06	0.00E+00	0.00E+00	8.65E-05
1992	ALL	750388.42	4038460.7	NonCancerChronicDerive	0.00E+00	9.06E-09	0.00E+00	0.00E+00	0.00E+00	6.13E-07	8.62E-05	0.00E+00	2.93E-08	0.00E+00	0.00E+00	3.86E-06	0.00E+00	0.00E+00	8.62E-05
1993	ALL	750488.42	4038460.7	NonCancerChronicDerive	0.00E+00	8.94E-09	0.00E+00	0.00E+00	0.00E+00	6.08E-07	8.54E-05	0.00E+00	2.90E-08	0.00E+00	0.00E+00	3.81E-06	0.00E+00	0.00E+00	8.54E-05
1994	ALL	750588.42	4038460.7	NonCancerChronicDerive	0.00E+00	8.77E-09	0.00E+00	0.00E+00	0.00E+00	6.00E-07	8.41E-05	0.00E+00	2.84E-08	0.00E+00	0.00E+00	3.73E-06	0.00E+00	0.00E+00	8.41E-05
1995	ALL	750688.42	4038460.7	NonCancerChronicDerive	0.00E+00	8.57E-09	0.00E+00	0.00E+00	0.00E+00	5.90E-07	8.24E-05	0.00E+00	2.77E-08	0.00E+00	0.00E+00	3.65E-06	0.00E+00	0.00E+00	8.24E-05
1996	ALL	750788.42	4038460.7	NonCancerChronicDerive	0.00E+00	8.33E-09	0.00E+00	0.00E+00	0.00E+00	5.77E-07	8.04E-05	0.00E+00	2.70E-08	0.00E+00	0.00E+00	3.54E-06	0.00E+00	0.00E+00	8.04E-05
1997	ALL	750888.42	4038460.7	NonCancerChronicDerive	0.00E+00	8.06E-09	0.00E+00	0.00E+00	0.00E+00	5.61E-07	7.81E-05	0.00E+00	2.61E-08	0.00E+00	0.00E+00	3.43E-06	0.00E+00	0.00E+00	7.81E-05
1998	ALL	750988.42	4038460.7	NonCancerChronicDerive	0.00E+00	7.77E-09	0.00E+00	0.00E+00	0.00E+00	5.45E-07	7.56E-05	0.00E+00	2.52E-08	0.00E+00	0.00E+00	3.31E-06	0.00E+00	0.00E+00	7.56E-05
1999	ALL	751088.42	4038460.7	NonCancerChronicDerive	0.00E+00	7.47E-09	0.00E+00	0.00E+00	0.00E+00	5.27E-07	7.30E-05	0.00E+00	2.42E-08	0.00E+00	0.00E+00	3.18E-06	0.00E+00	0.00E+00	7.30E-05
2000	ALL	751188.42	4038460.7	NonCancerChronicDerive	0.00E+00	7.16E-09	0.00E+00	0.00E+00	0.00E+00	5.08E-07	7.03E-05	0.00E+00	2.32E-08	0.00E+00	0.00E+00	3.05E-06	0.00E+00	0.00E+00	7.03E-05
2001	ALL	751288.42	4038460.7	NonCancerChronicDerive	0.00E+00	6.85E-09	0.00E+00	0.00E+00	0.00E+00	4.89E-07	6.75E-05	0.00E+00	2.22E-08	0.00E+00	0.00E+00	2.92E-06	0.00E+00	0.00E+00	6.75E-05
2002	ALL	751388.42	4038460.7	NonCancerChronicDerive	0.00E+00	6.55E-09	0.00E+00	0.00E+00	0.00E+00	4.70E-07	6.48E-05	0.00E+00	2.12E-08	0.00E+00	0.00E+00	2.79E-06	0.00E+00	0.00E+00	6.48E-05
2003	ALL	751888.42	4038460.7	NonCancerChronicDerive	0.00E+00	5.18E-09	0.00E+00	0.00E+00	0.00E+00	3.79E-07	5.20E-05	0.00E+00	1.68E-08	0.00E+00	0.00E+00	2.20E-06	0.00E+00	0.00E+00	5.20E-05
2004	ALL	751988.42	4038460.7	NonCancerChronicDerive	0.00E+00	4.94E-09	0.00E+00	0.00E+00	0.00E+00	3.63E-07	4.97E-05	0.00E+00	1.60E-08	0.00E+00	0.00E+00	2.10E-06	0.00E+00	0.00E+00	4.97E-05
2005	ALL	752088.42	4038460.7	NonCancerChronicDerive	0.00E+00	4.72E-09	0.00E+00	0.00E+00	0.00E+00	3.47E-07	4.75E-05	0.00E+00	1.53E-08	0.00E+00	0.00E+00	2.01E-06	0.00E+00	0.00E+00	4.75E-05
2006	ALL	752188.42	4038460.7	NonCancerChronicDerive	0.00E+00	4.52E-09	0.00E+00	0.00E+00	0.00E+00	3.32E-07	4.55E-05	0.00E+00	1.46E-08	0.00E+00	0.00E+00	1.92E-06	0.00E+00	0.00E+00	4.55E-05
2007	ALL	752288.42	4038460.7	NonCancerChronicDerive	0.00E+00	4.33E-09	0.00E+00	0.00E+00	0.00E+00	3.18E-07	4.35E-05	0.00E+00	1.40E-08	0.00E+00	0.00E+00	1.84E-06	0.00E+00	0.00E+00	4.35E-05
2008	ALL	752388.42	4038460.7	NonCancerChronicDerive	0.00E+00	4.14E-09	0.00E+00	0.00E+00	0.00E+00	3.04E-07	4.17E-05	0.00E+00	1.34E-08	0.00E+00	0.00E+00	1.76E-06	0.00E+00	0.00E+00	4.17E-05
2009	ALL	752488.42	4038460.7	NonCancerChronicDerive	0.00E+00	3.98E-09	0.00E+00	0.00E+00	0.00E+00	2.91E-07	4.00E-05	0.00E+00	1.29E-08	0.00E+00	0.00E+00	1.69E-06	0.00E+00	0.00E+00	4.00E-05
2010	ALL	752588.42	4038460.7	NonCancerChronicDerive	0.00E+00	3.82E-09	0.00E+00	0.00E+00	0.00E+00	2.79E-07	3.84E-05	0.00E+00	1.24E-08	0.00E+00	0.00E+00	1.62E-06	0.00E+00	0.00E+00	3.84E-05
2011	ALL	752688.42	4038460.7	NonCancerChronicDerive	0.00E+00	3.67E-09	0.00E+00	0.00E+00	0.00E+00	2.68E-07	3.69E-05	0.00E+00	1.19E-08	0.00E+00	0.00E+00	1.56E-06	0.00E+00	0.00E+00	3.69E-05
2012	ALL	754788.42	4038460.7	NonCancerChronicDerive	0.00E+00	1.92E-09	0.00E+00	0.00E+00	0.00E+00	1.35E-07	1.90E-05	0.00E+00	6.22E-09	0.00E+00	0.00E+00	8.18E-07	0.00E+00	0.00E+00	1.90E-05

2013	ALL	754888.42	4038460.7	NonCancerChronicDerive	0.00E+00	1.87E-09	0.00E+00	0.00E+00	0.00E+00	1.32E-07	1.85E-05	0.00E+00	6.07E-09	0.00E+00	0.00E+00	7.98E-07	0.00E+00	0.00E+00	1.85E-05
2014	ALL	754988.42	4038460.7	NonCancerChronicDerive	0.00E+00	1.83E-09	0.00E+00	0.00E+00	0.00E+00	1.29E-07	1.80E-05	0.00E+00	5.93E-09	0.00E+00	0.00E+00	7.79E-07	0.00E+00	0.00E+00	1.80E-05
2015	ALL	755088.42	4038460.7	NonCancerChronicDerive	0.00E+00	1.79E-09	0.00E+00	0.00E+00	0.00E+00	1.26E-07	1.76E-05	0.00E+00	5.79E-09	0.00E+00	0.00E+00	7.61E-07	0.00E+00	0.00E+00	1.76E-05
2016	ALL	755188.42	4038460.7	NonCancerChronicDerive	0.00E+00	1.75E-09	0.00E+00	0.00E+00	0.00E+00	1.23E-07	1.72E-05	0.00E+00	5.66E-09	0.00E+00	0.00E+00	7.44E-07	0.00E+00	0.00E+00	1.72E-05
2017	ALL	755288.42	4038460.7	NonCancerChronicDerive	0.00E+00	1.71E-09	0.00E+00	0.00E+00	0.00E+00	1.20E-07	1.68E-05	0.00E+00	5.53E-09	0.00E+00	0.00E+00	7.28E-07	0.00E+00	0.00E+00	1.68E-05
2018	ALL	747888.42	4038560.7	NonCancerChronicDerive	0.00E+00	1.96E-09	0.00E+00	0.00E+00	0.00E+00	1.46E-07	2.08E-05	0.00E+00	6.34E-09	0.00E+00	0.00E+00	8.33E-07	0.00E+00	0.00E+00	2.08E-05
2019	ALL	747988.42	4038560.7	NonCancerChronicDerive	0.00E+00	2.07E-09	0.00E+00	0.00E+00	0.00E+00	1.53E-07	2.19E-05	0.00E+00	6.71E-09	0.00E+00	0.00E+00	8.82E-07	0.00E+00	0.00E+00	2.19E-05
2020	ALL	748088.42	4038560.7	NonCancerChronicDerive	0.00E+00	2.16E-09	0.00E+00	0.00E+00	0.00E+00	1.58E-07	2.27E-05	0.00E+00	7.00E-09	0.00E+00	0.00E+00	9.20E-07	0.00E+00	0.00E+00	2.27E-05
2021	ALL	748188.42	4038560.7	NonCancerChronicDerive	0.00E+00	2.23E-09	0.00E+00	0.00E+00	0.00E+00	1.63E-07	2.33E-05	0.00E+00	7.22E-09	0.00E+00	0.00E+00	9.49E-07	0.00E+00	0.00E+00	2.33E-05
2022	ALL	749888.42	4038560.7	NonCancerChronicDerive	0.00E+00	9.69E-09	0.00E+00	0.00E+00	0.00E+00	6.35E-07	9.04E-05	0.00E+00	3.14E-08	0.00E+00	0.00E+00	4.12E-06	0.00E+00	0.00E+00	9.04E-05
2023	ALL	749988.42	4038560.7	NonCancerChronicDerive	0.00E+00	9.82E-09	0.00E+00	0.00E+00	0.00E+00	6.48E-07	9.20E-05	0.00E+00	3.18E-08	0.00E+00	0.00E+00	4.18E-06	0.00E+00	0.00E+00	9.20E-05
2024	ALL	750088.42	4038560.7	NonCancerChronicDerive	0.00E+00	9.88E-09	0.00E+00	0.00E+00	0.00E+00	6.57E-07	9.30E-05	0.00E+00	3.20E-08	0.00E+00	0.00E+00	4.21E-06	0.00E+00	0.00E+00	9.30E-05
2025	ALL	750188.42	4038560.7	NonCancerChronicDerive	0.00E+00	9.87E-09	0.00E+00	0.00E+00	0.00E+00	6.61E-07	9.33E-05	0.00E+00	3.20E-08	0.00E+00	0.00E+00	4.20E-06	0.00E+00	0.00E+00	9.33E-05
2026	ALL	750288.42	4038560.7	NonCancerChronicDerive	0.00E+00	9.79E-09	0.00E+00	0.00E+00	0.00E+00	6.60E-07	9.29E-05	0.00E+00	3.17E-08	0.00E+00	0.00E+00	4.17E-06	0.00E+00	0.00E+00	9.29E-05
2027	ALL	750388.42	4038560.7	NonCancerChronicDerive	0.00E+00	9.64E-09	0.00E+00	0.00E+00	0.00E+00	6.54E-07	9.19E-05	0.00E+00	3.12E-08	0.00E+00	0.00E+00	4.10E-06	0.00E+00	0.00E+00	9.19E-05
2028	ALL	750488.42	4038560.7	NonCancerChronicDerive	0.00E+00	9.44E-09	0.00E+00	0.00E+00	0.00E+00	6.45E-07	9.03E-05	0.00E+00	3.05E-08	0.00E+00	0.00E+00	4.02E-06	0.00E+00	0.00E+00	9.03E-05
2029	ALL	750588.42	4038560.7	NonCancerChronicDerive	0.00E+00	9.19E-09	0.00E+00	0.00E+00	0.00E+00	6.32E-07	8.83E-05	0.00E+00	2.97E-08	0.00E+00	0.00E+00	3.91E-06	0.00E+00	0.00E+00	8.83E-05
2030	ALL	750688.42	4038560.7	NonCancerChronicDerive	0.00E+00	8.90E-09	0.00E+00	0.00E+00	0.00E+00	6.17E-07	8.59E-05	0.00E+00	2.88E-08	0.00E+00	0.00E+00	3.79E-06	0.00E+00	0.00E+00	8.59E-05
2031	ALL	750788.42	4038560.7	NonCancerChronicDerive	0.00E+00	8.59E-09	0.00E+00	0.00E+00	0.00E+00	5.99E-07	8.33E-05	0.00E+00	2.78E-08	0.00E+00	0.00E+00	3.65E-06	0.00E+00	0.00E+00	8.33E-05
2032	ALL	750888.42	4038560.7	NonCancerChronicDerive	0.00E+00	8.25E-09	0.00E+00	0.00E+00	0.00E+00	5.80E-07	8.04E-05	0.00E+00	2.67E-08	0.00E+00	0.00E+00	3.51E-06	0.00E+00	0.00E+00	8.04E-05
2033	ALL	750988.42	4038560.7	NonCancerChronicDerive	0.00E+00	7.90E-09	0.00E+00	0.00E+00	0.00E+00	5.59E-07	7.74E-05	0.00E+00	2.56E-08	0.00E+00	0.00E+00	3.36E-06	0.00E+00	0.00E+00	7.74E-05
2034	ALL	751088.42	4038560.7	NonCancerChronicDerive	0.00E+00	7.54E-09	0.00E+00	0.00E+00	0.00E+00	5.38E-07	7.42E-05	0.00E+00	2.44E-08	0.00E+00	0.00E+00	3.21E-06	0.00E+00	0.00E+00	7.42E-05
2035	ALL	751188.42	4038560.7	NonCancerChronicDerive	0.00E+00	7.19E-09	0.00E+00	0.00E+00	0.00E+00	5.16E-07	7.11E-05	0.00E+00	2.33E-08	0.00E+00	0.00E+00	3.06E-06	0.00E+00	0.00E+00	7.11E-05
2036	ALL	751288.42	4038560.7	NonCancerChronicDerive	0.00E+00	6.84E-09	0.00E+00	0.00E+00	0.00E+00	4.95E-07	6.80E-05	0.00E+00	2.22E-08	0.00E+00	0.00E+00	2.91E-06	0.00E+00	0.00E+00	6.80E-05
2037	ALL	751388.42	4038560.7	NonCancerChronicDerive	0.00E+00	6.51E-09	0.00E+00	0.00E+00	0.00E+00	4.73E-07	6.50E-05	0.00E+00	2.11E-08	0.00E+00	0.00E+00	2.77E-06	0.00E+00	0.00E+00	6.50E-05
2038	ALL	752788.42	4038560.7	NonCancerChronicDerive	0.00E+00	3.45E-09	0.00E+00	0.00E+00	0.00E+00	2.52E-07	3.47E-05	0.00E+00	1.12E-08	0.00E+00	0.00E+00	1.47E-06	0.00E+00	0.00E+00	3.47E-05
2039	ALL	752888.42	4038560.7	NonCancerChronicDerive	0.00E+00	3.32E-09	0.00E+00	0.00E+00	0.00E+00	2.42E-07	3.33E-05	0.00E+00	1.08E-08	0.00E+00	0.00E+00	1.41E-06	0.00E+00	0.00E+00	3.33E-05
2040	ALL	752988.42	4038560.7	NonCancerChronicDerive	0.00E+00	3.20E-09	0.00E+00	0.00E+00	0.00E+00	2.32E-07	3.21E-05	0.00E+00	1.04E-08	0.00E+00	0.00E+00	1.36E-06	0.00E+00	0.00E+00	3.21E-05
2041	ALL	753088.42	4038560.7	NonCancerChronicDerive	0.00E+00	3.09E-09	0.00E+00	0.00E+00	0.00E+00	2.24E-07	3.09E-05	0.00E+00	1.00E-08	0.00E+00	0.00E+00	1.31E-06	0.00E+00	0.00E+00	3.09E-05
2042	ALL	753188.42	4038560.7	NonCancerChronicDerive	0.00E+00	2.98E-09	0.00E+00	0.00E+00	0.00E+00	2.16E-07	2.98E-05	0.00E+00	9.66E-09	0.00E+00	0.00E+00	1.27E-06	0.00E+00	0.00E+00	2.98E-05
2043	ALL	753288.42	4038560.7	NonCancerChronicDerive	0.00E+00	2.88E-09	0.00E+00	0.00E+00	0.00E+00	2.08E-07	2.88E-05	0.00E+00	9.34E-09	0.00E+00	0.00E+00	1.23E-06	0.00E+00	0.00E+00	2.88E-05
2044	ALL	753388.42	4038560.7	NonCancerChronicDerive	0.00E+00	2.79E-09	0.00E+00	0.00E+00	0.00E+00	2.01E-07	2.78E-05	0.00E+00	9.03E-09	0.00E+00	0.00E+00	1.19E-06	0.00E+00	0.00E+00	2.78E-05
2045	ALL	753488.42	4038560.7	NonCancerChronicDerive	0.00E+00	2.70E-09	0.00E+00	0.00E+00	0.00E+00	1.94E-07	2.69E-05	0.00E+00	8.74E-09	0.00E+00	0.00E+00	1.15E-06	0.00E+00	0.00E+00	2.69E-05
2046	ALL	753588.42	4038560.7	NonCancerChronicDerive	0.00E+00	2.62E-09	0.00E+00	0.00E+00	0.00E+00	1.87E-07	2.61E-05	0.00E+00	8.47E-09	0.00E+00	0.00E+00	1.11E-06	0.00E+00	0.00E+00	2.61E-05
2047	ALL	753688.42	4038560.7	NonCancerChronicDerive	0.00E+00	2.54E-09	0.00E+00	0.00E+00	0.00E+00	1.81E-07	2.52E-05	0.00E+00	8.21E-09	0.00E+00	0.00E+00	1.08E-06	0.00E+00	0.00E+00	2.52E-05
2048	ALL	753788.42	4038560.7	NonCancerChronicDerive	0.00E+00	2.46E-09	0.00E+00	0.00E+00	0.00E+00	1.76E-07	2.45E-05	0.00E+00	7.96E-09	0.00E+00	0.00E+00	1.05E-06	0.00E+00	0.00E+00	2.45E-05
2049	ALL	753888.42	4038560.7	NonCancerChronicDerive	0.00E+00	2.39E-09	0.00E+00	0.00E+00	0.00E+00	1.70E-07	2.37E-05	0.00E+00	7.73E-09	0.00E+00	0.00E+00	1.02E-06	0.00E+00	0.00E+00	2.37E-05
2050	ALL	753988.42	4038560.7	NonCancerChronicDerive	0.00E+00	2.32E-09	0.00E+00	0.00E+00	0.00E+00	1.65E-07	2.30E-05	0.00E+00	7.51E-09	0.00E+00	0.00E+00	9.87E-07	0.00E+00	0.00E+00	2.30E-05
2051	ALL	754088.42	4038560.7	NonCancerChronicDerive	0.00E+00	2.26E-09	0.00E+00	0.00E+00	0.00E+00	1.60E-07	2.24E-05	0.00E+00	7.30E-09	0.00E+00	0.00E+00	9.60E-07	0.00E+00	0.00E+00	2.24E-05
2052	ALL	754188.42	4038560.7	NonCancerChronicDerive	0.00E+00	2.19E-09	0.00E+00	0.00E+00	0.00E+00	1.56E-07	2.18E-05	0.00E+00	7.10E-09	0.00E+00	0.00E+00	9.34E-07	0.00E+00	0.00E+00	2.18E-05
2053	ALL	754288.42	4038560.7	NonCancerChronicDerive	0.00E+00	2.14E-09	0.00E+00	0.00E+00	0.00E+00	1.51E-07	2.12E-05	0.00E+00	6.91E-09	0.00E+00	0.00E+00	9.09E-07	0.00E+00	0.00E+00	2.12E-05
2054	ALL	754388.42	4038560.7	NonCancerChronicDerive	0.00E+00	2.08E-09	0.00E+00	0.00E+00	0.00E+00	1.47E-07	2.06E-05	0.00E+00	6.73E-09	0.00E+00	0.00E+00	8.85E-07	0.00E+00	0.00E+00	2.06E-05
2055	ALL	754488.42	4038560.7	NonCancerChronicDerive	0.00E+00	2.03E-09	0.00E+00	0.00E+00	0.00E+00	1.43E-07	2.00E-05	0.00E+00	6.56E-09	0.00E+00	0.00E+00	8.62E-07	0.00E+00	0.00E+00	2.00E-05
2056	ALL	754588.42	4038560.7	NonCancerChronicDerive	0.00E+00	1.97E-09	0.00E+00	0.00E+00	0.00E+00	1.39E-07	1.95E-05	0.00E+00	6.39E-09	0.00E+00	0.00E+00	8.40E-07	0.00E+00	0.00E+00	1.95E-05
2057	ALL	754688.42	4038560.7	NonCancerChronicDerive	0.00E+00	1.93E-09	0.00E+00	0.00E+00	0.00E+00	1.36E-07	1.90E-05	0.00E+00	6.23E-09	0.00E+00	0.00E+00	8.19E-07	0.00E+00	0.00E+00	1.90E-05
2058	ALL	754788.42	4038560.7	NonCancerChronicDerive	0.00E+00	1.88E-09	0.00E+00	0.00E+00	0.00E+00	1.32E-07	1.86E-05	0.00E+00	6.08E-09	0.00E+00	0.00E+00	8.00E-07	0.00E+00	0.00E+00	1.86E-05
2059	ALL	754888.42	4038560.7	NonCancerChronicDerive	0.00E+00	1.83E-09	0.00E+00	0.00E+00	0.00E+00	1.29E-07	1.81E-05	0.00E+00	5.94E-09	0.00E+00	0.00E+00	7.80E-07	0.00E+00	0.00E+00	1.81E-05
2060	ALL	754988.42	4038560.7	NonCancerChronicDerive	0.00E+00	1.79E-09	0.00E+00	0.00E+00	0.00E+00	1.26E-07	1.77E-05	0.00E+00	5.80E-09	0.00E+00	0.00E+00	7.62E-07	0.00E+00	0.00E+00	1.77E-05
2061	ALL	755088.42	4038560.7	NonCancerChronicDerive	0.00E+00	1.75E-09	0.00E+00	0.00E+00	0.00E+00	1.23E-07	1.73E-05	0.00E+00	5.67E-09	0.00E+00	0.00E+00	7.45E-07	0.00E+00	0.00E+00	1.73E-05
2062	ALL	755188.42	4038560.7	NonCancerChronicDerive	0.00E+00	1.71E-09	0.00E+00	0.00E+00	0.00E+00	1.20E-07	1.69E-05	0.00E+00	5.54E-09	0.00E+00	0.00E+00	7.28E-07	0.00E+00	0.00E+00	1.69E-05
2063	ALL	755288.42	4038560.7	NonCancerChronicDerive	0.00E+00	1.67E-09	0.00E+00	0.00E+00	0.00E+00	1.17E-07	1.65E-05	0.00E+00	5.42E-09	0.00E+00	0.00E+00	7.12E-07	0.00E+00	0.00E+00	1.65E-05
2064	ALL	747888.42	4038660.7	NonCancerChronicDerive	0.00E+00	1.97E-09	0.00E+00	0.00E+00	0.00E+00	1.47E-07	2.09E-05	0.00E+00	6.36E-09	0.00E+00	0.00E+00	8.37E-07	0.00E+00	0.00E+00	2.09E-05
2065	ALL	747988.42	4038660.7	NonCancerChronicDerive	0.00E+00	2.10E-09	0.00E+00	0.00E+00	0.00E+00	1.55E-07	2.21E-05	0.00E+00	6.80E-09	0.00E+00	0.00E+00	8.93E-07	0.00E+00	0.00E+00	2.21E-05

2066	ALL	748088.42	4038660.7	NonCancerChronicDerive	0.00E+00	2.21E-09	0.00E+00	0.00E+00	0.00E+00	1.62E-07	2.32E-05	0.00E+00	7.16E-09	0.00E+00	0.00E+00	9.42E-07	0.00E+00	0.00E+00	2.32E-05
2067	ALL	748188.42	4038660.7	NonCancerChronicDerive	0.00E+00	2.30E-09	0.00E+00	0.00E+00	0.00E+00	1.67E-07	2.40E-05	0.00E+00	7.45E-09	0.00E+00	0.00E+00	9.79E-07	0.00E+00	0.00E+00	2.40E-05
2068	ALL	749888.42	4038660.7	NonCancerChronicDerive	0.00E+00	1.07E-08	0.00E+00	0.00E+00	0.00E+00	6.99E-07	9.96E-05	0.00E+00	3.46E-08	0.00E+00	0.00E+00	4.55E-06	0.00E+00	0.00E+00	9.96E-05
2069	ALL	749988.42	4038660.7	NonCancerChronicDerive	0.00E+00	1.08E-08	0.00E+00	0.00E+00	0.00E+00	7.10E-07	1.01E-04	0.00E+00	3.48E-08	0.00E+00	0.00E+00	4.58E-06	0.00E+00	0.00E+00	1.01E-04
2070	ALL	750088.42	4038660.7	NonCancerChronicDerive	0.00E+00	1.07E-08	0.00E+00	0.00E+00	0.00E+00	7.15E-07	1.01E-04	0.00E+00	3.48E-08	0.00E+00	0.00E+00	4.57E-06	0.00E+00	0.00E+00	1.01E-04
2071	ALL	750188.42	4038660.7	NonCancerChronicDerive	0.00E+00	1.06E-08	0.00E+00	0.00E+00	0.00E+00	7.14E-07	1.01E-04	0.00E+00	3.44E-08	0.00E+00	0.00E+00	4.53E-06	0.00E+00	0.00E+00	1.01E-04
2072	ALL	750288.42	4038660.7	NonCancerChronicDerive	0.00E+00	1.05E-08	0.00E+00	0.00E+00	0.00E+00	7.07E-07	9.94E-05	0.00E+00	3.38E-08	0.00E+00	0.00E+00	4.45E-06	0.00E+00	0.00E+00	9.94E-05
2073	ALL	750388.42	4038660.7	NonCancerChronicDerive	0.00E+00	1.02E-08	0.00E+00	0.00E+00	0.00E+00	6.96E-07	9.75E-05	0.00E+00	3.30E-08	0.00E+00	0.00E+00	4.34E-06	0.00E+00	0.00E+00	9.75E-05
2074	ALL	750488.42	4038660.7	NonCancerChronicDerive	0.00E+00	9.89E-09	0.00E+00	0.00E+00	0.00E+00	6.81E-07	9.51E-05	0.00E+00	3.20E-08	0.00E+00	0.00E+00	4.21E-06	0.00E+00	0.00E+00	9.51E-05
2075	ALL	750588.42	4038660.7	NonCancerChronicDerive	0.00E+00	9.54E-09	0.00E+00	0.00E+00	0.00E+00	6.62E-07	9.22E-05	0.00E+00	3.09E-08	0.00E+00	0.00E+00	4.06E-06	0.00E+00	0.00E+00	9.22E-05
2076	ALL	750688.42	4038660.7	NonCancerChronicDerive	0.00E+00	9.16E-09	0.00E+00	0.00E+00	0.00E+00	6.41E-07	8.90E-05	0.00E+00	2.97E-08	0.00E+00	0.00E+00	3.90E-06	0.00E+00	0.00E+00	8.90E-05
2077	ALL	750788.42	4038660.7	NonCancerChronicDerive	0.00E+00	8.77E-09	0.00E+00	0.00E+00	0.00E+00	6.18E-07	8.56E-05	0.00E+00	2.84E-08	0.00E+00	0.00E+00	3.73E-06	0.00E+00	0.00E+00	8.56E-05
2078	ALL	750888.42	4038660.7	NonCancerChronicDerive	0.00E+00	8.36E-09	0.00E+00	0.00E+00	0.00E+00	5.95E-07	8.21E-05	0.00E+00	2.71E-08	0.00E+00	0.00E+00	3.56E-06	0.00E+00	0.00E+00	8.21E-05
2079	ALL	750988.42	4038660.7	NonCancerChronicDerive	0.00E+00	7.95E-09	0.00E+00	0.00E+00	0.00E+00	5.70E-07	7.85E-05	0.00E+00	2.57E-08	0.00E+00	0.00E+00	3.38E-06	0.00E+00	0.00E+00	7.85E-05
2080	ALL	751088.42	4038660.7	NonCancerChronicDerive	0.00E+00	7.55E-09	0.00E+00	0.00E+00	0.00E+00	5.46E-07	7.50E-05	0.00E+00	2.44E-08	0.00E+00	0.00E+00	3.21E-06	0.00E+00	0.00E+00	7.50E-05
2081	ALL	751188.42	4038660.7	NonCancerChronicDerive	0.00E+00	7.16E-09	0.00E+00	0.00E+00	0.00E+00	5.21E-07	7.15E-05	0.00E+00	2.32E-08	0.00E+00	0.00E+00	3.05E-06	0.00E+00	0.00E+00	7.15E-05
2082	ALL	751288.42	4038660.7	NonCancerChronicDerive	0.00E+00	6.78E-09	0.00E+00	0.00E+00	0.00E+00	4.97E-07	6.80E-05	0.00E+00	2.20E-08	0.00E+00	0.00E+00	2.89E-06	0.00E+00	0.00E+00	6.80E-05
2083	ALL	751388.42	4038660.7	NonCancerChronicDerive	0.00E+00	6.43E-09	0.00E+00	0.00E+00	0.00E+00	4.74E-07	6.47E-05	0.00E+00	2.08E-08	0.00E+00	0.00E+00	2.73E-06	0.00E+00	0.00E+00	6.47E-05
2084	ALL	752788.42	4038660.7	NonCancerChronicDerive	0.00E+00	3.36E-09	0.00E+00	0.00E+00	0.00E+00	2.46E-07	3.38E-05	0.00E+00	1.09E-08	0.00E+00	0.00E+00	1.43E-06	0.00E+00	0.00E+00	3.38E-05
2085	ALL	752888.42	4038660.7	NonCancerChronicDerive	0.00E+00	3.24E-09	0.00E+00	0.00E+00	0.00E+00	2.36E-07	3.26E-05	0.00E+00	1.05E-08	0.00E+00	0.00E+00	1.38E-06	0.00E+00	0.00E+00	3.26E-05
2086	ALL	752988.42	4038660.7	NonCancerChronicDerive	0.00E+00	3.12E-09	0.00E+00	0.00E+00	0.00E+00	2.27E-07	3.13E-05	0.00E+00	1.01E-08	0.00E+00	0.00E+00	1.33E-06	0.00E+00	0.00E+00	3.13E-05
2087	ALL	753088.42	4038660.7	NonCancerChronicDerive	0.00E+00	3.01E-09	0.00E+00	0.00E+00	0.00E+00	2.18E-07	3.02E-05	0.00E+00	9.76E-09	0.00E+00	0.00E+00	1.28E-06	0.00E+00	0.00E+00	3.02E-05
2088	ALL	753188.42	4038660.7	NonCancerChronicDerive	0.00E+00	2.91E-09	0.00E+00	0.00E+00	0.00E+00	2.10E-07	2.91E-05	0.00E+00	9.42E-09	0.00E+00	0.00E+00	1.24E-06	0.00E+00	0.00E+00	2.91E-05
2089	ALL	753288.42	4038660.7	NonCancerChronicDerive	0.00E+00	2.81E-09	0.00E+00	0.00E+00	0.00E+00	2.03E-07	2.81E-05	0.00E+00	9.11E-09	0.00E+00	0.00E+00	1.20E-06	0.00E+00	0.00E+00	2.81E-05
2090	ALL	753388.42	4038660.7	NonCancerChronicDerive	0.00E+00	2.72E-09	0.00E+00	0.00E+00	0.00E+00	1.96E-07	2.72E-05	0.00E+00	8.81E-09	0.00E+00	0.00E+00	1.16E-06	0.00E+00	0.00E+00	2.72E-05
2091	ALL	753488.42	4038660.7	NonCancerChronicDerive	0.00E+00	2.64E-09	0.00E+00	0.00E+00	0.00E+00	1.89E-07	2.63E-05	0.00E+00	8.53E-09	0.00E+00	0.00E+00	1.12E-06	0.00E+00	0.00E+00	2.63E-05
2092	ALL	753588.42	4038660.7	NonCancerChronicDerive	0.00E+00	2.55E-09	0.00E+00	0.00E+00	0.00E+00	1.83E-07	2.55E-05	0.00E+00	8.27E-09	0.00E+00	0.00E+00	1.09E-06	0.00E+00	0.00E+00	2.55E-05
2093	ALL	753688.42	4038660.7	NonCancerChronicDerive	0.00E+00	2.48E-09	0.00E+00	0.00E+00	0.00E+00	1.77E-07	2.47E-05	0.00E+00	8.01E-09	0.00E+00	0.00E+00	1.05E-06	0.00E+00	0.00E+00	2.47E-05
2094	ALL	753788.42	4038660.7	NonCancerChronicDerive	0.00E+00	2.40E-09	0.00E+00	0.00E+00	0.00E+00	1.71E-07	2.39E-05	0.00E+00	7.78E-09	0.00E+00	0.00E+00	1.02E-06	0.00E+00	0.00E+00	2.39E-05
2095	ALL	753888.42	4038660.7	NonCancerChronicDerive	0.00E+00	2.33E-09	0.00E+00	0.00E+00	0.00E+00	1.66E-07	2.32E-05	0.00E+00	7.55E-09	0.00E+00	0.00E+00	9.92E-07	0.00E+00	0.00E+00	2.32E-05
2096	ALL	753988.42	4038660.7	NonCancerChronicDerive	0.00E+00	2.27E-09	0.00E+00	0.00E+00	0.00E+00	1.61E-07	2.25E-05	0.00E+00	7.33E-09	0.00E+00	0.00E+00	9.64E-07	0.00E+00	0.00E+00	2.25E-05
2097	ALL	754088.42	4038660.7	NonCancerChronicDerive	0.00E+00	2.20E-09	0.00E+00	0.00E+00	0.00E+00	1.57E-07	2.19E-05	0.00E+00	7.13E-09	0.00E+00	0.00E+00	9.38E-07	0.00E+00	0.00E+00	2.19E-05
2098	ALL	754188.42	4038660.7	NonCancerChronicDerive	0.00E+00	2.14E-09	0.00E+00	0.00E+00	0.00E+00	1.52E-07	2.13E-05	0.00E+00	6.94E-09	0.00E+00	0.00E+00	9.12E-07	0.00E+00	0.00E+00	2.13E-05
2099	ALL	754288.42	4038660.7	NonCancerChronicDerive	0.00E+00	2.09E-09	0.00E+00	0.00E+00	0.00E+00	1.48E-07	2.07E-05	0.00E+00	6.75E-09	0.00E+00	0.00E+00	8.88E-07	0.00E+00	0.00E+00	2.07E-05
2100	ALL	754388.42	4038660.7	NonCancerChronicDerive	0.00E+00	2.03E-09	0.00E+00	0.00E+00	0.00E+00	1.44E-07	2.01E-05	0.00E+00	6.58E-09	0.00E+00	0.00E+00	8.64E-07	0.00E+00	0.00E+00	2.01E-05
2101	ALL	754488.42	4038660.7	NonCancerChronicDerive	0.00E+00	1.98E-09	0.00E+00	0.00E+00	0.00E+00	1.40E-07	1.96E-05	0.00E+00	6.41E-09	0.00E+00	0.00E+00	8.42E-07	0.00E+00	0.00E+00	1.96E-05
2102	ALL	754588.42	4038660.7	NonCancerChronicDerive	0.00E+00	1.93E-09	0.00E+00	0.00E+00	0.00E+00	1.36E-07	1.91E-05	0.00E+00	6.25E-09	0.00E+00	0.00E+00	8.21E-07	0.00E+00	0.00E+00	1.91E-05
2103	ALL	754688.42	4038660.7	NonCancerChronicDerive	0.00E+00	1.88E-09	0.00E+00	0.00E+00	0.00E+00	1.33E-07	1.86E-05	0.00E+00	6.09E-09	0.00E+00	0.00E+00	8.01E-07	0.00E+00	0.00E+00	1.86E-05
2104	ALL	754788.42	4038660.7	NonCancerChronicDerive	0.00E+00	1.84E-09	0.00E+00	0.00E+00	0.00E+00	1.29E-07	1.82E-05	0.00E+00	5.94E-09	0.00E+00	0.00E+00	7.81E-07	0.00E+00	0.00E+00	1.82E-05
2105	ALL	754888.42	4038660.7	NonCancerChronicDerive	0.00E+00	1.79E-09	0.00E+00	0.00E+00	0.00E+00	1.26E-07	1.77E-05	0.00E+00	5.80E-09	0.00E+00	0.00E+00	7.63E-07	0.00E+00	0.00E+00	1.77E-05
2106	ALL	754988.42	4038660.7	NonCancerChronicDerive	0.00E+00	1.75E-09	0.00E+00	0.00E+00	0.00E+00	1.23E-07	1.73E-05	0.00E+00	5.67E-09	0.00E+00	0.00E+00	7.45E-07	0.00E+00	0.00E+00	1.73E-05
2107	ALL	755088.42	4038660.7	NonCancerChronicDerive	0.00E+00	1.71E-09	0.00E+00	0.00E+00	0.00E+00	1.20E-07	1.69E-05	0.00E+00	5.54E-09	0.00E+00	0.00E+00	7.28E-07	0.00E+00	0.00E+00	1.69E-05
2108	ALL	755188.42	4038660.7	NonCancerChronicDerive	0.00E+00	1.67E-09	0.00E+00	0.00E+00	0.00E+00	1.17E-07	1.65E-05	0.00E+00	5.42E-09	0.00E+00	0.00E+00	7.12E-07	0.00E+00	0.00E+00	1.65E-05
2109	ALL	755288.42	4038660.7	NonCancerChronicDerive	0.00E+00	1.64E-09	0.00E+00	0.00E+00	0.00E+00	1.15E-07	1.61E-05	0.00E+00	5.30E-09	0.00E+00	0.00E+00	6.97E-07	0.00E+00	0.00E+00	1.61E-05
2110	ALL	747888.42	4038760.7	NonCancerChronicDerive	0.00E+00	1.97E-09	0.00E+00	0.00E+00	0.00E+00	1.47E-07	2.09E-05	0.00E+00	6.38E-09	0.00E+00	0.00E+00	8.39E-07	0.00E+00	0.00E+00	2.09E-05
2111	ALL	747988.42	4038760.7	NonCancerChronicDerive	0.00E+00	2.12E-09	0.00E+00	0.00E+00	0.00E+00	1.56E-07	2.24E-05	0.00E+00	6.87E-09	0.00E+00	0.00E+00	9.03E-07	0.00E+00	0.00E+00	2.24E-05
2112	ALL	748088.42	4038760.7	NonCancerChronicDerive	0.00E+00	2.26E-09	0.00E+00	0.00E+00	0.00E+00	1.65E-07	2.37E-05	0.00E+00	7.32E-09	0.00E+00	0.00E+00	9.63E-07	0.00E+00	0.00E+00	2.37E-05
2113	ALL	748188.42	4038760.7	NonCancerChronicDerive	0.00E+00	2.38E-09	0.00E+00	0.00E+00	0.00E+00	1.72E-07	2.47E-05	0.00E+00	7.69E-09	0.00E+00	0.00E+00	1.01E-06	0.00E+00	0.00E+00	2.47E-05
2114	ALL	749888.42	4038760.7	NonCancerChronicDerive	0.00E+00	1.18E-08	0.00E+00	0.00E+00	0.00E+00	7.72E-07	1.10E-04	0.00E+00	3.82E-08	0.00E+00	0.00E+00	5.02E-06	0.00E+00	0.00E+00	1.10E-04
2115	ALL	749988.42	4038760.7	NonCancerChronicDerive	0.00E+00	1.18E-08	0.00E+00	0.00E+00	0.00E+00	7.77E-07	1.10E-04	0.00E+00	3.81E-08	0.00E+00	0.00E+00	5.01E-06	0.00E+00	0.00E+00	1.10E-04
2116	ALL	750088.42	4038760.7	NonCancerChronicDerive	0.00E+00	1.16E-08	0.00E+00	0.00E+00	0.00E+00	7.76E-07	1.10E-04	0.00E+00	3.77E-08	0.00E+00	0.00E+00	4.95E-06	0.00E+00	0.00E+00	1.10E-04
2117	ALL	750188.42	4038760.7	NonCancerChronicDerive	0.00E+00	1.14E-08	0.00E+00	0.00E+00	0.00E+00	7.68E-07	1.08E-04	0.00E+00	3.69E-08	0.00E+00	0.00E+00	4.85E-06	0.00E+00	0.00E+00	1.08E-04
2118	ALL	750288.42	4038760.7	NonCancerChronicDerive	0.00E+00	1.11E-08	0.00E+00	0.00E+00	0.00E+00	7.54E-07	1.06E-04	0.00E+00	3.59E-08	0.00E+00	0.00E+00	4.71E-06	0.00E+00	0.00E+00	1.06E-04

2119	ALL	750388.42	4038760.7	NonCancerChronicDerive	0.00E+00	1.07E-08	0.00E+00	0.00E+00	0.00E+00	7.36E-07	1.03E-04	0.00E+00	3.46E-08	0.00E+00	0.00E+00	4.55E-06	0.00E+00	0.00E+00	1.03E-04
2120	ALL	750488.42	4038760.7	NonCancerChronicDerive	0.00E+00	1.03E-08	0.00E+00	0.00E+00	0.00E+00	7.13E-07	9.92E-05	0.00E+00	3.32E-08	0.00E+00	0.00E+00	4.37E-06	0.00E+00	0.00E+00	9.92E-05
2121	ALL	750588.42	4038760.7	NonCancerChronicDerive	0.00E+00	9.80E-09	0.00E+00	0.00E+00	0.00E+00	6.88E-07	9.54E-05	0.00E+00	3.17E-08	0.00E+00	0.00E+00	4.17E-06	0.00E+00	0.00E+00	9.54E-05
2122	ALL	750688.42	4038760.7	NonCancerChronicDerive	0.00E+00	9.33E-09	0.00E+00	0.00E+00	0.00E+00	6.61E-07	9.14E-05	0.00E+00	3.02E-08	0.00E+00	0.00E+00	3.97E-06	0.00E+00	0.00E+00	9.14E-05
2123	ALL	750788.42	4038760.7	NonCancerChronicDerive	0.00E+00	8.85E-09	0.00E+00	0.00E+00	0.00E+00	6.34E-07	8.73E-05	0.00E+00	2.87E-08	0.00E+00	0.00E+00	3.77E-06	0.00E+00	0.00E+00	8.73E-05
2124	ALL	750888.42	4038760.7	NonCancerChronicDerive	0.00E+00	8.38E-09	0.00E+00	0.00E+00	0.00E+00	6.05E-07	8.32E-05	0.00E+00	2.71E-08	0.00E+00	0.00E+00	3.57E-06	0.00E+00	0.00E+00	8.32E-05
2125	ALL	750988.42	4038760.7	NonCancerChronicDerive	0.00E+00	7.92E-09	0.00E+00	0.00E+00	0.00E+00	5.77E-07	7.91E-05	0.00E+00	2.56E-08	0.00E+00	0.00E+00	3.37E-06	0.00E+00	0.00E+00	7.91E-05
2126	ALL	751088.42	4038760.7	NonCancerChronicDerive	0.00E+00	7.48E-09	0.00E+00	0.00E+00	0.00E+00	5.50E-07	7.52E-05	0.00E+00	2.42E-08	0.00E+00	0.00E+00	3.18E-06	0.00E+00	0.00E+00	7.52E-05
2127	ALL	751188.42	4038760.7	NonCancerChronicDerive	0.00E+00	7.06E-09	0.00E+00	0.00E+00	0.00E+00	5.23E-07	7.13E-05	0.00E+00	2.29E-08	0.00E+00	0.00E+00	3.01E-06	0.00E+00	0.00E+00	7.13E-05
2128	ALL	751288.42	4038760.7	NonCancerChronicDerive	0.00E+00	6.67E-09	0.00E+00	0.00E+00	0.00E+00	4.97E-07	6.76E-05	0.00E+00	2.16E-08	0.00E+00	0.00E+00	2.84E-06	0.00E+00	0.00E+00	6.76E-05
2129	ALL	751388.42	4038760.7	NonCancerChronicDerive	0.00E+00	6.30E-09	0.00E+00	0.00E+00	0.00E+00	4.71E-07	6.41E-05	0.00E+00	2.04E-08	0.00E+00	0.00E+00	2.68E-06	0.00E+00	0.00E+00	6.41E-05
2130	ALL	752788.42	4038760.7	NonCancerChronicDerive	0.00E+00	3.27E-09	0.00E+00	0.00E+00	0.00E+00	2.39E-07	3.30E-05	0.00E+00	1.06E-08	0.00E+00	0.00E+00	1.39E-06	0.00E+00	0.00E+00	3.30E-05
2131	ALL	752888.42	4038760.7	NonCancerChronicDerive	0.00E+00	3.15E-09	0.00E+00	0.00E+00	0.00E+00	2.30E-07	3.17E-05	0.00E+00	1.02E-08	0.00E+00	0.00E+00	1.34E-06	0.00E+00	0.00E+00	3.17E-05
2132	ALL	752988.42	4038760.7	NonCancerChronicDerive	0.00E+00	3.04E-09	0.00E+00	0.00E+00	0.00E+00	2.21E-07	3.06E-05	0.00E+00	9.85E-09	0.00E+00	0.00E+00	1.29E-06	0.00E+00	0.00E+00	3.06E-05
2133	ALL	753088.42	4038760.7	NonCancerChronicDerive	0.00E+00	2.94E-09	0.00E+00	0.00E+00	0.00E+00	2.13E-07	2.95E-05	0.00E+00	9.50E-09	0.00E+00	0.00E+00	1.25E-06	0.00E+00	0.00E+00	2.95E-05
2134	ALL	753188.42	4038760.7	NonCancerChronicDerive	0.00E+00	2.84E-09	0.00E+00	0.00E+00	0.00E+00	2.05E-07	2.84E-05	0.00E+00	9.18E-09	0.00E+00	0.00E+00	1.21E-06	0.00E+00	0.00E+00	2.84E-05
2135	ALL	753288.42	4038760.7	NonCancerChronicDerive	0.00E+00	2.74E-09	0.00E+00	0.00E+00	0.00E+00	1.98E-07	2.75E-05	0.00E+00	8.88E-09	0.00E+00	0.00E+00	1.17E-06	0.00E+00	0.00E+00	2.75E-05
2136	ALL	753388.42	4038760.7	NonCancerChronicDerive	0.00E+00	2.65E-09	0.00E+00	0.00E+00	0.00E+00	1.91E-07	2.65E-05	0.00E+00	8.59E-09	0.00E+00	0.00E+00	1.13E-06	0.00E+00	0.00E+00	2.65E-05
2137	ALL	753488.42	4038760.7	NonCancerChronicDerive	0.00E+00	2.57E-09	0.00E+00	0.00E+00	0.00E+00	1.85E-07	2.57E-05	0.00E+00	8.32E-09	0.00E+00	0.00E+00	1.09E-06	0.00E+00	0.00E+00	2.57E-05
2138	ALL	753588.42	4038760.7	NonCancerChronicDerive	0.00E+00	2.49E-09	0.00E+00	0.00E+00	0.00E+00	1.78E-07	2.48E-05	0.00E+00	8.06E-09	0.00E+00	0.00E+00	1.06E-06	0.00E+00	0.00E+00	2.48E-05
2139	ALL	753688.42	4038760.7	NonCancerChronicDerive	0.00E+00	2.41E-09	0.00E+00	0.00E+00	0.00E+00	1.73E-07	2.41E-05	0.00E+00	7.81E-09	0.00E+00	0.00E+00	1.03E-06	0.00E+00	0.00E+00	2.41E-05
2140	ALL	753788.42	4038760.7	NonCancerChronicDerive	0.00E+00	2.34E-09	0.00E+00	0.00E+00	0.00E+00	1.67E-07	2.33E-05	0.00E+00	7.58E-09	0.00E+00	0.00E+00	9.97E-07	0.00E+00	0.00E+00	2.33E-05
2141	ALL	753888.42	4038760.7	NonCancerChronicDerive	0.00E+00	2.27E-09	0.00E+00	0.00E+00	0.00E+00	1.62E-07	2.26E-05	0.00E+00	7.36E-09	0.00E+00	0.00E+00	9.68E-07	0.00E+00	0.00E+00	2.26E-05
2142	ALL	753988.42	4038760.7	NonCancerChronicDerive	0.00E+00	2.21E-09	0.00E+00	0.00E+00	0.00E+00	1.57E-07	2.20E-05	0.00E+00	7.16E-09	0.00E+00	0.00E+00	9.41E-07	0.00E+00	0.00E+00	2.20E-05
2143	ALL	754088.42	4038760.7	NonCancerChronicDerive	0.00E+00	2.15E-09	0.00E+00	0.00E+00	0.00E+00	1.53E-07	2.14E-05	0.00E+00	6.96E-09	0.00E+00	0.00E+00	9.15E-07	0.00E+00	0.00E+00	2.14E-05
2144	ALL	754188.42	4038760.7	NonCancerChronicDerive	0.00E+00	2.09E-09	0.00E+00	0.00E+00	0.00E+00	1.49E-07	2.08E-05	0.00E+00	6.77E-09	0.00E+00	0.00E+00	8.90E-07	0.00E+00	0.00E+00	2.08E-05
2145	ALL	754288.42	4038760.7	NonCancerChronicDerive	0.00E+00	2.04E-09	0.00E+00	0.00E+00	0.00E+00	1.44E-07	2.02E-05	0.00E+00	6.59E-09	0.00E+00	0.00E+00	8.67E-07	0.00E+00	0.00E+00	2.02E-05
2146	ALL	754388.42	4038760.7	NonCancerChronicDerive	0.00E+00	1.98E-09	0.00E+00	0.00E+00	0.00E+00	1.40E-07	1.97E-05	0.00E+00	6.42E-09	0.00E+00	0.00E+00	8.44E-07	0.00E+00	0.00E+00	1.97E-05
2147	ALL	754488.42	4038760.7	NonCancerChronicDerive	0.00E+00	1.93E-09	0.00E+00	0.00E+00	0.00E+00	1.37E-07	1.92E-05	0.00E+00	6.26E-09	0.00E+00	0.00E+00	8.22E-07	0.00E+00	0.00E+00	1.92E-05
2148	ALL	754588.42	4038760.7	NonCancerChronicDerive	0.00E+00	1.88E-09	0.00E+00	0.00E+00	0.00E+00	1.33E-07	1.87E-05	0.00E+00	6.10E-09	0.00E+00	0.00E+00	8.02E-07	0.00E+00	0.00E+00	1.87E-05
2149	ALL	754688.42	4038760.7	NonCancerChronicDerive	0.00E+00	1.84E-09	0.00E+00	0.00E+00	0.00E+00	1.30E-07	1.82E-05	0.00E+00	5.95E-09	0.00E+00	0.00E+00	7.82E-07	0.00E+00	0.00E+00	1.82E-05
2150	ALL	754788.42	4038760.7	NonCancerChronicDerive	0.00E+00	1.79E-09	0.00E+00	0.00E+00	0.00E+00	1.26E-07	1.78E-05	0.00E+00	5.81E-09	0.00E+00	0.00E+00	7.64E-07	0.00E+00	0.00E+00	1.78E-05
2151	ALL	754888.42	4038760.7	NonCancerChronicDerive	0.00E+00	1.75E-09	0.00E+00	0.00E+00	0.00E+00	1.23E-07	1.73E-05	0.00E+00	5.67E-09	0.00E+00	0.00E+00	7.46E-07	0.00E+00	0.00E+00	1.73E-05
2152	ALL	754988.42	4038760.7	NonCancerChronicDerive	0.00E+00	1.71E-09	0.00E+00	0.00E+00	0.00E+00	1.20E-07	1.69E-05	0.00E+00	5.54E-09	0.00E+00	0.00E+00	7.29E-07	0.00E+00	0.00E+00	1.69E-05
2153	ALL	755088.42	4038760.7	NonCancerChronicDerive	0.00E+00	1.67E-09	0.00E+00	0.00E+00	0.00E+00	1.18E-07	1.65E-05	0.00E+00	5.42E-09	0.00E+00	0.00E+00	7.12E-07	0.00E+00	0.00E+00	1.65E-05
2154	ALL	755188.42	4038760.7	NonCancerChronicDerive	0.00E+00	1.64E-09	0.00E+00	0.00E+00	0.00E+00	1.15E-07	1.62E-05	0.00E+00	5.30E-09	0.00E+00	0.00E+00	6.97E-07	0.00E+00	0.00E+00	1.62E-05
2155	ALL	755288.42	4038760.7	NonCancerChronicDerive	0.00E+00	1.60E-09	0.00E+00	0.00E+00	0.00E+00	1.12E-07	1.58E-05	0.00E+00	5.18E-09	0.00E+00	0.00E+00	6.82E-07	0.00E+00	0.00E+00	1.58E-05
2156	ALL	747888.42	4038860.7	NonCancerChronicDerive	0.00E+00	1.98E-09	0.00E+00	0.00E+00	0.00E+00	1.48E-07	2.10E-05	0.00E+00	6.41E-09	0.00E+00	0.00E+00	8.42E-07	0.00E+00	0.00E+00	2.10E-05
2157	ALL	747988.42	4038860.7	NonCancerChronicDerive	0.00E+00	2.14E-09	0.00E+00	0.00E+00	0.00E+00	1.58E-07	2.26E-05	0.00E+00	6.93E-09	0.00E+00	0.00E+00	9.11E-07	0.00E+00	0.00E+00	2.26E-05
2158	ALL	748088.42	4038860.7	NonCancerChronicDerive	0.00E+00	2.31E-09	0.00E+00	0.00E+00	0.00E+00	1.68E-07	2.42E-05	0.00E+00	7.47E-09	0.00E+00	0.00E+00	9.82E-07	0.00E+00	0.00E+00	2.42E-05
2159	ALL	748188.42	4038860.7	NonCancerChronicDerive	0.00E+00	2.46E-09	0.00E+00	0.00E+00	0.00E+00	1.78E-07	2.56E-05	0.00E+00	7.96E-09	0.00E+00	0.00E+00	1.05E-06	0.00E+00	0.00E+00	2.56E-05
2160	ALL	749888.42	4038860.7	NonCancerChronicDerive	0.00E+00	1.30E-08	0.00E+00	0.00E+00	0.00E+00	8.50E-07	1.21E-04	0.00E+00	4.20E-08	0.00E+00	0.00E+00	5.52E-06	0.00E+00	0.00E+00	1.21E-04
2161	ALL	749988.42	4038860.7	NonCancerChronicDerive	0.00E+00	1.28E-08	0.00E+00	0.00E+00	0.00E+00	8.48E-07	1.20E-04	0.00E+00	4.14E-08	0.00E+00	0.00E+00	5.45E-06	0.00E+00	0.00E+00	1.20E-04
2162	ALL	750088.42	4038860.7	NonCancerChronicDerive	0.00E+00	1.25E-08	0.00E+00	0.00E+00	0.00E+00	8.38E-07	1.18E-04	0.00E+00	4.05E-08	0.00E+00	0.00E+00	5.32E-06	0.00E+00	0.00E+00	1.18E-04
2163	ALL	750188.42	4038860.7	NonCancerChronicDerive	0.00E+00	1.21E-08	0.00E+00	0.00E+00	0.00E+00	8.21E-07	1.15E-04	0.00E+00	3.92E-08	0.00E+00	0.00E+00	5.15E-06	0.00E+00	0.00E+00	1.15E-04
2164	ALL	750288.42	4038860.7	NonCancerChronicDerive	0.00E+00	1.16E-08	0.00E+00	0.00E+00	0.00E+00	7.99E-07	1.12E-04	0.00E+00	3.76E-08	0.00E+00	0.00E+00	4.95E-06	0.00E+00	0.00E+00	1.12E-04
2165	ALL	750388.42	4038860.7	NonCancerChronicDerive	0.00E+00	1.11E-08	0.00E+00	0.00E+00	0.00E+00	7.71E-07	1.07E-04	0.00E+00	3.59E-08	0.00E+00	0.00E+00	4.72E-06	0.00E+00	0.00E+00	1.07E-04
2166	ALL	750488.42	4038860.7	NonCancerChronicDerive	0.00E+00	1.05E-08	0.00E+00	0.00E+00	0.00E+00	7.41E-07	1.03E-04	0.00E+00	3.41E-08	0.00E+00	0.00E+00	4.48E-06	0.00E+00	0.00E+00	1.03E-04
2167	ALL	750588.42	4038860.7	NonCancerChronicDerive	0.00E+00	9.96E-09	0.00E+00	0.00E+00	0.00E+00	7.09E-07	9.78E-05	0.00E+00	3.22E-08	0.00E+00	0.00E+00	4.24E-06	0.00E+00	0.00E+00	9.78E-05
2168	ALL	750688.42	4038860.7	NonCancerChronicDerive	0.00E+00	9.39E-09	0.00E+00	0.00E+00	0.00E+00	6.77E-07	9.30E-05	0.00E+00	3.04E-08	0.00E+00	0.00E+00	4.00E-06	0.00E+00	0.00E+00	9.30E-05
2169	ALL	750788.42	4038860.7	NonCancerChronicDerive	0.00E+00	8.84E-09	0.00E+00	0.00E+00	0.00E+00	6.44E-07	8.82E-05	0.00E+00	2.86E-08	0.00E+00	0.00E+00	3.76E-06	0.00E+00	0.00E+00	8.82E-05
2170	ALL	750888.42	4038860.7	NonCancerChronicDerive	0.00E+00	8.31E-09	0.00E+00	0.00E+00	0.00E+00	6.12E-07	8.36E-05	0.00E+00	2.69E-08	0.00E+00	0.00E+00	3.54E-06	0.00E+00	0.00E+00	8.36E-05
2171	ALL	750988.42	4038860.7	NonCancerChronicDerive	0.00E+00	7.82E-09	0.00E+00	0.00E+00	0.00E+00	5.81E-07	7.91E-05	0.00E+00	2.53E-08	0.00E+00	0.00E+00	3.33E-06	0.00E+00	0.00E+00	7.91E-05

2172	ALL	751088.42	4038860.7	NonCancerChronicDerive	0.00E+00	7.35E-09	0.00E+00	0.00E+00	0.00E+00	5.51E-07	7.48E-05	0.00E+00	2.38E-08	0.00E+00	0.00E+00	3.13E-06	0.00E+00	0.00E+00	7.48E-05
2173	ALL	751188.42	4038860.7	NonCancerChronicDerive	0.00E+00	6.92E-09	0.00E+00	0.00E+00	0.00E+00	5.21E-07	7.07E-05	0.00E+00	2.24E-08	0.00E+00	0.00E+00	2.94E-06	0.00E+00	0.00E+00	7.07E-05
2174	ALL	751288.42	4038860.7	NonCancerChronicDerive	0.00E+00	6.52E-09	0.00E+00	0.00E+00	0.00E+00	4.93E-07	6.69E-05	0.00E+00	2.11E-08	0.00E+00	0.00E+00	2.77E-06	0.00E+00	0.00E+00	6.69E-05
2175	ALL	751388.42	4038860.7	NonCancerChronicDerive	0.00E+00	6.15E-09	0.00E+00	0.00E+00	0.00E+00	4.67E-07	6.32E-05	0.00E+00	1.99E-08	0.00E+00	0.00E+00	2.62E-06	0.00E+00	0.00E+00	6.32E-05
2176	ALL	752788.42	4038860.7	NonCancerChronicDerive	0.00E+00	3.18E-09	0.00E+00	0.00E+00	0.00E+00	2.33E-07	3.21E-05	0.00E+00	1.03E-08	0.00E+00	0.00E+00	1.35E-06	0.00E+00	0.00E+00	3.21E-05
2177	ALL	752888.42	4038860.7	NonCancerChronicDerive	0.00E+00	3.07E-09	0.00E+00	0.00E+00	0.00E+00	2.24E-07	3.09E-05	0.00E+00	9.93E-09	0.00E+00	0.00E+00	1.30E-06	0.00E+00	0.00E+00	3.09E-05
2178	ALL	752988.42	4038860.7	NonCancerChronicDerive	0.00E+00	2.96E-09	0.00E+00	0.00E+00	0.00E+00	2.15E-07	2.98E-05	0.00E+00	9.57E-09	0.00E+00	0.00E+00	1.26E-06	0.00E+00	0.00E+00	2.98E-05
2179	ALL	753088.42	4038860.7	NonCancerChronicDerive	0.00E+00	2.86E-09	0.00E+00	0.00E+00	0.00E+00	2.07E-07	2.87E-05	0.00E+00	9.24E-09	0.00E+00	0.00E+00	1.21E-06	0.00E+00	0.00E+00	2.87E-05
2180	ALL	753188.42	4038860.7	NonCancerChronicDerive	0.00E+00	2.76E-09	0.00E+00	0.00E+00	0.00E+00	1.99E-07	2.77E-05	0.00E+00	8.93E-09	0.00E+00	0.00E+00	1.17E-06	0.00E+00	0.00E+00	2.77E-05
2181	ALL	753288.42	4038860.7	NonCancerChronicDerive	0.00E+00	2.67E-09	0.00E+00	0.00E+00	0.00E+00	1.92E-07	2.67E-05	0.00E+00	8.63E-09	0.00E+00	0.00E+00	1.14E-06	0.00E+00	0.00E+00	2.67E-05
2182	ALL	753388.42	4038860.7	NonCancerChronicDerive	0.00E+00	2.58E-09	0.00E+00	0.00E+00	0.00E+00	1.86E-07	2.58E-05	0.00E+00	8.36E-09	0.00E+00	0.00E+00	1.10E-06	0.00E+00	0.00E+00	2.58E-05
2183	ALL	753488.42	4038860.7	NonCancerChronicDerive	0.00E+00	2.50E-09	0.00E+00	0.00E+00	0.00E+00	1.80E-07	2.50E-05	0.00E+00	8.09E-09	0.00E+00	0.00E+00	1.06E-06	0.00E+00	0.00E+00	2.50E-05
2184	ALL	753588.42	4038860.7	NonCancerChronicDerive	0.00E+00	2.42E-09	0.00E+00	0.00E+00	0.00E+00	1.74E-07	2.42E-05	0.00E+00	7.84E-09	0.00E+00	0.00E+00	1.03E-06	0.00E+00	0.00E+00	2.42E-05
2185	ALL	753688.42	4038860.7	NonCancerChronicDerive	0.00E+00	2.35E-09	0.00E+00	0.00E+00	0.00E+00	1.68E-07	2.35E-05	0.00E+00	7.61E-09	0.00E+00	0.00E+00	1.00E-06	0.00E+00	0.00E+00	2.35E-05
2186	ALL	753788.42	4038860.7	NonCancerChronicDerive	0.00E+00	2.28E-09	0.00E+00	0.00E+00	0.00E+00	1.63E-07	2.28E-05	0.00E+00	7.38E-09	0.00E+00	0.00E+00	9.71E-07	0.00E+00	0.00E+00	2.28E-05
2187	ALL	753888.42	4038860.7	NonCancerChronicDerive	0.00E+00	2.22E-09	0.00E+00	0.00E+00	0.00E+00	1.58E-07	2.21E-05	0.00E+00	7.17E-09	0.00E+00	0.00E+00	9.43E-07	0.00E+00	0.00E+00	2.21E-05
2188	ALL	753988.42	4038860.7	NonCancerChronicDerive	0.00E+00	2.15E-09	0.00E+00	0.00E+00	0.00E+00	1.53E-07	2.15E-05	0.00E+00	6.97E-09	0.00E+00	0.00E+00	9.17E-07	0.00E+00	0.00E+00	2.15E-05
2189	ALL	754088.42	4038860.7	NonCancerChronicDerive	0.00E+00	2.10E-09	0.00E+00	0.00E+00	0.00E+00	1.49E-07	2.09E-05	0.00E+00	6.78E-09	0.00E+00	0.00E+00	8.92E-07	0.00E+00	0.00E+00	2.09E-05
2190	ALL	754188.42	4038860.7	NonCancerChronicDerive	0.00E+00	2.04E-09	0.00E+00	0.00E+00	0.00E+00	1.45E-07	2.03E-05	0.00E+00	6.60E-09	0.00E+00	0.00E+00	8.68E-07	0.00E+00	0.00E+00	2.03E-05
2191	ALL	754288.42	4038860.7	NonCancerChronicDerive	0.00E+00	1.99E-09	0.00E+00	0.00E+00	0.00E+00	1.41E-07	1.97E-05	0.00E+00	6.43E-09	0.00E+00	0.00E+00	8.45E-07	0.00E+00	0.00E+00	1.97E-05
2192	ALL	754388.42	4038860.7	NonCancerChronicDerive	0.00E+00	1.94E-09	0.00E+00	0.00E+00	0.00E+00	1.37E-07	1.92E-05	0.00E+00	6.26E-09	0.00E+00	0.00E+00	8.23E-07	0.00E+00	0.00E+00	1.92E-05
2193	ALL	754488.42	4038860.7	NonCancerChronicDerive	0.00E+00	1.89E-09	0.00E+00	0.00E+00	0.00E+00	1.34E-07	1.87E-05	0.00E+00	6.11E-09	0.00E+00	0.00E+00	8.03E-07	0.00E+00	0.00E+00	1.87E-05
2194	ALL	754588.42	4038860.7	NonCancerChronicDerive	0.00E+00	1.84E-09	0.00E+00	0.00E+00	0.00E+00	1.30E-07	1.83E-05	0.00E+00	5.96E-09	0.00E+00	0.00E+00	7.83E-07	0.00E+00	0.00E+00	1.83E-05
2195	ALL	754688.42	4038860.7	NonCancerChronicDerive	0.00E+00	1.80E-09	0.00E+00	0.00E+00	0.00E+00	1.27E-07	1.78E-05	0.00E+00	5.81E-09	0.00E+00	0.00E+00	7.64E-07	0.00E+00	0.00E+00	1.78E-05
2196	ALL	754788.42	4038860.7	NonCancerChronicDerive	0.00E+00	1.75E-09	0.00E+00	0.00E+00	0.00E+00	1.24E-07	1.74E-05	0.00E+00	5.67E-09	0.00E+00	0.00E+00	7.46E-07	0.00E+00	0.00E+00	1.74E-05
2197	ALL	754888.42	4038860.7	NonCancerChronicDerive	0.00E+00	1.71E-09	0.00E+00	0.00E+00	0.00E+00	1.21E-07	1.70E-05	0.00E+00	5.54E-09	0.00E+00	0.00E+00	7.29E-07	0.00E+00	0.00E+00	1.70E-05
2198	ALL	754988.42	4038860.7	NonCancerChronicDerive	0.00E+00	1.67E-09	0.00E+00	0.00E+00	0.00E+00	1.18E-07	1.66E-05	0.00E+00	5.42E-09	0.00E+00	0.00E+00	7.12E-07	0.00E+00	0.00E+00	1.66E-05
2199	ALL	755088.42	4038860.7	NonCancerChronicDerive	0.00E+00	1.64E-09	0.00E+00	0.00E+00	0.00E+00	1.15E-07	1.62E-05	0.00E+00	5.30E-09	0.00E+00	0.00E+00	6.97E-07	0.00E+00	0.00E+00	1.62E-05
2200	ALL	755188.42	4038860.7	NonCancerChronicDerive	0.00E+00	1.60E-09	0.00E+00	0.00E+00	0.00E+00	1.12E-07	1.58E-05	0.00E+00	5.18E-09	0.00E+00	0.00E+00	6.81E-07	0.00E+00	0.00E+00	1.58E-05
2201	ALL	755288.42	4038860.7	NonCancerChronicDerive	0.00E+00	1.57E-09	0.00E+00	0.00E+00	0.00E+00	1.10E-07	1.55E-05	0.00E+00	5.07E-09	0.00E+00	0.00E+00	6.67E-07	0.00E+00	0.00E+00	1.55E-05
2202	ALL	747888.42	4038960.7	NonCancerChronicDerive	0.00E+00	1.99E-09	0.00E+00	0.00E+00	0.00E+00	1.48E-07	2.12E-05	0.00E+00	6.45E-09	0.00E+00	0.00E+00	8.48E-07	0.00E+00	0.00E+00	2.12E-05
2203	ALL	747988.42	4038960.7	NonCancerChronicDerive	0.00E+00	2.16E-09	0.00E+00	0.00E+00	0.00E+00	1.59E-07	2.27E-05	0.00E+00	6.98E-09	0.00E+00	0.00E+00	9.18E-07	0.00E+00	0.00E+00	2.27E-05
2204	ALL	748088.42	4038960.7	NonCancerChronicDerive	0.00E+00	2.36E-09	0.00E+00	0.00E+00	0.00E+00	1.72E-07	2.47E-05	0.00E+00	7.64E-09	0.00E+00	0.00E+00	1.00E-06	0.00E+00	0.00E+00	2.47E-05
2205	ALL	748188.42	4038960.7	NonCancerChronicDerive	0.00E+00	2.56E-09	0.00E+00	0.00E+00	0.00E+00	1.84E-07	2.65E-05	0.00E+00	8.27E-09	0.00E+00	0.00E+00	1.09E-06	0.00E+00	0.00E+00	2.65E-05
2206	ALL	749888.42	4038960.7	NonCancerChronicDerive	0.00E+00	1.42E-08	0.00E+00	0.00E+00	0.00E+00	9.33E-07	1.33E-04	0.00E+00	4.60E-08	0.00E+00	0.00E+00	6.05E-06	0.00E+00	0.00E+00	1.33E-04
2207	ALL	749988.42	4038960.7	NonCancerChronicDerive	0.00E+00	1.38E-08	0.00E+00	0.00E+00	0.00E+00	9.20E-07	1.30E-04	0.00E+00	4.47E-08	0.00E+00	0.00E+00	5.88E-06	0.00E+00	0.00E+00	1.30E-04
2208	ALL	750088.42	4038960.7	NonCancerChronicDerive	0.00E+00	1.33E-08	0.00E+00	0.00E+00	0.00E+00	8.98E-07	1.26E-04	0.00E+00	4.31E-08	0.00E+00	0.00E+00	5.66E-06	0.00E+00	0.00E+00	1.26E-04
2209	ALL	750188.42	4038960.7	NonCancerChronicDerive	0.00E+00	1.27E-08	0.00E+00	0.00E+00	0.00E+00	8.70E-07	1.22E-04	0.00E+00	4.11E-08	0.00E+00	0.00E+00	5.40E-06	0.00E+00	0.00E+00	1.22E-04
2210	ALL	750288.42	4038960.7	NonCancerChronicDerive	0.00E+00	1.20E-08	0.00E+00	0.00E+00	0.00E+00	8.37E-07	1.16E-04	0.00E+00	3.89E-08	0.00E+00	0.00E+00	5.12E-06	0.00E+00	0.00E+00	1.16E-04
2211	ALL	750388.42	4038960.7	NonCancerChronicDerive	0.00E+00	1.13E-08	0.00E+00	0.00E+00	0.00E+00	8.01E-07	1.11E-04	0.00E+00	3.67E-08	0.00E+00	0.00E+00	4.83E-06	0.00E+00	0.00E+00	1.11E-04
2212	ALL	750488.42	4038960.7	NonCancerChronicDerive	0.00E+00	1.07E-08	0.00E+00	0.00E+00	0.00E+00	7.63E-07	1.05E-04	0.00E+00	3.45E-08	0.00E+00	0.00E+00	4.53E-06	0.00E+00	0.00E+00	1.05E-04
2213	ALL	750588.42	4038960.7	NonCancerChronicDerive	0.00E+00	9.98E-09	0.00E+00	0.00E+00	0.00E+00	7.25E-07	9.94E-05	0.00E+00	3.23E-08	0.00E+00	0.00E+00	4.25E-06	0.00E+00	0.00E+00	9.94E-05
2214	ALL	750688.42	4038960.7	NonCancerChronicDerive	0.00E+00	9.33E-09	0.00E+00	0.00E+00	0.00E+00	6.87E-07	9.38E-05	0.00E+00	3.02E-08	0.00E+00	0.00E+00	3.97E-06	0.00E+00	0.00E+00	9.38E-05
2215	ALL	750788.42	4038960.7	NonCancerChronicDerive	0.00E+00	8.73E-09	0.00E+00	0.00E+00	0.00E+00	6.51E-07	8.85E-05	0.00E+00	2.83E-08	0.00E+00	0.00E+00	3.72E-06	0.00E+00	0.00E+00	8.85E-05
2216	ALL	750888.42	4038960.7	NonCancerChronicDerive	0.00E+00	8.17E-09	0.00E+00	0.00E+00	0.00E+00	6.15E-07	8.34E-05	0.00E+00	2.64E-08	0.00E+00	0.00E+00	3.48E-06	0.00E+00	0.00E+00	8.34E-05
2217	ALL	750988.42	4038960.7	NonCancerChronicDerive	0.00E+00	7.65E-09	0.00E+00	0.00E+00	0.00E+00	5.81E-07	7.86E-05	0.00E+00	2.48E-08	0.00E+00	0.00E+00	3.25E-06	0.00E+00	0.00E+00	7.86E-05
2218	ALL	751088.42	4038960.7	NonCancerChronicDerive	0.00E+00	7.17E-09	0.00E+00	0.00E+00	0.00E+00	5.48E-07	7.41E-05	0.00E+00	2.32E-08	0.00E+00	0.00E+00	3.05E-06	0.00E+00	0.00E+00	7.41E-05
2219	ALL	751188.42	4038960.7	NonCancerChronicDerive	0.00E+00	6.73E-09	0.00E+00	0.00E+00	0.00E+00	5.17E-07	6.98E-05	0.00E+00	2.18E-08	0.00E+00	0.00E+00	2.87E-06	0.00E+00	0.00E+00	6.98E-05
2220	ALL	751288.42	4038960.7	NonCancerChronicDerive	0.00E+00	6.33E-09	0.00E+00	0.00E+00	0.00E+00	4.87E-07	6.58E-05	0.00E+00	2.05E-08	0.00E+00	0.00E+00	2.69E-06	0.00E+00	0.00E+00	6.58E-05
2221	ALL	751388.42	4038960.7	NonCancerChronicDerive	0.00E+00	5.97E-09	0.00E+00	0.00E+00	0.00E+00	4.59E-07	6.20E-05	0.00E+00	1.93E-08	0.00E+00	0.00E+00	2.54E-06	0.00E+00	0.00E+00	6.20E-05
2222	ALL	752788.42	4038960.7	NonCancerChronicDerive	0.00E+00	3.09E-09	0.00E+00	0.00E+00	0.00E+00	2.26E-07	3.12E-05	0.00E+00	1.00E-08	0.00E+00	0.00E+00	1.31E-06	0.00E+00	0.00E+00	3.12E-05
2223	ALL	752888.42	4038960.7	NonCancerChronicDerive	0.00E+00	2.98E-09	0.00E+00	0.00E+00	0.00E+00	2.17E-07	3.00E-05	0.00E+00	9.63E-09	0.00E+00	0.00E+00	1.27E-06	0.00E+00	0.00E+00	3.00E-05
2224	ALL	752988.42	4038960.7	NonCancerChronicDerive	0.00E+00	2.87E-09	0.00E+00	0.00E+00	0.00E+00	2.09E-07	2.89E-05	0.00E+00	9.29E-09	0.00E+00	0.00E+00	1.22E-06	0.00E+00	0.00E+00	2.89E-05

2225	ALL	753088.42	4038960.7	NonCancerChronicDerive	0.00E+00	2.77E-09	0.00E+00	0.00E+00	0.00E+00	2.01E-07	2.79E-05	0.00E+00	8.97E-09	0.00E+00	0.00E+00	1.18E-06	0.00E+00	0.00E+00	2.79E-05
2226	ALL	753188.42	4038960.7	NonCancerChronicDerive	0.00E+00	2.68E-09	0.00E+00	0.00E+00	0.00E+00	1.94E-07	2.69E-05	0.00E+00	8.67E-09	0.00E+00	0.00E+00	1.14E-06	0.00E+00	0.00E+00	2.69E-05
2227	ALL	753288.42	4038960.7	NonCancerChronicDerive	0.00E+00	2.59E-09	0.00E+00	0.00E+00	0.00E+00	1.87E-07	2.60E-05	0.00E+00	8.38E-09	0.00E+00	0.00E+00	1.10E-06	0.00E+00	0.00E+00	2.60E-05
2228	ALL	753388.42	4038960.7	NonCancerChronicDerive	0.00E+00	2.51E-09	0.00E+00	0.00E+00	0.00E+00	1.81E-07	2.51E-05	0.00E+00	8.12E-09	0.00E+00	0.00E+00	1.07E-06	0.00E+00	0.00E+00	2.51E-05
2229	ALL	753488.42	4038960.7	NonCancerChronicDerive	0.00E+00	2.43E-09	0.00E+00	0.00E+00	0.00E+00	1.75E-07	2.43E-05	0.00E+00	7.86E-09	0.00E+00	0.00E+00	1.03E-06	0.00E+00	0.00E+00	2.43E-05
2230	ALL	753588.42	4038960.7	NonCancerChronicDerive	0.00E+00	2.36E-09	0.00E+00	0.00E+00	0.00E+00	1.69E-07	2.36E-05	0.00E+00	7.62E-09	0.00E+00	0.00E+00	1.00E-06	0.00E+00	0.00E+00	2.36E-05
2231	ALL	753688.42	4038960.7	NonCancerChronicDerive	0.00E+00	2.29E-09	0.00E+00	0.00E+00	0.00E+00	1.64E-07	2.28E-05	0.00E+00	7.40E-09	0.00E+00	0.00E+00	9.72E-07	0.00E+00	0.00E+00	2.28E-05
2232	ALL	753788.42	4038960.7	NonCancerChronicDerive	0.00E+00	2.22E-09	0.00E+00	0.00E+00	0.00E+00	1.59E-07	2.22E-05	0.00E+00	7.18E-09	0.00E+00	0.00E+00	9.44E-07	0.00E+00	0.00E+00	2.22E-05
2233	ALL	753888.42	4038960.7	NonCancerChronicDerive	0.00E+00	2.16E-09	0.00E+00	0.00E+00	0.00E+00	1.54E-07	2.15E-05	0.00E+00	6.98E-09	0.00E+00	0.00E+00	9.18E-07	0.00E+00	0.00E+00	2.15E-05
2234	ALL	753988.42	4038960.7	NonCancerChronicDerive	0.00E+00	2.10E-09	0.00E+00	0.00E+00	0.00E+00	1.49E-07	2.09E-05	0.00E+00	6.79E-09	0.00E+00	0.00E+00	8.92E-07	0.00E+00	0.00E+00	2.09E-05
2235	ALL	754088.42	4038960.7	NonCancerChronicDerive	0.00E+00	2.04E-09	0.00E+00	0.00E+00	0.00E+00	1.45E-07	2.03E-05	0.00E+00	6.60E-09	0.00E+00	0.00E+00	8.68E-07	0.00E+00	0.00E+00	2.03E-05
2236	ALL	754188.42	4038960.7	NonCancerChronicDerive	0.00E+00	1.99E-09	0.00E+00	0.00E+00	0.00E+00	1.41E-07	1.98E-05	0.00E+00	6.43E-09	0.00E+00	0.00E+00	8.45E-07	0.00E+00	0.00E+00	1.98E-05
2237	ALL	754288.42	4038960.7	NonCancerChronicDerive	0.00E+00	1.94E-09	0.00E+00	0.00E+00	0.00E+00	1.37E-07	1.93E-05	0.00E+00	6.27E-09	0.00E+00	0.00E+00	8.24E-07	0.00E+00	0.00E+00	1.93E-05
2238	ALL	754388.42	4038960.7	NonCancerChronicDerive	0.00E+00	1.89E-09	0.00E+00	0.00E+00	0.00E+00	1.34E-07	1.88E-05	0.00E+00	6.11E-09	0.00E+00	0.00E+00	8.03E-07	0.00E+00	0.00E+00	1.88E-05
2239	ALL	754488.42	4038960.7	NonCancerChronicDerive	0.00E+00	1.84E-09	0.00E+00	0.00E+00	0.00E+00	1.30E-07	1.83E-05	0.00E+00	5.96E-09	0.00E+00	0.00E+00	7.83E-07	0.00E+00	0.00E+00	1.83E-05
2240	ALL	754588.42	4038960.7	NonCancerChronicDerive	0.00E+00	1.80E-09	0.00E+00	0.00E+00	0.00E+00	1.27E-07	1.78E-05	0.00E+00	5.81E-09	0.00E+00	0.00E+00	7.64E-07	0.00E+00	0.00E+00	1.78E-05
2241	ALL	754688.42	4038960.7	NonCancerChronicDerive	0.00E+00	1.75E-09	0.00E+00	0.00E+00	0.00E+00	1.24E-07	1.74E-05	0.00E+00	5.67E-09	0.00E+00	0.00E+00	7.46E-07	0.00E+00	0.00E+00	1.74E-05
2242	ALL	754788.42	4038960.7	NonCancerChronicDerive	0.00E+00	1.71E-09	0.00E+00	0.00E+00	0.00E+00	1.21E-07	1.70E-05	0.00E+00	5.54E-09	0.00E+00	0.00E+00	7.28E-07	0.00E+00	0.00E+00	1.70E-05
2243	ALL	754888.42	4038960.7	NonCancerChronicDerive	0.00E+00	1.67E-09	0.00E+00	0.00E+00	0.00E+00	1.18E-07	1.66E-05	0.00E+00	5.42E-09	0.00E+00	0.00E+00	7.12E-07	0.00E+00	0.00E+00	1.66E-05
2244	ALL	754988.42	4038960.7	NonCancerChronicDerive	0.00E+00	1.64E-09	0.00E+00	0.00E+00	0.00E+00	1.15E-07	1.62E-05	0.00E+00	5.29E-09	0.00E+00	0.00E+00	6.96E-07	0.00E+00	0.00E+00	1.62E-05
2245	ALL	755088.42	4038960.7	NonCancerChronicDerive	0.00E+00	1.60E-09	0.00E+00	0.00E+00	0.00E+00	1.12E-07	1.58E-05	0.00E+00	5.18E-09	0.00E+00	0.00E+00	6.81E-07	0.00E+00	0.00E+00	1.58E-05
2246	ALL	755188.42	4038960.7	NonCancerChronicDerive	0.00E+00	1.57E-09	0.00E+00	0.00E+00	0.00E+00	1.10E-07	1.55E-05	0.00E+00	5.07E-09	0.00E+00	0.00E+00	6.66E-07	0.00E+00	0.00E+00	1.55E-05
2247	ALL	755288.42	4038960.7	NonCancerChronicDerive	0.00E+00	1.53E-09	0.00E+00	0.00E+00	0.00E+00	1.08E-07	1.52E-05	0.00E+00	4.96E-09	0.00E+00	0.00E+00	6.52E-07	0.00E+00	0.00E+00	1.52E-05
2248	ALL	747788.42	4039060.7	NonCancerChronicDerive	0.00E+00	1.93E-09	0.00E+00	0.00E+00	0.00E+00	1.44E-07	2.05E-05	0.00E+00	6.24E-09	0.00E+00	0.00E+00	8.21E-07	0.00E+00	0.00E+00	2.05E-05
2249	ALL	747888.42	4039060.7	NonCancerChronicDerive	0.00E+00	2.02E-09	0.00E+00	0.00E+00	0.00E+00	1.50E-07	2.14E-05	0.00E+00	6.55E-09	0.00E+00	0.00E+00	8.61E-07	0.00E+00	0.00E+00	2.14E-05
2250	ALL	747988.42	4039060.7	NonCancerChronicDerive	0.00E+00	2.19E-09	0.00E+00	0.00E+00	0.00E+00	1.61E-07	2.30E-05	0.00E+00	7.07E-09	0.00E+00	0.00E+00	9.30E-07	0.00E+00	0.00E+00	2.30E-05
2251	ALL	748088.42	4039060.7	NonCancerChronicDerive	0.00E+00	2.41E-09	0.00E+00	0.00E+00	0.00E+00	1.75E-07	2.52E-05	0.00E+00	7.81E-09	0.00E+00	0.00E+00	1.03E-06	0.00E+00	0.00E+00	2.52E-05
2252	ALL	748188.42	4039060.7	NonCancerChronicDerive	0.00E+00	2.65E-09	0.00E+00	0.00E+00	0.00E+00	1.90E-07	2.75E-05	0.00E+00	8.58E-09	0.00E+00	0.00E+00	1.13E-06	0.00E+00	0.00E+00	2.75E-05
2253	ALL	749888.42	4039060.7	NonCancerChronicDerive	0.00E+00	1.54E-08	0.00E+00	0.00E+00	0.00E+00	1.02E-06	1.44E-04	0.00E+00	4.99E-08	0.00E+00	0.00E+00	6.56E-06	0.00E+00	0.00E+00	1.44E-04
2254	ALL	749988.42	4039060.7	NonCancerChronicDerive	0.00E+00	1.47E-08	0.00E+00	0.00E+00	0.00E+00	9.88E-07	1.39E-04	0.00E+00	4.77E-08	0.00E+00	0.00E+00	6.27E-06	0.00E+00	0.00E+00	1.39E-04
2255	ALL	750088.42	4039060.7	NonCancerChronicDerive	0.00E+00	1.39E-08	0.00E+00	0.00E+00	0.00E+00	9.53E-07	1.33E-04	0.00E+00	4.52E-08	0.00E+00	0.00E+00	5.94E-06	0.00E+00	0.00E+00	1.33E-04
2256	ALL	750188.42	4039060.7	NonCancerChronicDerive	0.00E+00	1.31E-08	0.00E+00	0.00E+00	0.00E+00	9.12E-07	1.27E-04	0.00E+00	4.25E-08	0.00E+00	0.00E+00	5.58E-06	0.00E+00	0.00E+00	1.27E-04
2257	ALL	750288.42	4039060.7	NonCancerChronicDerive	0.00E+00	1.23E-08	0.00E+00	0.00E+00	0.00E+00	8.69E-07	1.20E-04	0.00E+00	3.97E-08	0.00E+00	0.00E+00	5.22E-06	0.00E+00	0.00E+00	1.20E-04
2258	ALL	750388.42	4039060.7	NonCancerChronicDerive	0.00E+00	1.14E-08	0.00E+00	0.00E+00	0.00E+00	8.24E-07	1.13E-04	0.00E+00	3.70E-08	0.00E+00	0.00E+00	4.86E-06	0.00E+00	0.00E+00	1.13E-04
2259	ALL	750488.42	4039060.7	NonCancerChronicDerive	0.00E+00	1.06E-08	0.00E+00	0.00E+00	0.00E+00	7.80E-07	1.07E-04	0.00E+00	3.44E-08	0.00E+00	0.00E+00	4.52E-06	0.00E+00	0.00E+00	1.07E-04
2260	ALL	750588.42	4039060.7	NonCancerChronicDerive	0.00E+00	9.87E-09	0.00E+00	0.00E+00	0.00E+00	7.36E-07	1.00E-04	0.00E+00	3.20E-08	0.00E+00	0.00E+00	4.20E-06	0.00E+00	0.00E+00	1.00E-04
2261	ALL	750688.42	4039060.7	NonCancerChronicDerive	0.00E+00	9.17E-09	0.00E+00	0.00E+00	0.00E+00	6.94E-07	9.39E-05	0.00E+00	2.97E-08	0.00E+00	0.00E+00	3.90E-06	0.00E+00	0.00E+00	9.39E-05
2262	ALL	750788.42	4039060.7	NonCancerChronicDerive	0.00E+00	8.53E-09	0.00E+00	0.00E+00	0.00E+00	6.54E-07	8.82E-05	0.00E+00	2.76E-08	0.00E+00	0.00E+00	3.63E-06	0.00E+00	0.00E+00	8.82E-05
2263	ALL	750888.42	4039060.7	NonCancerChronicDerive	0.00E+00	7.95E-09	0.00E+00	0.00E+00	0.00E+00	6.15E-07	8.27E-05	0.00E+00	2.57E-08	0.00E+00	0.00E+00	3.38E-06	0.00E+00	0.00E+00	8.27E-05
2264	ALL	750988.42	4039060.7	NonCancerChronicDerive	0.00E+00	7.42E-09	0.00E+00	0.00E+00	0.00E+00	5.78E-07	7.76E-05	0.00E+00	2.40E-08	0.00E+00	0.00E+00	3.16E-06	0.00E+00	0.00E+00	7.76E-05
2265	ALL	751088.42	4039060.7	NonCancerChronicDerive	0.00E+00	6.95E-09	0.00E+00	0.00E+00	0.00E+00	5.43E-07	7.29E-05	0.00E+00	2.25E-08	0.00E+00	0.00E+00	2.96E-06	0.00E+00	0.00E+00	7.29E-05
2266	ALL	751188.42	4039060.7	NonCancerChronicDerive	0.00E+00	6.52E-09	0.00E+00	0.00E+00	0.00E+00	5.10E-07	6.84E-05	0.00E+00	2.11E-08	0.00E+00	0.00E+00	2.77E-06	0.00E+00	0.00E+00	6.84E-05
2267	ALL	751288.42	4039060.7	NonCancerChronicDerive	0.00E+00	6.13E-09	0.00E+00	0.00E+00	0.00E+00	4.79E-07	6.43E-05	0.00E+00	1.98E-08	0.00E+00	0.00E+00	2.61E-06	0.00E+00	0.00E+00	6.43E-05
2268	ALL	751388.42	4039060.7	NonCancerChronicDerive	0.00E+00	5.77E-09	0.00E+00	0.00E+00	0.00E+00	4.50E-07	6.05E-05	0.00E+00	1.87E-08	0.00E+00	0.00E+00	2.46E-06	0.00E+00	0.00E+00	6.05E-05
2269	ALL	752788.42	4039060.7	NonCancerChronicDerive	0.00E+00	2.99E-09	0.00E+00	0.00E+00	0.00E+00	2.19E-07	3.03E-05	0.00E+00	9.69E-09	0.00E+00	0.00E+00	1.27E-06	0.00E+00	0.00E+00	3.03E-05
2270	ALL	752888.42	4039060.7	NonCancerChronicDerive	0.00E+00	2.88E-09	0.00E+00	0.00E+00	0.00E+00	2.10E-07	2.91E-05	0.00E+00	9.33E-09	0.00E+00	0.00E+00	1.23E-06	0.00E+00	0.00E+00	2.91E-05
2271	ALL	752988.42	4039060.7	NonCancerChronicDerive	0.00E+00	2.78E-09	0.00E+00	0.00E+00	0.00E+00	2.02E-07	2.81E-05	0.00E+00	9.00E-09	0.00E+00	0.00E+00	1.18E-06	0.00E+00	0.00E+00	2.81E-05
2272	ALL	753088.42	4039060.7	NonCancerChronicDerive	0.00E+00	2.69E-09	0.00E+00	0.00E+00	0.00E+00	1.95E-07	2.71E-05	0.00E+00	8.70E-09	0.00E+00	0.00E+00	1.14E-06	0.00E+00	0.00E+00	2.71E-05
2273	ALL	753188.42	4039060.7	NonCancerChronicDerive	0.00E+00	2.60E-09	0.00E+00	0.00E+00	0.00E+00	1.88E-07	2.61E-05	0.00E+00	8.40E-09	0.00E+00	0.00E+00	1.10E-06	0.00E+00	0.00E+00	2.61E-05
2274	ALL	747788.42	4039160.7	NonCancerChronicDerive	0.00E+00	1.98E-09	0.00E+00	0.00E+00	0.00E+00	1.47E-07	2.11E-05	0.00E+00	6.42E-09	0.00E+00	0.00E+00	8.43E-07	0.00E+00	0.00E+00	2.11E-05
2275	ALL	747888.42	4039160.7	NonCancerChronicDerive	0.00E+00	2.07E-09	0.00E+00	0.00E+00	0.00E+00	1.53E-07	2.19E-05	0.00E+00	6.71E-09	0.00E+00	0.00E+00	8.82E-07	0.00E+00	0.00E+00	2.19E-05
2276	ALL	747988.42	4039160.7	NonCancerChronicDerive	0.00E+00	2.22E-09	0.00E+00	0.00E+00	0.00E+00	1.63E-07	2.34E-05	0.00E+00	7.20E-09	0.00E+00	0.00E+00	9.47E-07	0.00E+00	0.00E+00	2.34E-05
2277	ALL	748088.42	4039160.7	NonCancerChronicDerive	0.00E+00	2.47E-09	0.00E+00	0.00E+00	0.00E+00	1.78E-07	2.57E-05	0.00E+00	7.98E-09	0.00E+00	0.00E+00	1.05E-06	0.00E+00	0.00E+00	2.57E-05

2278	ALL	748188.42	4039160.7	NonCancerChronicDerive	0.00E+00	2.76E-09	0.00E+00	0.00E+00	0.00E+00	1.97E-07	2.85E-05	0.00E+00	8.92E-09	0.00E+00	0.00E+00	1.17E-06	0.00E+00	0.00E+00	2.85E-05
2279	ALL	749888.42	4039160.7	NonCancerChronicDerive	0.00E+00	1.64E-08	0.00E+00	0.00E+00	0.00E+00	1.09E-06	1.54E-04	0.00E+00	5.32E-08	0.00E+00	0.00E+00	6.99E-06	0.00E+00	0.00E+00	1.54E-04
2280	ALL	749988.42	4039160.7	NonCancerChronicDerive	0.00E+00	1.54E-08	0.00E+00	0.00E+00	0.00E+00	1.05E-06	1.47E-04	0.00E+00	4.99E-08	0.00E+00	0.00E+00	6.56E-06	0.00E+00	0.00E+00	1.47E-04
2281	ALL	750088.42	4039160.7	NonCancerChronicDerive	0.00E+00	1.44E-08	0.00E+00	0.00E+00	0.00E+00	9.97E-07	1.39E-04	0.00E+00	4.65E-08	0.00E+00	0.00E+00	6.11E-06	0.00E+00	0.00E+00	1.39E-04
2282	ALL	750188.42	4039160.7	NonCancerChronicDerive	0.00E+00	1.33E-08	0.00E+00	0.00E+00	0.00E+00	9.45E-07	1.30E-04	0.00E+00	4.31E-08	0.00E+00	0.00E+00	5.66E-06	0.00E+00	0.00E+00	1.30E-04
2283	ALL	750288.42	4039160.7	NonCancerChronicDerive	0.00E+00	1.23E-08	0.00E+00	0.00E+00	0.00E+00	8.92E-07	1.22E-04	0.00E+00	3.97E-08	0.00E+00	0.00E+00	5.23E-06	0.00E+00	0.00E+00	1.22E-04
2284	ALL	750388.42	4039160.7	NonCancerChronicDerive	0.00E+00	1.13E-08	0.00E+00	0.00E+00	0.00E+00	8.41E-07	1.14E-04	0.00E+00	3.66E-08	0.00E+00	0.00E+00	4.82E-06	0.00E+00	0.00E+00	1.14E-04
2285	ALL	750488.42	4039160.7	NonCancerChronicDerive	0.00E+00	1.04E-08	0.00E+00	0.00E+00	0.00E+00	7.91E-07	1.07E-04	0.00E+00	3.38E-08	0.00E+00	0.00E+00	4.44E-06	0.00E+00	0.00E+00	1.07E-04
2286	ALL	750588.42	4039160.7	NonCancerChronicDerive	0.00E+00	9.64E-09	0.00E+00	0.00E+00	0.00E+00	7.43E-07	1.00E-04	0.00E+00	3.12E-08	0.00E+00	0.00E+00	4.10E-06	0.00E+00	0.00E+00	1.00E-04
2287	ALL	750688.42	4039160.7	NonCancerChronicDerive	0.00E+00	8.91E-09	0.00E+00	0.00E+00	0.00E+00	6.97E-07	9.34E-05	0.00E+00	2.89E-08	0.00E+00	0.00E+00	3.79E-06	0.00E+00	0.00E+00	9.34E-05
2288	ALL	750788.42	4039160.7	NonCancerChronicDerive	0.00E+00	8.26E-09	0.00E+00	0.00E+00	0.00E+00	6.53E-07	8.73E-05	0.00E+00	2.68E-08	0.00E+00	0.00E+00	3.52E-06	0.00E+00	0.00E+00	8.73E-05
2289	ALL	750888.42	4039160.7	NonCancerChronicDerive	0.00E+00	7.68E-09	0.00E+00	0.00E+00	0.00E+00	6.11E-07	8.15E-05	0.00E+00	2.49E-08	0.00E+00	0.00E+00	3.27E-06	0.00E+00	0.00E+00	8.15E-05
2290	ALL	750988.42	4039160.7	NonCancerChronicDerive	0.00E+00	7.16E-09	0.00E+00	0.00E+00	0.00E+00	5.71E-07	7.62E-05	0.00E+00	2.32E-08	0.00E+00	0.00E+00	3.05E-06	0.00E+00	0.00E+00	7.62E-05
2291	ALL	751088.42	4039160.7	NonCancerChronicDerive	0.00E+00	6.70E-09	0.00E+00	0.00E+00	0.00E+00	5.34E-07	7.13E-05	0.00E+00	2.17E-08	0.00E+00	0.00E+00	2.85E-06	0.00E+00	0.00E+00	7.13E-05
2292	ALL	751188.42	4039160.7	NonCancerChronicDerive	0.00E+00	6.28E-09	0.00E+00	0.00E+00	0.00E+00	4.99E-07	6.67E-05	0.00E+00	2.03E-08	0.00E+00	0.00E+00	2.67E-06	0.00E+00	0.00E+00	6.67E-05
2293	ALL	751288.42	4039160.7	NonCancerChronicDerive	0.00E+00	5.90E-09	0.00E+00	0.00E+00	0.00E+00	4.67E-07	6.26E-05	0.00E+00	1.91E-08	0.00E+00	0.00E+00	2.51E-06	0.00E+00	0.00E+00	6.26E-05
2294	ALL	751388.42	4039160.7	NonCancerChronicDerive	0.00E+00	5.56E-09	0.00E+00	0.00E+00	0.00E+00	4.37E-07	5.87E-05	0.00E+00	1.80E-08	0.00E+00	0.00E+00	2.37E-06	0.00E+00	0.00E+00	5.87E-05
2295	ALL	752788.42	4039160.7	NonCancerChronicDerive	0.00E+00	2.89E-09	0.00E+00	0.00E+00	0.00E+00	2.12E-07	2.93E-05	0.00E+00	9.37E-09	0.00E+00	0.00E+00	1.23E-06	0.00E+00	0.00E+00	2.93E-05
2296	ALL	752888.42	4039160.7	NonCancerChronicDerive	0.00E+00	2.79E-09	0.00E+00	0.00E+00	0.00E+00	2.04E-07	2.82E-05	0.00E+00	9.03E-09	0.00E+00	0.00E+00	1.19E-06	0.00E+00	0.00E+00	2.82E-05
2297	ALL	752988.42	4039160.7	NonCancerChronicDerive	0.00E+00	2.69E-09	0.00E+00	0.00E+00	0.00E+00	1.96E-07	2.72E-05	0.00E+00	8.71E-09	0.00E+00	0.00E+00	1.15E-06	0.00E+00	0.00E+00	2.72E-05
2298	ALL	753088.42	4039160.7	NonCancerChronicDerive	0.00E+00	2.60E-09	0.00E+00	0.00E+00	0.00E+00	1.89E-07	2.62E-05	0.00E+00	8.42E-09	0.00E+00	0.00E+00	1.11E-06	0.00E+00	0.00E+00	2.62E-05
2299	ALL	753188.42	4039160.7	NonCancerChronicDerive	0.00E+00	2.51E-09	0.00E+00	0.00E+00	0.00E+00	1.82E-07	2.53E-05	0.00E+00	8.14E-09	0.00E+00	0.00E+00	1.07E-06	0.00E+00	0.00E+00	2.53E-05
2300	ALL	747788.42	4039260.7	NonCancerChronicDerive	0.00E+00	2.04E-09	0.00E+00	0.00E+00	0.00E+00	1.51E-07	2.17E-05	0.00E+00	6.61E-09	0.00E+00	0.00E+00	8.69E-07	0.00E+00	0.00E+00	2.17E-05
2301	ALL	747888.42	4039260.7	NonCancerChronicDerive	0.00E+00	2.13E-09	0.00E+00	0.00E+00	0.00E+00	1.57E-07	2.26E-05	0.00E+00	6.91E-09	0.00E+00	0.00E+00	9.08E-07	0.00E+00	0.00E+00	2.26E-05
2302	ALL	747988.42	4039260.7	NonCancerChronicDerive	0.00E+00	2.28E-09	0.00E+00	0.00E+00	0.00E+00	1.67E-07	2.39E-05	0.00E+00	7.37E-09	0.00E+00	0.00E+00	9.69E-07	0.00E+00	0.00E+00	2.39E-05
2303	ALL	748088.42	4039260.7	NonCancerChronicDerive	0.00E+00	2.52E-09	0.00E+00	0.00E+00	0.00E+00	1.82E-07	2.62E-05	0.00E+00	8.15E-09	0.00E+00	0.00E+00	1.07E-06	0.00E+00	0.00E+00	2.62E-05
2304	ALL	748188.42	4039260.7	NonCancerChronicDerive	0.00E+00	2.86E-09	0.00E+00	0.00E+00	0.00E+00	2.03E-07	2.95E-05	0.00E+00	9.24E-09	0.00E+00	0.00E+00	1.22E-06	0.00E+00	0.00E+00	2.95E-05
2305	ALL	749888.42	4039260.7	NonCancerChronicDerive	0.00E+00	1.71E-08	0.00E+00	0.00E+00	0.00E+00	1.15E-06	1.62E-04	0.00E+00	5.55E-08	0.00E+00	0.00E+00	7.30E-06	0.00E+00	0.00E+00	1.62E-04
2306	ALL	749988.42	4039260.7	NonCancerChronicDerive	0.00E+00	1.58E-08	0.00E+00	0.00E+00	0.00E+00	1.09E-06	1.52E-04	0.00E+00	5.11E-08	0.00E+00	0.00E+00	6.72E-06	0.00E+00	0.00E+00	1.52E-04
2307	ALL	750088.42	4039260.7	NonCancerChronicDerive	0.00E+00	1.45E-08	0.00E+00	0.00E+00	0.00E+00	1.03E-06	1.42E-04	0.00E+00	4.68E-08	0.00E+00	0.00E+00	6.16E-06	0.00E+00	0.00E+00	1.42E-04
2308	ALL	750188.42	4039260.7	NonCancerChronicDerive	0.00E+00	1.32E-08	0.00E+00	0.00E+00	0.00E+00	9.69E-07	1.32E-04	0.00E+00	4.28E-08	0.00E+00	0.00E+00	5.63E-06	0.00E+00	0.00E+00	1.32E-04
2309	ALL	750288.42	4039260.7	NonCancerChronicDerive	0.00E+00	1.21E-08	0.00E+00	0.00E+00	0.00E+00	9.10E-07	1.23E-04	0.00E+00	3.91E-08	0.00E+00	0.00E+00	5.14E-06	0.00E+00	0.00E+00	1.23E-04
2310	ALL	750388.42	4039260.7	NonCancerChronicDerive	0.00E+00	1.10E-08	0.00E+00	0.00E+00	0.00E+00	8.53E-07	1.15E-04	0.00E+00	3.58E-08	0.00E+00	0.00E+00	4.70E-06	0.00E+00	0.00E+00	1.15E-04
2311	ALL	750488.42	4039260.7	NonCancerChronicDerive	0.00E+00	1.01E-08	0.00E+00	0.00E+00	0.00E+00	7.99E-07	1.07E-04	0.00E+00	3.28E-08	0.00E+00	0.00E+00	4.31E-06	0.00E+00	0.00E+00	1.07E-04
2312	ALL	750588.42	4039260.7	NonCancerChronicDerive	0.00E+00	9.31E-09	0.00E+00	0.00E+00	0.00E+00	7.46E-07	9.93E-05	0.00E+00	3.01E-08	0.00E+00	0.00E+00	3.96E-06	0.00E+00	0.00E+00	9.93E-05
2313	ALL	750688.42	4039260.7	NonCancerChronicDerive	0.00E+00	8.58E-09	0.00E+00	0.00E+00	0.00E+00	6.96E-07	9.24E-05	0.00E+00	2.78E-08	0.00E+00	0.00E+00	3.65E-06	0.00E+00	0.00E+00	9.24E-05
2314	ALL	750788.42	4039260.7	NonCancerChronicDerive	0.00E+00	7.94E-09	0.00E+00	0.00E+00	0.00E+00	6.48E-07	8.59E-05	0.00E+00	2.57E-08	0.00E+00	0.00E+00	3.38E-06	0.00E+00	0.00E+00	8.59E-05
2315	ALL	750888.42	4039260.7	NonCancerChronicDerive	0.00E+00	7.38E-09	0.00E+00	0.00E+00	0.00E+00	6.03E-07	7.99E-05	0.00E+00	2.39E-08	0.00E+00	0.00E+00	3.14E-06	0.00E+00	0.00E+00	7.99E-05
2316	ALL	750988.42	4039260.7	NonCancerChronicDerive	0.00E+00	6.87E-09	0.00E+00	0.00E+00	0.00E+00	5.60E-07	7.43E-05	0.00E+00	2.22E-08	0.00E+00	0.00E+00	2.92E-06	0.00E+00	0.00E+00	7.43E-05
2317	ALL	751088.42	4039260.7	NonCancerChronicDerive	0.00E+00	6.42E-09	0.00E+00	0.00E+00	0.00E+00	5.21E-07	6.92E-05	0.00E+00	2.08E-08	0.00E+00	0.00E+00	2.73E-06	0.00E+00	0.00E+00	6.92E-05
2318	ALL	751188.42	4039260.7	NonCancerChronicDerive	0.00E+00	6.02E-09	0.00E+00	0.00E+00	0.00E+00	4.85E-07	6.46E-05	0.00E+00	1.95E-08	0.00E+00	0.00E+00	2.56E-06	0.00E+00	0.00E+00	6.46E-05
2319	ALL	751288.42	4039260.7	NonCancerChronicDerive	0.00E+00	5.66E-09	0.00E+00	0.00E+00	0.00E+00	4.52E-07	6.05E-05	0.00E+00	1.83E-08	0.00E+00	0.00E+00	2.41E-06	0.00E+00	0.00E+00	6.05E-05
2320	ALL	751388.42	4039260.7	NonCancerChronicDerive	0.00E+00	5.33E-09	0.00E+00	0.00E+00	0.00E+00	4.23E-07	5.67E-05	0.00E+00	1.73E-08	0.00E+00	0.00E+00	2.27E-06	0.00E+00	0.00E+00	5.67E-05
2321	ALL	752788.42	4039260.7	NonCancerChronicDerive	0.00E+00	2.79E-09	0.00E+00	0.00E+00	0.00E+00	2.05E-07	2.84E-05	0.00E+00	9.04E-09	0.00E+00	0.00E+00	1.19E-06	0.00E+00	0.00E+00	2.84E-05
2322	ALL	752888.42	4039260.7	NonCancerChronicDerive	0.00E+00	2.69E-09	0.00E+00	0.00E+00	0.00E+00	1.97E-07	2.73E-05	0.00E+00	8.72E-09	0.00E+00	0.00E+00	1.15E-06	0.00E+00	0.00E+00	2.73E-05
2323	ALL	752988.42	4039260.7	NonCancerChronicDerive	0.00E+00	2.60E-09	0.00E+00	0.00E+00	0.00E+00	1.90E-07	2.63E-05	0.00E+00	8.42E-09	0.00E+00	0.00E+00	1.11E-06	0.00E+00	0.00E+00	2.63E-05
2324	ALL	753088.42	4039260.7	NonCancerChronicDerive	0.00E+00	2.51E-09	0.00E+00	0.00E+00	0.00E+00	1.83E-07	2.54E-05	0.00E+00	8.13E-09	0.00E+00	0.00E+00	1.07E-06	0.00E+00	0.00E+00	2.54E-05
2325	ALL	753188.42	4039260.7	NonCancerChronicDerive	0.00E+00	2.43E-09	0.00E+00	0.00E+00	0.00E+00	1.76E-07	2.45E-05	0.00E+00	7.87E-09	0.00E+00	0.00E+00	1.03E-06	0.00E+00	0.00E+00	2.45E-05
2326	ALL	747788.42	4039360.7	NonCancerChronicDerive	0.00E+00	2.11E-09	0.00E+00	0.00E+00	0.00E+00	1.56E-07	2.23E-05	0.00E+00	6.82E-09	0.00E+00	0.00E+00	8.96E-07	0.00E+00	0.00E+00	2.23E-05
2327	ALL	747888.42	4039360.7	NonCancerChronicDerive	0.00E+00	2.21E-09	0.00E+00	0.00E+00	0.00E+00	1.63E-07	2.33E-05	0.00E+00	7.15E-09	0.00E+00	0.00E+00	9.40E-07	0.00E+00	0.00E+00	2.33E-05
2328	ALL	747988.42	4039360.7	NonCancerChronicDerive	0.00E+00	2.35E-09	0.00E+00	0.00E+00	0.00E+00	1.72E-07	2.47E-05	0.00E+00	7.62E-09	0.00E+00	0.00E+00	1.00E-06	0.00E+00	0.00E+00	2.47E-05
2329	ALL	748088.42	4039360.7	NonCancerChronicDerive	0.00E+00	2.59E-09	0.00E+00	0.00E+00	0.00E+00	1.87E-07	2.69E-05	0.00E+00	8.38E-09	0.00E+00	0.00E+00	1.10E-06	0.00E+00	0.00E+00	2.69E-05
2330	ALL	748188.42	4039360.7	NonCancerChronicDerive	0.00E+00	2.97E-09	0.00E+00	0.00E+00	0.00E+00	2.11E-07	3.05E-05	0.00E+00	9.60E-09	0.00E+00	0.00E+00	1.26E-06	0.00E+00	0.00E+00	3.05E-05

2331	ALL	749888.42	4039360.7	NonCancerChronicDerive	0.00E+00	1.74E-08	0.00E+00	0.00E+00	0.00E+00	1.20E-06	1.67E-04	0.00E+00	5.64E-08	0.00E+00	0.00E+00	7.42E-06	0.00E+00	0.00E+00	1.67E-04
2332	ALL	749988.42	4039360.7	NonCancerChronicDerive	0.00E+00	1.58E-08	0.00E+00	0.00E+00	0.00E+00	1.12E-06	1.55E-04	0.00E+00	5.10E-08	0.00E+00	0.00E+00	6.70E-06	0.00E+00	0.00E+00	1.55E-04
2333	ALL	750088.42	4039360.7	NonCancerChronicDerive	0.00E+00	1.42E-08	0.00E+00	0.00E+00	0.00E+00	1.05E-06	1.43E-04	0.00E+00	4.61E-08	0.00E+00	0.00E+00	6.06E-06	0.00E+00	0.00E+00	1.43E-04
2334	ALL	750188.42	4039360.7	NonCancerChronicDerive	0.00E+00	1.29E-08	0.00E+00	0.00E+00	0.00E+00	9.87E-07	1.33E-04	0.00E+00	4.17E-08	0.00E+00	0.00E+00	5.48E-06	0.00E+00	0.00E+00	1.33E-04
2335	ALL	750288.42	4039360.7	NonCancerChronicDerive	0.00E+00	1.17E-08	0.00E+00	0.00E+00	0.00E+00	9.24E-07	1.23E-04	0.00E+00	3.78E-08	0.00E+00	0.00E+00	4.97E-06	0.00E+00	0.00E+00	1.23E-04
2336	ALL	750388.42	4039360.7	NonCancerChronicDerive	0.00E+00	1.06E-08	0.00E+00	0.00E+00	0.00E+00	8.63E-07	1.14E-04	0.00E+00	3.44E-08	0.00E+00	0.00E+00	4.52E-06	0.00E+00	0.00E+00	1.14E-04
2337	ALL	750488.42	4039360.7	NonCancerChronicDerive	0.00E+00	9.71E-09	0.00E+00	0.00E+00	0.00E+00	8.04E-07	1.06E-04	0.00E+00	3.14E-08	0.00E+00	0.00E+00	4.13E-06	0.00E+00	0.00E+00	1.06E-04
2338	ALL	750588.42	4039360.7	NonCancerChronicDerive	0.00E+00	8.90E-09	0.00E+00	0.00E+00	0.00E+00	7.47E-07	9.82E-05	0.00E+00	2.88E-08	0.00E+00	0.00E+00	3.79E-06	0.00E+00	0.00E+00	9.82E-05
2339	ALL	750688.42	4039360.7	NonCancerChronicDerive	0.00E+00	8.20E-09	0.00E+00	0.00E+00	0.00E+00	6.91E-07	9.07E-05	0.00E+00	2.65E-08	0.00E+00	0.00E+00	3.49E-06	0.00E+00	0.00E+00	9.07E-05
2340	ALL	750788.42	4039360.7	NonCancerChronicDerive	0.00E+00	7.58E-09	0.00E+00	0.00E+00	0.00E+00	6.39E-07	8.39E-05	0.00E+00	2.45E-08	0.00E+00	0.00E+00	3.23E-06	0.00E+00	0.00E+00	8.39E-05
2341	ALL	750888.42	4039360.7	NonCancerChronicDerive	0.00E+00	7.04E-09	0.00E+00	0.00E+00	0.00E+00	5.90E-07	7.76E-05	0.00E+00	2.28E-08	0.00E+00	0.00E+00	2.99E-06	0.00E+00	0.00E+00	7.76E-05
2342	ALL	750988.42	4039360.7	NonCancerChronicDerive	0.00E+00	6.55E-09	0.00E+00	0.00E+00	0.00E+00	5.44E-07	7.19E-05	0.00E+00	2.12E-08	0.00E+00	0.00E+00	2.79E-06	0.00E+00	0.00E+00	7.19E-05
2343	ALL	751088.42	4039360.7	NonCancerChronicDerive	0.00E+00	6.12E-09	0.00E+00	0.00E+00	0.00E+00	5.04E-07	6.68E-05	0.00E+00	1.98E-08	0.00E+00	0.00E+00	2.61E-06	0.00E+00	0.00E+00	6.68E-05
2344	ALL	751188.42	4039360.7	NonCancerChronicDerive	0.00E+00	5.74E-09	0.00E+00	0.00E+00	0.00E+00	4.67E-07	6.22E-05	0.00E+00	1.86E-08	0.00E+00	0.00E+00	2.44E-06	0.00E+00	0.00E+00	6.22E-05
2345	ALL	751288.42	4039360.7	NonCancerChronicDerive	0.00E+00	5.40E-09	0.00E+00	0.00E+00	0.00E+00	4.34E-07	5.80E-05	0.00E+00	1.75E-08	0.00E+00	0.00E+00	2.30E-06	0.00E+00	0.00E+00	5.80E-05
2346	ALL	751388.42	4039360.7	NonCancerChronicDerive	0.00E+00	5.09E-09	0.00E+00	0.00E+00	0.00E+00	4.05E-07	5.43E-05	0.00E+00	1.65E-08	0.00E+00	0.00E+00	2.17E-06	0.00E+00	0.00E+00	5.43E-05
2347	ALL	752788.42	4039360.7	NonCancerChronicDerive	0.00E+00	2.69E-09	0.00E+00	0.00E+00	0.00E+00	1.98E-07	2.74E-05	0.00E+00	8.72E-09	0.00E+00	0.00E+00	1.15E-06	0.00E+00	0.00E+00	2.74E-05
2348	ALL	752888.42	4039360.7	NonCancerChronicDerive	0.00E+00	2.60E-09	0.00E+00	0.00E+00	0.00E+00	1.90E-07	2.64E-05	0.00E+00	8.41E-09	0.00E+00	0.00E+00	1.11E-06	0.00E+00	0.00E+00	2.64E-05
2349	ALL	752988.42	4039360.7	NonCancerChronicDerive	0.00E+00	2.51E-09	0.00E+00	0.00E+00	0.00E+00	1.83E-07	2.54E-05	0.00E+00	8.12E-09	0.00E+00	0.00E+00	1.07E-06	0.00E+00	0.00E+00	2.54E-05
2350	ALL	753088.42	4039360.7	NonCancerChronicDerive	0.00E+00	2.42E-09	0.00E+00	0.00E+00	0.00E+00	1.76E-07	2.46E-05	0.00E+00	7.85E-09	0.00E+00	0.00E+00	1.03E-06	0.00E+00	0.00E+00	2.46E-05
2351	ALL	753188.42	4039360.7	NonCancerChronicDerive	0.00E+00	2.35E-09	0.00E+00	0.00E+00	0.00E+00	1.70E-07	2.37E-05	0.00E+00	7.59E-09	0.00E+00	0.00E+00	9.98E-07	0.00E+00	0.00E+00	2.37E-05
2352	ALL	747788.42	4039460.7	NonCancerChronicDerive	0.00E+00	2.17E-09	0.00E+00	0.00E+00	0.00E+00	1.60E-07	2.30E-05	0.00E+00	7.03E-09	0.00E+00	0.00E+00	9.24E-07	0.00E+00	0.00E+00	2.30E-05
2353	ALL	747888.42	4039460.7	NonCancerChronicDerive	0.00E+00	2.30E-09	0.00E+00	0.00E+00	0.00E+00	1.69E-07	2.43E-05	0.00E+00	7.45E-09	0.00E+00	0.00E+00	9.79E-07	0.00E+00	0.00E+00	2.43E-05
2354	ALL	747988.42	4039460.7	NonCancerChronicDerive	0.00E+00	2.46E-09	0.00E+00	0.00E+00	0.00E+00	1.79E-07	2.58E-05	0.00E+00	7.96E-09	0.00E+00	0.00E+00	1.05E-06	0.00E+00	0.00E+00	2.58E-05
2355	ALL	748088.42	4039460.7	NonCancerChronicDerive	0.00E+00	2.69E-09	0.00E+00	0.00E+00	0.00E+00	1.94E-07	2.80E-05	0.00E+00	8.72E-09	0.00E+00	0.00E+00	1.15E-06	0.00E+00	0.00E+00	2.80E-05
2356	ALL	748188.42	4039460.7	NonCancerChronicDerive	0.00E+00	3.09E-09	0.00E+00	0.00E+00	0.00E+00	2.19E-07	3.18E-05	0.00E+00	1.00E-08	0.00E+00	0.00E+00	1.32E-06	0.00E+00	0.00E+00	3.18E-05
2357	ALL	749888.42	4039460.7	NonCancerChronicDerive	0.00E+00	1.72E-08	0.00E+00	0.00E+00	0.00E+00	1.22E-06	1.68E-04	0.00E+00	5.56E-08	0.00E+00	0.00E+00	7.32E-06	0.00E+00	0.00E+00	1.68E-04
2358	ALL	749988.42	4039460.7	NonCancerChronicDerive	0.00E+00	1.53E-08	0.00E+00	0.00E+00	0.00E+00	1.14E-06	1.55E-04	0.00E+00	4.96E-08	0.00E+00	0.00E+00	6.52E-06	0.00E+00	0.00E+00	1.55E-04
2359	ALL	750088.42	4039460.7	NonCancerChronicDerive	0.00E+00	1.37E-08	0.00E+00	0.00E+00	0.00E+00	1.07E-06	1.44E-04	0.00E+00	4.44E-08	0.00E+00	0.00E+00	5.84E-06	0.00E+00	0.00E+00	1.44E-04
2360	ALL	750188.42	4039460.7	NonCancerChronicDerive	0.00E+00	1.23E-08	0.00E+00	0.00E+00	0.00E+00	1.01E-06	1.33E-04	0.00E+00	3.99E-08	0.00E+00	0.00E+00	5.24E-06	0.00E+00	0.00E+00	1.33E-04
2361	ALL	750288.42	4039460.7	NonCancerChronicDerive	0.00E+00	1.11E-08	0.00E+00	0.00E+00	0.00E+00	9.40E-07	1.23E-04	0.00E+00	3.60E-08	0.00E+00	0.00E+00	4.73E-06	0.00E+00	0.00E+00	1.23E-04
2362	ALL	750388.42	4039460.7	NonCancerChronicDerive	0.00E+00	1.01E-08	0.00E+00	0.00E+00	0.00E+00	8.74E-07	1.14E-04	0.00E+00	3.27E-08	0.00E+00	0.00E+00	4.30E-06	0.00E+00	0.00E+00	1.14E-04
2363	ALL	750488.42	4039460.7	NonCancerChronicDerive	0.00E+00	9.21E-09	0.00E+00	0.00E+00	0.00E+00	8.07E-07	1.05E-04	0.00E+00	2.98E-08	0.00E+00	0.00E+00	3.92E-06	0.00E+00	0.00E+00	1.05E-04
2364	ALL	750588.42	4039460.7	NonCancerChronicDerive	0.00E+00	8.44E-09	0.00E+00	0.00E+00	0.00E+00	7.41E-07	9.63E-05	0.00E+00	2.73E-08	0.00E+00	0.00E+00	3.59E-06	0.00E+00	0.00E+00	9.63E-05
2365	ALL	750688.42	4039460.7	NonCancerChronicDerive	0.00E+00	7.77E-09	0.00E+00	0.00E+00	0.00E+00	6.79E-07	8.84E-05	0.00E+00	2.52E-08	0.00E+00	0.00E+00	3.31E-06	0.00E+00	0.00E+00	8.84E-05
2366	ALL	750788.42	4039460.7	NonCancerChronicDerive	0.00E+00	7.19E-09	0.00E+00	0.00E+00	0.00E+00	6.22E-07	8.12E-05	0.00E+00	2.33E-08	0.00E+00	0.00E+00	3.06E-06	0.00E+00	0.00E+00	8.12E-05
2367	ALL	750888.42	4039460.7	NonCancerChronicDerive	0.00E+00	6.67E-09	0.00E+00	0.00E+00	0.00E+00	5.70E-07	7.47E-05	0.00E+00	2.16E-08	0.00E+00	0.00E+00	2.84E-06	0.00E+00	0.00E+00	7.47E-05
2368	ALL	750988.42	4039460.7	NonCancerChronicDerive	0.00E+00	6.21E-09	0.00E+00	0.00E+00	0.00E+00	5.23E-07	6.89E-05	0.00E+00	2.01E-08	0.00E+00	0.00E+00	2.64E-06	0.00E+00	0.00E+00	6.89E-05
2369	ALL	751088.42	4039460.7	NonCancerChronicDerive	0.00E+00	5.81E-09	0.00E+00	0.00E+00	0.00E+00	4.82E-07	6.38E-05	0.00E+00	1.88E-08	0.00E+00	0.00E+00	2.47E-06	0.00E+00	0.00E+00	6.38E-05
2370	ALL	751188.42	4039460.7	NonCancerChronicDerive	0.00E+00	5.45E-09	0.00E+00	0.00E+00	0.00E+00	4.46E-07	5.93E-05	0.00E+00	1.76E-08	0.00E+00	0.00E+00	2.32E-06	0.00E+00	0.00E+00	5.93E-05
2371	ALL	751288.42	4039460.7	NonCancerChronicDerive	0.00E+00	5.13E-09	0.00E+00	0.00E+00	0.00E+00	4.14E-07	5.53E-05	0.00E+00	1.66E-08	0.00E+00	0.00E+00	2.18E-06	0.00E+00	0.00E+00	5.53E-05
2372	ALL	751388.42	4039460.7	NonCancerChronicDerive	0.00E+00	4.83E-09	0.00E+00	0.00E+00	0.00E+00	3.86E-07	5.18E-05	0.00E+00	1.57E-08	0.00E+00	0.00E+00	2.06E-06	0.00E+00	0.00E+00	5.18E-05
2373	ALL	752788.42	4039460.7	NonCancerChronicDerive	0.00E+00	2.59E-09	0.00E+00	0.00E+00	0.00E+00	1.90E-07	2.64E-05	0.00E+00	8.38E-09	0.00E+00	0.00E+00	1.10E-06	0.00E+00	0.00E+00	2.64E-05
2374	ALL	752888.42	4039460.7	NonCancerChronicDerive	0.00E+00	2.50E-09	0.00E+00	0.00E+00	0.00E+00	1.83E-07	2.54E-05	0.00E+00	8.09E-09	0.00E+00	0.00E+00	1.06E-06	0.00E+00	0.00E+00	2.54E-05
2375	ALL	752988.42	4039460.7	NonCancerChronicDerive	0.00E+00	2.42E-09	0.00E+00	0.00E+00	0.00E+00	1.76E-07	2.45E-05	0.00E+00	7.82E-09	0.00E+00	0.00E+00	1.03E-06	0.00E+00	0.00E+00	2.45E-05
2376	ALL	753088.42	4039460.7	NonCancerChronicDerive	0.00E+00	2.34E-09	0.00E+00	0.00E+00	0.00E+00	1.70E-07	2.37E-05	0.00E+00	7.56E-09	0.00E+00	0.00E+00	9.94E-07	0.00E+00	0.00E+00	2.37E-05
2377	ALL	753188.42	4039460.7	NonCancerChronicDerive	0.00E+00	2.26E-09	0.00E+00	0.00E+00	0.00E+00	1.64E-07	2.29E-05	0.00E+00	7.32E-09	0.00E+00	0.00E+00	9.63E-07	0.00E+00	0.00E+00	2.29E-05
2378	ALL	747788.42	4039560.7	NonCancerChronicDerive	0.00E+00	2.22E-09	0.00E+00	0.00E+00	0.00E+00	1.64E-07	2.35E-05	0.00E+00	7.20E-09	0.00E+00	0.00E+00	9.46E-07	0.00E+00	0.00E+00	2.35E-05
2379	ALL	747888.42	4039560.7	NonCancerChronicDerive	0.00E+00	2.40E-09	0.00E+00	0.00E+00	0.00E+00	1.75E-07	2.52E-05	0.00E+00	7.77E-09	0.00E+00	0.00E+00	1.02E-06	0.00E+00	0.00E+00	2.52E-05
2380	ALL	747988.42	4039560.7	NonCancerChronicDerive	0.00E+00	2.60E-09	0.00E+00	0.00E+00	0.00E+00	1.88E-07	2.71E-05	0.00E+00	8.40E-09	0.00E+00	0.00E+00	1.10E-06	0.00E+00	0.00E+00	2.71E-05
2381	ALL	748088.42	4039560.7	NonCancerChronicDerive	0.00E+00	2.85E-09	0.00E+00	0.00E+00	0.00E+00	2.04E-07	2.95E-05	0.00E+00	9.21E-09	0.00E+00	0.00E+00	1.21E-06	0.00E+00	0.00E+00	2.95E-05
2382	ALL	748188.42	4039560.7	NonCancerChronicDerive	0.00E+00	3.25E-09	0.00E+00	0.00E+00	0.00E+00	2.30E-07	3.33E-05	0.00E+00	1.05E-08	0.00E+00	0.00E+00	1.38E-06	0.00E+00	0.00E+00	3.33E-05
2383	ALL	749888.42	4039560.7	NonCancerChronicDerive	0.00E+00	1.65E-08	0.00E+00	0.00E+00	0.00E+00	1.24E-06	1.68E-04	0.00E+00	5.34E-08	0.00E+00	0.00E+00	7.02E-06	0.00E+00	0.00E+00	1.68E-04

2384	ALL	749988.42	4039560.7	NonCancerChronicDerive	0.00E+00	1.46E-08	0.00E+00	0.00E+00	0.00E+00	1.17E-06	1.56E-04	0.00E+00	4.72E-08	0.00E+00	0.00E+00	6.20E-06	0.00E+00	0.00E+00	1.56E-04
2385	ALL	750088.42	4039560.7	NonCancerChronicDerive	0.00E+00	1.30E-08	0.00E+00	0.00E+00	0.00E+00	1.10E-06	1.44E-04	0.00E+00	4.20E-08	0.00E+00	0.00E+00	5.52E-06	0.00E+00	0.00E+00	1.44E-04
2386	ALL	750188.42	4039560.7	NonCancerChronicDerive	0.00E+00	1.16E-08	0.00E+00	0.00E+00	0.00E+00	1.04E-06	1.34E-04	0.00E+00	3.76E-08	0.00E+00	0.00E+00	4.94E-06	0.00E+00	0.00E+00	1.34E-04
2387	ALL	750288.42	4039560.7	NonCancerChronicDerive	0.00E+00	1.05E-08	0.00E+00	0.00E+00	0.00E+00	9.61E-07	1.23E-04	0.00E+00	3.39E-08	0.00E+00	0.00E+00	4.45E-06	0.00E+00	0.00E+00	1.23E-04
2388	ALL	750388.42	4039560.7	NonCancerChronicDerive	0.00E+00	9.49E-09	0.00E+00	0.00E+00	0.00E+00	8.81E-07	1.13E-04	0.00E+00	3.07E-08	0.00E+00	0.00E+00	4.04E-06	0.00E+00	0.00E+00	1.13E-04
2389	ALL	750488.42	4039560.7	NonCancerChronicDerive	0.00E+00	8.66E-09	0.00E+00	0.00E+00	0.00E+00	8.02E-07	1.03E-04	0.00E+00	2.80E-08	0.00E+00	0.00E+00	3.68E-06	0.00E+00	0.00E+00	1.03E-04
2390	ALL	750588.42	4039560.7	NonCancerChronicDerive	0.00E+00	7.93E-09	0.00E+00	0.00E+00	0.00E+00	7.26E-07	9.33E-05	0.00E+00	2.57E-08	0.00E+00	0.00E+00	3.38E-06	0.00E+00	0.00E+00	9.33E-05
2391	ALL	750688.42	4039560.7	NonCancerChronicDerive	0.00E+00	7.31E-09	0.00E+00	0.00E+00	0.00E+00	6.57E-07	8.49E-05	0.00E+00	2.37E-08	0.00E+00	0.00E+00	3.11E-06	0.00E+00	0.00E+00	8.49E-05
2392	ALL	750788.42	4039560.7	NonCancerChronicDerive	0.00E+00	6.76E-09	0.00E+00	0.00E+00	0.00E+00	5.96E-07	7.75E-05	0.00E+00	2.19E-08	0.00E+00	0.00E+00	2.88E-06	0.00E+00	0.00E+00	7.75E-05
2393	ALL	750888.42	4039560.7	NonCancerChronicDerive	0.00E+00	6.28E-09	0.00E+00	0.00E+00	0.00E+00	5.43E-07	7.10E-05	0.00E+00	2.03E-08	0.00E+00	0.00E+00	2.67E-06	0.00E+00	0.00E+00	7.10E-05
2394	ALL	750988.42	4039560.7	NonCancerChronicDerive	0.00E+00	5.85E-09	0.00E+00	0.00E+00	0.00E+00	4.96E-07	6.53E-05	0.00E+00	1.90E-08	0.00E+00	0.00E+00	2.49E-06	0.00E+00	0.00E+00	6.53E-05
2395	ALL	751088.42	4039560.7	NonCancerChronicDerive	0.00E+00	5.48E-09	0.00E+00	0.00E+00	0.00E+00	4.57E-07	6.04E-05	0.00E+00	1.77E-08	0.00E+00	0.00E+00	2.33E-06	0.00E+00	0.00E+00	6.04E-05
2396	ALL	751188.42	4039560.7	NonCancerChronicDerive	0.00E+00	5.14E-09	0.00E+00	0.00E+00	0.00E+00	4.22E-07	5.62E-05	0.00E+00	1.66E-08	0.00E+00	0.00E+00	2.19E-06	0.00E+00	0.00E+00	5.62E-05
2397	ALL	751288.42	4039560.7	NonCancerChronicDerive	0.00E+00	4.84E-09	0.00E+00	0.00E+00	0.00E+00	3.92E-07	5.24E-05	0.00E+00	1.57E-08	0.00E+00	0.00E+00	2.06E-06	0.00E+00	0.00E+00	5.24E-05
2398	ALL	751388.42	4039560.7	NonCancerChronicDerive	0.00E+00	4.57E-09	0.00E+00	0.00E+00	0.00E+00	3.66E-07	4.91E-05	0.00E+00	1.48E-08	0.00E+00	0.00E+00	1.94E-06	0.00E+00	0.00E+00	4.91E-05
2399	ALL	752788.42	4039560.7	NonCancerChronicDerive	0.00E+00	2.48E-09	0.00E+00	0.00E+00	0.00E+00	1.82E-07	2.54E-05	0.00E+00	8.04E-09	0.00E+00	0.00E+00	1.06E-06	0.00E+00	0.00E+00	2.54E-05
2400	ALL	752888.42	4039560.7	NonCancerChronicDerive	0.00E+00	2.40E-09	0.00E+00	0.00E+00	0.00E+00	1.76E-07	2.45E-05	0.00E+00	7.77E-09	0.00E+00	0.00E+00	1.02E-06	0.00E+00	0.00E+00	2.45E-05
2401	ALL	752988.42	4039560.7	NonCancerChronicDerive	0.00E+00	2.32E-09	0.00E+00	0.00E+00	0.00E+00	1.70E-07	2.36E-05	0.00E+00	7.51E-09	0.00E+00	0.00E+00	9.88E-07	0.00E+00	0.00E+00	2.36E-05
2402	ALL	753088.42	4039560.7	NonCancerChronicDerive	0.00E+00	2.25E-09	0.00E+00	0.00E+00	0.00E+00	1.64E-07	2.28E-05	0.00E+00	7.27E-09	0.00E+00	0.00E+00	9.56E-07	0.00E+00	0.00E+00	2.28E-05
2403	ALL	753188.42	4039560.7	NonCancerChronicDerive	0.00E+00	2.18E-09	0.00E+00	0.00E+00	0.00E+00	1.58E-07	2.21E-05	0.00E+00	7.05E-09	0.00E+00	0.00E+00	9.27E-07	0.00E+00	0.00E+00	2.21E-05
2404	ALL	746288.42	4039660.7	NonCancerChronicDerive	0.00E+00	1.68E-09	0.00E+00	0.00E+00	0.00E+00	1.24E-07	1.79E-05	0.00E+00	5.42E-09	0.00E+00	0.00E+00	7.13E-07	0.00E+00	0.00E+00	1.79E-05
2405	ALL	746388.42	4039660.7	NonCancerChronicDerive	0.00E+00	1.68E-09	0.00E+00	0.00E+00	0.00E+00	1.24E-07	1.79E-05	0.00E+00	5.44E-09	0.00E+00	0.00E+00	7.15E-07	0.00E+00	0.00E+00	1.79E-05
2406	ALL	746488.42	4039660.7	NonCancerChronicDerive	0.00E+00	1.68E-09	0.00E+00	0.00E+00	0.00E+00	1.25E-07	1.80E-05	0.00E+00	5.45E-09	0.00E+00	0.00E+00	7.16E-07	0.00E+00	0.00E+00	1.80E-05
2407	ALL	746588.42	4039660.7	NonCancerChronicDerive	0.00E+00	1.69E-09	0.00E+00	0.00E+00	0.00E+00	1.25E-07	1.81E-05	0.00E+00	5.47E-09	0.00E+00	0.00E+00	7.19E-07	0.00E+00	0.00E+00	1.81E-05
2408	ALL	746688.42	4039660.7	NonCancerChronicDerive	0.00E+00	1.70E-09	0.00E+00	0.00E+00	0.00E+00	1.26E-07	1.82E-05	0.00E+00	5.49E-09	0.00E+00	0.00E+00	7.21E-07	0.00E+00	0.00E+00	1.82E-05
2409	ALL	746788.42	4039660.7	NonCancerChronicDerive	0.00E+00	1.70E-09	0.00E+00	0.00E+00	0.00E+00	1.27E-07	1.83E-05	0.00E+00	5.51E-09	0.00E+00	0.00E+00	7.25E-07	0.00E+00	0.00E+00	1.83E-05
2410	ALL	746888.42	4039660.7	NonCancerChronicDerive	0.00E+00	1.71E-09	0.00E+00	0.00E+00	0.00E+00	1.28E-07	1.84E-05	0.00E+00	5.54E-09	0.00E+00	0.00E+00	7.29E-07	0.00E+00	0.00E+00	1.84E-05
2411	ALL	746988.42	4039660.7	NonCancerChronicDerive	0.00E+00	1.72E-09	0.00E+00	0.00E+00	0.00E+00	1.29E-07	1.86E-05	0.00E+00	5.58E-09	0.00E+00	0.00E+00	7.34E-07	0.00E+00	0.00E+00	1.86E-05
2412	ALL	747088.42	4039660.7	NonCancerChronicDerive	0.00E+00	1.74E-09	0.00E+00	0.00E+00	0.00E+00	1.31E-07	1.88E-05	0.00E+00	5.64E-09	0.00E+00	0.00E+00	7.42E-07	0.00E+00	0.00E+00	1.88E-05
2413	ALL	747188.42	4039660.7	NonCancerChronicDerive	0.00E+00	1.77E-09	0.00E+00	0.00E+00	0.00E+00	1.33E-07	1.91E-05	0.00E+00	5.73E-09	0.00E+00	0.00E+00	7.54E-07	0.00E+00	0.00E+00	1.91E-05
2414	ALL	747288.42	4039660.7	NonCancerChronicDerive	0.00E+00	1.81E-09	0.00E+00	0.00E+00	0.00E+00	1.36E-07	1.95E-05	0.00E+00	5.86E-09	0.00E+00	0.00E+00	7.70E-07	0.00E+00	0.00E+00	1.95E-05
2415	ALL	747388.42	4039660.7	NonCancerChronicDerive	0.00E+00	1.86E-09	0.00E+00	0.00E+00	0.00E+00	1.39E-07	1.99E-05	0.00E+00	6.02E-09	0.00E+00	0.00E+00	7.91E-07	0.00E+00	0.00E+00	1.99E-05
2416	ALL	747488.42	4039660.7	NonCancerChronicDerive	0.00E+00	1.92E-09	0.00E+00	0.00E+00	0.00E+00	1.44E-07	2.06E-05	0.00E+00	6.22E-09	0.00E+00	0.00E+00	8.18E-07	0.00E+00	0.00E+00	2.06E-05
2417	ALL	747588.42	4039660.7	NonCancerChronicDerive	0.00E+00	2.00E-09	0.00E+00	0.00E+00	0.00E+00	1.49E-07	2.14E-05	0.00E+00	6.49E-09	0.00E+00	0.00E+00	8.53E-07	0.00E+00	0.00E+00	2.14E-05
2418	ALL	747688.42	4039660.7	NonCancerChronicDerive	0.00E+00	2.12E-09	0.00E+00	0.00E+00	0.00E+00	1.57E-07	2.25E-05	0.00E+00	6.85E-09	0.00E+00	0.00E+00	9.01E-07	0.00E+00	0.00E+00	2.25E-05
2419	ALL	747788.42	4039660.7	NonCancerChronicDerive	0.00E+00	2.27E-09	0.00E+00	0.00E+00	0.00E+00	1.67E-07	2.40E-05	0.00E+00	7.36E-09	0.00E+00	0.00E+00	9.67E-07	0.00E+00	0.00E+00	2.40E-05
2420	ALL	747888.42	4039660.7	NonCancerChronicDerive	0.00E+00	2.49E-09	0.00E+00	0.00E+00	0.00E+00	1.81E-07	2.60E-05	0.00E+00	8.05E-09	0.00E+00	0.00E+00	1.06E-06	0.00E+00	0.00E+00	2.60E-05
2421	ALL	747988.42	4039660.7	NonCancerChronicDerive	0.00E+00	2.75E-09	0.00E+00	0.00E+00	0.00E+00	1.98E-07	2.85E-05	0.00E+00	8.89E-09	0.00E+00	0.00E+00	1.17E-06	0.00E+00	0.00E+00	2.85E-05
2422	ALL	748088.42	4039660.7	NonCancerChronicDerive	0.00E+00	3.05E-09	0.00E+00	0.00E+00	0.00E+00	2.18E-07	3.15E-05	0.00E+00	9.88E-09	0.00E+00	0.00E+00	1.30E-06	0.00E+00	0.00E+00	3.15E-05
2423	ALL	748188.42	4039660.7	NonCancerChronicDerive	0.00E+00	3.49E-09	0.00E+00	0.00E+00	0.00E+00	2.45E-07	3.56E-05	0.00E+00	1.13E-08	0.00E+00	0.00E+00	1.49E-06	0.00E+00	0.00E+00	3.56E-05
2424	ALL	749888.42	4039660.7	NonCancerChronicDerive	0.00E+00	1.54E-08	0.00E+00	0.00E+00	0.00E+00	1.27E-06	1.68E-04	0.00E+00	4.99E-08	0.00E+00	0.00E+00	6.56E-06	0.00E+00	0.00E+00	1.68E-04
2425	ALL	749988.42	4039660.7	NonCancerChronicDerive	0.00E+00	1.36E-08	0.00E+00	0.00E+00	0.00E+00	1.22E-06	1.58E-04	0.00E+00	4.39E-08	0.00E+00	0.00E+00	5.78E-06	0.00E+00	0.00E+00	1.58E-04
2426	ALL	750088.42	4039660.7	NonCancerChronicDerive	0.00E+00	1.21E-08	0.00E+00	0.00E+00	0.00E+00	1.16E-06	1.47E-04	0.00E+00	3.90E-08	0.00E+00	0.00E+00	5.13E-06	0.00E+00	0.00E+00	1.47E-04
2427	ALL	750188.42	4039660.7	NonCancerChronicDerive	0.00E+00	1.08E-08	0.00E+00	0.00E+00	0.00E+00	1.08E-06	1.35E-04	0.00E+00	3.49E-08	0.00E+00	0.00E+00	4.59E-06	0.00E+00	0.00E+00	1.35E-04
2428	ALL	750288.42	4039660.7	NonCancerChronicDerive	0.00E+00	9.72E-09	0.00E+00	0.00E+00	0.00E+00	9.78E-07	1.23E-04	0.00E+00	3.15E-08	0.00E+00	0.00E+00	4.14E-06	0.00E+00	0.00E+00	1.23E-04
2429	ALL	750388.42	4039660.7	NonCancerChronicDerive	0.00E+00	8.82E-09	0.00E+00	0.00E+00	0.00E+00	8.76E-07	1.10E-04	0.00E+00	2.85E-08	0.00E+00	0.00E+00	3.75E-06	0.00E+00	0.00E+00	1.10E-04
2430	ALL	750488.42	4039660.7	NonCancerChronicDerive	0.00E+00	8.05E-09	0.00E+00	0.00E+00	0.00E+00	7.80E-07	9.89E-05	0.00E+00	2.61E-08	0.00E+00	0.00E+00	3.42E-06	0.00E+00	0.00E+00	9.89E-05
2431	ALL	750588.42	4039660.7	NonCancerChronicDerive	0.00E+00	7.38E-09	0.00E+00	0.00E+00	0.00E+00	6.95E-07	8.89E-05	0.00E+00	2.39E-08	0.00E+00	0.00E+00	3.14E-06	0.00E+00	0.00E+00	8.89E-05
2432	ALL	750688.42	4039660.7	NonCancerChronicDerive	0.00E+00	6.81E-09	0.00E+00	0.00E+00	0.00E+00	6.23E-07	8.03E-05	0.00E+00	2.20E-08	0.00E+00	0.00E+00	2.90E-06	0.00E+00	0.00E+00	8.03E-05
2433	ALL	750788.42	4039660.7	NonCancerChronicDerive	0.00E+00	6.31E-09	0.00E+00	0.00E+00	0.00E+00	5.62E-07	7.29E-05	0.00E+00	2.04E-08	0.00E+00	0.00E+00	2.68E-06	0.00E+00	0.00E+00	7.29E-05
2434	ALL	750888.42	4039660.7	NonCancerChronicDerive	0.00E+00	5.86E-09	0.00E+00	0.00E+00	0.00E+00	5.10E-07	6.67E-05	0.00E+00	1.90E-08	0.00E+00	0.00E+00	2.50E-06	0.00E+00	0.00E+00	6.67E-05
2435	ALL	750988.42	4039660.7	NonCancerChronicDerive	0.00E+00	5.47E-09	0.00E+00	0.00E+00	0.00E+00	4.66E-07	6.14E-05	0.00E+00	1.77E-08	0.00E+00	0.00E+00	2.33E-06	0.00E+00	0.00E+00	6.14E-05
2436	ALL	751088.42	4039660.7	NonCancerChronicDerive	0.00E+00	5.13E-09	0.00E+00	0.00E+00	0.00E+00	4.29E-07	5.68E-05	0.00E+00	1.66E-08	0.00E+00	0.00E+00	2.18E-06	0.00E+00	0.00E+00	5.68E-05

2437	ALL	751188.42	4039660.7	NonCancerChronicDerive	0.00E+00	4.82E-09	0.00E+00	0.00E+00	0.00E+00	3.96E-07	5.28E-05	0.00E+00	1.56E-08	0.00E+00	0.00E+00	2.05E-06	0.00E+00	0.00E+00	5.28E-05
2438	ALL	751288.42	4039660.7	NonCancerChronicDerive	0.00E+00	4.54E-09	0.00E+00	0.00E+00	0.00E+00	3.68E-07	4.93E-05	0.00E+00	1.47E-08	0.00E+00	0.00E+00	1.93E-06	0.00E+00	0.00E+00	4.93E-05
2439	ALL	751388.42	4039660.7	NonCancerChronicDerive	0.00E+00	4.29E-09	0.00E+00	0.00E+00	0.00E+00	3.44E-07	4.63E-05	0.00E+00	1.39E-08	0.00E+00	0.00E+00	1.83E-06	0.00E+00	0.00E+00	4.63E-05
2440	ALL	752788.42	4039660.7	NonCancerChronicDerive	0.00E+00	2.38E-09	0.00E+00	0.00E+00	0.00E+00	1.75E-07	2.43E-05	0.00E+00	7.70E-09	0.00E+00	0.00E+00	1.01E-06	0.00E+00	0.00E+00	2.43E-05
2441	ALL	752888.42	4039660.7	NonCancerChronicDerive	0.00E+00	2.30E-09	0.00E+00	0.00E+00	0.00E+00	1.69E-07	2.35E-05	0.00E+00	7.45E-09	0.00E+00	0.00E+00	9.79E-07	0.00E+00	0.00E+00	2.35E-05
2442	ALL	752988.42	4039660.7	NonCancerChronicDerive	0.00E+00	2.23E-09	0.00E+00	0.00E+00	0.00E+00	1.63E-07	2.27E-05	0.00E+00	7.21E-09	0.00E+00	0.00E+00	9.48E-07	0.00E+00	0.00E+00	2.27E-05
2443	ALL	753088.42	4039660.7	NonCancerChronicDerive	0.00E+00	2.16E-09	0.00E+00	0.00E+00	0.00E+00	1.57E-07	2.20E-05	0.00E+00	6.99E-09	0.00E+00	0.00E+00	9.18E-07	0.00E+00	0.00E+00	2.20E-05
2444	ALL	753188.42	4039660.7	NonCancerChronicDerive	0.00E+00	2.09E-09	0.00E+00	0.00E+00	0.00E+00	1.52E-07	2.13E-05	0.00E+00	6.78E-09	0.00E+00	0.00E+00	8.91E-07	0.00E+00	0.00E+00	2.13E-05
2445	ALL	746288.42	4039760.7	NonCancerChronicDerive	0.00E+00	1.70E-09	0.00E+00	0.00E+00	0.00E+00	1.25E-07	1.80E-05	0.00E+00	5.50E-09	0.00E+00	0.00E+00	7.22E-07	0.00E+00	0.00E+00	1.80E-05
2446	ALL	746388.42	4039760.7	NonCancerChronicDerive	0.00E+00	1.71E-09	0.00E+00	0.00E+00	0.00E+00	1.26E-07	1.82E-05	0.00E+00	5.53E-09	0.00E+00	0.00E+00	7.27E-07	0.00E+00	0.00E+00	1.82E-05
2447	ALL	746488.42	4039760.7	NonCancerChronicDerive	0.00E+00	1.72E-09	0.00E+00	0.00E+00	0.00E+00	1.27E-07	1.83E-05	0.00E+00	5.57E-09	0.00E+00	0.00E+00	7.32E-07	0.00E+00	0.00E+00	1.83E-05
2448	ALL	746588.42	4039760.7	NonCancerChronicDerive	0.00E+00	1.73E-09	0.00E+00	0.00E+00	0.00E+00	1.28E-07	1.85E-05	0.00E+00	5.60E-09	0.00E+00	0.00E+00	7.37E-07	0.00E+00	0.00E+00	1.85E-05
2449	ALL	746688.42	4039760.7	NonCancerChronicDerive	0.00E+00	1.74E-09	0.00E+00	0.00E+00	0.00E+00	1.29E-07	1.86E-05	0.00E+00	5.64E-09	0.00E+00	0.00E+00	7.42E-07	0.00E+00	0.00E+00	1.86E-05
2450	ALL	746788.42	4039760.7	NonCancerChronicDerive	0.00E+00	1.75E-09	0.00E+00	0.00E+00	0.00E+00	1.30E-07	1.88E-05	0.00E+00	5.68E-09	0.00E+00	0.00E+00	7.47E-07	0.00E+00	0.00E+00	1.88E-05
2451	ALL	746888.42	4039760.7	NonCancerChronicDerive	0.00E+00	1.76E-09	0.00E+00	0.00E+00	0.00E+00	1.31E-07	1.89E-05	0.00E+00	5.71E-09	0.00E+00	0.00E+00	7.51E-07	0.00E+00	0.00E+00	1.89E-05
2452	ALL	746988.42	4039760.7	NonCancerChronicDerive	0.00E+00	1.78E-09	0.00E+00	0.00E+00	0.00E+00	1.32E-07	1.91E-05	0.00E+00	5.75E-09	0.00E+00	0.00E+00	7.56E-07	0.00E+00	0.00E+00	1.91E-05
2453	ALL	747088.42	4039760.7	NonCancerChronicDerive	0.00E+00	1.80E-09	0.00E+00	0.00E+00	0.00E+00	1.34E-07	1.93E-05	0.00E+00	5.81E-09	0.00E+00	0.00E+00	7.64E-07	0.00E+00	0.00E+00	1.93E-05
2454	ALL	747188.42	4039760.7	NonCancerChronicDerive	0.00E+00	1.82E-09	0.00E+00	0.00E+00	0.00E+00	1.36E-07	1.96E-05	0.00E+00	5.90E-09	0.00E+00	0.00E+00	7.76E-07	0.00E+00	0.00E+00	1.96E-05
2455	ALL	747288.42	4039760.7	NonCancerChronicDerive	0.00E+00	1.86E-09	0.00E+00	0.00E+00	0.00E+00	1.39E-07	2.00E-05	0.00E+00	6.03E-09	0.00E+00	0.00E+00	7.92E-07	0.00E+00	0.00E+00	2.00E-05
2456	ALL	747388.42	4039760.7	NonCancerChronicDerive	0.00E+00	1.91E-09	0.00E+00	0.00E+00	0.00E+00	1.42E-07	2.05E-05	0.00E+00	6.19E-09	0.00E+00	0.00E+00	8.14E-07	0.00E+00	0.00E+00	2.05E-05
2457	ALL	747488.42	4039760.7	NonCancerChronicDerive	0.00E+00	1.98E-09	0.00E+00	0.00E+00	0.00E+00	1.47E-07	2.11E-05	0.00E+00	6.41E-09	0.00E+00	0.00E+00	8.42E-07	0.00E+00	0.00E+00	2.11E-05
2458	ALL	747588.42	4039760.7	NonCancerChronicDerive	0.00E+00	2.07E-09	0.00E+00	0.00E+00	0.00E+00	1.54E-07	2.20E-05	0.00E+00	6.70E-09	0.00E+00	0.00E+00	8.80E-07	0.00E+00	0.00E+00	2.20E-05
2459	ALL	747688.42	4039760.7	NonCancerChronicDerive	0.00E+00	2.19E-09	0.00E+00	0.00E+00	0.00E+00	1.62E-07	2.32E-05	0.00E+00	7.09E-09	0.00E+00	0.00E+00	9.32E-07	0.00E+00	0.00E+00	2.32E-05
2460	ALL	747788.42	4039760.7	NonCancerChronicDerive	0.00E+00	2.35E-09	0.00E+00	0.00E+00	0.00E+00	1.73E-07	2.47E-05	0.00E+00	7.62E-09	0.00E+00	0.00E+00	1.00E-06	0.00E+00	0.00E+00	2.47E-05
2461	ALL	747888.42	4039760.7	NonCancerChronicDerive	0.00E+00	2.58E-09	0.00E+00	0.00E+00	0.00E+00	1.88E-07	2.69E-05	0.00E+00	8.36E-09	0.00E+00	0.00E+00	1.10E-06	0.00E+00	0.00E+00	2.69E-05
2462	ALL	747988.42	4039760.7	NonCancerChronicDerive	0.00E+00	2.90E-09	0.00E+00	0.00E+00	0.00E+00	2.08E-07	3.00E-05	0.00E+00	9.39E-09	0.00E+00	0.00E+00	1.23E-06	0.00E+00	0.00E+00	3.00E-05
2463	ALL	748088.42	4039760.7	NonCancerChronicDerive	0.00E+00	3.33E-09	0.00E+00	0.00E+00	0.00E+00	2.35E-07	3.41E-05	0.00E+00	1.08E-08	0.00E+00	0.00E+00	1.42E-06	0.00E+00	0.00E+00	3.41E-05
2464	ALL	748188.42	4039760.7	NonCancerChronicDerive	0.00E+00	3.85E-09	0.00E+00	0.00E+00	0.00E+00	2.69E-07	3.90E-05	0.00E+00	1.25E-08	0.00E+00	0.00E+00	1.64E-06	0.00E+00	0.00E+00	3.90E-05
2465	ALL	749888.42	4039760.7	NonCancerChronicDerive	0.00E+00	1.41E-08	0.00E+00	0.00E+00	0.00E+00	1.37E-06	1.73E-04	0.00E+00	4.56E-08	0.00E+00	0.00E+00	5.99E-06	0.00E+00	0.00E+00	1.73E-04
2466	ALL	749988.42	4039760.7	NonCancerChronicDerive	0.00E+00	1.24E-08	0.00E+00	0.00E+00	0.00E+00	1.34E-06	1.65E-04	0.00E+00	4.01E-08	0.00E+00	0.00E+00	5.27E-06	0.00E+00	0.00E+00	1.65E-04
2467	ALL	750088.42	4039760.7	NonCancerChronicDerive	0.00E+00	1.10E-08	0.00E+00	0.00E+00	0.00E+00	1.25E-06	1.52E-04	0.00E+00	3.56E-08	0.00E+00	0.00E+00	4.68E-06	0.00E+00	0.00E+00	1.52E-04
2468	ALL	750188.42	4039760.7	NonCancerChronicDerive	0.00E+00	9.86E-09	0.00E+00	0.00E+00	0.00E+00	1.11E-06	1.36E-04	0.00E+00	3.19E-08	0.00E+00	0.00E+00	4.20E-06	0.00E+00	0.00E+00	1.36E-04
2469	ALL	750288.42	4039760.7	NonCancerChronicDerive	0.00E+00	8.90E-09	0.00E+00	0.00E+00	0.00E+00	9.72E-07	1.20E-04	0.00E+00	2.88E-08	0.00E+00	0.00E+00	3.79E-06	0.00E+00	0.00E+00	1.20E-04
2470	ALL	750388.42	4039760.7	NonCancerChronicDerive	0.00E+00	8.08E-09	0.00E+00	0.00E+00	0.00E+00	8.44E-07	1.05E-04	0.00E+00	2.62E-08	0.00E+00	0.00E+00	3.44E-06	0.00E+00	0.00E+00	1.05E-04
2471	ALL	750488.42	4039760.7	NonCancerChronicDerive	0.00E+00	7.39E-09	0.00E+00	0.00E+00	0.00E+00	7.37E-07	9.29E-05	0.00E+00	2.39E-08	0.00E+00	0.00E+00	3.14E-06	0.00E+00	0.00E+00	9.29E-05
2472	ALL	750588.42	4039760.7	NonCancerChronicDerive	0.00E+00	6.79E-09	0.00E+00	0.00E+00	0.00E+00	6.49E-07	8.28E-05	0.00E+00	2.20E-08	0.00E+00	0.00E+00	2.89E-06	0.00E+00	0.00E+00	8.28E-05
2473	ALL	750688.42	4039760.7	NonCancerChronicDerive	0.00E+00	6.27E-09	0.00E+00	0.00E+00	0.00E+00	5.78E-07	7.45E-05	0.00E+00	2.03E-08	0.00E+00	0.00E+00	2.67E-06	0.00E+00	0.00E+00	7.45E-05
2474	ALL	750788.42	4039760.7	NonCancerChronicDerive	0.00E+00	5.82E-09	0.00E+00	0.00E+00	0.00E+00	5.21E-07	6.77E-05	0.00E+00	1.89E-08	0.00E+00	0.00E+00	2.48E-06	0.00E+00	0.00E+00	6.77E-05
2475	ALL	750888.42	4039760.7	NonCancerChronicDerive	0.00E+00	5.43E-09	0.00E+00	0.00E+00	0.00E+00	4.73E-07	6.20E-05	0.00E+00	1.76E-08	0.00E+00	0.00E+00	2.31E-06	0.00E+00	0.00E+00	6.20E-05
2476	ALL	750988.42	4039760.7	NonCancerChronicDerive	0.00E+00	5.08E-09	0.00E+00	0.00E+00	0.00E+00	4.33E-07	5.71E-05	0.00E+00	1.64E-08	0.00E+00	0.00E+00	2.16E-06	0.00E+00	0.00E+00	5.71E-05
2477	ALL	751088.42	4039760.7	NonCancerChronicDerive	0.00E+00	4.77E-09	0.00E+00	0.00E+00	0.00E+00	3.99E-07	5.29E-05	0.00E+00	1.54E-08	0.00E+00	0.00E+00	2.03E-06	0.00E+00	0.00E+00	5.29E-05
2478	ALL	751188.42	4039760.7	NonCancerChronicDerive	0.00E+00	4.49E-09	0.00E+00	0.00E+00	0.00E+00	3.69E-07	4.93E-05	0.00E+00	1.45E-08	0.00E+00	0.00E+00	1.91E-06	0.00E+00	0.00E+00	4.93E-05
2479	ALL	751288.42	4039760.7	NonCancerChronicDerive	0.00E+00	4.24E-09	0.00E+00	0.00E+00	0.00E+00	3.44E-07	4.61E-05	0.00E+00	1.37E-08	0.00E+00	0.00E+00	1.80E-06	0.00E+00	0.00E+00	4.61E-05
2480	ALL	751388.42	4039760.7	NonCancerChronicDerive	0.00E+00	4.01E-09	0.00E+00	0.00E+00	0.00E+00	3.22E-07	4.34E-05	0.00E+00	1.30E-08	0.00E+00	0.00E+00	1.71E-06	0.00E+00	0.00E+00	4.34E-05
2481	ALL	752788.42	4039760.7	NonCancerChronicDerive	0.00E+00	2.27E-09	0.00E+00	0.00E+00	0.00E+00	1.67E-07	2.33E-05	0.00E+00	7.36E-09	0.00E+00	0.00E+00	9.67E-07	0.00E+00	0.00E+00	2.33E-05
2482	ALL	752888.42	4039760.7	NonCancerChronicDerive	0.00E+00	2.20E-09	0.00E+00	0.00E+00	0.00E+00	1.61E-07	2.25E-05	0.00E+00	7.13E-09	0.00E+00	0.00E+00	9.37E-07	0.00E+00	0.00E+00	2.25E-05
2483	ALL	752988.42	4039760.7	NonCancerChronicDerive	0.00E+00	2.13E-09	0.00E+00	0.00E+00	0.00E+00	1.56E-07	2.18E-05	0.00E+00	6.91E-09	0.00E+00	0.00E+00	9.08E-07	0.00E+00	0.00E+00	2.18E-05
2484	ALL	753088.42	4039760.7	NonCancerChronicDerive	0.00E+00	2.07E-09	0.00E+00	0.00E+00	0.00E+00	1.51E-07	2.11E-05	0.00E+00	6.70E-09	0.00E+00	0.00E+00	8.81E-07	0.00E+00	0.00E+00	2.11E-05
2485	ALL	753188.42	4039760.7	NonCancerChronicDerive	0.00E+00	2.01E-09	0.00E+00	0.00E+00	0.00E+00	1.46E-07	2.05E-05	0.00E+00	6.51E-09	0.00E+00	0.00E+00	8.55E-07	0.00E+00	0.00E+00	2.05E-05
2486	ALL	746588.42	4039860.7	NonCancerChronicDerive	0.00E+00	1.76E-09	0.00E+00	0.00E+00	0.00E+00	1.29E-07	1.88E-05	0.00E+00	5.71E-09	0.00E+00	0.00E+00	7.51E-07	0.00E+00	0.00E+00	1.88E-05
2487	ALL	746688.42	4039860.7	NonCancerChronicDerive	0.00E+00	1.79E-09	0.00E+00	0.00E+00	0.00E+00	1.31E-07	1.90E-05	0.00E+00	5.78E-09	0.00E+00	0.00E+00	7.60E-07	0.00E+00	0.00E+00	1.90E-05
2488	ALL	746788.42	4039860.7	NonCancerChronicDerive	0.00E+00	1.81E-09	0.00E+00	0.00E+00	0.00E+00	1.33E-07	1.92E-05	0.00E+00	5.85E-09	0.00E+00	0.00E+00	7.69E-07	0.00E+00	0.00E+00	1.92E-05
2489	ALL	746888.42	4039860.7	NonCancerChronicDerive	0.00E+00	1.83E-09	0.00E+00	0.00E+00	0.00E+00	1.34E-07	1.95E-05	0.00E+00	5.91E-09	0.00E+00	0.00E+00	7.77E-07	0.00E+00	0.00E+00	1.95E-05

2490	ALL	746988.42	4039860.7	NonCancerChronicDerive	0.00E+00	1.85E-09	0.00E+00	0.00E+00	0.00E+00	1.36E-07	1.97E-05	0.00E+00	5.98E-09	0.00E+00	0.00E+00	7.86E-07	0.00E+00	0.00E+00	1.97E-05
2491	ALL	747088.42	4039860.7	NonCancerChronicDerive	0.00E+00	1.87E-09	0.00E+00	0.00E+00	0.00E+00	1.38E-07	2.00E-05	0.00E+00	6.06E-09	0.00E+00	0.00E+00	7.97E-07	0.00E+00	0.00E+00	2.00E-05
2492	ALL	747188.42	4039860.7	NonCancerChronicDerive	0.00E+00	1.90E-09	0.00E+00	0.00E+00	0.00E+00	1.41E-07	2.04E-05	0.00E+00	6.16E-09	0.00E+00	0.00E+00	8.10E-07	0.00E+00	0.00E+00	2.04E-05
2493	ALL	747288.42	4039860.7	NonCancerChronicDerive	0.00E+00	1.94E-09	0.00E+00	0.00E+00	0.00E+00	1.44E-07	2.08E-05	0.00E+00	6.29E-09	0.00E+00	0.00E+00	8.27E-07	0.00E+00	0.00E+00	2.08E-05
2494	ALL	747388.42	4039860.7	NonCancerChronicDerive	0.00E+00	1.99E-09	0.00E+00	0.00E+00	0.00E+00	1.47E-07	2.13E-05	0.00E+00	6.45E-09	0.00E+00	0.00E+00	8.48E-07	0.00E+00	0.00E+00	2.13E-05
2495	ALL	747488.42	4039860.7	NonCancerChronicDerive	0.00E+00	2.06E-09	0.00E+00	0.00E+00	0.00E+00	1.52E-07	2.19E-05	0.00E+00	6.66E-09	0.00E+00	0.00E+00	8.76E-07	0.00E+00	0.00E+00	2.19E-05
2496	ALL	747588.42	4039860.7	NonCancerChronicDerive	0.00E+00	2.15E-09	0.00E+00	0.00E+00	0.00E+00	1.59E-07	2.28E-05	0.00E+00	6.96E-09	0.00E+00	0.00E+00	9.15E-07	0.00E+00	0.00E+00	2.28E-05
2497	ALL	747688.42	4039860.7	NonCancerChronicDerive	0.00E+00	2.28E-09	0.00E+00	0.00E+00	0.00E+00	1.68E-07	2.41E-05	0.00E+00	7.39E-09	0.00E+00	0.00E+00	9.71E-07	0.00E+00	0.00E+00	2.41E-05
2498	ALL	747788.42	4039860.7	NonCancerChronicDerive	0.00E+00	2.47E-09	0.00E+00	0.00E+00	0.00E+00	1.80E-07	2.58E-05	0.00E+00	7.99E-09	0.00E+00	0.00E+00	1.05E-06	0.00E+00	0.00E+00	2.58E-05
2499	ALL	747888.42	4039860.7	NonCancerChronicDerive	0.00E+00	2.73E-09	0.00E+00	0.00E+00	0.00E+00	1.97E-07	2.83E-05	0.00E+00	8.84E-09	0.00E+00	0.00E+00	1.16E-06	0.00E+00	0.00E+00	2.83E-05
2500	ALL	747988.42	4039860.7	NonCancerChronicDerive	0.00E+00	3.10E-09	0.00E+00	0.00E+00	0.00E+00	2.21E-07	3.18E-05	0.00E+00	1.00E-08	0.00E+00	0.00E+00	1.32E-06	0.00E+00	0.00E+00	3.18E-05
2501	ALL	748088.42	4039860.7	NonCancerChronicDerive	0.00E+00	3.64E-09	0.00E+00	0.00E+00	0.00E+00	2.56E-07	3.70E-05	0.00E+00	1.18E-08	0.00E+00	0.00E+00	1.55E-06	0.00E+00	0.00E+00	3.70E-05
2502	ALL	749888.42	4039860.7	NonCancerChronicDerive	0.00E+00	1.25E-08	0.00E+00	0.00E+00	0.00E+00	1.61E-06	1.92E-04	0.00E+00	4.06E-08	0.00E+00	0.00E+00	5.34E-06	0.00E+00	0.00E+00	1.92E-04
2503	ALL	749988.42	4039860.7	NonCancerChronicDerive	0.00E+00	1.11E-08	0.00E+00	0.00E+00	0.00E+00	1.53E-06	1.79E-04	0.00E+00	3.58E-08	0.00E+00	0.00E+00	4.71E-06	0.00E+00	0.00E+00	1.79E-04
2504	ALL	750088.42	4039860.7	NonCancerChronicDerive	0.00E+00	9.85E-09	0.00E+00	0.00E+00	0.00E+00	1.32E-06	1.56E-04	0.00E+00	3.19E-08	0.00E+00	0.00E+00	4.19E-06	0.00E+00	0.00E+00	1.56E-04
2505	ALL	750188.42	4039860.7	NonCancerChronicDerive	0.00E+00	8.85E-09	0.00E+00	0.00E+00	0.00E+00	1.10E-06	1.32E-04	0.00E+00	2.86E-08	0.00E+00	0.00E+00	3.77E-06	0.00E+00	0.00E+00	1.32E-04
2506	ALL	750288.42	4039860.7	NonCancerChronicDerive	0.00E+00	8.01E-09	0.00E+00	0.00E+00	0.00E+00	9.20E-07	1.12E-04	0.00E+00	2.59E-08	0.00E+00	0.00E+00	3.41E-06	0.00E+00	0.00E+00	1.12E-04
2507	ALL	750388.42	4039860.7	NonCancerChronicDerive	0.00E+00	7.30E-09	0.00E+00	0.00E+00	0.00E+00	7.80E-07	9.69E-05	0.00E+00	2.36E-08	0.00E+00	0.00E+00	3.11E-06	0.00E+00	0.00E+00	9.69E-05
2508	ALL	750488.42	4039860.7	NonCancerChronicDerive	0.00E+00	6.70E-09	0.00E+00	0.00E+00	0.00E+00	6.73E-07	8.49E-05	0.00E+00	2.17E-08	0.00E+00	0.00E+00	2.85E-06	0.00E+00	0.00E+00	8.49E-05
2509	ALL	750588.42	4039860.7	NonCancerChronicDerive	0.00E+00	6.17E-09	0.00E+00	0.00E+00	0.00E+00	5.92E-07	7.56E-05	0.00E+00	2.00E-08	0.00E+00	0.00E+00	2.63E-06	0.00E+00	0.00E+00	7.56E-05
2510	ALL	750688.42	4039860.7	NonCancerChronicDerive	0.00E+00	5.72E-09	0.00E+00	0.00E+00	0.00E+00	5.28E-07	6.81E-05	0.00E+00	1.85E-08	0.00E+00	0.00E+00	2.43E-06	0.00E+00	0.00E+00	6.81E-05
2511	ALL	750788.42	4039860.7	NonCancerChronicDerive	0.00E+00	5.33E-09	0.00E+00	0.00E+00	0.00E+00	4.76E-07	6.21E-05	0.00E+00	1.72E-08	0.00E+00	0.00E+00	2.27E-06	0.00E+00	0.00E+00	6.21E-05
2512	ALL	750888.42	4039860.7	NonCancerChronicDerive	0.00E+00	4.98E-09	0.00E+00	0.00E+00	0.00E+00	4.34E-07	5.70E-05	0.00E+00	1.61E-08	0.00E+00	0.00E+00	2.12E-06	0.00E+00	0.00E+00	5.70E-05
2513	ALL	750988.42	4039860.7	NonCancerChronicDerive	0.00E+00	4.67E-09	0.00E+00	0.00E+00	0.00E+00	3.98E-07	5.26E-05	0.00E+00	1.51E-08	0.00E+00	0.00E+00	1.99E-06	0.00E+00	0.00E+00	5.26E-05
2514	ALL	751088.42	4039860.7	NonCancerChronicDerive	0.00E+00	4.40E-09	0.00E+00	0.00E+00	0.00E+00	3.68E-07	4.89E-05	0.00E+00	1.42E-08	0.00E+00	0.00E+00	1.87E-06	0.00E+00	0.00E+00	4.89E-05
2515	ALL	751188.42	4039860.7	NonCancerChronicDerive	0.00E+00	4.15E-09	0.00E+00	0.00E+00	0.00E+00	3.42E-07	4.57E-05	0.00E+00	1.34E-08	0.00E+00	0.00E+00	1.77E-06	0.00E+00	0.00E+00	4.57E-05
2516	ALL	751288.42	4039860.7	NonCancerChronicDerive	0.00E+00	3.93E-09	0.00E+00	0.00E+00	0.00E+00	3.19E-07	4.29E-05	0.00E+00	1.27E-08	0.00E+00	0.00E+00	1.67E-06	0.00E+00	0.00E+00	4.29E-05
2517	ALL	751388.42	4039860.7	NonCancerChronicDerive	0.00E+00	3.73E-09	0.00E+00	0.00E+00	0.00E+00	2.99E-07	4.04E-05	0.00E+00	1.21E-08	0.00E+00	0.00E+00	1.59E-06	0.00E+00	0.00E+00	4.04E-05
2518	ALL	752788.42	4039860.7	NonCancerChronicDerive	0.00E+00	2.17E-09	0.00E+00	0.00E+00	0.00E+00	1.60E-07	2.23E-05	0.00E+00	7.03E-09	0.00E+00	0.00E+00	9.24E-07	0.00E+00	0.00E+00	2.23E-05
2519	ALL	752888.42	4039860.7	NonCancerChronicDerive	0.00E+00	2.11E-09	0.00E+00	0.00E+00	0.00E+00	1.54E-07	2.16E-05	0.00E+00	6.82E-09	0.00E+00	0.00E+00	8.96E-07	0.00E+00	0.00E+00	2.16E-05
2520	ALL	752988.42	4039860.7	NonCancerChronicDerive	0.00E+00	2.04E-09	0.00E+00	0.00E+00	0.00E+00	1.49E-07	2.09E-05	0.00E+00	6.62E-09	0.00E+00	0.00E+00	8.70E-07	0.00E+00	0.00E+00	2.09E-05
2521	ALL	753088.42	4039860.7	NonCancerChronicDerive	0.00E+00	1.99E-09	0.00E+00	0.00E+00	0.00E+00	1.45E-07	2.03E-05	0.00E+00	6.43E-09	0.00E+00	0.00E+00	8.45E-07	0.00E+00	0.00E+00	2.03E-05
2522	ALL	753188.42	4039860.7	NonCancerChronicDerive	0.00E+00	1.93E-09	0.00E+00	0.00E+00	0.00E+00	1.40E-07	1.97E-05	0.00E+00	6.25E-09	0.00E+00	0.00E+00	8.21E-07	0.00E+00	0.00E+00	1.97E-05
2523	ALL	749888.42	4039960.7	NonCancerChronicDerive	0.00E+00	1.08E-08	0.00E+00	0.00E+00	0.00E+00	2.12E-06	2.35E-04	0.00E+00	3.51E-08	0.00E+00	0.00E+00	4.61E-06	0.00E+00	0.00E+00	2.35E-04
2524	ALL	749988.42	4039960.7	NonCancerChronicDerive	0.00E+00	9.62E-09	0.00E+00	0.00E+00	0.00E+00	1.70E-06	1.91E-04	0.00E+00	3.11E-08	0.00E+00	0.00E+00	4.09E-06	0.00E+00	0.00E+00	1.91E-04
2525	ALL	750088.42	4039960.7	NonCancerChronicDerive	0.00E+00	8.62E-09	0.00E+00	0.00E+00	0.00E+00	1.29E-06	1.49E-04	0.00E+00	2.79E-08	0.00E+00	0.00E+00	3.67E-06	0.00E+00	0.00E+00	1.49E-04
2526	ALL	750188.42	4039960.7	NonCancerChronicDerive	0.00E+00	7.79E-09	0.00E+00	0.00E+00	0.00E+00	1.01E-06	1.20E-04	0.00E+00	2.52E-08	0.00E+00	0.00E+00	3.31E-06	0.00E+00	0.00E+00	1.20E-04
2527	ALL	750288.42	4039960.7	NonCancerChronicDerive	0.00E+00	7.09E-09	0.00E+00	0.00E+00	0.00E+00	8.20E-07	1.00E-04	0.00E+00	2.29E-08	0.00E+00	0.00E+00	3.02E-06	0.00E+00	0.00E+00	1.00E-04
2528	ALL	750388.42	4039960.7	NonCancerChronicDerive	0.00E+00	6.49E-09	0.00E+00	0.00E+00	0.00E+00	6.91E-07	8.62E-05	0.00E+00	2.10E-08	0.00E+00	0.00E+00	2.76E-06	0.00E+00	0.00E+00	8.62E-05
2529	ALL	750488.42	4039960.7	NonCancerChronicDerive	0.00E+00	5.98E-09	0.00E+00	0.00E+00	0.00E+00	5.99E-07	7.58E-05	0.00E+00	1.94E-08	0.00E+00	0.00E+00	2.55E-06	0.00E+00	0.00E+00	7.58E-05
2530	ALL	750588.42	4039960.7	NonCancerChronicDerive	0.00E+00	5.54E-09	0.00E+00	0.00E+00	0.00E+00	5.29E-07	6.78E-05	0.00E+00	1.79E-08	0.00E+00	0.00E+00	2.36E-06	0.00E+00	0.00E+00	6.78E-05
2531	ALL	750688.42	4039960.7	NonCancerChronicDerive	0.00E+00	5.16E-09	0.00E+00	0.00E+00	0.00E+00	4.74E-07	6.15E-05	0.00E+00	1.67E-08	0.00E+00	0.00E+00	2.20E-06	0.00E+00	0.00E+00	6.15E-05
2532	ALL	750788.42	4039960.7	NonCancerChronicDerive	0.00E+00	4.83E-09	0.00E+00	0.00E+00	0.00E+00	4.30E-07	5.62E-05	0.00E+00	1.56E-08	0.00E+00	0.00E+00	2.05E-06	0.00E+00	0.00E+00	5.62E-05
2533	ALL	750888.42	4039960.7	NonCancerChronicDerive	0.00E+00	4.53E-09	0.00E+00	0.00E+00	0.00E+00	3.93E-07	5.19E-05	0.00E+00	1.47E-08	0.00E+00	0.00E+00	1.93E-06	0.00E+00	0.00E+00	5.19E-05
2534	ALL	750988.42	4039960.7	NonCancerChronicDerive	0.00E+00	4.27E-09	0.00E+00	0.00E+00	0.00E+00	3.63E-07	4.81E-05	0.00E+00	1.38E-08	0.00E+00	0.00E+00	1.82E-06	0.00E+00	0.00E+00	4.81E-05
2535	ALL	751088.42	4039960.7	NonCancerChronicDerive	0.00E+00	4.03E-09	0.00E+00	0.00E+00	0.00E+00	3.37E-07	4.49E-05	0.00E+00	1.30E-08	0.00E+00	0.00E+00	1.71E-06	0.00E+00	0.00E+00	4.49E-05
2536	ALL	751188.42	4039960.7	NonCancerChronicDerive	0.00E+00	3.82E-09	0.00E+00	0.00E+00	0.00E+00	3.14E-07	4.21E-05	0.00E+00	1.24E-08	0.00E+00	0.00E+00	1.62E-06	0.00E+00	0.00E+00	4.21E-05
2537	ALL	751288.42	4039960.7	NonCancerChronicDerive	0.00E+00	3.63E-09	0.00E+00	0.00E+00	0.00E+00	2.94E-07	3.97E-05	0.00E+00	1.17E-08	0.00E+00	0.00E+00	1.54E-06	0.00E+00	0.00E+00	3.97E-05
2538	ALL	751388.42	4039960.7	NonCancerChronicDerive	0.00E+00	3.47E-09	0.00E+00	0.00E+00	0.00E+00	2.78E-07	3.76E-05	0.00E+00	1.12E-08	0.00E+00	0.00E+00	1.47E-06	0.00E+00	0.00E+00	3.76E-05
2539	ALL	752788.42	4039960.7	NonCancerChronicDerive	0.00E+00	2.07E-09	0.00E+00	0.00E+00	0.00E+00	1.52E-07	2.13E-05	0.00E+00	6.70E-09	0.00E+00	0.00E+00	8.81E-07	0.00E+00	0.00E+00	2.13E-05
2540	ALL	752888.42	4039960.7	NonCancerChronicDerive	0.00E+00	2.01E-09	0.00E+00	0.00E+00	0.00E+00	1.48E-07	2.07E-05	0.00E+00	6.51E-09	0.00E+00	0.00E+00	8.56E-07	0.00E+00	0.00E+00	2.07E-05
2541	ALL	752988.42	4039960.7	NonCancerChronicDerive	0.00E+00	1.96E-09	0.00E+00	0.00E+00	0.00E+00	1.43E-07	2.01E-05	0.00E+00	6.33E-09	0.00E+00	0.00E+00	8.32E-07	0.00E+00	0.00E+00	2.01E-05
2542	ALL	753088.42	4039960.7	NonCancerChronicDerive	0.00E+00	1.90E-09	0.00E+00	0.00E+00	0.00E+00	1.39E-07	1.95E-05	0.00E+00	6.16E-09	0.00E+00	0.00E+00	8.10E-07	0.00E+00	0.00E+00	1.95E-05

2543	ALL	753188.42	4039960.7	NonCancerChronicDerive	0.00E+00	1.85E-09	0.00E+00	0.00E+00	0.00E+00	1.35E-07	1.89E-05	0.00E+00	5.99E-09	0.00E+00	0.00E+00	7.88E-07	0.00E+00	0.00E+00	1.89E-05
2544	ALL	746288.42	4040060.7	NonCancerChronicDerive	0.00E+00	1.76E-09	0.00E+00	0.00E+00	0.00E+00	1.28E-07	1.86E-05	0.00E+00	5.71E-09	0.00E+00	0.00E+00	7.50E-07	0.00E+00	0.00E+00	1.86E-05
2545	ALL	746388.42	4040060.7	NonCancerChronicDerive	0.00E+00	1.79E-09	0.00E+00	0.00E+00	0.00E+00	1.30E-07	1.88E-05	0.00E+00	5.78E-09	0.00E+00	0.00E+00	7.60E-07	0.00E+00	0.00E+00	1.88E-05
2546	ALL	746488.42	4040060.7	NonCancerChronicDerive	0.00E+00	1.81E-09	0.00E+00	0.00E+00	0.00E+00	1.32E-07	1.91E-05	0.00E+00	5.87E-09	0.00E+00	0.00E+00	7.72E-07	0.00E+00	0.00E+00	1.91E-05
2547	ALL	752788.42	4040060.7	NonCancerChronicDerive	0.00E+00	1.97E-09	0.00E+00	0.00E+00	0.00E+00	1.45E-07	2.04E-05	0.00E+00	6.39E-09	0.00E+00	0.00E+00	8.40E-07	0.00E+00	0.00E+00	2.04E-05
2548	ALL	752888.42	4040060.7	NonCancerChronicDerive	0.00E+00	1.92E-09	0.00E+00	0.00E+00	0.00E+00	1.41E-07	1.98E-05	0.00E+00	6.22E-09	0.00E+00	0.00E+00	8.18E-07	0.00E+00	0.00E+00	1.98E-05
2549	ALL	752988.42	4040060.7	NonCancerChronicDerive	0.00E+00	1.87E-09	0.00E+00	0.00E+00	0.00E+00	1.37E-07	1.92E-05	0.00E+00	6.06E-09	0.00E+00	0.00E+00	7.97E-07	0.00E+00	0.00E+00	1.92E-05
2550	ALL	753088.42	4040060.7	NonCancerChronicDerive	0.00E+00	1.82E-09	0.00E+00	0.00E+00	0.00E+00	1.33E-07	1.87E-05	0.00E+00	5.90E-09	0.00E+00	0.00E+00	7.76E-07	0.00E+00	0.00E+00	1.87E-05
2551	ALL	753188.42	4040060.7	NonCancerChronicDerive	0.00E+00	1.78E-09	0.00E+00	0.00E+00	0.00E+00	1.29E-07	1.82E-05	0.00E+00	5.75E-09	0.00E+00	0.00E+00	7.56E-07	0.00E+00	0.00E+00	1.82E-05
2552	ALL	746288.42	4040160.7	NonCancerChronicDerive	0.00E+00	1.82E-09	0.00E+00	0.00E+00	0.00E+00	1.31E-07	1.90E-05	0.00E+00	5.88E-09	0.00E+00	0.00E+00	7.73E-07	0.00E+00	0.00E+00	1.90E-05
2553	ALL	746388.42	4040160.7	NonCancerChronicDerive	0.00E+00	1.85E-09	0.00E+00	0.00E+00	0.00E+00	1.33E-07	1.94E-05	0.00E+00	5.97E-09	0.00E+00	0.00E+00	7.85E-07	0.00E+00	0.00E+00	1.94E-05
2554	ALL	746488.42	4040160.7	NonCancerChronicDerive	0.00E+00	1.88E-09	0.00E+00	0.00E+00	0.00E+00	1.35E-07	1.97E-05	0.00E+00	6.09E-09	0.00E+00	0.00E+00	8.00E-07	0.00E+00	0.00E+00	1.97E-05
2555	ALL	751488.42	4040160.7	NonCancerChronicDerive	0.00E+00	2.82E-09	0.00E+00	0.00E+00	0.00E+00	2.23E-07	3.04E-05	0.00E+00	9.12E-09	0.00E+00	0.00E+00	1.20E-06	0.00E+00	0.00E+00	3.04E-05
2556	ALL	751588.42	4040160.7	NonCancerChronicDerive	0.00E+00	2.71E-09	0.00E+00	0.00E+00	0.00E+00	2.12E-07	2.91E-05	0.00E+00	8.78E-09	0.00E+00	0.00E+00	1.15E-06	0.00E+00	0.00E+00	2.91E-05
2557	ALL	751688.42	4040160.7	NonCancerChronicDerive	0.00E+00	2.61E-09	0.00E+00	0.00E+00	0.00E+00	2.03E-07	2.79E-05	0.00E+00	8.46E-09	0.00E+00	0.00E+00	1.11E-06	0.00E+00	0.00E+00	2.79E-05
2558	ALL	751788.42	4040160.7	NonCancerChronicDerive	0.00E+00	2.52E-09	0.00E+00	0.00E+00	0.00E+00	1.95E-07	2.69E-05	0.00E+00	8.16E-09	0.00E+00	0.00E+00	1.07E-06	0.00E+00	0.00E+00	2.69E-05
2559	ALL	751888.42	4040160.7	NonCancerChronicDerive	0.00E+00	2.44E-09	0.00E+00	0.00E+00	0.00E+00	1.87E-07	2.59E-05	0.00E+00	7.89E-09	0.00E+00	0.00E+00	1.04E-06	0.00E+00	0.00E+00	2.59E-05
2560	ALL	751988.42	4040160.7	NonCancerChronicDerive	0.00E+00	2.36E-09	0.00E+00	0.00E+00	0.00E+00	1.80E-07	2.49E-05	0.00E+00	7.64E-09	0.00E+00	0.00E+00	1.00E-06	0.00E+00	0.00E+00	2.49E-05
2561	ALL	752088.42	4040160.7	NonCancerChronicDerive	0.00E+00	2.29E-09	0.00E+00	0.00E+00	0.00E+00	1.73E-07	2.41E-05	0.00E+00	7.40E-09	0.00E+00	0.00E+00	9.73E-07	0.00E+00	0.00E+00	2.41E-05
2562	ALL	752188.42	4040160.7	NonCancerChronicDerive	0.00E+00	2.22E-09	0.00E+00	0.00E+00	0.00E+00	1.67E-07	2.33E-05	0.00E+00	7.18E-09	0.00E+00	0.00E+00	9.44E-07	0.00E+00	0.00E+00	2.33E-05
2563	ALL	752288.42	4040160.7	NonCancerChronicDerive	0.00E+00	2.15E-09	0.00E+00	0.00E+00	0.00E+00	1.62E-07	2.25E-05	0.00E+00	6.97E-09	0.00E+00	0.00E+00	9.16E-07	0.00E+00	0.00E+00	2.25E-05
2564	ALL	752388.42	4040160.7	NonCancerChronicDerive	0.00E+00	2.09E-09	0.00E+00	0.00E+00	0.00E+00	1.57E-07	2.18E-05	0.00E+00	6.78E-09	0.00E+00	0.00E+00	8.91E-07	0.00E+00	0.00E+00	2.18E-05
2565	ALL	752488.42	4040160.7	NonCancerChronicDerive	0.00E+00	2.04E-09	0.00E+00	0.00E+00	0.00E+00	1.52E-07	2.12E-05	0.00E+00	6.60E-09	0.00E+00	0.00E+00	8.67E-07	0.00E+00	0.00E+00	2.12E-05
2566	ALL	752588.42	4040160.7	NonCancerChronicDerive	0.00E+00	1.98E-09	0.00E+00	0.00E+00	0.00E+00	1.47E-07	2.06E-05	0.00E+00	6.42E-09	0.00E+00	0.00E+00	8.45E-07	0.00E+00	0.00E+00	2.06E-05
2567	ALL	752688.42	4040160.7	NonCancerChronicDerive	0.00E+00	1.93E-09	0.00E+00	0.00E+00	0.00E+00	1.43E-07	2.00E-05	0.00E+00	6.26E-09	0.00E+00	0.00E+00	8.23E-07	0.00E+00	0.00E+00	2.00E-05
2568	ALL	752788.42	4040160.7	NonCancerChronicDerive	0.00E+00	1.88E-09	0.00E+00	0.00E+00	0.00E+00	1.39E-07	1.94E-05	0.00E+00	6.09E-09	0.00E+00	0.00E+00	8.01E-07	0.00E+00	0.00E+00	1.94E-05
2569	ALL	752888.42	4040160.7	NonCancerChronicDerive	0.00E+00	1.84E-09	0.00E+00	0.00E+00	0.00E+00	1.35E-07	1.89E-05	0.00E+00	5.94E-09	0.00E+00	0.00E+00	7.81E-07	0.00E+00	0.00E+00	1.89E-05
2570	ALL	752988.42	4040160.7	NonCancerChronicDerive	0.00E+00	1.79E-09	0.00E+00	0.00E+00	0.00E+00	1.31E-07	1.84E-05	0.00E+00	5.79E-09	0.00E+00	0.00E+00	7.62E-07	0.00E+00	0.00E+00	1.84E-05
2571	ALL	753088.42	4040160.7	NonCancerChronicDerive	0.00E+00	1.75E-09	0.00E+00	0.00E+00	0.00E+00	1.27E-07	1.79E-05	0.00E+00	5.66E-09	0.00E+00	0.00E+00	7.43E-07	0.00E+00	0.00E+00	1.79E-05
2572	ALL	753188.42	4040160.7	NonCancerChronicDerive	0.00E+00	1.71E-09	0.00E+00	0.00E+00	0.00E+00	1.24E-07	1.75E-05	0.00E+00	5.52E-09	0.00E+00	0.00E+00	7.26E-07	0.00E+00	0.00E+00	1.75E-05
2573	ALL	746288.42	4040260.7	NonCancerChronicDerive	0.00E+00	1.87E-09	0.00E+00	0.00E+00	0.00E+00	1.34E-07	1.95E-05	0.00E+00	6.06E-09	0.00E+00	0.00E+00	7.96E-07	0.00E+00	0.00E+00	1.95E-05
2574	ALL	746388.42	4040260.7	NonCancerChronicDerive	0.00E+00	1.91E-09	0.00E+00	0.00E+00	0.00E+00	1.37E-07	1.99E-05	0.00E+00	6.18E-09	0.00E+00	0.00E+00	8.13E-07	0.00E+00	0.00E+00	1.99E-05
2575	ALL	746488.42	4040260.7	NonCancerChronicDerive	0.00E+00	1.95E-09	0.00E+00	0.00E+00	0.00E+00	1.40E-07	2.04E-05	0.00E+00	6.32E-09	0.00E+00	0.00E+00	8.31E-07	0.00E+00	0.00E+00	2.04E-05
2576	ALL	751488.42	4040260.7	NonCancerChronicDerive	0.00E+00	2.60E-09	0.00E+00	0.00E+00	0.00E+00	2.05E-07	2.81E-05	0.00E+00	8.42E-09	0.00E+00	0.00E+00	1.11E-06	0.00E+00	0.00E+00	2.81E-05
2577	ALL	751588.42	4040260.7	NonCancerChronicDerive	0.00E+00	2.51E-09	0.00E+00	0.00E+00	0.00E+00	1.96E-07	2.70E-05	0.00E+00	8.13E-09	0.00E+00	0.00E+00	1.07E-06	0.00E+00	0.00E+00	2.70E-05
2578	ALL	751688.42	4040260.7	NonCancerChronicDerive	0.00E+00	2.43E-09	0.00E+00	0.00E+00	0.00E+00	1.88E-07	2.60E-05	0.00E+00	7.86E-09	0.00E+00	0.00E+00	1.03E-06	0.00E+00	0.00E+00	2.60E-05
2579	ALL	751788.42	4040260.7	NonCancerChronicDerive	0.00E+00	2.35E-09	0.00E+00	0.00E+00	0.00E+00	1.81E-07	2.51E-05	0.00E+00	7.61E-09	0.00E+00	0.00E+00	1.00E-06	0.00E+00	0.00E+00	2.51E-05
2580	ALL	751888.42	4040260.7	NonCancerChronicDerive	0.00E+00	2.28E-09	0.00E+00	0.00E+00	0.00E+00	1.75E-07	2.42E-05	0.00E+00	7.38E-09	0.00E+00	0.00E+00	9.70E-07	0.00E+00	0.00E+00	2.42E-05
2581	ALL	751988.42	4040260.7	NonCancerChronicDerive	0.00E+00	2.21E-09	0.00E+00	0.00E+00	0.00E+00	1.69E-07	2.34E-05	0.00E+00	7.16E-09	0.00E+00	0.00E+00	9.41E-07	0.00E+00	0.00E+00	2.34E-05
2582	ALL	752088.42	4040260.7	NonCancerChronicDerive	0.00E+00	2.15E-09	0.00E+00	0.00E+00	0.00E+00	1.63E-07	2.26E-05	0.00E+00	6.96E-09	0.00E+00	0.00E+00	9.14E-07	0.00E+00	0.00E+00	2.26E-05
2583	ALL	752188.42	4040260.7	NonCancerChronicDerive	0.00E+00	2.09E-09	0.00E+00	0.00E+00	0.00E+00	1.58E-07	2.19E-05	0.00E+00	6.76E-09	0.00E+00	0.00E+00	8.89E-07	0.00E+00	0.00E+00	2.19E-05
2584	ALL	752288.42	4040260.7	NonCancerChronicDerive	0.00E+00	2.03E-09	0.00E+00	0.00E+00	0.00E+00	1.53E-07	2.13E-05	0.00E+00	6.58E-09	0.00E+00	0.00E+00	8.65E-07	0.00E+00	0.00E+00	2.13E-05
2585	ALL	752388.42	4040260.7	NonCancerChronicDerive	0.00E+00	1.98E-09	0.00E+00	0.00E+00	0.00E+00	1.48E-07	2.07E-05	0.00E+00	6.41E-09	0.00E+00	0.00E+00	8.43E-07	0.00E+00	0.00E+00	2.07E-05
2586	ALL	752488.42	4040260.7	NonCancerChronicDerive	0.00E+00	1.93E-09	0.00E+00	0.00E+00	0.00E+00	1.44E-07	2.01E-05	0.00E+00	6.25E-09	0.00E+00	0.00E+00	8.22E-07	0.00E+00	0.00E+00	2.01E-05
2587	ALL	752588.42	4040260.7	NonCancerChronicDerive	0.00E+00	1.88E-09	0.00E+00	0.00E+00	0.00E+00	1.40E-07	1.96E-05	0.00E+00	6.10E-09	0.00E+00	0.00E+00	8.02E-07	0.00E+00	0.00E+00	1.96E-05
2588	ALL	752688.42	4040260.7	NonCancerChronicDerive	0.00E+00	1.84E-09	0.00E+00	0.00E+00	0.00E+00	1.36E-07	1.91E-05	0.00E+00	5.95E-09	0.00E+00	0.00E+00	7.82E-07	0.00E+00	0.00E+00	1.91E-05
2589	ALL	752788.42	4040260.7	NonCancerChronicDerive	0.00E+00	1.79E-09	0.00E+00	0.00E+00	0.00E+00	1.32E-07	1.86E-05	0.00E+00	5.81E-09	0.00E+00	0.00E+00	7.64E-07	0.00E+00	0.00E+00	1.86E-05
2590	ALL	752888.42	4040260.7	NonCancerChronicDerive	0.00E+00	1.75E-09	0.00E+00	0.00E+00	0.00E+00	1.29E-07	1.81E-05	0.00E+00	5.67E-09	0.00E+00	0.00E+00	7.46E-07	0.00E+00	0.00E+00	1.81E-05
2591	ALL	752988.42	4040260.7	NonCancerChronicDerive	0.00E+00	1.71E-09	0.00E+00	0.00E+00	0.00E+00	1.25E-07	1.76E-05	0.00E+00	5.54E-09	0.00E+00	0.00E+00	7.29E-07	0.00E+00	0.00E+00	1.76E-05
2592	ALL	753088.42	4040260.7	NonCancerChronicDerive	0.00E+00	1.67E-09	0.00E+00	0.00E+00	0.00E+00	1.22E-07	1.72E-05	0.00E+00	5.42E-09	0.00E+00	0.00E+00	7.12E-07	0.00E+00	0.00E+00	1.72E-05
2593	ALL	753188.42	4040260.7	NonCancerChronicDerive	0.00E+00	1.64E-09	0.00E+00	0.00E+00	0.00E+00	1.19E-07	1.68E-05	0.00E+00	5.30E-09	0.00E+00	0.00E+00	6.97E-07	0.00E+00	0.00E+00	1.68E-05
2594	ALL	746288.42	4040360.7	NonCancerChronicDerive	0.00E+00	1.92E-09	0.00E+00	0.00E+00	0.00E+00	1.37E-07	1.99E-05	0.00E+00	6.22E-09	0.00E+00	0.00E+00	8.18E-07	0.00E+00	0.00E+00	1.99E-05
2595	ALL	746388.42	4040360.7	NonCancerChronicDerive	0.00E+00	1.97E-09	0.00E+00	0.00E+00	0.00E+00	1.40E-07	2.04E-05	0.00E+00	6.37E-09	0.00E+00	0.00E+00	8.38E-07	0.00E+00	0.00E+00	2.04E-05

2596	ALL	751488.42	4040360.7	NonCancerChronicDerive	0.00E+00	2.40E-09	0.00E+00	0.00E+00	0.00E+00	1.88E-07	2.59E-05	0.00E+00	7.77E-09	0.00E+00	0.00E+00	1.02E-06	0.00E+00	0.00E+00	2.59E-05
2597	ALL	751588.42	4040360.7	NonCancerChronicDerive	0.00E+00	2.33E-09	0.00E+00	0.00E+00	0.00E+00	1.81E-07	2.50E-05	0.00E+00	7.53E-09	0.00E+00	0.00E+00	9.90E-07	0.00E+00	0.00E+00	2.50E-05
2598	ALL	751688.42	4040360.7	NonCancerChronicDerive	0.00E+00	2.26E-09	0.00E+00	0.00E+00	0.00E+00	1.75E-07	2.41E-05	0.00E+00	7.31E-09	0.00E+00	0.00E+00	9.60E-07	0.00E+00	0.00E+00	2.41E-05
2599	ALL	751788.42	4040360.7	NonCancerChronicDerive	0.00E+00	2.19E-09	0.00E+00	0.00E+00	0.00E+00	1.69E-07	2.34E-05	0.00E+00	7.10E-09	0.00E+00	0.00E+00	9.33E-07	0.00E+00	0.00E+00	2.34E-05
2600	ALL	751888.42	4040360.7	NonCancerChronicDerive	0.00E+00	2.13E-09	0.00E+00	0.00E+00	0.00E+00	1.63E-07	2.26E-05	0.00E+00	6.90E-09	0.00E+00	0.00E+00	9.07E-07	0.00E+00	0.00E+00	2.26E-05
2601	ALL	751988.42	4040360.7	NonCancerChronicDerive	0.00E+00	2.07E-09	0.00E+00	0.00E+00	0.00E+00	1.58E-07	2.19E-05	0.00E+00	6.71E-09	0.00E+00	0.00E+00	8.82E-07	0.00E+00	0.00E+00	2.19E-05
2602	ALL	752088.42	4040360.7	NonCancerChronicDerive	0.00E+00	2.02E-09	0.00E+00	0.00E+00	0.00E+00	1.53E-07	2.13E-05	0.00E+00	6.53E-09	0.00E+00	0.00E+00	8.59E-07	0.00E+00	0.00E+00	2.13E-05
2603	ALL	752188.42	4040360.7	NonCancerChronicDerive	0.00E+00	1.97E-09	0.00E+00	0.00E+00	0.00E+00	1.48E-07	2.07E-05	0.00E+00	6.37E-09	0.00E+00	0.00E+00	8.37E-07	0.00E+00	0.00E+00	2.07E-05
2604	ALL	752288.42	4040360.7	NonCancerChronicDerive	0.00E+00	1.92E-09	0.00E+00	0.00E+00	0.00E+00	1.44E-07	2.01E-05	0.00E+00	6.21E-09	0.00E+00	0.00E+00	8.17E-07	0.00E+00	0.00E+00	2.01E-05
2605	ALL	752388.42	4040360.7	NonCancerChronicDerive	0.00E+00	1.87E-09	0.00E+00	0.00E+00	0.00E+00	1.40E-07	1.96E-05	0.00E+00	6.07E-09	0.00E+00	0.00E+00	7.97E-07	0.00E+00	0.00E+00	1.96E-05
2606	ALL	752488.42	4040360.7	NonCancerChronicDerive	0.00E+00	1.83E-09	0.00E+00	0.00E+00	0.00E+00	1.36E-07	1.91E-05	0.00E+00	5.92E-09	0.00E+00	0.00E+00	7.79E-07	0.00E+00	0.00E+00	1.91E-05
2607	ALL	752588.42	4040360.7	NonCancerChronicDerive	0.00E+00	1.79E-09	0.00E+00	0.00E+00	0.00E+00	1.33E-07	1.86E-05	0.00E+00	5.79E-09	0.00E+00	0.00E+00	7.62E-07	0.00E+00	0.00E+00	1.86E-05
2608	ALL	752688.42	4040360.7	NonCancerChronicDerive	0.00E+00	1.75E-09	0.00E+00	0.00E+00	0.00E+00	1.29E-07	1.82E-05	0.00E+00	5.66E-09	0.00E+00	0.00E+00	7.44E-07	0.00E+00	0.00E+00	1.82E-05
2609	ALL	752788.42	4040360.7	NonCancerChronicDerive	0.00E+00	1.71E-09	0.00E+00	0.00E+00	0.00E+00	1.26E-07	1.77E-05	0.00E+00	5.53E-09	0.00E+00	0.00E+00	7.27E-07	0.00E+00	0.00E+00	1.77E-05
2610	ALL	752888.42	4040360.7	NonCancerChronicDerive	0.00E+00	1.67E-09	0.00E+00	0.00E+00	0.00E+00	1.23E-07	1.73E-05	0.00E+00	5.41E-09	0.00E+00	0.00E+00	7.12E-07	0.00E+00	0.00E+00	1.73E-05
2611	ALL	752988.42	4040360.7	NonCancerChronicDerive	0.00E+00	1.64E-09	0.00E+00	0.00E+00	0.00E+00	1.20E-07	1.69E-05	0.00E+00	5.30E-09	0.00E+00	0.00E+00	6.96E-07	0.00E+00	0.00E+00	1.69E-05
2612	ALL	753088.42	4040360.7	NonCancerChronicDerive	0.00E+00	1.60E-09	0.00E+00	0.00E+00	0.00E+00	1.17E-07	1.65E-05	0.00E+00	5.19E-09	0.00E+00	0.00E+00	6.82E-07	0.00E+00	0.00E+00	1.65E-05
2613	ALL	753188.42	4040360.7	NonCancerChronicDerive	0.00E+00	1.57E-09	0.00E+00	0.00E+00	0.00E+00	1.14E-07	1.61E-05	0.00E+00	5.08E-09	0.00E+00	0.00E+00	6.68E-07	0.00E+00	0.00E+00	1.61E-05
2614	ALL	746288.42	4040460.7	NonCancerChronicDerive	0.00E+00	1.96E-09	0.00E+00	0.00E+00	0.00E+00	1.39E-07	2.03E-05	0.00E+00	6.36E-09	0.00E+00	0.00E+00	8.36E-07	0.00E+00	0.00E+00	2.03E-05
2615	ALL	746388.42	4040460.7	NonCancerChronicDerive	0.00E+00	2.01E-09	0.00E+00	0.00E+00	0.00E+00	1.43E-07	2.08E-05	0.00E+00	6.52E-09	0.00E+00	0.00E+00	8.57E-07	0.00E+00	0.00E+00	2.08E-05
2616	ALL	751488.42	4040460.7	NonCancerChronicDerive	0.00E+00	2.21E-09	0.00E+00	0.00E+00	0.00E+00	1.72E-07	2.38E-05	0.00E+00	7.16E-09	0.00E+00	0.00E+00	9.41E-07	0.00E+00	0.00E+00	2.38E-05
2617	ALL	751588.42	4040460.7	NonCancerChronicDerive	0.00E+00	2.15E-09	0.00E+00	0.00E+00	0.00E+00	1.67E-07	2.31E-05	0.00E+00	6.97E-09	0.00E+00	0.00E+00	9.16E-07	0.00E+00	0.00E+00	2.31E-05
2618	ALL	751688.42	4040460.7	NonCancerChronicDerive	0.00E+00	2.10E-09	0.00E+00	0.00E+00	0.00E+00	1.61E-07	2.24E-05	0.00E+00	6.78E-09	0.00E+00	0.00E+00	8.91E-07	0.00E+00	0.00E+00	2.24E-05
2619	ALL	751788.42	4040460.7	NonCancerChronicDerive	0.00E+00	2.04E-09	0.00E+00	0.00E+00	0.00E+00	1.56E-07	2.17E-05	0.00E+00	6.61E-09	0.00E+00	0.00E+00	8.69E-07	0.00E+00	0.00E+00	2.17E-05
2620	ALL	751888.42	4040460.7	NonCancerChronicDerive	0.00E+00	1.99E-09	0.00E+00	0.00E+00	0.00E+00	1.52E-07	2.11E-05	0.00E+00	6.44E-09	0.00E+00	0.00E+00	8.47E-07	0.00E+00	0.00E+00	2.11E-05
2621	ALL	751988.42	4040460.7	NonCancerChronicDerive	0.00E+00	1.94E-09	0.00E+00	0.00E+00	0.00E+00	1.47E-07	2.05E-05	0.00E+00	6.28E-09	0.00E+00	0.00E+00	8.26E-07	0.00E+00	0.00E+00	2.05E-05
2622	ALL	752088.42	4040460.7	NonCancerChronicDerive	0.00E+00	1.89E-09	0.00E+00	0.00E+00	0.00E+00	1.43E-07	2.00E-05	0.00E+00	6.13E-09	0.00E+00	0.00E+00	8.06E-07	0.00E+00	0.00E+00	2.00E-05
2623	ALL	752188.42	4040460.7	NonCancerChronicDerive	0.00E+00	1.85E-09	0.00E+00	0.00E+00	0.00E+00	1.39E-07	1.95E-05	0.00E+00	5.99E-09	0.00E+00	0.00E+00	7.88E-07	0.00E+00	0.00E+00	1.95E-05
2624	ALL	752288.42	4040460.7	NonCancerChronicDerive	0.00E+00	1.81E-09	0.00E+00	0.00E+00	0.00E+00	1.36E-07	1.90E-05	0.00E+00	5.86E-09	0.00E+00	0.00E+00	7.70E-07	0.00E+00	0.00E+00	1.90E-05
2625	ALL	752388.42	4040460.7	NonCancerChronicDerive	0.00E+00	1.77E-09	0.00E+00	0.00E+00	0.00E+00	1.32E-07	1.85E-05	0.00E+00	5.73E-09	0.00E+00	0.00E+00	7.54E-07	0.00E+00	0.00E+00	1.85E-05
2626	ALL	752488.42	4040460.7	NonCancerChronicDerive	0.00E+00	1.73E-09	0.00E+00	0.00E+00	0.00E+00	1.29E-07	1.81E-05	0.00E+00	5.61E-09	0.00E+00	0.00E+00	7.38E-07	0.00E+00	0.00E+00	1.81E-05
2627	ALL	752588.42	4040460.7	NonCancerChronicDerive	0.00E+00	1.70E-09	0.00E+00	0.00E+00	0.00E+00	1.26E-07	1.77E-05	0.00E+00	5.50E-09	0.00E+00	0.00E+00	7.22E-07	0.00E+00	0.00E+00	1.77E-05
2628	ALL	752688.42	4040460.7	NonCancerChronicDerive	0.00E+00	1.66E-09	0.00E+00	0.00E+00	0.00E+00	1.23E-07	1.73E-05	0.00E+00	5.38E-09	0.00E+00	0.00E+00	7.07E-07	0.00E+00	0.00E+00	1.73E-05
2629	ALL	752788.42	4040460.7	NonCancerChronicDerive	0.00E+00	1.63E-09	0.00E+00	0.00E+00	0.00E+00	1.20E-07	1.69E-05	0.00E+00	5.26E-09	0.00E+00	0.00E+00	6.92E-07	0.00E+00	0.00E+00	1.69E-05
2630	ALL	752888.42	4040460.7	NonCancerChronicDerive	0.00E+00	1.59E-09	0.00E+00	0.00E+00	0.00E+00	1.17E-07	1.65E-05	0.00E+00	5.16E-09	0.00E+00	0.00E+00	6.79E-07	0.00E+00	0.00E+00	1.65E-05
2631	ALL	752988.42	4040460.7	NonCancerChronicDerive	0.00E+00	1.56E-09	0.00E+00	0.00E+00	0.00E+00	1.14E-07	1.61E-05	0.00E+00	5.06E-09	0.00E+00	0.00E+00	6.65E-07	0.00E+00	0.00E+00	1.61E-05
2632	ALL	753088.42	4040460.7	NonCancerChronicDerive	0.00E+00	1.53E-09	0.00E+00	0.00E+00	0.00E+00	1.12E-07	1.58E-05	0.00E+00	4.96E-09	0.00E+00	0.00E+00	6.52E-07	0.00E+00	0.00E+00	1.58E-05
2633	ALL	753188.42	4040460.7	NonCancerChronicDerive	0.00E+00	1.50E-09	0.00E+00	0.00E+00	0.00E+00	1.09E-07	1.55E-05	0.00E+00	4.87E-09	0.00E+00	0.00E+00	6.40E-07	0.00E+00	0.00E+00	1.55E-05
2634	ALL	746288.42	4040560.7	NonCancerChronicDerive	0.00E+00	1.99E-09	0.00E+00	0.00E+00	0.00E+00	1.41E-07	2.05E-05	0.00E+00	6.45E-09	0.00E+00	0.00E+00	8.48E-07	0.00E+00	0.00E+00	2.05E-05
2635	ALL	746388.42	4040560.7	NonCancerChronicDerive	0.00E+00	2.05E-09	0.00E+00	0.00E+00	0.00E+00	1.44E-07	2.11E-05	0.00E+00	6.63E-09	0.00E+00	0.00E+00	8.72E-07	0.00E+00	0.00E+00	2.11E-05
2636	ALL	751488.42	4040560.7	NonCancerChronicDerive	0.00E+00	2.04E-09	0.00E+00	0.00E+00	0.00E+00	1.58E-07	2.19E-05	0.00E+00	6.60E-09	0.00E+00	0.00E+00	8.67E-07	0.00E+00	0.00E+00	2.19E-05
2637	ALL	751588.42	4040560.7	NonCancerChronicDerive	0.00E+00	1.99E-09	0.00E+00	0.00E+00	0.00E+00	1.53E-07	2.13E-05	0.00E+00	6.44E-09	0.00E+00	0.00E+00	8.47E-07	0.00E+00	0.00E+00	2.13E-05
2638	ALL	751688.42	4040560.7	NonCancerChronicDerive	0.00E+00	1.94E-09	0.00E+00	0.00E+00	0.00E+00	1.49E-07	2.08E-05	0.00E+00	6.29E-09	0.00E+00	0.00E+00	8.27E-07	0.00E+00	0.00E+00	2.08E-05
2639	ALL	751788.42	4040560.7	NonCancerChronicDerive	0.00E+00	1.90E-09	0.00E+00	0.00E+00	0.00E+00	1.45E-07	2.02E-05	0.00E+00	6.15E-09	0.00E+00	0.00E+00	8.08E-07	0.00E+00	0.00E+00	2.02E-05
2640	ALL	751888.42	4040560.7	NonCancerChronicDerive	0.00E+00	1.86E-09	0.00E+00	0.00E+00	0.00E+00	1.41E-07	1.97E-05	0.00E+00	6.01E-09	0.00E+00	0.00E+00	7.90E-07	0.00E+00	0.00E+00	1.97E-05
2641	ALL	751988.42	4040560.7	NonCancerChronicDerive	0.00E+00	1.82E-09	0.00E+00	0.00E+00	0.00E+00	1.37E-07	1.92E-05	0.00E+00	5.88E-09	0.00E+00	0.00E+00	7.73E-07	0.00E+00	0.00E+00	1.92E-05
2642	ALL	752088.42	4040560.7	NonCancerChronicDerive	0.00E+00	1.78E-09	0.00E+00	0.00E+00	0.00E+00	1.34E-07	1.88E-05	0.00E+00	5.75E-09	0.00E+00	0.00E+00	7.56E-07	0.00E+00	0.00E+00	1.88E-05
2643	ALL	752188.42	4040560.7	NonCancerChronicDerive	0.00E+00	1.74E-09	0.00E+00	0.00E+00	0.00E+00	1.31E-07	1.83E-05	0.00E+00	5.63E-09	0.00E+00	0.00E+00	7.40E-07	0.00E+00	0.00E+00	1.83E-05
2644	ALL	752288.42	4040560.7	NonCancerChronicDerive	0.00E+00	1.71E-09	0.00E+00	0.00E+00	0.00E+00	1.28E-07	1.79E-05	0.00E+00	5.52E-09	0.00E+00	0.00E+00	7.26E-07	0.00E+00	0.00E+00	1.79E-05
2645	ALL	752388.42	4040560.7	NonCancerChronicDerive	0.00E+00	1.67E-09	0.00E+00	0.00E+00	0.00E+00	1.25E-07	1.75E-05	0.00E+00	5.41E-09	0.00E+00	0.00E+00	7.12E-07	0.00E+00	0.00E+00	1.75E-05
2646	ALL	752488.42	4040560.7	NonCancerChronicDerive	0.00E+00	1.64E-09	0.00E+00	0.00E+00	0.00E+00	1.22E-07	1.71E-05	0.00E+00	5.31E-09	0.00E+00	0.00E+00	6.98E-07	0.00E+00	0.00E+00	1.71E-05
2647	ALL	752588.42	4040560.7	NonCancerChronicDerive	0.00E+00	1.61E-09	0.00E+00	0.00E+00	0.00E+00	1.19E-07	1.68E-05	0.00E+00	5.21E-09	0.00E+00	0.00E+00	6.85E-07	0.00E+00	0.00E+00	1.68E-05
2648	ALL	752688.42	4040560.7	NonCancerChronicDerive	0.00E+00	1.58E-09	0.00E+00	0.00E+00	0.00E+00	1.16E-07	1.64E-05	0.00E+00	5.11E-09	0.00E+00	0.00E+00	6.71E-07	0.00E+00	0.00E+00	1.64E-05

2649	ALL	752788.42	4040560.7	NonCancerChronicDerive	0.00E+00	1.55E-09	0.00E+00	0.00E+00	0.00E+00	1.14E-07	1.61E-05	0.00E+00	5.01E-09	0.00E+00	0.00E+00	6.58E-07	0.00E+00	0.00E+00	1.61E-05
2650	ALL	752888.42	4040560.7	NonCancerChronicDerive	0.00E+00	1.52E-09	0.00E+00	0.00E+00	0.00E+00	1.11E-07	1.57E-05	0.00E+00	4.91E-09	0.00E+00	0.00E+00	6.46E-07	0.00E+00	0.00E+00	1.57E-05
2651	ALL	752988.42	4040560.7	NonCancerChronicDerive	0.00E+00	1.49E-09	0.00E+00	0.00E+00	0.00E+00	1.09E-07	1.54E-05	0.00E+00	4.83E-09	0.00E+00	0.00E+00	6.34E-07	0.00E+00	0.00E+00	1.54E-05
2652	ALL	753088.42	4040560.7	NonCancerChronicDerive	0.00E+00	1.46E-09	0.00E+00	0.00E+00	0.00E+00	1.07E-07	1.51E-05	0.00E+00	4.74E-09	0.00E+00	0.00E+00	6.23E-07	0.00E+00	0.00E+00	1.51E-05
2653	ALL	753188.42	4040560.7	NonCancerChronicDerive	0.00E+00	1.44E-09	0.00E+00	0.00E+00	0.00E+00	1.05E-07	1.48E-05	0.00E+00	4.66E-09	0.00E+00	0.00E+00	6.12E-07	0.00E+00	0.00E+00	1.48E-05
2654	ALL	746288.42	4040660.7	NonCancerChronicDerive	0.00E+00	2.02E-09	0.00E+00	0.00E+00	0.00E+00	1.42E-07	2.07E-05	0.00E+00	6.54E-09	0.00E+00	0.00E+00	8.60E-07	0.00E+00	0.00E+00	2.07E-05
2655	ALL	746388.42	4040660.7	NonCancerChronicDerive	0.00E+00	2.09E-09	0.00E+00	0.00E+00	0.00E+00	1.47E-07	2.14E-05	0.00E+00	6.76E-09	0.00E+00	0.00E+00	8.88E-07	0.00E+00	0.00E+00	2.14E-05
2656	ALL	746488.42	4040660.7	NonCancerChronicDerive	0.00E+00	2.17E-09	0.00E+00	0.00E+00	0.00E+00	1.52E-07	2.21E-05	0.00E+00	7.01E-09	0.00E+00	0.00E+00	9.22E-07	0.00E+00	0.00E+00	2.21E-05
2657	ALL	751388.42	4040660.7	NonCancerChronicDerive	0.00E+00	1.92E-09	0.00E+00	0.00E+00	0.00E+00	1.49E-07	2.07E-05	0.00E+00	6.22E-09	0.00E+00	0.00E+00	8.17E-07	0.00E+00	0.00E+00	2.07E-05
2658	ALL	751488.42	4040660.7	NonCancerChronicDerive	0.00E+00	1.88E-09	0.00E+00	0.00E+00	0.00E+00	1.45E-07	2.02E-05	0.00E+00	6.09E-09	0.00E+00	0.00E+00	8.00E-07	0.00E+00	0.00E+00	2.02E-05
2659	ALL	751588.42	4040660.7	NonCancerChronicDerive	0.00E+00	1.84E-09	0.00E+00	0.00E+00	0.00E+00	1.41E-07	1.97E-05	0.00E+00	5.96E-09	0.00E+00	0.00E+00	7.84E-07	0.00E+00	0.00E+00	1.97E-05
2660	ALL	751688.42	4040660.7	NonCancerChronicDerive	0.00E+00	1.80E-09	0.00E+00	0.00E+00	0.00E+00	1.38E-07	1.92E-05	0.00E+00	5.84E-09	0.00E+00	0.00E+00	7.68E-07	0.00E+00	0.00E+00	1.92E-05
2661	ALL	751788.42	4040660.7	NonCancerChronicDerive	0.00E+00	1.77E-09	0.00E+00	0.00E+00	0.00E+00	1.34E-07	1.88E-05	0.00E+00	5.72E-09	0.00E+00	0.00E+00	7.52E-07	0.00E+00	0.00E+00	1.88E-05
2662	ALL	751888.42	4040660.7	NonCancerChronicDerive	0.00E+00	1.73E-09	0.00E+00	0.00E+00	0.00E+00	1.31E-07	1.84E-05	0.00E+00	5.61E-09	0.00E+00	0.00E+00	7.37E-07	0.00E+00	0.00E+00	1.84E-05
2663	ALL	751988.42	4040660.7	NonCancerChronicDerive	0.00E+00	1.70E-09	0.00E+00	0.00E+00	0.00E+00	1.28E-07	1.80E-05	0.00E+00	5.50E-09	0.00E+00	0.00E+00	7.23E-07	0.00E+00	0.00E+00	1.80E-05
2664	ALL	752088.42	4040660.7	NonCancerChronicDerive	0.00E+00	1.67E-09	0.00E+00	0.00E+00	0.00E+00	1.25E-07	1.76E-05	0.00E+00	5.40E-09	0.00E+00	0.00E+00	7.09E-07	0.00E+00	0.00E+00	1.76E-05
2665	ALL	746288.42	4040760.7	NonCancerChronicDerive	0.00E+00	2.07E-09	0.00E+00	0.00E+00	0.00E+00	1.45E-07	2.11E-05	0.00E+00	6.69E-09	0.00E+00	0.00E+00	8.80E-07	0.00E+00	0.00E+00	2.11E-05
2666	ALL	746388.42	4040760.7	NonCancerChronicDerive	0.00E+00	2.15E-09	0.00E+00	0.00E+00	0.00E+00	1.50E-07	2.18E-05	0.00E+00	6.95E-09	0.00E+00	0.00E+00	9.14E-07	0.00E+00	0.00E+00	2.18E-05
2667	ALL	746488.42	4040760.7	NonCancerChronicDerive	0.00E+00	2.24E-09	0.00E+00	0.00E+00	0.00E+00	1.56E-07	2.28E-05	0.00E+00	7.26E-09	0.00E+00	0.00E+00	9.54E-07	0.00E+00	0.00E+00	2.28E-05
2668	ALL	751388.42	4040760.7	NonCancerChronicDerive	0.00E+00	1.77E-09	0.00E+00	0.00E+00	0.00E+00	1.36E-07	1.90E-05	0.00E+00	5.73E-09	0.00E+00	0.00E+00	7.53E-07	0.00E+00	0.00E+00	1.90E-05
2669	ALL	751488.42	4040760.7	NonCancerChronicDerive	0.00E+00	1.74E-09	0.00E+00	0.00E+00	0.00E+00	1.33E-07	1.86E-05	0.00E+00	5.62E-09	0.00E+00	0.00E+00	7.39E-07	0.00E+00	0.00E+00	1.86E-05
2670	ALL	751588.42	4040760.7	NonCancerChronicDerive	0.00E+00	1.71E-09	0.00E+00	0.00E+00	0.00E+00	1.30E-07	1.82E-05	0.00E+00	5.52E-09	0.00E+00	0.00E+00	7.26E-07	0.00E+00	0.00E+00	1.82E-05
2671	ALL	751688.42	4040760.7	NonCancerChronicDerive	0.00E+00	1.68E-09	0.00E+00	0.00E+00	0.00E+00	1.28E-07	1.79E-05	0.00E+00	5.43E-09	0.00E+00	0.00E+00	7.13E-07	0.00E+00	0.00E+00	1.79E-05
2672	ALL	751788.42	4040760.7	NonCancerChronicDerive	0.00E+00	1.65E-09	0.00E+00	0.00E+00	0.00E+00	1.25E-07	1.75E-05	0.00E+00	5.33E-09	0.00E+00	0.00E+00	7.01E-07	0.00E+00	0.00E+00	1.75E-05
2673	ALL	751888.42	4040760.7	NonCancerChronicDerive	0.00E+00	1.62E-09	0.00E+00	0.00E+00	0.00E+00	1.22E-07	1.72E-05	0.00E+00	5.24E-09	0.00E+00	0.00E+00	6.89E-07	0.00E+00	0.00E+00	1.72E-05
2674	ALL	751988.42	4040760.7	NonCancerChronicDerive	0.00E+00	1.59E-09	0.00E+00	0.00E+00	0.00E+00	1.20E-07	1.68E-05	0.00E+00	5.15E-09	0.00E+00	0.00E+00	6.77E-07	0.00E+00	0.00E+00	1.68E-05
2675	ALL	752088.42	4040760.7	NonCancerChronicDerive	0.00E+00	1.57E-09	0.00E+00	0.00E+00	0.00E+00	1.17E-07	1.65E-05	0.00E+00	5.07E-09	0.00E+00	0.00E+00	6.66E-07	0.00E+00	0.00E+00	1.65E-05
2676	ALL	746288.42	4040860.7	NonCancerChronicDerive	0.00E+00	2.14E-09	0.00E+00	0.00E+00	0.00E+00	1.49E-07	2.16E-05	0.00E+00	6.92E-09	0.00E+00	0.00E+00	9.10E-07	0.00E+00	0.00E+00	2.16E-05
2677	ALL	746388.42	4040860.7	NonCancerChronicDerive	0.00E+00	2.23E-09	0.00E+00	0.00E+00	0.00E+00	1.55E-07	2.26E-05	0.00E+00	7.23E-09	0.00E+00	0.00E+00	9.50E-07	0.00E+00	0.00E+00	2.26E-05
2678	ALL	746488.42	4040860.7	NonCancerChronicDerive	0.00E+00	2.34E-09	0.00E+00	0.00E+00	0.00E+00	1.62E-07	2.36E-05	0.00E+00	7.59E-09	0.00E+00	0.00E+00	9.97E-07	0.00E+00	0.00E+00	2.36E-05
2679	ALL	751388.42	4040860.7	NonCancerChronicDerive	0.00E+00	1.64E-09	0.00E+00	0.00E+00	0.00E+00	1.26E-07	1.76E-05	0.00E+00	5.30E-09	0.00E+00	0.00E+00	6.97E-07	0.00E+00	0.00E+00	1.76E-05
2680	ALL	751488.42	4040860.7	NonCancerChronicDerive	0.00E+00	1.61E-09	0.00E+00	0.00E+00	0.00E+00	1.23E-07	1.73E-05	0.00E+00	5.22E-09	0.00E+00	0.00E+00	6.86E-07	0.00E+00	0.00E+00	1.73E-05
2681	ALL	751588.42	4040860.7	NonCancerChronicDerive	0.00E+00	1.59E-09	0.00E+00	0.00E+00	0.00E+00	1.21E-07	1.70E-05	0.00E+00	5.14E-09	0.00E+00	0.00E+00	6.75E-07	0.00E+00	0.00E+00	1.70E-05
2682	ALL	751688.42	4040860.7	NonCancerChronicDerive	0.00E+00	1.56E-09	0.00E+00	0.00E+00	0.00E+00	1.19E-07	1.67E-05	0.00E+00	5.06E-09	0.00E+00	0.00E+00	6.65E-07	0.00E+00	0.00E+00	1.67E-05
2683	ALL	751788.42	4040860.7	NonCancerChronicDerive	0.00E+00	1.54E-09	0.00E+00	0.00E+00	0.00E+00	1.16E-07	1.64E-05	0.00E+00	4.98E-09	0.00E+00	0.00E+00	6.55E-07	0.00E+00	0.00E+00	1.64E-05
2684	ALL	751888.42	4040860.7	NonCancerChronicDerive	0.00E+00	1.52E-09	0.00E+00	0.00E+00	0.00E+00	1.14E-07	1.61E-05	0.00E+00	4.91E-09	0.00E+00	0.00E+00	6.45E-07	0.00E+00	0.00E+00	1.61E-05
2685	ALL	751988.42	4040860.7	NonCancerChronicDerive	0.00E+00	1.49E-09	0.00E+00	0.00E+00	0.00E+00	1.12E-07	1.58E-05	0.00E+00	4.83E-09	0.00E+00	0.00E+00	6.35E-07	0.00E+00	0.00E+00	1.58E-05
2686	ALL	752088.42	4040860.7	NonCancerChronicDerive	0.00E+00	1.47E-09	0.00E+00	0.00E+00	0.00E+00	1.10E-07	1.55E-05	0.00E+00	4.76E-09	0.00E+00	0.00E+00	6.26E-07	0.00E+00	0.00E+00	1.55E-05
2687	ALL	746288.42	4040960.7	NonCancerChronicDerive	0.00E+00	2.22E-09	0.00E+00	0.00E+00	0.00E+00	1.53E-07	2.23E-05	0.00E+00	7.19E-09	0.00E+00	0.00E+00	9.45E-07	0.00E+00	0.00E+00	2.23E-05
2688	ALL	746388.42	4040960.7	NonCancerChronicDerive	0.00E+00	2.33E-09	0.00E+00	0.00E+00	0.00E+00	1.61E-07	2.34E-05	0.00E+00	7.54E-09	0.00E+00	0.00E+00	9.92E-07	0.00E+00	0.00E+00	2.34E-05
2689	ALL	746488.42	4040960.7	NonCancerChronicDerive	0.00E+00	2.46E-09	0.00E+00	0.00E+00	0.00E+00	1.69E-07	2.46E-05	0.00E+00	7.96E-09	0.00E+00	0.00E+00	1.05E-06	0.00E+00	0.00E+00	2.46E-05
2690	ALL	751388.42	4040960.7	NonCancerChronicDerive	0.00E+00	1.52E-09	0.00E+00	0.00E+00	0.00E+00	1.17E-07	1.64E-05	0.00E+00	4.92E-09	0.00E+00	0.00E+00	6.47E-07	0.00E+00	0.00E+00	1.64E-05
2691	ALL	751488.42	4040960.7	NonCancerChronicDerive	0.00E+00	1.50E-09	0.00E+00	0.00E+00	0.00E+00	1.15E-07	1.61E-05	0.00E+00	4.86E-09	0.00E+00	0.00E+00	6.39E-07	0.00E+00	0.00E+00	1.61E-05
2692	ALL	751588.42	4040960.7	NonCancerChronicDerive	0.00E+00	1.48E-09	0.00E+00	0.00E+00	0.00E+00	1.13E-07	1.58E-05	0.00E+00	4.79E-09	0.00E+00	0.00E+00	6.30E-07	0.00E+00	0.00E+00	1.58E-05
2693	ALL	751688.42	4040960.7	NonCancerChronicDerive	0.00E+00	1.46E-09	0.00E+00	0.00E+00	0.00E+00	1.11E-07	1.56E-05	0.00E+00	4.73E-09	0.00E+00	0.00E+00	6.22E-07	0.00E+00	0.00E+00	1.56E-05
2694	ALL	751788.42	4040960.7	NonCancerChronicDerive	0.00E+00	1.44E-09	0.00E+00	0.00E+00	0.00E+00	1.09E-07	1.53E-05	0.00E+00	4.67E-09	0.00E+00	0.00E+00	6.14E-07	0.00E+00	0.00E+00	1.53E-05
2695	ALL	751888.42	4040960.7	NonCancerChronicDerive	0.00E+00	1.42E-09	0.00E+00	0.00E+00	0.00E+00	1.07E-07	1.51E-05	0.00E+00	4.61E-09	0.00E+00	0.00E+00	6.06E-07	0.00E+00	0.00E+00	1.51E-05
2696	ALL	751988.42	4040960.7	NonCancerChronicDerive	0.00E+00	1.41E-09	0.00E+00	0.00E+00	0.00E+00	1.05E-07	1.49E-05	0.00E+00	4.55E-09	0.00E+00	0.00E+00	5.98E-07	0.00E+00	0.00E+00	1.49E-05
2697	ALL	752088.42	4040960.7	NonCancerChronicDerive	0.00E+00	1.39E-09	0.00E+00	0.00E+00	0.00E+00	1.04E-07	1.46E-05	0.00E+00	4.49E-09	0.00E+00	0.00E+00	5.90E-07	0.00E+00	0.00E+00	1.46E-05
2698	ALL	746288.42	4041060.7	NonCancerChronicDerive	0.00E+00	2.31E-09	0.00E+00	0.00E+00	0.00E+00	1.59E-07	2.31E-05	0.00E+00	7.48E-09	0.00E+00	0.00E+00	9.84E-07	0.00E+00	0.00E+00	2.31E-05
2699	ALL	746388.42	4041060.7	NonCancerChronicDerive	0.00E+00	2.44E-09	0.00E+00	0.00E+00	0.00E+00	1.67E-07	2.43E-05	0.00E+00	7.89E-09	0.00E+00	0.00E+00	1.04E-06	0.00E+00	0.00E+00	2.43E-05
2700	ALL	746488.42	4041060.7	NonCancerChronicDerive	0.00E+00	2.58E-09	0.00E+00	0.00E+00	0.00E+00	1.76E-07	2.57E-05	0.00E+00	8.36E-09	0.00E+00	0.00E+00	1.10E-06	0.00E+00	0.00E+00	2.57E-05
2701	ALL	751388.42	4041060.7	NonCancerChronicDerive	0.00E+00	1.42E-09	0.00E+00	0.00E+00	0.00E+00	1.10E-07	1.54E-05	0.00E+00	4.61E-09	0.00E+00	0.00E+00	6.06E-07	0.00E+00	0.00E+00	1.54E-05

2702	ALL	751488.42	4041060.7	NonCancerChronicDerive	0.00E+00	1.41E-09	0.00E+00	0.00E+00	0.00E+00	1.08E-07	1.51E-05	0.00E+00	4.55E-09	0.00E+00	0.00E+00	5.99E-07	0.00E+00	0.00E+00	1.51E-05
2703	ALL	751588.42	4041060.7	NonCancerChronicDerive	0.00E+00	1.39E-09	0.00E+00	0.00E+00	0.00E+00	1.06E-07	1.49E-05	0.00E+00	4.50E-09	0.00E+00	0.00E+00	5.91E-07	0.00E+00	0.00E+00	1.49E-05
2704	ALL	751688.42	4041060.7	NonCancerChronicDerive	0.00E+00	1.37E-09	0.00E+00	0.00E+00	0.00E+00	1.04E-07	1.47E-05	0.00E+00	4.45E-09	0.00E+00	0.00E+00	5.85E-07	0.00E+00	0.00E+00	1.47E-05
2705	ALL	751788.42	4041060.7	NonCancerChronicDerive	0.00E+00	1.36E-09	0.00E+00	0.00E+00	0.00E+00	1.03E-07	1.44E-05	0.00E+00	4.39E-09	0.00E+00	0.00E+00	5.78E-07	0.00E+00	0.00E+00	1.44E-05
2706	ALL	751888.42	4041060.7	NonCancerChronicDerive	0.00E+00	1.34E-09	0.00E+00	0.00E+00	0.00E+00	1.01E-07	1.42E-05	0.00E+00	4.34E-09	0.00E+00	0.00E+00	5.71E-07	0.00E+00	0.00E+00	1.42E-05
2707	ALL	751988.42	4041060.7	NonCancerChronicDerive	0.00E+00	1.33E-09	0.00E+00	0.00E+00	0.00E+00	9.94E-08	1.40E-05	0.00E+00	4.29E-09	0.00E+00	0.00E+00	5.64E-07	0.00E+00	0.00E+00	1.40E-05
2708	ALL	752088.42	4041060.7	NonCancerChronicDerive	0.00E+00	1.31E-09	0.00E+00	0.00E+00	0.00E+00	9.80E-08	1.38E-05	0.00E+00	4.24E-09	0.00E+00	0.00E+00	5.58E-07	0.00E+00	0.00E+00	1.38E-05
2709	ALL	746288.42	4041160.7	NonCancerChronicDerive	0.00E+00	2.41E-09	0.00E+00	0.00E+00	0.00E+00	1.65E-07	2.40E-05	0.00E+00	7.80E-09	0.00E+00	0.00E+00	1.03E-06	0.00E+00	0.00E+00	2.40E-05
2710	ALL	746388.42	4041160.7	NonCancerChronicDerive	0.00E+00	2.55E-09	0.00E+00	0.00E+00	0.00E+00	1.74E-07	2.53E-05	0.00E+00	8.25E-09	0.00E+00	0.00E+00	1.08E-06	0.00E+00	0.00E+00	2.53E-05
2711	ALL	746488.42	4041160.7	NonCancerChronicDerive	0.00E+00	2.70E-09	0.00E+00	0.00E+00	0.00E+00	1.83E-07	2.67E-05	0.00E+00	8.73E-09	0.00E+00	0.00E+00	1.15E-06	0.00E+00	0.00E+00	2.67E-05
2712	ALL	746588.42	4041160.7	NonCancerChronicDerive	0.00E+00	2.88E-09	0.00E+00	0.00E+00	0.00E+00	1.95E-07	2.84E-05	0.00E+00	9.34E-09	0.00E+00	0.00E+00	1.23E-06	0.00E+00	0.00E+00	2.84E-05
2713	ALL	746688.42	4041160.7	NonCancerChronicDerive	0.00E+00	3.07E-09	0.00E+00	0.00E+00	0.00E+00	2.07E-07	3.02E-05	0.00E+00	9.95E-09	0.00E+00	0.00E+00	1.31E-06	0.00E+00	0.00E+00	3.02E-05
2714	ALL	751388.42	4041160.7	NonCancerChronicDerive	0.00E+00	1.34E-09	0.00E+00	0.00E+00	0.00E+00	1.03E-07	1.45E-05	0.00E+00	4.34E-09	0.00E+00	0.00E+00	5.71E-07	0.00E+00	0.00E+00	1.45E-05
2715	ALL	751488.42	4041160.7	NonCancerChronicDerive	0.00E+00	1.33E-09	0.00E+00	0.00E+00	0.00E+00	1.02E-07	1.43E-05	0.00E+00	4.29E-09	0.00E+00	0.00E+00	5.64E-07	0.00E+00	0.00E+00	1.43E-05
2716	ALL	751588.42	4041160.7	NonCancerChronicDerive	0.00E+00	1.31E-09	0.00E+00	0.00E+00	0.00E+00	1.00E-07	1.41E-05	0.00E+00	4.25E-09	0.00E+00	0.00E+00	5.58E-07	0.00E+00	0.00E+00	1.41E-05
2717	ALL	751688.42	4041160.7	NonCancerChronicDerive	0.00E+00	1.30E-09	0.00E+00	0.00E+00	0.00E+00	9.85E-08	1.39E-05	0.00E+00	4.20E-09	0.00E+00	0.00E+00	5.52E-07	0.00E+00	0.00E+00	1.39E-05
2718	ALL	751788.42	4041160.7	NonCancerChronicDerive	0.00E+00	1.28E-09	0.00E+00	0.00E+00	0.00E+00	9.70E-08	1.37E-05	0.00E+00	4.15E-09	0.00E+00	0.00E+00	5.46E-07	0.00E+00	0.00E+00	1.37E-05
2719	ALL	751888.42	4041160.7	NonCancerChronicDerive	0.00E+00	1.27E-09	0.00E+00	0.00E+00	0.00E+00	9.56E-08	1.35E-05	0.00E+00	4.11E-09	0.00E+00	0.00E+00	5.40E-07	0.00E+00	0.00E+00	1.35E-05
2720	ALL	751988.42	4041160.7	NonCancerChronicDerive	0.00E+00	1.26E-09	0.00E+00	0.00E+00	0.00E+00	9.42E-08	1.33E-05	0.00E+00	4.07E-09	0.00E+00	0.00E+00	5.34E-07	0.00E+00	0.00E+00	1.33E-05
2721	ALL	752088.42	4041160.7	NonCancerChronicDerive	0.00E+00	1.24E-09	0.00E+00	0.00E+00	0.00E+00	9.29E-08	1.31E-05	0.00E+00	4.02E-09	0.00E+00	0.00E+00	5.29E-07	0.00E+00	0.00E+00	1.31E-05
2722	ALL	752188.42	4041160.7	NonCancerChronicDerive	0.00E+00	1.23E-09	0.00E+00	0.00E+00	0.00E+00	9.16E-08	1.30E-05	0.00E+00	3.98E-09	0.00E+00	0.00E+00	5.23E-07	0.00E+00	0.00E+00	1.30E-05
2723	ALL	752288.42	4041160.7	NonCancerChronicDerive	0.00E+00	1.22E-09	0.00E+00	0.00E+00	0.00E+00	9.04E-08	1.28E-05	0.00E+00	3.94E-09	0.00E+00	0.00E+00	5.18E-07	0.00E+00	0.00E+00	1.28E-05
2724	ALL	752388.42	4041160.7	NonCancerChronicDerive	0.00E+00	1.20E-09	0.00E+00	0.00E+00	0.00E+00	8.91E-08	1.26E-05	0.00E+00	3.89E-09	0.00E+00	0.00E+00	5.12E-07	0.00E+00	0.00E+00	1.26E-05
2725	ALL	752488.42	4041160.7	NonCancerChronicDerive	0.00E+00	1.19E-09	0.00E+00	0.00E+00	0.00E+00	8.78E-08	1.24E-05	0.00E+00	3.85E-09	0.00E+00	0.00E+00	5.06E-07	0.00E+00	0.00E+00	1.24E-05
2726	ALL	752588.42	4041160.7	NonCancerChronicDerive	0.00E+00	1.18E-09	0.00E+00	0.00E+00	0.00E+00	8.67E-08	1.23E-05	0.00E+00	3.81E-09	0.00E+00	0.00E+00	5.00E-07	0.00E+00	0.00E+00	1.23E-05
2727	ALL	752688.42	4041160.7	NonCancerChronicDerive	0.00E+00	1.16E-09	0.00E+00	0.00E+00	0.00E+00	8.55E-08	1.21E-05	0.00E+00	3.76E-09	0.00E+00	0.00E+00	4.95E-07	0.00E+00	0.00E+00	1.21E-05
2728	ALL	752788.42	4041160.7	NonCancerChronicDerive	0.00E+00	1.15E-09	0.00E+00	0.00E+00	0.00E+00	8.43E-08	1.20E-05	0.00E+00	3.72E-09	0.00E+00	0.00E+00	4.89E-07	0.00E+00	0.00E+00	1.20E-05
2729	ALL	752888.42	4041160.7	NonCancerChronicDerive	0.00E+00	1.14E-09	0.00E+00	0.00E+00	0.00E+00	8.32E-08	1.18E-05	0.00E+00	3.68E-09	0.00E+00	0.00E+00	4.84E-07	0.00E+00	0.00E+00	1.18E-05
2730	ALL	752988.42	4041160.7	NonCancerChronicDerive	0.00E+00	1.12E-09	0.00E+00	0.00E+00	0.00E+00	8.21E-08	1.17E-05	0.00E+00	3.64E-09	0.00E+00	0.00E+00	4.79E-07	0.00E+00	0.00E+00	1.17E-05
2731	ALL	753088.42	4041160.7	NonCancerChronicDerive	0.00E+00	1.11E-09	0.00E+00	0.00E+00	0.00E+00	8.10E-08	1.15E-05	0.00E+00	3.60E-09	0.00E+00	0.00E+00	4.73E-07	0.00E+00	0.00E+00	1.15E-05
2732	ALL	753188.42	4041160.7	NonCancerChronicDerive	0.00E+00	1.10E-09	0.00E+00	0.00E+00	0.00E+00	8.00E-08	1.14E-05	0.00E+00	3.56E-09	0.00E+00	0.00E+00	4.68E-07	0.00E+00	0.00E+00	1.14E-05
2733	ALL	753288.42	4041160.7	NonCancerChronicDerive	0.00E+00	1.09E-09	0.00E+00	0.00E+00	0.00E+00	7.90E-08	1.12E-05	0.00E+00	3.53E-09	0.00E+00	0.00E+00	4.63E-07	0.00E+00	0.00E+00	1.12E-05
2734	ALL	753388.42	4041160.7	NonCancerChronicDerive	0.00E+00	1.08E-09	0.00E+00	0.00E+00	0.00E+00	7.81E-08	1.11E-05	0.00E+00	3.49E-09	0.00E+00	0.00E+00	4.59E-07	0.00E+00	0.00E+00	1.11E-05
2735	ALL	753488.42	4041160.7	NonCancerChronicDerive	0.00E+00	1.07E-09	0.00E+00	0.00E+00	0.00E+00	7.72E-08	1.10E-05	0.00E+00	3.46E-09	0.00E+00	0.00E+00	4.54E-07	0.00E+00	0.00E+00	1.10E-05
2736	ALL	753588.42	4041160.7	NonCancerChronicDerive	0.00E+00	1.06E-09	0.00E+00	0.00E+00	0.00E+00	7.62E-08	1.09E-05	0.00E+00	3.42E-09	0.00E+00	0.00E+00	4.50E-07	0.00E+00	0.00E+00	1.09E-05
2737	ALL	753688.42	4041160.7	NonCancerChronicDerive	0.00E+00	1.05E-09	0.00E+00	0.00E+00	0.00E+00	7.53E-08	1.07E-05	0.00E+00	3.39E-09	0.00E+00	0.00E+00	4.45E-07	0.00E+00	0.00E+00	1.07E-05
2738	ALL	753788.42	4041160.7	NonCancerChronicDerive	0.00E+00	1.04E-09	0.00E+00	0.00E+00	0.00E+00	7.44E-08	1.06E-05	0.00E+00	3.35E-09	0.00E+00	0.00E+00	4.41E-07	0.00E+00	0.00E+00	1.06E-05
2739	ALL	753888.42	4041160.7	NonCancerChronicDerive	0.00E+00	1.03E-09	0.00E+00	0.00E+00	0.00E+00	7.35E-08	1.05E-05	0.00E+00	3.32E-09	0.00E+00	0.00E+00	4.36E-07	0.00E+00	0.00E+00	1.05E-05
2740	ALL	753988.42	4041160.7	NonCancerChronicDerive	0.00E+00	1.02E-09	0.00E+00	0.00E+00	0.00E+00	7.27E-08	1.04E-05	0.00E+00	3.29E-09	0.00E+00	0.00E+00	4.32E-07	0.00E+00	0.00E+00	1.04E-05
2741	ALL	746288.42	4041260.7	NonCancerChronicDerive	0.00E+00	2.50E-09	0.00E+00	0.00E+00	0.00E+00	1.70E-07	2.48E-05	0.00E+00	8.10E-09	0.00E+00	0.00E+00	1.07E-06	0.00E+00	0.00E+00	2.48E-05
2742	ALL	746388.42	4041260.7	NonCancerChronicDerive	0.00E+00	2.65E-09	0.00E+00	0.00E+00	0.00E+00	1.80E-07	2.61E-05	0.00E+00	8.56E-09	0.00E+00	0.00E+00	1.13E-06	0.00E+00	0.00E+00	2.61E-05
2743	ALL	746488.42	4041260.7	NonCancerChronicDerive	0.00E+00	2.80E-09	0.00E+00	0.00E+00	0.00E+00	1.89E-07	2.75E-05	0.00E+00	9.06E-09	0.00E+00	0.00E+00	1.19E-06	0.00E+00	0.00E+00	2.75E-05
2744	ALL	746588.42	4041260.7	NonCancerChronicDerive	0.00E+00	2.98E-09	0.00E+00	0.00E+00	0.00E+00	2.01E-07	2.92E-05	0.00E+00	9.63E-09	0.00E+00	0.00E+00	1.27E-06	0.00E+00	0.00E+00	2.92E-05
2745	ALL	746688.42	4041260.7	NonCancerChronicDerive	0.00E+00	3.16E-09	0.00E+00	0.00E+00	0.00E+00	2.13E-07	3.10E-05	0.00E+00	1.02E-08	0.00E+00	0.00E+00	1.34E-06	0.00E+00	0.00E+00	3.10E-05
2746	ALL	751388.42	4041260.7	NonCancerChronicDerive	0.00E+00	1.27E-09	0.00E+00	0.00E+00	0.00E+00	9.80E-08	1.38E-05	0.00E+00	4.11E-09	0.00E+00	0.00E+00	5.40E-07	0.00E+00	0.00E+00	1.38E-05
2747	ALL	751488.42	4041260.7	NonCancerChronicDerive	0.00E+00	1.26E-09	0.00E+00	0.00E+00	0.00E+00	9.65E-08	1.36E-05	0.00E+00	4.07E-09	0.00E+00	0.00E+00	5.35E-07	0.00E+00	0.00E+00	1.36E-05
2748	ALL	751588.42	4041260.7	NonCancerChronicDerive	0.00E+00	1.24E-09	0.00E+00	0.00E+00	0.00E+00	9.51E-08	1.34E-05	0.00E+00	4.03E-09	0.00E+00	0.00E+00	5.30E-07	0.00E+00	0.00E+00	1.34E-05
2749	ALL	751688.42	4041260.7	NonCancerChronicDerive	0.00E+00	1.23E-09	0.00E+00	0.00E+00	0.00E+00	9.36E-08	1.32E-05	0.00E+00	3.99E-09	0.00E+00	0.00E+00	5.24E-07	0.00E+00	0.00E+00	1.32E-05
2750	ALL	751788.42	4041260.7	NonCancerChronicDerive	0.00E+00	1.22E-09	0.00E+00	0.00E+00	0.00E+00	9.22E-08	1.30E-05	0.00E+00	3.95E-09	0.00E+00	0.00E+00	5.19E-07	0.00E+00	0.00E+00	1.30E-05
2751	ALL	751888.42	4041260.7	NonCancerChronicDerive	0.00E+00	1.21E-09	0.00E+00	0.00E+00	0.00E+00	9.09E-08	1.28E-05	0.00E+00	3.91E-09	0.00E+00	0.00E+00	5.13E-07	0.00E+00	0.00E+00	1.28E-05
2752	ALL	751988.42	4041260.7	NonCancerChronicDerive	0.00E+00	1.19E-09	0.00E+00	0.00E+00	0.00E+00	8.96E-08	1.27E-05	0.00E+00	3.87E-09	0.00E+00	0.00E+00	5.08E-07	0.00E+00	0.00E+00	1.27E-05
2753	ALL	752088.42	4041260.7	NonCancerChronicDerive	0.00E+00	1.18E-09	0.00E+00	0.00E+00	0.00E+00	8.84E-08	1.25E-05	0.00E+00	3.83E-09	0.00E+00	0.00E+00	5.03E-07	0.00E+00	0.00E+00	1.25E-05
2754	ALL	752188.42	4041260.7	NonCancerChronicDerive	0.00E+00	1.17E-09	0.00E+00	0.00E+00	0.00E+00	8.73E-08	1.24E-05	0.00E+00	3.79E-09	0.00E+00	0.00E+00	4.98E-07	0.00E+00	0.00E+00	1.24E-05

2755	ALL	752288.42	4041260.7	NonCancerChronicDerive	0.00E+00	1.16E-09	0.00E+00	0.00E+00	0.00E+00	8.61E-08	1.22E-05	0.00E+00	3.75E-09	0.00E+00	0.00E+00	4.93E-07	0.00E+00	0.00E+00	1.22E-05
2756	ALL	752388.42	4041260.7	NonCancerChronicDerive	0.00E+00	1.15E-09	0.00E+00	0.00E+00	0.00E+00	8.50E-08	1.20E-05	0.00E+00	3.71E-09	0.00E+00	0.00E+00	4.88E-07	0.00E+00	0.00E+00	1.20E-05
2757	ALL	752488.42	4041260.7	NonCancerChronicDerive	0.00E+00	1.13E-09	0.00E+00	0.00E+00	0.00E+00	8.38E-08	1.19E-05	0.00E+00	3.67E-09	0.00E+00	0.00E+00	4.83E-07	0.00E+00	0.00E+00	1.19E-05
2758	ALL	752588.42	4041260.7	NonCancerChronicDerive	0.00E+00	1.12E-09	0.00E+00	0.00E+00	0.00E+00	8.27E-08	1.17E-05	0.00E+00	3.63E-09	0.00E+00	0.00E+00	4.78E-07	0.00E+00	0.00E+00	1.17E-05
2759	ALL	752688.42	4041260.7	NonCancerChronicDerive	0.00E+00	1.11E-09	0.00E+00	0.00E+00	0.00E+00	8.17E-08	1.16E-05	0.00E+00	3.60E-09	0.00E+00	0.00E+00	4.73E-07	0.00E+00	0.00E+00	1.16E-05
2760	ALL	752788.42	4041260.7	NonCancerChronicDerive	0.00E+00	1.10E-09	0.00E+00	0.00E+00	0.00E+00	8.06E-08	1.15E-05	0.00E+00	3.56E-09	0.00E+00	0.00E+00	4.68E-07	0.00E+00	0.00E+00	1.15E-05
2761	ALL	752888.42	4041260.7	NonCancerChronicDerive	0.00E+00	1.09E-09	0.00E+00	0.00E+00	0.00E+00	7.96E-08	1.13E-05	0.00E+00	3.52E-09	0.00E+00	0.00E+00	4.63E-07	0.00E+00	0.00E+00	1.13E-05
2762	ALL	752988.42	4041260.7	NonCancerChronicDerive	0.00E+00	1.08E-09	0.00E+00	0.00E+00	0.00E+00	7.87E-08	1.12E-05	0.00E+00	3.49E-09	0.00E+00	0.00E+00	4.58E-07	0.00E+00	0.00E+00	1.12E-05
2763	ALL	753088.42	4041260.7	NonCancerChronicDerive	0.00E+00	1.07E-09	0.00E+00	0.00E+00	0.00E+00	7.77E-08	1.11E-05	0.00E+00	3.45E-09	0.00E+00	0.00E+00	4.54E-07	0.00E+00	0.00E+00	1.11E-05
2764	ALL	753188.42	4041260.7	NonCancerChronicDerive	0.00E+00	1.06E-09	0.00E+00	0.00E+00	0.00E+00	7.68E-08	1.09E-05	0.00E+00	3.42E-09	0.00E+00	0.00E+00	4.49E-07	0.00E+00	0.00E+00	1.09E-05
2765	ALL	753288.42	4041260.7	NonCancerChronicDerive	0.00E+00	1.05E-09	0.00E+00	0.00E+00	0.00E+00	7.59E-08	1.08E-05	0.00E+00	3.39E-09	0.00E+00	0.00E+00	4.45E-07	0.00E+00	0.00E+00	1.08E-05
2766	ALL	753388.42	4041260.7	NonCancerChronicDerive	0.00E+00	1.04E-09	0.00E+00	0.00E+00	0.00E+00	7.51E-08	1.07E-05	0.00E+00	3.35E-09	0.00E+00	0.00E+00	4.41E-07	0.00E+00	0.00E+00	1.07E-05
2767	ALL	753488.42	4041260.7	NonCancerChronicDerive	0.00E+00	1.03E-09	0.00E+00	0.00E+00	0.00E+00	7.42E-08	1.06E-05	0.00E+00	3.32E-09	0.00E+00	0.00E+00	4.37E-07	0.00E+00	0.00E+00	1.06E-05
2768	ALL	753588.42	4041260.7	NonCancerChronicDerive	0.00E+00	1.02E-09	0.00E+00	0.00E+00	0.00E+00	7.34E-08	1.05E-05	0.00E+00	3.29E-09	0.00E+00	0.00E+00	4.33E-07	0.00E+00	0.00E+00	1.05E-05
2769	ALL	753688.42	4041260.7	NonCancerChronicDerive	0.00E+00	1.01E-09	0.00E+00	0.00E+00	0.00E+00	7.26E-08	1.03E-05	0.00E+00	3.26E-09	0.00E+00	0.00E+00	4.29E-07	0.00E+00	0.00E+00	1.03E-05
2770	ALL	753788.42	4041260.7	NonCancerChronicDerive	0.00E+00	9.99E-10	0.00E+00	0.00E+00	0.00E+00	7.18E-08	1.02E-05	0.00E+00	3.23E-09	0.00E+00	0.00E+00	4.25E-07	0.00E+00	0.00E+00	1.02E-05
2771	ALL	753888.42	4041260.7	NonCancerChronicDerive	0.00E+00	9.89E-10	0.00E+00	0.00E+00	0.00E+00	7.10E-08	1.01E-05	0.00E+00	3.20E-09	0.00E+00	0.00E+00	4.21E-07	0.00E+00	0.00E+00	1.01E-05
2772	ALL	753988.42	4041260.7	NonCancerChronicDerive	0.00E+00	9.80E-10	0.00E+00	0.00E+00	0.00E+00	7.02E-08	1.00E-05	0.00E+00	3.17E-09	0.00E+00	0.00E+00	4.17E-07	0.00E+00	0.00E+00	1.00E-05
2773	ALL	746288.42	4041360.7	NonCancerChronicDerive	0.00E+00	2.58E-09	0.00E+00	0.00E+00	0.00E+00	1.75E-07	2.54E-05	0.00E+00	8.35E-09	0.00E+00	0.00E+00	1.10E-06	0.00E+00	0.00E+00	2.54E-05
2774	ALL	746388.42	4041360.7	NonCancerChronicDerive	0.00E+00	2.71E-09	0.00E+00	0.00E+00	0.00E+00	1.84E-07	2.67E-05	0.00E+00	8.79E-09	0.00E+00	0.00E+00	1.16E-06	0.00E+00	0.00E+00	2.67E-05
2775	ALL	746488.42	4041360.7	NonCancerChronicDerive	0.00E+00	2.86E-09	0.00E+00	0.00E+00	0.00E+00	1.93E-07	2.81E-05	0.00E+00	9.26E-09	0.00E+00	0.00E+00	1.22E-06	0.00E+00	0.00E+00	2.81E-05
2776	ALL	746588.42	4041360.7	NonCancerChronicDerive	0.00E+00	3.03E-09	0.00E+00	0.00E+00	0.00E+00	2.04E-07	2.96E-05	0.00E+00	9.81E-09	0.00E+00	0.00E+00	1.29E-06	0.00E+00	0.00E+00	2.96E-05
2777	ALL	746688.42	4041360.7	NonCancerChronicDerive	0.00E+00	3.20E-09	0.00E+00	0.00E+00	0.00E+00	2.15E-07	3.13E-05	0.00E+00	1.04E-08	0.00E+00	0.00E+00	1.36E-06	0.00E+00	0.00E+00	3.13E-05
2778	ALL	751388.42	4041360.7	NonCancerChronicDerive	0.00E+00	1.21E-09	0.00E+00	0.00E+00	0.00E+00	9.32E-08	1.31E-05	0.00E+00	3.91E-09	0.00E+00	0.00E+00	5.14E-07	0.00E+00	0.00E+00	1.31E-05
2779	ALL	751488.42	4041360.7	NonCancerChronicDerive	0.00E+00	1.20E-09	0.00E+00	0.00E+00	0.00E+00	9.20E-08	1.29E-05	0.00E+00	3.88E-09	0.00E+00	0.00E+00	5.09E-07	0.00E+00	0.00E+00	1.29E-05
2780	ALL	751588.42	4041360.7	NonCancerChronicDerive	0.00E+00	1.19E-09	0.00E+00	0.00E+00	0.00E+00	9.07E-08	1.28E-05	0.00E+00	3.84E-09	0.00E+00	0.00E+00	5.05E-07	0.00E+00	0.00E+00	1.28E-05
2781	ALL	751688.42	4041360.7	NonCancerChronicDerive	0.00E+00	1.18E-09	0.00E+00	0.00E+00	0.00E+00	8.95E-08	1.26E-05	0.00E+00	3.80E-09	0.00E+00	0.00E+00	5.00E-07	0.00E+00	0.00E+00	1.26E-05
2782	ALL	751788.42	4041360.7	NonCancerChronicDerive	0.00E+00	1.16E-09	0.00E+00	0.00E+00	0.00E+00	8.82E-08	1.24E-05	0.00E+00	3.77E-09	0.00E+00	0.00E+00	4.95E-07	0.00E+00	0.00E+00	1.24E-05
2783	ALL	751888.42	4041360.7	NonCancerChronicDerive	0.00E+00	1.15E-09	0.00E+00	0.00E+00	0.00E+00	8.69E-08	1.23E-05	0.00E+00	3.73E-09	0.00E+00	0.00E+00	4.90E-07	0.00E+00	0.00E+00	1.23E-05
2784	ALL	751988.42	4041360.7	NonCancerChronicDerive	0.00E+00	1.14E-09	0.00E+00	0.00E+00	0.00E+00	8.57E-08	1.21E-05	0.00E+00	3.69E-09	0.00E+00	0.00E+00	4.85E-07	0.00E+00	0.00E+00	1.21E-05
2785	ALL	752088.42	4041360.7	NonCancerChronicDerive	0.00E+00	1.13E-09	0.00E+00	0.00E+00	0.00E+00	8.45E-08	1.20E-05	0.00E+00	3.66E-09	0.00E+00	0.00E+00	4.81E-07	0.00E+00	0.00E+00	1.20E-05
2786	ALL	752188.42	4041360.7	NonCancerChronicDerive	0.00E+00	1.12E-09	0.00E+00	0.00E+00	0.00E+00	8.35E-08	1.18E-05	0.00E+00	3.62E-09	0.00E+00	0.00E+00	4.76E-07	0.00E+00	0.00E+00	1.18E-05
2787	ALL	752288.42	4041360.7	NonCancerChronicDerive	0.00E+00	1.11E-09	0.00E+00	0.00E+00	0.00E+00	8.24E-08	1.17E-05	0.00E+00	3.59E-09	0.00E+00	0.00E+00	4.71E-07	0.00E+00	0.00E+00	1.17E-05
2788	ALL	752388.42	4041360.7	NonCancerChronicDerive	0.00E+00	1.10E-09	0.00E+00	0.00E+00	0.00E+00	8.13E-08	1.15E-05	0.00E+00	3.55E-09	0.00E+00	0.00E+00	4.67E-07	0.00E+00	0.00E+00	1.15E-05
2789	ALL	752488.42	4041360.7	NonCancerChronicDerive	0.00E+00	1.09E-09	0.00E+00	0.00E+00	0.00E+00	8.03E-08	1.14E-05	0.00E+00	3.52E-09	0.00E+00	0.00E+00	4.62E-07	0.00E+00	0.00E+00	1.14E-05
2790	ALL	752588.42	4041360.7	NonCancerChronicDerive	0.00E+00	1.08E-09	0.00E+00	0.00E+00	0.00E+00	7.93E-08	1.13E-05	0.00E+00	3.48E-09	0.00E+00	0.00E+00	4.58E-07	0.00E+00	0.00E+00	1.13E-05
2791	ALL	752688.42	4041360.7	NonCancerChronicDerive	0.00E+00	1.06E-09	0.00E+00	0.00E+00	0.00E+00	7.83E-08	1.11E-05	0.00E+00	3.45E-09	0.00E+00	0.00E+00	4.53E-07	0.00E+00	0.00E+00	1.11E-05
2792	ALL	752788.42	4041360.7	NonCancerChronicDerive	0.00E+00	1.05E-09	0.00E+00	0.00E+00	0.00E+00	7.73E-08	1.10E-05	0.00E+00	3.41E-09	0.00E+00	0.00E+00	4.48E-07	0.00E+00	0.00E+00	1.10E-05
2793	ALL	752888.42	4041360.7	NonCancerChronicDerive	0.00E+00	1.04E-09	0.00E+00	0.00E+00	0.00E+00	7.64E-08	1.09E-05	0.00E+00	3.38E-09	0.00E+00	0.00E+00	4.44E-07	0.00E+00	0.00E+00	1.09E-05
2794	ALL	752988.42	4041360.7	NonCancerChronicDerive	0.00E+00	1.03E-09	0.00E+00	0.00E+00	0.00E+00	7.55E-08	1.07E-05	0.00E+00	3.35E-09	0.00E+00	0.00E+00	4.40E-07	0.00E+00	0.00E+00	1.07E-05
2795	ALL	753088.42	4041360.7	NonCancerChronicDerive	0.00E+00	1.02E-09	0.00E+00	0.00E+00	0.00E+00	7.46E-08	1.06E-05	0.00E+00	3.31E-09	0.00E+00	0.00E+00	4.36E-07	0.00E+00	0.00E+00	1.06E-05
2796	ALL	753188.42	4041360.7	NonCancerChronicDerive	0.00E+00	1.01E-09	0.00E+00	0.00E+00	0.00E+00	7.38E-08	1.05E-05	0.00E+00	3.28E-09	0.00E+00	0.00E+00	4.32E-07	0.00E+00	0.00E+00	1.05E-05
2797	ALL	753288.42	4041360.7	NonCancerChronicDerive	0.00E+00	1.01E-09	0.00E+00	0.00E+00	0.00E+00	7.30E-08	1.04E-05	0.00E+00	3.26E-09	0.00E+00	0.00E+00	4.28E-07	0.00E+00	0.00E+00	1.04E-05
2798	ALL	753388.42	4041360.7	NonCancerChronicDerive	0.00E+00	9.97E-10	0.00E+00	0.00E+00	0.00E+00	7.22E-08	1.03E-05	0.00E+00	3.23E-09	0.00E+00	0.00E+00	4.24E-07	0.00E+00	0.00E+00	1.03E-05
2799	ALL	753488.42	4041360.7	NonCancerChronicDerive	0.00E+00	9.88E-10	0.00E+00	0.00E+00	0.00E+00	7.15E-08	1.02E-05	0.00E+00	3.20E-09	0.00E+00	0.00E+00	4.21E-07	0.00E+00	0.00E+00	1.02E-05
2800	ALL	753588.42	4041360.7	NonCancerChronicDerive	0.00E+00	9.80E-10	0.00E+00	0.00E+00	0.00E+00	7.07E-08	1.01E-05	0.00E+00	3.17E-09	0.00E+00	0.00E+00	4.17E-07	0.00E+00	0.00E+00	1.01E-05
2801	ALL	753688.42	4041360.7	NonCancerChronicDerive	0.00E+00	9.72E-10	0.00E+00	0.00E+00	0.00E+00	7.00E-08	9.99E-06	0.00E+00	3.15E-09	0.00E+00	0.00E+00	4.14E-07	0.00E+00	0.00E+00	9.99E-06
2802	ALL	753788.42	4041360.7	NonCancerChronicDerive	0.00E+00	9.63E-10	0.00E+00	0.00E+00	0.00E+00	6.93E-08	9.89E-06	0.00E+00	3.12E-09	0.00E+00	0.00E+00	4.10E-07	0.00E+00	0.00E+00	9.89E-06
2803	ALL	753888.42	4041360.7	NonCancerChronicDerive	0.00E+00	9.55E-10	0.00E+00	0.00E+00	0.00E+00	6.85E-08	9.78E-06	0.00E+00	3.09E-09	0.00E+00	0.00E+00	4.06E-07	0.00E+00	0.00E+00	9.78E-06
2804	ALL	753988.42	4041360.7	NonCancerChronicDerive	0.00E+00	9.47E-10	0.00E+00	0.00E+00	0.00E+00	6.78E-08	9.69E-06	0.00E+00	3.07E-09	0.00E+00	0.00E+00	4.03E-07	0.00E+00	0.00E+00	9.69E-06
2805	ALL	746288.42	4041460.7	NonCancerChronicDerive	0.00E+00	2.63E-09	0.00E+00	0.00E+00	0.00E+00	1.78E-07	2.58E-05	0.00E+00	8.50E-09	0.00E+00	0.00E+00	1.12E-06	0.00E+00	0.00E+00	2.58E-05
2806	ALL	746388.42	4041460.7	NonCancerChronicDerive	0.00E+00	2.76E-09	0.00E+00	0.00E+00	0.00E+00	1.86E-07	2.70E-05	0.00E+00	8.93E-09	0.00E+00	0.00E+00	1.17E-06	0.00E+00	0.00E+00	2.70E-05
2807	ALL	746488.42	4041460.7	NonCancerChronicDerive	0.00E+00	2.90E-09	0.00E+00	0.00E+00	0.00E+00	1.95E-07	2.83E-05	0.00E+00	9.37E-09	0.00E+00	0.00E+00	1.23E-06	0.00E+00	0.00E+00	2.83E-05

2808	ALL	746588.42	4041460.7	NonCancerChronicDerive	0.00E+00	3.05E-09	0.00E+00	0.00E+00	0.00E+00	2.05E-07	2.97E-05	0.00E+00	9.86E-09	0.00E+00	0.00E+00	1.30E-06	0.00E+00	0.00E+00	2.97E-05
2809	ALL	746688.42	4041460.7	NonCancerChronicDerive	0.00E+00	3.21E-09	0.00E+00	0.00E+00	0.00E+00	2.16E-07	3.13E-05	0.00E+00	1.04E-08	0.00E+00	0.00E+00	1.36E-06	0.00E+00	0.00E+00	3.13E-05
2810	ALL	751388.42	4041460.7	NonCancerChronicDerive	0.00E+00	1.15E-09	0.00E+00	0.00E+00	0.00E+00	8.87E-08	1.25E-05	0.00E+00	3.73E-09	0.00E+00	0.00E+00	4.90E-07	0.00E+00	0.00E+00	1.25E-05
2811	ALL	751488.42	4041460.7	NonCancerChronicDerive	0.00E+00	1.14E-09	0.00E+00	0.00E+00	0.00E+00	8.78E-08	1.24E-05	0.00E+00	3.70E-09	0.00E+00	0.00E+00	4.87E-07	0.00E+00	0.00E+00	1.24E-05
2812	ALL	751588.42	4041460.7	NonCancerChronicDerive	0.00E+00	1.13E-09	0.00E+00	0.00E+00	0.00E+00	8.68E-08	1.22E-05	0.00E+00	3.67E-09	0.00E+00	0.00E+00	4.83E-07	0.00E+00	0.00E+00	1.22E-05
2813	ALL	751688.42	4041460.7	NonCancerChronicDerive	0.00E+00	1.12E-09	0.00E+00	0.00E+00	0.00E+00	8.57E-08	1.21E-05	0.00E+00	3.64E-09	0.00E+00	0.00E+00	4.78E-07	0.00E+00	0.00E+00	1.21E-05
2814	ALL	751788.42	4041460.7	NonCancerChronicDerive	0.00E+00	1.11E-09	0.00E+00	0.00E+00	0.00E+00	8.46E-08	1.19E-05	0.00E+00	3.61E-09	0.00E+00	0.00E+00	4.74E-07	0.00E+00	0.00E+00	1.19E-05
2815	ALL	751888.42	4041460.7	NonCancerChronicDerive	0.00E+00	1.10E-09	0.00E+00	0.00E+00	0.00E+00	8.34E-08	1.18E-05	0.00E+00	3.57E-09	0.00E+00	0.00E+00	4.70E-07	0.00E+00	0.00E+00	1.18E-05
2816	ALL	751988.42	4041460.7	NonCancerChronicDerive	0.00E+00	1.09E-09	0.00E+00	0.00E+00	0.00E+00	8.23E-08	1.16E-05	0.00E+00	3.54E-09	0.00E+00	0.00E+00	4.65E-07	0.00E+00	0.00E+00	1.16E-05
2817	ALL	752088.42	4041460.7	NonCancerChronicDerive	0.00E+00	1.08E-09	0.00E+00	0.00E+00	0.00E+00	8.12E-08	1.15E-05	0.00E+00	3.51E-09	0.00E+00	0.00E+00	4.61E-07	0.00E+00	0.00E+00	1.15E-05
2818	ALL	752188.42	4041460.7	NonCancerChronicDerive	0.00E+00	1.07E-09	0.00E+00	0.00E+00	0.00E+00	8.02E-08	1.14E-05	0.00E+00	3.48E-09	0.00E+00	0.00E+00	4.57E-07	0.00E+00	0.00E+00	1.14E-05
2819	ALL	752288.42	4041460.7	NonCancerChronicDerive	0.00E+00	1.06E-09	0.00E+00	0.00E+00	0.00E+00	7.91E-08	1.12E-05	0.00E+00	3.44E-09	0.00E+00	0.00E+00	4.53E-07	0.00E+00	0.00E+00	1.12E-05
2820	ALL	752388.42	4041460.7	NonCancerChronicDerive	0.00E+00	1.05E-09	0.00E+00	0.00E+00	0.00E+00	7.81E-08	1.11E-05	0.00E+00	3.41E-09	0.00E+00	0.00E+00	4.48E-07	0.00E+00	0.00E+00	1.11E-05
2821	ALL	752488.42	4041460.7	NonCancerChronicDerive	0.00E+00	1.04E-09	0.00E+00	0.00E+00	0.00E+00	7.71E-08	1.10E-05	0.00E+00	3.38E-09	0.00E+00	0.00E+00	4.44E-07	0.00E+00	0.00E+00	1.10E-05
2822	ALL	752588.42	4041460.7	NonCancerChronicDerive	0.00E+00	1.03E-09	0.00E+00	0.00E+00	0.00E+00	7.62E-08	1.08E-05	0.00E+00	3.34E-09	0.00E+00	0.00E+00	4.39E-07	0.00E+00	0.00E+00	1.08E-05
2823	ALL	752688.42	4041460.7	NonCancerChronicDerive	0.00E+00	1.02E-09	0.00E+00	0.00E+00	0.00E+00	7.53E-08	1.07E-05	0.00E+00	3.31E-09	0.00E+00	0.00E+00	4.35E-07	0.00E+00	0.00E+00	1.07E-05
2824	ALL	752788.42	4041460.7	NonCancerChronicDerive	0.00E+00	1.01E-09	0.00E+00	0.00E+00	0.00E+00	7.43E-08	1.06E-05	0.00E+00	3.28E-09	0.00E+00	0.00E+00	4.31E-07	0.00E+00	0.00E+00	1.06E-05
2825	ALL	752888.42	4041460.7	NonCancerChronicDerive	0.00E+00	1.00E-09	0.00E+00	0.00E+00	0.00E+00	7.34E-08	1.05E-05	0.00E+00	3.25E-09	0.00E+00	0.00E+00	4.27E-07	0.00E+00	0.00E+00	1.05E-05
2826	ALL	752988.42	4041460.7	NonCancerChronicDerive	0.00E+00	9.94E-10	0.00E+00	0.00E+00	0.00E+00	7.26E-08	1.03E-05	0.00E+00	3.22E-09	0.00E+00	0.00E+00	4.23E-07	0.00E+00	0.00E+00	1.03E-05
2827	ALL	753088.42	4041460.7	NonCancerChronicDerive	0.00E+00	9.85E-10	0.00E+00	0.00E+00	0.00E+00	7.18E-08	1.02E-05	0.00E+00	3.19E-09	0.00E+00	0.00E+00	4.19E-07	0.00E+00	0.00E+00	1.02E-05
2828	ALL	753188.42	4041460.7	NonCancerChronicDerive	0.00E+00	9.76E-10	0.00E+00	0.00E+00	0.00E+00	7.10E-08	1.01E-05	0.00E+00	3.16E-09	0.00E+00	0.00E+00	4.15E-07	0.00E+00	0.00E+00	1.01E-05
2829	ALL	753288.42	4041460.7	NonCancerChronicDerive	0.00E+00	9.69E-10	0.00E+00	0.00E+00	0.00E+00	7.03E-08	1.00E-05	0.00E+00	3.14E-09	0.00E+00	0.00E+00	4.12E-07	0.00E+00	0.00E+00	1.00E-05
2830	ALL	753388.42	4041460.7	NonCancerChronicDerive	0.00E+00	9.61E-10	0.00E+00	0.00E+00	0.00E+00	6.96E-08	9.93E-06	0.00E+00	3.11E-09	0.00E+00	0.00E+00	4.09E-07	0.00E+00	0.00E+00	9.93E-06
2831	ALL	753488.42	4041460.7	NonCancerChronicDerive	0.00E+00	9.53E-10	0.00E+00	0.00E+00	0.00E+00	6.89E-08	9.83E-06	0.00E+00	3.09E-09	0.00E+00	0.00E+00	4.06E-07	0.00E+00	0.00E+00	9.83E-06
2832	ALL	753588.42	4041460.7	NonCancerChronicDerive	0.00E+00	9.46E-10	0.00E+00	0.00E+00	0.00E+00	6.83E-08	9.74E-06	0.00E+00	3.06E-09	0.00E+00	0.00E+00	4.02E-07	0.00E+00	0.00E+00	9.74E-06
2833	ALL	753688.42	4041460.7	NonCancerChronicDerive	0.00E+00	9.38E-10	0.00E+00	0.00E+00	0.00E+00	6.76E-08	9.65E-06	0.00E+00	3.04E-09	0.00E+00	0.00E+00	3.99E-07	0.00E+00	0.00E+00	9.65E-06
2834	ALL	753788.42	4041460.7	NonCancerChronicDerive	0.00E+00	9.31E-10	0.00E+00	0.00E+00	0.00E+00	6.70E-08	9.56E-06	0.00E+00	3.01E-09	0.00E+00	0.00E+00	3.96E-07	0.00E+00	0.00E+00	9.56E-06
2835	ALL	753888.42	4041460.7	NonCancerChronicDerive	0.00E+00	9.23E-10	0.00E+00	0.00E+00	0.00E+00	6.63E-08	9.47E-06	0.00E+00	2.99E-09	0.00E+00	0.00E+00	3.93E-07	0.00E+00	0.00E+00	9.47E-06
2836	ALL	753988.42	4041460.7	NonCancerChronicDerive	0.00E+00	9.16E-10	0.00E+00	0.00E+00	0.00E+00	6.56E-08	9.38E-06	0.00E+00	2.96E-09	0.00E+00	0.00E+00	3.90E-07	0.00E+00	0.00E+00	9.38E-06
2837	ALL	746288.42	4041560.7	NonCancerChronicDerive	0.00E+00	2.65E-09	0.00E+00	0.00E+00	0.00E+00	1.80E-07	2.60E-05	0.00E+00	8.59E-09	0.00E+00	0.00E+00	1.13E-06	0.00E+00	0.00E+00	2.60E-05
2838	ALL	746388.42	4041560.7	NonCancerChronicDerive	0.00E+00	2.78E-09	0.00E+00	0.00E+00	0.00E+00	1.88E-07	2.72E-05	0.00E+00	9.00E-09	0.00E+00	0.00E+00	1.18E-06	0.00E+00	0.00E+00	2.72E-05
2839	ALL	746488.42	4041560.7	NonCancerChronicDerive	0.00E+00	2.91E-09	0.00E+00	0.00E+00	0.00E+00	1.96E-07	2.84E-05	0.00E+00	9.42E-09	0.00E+00	0.00E+00	1.24E-06	0.00E+00	0.00E+00	2.84E-05
2840	ALL	746588.42	4041560.7	NonCancerChronicDerive	0.00E+00	3.04E-09	0.00E+00	0.00E+00	0.00E+00	2.05E-07	2.97E-05	0.00E+00	9.86E-09	0.00E+00	0.00E+00	1.30E-06	0.00E+00	0.00E+00	2.97E-05
2841	ALL	746688.42	4041560.7	NonCancerChronicDerive	0.00E+00	3.17E-09	0.00E+00	0.00E+00	0.00E+00	2.14E-07	3.09E-05	0.00E+00	1.03E-08	0.00E+00	0.00E+00	1.35E-06	0.00E+00	0.00E+00	3.09E-05
2842	ALL	746788.42	4041560.7	NonCancerChronicDerive	0.00E+00	3.29E-09	0.00E+00	0.00E+00	0.00E+00	2.22E-07	3.20E-05	0.00E+00	1.07E-08	0.00E+00	0.00E+00	1.40E-06	0.00E+00	0.00E+00	3.20E-05
2843	ALL	746888.42	4041560.7	NonCancerChronicDerive	0.00E+00	3.38E-09	0.00E+00	0.00E+00	0.00E+00	2.28E-07	3.29E-05	0.00E+00	1.09E-08	0.00E+00	0.00E+00	1.44E-06	0.00E+00	0.00E+00	3.29E-05
2844	ALL	746988.42	4041560.7	NonCancerChronicDerive	0.00E+00	3.43E-09	0.00E+00	0.00E+00	0.00E+00	2.32E-07	3.34E-05	0.00E+00	1.11E-08	0.00E+00	0.00E+00	1.46E-06	0.00E+00	0.00E+00	3.34E-05
2845	ALL	747088.42	4041560.7	NonCancerChronicDerive	0.00E+00	3.42E-09	0.00E+00	0.00E+00	0.00E+00	2.32E-07	3.35E-05	0.00E+00	1.11E-08	0.00E+00	0.00E+00	1.46E-06	0.00E+00	0.00E+00	3.35E-05
2846	ALL	747188.42	4041560.7	NonCancerChronicDerive	0.00E+00	3.36E-09	0.00E+00	0.00E+00	0.00E+00	2.30E-07	3.30E-05	0.00E+00	1.09E-08	0.00E+00	0.00E+00	1.43E-06	0.00E+00	0.00E+00	3.30E-05
2847	ALL	747288.42	4041560.7	NonCancerChronicDerive	0.00E+00	3.25E-09	0.00E+00	0.00E+00	0.00E+00	2.24E-07	3.22E-05	0.00E+00	1.05E-08	0.00E+00	0.00E+00	1.38E-06	0.00E+00	0.00E+00	3.22E-05
2848	ALL	747388.42	4041560.7	NonCancerChronicDerive	0.00E+00	3.10E-09	0.00E+00	0.00E+00	0.00E+00	2.16E-07	3.10E-05	0.00E+00	1.00E-08	0.00E+00	0.00E+00	1.32E-06	0.00E+00	0.00E+00	3.10E-05
2849	ALL	747488.42	4041560.7	NonCancerChronicDerive	0.00E+00	2.93E-09	0.00E+00	0.00E+00	0.00E+00	2.07E-07	2.95E-05	0.00E+00	9.47E-09	0.00E+00	0.00E+00	1.25E-06	0.00E+00	0.00E+00	2.95E-05
2850	ALL	747588.42	4041560.7	NonCancerChronicDerive	0.00E+00	2.73E-09	0.00E+00	0.00E+00	0.00E+00	1.96E-07	2.78E-05	0.00E+00	8.83E-09	0.00E+00	0.00E+00	1.16E-06	0.00E+00	0.00E+00	2.78E-05
2851	ALL	747688.42	4041560.7	NonCancerChronicDerive	0.00E+00	2.52E-09	0.00E+00	0.00E+00	0.00E+00	1.85E-07	2.61E-05	0.00E+00	8.14E-09	0.00E+00	0.00E+00	1.07E-06	0.00E+00	0.00E+00	2.61E-05
2852	ALL	747788.42	4041560.7	NonCancerChronicDerive	0.00E+00	2.32E-09	0.00E+00	0.00E+00	0.00E+00	1.75E-07	2.45E-05	0.00E+00	7.53E-09	0.00E+00	0.00E+00	9.89E-07	0.00E+00	0.00E+00	2.45E-05
2853	ALL	747888.42	4041560.7	NonCancerChronicDerive	0.00E+00	2.17E-09	0.00E+00	0.00E+00	0.00E+00	1.67E-07	2.33E-05	0.00E+00	7.01E-09	0.00E+00	0.00E+00	9.21E-07	0.00E+00	0.00E+00	2.33E-05
2854	ALL	747988.42	4041560.7	NonCancerChronicDerive	0.00E+00	2.04E-09	0.00E+00	0.00E+00	0.00E+00	1.60E-07	2.23E-05	0.00E+00	6.60E-09	0.00E+00	0.00E+00	8.68E-07	0.00E+00	0.00E+00	2.23E-05
2855	ALL	748088.42	4041560.7	NonCancerChronicDerive	0.00E+00	1.93E-09	0.00E+00	0.00E+00	0.00E+00	1.55E-07	2.15E-05	0.00E+00	6.25E-09	0.00E+00	0.00E+00	8.22E-07	0.00E+00	0.00E+00	2.15E-05
2856	ALL	751388.42	4041560.7	NonCancerChronicDerive	0.00E+00	1.10E-09	0.00E+00	0.00E+00	0.00E+00	8.46E-08	1.19E-05	0.00E+00	3.57E-09	0.00E+00	0.00E+00	4.69E-07	0.00E+00	0.00E+00	1.19E-05
2857	ALL	751488.42	4041560.7	NonCancerChronicDerive	0.00E+00	1.09E-09	0.00E+00	0.00E+00	0.00E+00	8.39E-08	1.18E-05	0.00E+00	3.54E-09	0.00E+00	0.00E+00	4.66E-07	0.00E+00	0.00E+00	1.18E-05
2858	ALL	751588.42	4041560.7	NonCancerChronicDerive	0.00E+00	1.09E-09	0.00E+00	0.00E+00	0.00E+00	8.31E-08	1.17E-05	0.00E+00	3.52E-09	0.00E+00	0.00E+00	4.63E-07	0.00E+00	0.00E+00	1.17E-05
2859	ALL	751688.42	4041560.7	NonCancerChronicDerive	0.00E+00	1.08E-09	0.00E+00	0.00E+00	0.00E+00	8.22E-08	1.16E-05	0.00E+00	3.49E-09	0.00E+00	0.00E+00	4.59E-07	0.00E+00	0.00E+00	1.16E-05
2860	ALL	751788.42	4041560.7	NonCancerChronicDerive	0.00E+00	1.07E-09	0.00E+00	0.00E+00	0.00E+00	8.13E-08	1.15E-05	0.00E+00	3.46E-09	0.00E+00	0.00E+00	4.55E-07	0.00E+00	0.00E+00	1.15E-05

2861	ALL	751888.42	4041560.7	NonCancerChronicDerive	0.00E+00	1.06E-09	0.00E+00	0.00E+00	0.00E+00	8.03E-08	1.13E-05	0.00E+00	3.43E-09	0.00E+00	0.00E+00	4.51E-07	0.00E+00	0.00E+00	1.13E-05
2862	ALL	751988.42	4041560.7	NonCancerChronicDerive	0.00E+00	1.05E-09	0.00E+00	0.00E+00	0.00E+00	7.92E-08	1.12E-05	0.00E+00	3.40E-09	0.00E+00	0.00E+00	4.48E-07	0.00E+00	0.00E+00	1.12E-05
2863	ALL	752088.42	4041560.7	NonCancerChronicDerive	0.00E+00	1.04E-09	0.00E+00	0.00E+00	0.00E+00	7.82E-08	1.11E-05	0.00E+00	3.38E-09	0.00E+00	0.00E+00	4.44E-07	0.00E+00	0.00E+00	1.11E-05
2864	ALL	752188.42	4041560.7	NonCancerChronicDerive	0.00E+00	1.03E-09	0.00E+00	0.00E+00	0.00E+00	7.73E-08	1.10E-05	0.00E+00	3.35E-09	0.00E+00	0.00E+00	4.40E-07	0.00E+00	0.00E+00	1.10E-05
2865	ALL	752288.42	4041560.7	NonCancerChronicDerive	0.00E+00	1.02E-09	0.00E+00	0.00E+00	0.00E+00	7.63E-08	1.08E-05	0.00E+00	3.32E-09	0.00E+00	0.00E+00	4.36E-07	0.00E+00	0.00E+00	1.08E-05
2866	ALL	752388.42	4041560.7	NonCancerChronicDerive	0.00E+00	1.01E-09	0.00E+00	0.00E+00	0.00E+00	7.53E-08	1.07E-05	0.00E+00	3.28E-09	0.00E+00	0.00E+00	4.32E-07	0.00E+00	0.00E+00	1.07E-05
2867	ALL	752488.42	4041560.7	NonCancerChronicDerive	0.00E+00	1.00E-09	0.00E+00	0.00E+00	0.00E+00	7.43E-08	1.06E-05	0.00E+00	3.25E-09	0.00E+00	0.00E+00	4.28E-07	0.00E+00	0.00E+00	1.06E-05
2868	ALL	752588.42	4041560.7	NonCancerChronicDerive	0.00E+00	9.95E-10	0.00E+00	0.00E+00	0.00E+00	7.34E-08	1.04E-05	0.00E+00	3.22E-09	0.00E+00	0.00E+00	4.24E-07	0.00E+00	0.00E+00	1.04E-05
2869	ALL	752688.42	4041560.7	NonCancerChronicDerive	0.00E+00	9.86E-10	0.00E+00	0.00E+00	0.00E+00	7.26E-08	1.03E-05	0.00E+00	3.19E-09	0.00E+00	0.00E+00	4.20E-07	0.00E+00	0.00E+00	1.03E-05
2870	ALL	752788.42	4041560.7	NonCancerChronicDerive	0.00E+00	9.76E-10	0.00E+00	0.00E+00	0.00E+00	7.17E-08	1.02E-05	0.00E+00	3.16E-09	0.00E+00	0.00E+00	4.16E-07	0.00E+00	0.00E+00	1.02E-05
2871	ALL	752888.42	4041560.7	NonCancerChronicDerive	0.00E+00	9.67E-10	0.00E+00	0.00E+00	0.00E+00	7.08E-08	1.01E-05	0.00E+00	3.13E-09	0.00E+00	0.00E+00	4.12E-07	0.00E+00	0.00E+00	1.01E-05
2872	ALL	752988.42	4041560.7	NonCancerChronicDerive	0.00E+00	9.58E-10	0.00E+00	0.00E+00	0.00E+00	7.00E-08	9.97E-06	0.00E+00	3.10E-09	0.00E+00	0.00E+00	4.08E-07	0.00E+00	0.00E+00	9.97E-06
2873	ALL	753088.42	4041560.7	NonCancerChronicDerive	0.00E+00	9.50E-10	0.00E+00	0.00E+00	0.00E+00	6.92E-08	9.87E-06	0.00E+00	3.07E-09	0.00E+00	0.00E+00	4.04E-07	0.00E+00	0.00E+00	9.87E-06
2874	ALL	753188.42	4041560.7	NonCancerChronicDerive	0.00E+00	9.42E-10	0.00E+00	0.00E+00	0.00E+00	6.85E-08	9.77E-06	0.00E+00	3.05E-09	0.00E+00	0.00E+00	4.01E-07	0.00E+00	0.00E+00	9.77E-06
2875	ALL	753288.42	4041560.7	NonCancerChronicDerive	0.00E+00	9.35E-10	0.00E+00	0.00E+00	0.00E+00	6.79E-08	9.68E-06	0.00E+00	3.03E-09	0.00E+00	0.00E+00	3.98E-07	0.00E+00	0.00E+00	9.68E-06
2876	ALL	753388.42	4041560.7	NonCancerChronicDerive	0.00E+00	9.27E-10	0.00E+00	0.00E+00	0.00E+00	6.72E-08	9.59E-06	0.00E+00	3.00E-09	0.00E+00	0.00E+00	3.95E-07	0.00E+00	0.00E+00	9.59E-06
2877	ALL	753488.42	4041560.7	NonCancerChronicDerive	0.00E+00	9.20E-10	0.00E+00	0.00E+00	0.00E+00	6.66E-08	9.51E-06	0.00E+00	2.98E-09	0.00E+00	0.00E+00	3.92E-07	0.00E+00	0.00E+00	9.51E-06
2878	ALL	753588.42	4041560.7	NonCancerChronicDerive	0.00E+00	9.13E-10	0.00E+00	0.00E+00	0.00E+00	6.60E-08	9.42E-06	0.00E+00	2.96E-09	0.00E+00	0.00E+00	3.89E-07	0.00E+00	0.00E+00	9.42E-06
2879	ALL	753688.42	4041560.7	NonCancerChronicDerive	0.00E+00	9.07E-10	0.00E+00	0.00E+00	0.00E+00	6.54E-08	9.34E-06	0.00E+00	2.94E-09	0.00E+00	0.00E+00	3.86E-07	0.00E+00	0.00E+00	9.34E-06
2880	ALL	753788.42	4041560.7	NonCancerChronicDerive	0.00E+00	9.00E-10	0.00E+00	0.00E+00	0.00E+00	6.48E-08	9.25E-06	0.00E+00	2.91E-09	0.00E+00	0.00E+00	3.83E-07	0.00E+00	0.00E+00	9.25E-06
2881	ALL	753888.42	4041560.7	NonCancerChronicDerive	0.00E+00	8.93E-10	0.00E+00	0.00E+00	0.00E+00	6.42E-08	9.17E-06	0.00E+00	2.89E-09	0.00E+00	0.00E+00	3.80E-07	0.00E+00	0.00E+00	9.17E-06
2882	ALL	753988.42	4041560.7	NonCancerChronicDerive	0.00E+00	8.86E-10	0.00E+00	0.00E+00	0.00E+00	6.36E-08	9.09E-06	0.00E+00	2.87E-09	0.00E+00	0.00E+00	3.77E-07	0.00E+00	0.00E+00	9.09E-06
2883	ALL	746288.42	4041660.7	NonCancerChronicDerive	0.00E+00	2.66E-09	0.00E+00	0.00E+00	0.00E+00	1.80E-07	2.60E-05	0.00E+00	8.61E-09	0.00E+00	0.00E+00	1.13E-06	0.00E+00	0.00E+00	2.60E-05
2884	ALL	746388.42	4041660.7	NonCancerChronicDerive	0.00E+00	2.78E-09	0.00E+00	0.00E+00	0.00E+00	1.88E-07	2.71E-05	0.00E+00	8.98E-09	0.00E+00	0.00E+00	1.18E-06	0.00E+00	0.00E+00	2.71E-05
2885	ALL	746488.42	4041660.7	NonCancerChronicDerive	0.00E+00	2.89E-09	0.00E+00	0.00E+00	0.00E+00	1.95E-07	2.82E-05	0.00E+00	9.36E-09	0.00E+00	0.00E+00	1.23E-06	0.00E+00	0.00E+00	2.82E-05
2886	ALL	746588.42	4041660.7	NonCancerChronicDerive	0.00E+00	3.00E-09	0.00E+00	0.00E+00	0.00E+00	2.02E-07	2.92E-05	0.00E+00	9.71E-09	0.00E+00	0.00E+00	1.28E-06	0.00E+00	0.00E+00	2.92E-05
2887	ALL	746688.42	4041660.7	NonCancerChronicDerive	0.00E+00	3.09E-09	0.00E+00	0.00E+00	0.00E+00	2.09E-07	3.01E-05	0.00E+00	1.00E-08	0.00E+00	0.00E+00	1.32E-06	0.00E+00	0.00E+00	3.01E-05
2888	ALL	746788.42	4041660.7	NonCancerChronicDerive	0.00E+00	3.16E-09	0.00E+00	0.00E+00	0.00E+00	2.14E-07	3.08E-05	0.00E+00	1.02E-08	0.00E+00	0.00E+00	1.34E-06	0.00E+00	0.00E+00	3.08E-05
2889	ALL	746888.42	4041660.7	NonCancerChronicDerive	0.00E+00	3.19E-09	0.00E+00	0.00E+00	0.00E+00	2.16E-07	3.11E-05	0.00E+00	1.03E-08	0.00E+00	0.00E+00	1.36E-06	0.00E+00	0.00E+00	3.11E-05
2890	ALL	746988.42	4041660.7	NonCancerChronicDerive	0.00E+00	3.18E-09	0.00E+00	0.00E+00	0.00E+00	2.16E-07	3.11E-05	0.00E+00	1.03E-08	0.00E+00	0.00E+00	1.35E-06	0.00E+00	0.00E+00	3.11E-05
2891	ALL	747088.42	4041660.7	NonCancerChronicDerive	0.00E+00	3.12E-09	0.00E+00	0.00E+00	0.00E+00	2.14E-07	3.07E-05	0.00E+00	1.01E-08	0.00E+00	0.00E+00	1.33E-06	0.00E+00	0.00E+00	3.07E-05
2892	ALL	747188.42	4041660.7	NonCancerChronicDerive	0.00E+00	3.02E-09	0.00E+00	0.00E+00	0.00E+00	2.09E-07	2.99E-05	0.00E+00	9.79E-09	0.00E+00	0.00E+00	1.29E-06	0.00E+00	0.00E+00	2.99E-05
2893	ALL	747288.42	4041660.7	NonCancerChronicDerive	0.00E+00	2.90E-09	0.00E+00	0.00E+00	0.00E+00	2.03E-07	2.89E-05	0.00E+00	9.39E-09	0.00E+00	0.00E+00	1.23E-06	0.00E+00	0.00E+00	2.89E-05
2894	ALL	747388.42	4041660.7	NonCancerChronicDerive	0.00E+00	2.76E-09	0.00E+00	0.00E+00	0.00E+00	1.95E-07	2.78E-05	0.00E+00	8.92E-09	0.00E+00	0.00E+00	1.17E-06	0.00E+00	0.00E+00	2.78E-05
2895	ALL	747488.42	4041660.7	NonCancerChronicDerive	0.00E+00	2.59E-09	0.00E+00	0.00E+00	0.00E+00	1.86E-07	2.64E-05	0.00E+00	8.39E-09	0.00E+00	0.00E+00	1.10E-06	0.00E+00	0.00E+00	2.64E-05
2896	ALL	747588.42	4041660.7	NonCancerChronicDerive	0.00E+00	2.42E-09	0.00E+00	0.00E+00	0.00E+00	1.77E-07	2.49E-05	0.00E+00	7.82E-09	0.00E+00	0.00E+00	1.03E-06	0.00E+00	0.00E+00	2.49E-05
2897	ALL	747688.42	4041660.7	NonCancerChronicDerive	0.00E+00	2.24E-09	0.00E+00	0.00E+00	0.00E+00	1.68E-07	2.35E-05	0.00E+00	7.26E-09	0.00E+00	0.00E+00	9.55E-07	0.00E+00	0.00E+00	2.35E-05
2898	ALL	747788.42	4041660.7	NonCancerChronicDerive	0.00E+00	2.10E-09	0.00E+00	0.00E+00	0.00E+00	1.60E-07	2.24E-05	0.00E+00	6.79E-09	0.00E+00	0.00E+00	8.92E-07	0.00E+00	0.00E+00	2.24E-05
2899	ALL	747888.42	4041660.7	NonCancerChronicDerive	0.00E+00	1.98E-09	0.00E+00	0.00E+00	0.00E+00	1.54E-07	2.14E-05	0.00E+00	6.41E-09	0.00E+00	0.00E+00	8.42E-07	0.00E+00	0.00E+00	2.14E-05
2900	ALL	747988.42	4041660.7	NonCancerChronicDerive	0.00E+00	1.88E-09	0.00E+00	0.00E+00	0.00E+00	1.49E-07	2.07E-05	0.00E+00	6.10E-09	0.00E+00	0.00E+00	8.02E-07	0.00E+00	0.00E+00	2.07E-05
2901	ALL	748088.42	4041660.7	NonCancerChronicDerive	0.00E+00	1.79E-09	0.00E+00	0.00E+00	0.00E+00	1.44E-07	2.00E-05	0.00E+00	5.81E-09	0.00E+00	0.00E+00	7.64E-07	0.00E+00	0.00E+00	2.00E-05
2902	ALL	748188.42	4041660.7	NonCancerChronicDerive	0.00E+00	1.70E-09	0.00E+00	0.00E+00	0.00E+00	1.38E-07	1.91E-05	0.00E+00	5.49E-09	0.00E+00	0.00E+00	7.22E-07	0.00E+00	0.00E+00	1.91E-05
2903	ALL	748288.42	4041660.7	NonCancerChronicDerive	0.00E+00	1.60E-09	0.00E+00	0.00E+00	0.00E+00	1.32E-07	1.82E-05	0.00E+00	5.18E-09	0.00E+00	0.00E+00	6.81E-07	0.00E+00	0.00E+00	1.82E-05
2904	ALL	748388.42	4041660.7	NonCancerChronicDerive	0.00E+00	1.51E-09	0.00E+00	0.00E+00	0.00E+00	1.26E-07	1.73E-05	0.00E+00	4.90E-09	0.00E+00	0.00E+00	6.44E-07	0.00E+00	0.00E+00	1.73E-05
2905	ALL	748488.42	4041660.7	NonCancerChronicDerive	0.00E+00	1.44E-09	0.00E+00	0.00E+00	0.00E+00	1.20E-07	1.65E-05	0.00E+00	4.66E-09	0.00E+00	0.00E+00	6.12E-07	0.00E+00	0.00E+00	1.65E-05
2906	ALL	751388.42	4041660.7	NonCancerChronicDerive	0.00E+00	1.06E-09	0.00E+00	0.00E+00	0.00E+00	8.08E-08	1.14E-05	0.00E+00	3.43E-09	0.00E+00	0.00E+00	4.51E-07	0.00E+00	0.00E+00	1.14E-05
2907	ALL	751488.42	4041660.7	NonCancerChronicDerive	0.00E+00	1.05E-09	0.00E+00	0.00E+00	0.00E+00	8.02E-08	1.13E-05	0.00E+00	3.40E-09	0.00E+00	0.00E+00	4.48E-07	0.00E+00	0.00E+00	1.13E-05
2908	ALL	751588.42	4041660.7	NonCancerChronicDerive	0.00E+00	1.04E-09	0.00E+00	0.00E+00	0.00E+00	7.96E-08	1.12E-05	0.00E+00	3.38E-09	0.00E+00	0.00E+00	4.44E-07	0.00E+00	0.00E+00	1.12E-05
2909	ALL	751688.42	4041660.7	NonCancerChronicDerive	0.00E+00	1.04E-09	0.00E+00	0.00E+00	0.00E+00	7.89E-08	1.11E-05	0.00E+00	3.36E-09	0.00E+00	0.00E+00	4.41E-07	0.00E+00	0.00E+00	1.11E-05
2910	ALL	751788.42	4041660.7	NonCancerChronicDerive	0.00E+00	1.03E-09	0.00E+00	0.00E+00	0.00E+00	7.81E-08	1.10E-05	0.00E+00	3.33E-09	0.00E+00	0.00E+00	4.38E-07	0.00E+00	0.00E+00	1.10E-05
2911	ALL	751888.42	4041660.7	NonCancerChronicDerive	0.00E+00	1.02E-09	0.00E+00	0.00E+00	0.00E+00	7.73E-08	1.09E-05	0.00E+00	3.31E-09	0.00E+00	0.00E+00	4.35E-07	0.00E+00	0.00E+00	1.09E-05
2912	ALL	751988.42	4041660.7	NonCancerChronicDerive	0.00E+00	1.01E-09	0.00E+00	0.00E+00	0.00E+00	7.64E-08	1.08E-05	0.00E+00	3.28E-09	0.00E+00	0.00E+00	4.31E-07	0.00E+00	0.00E+00	1.08E-05
2913	ALL	752088.42	4041660.7	NonCancerChronicDerive	0.00E+00	1.01E-09	0.00E+00	0.00E+00	0.00E+00	7.55E-08	1.07E-05	0.00E+00	3.25E-09	0.00E+00	0.00E+00	4.28E-07	0.00E+00	0.00E+00	1.07E-05

2914	ALL	752188.42	4041660.7	NonCancerChronicDerive	0.00E+00	9.97E-10	0.00E+00	0.00E+00	0.00E+00	7.46E-08	1.06E-05	0.00E+00	3.23E-09	0.00E+00	0.00E+00	4.24E-07	0.00E+00	0.00E+00	1.06E-05
2915	ALL	752288.42	4041660.7	NonCancerChronicDerive	0.00E+00	9.89E-10	0.00E+00	0.00E+00	0.00E+00	7.37E-08	1.05E-05	0.00E+00	3.20E-09	0.00E+00	0.00E+00	4.21E-07	0.00E+00	0.00E+00	1.05E-05
2916	ALL	752388.42	4041660.7	NonCancerChronicDerive	0.00E+00	9.80E-10	0.00E+00	0.00E+00	0.00E+00	7.28E-08	1.03E-05	0.00E+00	3.17E-09	0.00E+00	0.00E+00	4.17E-07	0.00E+00	0.00E+00	1.03E-05
2917	ALL	752488.42	4041660.7	NonCancerChronicDerive	0.00E+00	9.71E-10	0.00E+00	0.00E+00	0.00E+00	7.19E-08	1.02E-05	0.00E+00	3.14E-09	0.00E+00	0.00E+00	4.13E-07	0.00E+00	0.00E+00	1.02E-05
2918	ALL	752588.42	4041660.7	NonCancerChronicDerive	0.00E+00	9.62E-10	0.00E+00	0.00E+00	0.00E+00	7.10E-08	1.01E-05	0.00E+00	3.11E-09	0.00E+00	0.00E+00	4.09E-07	0.00E+00	0.00E+00	1.01E-05
2919	ALL	752688.42	4041660.7	NonCancerChronicDerive	0.00E+00	9.53E-10	0.00E+00	0.00E+00	0.00E+00	7.02E-08	9.99E-06	0.00E+00	3.09E-09	0.00E+00	0.00E+00	4.06E-07	0.00E+00	0.00E+00	9.99E-06
2920	ALL	752788.42	4041660.7	NonCancerChronicDerive	0.00E+00	9.44E-10	0.00E+00	0.00E+00	0.00E+00	6.93E-08	9.87E-06	0.00E+00	3.05E-09	0.00E+00	0.00E+00	4.02E-07	0.00E+00	0.00E+00	9.87E-06
2921	ALL	752888.42	4041660.7	NonCancerChronicDerive	0.00E+00	9.35E-10	0.00E+00	0.00E+00	0.00E+00	6.85E-08	9.76E-06	0.00E+00	3.03E-09	0.00E+00	0.00E+00	3.98E-07	0.00E+00	0.00E+00	9.76E-06
2922	ALL	752988.42	4041660.7	NonCancerChronicDerive	0.00E+00	9.26E-10	0.00E+00	0.00E+00	0.00E+00	6.77E-08	9.65E-06	0.00E+00	3.00E-09	0.00E+00	0.00E+00	3.94E-07	0.00E+00	0.00E+00	9.65E-06
2923	ALL	753088.42	4041660.7	NonCancerChronicDerive	0.00E+00	9.18E-10	0.00E+00	0.00E+00	0.00E+00	6.70E-08	9.55E-06	0.00E+00	2.97E-09	0.00E+00	0.00E+00	3.91E-07	0.00E+00	0.00E+00	9.55E-06
2924	ALL	753188.42	4041660.7	NonCancerChronicDerive	0.00E+00	9.11E-10	0.00E+00	0.00E+00	0.00E+00	6.63E-08	9.46E-06	0.00E+00	2.95E-09	0.00E+00	0.00E+00	3.88E-07	0.00E+00	0.00E+00	9.46E-06
2925	ALL	753288.42	4041660.7	NonCancerChronicDerive	0.00E+00	9.04E-10	0.00E+00	0.00E+00	0.00E+00	6.57E-08	9.37E-06	0.00E+00	2.93E-09	0.00E+00	0.00E+00	3.85E-07	0.00E+00	0.00E+00	9.37E-06
2926	ALL	753388.42	4041660.7	NonCancerChronicDerive	0.00E+00	8.97E-10	0.00E+00	0.00E+00	0.00E+00	6.50E-08	9.29E-06	0.00E+00	2.90E-09	0.00E+00	0.00E+00	3.82E-07	0.00E+00	0.00E+00	9.29E-06
2927	ALL	753488.42	4041660.7	NonCancerChronicDerive	0.00E+00	8.90E-10	0.00E+00	0.00E+00	0.00E+00	6.45E-08	9.20E-06	0.00E+00	2.88E-09	0.00E+00	0.00E+00	3.79E-07	0.00E+00	0.00E+00	9.20E-06
2928	ALL	753588.42	4041660.7	NonCancerChronicDerive	0.00E+00	8.84E-10	0.00E+00	0.00E+00	0.00E+00	6.39E-08	9.12E-06	0.00E+00	2.86E-09	0.00E+00	0.00E+00	3.76E-07	0.00E+00	0.00E+00	9.12E-06
2929	ALL	753688.42	4041660.7	NonCancerChronicDerive	0.00E+00	8.78E-10	0.00E+00	0.00E+00	0.00E+00	6.33E-08	9.05E-06	0.00E+00	2.84E-09	0.00E+00	0.00E+00	3.73E-07	0.00E+00	0.00E+00	9.05E-06
2930	ALL	753788.42	4041660.7	NonCancerChronicDerive	0.00E+00	8.72E-10	0.00E+00	0.00E+00	0.00E+00	6.27E-08	8.97E-06	0.00E+00	2.82E-09	0.00E+00	0.00E+00	3.71E-07	0.00E+00	0.00E+00	8.97E-06
2931	ALL	753888.42	4041660.7	NonCancerChronicDerive	0.00E+00	8.65E-10	0.00E+00	0.00E+00	0.00E+00	6.22E-08	8.89E-06	0.00E+00	2.80E-09	0.00E+00	0.00E+00	3.68E-07	0.00E+00	0.00E+00	8.89E-06
2932	ALL	753988.42	4041660.7	NonCancerChronicDerive	0.00E+00	8.59E-10	0.00E+00	0.00E+00	0.00E+00	6.17E-08	8.82E-06	0.00E+00	2.78E-09	0.00E+00	0.00E+00	3.66E-07	0.00E+00	0.00E+00	8.82E-06
2933	ALL	746288.42	4041760.7	NonCancerChronicDerive	0.00E+00	2.65E-09	0.00E+00	0.00E+00	0.00E+00	1.79E-07	2.59E-05	0.00E+00	8.57E-09	0.00E+00	0.00E+00	1.13E-06	0.00E+00	0.00E+00	2.59E-05
2934	ALL	746388.42	4041760.7	NonCancerChronicDerive	0.00E+00	2.75E-09	0.00E+00	0.00E+00	0.00E+00	1.86E-07	2.68E-05	0.00E+00	8.89E-09	0.00E+00	0.00E+00	1.17E-06	0.00E+00	0.00E+00	2.68E-05
2935	ALL	746488.42	4041760.7	NonCancerChronicDerive	0.00E+00	2.84E-09	0.00E+00	0.00E+00	0.00E+00	1.92E-07	2.77E-05	0.00E+00	9.19E-09	0.00E+00	0.00E+00	1.21E-06	0.00E+00	0.00E+00	2.77E-05
2936	ALL	746588.42	4041760.7	NonCancerChronicDerive	0.00E+00	2.92E-09	0.00E+00	0.00E+00	0.00E+00	1.97E-07	2.84E-05	0.00E+00	9.44E-09	0.00E+00	0.00E+00	1.24E-06	0.00E+00	0.00E+00	2.84E-05
2937	ALL	746688.42	4041760.7	NonCancerChronicDerive	0.00E+00	2.97E-09	0.00E+00	0.00E+00	0.00E+00	2.01E-07	2.89E-05	0.00E+00	9.60E-09	0.00E+00	0.00E+00	1.26E-06	0.00E+00	0.00E+00	2.89E-05
2938	ALL	746788.42	4041760.7	NonCancerChronicDerive	0.00E+00	2.98E-09	0.00E+00	0.00E+00	0.00E+00	2.03E-07	2.92E-05	0.00E+00	9.66E-09	0.00E+00	0.00E+00	1.27E-06	0.00E+00	0.00E+00	2.92E-05
2939	ALL	746888.42	4041760.7	NonCancerChronicDerive	0.00E+00	2.96E-09	0.00E+00	0.00E+00	0.00E+00	2.02E-07	2.90E-05	0.00E+00	9.59E-09	0.00E+00	0.00E+00	1.26E-06	0.00E+00	0.00E+00	2.90E-05
2940	ALL	746988.42	4041760.7	NonCancerChronicDerive	0.00E+00	2.91E-09	0.00E+00	0.00E+00	0.00E+00	2.00E-07	2.86E-05	0.00E+00	9.42E-09	0.00E+00	0.00E+00	1.24E-06	0.00E+00	0.00E+00	2.86E-05
2941	ALL	747088.42	4041760.7	NonCancerChronicDerive	0.00E+00	2.83E-09	0.00E+00	0.00E+00	0.00E+00	1.96E-07	2.80E-05	0.00E+00	9.16E-09	0.00E+00	0.00E+00	1.20E-06	0.00E+00	0.00E+00	2.80E-05
2942	ALL	747188.42	4041760.7	NonCancerChronicDerive	0.00E+00	2.72E-09	0.00E+00	0.00E+00	0.00E+00	1.90E-07	2.72E-05	0.00E+00	8.82E-09	0.00E+00	0.00E+00	1.16E-06	0.00E+00	0.00E+00	2.72E-05
2943	ALL	747288.42	4041760.7	NonCancerChronicDerive	0.00E+00	2.60E-09	0.00E+00	0.00E+00	0.00E+00	1.84E-07	2.62E-05	0.00E+00	8.42E-09	0.00E+00	0.00E+00	1.11E-06	0.00E+00	0.00E+00	2.62E-05
2944	ALL	747388.42	4041760.7	NonCancerChronicDerive	0.00E+00	2.46E-09	0.00E+00	0.00E+00	0.00E+00	1.77E-07	2.51E-05	0.00E+00	7.97E-09	0.00E+00	0.00E+00	1.05E-06	0.00E+00	0.00E+00	2.51E-05
2945	ALL	747488.42	4041760.7	NonCancerChronicDerive	0.00E+00	2.32E-09	0.00E+00	0.00E+00	0.00E+00	1.69E-07	2.38E-05	0.00E+00	7.50E-09	0.00E+00	0.00E+00	9.86E-07	0.00E+00	0.00E+00	2.38E-05
2946	ALL	747588.42	4041760.7	NonCancerChronicDerive	0.00E+00	2.17E-09	0.00E+00	0.00E+00	0.00E+00	1.61E-07	2.26E-05	0.00E+00	7.01E-09	0.00E+00	0.00E+00	9.22E-07	0.00E+00	0.00E+00	2.26E-05
2947	ALL	747688.42	4041760.7	NonCancerChronicDerive	0.00E+00	2.03E-09	0.00E+00	0.00E+00	0.00E+00	1.54E-07	2.15E-05	0.00E+00	6.58E-09	0.00E+00	0.00E+00	8.65E-07	0.00E+00	0.00E+00	2.15E-05
2948	ALL	747788.42	4041760.7	NonCancerChronicDerive	0.00E+00	1.92E-09	0.00E+00	0.00E+00	0.00E+00	1.48E-07	2.06E-05	0.00E+00	6.22E-09	0.00E+00	0.00E+00	8.18E-07	0.00E+00	0.00E+00	2.06E-05
2949	ALL	747888.42	4041760.7	NonCancerChronicDerive	0.00E+00	1.83E-09	0.00E+00	0.00E+00	0.00E+00	1.43E-07	2.00E-05	0.00E+00	5.93E-09	0.00E+00	0.00E+00	7.80E-07	0.00E+00	0.00E+00	2.00E-05
2950	ALL	747988.42	4041760.7	NonCancerChronicDerive	0.00E+00	1.76E-09	0.00E+00	0.00E+00	0.00E+00	1.39E-07	1.93E-05	0.00E+00	5.69E-09	0.00E+00	0.00E+00	7.48E-07	0.00E+00	0.00E+00	1.93E-05
2951	ALL	748088.42	4041760.7	NonCancerChronicDerive	0.00E+00	1.68E-09	0.00E+00	0.00E+00	0.00E+00	1.34E-07	1.87E-05	0.00E+00	5.44E-09	0.00E+00	0.00E+00	7.15E-07	0.00E+00	0.00E+00	1.87E-05
2952	ALL	748188.42	4041760.7	NonCancerChronicDerive	0.00E+00	1.60E-09	0.00E+00	0.00E+00	0.00E+00	1.28E-07	1.79E-05	0.00E+00	5.17E-09	0.00E+00	0.00E+00	6.79E-07	0.00E+00	0.00E+00	1.79E-05
2953	ALL	748288.42	4041760.7	NonCancerChronicDerive	0.00E+00	1.51E-09	0.00E+00	0.00E+00	0.00E+00	1.23E-07	1.71E-05	0.00E+00	4.90E-09	0.00E+00	0.00E+00	6.44E-07	0.00E+00	0.00E+00	1.71E-05
2954	ALL	748388.42	4041760.7	NonCancerChronicDerive	0.00E+00	1.44E-09	0.00E+00	0.00E+00	0.00E+00	1.18E-07	1.63E-05	0.00E+00	4.65E-09	0.00E+00	0.00E+00	6.11E-07	0.00E+00	0.00E+00	1.63E-05
2955	ALL	748488.42	4041760.7	NonCancerChronicDerive	0.00E+00	1.37E-09	0.00E+00	0.00E+00	0.00E+00	1.13E-07	1.56E-05	0.00E+00	4.43E-09	0.00E+00	0.00E+00	5.82E-07	0.00E+00	0.00E+00	1.56E-05
2956	ALL	753588.42	4041760.7	NonCancerChronicDerive	0.00E+00	8.58E-10	0.00E+00	0.00E+00	0.00E+00	6.20E-08	8.87E-06	0.00E+00	2.78E-09	0.00E+00	0.00E+00	3.65E-07	0.00E+00	0.00E+00	8.87E-06
2957	ALL	753688.42	4041760.7	NonCancerChronicDerive	0.00E+00	8.52E-10	0.00E+00	0.00E+00	0.00E+00	6.15E-08	8.79E-06	0.00E+00	2.76E-09	0.00E+00	0.00E+00	3.63E-07	0.00E+00	0.00E+00	8.79E-06
2958	ALL	753788.42	4041760.7	NonCancerChronicDerive	0.00E+00	8.47E-10	0.00E+00	0.00E+00	0.00E+00	6.10E-08	8.72E-06	0.00E+00	2.74E-09	0.00E+00	0.00E+00	3.60E-07	0.00E+00	0.00E+00	8.72E-06
2959	ALL	753888.42	4041760.7	NonCancerChronicDerive	0.00E+00	8.41E-10	0.00E+00	0.00E+00	0.00E+00	6.04E-08	8.65E-06	0.00E+00	2.72E-09	0.00E+00	0.00E+00	3.58E-07	0.00E+00	0.00E+00	8.65E-06
2960	ALL	753988.42	4041760.7	NonCancerChronicDerive	0.00E+00	8.34E-10	0.00E+00	0.00E+00	0.00E+00	5.99E-08	8.57E-06	0.00E+00	2.70E-09	0.00E+00	0.00E+00	3.55E-07	0.00E+00	0.00E+00	8.57E-06
2961	ALL	746288.42	4041860.7	NonCancerChronicDerive	0.00E+00	2.62E-09	0.00E+00	0.00E+00	0.00E+00	1.77E-07	2.55E-05	0.00E+00	8.47E-09	0.00E+00	0.00E+00	1.11E-06	0.00E+00	0.00E+00	2.55E-05
2962	ALL	746388.42	4041860.7	NonCancerChronicDerive	0.00E+00	2.69E-09	0.00E+00	0.00E+00	0.00E+00	1.83E-07	2.63E-05	0.00E+00	8.72E-09	0.00E+00	0.00E+00	1.15E-06	0.00E+00	0.00E+00	2.63E-05
2963	ALL	746488.42	4041860.7	NonCancerChronicDerive	0.00E+00	2.76E-09	0.00E+00	0.00E+00	0.00E+00	1.87E-07	2.69E-05	0.00E+00	8.92E-09	0.00E+00	0.00E+00	1.17E-06	0.00E+00	0.00E+00	2.69E-05
2964	ALL	746588.42	4041860.7	NonCancerChronicDerive	0.00E+00	2.79E-09	0.00E+00	0.00E+00	0.00E+00	1.90E-07	2.73E-05	0.00E+00	9.05E-09	0.00E+00	0.00E+00	1.19E-06	0.00E+00	0.00E+00	2.73E-05
2965	ALL	746688.42	4041860.7	NonCancerChronicDerive	0.00E+00	2.80E-09	0.00E+00	0.00E+00	0.00E+00	1.91E-07	2.74E-05	0.00E+00	9.08E-09	0.00E+00	0.00E+00	1.19E-06	0.00E+00	0.00E+00	2.74E-05
2966	ALL	746788.42	4041860.7	NonCancerChronicDerive	0.00E+00	2.78E-09	0.00E+00	0.00E+00	0.00E+00	1.90E-07	2.73E-05	0.00E+00	9.01E-09	0.00E+00	0.00E+00	1.18E-06	0.00E+00	0.00E+00	2.73E-05

2967	ALL	746888.42	4041860.7	NonCancerChronicDerive	0.00E+00	2.73E-09	0.00E+00	0.00E+00	0.00E+00	1.88E-07	2.69E-05	0.00E+00	8.84E-09	0.00E+00	0.00E+00	1.16E-06	0.00E+00	0.00E+00	2.69E-05
2968	ALL	746988.42	4041860.7	NonCancerChronicDerive	0.00E+00	2.66E-09	0.00E+00	0.00E+00	0.00E+00	1.84E-07	2.63E-05	0.00E+00	8.60E-09	0.00E+00	0.00E+00	1.13E-06	0.00E+00	0.00E+00	2.63E-05
2969	ALL	747088.42	4041860.7	NonCancerChronicDerive	0.00E+00	2.57E-09	0.00E+00	0.00E+00	0.00E+00	1.80E-07	2.56E-05	0.00E+00	8.31E-09	0.00E+00	0.00E+00	1.09E-06	0.00E+00	0.00E+00	2.56E-05
2970	ALL	747188.42	4041860.7	NonCancerChronicDerive	0.00E+00	2.46E-09	0.00E+00	0.00E+00	0.00E+00	1.74E-07	2.48E-05	0.00E+00	7.98E-09	0.00E+00	0.00E+00	1.05E-06	0.00E+00	0.00E+00	2.48E-05
2971	ALL	747288.42	4041860.7	NonCancerChronicDerive	0.00E+00	2.35E-09	0.00E+00	0.00E+00	0.00E+00	1.68E-07	2.38E-05	0.00E+00	7.59E-09	0.00E+00	0.00E+00	9.98E-07	0.00E+00	0.00E+00	2.38E-05
2972	ALL	747388.42	4041860.7	NonCancerChronicDerive	0.00E+00	2.22E-09	0.00E+00	0.00E+00	0.00E+00	1.61E-07	2.28E-05	0.00E+00	7.18E-09	0.00E+00	0.00E+00	9.44E-07	0.00E+00	0.00E+00	2.28E-05
2973	ALL	747488.42	4041860.7	NonCancerChronicDerive	0.00E+00	2.09E-09	0.00E+00	0.00E+00	0.00E+00	1.55E-07	2.17E-05	0.00E+00	6.77E-09	0.00E+00	0.00E+00	8.90E-07	0.00E+00	0.00E+00	2.17E-05
2974	ALL	747588.42	4041860.7	NonCancerChronicDerive	0.00E+00	1.97E-09	0.00E+00	0.00E+00	0.00E+00	1.48E-07	2.07E-05	0.00E+00	6.38E-09	0.00E+00	0.00E+00	8.38E-07	0.00E+00	0.00E+00	2.07E-05
2975	ALL	747688.42	4041860.7	NonCancerChronicDerive	0.00E+00	1.87E-09	0.00E+00	0.00E+00	0.00E+00	1.42E-07	1.99E-05	0.00E+00	6.05E-09	0.00E+00	0.00E+00	7.95E-07	0.00E+00	0.00E+00	1.99E-05
2976	ALL	747788.42	4041860.7	NonCancerChronicDerive	0.00E+00	1.78E-09	0.00E+00	0.00E+00	0.00E+00	1.38E-07	1.92E-05	0.00E+00	5.77E-09	0.00E+00	0.00E+00	7.58E-07	0.00E+00	0.00E+00	1.92E-05
2977	ALL	747888.42	4041860.7	NonCancerChronicDerive	0.00E+00	1.71E-09	0.00E+00	0.00E+00	0.00E+00	1.34E-07	1.87E-05	0.00E+00	5.55E-09	0.00E+00	0.00E+00	7.30E-07	0.00E+00	0.00E+00	1.87E-05
2978	ALL	747988.42	4041860.7	NonCancerChronicDerive	0.00E+00	1.65E-09	0.00E+00	0.00E+00	0.00E+00	1.30E-07	1.82E-05	0.00E+00	5.35E-09	0.00E+00	0.00E+00	7.03E-07	0.00E+00	0.00E+00	1.82E-05
2979	ALL	748088.42	4041860.7	NonCancerChronicDerive	0.00E+00	1.58E-09	0.00E+00	0.00E+00	0.00E+00	1.25E-07	1.75E-05	0.00E+00	5.13E-09	0.00E+00	0.00E+00	6.74E-07	0.00E+00	0.00E+00	1.75E-05
2980	ALL	748188.42	4041860.7	NonCancerChronicDerive	0.00E+00	1.51E-09	0.00E+00	0.00E+00	0.00E+00	1.20E-07	1.68E-05	0.00E+00	4.89E-09	0.00E+00	0.00E+00	6.42E-07	0.00E+00	0.00E+00	1.68E-05
2981	ALL	748288.42	4041860.7	NonCancerChronicDerive	0.00E+00	1.44E-09	0.00E+00	0.00E+00	0.00E+00	1.16E-07	1.61E-05	0.00E+00	4.65E-09	0.00E+00	0.00E+00	6.11E-07	0.00E+00	0.00E+00	1.61E-05
2982	ALL	748388.42	4041860.7	NonCancerChronicDerive	0.00E+00	1.37E-09	0.00E+00	0.00E+00	0.00E+00	1.11E-07	1.54E-05	0.00E+00	4.43E-09	0.00E+00	0.00E+00	5.82E-07	0.00E+00	0.00E+00	1.54E-05
2983	ALL	748488.42	4041860.7	NonCancerChronicDerive	0.00E+00	1.31E-09	0.00E+00	0.00E+00	0.00E+00	1.06E-07	1.47E-05	0.00E+00	4.23E-09	0.00E+00	0.00E+00	5.56E-07	0.00E+00	0.00E+00	1.47E-05
2984	ALL	753488.42	4041860.7	NonCancerChronicDerive	0.00E+00	8.39E-10	0.00E+00	0.00E+00	0.00E+00	6.08E-08	8.69E-06	0.00E+00	2.72E-09	0.00E+00	0.00E+00	3.57E-07	0.00E+00	0.00E+00	8.69E-06
2985	ALL	753588.42	4041860.7	NonCancerChronicDerive	0.00E+00	8.35E-10	0.00E+00	0.00E+00	0.00E+00	6.03E-08	8.63E-06	0.00E+00	2.70E-09	0.00E+00	0.00E+00	3.55E-07	0.00E+00	0.00E+00	8.63E-06
2986	ALL	753688.42	4041860.7	NonCancerChronicDerive	0.00E+00	8.28E-10	0.00E+00	0.00E+00	0.00E+00	5.98E-08	8.55E-06	0.00E+00	2.68E-09	0.00E+00	0.00E+00	3.53E-07	0.00E+00	0.00E+00	8.55E-06
2987	ALL	753788.42	4041860.7	NonCancerChronicDerive	0.00E+00	8.24E-10	0.00E+00	0.00E+00	0.00E+00	5.93E-08	8.49E-06	0.00E+00	2.67E-09	0.00E+00	0.00E+00	3.50E-07	0.00E+00	0.00E+00	8.49E-06
2988	ALL	753888.42	4041860.7	NonCancerChronicDerive	0.00E+00	8.18E-10	0.00E+00	0.00E+00	0.00E+00	5.88E-08	8.42E-06	0.00E+00	2.65E-09	0.00E+00	0.00E+00	3.48E-07	0.00E+00	0.00E+00	8.42E-06
2989	ALL	753988.42	4041860.7	NonCancerChronicDerive	0.00E+00	8.14E-10	0.00E+00	0.00E+00	0.00E+00	5.84E-08	8.36E-06	0.00E+00	2.63E-09	0.00E+00	0.00E+00	3.46E-07	0.00E+00	0.00E+00	8.36E-06
2990	ALL	748188.42	4041960.7	NonCancerChronicDerive	0.00E+00	1.43E-09	0.00E+00	0.00E+00	0.00E+00	1.13E-07	1.59E-05	0.00E+00	4.64E-09	0.00E+00	0.00E+00	6.10E-07	0.00E+00	0.00E+00	1.59E-05
2991	ALL	748288.42	4041960.7	NonCancerChronicDerive	0.00E+00	1.37E-09	0.00E+00	0.00E+00	0.00E+00	1.09E-07	1.53E-05	0.00E+00	4.43E-09	0.00E+00	0.00E+00	5.83E-07	0.00E+00	0.00E+00	1.53E-05
2992	ALL	748388.42	4041960.7	NonCancerChronicDerive	0.00E+00	1.31E-09	0.00E+00	0.00E+00	0.00E+00	1.05E-07	1.46E-05	0.00E+00	4.23E-09	0.00E+00	0.00E+00	5.57E-07	0.00E+00	0.00E+00	1.46E-05
2993	ALL	748488.42	4041960.7	NonCancerChronicDerive	0.00E+00	1.25E-09	0.00E+00	0.00E+00	0.00E+00	1.00E-07	1.40E-05	0.00E+00	4.05E-09	0.00E+00	0.00E+00	5.33E-07	0.00E+00	0.00E+00	1.40E-05
2994	ALL	753488.42	4041960.7	NonCancerChronicDerive	0.00E+00	8.18E-10	0.00E+00	0.00E+00	0.00E+00	5.92E-08	8.47E-06	0.00E+00	2.65E-09	0.00E+00	0.00E+00	3.48E-07	0.00E+00	0.00E+00	8.47E-06
2995	ALL	753588.42	4041960.7	NonCancerChronicDerive	0.00E+00	8.13E-10	0.00E+00	0.00E+00	0.00E+00	5.88E-08	8.41E-06	0.00E+00	2.63E-09	0.00E+00	0.00E+00	3.46E-07	0.00E+00	0.00E+00	8.41E-06
2996	ALL	753688.42	4041960.7	NonCancerChronicDerive	0.00E+00	8.07E-10	0.00E+00	0.00E+00	0.00E+00	5.83E-08	8.34E-06	0.00E+00	2.61E-09	0.00E+00	0.00E+00	3.43E-07	0.00E+00	0.00E+00	8.34E-06
2997	ALL	753788.42	4041960.7	NonCancerChronicDerive	0.00E+00	8.02E-10	0.00E+00	0.00E+00	0.00E+00	5.78E-08	8.27E-06	0.00E+00	2.60E-09	0.00E+00	0.00E+00	3.41E-07	0.00E+00	0.00E+00	8.27E-06
2998	ALL	753888.42	4041960.7	NonCancerChronicDerive	0.00E+00	7.96E-10	0.00E+00	0.00E+00	0.00E+00	5.73E-08	8.20E-06	0.00E+00	2.58E-09	0.00E+00	0.00E+00	3.39E-07	0.00E+00	0.00E+00	8.20E-06
2999	ALL	753988.42	4041960.7	NonCancerChronicDerive	0.00E+00	7.91E-10	0.00E+00	0.00E+00	0.00E+00	5.68E-08	8.14E-06	0.00E+00	2.56E-09	0.00E+00	0.00E+00	3.37E-07	0.00E+00	0.00E+00	8.14E-06
3000	ALL	748188.42	4042060.7	NonCancerChronicDerive	0.00E+00	1.37E-09	0.00E+00	0.00E+00	0.00E+00	1.07E-07	1.51E-05	0.00E+00	4.42E-09	0.00E+00	0.00E+00	5.81E-07	0.00E+00	0.00E+00	1.51E-05
3001	ALL	748288.42	4042060.7	NonCancerChronicDerive	0.00E+00	1.31E-09	0.00E+00	0.00E+00	0.00E+00	1.03E-07	1.45E-05	0.00E+00	4.24E-09	0.00E+00	0.00E+00	5.57E-07	0.00E+00	0.00E+00	1.45E-05
3002	ALL	748388.42	4042060.7	NonCancerChronicDerive	0.00E+00	1.25E-09	0.00E+00	0.00E+00	0.00E+00	9.92E-08	1.39E-05	0.00E+00	4.06E-09	0.00E+00	0.00E+00	5.33E-07	0.00E+00	0.00E+00	1.39E-05
3003	ALL	748488.42	4042060.7	NonCancerChronicDerive	0.00E+00	1.20E-09	0.00E+00	0.00E+00	0.00E+00	9.53E-08	1.33E-05	0.00E+00	3.89E-09	0.00E+00	0.00E+00	5.11E-07	0.00E+00	0.00E+00	1.33E-05
3004	ALL	753488.42	4042060.7	NonCancerChronicDerive	0.00E+00	7.98E-10	0.00E+00	0.00E+00	0.00E+00	5.78E-08	8.27E-06	0.00E+00	2.58E-09	0.00E+00	0.00E+00	3.40E-07	0.00E+00	0.00E+00	8.27E-06
3005	ALL	753588.42	4042060.7	NonCancerChronicDerive	0.00E+00	7.93E-10	0.00E+00	0.00E+00	0.00E+00	5.73E-08	8.20E-06	0.00E+00	2.57E-09	0.00E+00	0.00E+00	3.37E-07	0.00E+00	0.00E+00	8.20E-06
3006	ALL	753688.42	4042060.7	NonCancerChronicDerive	0.00E+00	7.88E-10	0.00E+00	0.00E+00	0.00E+00	5.69E-08	8.14E-06	0.00E+00	2.55E-09	0.00E+00	0.00E+00	3.35E-07	0.00E+00	0.00E+00	8.14E-06
3007	ALL	753788.42	4042060.7	NonCancerChronicDerive	0.00E+00	7.82E-10	0.00E+00	0.00E+00	0.00E+00	5.64E-08	8.07E-06	0.00E+00	2.53E-09	0.00E+00	0.00E+00	3.33E-07	0.00E+00	0.00E+00	8.07E-06
3008	ALL	753888.42	4042060.7	NonCancerChronicDerive	0.00E+00	7.77E-10	0.00E+00	0.00E+00	0.00E+00	5.59E-08	8.01E-06	0.00E+00	2.52E-09	0.00E+00	0.00E+00	3.31E-07	0.00E+00	0.00E+00	8.01E-06
3009	ALL	753988.42	4042060.7	NonCancerChronicDerive	0.00E+00	7.72E-10	0.00E+00	0.00E+00	0.00E+00	5.55E-08	7.95E-06	0.00E+00	2.50E-09	0.00E+00	0.00E+00	3.29E-07	0.00E+00	0.00E+00	7.95E-06
3010	ALL	748188.42	4042160.7	NonCancerChronicDerive	0.00E+00	1.31E-09	0.00E+00	0.00E+00	0.00E+00	1.02E-07	1.43E-05	0.00E+00	4.23E-09	0.00E+00	0.00E+00	5.56E-07	0.00E+00	0.00E+00	1.43E-05
3011	ALL	748288.42	4042160.7	NonCancerChronicDerive	0.00E+00	1.25E-09	0.00E+00	0.00E+00	0.00E+00	9.80E-08	1.38E-05	0.00E+00	4.06E-09	0.00E+00	0.00E+00	5.34E-07	0.00E+00	0.00E+00	1.38E-05
3012	ALL	748388.42	4042160.7	NonCancerChronicDerive	0.00E+00	1.20E-09	0.00E+00	0.00E+00	0.00E+00	9.43E-08	1.33E-05	0.00E+00	3.90E-09	0.00E+00	0.00E+00	5.12E-07	0.00E+00	0.00E+00	1.33E-05
3013	ALL	748488.42	4042160.7	NonCancerChronicDerive	0.00E+00	1.16E-09	0.00E+00	0.00E+00	0.00E+00	9.09E-08	1.27E-05	0.00E+00	3.74E-09	0.00E+00	0.00E+00	4.92E-07	0.00E+00	0.00E+00	1.27E-05
3014	ALL	753488.42	4042160.7	NonCancerChronicDerive	0.00E+00	7.79E-10	0.00E+00	0.00E+00	0.00E+00	5.65E-08	8.08E-06	0.00E+00	2.52E-09	0.00E+00	0.00E+00	3.32E-07	0.00E+00	0.00E+00	8.08E-06
3015	ALL	753588.42	4042160.7	NonCancerChronicDerive	0.00E+00	7.74E-10	0.00E+00	0.00E+00	0.00E+00	5.60E-08	8.02E-06	0.00E+00	2.51E-09	0.00E+00	0.00E+00	3.30E-07	0.00E+00	0.00E+00	8.02E-06
3016	ALL	753688.42	4042160.7	NonCancerChronicDerive	0.00E+00	7.69E-10	0.00E+00	0.00E+00	0.00E+00	5.56E-08	7.95E-06	0.00E+00	2.49E-09	0.00E+00	0.00E+00	3.27E-07	0.00E+00	0.00E+00	7.95E-06
3017	ALL	753788.42	4042160.7	NonCancerChronicDerive	0.00E+00	7.64E-10	0.00E+00	0.00E+00	0.00E+00	5.51E-08	7.89E-06	0.00E+00	2.47E-09	0.00E+00	0.00E+00	3.25E-07	0.00E+00	0.00E+00	7.89E-06
3018	ALL	753888.42	4042160.7	NonCancerChronicDerive	0.00E+00	7.60E-10	0.00E+00	0.00E+00	0.00E+00	5.47E-08	7.83E-06	0.00E+00	2.46E-09	0.00E+00	0.00E+00	3.23E-07	0.00E+00	0.00E+00	7.83E-06
3019	ALL	753988.42	4042160.7	NonCancerChronicDerive	0.00E+00	7.55E-10	0.00E+00	0.00E+00	0.00E+00	5.42E-08	7.77E-06	0.00E+00	2.44E-09	0.00E+00	0.00E+00	3.21E-07	0.00E+00	0.00E+00	7.77E-06

3020	ALL	748188.42	4042260.7	NonCancerChronicDerive	0.00E+00	1.25E-09	0.00E+00	0.00E+00	0.00E+00	9.67E-08	1.37E-05	0.00E+00	4.05E-09	0.00E+00	0.00E+00	5.33E-07	0.00E+00	0.00E+00	1.37E-05
3021	ALL	748288.42	4042260.7	NonCancerChronicDerive	0.00E+00	1.21E-09	0.00E+00	0.00E+00	0.00E+00	9.33E-08	1.32E-05	0.00E+00	3.90E-09	0.00E+00	0.00E+00	5.13E-07	0.00E+00	0.00E+00	1.32E-05
3022	ALL	748388.42	4042260.7	NonCancerChronicDerive	0.00E+00	1.16E-09	0.00E+00	0.00E+00	0.00E+00	9.00E-08	1.27E-05	0.00E+00	3.75E-09	0.00E+00	0.00E+00	4.93E-07	0.00E+00	0.00E+00	1.27E-05
3023	ALL	748488.42	4042260.7	NonCancerChronicDerive	0.00E+00	1.11E-09	0.00E+00	0.00E+00	0.00E+00	8.70E-08	1.22E-05	0.00E+00	3.61E-09	0.00E+00	0.00E+00	4.74E-07	0.00E+00	0.00E+00	1.22E-05
3024	ALL	753488.42	4042260.7	NonCancerChronicDerive	0.00E+00	7.61E-10	0.00E+00	0.00E+00	0.00E+00	5.52E-08	7.90E-06	0.00E+00	2.46E-09	0.00E+00	0.00E+00	3.24E-07	0.00E+00	0.00E+00	7.90E-06
3025	ALL	753588.42	4042260.7	NonCancerChronicDerive	0.00E+00	7.57E-10	0.00E+00	0.00E+00	0.00E+00	5.48E-08	7.84E-06	0.00E+00	2.45E-09	0.00E+00	0.00E+00	3.22E-07	0.00E+00	0.00E+00	7.84E-06
3026	ALL	753688.42	4042260.7	NonCancerChronicDerive	0.00E+00	7.52E-10	0.00E+00	0.00E+00	0.00E+00	5.43E-08	7.78E-06	0.00E+00	2.44E-09	0.00E+00	0.00E+00	3.20E-07	0.00E+00	0.00E+00	7.78E-06
3027	ALL	753788.42	4042260.7	NonCancerChronicDerive	0.00E+00	7.48E-10	0.00E+00	0.00E+00	0.00E+00	5.39E-08	7.72E-06	0.00E+00	2.42E-09	0.00E+00	0.00E+00	3.18E-07	0.00E+00	0.00E+00	7.72E-06
3028	ALL	753888.42	4042260.7	NonCancerChronicDerive	0.00E+00	7.43E-10	0.00E+00	0.00E+00	0.00E+00	5.35E-08	7.66E-06	0.00E+00	2.41E-09	0.00E+00	0.00E+00	3.16E-07	0.00E+00	0.00E+00	7.66E-06
3029	ALL	753988.42	4042260.7	NonCancerChronicDerive	0.00E+00	7.38E-10	0.00E+00	0.00E+00	0.00E+00	5.31E-08	7.61E-06	0.00E+00	2.39E-09	0.00E+00	0.00E+00	3.14E-07	0.00E+00	0.00E+00	7.61E-06
3030	ALL	748188.42	4042360.7	NonCancerChronicDerive	0.00E+00	1.20E-09	0.00E+00	0.00E+00	0.00E+00	9.23E-08	1.31E-05	0.00E+00	3.90E-09	0.00E+00	0.00E+00	5.12E-07	0.00E+00	0.00E+00	1.31E-05
3031	ALL	748288.42	4042360.7	NonCancerChronicDerive	0.00E+00	1.16E-09	0.00E+00	0.00E+00	0.00E+00	8.92E-08	1.26E-05	0.00E+00	3.76E-09	0.00E+00	0.00E+00	4.94E-07	0.00E+00	0.00E+00	1.26E-05
3032	ALL	748388.42	4042360.7	NonCancerChronicDerive	0.00E+00	1.12E-09	0.00E+00	0.00E+00	0.00E+00	8.62E-08	1.22E-05	0.00E+00	3.62E-09	0.00E+00	0.00E+00	4.76E-07	0.00E+00	0.00E+00	1.22E-05
3033	ALL	748488.42	4042360.7	NonCancerChronicDerive	0.00E+00	1.08E-09	0.00E+00	0.00E+00	0.00E+00	8.36E-08	1.18E-05	0.00E+00	3.49E-09	0.00E+00	0.00E+00	4.58E-07	0.00E+00	0.00E+00	1.18E-05
3034	ALL	753488.42	4042360.7	NonCancerChronicDerive	0.00E+00	7.44E-10	0.00E+00	0.00E+00	0.00E+00	5.40E-08	7.72E-06	0.00E+00	2.41E-09	0.00E+00	0.00E+00	3.16E-07	0.00E+00	0.00E+00	7.72E-06
3035	ALL	753588.42	4042360.7	NonCancerChronicDerive	0.00E+00	7.40E-10	0.00E+00	0.00E+00	0.00E+00	5.36E-08	7.67E-06	0.00E+00	2.39E-09	0.00E+00	0.00E+00	3.15E-07	0.00E+00	0.00E+00	7.67E-06
3036	ALL	753688.42	4042360.7	NonCancerChronicDerive	0.00E+00	7.36E-10	0.00E+00	0.00E+00	0.00E+00	5.32E-08	7.61E-06	0.00E+00	2.38E-09	0.00E+00	0.00E+00	3.13E-07	0.00E+00	0.00E+00	7.61E-06
3037	ALL	753788.42	4042360.7	NonCancerChronicDerive	0.00E+00	7.31E-10	0.00E+00	0.00E+00	0.00E+00	5.28E-08	7.56E-06	0.00E+00	2.37E-09	0.00E+00	0.00E+00	3.11E-07	0.00E+00	0.00E+00	7.56E-06
3038	ALL	753888.42	4042360.7	NonCancerChronicDerive	0.00E+00	7.27E-10	0.00E+00	0.00E+00	0.00E+00	5.24E-08	7.50E-06	0.00E+00	2.35E-09	0.00E+00	0.00E+00	3.09E-07	0.00E+00	0.00E+00	7.50E-06
3039	ALL	753988.42	4042360.7	NonCancerChronicDerive	0.00E+00	7.23E-10	0.00E+00	0.00E+00	0.00E+00	5.20E-08	7.45E-06	0.00E+00	2.34E-09	0.00E+00	0.00E+00	3.08E-07	0.00E+00	0.00E+00	7.45E-06
3040	ALL	748188.42	4042460.7	NonCancerChronicDerive	0.00E+00	1.16E-09	0.00E+00	0.00E+00	0.00E+00	8.83E-08	1.25E-05	0.00E+00	3.76E-09	0.00E+00	0.00E+00	4.94E-07	0.00E+00	0.00E+00	1.25E-05
3041	ALL	748288.42	4042460.7	NonCancerChronicDerive	0.00E+00	1.12E-09	0.00E+00	0.00E+00	0.00E+00	8.55E-08	1.21E-05	0.00E+00	3.63E-09	0.00E+00	0.00E+00	4.77E-07	0.00E+00	0.00E+00	1.21E-05
3042	ALL	748388.42	4042460.7	NonCancerChronicDerive	0.00E+00	1.08E-09	0.00E+00	0.00E+00	0.00E+00	8.29E-08	1.17E-05	0.00E+00	3.50E-09	0.00E+00	0.00E+00	4.60E-07	0.00E+00	0.00E+00	1.17E-05
3043	ALL	748488.42	4042460.7	NonCancerChronicDerive	0.00E+00	1.04E-09	0.00E+00	0.00E+00	0.00E+00	8.05E-08	1.13E-05	0.00E+00	3.37E-09	0.00E+00	0.00E+00	4.44E-07	0.00E+00	0.00E+00	1.13E-05
3044	ALL	753488.42	4042460.7	NonCancerChronicDerive	0.00E+00	7.26E-10	0.00E+00	0.00E+00	0.00E+00	5.28E-08	7.55E-06	0.00E+00	2.35E-09	0.00E+00	0.00E+00	3.09E-07	0.00E+00	0.00E+00	7.55E-06
3045	ALL	753588.42	4042460.7	NonCancerChronicDerive	0.00E+00	7.23E-10	0.00E+00	0.00E+00	0.00E+00	5.25E-08	7.51E-06	0.00E+00	2.34E-09	0.00E+00	0.00E+00	3.08E-07	0.00E+00	0.00E+00	7.51E-06
3046	ALL	753688.42	4042460.7	NonCancerChronicDerive	0.00E+00	7.20E-10	0.00E+00	0.00E+00	0.00E+00	5.21E-08	7.45E-06	0.00E+00	2.33E-09	0.00E+00	0.00E+00	3.06E-07	0.00E+00	0.00E+00	7.45E-06
3047	ALL	753788.42	4042460.7	NonCancerChronicDerive	0.00E+00	7.16E-10	0.00E+00	0.00E+00	0.00E+00	5.17E-08	7.40E-06	0.00E+00	2.32E-09	0.00E+00	0.00E+00	3.05E-07	0.00E+00	0.00E+00	7.40E-06
3048	ALL	753888.42	4042460.7	NonCancerChronicDerive	0.00E+00	7.12E-10	0.00E+00	0.00E+00	0.00E+00	5.13E-08	7.35E-06	0.00E+00	2.30E-09	0.00E+00	0.00E+00	3.03E-07	0.00E+00	0.00E+00	7.35E-06
3049	ALL	753988.42	4042460.7	NonCancerChronicDerive	0.00E+00	7.08E-10	0.00E+00	0.00E+00	0.00E+00	5.09E-08	7.30E-06	0.00E+00	2.29E-09	0.00E+00	0.00E+00	3.01E-07	0.00E+00	0.00E+00	7.30E-06
3050	ALL	748188.42	4042560.7	NonCancerChronicDerive	0.00E+00	1.12E-09	0.00E+00	0.00E+00	0.00E+00	8.48E-08	1.20E-05	0.00E+00	3.63E-09	0.00E+00	0.00E+00	4.77E-07	0.00E+00	0.00E+00	1.20E-05
3051	ALL	748288.42	4042560.7	NonCancerChronicDerive	0.00E+00	1.08E-09	0.00E+00	0.00E+00	0.00E+00	8.23E-08	1.17E-05	0.00E+00	3.51E-09	0.00E+00	0.00E+00	4.61E-07	0.00E+00	0.00E+00	1.17E-05
3052	ALL	748388.42	4042560.7	NonCancerChronicDerive	0.00E+00	1.05E-09	0.00E+00	0.00E+00	0.00E+00	7.99E-08	1.13E-05	0.00E+00	3.39E-09	0.00E+00	0.00E+00	4.45E-07	0.00E+00	0.00E+00	1.13E-05
3053	ALL	748488.42	4042560.7	NonCancerChronicDerive	0.00E+00	1.01E-09	0.00E+00	0.00E+00	0.00E+00	7.78E-08	1.10E-05	0.00E+00	3.27E-09	0.00E+00	0.00E+00	4.30E-07	0.00E+00	0.00E+00	1.10E-05
3054	ALL	753488.42	4042560.7	NonCancerChronicDerive	0.00E+00	7.10E-10	0.00E+00	0.00E+00	0.00E+00	5.17E-08	7.39E-06	0.00E+00	2.30E-09	0.00E+00	0.00E+00	3.02E-07	0.00E+00	0.00E+00	7.39E-06
3055	ALL	753588.42	4042560.7	NonCancerChronicDerive	0.00E+00	7.07E-10	0.00E+00	0.00E+00	0.00E+00	5.14E-08	7.35E-06	0.00E+00	2.29E-09	0.00E+00	0.00E+00	3.01E-07	0.00E+00	0.00E+00	7.35E-06
3056	ALL	753688.42	4042560.7	NonCancerChronicDerive	0.00E+00	7.04E-10	0.00E+00	0.00E+00	0.00E+00	5.10E-08	7.30E-06	0.00E+00	2.28E-09	0.00E+00	0.00E+00	2.99E-07	0.00E+00	0.00E+00	7.30E-06
3057	ALL	753788.42	4042560.7	NonCancerChronicDerive	0.00E+00	7.00E-10	0.00E+00	0.00E+00	0.00E+00	5.06E-08	7.25E-06	0.00E+00	2.27E-09	0.00E+00	0.00E+00	2.98E-07	0.00E+00	0.00E+00	7.25E-06
3058	ALL	753888.42	4042560.7	NonCancerChronicDerive	0.00E+00	6.97E-10	0.00E+00	0.00E+00	0.00E+00	5.03E-08	7.20E-06	0.00E+00	2.26E-09	0.00E+00	0.00E+00	2.96E-07	0.00E+00	0.00E+00	7.20E-06
3059	ALL	753988.42	4042560.7	NonCancerChronicDerive	0.00E+00	6.93E-10	0.00E+00	0.00E+00	0.00E+00	4.99E-08	7.15E-06	0.00E+00	2.24E-09	0.00E+00	0.00E+00	2.95E-07	0.00E+00	0.00E+00	7.15E-06
3060	ALL	748188.42	4042660.7	NonCancerChronicDerive	0.00E+00	1.08E-09	0.00E+00	0.00E+00	0.00E+00	8.16E-08	1.16E-05	0.00E+00	3.51E-09	0.00E+00	0.00E+00	4.61E-07	0.00E+00	0.00E+00	1.16E-05
3061	ALL	748288.42	4042660.7	NonCancerChronicDerive	0.00E+00	1.05E-09	0.00E+00	0.00E+00	0.00E+00	7.94E-08	1.13E-05	0.00E+00	3.40E-09	0.00E+00	0.00E+00	4.47E-07	0.00E+00	0.00E+00	1.13E-05
3062	ALL	748388.42	4042660.7	NonCancerChronicDerive	0.00E+00	1.01E-09	0.00E+00	0.00E+00	0.00E+00	7.72E-08	1.09E-05	0.00E+00	3.28E-09	0.00E+00	0.00E+00	4.32E-07	0.00E+00	0.00E+00	1.09E-05
3063	ALL	748488.42	4042660.7	NonCancerChronicDerive	0.00E+00	9.80E-10	0.00E+00	0.00E+00	0.00E+00	7.52E-08	1.06E-05	0.00E+00	3.17E-09	0.00E+00	0.00E+00	4.17E-07	0.00E+00	0.00E+00	1.06E-05
3064	ALL	753488.42	4042660.7	NonCancerChronicDerive	0.00E+00	6.94E-10	0.00E+00	0.00E+00	0.00E+00	5.06E-08	7.24E-06	0.00E+00	2.25E-09	0.00E+00	0.00E+00	2.96E-07	0.00E+00	0.00E+00	7.24E-06
3065	ALL	753588.42	4042660.7	NonCancerChronicDerive	0.00E+00	6.91E-10	0.00E+00	0.00E+00	0.00E+00	5.02E-08	7.19E-06	0.00E+00	2.24E-09	0.00E+00	0.00E+00	2.94E-07	0.00E+00	0.00E+00	7.19E-06
3066	ALL	753688.42	4042660.7	NonCancerChronicDerive	0.00E+00	6.87E-10	0.00E+00	0.00E+00	0.00E+00	4.99E-08	7.14E-06	0.00E+00	2.23E-09	0.00E+00	0.00E+00	2.92E-07	0.00E+00	0.00E+00	7.14E-06
3067	ALL	753788.42	4042660.7	NonCancerChronicDerive	0.00E+00	6.84E-10	0.00E+00	0.00E+00	0.00E+00	4.95E-08	7.09E-06	0.00E+00	2.21E-09	0.00E+00	0.00E+00	2.91E-07	0.00E+00	0.00E+00	7.09E-06
3068	ALL	753888.42	4042660.7	NonCancerChronicDerive	0.00E+00	6.81E-10	0.00E+00	0.00E+00	0.00E+00	4.92E-08	7.04E-06	0.00E+00	2.20E-09	0.00E+00	0.00E+00	2.90E-07	0.00E+00	0.00E+00	7.04E-06
3069	ALL	753988.42	4042660.7	NonCancerChronicDerive	0.00E+00	6.77E-10	0.00E+00	0.00E+00	0.00E+00	4.88E-08	7.00E-06	0.00E+00	2.19E-09	0.00E+00	0.00E+00	2.88E-07	0.00E+00	0.00E+00	7.00E-06
3070	ALL	748188.42	4042760.7	NonCancerChronicDerive	0.00E+00	1.05E-09	0.00E+00	0.00E+00	0.00E+00	7.87E-08	1.12E-05	0.00E+00	3.40E-09	0.00E+00	0.00E+00	4.47E-07	0.00E+00	0.00E+00	1.12E-05
3071	ALL	748288.42	4042760.7	NonCancerChronicDerive	0.00E+00	1.02E-09	0.00E+00	0.00E+00	0.00E+00	7.67E-08	1.09E-05	0.00E+00	3.29E-09	0.00E+00	0.00E+00	4.33E-07	0.00E+00	0.00E+00	1.09E-05
3072	ALL	748388.42	4042760.7	NonCancerChronicDerive	0.00E+00	9.84E-10	0.00E+00	0.00E+00	0.00E+00	7.47E-08	1.06E-05	0.00E+00	3.19E-09	0.00E+00	0.00E+00	4.19E-07	0.00E+00	0.00E+00	1.06E-05

3073	ALL	748488.42	4042760.7	NonCancerChronicDerive	0.00E+00	9.52E-10	0.00E+00	0.00E+00	0.00E+00	7.28E-08	1.03E-05	0.00E+00	3.08E-09	0.00E+00	0.00E+00	4.05E-07	0.00E+00	0.00E+00	1.03E-05
3074	ALL	753488.42	4042760.7	NonCancerChronicDerive	0.00E+00	6.81E-10	0.00E+00	0.00E+00	0.00E+00	4.96E-08	7.09E-06	0.00E+00	2.20E-09	0.00E+00	0.00E+00	2.90E-07	0.00E+00	0.00E+00	7.09E-06
3075	ALL	753588.42	4042760.7	NonCancerChronicDerive	0.00E+00	6.77E-10	0.00E+00	0.00E+00	0.00E+00	4.92E-08	7.04E-06	0.00E+00	2.19E-09	0.00E+00	0.00E+00	2.88E-07	0.00E+00	0.00E+00	7.04E-06
3076	ALL	753688.42	4042760.7	NonCancerChronicDerive	0.00E+00	6.73E-10	0.00E+00	0.00E+00	0.00E+00	4.89E-08	7.00E-06	0.00E+00	2.18E-09	0.00E+00	0.00E+00	2.87E-07	0.00E+00	0.00E+00	7.00E-06
3077	ALL	753788.42	4042760.7	NonCancerChronicDerive	0.00E+00	6.70E-10	0.00E+00	0.00E+00	0.00E+00	4.86E-08	6.95E-06	0.00E+00	2.17E-09	0.00E+00	0.00E+00	2.85E-07	0.00E+00	0.00E+00	6.95E-06
3078	ALL	753888.42	4042760.7	NonCancerChronicDerive	0.00E+00	6.67E-10	0.00E+00	0.00E+00	0.00E+00	4.82E-08	6.90E-06	0.00E+00	2.16E-09	0.00E+00	0.00E+00	2.84E-07	0.00E+00	0.00E+00	6.90E-06
3079	ALL	753988.42	4042760.7	NonCancerChronicDerive	0.00E+00	6.63E-10	0.00E+00	0.00E+00	0.00E+00	4.79E-08	6.86E-06	0.00E+00	2.15E-09	0.00E+00	0.00E+00	2.82E-07	0.00E+00	0.00E+00	6.86E-06
3080	ALL	748188.42	4042860.7	NonCancerChronicDerive	0.00E+00	1.02E-09	0.00E+00	0.00E+00	0.00E+00	7.62E-08	1.08E-05	0.00E+00	3.30E-09	0.00E+00	0.00E+00	4.33E-07	0.00E+00	0.00E+00	1.08E-05
3081	ALL	748288.42	4042860.7	NonCancerChronicDerive	0.00E+00	9.88E-10	0.00E+00	0.00E+00	0.00E+00	7.43E-08	1.05E-05	0.00E+00	3.20E-09	0.00E+00	0.00E+00	4.20E-07	0.00E+00	0.00E+00	1.05E-05
3082	ALL	748388.42	4042860.7	NonCancerChronicDerive	0.00E+00	9.57E-10	0.00E+00	0.00E+00	0.00E+00	7.24E-08	1.02E-05	0.00E+00	3.10E-09	0.00E+00	0.00E+00	4.07E-07	0.00E+00	0.00E+00	1.02E-05
3083	ALL	748488.42	4042860.7	NonCancerChronicDerive	0.00E+00	9.27E-10	0.00E+00	0.00E+00	0.00E+00	7.06E-08	9.97E-06	0.00E+00	3.00E-09	0.00E+00	0.00E+00	3.94E-07	0.00E+00	0.00E+00	9.97E-06
3084	ALL	753488.42	4042860.7	NonCancerChronicDerive	0.00E+00	6.69E-10	0.00E+00	0.00E+00	0.00E+00	4.87E-08	6.97E-06	0.00E+00	2.16E-09	0.00E+00	0.00E+00	2.85E-07	0.00E+00	0.00E+00	6.97E-06
3085	ALL	753588.42	4042860.7	NonCancerChronicDerive	0.00E+00	6.64E-10	0.00E+00	0.00E+00	0.00E+00	4.83E-08	6.92E-06	0.00E+00	2.15E-09	0.00E+00	0.00E+00	2.83E-07	0.00E+00	0.00E+00	6.92E-06
3086	ALL	753688.42	4042860.7	NonCancerChronicDerive	0.00E+00	6.60E-10	0.00E+00	0.00E+00	0.00E+00	4.80E-08	6.87E-06	0.00E+00	2.14E-09	0.00E+00	0.00E+00	2.81E-07	0.00E+00	0.00E+00	6.87E-06
3087	ALL	753788.42	4042860.7	NonCancerChronicDerive	0.00E+00	6.57E-10	0.00E+00	0.00E+00	0.00E+00	4.76E-08	6.82E-06	0.00E+00	2.13E-09	0.00E+00	0.00E+00	2.80E-07	0.00E+00	0.00E+00	6.82E-06
3088	ALL	753888.42	4042860.7	NonCancerChronicDerive	0.00E+00	6.54E-10	0.00E+00	0.00E+00	0.00E+00	4.73E-08	6.78E-06	0.00E+00	2.12E-09	0.00E+00	0.00E+00	2.78E-07	0.00E+00	0.00E+00	6.78E-06
3089	ALL	753988.42	4042860.7	NonCancerChronicDerive	0.00E+00	6.50E-10	0.00E+00	0.00E+00	0.00E+00	4.70E-08	6.73E-06	0.00E+00	2.11E-09	0.00E+00	0.00E+00	2.77E-07	0.00E+00	0.00E+00	6.73E-06
3090	ALL	748188.42	4042960.7	NonCancerChronicDerive	0.00E+00	9.89E-10	0.00E+00	0.00E+00	0.00E+00	7.38E-08	1.05E-05	0.00E+00	3.20E-09	0.00E+00	0.00E+00	4.21E-07	0.00E+00	0.00E+00	1.05E-05
3091	ALL	748288.42	4042960.7	NonCancerChronicDerive	0.00E+00	9.61E-10	0.00E+00	0.00E+00	0.00E+00	7.20E-08	1.02E-05	0.00E+00	3.11E-09	0.00E+00	0.00E+00	4.09E-07	0.00E+00	0.00E+00	1.02E-05
3092	ALL	748388.42	4042960.7	NonCancerChronicDerive	0.00E+00	9.32E-10	0.00E+00	0.00E+00	0.00E+00	7.03E-08	9.95E-06	0.00E+00	3.02E-09	0.00E+00	0.00E+00	3.96E-07	0.00E+00	0.00E+00	9.95E-06
3093	ALL	748488.42	4042960.7	NonCancerChronicDerive	0.00E+00	9.03E-10	0.00E+00	0.00E+00	0.00E+00	6.87E-08	9.69E-06	0.00E+00	2.92E-09	0.00E+00	0.00E+00	3.84E-07	0.00E+00	0.00E+00	9.69E-06
3094	ALL	753488.42	4042960.7	NonCancerChronicDerive	0.00E+00	6.58E-10	0.00E+00	0.00E+00	0.00E+00	4.78E-08	6.85E-06	0.00E+00	2.13E-09	0.00E+00	0.00E+00	2.80E-07	0.00E+00	0.00E+00	6.85E-06
3095	ALL	753588.42	4042960.7	NonCancerChronicDerive	0.00E+00	6.53E-10	0.00E+00	0.00E+00	0.00E+00	4.75E-08	6.80E-06	0.00E+00	2.11E-09	0.00E+00	0.00E+00	2.78E-07	0.00E+00	0.00E+00	6.80E-06
3096	ALL	753688.42	4042960.7	NonCancerChronicDerive	0.00E+00	6.49E-10	0.00E+00	0.00E+00	0.00E+00	4.71E-08	6.75E-06	0.00E+00	2.10E-09	0.00E+00	0.00E+00	2.76E-07	0.00E+00	0.00E+00	6.75E-06
3097	ALL	753788.42	4042960.7	NonCancerChronicDerive	0.00E+00	6.45E-10	0.00E+00	0.00E+00	0.00E+00	4.68E-08	6.70E-06	0.00E+00	2.09E-09	0.00E+00	0.00E+00	2.74E-07	0.00E+00	0.00E+00	6.70E-06
3098	ALL	753888.42	4042960.7	NonCancerChronicDerive	0.00E+00	6.42E-10	0.00E+00	0.00E+00	0.00E+00	4.65E-08	6.65E-06	0.00E+00	2.08E-09	0.00E+00	0.00E+00	2.73E-07	0.00E+00	0.00E+00	6.65E-06
3099	ALL	753988.42	4042960.7	NonCancerChronicDerive	0.00E+00	6.38E-10	0.00E+00	0.00E+00	0.00E+00	4.61E-08	6.61E-06	0.00E+00	2.07E-09	0.00E+00	0.00E+00	2.71E-07	0.00E+00	0.00E+00	6.61E-06
3100	ALL	748188.42	4043060.7	NonCancerChronicDerive	0.00E+00	9.63E-10	0.00E+00	0.00E+00	0.00E+00	7.16E-08	1.02E-05	0.00E+00	3.12E-09	0.00E+00	0.00E+00	4.10E-07	0.00E+00	0.00E+00	1.02E-05
3101	ALL	748288.42	4043060.7	NonCancerChronicDerive	0.00E+00	9.36E-10	0.00E+00	0.00E+00	0.00E+00	7.00E-08	9.93E-06	0.00E+00	3.03E-09	0.00E+00	0.00E+00	3.98E-07	0.00E+00	0.00E+00	9.93E-06
3102	ALL	748388.42	4043060.7	NonCancerChronicDerive	0.00E+00	9.08E-10	0.00E+00	0.00E+00	0.00E+00	6.83E-08	9.67E-06	0.00E+00	2.94E-09	0.00E+00	0.00E+00	3.86E-07	0.00E+00	0.00E+00	9.67E-06
3103	ALL	748488.42	4043060.7	NonCancerChronicDerive	0.00E+00	8.81E-10	0.00E+00	0.00E+00	0.00E+00	6.68E-08	9.44E-06	0.00E+00	2.85E-09	0.00E+00	0.00E+00	3.75E-07	0.00E+00	0.00E+00	9.44E-06
3104	ALL	753488.42	4043060.7	NonCancerChronicDerive	0.00E+00	6.49E-10	0.00E+00	0.00E+00	0.00E+00	4.71E-08	6.75E-06	0.00E+00	2.10E-09	0.00E+00	0.00E+00	2.76E-07	0.00E+00	0.00E+00	6.75E-06
3105	ALL	753588.42	4043060.7	NonCancerChronicDerive	0.00E+00	6.44E-10	0.00E+00	0.00E+00	0.00E+00	4.67E-08	6.69E-06	0.00E+00	2.08E-09	0.00E+00	0.00E+00	2.74E-07	0.00E+00	0.00E+00	6.69E-06
3106	ALL	753688.42	4043060.7	NonCancerChronicDerive	0.00E+00	6.39E-10	0.00E+00	0.00E+00	0.00E+00	4.63E-08	6.64E-06	0.00E+00	2.07E-09	0.00E+00	0.00E+00	2.72E-07	0.00E+00	0.00E+00	6.64E-06
3107	ALL	753788.42	4043060.7	NonCancerChronicDerive	0.00E+00	6.35E-10	0.00E+00	0.00E+00	0.00E+00	4.60E-08	6.59E-06	0.00E+00	2.05E-09	0.00E+00	0.00E+00	2.70E-07	0.00E+00	0.00E+00	6.59E-06
3108	ALL	753888.42	4043060.7	NonCancerChronicDerive	0.00E+00	6.31E-10	0.00E+00	0.00E+00	0.00E+00	4.57E-08	6.54E-06	0.00E+00	2.04E-09	0.00E+00	0.00E+00	2.68E-07	0.00E+00	0.00E+00	6.54E-06
3109	ALL	753988.42	4043060.7	NonCancerChronicDerive	0.00E+00	6.27E-10	0.00E+00	0.00E+00	0.00E+00	4.53E-08	6.49E-06	0.00E+00	2.03E-09	0.00E+00	0.00E+00	2.67E-07	0.00E+00	0.00E+00	6.49E-06
3110	ALL	748188.42	4043160.7	NonCancerChronicDerive	0.00E+00	9.38E-10	0.00E+00	0.00E+00	0.00E+00	6.96E-08	9.89E-06	0.00E+00	3.04E-09	0.00E+00	0.00E+00	3.99E-07	0.00E+00	0.00E+00	9.89E-06
3111	ALL	748288.42	4043160.7	NonCancerChronicDerive	0.00E+00	9.12E-10	0.00E+00	0.00E+00	0.00E+00	6.80E-08	9.66E-06	0.00E+00	2.95E-09	0.00E+00	0.00E+00	3.88E-07	0.00E+00	0.00E+00	9.66E-06
3112	ALL	748388.42	4043160.7	NonCancerChronicDerive	0.00E+00	8.86E-10	0.00E+00	0.00E+00	0.00E+00	6.65E-08	9.42E-06	0.00E+00	2.87E-09	0.00E+00	0.00E+00	3.77E-07	0.00E+00	0.00E+00	9.42E-06
3113	ALL	748488.42	4043160.7	NonCancerChronicDerive	0.00E+00	8.61E-10	0.00E+00	0.00E+00	0.00E+00	6.51E-08	9.20E-06	0.00E+00	2.79E-09	0.00E+00	0.00E+00	3.66E-07	0.00E+00	0.00E+00	9.20E-06
3114	ALL	753488.42	4043160.7	NonCancerChronicDerive	0.00E+00	6.40E-10	0.00E+00	0.00E+00	0.00E+00	4.63E-08	6.65E-06	0.00E+00	2.07E-09	0.00E+00	0.00E+00	2.72E-07	0.00E+00	0.00E+00	6.65E-06
3115	ALL	753588.42	4043160.7	NonCancerChronicDerive	0.00E+00	6.35E-10	0.00E+00	0.00E+00	0.00E+00	4.60E-08	6.59E-06	0.00E+00	2.06E-09	0.00E+00	0.00E+00	2.70E-07	0.00E+00	0.00E+00	6.59E-06
3116	ALL	753688.42	4043160.7	NonCancerChronicDerive	0.00E+00	6.30E-10	0.00E+00	0.00E+00	0.00E+00	4.56E-08	6.54E-06	0.00E+00	2.04E-09	0.00E+00	0.00E+00	2.68E-07	0.00E+00	0.00E+00	6.54E-06
3117	ALL	753788.42	4043160.7	NonCancerChronicDerive	0.00E+00	6.25E-10	0.00E+00	0.00E+00	0.00E+00	4.53E-08	6.49E-06	0.00E+00	2.02E-09	0.00E+00	0.00E+00	2.66E-07	0.00E+00	0.00E+00	6.49E-06
3118	ALL	753888.42	4043160.7	NonCancerChronicDerive	0.00E+00	6.21E-10	0.00E+00	0.00E+00	0.00E+00	4.49E-08	6.44E-06	0.00E+00	2.01E-09	0.00E+00	0.00E+00	2.64E-07	0.00E+00	0.00E+00	6.44E-06
3119	ALL	753988.42	4043160.7	NonCancerChronicDerive	0.00E+00	6.17E-10	0.00E+00	0.00E+00	0.00E+00	4.46E-08	6.39E-06	0.00E+00	2.00E-09	0.00E+00	0.00E+00	2.63E-07	0.00E+00	0.00E+00	6.39E-06
3120	ALL	748188.42	4043260.7	NonCancerChronicDerive	0.00E+00	9.14E-10	0.00E+00	0.00E+00	0.00E+00	6.77E-08	9.62E-06	0.00E+00	2.96E-09	0.00E+00	0.00E+00	3.89E-07	0.00E+00	0.00E+00	9.62E-06
3121	ALL	748288.42	4043260.7	NonCancerChronicDerive	0.00E+00	8.89E-10	0.00E+00	0.00E+00	0.00E+00	6.62E-08	9.40E-06	0.00E+00	2.88E-09	0.00E+00	0.00E+00	3.78E-07	0.00E+00	0.00E+00	9.40E-06
3122	ALL	748388.42	4043260.7	NonCancerChronicDerive	0.00E+00	8.64E-10	0.00E+00	0.00E+00	0.00E+00	6.47E-08	9.17E-06	0.00E+00	2.80E-09	0.00E+00	0.00E+00	3.68E-07	0.00E+00	0.00E+00	9.17E-06
3123	ALL	748488.42	4043260.7	NonCancerChronicDerive	0.00E+00	8.40E-10	0.00E+00	0.00E+00	0.00E+00	6.34E-08	8.96E-06	0.00E+00	2.72E-09	0.00E+00	0.00E+00	3.57E-07	0.00E+00	0.00E+00	8.96E-06
3124	ALL	753488.42	4043260.7	NonCancerChronicDerive	0.00E+00	6.31E-10	0.00E+00	0.00E+00	0.00E+00	4.56E-08	6.55E-06	0.00E+00	2.04E-09	0.00E+00	0.00E+00	2.69E-07	0.00E+00	0.00E+00	6.55E-06
3125	ALL	753588.42	4043260.7	NonCancerChronicDerive	0.00E+00	6.27E-10	0.00E+00	0.00E+00	0.00E+00	4.53E-08	6.50E-06	0.00E+00	2.03E-09	0.00E+00	0.00E+00	2.67E-07	0.00E+00	0.00E+00	6.50E-06

3126	ALL	753688.42	4043260.7	NonCancerChronicDerive	0.00E+00	6.22E-10	0.00E+00	0.00E+00	0.00E+00	4.49E-08	6.45E-06	0.00E+00	2.01E-09	0.00E+00	0.00E+00	2.65E-07	0.00E+00	0.00E+00	6.45E-06
3127	ALL	753788.42	4043260.7	NonCancerChronicDerive	0.00E+00	6.17E-10	0.00E+00	0.00E+00	0.00E+00	4.46E-08	6.40E-06	0.00E+00	2.00E-09	0.00E+00	0.00E+00	2.63E-07	0.00E+00	0.00E+00	6.40E-06
3128	ALL	753888.42	4043260.7	NonCancerChronicDerive	0.00E+00	6.13E-10	0.00E+00	0.00E+00	0.00E+00	4.43E-08	6.35E-06	0.00E+00	1.98E-09	0.00E+00	0.00E+00	2.61E-07	0.00E+00	0.00E+00	6.35E-06
3129	ALL	753988.42	4043260.7	NonCancerChronicDerive	0.00E+00	6.08E-10	0.00E+00	0.00E+00	0.00E+00	4.39E-08	6.30E-06	0.00E+00	1.97E-09	0.00E+00	0.00E+00	2.59E-07	0.00E+00	0.00E+00	6.30E-06
3130	ALL	748188.42	4043360.7	NonCancerChronicDerive	0.00E+00	8.91E-10	0.00E+00	0.00E+00	0.00E+00	6.59E-08	9.37E-06	0.00E+00	2.88E-09	0.00E+00	0.00E+00	3.79E-07	0.00E+00	0.00E+00	9.37E-06
3131	ALL	748288.42	4043360.7	NonCancerChronicDerive	0.00E+00	8.68E-10	0.00E+00	0.00E+00	0.00E+00	6.45E-08	9.16E-06	0.00E+00	2.81E-09	0.00E+00	0.00E+00	3.69E-07	0.00E+00	0.00E+00	9.16E-06
3132	ALL	748388.42	4043360.7	NonCancerChronicDerive	0.00E+00	8.44E-10	0.00E+00	0.00E+00	0.00E+00	6.31E-08	8.94E-06	0.00E+00	2.73E-09	0.00E+00	0.00E+00	3.59E-07	0.00E+00	0.00E+00	8.94E-06
3133	ALL	748488.42	4043360.7	NonCancerChronicDerive	0.00E+00	8.21E-10	0.00E+00	0.00E+00	0.00E+00	6.18E-08	8.74E-06	0.00E+00	2.66E-09	0.00E+00	0.00E+00	3.49E-07	0.00E+00	0.00E+00	8.74E-06
3134	ALL	752688.42	4043360.7	NonCancerChronicDerive	0.00E+00	6.30E-10	0.00E+00	0.00E+00	0.00E+00	4.57E-08	6.58E-06	0.00E+00	2.04E-09	0.00E+00	0.00E+00	2.68E-07	0.00E+00	0.00E+00	6.58E-06
3135	ALL	752788.42	4043360.7	NonCancerChronicDerive	0.00E+00	6.32E-10	0.00E+00	0.00E+00	0.00E+00	4.58E-08	6.58E-06	0.00E+00	2.05E-09	0.00E+00	0.00E+00	2.69E-07	0.00E+00	0.00E+00	6.58E-06
3136	ALL	752888.42	4043360.7	NonCancerChronicDerive	0.00E+00	6.33E-10	0.00E+00	0.00E+00	0.00E+00	4.58E-08	6.59E-06	0.00E+00	2.05E-09	0.00E+00	0.00E+00	2.69E-07	0.00E+00	0.00E+00	6.59E-06
3137	ALL	752988.42	4043360.7	NonCancerChronicDerive	0.00E+00	6.33E-10	0.00E+00	0.00E+00	0.00E+00	4.57E-08	6.58E-06	0.00E+00	2.05E-09	0.00E+00	0.00E+00	2.69E-07	0.00E+00	0.00E+00	6.58E-06
3138	ALL	753088.42	4043360.7	NonCancerChronicDerive	0.00E+00	6.32E-10	0.00E+00	0.00E+00	0.00E+00	4.56E-08	6.57E-06	0.00E+00	2.05E-09	0.00E+00	0.00E+00	2.69E-07	0.00E+00	0.00E+00	6.57E-06
3139	ALL	753188.42	4043360.7	NonCancerChronicDerive	0.00E+00	6.31E-10	0.00E+00	0.00E+00	0.00E+00	4.55E-08	6.54E-06	0.00E+00	2.04E-09	0.00E+00	0.00E+00	2.68E-07	0.00E+00	0.00E+00	6.54E-06
3140	ALL	753488.42	4043360.7	NonCancerChronicDerive	0.00E+00	6.22E-10	0.00E+00	0.00E+00	0.00E+00	4.48E-08	6.45E-06	0.00E+00	2.01E-09	0.00E+00	0.00E+00	2.65E-07	0.00E+00	0.00E+00	6.45E-06
3141	ALL	753588.42	4043360.7	NonCancerChronicDerive	0.00E+00	6.18E-10	0.00E+00	0.00E+00	0.00E+00	4.45E-08	6.40E-06	0.00E+00	2.00E-09	0.00E+00	0.00E+00	2.63E-07	0.00E+00	0.00E+00	6.40E-06
3142	ALL	753688.42	4043360.7	NonCancerChronicDerive	0.00E+00	6.14E-10	0.00E+00	0.00E+00	0.00E+00	4.42E-08	6.36E-06	0.00E+00	1.99E-09	0.00E+00	0.00E+00	2.61E-07	0.00E+00	0.00E+00	6.36E-06
3143	ALL	753788.42	4043360.7	NonCancerChronicDerive	0.00E+00	6.10E-10	0.00E+00	0.00E+00	0.00E+00	4.39E-08	6.31E-06	0.00E+00	1.97E-09	0.00E+00	0.00E+00	2.59E-07	0.00E+00	0.00E+00	6.31E-06
3144	ALL	753888.42	4043360.7	NonCancerChronicDerive	0.00E+00	6.05E-10	0.00E+00	0.00E+00	0.00E+00	4.36E-08	6.26E-06	0.00E+00	1.96E-09	0.00E+00	0.00E+00	2.58E-07	0.00E+00	0.00E+00	6.26E-06
3145	ALL	753988.42	4043360.7	NonCancerChronicDerive	0.00E+00	6.01E-10	0.00E+00	0.00E+00	0.00E+00	4.33E-08	6.22E-06	0.00E+00	1.94E-09	0.00E+00	0.00E+00	2.56E-07	0.00E+00	0.00E+00	6.22E-06
3146	ALL	748188.42	4043460.7	NonCancerChronicDerive	0.00E+00	8.70E-10	0.00E+00	0.00E+00	0.00E+00	6.42E-08	9.14E-06	0.00E+00	2.82E-09	0.00E+00	0.00E+00	3.70E-07	0.00E+00	0.00E+00	9.14E-06
3147	ALL	748288.42	4043460.7	NonCancerChronicDerive	0.00E+00	8.47E-10	0.00E+00	0.00E+00	0.00E+00	6.29E-08	8.93E-06	0.00E+00	2.74E-09	0.00E+00	0.00E+00	3.61E-07	0.00E+00	0.00E+00	8.93E-06
3148	ALL	748388.42	4043460.7	NonCancerChronicDerive	0.00E+00	8.25E-10	0.00E+00	0.00E+00	0.00E+00	6.16E-08	8.73E-06	0.00E+00	2.67E-09	0.00E+00	0.00E+00	3.51E-07	0.00E+00	0.00E+00	8.73E-06
3149	ALL	748488.42	4043460.7	NonCancerChronicDerive	0.00E+00	8.03E-10	0.00E+00	0.00E+00	0.00E+00	6.04E-08	8.54E-06	0.00E+00	2.60E-09	0.00E+00	0.00E+00	3.42E-07	0.00E+00	0.00E+00	8.54E-06
3150	ALL	752688.42	4043460.7	NonCancerChronicDerive	0.00E+00	6.13E-10	0.00E+00	0.00E+00	0.00E+00	4.45E-08	6.39E-06	0.00E+00	1.98E-09	0.00E+00	0.00E+00	2.61E-07	0.00E+00	0.00E+00	6.39E-06
3151	ALL	752788.42	4043460.7	NonCancerChronicDerive	0.00E+00	6.15E-10	0.00E+00	0.00E+00	0.00E+00	4.46E-08	6.41E-06	0.00E+00	1.99E-09	0.00E+00	0.00E+00	2.62E-07	0.00E+00	0.00E+00	6.41E-06
3152	ALL	752888.42	4043460.7	NonCancerChronicDerive	0.00E+00	6.17E-10	0.00E+00	0.00E+00	0.00E+00	4.46E-08	6.41E-06	0.00E+00	2.00E-09	0.00E+00	0.00E+00	2.62E-07	0.00E+00	0.00E+00	6.41E-06
3153	ALL	752988.42	4043460.7	NonCancerChronicDerive	0.00E+00	6.18E-10	0.00E+00	0.00E+00	0.00E+00	4.46E-08	6.42E-06	0.00E+00	2.00E-09	0.00E+00	0.00E+00	2.63E-07	0.00E+00	0.00E+00	6.42E-06
3154	ALL	753088.42	4043460.7	NonCancerChronicDerive	0.00E+00	6.18E-10	0.00E+00	0.00E+00	0.00E+00	4.45E-08	6.41E-06	0.00E+00	2.00E-09	0.00E+00	0.00E+00	2.63E-07	0.00E+00	0.00E+00	6.41E-06
3155	ALL	753188.42	4043460.7	NonCancerChronicDerive	0.00E+00	6.17E-10	0.00E+00	0.00E+00	0.00E+00	4.45E-08	6.40E-06	0.00E+00	2.00E-09	0.00E+00	0.00E+00	2.63E-07	0.00E+00	0.00E+00	6.40E-06
3156	ALL	753288.42	4043460.7	NonCancerChronicDerive	0.00E+00	6.16E-10	0.00E+00	0.00E+00	0.00E+00	4.43E-08	6.38E-06	0.00E+00	1.99E-09	0.00E+00	0.00E+00	2.62E-07	0.00E+00	0.00E+00	6.38E-06
3157	ALL	753388.42	4043460.7	NonCancerChronicDerive	0.00E+00	6.14E-10	0.00E+00	0.00E+00	0.00E+00	4.42E-08	6.36E-06	0.00E+00	1.99E-09	0.00E+00	0.00E+00	2.61E-07	0.00E+00	0.00E+00	6.36E-06
3158	ALL	753488.42	4043460.7	NonCancerChronicDerive	0.00E+00	6.12E-10	0.00E+00	0.00E+00	0.00E+00	4.40E-08	6.33E-06	0.00E+00	1.98E-09	0.00E+00	0.00E+00	2.60E-07	0.00E+00	0.00E+00	6.33E-06
3159	ALL	753588.42	4043460.7	NonCancerChronicDerive	0.00E+00	6.09E-10	0.00E+00	0.00E+00	0.00E+00	4.38E-08	6.30E-06	0.00E+00	1.97E-09	0.00E+00	0.00E+00	2.59E-07	0.00E+00	0.00E+00	6.30E-06
3160	ALL	753688.42	4043460.7	NonCancerChronicDerive	0.00E+00	6.05E-10	0.00E+00	0.00E+00	0.00E+00	4.35E-08	6.26E-06	0.00E+00	1.96E-09	0.00E+00	0.00E+00	2.58E-07	0.00E+00	0.00E+00	6.26E-06
3161	ALL	753788.42	4043460.7	NonCancerChronicDerive	0.00E+00	6.01E-10	0.00E+00	0.00E+00	0.00E+00	4.32E-08	6.22E-06	0.00E+00	1.95E-09	0.00E+00	0.00E+00	2.56E-07	0.00E+00	0.00E+00	6.22E-06
3162	ALL	753888.42	4043460.7	NonCancerChronicDerive	0.00E+00	5.97E-10	0.00E+00	0.00E+00	0.00E+00	4.29E-08	6.17E-06	0.00E+00	1.93E-09	0.00E+00	0.00E+00	2.54E-07	0.00E+00	0.00E+00	6.17E-06
3163	ALL	753988.42	4043460.7	NonCancerChronicDerive	0.00E+00	5.93E-10	0.00E+00	0.00E+00	0.00E+00	4.27E-08	6.13E-06	0.00E+00	1.92E-09	0.00E+00	0.00E+00	2.52E-07	0.00E+00	0.00E+00	6.13E-06
3164	ALL	748188.42	4043560.7	NonCancerChronicDerive	0.00E+00	8.49E-10	0.00E+00	0.00E+00	0.00E+00	6.26E-08	8.91E-06	0.00E+00	2.75E-09	0.00E+00	0.00E+00	3.61E-07	0.00E+00	0.00E+00	8.91E-06
3165	ALL	748288.42	4043560.7	NonCancerChronicDerive	0.00E+00	8.28E-10	0.00E+00	0.00E+00	0.00E+00	6.14E-08	8.72E-06	0.00E+00	2.68E-09	0.00E+00	0.00E+00	3.52E-07	0.00E+00	0.00E+00	8.72E-06
3166	ALL	748388.42	4043560.7	NonCancerChronicDerive	0.00E+00	8.07E-10	0.00E+00	0.00E+00	0.00E+00	6.01E-08	8.53E-06	0.00E+00	2.61E-09	0.00E+00	0.00E+00	3.43E-07	0.00E+00	0.00E+00	8.53E-06
3167	ALL	748488.42	4043560.7	NonCancerChronicDerive	0.00E+00	7.86E-10	0.00E+00	0.00E+00	0.00E+00	5.90E-08	8.35E-06	0.00E+00	2.54E-09	0.00E+00	0.00E+00	3.34E-07	0.00E+00	0.00E+00	8.35E-06
3168	ALL	752688.42	4043560.7	NonCancerChronicDerive	0.00E+00	5.96E-10	0.00E+00	0.00E+00	0.00E+00	4.33E-08	6.23E-06	0.00E+00	1.93E-09	0.00E+00	0.00E+00	2.54E-07	0.00E+00	0.00E+00	6.23E-06
3169	ALL	752788.42	4043560.7	NonCancerChronicDerive	0.00E+00	5.99E-10	0.00E+00	0.00E+00	0.00E+00	4.34E-08	6.24E-06	0.00E+00	1.94E-09	0.00E+00	0.00E+00	2.55E-07	0.00E+00	0.00E+00	6.24E-06
3170	ALL	752888.42	4043560.7	NonCancerChronicDerive	0.00E+00	6.01E-10	0.00E+00	0.00E+00	0.00E+00	4.35E-08	6.25E-06	0.00E+00	1.94E-09	0.00E+00	0.00E+00	2.56E-07	0.00E+00	0.00E+00	6.25E-06
3171	ALL	752988.42	4043560.7	NonCancerChronicDerive	0.00E+00	6.02E-10	0.00E+00	0.00E+00	0.00E+00	4.35E-08	6.26E-06	0.00E+00	1.95E-09	0.00E+00	0.00E+00	2.56E-07	0.00E+00	0.00E+00	6.26E-06
3172	ALL	753088.42	4043560.7	NonCancerChronicDerive	0.00E+00	6.03E-10	0.00E+00	0.00E+00	0.00E+00	4.35E-08	6.26E-06	0.00E+00	1.95E-09	0.00E+00	0.00E+00	2.57E-07	0.00E+00	0.00E+00	6.26E-06
3173	ALL	753188.42	4043560.7	NonCancerChronicDerive	0.00E+00	6.04E-10	0.00E+00	0.00E+00	0.00E+00	4.34E-08	6.26E-06	0.00E+00	1.95E-09	0.00E+00	0.00E+00	2.57E-07	0.00E+00	0.00E+00	6.26E-06
3174	ALL	753288.42	4043560.7	NonCancerChronicDerive	0.00E+00	6.03E-10	0.00E+00	0.00E+00	0.00E+00	4.34E-08	6.25E-06	0.00E+00	1.95E-09	0.00E+00	0.00E+00	2.57E-07	0.00E+00	0.00E+00	6.25E-06
3175	ALL	753388.42	4043560.7	NonCancerChronicDerive	0.00E+00	6.02E-10	0.00E+00	0.00E+00	0.00E+00	4.33E-08	6.23E-06	0.00E+00	1.95E-09	0.00E+00	0.00E+00	2.56E-07	0.00E+00	0.00E+00	6.23E-06
3176	ALL	753488.42	4043560.7	NonCancerChronicDerive	0.00E+00	6.01E-10	0.00E+00	0.00E+00	0.00E+00	4.32E-08	6.22E-06	0.00E+00	1.95E-09	0.00E+00	0.00E+00	2.56E-07	0.00E+00	0.00E+00	6.22E-06
3177	ALL	753588.42	4043560.7	NonCancerChronicDerive	0.00E+00	5.99E-10	0.00E+00	0.00E+00	0.00E+00	4.30E-08	6.19E-06	0.00E+00	1.94E-09	0.00E+00	0.00E+00	2.55E-07	0.00E+00	0.00E+00	6.19E-06
3178	ALL	753688.42	4043560.7	NonCancerChronicDerive	0.00E+00	5.96E-10	0.00E+00	0.00E+00	0.00E+00	4.28E-08	6.16E-06	0.00E+00	1.93E-09	0.00E+00	0.00E+00	2.54E-07	0.00E+00	0.00E+00	6.16E-06

3179	ALL	753788.42	4043560.7	NonCancerChronicDerive	0.00E+00	5.93E-10	0.00E+00	0.00E+00	0.00E+00	4.26E-08	6.13E-06	0.00E+00	1.92E-09	0.00E+00	0.00E+00	2.52E-07	0.00E+00	0.00E+00	6.13E-06
3180	ALL	753888.42	4043560.7	NonCancerChronicDerive	0.00E+00	5.90E-10	0.00E+00	0.00E+00	0.00E+00	4.23E-08	6.09E-06	0.00E+00	1.91E-09	0.00E+00	0.00E+00	2.51E-07	0.00E+00	0.00E+00	6.09E-06
3181	ALL	753988.42	4043560.7	NonCancerChronicDerive	0.00E+00	5.86E-10	0.00E+00	0.00E+00	0.00E+00	4.21E-08	6.05E-06	0.00E+00	1.90E-09	0.00E+00	0.00E+00	2.49E-07	0.00E+00	0.00E+00	6.05E-06
3182	ALL	748188.42	4043660.7	NonCancerChronicDerive	0.00E+00	8.30E-10	0.00E+00	0.00E+00	0.00E+00	6.11E-08	8.70E-06	0.00E+00	2.69E-09	0.00E+00	0.00E+00	3.53E-07	0.00E+00	0.00E+00	8.70E-06
3183	ALL	748288.42	4043660.7	NonCancerChronicDerive	0.00E+00	8.10E-10	0.00E+00	0.00E+00	0.00E+00	5.99E-08	8.52E-06	0.00E+00	2.62E-09	0.00E+00	0.00E+00	3.45E-07	0.00E+00	0.00E+00	8.52E-06
3184	ALL	748388.42	4043660.7	NonCancerChronicDerive	0.00E+00	7.89E-10	0.00E+00	0.00E+00	0.00E+00	5.88E-08	8.33E-06	0.00E+00	2.56E-09	0.00E+00	0.00E+00	3.36E-07	0.00E+00	0.00E+00	8.33E-06
3185	ALL	748488.42	4043660.7	NonCancerChronicDerive	0.00E+00	7.70E-10	0.00E+00	0.00E+00	0.00E+00	5.76E-08	8.16E-06	0.00E+00	2.49E-09	0.00E+00	0.00E+00	3.28E-07	0.00E+00	0.00E+00	8.16E-06
3186	ALL	752688.42	4043660.7	NonCancerChronicDerive	0.00E+00	5.81E-10	0.00E+00	0.00E+00	0.00E+00	4.22E-08	6.07E-06	0.00E+00	1.88E-09	0.00E+00	0.00E+00	2.47E-07	0.00E+00	0.00E+00	6.07E-06
3187	ALL	752788.42	4043660.7	NonCancerChronicDerive	0.00E+00	5.83E-10	0.00E+00	0.00E+00	0.00E+00	4.23E-08	6.08E-06	0.00E+00	1.89E-09	0.00E+00	0.00E+00	2.48E-07	0.00E+00	0.00E+00	6.08E-06
3188	ALL	752888.42	4043660.7	NonCancerChronicDerive	0.00E+00	5.85E-10	0.00E+00	0.00E+00	0.00E+00	4.24E-08	6.09E-06	0.00E+00	1.89E-09	0.00E+00	0.00E+00	2.49E-07	0.00E+00	0.00E+00	6.09E-06
3189	ALL	752988.42	4043660.7	NonCancerChronicDerive	0.00E+00	5.87E-10	0.00E+00	0.00E+00	0.00E+00	4.24E-08	6.10E-06	0.00E+00	1.90E-09	0.00E+00	0.00E+00	2.50E-07	0.00E+00	0.00E+00	6.10E-06
3190	ALL	753088.42	4043660.7	NonCancerChronicDerive	0.00E+00	5.89E-10	0.00E+00	0.00E+00	0.00E+00	4.24E-08	6.11E-06	0.00E+00	1.91E-09	0.00E+00	0.00E+00	2.50E-07	0.00E+00	0.00E+00	6.11E-06
3191	ALL	753188.42	4043660.7	NonCancerChronicDerive	0.00E+00	5.89E-10	0.00E+00	0.00E+00	0.00E+00	4.24E-08	6.11E-06	0.00E+00	1.91E-09	0.00E+00	0.00E+00	2.51E-07	0.00E+00	0.00E+00	6.11E-06
3192	ALL	753288.42	4043660.7	NonCancerChronicDerive	0.00E+00	5.90E-10	0.00E+00	0.00E+00	0.00E+00	4.24E-08	6.11E-06	0.00E+00	1.91E-09	0.00E+00	0.00E+00	2.51E-07	0.00E+00	0.00E+00	6.11E-06
3193	ALL	753388.42	4043660.7	NonCancerChronicDerive	0.00E+00	5.90E-10	0.00E+00	0.00E+00	0.00E+00	4.24E-08	6.10E-06	0.00E+00	1.91E-09	0.00E+00	0.00E+00	2.51E-07	0.00E+00	0.00E+00	6.10E-06
3194	ALL	753488.42	4043660.7	NonCancerChronicDerive	0.00E+00	5.90E-10	0.00E+00	0.00E+00	0.00E+00	4.23E-08	6.10E-06	0.00E+00	1.91E-09	0.00E+00	0.00E+00	2.51E-07	0.00E+00	0.00E+00	6.10E-06
3195	ALL	753588.42	4043660.7	NonCancerChronicDerive	0.00E+00	5.89E-10	0.00E+00	0.00E+00	0.00E+00	4.22E-08	6.08E-06	0.00E+00	1.91E-09	0.00E+00	0.00E+00	2.51E-07	0.00E+00	0.00E+00	6.08E-06
3196	ALL	753688.42	4043660.7	NonCancerChronicDerive	0.00E+00	5.87E-10	0.00E+00	0.00E+00	0.00E+00	4.21E-08	6.06E-06	0.00E+00	1.90E-09	0.00E+00	0.00E+00	2.50E-07	0.00E+00	0.00E+00	6.06E-06
3197	ALL	753788.42	4043660.7	NonCancerChronicDerive	0.00E+00	5.85E-10	0.00E+00	0.00E+00	0.00E+00	4.19E-08	6.03E-06	0.00E+00	1.89E-09	0.00E+00	0.00E+00	2.49E-07	0.00E+00	0.00E+00	6.03E-06
3198	ALL	753888.42	4043660.7	NonCancerChronicDerive	0.00E+00	5.82E-10	0.00E+00	0.00E+00	0.00E+00	4.17E-08	6.00E-06	0.00E+00	1.88E-09	0.00E+00	0.00E+00	2.48E-07	0.00E+00	0.00E+00	6.00E-06
3199	ALL	753988.42	4043660.7	NonCancerChronicDerive	0.00E+00	5.79E-10	0.00E+00	0.00E+00	0.00E+00	4.15E-08	5.97E-06	0.00E+00	1.87E-09	0.00E+00	0.00E+00	2.46E-07	0.00E+00	0.00E+00	5.97E-06
3200	ALL	748188.42	4043760.7	NonCancerChronicDerive	0.00E+00	8.11E-10	0.00E+00	0.00E+00	0.00E+00	5.96E-08	8.49E-06	0.00E+00	2.63E-09	0.00E+00	0.00E+00	3.45E-07	0.00E+00	0.00E+00	8.49E-06
3201	ALL	748288.42	4043760.7	NonCancerChronicDerive	0.00E+00	7.92E-10	0.00E+00	0.00E+00	0.00E+00	5.85E-08	8.32E-06	0.00E+00	2.56E-09	0.00E+00	0.00E+00	3.37E-07	0.00E+00	0.00E+00	8.32E-06
3202	ALL	748388.42	4043760.7	NonCancerChronicDerive	0.00E+00	7.73E-10	0.00E+00	0.00E+00	0.00E+00	5.74E-08	8.15E-06	0.00E+00	2.50E-09	0.00E+00	0.00E+00	3.29E-07	0.00E+00	0.00E+00	8.15E-06
3203	ALL	748488.42	4043760.7	NonCancerChronicDerive	0.00E+00	7.54E-10	0.00E+00	0.00E+00	0.00E+00	5.64E-08	7.98E-06	0.00E+00	2.44E-09	0.00E+00	0.00E+00	3.21E-07	0.00E+00	0.00E+00	7.98E-06
3204	ALL	752688.42	4043760.7	NonCancerChronicDerive	0.00E+00	5.66E-10	0.00E+00	0.00E+00	0.00E+00	4.12E-08	5.91E-06	0.00E+00	1.83E-09	0.00E+00	0.00E+00	2.41E-07	0.00E+00	0.00E+00	5.91E-06
3205	ALL	752788.42	4043760.7	NonCancerChronicDerive	0.00E+00	5.68E-10	0.00E+00	0.00E+00	0.00E+00	4.12E-08	5.93E-06	0.00E+00	1.84E-09	0.00E+00	0.00E+00	2.42E-07	0.00E+00	0.00E+00	5.93E-06
3206	ALL	752888.42	4043760.7	NonCancerChronicDerive	0.00E+00	5.70E-10	0.00E+00	0.00E+00	0.00E+00	4.13E-08	5.94E-06	0.00E+00	1.85E-09	0.00E+00	0.00E+00	2.43E-07	0.00E+00	0.00E+00	5.94E-06
3207	ALL	752988.42	4043760.7	NonCancerChronicDerive	0.00E+00	5.73E-10	0.00E+00	0.00E+00	0.00E+00	4.14E-08	5.95E-06	0.00E+00	1.85E-09	0.00E+00	0.00E+00	2.44E-07	0.00E+00	0.00E+00	5.95E-06
3208	ALL	753088.42	4043760.7	NonCancerChronicDerive	0.00E+00	5.74E-10	0.00E+00	0.00E+00	0.00E+00	4.14E-08	5.96E-06	0.00E+00	1.86E-09	0.00E+00	0.00E+00	2.44E-07	0.00E+00	0.00E+00	5.96E-06
3209	ALL	753188.42	4043760.7	NonCancerChronicDerive	0.00E+00	5.75E-10	0.00E+00	0.00E+00	0.00E+00	4.14E-08	5.97E-06	0.00E+00	1.86E-09	0.00E+00	0.00E+00	2.45E-07	0.00E+00	0.00E+00	5.97E-06
3210	ALL	753288.42	4043760.7	NonCancerChronicDerive	0.00E+00	5.77E-10	0.00E+00	0.00E+00	0.00E+00	4.14E-08	5.97E-06	0.00E+00	1.87E-09	0.00E+00	0.00E+00	2.45E-07	0.00E+00	0.00E+00	5.97E-06
3211	ALL	753388.42	4043760.7	NonCancerChronicDerive	0.00E+00	5.77E-10	0.00E+00	0.00E+00	0.00E+00	4.14E-08	5.97E-06	0.00E+00	1.87E-09	0.00E+00	0.00E+00	2.46E-07	0.00E+00	0.00E+00	5.97E-06
3212	ALL	753488.42	4043760.7	NonCancerChronicDerive	0.00E+00	5.78E-10	0.00E+00	0.00E+00	0.00E+00	4.15E-08	5.97E-06	0.00E+00	1.87E-09	0.00E+00	0.00E+00	2.46E-07	0.00E+00	0.00E+00	5.97E-06
3213	ALL	753588.42	4043760.7	NonCancerChronicDerive	0.00E+00	5.78E-10	0.00E+00	0.00E+00	0.00E+00	4.14E-08	5.96E-06	0.00E+00	1.87E-09	0.00E+00	0.00E+00	2.46E-07	0.00E+00	0.00E+00	5.96E-06
3214	ALL	753688.42	4043760.7	NonCancerChronicDerive	0.00E+00	5.77E-10	0.00E+00	0.00E+00	0.00E+00	4.13E-08	5.95E-06	0.00E+00	1.87E-09	0.00E+00	0.00E+00	2.45E-07	0.00E+00	0.00E+00	5.95E-06
3215	ALL	753788.42	4043760.7	NonCancerChronicDerive	0.00E+00	5.75E-10	0.00E+00	0.00E+00	0.00E+00	4.12E-08	5.93E-06	0.00E+00	1.86E-09	0.00E+00	0.00E+00	2.45E-07	0.00E+00	0.00E+00	5.93E-06
3216	ALL	753888.42	4043760.7	NonCancerChronicDerive	0.00E+00	5.73E-10	0.00E+00	0.00E+00	0.00E+00	4.10E-08	5.91E-06	0.00E+00	1.86E-09	0.00E+00	0.00E+00	2.44E-07	0.00E+00	0.00E+00	5.91E-06
3217	ALL	753988.42	4043760.7	NonCancerChronicDerive	0.00E+00	5.71E-10	0.00E+00	0.00E+00	0.00E+00	4.08E-08	5.88E-06	0.00E+00	1.85E-09	0.00E+00	0.00E+00	2.43E-07	0.00E+00	0.00E+00	5.88E-06
3218	ALL	748188.42	4043860.7	NonCancerChronicDerive	0.00E+00	7.93E-10	0.00E+00	0.00E+00	0.00E+00	5.83E-08	8.30E-06	0.00E+00	2.57E-09	0.00E+00	0.00E+00	3.38E-07	0.00E+00	0.00E+00	8.30E-06
3219	ALL	748288.42	4043860.7	NonCancerChronicDerive	0.00E+00	7.75E-10	0.00E+00	0.00E+00	0.00E+00	5.72E-08	8.13E-06	0.00E+00	2.51E-09	0.00E+00	0.00E+00	3.30E-07	0.00E+00	0.00E+00	8.13E-06
3220	ALL	748388.42	4043860.7	NonCancerChronicDerive	0.00E+00	7.57E-10	0.00E+00	0.00E+00	0.00E+00	5.62E-08	7.97E-06	0.00E+00	2.45E-09	0.00E+00	0.00E+00	3.22E-07	0.00E+00	0.00E+00	7.97E-06
3221	ALL	748488.42	4043860.7	NonCancerChronicDerive	0.00E+00	7.39E-10	0.00E+00	0.00E+00	0.00E+00	5.52E-08	7.82E-06	0.00E+00	2.39E-09	0.00E+00	0.00E+00	3.15E-07	0.00E+00	0.00E+00	7.82E-06
3222	ALL	752688.42	4043860.7	NonCancerChronicDerive	0.00E+00	5.53E-10	0.00E+00	0.00E+00	0.00E+00	4.02E-08	5.77E-06	0.00E+00	1.79E-09	0.00E+00	0.00E+00	2.35E-07	0.00E+00	0.00E+00	5.77E-06
3223	ALL	752788.42	4043860.7	NonCancerChronicDerive	0.00E+00	5.55E-10	0.00E+00	0.00E+00	0.00E+00	4.03E-08	5.79E-06	0.00E+00	1.80E-09	0.00E+00	0.00E+00	2.36E-07	0.00E+00	0.00E+00	5.79E-06
3224	ALL	752888.42	4043860.7	NonCancerChronicDerive	0.00E+00	5.57E-10	0.00E+00	0.00E+00	0.00E+00	4.03E-08	5.80E-06	0.00E+00	1.80E-09	0.00E+00	0.00E+00	2.37E-07	0.00E+00	0.00E+00	5.80E-06
3225	ALL	752988.42	4043860.7	NonCancerChronicDerive	0.00E+00	5.58E-10	0.00E+00	0.00E+00	0.00E+00	4.04E-08	5.81E-06	0.00E+00	1.81E-09	0.00E+00	0.00E+00	2.38E-07	0.00E+00	0.00E+00	5.81E-06
3226	ALL	748088.42	4043960.7	NonCancerChronicDerive	0.00E+00	7.92E-10	0.00E+00	0.00E+00	0.00E+00	5.79E-08	8.26E-06	0.00E+00	2.56E-09	0.00E+00	0.00E+00	3.37E-07	0.00E+00	0.00E+00	8.26E-06
3227	ALL	748188.42	4043960.7	NonCancerChronicDerive	0.00E+00	7.76E-10	0.00E+00	0.00E+00	0.00E+00	5.70E-08	8.11E-06	0.00E+00	2.51E-09	0.00E+00	0.00E+00	3.30E-07	0.00E+00	0.00E+00	8.11E-06
3228	ALL	748288.42	4043960.7	NonCancerChronicDerive	0.00E+00	7.59E-10	0.00E+00	0.00E+00	0.00E+00	5.60E-08	7.96E-06	0.00E+00	2.46E-09	0.00E+00	0.00E+00	3.23E-07	0.00E+00	0.00E+00	7.96E-06
3229	ALL	748388.42	4043960.7	NonCancerChronicDerive	0.00E+00	7.41E-10	0.00E+00	0.00E+00	0.00E+00	5.50E-08	7.80E-06	0.00E+00	2.40E-09	0.00E+00	0.00E+00	3.15E-07	0.00E+00	0.00E+00	7.80E-06
3230	ALL	748488.42	4043960.7	NonCancerChronicDerive	0.00E+00	7.25E-10	0.00E+00	0.00E+00	0.00E+00	5.40E-08	7.65E-06	0.00E+00	2.35E-09	0.00E+00	0.00E+00	3.08E-07	0.00E+00	0.00E+00	7.65E-06
3231	ALL	752688.42	4043960.7	NonCancerChronicDerive	0.00E+00	5.40E-10	0.00E+00	0.00E+00	0.00E+00	3.93E-08	5.64E-06	0.00E+00	1.75E-09	0.00E+00	0.00E+00	2.30E-07	0.00E+00	0.00E+00	5.64E-06

3232	ALL	752788.42	4043960.7	NonCancerChronicDerive	0.00E+00	5.42E-10	0.00E+00	0.00E+00	0.00E+00	3.94E-08	5.65E-06	0.00E+00	1.75E-09	0.00E+00	0.00E+00	2.31E-07	0.00E+00	0.00E+00	5.65E-06
3233	ALL	752888.42	4043960.7	NonCancerChronicDerive	0.00E+00	5.44E-10	0.00E+00	0.00E+00	0.00E+00	3.94E-08	5.66E-06	0.00E+00	1.76E-09	0.00E+00	0.00E+00	2.31E-07	0.00E+00	0.00E+00	5.66E-06
3234	ALL	752988.42	4043960.7	NonCancerChronicDerive	0.00E+00	5.45E-10	0.00E+00	0.00E+00	0.00E+00	3.94E-08	5.67E-06	0.00E+00	1.77E-09	0.00E+00	0.00E+00	2.32E-07	0.00E+00	0.00E+00	5.67E-06
3235	ALL	748088.42	4044060.7	NonCancerChronicDerive	0.00E+00	7.75E-10	0.00E+00	0.00E+00	0.00E+00	5.66E-08	8.07E-06	0.00E+00	2.51E-09	0.00E+00	0.00E+00	3.30E-07	0.00E+00	0.00E+00	8.07E-06
3236	ALL	748188.42	4044060.7	NonCancerChronicDerive	0.00E+00	7.60E-10	0.00E+00	0.00E+00	0.00E+00	5.57E-08	7.93E-06	0.00E+00	2.46E-09	0.00E+00	0.00E+00	3.23E-07	0.00E+00	0.00E+00	7.93E-06
3237	ALL	748288.42	4044060.7	NonCancerChronicDerive	0.00E+00	7.43E-10	0.00E+00	0.00E+00	0.00E+00	5.47E-08	7.78E-06	0.00E+00	2.41E-09	0.00E+00	0.00E+00	3.16E-07	0.00E+00	0.00E+00	7.78E-06
3238	ALL	748388.42	4044060.7	NonCancerChronicDerive	0.00E+00	7.26E-10	0.00E+00	0.00E+00	0.00E+00	5.37E-08	7.63E-06	0.00E+00	2.35E-09	0.00E+00	0.00E+00	3.09E-07	0.00E+00	0.00E+00	7.63E-06
3239	ALL	748488.42	4044060.7	NonCancerChronicDerive	0.00E+00	7.10E-10	0.00E+00	0.00E+00	0.00E+00	5.28E-08	7.49E-06	0.00E+00	2.30E-09	0.00E+00	0.00E+00	3.02E-07	0.00E+00	0.00E+00	7.49E-06
3240	ALL	752688.42	4044060.7	NonCancerChronicDerive	0.00E+00	5.28E-10	0.00E+00	0.00E+00	0.00E+00	3.84E-08	5.52E-06	0.00E+00	1.71E-09	0.00E+00	0.00E+00	2.25E-07	0.00E+00	0.00E+00	5.52E-06
3241	ALL	752788.42	4044060.7	NonCancerChronicDerive	0.00E+00	5.30E-10	0.00E+00	0.00E+00	0.00E+00	3.85E-08	5.53E-06	0.00E+00	1.71E-09	0.00E+00	0.00E+00	2.25E-07	0.00E+00	0.00E+00	5.53E-06
3242	ALL	752888.42	4044060.7	NonCancerChronicDerive	0.00E+00	5.31E-10	0.00E+00	0.00E+00	0.00E+00	3.85E-08	5.54E-06	0.00E+00	1.72E-09	0.00E+00	0.00E+00	2.26E-07	0.00E+00	0.00E+00	5.54E-06
3243	ALL	752988.42	4044060.7	NonCancerChronicDerive	0.00E+00	5.33E-10	0.00E+00	0.00E+00	0.00E+00	3.86E-08	5.55E-06	0.00E+00	1.73E-09	0.00E+00	0.00E+00	2.27E-07	0.00E+00	0.00E+00	5.55E-06
3244	ALL	748088.42	4044160.7	NonCancerChronicDerive	0.00E+00	7.59E-10	0.00E+00	0.00E+00	0.00E+00	5.54E-08	7.89E-06	0.00E+00	2.46E-09	0.00E+00	0.00E+00	3.23E-07	0.00E+00	0.00E+00	7.89E-06
3245	ALL	748188.42	4044160.7	NonCancerChronicDerive	0.00E+00	7.44E-10	0.00E+00	0.00E+00	0.00E+00	5.45E-08	7.76E-06	0.00E+00	2.41E-09	0.00E+00	0.00E+00	3.17E-07	0.00E+00	0.00E+00	7.76E-06
3246	ALL	748288.42	4044160.7	NonCancerChronicDerive	0.00E+00	7.28E-10	0.00E+00	0.00E+00	0.00E+00	5.36E-08	7.62E-06	0.00E+00	2.36E-09	0.00E+00	0.00E+00	3.10E-07	0.00E+00	0.00E+00	7.62E-06
3247	ALL	748388.42	4044160.7	NonCancerChronicDerive	0.00E+00	7.12E-10	0.00E+00	0.00E+00	0.00E+00	5.26E-08	7.47E-06	0.00E+00	2.30E-09	0.00E+00	0.00E+00	3.03E-07	0.00E+00	0.00E+00	7.47E-06
3248	ALL	748488.42	4044160.7	NonCancerChronicDerive	0.00E+00	6.97E-10	0.00E+00	0.00E+00	0.00E+00	5.17E-08	7.34E-06	0.00E+00	2.25E-09	0.00E+00	0.00E+00	2.96E-07	0.00E+00	0.00E+00	7.34E-06
3249	ALL	752688.42	4044160.7	NonCancerChronicDerive	0.00E+00	5.18E-10	0.00E+00	0.00E+00	0.00E+00	3.77E-08	5.41E-06	0.00E+00	1.68E-09	0.00E+00	0.00E+00	2.20E-07	0.00E+00	0.00E+00	5.41E-06
3250	ALL	752788.42	4044160.7	NonCancerChronicDerive	0.00E+00	5.19E-10	0.00E+00	0.00E+00	0.00E+00	3.77E-08	5.42E-06	0.00E+00	1.68E-09	0.00E+00	0.00E+00	2.21E-07	0.00E+00	0.00E+00	5.42E-06
3251	ALL	752888.42	4044160.7	NonCancerChronicDerive	0.00E+00	5.21E-10	0.00E+00	0.00E+00	0.00E+00	3.78E-08	5.43E-06	0.00E+00	1.69E-09	0.00E+00	0.00E+00	2.22E-07	0.00E+00	0.00E+00	5.43E-06
3252	ALL	752988.42	4044160.7	NonCancerChronicDerive	0.00E+00	5.22E-10	0.00E+00	0.00E+00	0.00E+00	3.78E-08	5.43E-06	0.00E+00	1.69E-09	0.00E+00	0.00E+00	2.22E-07	0.00E+00	0.00E+00	5.43E-06
3253	ALL	748088.42	4044260.7	NonCancerChronicDerive	0.00E+00	7.43E-10	0.00E+00	0.00E+00	0.00E+00	5.42E-08	7.72E-06	0.00E+00	2.40E-09	0.00E+00	0.00E+00	3.16E-07	0.00E+00	0.00E+00	7.72E-06
3254	ALL	748188.42	4044260.7	NonCancerChronicDerive	0.00E+00	7.29E-10	0.00E+00	0.00E+00	0.00E+00	5.34E-08	7.60E-06	0.00E+00	2.36E-09	0.00E+00	0.00E+00	3.10E-07	0.00E+00	0.00E+00	7.60E-06
3255	ALL	748288.42	4044260.7	NonCancerChronicDerive	0.00E+00	7.14E-10	0.00E+00	0.00E+00	0.00E+00	5.25E-08	7.46E-06	0.00E+00	2.31E-09	0.00E+00	0.00E+00	3.04E-07	0.00E+00	0.00E+00	7.46E-06
3256	ALL	748388.42	4044260.7	NonCancerChronicDerive	0.00E+00	6.98E-10	0.00E+00	0.00E+00	0.00E+00	5.15E-08	7.32E-06	0.00E+00	2.26E-09	0.00E+00	0.00E+00	2.97E-07	0.00E+00	0.00E+00	7.32E-06
3257	ALL	748488.42	4044260.7	NonCancerChronicDerive	0.00E+00	6.84E-10	0.00E+00	0.00E+00	0.00E+00	5.07E-08	7.19E-06	0.00E+00	2.21E-09	0.00E+00	0.00E+00	2.91E-07	0.00E+00	0.00E+00	7.19E-06
3258	ALL	752688.42	4044260.7	NonCancerChronicDerive	0.00E+00	5.08E-10	0.00E+00	0.00E+00	0.00E+00	3.69E-08	5.30E-06	0.00E+00	1.64E-09	0.00E+00	0.00E+00	2.16E-07	0.00E+00	0.00E+00	5.30E-06
3259	ALL	752788.42	4044260.7	NonCancerChronicDerive	0.00E+00	5.09E-10	0.00E+00	0.00E+00	0.00E+00	3.70E-08	5.31E-06	0.00E+00	1.65E-09	0.00E+00	0.00E+00	2.16E-07	0.00E+00	0.00E+00	5.31E-06
3260	ALL	752888.42	4044260.7	NonCancerChronicDerive	0.00E+00	5.10E-10	0.00E+00	0.00E+00	0.00E+00	3.70E-08	5.31E-06	0.00E+00	1.65E-09	0.00E+00	0.00E+00	2.17E-07	0.00E+00	0.00E+00	5.31E-06
3261	ALL	752988.42	4044260.7	NonCancerChronicDerive	0.00E+00	5.11E-10	0.00E+00	0.00E+00	0.00E+00	3.70E-08	5.32E-06	0.00E+00	1.65E-09	0.00E+00	0.00E+00	2.17E-07	0.00E+00	0.00E+00	5.32E-06
3262	ALL	748088.42	4044360.7	NonCancerChronicDerive	0.00E+00	7.28E-10	0.00E+00	0.00E+00	0.00E+00	5.30E-08	7.56E-06	0.00E+00	2.36E-09	0.00E+00	0.00E+00	3.10E-07	0.00E+00	0.00E+00	7.56E-06
3263	ALL	748188.42	4044360.7	NonCancerChronicDerive	0.00E+00	7.14E-10	0.00E+00	0.00E+00	0.00E+00	5.23E-08	7.44E-06	0.00E+00	2.31E-09	0.00E+00	0.00E+00	3.04E-07	0.00E+00	0.00E+00	7.44E-06
3264	ALL	748288.42	4044360.7	NonCancerChronicDerive	0.00E+00	7.00E-10	0.00E+00	0.00E+00	0.00E+00	5.14E-08	7.31E-06	0.00E+00	2.26E-09	0.00E+00	0.00E+00	2.98E-07	0.00E+00	0.00E+00	7.31E-06
3265	ALL	748388.42	4044360.7	NonCancerChronicDerive	0.00E+00	6.85E-10	0.00E+00	0.00E+00	0.00E+00	5.05E-08	7.17E-06	0.00E+00	2.22E-09	0.00E+00	0.00E+00	2.91E-07	0.00E+00	0.00E+00	7.17E-06
3266	ALL	748488.42	4044360.7	NonCancerChronicDerive	0.00E+00	6.71E-10	0.00E+00	0.00E+00	0.00E+00	4.96E-08	7.05E-06	0.00E+00	2.17E-09	0.00E+00	0.00E+00	2.86E-07	0.00E+00	0.00E+00	7.05E-06
3267	ALL	752688.42	4044360.7	NonCancerChronicDerive	0.00E+00	4.98E-10	0.00E+00	0.00E+00	0.00E+00	3.62E-08	5.20E-06	0.00E+00	1.61E-09	0.00E+00	0.00E+00	2.12E-07	0.00E+00	0.00E+00	5.20E-06
3268	ALL	752788.42	4044360.7	NonCancerChronicDerive	0.00E+00	4.99E-10	0.00E+00	0.00E+00	0.00E+00	3.62E-08	5.21E-06	0.00E+00	1.62E-09	0.00E+00	0.00E+00	2.12E-07	0.00E+00	0.00E+00	5.21E-06
3269	ALL	752888.42	4044360.7	NonCancerChronicDerive	0.00E+00	5.00E-10	0.00E+00	0.00E+00	0.00E+00	3.63E-08	5.21E-06	0.00E+00	1.62E-09	0.00E+00	0.00E+00	2.13E-07	0.00E+00	0.00E+00	5.21E-06
3270	ALL	752988.42	4044360.7	NonCancerChronicDerive	0.00E+00	5.01E-10	0.00E+00	0.00E+00	0.00E+00	3.63E-08	5.21E-06	0.00E+00	1.62E-09	0.00E+00	0.00E+00	2.13E-07	0.00E+00	0.00E+00	5.21E-06
3271	ALL	748088.42	4044460.7	NonCancerChronicDerive	0.00E+00	7.13E-10	0.00E+00	0.00E+00	0.00E+00	5.19E-08	7.41E-06	0.00E+00	2.31E-09	0.00E+00	0.00E+00	3.04E-07	0.00E+00	0.00E+00	7.41E-06
3272	ALL	748188.42	4044460.7	NonCancerChronicDerive	0.00E+00	7.00E-10	0.00E+00	0.00E+00	0.00E+00	5.12E-08	7.29E-06	0.00E+00	2.27E-09	0.00E+00	0.00E+00	2.98E-07	0.00E+00	0.00E+00	7.29E-06
3273	ALL	748288.42	4044460.7	NonCancerChronicDerive	0.00E+00	6.86E-10	0.00E+00	0.00E+00	0.00E+00	5.04E-08	7.16E-06	0.00E+00	2.22E-09	0.00E+00	0.00E+00	2.92E-07	0.00E+00	0.00E+00	7.16E-06
3274	ALL	748388.42	4044460.7	NonCancerChronicDerive	0.00E+00	6.72E-10	0.00E+00	0.00E+00	0.00E+00	4.95E-08	7.03E-06	0.00E+00	2.18E-09	0.00E+00	0.00E+00	2.86E-07	0.00E+00	0.00E+00	7.03E-06
3275	ALL	748488.42	4044460.7	NonCancerChronicDerive	0.00E+00	6.59E-10	0.00E+00	0.00E+00	0.00E+00	4.87E-08	6.92E-06	0.00E+00	2.13E-09	0.00E+00	0.00E+00	2.81E-07	0.00E+00	0.00E+00	6.92E-06
3276	ALL	752688.42	4044460.7	NonCancerChronicDerive	0.00E+00	4.89E-10	0.00E+00	0.00E+00	0.00E+00	3.55E-08	5.10E-06	0.00E+00	1.58E-09	0.00E+00	0.00E+00	2.08E-07	0.00E+00	0.00E+00	5.10E-06
3277	ALL	752788.42	4044460.7	NonCancerChronicDerive	0.00E+00	4.90E-10	0.00E+00	0.00E+00	0.00E+00	3.56E-08	5.11E-06	0.00E+00	1.59E-09	0.00E+00	0.00E+00	2.08E-07	0.00E+00	0.00E+00	5.11E-06
3278	ALL	752888.42	4044460.7	NonCancerChronicDerive	0.00E+00	4.91E-10	0.00E+00	0.00E+00	0.00E+00	3.56E-08	5.11E-06	0.00E+00	1.59E-09	0.00E+00	0.00E+00	2.09E-07	0.00E+00	0.00E+00	5.11E-06
3279	ALL	752988.42	4044460.7	NonCancerChronicDerive	0.00E+00	4.92E-10	0.00E+00	0.00E+00	0.00E+00	3.56E-08	5.12E-06	0.00E+00	1.59E-09	0.00E+00	0.00E+00	2.09E-07	0.00E+00	0.00E+00	5.12E-06
3280	ALL	748088.42	4044560.7	NonCancerChronicDerive	0.00E+00	6.99E-10	0.00E+00	0.00E+00	0.00E+00	5.09E-08	7.26E-06	0.00E+00	2.26E-09	0.00E+00	0.00E+00	2.98E-07	0.00E+00	0.00E+00	7.26E-06
3281	ALL	748188.42	4044560.7	NonCancerChronicDerive	0.00E+00	6.87E-10	0.00E+00	0.00E+00	0.00E+00	5.02E-08	7.14E-06	0.00E+00	2.22E-09	0.00E+00	0.00E+00	2.92E-07	0.00E+00	0.00E+00	7.14E-06
3282	ALL	748288.42	4044560.7	NonCancerChronicDerive	0.00E+00	6.73E-10	0.00E+00	0.00E+00	0.00E+00	4.93E-08	7.02E-06	0.00E+00	2.18E-09	0.00E+00	0.00E+00	2.86E-07	0.00E+00	0.00E+00	7.02E-06
3283	ALL	748388.42	4044560.7	NonCancerChronicDerive	0.00E+00	6.60E-10	0.00E+00	0.00E+00	0.00E+00	4.85E-08	6.90E-06	0.00E+00	2.14E-09	0.00E+00	0.00E+00	2.81E-07	0.00E+00	0.00E+00	6.90E-06
3284	ALL	748488.42	4044560.7	NonCancerChronicDerive	0.00E+00	6.45E-10	0.00E+00	0.00E+00	0.00E+00	4.75E-08	6.75E-06	0.00E+00	2.09E-09	0.00E+00	0.00E+00	2.74E-07	0.00E+00	0.00E+00	6.75E-06

3285	ALL	752688.42	4044560.7	NonCancerChronicDerive	0.00E+00	4.81E-10	0.00E+00	0.00E+00	0.00E+00	3.49E-08	5.02E-06	0.00E+00	1.56E-09	0.00E+00	0.00E+00	2.05E-07	0.00E+00	0.00E+00	5.02E-06
3286	ALL	752788.42	4044560.7	NonCancerChronicDerive	0.00E+00	4.81E-10	0.00E+00	0.00E+00	0.00E+00	3.49E-08	5.02E-06	0.00E+00	1.56E-09	0.00E+00	0.00E+00	2.05E-07	0.00E+00	0.00E+00	5.02E-06
3287	ALL	752888.42	4044560.7	NonCancerChronicDerive	0.00E+00	4.82E-10	0.00E+00	0.00E+00	0.00E+00	3.49E-08	5.02E-06	0.00E+00	1.56E-09	0.00E+00	0.00E+00	2.05E-07	0.00E+00	0.00E+00	5.02E-06
3288	ALL	752988.42	4044560.7	NonCancerChronicDerive	0.00E+00	4.82E-10	0.00E+00	0.00E+00	0.00E+00	3.49E-08	5.02E-06	0.00E+00	1.56E-09	0.00E+00	0.00E+00	2.05E-07	0.00E+00	0.00E+00	5.02E-06
3289	ALL	748088.42	4044660.7	NonCancerChronicDerive	0.00E+00	6.86E-10	0.00E+00	0.00E+00	0.00E+00	4.99E-08	7.11E-06	0.00E+00	2.22E-09	0.00E+00	0.00E+00	2.92E-07	0.00E+00	0.00E+00	7.11E-06
3290	ALL	748188.42	4044660.7	NonCancerChronicDerive	0.00E+00	6.74E-10	0.00E+00	0.00E+00	0.00E+00	4.92E-08	7.01E-06	0.00E+00	2.18E-09	0.00E+00	0.00E+00	2.87E-07	0.00E+00	0.00E+00	7.01E-06
3291	ALL	748288.42	4044660.7	NonCancerChronicDerive	0.00E+00	6.61E-10	0.00E+00	0.00E+00	0.00E+00	4.84E-08	6.89E-06	0.00E+00	2.14E-09	0.00E+00	0.00E+00	2.81E-07	0.00E+00	0.00E+00	6.89E-06
3292	ALL	748388.42	4044660.7	NonCancerChronicDerive	0.00E+00	6.48E-10	0.00E+00	0.00E+00	0.00E+00	4.76E-08	6.77E-06	0.00E+00	2.10E-09	0.00E+00	0.00E+00	2.76E-07	0.00E+00	0.00E+00	6.77E-06
3293	ALL	748488.42	4044660.7	NonCancerChronicDerive	0.00E+00	6.35E-10	0.00E+00	0.00E+00	0.00E+00	4.68E-08	6.65E-06	0.00E+00	2.06E-09	0.00E+00	0.00E+00	2.70E-07	0.00E+00	0.00E+00	6.65E-06
3294	ALL	752688.42	4044660.7	NonCancerChronicDerive	0.00E+00	4.74E-10	0.00E+00	0.00E+00	0.00E+00	3.43E-08	4.93E-06	0.00E+00	1.53E-09	0.00E+00	0.00E+00	2.02E-07	0.00E+00	0.00E+00	4.93E-06
3295	ALL	752788.42	4044660.7	NonCancerChronicDerive	0.00E+00	4.74E-10	0.00E+00	0.00E+00	0.00E+00	3.43E-08	4.93E-06	0.00E+00	1.53E-09	0.00E+00	0.00E+00	2.02E-07	0.00E+00	0.00E+00	4.93E-06
3296	ALL	752888.42	4044660.7	NonCancerChronicDerive	0.00E+00	4.74E-10	0.00E+00	0.00E+00	0.00E+00	3.43E-08	4.93E-06	0.00E+00	1.53E-09	0.00E+00	0.00E+00	2.02E-07	0.00E+00	0.00E+00	4.93E-06
3297	ALL	752988.42	4044660.7	NonCancerChronicDerive	0.00E+00	4.74E-10	0.00E+00	0.00E+00	0.00E+00	3.43E-08	4.93E-06	0.00E+00	1.54E-09	0.00E+00	0.00E+00	2.02E-07	0.00E+00	0.00E+00	4.93E-06
3298	ALL	748088.42	4044760.7	NonCancerChronicDerive	0.00E+00	6.73E-10	0.00E+00	0.00E+00	0.00E+00	4.89E-08	6.98E-06	0.00E+00	2.18E-09	0.00E+00	0.00E+00	2.86E-07	0.00E+00	0.00E+00	6.98E-06
3299	ALL	748188.42	4044760.7	NonCancerChronicDerive	0.00E+00	6.61E-10	0.00E+00	0.00E+00	0.00E+00	4.82E-08	6.87E-06	0.00E+00	2.14E-09	0.00E+00	0.00E+00	2.81E-07	0.00E+00	0.00E+00	6.87E-06
3300	ALL	748288.42	4044760.7	NonCancerChronicDerive	0.00E+00	6.49E-10	0.00E+00	0.00E+00	0.00E+00	4.75E-08	6.76E-06	0.00E+00	2.10E-09	0.00E+00	0.00E+00	2.76E-07	0.00E+00	0.00E+00	6.76E-06
3301	ALL	748388.42	4044760.7	NonCancerChronicDerive	0.00E+00	6.37E-10	0.00E+00	0.00E+00	0.00E+00	4.67E-08	6.65E-06	0.00E+00	2.06E-09	0.00E+00	0.00E+00	2.71E-07	0.00E+00	0.00E+00	6.65E-06
3302	ALL	748488.42	4044760.7	NonCancerChronicDerive	0.00E+00	6.25E-10	0.00E+00	0.00E+00	0.00E+00	4.60E-08	6.54E-06	0.00E+00	2.02E-09	0.00E+00	0.00E+00	2.66E-07	0.00E+00	0.00E+00	6.54E-06
3303	ALL	752688.42	4044760.7	NonCancerChronicDerive	0.00E+00	4.66E-10	0.00E+00	0.00E+00	0.00E+00	3.38E-08	4.86E-06	0.00E+00	1.51E-09	0.00E+00	0.00E+00	1.99E-07	0.00E+00	0.00E+00	4.86E-06
3304	ALL	752788.42	4044760.7	NonCancerChronicDerive	0.00E+00	4.66E-10	0.00E+00	0.00E+00	0.00E+00	3.38E-08	4.85E-06	0.00E+00	1.51E-09	0.00E+00	0.00E+00	1.98E-07	0.00E+00	0.00E+00	4.85E-06
3305	ALL	752888.42	4044760.7	NonCancerChronicDerive	0.00E+00	4.66E-10	0.00E+00	0.00E+00	0.00E+00	3.37E-08	4.85E-06	0.00E+00	1.51E-09	0.00E+00	0.00E+00	1.98E-07	0.00E+00	0.00E+00	4.85E-06
3306	ALL	752988.42	4044760.7	NonCancerChronicDerive	0.00E+00	4.66E-10	0.00E+00	0.00E+00	0.00E+00	3.37E-08	4.85E-06	0.00E+00	1.51E-09	0.00E+00	0.00E+00	1.99E-07	0.00E+00	0.00E+00	4.85E-06
3307	ALL	748088.42	4044860.7	NonCancerChronicDerive	0.00E+00	6.61E-10	0.00E+00	0.00E+00	0.00E+00	4.80E-08	6.85E-06	0.00E+00	2.14E-09	0.00E+00	0.00E+00	2.81E-07	0.00E+00	0.00E+00	6.85E-06
3308	ALL	748188.42	4044860.7	NonCancerChronicDerive	0.00E+00	6.50E-10	0.00E+00	0.00E+00	0.00E+00	4.73E-08	6.75E-06	0.00E+00	2.10E-09	0.00E+00	0.00E+00	2.76E-07	0.00E+00	0.00E+00	6.75E-06
3309	ALL	748288.42	4044860.7	NonCancerChronicDerive	0.00E+00	6.38E-10	0.00E+00	0.00E+00	0.00E+00	4.66E-08	6.64E-06	0.00E+00	2.06E-09	0.00E+00	0.00E+00	2.71E-07	0.00E+00	0.00E+00	6.64E-06
3310	ALL	748388.42	4044860.7	NonCancerChronicDerive	0.00E+00	6.26E-10	0.00E+00	0.00E+00	0.00E+00	4.59E-08	6.53E-06	0.00E+00	2.03E-09	0.00E+00	0.00E+00	2.67E-07	0.00E+00	0.00E+00	6.53E-06
3311	ALL	750188.42	4044860.7	NonCancerChronicDerive	0.00E+00	5.36E-10	0.00E+00	0.00E+00	0.00E+00	3.93E-08	5.61E-06	0.00E+00	1.74E-09	0.00E+00	0.00E+00	2.28E-07	0.00E+00	0.00E+00	5.61E-06
3312	ALL	752688.42	4044860.7	NonCancerChronicDerive	0.00E+00	4.60E-10	0.00E+00	0.00E+00	0.00E+00	3.33E-08	4.79E-06	0.00E+00	1.49E-09	0.00E+00	0.00E+00	1.96E-07	0.00E+00	0.00E+00	4.79E-06
3313	ALL	752788.42	4044860.7	NonCancerChronicDerive	0.00E+00	4.60E-10	0.00E+00	0.00E+00	0.00E+00	3.33E-08	4.78E-06	0.00E+00	1.49E-09	0.00E+00	0.00E+00	1.96E-07	0.00E+00	0.00E+00	4.78E-06
3314	ALL	752888.42	4044860.7	NonCancerChronicDerive	0.00E+00	4.59E-10	0.00E+00	0.00E+00	0.00E+00	3.32E-08	4.77E-06	0.00E+00	1.49E-09	0.00E+00	0.00E+00	1.95E-07	0.00E+00	0.00E+00	4.77E-06
3315	ALL	752988.42	4044860.7	NonCancerChronicDerive	0.00E+00	4.59E-10	0.00E+00	0.00E+00	0.00E+00	3.32E-08	4.77E-06	0.00E+00	1.49E-09	0.00E+00	0.00E+00	1.95E-07	0.00E+00	0.00E+00	4.77E-06
3316	ALL	748088.42	4044960.7	NonCancerChronicDerive	0.00E+00	6.48E-10	0.00E+00	0.00E+00	0.00E+00	4.71E-08	6.72E-06	0.00E+00	2.10E-09	0.00E+00	0.00E+00	2.76E-07	0.00E+00	0.00E+00	6.72E-06
3317	ALL	748188.42	4044960.7	NonCancerChronicDerive	0.00E+00	6.38E-10	0.00E+00	0.00E+00	0.00E+00	4.64E-08	6.62E-06	0.00E+00	2.06E-09	0.00E+00	0.00E+00	2.71E-07	0.00E+00	0.00E+00	6.62E-06
3318	ALL	748288.42	4044960.7	NonCancerChronicDerive	0.00E+00	6.27E-10	0.00E+00	0.00E+00	0.00E+00	4.58E-08	6.52E-06	0.00E+00	2.03E-09	0.00E+00	0.00E+00	2.67E-07	0.00E+00	0.00E+00	6.52E-06
3319	ALL	748388.42	4044960.7	NonCancerChronicDerive	0.00E+00	6.16E-10	0.00E+00	0.00E+00	0.00E+00	4.51E-08	6.42E-06	0.00E+00	2.00E-09	0.00E+00	0.00E+00	2.62E-07	0.00E+00	0.00E+00	6.42E-06
3320	ALL	750188.42	4044960.7	NonCancerChronicDerive	0.00E+00	5.31E-10	0.00E+00	0.00E+00	0.00E+00	3.88E-08	5.55E-06	0.00E+00	1.72E-09	0.00E+00	0.00E+00	2.26E-07	0.00E+00	0.00E+00	5.55E-06
3321	ALL	750288.42	4044960.7	NonCancerChronicDerive	0.00E+00	5.26E-10	0.00E+00	0.00E+00	0.00E+00	3.84E-08	5.49E-06	0.00E+00	1.70E-09	0.00E+00	0.00E+00	2.24E-07	0.00E+00	0.00E+00	5.49E-06
3322	ALL	750388.42	4044960.7	NonCancerChronicDerive	0.00E+00	5.19E-10	0.00E+00	0.00E+00	0.00E+00	3.79E-08	5.42E-06	0.00E+00	1.68E-09	0.00E+00	0.00E+00	2.21E-07	0.00E+00	0.00E+00	5.42E-06
3323	ALL	750488.42	4044960.7	NonCancerChronicDerive	0.00E+00	5.11E-10	0.00E+00	0.00E+00	0.00E+00	3.73E-08	5.34E-06	0.00E+00	1.65E-09	0.00E+00	0.00E+00	2.17E-07	0.00E+00	0.00E+00	5.34E-06
3324	ALL	750588.42	4044960.7	NonCancerChronicDerive	0.00E+00	5.02E-10	0.00E+00	0.00E+00	0.00E+00	3.67E-08	5.26E-06	0.00E+00	1.63E-09	0.00E+00	0.00E+00	2.14E-07	0.00E+00	0.00E+00	5.26E-06
3325	ALL	750688.42	4044960.7	NonCancerChronicDerive	0.00E+00	4.94E-10	0.00E+00	0.00E+00	0.00E+00	3.62E-08	5.17E-06	0.00E+00	1.60E-09	0.00E+00	0.00E+00	2.10E-07	0.00E+00	0.00E+00	5.17E-06
3326	ALL	750788.42	4044960.7	NonCancerChronicDerive	0.00E+00	4.86E-10	0.00E+00	0.00E+00	0.00E+00	3.57E-08	5.10E-06	0.00E+00	1.57E-09	0.00E+00	0.00E+00	2.07E-07	0.00E+00	0.00E+00	5.10E-06
3327	ALL	750888.42	4044960.7	NonCancerChronicDerive	0.00E+00	4.79E-10	0.00E+00	0.00E+00	0.00E+00	3.52E-08	5.03E-06	0.00E+00	1.55E-09	0.00E+00	0.00E+00	2.04E-07	0.00E+00	0.00E+00	5.03E-06
3328	ALL	750988.42	4044960.7	NonCancerChronicDerive	0.00E+00	4.73E-10	0.00E+00	0.00E+00	0.00E+00	3.49E-08	4.98E-06	0.00E+00	1.53E-09	0.00E+00	0.00E+00	2.01E-07	0.00E+00	0.00E+00	4.98E-06
3329	ALL	751088.42	4044960.7	NonCancerChronicDerive	0.00E+00	4.68E-10	0.00E+00	0.00E+00	0.00E+00	3.46E-08	4.93E-06	0.00E+00	1.52E-09	0.00E+00	0.00E+00	1.99E-07	0.00E+00	0.00E+00	4.93E-06
3330	ALL	751188.42	4044960.7	NonCancerChronicDerive	0.00E+00	4.64E-10	0.00E+00	0.00E+00	0.00E+00	3.43E-08	4.90E-06	0.00E+00	1.50E-09	0.00E+00	0.00E+00	1.98E-07	0.00E+00	0.00E+00	4.90E-06
3331	ALL	751288.42	4044960.7	NonCancerChronicDerive	0.00E+00	4.61E-10	0.00E+00	0.00E+00	0.00E+00	3.41E-08	4.87E-06	0.00E+00	1.49E-09	0.00E+00	0.00E+00	1.96E-07	0.00E+00	0.00E+00	4.87E-06
3332	ALL	751388.42	4044960.7	NonCancerChronicDerive	0.00E+00	4.59E-10	0.00E+00	0.00E+00	0.00E+00	3.39E-08	4.84E-06	0.00E+00	1.49E-09	0.00E+00	0.00E+00	1.95E-07	0.00E+00	0.00E+00	4.84E-06
3333	ALL	751488.42	4044960.7	NonCancerChronicDerive	0.00E+00	4.58E-10	0.00E+00	0.00E+00	0.00E+00	3.38E-08	4.83E-06	0.00E+00	1.48E-09	0.00E+00	0.00E+00	1.95E-07	0.00E+00	0.00E+00	4.83E-06
3334	ALL	751588.42	4044960.7	NonCancerChronicDerive	0.00E+00	4.57E-10	0.00E+00	0.00E+00	0.00E+00	3.37E-08	4.81E-06	0.00E+00	1.48E-09	0.00E+00	0.00E+00	1.95E-07	0.00E+00	0.00E+00	4.81E-06
3335	ALL	751688.42	4044960.7	NonCancerChronicDerive	0.00E+00	4.57E-10	0.00E+00	0.00E+00	0.00E+00	3.36E-08	4.81E-06	0.00E+00	1.48E-09	0.00E+00	0.00E+00	1.95E-07	0.00E+00	0.00E+00	4.81E-06
3336	ALL	751788.42	4044960.7	NonCancerChronicDerive	0.00E+00	4.58E-10	0.00E+00	0.00E+00	0.00E+00	3.36E-08	4.81E-06	0.00E+00	1.48E-09	0.00E+00	0.00E+00	1.95E-07	0.00E+00	0.00E+00	4.81E-06
3337	ALL	751888.42	4044960.7	NonCancerChronicDerive	0.00E+00	4.58E-10	0.00E+00	0.00E+00	0.00E+00	3.35E-08	4.80E-06	0.00E+00	1.48E-09	0.00E+00	0.00E+00	1.95E-07	0.00E+00	0.00E+00	4.80E-06

3338	ALL	751988.42	4044960.7	NonCancerChronicDerive	0.00E+00	4.58E-10	0.00E+00	0.00E+00	0.00E+00	3.34E-08	4.79E-06	0.00E+00	1.48E-09	0.00E+00	0.00E+00	1.95E-07	0.00E+00	0.00E+00	4.79E-06
3339	ALL	752088.42	4044960.7	NonCancerChronicDerive	0.00E+00	4.58E-10	0.00E+00	0.00E+00	0.00E+00	3.33E-08	4.78E-06	0.00E+00	1.48E-09	0.00E+00	0.00E+00	1.95E-07	0.00E+00	0.00E+00	4.78E-06
3340	ALL	752188.42	4044960.7	NonCancerChronicDerive	0.00E+00	4.57E-10	0.00E+00	0.00E+00	0.00E+00	3.32E-08	4.77E-06	0.00E+00	1.48E-09	0.00E+00	0.00E+00	1.95E-07	0.00E+00	0.00E+00	4.77E-06
3341	ALL	752288.42	4044960.7	NonCancerChronicDerive	0.00E+00	4.57E-10	0.00E+00	0.00E+00	0.00E+00	3.32E-08	4.76E-06	0.00E+00	1.48E-09	0.00E+00	0.00E+00	1.95E-07	0.00E+00	0.00E+00	4.76E-06
3342	ALL	752388.42	4044960.7	NonCancerChronicDerive	0.00E+00	4.57E-10	0.00E+00	0.00E+00	0.00E+00	3.31E-08	4.75E-06	0.00E+00	1.48E-09	0.00E+00	0.00E+00	1.94E-07	0.00E+00	0.00E+00	4.75E-06
3343	ALL	752488.42	4044960.7	NonCancerChronicDerive	0.00E+00	4.56E-10	0.00E+00	0.00E+00	0.00E+00	3.30E-08	4.74E-06	0.00E+00	1.47E-09	0.00E+00	0.00E+00	1.94E-07	0.00E+00	0.00E+00	4.74E-06
3344	ALL	752588.42	4044960.7	NonCancerChronicDerive	0.00E+00	4.55E-10	0.00E+00	0.00E+00	0.00E+00	3.29E-08	4.73E-06	0.00E+00	1.47E-09	0.00E+00	0.00E+00	1.94E-07	0.00E+00	0.00E+00	4.73E-06
3345	ALL	752688.42	4044960.7	NonCancerChronicDerive	0.00E+00	4.54E-10	0.00E+00	0.00E+00	0.00E+00	3.28E-08	4.72E-06	0.00E+00	1.47E-09	0.00E+00	0.00E+00	1.93E-07	0.00E+00	0.00E+00	4.72E-06
3346	ALL	752788.42	4044960.7	NonCancerChronicDerive	0.00E+00	4.53E-10	0.00E+00	0.00E+00	0.00E+00	3.28E-08	4.71E-06	0.00E+00	1.47E-09	0.00E+00	0.00E+00	1.93E-07	0.00E+00	0.00E+00	4.71E-06
3347	ALL	752888.42	4044960.7	NonCancerChronicDerive	0.00E+00	4.53E-10	0.00E+00	0.00E+00	0.00E+00	3.27E-08	4.71E-06	0.00E+00	1.47E-09	0.00E+00	0.00E+00	1.93E-07	0.00E+00	0.00E+00	4.71E-06
3348	ALL	752988.42	4044960.7	NonCancerChronicDerive	0.00E+00	4.53E-10	0.00E+00	0.00E+00	0.00E+00	3.27E-08	4.70E-06	0.00E+00	1.47E-09	0.00E+00	0.00E+00	1.93E-07	0.00E+00	0.00E+00	4.70E-06
3349	ALL	748088.42	4045060.7	NonCancerChronicDerive	0.00E+00	6.37E-10	0.00E+00	0.00E+00	0.00E+00	4.62E-08	6.59E-06	0.00E+00	2.06E-09	0.00E+00	0.00E+00	2.71E-07	0.00E+00	0.00E+00	6.59E-06
3350	ALL	748188.42	4045060.7	NonCancerChronicDerive	0.00E+00	6.27E-10	0.00E+00	0.00E+00	0.00E+00	4.56E-08	6.50E-06	0.00E+00	2.03E-09	0.00E+00	0.00E+00	2.67E-07	0.00E+00	0.00E+00	6.50E-06
3351	ALL	748288.42	4045060.7	NonCancerChronicDerive	0.00E+00	6.17E-10	0.00E+00	0.00E+00	0.00E+00	4.50E-08	6.41E-06	0.00E+00	2.00E-09	0.00E+00	0.00E+00	2.62E-07	0.00E+00	0.00E+00	6.41E-06
3352	ALL	748388.42	4045060.7	NonCancerChronicDerive	0.00E+00	6.07E-10	0.00E+00	0.00E+00	0.00E+00	4.43E-08	6.31E-06	0.00E+00	1.96E-09	0.00E+00	0.00E+00	2.58E-07	0.00E+00	0.00E+00	6.31E-06
3353	ALL	750188.42	4045060.7	NonCancerChronicDerive	0.00E+00	5.25E-10	0.00E+00	0.00E+00	0.00E+00	3.83E-08	5.48E-06	0.00E+00	1.70E-09	0.00E+00	0.00E+00	2.23E-07	0.00E+00	0.00E+00	5.48E-06
3354	ALL	750288.42	4045060.7	NonCancerChronicDerive	0.00E+00	5.21E-10	0.00E+00	0.00E+00	0.00E+00	3.80E-08	5.43E-06	0.00E+00	1.68E-09	0.00E+00	0.00E+00	2.21E-07	0.00E+00	0.00E+00	5.43E-06
3355	ALL	750388.42	4045060.7	NonCancerChronicDerive	0.00E+00	5.14E-10	0.00E+00	0.00E+00	0.00E+00	3.75E-08	5.37E-06	0.00E+00	1.66E-09	0.00E+00	0.00E+00	2.19E-07	0.00E+00	0.00E+00	5.37E-06
3356	ALL	750488.42	4045060.7	NonCancerChronicDerive	0.00E+00	5.07E-10	0.00E+00	0.00E+00	0.00E+00	3.70E-08	5.29E-06	0.00E+00	1.64E-09	0.00E+00	0.00E+00	2.16E-07	0.00E+00	0.00E+00	5.29E-06
3357	ALL	750588.42	4045060.7	NonCancerChronicDerive	0.00E+00	4.99E-10	0.00E+00	0.00E+00	0.00E+00	3.64E-08	5.21E-06	0.00E+00	1.62E-09	0.00E+00	0.00E+00	2.12E-07	0.00E+00	0.00E+00	5.21E-06
3358	ALL	750688.42	4045060.7	NonCancerChronicDerive	0.00E+00	4.91E-10	0.00E+00	0.00E+00	0.00E+00	3.59E-08	5.13E-06	0.00E+00	1.59E-09	0.00E+00	0.00E+00	2.09E-07	0.00E+00	0.00E+00	5.13E-06
3359	ALL	750788.42	4045060.7	NonCancerChronicDerive	0.00E+00	4.83E-10	0.00E+00	0.00E+00	0.00E+00	3.53E-08	5.05E-06	0.00E+00	1.56E-09	0.00E+00	0.00E+00	2.05E-07	0.00E+00	0.00E+00	5.05E-06
3360	ALL	750888.42	4045060.7	NonCancerChronicDerive	0.00E+00	4.76E-10	0.00E+00	0.00E+00	0.00E+00	3.49E-08	4.99E-06	0.00E+00	1.54E-09	0.00E+00	0.00E+00	2.02E-07	0.00E+00	0.00E+00	4.99E-06
3361	ALL	750988.42	4045060.7	NonCancerChronicDerive	0.00E+00	4.70E-10	0.00E+00	0.00E+00	0.00E+00	3.45E-08	4.93E-06	0.00E+00	1.52E-09	0.00E+00	0.00E+00	2.00E-07	0.00E+00	0.00E+00	4.93E-06
3362	ALL	751088.42	4045060.7	NonCancerChronicDerive	0.00E+00	4.64E-10	0.00E+00	0.00E+00	0.00E+00	3.42E-08	4.88E-06	0.00E+00	1.50E-09	0.00E+00	0.00E+00	1.98E-07	0.00E+00	0.00E+00	4.88E-06
3363	ALL	751188.42	4045060.7	NonCancerChronicDerive	0.00E+00	4.60E-10	0.00E+00	0.00E+00	0.00E+00	3.39E-08	4.84E-06	0.00E+00	1.49E-09	0.00E+00	0.00E+00	1.96E-07	0.00E+00	0.00E+00	4.84E-06
3364	ALL	751288.42	4045060.7	NonCancerChronicDerive	0.00E+00	4.56E-10	0.00E+00	0.00E+00	0.00E+00	3.37E-08	4.81E-06	0.00E+00	1.48E-09	0.00E+00	0.00E+00	1.94E-07	0.00E+00	0.00E+00	4.81E-06
3365	ALL	751388.42	4045060.7	NonCancerChronicDerive	0.00E+00	4.54E-10	0.00E+00	0.00E+00	0.00E+00	3.35E-08	4.78E-06	0.00E+00	1.47E-09	0.00E+00	0.00E+00	1.93E-07	0.00E+00	0.00E+00	4.78E-06
3366	ALL	751488.42	4045060.7	NonCancerChronicDerive	0.00E+00	4.52E-10	0.00E+00	0.00E+00	0.00E+00	3.34E-08	4.76E-06	0.00E+00	1.46E-09	0.00E+00	0.00E+00	1.92E-07	0.00E+00	0.00E+00	4.76E-06
3367	ALL	751588.42	4045060.7	NonCancerChronicDerive	0.00E+00	4.51E-10	0.00E+00	0.00E+00	0.00E+00	3.32E-08	4.75E-06	0.00E+00	1.46E-09	0.00E+00	0.00E+00	1.92E-07	0.00E+00	0.00E+00	4.75E-06
3368	ALL	751688.42	4045060.7	NonCancerChronicDerive	0.00E+00	4.51E-10	0.00E+00	0.00E+00	0.00E+00	3.31E-08	4.74E-06	0.00E+00	1.46E-09	0.00E+00	0.00E+00	1.92E-07	0.00E+00	0.00E+00	4.74E-06
3369	ALL	751788.42	4045060.7	NonCancerChronicDerive	0.00E+00	4.51E-10	0.00E+00	0.00E+00	0.00E+00	3.30E-08	4.73E-06	0.00E+00	1.46E-09	0.00E+00	0.00E+00	1.92E-07	0.00E+00	0.00E+00	4.73E-06
3370	ALL	751888.42	4045060.7	NonCancerChronicDerive	0.00E+00	4.51E-10	0.00E+00	0.00E+00	0.00E+00	3.30E-08	4.73E-06	0.00E+00	1.46E-09	0.00E+00	0.00E+00	1.92E-07	0.00E+00	0.00E+00	4.73E-06
3371	ALL	751988.42	4045060.7	NonCancerChronicDerive	0.00E+00	4.51E-10	0.00E+00	0.00E+00	0.00E+00	3.29E-08	4.72E-06	0.00E+00	1.46E-09	0.00E+00	0.00E+00	1.92E-07	0.00E+00	0.00E+00	4.72E-06
3372	ALL	752088.42	4045060.7	NonCancerChronicDerive	0.00E+00	4.51E-10	0.00E+00	0.00E+00	0.00E+00	3.28E-08	4.71E-06	0.00E+00	1.46E-09	0.00E+00	0.00E+00	1.92E-07	0.00E+00	0.00E+00	4.71E-06
3373	ALL	752188.42	4045060.7	NonCancerChronicDerive	0.00E+00	4.52E-10	0.00E+00	0.00E+00	0.00E+00	3.28E-08	4.71E-06	0.00E+00	1.46E-09	0.00E+00	0.00E+00	1.92E-07	0.00E+00	0.00E+00	4.71E-06
3374	ALL	752288.42	4045060.7	NonCancerChronicDerive	0.00E+00	4.51E-10	0.00E+00	0.00E+00	0.00E+00	3.27E-08	4.70E-06	0.00E+00	1.46E-09	0.00E+00	0.00E+00	1.92E-07	0.00E+00	0.00E+00	4.70E-06
3375	ALL	752388.42	4045060.7	NonCancerChronicDerive	0.00E+00	4.51E-10	0.00E+00	0.00E+00	0.00E+00	3.26E-08	4.69E-06	0.00E+00	1.46E-09	0.00E+00	0.00E+00	1.92E-07	0.00E+00	0.00E+00	4.69E-06
3376	ALL	752488.42	4045060.7	NonCancerChronicDerive	0.00E+00	4.50E-10	0.00E+00	0.00E+00	0.00E+00	3.25E-08	4.68E-06	0.00E+00	1.46E-09	0.00E+00	0.00E+00	1.91E-07	0.00E+00	0.00E+00	4.68E-06
3377	ALL	752588.42	4045060.7	NonCancerChronicDerive	0.00E+00	4.49E-10	0.00E+00	0.00E+00	0.00E+00	3.24E-08	4.67E-06	0.00E+00	1.45E-09	0.00E+00	0.00E+00	1.91E-07	0.00E+00	0.00E+00	4.67E-06
3378	ALL	752688.42	4045060.7	NonCancerChronicDerive	0.00E+00	4.48E-10	0.00E+00	0.00E+00	0.00E+00	3.24E-08	4.66E-06	0.00E+00	1.45E-09	0.00E+00	0.00E+00	1.91E-07	0.00E+00	0.00E+00	4.66E-06
3379	ALL	752788.42	4045060.7	NonCancerChronicDerive	0.00E+00	4.47E-10	0.00E+00	0.00E+00	0.00E+00	3.23E-08	4.65E-06	0.00E+00	1.45E-09	0.00E+00	0.00E+00	1.90E-07	0.00E+00	0.00E+00	4.65E-06
3380	ALL	752888.42	4045060.7	NonCancerChronicDerive	0.00E+00	4.47E-10	0.00E+00	0.00E+00	0.00E+00	3.22E-08	4.64E-06	0.00E+00	1.45E-09	0.00E+00	0.00E+00	1.90E-07	0.00E+00	0.00E+00	4.64E-06
3381	ALL	752988.42	4045060.7	NonCancerChronicDerive	0.00E+00	4.47E-10	0.00E+00	0.00E+00	0.00E+00	3.22E-08	4.64E-06	0.00E+00	1.45E-09	0.00E+00	0.00E+00	1.90E-07	0.00E+00	0.00E+00	4.64E-06
3382	ALL	748088.42	4045160.7	NonCancerChronicDerive	0.00E+00	6.26E-10	0.00E+00	0.00E+00	0.00E+00	4.54E-08	6.48E-06	0.00E+00	2.03E-09	0.00E+00	0.00E+00	2.67E-07	0.00E+00	0.00E+00	6.48E-06
3383	ALL	748188.42	4045160.7	NonCancerChronicDerive	0.00E+00	6.17E-10	0.00E+00	0.00E+00	0.00E+00	4.48E-08	6.39E-06	0.00E+00	2.00E-09	0.00E+00	0.00E+00	2.63E-07	0.00E+00	0.00E+00	6.39E-06
3384	ALL	748288.42	4045160.7	NonCancerChronicDerive	0.00E+00	6.07E-10	0.00E+00	0.00E+00	0.00E+00	4.42E-08	6.30E-06	0.00E+00	1.96E-09	0.00E+00	0.00E+00	2.58E-07	0.00E+00	0.00E+00	6.30E-06
3385	ALL	748388.42	4045160.7	NonCancerChronicDerive	0.00E+00	5.97E-10	0.00E+00	0.00E+00	0.00E+00	4.36E-08	6.21E-06	0.00E+00	1.93E-09	0.00E+00	0.00E+00	2.54E-07	0.00E+00	0.00E+00	6.21E-06
3386	ALL	750188.42	4045160.7	NonCancerChronicDerive	0.00E+00	5.19E-10	0.00E+00	0.00E+00	0.00E+00	3.78E-08	5.41E-06	0.00E+00	1.68E-09	0.00E+00	0.00E+00	2.21E-07	0.00E+00	0.00E+00	5.41E-06
3387	ALL	750288.42	4045160.7	NonCancerChronicDerive	0.00E+00	5.15E-10	0.00E+00	0.00E+00	0.00E+00	3.75E-08	5.37E-06	0.00E+00	1.67E-09	0.00E+00	0.00E+00	2.19E-07	0.00E+00	0.00E+00	5.37E-06
3388	ALL	750388.42	4045160.7	NonCancerChronicDerive	0.00E+00	5.10E-10	0.00E+00	0.00E+00	0.00E+00	3.71E-08	5.31E-06	0.00E+00	1.65E-09	0.00E+00	0.00E+00	2.17E-07	0.00E+00	0.00E+00	5.31E-06
3389	ALL	750488.42	4045160.7	NonCancerChronicDerive	0.00E+00	5.03E-10	0.00E+00	0.00E+00	0.00E+00	3.66E-08	5.25E-06	0.00E+00	1.63E-09	0.00E+00	0.00E+00	2.14E-07	0.00E+00	0.00E+00	5.25E-06
3390	ALL	750588.42	4045160.7	NonCancerChronicDerive	0.00E+00	4.96E-10	0.00E+00	0.00E+00	0.00E+00	3.61E-08	5.17E-06	0.00E+00	1.60E-09	0.00E+00	0.00E+00	2.11E-07	0.00E+00	0.00E+00	5.17E-06

3391	ALL	750688.42	4045160.7	NonCancerChronicDerive	0.00E+00	4.87E-10	0.00E+00	0.00E+00	0.00E+00	3.55E-08	5.09E-06	0.00E+00	1.58E-09	0.00E+00	0.00E+00	2.07E-07	0.00E+00	0.00E+00	5.09E-06
3392	ALL	750788.42	4045160.7	NonCancerChronicDerive	0.00E+00	4.80E-10	0.00E+00	0.00E+00	0.00E+00	3.50E-08	5.01E-06	0.00E+00	1.55E-09	0.00E+00	0.00E+00	2.04E-07	0.00E+00	0.00E+00	5.01E-06
3393	ALL	750888.42	4045160.7	NonCancerChronicDerive	0.00E+00	4.72E-10	0.00E+00	0.00E+00	0.00E+00	3.46E-08	4.95E-06	0.00E+00	1.53E-09	0.00E+00	0.00E+00	2.01E-07	0.00E+00	0.00E+00	4.95E-06
3394	ALL	750988.42	4045160.7	NonCancerChronicDerive	0.00E+00	4.66E-10	0.00E+00	0.00E+00	0.00E+00	3.42E-08	4.89E-06	0.00E+00	1.51E-09	0.00E+00	0.00E+00	1.98E-07	0.00E+00	0.00E+00	4.89E-06
3395	ALL	751088.42	4045160.7	NonCancerChronicDerive	0.00E+00	4.61E-10	0.00E+00	0.00E+00	0.00E+00	3.39E-08	4.84E-06	0.00E+00	1.49E-09	0.00E+00	0.00E+00	1.96E-07	0.00E+00	0.00E+00	4.84E-06
3396	ALL	751188.42	4045160.7	NonCancerChronicDerive	0.00E+00	4.56E-10	0.00E+00	0.00E+00	0.00E+00	3.36E-08	4.79E-06	0.00E+00	1.48E-09	0.00E+00	0.00E+00	1.94E-07	0.00E+00	0.00E+00	4.79E-06
3397	ALL	751288.42	4045160.7	NonCancerChronicDerive	0.00E+00	4.52E-10	0.00E+00	0.00E+00	0.00E+00	3.33E-08	4.76E-06	0.00E+00	1.46E-09	0.00E+00	0.00E+00	1.92E-07	0.00E+00	0.00E+00	4.76E-06
3398	ALL	751388.42	4045160.7	NonCancerChronicDerive	0.00E+00	4.49E-10	0.00E+00	0.00E+00	0.00E+00	3.31E-08	4.73E-06	0.00E+00	1.45E-09	0.00E+00	0.00E+00	1.91E-07	0.00E+00	0.00E+00	4.73E-06
3399	ALL	751488.42	4045160.7	NonCancerChronicDerive	0.00E+00	4.47E-10	0.00E+00	0.00E+00	0.00E+00	3.29E-08	4.70E-06	0.00E+00	1.45E-09	0.00E+00	0.00E+00	1.90E-07	0.00E+00	0.00E+00	4.70E-06
3400	ALL	751588.42	4045160.7	NonCancerChronicDerive	0.00E+00	4.46E-10	0.00E+00	0.00E+00	0.00E+00	3.28E-08	4.69E-06	0.00E+00	1.44E-09	0.00E+00	0.00E+00	1.90E-07	0.00E+00	0.00E+00	4.69E-06
3401	ALL	751688.42	4045160.7	NonCancerChronicDerive	0.00E+00	4.45E-10	0.00E+00	0.00E+00	0.00E+00	3.27E-08	4.67E-06	0.00E+00	1.44E-09	0.00E+00	0.00E+00	1.89E-07	0.00E+00	0.00E+00	4.67E-06
3402	ALL	751788.42	4045160.7	NonCancerChronicDerive	0.00E+00	4.45E-10	0.00E+00	0.00E+00	0.00E+00	3.26E-08	4.66E-06	0.00E+00	1.44E-09	0.00E+00	0.00E+00	1.89E-07	0.00E+00	0.00E+00	4.66E-06
3403	ALL	751888.42	4045160.7	NonCancerChronicDerive	0.00E+00	4.45E-10	0.00E+00	0.00E+00	0.00E+00	3.25E-08	4.66E-06	0.00E+00	1.44E-09	0.00E+00	0.00E+00	1.89E-07	0.00E+00	0.00E+00	4.66E-06
3404	ALL	751988.42	4045160.7	NonCancerChronicDerive	0.00E+00	4.45E-10	0.00E+00	0.00E+00	0.00E+00	3.25E-08	4.65E-06	0.00E+00	1.44E-09	0.00E+00	0.00E+00	1.89E-07	0.00E+00	0.00E+00	4.65E-06
3405	ALL	752088.42	4045160.7	NonCancerChronicDerive	0.00E+00	4.45E-10	0.00E+00	0.00E+00	0.00E+00	3.24E-08	4.65E-06	0.00E+00	1.44E-09	0.00E+00	0.00E+00	1.89E-07	0.00E+00	0.00E+00	4.65E-06
3406	ALL	752188.42	4045160.7	NonCancerChronicDerive	0.00E+00	4.45E-10	0.00E+00	0.00E+00	0.00E+00	3.23E-08	4.64E-06	0.00E+00	1.44E-09	0.00E+00	0.00E+00	1.90E-07	0.00E+00	0.00E+00	4.64E-06
3407	ALL	752288.42	4045160.7	NonCancerChronicDerive	0.00E+00	4.45E-10	0.00E+00	0.00E+00	0.00E+00	3.23E-08	4.64E-06	0.00E+00	1.44E-09	0.00E+00	0.00E+00	1.89E-07	0.00E+00	0.00E+00	4.64E-06
3408	ALL	752388.42	4045160.7	NonCancerChronicDerive	0.00E+00	4.45E-10	0.00E+00	0.00E+00	0.00E+00	3.22E-08	4.63E-06	0.00E+00	1.44E-09	0.00E+00	0.00E+00	1.89E-07	0.00E+00	0.00E+00	4.63E-06
3409	ALL	752488.42	4045160.7	NonCancerChronicDerive	0.00E+00	4.44E-10	0.00E+00	0.00E+00	0.00E+00	3.21E-08	4.62E-06	0.00E+00	1.44E-09	0.00E+00	0.00E+00	1.89E-07	0.00E+00	0.00E+00	4.62E-06
3410	ALL	752588.42	4045160.7	NonCancerChronicDerive	0.00E+00	4.44E-10	0.00E+00	0.00E+00	0.00E+00	3.20E-08	4.61E-06	0.00E+00	1.44E-09	0.00E+00	0.00E+00	1.89E-07	0.00E+00	0.00E+00	4.61E-06
3411	ALL	752688.42	4045160.7	NonCancerChronicDerive	0.00E+00	4.43E-10	0.00E+00	0.00E+00	0.00E+00	3.19E-08	4.60E-06	0.00E+00	1.43E-09	0.00E+00	0.00E+00	1.88E-07	0.00E+00	0.00E+00	4.60E-06
3412	ALL	752788.42	4045160.7	NonCancerChronicDerive	0.00E+00	4.42E-10	0.00E+00	0.00E+00	0.00E+00	3.19E-08	4.59E-06	0.00E+00	1.43E-09	0.00E+00	0.00E+00	1.88E-07	0.00E+00	0.00E+00	4.59E-06
3413	ALL	752888.42	4045160.7	NonCancerChronicDerive	0.00E+00	4.41E-10	0.00E+00	0.00E+00	0.00E+00	3.18E-08	4.58E-06	0.00E+00	1.43E-09	0.00E+00	0.00E+00	1.88E-07	0.00E+00	0.00E+00	4.58E-06
3414	ALL	752988.42	4045160.7	NonCancerChronicDerive	0.00E+00	4.41E-10	0.00E+00	0.00E+00	0.00E+00	3.18E-08	4.57E-06	0.00E+00	1.43E-09	0.00E+00	0.00E+00	1.88E-07	0.00E+00	0.00E+00	4.57E-06
3415	ALL	748088.42	4045260.7	NonCancerChronicDerive	0.00E+00	6.16E-10	0.00E+00	0.00E+00	0.00E+00	4.47E-08	6.37E-06	0.00E+00	2.00E-09	0.00E+00	0.00E+00	2.62E-07	0.00E+00	0.00E+00	6.37E-06
3416	ALL	748188.42	4045260.7	NonCancerChronicDerive	0.00E+00	6.07E-10	0.00E+00	0.00E+00	0.00E+00	4.41E-08	6.29E-06	0.00E+00	1.97E-09	0.00E+00	0.00E+00	2.59E-07	0.00E+00	0.00E+00	6.29E-06
3417	ALL	748288.42	4045260.7	NonCancerChronicDerive	0.00E+00	5.97E-10	0.00E+00	0.00E+00	0.00E+00	4.34E-08	6.19E-06	0.00E+00	1.93E-09	0.00E+00	0.00E+00	2.54E-07	0.00E+00	0.00E+00	6.19E-06
3418	ALL	748388.42	4045260.7	NonCancerChronicDerive	0.00E+00	5.88E-10	0.00E+00	0.00E+00	0.00E+00	4.28E-08	6.11E-06	0.00E+00	1.90E-09	0.00E+00	0.00E+00	2.50E-07	0.00E+00	0.00E+00	6.11E-06
3419	ALL	750188.42	4045260.7	NonCancerChronicDerive	0.00E+00	5.12E-10	0.00E+00	0.00E+00	0.00E+00	3.73E-08	5.34E-06	0.00E+00	1.66E-09	0.00E+00	0.00E+00	2.18E-07	0.00E+00	0.00E+00	5.34E-06
3420	ALL	750288.42	4045260.7	NonCancerChronicDerive	0.00E+00	5.10E-10	0.00E+00	0.00E+00	0.00E+00	3.71E-08	5.31E-06	0.00E+00	1.65E-09	0.00E+00	0.00E+00	2.17E-07	0.00E+00	0.00E+00	5.31E-06
3421	ALL	750388.42	4045260.7	NonCancerChronicDerive	0.00E+00	5.05E-10	0.00E+00	0.00E+00	0.00E+00	3.67E-08	5.26E-06	0.00E+00	1.64E-09	0.00E+00	0.00E+00	2.15E-07	0.00E+00	0.00E+00	5.26E-06
3422	ALL	750488.42	4045260.7	NonCancerChronicDerive	0.00E+00	4.99E-10	0.00E+00	0.00E+00	0.00E+00	3.63E-08	5.20E-06	0.00E+00	1.62E-09	0.00E+00	0.00E+00	2.12E-07	0.00E+00	0.00E+00	5.20E-06
3423	ALL	750588.42	4045260.7	NonCancerChronicDerive	0.00E+00	4.92E-10	0.00E+00	0.00E+00	0.00E+00	3.58E-08	5.13E-06	0.00E+00	1.59E-09	0.00E+00	0.00E+00	2.09E-07	0.00E+00	0.00E+00	5.13E-06
3424	ALL	750688.42	4045260.7	NonCancerChronicDerive	0.00E+00	4.84E-10	0.00E+00	0.00E+00	0.00E+00	3.53E-08	5.05E-06	0.00E+00	1.57E-09	0.00E+00	0.00E+00	2.06E-07	0.00E+00	0.00E+00	5.05E-06
3425	ALL	750788.42	4045260.7	NonCancerChronicDerive	0.00E+00	4.76E-10	0.00E+00	0.00E+00	0.00E+00	3.47E-08	4.97E-06	0.00E+00	1.54E-09	0.00E+00	0.00E+00	2.03E-07	0.00E+00	0.00E+00	4.97E-06
3426	ALL	750888.42	4045260.7	NonCancerChronicDerive	0.00E+00	4.69E-10	0.00E+00	0.00E+00	0.00E+00	3.43E-08	4.91E-06	0.00E+00	1.52E-09	0.00E+00	0.00E+00	2.00E-07	0.00E+00	0.00E+00	4.91E-06
3427	ALL	750988.42	4045260.7	NonCancerChronicDerive	0.00E+00	4.63E-10	0.00E+00	0.00E+00	0.00E+00	3.39E-08	4.85E-06	0.00E+00	1.50E-09	0.00E+00	0.00E+00	1.97E-07	0.00E+00	0.00E+00	4.85E-06
3428	ALL	751088.42	4045260.7	NonCancerChronicDerive	0.00E+00	4.57E-10	0.00E+00	0.00E+00	0.00E+00	3.35E-08	4.79E-06	0.00E+00	1.48E-09	0.00E+00	0.00E+00	1.95E-07	0.00E+00	0.00E+00	4.79E-06
3429	ALL	751188.42	4045260.7	NonCancerChronicDerive	0.00E+00	4.52E-10	0.00E+00	0.00E+00	0.00E+00	3.32E-08	4.75E-06	0.00E+00	1.46E-09	0.00E+00	0.00E+00	1.92E-07	0.00E+00	0.00E+00	4.75E-06
3430	ALL	751288.42	4045260.7	NonCancerChronicDerive	0.00E+00	4.48E-10	0.00E+00	0.00E+00	0.00E+00	3.30E-08	4.71E-06	0.00E+00	1.45E-09	0.00E+00	0.00E+00	1.91E-07	0.00E+00	0.00E+00	4.71E-06
3431	ALL	751388.42	4045260.7	NonCancerChronicDerive	0.00E+00	4.45E-10	0.00E+00	0.00E+00	0.00E+00	3.27E-08	4.67E-06	0.00E+00	1.44E-09	0.00E+00	0.00E+00	1.89E-07	0.00E+00	0.00E+00	4.67E-06
3432	ALL	751488.42	4045260.7	NonCancerChronicDerive	0.00E+00	4.42E-10	0.00E+00	0.00E+00	0.00E+00	3.25E-08	4.65E-06	0.00E+00	1.43E-09	0.00E+00	0.00E+00	1.88E-07	0.00E+00	0.00E+00	4.65E-06
3433	ALL	751588.42	4045260.7	NonCancerChronicDerive	0.00E+00	4.40E-10	0.00E+00	0.00E+00	0.00E+00	3.24E-08	4.63E-06	0.00E+00	1.43E-09	0.00E+00	0.00E+00	1.87E-07	0.00E+00	0.00E+00	4.63E-06
3434	ALL	751688.42	4045260.7	NonCancerChronicDerive	0.00E+00	4.39E-10	0.00E+00	0.00E+00	0.00E+00	3.23E-08	4.61E-06	0.00E+00	1.42E-09	0.00E+00	0.00E+00	1.87E-07	0.00E+00	0.00E+00	4.61E-06
3435	ALL	751788.42	4045260.7	NonCancerChronicDerive	0.00E+00	4.39E-10	0.00E+00	0.00E+00	0.00E+00	3.22E-08	4.60E-06	0.00E+00	1.42E-09	0.00E+00	0.00E+00	1.87E-07	0.00E+00	0.00E+00	4.60E-06
3436	ALL	751888.42	4045260.7	NonCancerChronicDerive	0.00E+00	4.39E-10	0.00E+00	0.00E+00	0.00E+00	3.21E-08	4.60E-06	0.00E+00	1.42E-09	0.00E+00	0.00E+00	1.87E-07	0.00E+00	0.00E+00	4.60E-06
3437	ALL	751988.42	4045260.7	NonCancerChronicDerive	0.00E+00	4.39E-10	0.00E+00	0.00E+00	0.00E+00	3.20E-08	4.59E-06	0.00E+00	1.42E-09	0.00E+00	0.00E+00	1.87E-07	0.00E+00	0.00E+00	4.59E-06
3438	ALL	752088.42	4045260.7	NonCancerChronicDerive	0.00E+00	4.39E-10	0.00E+00	0.00E+00	0.00E+00	3.20E-08	4.59E-06	0.00E+00	1.42E-09	0.00E+00	0.00E+00	1.87E-07	0.00E+00	0.00E+00	4.59E-06
3439	ALL	752188.42	4045260.7	NonCancerChronicDerive	0.00E+00	4.40E-10	0.00E+00	0.00E+00	0.00E+00	3.19E-08	4.58E-06	0.00E+00	1.42E-09	0.00E+00	0.00E+00	1.87E-07	0.00E+00	0.00E+00	4.58E-06
3440	ALL	752288.42	4045260.7	NonCancerChronicDerive	0.00E+00	4.39E-10	0.00E+00	0.00E+00	0.00E+00	3.18E-08	4.57E-06	0.00E+00	1.42E-09	0.00E+00	0.00E+00	1.87E-07	0.00E+00	0.00E+00	4.57E-06
3441	ALL	752388.42	4045260.7	NonCancerChronicDerive	0.00E+00	4.39E-10	0.00E+00	0.00E+00	0.00E+00	3.18E-08	4.57E-06	0.00E+00	1.42E-09	0.00E+00	0.00E+00	1.87E-07	0.00E+00	0.00E+00	4.57E-06
3442	ALL	752488.42	4045260.7	NonCancerChronicDerive	0.00E+00	4.39E-10	0.00E+00	0.00E+00	0.00E+00	3.17E-08	4.56E-06	0.00E+00	1.42E-09	0.00E+00	0.00E+00	1.87E-07	0.00E+00	0.00E+00	4.56E-06
3443	ALL	752588.42	4045260.7	NonCancerChronicDerive	0.00E+00	4.38E-10	0.00E+00	0.00E+00	0.00E+00	3.16E-08	4.55E-06	0.00E+00	1.42E-09	0.00E+00	0.00E+00	1.87E-07	0.00E+00	0.00E+00	4.55E-06

3444	ALL	752688.42	4045260.7	NonCancerChronicDerive	0.00E+00	4.37E-10	0.00E+00	0.00E+00	0.00E+00	3.15E-08	4.54E-06	0.00E+00	1.42E-09	0.00E+00	0.00E+00	1.86E-07	0.00E+00	0.00E+00	4.54E-06
3445	ALL	752788.42	4045260.7	NonCancerChronicDerive	0.00E+00	4.37E-10	0.00E+00	0.00E+00	0.00E+00	3.15E-08	4.53E-06	0.00E+00	1.41E-09	0.00E+00	0.00E+00	1.86E-07	0.00E+00	0.00E+00	4.53E-06
3446	ALL	752888.42	4045260.7	NonCancerChronicDerive	0.00E+00	4.36E-10	0.00E+00	0.00E+00	0.00E+00	3.14E-08	4.52E-06	0.00E+00	1.41E-09	0.00E+00	0.00E+00	1.85E-07	0.00E+00	0.00E+00	4.52E-06
3447	ALL	752988.42	4045260.7	NonCancerChronicDerive	0.00E+00	4.35E-10	0.00E+00	0.00E+00	0.00E+00	3.13E-08	4.51E-06	0.00E+00	1.41E-09	0.00E+00	0.00E+00	1.85E-07	0.00E+00	0.00E+00	4.51E-06
3448	ALL	748088.42	4045360.7	NonCancerChronicDerive	0.00E+00	6.06E-10	0.00E+00	0.00E+00	0.00E+00	4.39E-08	6.27E-06	0.00E+00	1.96E-09	0.00E+00	0.00E+00	2.58E-07	0.00E+00	0.00E+00	6.27E-06
3449	ALL	748188.42	4045360.7	NonCancerChronicDerive	0.00E+00	5.97E-10	0.00E+00	0.00E+00	0.00E+00	4.33E-08	6.18E-06	0.00E+00	1.93E-09	0.00E+00	0.00E+00	2.54E-07	0.00E+00	0.00E+00	6.18E-06
3450	ALL	748288.42	4045360.7	NonCancerChronicDerive	0.00E+00	5.88E-10	0.00E+00	0.00E+00	0.00E+00	4.27E-08	6.09E-06	0.00E+00	1.90E-09	0.00E+00	0.00E+00	2.50E-07	0.00E+00	0.00E+00	6.09E-06
3451	ALL	748388.42	4045360.7	NonCancerChronicDerive	0.00E+00	5.78E-10	0.00E+00	0.00E+00	0.00E+00	4.21E-08	6.00E-06	0.00E+00	1.87E-09	0.00E+00	0.00E+00	2.46E-07	0.00E+00	0.00E+00	6.00E-06
3452	ALL	750188.42	4045360.7	NonCancerChronicDerive	0.00E+00	5.06E-10	0.00E+00	0.00E+00	0.00E+00	3.68E-08	5.27E-06	0.00E+00	1.64E-09	0.00E+00	0.00E+00	2.15E-07	0.00E+00	0.00E+00	5.27E-06
3453	ALL	750288.42	4045360.7	NonCancerChronicDerive	0.00E+00	5.04E-10	0.00E+00	0.00E+00	0.00E+00	3.66E-08	5.24E-06	0.00E+00	1.63E-09	0.00E+00	0.00E+00	2.14E-07	0.00E+00	0.00E+00	5.24E-06
3454	ALL	750388.42	4045360.7	NonCancerChronicDerive	0.00E+00	5.00E-10	0.00E+00	0.00E+00	0.00E+00	3.63E-08	5.20E-06	0.00E+00	1.62E-09	0.00E+00	0.00E+00	2.13E-07	0.00E+00	0.00E+00	5.20E-06
3455	ALL	750488.42	4045360.7	NonCancerChronicDerive	0.00E+00	4.95E-10	0.00E+00	0.00E+00	0.00E+00	3.60E-08	5.15E-06	0.00E+00	1.60E-09	0.00E+00	0.00E+00	2.11E-07	0.00E+00	0.00E+00	5.15E-06
3456	ALL	748088.42	4045460.7	NonCancerChronicDerive	0.00E+00	5.96E-10	0.00E+00	0.00E+00	0.00E+00	4.31E-08	6.16E-06	0.00E+00	1.93E-09	0.00E+00	0.00E+00	2.54E-07	0.00E+00	0.00E+00	6.16E-06
3457	ALL	748188.42	4045460.7	NonCancerChronicDerive	0.00E+00	5.87E-10	0.00E+00	0.00E+00	0.00E+00	4.26E-08	6.07E-06	0.00E+00	1.90E-09	0.00E+00	0.00E+00	2.50E-07	0.00E+00	0.00E+00	6.07E-06
3458	ALL	748288.42	4045460.7	NonCancerChronicDerive	0.00E+00	5.78E-10	0.00E+00	0.00E+00	0.00E+00	4.20E-08	5.99E-06	0.00E+00	1.87E-09	0.00E+00	0.00E+00	2.46E-07	0.00E+00	0.00E+00	5.99E-06
3459	ALL	748388.42	4045460.7	NonCancerChronicDerive	0.00E+00	5.70E-10	0.00E+00	0.00E+00	0.00E+00	4.14E-08	5.91E-06	0.00E+00	1.84E-09	0.00E+00	0.00E+00	2.42E-07	0.00E+00	0.00E+00	5.91E-06
3460	ALL	750188.42	4045460.7	NonCancerChronicDerive	0.00E+00	4.99E-10	0.00E+00	0.00E+00	0.00E+00	3.63E-08	5.19E-06	0.00E+00	1.62E-09	0.00E+00	0.00E+00	2.12E-07	0.00E+00	0.00E+00	5.19E-06
3461	ALL	750288.42	4045460.7	NonCancerChronicDerive	0.00E+00	4.98E-10	0.00E+00	0.00E+00	0.00E+00	3.62E-08	5.18E-06	0.00E+00	1.61E-09	0.00E+00	0.00E+00	2.12E-07	0.00E+00	0.00E+00	5.18E-06
3462	ALL	750388.42	4045460.7	NonCancerChronicDerive	0.00E+00	4.96E-10	0.00E+00	0.00E+00	0.00E+00	3.59E-08	5.15E-06	0.00E+00	1.60E-09	0.00E+00	0.00E+00	2.11E-07	0.00E+00	0.00E+00	5.15E-06
3463	ALL	750488.42	4045460.7	NonCancerChronicDerive	0.00E+00	4.91E-10	0.00E+00	0.00E+00	0.00E+00	3.56E-08	5.10E-06	0.00E+00	1.59E-09	0.00E+00	0.00E+00	2.09E-07	0.00E+00	0.00E+00	5.10E-06
3464	ALL	748088.42	4045560.7	NonCancerChronicDerive	0.00E+00	5.87E-10	0.00E+00	0.00E+00	0.00E+00	4.24E-08	6.06E-06	0.00E+00	1.90E-09	0.00E+00	0.00E+00	2.50E-07	0.00E+00	0.00E+00	6.06E-06
3465	ALL	748188.42	4045560.7	NonCancerChronicDerive	0.00E+00	5.78E-10	0.00E+00	0.00E+00	0.00E+00	4.19E-08	5.98E-06	0.00E+00	1.87E-09	0.00E+00	0.00E+00	2.46E-07	0.00E+00	0.00E+00	5.98E-06
3466	ALL	748288.42	4045560.7	NonCancerChronicDerive	0.00E+00	5.69E-10	0.00E+00	0.00E+00	0.00E+00	4.13E-08	5.89E-06	0.00E+00	1.84E-09	0.00E+00	0.00E+00	2.42E-07	0.00E+00	0.00E+00	5.89E-06
3467	ALL	748388.42	4045560.7	NonCancerChronicDerive	0.00E+00	5.61E-10	0.00E+00	0.00E+00	0.00E+00	4.07E-08	5.81E-06	0.00E+00	1.82E-09	0.00E+00	0.00E+00	2.39E-07	0.00E+00	0.00E+00	5.81E-06
3468	ALL	750188.42	4045560.7	NonCancerChronicDerive	0.00E+00	4.93E-10	0.00E+00	0.00E+00	0.00E+00	3.58E-08	5.12E-06	0.00E+00	1.59E-09	0.00E+00	0.00E+00	2.10E-07	0.00E+00	0.00E+00	5.12E-06
3469	ALL	750288.42	4045560.7	NonCancerChronicDerive	0.00E+00	4.92E-10	0.00E+00	0.00E+00	0.00E+00	3.57E-08	5.11E-06	0.00E+00	1.59E-09	0.00E+00	0.00E+00	2.09E-07	0.00E+00	0.00E+00	5.11E-06
3470	ALL	750388.42	4045560.7	NonCancerChronicDerive	0.00E+00	4.90E-10	0.00E+00	0.00E+00	0.00E+00	3.55E-08	5.09E-06	0.00E+00	1.59E-09	0.00E+00	0.00E+00	2.09E-07	0.00E+00	0.00E+00	5.09E-06
3471	ALL	750488.42	4045560.7	NonCancerChronicDerive	0.00E+00	4.87E-10	0.00E+00	0.00E+00	0.00E+00	3.52E-08	5.05E-06	0.00E+00	1.57E-09	0.00E+00	0.00E+00	2.07E-07	0.00E+00	0.00E+00	5.05E-06
3472	ALL	748088.42	4045660.7	NonCancerChronicDerive	0.00E+00	5.77E-10	0.00E+00	0.00E+00	0.00E+00	4.17E-08	5.96E-06	0.00E+00	1.87E-09	0.00E+00	0.00E+00	2.46E-07	0.00E+00	0.00E+00	5.96E-06
3473	ALL	748188.42	4045660.7	NonCancerChronicDerive	0.00E+00	5.69E-10	0.00E+00	0.00E+00	0.00E+00	4.12E-08	5.88E-06	0.00E+00	1.84E-09	0.00E+00	0.00E+00	2.42E-07	0.00E+00	0.00E+00	5.88E-06
3474	ALL	748288.42	4045660.7	NonCancerChronicDerive	0.00E+00	5.61E-10	0.00E+00	0.00E+00	0.00E+00	4.06E-08	5.80E-06	0.00E+00	1.81E-09	0.00E+00	0.00E+00	2.39E-07	0.00E+00	0.00E+00	5.80E-06
3475	ALL	748388.42	4045660.7	NonCancerChronicDerive	0.00E+00	5.52E-10	0.00E+00	0.00E+00	0.00E+00	4.00E-08	5.71E-06	0.00E+00	1.79E-09	0.00E+00	0.00E+00	2.35E-07	0.00E+00	0.00E+00	5.71E-06
3476	ALL	748488.42	4045660.7	NonCancerChronicDerive	0.00E+00	5.44E-10	0.00E+00	0.00E+00	0.00E+00	3.95E-08	5.64E-06	0.00E+00	1.76E-09	0.00E+00	0.00E+00	2.31E-07	0.00E+00	0.00E+00	5.64E-06
3477	ALL	748588.42	4045660.7	NonCancerChronicDerive	0.00E+00	5.37E-10	0.00E+00	0.00E+00	0.00E+00	3.90E-08	5.57E-06	0.00E+00	1.74E-09	0.00E+00	0.00E+00	2.28E-07	0.00E+00	0.00E+00	5.57E-06
3478	ALL	748688.42	4045660.7	NonCancerChronicDerive	0.00E+00	5.30E-10	0.00E+00	0.00E+00	0.00E+00	3.85E-08	5.51E-06	0.00E+00	1.72E-09	0.00E+00	0.00E+00	2.26E-07	0.00E+00	0.00E+00	5.51E-06
3479	ALL	748788.42	4045660.7	NonCancerChronicDerive	0.00E+00	5.24E-10	0.00E+00	0.00E+00	0.00E+00	3.81E-08	5.45E-06	0.00E+00	1.70E-09	0.00E+00	0.00E+00	2.23E-07	0.00E+00	0.00E+00	5.45E-06
3480	ALL	748888.42	4045660.7	NonCancerChronicDerive	0.00E+00	5.18E-10	0.00E+00	0.00E+00	0.00E+00	3.78E-08	5.39E-06	0.00E+00	1.68E-09	0.00E+00	0.00E+00	2.21E-07	0.00E+00	0.00E+00	5.39E-06
3481	ALL	748988.42	4045660.7	NonCancerChronicDerive	0.00E+00	5.13E-10	0.00E+00	0.00E+00	0.00E+00	3.74E-08	5.34E-06	0.00E+00	1.66E-09	0.00E+00	0.00E+00	2.18E-07	0.00E+00	0.00E+00	5.34E-06
3482	ALL	749088.42	4045660.7	NonCancerChronicDerive	0.00E+00	5.07E-10	0.00E+00	0.00E+00	0.00E+00	3.70E-08	5.29E-06	0.00E+00	1.64E-09	0.00E+00	0.00E+00	2.16E-07	0.00E+00	0.00E+00	5.29E-06
3483	ALL	749188.42	4045660.7	NonCancerChronicDerive	0.00E+00	5.02E-10	0.00E+00	0.00E+00	0.00E+00	3.67E-08	5.23E-06	0.00E+00	1.62E-09	0.00E+00	0.00E+00	2.13E-07	0.00E+00	0.00E+00	5.23E-06
3484	ALL	749288.42	4045660.7	NonCancerChronicDerive	0.00E+00	4.96E-10	0.00E+00	0.00E+00	0.00E+00	3.63E-08	5.18E-06	0.00E+00	1.61E-09	0.00E+00	0.00E+00	2.11E-07	0.00E+00	0.00E+00	5.18E-06
3485	ALL	749388.42	4045660.7	NonCancerChronicDerive	0.00E+00	4.91E-10	0.00E+00	0.00E+00	0.00E+00	3.59E-08	5.13E-06	0.00E+00	1.59E-09	0.00E+00	0.00E+00	2.09E-07	0.00E+00	0.00E+00	5.13E-06
3486	ALL	749488.42	4045660.7	NonCancerChronicDerive	0.00E+00	4.87E-10	0.00E+00	0.00E+00	0.00E+00	3.56E-08	5.08E-06	0.00E+00	1.58E-09	0.00E+00	0.00E+00	2.07E-07	0.00E+00	0.00E+00	5.08E-06
3487	ALL	749588.42	4045660.7	NonCancerChronicDerive	0.00E+00	4.83E-10	0.00E+00	0.00E+00	0.00E+00	3.54E-08	5.05E-06	0.00E+00	1.56E-09	0.00E+00	0.00E+00	2.06E-07	0.00E+00	0.00E+00	5.05E-06
3488	ALL	749688.42	4045660.7	NonCancerChronicDerive	0.00E+00	4.81E-10	0.00E+00	0.00E+00	0.00E+00	3.52E-08	5.03E-06	0.00E+00	1.56E-09	0.00E+00	0.00E+00	2.05E-07	0.00E+00	0.00E+00	5.03E-06
3489	ALL	749788.42	4045660.7	NonCancerChronicDerive	0.00E+00	4.81E-10	0.00E+00	0.00E+00	0.00E+00	3.52E-08	5.02E-06	0.00E+00	1.56E-09	0.00E+00	0.00E+00	2.05E-07	0.00E+00	0.00E+00	5.02E-06
3490	ALL	749888.42	4045660.7	NonCancerChronicDerive	0.00E+00	4.81E-10	0.00E+00	0.00E+00	0.00E+00	3.52E-08	5.02E-06	0.00E+00	1.56E-09	0.00E+00	0.00E+00	2.05E-07	0.00E+00	0.00E+00	5.02E-06
3491	ALL	749988.42	4045660.7	NonCancerChronicDerive	0.00E+00	4.83E-10	0.00E+00	0.00E+00	0.00E+00	3.52E-08	5.03E-06	0.00E+00	1.56E-09	0.00E+00	0.00E+00	2.06E-07	0.00E+00	0.00E+00	5.03E-06
3492	ALL	750088.42	4045660.7	NonCancerChronicDerive	0.00E+00	4.85E-10	0.00E+00	0.00E+00	0.00E+00	3.53E-08	5.04E-06	0.00E+00	1.57E-09	0.00E+00	0.00E+00	2.06E-07	0.00E+00	0.00E+00	5.04E-06
3493	ALL	750188.42	4045660.7	NonCancerChronicDerive	0.00E+00	4.86E-10	0.00E+00	0.00E+00	0.00E+00	3.53E-08	5.05E-06	0.00E+00	1.57E-09	0.00E+00	0.00E+00	2.07E-07	0.00E+00	0.00E+00	5.05E-06
3494	ALL	750288.42	4045660.7	NonCancerChronicDerive	0.00E+00	4.86E-10	0.00E+00	0.00E+00	0.00E+00	3.53E-08	5.05E-06	0.00E+00	1.57E-09	0.00E+00	0.00E+00	2.07E-07	0.00E+00	0.00E+00	5.05E-06
3495	ALL	750388.42	4045660.7	NonCancerChronicDerive	0.00E+00	4.85E-10	0.00E+00	0.00E+00	0.00E+00	3.51E-08	5.03E-06	0.00E+00	1.57E-09	0.00E+00	0.00E+00	2.06E-07	0.00E+00	0.00E+00	5.03E-06
3496	ALL	750488.42	4045660.7	NonCancerChronicDerive	0.00E+00	4.82E-10	0.00E+00	0.00E+00	0.00E+00	3.48E-08	5.00E-06	0.00E+00	1.56E-09	0.00E+00	0.00E+00	2.05E-07	0.00E+00	0.00E+00	5.00E-06

3497	ALL	748088.42	4045760.7	NonCancerChronicDerive	0.00E+00	5.69E-10	0.00E+00	0.00E+00	0.00E+00	4.10E-08	5.86E-06	0.00E+00	1.84E-09	0.00E+00	0.00E+00	2.42E-07	0.00E+00	0.00E+00	5.86E-06
3498	ALL	748188.42	4045760.7	NonCancerChronicDerive	0.00E+00	5.60E-10	0.00E+00	0.00E+00	0.00E+00	4.05E-08	5.78E-06	0.00E+00	1.81E-09	0.00E+00	0.00E+00	2.38E-07	0.00E+00	0.00E+00	5.78E-06
3499	ALL	748288.42	4045760.7	NonCancerChronicDerive	0.00E+00	5.52E-10	0.00E+00	0.00E+00	0.00E+00	3.99E-08	5.70E-06	0.00E+00	1.79E-09	0.00E+00	0.00E+00	2.35E-07	0.00E+00	0.00E+00	5.70E-06
3500	ALL	748388.42	4045760.7	NonCancerChronicDerive	0.00E+00	5.44E-10	0.00E+00	0.00E+00	0.00E+00	3.94E-08	5.63E-06	0.00E+00	1.76E-09	0.00E+00	0.00E+00	2.32E-07	0.00E+00	0.00E+00	5.63E-06
3501	ALL	748488.42	4045760.7	NonCancerChronicDerive	0.00E+00	5.36E-10	0.00E+00	0.00E+00	0.00E+00	3.89E-08	5.55E-06	0.00E+00	1.74E-09	0.00E+00	0.00E+00	2.28E-07	0.00E+00	0.00E+00	5.55E-06
3502	ALL	748588.42	4045760.7	NonCancerChronicDerive	0.00E+00	5.29E-10	0.00E+00	0.00E+00	0.00E+00	3.84E-08	5.49E-06	0.00E+00	1.71E-09	0.00E+00	0.00E+00	2.25E-07	0.00E+00	0.00E+00	5.49E-06
3503	ALL	748688.42	4045760.7	NonCancerChronicDerive	0.00E+00	5.23E-10	0.00E+00	0.00E+00	0.00E+00	3.80E-08	5.43E-06	0.00E+00	1.69E-09	0.00E+00	0.00E+00	2.23E-07	0.00E+00	0.00E+00	5.43E-06
3504	ALL	748788.42	4045760.7	NonCancerChronicDerive	0.00E+00	5.17E-10	0.00E+00	0.00E+00	0.00E+00	3.76E-08	5.37E-06	0.00E+00	1.67E-09	0.00E+00	0.00E+00	2.20E-07	0.00E+00	0.00E+00	5.37E-06
3505	ALL	748888.42	4045760.7	NonCancerChronicDerive	0.00E+00	5.11E-10	0.00E+00	0.00E+00	0.00E+00	3.72E-08	5.32E-06	0.00E+00	1.66E-09	0.00E+00	0.00E+00	2.18E-07	0.00E+00	0.00E+00	5.32E-06
3506	ALL	748988.42	4045760.7	NonCancerChronicDerive	0.00E+00	5.06E-10	0.00E+00	0.00E+00	0.00E+00	3.69E-08	5.27E-06	0.00E+00	1.64E-09	0.00E+00	0.00E+00	2.15E-07	0.00E+00	0.00E+00	5.27E-06
3507	ALL	749088.42	4045760.7	NonCancerChronicDerive	0.00E+00	5.01E-10	0.00E+00	0.00E+00	0.00E+00	3.65E-08	5.21E-06	0.00E+00	1.62E-09	0.00E+00	0.00E+00	2.13E-07	0.00E+00	0.00E+00	5.21E-06
3508	ALL	749188.42	4045760.7	NonCancerChronicDerive	0.00E+00	4.95E-10	0.00E+00	0.00E+00	0.00E+00	3.61E-08	5.16E-06	0.00E+00	1.60E-09	0.00E+00	0.00E+00	2.11E-07	0.00E+00	0.00E+00	5.16E-06
3509	ALL	749288.42	4045760.7	NonCancerChronicDerive	0.00E+00	4.90E-10	0.00E+00	0.00E+00	0.00E+00	3.58E-08	5.11E-06	0.00E+00	1.59E-09	0.00E+00	0.00E+00	2.09E-07	0.00E+00	0.00E+00	5.11E-06
3510	ALL	749388.42	4045760.7	NonCancerChronicDerive	0.00E+00	4.85E-10	0.00E+00	0.00E+00	0.00E+00	3.54E-08	5.06E-06	0.00E+00	1.57E-09	0.00E+00	0.00E+00	2.06E-07	0.00E+00	0.00E+00	5.06E-06
3511	ALL	749488.42	4045760.7	NonCancerChronicDerive	0.00E+00	4.80E-10	0.00E+00	0.00E+00	0.00E+00	3.51E-08	5.01E-06	0.00E+00	1.56E-09	0.00E+00	0.00E+00	2.04E-07	0.00E+00	0.00E+00	5.01E-06
3512	ALL	749588.42	4045760.7	NonCancerChronicDerive	0.00E+00	4.77E-10	0.00E+00	0.00E+00	0.00E+00	3.49E-08	4.98E-06	0.00E+00	1.54E-09	0.00E+00	0.00E+00	2.03E-07	0.00E+00	0.00E+00	4.98E-06
3513	ALL	749688.42	4045760.7	NonCancerChronicDerive	0.00E+00	4.75E-10	0.00E+00	0.00E+00	0.00E+00	3.47E-08	4.96E-06	0.00E+00	1.54E-09	0.00E+00	0.00E+00	2.02E-07	0.00E+00	0.00E+00	4.96E-06
3514	ALL	749788.42	4045760.7	NonCancerChronicDerive	0.00E+00	4.74E-10	0.00E+00	0.00E+00	0.00E+00	3.46E-08	4.95E-06	0.00E+00	1.54E-09	0.00E+00	0.00E+00	2.02E-07	0.00E+00	0.00E+00	4.95E-06
3515	ALL	749888.42	4045760.7	NonCancerChronicDerive	0.00E+00	4.75E-10	0.00E+00	0.00E+00	0.00E+00	3.46E-08	4.95E-06	0.00E+00	1.54E-09	0.00E+00	0.00E+00	2.02E-07	0.00E+00	0.00E+00	4.95E-06
3516	ALL	749988.42	4045760.7	NonCancerChronicDerive	0.00E+00	4.76E-10	0.00E+00	0.00E+00	0.00E+00	3.47E-08	4.96E-06	0.00E+00	1.54E-09	0.00E+00	0.00E+00	2.03E-07	0.00E+00	0.00E+00	4.96E-06
3517	ALL	750088.42	4045760.7	NonCancerChronicDerive	0.00E+00	4.78E-10	0.00E+00	0.00E+00	0.00E+00	3.47E-08	4.97E-06	0.00E+00	1.55E-09	0.00E+00	0.00E+00	2.03E-07	0.00E+00	0.00E+00	4.97E-06
3518	ALL	750188.42	4045760.7	NonCancerChronicDerive	0.00E+00	4.79E-10	0.00E+00	0.00E+00	0.00E+00	3.48E-08	4.98E-06	0.00E+00	1.55E-09	0.00E+00	0.00E+00	2.04E-07	0.00E+00	0.00E+00	4.98E-06
3519	ALL	750288.42	4045760.7	NonCancerChronicDerive	0.00E+00	4.80E-10	0.00E+00	0.00E+00	0.00E+00	3.48E-08	4.98E-06	0.00E+00	1.55E-09	0.00E+00	0.00E+00	2.04E-07	0.00E+00	0.00E+00	4.98E-06
3520	ALL	750388.42	4045760.7	NonCancerChronicDerive	0.00E+00	4.79E-10	0.00E+00	0.00E+00	0.00E+00	3.47E-08	4.97E-06	0.00E+00	1.55E-09	0.00E+00	0.00E+00	2.04E-07	0.00E+00	0.00E+00	4.97E-06
3521	ALL	750488.42	4045760.7	NonCancerChronicDerive	0.00E+00	4.77E-10	0.00E+00	0.00E+00	0.00E+00	3.44E-08	4.94E-06	0.00E+00	1.54E-09	0.00E+00	0.00E+00	2.03E-07	0.00E+00	0.00E+00	4.94E-06
3522	ALL	748088.42	4045860.7	NonCancerChronicDerive	0.00E+00	5.60E-10	0.00E+00	0.00E+00	0.00E+00	4.04E-08	5.77E-06	0.00E+00	1.81E-09	0.00E+00	0.00E+00	2.38E-07	0.00E+00	0.00E+00	5.77E-06
3523	ALL	748188.42	4045860.7	NonCancerChronicDerive	0.00E+00	5.52E-10	0.00E+00	0.00E+00	0.00E+00	3.99E-08	5.69E-06	0.00E+00	1.79E-09	0.00E+00	0.00E+00	2.35E-07	0.00E+00	0.00E+00	5.69E-06
3524	ALL	748288.42	4045860.7	NonCancerChronicDerive	0.00E+00	5.44E-10	0.00E+00	0.00E+00	0.00E+00	3.93E-08	5.62E-06	0.00E+00	1.76E-09	0.00E+00	0.00E+00	2.32E-07	0.00E+00	0.00E+00	5.62E-06
3525	ALL	748388.42	4045860.7	NonCancerChronicDerive	0.00E+00	5.36E-10	0.00E+00	0.00E+00	0.00E+00	3.88E-08	5.54E-06	0.00E+00	1.74E-09	0.00E+00	0.00E+00	2.28E-07	0.00E+00	0.00E+00	5.54E-06
3526	ALL	748488.42	4045860.7	NonCancerChronicDerive	0.00E+00	5.29E-10	0.00E+00	0.00E+00	0.00E+00	3.83E-08	5.47E-06	0.00E+00	1.71E-09	0.00E+00	0.00E+00	2.25E-07	0.00E+00	0.00E+00	5.47E-06
3527	ALL	748588.42	4045860.7	NonCancerChronicDerive	0.00E+00	5.22E-10	0.00E+00	0.00E+00	0.00E+00	3.78E-08	5.41E-06	0.00E+00	1.69E-09	0.00E+00	0.00E+00	2.22E-07	0.00E+00	0.00E+00	5.41E-06
3528	ALL	748688.42	4045860.7	NonCancerChronicDerive	0.00E+00	5.16E-10	0.00E+00	0.00E+00	0.00E+00	3.74E-08	5.35E-06	0.00E+00	1.67E-09	0.00E+00	0.00E+00	2.19E-07	0.00E+00	0.00E+00	5.35E-06
3529	ALL	748788.42	4045860.7	NonCancerChronicDerive	0.00E+00	5.10E-10	0.00E+00	0.00E+00	0.00E+00	3.70E-08	5.29E-06	0.00E+00	1.65E-09	0.00E+00	0.00E+00	2.17E-07	0.00E+00	0.00E+00	5.29E-06
3530	ALL	748888.42	4045860.7	NonCancerChronicDerive	0.00E+00	5.05E-10	0.00E+00	0.00E+00	0.00E+00	3.67E-08	5.24E-06	0.00E+00	1.63E-09	0.00E+00	0.00E+00	2.15E-07	0.00E+00	0.00E+00	5.24E-06
3531	ALL	748988.42	4045860.7	NonCancerChronicDerive	0.00E+00	4.99E-10	0.00E+00	0.00E+00	0.00E+00	3.63E-08	5.19E-06	0.00E+00	1.62E-09	0.00E+00	0.00E+00	2.13E-07	0.00E+00	0.00E+00	5.19E-06
3532	ALL	749088.42	4045860.7	NonCancerChronicDerive	0.00E+00	4.94E-10	0.00E+00	0.00E+00	0.00E+00	3.60E-08	5.14E-06	0.00E+00	1.60E-09	0.00E+00	0.00E+00	2.10E-07	0.00E+00	0.00E+00	5.14E-06
3533	ALL	749188.42	4045860.7	NonCancerChronicDerive	0.00E+00	4.89E-10	0.00E+00	0.00E+00	0.00E+00	3.56E-08	5.09E-06	0.00E+00	1.58E-09	0.00E+00	0.00E+00	2.08E-07	0.00E+00	0.00E+00	5.09E-06
3534	ALL	749288.42	4045860.7	NonCancerChronicDerive	0.00E+00	4.84E-10	0.00E+00	0.00E+00	0.00E+00	3.53E-08	5.04E-06	0.00E+00	1.57E-09	0.00E+00	0.00E+00	2.06E-07	0.00E+00	0.00E+00	5.04E-06
3535	ALL	749388.42	4045860.7	NonCancerChronicDerive	0.00E+00	4.79E-10	0.00E+00	0.00E+00	0.00E+00	3.49E-08	4.99E-06	0.00E+00	1.55E-09	0.00E+00	0.00E+00	2.04E-07	0.00E+00	0.00E+00	4.99E-06
3536	ALL	749488.42	4045860.7	NonCancerChronicDerive	0.00E+00	4.75E-10	0.00E+00	0.00E+00	0.00E+00	3.47E-08	4.95E-06	0.00E+00	1.54E-09	0.00E+00	0.00E+00	2.02E-07	0.00E+00	0.00E+00	4.95E-06
3537	ALL	749588.42	4045860.7	NonCancerChronicDerive	0.00E+00	4.71E-10	0.00E+00	0.00E+00	0.00E+00	3.44E-08	4.91E-06	0.00E+00	1.53E-09	0.00E+00	0.00E+00	2.01E-07	0.00E+00	0.00E+00	4.91E-06
3538	ALL	749688.42	4045860.7	NonCancerChronicDerive	0.00E+00	4.69E-10	0.00E+00	0.00E+00	0.00E+00	3.42E-08	4.89E-06	0.00E+00	1.52E-09	0.00E+00	0.00E+00	2.00E-07	0.00E+00	0.00E+00	4.89E-06
3539	ALL	749788.42	4045860.7	NonCancerChronicDerive	0.00E+00	4.68E-10	0.00E+00	0.00E+00	0.00E+00	3.42E-08	4.88E-06	0.00E+00	1.51E-09	0.00E+00	0.00E+00	1.99E-07	0.00E+00	0.00E+00	4.88E-06
3540	ALL	749888.42	4045860.7	NonCancerChronicDerive	0.00E+00	4.68E-10	0.00E+00	0.00E+00	0.00E+00	3.41E-08	4.88E-06	0.00E+00	1.52E-09	0.00E+00	0.00E+00	1.99E-07	0.00E+00	0.00E+00	4.88E-06
3541	ALL	749988.42	4045860.7	NonCancerChronicDerive	0.00E+00	4.69E-10	0.00E+00	0.00E+00	0.00E+00	3.42E-08	4.88E-06	0.00E+00	1.52E-09	0.00E+00	0.00E+00	2.00E-07	0.00E+00	0.00E+00	4.88E-06
3542	ALL	750088.42	4045860.7	NonCancerChronicDerive	0.00E+00	4.71E-10	0.00E+00	0.00E+00	0.00E+00	3.42E-08	4.89E-06	0.00E+00	1.52E-09	0.00E+00	0.00E+00	2.00E-07	0.00E+00	0.00E+00	4.89E-06
3543	ALL	750188.42	4045860.7	NonCancerChronicDerive	0.00E+00	4.73E-10	0.00E+00	0.00E+00	0.00E+00	3.43E-08	4.91E-06	0.00E+00	1.53E-09	0.00E+00	0.00E+00	2.01E-07	0.00E+00	0.00E+00	4.91E-06
3544	ALL	750288.42	4045860.7	NonCancerChronicDerive	0.00E+00	4.74E-10	0.00E+00	0.00E+00	0.00E+00	3.43E-08	4.92E-06	0.00E+00	1.53E-09	0.00E+00	0.00E+00	2.02E-07	0.00E+00	0.00E+00	4.92E-06
3545	ALL	750388.42	4045860.7	NonCancerChronicDerive	0.00E+00	4.74E-10	0.00E+00	0.00E+00	0.00E+00	3.42E-08	4.91E-06	0.00E+00	1.53E-09	0.00E+00	0.00E+00	2.02E-07	0.00E+00	0.00E+00	4.91E-06
3546	ALL	750488.42	4045860.7	NonCancerChronicDerive	0.00E+00	4.72E-10	0.00E+00	0.00E+00	0.00E+00	3.40E-08	4.88E-06	0.00E+00	1.53E-09	0.00E+00	0.00E+00	2.01E-07	0.00E+00	0.00E+00	4.88E-06
3547	ALL	745916	4035023	NonCancerChronicDerive	0.00E+00	1.70E-09	0.00E+00	0.00E+00	0.00E+00	1.24E-07	1.79E-05	0.00E+00	5.49E-09	0.00E+00	0.00E+00	7.22E-07	0.00E+00	0.00E+00	1.79E-05
3548	ALL	745966	4035023	NonCancerChronicDerive	0.00E+00	1.73E-09	0.00E+00	0.00E+00	0.00E+00	1.26E-07	1.82E-05	0.00E+00	5.59E-09	0.00E+00	0.00E+00	7.34E-07	0.00E+00	0.00E+00	1.82E-05
3549	ALL	746016	4035023	NonCancerChronicDerive	0.00E+00	1.76E-09	0.00E+00	0.00E+00	0.00E+00	1.28E-07	1.85E-05	0.00E+00	5.69E-09	0.00E+00	0.00E+00	7.47E-07	0.00E+00	0.00E+00	1.85E-05

3550	ALL	746066	4035023	NonCancerChronicDerive	0.00E+00	1.79E-09	0.00E+00	0.00E+00	0.00E+00	1.31E-07	1.88E-05	0.00E+00	5.79E-09	0.00E+00	0.00E+00	7.61E-07	0.00E+00	0.00E+00	1.88E-05
3551	ALL	746116	4035023	NonCancerChronicDerive	0.00E+00	1.82E-09	0.00E+00	0.00E+00	0.00E+00	1.33E-07	1.92E-05	0.00E+00	5.90E-09	0.00E+00	0.00E+00	7.76E-07	0.00E+00	0.00E+00	1.92E-05
3552	ALL	746166	4035023	NonCancerChronicDerive	0.00E+00	1.86E-09	0.00E+00	0.00E+00	0.00E+00	1.36E-07	1.95E-05	0.00E+00	6.01E-09	0.00E+00	0.00E+00	7.91E-07	0.00E+00	0.00E+00	1.95E-05
3553	ALL	746216	4035023	NonCancerChronicDerive	0.00E+00	1.89E-09	0.00E+00	0.00E+00	0.00E+00	1.39E-07	1.99E-05	0.00E+00	6.13E-09	0.00E+00	0.00E+00	8.06E-07	0.00E+00	0.00E+00	1.99E-05
3554	ALL	746266	4035023	NonCancerChronicDerive	0.00E+00	1.93E-09	0.00E+00	0.00E+00	0.00E+00	1.42E-07	2.03E-05	0.00E+00	6.25E-09	0.00E+00	0.00E+00	8.22E-07	0.00E+00	0.00E+00	2.03E-05
3555	ALL	746316	4035023	NonCancerChronicDerive	0.00E+00	1.97E-09	0.00E+00	0.00E+00	0.00E+00	1.45E-07	2.08E-05	0.00E+00	6.38E-09	0.00E+00	0.00E+00	8.39E-07	0.00E+00	0.00E+00	2.08E-05
3556	ALL	746366	4035023	NonCancerChronicDerive	0.00E+00	2.01E-09	0.00E+00	0.00E+00	0.00E+00	1.48E-07	2.12E-05	0.00E+00	6.52E-09	0.00E+00	0.00E+00	8.57E-07	0.00E+00	0.00E+00	2.12E-05
3557	ALL	745916	4035073	NonCancerChronicDerive	0.00E+00	1.70E-09	0.00E+00	0.00E+00	0.00E+00	1.25E-07	1.80E-05	0.00E+00	5.51E-09	0.00E+00	0.00E+00	7.25E-07	0.00E+00	0.00E+00	1.80E-05
3558	ALL	745966	4035073	NonCancerChronicDerive	0.00E+00	1.73E-09	0.00E+00	0.00E+00	0.00E+00	1.27E-07	1.83E-05	0.00E+00	5.60E-09	0.00E+00	0.00E+00	7.36E-07	0.00E+00	0.00E+00	1.83E-05
3559	ALL	746016	4035073	NonCancerChronicDerive	0.00E+00	1.77E-09	0.00E+00	0.00E+00	0.00E+00	1.29E-07	1.87E-05	0.00E+00	5.72E-09	0.00E+00	0.00E+00	7.52E-07	0.00E+00	0.00E+00	1.87E-05
3560	ALL	746066	4035073	NonCancerChronicDerive	0.00E+00	1.81E-09	0.00E+00	0.00E+00	0.00E+00	1.32E-07	1.90E-05	0.00E+00	5.85E-09	0.00E+00	0.00E+00	7.68E-07	0.00E+00	0.00E+00	1.90E-05
3561	ALL	746116	4035073	NonCancerChronicDerive	0.00E+00	1.84E-09	0.00E+00	0.00E+00	0.00E+00	1.35E-07	1.93E-05	0.00E+00	5.95E-09	0.00E+00	0.00E+00	7.82E-07	0.00E+00	0.00E+00	1.93E-05
3562	ALL	746166	4035073	NonCancerChronicDerive	0.00E+00	1.89E-09	0.00E+00	0.00E+00	0.00E+00	1.39E-07	1.99E-05	0.00E+00	6.13E-09	0.00E+00	0.00E+00	8.05E-07	0.00E+00	0.00E+00	1.99E-05
3563	ALL	746216	4035073	NonCancerChronicDerive	0.00E+00	1.94E-09	0.00E+00	0.00E+00	0.00E+00	1.42E-07	2.04E-05	0.00E+00	6.27E-09	0.00E+00	0.00E+00	8.24E-07	0.00E+00	0.00E+00	2.04E-05
3564	ALL	746266	4035073	NonCancerChronicDerive	0.00E+00	1.98E-09	0.00E+00	0.00E+00	0.00E+00	1.45E-07	2.08E-05	0.00E+00	6.40E-09	0.00E+00	0.00E+00	8.41E-07	0.00E+00	0.00E+00	2.08E-05
3565	ALL	746316	4035073	NonCancerChronicDerive	0.00E+00	2.02E-09	0.00E+00	0.00E+00	0.00E+00	1.49E-07	2.13E-05	0.00E+00	6.54E-09	0.00E+00	0.00E+00	8.59E-07	0.00E+00	0.00E+00	2.13E-05
3566	ALL	746366	4035073	NonCancerChronicDerive	0.00E+00	2.07E-09	0.00E+00	0.00E+00	0.00E+00	1.53E-07	2.18E-05	0.00E+00	6.71E-09	0.00E+00	0.00E+00	8.82E-07	0.00E+00	0.00E+00	2.18E-05
3567	ALL	745916	4035123	NonCancerChronicDerive	0.00E+00	1.71E-09	0.00E+00	0.00E+00	0.00E+00	1.26E-07	1.81E-05	0.00E+00	5.53E-09	0.00E+00	0.00E+00	7.27E-07	0.00E+00	0.00E+00	1.81E-05
3568	ALL	745966	4035123	NonCancerChronicDerive	0.00E+00	1.74E-09	0.00E+00	0.00E+00	0.00E+00	1.28E-07	1.84E-05	0.00E+00	5.63E-09	0.00E+00	0.00E+00	7.40E-07	0.00E+00	0.00E+00	1.84E-05
3569	ALL	746016	4035123	NonCancerChronicDerive	0.00E+00	1.77E-09	0.00E+00	0.00E+00	0.00E+00	1.30E-07	1.88E-05	0.00E+00	5.74E-09	0.00E+00	0.00E+00	7.55E-07	0.00E+00	0.00E+00	1.88E-05
3570	ALL	746066	4035123	NonCancerChronicDerive	0.00E+00	1.82E-09	0.00E+00	0.00E+00	0.00E+00	1.34E-07	1.92E-05	0.00E+00	5.89E-09	0.00E+00	0.00E+00	7.75E-07	0.00E+00	0.00E+00	1.92E-05
3571	ALL	746116	4035123	NonCancerChronicDerive	0.00E+00	1.86E-09	0.00E+00	0.00E+00	0.00E+00	1.36E-07	1.96E-05	0.00E+00	6.01E-09	0.00E+00	0.00E+00	7.91E-07	0.00E+00	0.00E+00	1.96E-05
3572	ALL	746166	4035123	NonCancerChronicDerive	0.00E+00	1.91E-09	0.00E+00	0.00E+00	0.00E+00	1.41E-07	2.02E-05	0.00E+00	6.20E-09	0.00E+00	0.00E+00	8.14E-07	0.00E+00	0.00E+00	2.02E-05
3573	ALL	746216	4035123	NonCancerChronicDerive	0.00E+00	1.95E-09	0.00E+00	0.00E+00	0.00E+00	1.44E-07	2.06E-05	0.00E+00	6.32E-09	0.00E+00	0.00E+00	8.31E-07	0.00E+00	0.00E+00	2.06E-05
3574	ALL	746266	4035123	NonCancerChronicDerive	0.00E+00	1.99E-09	0.00E+00	0.00E+00	0.00E+00	1.47E-07	2.10E-05	0.00E+00	6.45E-09	0.00E+00	0.00E+00	8.49E-07	0.00E+00	0.00E+00	2.10E-05
3575	ALL	746316	4035123	NonCancerChronicDerive	0.00E+00	2.04E-09	0.00E+00	0.00E+00	0.00E+00	1.50E-07	2.15E-05	0.00E+00	6.59E-09	0.00E+00	0.00E+00	8.67E-07	0.00E+00	0.00E+00	2.15E-05
3576	ALL	746366	4035123	NonCancerChronicDerive	0.00E+00	2.13E-09	0.00E+00	0.00E+00	0.00E+00	1.57E-07	2.25E-05	0.00E+00	6.90E-09	0.00E+00	0.00E+00	9.08E-07	0.00E+00	0.00E+00	2.25E-05
3577	ALL	745916	4035173	NonCancerChronicDerive	0.00E+00	1.72E-09	0.00E+00	0.00E+00	0.00E+00	1.27E-07	1.83E-05	0.00E+00	5.56E-09	0.00E+00	0.00E+00	7.31E-07	0.00E+00	0.00E+00	1.83E-05
3578	ALL	745966	4035173	NonCancerChronicDerive	0.00E+00	1.75E-09	0.00E+00	0.00E+00	0.00E+00	1.29E-07	1.85E-05	0.00E+00	5.65E-09	0.00E+00	0.00E+00	7.43E-07	0.00E+00	0.00E+00	1.85E-05
3579	ALL	746016	4035173	NonCancerChronicDerive	0.00E+00	1.78E-09	0.00E+00	0.00E+00	0.00E+00	1.31E-07	1.89E-05	0.00E+00	5.78E-09	0.00E+00	0.00E+00	7.60E-07	0.00E+00	0.00E+00	1.89E-05
3580	ALL	746066	4035173	NonCancerChronicDerive	0.00E+00	1.83E-09	0.00E+00	0.00E+00	0.00E+00	1.35E-07	1.94E-05	0.00E+00	5.94E-09	0.00E+00	0.00E+00	7.81E-07	0.00E+00	0.00E+00	1.94E-05
3581	ALL	746116	4035173	NonCancerChronicDerive	0.00E+00	1.88E-09	0.00E+00	0.00E+00	0.00E+00	1.38E-07	1.99E-05	0.00E+00	6.08E-09	0.00E+00	0.00E+00	7.99E-07	0.00E+00	0.00E+00	1.99E-05
3582	ALL	746166	4035173	NonCancerChronicDerive	0.00E+00	1.93E-09	0.00E+00	0.00E+00	0.00E+00	1.42E-07	2.04E-05	0.00E+00	6.26E-09	0.00E+00	0.00E+00	8.23E-07	0.00E+00	0.00E+00	2.04E-05
3583	ALL	746216	4035173	NonCancerChronicDerive	0.00E+00	1.99E-09	0.00E+00	0.00E+00	0.00E+00	1.46E-07	2.10E-05	0.00E+00	6.43E-09	0.00E+00	0.00E+00	8.45E-07	0.00E+00	0.00E+00	2.10E-05
3584	ALL	746266	4035173	NonCancerChronicDerive	0.00E+00	2.03E-09	0.00E+00	0.00E+00	0.00E+00	1.50E-07	2.15E-05	0.00E+00	6.58E-09	0.00E+00	0.00E+00	8.65E-07	0.00E+00	0.00E+00	2.15E-05
3585	ALL	746316	4035173	NonCancerChronicDerive	0.00E+00	2.08E-09	0.00E+00	0.00E+00	0.00E+00	1.54E-07	2.20E-05	0.00E+00	6.74E-09	0.00E+00	0.00E+00	8.86E-07	0.00E+00	0.00E+00	2.20E-05
3586	ALL	746366	4035173	NonCancerChronicDerive	0.00E+00	2.16E-09	0.00E+00	0.00E+00	0.00E+00	1.60E-07	2.29E-05	0.00E+00	7.00E-09	0.00E+00	0.00E+00	9.20E-07	0.00E+00	0.00E+00	2.29E-05
3587	ALL	745916	4035223	NonCancerChronicDerive	0.00E+00	1.72E-09	0.00E+00	0.00E+00	0.00E+00	1.28E-07	1.84E-05	0.00E+00	5.58E-09	0.00E+00	0.00E+00	7.34E-07	0.00E+00	0.00E+00	1.84E-05
3588	ALL	745966	4035223	NonCancerChronicDerive	0.00E+00	1.76E-09	0.00E+00	0.00E+00	0.00E+00	1.30E-07	1.87E-05	0.00E+00	5.68E-09	0.00E+00	0.00E+00	7.47E-07	0.00E+00	0.00E+00	1.87E-05
3589	ALL	746016	4035223	NonCancerChronicDerive	0.00E+00	1.80E-09	0.00E+00	0.00E+00	0.00E+00	1.33E-07	1.91E-05	0.00E+00	5.83E-09	0.00E+00	0.00E+00	7.66E-07	0.00E+00	0.00E+00	1.91E-05
3590	ALL	746066	4035223	NonCancerChronicDerive	0.00E+00	1.84E-09	0.00E+00	0.00E+00	0.00E+00	1.36E-07	1.96E-05	0.00E+00	5.97E-09	0.00E+00	0.00E+00	7.85E-07	0.00E+00	0.00E+00	1.96E-05
3591	ALL	746116	4035223	NonCancerChronicDerive	0.00E+00	1.89E-09	0.00E+00	0.00E+00	0.00E+00	1.40E-07	2.01E-05	0.00E+00	6.12E-09	0.00E+00	0.00E+00	8.05E-07	0.00E+00	0.00E+00	2.01E-05
3592	ALL	746166	4035223	NonCancerChronicDerive	0.00E+00	1.94E-09	0.00E+00	0.00E+00	0.00E+00	1.43E-07	2.06E-05	0.00E+00	6.29E-09	0.00E+00	0.00E+00	8.27E-07	0.00E+00	0.00E+00	2.06E-05
3593	ALL	746216	4035223	NonCancerChronicDerive	0.00E+00	1.99E-09	0.00E+00	0.00E+00	0.00E+00	1.47E-07	2.11E-05	0.00E+00	6.45E-09	0.00E+00	0.00E+00	8.48E-07	0.00E+00	0.00E+00	2.11E-05
3594	ALL	746266	4035223	NonCancerChronicDerive	0.00E+00	2.05E-09	0.00E+00	0.00E+00	0.00E+00	1.51E-07	2.16E-05	0.00E+00	6.62E-09	0.00E+00	0.00E+00	8.71E-07	0.00E+00	0.00E+00	2.16E-05
3595	ALL	746316	4035223	NonCancerChronicDerive	0.00E+00	2.10E-09	0.00E+00	0.00E+00	0.00E+00	1.55E-07	2.22E-05	0.00E+00	6.81E-09	0.00E+00	0.00E+00	8.95E-07	0.00E+00	0.00E+00	2.22E-05
3596	ALL	746366	4035223	NonCancerChronicDerive	0.00E+00	2.17E-09	0.00E+00	0.00E+00	0.00E+00	1.61E-07	2.30E-05	0.00E+00	7.03E-09	0.00E+00	0.00E+00	9.25E-07	0.00E+00	0.00E+00	2.30E-05
3597	ALL	745916	4035273	NonCancerChronicDerive	0.00E+00	1.73E-09	0.00E+00	0.00E+00	0.00E+00	1.29E-07	1.85E-05	0.00E+00	5.60E-09	0.00E+00	0.00E+00	7.37E-07	0.00E+00	0.00E+00	1.85E-05
3598	ALL	745966	4035273	NonCancerChronicDerive	0.00E+00	1.76E-09	0.00E+00	0.00E+00	0.00E+00	1.31E-07	1.88E-05	0.00E+00	5.71E-09	0.00E+00	0.00E+00	7.51E-07	0.00E+00	0.00E+00	1.88E-05
3599	ALL	746016	4035273	NonCancerChronicDerive	0.00E+00	1.81E-09	0.00E+00	0.00E+00	0.00E+00	1.35E-07	1.93E-05	0.00E+00	5.86E-09	0.00E+00	0.00E+00	7.70E-07	0.00E+00	0.00E+00	1.93E-05
3600	ALL	746066	4035273	NonCancerChronicDerive	0.00E+00	1.85E-09	0.00E+00	0.00E+00	0.00E+00	1.37E-07	1.97E-05	0.00E+00	5.99E-09	0.00E+00	0.00E+00	7.88E-07	0.00E+00	0.00E+00	1.97E-05
3601	ALL	746116	4035273	NonCancerChronicDerive	0.00E+00	1.90E-09	0.00E+00	0.00E+00	0.00E+00	1.40E-07	2.02E-05	0.00E+00	6.14E-09	0.00E+00	0.00E+00	8.07E-07	0.00E+00	0.00E+00	2.02E-05
3602	ALL	746166	4035273	NonCancerChronicDerive	0.00E+00	1.96E-09	0.00E+00	0.00E+00	0.00E+00	1.45E-07	2.08E-05	0.00E+00	6.35E-09	0.00E+00	0.00E+00	8.35E-07	0.00E+00	0.00E+00	2.08E-05

3603	ALL	746216	4035273	NonCancerChronicDerive	0.00E+00	2.02E-09	0.00E+00	0.00E+00	0.00E+00	1.49E-07	2.14E-05	0.00E+00	6.54E-09	0.00E+00	0.00E+00	8.59E-07	0.00E+00	0.00E+00	2.14E-05
3604	ALL	746266	4035273	NonCancerChronicDerive	0.00E+00	2.08E-09	0.00E+00	0.00E+00	0.00E+00	1.54E-07	2.20E-05	0.00E+00	6.72E-09	0.00E+00	0.00E+00	8.84E-07	0.00E+00	0.00E+00	2.20E-05
3605	ALL	746316	4035273	NonCancerChronicDerive	0.00E+00	2.14E-09	0.00E+00	0.00E+00	0.00E+00	1.58E-07	2.26E-05	0.00E+00	6.92E-09	0.00E+00	0.00E+00	9.10E-07	0.00E+00	0.00E+00	2.26E-05
3606	ALL	746366	4035273	NonCancerChronicDerive	0.00E+00	2.20E-09	0.00E+00	0.00E+00	0.00E+00	1.63E-07	2.33E-05	0.00E+00	7.13E-09	0.00E+00	0.00E+00	9.37E-07	0.00E+00	0.00E+00	2.33E-05
3607	ALL	745916	4035323	NonCancerChronicDerive	0.00E+00	1.74E-09	0.00E+00	0.00E+00	0.00E+00	1.30E-07	1.87E-05	0.00E+00	5.63E-09	0.00E+00	0.00E+00	7.41E-07	0.00E+00	0.00E+00	1.87E-05
3608	ALL	745966	4035323	NonCancerChronicDerive	0.00E+00	1.77E-09	0.00E+00	0.00E+00	0.00E+00	1.33E-07	1.90E-05	0.00E+00	5.74E-09	0.00E+00	0.00E+00	7.55E-07	0.00E+00	0.00E+00	1.90E-05
3609	ALL	746016	4035323	NonCancerChronicDerive	0.00E+00	1.82E-09	0.00E+00	0.00E+00	0.00E+00	1.36E-07	1.94E-05	0.00E+00	5.89E-09	0.00E+00	0.00E+00	7.74E-07	0.00E+00	0.00E+00	1.94E-05
3610	ALL	746066	4035323	NonCancerChronicDerive	0.00E+00	1.85E-09	0.00E+00	0.00E+00	0.00E+00	1.38E-07	1.98E-05	0.00E+00	6.00E-09	0.00E+00	0.00E+00	7.89E-07	0.00E+00	0.00E+00	1.98E-05
3611	ALL	746116	4035323	NonCancerChronicDerive	0.00E+00	1.90E-09	0.00E+00	0.00E+00	0.00E+00	1.41E-07	2.02E-05	0.00E+00	6.14E-09	0.00E+00	0.00E+00	8.07E-07	0.00E+00	0.00E+00	2.02E-05
3612	ALL	746166	4035323	NonCancerChronicDerive	0.00E+00	1.97E-09	0.00E+00	0.00E+00	0.00E+00	1.46E-07	2.09E-05	0.00E+00	6.36E-09	0.00E+00	0.00E+00	8.37E-07	0.00E+00	0.00E+00	2.09E-05
3613	ALL	746216	4035323	NonCancerChronicDerive	0.00E+00	2.03E-09	0.00E+00	0.00E+00	0.00E+00	1.50E-07	2.15E-05	0.00E+00	6.56E-09	0.00E+00	0.00E+00	8.62E-07	0.00E+00	0.00E+00	2.15E-05
3614	ALL	746266	4035323	NonCancerChronicDerive	0.00E+00	2.09E-09	0.00E+00	0.00E+00	0.00E+00	1.55E-07	2.22E-05	0.00E+00	6.77E-09	0.00E+00	0.00E+00	8.90E-07	0.00E+00	0.00E+00	2.22E-05
3615	ALL	746316	4035323	NonCancerChronicDerive	0.00E+00	2.16E-09	0.00E+00	0.00E+00	0.00E+00	1.60E-07	2.29E-05	0.00E+00	6.99E-09	0.00E+00	0.00E+00	9.19E-07	0.00E+00	0.00E+00	2.29E-05
3616	ALL	746366	4035323	NonCancerChronicDerive	0.00E+00	2.23E-09	0.00E+00	0.00E+00	0.00E+00	1.65E-07	2.36E-05	0.00E+00	7.21E-09	0.00E+00	0.00E+00	9.48E-07	0.00E+00	0.00E+00	2.36E-05
3617	ALL	745916	4035373	NonCancerChronicDerive	0.00E+00	1.76E-09	0.00E+00	0.00E+00	0.00E+00	1.32E-07	1.89E-05	0.00E+00	5.68E-09	0.00E+00	0.00E+00	7.47E-07	0.00E+00	0.00E+00	1.89E-05
3618	ALL	745966	4035373	NonCancerChronicDerive	0.00E+00	1.79E-09	0.00E+00	0.00E+00	0.00E+00	1.34E-07	1.92E-05	0.00E+00	5.79E-09	0.00E+00	0.00E+00	7.62E-07	0.00E+00	0.00E+00	1.92E-05
3619	ALL	746016	4035373	NonCancerChronicDerive	0.00E+00	1.83E-09	0.00E+00	0.00E+00	0.00E+00	1.38E-07	1.97E-05	0.00E+00	5.94E-09	0.00E+00	0.00E+00	7.80E-07	0.00E+00	0.00E+00	1.97E-05
3620	ALL	746066	4035373	NonCancerChronicDerive	0.00E+00	1.86E-09	0.00E+00	0.00E+00	0.00E+00	1.39E-07	1.99E-05	0.00E+00	6.03E-09	0.00E+00	0.00E+00	7.93E-07	0.00E+00	0.00E+00	1.99E-05
3621	ALL	746116	4035373	NonCancerChronicDerive	0.00E+00	1.90E-09	0.00E+00	0.00E+00	0.00E+00	1.42E-07	2.03E-05	0.00E+00	6.17E-09	0.00E+00	0.00E+00	8.11E-07	0.00E+00	0.00E+00	2.03E-05
3622	ALL	746166	4035373	NonCancerChronicDerive	0.00E+00	1.97E-09	0.00E+00	0.00E+00	0.00E+00	1.47E-07	2.10E-05	0.00E+00	6.39E-09	0.00E+00	0.00E+00	8.40E-07	0.00E+00	0.00E+00	2.10E-05
3623	ALL	746216	4035373	NonCancerChronicDerive	0.00E+00	2.03E-09	0.00E+00	0.00E+00	0.00E+00	1.51E-07	2.16E-05	0.00E+00	6.58E-09	0.00E+00	0.00E+00	8.65E-07	0.00E+00	0.00E+00	2.16E-05
3624	ALL	746266	4035373	NonCancerChronicDerive	0.00E+00	2.10E-09	0.00E+00	0.00E+00	0.00E+00	1.56E-07	2.23E-05	0.00E+00	6.80E-09	0.00E+00	0.00E+00	8.93E-07	0.00E+00	0.00E+00	2.23E-05
3625	ALL	746316	4035373	NonCancerChronicDerive	0.00E+00	2.17E-09	0.00E+00	0.00E+00	0.00E+00	1.61E-07	2.30E-05	0.00E+00	7.03E-09	0.00E+00	0.00E+00	9.24E-07	0.00E+00	0.00E+00	2.30E-05
3626	ALL	746366	4035373	NonCancerChronicDerive	0.00E+00	2.26E-09	0.00E+00	0.00E+00	0.00E+00	1.67E-07	2.39E-05	0.00E+00	7.30E-09	0.00E+00	0.00E+00	9.60E-07	0.00E+00	0.00E+00	2.39E-05
3627	ALL	745916	4035423	NonCancerChronicDerive	0.00E+00	1.77E-09	0.00E+00	0.00E+00	0.00E+00	1.34E-07	1.91E-05	0.00E+00	5.74E-09	0.00E+00	0.00E+00	7.55E-07	0.00E+00	0.00E+00	1.91E-05
3628	ALL	745966	4035423	NonCancerChronicDerive	0.00E+00	1.81E-09	0.00E+00	0.00E+00	0.00E+00	1.36E-07	1.95E-05	0.00E+00	5.86E-09	0.00E+00	0.00E+00	7.70E-07	0.00E+00	0.00E+00	1.95E-05
3629	ALL	746016	4035423	NonCancerChronicDerive	0.00E+00	1.85E-09	0.00E+00	0.00E+00	0.00E+00	1.39E-07	1.99E-05	0.00E+00	5.99E-09	0.00E+00	0.00E+00	7.87E-07	0.00E+00	0.00E+00	1.99E-05
3630	ALL	746066	4035423	NonCancerChronicDerive	0.00E+00	1.88E-09	0.00E+00	0.00E+00	0.00E+00	1.41E-07	2.01E-05	0.00E+00	6.09E-09	0.00E+00	0.00E+00	8.00E-07	0.00E+00	0.00E+00	2.01E-05
3631	ALL	746116	4035423	NonCancerChronicDerive	0.00E+00	1.92E-09	0.00E+00	0.00E+00	0.00E+00	1.44E-07	2.06E-05	0.00E+00	6.23E-09	0.00E+00	0.00E+00	8.19E-07	0.00E+00	0.00E+00	2.06E-05
3632	ALL	746166	4035423	NonCancerChronicDerive	0.00E+00	1.99E-09	0.00E+00	0.00E+00	0.00E+00	1.49E-07	2.13E-05	0.00E+00	6.45E-09	0.00E+00	0.00E+00	8.48E-07	0.00E+00	0.00E+00	2.13E-05
3633	ALL	746216	4035423	NonCancerChronicDerive	0.00E+00	2.06E-09	0.00E+00	0.00E+00	0.00E+00	1.53E-07	2.19E-05	0.00E+00	6.65E-09	0.00E+00	0.00E+00	8.75E-07	0.00E+00	0.00E+00	2.19E-05
3634	ALL	746266	4035423	NonCancerChronicDerive	0.00E+00	2.13E-09	0.00E+00	0.00E+00	0.00E+00	1.58E-07	2.26E-05	0.00E+00	6.88E-09	0.00E+00	0.00E+00	9.05E-07	0.00E+00	0.00E+00	2.26E-05
3635	ALL	746316	4035423	NonCancerChronicDerive	0.00E+00	2.20E-09	0.00E+00	0.00E+00	0.00E+00	1.64E-07	2.35E-05	0.00E+00	7.14E-09	0.00E+00	0.00E+00	9.38E-07	0.00E+00	0.00E+00	2.35E-05
3636	ALL	746366	4035423	NonCancerChronicDerive	0.00E+00	2.27E-09	0.00E+00	0.00E+00	0.00E+00	1.69E-07	2.41E-05	0.00E+00	7.35E-09	0.00E+00	0.00E+00	9.66E-07	0.00E+00	0.00E+00	2.41E-05
3637	ALL	745916	4035473	NonCancerChronicDerive	0.00E+00	1.80E-09	0.00E+00	0.00E+00	0.00E+00	1.36E-07	1.94E-05	0.00E+00	5.82E-09	0.00E+00	0.00E+00	7.65E-07	0.00E+00	0.00E+00	1.94E-05
3638	ALL	745966	4035473	NonCancerChronicDerive	0.00E+00	1.84E-09	0.00E+00	0.00E+00	0.00E+00	1.40E-07	1.99E-05	0.00E+00	5.97E-09	0.00E+00	0.00E+00	7.85E-07	0.00E+00	0.00E+00	1.99E-05
3639	ALL	746016	4035473	NonCancerChronicDerive	0.00E+00	1.87E-09	0.00E+00	0.00E+00	0.00E+00	1.42E-07	2.02E-05	0.00E+00	6.07E-09	0.00E+00	0.00E+00	7.97E-07	0.00E+00	0.00E+00	2.02E-05
3640	ALL	746066	4035473	NonCancerChronicDerive	0.00E+00	1.91E-09	0.00E+00	0.00E+00	0.00E+00	1.44E-07	2.05E-05	0.00E+00	6.19E-09	0.00E+00	0.00E+00	8.14E-07	0.00E+00	0.00E+00	2.05E-05
3641	ALL	746116	4035473	NonCancerChronicDerive	0.00E+00	1.96E-09	0.00E+00	0.00E+00	0.00E+00	1.47E-07	2.10E-05	0.00E+00	6.33E-09	0.00E+00	0.00E+00	8.32E-07	0.00E+00	0.00E+00	2.10E-05
3642	ALL	746166	4035473	NonCancerChronicDerive	0.00E+00	2.00E-09	0.00E+00	0.00E+00	0.00E+00	1.50E-07	2.14E-05	0.00E+00	6.48E-09	0.00E+00	0.00E+00	8.52E-07	0.00E+00	0.00E+00	2.14E-05
3643	ALL	746216	4035473	NonCancerChronicDerive	0.00E+00	2.06E-09	0.00E+00	0.00E+00	0.00E+00	1.54E-07	2.20E-05	0.00E+00	6.67E-09	0.00E+00	0.00E+00	8.77E-07	0.00E+00	0.00E+00	2.20E-05
3644	ALL	746266	4035473	NonCancerChronicDerive	0.00E+00	2.13E-09	0.00E+00	0.00E+00	0.00E+00	1.59E-07	2.27E-05	0.00E+00	6.90E-09	0.00E+00	0.00E+00	9.07E-07	0.00E+00	0.00E+00	2.27E-05
3645	ALL	746316	4035473	NonCancerChronicDerive	0.00E+00	2.21E-09	0.00E+00	0.00E+00	0.00E+00	1.65E-07	2.36E-05	0.00E+00	7.16E-09	0.00E+00	0.00E+00	9.42E-07	0.00E+00	0.00E+00	2.36E-05
3646	ALL	746366	4035473	NonCancerChronicDerive	0.00E+00	2.29E-09	0.00E+00	0.00E+00	0.00E+00	1.71E-07	2.44E-05	0.00E+00	7.41E-09	0.00E+00	0.00E+00	9.75E-07	0.00E+00	0.00E+00	2.44E-05
3647	ALL	746762.33	4034654.27	NonCancerChronicDerive	0.00E+00	2.46E-09	0.00E+00	0.00E+00	0.00E+00	1.72E-07	2.49E-05	0.00E+00	7.97E-09	0.00E+00	0.00E+00	1.05E-06	0.00E+00	0.00E+00	2.49E-05
3648	ALL	746812.33	4034654.27	NonCancerChronicDerive	0.00E+00	2.54E-09	0.00E+00	0.00E+00	0.00E+00	1.77E-07	2.57E-05	0.00E+00	8.23E-09	0.00E+00	0.00E+00	1.08E-06	0.00E+00	0.00E+00	2.57E-05
3649	ALL	746862.33	4034654.27	NonCancerChronicDerive	0.00E+00	2.62E-09	0.00E+00	0.00E+00	0.00E+00	1.83E-07	2.64E-05	0.00E+00	8.49E-09	0.00E+00	0.00E+00	1.12E-06	0.00E+00	0.00E+00	2.64E-05
3650	ALL	746912.33	4034654.27	NonCancerChronicDerive	0.00E+00	2.72E-09	0.00E+00	0.00E+00	0.00E+00	1.89E-07	2.73E-05	0.00E+00	8.80E-09	0.00E+00	0.00E+00	1.16E-06	0.00E+00	0.00E+00	2.73E-05
3651	ALL	746962.33	4034654.27	NonCancerChronicDerive	0.00E+00	2.84E-09	0.00E+00	0.00E+00	0.00E+00	1.98E-07	2.84E-05	0.00E+00	9.19E-09	0.00E+00	0.00E+00	1.21E-06	0.00E+00	0.00E+00	2.84E-05
3652	ALL	746762.33	4034704.27	NonCancerChronicDerive	0.00E+00	2.52E-09	0.00E+00	0.00E+00	0.00E+00	1.76E-07	2.55E-05	0.00E+00	8.15E-09	0.00E+00	0.00E+00	1.07E-06	0.00E+00	0.00E+00	2.55E-05
3653	ALL	746812.33	4034704.27	NonCancerChronicDerive	0.00E+00	2.58E-09	0.00E+00	0.00E+00	0.00E+00	1.80E-07	2.61E-05	0.00E+00	8.36E-09	0.00E+00	0.00E+00	1.10E-06	0.00E+00	0.00E+00	2.61E-05
3654	ALL	746862.33	4034704.27	NonCancerChronicDerive	0.00E+00	2.68E-09	0.00E+00	0.00E+00	0.00E+00	1.87E-07	2.71E-05	0.00E+00	8.69E-09	0.00E+00	0.00E+00	1.14E-06	0.00E+00	0.00E+00	2.71E-05
3655	ALL	746912.33	4034704.27	NonCancerChronicDerive	0.00E+00	2.79E-09	0.00E+00	0.00E+00	0.00E+00	1.94E-07	2.81E-05	0.00E+00	9.03E-09	0.00E+00	0.00E+00	1.19E-06	0.00E+00	0.00E+00	2.81E-05

3656	ALL		746962.33	4034704.27	NonCancerChronicDerive	0.00E+00	2.92E-09	0.00E+00	0.00E+00	0.00E+00	2.03E-07	2.93E-05	0.00E+00	9.45E-09	0.00E+00	0.00E+00	1.24E-06	0.00E+00	0.00E+00	2.93E-05
3657	ALL		746762.33	4034754.27	NonCancerChronicDerive	0.00E+00	2.56E-09	0.00E+00	0.00E+00	0.00E+00	1.80E-07	2.61E-05	0.00E+00	8.30E-09	0.00E+00	0.00E+00	1.09E-06	0.00E+00	0.00E+00	2.61E-05
3658	ALL		746812.33	4034754.27	NonCancerChronicDerive	0.00E+00	2.64E-09	0.00E+00	0.00E+00	0.00E+00	1.85E-07	2.68E-05	0.00E+00	8.55E-09	0.00E+00	0.00E+00	1.12E-06	0.00E+00	0.00E+00	2.68E-05
3659	ALL		746862.33	4034754.27	NonCancerChronicDerive	0.00E+00	2.75E-09	0.00E+00	0.00E+00	0.00E+00	1.92E-07	2.77E-05	0.00E+00	8.89E-09	0.00E+00	0.00E+00	1.17E-06	0.00E+00	0.00E+00	2.77E-05
3660	ALL		746912.33	4034754.27	NonCancerChronicDerive	0.00E+00	2.87E-09	0.00E+00	0.00E+00	0.00E+00	2.00E-07	2.89E-05	0.00E+00	9.28E-09	0.00E+00	0.00E+00	1.22E-06	0.00E+00	0.00E+00	2.89E-05
3661	ALL		746962.33	4034754.27	NonCancerChronicDerive	0.00E+00	3.00E-09	0.00E+00	0.00E+00	0.00E+00	2.09E-07	3.01E-05	0.00E+00	9.72E-09	0.00E+00	0.00E+00	1.28E-06	0.00E+00	0.00E+00	3.01E-05
3662	ALL		746762.33	4034804.27	NonCancerChronicDerive	0.00E+00	2.61E-09	0.00E+00	0.00E+00	0.00E+00	1.83E-07	2.65E-05	0.00E+00	8.44E-09	0.00E+00	0.00E+00	1.11E-06	0.00E+00	0.00E+00	2.65E-05
3663	ALL		746812.33	4034804.27	NonCancerChronicDerive	0.00E+00	2.70E-09	0.00E+00	0.00E+00	0.00E+00	1.89E-07	2.74E-05	0.00E+00	8.74E-09	0.00E+00	0.00E+00	1.15E-06	0.00E+00	0.00E+00	2.74E-05
3664	ALL		746862.33	4034804.27	NonCancerChronicDerive	0.00E+00	2.82E-09	0.00E+00	0.00E+00	0.00E+00	1.97E-07	2.85E-05	0.00E+00	9.12E-09	0.00E+00	0.00E+00	1.20E-06	0.00E+00	0.00E+00	2.85E-05
3665	ALL		746912.33	4034804.27	NonCancerChronicDerive	0.00E+00	2.94E-09	0.00E+00	0.00E+00	0.00E+00	2.05E-07	2.97E-05	0.00E+00	9.53E-09	0.00E+00	0.00E+00	1.25E-06	0.00E+00	0.00E+00	2.97E-05
3666	ALL		746962.33	4034804.27	NonCancerChronicDerive	0.00E+00	3.09E-09	0.00E+00	0.00E+00	0.00E+00	2.15E-07	3.10E-05	0.00E+00	1.00E-08	0.00E+00	0.00E+00	1.32E-06	0.00E+00	0.00E+00	3.10E-05
3667	ALL		746762.33	4034854.27	NonCancerChronicDerive	0.00E+00	2.66E-09	0.00E+00	0.00E+00	0.00E+00	1.86E-07	2.71E-05	0.00E+00	8.60E-09	0.00E+00	0.00E+00	1.13E-06	0.00E+00	0.00E+00	2.71E-05
3668	ALL		746812.33	4034854.27	NonCancerChronicDerive	0.00E+00	2.77E-09	0.00E+00	0.00E+00	0.00E+00	1.94E-07	2.81E-05	0.00E+00	8.96E-09	0.00E+00	0.00E+00	1.18E-06	0.00E+00	0.00E+00	2.81E-05
3669	ALL		746862.33	4034854.27	NonCancerChronicDerive	0.00E+00	2.89E-09	0.00E+00	0.00E+00	0.00E+00	2.02E-07	2.92E-05	0.00E+00	9.35E-09	0.00E+00	0.00E+00	1.23E-06	0.00E+00	0.00E+00	2.92E-05
3670	ALL		746912.33	4034854.27	NonCancerChronicDerive	0.00E+00	3.03E-09	0.00E+00	0.00E+00	0.00E+00	2.11E-07	3.05E-05	0.00E+00	9.80E-09	0.00E+00	0.00E+00	1.29E-06	0.00E+00	0.00E+00	3.05E-05
3671	ALL		746962.33	4034854.27	NonCancerChronicDerive	0.00E+00	3.19E-09	0.00E+00	0.00E+00	0.00E+00	2.22E-07	3.20E-05	0.00E+00	1.03E-08	0.00E+00	0.00E+00	1.36E-06	0.00E+00	0.00E+00	3.20E-05
3672	ALL		746762.33	4034904.27	NonCancerChronicDerive	0.00E+00	2.70E-09	0.00E+00	0.00E+00	0.00E+00	1.90E-07	2.75E-05	0.00E+00	8.73E-09	0.00E+00	0.00E+00	1.15E-06	0.00E+00	0.00E+00	2.75E-05
3673	ALL		746812.33	4034904.27	NonCancerChronicDerive	0.00E+00	2.81E-09	0.00E+00	0.00E+00	0.00E+00	1.97E-07	2.85E-05	0.00E+00	9.09E-09	0.00E+00	0.00E+00	1.19E-06	0.00E+00	0.00E+00	2.85E-05
3674	ALL		746862.33	4034904.27	NonCancerChronicDerive	0.00E+00	2.96E-09	0.00E+00	0.00E+00	0.00E+00	2.07E-07	3.00E-05	0.00E+00	9.59E-09	0.00E+00	0.00E+00	1.26E-06	0.00E+00	0.00E+00	3.00E-05
3675	ALL		746912.33	4034904.27	NonCancerChronicDerive	0.00E+00	3.11E-09	0.00E+00	0.00E+00	0.00E+00	2.17E-07	3.14E-05	0.00E+00	1.01E-08	0.00E+00	0.00E+00	1.32E-06	0.00E+00	0.00E+00	3.14E-05
3676	ALL		746962.33	4034904.27	NonCancerChronicDerive	0.00E+00	3.28E-09	0.00E+00	0.00E+00	0.00E+00	2.29E-07	3.30E-05	0.00E+00	1.06E-08	0.00E+00	0.00E+00	1.40E-06	0.00E+00	0.00E+00	3.30E-05
3677	ALL		746762.33	4034954.27	NonCancerChronicDerive	0.00E+00	2.75E-09	0.00E+00	0.00E+00	0.00E+00	1.94E-07	2.81E-05	0.00E+00	8.91E-09	0.00E+00	0.00E+00	1.17E-06	0.00E+00	0.00E+00	2.81E-05
3678	ALL		746812.33	4034954.27	NonCancerChronicDerive	0.00E+00	2.89E-09	0.00E+00	0.00E+00	0.00E+00	2.03E-07	2.94E-05	0.00E+00	9.36E-09	0.00E+00	0.00E+00	1.23E-06	0.00E+00	0.00E+00	2.94E-05
3679	ALL		746862.33	4034954.27	NonCancerChronicDerive	0.00E+00	3.04E-09	0.00E+00	0.00E+00	0.00E+00	2.13E-07	3.08E-05	0.00E+00	9.83E-09	0.00E+00	0.00E+00	1.29E-06	0.00E+00	0.00E+00	3.08E-05
3680	ALL		746912.33	4034954.27	NonCancerChronicDerive	0.00E+00	3.20E-09	0.00E+00	0.00E+00	0.00E+00	2.24E-07	3.23E-05	0.00E+00	1.04E-08	0.00E+00	0.00E+00	1.36E-06	0.00E+00	0.00E+00	3.23E-05
3681	ALL		746962.33	4034954.27	NonCancerChronicDerive	0.00E+00	3.39E-09	0.00E+00	0.00E+00	0.00E+00	2.36E-07	3.41E-05	0.00E+00	1.10E-08	0.00E+00	0.00E+00	1.44E-06	0.00E+00	0.00E+00	3.41E-05
3682	ALL	SENS	746762.33	4035004.27	NonCancerChronicDerive	0.00E+00	2.79E-09	0.00E+00	0.00E+00	0.00E+00	1.97E-07	2.86E-05	0.00E+00	9.04E-09	0.00E+00	0.00E+00	1.19E-06	0.00E+00	0.00E+00	2.86E-05
3683	ALL	SENS	746812.33	4035004.27	NonCancerChronicDerive	0.00E+00	2.93E-09	0.00E+00	0.00E+00	0.00E+00	2.06E-07	2.98E-05	0.00E+00	9.47E-09	0.00E+00	0.00E+00	1.25E-06	0.00E+00	0.00E+00	2.98E-05
3684	ALL	SENS	746862.33	4035004.27	NonCancerChronicDerive	0.00E+00	3.10E-09	0.00E+00	0.00E+00	0.00E+00	2.17E-07	3.15E-05	0.00E+00	1.00E-08	0.00E+00	0.00E+00	1.32E-06	0.00E+00	0.00E+00	3.15E-05
3685	ALL	SENS	746912.33	4035004.27	NonCancerChronicDerive	0.00E+00	3.28E-09	0.00E+00	0.00E+00	0.00E+00	2.29E-07	3.32E-05	0.00E+00	1.06E-08	0.00E+00	0.00E+00	1.40E-06	0.00E+00	0.00E+00	3.32E-05
3686	ALL		746962.33	4035004.27	NonCancerChronicDerive	0.00E+00	3.50E-09	0.00E+00	0.00E+00	0.00E+00	2.44E-07	3.52E-05	0.00E+00	1.13E-08	0.00E+00	0.00E+00	1.49E-06	0.00E+00	0.00E+00	3.52E-05
3687	ALL		746762.33	4035054.27	NonCancerChronicDerive	0.00E+00	2.83E-09	0.00E+00	0.00E+00	0.00E+00	2.00E-07	2.90E-05	0.00E+00	9.17E-09	0.00E+00	0.00E+00	1.20E-06	0.00E+00	0.00E+00	2.90E-05
3688	ALL		746812.33	4035054.27	NonCancerChronicDerive	0.00E+00	3.00E-09	0.00E+00	0.00E+00	0.00E+00	2.11E-07	3.06E-05	0.00E+00	9.70E-09	0.00E+00	0.00E+00	1.28E-06	0.00E+00	0.00E+00	3.06E-05
3689	ALL		746862.33	4035054.27	NonCancerChronicDerive	0.00E+00	3.16E-09	0.00E+00	0.00E+00	0.00E+00	2.22E-07	3.22E-05	0.00E+00	1.02E-08	0.00E+00	0.00E+00	1.35E-06	0.00E+00	0.00E+00	3.22E-05
3690	ALL		746912.33	4035054.27	NonCancerChronicDerive	0.00E+00	3.35E-09	0.00E+00	0.00E+00	0.00E+00	2.35E-07	3.40E-05	0.00E+00	1.09E-08	0.00E+00	0.00E+00	1.43E-06	0.00E+00	0.00E+00	3.40E-05
3691	ALL		746962.33	4035054.27	NonCancerChronicDerive	0.00E+00	3.62E-09	0.00E+00	0.00E+00	0.00E+00	2.52E-07	3.64E-05	0.00E+00	1.17E-08	0.00E+00	0.00E+00	1.54E-06	0.00E+00	0.00E+00	3.64E-05
3692	ALL		747420	4038175	NonCancerChronicDerive	0.00E+00	1.67E-09	0.00E+00	0.00E+00	0.00E+00	1.31E-07	1.83E-05	0.00E+00	5.40E-09	0.00E+00	0.00E+00	7.09E-07	0.00E+00	0.00E+00	1.83E-05
3693	ALL		747470	4038175	NonCancerChronicDerive	0.00E+00	1.67E-09	0.00E+00	0.00E+00	0.00E+00	1.31E-07	1.83E-05	0.00E+00	5.41E-09	0.00E+00	0.00E+00	7.12E-07	0.00E+00	0.00E+00	1.83E-05
3694	ALL		747520	4038175	NonCancerChronicDerive	0.00E+00	1.69E-09	0.00E+00	0.00E+00	0.00E+00	1.31E-07	1.84E-05	0.00E+00	5.46E-09	0.00E+00	0.00E+00	7.17E-07	0.00E+00	0.00E+00	1.84E-05
3695	ALL	SENS	747420	4038225	NonCancerChronicDerive	0.00E+00	1.66E-09	0.00E+00	0.00E+00	0.00E+00	1.30E-07	1.83E-05	0.00E+00	5.39E-09	0.00E+00	0.00E+00	7.08E-07	0.00E+00	0.00E+00	1.83E-05
3696	ALL	SENS	747470	4038225	NonCancerChronicDerive	0.00E+00	1.67E-09	0.00E+00	0.00E+00	0.00E+00	1.30E-07	1.83E-05	0.00E+00	5.40E-09	0.00E+00	0.00E+00	7.10E-07	0.00E+00	0.00E+00	1.83E-05
3697	ALL	SENS	747520	4038225	NonCancerChronicDerive	0.00E+00	1.68E-09	0.00E+00	0.00E+00	0.00E+00	1.31E-07	1.83E-05	0.00E+00	5.44E-09	0.00E+00	0.00E+00	7.15E-07	0.00E+00	0.00E+00	1.83E-05
3698	ALL	SENS	747420	4038275	NonCancerChronicDerive	0.00E+00	1.66E-09	0.00E+00	0.00E+00	0.00E+00	1.30E-07	1.82E-05	0.00E+00	5.39E-09	0.00E+00	0.00E+00	7.08E-07	0.00E+00	0.00E+00	1.82E-05
3699	ALL	SENS	747470	4038275	NonCancerChronicDerive	0.00E+00	1.67E-09	0.00E+00	0.00E+00	0.00E+00	1.30E-07	1.82E-05	0.00E+00	5.40E-09	0.00E+00	0.00E+00	7.09E-07	0.00E+00	0.00E+00	1.82E-05
3700	ALL	SENS	747520	4038275	NonCancerChronicDerive	0.00E+00	1.68E-09	0.00E+00	0.00E+00	0.00E+00	1.30E-07	1.83E-05	0.00E+00	5.43E-09	0.00E+00	0.00E+00	7.14E-07	0.00E+00	0.00E+00	1.83E-05
3701	ALL		747420	4038325	NonCancerChronicDerive	0.00E+00	1.67E-09	0.00E+00	0.00E+00	0.00E+00	1.30E-07	1.82E-05	0.00E+00	5.39E-09	0.00E+00	0.00E+00	7.09E-07	0.00E+00	0.00E+00	1.82E-05
3702	ALL		747470	4038325	NonCancerChronicDerive	0.00E+00	1.67E-09	0.00E+00	0.00E+00	0.00E+00	1.30E-07	1.82E-05	0.00E+00	5.40E-09	0.00E+00	0.00E+00	7.10E-07	0.00E+00	0.00E+00	1.82E-05
3703	ALL		747520	4038325	NonCancerChronicDerive	0.00E+00	1.68E-09	0.00E+00	0.00E+00	0.00E+00	1.30E-07	1.83E-05	0.00E+00	5.43E-09	0.00E+00	0.00E+00	7.14E-07	0.00E+00	0.00E+00	1.83E-05
3704	ALL		746279	4039819	NonCancerChronicDerive	0.00E+00	1.70E-09	0.00E+00	0.00E+00	0.00E+00	1.25E-07	1.81E-05	0.00E+00	5.51E-09	0.00E+00	0.00E+00	7.25E-07	0.00E+00	0.00E+00	1.81E-05
3705	ALL		746329	4039819	NonCancerChronicDerive	0.00E+00	1.71E-09	0.00E+00	0.00E+00	0.00E+00	1.25E-07	1.82E-05	0.00E+00	5.54E-09	0.00E+00	0.00E+00	7.28E-07	0.00E+00	0.00E+00	1.82E-05
3706	ALL		746379	4039819	NonCancerChronicDerive	0.00E+00	1.72E-09	0.00E+00	0.00E+00	0.00E+00	1.26E-07	1.82E-05	0.00E+00	5.56E-09	0.00E+00	0.00E+00	7.31E-07	0.00E+00	0.00E+00	1.82E-05
3707	ALL	SENS	746429	4039819	NonCancerChronicDerive	0.00E+00	1.73E-09	0.00E+00	0.00E+00	0.00E+00	1.27E-07	1.83E-05	0.00E+00	5.59E-09	0.00E+00	0.00E+00	7.34E-07	0.00E+00	0.00E+00	1.83E-05
3708	ALL	SENS	746479	4039819	NonCancerChronicDerive	0.00E+00	1.73E-09	0.00E+00	0.00E+00	0.00E+00	1.27E-07	1.84E-05	0.00E+00	5.61E-09	0.00E+00	0.00E+00	7.38E-07	0.00E+00	0.00E+00	1.84E-05

3709	ALL		746529	4039819	NonCancerChronicDerive	0.00E+00	1.74E-09	0.00E+00	0.00E+00	0.00E+00	1.28E-07	1.85E-05	0.00E+00	5.64E-09	0.00E+00	0.00E+00	7.42E-07	0.00E+00	0.00E+00	1.85E-05
3710	ALL	SENS	746279	4039869	NonCancerChronicDerive	0.00E+00	1.71E-09	0.00E+00	0.00E+00	0.00E+00	1.25E-07	1.81E-05	0.00E+00	5.53E-09	0.00E+00	0.00E+00	7.27E-07	0.00E+00	0.00E+00	1.81E-05
3711	ALL	SENS	746329	4039869	NonCancerChronicDerive	0.00E+00	1.72E-09	0.00E+00	0.00E+00	0.00E+00	1.26E-07	1.82E-05	0.00E+00	5.56E-09	0.00E+00	0.00E+00	7.31E-07	0.00E+00	0.00E+00	1.82E-05
3712	ALL	SENS	746379	4039869	NonCancerChronicDerive	0.00E+00	1.73E-09	0.00E+00	0.00E+00	0.00E+00	1.26E-07	1.83E-05	0.00E+00	5.58E-09	0.00E+00	0.00E+00	7.34E-07	0.00E+00	0.00E+00	1.83E-05
3713	ALL	SENS	746429	4039869	NonCancerChronicDerive	0.00E+00	1.73E-09	0.00E+00	0.00E+00	0.00E+00	1.27E-07	1.84E-05	0.00E+00	5.61E-09	0.00E+00	0.00E+00	7.38E-07	0.00E+00	0.00E+00	1.84E-05
3714	ALL	SENS	746479	4039869	NonCancerChronicDerive	0.00E+00	1.74E-09	0.00E+00	0.00E+00	0.00E+00	1.28E-07	1.85E-05	0.00E+00	5.64E-09	0.00E+00	0.00E+00	7.42E-07	0.00E+00	0.00E+00	1.85E-05
3715	ALL		746529	4039869	NonCancerChronicDerive	0.00E+00	1.76E-09	0.00E+00	0.00E+00	0.00E+00	1.28E-07	1.86E-05	0.00E+00	5.68E-09	0.00E+00	0.00E+00	7.47E-07	0.00E+00	0.00E+00	1.86E-05
3716	ALL	SENS	746279	4039919	NonCancerChronicDerive	0.00E+00	1.72E-09	0.00E+00	0.00E+00	0.00E+00	1.25E-07	1.81E-05	0.00E+00	5.55E-09	0.00E+00	0.00E+00	7.30E-07	0.00E+00	0.00E+00	1.81E-05
3717	ALL	SENS	746329	4039919	NonCancerChronicDerive	0.00E+00	1.72E-09	0.00E+00	0.00E+00	0.00E+00	1.26E-07	1.82E-05	0.00E+00	5.58E-09	0.00E+00	0.00E+00	7.33E-07	0.00E+00	0.00E+00	1.82E-05
3718	ALL	SENS	746379	4039919	NonCancerChronicDerive	0.00E+00	1.73E-09	0.00E+00	0.00E+00	0.00E+00	1.27E-07	1.84E-05	0.00E+00	5.61E-09	0.00E+00	0.00E+00	7.38E-07	0.00E+00	0.00E+00	1.84E-05
3719	ALL		746429	4039919	NonCancerChronicDerive	0.00E+00	1.74E-09	0.00E+00	0.00E+00	0.00E+00	1.27E-07	1.85E-05	0.00E+00	5.64E-09	0.00E+00	0.00E+00	7.42E-07	0.00E+00	0.00E+00	1.85E-05
3720	ALL		746479	4039919	NonCancerChronicDerive	0.00E+00	1.75E-09	0.00E+00	0.00E+00	0.00E+00	1.28E-07	1.86E-05	0.00E+00	5.68E-09	0.00E+00	0.00E+00	7.47E-07	0.00E+00	0.00E+00	1.86E-05
3721	ALL		746529	4039919	NonCancerChronicDerive	0.00E+00	1.77E-09	0.00E+00	0.00E+00	0.00E+00	1.29E-07	1.87E-05	0.00E+00	5.72E-09	0.00E+00	0.00E+00	7.52E-07	0.00E+00	0.00E+00	1.87E-05
3722	ALL		746279	4039969	NonCancerChronicDerive	0.00E+00	1.73E-09	0.00E+00	0.00E+00	0.00E+00	1.26E-07	1.82E-05	0.00E+00	5.59E-09	0.00E+00	0.00E+00	7.35E-07	0.00E+00	0.00E+00	1.82E-05
3723	ALL		746329	4039969	NonCancerChronicDerive	0.00E+00	1.74E-09	0.00E+00	0.00E+00	0.00E+00	1.26E-07	1.83E-05	0.00E+00	5.62E-09	0.00E+00	0.00E+00	7.39E-07	0.00E+00	0.00E+00	1.83E-05
3724	ALL		746379	4039969	NonCancerChronicDerive	0.00E+00	1.75E-09	0.00E+00	0.00E+00	0.00E+00	1.27E-07	1.85E-05	0.00E+00	5.65E-09	0.00E+00	0.00E+00	7.43E-07	0.00E+00	0.00E+00	1.85E-05
3725	ALL		746429	4039969	NonCancerChronicDerive	0.00E+00	1.76E-09	0.00E+00	0.00E+00	0.00E+00	1.28E-07	1.86E-05	0.00E+00	5.69E-09	0.00E+00	0.00E+00	7.48E-07	0.00E+00	0.00E+00	1.86E-05
3726	ALL		746479	4039969	NonCancerChronicDerive	0.00E+00	1.77E-09	0.00E+00	0.00E+00	0.00E+00	1.29E-07	1.87E-05	0.00E+00	5.73E-09	0.00E+00	0.00E+00	7.53E-07	0.00E+00	0.00E+00	1.87E-05
3727	ALL		746529	4039969	NonCancerChronicDerive	0.00E+00	1.78E-09	0.00E+00	0.00E+00	0.00E+00	1.30E-07	1.89E-05	0.00E+00	5.77E-09	0.00E+00	0.00E+00	7.58E-07	0.00E+00	0.00E+00	1.89E-05
3728	ALL		746279	4040019	NonCancerChronicDerive	0.00E+00	1.74E-09	0.00E+00	0.00E+00	0.00E+00	1.27E-07	1.84E-05	0.00E+00	5.64E-09	0.00E+00	0.00E+00	7.42E-07	0.00E+00	0.00E+00	1.84E-05
3729	ALL		746329	4040019	NonCancerChronicDerive	0.00E+00	1.75E-09	0.00E+00	0.00E+00	0.00E+00	1.27E-07	1.85E-05	0.00E+00	5.68E-09	0.00E+00	0.00E+00	7.46E-07	0.00E+00	0.00E+00	1.85E-05
3730	ALL		746379	4040019	NonCancerChronicDerive	0.00E+00	1.76E-09	0.00E+00	0.00E+00	0.00E+00	1.28E-07	1.86E-05	0.00E+00	5.71E-09	0.00E+00	0.00E+00	7.51E-07	0.00E+00	0.00E+00	1.86E-05
3731	ALL		746429	4040019	NonCancerChronicDerive	0.00E+00	1.78E-09	0.00E+00	0.00E+00	0.00E+00	1.29E-07	1.88E-05	0.00E+00	5.75E-09	0.00E+00	0.00E+00	7.56E-07	0.00E+00	0.00E+00	1.88E-05
3732	ALL		746479	4040019	NonCancerChronicDerive	0.00E+00	1.79E-09	0.00E+00	0.00E+00	0.00E+00	1.30E-07	1.89E-05	0.00E+00	5.79E-09	0.00E+00	0.00E+00	7.61E-07	0.00E+00	0.00E+00	1.89E-05
3733	ALL		746529	4040019	NonCancerChronicDerive	0.00E+00	1.80E-09	0.00E+00	0.00E+00	0.00E+00	1.31E-07	1.90E-05	0.00E+00	5.83E-09	0.00E+00	0.00E+00	7.67E-07	0.00E+00	0.00E+00	1.90E-05
3734	ALL		746566	4040066	NonCancerChronicDerive	0.00E+00	1.84E-09	0.00E+00	0.00E+00	0.00E+00	1.33E-07	1.94E-05	0.00E+00	5.95E-09	0.00E+00	0.00E+00	7.83E-07	0.00E+00	0.00E+00	1.94E-05
3735	ALL	SENS	746576	4040066	NonCancerChronicDerive	0.00E+00	1.84E-09	0.00E+00	0.00E+00	0.00E+00	1.34E-07	1.94E-05	0.00E+00	5.97E-09	0.00E+00	0.00E+00	7.84E-07	0.00E+00	0.00E+00	1.94E-05
3736	ALL	SENS	746586	4040066	NonCancerChronicDerive	0.00E+00	1.85E-09	0.00E+00	0.00E+00	0.00E+00	1.34E-07	1.95E-05	0.00E+00	5.98E-09	0.00E+00	0.00E+00	7.86E-07	0.00E+00	0.00E+00	1.95E-05
3737	ALL	SENS	746596	4040066	NonCancerChronicDerive	0.00E+00	1.85E-09	0.00E+00	0.00E+00	0.00E+00	1.34E-07	1.95E-05	0.00E+00	5.99E-09	0.00E+00	0.00E+00	7.87E-07	0.00E+00	0.00E+00	1.95E-05
3738	ALL	SENS	746606	4040066	NonCancerChronicDerive	0.00E+00	1.85E-09	0.00E+00	0.00E+00	0.00E+00	1.34E-07	1.96E-05	0.00E+00	6.00E-09	0.00E+00	0.00E+00	7.89E-07	0.00E+00	0.00E+00	1.96E-05
3739	ALL	SENS	746616	4040066	NonCancerChronicDerive	0.00E+00	1.86E-09	0.00E+00	0.00E+00	0.00E+00	1.35E-07	1.96E-05	0.00E+00	6.01E-09	0.00E+00	0.00E+00	7.90E-07	0.00E+00	0.00E+00	1.96E-05
3740	ALL	SENS	746566	4040076	NonCancerChronicDerive	0.00E+00	1.85E-09	0.00E+00	0.00E+00	0.00E+00	1.34E-07	1.95E-05	0.00E+00	5.98E-09	0.00E+00	0.00E+00	7.85E-07	0.00E+00	0.00E+00	1.95E-05
3741	ALL	SENS	746576	4040076	NonCancerChronicDerive	0.00E+00	1.85E-09	0.00E+00	0.00E+00	0.00E+00	1.34E-07	1.95E-05	0.00E+00	5.99E-09	0.00E+00	0.00E+00	7.87E-07	0.00E+00	0.00E+00	1.95E-05
3742	ALL	SENS	746586	4040076	NonCancerChronicDerive	0.00E+00	1.85E-09	0.00E+00	0.00E+00	0.00E+00	1.34E-07	1.95E-05	0.00E+00	6.00E-09	0.00E+00	0.00E+00	7.89E-07	0.00E+00	0.00E+00	1.95E-05
3743	ALL	SENS	746596	4040076	NonCancerChronicDerive	0.00E+00	1.86E-09	0.00E+00	0.00E+00	0.00E+00	1.35E-07	1.96E-05	0.00E+00	6.01E-09	0.00E+00	0.00E+00	7.90E-07	0.00E+00	0.00E+00	1.96E-05
3744	ALL	SENS	746606	4040076	NonCancerChronicDerive	0.00E+00	1.86E-09	0.00E+00	0.00E+00	0.00E+00	1.35E-07	1.96E-05	0.00E+00	6.02E-09	0.00E+00	0.00E+00	7.91E-07	0.00E+00	0.00E+00	1.96E-05
3745	ALL	SENS	746616	4040076	NonCancerChronicDerive	0.00E+00	1.86E-09	0.00E+00	0.00E+00	0.00E+00	1.35E-07	1.97E-05	0.00E+00	6.03E-09	0.00E+00	0.00E+00	7.93E-07	0.00E+00	0.00E+00	1.97E-05
3746	ALL	SENS	746566	4040086	NonCancerChronicDerive	0.00E+00	1.85E-09	0.00E+00	0.00E+00	0.00E+00	1.34E-07	1.95E-05	0.00E+00	6.00E-09	0.00E+00	0.00E+00	7.88E-07	0.00E+00	0.00E+00	1.95E-05
3747	ALL	SENS	746576	4040086	NonCancerChronicDerive	0.00E+00	1.86E-09	0.00E+00	0.00E+00	0.00E+00	1.34E-07	1.96E-05	0.00E+00	6.01E-09	0.00E+00	0.00E+00	7.90E-07	0.00E+00	0.00E+00	1.96E-05
3748	ALL	SENS	746586	4040086	NonCancerChronicDerive	0.00E+00	1.86E-09	0.00E+00	0.00E+00	0.00E+00	1.35E-07	1.96E-05	0.00E+00	6.02E-09	0.00E+00	0.00E+00	7.92E-07	0.00E+00	0.00E+00	1.96E-05
3749	ALL	SENS	746596	4040086	NonCancerChronicDerive	0.00E+00	1.86E-09	0.00E+00	0.00E+00	0.00E+00	1.35E-07	1.96E-05	0.00E+00	6.03E-09	0.00E+00	0.00E+00	7.93E-07	0.00E+00	0.00E+00	1.96E-05
3750	ALL	SENS	746606	4040086	NonCancerChronicDerive	0.00E+00	1.87E-09	0.00E+00	0.00E+00	0.00E+00	1.35E-07	1.97E-05	0.00E+00	6.04E-09	0.00E+00	0.00E+00	7.95E-07	0.00E+00	0.00E+00	1.97E-05
3751	ALL	SENS	746616	4040086	NonCancerChronicDerive	0.00E+00	1.87E-09	0.00E+00	0.00E+00	0.00E+00	1.36E-07	1.97E-05	0.00E+00	6.06E-09	0.00E+00	0.00E+00	7.96E-07	0.00E+00	0.00E+00	1.97E-05
3752	ALL	SENS	746566	4040096	NonCancerChronicDerive	0.00E+00	1.86E-09	0.00E+00	0.00E+00	0.00E+00	1.35E-07	1.96E-05	0.00E+00	6.02E-09	0.00E+00	0.00E+00	7.91E-07	0.00E+00	0.00E+00	1.96E-05
3753	ALL	SENS	746576	4040096	NonCancerChronicDerive	0.00E+00	1.86E-09	0.00E+00	0.00E+00	0.00E+00	1.35E-07	1.96E-05	0.00E+00	6.03E-09	0.00E+00	0.00E+00	7.93E-07	0.00E+00	0.00E+00	1.96E-05
3754	ALL	SENS	746586	4040096	NonCancerChronicDerive	0.00E+00	1.87E-09	0.00E+00	0.00E+00	0.00E+00	1.35E-07	1.97E-05	0.00E+00	6.04E-09	0.00E+00	0.00E+00	7.95E-07	0.00E+00	0.00E+00	1.97E-05
3755	ALL	SENS	746596	4040096	NonCancerChronicDerive	0.00E+00	1.87E-09	0.00E+00	0.00E+00	0.00E+00	1.35E-07	1.97E-05	0.00E+00	6.06E-09	0.00E+00	0.00E+00	7.96E-07	0.00E+00	0.00E+00	1.97E-05
3756	ALL	SENS	746606	4040096	NonCancerChronicDerive	0.00E+00	1.87E-09	0.00E+00	0.00E+00	0.00E+00	1.36E-07	1.98E-05	0.00E+00	6.07E-09	0.00E+00	0.00E+00	7.98E-07	0.00E+00	0.00E+00	1.98E-05
3757	ALL	SENS	746616	4040096	NonCancerChronicDerive	0.00E+00	1.88E-09	0.00E+00	0.00E+00	0.00E+00	1.36E-07	1.98E-05	0.00E+00	6.08E-09	0.00E+00	0.00E+00	7.99E-07	0.00E+00	0.00E+00	1.98E-05
3758	ALL	SENS	746566	4040106	NonCancerChronicDerive	0.00E+00	1.87E-09	0.00E+00	0.00E+00	0.00E+00	1.35E-07	1.96E-05	0.00E+00	6.04E-09	0.00E+00	0.00E+00	7.94E-07	0.00E+00	0.00E+00	1.96E-05
3759	ALL	SENS	746576	4040106	NonCancerChronicDerive	0.00E+00	1.87E-09	0.00E+00	0.00E+00	0.00E+00	1.35E-07	1.97E-05	0.00E+00	6.06E-09	0.00E+00	0.00E+00	7.96E-07	0.00E+00	0.00E+00	1.97E-05
3760	ALL	SENS	746586	4040106	NonCancerChronicDerive	0.00E+00	1.87E-09	0.00E+00	0.00E+00	0.00E+00	1.36E-07	1.97E-05	0.00E+00	6.07E-09	0.00E+00	0.00E+00	7.98E-07	0.00E+00	0.00E+00	1.97E-05
3761	ALL	SENS	746596	4040106	NonCancerChronicDerive	0.00E+00	1.88E-09	0.00E+00	0.00E+00	0.00E+00	1.36E-07	1.98E-05	0.00E+00	6.08E-09	0.00E+00	0.00E+00	7.99E-07	0.00E+00	0.00E+00	1.98E-05

3762	ALL	SENS	746606	4040106	NonCancerChronicDerive	0.00E+00	1.88E-09	0.00E+00	0.00E+00	0.00E+00	1.36E-07	1.98E-05	0.00E+00	6.09E-09	0.00E+00	0.00E+00	8.01E-07	0.00E+00	0.00E+00	1.98E-05
3763	ALL	SENS	746616	4040106	NonCancerChronicDerive	0.00E+00	1.89E-09	0.00E+00	0.00E+00	0.00E+00	1.36E-07	1.99E-05	0.00E+00	6.10E-09	0.00E+00	0.00E+00	8.02E-07	0.00E+00	0.00E+00	1.99E-05
3764	ALL	SENS	746566	4040116	NonCancerChronicDerive	0.00E+00	1.87E-09	0.00E+00	0.00E+00	0.00E+00	1.35E-07	1.97E-05	0.00E+00	6.07E-09	0.00E+00	0.00E+00	7.97E-07	0.00E+00	0.00E+00	1.97E-05
3765	ALL	SENS	746576	4040116	NonCancerChronicDerive	0.00E+00	1.88E-09	0.00E+00	0.00E+00	0.00E+00	1.36E-07	1.98E-05	0.00E+00	6.08E-09	0.00E+00	0.00E+00	7.99E-07	0.00E+00	0.00E+00	1.98E-05
3766	ALL	SENS	746586	4040116	NonCancerChronicDerive	0.00E+00	1.88E-09	0.00E+00	0.00E+00	0.00E+00	1.36E-07	1.98E-05	0.00E+00	6.09E-09	0.00E+00	0.00E+00	8.01E-07	0.00E+00	0.00E+00	1.98E-05
3767	ALL	SENS	746596	4040116	NonCancerChronicDerive	0.00E+00	1.89E-09	0.00E+00	0.00E+00	0.00E+00	1.36E-07	1.98E-05	0.00E+00	6.10E-09	0.00E+00	0.00E+00	8.02E-07	0.00E+00	0.00E+00	1.98E-05
3768	ALL	SENS	746606	4040116	NonCancerChronicDerive	0.00E+00	1.89E-09	0.00E+00	0.00E+00	0.00E+00	1.37E-07	1.99E-05	0.00E+00	6.12E-09	0.00E+00	0.00E+00	8.04E-07	0.00E+00	0.00E+00	1.99E-05
3769	ALL	SENS	746616	4040116	NonCancerChronicDerive	0.00E+00	1.89E-09	0.00E+00	0.00E+00	0.00E+00	1.37E-07	1.99E-05	0.00E+00	6.13E-09	0.00E+00	0.00E+00	8.06E-07	0.00E+00	0.00E+00	1.99E-05
3770	ALL	SENS	746566	4040126	NonCancerChronicDerive	0.00E+00	1.88E-09	0.00E+00	0.00E+00	0.00E+00	1.36E-07	1.98E-05	0.00E+00	6.09E-09	0.00E+00	0.00E+00	8.01E-07	0.00E+00	0.00E+00	1.98E-05
3771	ALL	SENS	746576	4040126	NonCancerChronicDerive	0.00E+00	1.89E-09	0.00E+00	0.00E+00	0.00E+00	1.36E-07	1.98E-05	0.00E+00	6.11E-09	0.00E+00	0.00E+00	8.03E-07	0.00E+00	0.00E+00	1.98E-05
3772	ALL	SENS	746586	4040126	NonCancerChronicDerive	0.00E+00	1.89E-09	0.00E+00	0.00E+00	0.00E+00	1.37E-07	1.99E-05	0.00E+00	6.12E-09	0.00E+00	0.00E+00	8.04E-07	0.00E+00	0.00E+00	1.99E-05
3773	ALL	SENS	746596	4040126	NonCancerChronicDerive	0.00E+00	1.89E-09	0.00E+00	0.00E+00	0.00E+00	1.37E-07	1.99E-05	0.00E+00	6.13E-09	0.00E+00	0.00E+00	8.06E-07	0.00E+00	0.00E+00	1.99E-05
3774	ALL	SENS	746606	4040126	NonCancerChronicDerive	0.00E+00	1.90E-09	0.00E+00	0.00E+00	0.00E+00	1.37E-07	2.00E-05	0.00E+00	6.14E-09	0.00E+00	0.00E+00	8.07E-07	0.00E+00	0.00E+00	2.00E-05
3775	ALL	SENS	746616	4040126	NonCancerChronicDerive	0.00E+00	1.90E-09	0.00E+00	0.00E+00	0.00E+00	1.37E-07	2.00E-05	0.00E+00	6.15E-09	0.00E+00	0.00E+00	8.09E-07	0.00E+00	0.00E+00	2.00E-05
3776	ALL	SENS	746566	4040136	NonCancerChronicDerive	0.00E+00	1.89E-09	0.00E+00	0.00E+00	0.00E+00	1.36E-07	1.99E-05	0.00E+00	6.12E-09	0.00E+00	0.00E+00	8.04E-07	0.00E+00	0.00E+00	1.99E-05
3777	ALL	SENS	746576	4040136	NonCancerChronicDerive	0.00E+00	1.89E-09	0.00E+00	0.00E+00	0.00E+00	1.37E-07	1.99E-05	0.00E+00	6.13E-09	0.00E+00	0.00E+00	8.06E-07	0.00E+00	0.00E+00	1.99E-05
3778	ALL	SENS	746586	4040136	NonCancerChronicDerive	0.00E+00	1.90E-09	0.00E+00	0.00E+00	0.00E+00	1.37E-07	2.00E-05	0.00E+00	6.14E-09	0.00E+00	0.00E+00	8.08E-07	0.00E+00	0.00E+00	2.00E-05
3779	ALL	SENS	746596	4040136	NonCancerChronicDerive	0.00E+00	1.90E-09	0.00E+00	0.00E+00	0.00E+00	1.37E-07	2.00E-05	0.00E+00	6.16E-09	0.00E+00	0.00E+00	8.09E-07	0.00E+00	0.00E+00	2.00E-05
3780	ALL	SENS	746606	4040136	NonCancerChronicDerive	0.00E+00	1.91E-09	0.00E+00	0.00E+00	0.00E+00	1.38E-07	2.00E-05	0.00E+00	6.17E-09	0.00E+00	0.00E+00	8.11E-07	0.00E+00	0.00E+00	2.00E-05
3781	ALL	SENS	746616	4040136	NonCancerChronicDerive	0.00E+00	1.91E-09	0.00E+00	0.00E+00	0.00E+00	1.38E-07	2.01E-05	0.00E+00	6.18E-09	0.00E+00	0.00E+00	8.12E-07	0.00E+00	0.00E+00	2.01E-05
3782	ALL	SENS	746566	4040146	NonCancerChronicDerive	0.00E+00	1.90E-09	0.00E+00	0.00E+00	0.00E+00	1.37E-07	1.99E-05	0.00E+00	6.14E-09	0.00E+00	0.00E+00	8.07E-07	0.00E+00	0.00E+00	1.99E-05
3783	ALL	SENS	746576	4040146	NonCancerChronicDerive	0.00E+00	1.90E-09	0.00E+00	0.00E+00	0.00E+00	1.37E-07	2.00E-05	0.00E+00	6.16E-09	0.00E+00	0.00E+00	8.09E-07	0.00E+00	0.00E+00	2.00E-05
3784	ALL	SENS	746586	4040146	NonCancerChronicDerive	0.00E+00	1.91E-09	0.00E+00	0.00E+00	0.00E+00	1.37E-07	2.00E-05	0.00E+00	6.17E-09	0.00E+00	0.00E+00	8.11E-07	0.00E+00	0.00E+00	2.00E-05
3785	ALL	SENS	746596	4040146	NonCancerChronicDerive	0.00E+00	1.91E-09	0.00E+00	0.00E+00	0.00E+00	1.38E-07	2.01E-05	0.00E+00	6.18E-09	0.00E+00	0.00E+00	8.13E-07	0.00E+00	0.00E+00	2.01E-05
3786	ALL	SENS	746606	4040146	NonCancerChronicDerive	0.00E+00	1.91E-09	0.00E+00	0.00E+00	0.00E+00	1.38E-07	2.01E-05	0.00E+00	6.19E-09	0.00E+00	0.00E+00	8.14E-07	0.00E+00	0.00E+00	2.01E-05
3787	ALL	SENS	746616	4040146	NonCancerChronicDerive	0.00E+00	1.92E-09	0.00E+00	0.00E+00	0.00E+00	1.38E-07	2.02E-05	0.00E+00	6.21E-09	0.00E+00	0.00E+00	8.16E-07	0.00E+00	0.00E+00	2.02E-05
3788	ALL	SENS	746566	4040156	NonCancerChronicDerive	0.00E+00	1.90E-09	0.00E+00	0.00E+00	0.00E+00	1.37E-07	2.00E-05	0.00E+00	6.17E-09	0.00E+00	0.00E+00	8.11E-07	0.00E+00	0.00E+00	2.00E-05
3789	ALL	SENS	746576	4040156	NonCancerChronicDerive	0.00E+00	1.91E-09	0.00E+00	0.00E+00	0.00E+00	1.38E-07	2.01E-05	0.00E+00	6.18E-09	0.00E+00	0.00E+00	8.13E-07	0.00E+00	0.00E+00	2.01E-05
3790	ALL	SENS	746586	4040156	NonCancerChronicDerive	0.00E+00	1.91E-09	0.00E+00	0.00E+00	0.00E+00	1.38E-07	2.01E-05	0.00E+00	6.20E-09	0.00E+00	0.00E+00	8.15E-07	0.00E+00	0.00E+00	2.01E-05
3791	ALL	SENS	746596	4040156	NonCancerChronicDerive	0.00E+00	1.92E-09	0.00E+00	0.00E+00	0.00E+00	1.38E-07	2.01E-05	0.00E+00	6.21E-09	0.00E+00	0.00E+00	8.16E-07	0.00E+00	0.00E+00	2.01E-05
3792	ALL	SENS	746606	4040156	NonCancerChronicDerive	0.00E+00	1.92E-09	0.00E+00	0.00E+00	0.00E+00	1.39E-07	2.02E-05	0.00E+00	6.22E-09	0.00E+00	0.00E+00	8.18E-07	0.00E+00	0.00E+00	2.02E-05
3793	ALL	SENS	746616	4040156	NonCancerChronicDerive	0.00E+00	1.93E-09	0.00E+00	0.00E+00	0.00E+00	1.39E-07	2.02E-05	0.00E+00	6.23E-09	0.00E+00	0.00E+00	8.20E-07	0.00E+00	0.00E+00	2.02E-05
3794	ALL	SENS	746566	4040166	NonCancerChronicDerive	0.00E+00	1.91E-09	0.00E+00	0.00E+00	0.00E+00	1.38E-07	2.01E-05	0.00E+00	6.19E-09	0.00E+00	0.00E+00	8.14E-07	0.00E+00	0.00E+00	2.01E-05
3795	ALL	SENS	746576	4040166	NonCancerChronicDerive	0.00E+00	1.92E-09	0.00E+00	0.00E+00	0.00E+00	1.38E-07	2.01E-05	0.00E+00	6.21E-09	0.00E+00	0.00E+00	8.16E-07	0.00E+00	0.00E+00	2.01E-05
3796	ALL	SENS	746586	4040166	NonCancerChronicDerive	0.00E+00	1.92E-09	0.00E+00	0.00E+00	0.00E+00	1.38E-07	2.02E-05	0.00E+00	6.22E-09	0.00E+00	0.00E+00	8.18E-07	0.00E+00	0.00E+00	2.02E-05
3797	ALL	SENS	746596	4040166	NonCancerChronicDerive	0.00E+00	1.93E-09	0.00E+00	0.00E+00	0.00E+00	1.39E-07	2.02E-05	0.00E+00	6.24E-09	0.00E+00	0.00E+00	8.20E-07	0.00E+00	0.00E+00	2.02E-05
3798	ALL	SENS	746606	4040166	NonCancerChronicDerive	0.00E+00	1.93E-09	0.00E+00	0.00E+00	0.00E+00	1.39E-07	2.03E-05	0.00E+00	6.25E-09	0.00E+00	0.00E+00	8.22E-07	0.00E+00	0.00E+00	2.03E-05
3799	ALL	SENS	746616	4040166	NonCancerChronicDerive	0.00E+00	1.93E-09	0.00E+00	0.00E+00	0.00E+00	1.39E-07	2.03E-05	0.00E+00	6.26E-09	0.00E+00	0.00E+00	8.23E-07	0.00E+00	0.00E+00	2.03E-05
3800	ALL		746559.72	4040315.67	NonCancerChronicDerive	0.00E+00	2.03E-09	0.00E+00	0.00E+00	0.00E+00	1.44E-07	2.11E-05	0.00E+00	6.56E-09	0.00E+00	0.00E+00	8.62E-07	0.00E+00	0.00E+00	2.11E-05
3801	ALL		746569.72	4040315.67	NonCancerChronicDerive	0.00E+00	2.03E-09	0.00E+00	0.00E+00	0.00E+00	1.45E-07	2.12E-05	0.00E+00	6.59E-09	0.00E+00	0.00E+00	8.66E-07	0.00E+00	0.00E+00	2.12E-05
3802	ALL		746579.72	4040315.67	NonCancerChronicDerive	0.00E+00	2.04E-09	0.00E+00	0.00E+00	0.00E+00	1.45E-07	2.12E-05	0.00E+00	6.61E-09	0.00E+00	0.00E+00	8.68E-07	0.00E+00	0.00E+00	2.12E-05
3803	ALL		746589.72	4040315.67	NonCancerChronicDerive	0.00E+00	2.05E-09	0.00E+00	0.00E+00	0.00E+00	1.46E-07	2.13E-05	0.00E+00	6.62E-09	0.00E+00	0.00E+00	8.71E-07	0.00E+00	0.00E+00	2.13E-05
3804	ALL		746599.72	4040315.67	NonCancerChronicDerive	0.00E+00	2.05E-09	0.00E+00	0.00E+00	0.00E+00	1.46E-07	2.13E-05	0.00E+00	6.64E-09	0.00E+00	0.00E+00	8.73E-07	0.00E+00	0.00E+00	2.13E-05
3805	ALL		746609.72	4040315.67	NonCancerChronicDerive	0.00E+00	2.06E-09	0.00E+00	0.00E+00	0.00E+00	1.46E-07	2.14E-05	0.00E+00	6.66E-09	0.00E+00	0.00E+00	8.76E-07	0.00E+00	0.00E+00	2.14E-05
3806	ALL		746619.72	4040315.67	NonCancerChronicDerive	0.00E+00	2.06E-09	0.00E+00	0.00E+00	0.00E+00	1.47E-07	2.15E-05	0.00E+00	6.68E-09	0.00E+00	0.00E+00	8.78E-07	0.00E+00	0.00E+00	2.15E-05
3807	ALL		746559.72	4040325.67	NonCancerChronicDerive	0.00E+00	2.03E-09	0.00E+00	0.00E+00	0.00E+00	1.45E-07	2.11E-05	0.00E+00	6.58E-09	0.00E+00	0.00E+00	8.65E-07	0.00E+00	0.00E+00	2.11E-05
3808	ALL		746569.72	4040325.67	NonCancerChronicDerive	0.00E+00	2.04E-09	0.00E+00	0.00E+00	0.00E+00	1.45E-07	2.12E-05	0.00E+00	6.61E-09	0.00E+00	0.00E+00	8.69E-07	0.00E+00	0.00E+00	2.12E-05
3809	ALL		746579.72	4040325.67	NonCancerChronicDerive	0.00E+00	2.05E-09	0.00E+00	0.00E+00	0.00E+00	1.46E-07	2.13E-05	0.00E+00	6.63E-09	0.00E+00	0.00E+00	8.72E-07	0.00E+00	0.00E+00	2.13E-05
3810	ALL		746589.72	4040325.67	NonCancerChronicDerive	0.00E+00	2.05E-09	0.00E+00	0.00E+00	0.00E+00	1.46E-07	2.14E-05	0.00E+00	6.65E-09	0.00E+00	0.00E+00	8.74E-07	0.00E+00	0.00E+00	2.14E-05
3811	ALL		746599.72	4040325.67	NonCancerChronicDerive	0.00E+00	2.06E-09	0.00E+00	0.00E+00	0.00E+00	1.47E-07	2.14E-05	0.00E+00	6.67E-09	0.00E+00	0.00E+00	8.77E-07	0.00E+00	0.00E+00	2.14E-05
3812	ALL		746609.72	4040325.67	NonCancerChronicDerive	0.00E+00	2.07E-09	0.00E+00	0.00E+00	0.00E+00	1.47E-07	2.15E-05	0.00E+00	6.69E-09	0.00E+00	0.00E+00	8.79E-07	0.00E+00	0.00E+00	2.15E-05
3813	ALL		746619.72	4040325.67	NonCancerChronicDerive	0.00E+00	2.07E-09	0.00E+00	0.00E+00	0.00E+00	1.47E-07	2.15E-05	0.00E+00	6.70E-09	0.00E+00	0.00E+00	8.81E-07	0.00E+00	0.00E+00	2.15E-05
3814	ALL		746559.72	4040335.67	NonCancerChronicDerive	0.00E+00	2.04E-09	0.00E+00	0.00E+00	0.00E+00	1.45E-07	2.12E-05	0.00E+00	6.61E-09	0.00E+00	0.00E+00	8.68E-07	0.00E+00	0.00E+00	2.12E-05

3815	ALL		746569.72	4040335.67	NonCancerChronicDerive	0.00E+00	2.05E-09	0.00E+00	0.00E+00	0.00E+00	1.46E-07	2.13E-05	0.00E+00	6.63E-09	0.00E+00	0.00E+00	8.72E-07	0.00E+00	0.00E+00	2.13E-05
3816	ALL		746579.72	4040335.67	NonCancerChronicDerive	0.00E+00	2.06E-09	0.00E+00	0.00E+00	0.00E+00	1.46E-07	2.14E-05	0.00E+00	6.65E-09	0.00E+00	0.00E+00	8.75E-07	0.00E+00	0.00E+00	2.14E-05
3817	ALL		746589.72	4040335.67	NonCancerChronicDerive	0.00E+00	2.06E-09	0.00E+00	0.00E+00	0.00E+00	1.47E-07	2.14E-05	0.00E+00	6.67E-09	0.00E+00	0.00E+00	8.77E-07	0.00E+00	0.00E+00	2.14E-05
3818	ALL		746599.72	4040335.67	NonCancerChronicDerive	0.00E+00	2.07E-09	0.00E+00	0.00E+00	0.00E+00	1.47E-07	2.15E-05	0.00E+00	6.69E-09	0.00E+00	0.00E+00	8.80E-07	0.00E+00	0.00E+00	2.15E-05
3819	ALL		746609.72	4040335.67	NonCancerChronicDerive	0.00E+00	2.07E-09	0.00E+00	0.00E+00	0.00E+00	1.47E-07	2.15E-05	0.00E+00	6.71E-09	0.00E+00	0.00E+00	8.82E-07	0.00E+00	0.00E+00	2.15E-05
3820	ALL		746619.72	4040335.67	NonCancerChronicDerive	0.00E+00	2.08E-09	0.00E+00	0.00E+00	0.00E+00	1.48E-07	2.16E-05	0.00E+00	6.73E-09	0.00E+00	0.00E+00	8.84E-07	0.00E+00	0.00E+00	2.16E-05
3821	ALL		746559.72	4040345.67	NonCancerChronicDerive	0.00E+00	2.05E-09	0.00E+00	0.00E+00	0.00E+00	1.46E-07	2.12E-05	0.00E+00	6.63E-09	0.00E+00	0.00E+00	8.71E-07	0.00E+00	0.00E+00	2.12E-05
3822	ALL		746569.72	4040345.67	NonCancerChronicDerive	0.00E+00	2.06E-09	0.00E+00	0.00E+00	0.00E+00	1.46E-07	2.13E-05	0.00E+00	6.66E-09	0.00E+00	0.00E+00	8.75E-07	0.00E+00	0.00E+00	2.13E-05
3823	ALL		746579.72	4040345.67	NonCancerChronicDerive	0.00E+00	2.06E-09	0.00E+00	0.00E+00	0.00E+00	1.47E-07	2.14E-05	0.00E+00	6.68E-09	0.00E+00	0.00E+00	8.78E-07	0.00E+00	0.00E+00	2.14E-05
3824	ALL		746589.72	4040345.67	NonCancerChronicDerive	0.00E+00	2.07E-09	0.00E+00	0.00E+00	0.00E+00	1.47E-07	2.15E-05	0.00E+00	6.70E-09	0.00E+00	0.00E+00	8.80E-07	0.00E+00	0.00E+00	2.15E-05
3825	ALL		746599.72	4040345.67	NonCancerChronicDerive	0.00E+00	2.07E-09	0.00E+00	0.00E+00	0.00E+00	1.47E-07	2.15E-05	0.00E+00	6.71E-09	0.00E+00	0.00E+00	8.83E-07	0.00E+00	0.00E+00	2.15E-05
3826	ALL		746609.72	4040345.67	NonCancerChronicDerive	0.00E+00	2.08E-09	0.00E+00	0.00E+00	0.00E+00	1.48E-07	2.16E-05	0.00E+00	6.73E-09	0.00E+00	0.00E+00	8.85E-07	0.00E+00	0.00E+00	2.16E-05
3827	ALL		746619.72	4040345.67	NonCancerChronicDerive	0.00E+00	2.09E-09	0.00E+00	0.00E+00	0.00E+00	1.48E-07	2.17E-05	0.00E+00	6.75E-09	0.00E+00	0.00E+00	8.88E-07	0.00E+00	0.00E+00	2.17E-05
3828	ALL		746559.72	4040355.67	NonCancerChronicDerive	0.00E+00	2.05E-09	0.00E+00	0.00E+00	0.00E+00	1.46E-07	2.13E-05	0.00E+00	6.65E-09	0.00E+00	0.00E+00	8.74E-07	0.00E+00	0.00E+00	2.13E-05
3829	ALL		746569.72	4040355.67	NonCancerChronicDerive	0.00E+00	2.06E-09	0.00E+00	0.00E+00	0.00E+00	1.47E-07	2.14E-05	0.00E+00	6.68E-09	0.00E+00	0.00E+00	8.78E-07	0.00E+00	0.00E+00	2.14E-05
3830	ALL		746579.72	4040355.67	NonCancerChronicDerive	0.00E+00	2.07E-09	0.00E+00	0.00E+00	0.00E+00	1.47E-07	2.15E-05	0.00E+00	6.70E-09	0.00E+00	0.00E+00	8.81E-07	0.00E+00	0.00E+00	2.15E-05
3831	ALL		746589.72	4040355.67	NonCancerChronicDerive	0.00E+00	2.08E-09	0.00E+00	0.00E+00	0.00E+00	1.47E-07	2.15E-05	0.00E+00	6.72E-09	0.00E+00	0.00E+00	8.84E-07	0.00E+00	0.00E+00	2.15E-05
3832	ALL		746599.72	4040355.67	NonCancerChronicDerive	0.00E+00	2.08E-09	0.00E+00	0.00E+00	0.00E+00	1.48E-07	2.16E-05	0.00E+00	6.74E-09	0.00E+00	0.00E+00	8.86E-07	0.00E+00	0.00E+00	2.16E-05
3833	ALL		746609.72	4040355.67	NonCancerChronicDerive	0.00E+00	2.09E-09	0.00E+00	0.00E+00	0.00E+00	1.48E-07	2.17E-05	0.00E+00	6.76E-09	0.00E+00	0.00E+00	8.88E-07	0.00E+00	0.00E+00	2.17E-05
3834	ALL		746619.72	4040355.67	NonCancerChronicDerive	0.00E+00	2.09E-09	0.00E+00	0.00E+00	0.00E+00	1.49E-07	2.17E-05	0.00E+00	6.77E-09	0.00E+00	0.00E+00	8.91E-07	0.00E+00	0.00E+00	2.17E-05
3835	ALL		746554	4040469	NonCancerChronicDerive	0.00E+00	2.11E-09	0.00E+00	0.00E+00	0.00E+00	1.49E-07	2.18E-05	0.00E+00	6.84E-09	0.00E+00	0.00E+00	8.99E-07	0.00E+00	0.00E+00	2.18E-05
3836	ALL	SENS	746564	4040469	NonCancerChronicDerive	0.00E+00	2.12E-09	0.00E+00	0.00E+00	0.00E+00	1.50E-07	2.19E-05	0.00E+00	6.87E-09	0.00E+00	0.00E+00	9.03E-07	0.00E+00	0.00E+00	2.19E-05
3837	ALL	SENS	746574	4040469	NonCancerChronicDerive	0.00E+00	2.13E-09	0.00E+00	0.00E+00	0.00E+00	1.50E-07	2.20E-05	0.00E+00	6.90E-09	0.00E+00	0.00E+00	9.06E-07	0.00E+00	0.00E+00	2.20E-05
3838	ALL	SENS	746584	4040469	NonCancerChronicDerive	0.00E+00	2.14E-09	0.00E+00	0.00E+00	0.00E+00	1.51E-07	2.20E-05	0.00E+00	6.92E-09	0.00E+00	0.00E+00	9.09E-07	0.00E+00	0.00E+00	2.20E-05
3839	ALL	SENS	746594	4040469	NonCancerChronicDerive	0.00E+00	2.14E-09	0.00E+00	0.00E+00	0.00E+00	1.51E-07	2.21E-05	0.00E+00	6.94E-09	0.00E+00	0.00E+00	9.12E-07	0.00E+00	0.00E+00	2.21E-05
3840	ALL	SENS	746604	4040469	NonCancerChronicDerive	0.00E+00	2.15E-09	0.00E+00	0.00E+00	0.00E+00	1.52E-07	2.22E-05	0.00E+00	6.96E-09	0.00E+00	0.00E+00	9.15E-07	0.00E+00	0.00E+00	2.22E-05
3841	ALL	SENS	746614	4040469	NonCancerChronicDerive	0.00E+00	2.16E-09	0.00E+00	0.00E+00	0.00E+00	1.52E-07	2.23E-05	0.00E+00	6.98E-09	0.00E+00	0.00E+00	9.18E-07	0.00E+00	0.00E+00	2.23E-05
3842	ALL	SENS	746624	4040469	NonCancerChronicDerive	0.00E+00	2.16E-09	0.00E+00	0.00E+00	0.00E+00	1.53E-07	2.23E-05	0.00E+00	7.01E-09	0.00E+00	0.00E+00	9.21E-07	0.00E+00	0.00E+00	2.23E-05
3843	ALL	SENS	746634	4040469	NonCancerChronicDerive	0.00E+00	2.17E-09	0.00E+00	0.00E+00	0.00E+00	1.53E-07	2.24E-05	0.00E+00	7.03E-09	0.00E+00	0.00E+00	9.24E-07	0.00E+00	0.00E+00	2.24E-05
3844	ALL	SENS	746554	4040479	NonCancerChronicDerive	0.00E+00	2.12E-09	0.00E+00	0.00E+00	0.00E+00	1.50E-07	2.18E-05	0.00E+00	6.86E-09	0.00E+00	0.00E+00	9.01E-07	0.00E+00	0.00E+00	2.18E-05
3845	ALL	SENS	746564	4040479	NonCancerChronicDerive	0.00E+00	2.13E-09	0.00E+00	0.00E+00	0.00E+00	1.50E-07	2.20E-05	0.00E+00	6.89E-09	0.00E+00	0.00E+00	9.06E-07	0.00E+00	0.00E+00	2.20E-05
3846	ALL	SENS	746574	4040479	NonCancerChronicDerive	0.00E+00	2.14E-09	0.00E+00	0.00E+00	0.00E+00	1.51E-07	2.20E-05	0.00E+00	6.92E-09	0.00E+00	0.00E+00	9.09E-07	0.00E+00	0.00E+00	2.20E-05
3847	ALL	SENS	746584	4040479	NonCancerChronicDerive	0.00E+00	2.14E-09	0.00E+00	0.00E+00	0.00E+00	1.51E-07	2.21E-05	0.00E+00	6.94E-09	0.00E+00	0.00E+00	9.12E-07	0.00E+00	0.00E+00	2.21E-05
3848	ALL	SENS	746594	4040479	NonCancerChronicDerive	0.00E+00	2.15E-09	0.00E+00	0.00E+00	0.00E+00	1.52E-07	2.22E-05	0.00E+00	6.96E-09	0.00E+00	0.00E+00	9.15E-07	0.00E+00	0.00E+00	2.22E-05
3849	ALL	SENS	746604	4040479	NonCancerChronicDerive	0.00E+00	2.16E-09	0.00E+00	0.00E+00	0.00E+00	1.52E-07	2.22E-05	0.00E+00	6.98E-09	0.00E+00	0.00E+00	9.17E-07	0.00E+00	0.00E+00	2.22E-05
3850	ALL	SENS	746614	4040479	NonCancerChronicDerive	0.00E+00	2.16E-09	0.00E+00	0.00E+00	0.00E+00	1.53E-07	2.23E-05	0.00E+00	7.00E-09	0.00E+00	0.00E+00	9.20E-07	0.00E+00	0.00E+00	2.23E-05
3851	ALL	SENS	746624	4040479	NonCancerChronicDerive	0.00E+00	2.17E-09	0.00E+00	0.00E+00	0.00E+00	1.53E-07	2.24E-05	0.00E+00	7.02E-09	0.00E+00	0.00E+00	9.23E-07	0.00E+00	0.00E+00	2.24E-05
3852	ALL	SENS	746634	4040479	NonCancerChronicDerive	0.00E+00	2.18E-09	0.00E+00	0.00E+00	0.00E+00	1.54E-07	2.25E-05	0.00E+00	7.05E-09	0.00E+00	0.00E+00	9.27E-07	0.00E+00	0.00E+00	2.25E-05
3853	ALL	SENS	746554	4040489	NonCancerChronicDerive	0.00E+00	2.12E-09	0.00E+00	0.00E+00	0.00E+00	1.50E-07	2.19E-05	0.00E+00	6.87E-09	0.00E+00	0.00E+00	9.03E-07	0.00E+00	0.00E+00	2.19E-05
3854	ALL	SENS	746564	4040489	NonCancerChronicDerive	0.00E+00	2.13E-09	0.00E+00	0.00E+00	0.00E+00	1.51E-07	2.20E-05	0.00E+00	6.91E-09	0.00E+00	0.00E+00	9.08E-07	0.00E+00	0.00E+00	2.20E-05
3855	ALL	SENS	746574	4040489	NonCancerChronicDerive	0.00E+00	2.14E-09	0.00E+00	0.00E+00	0.00E+00	1.51E-07	2.21E-05	0.00E+00	6.94E-09	0.00E+00	0.00E+00	9.12E-07	0.00E+00	0.00E+00	2.21E-05
3856	ALL	SENS	746584	4040489	NonCancerChronicDerive	0.00E+00	2.15E-09	0.00E+00	0.00E+00	0.00E+00	1.52E-07	2.22E-05	0.00E+00	6.96E-09	0.00E+00	0.00E+00	9.15E-07	0.00E+00	0.00E+00	2.22E-05
3857	ALL	SENS	746594	4040489	NonCancerChronicDerive	0.00E+00	2.16E-09	0.00E+00	0.00E+00	0.00E+00	1.52E-07	2.22E-05	0.00E+00	6.98E-09	0.00E+00	0.00E+00	9.18E-07	0.00E+00	0.00E+00	2.22E-05
3858	ALL	SENS	746604	4040489	NonCancerChronicDerive	0.00E+00	2.16E-09	0.00E+00	0.00E+00	0.00E+00	1.52E-07	2.23E-05	0.00E+00	7.00E-09	0.00E+00	0.00E+00	9.20E-07	0.00E+00	0.00E+00	2.23E-05
3859	ALL	SENS	746614	4040489	NonCancerChronicDerive	0.00E+00	2.17E-09	0.00E+00	0.00E+00	0.00E+00	1.53E-07	2.23E-05	0.00E+00	7.02E-09	0.00E+00	0.00E+00	9.22E-07	0.00E+00	0.00E+00	2.23E-05
3860	ALL	SENS	746624	4040489	NonCancerChronicDerive	0.00E+00	2.18E-09	0.00E+00	0.00E+00	0.00E+00	1.53E-07	2.24E-05	0.00E+00	7.04E-09	0.00E+00	0.00E+00	9.26E-07	0.00E+00	0.00E+00	2.24E-05
3861	ALL	SENS	746634	4040489	NonCancerChronicDerive	0.00E+00	2.18E-09	0.00E+00	0.00E+00	0.00E+00	1.54E-07	2.25E-05	0.00E+00	7.07E-09	0.00E+00	0.00E+00	9.29E-07	0.00E+00	0.00E+00	2.25E-05
3862	ALL	SENS	746554	4040499	NonCancerChronicDerive	0.00E+00	2.13E-09	0.00E+00	0.00E+00	0.00E+00	1.50E-07	2.19E-05	0.00E+00	6.89E-09	0.00E+00	0.00E+00	9.05E-07	0.00E+00	0.00E+00	2.19E-05
3863	ALL	SENS	746564	4040499	NonCancerChronicDerive	0.00E+00	2.14E-09	0.00E+00	0.00E+00	0.00E+00	1.51E-07	2.20E-05	0.00E+00	6.92E-09	0.00E+00	0.00E+00	9.10E-07	0.00E+00	0.00E+00	2.20E-05
3864	ALL	SENS	746574	4040499	NonCancerChronicDerive	0.00E+00	2.15E-09	0.00E+00	0.00E+00	0.00E+00	1.51E-07	2.21E-05	0.00E+00	6.95E-09	0.00E+00	0.00E+00	9.14E-07	0.00E+00	0.00E+00	2.21E-05
3865	ALL	SENS	746584	4040499	NonCancerChronicDerive	0.00E+00	2.15E-09	0.00E+00	0.00E+00	0.00E+00	1.52E-07	2.22E-05	0.00E+00	6.97E-09	0.00E+00	0.00E+00	9.17E-07	0.00E+00	0.00E+00	2.22E-05
3866	ALL	SENS	746594	4040499	NonCancerChronicDerive	0.00E+00	2.16E-09	0.00E+00	0.00E+00	0.00E+00	1.52E-07	2.23E-05	0.00E+00	7.00E-09	0.00E+00	0.00E+00	9.20E-07	0.00E+00	0.00E+00	2.23E-05
3867	ALL	SENS	746604	4040499	NonCancerChronicDerive	0.00E+00	2.17E-09	0.00E+00	0.00E+00	0.00E+00	1.53E-07	2.23E-05	0.00E+00	7.01E-09	0.00E+00	0.00E+00	9.22E-07	0.00E+00	0.00E+00	2.23E-05

3868	ALL	SENS	746614	4040499	NonCancerChronicDerive	0.00E+00	2.17E-09	0.00E+00	0.00E+00	0.00E+00	1.53E-07	2.24E-05	0.00E+00	7.03E-09	0.00E+00	0.00E+00	9.25E-07	0.00E+00	0.00E+00	2.24E-05
3869	ALL	SENS	746624	4040499	NonCancerChronicDerive	0.00E+00	2.18E-09	0.00E+00	0.00E+00	0.00E+00	1.54E-07	2.25E-05	0.00E+00	7.06E-09	0.00E+00	0.00E+00	9.28E-07	0.00E+00	0.00E+00	2.25E-05
3870	ALL	SENS	746634	4040499	NonCancerChronicDerive	0.00E+00	2.19E-09	0.00E+00	0.00E+00	0.00E+00	1.54E-07	2.25E-05	0.00E+00	7.08E-09	0.00E+00	0.00E+00	9.31E-07	0.00E+00	0.00E+00	2.25E-05
3871	ALL	SENS	746554	4040509	NonCancerChronicDerive	0.00E+00	2.13E-09	0.00E+00	0.00E+00	0.00E+00	1.50E-07	2.20E-05	0.00E+00	6.90E-09	0.00E+00	0.00E+00	9.07E-07	0.00E+00	0.00E+00	2.20E-05
3872	ALL	SENS	746564	4040509	NonCancerChronicDerive	0.00E+00	2.14E-09	0.00E+00	0.00E+00	0.00E+00	1.51E-07	2.21E-05	0.00E+00	6.94E-09	0.00E+00	0.00E+00	9.12E-07	0.00E+00	0.00E+00	2.21E-05
3873	ALL	SENS	746574	4040509	NonCancerChronicDerive	0.00E+00	2.15E-09	0.00E+00	0.00E+00	0.00E+00	1.52E-07	2.22E-05	0.00E+00	6.97E-09	0.00E+00	0.00E+00	9.16E-07	0.00E+00	0.00E+00	2.22E-05
3874	ALL	SENS	746584	4040509	NonCancerChronicDerive	0.00E+00	2.16E-09	0.00E+00	0.00E+00	0.00E+00	1.52E-07	2.22E-05	0.00E+00	6.99E-09	0.00E+00	0.00E+00	9.19E-07	0.00E+00	0.00E+00	2.22E-05
3875	ALL	SENS	746594	4040509	NonCancerChronicDerive	0.00E+00	2.17E-09	0.00E+00	0.00E+00	0.00E+00	1.53E-07	2.23E-05	0.00E+00	7.01E-09	0.00E+00	0.00E+00	9.22E-07	0.00E+00	0.00E+00	2.23E-05
3876	ALL	SENS	746604	4040509	NonCancerChronicDerive	0.00E+00	2.17E-09	0.00E+00	0.00E+00	0.00E+00	1.53E-07	2.24E-05	0.00E+00	7.03E-09	0.00E+00	0.00E+00	9.24E-07	0.00E+00	0.00E+00	2.24E-05
3877	ALL	SENS	746614	4040509	NonCancerChronicDerive	0.00E+00	2.18E-09	0.00E+00	0.00E+00	0.00E+00	1.53E-07	2.24E-05	0.00E+00	7.05E-09	0.00E+00	0.00E+00	9.27E-07	0.00E+00	0.00E+00	2.24E-05
3878	ALL	SENS	746624	4040509	NonCancerChronicDerive	0.00E+00	2.19E-09	0.00E+00	0.00E+00	0.00E+00	1.54E-07	2.25E-05	0.00E+00	7.08E-09	0.00E+00	0.00E+00	9.30E-07	0.00E+00	0.00E+00	2.25E-05
3879	ALL	SENS	746634	4040509	NonCancerChronicDerive	0.00E+00	2.19E-09	0.00E+00	0.00E+00	0.00E+00	1.54E-07	2.26E-05	0.00E+00	7.10E-09	0.00E+00	0.00E+00	9.33E-07	0.00E+00	0.00E+00	2.26E-05
3880	ALL	SENS	746554	4040519	NonCancerChronicDerive	0.00E+00	2.14E-09	0.00E+00	0.00E+00	0.00E+00	1.51E-07	2.20E-05	0.00E+00	6.92E-09	0.00E+00	0.00E+00	9.09E-07	0.00E+00	0.00E+00	2.20E-05
3881	ALL	SENS	746564	4040519	NonCancerChronicDerive	0.00E+00	2.15E-09	0.00E+00	0.00E+00	0.00E+00	1.51E-07	2.21E-05	0.00E+00	6.95E-09	0.00E+00	0.00E+00	9.14E-07	0.00E+00	0.00E+00	2.21E-05
3882	ALL	SENS	746574	4040519	NonCancerChronicDerive	0.00E+00	2.16E-09	0.00E+00	0.00E+00	0.00E+00	1.52E-07	2.22E-05	0.00E+00	6.98E-09	0.00E+00	0.00E+00	9.18E-07	0.00E+00	0.00E+00	2.22E-05
3883	ALL	SENS	746584	4040519	NonCancerChronicDerive	0.00E+00	2.16E-09	0.00E+00	0.00E+00	0.00E+00	1.52E-07	2.23E-05	0.00E+00	7.01E-09	0.00E+00	0.00E+00	9.21E-07	0.00E+00	0.00E+00	2.23E-05
3884	ALL	SENS	746594	4040519	NonCancerChronicDerive	0.00E+00	2.17E-09	0.00E+00	0.00E+00	0.00E+00	1.53E-07	2.23E-05	0.00E+00	7.03E-09	0.00E+00	0.00E+00	9.24E-07	0.00E+00	0.00E+00	2.23E-05
3885	ALL	SENS	746604	4040519	NonCancerChronicDerive	0.00E+00	2.18E-09	0.00E+00	0.00E+00	0.00E+00	1.53E-07	2.24E-05	0.00E+00	7.05E-09	0.00E+00	0.00E+00	9.26E-07	0.00E+00	0.00E+00	2.24E-05
3886	ALL	SENS	746614	4040519	NonCancerChronicDerive	0.00E+00	2.18E-09	0.00E+00	0.00E+00	0.00E+00	1.54E-07	2.25E-05	0.00E+00	7.07E-09	0.00E+00	0.00E+00	9.29E-07	0.00E+00	0.00E+00	2.25E-05
3887	ALL	SENS	746624	4040519	NonCancerChronicDerive	0.00E+00	2.19E-09	0.00E+00	0.00E+00	0.00E+00	1.54E-07	2.26E-05	0.00E+00	7.09E-09	0.00E+00	0.00E+00	9.32E-07	0.00E+00	0.00E+00	2.26E-05
3888	ALL	SENS	746634	4040519	NonCancerChronicDerive	0.00E+00	2.20E-09	0.00E+00	0.00E+00	0.00E+00	1.55E-07	2.26E-05	0.00E+00	7.12E-09	0.00E+00	0.00E+00	9.35E-07	0.00E+00	0.00E+00	2.26E-05
3889	ALL	SENS	746491	4040326	NonCancerChronicDerive	0.00E+00	2.00E-09	0.00E+00	0.00E+00	0.00E+00	1.42E-07	2.08E-05	0.00E+00	6.47E-09	0.00E+00	0.00E+00	8.51E-07	0.00E+00	0.00E+00	2.08E-05
3890	ALL	SENS	746501	4040326	NonCancerChronicDerive	0.00E+00	2.00E-09	0.00E+00	0.00E+00	0.00E+00	1.43E-07	2.08E-05	0.00E+00	6.49E-09	0.00E+00	0.00E+00	8.53E-07	0.00E+00	0.00E+00	2.08E-05
3891	ALL	SENS	746511	4040326	NonCancerChronicDerive	0.00E+00	2.01E-09	0.00E+00	0.00E+00	0.00E+00	1.43E-07	2.09E-05	0.00E+00	6.50E-09	0.00E+00	0.00E+00	8.55E-07	0.00E+00	0.00E+00	2.09E-05
3892	ALL	SENS	746521	4040326	NonCancerChronicDerive	0.00E+00	2.01E-09	0.00E+00	0.00E+00	0.00E+00	1.43E-07	2.09E-05	0.00E+00	6.52E-09	0.00E+00	0.00E+00	8.57E-07	0.00E+00	0.00E+00	2.09E-05
3893	ALL	SENS	746531	4040326	NonCancerChronicDerive	0.00E+00	2.02E-09	0.00E+00	0.00E+00	0.00E+00	1.44E-07	2.10E-05	0.00E+00	6.54E-09	0.00E+00	0.00E+00	8.59E-07	0.00E+00	0.00E+00	2.10E-05
3894	ALL	SENS	746541	4040326	NonCancerChronicDerive	0.00E+00	2.02E-09	0.00E+00	0.00E+00	0.00E+00	1.44E-07	2.10E-05	0.00E+00	6.55E-09	0.00E+00	0.00E+00	8.62E-07	0.00E+00	0.00E+00	2.10E-05
3895	ALL	SENS	746491	4040336	NonCancerChronicDerive	0.00E+00	2.01E-09	0.00E+00	0.00E+00	0.00E+00	1.43E-07	2.08E-05	0.00E+00	6.49E-09	0.00E+00	0.00E+00	8.53E-07	0.00E+00	0.00E+00	2.08E-05
3896	ALL	SENS	746501	4040336	NonCancerChronicDerive	0.00E+00	2.01E-09	0.00E+00	0.00E+00	0.00E+00	1.43E-07	2.09E-05	0.00E+00	6.51E-09	0.00E+00	0.00E+00	8.55E-07	0.00E+00	0.00E+00	2.09E-05
3897	ALL	SENS	746511	4040336	NonCancerChronicDerive	0.00E+00	2.02E-09	0.00E+00	0.00E+00	0.00E+00	1.43E-07	2.09E-05	0.00E+00	6.52E-09	0.00E+00	0.00E+00	8.58E-07	0.00E+00	0.00E+00	2.09E-05
3898	ALL	SENS	746521	4040336	NonCancerChronicDerive	0.00E+00	2.02E-09	0.00E+00	0.00E+00	0.00E+00	1.44E-07	2.10E-05	0.00E+00	6.54E-09	0.00E+00	0.00E+00	8.60E-07	0.00E+00	0.00E+00	2.10E-05
3899	ALL	SENS	746531	4040336	NonCancerChronicDerive	0.00E+00	2.03E-09	0.00E+00	0.00E+00	0.00E+00	1.44E-07	2.10E-05	0.00E+00	6.56E-09	0.00E+00	0.00E+00	8.62E-07	0.00E+00	0.00E+00	2.10E-05
3900	ALL	SENS	746541	4040336	NonCancerChronicDerive	0.00E+00	2.03E-09	0.00E+00	0.00E+00	0.00E+00	1.45E-07	2.11E-05	0.00E+00	6.58E-09	0.00E+00	0.00E+00	8.65E-07	0.00E+00	0.00E+00	2.11E-05
3901	ALL	SENS	746491	4040346	NonCancerChronicDerive	0.00E+00	2.01E-09	0.00E+00	0.00E+00	0.00E+00	1.43E-07	2.09E-05	0.00E+00	6.51E-09	0.00E+00	0.00E+00	8.56E-07	0.00E+00	0.00E+00	2.09E-05
3902	ALL	SENS	746501	4040346	NonCancerChronicDerive	0.00E+00	2.02E-09	0.00E+00	0.00E+00	0.00E+00	1.43E-07	2.09E-05	0.00E+00	6.53E-09	0.00E+00	0.00E+00	8.58E-07	0.00E+00	0.00E+00	2.09E-05
3903	ALL	SENS	746511	4040346	NonCancerChronicDerive	0.00E+00	2.02E-09	0.00E+00	0.00E+00	0.00E+00	1.44E-07	2.10E-05	0.00E+00	6.54E-09	0.00E+00	0.00E+00	8.60E-07	0.00E+00	0.00E+00	2.10E-05
3904	ALL	SENS	746521	4040346	NonCancerChronicDerive	0.00E+00	2.03E-09	0.00E+00	0.00E+00	0.00E+00	1.44E-07	2.10E-05	0.00E+00	6.56E-09	0.00E+00	0.00E+00	8.62E-07	0.00E+00	0.00E+00	2.10E-05
3905	ALL	SENS	746531	4040346	NonCancerChronicDerive	0.00E+00	2.03E-09	0.00E+00	0.00E+00	0.00E+00	1.45E-07	2.11E-05	0.00E+00	6.58E-09	0.00E+00	0.00E+00	8.65E-07	0.00E+00	0.00E+00	2.11E-05
3906	ALL	SENS	746541	4040346	NonCancerChronicDerive	0.00E+00	2.04E-09	0.00E+00	0.00E+00	0.00E+00	1.45E-07	2.12E-05	0.00E+00	6.60E-09	0.00E+00	0.00E+00	8.68E-07	0.00E+00	0.00E+00	2.12E-05
3907	ALL	SENS	746491	4040356	NonCancerChronicDerive	0.00E+00	2.02E-09	0.00E+00	0.00E+00	0.00E+00	1.43E-07	2.09E-05	0.00E+00	6.53E-09	0.00E+00	0.00E+00	8.59E-07	0.00E+00	0.00E+00	2.09E-05
3908	ALL	SENS	746501	4040356	NonCancerChronicDerive	0.00E+00	2.02E-09	0.00E+00	0.00E+00	0.00E+00	1.44E-07	2.10E-05	0.00E+00	6.55E-09	0.00E+00	0.00E+00	8.61E-07	0.00E+00	0.00E+00	2.10E-05
3909	ALL	SENS	746511	4040356	NonCancerChronicDerive	0.00E+00	2.03E-09	0.00E+00	0.00E+00	0.00E+00	1.44E-07	2.10E-05	0.00E+00	6.57E-09	0.00E+00	0.00E+00	8.63E-07	0.00E+00	0.00E+00	2.10E-05
3910	ALL	SENS	746521	4040356	NonCancerChronicDerive	0.00E+00	2.03E-09	0.00E+00	0.00E+00	0.00E+00	1.44E-07	2.11E-05	0.00E+00	6.58E-09	0.00E+00	0.00E+00	8.65E-07	0.00E+00	0.00E+00	2.11E-05
3911	ALL	SENS	746531	4040356	NonCancerChronicDerive	0.00E+00	2.04E-09	0.00E+00	0.00E+00	0.00E+00	1.45E-07	2.12E-05	0.00E+00	6.60E-09	0.00E+00	0.00E+00	8.68E-07	0.00E+00	0.00E+00	2.12E-05
3912	ALL	SENS	746541	4040356	NonCancerChronicDerive	0.00E+00	2.05E-09	0.00E+00	0.00E+00	0.00E+00	1.45E-07	2.12E-05	0.00E+00	6.62E-09	0.00E+00	0.00E+00	8.70E-07	0.00E+00	0.00E+00	2.12E-05
3913	ALL	SENS	746491	4040366	NonCancerChronicDerive	0.00E+00	2.02E-09	0.00E+00	0.00E+00	0.00E+00	1.44E-07	2.10E-05	0.00E+00	6.55E-09	0.00E+00	0.00E+00	8.61E-07	0.00E+00	0.00E+00	2.10E-05
3914	ALL	SENS	746501	4040366	NonCancerChronicDerive	0.00E+00	2.03E-09	0.00E+00	0.00E+00	0.00E+00	1.44E-07	2.10E-05	0.00E+00	6.57E-09	0.00E+00	0.00E+00	8.63E-07	0.00E+00	0.00E+00	2.10E-05
3915	ALL	SENS	746511	4040366	NonCancerChronicDerive	0.00E+00	2.03E-09	0.00E+00	0.00E+00	0.00E+00	1.44E-07	2.11E-05	0.00E+00	6.59E-09	0.00E+00	0.00E+00	8.66E-07	0.00E+00	0.00E+00	2.11E-05
3916	ALL	SENS	746521	4040366	NonCancerChronicDerive	0.00E+00	2.04E-09	0.00E+00	0.00E+00	0.00E+00	1.45E-07	2.11E-05	0.00E+00	6.60E-09	0.00E+00	0.00E+00	8.68E-07	0.00E+00	0.00E+00	2.11E-05
3917	ALL	SENS	746531	4040366	NonCancerChronicDerive	0.00E+00	2.05E-09	0.00E+00	0.00E+00	0.00E+00	1.45E-07	2.12E-05	0.00E+00	6.62E-09	0.00E+00	0.00E+00	8.70E-07	0.00E+00	0.00E+00	2.12E-05
3918	ALL	SENS	746541	4040366	NonCancerChronicDerive	0.00E+00	2.05E-09	0.00E+00	0.00E+00	0.00E+00	1.46E-07	2.13E-05	0.00E+00	6.64E-09	0.00E+00	0.00E+00	8.73E-07	0.00E+00	0.00E+00	2.13E-05
3919	ALL	SENS	746491	4040376	NonCancerChronicDerive	0.00E+00	2.03E-09	0.00E+00	0.00E+00	0.00E+00	1.44E-07	2.10E-05	0.00E+00	6.57E-09	0.00E+00	0.00E+00	8.64E-07	0.00E+00	0.00E+00	2.10E-05
3920	ALL	SENS	746501	4040376	NonCancerChronicDerive	0.00E+00	2.04E-09	0.00E+00	0.00E+00	0.00E+00	1.44E-07	2.11E-05	0.00E+00	6.59E-09	0.00E+00	0.00E+00	8.66E-07	0.00E+00	0.00E+00	2.11E-05

3921	ALL	SENS	746511	4040376	NonCancerChronicDerive	0.00E+00	2.04E-09	0.00E+00	0.00E+00	0.00E+00	1.45E-07	2.11E-05	0.00E+00	6.61E-09	0.00E+00	0.00E+00	8.68E-07	0.00E+00	0.00E+00	2.11E-05
3922	ALL	SENS	746521	4040376	NonCancerChronicDerive	0.00E+00	2.05E-09	0.00E+00	0.00E+00	0.00E+00	1.45E-07	2.12E-05	0.00E+00	6.62E-09	0.00E+00	0.00E+00	8.71E-07	0.00E+00	0.00E+00	2.12E-05
3923	ALL	SENS	746531	4040376	NonCancerChronicDerive	0.00E+00	2.05E-09	0.00E+00	0.00E+00	0.00E+00	1.46E-07	2.13E-05	0.00E+00	6.64E-09	0.00E+00	0.00E+00	8.73E-07	0.00E+00	0.00E+00	2.13E-05
3924	ALL	SENS	746541	4040376	NonCancerChronicDerive	0.00E+00	2.06E-09	0.00E+00	0.00E+00	0.00E+00	1.46E-07	2.13E-05	0.00E+00	6.66E-09	0.00E+00	0.00E+00	8.76E-07	0.00E+00	0.00E+00	2.13E-05
3925	ALL	SENS	746491	4040386	NonCancerChronicDerive	0.00E+00	2.04E-09	0.00E+00	0.00E+00	0.00E+00	1.44E-07	2.11E-05	0.00E+00	6.59E-09	0.00E+00	0.00E+00	8.66E-07	0.00E+00	0.00E+00	2.11E-05
3926	ALL	SENS	746501	4040386	NonCancerChronicDerive	0.00E+00	2.04E-09	0.00E+00	0.00E+00	0.00E+00	1.45E-07	2.11E-05	0.00E+00	6.61E-09	0.00E+00	0.00E+00	8.69E-07	0.00E+00	0.00E+00	2.11E-05
3927	ALL	SENS	746511	4040386	NonCancerChronicDerive	0.00E+00	2.05E-09	0.00E+00	0.00E+00	0.00E+00	1.45E-07	2.12E-05	0.00E+00	6.62E-09	0.00E+00	0.00E+00	8.71E-07	0.00E+00	0.00E+00	2.12E-05
3928	ALL	SENS	746521	4040386	NonCancerChronicDerive	0.00E+00	2.05E-09	0.00E+00	0.00E+00	0.00E+00	1.46E-07	2.13E-05	0.00E+00	6.64E-09	0.00E+00	0.00E+00	8.73E-07	0.00E+00	0.00E+00	2.13E-05
3929	ALL	SENS	746531	4040386	NonCancerChronicDerive	0.00E+00	2.06E-09	0.00E+00	0.00E+00	0.00E+00	1.46E-07	2.13E-05	0.00E+00	6.66E-09	0.00E+00	0.00E+00	8.76E-07	0.00E+00	0.00E+00	2.13E-05
3930	ALL	SENS	746541	4040386	NonCancerChronicDerive	0.00E+00	2.06E-09	0.00E+00	0.00E+00	0.00E+00	1.46E-07	2.14E-05	0.00E+00	6.68E-09	0.00E+00	0.00E+00	8.78E-07	0.00E+00	0.00E+00	2.14E-05
3931	ALL	SENS	746491	4040396	NonCancerChronicDerive	0.00E+00	2.04E-09	0.00E+00	0.00E+00	0.00E+00	1.45E-07	2.11E-05	0.00E+00	6.61E-09	0.00E+00	0.00E+00	8.69E-07	0.00E+00	0.00E+00	2.11E-05
3932	ALL	SENS	746501	4040396	NonCancerChronicDerive	0.00E+00	2.05E-09	0.00E+00	0.00E+00	0.00E+00	1.45E-07	2.12E-05	0.00E+00	6.63E-09	0.00E+00	0.00E+00	8.71E-07	0.00E+00	0.00E+00	2.12E-05
3933	ALL	SENS	746511	4040396	NonCancerChronicDerive	0.00E+00	2.05E-09	0.00E+00	0.00E+00	0.00E+00	1.46E-07	2.13E-05	0.00E+00	6.65E-09	0.00E+00	0.00E+00	8.74E-07	0.00E+00	0.00E+00	2.13E-05
3934	ALL	SENS	746521	4040396	NonCancerChronicDerive	0.00E+00	2.06E-09	0.00E+00	0.00E+00	0.00E+00	1.46E-07	2.13E-05	0.00E+00	6.66E-09	0.00E+00	0.00E+00	8.76E-07	0.00E+00	0.00E+00	2.13E-05
3935	ALL	SENS	746531	4040396	NonCancerChronicDerive	0.00E+00	2.06E-09	0.00E+00	0.00E+00	0.00E+00	1.46E-07	2.14E-05	0.00E+00	6.68E-09	0.00E+00	0.00E+00	8.78E-07	0.00E+00	0.00E+00	2.14E-05
3936	ALL	SENS	746541	4040396	NonCancerChronicDerive	0.00E+00	2.07E-09	0.00E+00	0.00E+00	0.00E+00	1.47E-07	2.14E-05	0.00E+00	6.70E-09	0.00E+00	0.00E+00	8.81E-07	0.00E+00	0.00E+00	2.14E-05
3937	ALL	SENS	746491	4040406	NonCancerChronicDerive	0.00E+00	2.05E-09	0.00E+00	0.00E+00	0.00E+00	1.45E-07	2.12E-05	0.00E+00	6.63E-09	0.00E+00	0.00E+00	8.71E-07	0.00E+00	0.00E+00	2.12E-05
3938	ALL	SENS	746501	4040406	NonCancerChronicDerive	0.00E+00	2.05E-09	0.00E+00	0.00E+00	0.00E+00	1.46E-07	2.12E-05	0.00E+00	6.65E-09	0.00E+00	0.00E+00	8.74E-07	0.00E+00	0.00E+00	2.12E-05
3939	ALL	SENS	746511	4040406	NonCancerChronicDerive	0.00E+00	2.06E-09	0.00E+00	0.00E+00	0.00E+00	1.46E-07	2.13E-05	0.00E+00	6.67E-09	0.00E+00	0.00E+00	8.76E-07	0.00E+00	0.00E+00	2.13E-05
3940	ALL	SENS	746521	4040406	NonCancerChronicDerive	0.00E+00	2.07E-09	0.00E+00	0.00E+00	0.00E+00	1.46E-07	2.14E-05	0.00E+00	6.69E-09	0.00E+00	0.00E+00	8.79E-07	0.00E+00	0.00E+00	2.14E-05
3941	ALL	SENS	746531	4040406	NonCancerChronicDerive	0.00E+00	2.07E-09	0.00E+00	0.00E+00	0.00E+00	1.47E-07	2.14E-05	0.00E+00	6.70E-09	0.00E+00	0.00E+00	8.81E-07	0.00E+00	0.00E+00	2.14E-05
3942	ALL	SENS	746541	4040406	NonCancerChronicDerive	0.00E+00	2.08E-09	0.00E+00	0.00E+00	0.00E+00	1.47E-07	2.15E-05	0.00E+00	6.72E-09	0.00E+00	0.00E+00	8.83E-07	0.00E+00	0.00E+00	2.15E-05
3943	ALL	SENS	746491	4040416	NonCancerChronicDerive	0.00E+00	2.05E-09	0.00E+00	0.00E+00	0.00E+00	1.45E-07	2.12E-05	0.00E+00	6.64E-09	0.00E+00	0.00E+00	8.73E-07	0.00E+00	0.00E+00	2.12E-05
3944	ALL	SENS	746501	4040416	NonCancerChronicDerive	0.00E+00	2.06E-09	0.00E+00	0.00E+00	0.00E+00	1.46E-07	2.13E-05	0.00E+00	6.66E-09	0.00E+00	0.00E+00	8.76E-07	0.00E+00	0.00E+00	2.13E-05
3945	ALL	SENS	746511	4040416	NonCancerChronicDerive	0.00E+00	2.06E-09	0.00E+00	0.00E+00	0.00E+00	1.46E-07	2.14E-05	0.00E+00	6.68E-09	0.00E+00	0.00E+00	8.79E-07	0.00E+00	0.00E+00	2.14E-05
3946	ALL	SENS	746521	4040416	NonCancerChronicDerive	0.00E+00	2.07E-09	0.00E+00	0.00E+00	0.00E+00	1.47E-07	2.14E-05	0.00E+00	6.71E-09	0.00E+00	0.00E+00	8.81E-07	0.00E+00	0.00E+00	2.14E-05
3947	ALL	SENS	746531	4040416	NonCancerChronicDerive	0.00E+00	2.08E-09	0.00E+00	0.00E+00	0.00E+00	1.47E-07	2.15E-05	0.00E+00	6.72E-09	0.00E+00	0.00E+00	8.84E-07	0.00E+00	0.00E+00	2.15E-05
3948	ALL	SENS	746541	4040416	NonCancerChronicDerive	0.00E+00	2.08E-09	0.00E+00	0.00E+00	0.00E+00	1.47E-07	2.15E-05	0.00E+00	6.74E-09	0.00E+00	0.00E+00	8.86E-07	0.00E+00	0.00E+00	2.15E-05
3949	ALL	SENS	746491	4040426	NonCancerChronicDerive	0.00E+00	2.06E-09	0.00E+00	0.00E+00	0.00E+00	1.46E-07	2.13E-05	0.00E+00	6.66E-09	0.00E+00	0.00E+00	8.75E-07	0.00E+00	0.00E+00	2.13E-05
3950	ALL	SENS	746501	4040426	NonCancerChronicDerive	0.00E+00	2.06E-09	0.00E+00	0.00E+00	0.00E+00	1.46E-07	2.13E-05	0.00E+00	6.68E-09	0.00E+00	0.00E+00	8.78E-07	0.00E+00	0.00E+00	2.13E-05
3951	ALL	SENS	746511	4040426	NonCancerChronicDerive	0.00E+00	2.07E-09	0.00E+00	0.00E+00	0.00E+00	1.46E-07	2.14E-05	0.00E+00	6.70E-09	0.00E+00	0.00E+00	8.80E-07	0.00E+00	0.00E+00	2.14E-05
3952	ALL	SENS	746521	4040426	NonCancerChronicDerive	0.00E+00	2.08E-09	0.00E+00	0.00E+00	0.00E+00	1.47E-07	2.15E-05	0.00E+00	6.72E-09	0.00E+00	0.00E+00	8.83E-07	0.00E+00	0.00E+00	2.15E-05
3953	ALL	SENS	746531	4040426	NonCancerChronicDerive	0.00E+00	2.08E-09	0.00E+00	0.00E+00	0.00E+00	1.47E-07	2.15E-05	0.00E+00	6.74E-09	0.00E+00	0.00E+00	8.86E-07	0.00E+00	0.00E+00	2.15E-05
3954	ALL	SENS	746541	4040426	NonCancerChronicDerive	0.00E+00	2.09E-09	0.00E+00	0.00E+00	0.00E+00	1.48E-07	2.16E-05	0.00E+00	6.75E-09	0.00E+00	0.00E+00	8.88E-07	0.00E+00	0.00E+00	2.16E-05
3955	ALL	SENS	746491	4040436	NonCancerChronicDerive	0.00E+00	2.06E-09	0.00E+00	0.00E+00	0.00E+00	1.46E-07	2.13E-05	0.00E+00	6.67E-09	0.00E+00	0.00E+00	8.77E-07	0.00E+00	0.00E+00	2.13E-05
3956	ALL	SENS	746501	4040436	NonCancerChronicDerive	0.00E+00	2.07E-09	0.00E+00	0.00E+00	0.00E+00	1.46E-07	2.14E-05	0.00E+00	6.69E-09	0.00E+00	0.00E+00	8.80E-07	0.00E+00	0.00E+00	2.14E-05
3957	ALL	SENS	746511	4040436	NonCancerChronicDerive	0.00E+00	2.07E-09	0.00E+00	0.00E+00	0.00E+00	1.47E-07	2.14E-05	0.00E+00	6.71E-09	0.00E+00	0.00E+00	8.82E-07	0.00E+00	0.00E+00	2.14E-05
3958	ALL	SENS	746521	4040436	NonCancerChronicDerive	0.00E+00	2.08E-09	0.00E+00	0.00E+00	0.00E+00	1.47E-07	2.15E-05	0.00E+00	6.73E-09	0.00E+00	0.00E+00	8.84E-07	0.00E+00	0.00E+00	2.15E-05
3959	ALL	SENS	746531	4040436	NonCancerChronicDerive	0.00E+00	2.08E-09	0.00E+00	0.00E+00	0.00E+00	1.48E-07	2.15E-05	0.00E+00	6.75E-09	0.00E+00	0.00E+00	8.87E-07	0.00E+00	0.00E+00	2.15E-05
3960	ALL	SENS	746541	4040436	NonCancerChronicDerive	0.00E+00	2.09E-09	0.00E+00	0.00E+00	0.00E+00	1.48E-07	2.16E-05	0.00E+00	6.77E-09	0.00E+00	0.00E+00	8.90E-07	0.00E+00	0.00E+00	2.16E-05
3961	ALL	SENS	746491	4040446	NonCancerChronicDerive	0.00E+00	2.07E-09	0.00E+00	0.00E+00	0.00E+00	1.46E-07	2.13E-05	0.00E+00	6.69E-09	0.00E+00	0.00E+00	8.79E-07	0.00E+00	0.00E+00	2.13E-05
3962	ALL	SENS	746501	4040446	NonCancerChronicDerive	0.00E+00	2.07E-09	0.00E+00	0.00E+00	0.00E+00	1.47E-07	2.14E-05	0.00E+00	6.71E-09	0.00E+00	0.00E+00	8.82E-07	0.00E+00	0.00E+00	2.14E-05
3963	ALL	SENS	746511	4040446	NonCancerChronicDerive	0.00E+00	2.08E-09	0.00E+00	0.00E+00	0.00E+00	1.47E-07	2.15E-05	0.00E+00	6.72E-09	0.00E+00	0.00E+00	8.84E-07	0.00E+00	0.00E+00	2.15E-05
3964	ALL	SENS	746521	4040446	NonCancerChronicDerive	0.00E+00	2.08E-09	0.00E+00	0.00E+00	0.00E+00	1.47E-07	2.15E-05	0.00E+00	6.74E-09	0.00E+00	0.00E+00	8.86E-07	0.00E+00	0.00E+00	2.15E-05
3965	ALL	SENS	746531	4040446	NonCancerChronicDerive	0.00E+00	2.09E-09	0.00E+00	0.00E+00	0.00E+00	1.48E-07	2.16E-05	0.00E+00	6.76E-09	0.00E+00	0.00E+00	8.89E-07	0.00E+00	0.00E+00	2.16E-05
3966	ALL	SENS	746541	4040446	NonCancerChronicDerive	0.00E+00	2.10E-09	0.00E+00	0.00E+00	0.00E+00	1.48E-07	2.16E-05	0.00E+00	6.78E-09	0.00E+00	0.00E+00	8.92E-07	0.00E+00	0.00E+00	2.16E-05
3967	ALL	SENS	746491	4040456	NonCancerChronicDerive	0.00E+00	2.07E-09	0.00E+00	0.00E+00	0.00E+00	1.46E-07	2.14E-05	0.00E+00	6.70E-09	0.00E+00	0.00E+00	8.81E-07	0.00E+00	0.00E+00	2.14E-05
3968	ALL	SENS	746501	4040456	NonCancerChronicDerive	0.00E+00	2.08E-09	0.00E+00	0.00E+00	0.00E+00	1.47E-07	2.14E-05	0.00E+00	6.72E-09	0.00E+00	0.00E+00	8.84E-07	0.00E+00	0.00E+00	2.14E-05
3969	ALL	SENS	746511	4040456	NonCancerChronicDerive	0.00E+00	2.08E-09	0.00E+00	0.00E+00	0.00E+00	1.47E-07	2.15E-05	0.00E+00	6.74E-09	0.00E+00	0.00E+00	8.86E-07	0.00E+00	0.00E+00	2.15E-05
3970	ALL	SENS	746521	4040456	NonCancerChronicDerive	0.00E+00	2.09E-09	0.00E+00	0.00E+00	0.00E+00	1.48E-07	2.16E-05	0.00E+00	6.76E-09	0.00E+00	0.00E+00	8.88E-07	0.00E+00	0.00E+00	2.16E-05
3971	ALL	SENS	746531	4040456	NonCancerChronicDerive	0.00E+00	2.10E-09	0.00E+00	0.00E+00	0.00E+00	1.48E-07	2.16E-05	0.00E+00	6.78E-09	0.00E+00	0.00E+00	8.92E-07	0.00E+00	0.00E+00	2.16E-05
3972	ALL	SENS	746541	4040456	NonCancerChronicDerive	0.00E+00	2.10E-09	0.00E+00	0.00E+00	0.00E+00	1.49E-07	2.17E-05	0.00E+00	6.80E-09	0.00E+00	0.00E+00	8.94E-07	0.00E+00	0.00E+00	2.17E-05
3973	ALL	SENS	746491	4040466	NonCancerChronicDerive	0.00E+00	2.07E-09	0.00E+00	0.00E+00	0.00E+00	1.47E-07	2.14E-05	0.00E+00	6.72E-09	0.00E+00	0.00E+00	8.83E-07	0.00E+00	0.00E+00	2.14E-05

3974	ALL	SENS	746501	4040466	NonCancerChronicDerive	0.00E+00	2.08E-09	0.00E+00	0.00E+00	0.00E+00	1.47E-07	2.15E-05	0.00E+00	6.74E-09	0.00E+00	0.00E+00	8.85E-07	0.00E+00	0.00E+00	2.15E-05
3975	ALL	SENS	746511	4040466	NonCancerChronicDerive	0.00E+00	2.09E-09	0.00E+00	0.00E+00	0.00E+00	1.48E-07	2.15E-05	0.00E+00	6.76E-09	0.00E+00	0.00E+00	8.88E-07	0.00E+00	0.00E+00	2.15E-05
3976	ALL	SENS	746521	4040466	NonCancerChronicDerive	0.00E+00	2.09E-09	0.00E+00	0.00E+00	0.00E+00	1.48E-07	2.16E-05	0.00E+00	6.78E-09	0.00E+00	0.00E+00	8.91E-07	0.00E+00	0.00E+00	2.16E-05
3977	ALL	SENS	746531	4040466	NonCancerChronicDerive	0.00E+00	2.10E-09	0.00E+00	0.00E+00	0.00E+00	1.48E-07	2.17E-05	0.00E+00	6.80E-09	0.00E+00	0.00E+00	8.94E-07	0.00E+00	0.00E+00	2.17E-05
3978	ALL	SENS	746541	4040466	NonCancerChronicDerive	0.00E+00	2.11E-09	0.00E+00	0.00E+00	0.00E+00	1.49E-07	2.17E-05	0.00E+00	6.82E-09	0.00E+00	0.00E+00	8.96E-07	0.00E+00	0.00E+00	2.17E-05
3979	ALL	SENS	746491	4040476	NonCancerChronicDerive	0.00E+00	2.08E-09	0.00E+00	0.00E+00	0.00E+00	1.47E-07	2.14E-05	0.00E+00	6.73E-09	0.00E+00	0.00E+00	8.85E-07	0.00E+00	0.00E+00	2.14E-05
3980	ALL	SENS	746501	4040476	NonCancerChronicDerive	0.00E+00	2.08E-09	0.00E+00	0.00E+00	0.00E+00	1.47E-07	2.15E-05	0.00E+00	6.75E-09	0.00E+00	0.00E+00	8.87E-07	0.00E+00	0.00E+00	2.15E-05
3981	ALL	SENS	746511	4040476	NonCancerChronicDerive	0.00E+00	2.09E-09	0.00E+00	0.00E+00	0.00E+00	1.48E-07	2.16E-05	0.00E+00	6.77E-09	0.00E+00	0.00E+00	8.90E-07	0.00E+00	0.00E+00	2.16E-05
3982	ALL	SENS	746521	4040476	NonCancerChronicDerive	0.00E+00	2.10E-09	0.00E+00	0.00E+00	0.00E+00	1.48E-07	2.17E-05	0.00E+00	6.79E-09	0.00E+00	0.00E+00	8.93E-07	0.00E+00	0.00E+00	2.17E-05
3983	ALL	SENS	746531	4040476	NonCancerChronicDerive	0.00E+00	2.11E-09	0.00E+00	0.00E+00	0.00E+00	1.49E-07	2.17E-05	0.00E+00	6.82E-09	0.00E+00	0.00E+00	8.96E-07	0.00E+00	0.00E+00	2.17E-05
3984	ALL	SENS	746541	4040476	NonCancerChronicDerive	0.00E+00	2.11E-09	0.00E+00	0.00E+00	0.00E+00	1.49E-07	2.18E-05	0.00E+00	6.83E-09	0.00E+00	0.00E+00	8.98E-07	0.00E+00	0.00E+00	2.18E-05
3985	ALL	SENS	746491	4040486	NonCancerChronicDerive	0.00E+00	2.08E-09	0.00E+00	0.00E+00	0.00E+00	1.47E-07	2.15E-05	0.00E+00	6.74E-09	0.00E+00	0.00E+00	8.86E-07	0.00E+00	0.00E+00	2.15E-05
3986	ALL	SENS	746501	4040486	NonCancerChronicDerive	0.00E+00	2.09E-09	0.00E+00	0.00E+00	0.00E+00	1.48E-07	2.15E-05	0.00E+00	6.76E-09	0.00E+00	0.00E+00	8.89E-07	0.00E+00	0.00E+00	2.15E-05
3987	ALL	SENS	746511	4040486	NonCancerChronicDerive	0.00E+00	2.10E-09	0.00E+00	0.00E+00	0.00E+00	1.48E-07	2.16E-05	0.00E+00	6.78E-09	0.00E+00	0.00E+00	8.92E-07	0.00E+00	0.00E+00	2.16E-05
3988	ALL	SENS	746521	4040486	NonCancerChronicDerive	0.00E+00	2.10E-09	0.00E+00	0.00E+00	0.00E+00	1.48E-07	2.17E-05	0.00E+00	6.81E-09	0.00E+00	0.00E+00	8.95E-07	0.00E+00	0.00E+00	2.17E-05
3989	ALL	SENS	746531	4040486	NonCancerChronicDerive	0.00E+00	2.11E-09	0.00E+00	0.00E+00	0.00E+00	1.49E-07	2.17E-05	0.00E+00	6.83E-09	0.00E+00	0.00E+00	8.98E-07	0.00E+00	0.00E+00	2.17E-05
3990	ALL	SENS	746541	4040486	NonCancerChronicDerive	0.00E+00	2.11E-09	0.00E+00	0.00E+00	0.00E+00	1.49E-07	2.18E-05	0.00E+00	6.85E-09	0.00E+00	0.00E+00	9.00E-07	0.00E+00	0.00E+00	2.18E-05
3991	ALL	SENS	746491	4040496	NonCancerChronicDerive	0.00E+00	2.09E-09	0.00E+00	0.00E+00	0.00E+00	1.47E-07	2.15E-05	0.00E+00	6.76E-09	0.00E+00	0.00E+00	8.88E-07	0.00E+00	0.00E+00	2.15E-05
3992	ALL	SENS	746501	4040496	NonCancerChronicDerive	0.00E+00	2.09E-09	0.00E+00	0.00E+00	0.00E+00	1.48E-07	2.16E-05	0.00E+00	6.78E-09	0.00E+00	0.00E+00	8.91E-07	0.00E+00	0.00E+00	2.16E-05
3993	ALL	SENS	746511	4040496	NonCancerChronicDerive	0.00E+00	2.10E-09	0.00E+00	0.00E+00	0.00E+00	1.48E-07	2.16E-05	0.00E+00	6.80E-09	0.00E+00	0.00E+00	8.93E-07	0.00E+00	0.00E+00	2.16E-05
3994	ALL	SENS	746521	4040496	NonCancerChronicDerive	0.00E+00	2.11E-09	0.00E+00	0.00E+00	0.00E+00	1.49E-07	2.17E-05	0.00E+00	6.82E-09	0.00E+00	0.00E+00	8.96E-07	0.00E+00	0.00E+00	2.17E-05
3995	ALL	SENS	746531	4040496	NonCancerChronicDerive	0.00E+00	2.11E-09	0.00E+00	0.00E+00	0.00E+00	1.49E-07	2.18E-05	0.00E+00	6.84E-09	0.00E+00	0.00E+00	8.99E-07	0.00E+00	0.00E+00	2.18E-05
3996	ALL	SENS	746541	4040496	NonCancerChronicDerive	0.00E+00	2.12E-09	0.00E+00	0.00E+00	0.00E+00	1.50E-07	2.18E-05	0.00E+00	6.86E-09	0.00E+00	0.00E+00	9.02E-07	0.00E+00	0.00E+00	2.18E-05
3997	ALL	SENS	746491	4040506	NonCancerChronicDerive	0.00E+00	2.09E-09	0.00E+00	0.00E+00	0.00E+00	1.48E-07	2.15E-05	0.00E+00	6.77E-09	0.00E+00	0.00E+00	8.90E-07	0.00E+00	0.00E+00	2.15E-05
3998	ALL	SENS	746501	4040506	NonCancerChronicDerive	0.00E+00	2.10E-09	0.00E+00	0.00E+00	0.00E+00	1.48E-07	2.16E-05	0.00E+00	6.79E-09	0.00E+00	0.00E+00	8.93E-07	0.00E+00	0.00E+00	2.16E-05
3999	ALL	SENS	746511	4040506	NonCancerChronicDerive	0.00E+00	2.10E-09	0.00E+00	0.00E+00	0.00E+00	1.48E-07	2.17E-05	0.00E+00	6.81E-09	0.00E+00	0.00E+00	8.95E-07	0.00E+00	0.00E+00	2.17E-05
4000	ALL	SENS	746521	4040506	NonCancerChronicDerive	0.00E+00	2.11E-09	0.00E+00	0.00E+00	0.00E+00	1.49E-07	2.17E-05	0.00E+00	6.83E-09	0.00E+00	0.00E+00	8.98E-07	0.00E+00	0.00E+00	2.17E-05
4001	ALL	SENS	746531	4040506	NonCancerChronicDerive	0.00E+00	2.12E-09	0.00E+00	0.00E+00	0.00E+00	1.49E-07	2.18E-05	0.00E+00	6.85E-09	0.00E+00	0.00E+00	9.01E-07	0.00E+00	0.00E+00	2.18E-05
4002	ALL	SENS	746541	4040506	NonCancerChronicDerive	0.00E+00	2.12E-09	0.00E+00	0.00E+00	0.00E+00	1.50E-07	2.19E-05	0.00E+00	6.87E-09	0.00E+00	0.00E+00	9.03E-07	0.00E+00	0.00E+00	2.19E-05
4003	ALL	SENS	746491	4040516	NonCancerChronicDerive	0.00E+00	2.10E-09	0.00E+00	0.00E+00	0.00E+00	1.48E-07	2.16E-05	0.00E+00	6.78E-09	0.00E+00	0.00E+00	8.92E-07	0.00E+00	0.00E+00	2.16E-05
4004	ALL	SENS	746501	4040516	NonCancerChronicDerive	0.00E+00	2.10E-09	0.00E+00	0.00E+00	0.00E+00	1.48E-07	2.17E-05	0.00E+00	6.81E-09	0.00E+00	0.00E+00	8.95E-07	0.00E+00	0.00E+00	2.17E-05
4005	ALL	SENS	746511	4040516	NonCancerChronicDerive	0.00E+00	2.11E-09	0.00E+00	0.00E+00	0.00E+00	1.49E-07	2.17E-05	0.00E+00	6.83E-09	0.00E+00	0.00E+00	8.97E-07	0.00E+00	0.00E+00	2.17E-05
4006	ALL	SENS	746521	4040516	NonCancerChronicDerive	0.00E+00	2.11E-09	0.00E+00	0.00E+00	0.00E+00	1.49E-07	2.18E-05	0.00E+00	6.84E-09	0.00E+00	0.00E+00	9.00E-07	0.00E+00	0.00E+00	2.18E-05
4007	ALL	SENS	746531	4040516	NonCancerChronicDerive	0.00E+00	2.12E-09	0.00E+00	0.00E+00	0.00E+00	1.50E-07	2.18E-05	0.00E+00	6.87E-09	0.00E+00	0.00E+00	9.03E-07	0.00E+00	0.00E+00	2.18E-05
4008	ALL	SENS	746541	4040516	NonCancerChronicDerive	0.00E+00	2.13E-09	0.00E+00	0.00E+00	0.00E+00	1.50E-07	2.19E-05	0.00E+00	6.89E-09	0.00E+00	0.00E+00	9.05E-07	0.00E+00	0.00E+00	2.19E-05
4009	ALL	SENS	746491	4040526	NonCancerChronicDerive	0.00E+00	2.10E-09	0.00E+00	0.00E+00	0.00E+00	1.48E-07	2.16E-05	0.00E+00	6.80E-09	0.00E+00	0.00E+00	8.94E-07	0.00E+00	0.00E+00	2.16E-05
4010	ALL	SENS	746501	4040526	NonCancerChronicDerive	0.00E+00	2.11E-09	0.00E+00	0.00E+00	0.00E+00	1.49E-07	2.17E-05	0.00E+00	6.82E-09	0.00E+00	0.00E+00	8.97E-07	0.00E+00	0.00E+00	2.17E-05
4011	ALL	SENS	746511	4040526	NonCancerChronicDerive	0.00E+00	2.11E-09	0.00E+00	0.00E+00	0.00E+00	1.49E-07	2.17E-05	0.00E+00	6.84E-09	0.00E+00	0.00E+00	8.99E-07	0.00E+00	0.00E+00	2.17E-05
4012	ALL	SENS	746521	4040526	NonCancerChronicDerive	0.00E+00	2.12E-09	0.00E+00	0.00E+00	0.00E+00	1.49E-07	2.18E-05	0.00E+00	6.86E-09	0.00E+00	0.00E+00	9.02E-07	0.00E+00	0.00E+00	2.18E-05
4013	ALL	SENS	746531	4040526	NonCancerChronicDerive	0.00E+00	2.13E-09	0.00E+00	0.00E+00	0.00E+00	1.50E-07	2.19E-05	0.00E+00	6.88E-09	0.00E+00	0.00E+00	9.05E-07	0.00E+00	0.00E+00	2.19E-05
4014	ALL	SENS	746541	4040526	NonCancerChronicDerive	0.00E+00	2.13E-09	0.00E+00	0.00E+00	0.00E+00	1.50E-07	2.19E-05	0.00E+00	6.90E-09	0.00E+00	0.00E+00	9.07E-07	0.00E+00	0.00E+00	2.19E-05
4015	ALL	SENS	746491	4040536	NonCancerChronicDerive	0.00E+00	2.10E-09	0.00E+00	0.00E+00	0.00E+00	1.48E-07	2.16E-05	0.00E+00	6.81E-09	0.00E+00	0.00E+00	8.95E-07	0.00E+00	0.00E+00	2.16E-05
4016	ALL	SENS	746501	4040536	NonCancerChronicDerive	0.00E+00	2.11E-09	0.00E+00	0.00E+00	0.00E+00	1.49E-07	2.17E-05	0.00E+00	6.83E-09	0.00E+00	0.00E+00	8.98E-07	0.00E+00	0.00E+00	2.17E-05
4017	ALL	SENS	746511	4040536	NonCancerChronicDerive	0.00E+00	2.12E-09	0.00E+00	0.00E+00	0.00E+00	1.49E-07	2.18E-05	0.00E+00	6.85E-09	0.00E+00	0.00E+00	9.01E-07	0.00E+00	0.00E+00	2.18E-05
4018	ALL	SENS	746521	4040536	NonCancerChronicDerive	0.00E+00	2.12E-09	0.00E+00	0.00E+00	0.00E+00	1.50E-07	2.18E-05	0.00E+00	6.87E-09	0.00E+00	0.00E+00	9.03E-07	0.00E+00	0.00E+00	2.18E-05
4019	ALL	SENS	746531	4040536	NonCancerChronicDerive	0.00E+00	2.13E-09	0.00E+00	0.00E+00	0.00E+00	1.50E-07	2.19E-05	0.00E+00	6.90E-09	0.00E+00	0.00E+00	9.07E-07	0.00E+00	0.00E+00	2.19E-05
4020	ALL	SENS	746541	4040536	NonCancerChronicDerive	0.00E+00	2.14E-09	0.00E+00	0.00E+00	0.00E+00	1.51E-07	2.20E-05	0.00E+00	6.92E-09	0.00E+00	0.00E+00	9.09E-07	0.00E+00	0.00E+00	2.20E-05
4021	ALL	SENS	746491	4040546	NonCancerChronicDerive	0.00E+00	2.11E-09	0.00E+00	0.00E+00	0.00E+00	1.49E-07	2.17E-05	0.00E+00	6.82E-09	0.00E+00	0.00E+00	8.97E-07	0.00E+00	0.00E+00	2.17E-05
4022	ALL	SENS	746501	4040546	NonCancerChronicDerive	0.00E+00	2.11E-09	0.00E+00	0.00E+00	0.00E+00	1.49E-07	2.17E-05	0.00E+00	6.84E-09	0.00E+00	0.00E+00	9.00E-07	0.00E+00	0.00E+00	2.17E-05
4023	ALL	SENS	746511	4040546	NonCancerChronicDerive	0.00E+00	2.12E-09	0.00E+00	0.00E+00	0.00E+00	1.49E-07	2.18E-05	0.00E+00	6.87E-09	0.00E+00	0.00E+00	9.02E-07	0.00E+00	0.00E+00	2.18E-05
4024	ALL	SENS	746521	4040546	NonCancerChronicDerive	0.00E+00	2.13E-09	0.00E+00	0.00E+00	0.00E+00	1.50E-07	2.19E-05	0.00E+00	6.89E-09	0.00E+00	0.00E+00	9.05E-07	0.00E+00	0.00E+00	2.19E-05
4025	ALL	SENS	746531	4040546	NonCancerChronicDerive	0.00E+00	2.14E-09	0.00E+00	0.00E+00	0.00E+00	1.50E-07	2.20E-05	0.00E+00	6.91E-09	0.00E+00	0.00E+00	9.09E-07	0.00E+00	0.00E+00	2.20E-05
4026	ALL	SENS	746541	4040546	NonCancerChronicDerive	0.00E+00	2.14E-09	0.00E+00	0.00E+00	0.00E+00	1.51E-07	2.20E-05	0.00E+00	6.93E-09	0.00E+00	0.00E+00	9.11E-07	0.00E+00	0.00E+00	2.20E-05

4027	ALL	746491	4040556	NonCancerChronicDerive	0.00E+00	2.11E-09	0.00E+00	0.00E+00	0.00E+00	1.49E-07	2.17E-05	0.00E+00	6.83E-09	0.00E+00	0.00E+00	8.98E-07	0.00E+00	0.00E+00	2.17E-05
4028	ALL	746501	4040556	NonCancerChronicDerive	0.00E+00	2.12E-09	0.00E+00	0.00E+00	0.00E+00	1.49E-07	2.18E-05	0.00E+00	6.86E-09	0.00E+00	0.00E+00	9.01E-07	0.00E+00	0.00E+00	2.18E-05
4029	ALL	746511	4040556	NonCancerChronicDerive	0.00E+00	2.13E-09	0.00E+00	0.00E+00	0.00E+00	1.50E-07	2.18E-05	0.00E+00	6.88E-09	0.00E+00	0.00E+00	9.04E-07	0.00E+00	0.00E+00	2.18E-05
4030	ALL	746521	4040556	NonCancerChronicDerive	0.00E+00	2.13E-09	0.00E+00	0.00E+00	0.00E+00	1.50E-07	2.19E-05	0.00E+00	6.90E-09	0.00E+00	0.00E+00	9.07E-07	0.00E+00	0.00E+00	2.19E-05
4031	ALL	746531	4040556	NonCancerChronicDerive	0.00E+00	2.14E-09	0.00E+00	0.00E+00	0.00E+00	1.51E-07	2.20E-05	0.00E+00	6.93E-09	0.00E+00	0.00E+00	9.11E-07	0.00E+00	0.00E+00	2.20E-05
4032	ALL	746541	4040556	NonCancerChronicDerive	0.00E+00	2.15E-09	0.00E+00	0.00E+00	0.00E+00	1.51E-07	2.20E-05	0.00E+00	6.94E-09	0.00E+00	0.00E+00	9.13E-07	0.00E+00	0.00E+00	2.20E-05
4033	ALL	746491	4040566	NonCancerChronicDerive	0.00E+00	2.12E-09	0.00E+00	0.00E+00	0.00E+00	1.49E-07	2.17E-05	0.00E+00	6.85E-09	0.00E+00	0.00E+00	9.00E-07	0.00E+00	0.00E+00	2.17E-05
4034	ALL	746501	4040566	NonCancerChronicDerive	0.00E+00	2.12E-09	0.00E+00	0.00E+00	0.00E+00	1.49E-07	2.18E-05	0.00E+00	6.87E-09	0.00E+00	0.00E+00	9.03E-07	0.00E+00	0.00E+00	2.18E-05
4035	ALL	746511	4040566	NonCancerChronicDerive	0.00E+00	2.13E-09	0.00E+00	0.00E+00	0.00E+00	1.50E-07	2.19E-05	0.00E+00	6.89E-09	0.00E+00	0.00E+00	9.06E-07	0.00E+00	0.00E+00	2.19E-05
4036	ALL	746521	4040566	NonCancerChronicDerive	0.00E+00	2.14E-09	0.00E+00	0.00E+00	0.00E+00	1.50E-07	2.20E-05	0.00E+00	6.92E-09	0.00E+00	0.00E+00	9.10E-07	0.00E+00	0.00E+00	2.20E-05
4037	ALL	746531	4040566	NonCancerChronicDerive	0.00E+00	2.14E-09	0.00E+00	0.00E+00	0.00E+00	1.51E-07	2.20E-05	0.00E+00	6.94E-09	0.00E+00	0.00E+00	9.13E-07	0.00E+00	0.00E+00	2.20E-05
4038	ALL	746541	4040566	NonCancerChronicDerive	0.00E+00	2.15E-09	0.00E+00	0.00E+00	0.00E+00	1.51E-07	2.21E-05	0.00E+00	6.96E-09	0.00E+00	0.00E+00	9.15E-07	0.00E+00	0.00E+00	2.21E-05
4039	ALL	746548	4041125	NonCancerChronicDerive	0.00E+00	2.76E-09	0.00E+00	0.00E+00	0.00E+00	1.88E-07	2.73E-05	0.00E+00	8.95E-09	0.00E+00	0.00E+00	1.18E-06	0.00E+00	0.00E+00	2.73E-05
4040	ALL	746573	4041125	NonCancerChronicDerive	0.00E+00	2.81E-09	0.00E+00	0.00E+00	0.00E+00	1.91E-07	2.78E-05	0.00E+00	9.10E-09	0.00E+00	0.00E+00	1.20E-06	0.00E+00	0.00E+00	2.78E-05
4041	ALL	746598	4041125	NonCancerChronicDerive	0.00E+00	2.86E-09	0.00E+00	0.00E+00	0.00E+00	1.94E-07	2.82E-05	0.00E+00	9.26E-09	0.00E+00	0.00E+00	1.22E-06	0.00E+00	0.00E+00	2.82E-05
4042	ALL	746623	4041125	NonCancerChronicDerive	0.00E+00	2.91E-09	0.00E+00	0.00E+00	0.00E+00	1.97E-07	2.87E-05	0.00E+00	9.41E-09	0.00E+00	0.00E+00	1.24E-06	0.00E+00	0.00E+00	2.87E-05
4043	ALL	746648	4041125	NonCancerChronicDerive	0.00E+00	2.96E-09	0.00E+00	0.00E+00	0.00E+00	2.00E-07	2.92E-05	0.00E+00	9.57E-09	0.00E+00	0.00E+00	1.26E-06	0.00E+00	0.00E+00	2.92E-05
4044	ALL	746673	4041125	NonCancerChronicDerive	0.00E+00	3.01E-09	0.00E+00	0.00E+00	0.00E+00	2.03E-07	2.96E-05	0.00E+00	9.73E-09	0.00E+00	0.00E+00	1.28E-06	0.00E+00	0.00E+00	2.96E-05
4045	ALL	746698	4041125	NonCancerChronicDerive	0.00E+00	3.06E-09	0.00E+00	0.00E+00	0.00E+00	2.06E-07	3.01E-05	0.00E+00	9.89E-09	0.00E+00	0.00E+00	1.30E-06	0.00E+00	0.00E+00	3.01E-05
4046	ALL	746723	4041125	NonCancerChronicDerive	0.00E+00	3.11E-09	0.00E+00	0.00E+00	0.00E+00	2.10E-07	3.06E-05	0.00E+00	1.01E-08	0.00E+00	0.00E+00	1.32E-06	0.00E+00	0.00E+00	3.06E-05
4047	ALL	746548	4041150	NonCancerChronicDerive	0.00E+00	2.80E-09	0.00E+00	0.00E+00	0.00E+00	1.89E-07	2.76E-05	0.00E+00	9.05E-09	0.00E+00	0.00E+00	1.19E-06	0.00E+00	0.00E+00	2.76E-05
4048	ALL	746573	4041150	NonCancerChronicDerive	0.00E+00	2.84E-09	0.00E+00	0.00E+00	0.00E+00	1.93E-07	2.81E-05	0.00E+00	9.20E-09	0.00E+00	0.00E+00	1.21E-06	0.00E+00	0.00E+00	2.81E-05
4049	ALL	746598	4041150	NonCancerChronicDerive	0.00E+00	2.89E-09	0.00E+00	0.00E+00	0.00E+00	1.96E-07	2.85E-05	0.00E+00	9.35E-09	0.00E+00	0.00E+00	1.23E-06	0.00E+00	0.00E+00	2.85E-05
4050	ALL	746623	4041150	NonCancerChronicDerive	0.00E+00	2.94E-09	0.00E+00	0.00E+00	0.00E+00	1.98E-07	2.89E-05	0.00E+00	9.50E-09	0.00E+00	0.00E+00	1.25E-06	0.00E+00	0.00E+00	2.89E-05
4051	ALL	746648	4041150	NonCancerChronicDerive	0.00E+00	2.98E-09	0.00E+00	0.00E+00	0.00E+00	2.02E-07	2.94E-05	0.00E+00	9.66E-09	0.00E+00	0.00E+00	1.27E-06	0.00E+00	0.00E+00	2.94E-05
4052	ALL	746673	4041150	NonCancerChronicDerive	0.00E+00	3.04E-09	0.00E+00	0.00E+00	0.00E+00	2.05E-07	2.99E-05	0.00E+00	9.82E-09	0.00E+00	0.00E+00	1.29E-06	0.00E+00	0.00E+00	2.99E-05
4053	ALL	746698	4041150	NonCancerChronicDerive	0.00E+00	3.08E-09	0.00E+00	0.00E+00	0.00E+00	2.08E-07	3.03E-05	0.00E+00	9.98E-09	0.00E+00	0.00E+00	1.31E-06	0.00E+00	0.00E+00	3.03E-05
4054	ALL	746723	4041150	NonCancerChronicDerive	0.00E+00	3.14E-09	0.00E+00	0.00E+00	0.00E+00	2.11E-07	3.09E-05	0.00E+00	1.02E-08	0.00E+00	0.00E+00	1.34E-06	0.00E+00	0.00E+00	3.09E-05
4055	ALL	746548	4041175	NonCancerChronicDerive	0.00E+00	2.82E-09	0.00E+00	0.00E+00	0.00E+00	1.91E-07	2.79E-05	0.00E+00	9.14E-09	0.00E+00	0.00E+00	1.20E-06	0.00E+00	0.00E+00	2.79E-05
4056	ALL	746573	4041175	NonCancerChronicDerive	0.00E+00	2.87E-09	0.00E+00	0.00E+00	0.00E+00	1.94E-07	2.83E-05	0.00E+00	9.29E-09	0.00E+00	0.00E+00	1.22E-06	0.00E+00	0.00E+00	2.83E-05
4057	ALL	746598	4041175	NonCancerChronicDerive	0.00E+00	2.92E-09	0.00E+00	0.00E+00	0.00E+00	1.97E-07	2.87E-05	0.00E+00	9.44E-09	0.00E+00	0.00E+00	1.24E-06	0.00E+00	0.00E+00	2.87E-05
4058	ALL	746623	4041175	NonCancerChronicDerive	0.00E+00	2.96E-09	0.00E+00	0.00E+00	0.00E+00	2.00E-07	2.92E-05	0.00E+00	9.59E-09	0.00E+00	0.00E+00	1.26E-06	0.00E+00	0.00E+00	2.92E-05
4059	ALL	746648	4041175	NonCancerChronicDerive	0.00E+00	3.01E-09	0.00E+00	0.00E+00	0.00E+00	2.03E-07	2.96E-05	0.00E+00	9.74E-09	0.00E+00	0.00E+00	1.28E-06	0.00E+00	0.00E+00	2.96E-05
4060	ALL	746673	4041175	NonCancerChronicDerive	0.00E+00	3.06E-09	0.00E+00	0.00E+00	0.00E+00	2.06E-07	3.01E-05	0.00E+00	9.91E-09	0.00E+00	0.00E+00	1.30E-06	0.00E+00	0.00E+00	3.01E-05
4061	ALL	746698	4041175	NonCancerChronicDerive	0.00E+00	3.11E-09	0.00E+00	0.00E+00	0.00E+00	2.09E-07	3.05E-05	0.00E+00	1.01E-08	0.00E+00	0.00E+00	1.32E-06	0.00E+00	0.00E+00	3.05E-05
4062	ALL	746723	4041175	NonCancerChronicDerive	0.00E+00	3.16E-09	0.00E+00	0.00E+00	0.00E+00	2.13E-07	3.11E-05	0.00E+00	1.02E-08	0.00E+00	0.00E+00	1.35E-06	0.00E+00	0.00E+00	3.11E-05
4063	ALL	746548	4041200	NonCancerChronicDerive	0.00E+00	2.85E-09	0.00E+00	0.00E+00	0.00E+00	1.93E-07	2.81E-05	0.00E+00	9.22E-09	0.00E+00	0.00E+00	1.21E-06	0.00E+00	0.00E+00	2.81E-05
4064	ALL	746573	4041200	NonCancerChronicDerive	0.00E+00	2.90E-09	0.00E+00	0.00E+00	0.00E+00	1.96E-07	2.85E-05	0.00E+00	9.37E-09	0.00E+00	0.00E+00	1.23E-06	0.00E+00	0.00E+00	2.85E-05
4065	ALL	746598	4041200	NonCancerChronicDerive	0.00E+00	2.94E-09	0.00E+00	0.00E+00	0.00E+00	1.99E-07	2.89E-05	0.00E+00	9.52E-09	0.00E+00	0.00E+00	1.25E-06	0.00E+00	0.00E+00	2.89E-05
4066	ALL	746623	4041200	NonCancerChronicDerive	0.00E+00	2.99E-09	0.00E+00	0.00E+00	0.00E+00	2.02E-07	2.94E-05	0.00E+00	9.67E-09	0.00E+00	0.00E+00	1.27E-06	0.00E+00	0.00E+00	2.94E-05
4067	ALL	746648	4041200	NonCancerChronicDerive	0.00E+00	3.04E-09	0.00E+00	0.00E+00	0.00E+00	2.05E-07	2.98E-05	0.00E+00	9.83E-09	0.00E+00	0.00E+00	1.29E-06	0.00E+00	0.00E+00	2.98E-05
4068	ALL	746673	4041200	NonCancerChronicDerive	0.00E+00	3.09E-09	0.00E+00	0.00E+00	0.00E+00	2.08E-07	3.03E-05	0.00E+00	1.00E-08	0.00E+00	0.00E+00	1.31E-06	0.00E+00	0.00E+00	3.03E-05
4069	ALL	746698	4041200	NonCancerChronicDerive	0.00E+00	3.13E-09	0.00E+00	0.00E+00	0.00E+00	2.11E-07	3.07E-05	0.00E+00	1.01E-08	0.00E+00	0.00E+00	1.33E-06	0.00E+00	0.00E+00	3.07E-05
4070	ALL	746723	4041200	NonCancerChronicDerive	0.00E+00	3.19E-09	0.00E+00	0.00E+00	0.00E+00	2.14E-07	3.12E-05	0.00E+00	1.03E-08	0.00E+00	0.00E+00	1.36E-06	0.00E+00	0.00E+00	3.12E-05
4071	ALL	746548	4041225	NonCancerChronicDerive	0.00E+00	2.87E-09	0.00E+00	0.00E+00	0.00E+00	1.94E-07	2.83E-05	0.00E+00	9.30E-09	0.00E+00	0.00E+00	1.22E-06	0.00E+00	0.00E+00	2.83E-05
4072	ALL	746573	4041225	NonCancerChronicDerive	0.00E+00	2.92E-09	0.00E+00	0.00E+00	0.00E+00	1.97E-07	2.87E-05	0.00E+00	9.45E-09	0.00E+00	0.00E+00	1.24E-06	0.00E+00	0.00E+00	2.87E-05
4073	ALL	746598	4041225	NonCancerChronicDerive	0.00E+00	2.96E-09	0.00E+00	0.00E+00	0.00E+00	2.00E-07	2.91E-05	0.00E+00	9.60E-09	0.00E+00	0.00E+00	1.26E-06	0.00E+00	0.00E+00	2.91E-05
4074	ALL	746623	4041225	NonCancerChronicDerive	0.00E+00	3.01E-09	0.00E+00	0.00E+00	0.00E+00	2.03E-07	2.96E-05	0.00E+00	9.74E-09	0.00E+00	0.00E+00	1.28E-06	0.00E+00	0.00E+00	2.96E-05
4075	ALL	746648	4041225	NonCancerChronicDerive	0.00E+00	3.06E-09	0.00E+00	0.00E+00	0.00E+00	2.06E-07	3.00E-05	0.00E+00	9.90E-09	0.00E+00	0.00E+00	1.30E-06	0.00E+00	0.00E+00	3.00E-05
4076	ALL	746673	4041225	NonCancerChronicDerive	0.00E+00	3.11E-09	0.00E+00	0.00E+00	0.00E+00	2.09E-07	3.05E-05	0.00E+00	1.01E-08	0.00E+00	0.00E+00	1.32E-06	0.00E+00	0.00E+00	3.05E-05
4077	ALL	746698	4041225	NonCancerChronicDerive	0.00E+00	3.15E-09	0.00E+00	0.00E+00	0.00E+00	2.12E-07	3.09E-05	0.00E+00	1.02E-08	0.00E+00	0.00E+00	1.34E-06	0.00E+00	0.00E+00	3.09E-05
4078	ALL	746723	4041225	NonCancerChronicDerive	0.00E+00	3.20E-09	0.00E+00	0.00E+00	0.00E+00	2.15E-07	3.14E-05	0.00E+00	1.04E-08	0.00E+00	0.00E+00	1.36E-06	0.00E+00	0.00E+00	3.14E-05
4079	ALL	746548	4041250	NonCancerChronicDerive	0.00E+00	2.89E-09	0.00E+00	0.00E+00	0.00E+00	1.95E-07	2.84E-05	0.00E+00	9.36E-09	0.00E+00	0.00E+00	1.23E-06	0.00E+00	0.00E+00	2.84E-05

4080	ALL	746573	4041250	NonCancerChronicDerive	0.00E+00	2.94E-09	0.00E+00	0.00E+00	0.00E+00	1.98E-07	2.89E-05	0.00E+00	9.52E-09	0.00E+00	0.00E+00	1.25E-06	0.00E+00	0.00E+00	2.89E-05
4081	ALL	746598	4041250	NonCancerChronicDerive	0.00E+00	2.99E-09	0.00E+00	0.00E+00	0.00E+00	2.01E-07	2.93E-05	0.00E+00	9.66E-09	0.00E+00	0.00E+00	1.27E-06	0.00E+00	0.00E+00	2.93E-05
4082	ALL	746623	4041250	NonCancerChronicDerive	0.00E+00	3.03E-09	0.00E+00	0.00E+00	0.00E+00	2.04E-07	2.97E-05	0.00E+00	9.81E-09	0.00E+00	0.00E+00	1.29E-06	0.00E+00	0.00E+00	2.97E-05
4083	ALL	746648	4041250	NonCancerChronicDerive	0.00E+00	3.08E-09	0.00E+00	0.00E+00	0.00E+00	2.07E-07	3.02E-05	0.00E+00	9.96E-09	0.00E+00	0.00E+00	1.31E-06	0.00E+00	0.00E+00	3.02E-05
4084	ALL	746673	4041250	NonCancerChronicDerive	0.00E+00	3.12E-09	0.00E+00	0.00E+00	0.00E+00	2.10E-07	3.06E-05	0.00E+00	1.01E-08	0.00E+00	0.00E+00	1.33E-06	0.00E+00	0.00E+00	3.06E-05
4085	ALL	746698	4041250	NonCancerChronicDerive	0.00E+00	3.17E-09	0.00E+00	0.00E+00	0.00E+00	2.13E-07	3.11E-05	0.00E+00	1.03E-08	0.00E+00	0.00E+00	1.35E-06	0.00E+00	0.00E+00	3.11E-05
4086	ALL	746723	4041250	NonCancerChronicDerive	0.00E+00	3.22E-09	0.00E+00	0.00E+00	0.00E+00	2.16E-07	3.15E-05	0.00E+00	1.04E-08	0.00E+00	0.00E+00	1.37E-06	0.00E+00	0.00E+00	3.15E-05
4087	ALL	746548	4041275	NonCancerChronicDerive	0.00E+00	2.91E-09	0.00E+00	0.00E+00	0.00E+00	1.97E-07	2.86E-05	0.00E+00	9.43E-09	0.00E+00	0.00E+00	1.24E-06	0.00E+00	0.00E+00	2.86E-05
4088	ALL	746573	4041275	NonCancerChronicDerive	0.00E+00	2.96E-09	0.00E+00	0.00E+00	0.00E+00	2.00E-07	2.90E-05	0.00E+00	9.58E-09	0.00E+00	0.00E+00	1.26E-06	0.00E+00	0.00E+00	2.90E-05
4089	ALL	746598	4041275	NonCancerChronicDerive	0.00E+00	3.00E-09	0.00E+00	0.00E+00	0.00E+00	2.02E-07	2.95E-05	0.00E+00	9.72E-09	0.00E+00	0.00E+00	1.28E-06	0.00E+00	0.00E+00	2.95E-05
4090	ALL	746623	4041275	NonCancerChronicDerive	0.00E+00	3.05E-09	0.00E+00	0.00E+00	0.00E+00	2.05E-07	2.99E-05	0.00E+00	9.87E-09	0.00E+00	0.00E+00	1.30E-06	0.00E+00	0.00E+00	2.99E-05
4091	ALL	746648	4041275	NonCancerChronicDerive	0.00E+00	3.09E-09	0.00E+00	0.00E+00	0.00E+00	2.08E-07	3.03E-05	0.00E+00	1.00E-08	0.00E+00	0.00E+00	1.32E-06	0.00E+00	0.00E+00	3.03E-05
4092	ALL	746673	4041275	NonCancerChronicDerive	0.00E+00	3.14E-09	0.00E+00	0.00E+00	0.00E+00	2.11E-07	3.07E-05	0.00E+00	1.02E-08	0.00E+00	0.00E+00	1.34E-06	0.00E+00	0.00E+00	3.07E-05
4093	ALL	746698	4041275	NonCancerChronicDerive	0.00E+00	3.19E-09	0.00E+00	0.00E+00	0.00E+00	2.14E-07	3.12E-05	0.00E+00	1.03E-08	0.00E+00	0.00E+00	1.36E-06	0.00E+00	0.00E+00	3.12E-05
4094	ALL	746723	4041275	NonCancerChronicDerive	0.00E+00	3.24E-09	0.00E+00	0.00E+00	0.00E+00	2.17E-07	3.17E-05	0.00E+00	1.05E-08	0.00E+00	0.00E+00	1.38E-06	0.00E+00	0.00E+00	3.17E-05
4095	ALL	746548	4041300	NonCancerChronicDerive	0.00E+00	2.93E-09	0.00E+00	0.00E+00	0.00E+00	1.98E-07	2.87E-05	0.00E+00	9.48E-09	0.00E+00	0.00E+00	1.25E-06	0.00E+00	0.00E+00	2.87E-05
4096	ALL	746573	4041300	NonCancerChronicDerive	0.00E+00	2.98E-09	0.00E+00	0.00E+00	0.00E+00	2.01E-07	2.92E-05	0.00E+00	9.63E-09	0.00E+00	0.00E+00	1.27E-06	0.00E+00	0.00E+00	2.92E-05
4097	ALL	746598	4041300	NonCancerChronicDerive	0.00E+00	3.02E-09	0.00E+00	0.00E+00	0.00E+00	2.03E-07	2.96E-05	0.00E+00	9.77E-09	0.00E+00	0.00E+00	1.28E-06	0.00E+00	0.00E+00	2.96E-05
4098	ALL	746623	4041300	NonCancerChronicDerive	0.00E+00	3.06E-09	0.00E+00	0.00E+00	0.00E+00	2.06E-07	3.00E-05	0.00E+00	9.91E-09	0.00E+00	0.00E+00	1.30E-06	0.00E+00	0.00E+00	3.00E-05
4099	ALL	746648	4041300	NonCancerChronicDerive	0.00E+00	3.11E-09	0.00E+00	0.00E+00	0.00E+00	2.09E-07	3.04E-05	0.00E+00	1.01E-08	0.00E+00	0.00E+00	1.32E-06	0.00E+00	0.00E+00	3.04E-05
4100	ALL	746673	4041300	NonCancerChronicDerive	0.00E+00	3.15E-09	0.00E+00	0.00E+00	0.00E+00	2.12E-07	3.08E-05	0.00E+00	1.02E-08	0.00E+00	0.00E+00	1.34E-06	0.00E+00	0.00E+00	3.08E-05
4101	ALL	746698	4041300	NonCancerChronicDerive	0.00E+00	3.20E-09	0.00E+00	0.00E+00	0.00E+00	2.15E-07	3.13E-05	0.00E+00	1.04E-08	0.00E+00	0.00E+00	1.36E-06	0.00E+00	0.00E+00	3.13E-05
4102	ALL	746723	4041300	NonCancerChronicDerive	0.00E+00	3.25E-09	0.00E+00	0.00E+00	0.00E+00	2.18E-07	3.18E-05	0.00E+00	1.05E-08	0.00E+00	0.00E+00	1.38E-06	0.00E+00	0.00E+00	3.18E-05
4103	ALL	746561.71	4041116.1	NonCancerChronicDerive	0.00E+00	2.78E-09	0.00E+00	0.00E+00	0.00E+00	1.89E-07	2.75E-05	0.00E+00	9.00E-09	0.00E+00	0.00E+00	1.18E-06	0.00E+00	0.00E+00	2.75E-05
4104	ALL	746586.71	4041116.1	NonCancerChronicDerive	0.00E+00	2.83E-09	0.00E+00	0.00E+00	0.00E+00	1.92E-07	2.80E-05	0.00E+00	9.15E-09	0.00E+00	0.00E+00	1.20E-06	0.00E+00	0.00E+00	2.80E-05
4105	ALL	746611.71	4041116.1	NonCancerChronicDerive	0.00E+00	2.87E-09	0.00E+00	0.00E+00	0.00E+00	1.95E-07	2.84E-05	0.00E+00	9.31E-09	0.00E+00	0.00E+00	1.22E-06	0.00E+00	0.00E+00	2.84E-05
4106	ALL	746561.71	4041141.1	NonCancerChronicDerive	0.00E+00	2.81E-09	0.00E+00	0.00E+00	0.00E+00	1.90E-07	2.78E-05	0.00E+00	9.10E-09	0.00E+00	0.00E+00	1.20E-06	0.00E+00	0.00E+00	2.78E-05
4107	ALL	746586.71	4041141.1	NonCancerChronicDerive	0.00E+00	2.86E-09	0.00E+00	0.00E+00	0.00E+00	1.93E-07	2.82E-05	0.00E+00	9.25E-09	0.00E+00	0.00E+00	1.22E-06	0.00E+00	0.00E+00	2.82E-05
4108	ALL	746611.71	4041141.1	NonCancerChronicDerive	0.00E+00	2.90E-09	0.00E+00	0.00E+00	0.00E+00	1.96E-07	2.87E-05	0.00E+00	9.40E-09	0.00E+00	0.00E+00	1.24E-06	0.00E+00	0.00E+00	2.87E-05
4109	ALL	746561.71	4041166.1	NonCancerChronicDerive	0.00E+00	2.84E-09	0.00E+00	0.00E+00	0.00E+00	1.92E-07	2.80E-05	0.00E+00	9.20E-09	0.00E+00	0.00E+00	1.21E-06	0.00E+00	0.00E+00	2.80E-05
4110	ALL	746586.71	4041166.1	NonCancerChronicDerive	0.00E+00	2.89E-09	0.00E+00	0.00E+00	0.00E+00	1.95E-07	2.85E-05	0.00E+00	9.34E-09	0.00E+00	0.00E+00	1.23E-06	0.00E+00	0.00E+00	2.85E-05
4111	ALL	746611.71	4041166.1	NonCancerChronicDerive	0.00E+00	2.93E-09	0.00E+00	0.00E+00	0.00E+00	1.98E-07	2.89E-05	0.00E+00	9.49E-09	0.00E+00	0.00E+00	1.25E-06	0.00E+00	0.00E+00	2.89E-05
4112	ALL	732066.53	4034602.91	NonCancerChronicDerive	0.00E+00	3.38E-09	0.00E+00	0.00E+00	0.00E+00	2.41E-07	3.47E-05	0.00E+00	1.09E-08	0.00E+00	0.00E+00	1.44E-06	0.00E+00	0.00E+00	3.47E-05
4113	ALL	732091.13	4033774.4	NonCancerChronicDerive	0.00E+00	2.66E-09	0.00E+00	0.00E+00	0.00E+00	1.82E-07	2.66E-05	0.00E+00	8.62E-09	0.00E+00	0.00E+00	1.13E-06	0.00E+00	0.00E+00	2.66E-05
4114	ALL	733692.71	4033824.33	NonCancerChronicDerive	0.00E+00	9.50E-08	0.00E+00	0.00E+00	0.00E+00	6.13E-06	8.87E-04	0.00E+00	3.08E-07	0.00E+00	0.00E+00	4.04E-05	0.00E+00	0.00E+00	8.87E-04
4115	ALL	733674.04	4034495.29	NonCancerChronicDerive	0.00E+00	3.01E-09	0.00E+00	0.00E+00	0.00E+00	3.75E-07	4.57E-05	0.00E+00	9.76E-09	0.00E+00	0.00E+00	1.28E-06	0.00E+00	0.00E+00	4.57E-05
4116	ALL	734110.13	4034487.33	NonCancerChronicDerive	0.00E+00	2.61E-09	0.00E+00	0.00E+00	0.00E+00	2.67E-07	3.45E-05	0.00E+00	8.46E-09	0.00E+00	0.00E+00	1.11E-06	0.00E+00	0.00E+00	3.45E-05
4117	ALL	734257.24	4034696.21	NonCancerChronicDerive	0.00E+00	1.87E-09	0.00E+00	0.00E+00	0.00E+00	1.66E-07	2.23E-05	0.00E+00	6.04E-09	0.00E+00	0.00E+00	7.94E-07	0.00E+00	0.00E+00	2.23E-05
4118	ALL	734627.91	4034703.99	NonCancerChronicDerive	0.00E+00	1.88E-09	0.00E+00	0.00E+00	0.00E+00	1.56E-07	2.13E-05	0.00E+00	6.07E-09	0.00E+00	0.00E+00	7.98E-07	0.00E+00	0.00E+00	2.13E-05
4119	ALL	735392.15	4035430.99	NonCancerChronicDerive	0.00E+00	1.20E-09	0.00E+00	0.00E+00	0.00E+00	8.87E-08	1.24E-05	0.00E+00	3.88E-09	0.00E+00	0.00E+00	5.10E-07	0.00E+00	0.00E+00	1.24E-05
4120	ALL	737808.42	4035430.09	NonCancerChronicDerive	0.00E+00	1.21E-09	0.00E+00	0.00E+00	0.00E+00	8.38E-08	1.19E-05	0.00E+00	3.91E-09	0.00E+00	0.00E+00	5.15E-07	0.00E+00	0.00E+00	1.19E-05
4121	ALL	738465.19	4036541.12	NonCancerChronicDerive	0.00E+00	1.04E-09	0.00E+00	0.00E+00	0.00E+00	7.17E-08	1.02E-05	0.00E+00	3.37E-09	0.00E+00	0.00E+00	4.43E-07	0.00E+00	0.00E+00	1.02E-05
4122	ALL	738750.39	4036380.31	NonCancerChronicDerive	0.00E+00	1.08E-09	0.00E+00	0.00E+00	0.00E+00	7.40E-08	1.06E-05	0.00E+00	3.48E-09	0.00E+00	0.00E+00	4.58E-07	0.00E+00	0.00E+00	1.06E-05
4123	ALL	742069.46	4036499.23	NonCancerChronicDerive	0.00E+00	1.20E-09	0.00E+00	0.00E+00	0.00E+00	8.48E-08	1.22E-05	0.00E+00	3.88E-09	0.00E+00	0.00E+00	5.10E-07	0.00E+00	0.00E+00	1.22E-05
4124	ALL	745283.68	4036598.92	NonCancerChronicDerive	0.00E+00	2.47E-09	0.00E+00	0.00E+00	0.00E+00	1.83E-07	2.62E-05	0.00E+00	8.00E-09	0.00E+00	0.00E+00	1.05E-06	0.00E+00	0.00E+00	2.62E-05
4125	ALL	746673.96	4036659.94	NonCancerChronicDerive	0.00E+00	7.97E-09	0.00E+00	0.00E+00	0.00E+00	6.16E-07	8.57E-05	0.00E+00	2.58E-08	0.00E+00	0.00E+00	3.39E-06	0.00E+00	0.00E+00	8.57E-05
4126	ALL	746708.07	4035860.27	NonCancerChronicDerive	0.00E+00	4.37E-09	0.00E+00	0.00E+00	0.00E+00	3.18E-07	4.51E-05	0.00E+00	1.41E-08	0.00E+00	0.00E+00	1.86E-06	0.00E+00	0.00E+00	4.51E-05
4127	ALL	747515.51	4035882.35	NonCancerChronicDerive	0.00E+00	9.40E-08	0.00E+00	0.00E+00	0.00E+00	5.88E-06	8.57E-04	0.00E+00	3.04E-07	0.00E+00	0.00E+00	4.00E-05	0.00E+00	0.00E+00	8.57E-04
4128	ALL	747536.38	4035076.16	NonCancerChronicDerive	0.00E+00	1.35E-08	0.00E+00	0.00E+00	0.00E+00	8.74E-07	1.26E-04	0.00E+00	4.36E-08	0.00E+00	0.00E+00	5.73E-06	0.00E+00	0.00E+00	1.26E-04
4129	ALL	748342.31	4035116.19	NonCancerChronicDerive	0.00E+00	1.87E-08	0.00E+00	0.00E+00	0.00E+00	1.21E-06	1.72E-04	0.00E+00	6.05E-08	0.00E+00	0.00E+00	7.95E-06	0.00E+00	0.00E+00	1.72E-04
4130	ALL	748310.9	4036726.09	NonCancerChronicDerive	0.00E+00	2.57E-09	0.00E+00	0.00E+00	0.00E+00	2.37E-07	3.16E-05	0.00E+00	8.31E-09	0.00E+00	0.00E+00	1.09E-06	0.00E+00	0.00E+00	3.16E-05
4131	ALL	749907.56	4036767.46	NonCancerChronicDerive	0.00E+00	3.76E-09	0.00E+00	0.00E+00	0.00E+00	2.61E-07	3.70E-05	0.00E+00	1.22E-08	0.00E+00	0.00E+00	1.60E-06	0.00E+00	0.00E+00	3.70E-05
4132	ALL	749811.98	4039992.18	NonCancerChronicDerive	0.00E+00	1.13E-08	0.00E+00	0.00E+00	0.00E+00	2.56E-06	2.78E-04	0.00E+00	3.67E-08	0.00E+00	0.00E+00	4.83E-06	0.00E+00	0.00E+00	2.78E-04

4133	ALL	751400.39	4040064.69	NonCancerChronicDerive	0.00E+00	3.15E-09	0.00E+00	0.00E+00	0.00E+00	2.52E-07	3.42E-05	0.00E+00	1.02E-08	0.00E+00	0.00E+00	1.34E-06	0.00E+00	0.00E+00	3.42E-05
4134	ALL	751462.23	4038438.34	NonCancerChronicDerive	0.00E+00	6.35E-09	0.00E+00	0.00E+00	0.00E+00	4.56E-07	6.28E-05	0.00E+00	2.05E-08	0.00E+00	0.00E+00	2.70E-06	0.00E+00	0.00E+00	6.28E-05
4135	ALL	752772.2	4038498.22	NonCancerChronicDerive	0.00E+00	3.53E-09	0.00E+00	0.00E+00	0.00E+00	2.57E-07	3.54E-05	0.00E+00	1.14E-08	0.00E+00	0.00E+00	1.50E-06	0.00E+00	0.00E+00	3.54E-05
4136	ALL	752832.11	4036888.4	NonCancerChronicDerive	0.00E+00	3.94E-09	0.00E+00	0.00E+00	0.00E+00	2.71E-07	3.80E-05	0.00E+00	1.27E-08	0.00E+00	0.00E+00	1.67E-06	0.00E+00	0.00E+00	3.80E-05
4137	ALL	754818.78	4036951.87	NonCancerChronicDerive	0.00E+00	2.51E-09	0.00E+00	0.00E+00	0.00E+00	1.75E-07	2.45E-05	0.00E+00	8.13E-09	0.00E+00	0.00E+00	1.07E-06	0.00E+00	0.00E+00	2.45E-05
4138	ALL	754771.03	4038559.27	NonCancerChronicDerive	0.00E+00	1.89E-09	0.00E+00	0.00E+00	0.00E+00	1.33E-07	1.87E-05	0.00E+00	6.12E-09	0.00E+00	0.00E+00	8.04E-07	0.00E+00	0.00E+00	1.87E-05
4139	ALL	752787.25	4038507.84	NonCancerChronicDerive	0.00E+00	3.50E-09	0.00E+00	0.00E+00	0.00E+00	2.55E-07	3.51E-05	0.00E+00	1.13E-08	0.00E+00	0.00E+00	1.49E-06	0.00E+00	0.00E+00	3.51E-05
4140	ALL	752734.04	4040110.04	NonCancerChronicDerive	0.00E+00	1.96E-09	0.00E+00	0.00E+00	0.00E+00	1.45E-07	2.03E-05	0.00E+00	6.35E-09	0.00E+00	0.00E+00	8.34E-07	0.00E+00	0.00E+00	2.03E-05
4141	ALL	751403.83	4040076.27	NonCancerChronicDerive	0.00E+00	3.13E-09	0.00E+00	0.00E+00	0.00E+00	2.50E-07	3.40E-05	0.00E+00	1.01E-08	0.00E+00	0.00E+00	1.33E-06	0.00E+00	0.00E+00	3.40E-05
4142	ALL	751355.71	4041673.39	NonCancerChronicDerive	0.00E+00	1.06E-09	0.00E+00	0.00E+00	0.00E+00	8.06E-08	1.14E-05	0.00E+00	3.42E-09	0.00E+00	0.00E+00	4.50E-07	0.00E+00	0.00E+00	1.14E-05
4143	ALL	753494.58	4041753.1	NonCancerChronicDerive	0.00E+00	8.66E-10	0.00E+00	0.00E+00	0.00E+00	6.27E-08	8.95E-06	0.00E+00	2.80E-09	0.00E+00	0.00E+00	3.68E-07	0.00E+00	0.00E+00	8.95E-06
4144	ALL	753492.55	4041789.93	NonCancerChronicDerive	0.00E+00	8.56E-10	0.00E+00	0.00E+00	0.00E+00	6.20E-08	8.86E-06	0.00E+00	2.77E-09	0.00E+00	0.00E+00	3.64E-07	0.00E+00	0.00E+00	8.86E-06
4145	ALL	753430	4043372.28	NonCancerChronicDerive	0.00E+00	6.23E-10	0.00E+00	0.00E+00	0.00E+00	4.49E-08	6.46E-06	0.00E+00	2.02E-09	0.00E+00	0.00E+00	2.65E-07	0.00E+00	0.00E+00	6.46E-06
4146	ALL	752608.63	4043340.49	NonCancerChronicDerive	0.00E+00	6.32E-10	0.00E+00	0.00E+00	0.00E+00	4.60E-08	6.61E-06	0.00E+00	2.05E-09	0.00E+00	0.00E+00	2.69E-07	0.00E+00	0.00E+00	6.61E-06
4147	ALL	752588.7	4044954.02	NonCancerChronicDerive	0.00E+00	4.56E-10	0.00E+00	0.00E+00	0.00E+00	3.30E-08	4.74E-06	0.00E+00	1.47E-09	0.00E+00	0.00E+00	1.94E-07	0.00E+00	0.00E+00	4.74E-06
4148	ALL	751182.35	4044928.16	NonCancerChronicDerive	0.00E+00	4.67E-10	0.00E+00	0.00E+00	0.00E+00	3.45E-08	4.92E-06	0.00E+00	1.51E-09	0.00E+00	0.00E+00	1.99E-07	0.00E+00	0.00E+00	4.92E-06
4149	ALL	750128.34	4044862.62	NonCancerChronicDerive	0.00E+00	5.40E-10	0.00E+00	0.00E+00	0.00E+00	3.96E-08	5.66E-06	0.00E+00	1.75E-09	0.00E+00	0.00E+00	2.30E-07	0.00E+00	0.00E+00	5.66E-06
4150	ALL	750113.01	4045660.82	NonCancerChronicDerive	0.00E+00	4.85E-10	0.00E+00	0.00E+00	0.00E+00	3.53E-08	5.05E-06	0.00E+00	1.57E-09	0.00E+00	0.00E+00	2.06E-07	0.00E+00	0.00E+00	5.05E-06
4151	ALL	748466.7	4045588.02	NonCancerChronicDerive	0.00E+00	5.53E-10	0.00E+00	0.00E+00	0.00E+00	4.01E-08	5.73E-06	0.00E+00	1.79E-09	0.00E+00	0.00E+00	2.35E-07	0.00E+00	0.00E+00	5.73E-06
4152	ALL	748517.04	4043182.11	NonCancerChronicDerive	0.00E+00	8.51E-10	0.00E+00	0.00E+00	0.00E+00	6.44E-08	9.10E-06	0.00E+00	2.75E-09	0.00E+00	0.00E+00	3.62E-07	0.00E+00	0.00E+00	9.10E-06
4153	ALL	748555.57	4041574.8	NonCancerChronicDerive	0.00E+00	1.46E-09	0.00E+00	0.00E+00	0.00E+00	1.24E-07	1.70E-05	0.00E+00	4.73E-09	0.00E+00	0.00E+00	6.22E-07	0.00E+00	0.00E+00	1.70E-05
4154	ALL	748134.63	4041563.3	NonCancerChronicDerive	0.00E+00	1.88E-09	0.00E+00	0.00E+00	0.00E+00	1.52E-07	2.11E-05	0.00E+00	6.08E-09	0.00E+00	0.00E+00	8.00E-07	0.00E+00	0.00E+00	2.11E-05
4155	ALL	747727.94	4041548.19	NonCancerChronicDerive	0.00E+00	2.47E-09	0.00E+00	0.00E+00	0.00E+00	1.83E-07	2.58E-05	0.00E+00	8.00E-09	0.00E+00	0.00E+00	1.05E-06	0.00E+00	0.00E+00	2.58E-05
4156	ALL	746738.41	4041515.68	NonCancerChronicDerive	0.00E+00	3.26E-09	0.00E+00	0.00E+00	0.00E+00	2.19E-07	3.18E-05	0.00E+00	1.06E-08	0.00E+00	0.00E+00	1.39E-06	0.00E+00	0.00E+00	3.18E-05
4157	ALL	746735.92	4041120.52	NonCancerChronicDerive	0.00E+00	3.13E-09	0.00E+00	0.00E+00	0.00E+00	2.11E-07	3.08E-05	0.00E+00	1.01E-08	0.00E+00	0.00E+00	1.33E-06	0.00E+00	0.00E+00	3.08E-05
4158	ALL	746543.23	4041110.63	NonCancerChronicDerive	0.00E+00	2.74E-09	0.00E+00	0.00E+00	0.00E+00	1.86E-07	2.71E-05	0.00E+00	8.87E-09	0.00E+00	0.00E+00	1.17E-06	0.00E+00	0.00E+00	2.71E-05
4159	ALL	746547.66	4040518.95	NonCancerChronicDerive	0.00E+00	2.13E-09	0.00E+00	0.00E+00	0.00E+00	1.50E-07	2.19E-05	0.00E+00	6.90E-09	0.00E+00	0.00E+00	9.07E-07	0.00E+00	0.00E+00	2.19E-05
4160	ALL	746633.93	4040521.31	NonCancerChronicDerive	0.00E+00	2.20E-09	0.00E+00	0.00E+00	0.00E+00	1.55E-07	2.26E-05	0.00E+00	7.12E-09	0.00E+00	0.00E+00	9.36E-07	0.00E+00	0.00E+00	2.26E-05
4161	ALL	746634.88	4040467.3	NonCancerChronicDerive	0.00E+00	2.17E-09	0.00E+00	0.00E+00	0.00E+00	1.53E-07	2.24E-05	0.00E+00	7.03E-09	0.00E+00	0.00E+00	9.24E-07	0.00E+00	0.00E+00	2.24E-05
4162	ALL	746550.33	4040468.06	NonCancerChronicDerive	0.00E+00	2.11E-09	0.00E+00	0.00E+00	0.00E+00	1.49E-07	2.18E-05	0.00E+00	6.83E-09	0.00E+00	0.00E+00	8.98E-07	0.00E+00	0.00E+00	2.18E-05
4163	ALL	746553.92	4040355.79	NonCancerChronicDerive	0.00E+00	2.05E-09	0.00E+00	0.00E+00	0.00E+00	1.46E-07	2.13E-05	0.00E+00	6.64E-09	0.00E+00	0.00E+00	8.73E-07	0.00E+00	0.00E+00	2.13E-05
4164	ALL	746620.22	4040356.68	NonCancerChronicDerive	0.00E+00	2.09E-09	0.00E+00	0.00E+00	0.00E+00	1.49E-07	2.17E-05	0.00E+00	6.78E-09	0.00E+00	0.00E+00	8.91E-07	0.00E+00	0.00E+00	2.17E-05
4165	ALL	746621.12	4040314.75	NonCancerChronicDerive	0.00E+00	2.06E-09	0.00E+00	0.00E+00	0.00E+00	1.47E-07	2.15E-05	0.00E+00	6.68E-09	0.00E+00	0.00E+00	8.78E-07	0.00E+00	0.00E+00	2.15E-05
4166	ALL	746554.62	4040315.5	NonCancerChronicDerive	0.00E+00	2.02E-09	0.00E+00	0.00E+00	0.00E+00	1.44E-07	2.10E-05	0.00E+00	6.55E-09	0.00E+00	0.00E+00	8.61E-07	0.00E+00	0.00E+00	2.10E-05
4167	ALL	746560.36	4040168.37	NonCancerChronicDerive	0.00E+00	1.91E-09	0.00E+00	0.00E+00	0.00E+00	1.38E-07	2.01E-05	0.00E+00	6.19E-09	0.00E+00	0.00E+00	8.14E-07	0.00E+00	0.00E+00	2.01E-05
4168	ALL	746603.42	4040169.72	NonCancerChronicDerive	0.00E+00	1.93E-09	0.00E+00	0.00E+00	0.00E+00	1.39E-07	2.03E-05	0.00E+00	6.26E-09	0.00E+00	0.00E+00	8.23E-07	0.00E+00	0.00E+00	2.03E-05
4169	ALL	746617.4	4040169.94	NonCancerChronicDerive	0.00E+00	1.94E-09	0.00E+00	0.00E+00	0.00E+00	1.40E-07	2.03E-05	0.00E+00	6.28E-09	0.00E+00	0.00E+00	8.25E-07	0.00E+00	0.00E+00	2.03E-05
4170	ALL	746619.21	4040066.32	NonCancerChronicDerive	0.00E+00	1.86E-09	0.00E+00	0.00E+00	0.00E+00	1.35E-07	1.96E-05	0.00E+00	6.02E-09	0.00E+00	0.00E+00	7.91E-07	0.00E+00	0.00E+00	1.96E-05
4171	ALL	746619.25	4040065.57	NonCancerChronicDerive	0.00E+00	1.86E-09	0.00E+00	0.00E+00	0.00E+00	1.35E-07	1.96E-05	0.00E+00	6.01E-09	0.00E+00	0.00E+00	7.91E-07	0.00E+00	0.00E+00	1.96E-05
4172	ALL	746566.34	4040064.96	NonCancerChronicDerive	0.00E+00	1.84E-09	0.00E+00	0.00E+00	0.00E+00	1.33E-07	1.94E-05	0.00E+00	5.95E-09	0.00E+00	0.00E+00	7.83E-07	0.00E+00	0.00E+00	1.94E-05
4173	ALL	746573	4039885.4	NonCancerChronicDerive	0.00E+00	1.77E-09	0.00E+00	0.00E+00	0.00E+00	1.29E-07	1.88E-05	0.00E+00	5.72E-09	0.00E+00	0.00E+00	7.52E-07	0.00E+00	0.00E+00	1.88E-05
4174	ALL	748187.61	4039939.79	NonCancerChronicDerive	0.00E+00	4.90E-09	0.00E+00	0.00E+00	0.00E+00	3.34E-07	4.86E-05	0.00E+00	1.59E-08	0.00E+00	0.00E+00	2.09E-06	0.00E+00	0.00E+00	4.86E-05
4175	ALL	748269.93	4036790.15	NonCancerChronicDerive	0.00E+00	2.44E-09	0.00E+00	0.00E+00	0.00E+00	2.26E-07	3.01E-05	0.00E+00	7.89E-09	0.00E+00	0.00E+00	1.04E-06	0.00E+00	0.00E+00	3.01E-05
4176	ALL	747485.7	4036764.65	NonCancerChronicDerive	0.00E+00	2.69E-09	0.00E+00	0.00E+00	0.00E+00	4.37E-07	5.05E-05	0.00E+00	8.69E-09	0.00E+00	0.00E+00	1.14E-06	0.00E+00	0.00E+00	5.05E-05
4177	ALL	747441.54	4037774.89	NonCancerChronicDerive	0.00E+00	1.76E-09	0.00E+00	0.00E+00	0.00E+00	1.40E-07	1.95E-05	0.00E+00	5.68E-09	0.00E+00	0.00E+00	7.47E-07	0.00E+00	0.00E+00	1.95E-05
4178	ALL	746636.18	4037748.26	NonCancerChronicDerive	0.00E+00	2.06E-09	0.00E+00	0.00E+00	0.00E+00	1.73E-07	2.37E-05	0.00E+00	6.66E-09	0.00E+00	0.00E+00	8.76E-07	0.00E+00	0.00E+00	2.37E-05
4179	ALL	746670.69	4036745.26	NonCancerChronicDerive	0.00E+00	6.19E-09	0.00E+00	0.00E+00	0.00E+00	5.38E-07	7.22E-05	0.00E+00	2.00E-08	0.00E+00	0.00E+00	2.64E-06	0.00E+00	0.00E+00	7.22E-05
4180	ALL	745738.29	4036714.6	NonCancerChronicDerive	0.00E+00	3.76E-09	0.00E+00	0.00E+00	0.00E+00	2.73E-07	3.92E-05	0.00E+00	1.22E-08	0.00E+00	0.00E+00	1.60E-06	0.00E+00	0.00E+00	3.92E-05
4181	ALL	738770.04	4036473.6	NonCancerChronicDerive	0.00E+00	1.06E-09	0.00E+00	0.00E+00	0.00E+00	7.32E-08	1.05E-05	0.00E+00	3.44E-09	0.00E+00	0.00E+00	4.53E-07	0.00E+00	0.00E+00	1.05E-05
4182	ALL	738439.61	4036664.66	NonCancerChronicDerive	0.00E+00	1.02E-09	0.00E+00	0.00E+00	0.00E+00	7.07E-08	1.01E-05	0.00E+00	3.32E-09	0.00E+00	0.00E+00	4.36E-07	0.00E+00	0.00E+00	1.01E-05
4183	ALL	737829.88	4035658.81	NonCancerChronicDerive	0.00E+00	1.17E-09	0.00E+00	0.00E+00	0.00E+00	8.07E-08	1.15E-05	0.00E+00	3.78E-09	0.00E+00	0.00E+00	4.97E-07	0.00E+00	0.00E+00	1.15E-05
4184	ALL	737743.73	4035513.27	NonCancerChronicDerive	0.00E+00	1.19E-09	0.00E+00	0.00E+00	0.00E+00	8.27E-08	1.17E-05	0.00E+00	3.87E-09	0.00E+00	0.00E+00	5.08E-07	0.00E+00	0.00E+00	1.17E-05
4185	ALL	737022.12	4035512.85	NonCancerChronicDerive	0.00E+00	1.19E-09	0.00E+00	0.00E+00	0.00E+00	8.34E-08	1.18E-05	0.00E+00	3.86E-09	0.00E+00	0.00E+00	5.08E-07	0.00E+00	0.00E+00	1.18E-05

4186	ALL	735339.16	4035512.23	NonCancerChronicDerive	0.00E+00	1.16E-09	0.00E+00	0.00E+00	0.00E+00	8.61E-08	1.20E-05	0.00E+00	3.75E-09	0.00E+00	0.00E+00	4.93E-07	0.00E+00	0.00E+00	1.20E-05
4187	ALL	734620.84	4034828.06	NonCancerChronicDerive	0.00E+00	1.65E-09	0.00E+00	0.00E+00	0.00E+00	1.35E-07	1.85E-05	0.00E+00	5.33E-09	0.00E+00	0.00E+00	7.01E-07	0.00E+00	0.00E+00	1.85E-05
4188	ALL	734199.14	4034810.78	NonCancerChronicDerive	0.00E+00	1.64E-09	0.00E+00	0.00E+00	0.00E+00	1.43E-07	1.92E-05	0.00E+00	5.30E-09	0.00E+00	0.00E+00	6.96E-07	0.00E+00	0.00E+00	1.92E-05
4189	ALL	734063.26	4034590.76	NonCancerChronicDerive	0.00E+00	2.16E-09	0.00E+00	0.00E+00	0.00E+00	2.12E-07	2.77E-05	0.00E+00	6.99E-09	0.00E+00	0.00E+00	9.19E-07	0.00E+00	0.00E+00	2.77E-05
4190	ALL	733671.38	4034584.06	NonCancerChronicDerive	0.00E+00	2.56E-09	0.00E+00	0.00E+00	0.00E+00	2.61E-07	3.33E-05	0.00E+00	8.28E-09	0.00E+00	0.00E+00	1.09E-06	0.00E+00	0.00E+00	3.33E-05
4191	ALL	733670.9	4034611.62	NonCancerChronicDerive	0.00E+00	2.44E-09	0.00E+00	0.00E+00	0.00E+00	2.42E-07	3.10E-05	0.00E+00	7.91E-09	0.00E+00	0.00E+00	1.04E-06	0.00E+00	0.00E+00	3.10E-05
4192	ALL	733666.71	4034642.68	NonCancerChronicDerive	0.00E+00	2.34E-09	0.00E+00	0.00E+00	0.00E+00	2.25E-07	2.90E-05	0.00E+00	7.56E-09	0.00E+00	0.00E+00	9.94E-07	0.00E+00	0.00E+00	2.90E-05
4193	ALL	732743.17	4034617.72	NonCancerChronicDerive	0.00E+00	9.14E-09	0.00E+00	0.00E+00	0.00E+00	6.67E-07	9.50E-05	0.00E+00	2.96E-08	0.00E+00	0.00E+00	3.89E-06	0.00E+00	0.00E+00	9.50E-05
4194	ALL	732071.45	4034437.21	NonCancerChronicDerive	0.00E+00	2.99E-09	0.00E+00	0.00E+00	0.00E+00	2.15E-07	3.09E-05	0.00E+00	9.67E-09	0.00E+00	0.00E+00	1.27E-06	0.00E+00	0.00E+00	3.09E-05
4195	ALL	732076.37	4034271.51	NonCancerChronicDerive	0.00E+00	2.81E-09	0.00E+00	0.00E+00	0.00E+00	2.02E-07	2.92E-05	0.00E+00	9.09E-09	0.00E+00	0.00E+00	1.20E-06	0.00E+00	0.00E+00	2.92E-05
4196	ALL	732081.29	4034105.8	NonCancerChronicDerive	0.00E+00	2.91E-09	0.00E+00	0.00E+00	0.00E+00	2.03E-07	2.94E-05	0.00E+00	9.43E-09	0.00E+00	0.00E+00	1.24E-06	0.00E+00	0.00E+00	2.94E-05
4197	ALL	732086.21	4033940.1	NonCancerChronicDerive	0.00E+00	2.94E-09	0.00E+00	0.00E+00	0.00E+00	1.99E-07	2.89E-05	0.00E+00	9.52E-09	0.00E+00	0.00E+00	1.25E-06	0.00E+00	0.00E+00	2.89E-05
4198	ALL	732269.08	4033779.95	NonCancerChronicDerive	0.00E+00	2.41E-09	0.00E+00	0.00E+00	0.00E+00	1.74E-07	2.54E-05	0.00E+00	7.80E-09	0.00E+00	0.00E+00	1.02E-06	0.00E+00	0.00E+00	2.54E-05
4199	ALL	732447.04	4033785.5	NonCancerChronicDerive	0.00E+00	2.33E-09	0.00E+00	0.00E+00	0.00E+00	1.76E-07	2.54E-05	0.00E+00	7.55E-09	0.00E+00	0.00E+00	9.93E-07	0.00E+00	0.00E+00	2.54E-05
4200	ALL	732624.99	4033791.04	NonCancerChronicDerive	0.00E+00	2.39E-09	0.00E+00	0.00E+00	0.00E+00	1.84E-07	2.62E-05	0.00E+00	7.73E-09	0.00E+00	0.00E+00	1.02E-06	0.00E+00	0.00E+00	2.62E-05
4201	ALL	732802.94	4033796.59	NonCancerChronicDerive	0.00E+00	2.75E-09	0.00E+00	0.00E+00	0.00E+00	2.09E-07	2.96E-05	0.00E+00	8.91E-09	0.00E+00	0.00E+00	1.17E-06	0.00E+00	0.00E+00	2.96E-05
4202	ALL	732980.9	4033802.14	NonCancerChronicDerive	0.00E+00	3.81E-09	0.00E+00	0.00E+00	0.00E+00	2.77E-07	3.94E-05	0.00E+00	1.23E-08	0.00E+00	0.00E+00	1.62E-06	0.00E+00	0.00E+00	3.94E-05
4203	ALL	733158.85	4033807.69	NonCancerChronicDerive	0.00E+00	6.31E-09	0.00E+00	0.00E+00	0.00E+00	4.47E-07	6.43E-05	0.00E+00	2.04E-08	0.00E+00	0.00E+00	2.69E-06	0.00E+00	0.00E+00	6.43E-05
4204	ALL	733336.8	4033813.23	NonCancerChronicDerive	0.00E+00	2.89E-08	0.00E+00	0.00E+00	0.00E+00	1.87E-06	2.83E-04	0.00E+00	9.37E-08	0.00E+00	0.00E+00	1.23E-05	0.00E+00	0.00E+00	2.83E-04
4205	ALL	733514.76	4033818.78	NonCancerChronicDerive	0.00E+00	1.08E-07	0.00E+00	0.00E+00	0.00E+00	6.80E-06	1.01E-03	0.00E+00	3.49E-07	0.00E+00	0.00E+00	4.59E-05	0.00E+00	0.00E+00	1.01E-03
4206	ALL	733688.04	4033992.07	NonCancerChronicDerive	0.00E+00	7.30E-08	0.00E+00	0.00E+00	0.00E+00	5.08E-06	7.20E-04	0.00E+00	2.36E-07	0.00E+00	0.00E+00	3.11E-05	0.00E+00	0.00E+00	7.20E-04
4207	ALL	733683.38	4034159.81	NonCancerChronicDerive	0.00E+00	1.65E-08	0.00E+00	0.00E+00	0.00E+00	1.93E-06	2.41E-04	0.00E+00	5.34E-08	0.00E+00	0.00E+00	7.02E-06	0.00E+00	0.00E+00	2.41E-04
4208	ALL	733678.71	4034327.55	NonCancerChronicDerive	0.00E+00	4.59E-09	0.00E+00	0.00E+00	0.00E+00	9.07E-07	1.02E-04	0.00E+00	1.48E-08	0.00E+00	0.00E+00	1.95E-06	0.00E+00	0.00E+00	1.02E-04
4209	ALL	733819.4	4034492.64	NonCancerChronicDerive	0.00E+00	2.71E-09	0.00E+00	0.00E+00	0.00E+00	3.24E-07	4.00E-05	0.00E+00	8.77E-09	0.00E+00	0.00E+00	1.15E-06	0.00E+00	0.00E+00	4.00E-05
4210	ALL	733964.77	4034489.98	NonCancerChronicDerive	0.00E+00	2.61E-09	0.00E+00	0.00E+00	0.00E+00	2.89E-07	3.66E-05	0.00E+00	8.45E-09	0.00E+00	0.00E+00	1.11E-06	0.00E+00	0.00E+00	3.66E-05
4211	ALL	734183.69	4034591.77	NonCancerChronicDerive	0.00E+00	2.15E-09	0.00E+00	0.00E+00	0.00E+00	2.04E-07	2.69E-05	0.00E+00	6.97E-09	0.00E+00	0.00E+00	9.17E-07	0.00E+00	0.00E+00	2.69E-05
4212	ALL	734442.57	4034700.1	NonCancerChronicDerive	0.00E+00	1.87E-09	0.00E+00	0.00E+00	0.00E+00	1.61E-07	2.18E-05	0.00E+00	6.06E-09	0.00E+00	0.00E+00	7.97E-07	0.00E+00	0.00E+00	2.18E-05
4213	ALL	734755.28	4034825.16	NonCancerChronicDerive	0.00E+00	1.66E-09	0.00E+00	0.00E+00	0.00E+00	1.34E-07	1.84E-05	0.00E+00	5.36E-09	0.00E+00	0.00E+00	7.05E-07	0.00E+00	0.00E+00	1.84E-05
4214	ALL	734882.66	4034946.32	NonCancerChronicDerive	0.00E+00	1.50E-09	0.00E+00	0.00E+00	0.00E+00	1.18E-07	1.64E-05	0.00E+00	4.87E-09	0.00E+00	0.00E+00	6.40E-07	0.00E+00	0.00E+00	1.64E-05
4215	ALL	735010.03	4035067.49	NonCancerChronicDerive	0.00E+00	1.40E-09	0.00E+00	0.00E+00	0.00E+00	1.08E-07	1.50E-05	0.00E+00	4.52E-09	0.00E+00	0.00E+00	5.95E-07	0.00E+00	0.00E+00	1.50E-05
4216	ALL	735137.4	4035188.66	NonCancerChronicDerive	0.00E+00	1.32E-09	0.00E+00	0.00E+00	0.00E+00	9.97E-08	1.39E-05	0.00E+00	4.26E-09	0.00E+00	0.00E+00	5.60E-07	0.00E+00	0.00E+00	1.39E-05
4217	ALL	735264.78	4035309.82	NonCancerChronicDerive	0.00E+00	1.25E-09	0.00E+00	0.00E+00	0.00E+00	9.35E-08	1.31E-05	0.00E+00	4.04E-09	0.00E+00	0.00E+00	5.31E-07	0.00E+00	0.00E+00	1.31E-05
4218	ALL	735578.02	4035430.92	NonCancerChronicDerive	0.00E+00	1.20E-09	0.00E+00	0.00E+00	0.00E+00	8.81E-08	1.23E-05	0.00E+00	3.89E-09	0.00E+00	0.00E+00	5.11E-07	0.00E+00	0.00E+00	1.23E-05
4219	ALL	735763.88	4035430.85	NonCancerChronicDerive	0.00E+00	1.20E-09	0.00E+00	0.00E+00	0.00E+00	8.74E-08	1.22E-05	0.00E+00	3.89E-09	0.00E+00	0.00E+00	5.12E-07	0.00E+00	0.00E+00	1.22E-05
4220	ALL	735949.75	4035430.78	NonCancerChronicDerive	0.00E+00	1.20E-09	0.00E+00	0.00E+00	0.00E+00	8.69E-08	1.22E-05	0.00E+00	3.90E-09	0.00E+00	0.00E+00	5.13E-07	0.00E+00	0.00E+00	1.22E-05
4221	ALL	736135.62	4035430.71	NonCancerChronicDerive	0.00E+00	1.21E-09	0.00E+00	0.00E+00	0.00E+00	8.65E-08	1.21E-05	0.00E+00	3.91E-09	0.00E+00	0.00E+00	5.14E-07	0.00E+00	0.00E+00	1.21E-05
4222	ALL	736321.48	4035430.64	NonCancerChronicDerive	0.00E+00	1.21E-09	0.00E+00	0.00E+00	0.00E+00	8.61E-08	1.21E-05	0.00E+00	3.91E-09	0.00E+00	0.00E+00	5.14E-07	0.00E+00	0.00E+00	1.21E-05
4223	ALL	736507.35	4035430.57	NonCancerChronicDerive	0.00E+00	1.21E-09	0.00E+00	0.00E+00	0.00E+00	8.58E-08	1.21E-05	0.00E+00	3.92E-09	0.00E+00	0.00E+00	5.15E-07	0.00E+00	0.00E+00	1.21E-05
4224	ALL	736693.22	4035430.51	NonCancerChronicDerive	0.00E+00	1.21E-09	0.00E+00	0.00E+00	0.00E+00	8.55E-08	1.20E-05	0.00E+00	3.92E-09	0.00E+00	0.00E+00	5.16E-07	0.00E+00	0.00E+00	1.20E-05
4225	ALL	736879.09	4035430.44	NonCancerChronicDerive	0.00E+00	1.21E-09	0.00E+00	0.00E+00	0.00E+00	8.52E-08	1.20E-05	0.00E+00	3.93E-09	0.00E+00	0.00E+00	5.16E-07	0.00E+00	0.00E+00	1.20E-05
4226	ALL	737064.95	4035430.37	NonCancerChronicDerive	0.00E+00	1.21E-09	0.00E+00	0.00E+00	0.00E+00	8.49E-08	1.20E-05	0.00E+00	3.93E-09	0.00E+00	0.00E+00	5.16E-07	0.00E+00	0.00E+00	1.20E-05
4227	ALL	737250.82	4035430.3	NonCancerChronicDerive	0.00E+00	1.21E-09	0.00E+00	0.00E+00	0.00E+00	8.46E-08	1.19E-05	0.00E+00	3.93E-09	0.00E+00	0.00E+00	5.16E-07	0.00E+00	0.00E+00	1.19E-05
4228	ALL	737436.69	4035430.23	NonCancerChronicDerive	0.00E+00	1.21E-09	0.00E+00	0.00E+00	0.00E+00	8.43E-08	1.19E-05	0.00E+00	3.92E-09	0.00E+00	0.00E+00	5.16E-07	0.00E+00	0.00E+00	1.19E-05
4229	ALL	737622.55	4035430.16	NonCancerChronicDerive	0.00E+00	1.21E-09	0.00E+00	0.00E+00	0.00E+00	8.41E-08	1.19E-05	0.00E+00	3.92E-09	0.00E+00	0.00E+00	5.15E-07	0.00E+00	0.00E+00	1.19E-05
4230	ALL	737902.24	4035588.81	NonCancerChronicDerive	0.00E+00	1.18E-09	0.00E+00	0.00E+00	0.00E+00	8.16E-08	1.16E-05	0.00E+00	3.82E-09	0.00E+00	0.00E+00	5.02E-07	0.00E+00	0.00E+00	1.16E-05
4231	ALL	737996.07	4035747.53	NonCancerChronicDerive	0.00E+00	1.16E-09	0.00E+00	0.00E+00	0.00E+00	7.96E-08	1.13E-05	0.00E+00	3.74E-09	0.00E+00	0.00E+00	4.92E-07	0.00E+00	0.00E+00	1.13E-05
4232	ALL	738089.89	4035906.25	NonCancerChronicDerive	0.00E+00	1.13E-09	0.00E+00	0.00E+00	0.00E+00	7.78E-08	1.11E-05	0.00E+00	3.66E-09	0.00E+00	0.00E+00	4.81E-07	0.00E+00	0.00E+00	1.11E-05
4233	ALL	738183.72	4036064.96	NonCancerChronicDerive	0.00E+00	1.11E-09	0.00E+00	0.00E+00	0.00E+00	7.61E-08	1.09E-05	0.00E+00	3.58E-09	0.00E+00	0.00E+00	4.71E-07	0.00E+00	0.00E+00	1.09E-05
4234	ALL	738277.54	4036223.68	NonCancerChronicDerive	0.00E+00	1.08E-09	0.00E+00	0.00E+00	0.00E+00	7.45E-08	1.06E-05	0.00E+00	3.50E-09	0.00E+00	0.00E+00	4.61E-07	0.00E+00	0.00E+00	1.06E-05
4235	ALL	738371.37	4036382.4	NonCancerChronicDerive	0.00E+00	1.06E-09	0.00E+00	0.00E+00	0.00E+00	7.30E-08	1.04E-05	0.00E+00	3.43E-09	0.00E+00	0.00E+00	4.51E-07	0.00E+00	0.00E+00	1.04E-05
4236	ALL	738607.79	4036460.71	NonCancerChronicDerive	0.00E+00	1.06E-09	0.00E+00	0.00E+00	0.00E+00	7.29E-08	1.04E-05	0.00E+00	3.43E-09	0.00E+00	0.00E+00	4.51E-07	0.00E+00	0.00E+00	1.04E-05
4237	ALL	738945.63	4036387.31	NonCancerChronicDerive	0.00E+00	1.08E-09	0.00E+00	0.00E+00	0.00E+00	7.43E-08	1.06E-05	0.00E+00	3.50E-09	0.00E+00	0.00E+00	4.60E-07	0.00E+00	0.00E+00	1.06E-05
4238	ALL	739140.87	4036394.3	NonCancerChronicDerive	0.00E+00	1.08E-09	0.00E+00	0.00E+00	0.00E+00	7.46E-08	1.07E-05	0.00E+00	3.51E-09	0.00E+00	0.00E+00	4.61E-07	0.00E+00	0.00E+00	1.07E-05

4239	ALL	739336.11	4036401.3	NonCancerChronicDerive	0.00E+00	1.09E-09	0.00E+00	0.00E+00	0.00E+00	7.49E-08	1.07E-05	0.00E+00	3.52E-09	0.00E+00	0.00E+00	4.63E-07	0.00E+00	0.00E+00	1.07E-05
4240	ALL	739531.35	4036408.29	NonCancerChronicDerive	0.00E+00	1.09E-09	0.00E+00	0.00E+00	0.00E+00	7.51E-08	1.08E-05	0.00E+00	3.52E-09	0.00E+00	0.00E+00	4.63E-07	0.00E+00	0.00E+00	1.08E-05
4241	ALL	739726.59	4036415.29	NonCancerChronicDerive	0.00E+00	1.09E-09	0.00E+00	0.00E+00	0.00E+00	7.53E-08	1.08E-05	0.00E+00	3.53E-09	0.00E+00	0.00E+00	4.64E-07	0.00E+00	0.00E+00	1.08E-05
4242	ALL	739921.83	4036422.28	NonCancerChronicDerive	0.00E+00	1.09E-09	0.00E+00	0.00E+00	0.00E+00	7.56E-08	1.09E-05	0.00E+00	3.54E-09	0.00E+00	0.00E+00	4.65E-07	0.00E+00	0.00E+00	1.09E-05
4243	ALL	740117.07	4036429.28	NonCancerChronicDerive	0.00E+00	1.10E-09	0.00E+00	0.00E+00	0.00E+00	7.61E-08	1.09E-05	0.00E+00	3.55E-09	0.00E+00	0.00E+00	4.67E-07	0.00E+00	0.00E+00	1.09E-05
4244	ALL	740312.31	4036436.27	NonCancerChronicDerive	0.00E+00	1.10E-09	0.00E+00	0.00E+00	0.00E+00	7.63E-08	1.10E-05	0.00E+00	3.55E-09	0.00E+00	0.00E+00	4.67E-07	0.00E+00	0.00E+00	1.10E-05
4245	ALL	740507.54	4036443.27	NonCancerChronicDerive	0.00E+00	1.10E-09	0.00E+00	0.00E+00	0.00E+00	7.68E-08	1.10E-05	0.00E+00	3.57E-09	0.00E+00	0.00E+00	4.69E-07	0.00E+00	0.00E+00	1.10E-05
4246	ALL	740702.78	4036450.26	NonCancerChronicDerive	0.00E+00	1.11E-09	0.00E+00	0.00E+00	0.00E+00	7.75E-08	1.11E-05	0.00E+00	3.60E-09	0.00E+00	0.00E+00	4.73E-07	0.00E+00	0.00E+00	1.11E-05
4247	ALL	740898.02	4036457.26	NonCancerChronicDerive	0.00E+00	1.12E-09	0.00E+00	0.00E+00	0.00E+00	7.81E-08	1.12E-05	0.00E+00	3.62E-09	0.00E+00	0.00E+00	4.76E-07	0.00E+00	0.00E+00	1.12E-05
4248	ALL	741093.26	4036464.25	NonCancerChronicDerive	0.00E+00	1.13E-09	0.00E+00	0.00E+00	0.00E+00	7.90E-08	1.14E-05	0.00E+00	3.66E-09	0.00E+00	0.00E+00	4.81E-07	0.00E+00	0.00E+00	1.14E-05
4249	ALL	741288.5	4036471.25	NonCancerChronicDerive	0.00E+00	1.14E-09	0.00E+00	0.00E+00	0.00E+00	7.99E-08	1.15E-05	0.00E+00	3.69E-09	0.00E+00	0.00E+00	4.85E-07	0.00E+00	0.00E+00	1.15E-05
4250	ALL	741483.74	4036478.24	NonCancerChronicDerive	0.00E+00	1.15E-09	0.00E+00	0.00E+00	0.00E+00	8.10E-08	1.16E-05	0.00E+00	3.73E-09	0.00E+00	0.00E+00	4.91E-07	0.00E+00	0.00E+00	1.16E-05
4251	ALL	741678.98	4036485.24	NonCancerChronicDerive	0.00E+00	1.17E-09	0.00E+00	0.00E+00	0.00E+00	8.22E-08	1.18E-05	0.00E+00	3.78E-09	0.00E+00	0.00E+00	4.97E-07	0.00E+00	0.00E+00	1.18E-05
4252	ALL	741874.22	4036492.23	NonCancerChronicDerive	0.00E+00	1.19E-09	0.00E+00	0.00E+00	0.00E+00	8.35E-08	1.20E-05	0.00E+00	3.84E-09	0.00E+00	0.00E+00	5.04E-07	0.00E+00	0.00E+00	1.20E-05
4253	ALL	742258.53	4036505.09	NonCancerChronicDerive	0.00E+00	1.23E-09	0.00E+00	0.00E+00	0.00E+00	8.68E-08	1.25E-05	0.00E+00	3.97E-09	0.00E+00	0.00E+00	5.22E-07	0.00E+00	0.00E+00	1.25E-05
4254	ALL	742447.6	4036510.96	NonCancerChronicDerive	0.00E+00	1.26E-09	0.00E+00	0.00E+00	0.00E+00	8.91E-08	1.28E-05	0.00E+00	4.07E-09	0.00E+00	0.00E+00	5.35E-07	0.00E+00	0.00E+00	1.28E-05
4255	ALL	742636.68	4036516.82	NonCancerChronicDerive	0.00E+00	1.29E-09	0.00E+00	0.00E+00	0.00E+00	9.16E-08	1.32E-05	0.00E+00	4.18E-09	0.00E+00	0.00E+00	5.49E-07	0.00E+00	0.00E+00	1.32E-05
4256	ALL	742825.75	4036522.69	NonCancerChronicDerive	0.00E+00	1.33E-09	0.00E+00	0.00E+00	0.00E+00	9.45E-08	1.36E-05	0.00E+00	4.31E-09	0.00E+00	0.00E+00	5.66E-07	0.00E+00	0.00E+00	1.36E-05
4257	ALL	743014.82	4036528.55	NonCancerChronicDerive	0.00E+00	1.37E-09	0.00E+00	0.00E+00	0.00E+00	9.77E-08	1.41E-05	0.00E+00	4.45E-09	0.00E+00	0.00E+00	5.85E-07	0.00E+00	0.00E+00	1.41E-05
4258	ALL	743203.89	4036534.41	NonCancerChronicDerive	0.00E+00	1.42E-09	0.00E+00	0.00E+00	0.00E+00	1.01E-07	1.46E-05	0.00E+00	4.60E-09	0.00E+00	0.00E+00	6.05E-07	0.00E+00	0.00E+00	1.46E-05
4259	ALL	743392.96	4036540.28	NonCancerChronicDerive	0.00E+00	1.47E-09	0.00E+00	0.00E+00	0.00E+00	1.05E-07	1.52E-05	0.00E+00	4.77E-09	0.00E+00	0.00E+00	6.27E-07	0.00E+00	0.00E+00	1.52E-05
4260	ALL	743582.03	4036546.14	NonCancerChronicDerive	0.00E+00	1.53E-09	0.00E+00	0.00E+00	0.00E+00	1.09E-07	1.58E-05	0.00E+00	4.95E-09	0.00E+00	0.00E+00	6.51E-07	0.00E+00	0.00E+00	1.58E-05
4261	ALL	743771.11	4036552.01	NonCancerChronicDerive	0.00E+00	1.59E-09	0.00E+00	0.00E+00	0.00E+00	1.14E-07	1.64E-05	0.00E+00	5.14E-09	0.00E+00	0.00E+00	6.76E-07	0.00E+00	0.00E+00	1.64E-05
4262	ALL	743960.18	4036557.87	NonCancerChronicDerive	0.00E+00	1.65E-09	0.00E+00	0.00E+00	0.00E+00	1.19E-07	1.71E-05	0.00E+00	5.35E-09	0.00E+00	0.00E+00	7.03E-07	0.00E+00	0.00E+00	1.71E-05
4263	ALL	744149.25	4036563.74	NonCancerChronicDerive	0.00E+00	1.72E-09	0.00E+00	0.00E+00	0.00E+00	1.24E-07	1.79E-05	0.00E+00	5.57E-09	0.00E+00	0.00E+00	7.32E-07	0.00E+00	0.00E+00	1.79E-05
4264	ALL	744338.32	4036569.6	NonCancerChronicDerive	0.00E+00	1.79E-09	0.00E+00	0.00E+00	0.00E+00	1.30E-07	1.87E-05	0.00E+00	5.80E-09	0.00E+00	0.00E+00	7.63E-07	0.00E+00	0.00E+00	1.87E-05
4265	ALL	744527.39	4036575.46	NonCancerChronicDerive	0.00E+00	1.88E-09	0.00E+00	0.00E+00	0.00E+00	1.37E-07	1.97E-05	0.00E+00	6.07E-09	0.00E+00	0.00E+00	7.98E-07	0.00E+00	0.00E+00	1.97E-05
4266	ALL	744716.46	4036581.33	NonCancerChronicDerive	0.00E+00	1.97E-09	0.00E+00	0.00E+00	0.00E+00	1.45E-07	2.08E-05	0.00E+00	6.39E-09	0.00E+00	0.00E+00	8.40E-07	0.00E+00	0.00E+00	2.08E-05
4267	ALL	744905.54	4036587.19	NonCancerChronicDerive	0.00E+00	2.10E-09	0.00E+00	0.00E+00	0.00E+00	1.55E-07	2.22E-05	0.00E+00	6.79E-09	0.00E+00	0.00E+00	8.92E-07	0.00E+00	0.00E+00	2.22E-05
4268	ALL	745094.61	4036593.06	NonCancerChronicDerive	0.00E+00	2.26E-09	0.00E+00	0.00E+00	0.00E+00	1.67E-07	2.39E-05	0.00E+00	7.30E-09	0.00E+00	0.00E+00	9.60E-07	0.00E+00	0.00E+00	2.39E-05
4269	ALL	745482.29	4036607.64	NonCancerChronicDerive	0.00E+00	2.79E-09	0.00E+00	0.00E+00	0.00E+00	2.06E-07	2.95E-05	0.00E+00	9.03E-09	0.00E+00	0.00E+00	1.19E-06	0.00E+00	0.00E+00	2.95E-05
4270	ALL	745680.9	4036616.35	NonCancerChronicDerive	0.00E+00	3.26E-09	0.00E+00	0.00E+00	0.00E+00	2.40E-07	3.43E-05	0.00E+00	1.05E-08	0.00E+00	0.00E+00	1.39E-06	0.00E+00	0.00E+00	3.43E-05
4271	ALL	745879.51	4036625.07	NonCancerChronicDerive	0.00E+00	4.02E-09	0.00E+00	0.00E+00	0.00E+00	2.92E-07	4.20E-05	0.00E+00	1.30E-08	0.00E+00	0.00E+00	1.71E-06	0.00E+00	0.00E+00	4.20E-05
4272	ALL	746078.13	4036633.79	NonCancerChronicDerive	0.00E+00	5.21E-09	0.00E+00	0.00E+00	0.00E+00	3.73E-07	5.38E-05	0.00E+00	1.69E-08	0.00E+00	0.00E+00	2.22E-06	0.00E+00	0.00E+00	5.38E-05
4273	ALL	746276.74	4036642.51	NonCancerChronicDerive	0.00E+00	6.96E-09	0.00E+00	0.00E+00	0.00E+00	4.89E-07	7.08E-05	0.00E+00	2.25E-08	0.00E+00	0.00E+00	2.96E-06	0.00E+00	0.00E+00	7.08E-05
4274	ALL	746475.35	4036651.22	NonCancerChronicDerive	0.00E+00	8.80E-09	0.00E+00	0.00E+00	0.00E+00	6.16E-07	8.90E-05	0.00E+00	2.85E-08	0.00E+00	0.00E+00	3.74E-06	0.00E+00	0.00E+00	8.90E-05
4275	ALL	746680.78	4036500.01	NonCancerChronicDerive	0.00E+00	1.25E-08	0.00E+00	0.00E+00	0.00E+00	8.61E-07	1.26E-04	0.00E+00	4.05E-08	0.00E+00	0.00E+00	5.32E-06	0.00E+00	0.00E+00	1.26E-04
4276	ALL	746687.6	4036340.07	NonCancerChronicDerive	0.00E+00	1.25E-08	0.00E+00	0.00E+00	0.00E+00	8.44E-07	1.25E-04	0.00E+00	4.06E-08	0.00E+00	0.00E+00	5.34E-06	0.00E+00	0.00E+00	1.25E-04
4277	ALL	746694.43	4036180.14	NonCancerChronicDerive	0.00E+00	7.41E-09	0.00E+00	0.00E+00	0.00E+00	5.21E-07	7.57E-05	0.00E+00	2.40E-08	0.00E+00	0.00E+00	3.15E-06	0.00E+00	0.00E+00	7.57E-05
4278	ALL	746701.25	4036020.2	NonCancerChronicDerive	0.00E+00	5.19E-09	0.00E+00	0.00E+00	0.00E+00	3.76E-07	5.35E-05	0.00E+00	1.68E-08	0.00E+00	0.00E+00	2.21E-06	0.00E+00	0.00E+00	5.35E-05
4279	ALL	746869.56	4035864.69	NonCancerChronicDerive	0.00E+00	6.88E-09	0.00E+00	0.00E+00	0.00E+00	4.82E-07	6.96E-05	0.00E+00	2.23E-08	0.00E+00	0.00E+00	2.93E-06	0.00E+00	0.00E+00	6.96E-05
4280	ALL	747031.05	4035869.1	NonCancerChronicDerive	0.00E+00	1.24E-08	0.00E+00	0.00E+00	0.00E+00	8.45E-07	1.25E-04	0.00E+00	4.02E-08	0.00E+00	0.00E+00	5.29E-06	0.00E+00	0.00E+00	1.25E-04
4281	ALL	747192.53	4035873.52	NonCancerChronicDerive	0.00E+00	8.78E-08	0.00E+00	0.00E+00	0.00E+00	5.45E-06	8.36E-04	0.00E+00	2.84E-07	0.00E+00	0.00E+00	3.74E-05	0.00E+00	0.00E+00	8.36E-04
4282	ALL	747354.02	4035877.93	NonCancerChronicDerive	0.00E+00	1.53E-07	0.00E+00	0.00E+00	0.00E+00	9.42E-06	1.41E-03	0.00E+00	4.95E-07	0.00E+00	0.00E+00	6.50E-05	0.00E+00	0.00E+00	1.41E-03
4283	ALL	747519.68	4035721.11	NonCancerChronicDerive	0.00E+00	7.67E-08	0.00E+00	0.00E+00	0.00E+00	4.79E-06	7.00E-04	0.00E+00	2.48E-07	0.00E+00	0.00E+00	3.26E-05	0.00E+00	0.00E+00	7.00E-04
4284	ALL	747523.86	4035559.87	NonCancerChronicDerive	0.00E+00	4.62E-08	0.00E+00	0.00E+00	0.00E+00	2.91E-06	4.23E-04	0.00E+00	1.50E-07	0.00E+00	0.00E+00	1.97E-05	0.00E+00	0.00E+00	4.23E-04
4285	ALL	747528.03	4035398.64	NonCancerChronicDerive	0.00E+00	2.83E-08	0.00E+00	0.00E+00	0.00E+00	1.80E-06	2.60E-04	0.00E+00	9.15E-08	0.00E+00	0.00E+00	1.20E-05	0.00E+00	0.00E+00	2.60E-04
4286	ALL	747532.21	4035237.4	NonCancerChronicDerive	0.00E+00	1.88E-08	0.00E+00	0.00E+00	0.00E+00	1.21E-06	1.74E-04	0.00E+00	6.09E-08	0.00E+00	0.00E+00	8.00E-06	0.00E+00	0.00E+00	1.74E-04
4287	ALL	747697.57	4035084.17	NonCancerChronicDerive	0.00E+00	1.64E-08	0.00E+00	0.00E+00	0.00E+00	1.06E-06	1.52E-04	0.00E+00	5.32E-08	0.00E+00	0.00E+00	6.99E-06	0.00E+00	0.00E+00	1.52E-04
4288	ALL	747858.75	4035092.17	NonCancerChronicDerive	0.00E+00	1.86E-08	0.00E+00	0.00E+00	0.00E+00	1.20E-06	1.72E-04	0.00E+00	6.02E-08	0.00E+00	0.00E+00	7.92E-06	0.00E+00	0.00E+00	1.72E-04
4289	ALL	748019.94	4035100.18	NonCancerChronicDerive	0.00E+00	1.98E-08	0.00E+00	0.00E+00	0.00E+00	1.27E-06	1.82E-04	0.00E+00	6.40E-08	0.00E+00	0.00E+00	8.41E-06	0.00E+00	0.00E+00	1.82E-04
4290	ALL	748181.12	4035108.18	NonCancerChronicDerive	0.00E+00	1.98E-08	0.00E+00	0.00E+00	0.00E+00	1.27E-06	1.82E-04	0.00E+00	6.39E-08	0.00E+00	0.00E+00	8.40E-06	0.00E+00	0.00E+00	1.82E-04
4291	ALL	748338.82	4035295.07	NonCancerChronicDerive	0.00E+00	2.05E-08	0.00E+00	0.00E+00	0.00E+00	1.33E-06	1.89E-04	0.00E+00	6.63E-08	0.00E+00	0.00E+00	8.72E-06	0.00E+00	0.00E+00	1.89E-04

4292	ALL	748335.33	4035473.95	NonCancerChronicDerive	0.00E+00	2.03E-08	0.00E+00	0.00E+00	0.00E+00	1.33E-06	1.89E-04	0.00E+00	6.56E-08	0.00E+00	0.00E+00	8.62E-06	0.00E+00	0.00E+00	1.89E-04
4293	ALL	748331.84	4035652.82	NonCancerChronicDerive	0.00E+00	1.80E-08	0.00E+00	0.00E+00	0.00E+00	1.21E-06	1.70E-04	0.00E+00	5.82E-08	0.00E+00	0.00E+00	7.65E-06	0.00E+00	0.00E+00	1.70E-04
4294	ALL	748328.35	4035831.7	NonCancerChronicDerive	0.00E+00	1.44E-08	0.00E+00	0.00E+00	0.00E+00	1.01E-06	1.41E-04	0.00E+00	4.68E-08	0.00E+00	0.00E+00	6.15E-06	0.00E+00	0.00E+00	1.41E-04
4295	ALL	748324.86	4036010.58	NonCancerChronicDerive	0.00E+00	1.03E-08	0.00E+00	0.00E+00	0.00E+00	7.58E-07	1.05E-04	0.00E+00	3.33E-08	0.00E+00	0.00E+00	4.38E-06	0.00E+00	0.00E+00	1.05E-04
4296	ALL	748321.37	4036189.46	NonCancerChronicDerive	0.00E+00	6.64E-09	0.00E+00	0.00E+00	0.00E+00	5.29E-07	7.26E-05	0.00E+00	2.15E-08	0.00E+00	0.00E+00	2.83E-06	0.00E+00	0.00E+00	7.26E-05
4297	ALL	748317.88	4036368.33	NonCancerChronicDerive	0.00E+00	4.29E-09	0.00E+00	0.00E+00	0.00E+00	3.73E-07	5.05E-05	0.00E+00	1.39E-08	0.00E+00	0.00E+00	1.82E-06	0.00E+00	0.00E+00	5.05E-05
4298	ALL	748314.39	4036547.21	NonCancerChronicDerive	0.00E+00	3.11E-09	0.00E+00	0.00E+00	0.00E+00	2.86E-07	3.83E-05	0.00E+00	1.01E-08	0.00E+00	0.00E+00	1.32E-06	0.00E+00	0.00E+00	3.83E-05
4299	ALL	748510.48	4036731.26	NonCancerChronicDerive	0.00E+00	2.64E-09	0.00E+00	0.00E+00	0.00E+00	2.27E-07	3.09E-05	0.00E+00	8.54E-09	0.00E+00	0.00E+00	1.12E-06	0.00E+00	0.00E+00	3.09E-05
4300	ALL	748710.07	4036736.43	NonCancerChronicDerive	0.00E+00	2.77E-09	0.00E+00	0.00E+00	0.00E+00	2.26E-07	3.10E-05	0.00E+00	8.96E-09	0.00E+00	0.00E+00	1.18E-06	0.00E+00	0.00E+00	3.10E-05
4301	ALL	748909.65	4036741.6	NonCancerChronicDerive	0.00E+00	2.95E-09	0.00E+00	0.00E+00	0.00E+00	2.29E-07	3.19E-05	0.00E+00	9.55E-09	0.00E+00	0.00E+00	1.25E-06	0.00E+00	0.00E+00	3.19E-05
4302	ALL	749109.23	4036746.77	NonCancerChronicDerive	0.00E+00	3.15E-09	0.00E+00	0.00E+00	0.00E+00	2.35E-07	3.29E-05	0.00E+00	1.02E-08	0.00E+00	0.00E+00	1.34E-06	0.00E+00	0.00E+00	3.29E-05
4303	ALL	749308.81	4036751.95	NonCancerChronicDerive	0.00E+00	3.32E-09	0.00E+00	0.00E+00	0.00E+00	2.41E-07	3.40E-05	0.00E+00	1.08E-08	0.00E+00	0.00E+00	1.41E-06	0.00E+00	0.00E+00	3.40E-05
4304	ALL	749508.4	4036757.12	NonCancerChronicDerive	0.00E+00	3.48E-09	0.00E+00	0.00E+00	0.00E+00	2.47E-07	3.49E-05	0.00E+00	1.13E-08	0.00E+00	0.00E+00	1.48E-06	0.00E+00	0.00E+00	3.49E-05
4305	ALL	749707.98	4036762.29	NonCancerChronicDerive	0.00E+00	3.62E-09	0.00E+00	0.00E+00	0.00E+00	2.54E-07	3.59E-05	0.00E+00	1.17E-08	0.00E+00	0.00E+00	1.54E-06	0.00E+00	0.00E+00	3.59E-05
4306	ALL	749901.94	4036957.15	NonCancerChronicDerive	0.00E+00	3.82E-09	0.00E+00	0.00E+00	0.00E+00	2.64E-07	3.74E-05	0.00E+00	1.24E-08	0.00E+00	0.00E+00	1.63E-06	0.00E+00	0.00E+00	3.74E-05
4307	ALL	749896.32	4037146.84	NonCancerChronicDerive	0.00E+00	3.99E-09	0.00E+00	0.00E+00	0.00E+00	2.73E-07	3.87E-05	0.00E+00	1.29E-08	0.00E+00	0.00E+00	1.70E-06	0.00E+00	0.00E+00	3.87E-05
4308	ALL	749890.69	4037336.53	NonCancerChronicDerive	0.00E+00	4.25E-09	0.00E+00	0.00E+00	0.00E+00	2.88E-07	4.09E-05	0.00E+00	1.38E-08	0.00E+00	0.00E+00	1.81E-06	0.00E+00	0.00E+00	4.09E-05
4309	ALL	749885.07	4037526.22	NonCancerChronicDerive	0.00E+00	4.61E-09	0.00E+00	0.00E+00	0.00E+00	3.09E-07	4.41E-05	0.00E+00	1.49E-08	0.00E+00	0.00E+00	1.96E-06	0.00E+00	0.00E+00	4.41E-05
4310	ALL	749879.45	4037715.91	NonCancerChronicDerive	0.00E+00	5.08E-09	0.00E+00	0.00E+00	0.00E+00	3.39E-07	4.83E-05	0.00E+00	1.64E-08	0.00E+00	0.00E+00	2.16E-06	0.00E+00	0.00E+00	4.83E-05
4311	ALL	749873.83	4037905.6	NonCancerChronicDerive	0.00E+00	5.69E-09	0.00E+00	0.00E+00	0.00E+00	3.77E-07	5.38E-05	0.00E+00	1.84E-08	0.00E+00	0.00E+00	2.42E-06	0.00E+00	0.00E+00	5.38E-05
4312	ALL	749868.2	4038095.29	NonCancerChronicDerive	0.00E+00	6.47E-09	0.00E+00	0.00E+00	0.00E+00	4.27E-07	6.09E-05	0.00E+00	2.09E-08	0.00E+00	0.00E+00	2.75E-06	0.00E+00	0.00E+00	6.09E-05
4313	ALL	749862.58	4038284.98	NonCancerChronicDerive	0.00E+00	7.50E-09	0.00E+00	0.00E+00	0.00E+00	4.93E-07	7.03E-05	0.00E+00	2.43E-08	0.00E+00	0.00E+00	3.19E-06	0.00E+00	0.00E+00	7.03E-05
4314	ALL	749856.96	4038474.66	NonCancerChronicDerive	0.00E+00	8.87E-09	0.00E+00	0.00E+00	0.00E+00	5.81E-07	8.28E-05	0.00E+00	2.87E-08	0.00E+00	0.00E+00	3.78E-06	0.00E+00	0.00E+00	8.28E-05
4315	ALL	749851.34	4038664.35	NonCancerChronicDerive	0.00E+00	1.07E-08	0.00E+00	0.00E+00	0.00E+00	6.97E-07	9.93E-05	0.00E+00	3.46E-08	0.00E+00	0.00E+00	4.54E-06	0.00E+00	0.00E+00	9.93E-05
4316	ALL	749845.71	4038854.04	NonCancerChronicDerive	0.00E+00	1.29E-08	0.00E+00	0.00E+00	0.00E+00	8.44E-07	1.20E-04	0.00E+00	4.19E-08	0.00E+00	0.00E+00	5.51E-06	0.00E+00	0.00E+00	1.20E-04
4317	ALL	749840.09	4039043.73	NonCancerChronicDerive	0.00E+00	1.55E-08	0.00E+00	0.00E+00	0.00E+00	1.01E-06	1.44E-04	0.00E+00	5.01E-08	0.00E+00	0.00E+00	6.59E-06	0.00E+00	0.00E+00	1.44E-04
4318	ALL	749834.47	4039233.42	NonCancerChronicDerive	0.00E+00	1.77E-08	0.00E+00	0.00E+00	0.00E+00	1.17E-06	1.65E-04	0.00E+00	5.72E-08	0.00E+00	0.00E+00	7.52E-06	0.00E+00	0.00E+00	1.65E-04
4319	ALL	749828.85	4039423.11	NonCancerChronicDerive	0.00E+00	1.85E-08	0.00E+00	0.00E+00	0.00E+00	1.26E-06	1.77E-04	0.00E+00	6.00E-08	0.00E+00	0.00E+00	7.88E-06	0.00E+00	0.00E+00	1.77E-04
4320	ALL	749823.22	4039612.8	NonCancerChronicDerive	0.00E+00	1.74E-08	0.00E+00	0.00E+00	0.00E+00	1.29E-06	1.76E-04	0.00E+00	5.64E-08	0.00E+00	0.00E+00	7.41E-06	0.00E+00	0.00E+00	1.76E-04
4321	ALL	749817.6	4039802.49	NonCancerChronicDerive	0.00E+00	1.48E-08	0.00E+00	0.00E+00	0.00E+00	1.41E-06	1.80E-04	0.00E+00	4.80E-08	0.00E+00	0.00E+00	6.31E-06	0.00E+00	0.00E+00	1.80E-04
4322	ALL	750010.53	4040001.24	NonCancerChronicDerive	0.00E+00	8.81E-09	0.00E+00	0.00E+00	0.00E+00	1.57E-06	1.76E-04	0.00E+00	2.85E-08	0.00E+00	0.00E+00	3.75E-06	0.00E+00	0.00E+00	1.76E-04
4323	ALL	750209.08	4040010.31	NonCancerChronicDerive	0.00E+00	7.12E-09	0.00E+00	0.00E+00	0.00E+00	8.90E-07	1.07E-04	0.00E+00	2.30E-08	0.00E+00	0.00E+00	3.03E-06	0.00E+00	0.00E+00	1.07E-04
4324	ALL	750407.63	4040019.37	NonCancerChronicDerive	0.00E+00	5.93E-09	0.00E+00	0.00E+00	0.00E+00	6.17E-07	7.75E-05	0.00E+00	1.92E-08	0.00E+00	0.00E+00	2.52E-06	0.00E+00	0.00E+00	7.75E-05
4325	ALL	750606.19	4040028.44	NonCancerChronicDerive	0.00E+00	5.07E-09	0.00E+00	0.00E+00	0.00E+00	4.76E-07	6.15E-05	0.00E+00	1.64E-08	0.00E+00	0.00E+00	2.16E-06	0.00E+00	0.00E+00	6.15E-05
4326	ALL	750804.74	4040037.5	NonCancerChronicDerive	0.00E+00	4.41E-09	0.00E+00	0.00E+00	0.00E+00	3.89E-07	5.11E-05	0.00E+00	1.43E-08	0.00E+00	0.00E+00	1.88E-06	0.00E+00	0.00E+00	5.11E-05
4327	ALL	751003.29	4040046.56	NonCancerChronicDerive	0.00E+00	3.90E-09	0.00E+00	0.00E+00	0.00E+00	3.29E-07	4.39E-05	0.00E+00	1.26E-08	0.00E+00	0.00E+00	1.66E-06	0.00E+00	0.00E+00	4.39E-05
4328	ALL	751201.84	4040055.63	NonCancerChronicDerive	0.00E+00	3.49E-09	0.00E+00	0.00E+00	0.00E+00	2.86E-07	3.85E-05	0.00E+00	1.13E-08	0.00E+00	0.00E+00	1.49E-06	0.00E+00	0.00E+00	3.85E-05
4329	ALL	751407.26	4039883.98	NonCancerChronicDerive	0.00E+00	3.63E-09	0.00E+00	0.00E+00	0.00E+00	2.91E-07	3.93E-05	0.00E+00	1.17E-08	0.00E+00	0.00E+00	1.54E-06	0.00E+00	0.00E+00	3.93E-05
4330	ALL	751414.13	4039703.28	NonCancerChronicDerive	0.00E+00	4.12E-09	0.00E+00	0.00E+00	0.00E+00	3.29E-07	4.43E-05	0.00E+00	1.33E-08	0.00E+00	0.00E+00	1.75E-06	0.00E+00	0.00E+00	4.43E-05
4331	ALL	751421	4039522.57	NonCancerChronicDerive	0.00E+00	4.59E-09	0.00E+00	0.00E+00	0.00E+00	3.65E-07	4.91E-05	0.00E+00	1.48E-08	0.00E+00	0.00E+00	1.95E-06	0.00E+00	0.00E+00	4.91E-05
4332	ALL	751427.87	4039341.87	NonCancerChronicDerive	0.00E+00	5.02E-09	0.00E+00	0.00E+00	0.00E+00	3.98E-07	5.35E-05	0.00E+00	1.63E-08	0.00E+00	0.00E+00	2.14E-06	0.00E+00	0.00E+00	5.35E-05
4333	ALL	751434.75	4039161.16	NonCancerChronicDerive	0.00E+00	5.41E-09	0.00E+00	0.00E+00	0.00E+00	4.25E-07	5.71E-05	0.00E+00	1.75E-08	0.00E+00	0.00E+00	2.30E-06	0.00E+00	0.00E+00	5.71E-05
4334	ALL	751441.62	4038980.46	NonCancerChronicDerive	0.00E+00	5.75E-09	0.00E+00	0.00E+00	0.00E+00	4.44E-07	5.99E-05	0.00E+00	1.86E-08	0.00E+00	0.00E+00	2.45E-06	0.00E+00	0.00E+00	5.99E-05
4335	ALL	751448.49	4038799.75	NonCancerChronicDerive	0.00E+00	6.04E-09	0.00E+00	0.00E+00	0.00E+00	4.55E-07	6.18E-05	0.00E+00	1.95E-08	0.00E+00	0.00E+00	2.57E-06	0.00E+00	0.00E+00	6.18E-05
4336	ALL	751455.36	4038619.05	NonCancerChronicDerive	0.00E+00	6.25E-09	0.00E+00	0.00E+00	0.00E+00	4.59E-07	6.28E-05	0.00E+00	2.02E-08	0.00E+00	0.00E+00	2.66E-06	0.00E+00	0.00E+00	6.28E-05
4337	ALL	751649.37	4038446.89	NonCancerChronicDerive	0.00E+00	5.80E-09	0.00E+00	0.00E+00	0.00E+00	4.21E-07	5.79E-05	0.00E+00	1.88E-08	0.00E+00	0.00E+00	2.47E-06	0.00E+00	0.00E+00	5.79E-05
4338	ALL	751836.51	4038455.45	NonCancerChronicDerive	0.00E+00	5.31E-09	0.00E+00	0.00E+00	0.00E+00	3.88E-07	5.32E-05	0.00E+00	1.72E-08	0.00E+00	0.00E+00	2.26E-06	0.00E+00	0.00E+00	5.32E-05
4339	ALL	752023.65	4038464	NonCancerChronicDerive	0.00E+00	4.86E-09	0.00E+00	0.00E+00	0.00E+00	3.57E-07	4.89E-05	0.00E+00	1.57E-08	0.00E+00	0.00E+00	2.07E-06	0.00E+00	0.00E+00	4.89E-05
4340	ALL	752210.78	4038472.56	NonCancerChronicDerive	0.00E+00	4.46E-09	0.00E+00	0.00E+00	0.00E+00	3.28E-07	4.49E-05	0.00E+00	1.44E-08	0.00E+00	0.00E+00	1.90E-06	0.00E+00	0.00E+00	4.49E-05
4341	ALL	752397.92	4038481.11	NonCancerChronicDerive	0.00E+00	4.11E-09	0.00E+00	0.00E+00	0.00E+00	3.02E-07	4.14E-05	0.00E+00	1.33E-08	0.00E+00	0.00E+00	1.75E-06	0.00E+00	0.00E+00	4.14E-05
4342	ALL	752585.06	4038489.67	NonCancerChronicDerive	0.00E+00	3.80E-09	0.00E+00	0.00E+00	0.00E+00	2.78E-07	3.82E-05	0.00E+00	1.23E-08	0.00E+00	0.00E+00	1.62E-06	0.00E+00	0.00E+00	3.82E-05
4343	ALL	752778.86	4038319.35	NonCancerChronicDerive	0.00E+00	3.66E-09	0.00E+00	0.00E+00	0.00E+00	2.66E-07	3.66E-05	0.00E+00	1.18E-08	0.00E+00	0.00E+00	1.56E-06	0.00E+00	0.00E+00	3.66E-05
4344	ALL	752785.51	4038140.48	NonCancerChronicDerive	0.00E+00	3.78E-09	0.00E+00	0.00E+00	0.00E+00	2.73E-07	3.77E-05	0.00E+00	1.22E-08	0.00E+00	0.00E+00	1.61E-06	0.00E+00	0.00E+00	3.77E-05

4345	ALL	752792.17	4037961.61	NonCancerChronicDerive	0.00E+00	3.89E-09	0.00E+00	0.00E+00	0.00E+00	2.79E-07	3.85E-05	0.00E+00	1.26E-08	0.00E+00	0.00E+00	1.65E-06	0.00E+00	0.00E+00	3.85E-05
4346	ALL	752798.83	4037782.74	NonCancerChronicDerive	0.00E+00	3.97E-09	0.00E+00	0.00E+00	0.00E+00	2.82E-07	3.91E-05	0.00E+00	1.29E-08	0.00E+00	0.00E+00	1.69E-06	0.00E+00	0.00E+00	3.91E-05
4347	ALL	752805.48	4037603.88	NonCancerChronicDerive	0.00E+00	4.03E-09	0.00E+00	0.00E+00	0.00E+00	2.84E-07	3.95E-05	0.00E+00	1.30E-08	0.00E+00	0.00E+00	1.71E-06	0.00E+00	0.00E+00	3.95E-05
4348	ALL	752812.14	4037425.01	NonCancerChronicDerive	0.00E+00	4.05E-09	0.00E+00	0.00E+00	0.00E+00	2.83E-07	3.95E-05	0.00E+00	1.31E-08	0.00E+00	0.00E+00	1.72E-06	0.00E+00	0.00E+00	3.95E-05
4349	ALL	752818.8	4037246.14	NonCancerChronicDerive	0.00E+00	4.03E-09	0.00E+00	0.00E+00	0.00E+00	2.81E-07	3.92E-05	0.00E+00	1.31E-08	0.00E+00	0.00E+00	1.72E-06	0.00E+00	0.00E+00	3.92E-05
4350	ALL	752825.45	4037067.27	NonCancerChronicDerive	0.00E+00	3.99E-09	0.00E+00	0.00E+00	0.00E+00	2.76E-07	3.86E-05	0.00E+00	1.29E-08	0.00E+00	0.00E+00	1.70E-06	0.00E+00	0.00E+00	3.86E-05
4351	ALL	753030.78	4036894.75	NonCancerChronicDerive	0.00E+00	3.81E-09	0.00E+00	0.00E+00	0.00E+00	2.63E-07	3.68E-05	0.00E+00	1.23E-08	0.00E+00	0.00E+00	1.62E-06	0.00E+00	0.00E+00	3.68E-05
4352	ALL	753229.44	4036901.09	NonCancerChronicDerive	0.00E+00	3.67E-09	0.00E+00	0.00E+00	0.00E+00	2.54E-07	3.55E-05	0.00E+00	1.19E-08	0.00E+00	0.00E+00	1.56E-06	0.00E+00	0.00E+00	3.55E-05
4353	ALL	753428.11	4036907.44	NonCancerChronicDerive	0.00E+00	3.52E-09	0.00E+00	0.00E+00	0.00E+00	2.44E-07	3.41E-05	0.00E+00	1.14E-08	0.00E+00	0.00E+00	1.50E-06	0.00E+00	0.00E+00	3.41E-05
4354	ALL	753626.78	4036913.79	NonCancerChronicDerive	0.00E+00	3.37E-09	0.00E+00	0.00E+00	0.00E+00	2.34E-07	3.27E-05	0.00E+00	1.09E-08	0.00E+00	0.00E+00	1.43E-06	0.00E+00	0.00E+00	3.27E-05
4355	ALL	753825.45	4036920.13	NonCancerChronicDerive	0.00E+00	3.22E-09	0.00E+00	0.00E+00	0.00E+00	2.24E-07	3.13E-05	0.00E+00	1.04E-08	0.00E+00	0.00E+00	1.37E-06	0.00E+00	0.00E+00	3.13E-05
4356	ALL	754024.11	4036926.48	NonCancerChronicDerive	0.00E+00	3.07E-09	0.00E+00	0.00E+00	0.00E+00	2.14E-07	2.98E-05	0.00E+00	9.93E-09	0.00E+00	0.00E+00	1.30E-06	0.00E+00	0.00E+00	2.98E-05
4357	ALL	754222.78	4036932.83	NonCancerChronicDerive	0.00E+00	2.92E-09	0.00E+00	0.00E+00	0.00E+00	2.04E-07	2.84E-05	0.00E+00	9.45E-09	0.00E+00	0.00E+00	1.24E-06	0.00E+00	0.00E+00	2.84E-05
4358	ALL	754421.45	4036939.18	NonCancerChronicDerive	0.00E+00	2.78E-09	0.00E+00	0.00E+00	0.00E+00	1.94E-07	2.70E-05	0.00E+00	8.98E-09	0.00E+00	0.00E+00	1.18E-06	0.00E+00	0.00E+00	2.70E-05
4359	ALL	754620.11	4036945.52	NonCancerChronicDerive	0.00E+00	2.64E-09	0.00E+00	0.00E+00	0.00E+00	1.84E-07	2.57E-05	0.00E+00	8.54E-09	0.00E+00	0.00E+00	1.12E-06	0.00E+00	0.00E+00	2.57E-05
4360	ALL	754813.47	4037130.47	NonCancerChronicDerive	0.00E+00	2.44E-09	0.00E+00	0.00E+00	0.00E+00	1.71E-07	2.38E-05	0.00E+00	7.90E-09	0.00E+00	0.00E+00	1.04E-06	0.00E+00	0.00E+00	2.38E-05
4361	ALL	754808.17	4037309.07	NonCancerChronicDerive	0.00E+00	2.37E-09	0.00E+00	0.00E+00	0.00E+00	1.66E-07	2.32E-05	0.00E+00	7.68E-09	0.00E+00	0.00E+00	1.01E-06	0.00E+00	0.00E+00	2.32E-05
4362	ALL	754802.86	4037487.67	NonCancerChronicDerive	0.00E+00	2.30E-09	0.00E+00	0.00E+00	0.00E+00	1.62E-07	2.26E-05	0.00E+00	7.46E-09	0.00E+00	0.00E+00	9.80E-07	0.00E+00	0.00E+00	2.26E-05
4363	ALL	754797.56	4037666.27	NonCancerChronicDerive	0.00E+00	2.24E-09	0.00E+00	0.00E+00	0.00E+00	1.57E-07	2.19E-05	0.00E+00	7.24E-09	0.00E+00	0.00E+00	9.52E-07	0.00E+00	0.00E+00	2.19E-05
4364	ALL	754792.25	4037844.87	NonCancerChronicDerive	0.00E+00	2.17E-09	0.00E+00	0.00E+00	0.00E+00	1.52E-07	2.13E-05	0.00E+00	7.02E-09	0.00E+00	0.00E+00	9.23E-07	0.00E+00	0.00E+00	2.13E-05
4365	ALL	754786.95	4038023.47	NonCancerChronicDerive	0.00E+00	2.10E-09	0.00E+00	0.00E+00	0.00E+00	1.48E-07	2.06E-05	0.00E+00	6.80E-09	0.00E+00	0.00E+00	8.94E-07	0.00E+00	0.00E+00	2.06E-05
4366	ALL	754781.64	4038202.07	NonCancerChronicDerive	0.00E+00	2.03E-09	0.00E+00	0.00E+00	0.00E+00	1.43E-07	2.00E-05	0.00E+00	6.58E-09	0.00E+00	0.00E+00	8.64E-07	0.00E+00	0.00E+00	2.00E-05
4367	ALL	754776.34	4038380.67	NonCancerChronicDerive	0.00E+00	1.96E-09	0.00E+00	0.00E+00	0.00E+00	1.38E-07	1.93E-05	0.00E+00	6.34E-09	0.00E+00	0.00E+00	8.34E-07	0.00E+00	0.00E+00	1.93E-05
4368	ALL	754572.65	4038554.13	NonCancerChronicDerive	0.00E+00	1.99E-09	0.00E+00	0.00E+00	0.00E+00	1.40E-07	1.96E-05	0.00E+00	6.43E-09	0.00E+00	0.00E+00	8.45E-07	0.00E+00	0.00E+00	1.96E-05
4369	ALL	754374.27	4038548.98	NonCancerChronicDerive	0.00E+00	2.09E-09	0.00E+00	0.00E+00	0.00E+00	1.48E-07	2.07E-05	0.00E+00	6.77E-09	0.00E+00	0.00E+00	8.91E-07	0.00E+00	0.00E+00	2.07E-05
4370	ALL	754175.9	4038543.84	NonCancerChronicDerive	0.00E+00	2.21E-09	0.00E+00	0.00E+00	0.00E+00	1.57E-07	2.19E-05	0.00E+00	7.16E-09	0.00E+00	0.00E+00	9.41E-07	0.00E+00	0.00E+00	2.19E-05
4371	ALL	753977.52	4038538.7	NonCancerChronicDerive	0.00E+00	2.34E-09	0.00E+00	0.00E+00	0.00E+00	1.67E-07	2.32E-05	0.00E+00	7.58E-09	0.00E+00	0.00E+00	9.96E-07	0.00E+00	0.00E+00	2.32E-05
4372	ALL	753779.14	4038533.55	NonCancerChronicDerive	0.00E+00	2.48E-09	0.00E+00	0.00E+00	0.00E+00	1.77E-07	2.47E-05	0.00E+00	8.04E-09	0.00E+00	0.00E+00	1.06E-06	0.00E+00	0.00E+00	2.47E-05
4373	ALL	753580.76	4038528.41	NonCancerChronicDerive	0.00E+00	2.64E-09	0.00E+00	0.00E+00	0.00E+00	1.89E-07	2.63E-05	0.00E+00	8.56E-09	0.00E+00	0.00E+00	1.12E-06	0.00E+00	0.00E+00	2.63E-05
4374	ALL	753382.38	4038523.27	NonCancerChronicDerive	0.00E+00	2.82E-09	0.00E+00	0.00E+00	0.00E+00	2.03E-07	2.81E-05	0.00E+00	9.13E-09	0.00E+00	0.00E+00	1.20E-06	0.00E+00	0.00E+00	2.81E-05
4375	ALL	753184.01	4038518.13	NonCancerChronicDerive	0.00E+00	3.02E-09	0.00E+00	0.00E+00	0.00E+00	2.18E-07	3.02E-05	0.00E+00	9.77E-09	0.00E+00	0.00E+00	1.28E-06	0.00E+00	0.00E+00	3.02E-05
4376	ALL	752985.63	4038512.98	NonCancerChronicDerive	0.00E+00	3.24E-09	0.00E+00	0.00E+00	0.00E+00	2.35E-07	3.25E-05	0.00E+00	1.05E-08	0.00E+00	0.00E+00	1.38E-06	0.00E+00	0.00E+00	3.25E-05
4377	ALL	752781.34	4038685.86	NonCancerChronicDerive	0.00E+00	3.35E-09	0.00E+00	0.00E+00	0.00E+00	2.45E-07	3.37E-05	0.00E+00	1.08E-08	0.00E+00	0.00E+00	1.43E-06	0.00E+00	0.00E+00	3.37E-05
4378	ALL	752775.43	4038863.88	NonCancerChronicDerive	0.00E+00	3.20E-09	0.00E+00	0.00E+00	0.00E+00	2.34E-07	3.23E-05	0.00E+00	1.03E-08	0.00E+00	0.00E+00	1.36E-06	0.00E+00	0.00E+00	3.23E-05
4379	ALL	752769.51	4039041.91	NonCancerChronicDerive	0.00E+00	3.03E-09	0.00E+00	0.00E+00	0.00E+00	2.22E-07	3.07E-05	0.00E+00	9.82E-09	0.00E+00	0.00E+00	1.29E-06	0.00E+00	0.00E+00	3.07E-05
4380	ALL	752763.6	4039219.93	NonCancerChronicDerive	0.00E+00	2.86E-09	0.00E+00	0.00E+00	0.00E+00	2.10E-07	2.91E-05	0.00E+00	9.26E-09	0.00E+00	0.00E+00	1.22E-06	0.00E+00	0.00E+00	2.91E-05
4381	ALL	752757.69	4039397.95	NonCancerChronicDerive	0.00E+00	2.68E-09	0.00E+00	0.00E+00	0.00E+00	1.97E-07	2.73E-05	0.00E+00	8.69E-09	0.00E+00	0.00E+00	1.14E-06	0.00E+00	0.00E+00	2.73E-05
4382	ALL	752751.78	4039575.97	NonCancerChronicDerive	0.00E+00	2.50E-09	0.00E+00	0.00E+00	0.00E+00	1.84E-07	2.56E-05	0.00E+00	8.09E-09	0.00E+00	0.00E+00	1.06E-06	0.00E+00	0.00E+00	2.56E-05
4383	ALL	752745.86	4039754	NonCancerChronicDerive	0.00E+00	2.31E-09	0.00E+00	0.00E+00	0.00E+00	1.70E-07	2.37E-05	0.00E+00	7.49E-09	0.00E+00	0.00E+00	9.84E-07	0.00E+00	0.00E+00	2.37E-05
4384	ALL	752739.95	4039932.02	NonCancerChronicDerive	0.00E+00	2.13E-09	0.00E+00	0.00E+00	0.00E+00	1.57E-07	2.19E-05	0.00E+00	6.89E-09	0.00E+00	0.00E+00	9.06E-07	0.00E+00	0.00E+00	2.19E-05
4385	ALL	752544.01	4040105.22	NonCancerChronicDerive	0.00E+00	2.07E-09	0.00E+00	0.00E+00	0.00E+00	1.54E-07	2.14E-05	0.00E+00	6.69E-09	0.00E+00	0.00E+00	8.79E-07	0.00E+00	0.00E+00	2.14E-05
4386	ALL	752353.98	4040100.39	NonCancerChronicDerive	0.00E+00	2.19E-09	0.00E+00	0.00E+00	0.00E+00	1.64E-07	2.28E-05	0.00E+00	7.08E-09	0.00E+00	0.00E+00	9.30E-07	0.00E+00	0.00E+00	2.28E-05
4387	ALL	752163.95	4040095.57	NonCancerChronicDerive	0.00E+00	2.32E-09	0.00E+00	0.00E+00	0.00E+00	1.76E-07	2.44E-05	0.00E+00	7.52E-09	0.00E+00	0.00E+00	9.89E-07	0.00E+00	0.00E+00	2.44E-05
4388	ALL	751973.92	4040090.74	NonCancerChronicDerive	0.00E+00	2.48E-09	0.00E+00	0.00E+00	0.00E+00	1.90E-07	2.62E-05	0.00E+00	8.03E-09	0.00E+00	0.00E+00	1.06E-06	0.00E+00	0.00E+00	2.62E-05
4389	ALL	751783.89	4040085.92	NonCancerChronicDerive	0.00E+00	2.66E-09	0.00E+00	0.00E+00	0.00E+00	2.06E-07	2.83E-05	0.00E+00	8.61E-09	0.00E+00	0.00E+00	1.13E-06	0.00E+00	0.00E+00	2.83E-05
4390	ALL	751593.86	4040081.09	NonCancerChronicDerive	0.00E+00	2.87E-09	0.00E+00	0.00E+00	0.00E+00	2.25E-07	3.08E-05	0.00E+00	9.30E-09	0.00E+00	0.00E+00	1.22E-06	0.00E+00	0.00E+00	3.08E-05
4391	ALL	751397.81	4040275.91	NonCancerChronicDerive	0.00E+00	2.65E-09	0.00E+00	0.00E+00	0.00E+00	2.10E-07	2.88E-05	0.00E+00	8.59E-09	0.00E+00	0.00E+00	1.13E-06	0.00E+00	0.00E+00	2.88E-05
4392	ALL	751391.8	4040475.55	NonCancerChronicDerive	0.00E+00	2.25E-09	0.00E+00	0.00E+00	0.00E+00	1.76E-07	2.43E-05	0.00E+00	7.27E-09	0.00E+00	0.00E+00	9.56E-07	0.00E+00	0.00E+00	2.43E-05
4393	ALL	751385.78	4040675.19	NonCancerChronicDerive	0.00E+00	1.90E-09	0.00E+00	0.00E+00	0.00E+00	1.47E-07	2.05E-05	0.00E+00	6.15E-09	0.00E+00	0.00E+00	8.08E-07	0.00E+00	0.00E+00	2.05E-05
4394	ALL	751379.77	4040874.83	NonCancerChronicDerive	0.00E+00	1.62E-09	0.00E+00	0.00E+00	0.00E+00	1.25E-07	1.75E-05	0.00E+00	5.25E-09	0.00E+00	0.00E+00	6.90E-07	0.00E+00	0.00E+00	1.75E-05
4395	ALL	751373.76	4041074.47	NonCancerChronicDerive	0.00E+00	1.41E-09	0.00E+00	0.00E+00	0.00E+00	1.09E-07	1.53E-05	0.00E+00	4.58E-09	0.00E+00	0.00E+00	6.02E-07	0.00E+00	0.00E+00	1.53E-05
4396	ALL	751367.74	4041274.11	NonCancerChronicDerive	0.00E+00	1.26E-09	0.00E+00	0.00E+00	0.00E+00	9.76E-08	1.37E-05	0.00E+00	4.09E-09	0.00E+00	0.00E+00	5.38E-07	0.00E+00	0.00E+00	1.37E-05
4397	ALL	751361.72	4041473.75	NonCancerChronicDerive	0.00E+00	1.15E-09	0.00E+00	0.00E+00	0.00E+00	8.84E-08	1.24E-05	0.00E+00	3.71E-09	0.00E+00	0.00E+00	4.88E-07	0.00E+00	0.00E+00	1.24E-05

4398	ALL	751550.15	4041680.64	NonCancerChronicDerive	0.00E+00	1.04E-09	0.00E+00	0.00E+00	0.00E+00	7.93E-08	1.12E-05	0.00E+00	3.37E-09	0.00E+00	0.00E+00	4.43E-07	0.00E+00	0.00E+00	1.12E-05
4399	ALL	751744.6	4041687.88	NonCancerChronicDerive	0.00E+00	1.02E-09	0.00E+00	0.00E+00	0.00E+00	7.77E-08	1.10E-05	0.00E+00	3.31E-09	0.00E+00	0.00E+00	4.35E-07	0.00E+00	0.00E+00	1.10E-05
4400	ALL	751939.04	4041695.13	NonCancerChronicDerive	0.00E+00	1.01E-09	0.00E+00	0.00E+00	0.00E+00	7.59E-08	1.07E-05	0.00E+00	3.25E-09	0.00E+00	0.00E+00	4.28E-07	0.00E+00	0.00E+00	1.07E-05
4401	ALL	752133.48	4041702.38	NonCancerChronicDerive	0.00E+00	9.87E-10	0.00E+00	0.00E+00	0.00E+00	7.41E-08	1.05E-05	0.00E+00	3.20E-09	0.00E+00	0.00E+00	4.20E-07	0.00E+00	0.00E+00	1.05E-05
4402	ALL	752327.92	4041709.62	NonCancerChronicDerive	0.00E+00	9.69E-10	0.00E+00	0.00E+00	0.00E+00	7.22E-08	1.03E-05	0.00E+00	3.14E-09	0.00E+00	0.00E+00	4.12E-07	0.00E+00	0.00E+00	1.03E-05
4403	ALL	752522.37	4041716.87	NonCancerChronicDerive	0.00E+00	9.50E-10	0.00E+00	0.00E+00	0.00E+00	7.03E-08	1.00E-05	0.00E+00	3.08E-09	0.00E+00	0.00E+00	4.04E-07	0.00E+00	0.00E+00	1.00E-05
4404	ALL	752716.81	4041724.11	NonCancerChronicDerive	0.00E+00	9.31E-10	0.00E+00	0.00E+00	0.00E+00	6.85E-08	9.75E-06	0.00E+00	3.01E-09	0.00E+00	0.00E+00	3.96E-07	0.00E+00	0.00E+00	9.75E-06
4405	ALL	752911.25	4041731.36	NonCancerChronicDerive	0.00E+00	9.12E-10	0.00E+00	0.00E+00	0.00E+00	6.68E-08	9.52E-06	0.00E+00	2.95E-09	0.00E+00	0.00E+00	3.88E-07	0.00E+00	0.00E+00	9.52E-06
4406	ALL	753105.69	4041738.61	NonCancerChronicDerive	0.00E+00	8.95E-10	0.00E+00	0.00E+00	0.00E+00	6.53E-08	9.31E-06	0.00E+00	2.90E-09	0.00E+00	0.00E+00	3.81E-07	0.00E+00	0.00E+00	9.31E-06
4407	ALL	753300.14	4041745.85	NonCancerChronicDerive	0.00E+00	8.79E-10	0.00E+00	0.00E+00	0.00E+00	6.39E-08	9.12E-06	0.00E+00	2.85E-09	0.00E+00	0.00E+00	3.74E-07	0.00E+00	0.00E+00	9.12E-06
4408	ALL	753484.73	4041987.72	NonCancerChronicDerive	0.00E+00	8.12E-10	0.00E+00	0.00E+00	0.00E+00	5.88E-08	8.41E-06	0.00E+00	2.63E-09	0.00E+00	0.00E+00	3.46E-07	0.00E+00	0.00E+00	8.41E-06
4409	ALL	753476.91	4042185.52	NonCancerChronicDerive	0.00E+00	7.74E-10	0.00E+00	0.00E+00	0.00E+00	5.62E-08	8.03E-06	0.00E+00	2.51E-09	0.00E+00	0.00E+00	3.30E-07	0.00E+00	0.00E+00	8.03E-06
4410	ALL	753469.09	4042383.31	NonCancerChronicDerive	0.00E+00	7.40E-10	0.00E+00	0.00E+00	0.00E+00	5.38E-08	7.69E-06	0.00E+00	2.39E-09	0.00E+00	0.00E+00	3.15E-07	0.00E+00	0.00E+00	7.69E-06
4411	ALL	753461.28	4042581.1	NonCancerChronicDerive	0.00E+00	7.07E-10	0.00E+00	0.00E+00	0.00E+00	5.15E-08	7.37E-06	0.00E+00	2.29E-09	0.00E+00	0.00E+00	3.01E-07	0.00E+00	0.00E+00	7.37E-06
4412	ALL	753453.46	4042778.9	NonCancerChronicDerive	0.00E+00	6.80E-10	0.00E+00	0.00E+00	0.00E+00	4.95E-08	7.09E-06	0.00E+00	2.20E-09	0.00E+00	0.00E+00	2.89E-07	0.00E+00	0.00E+00	7.09E-06
4413	ALL	753445.64	4042976.69	NonCancerChronicDerive	0.00E+00	6.59E-10	0.00E+00	0.00E+00	0.00E+00	4.79E-08	6.86E-06	0.00E+00	2.13E-09	0.00E+00	0.00E+00	2.80E-07	0.00E+00	0.00E+00	6.86E-06
4414	ALL	753437.82	4043174.49	NonCancerChronicDerive	0.00E+00	6.41E-10	0.00E+00	0.00E+00	0.00E+00	4.64E-08	6.66E-06	0.00E+00	2.08E-09	0.00E+00	0.00E+00	2.73E-07	0.00E+00	0.00E+00	6.66E-06
4415	ALL	753265.73	4043365.92	NonCancerChronicDerive	0.00E+00	6.28E-10	0.00E+00	0.00E+00	0.00E+00	4.53E-08	6.52E-06	0.00E+00	2.03E-09	0.00E+00	0.00E+00	2.67E-07	0.00E+00	0.00E+00	6.52E-06
4416	ALL	753101.45	4043359.56	NonCancerChronicDerive	0.00E+00	6.32E-10	0.00E+00	0.00E+00	0.00E+00	4.56E-08	6.56E-06	0.00E+00	2.05E-09	0.00E+00	0.00E+00	2.69E-07	0.00E+00	0.00E+00	6.56E-06
4417	ALL	752937.18	4043353.21	NonCancerChronicDerive	0.00E+00	6.34E-10	0.00E+00	0.00E+00	0.00E+00	4.58E-08	6.60E-06	0.00E+00	2.05E-09	0.00E+00	0.00E+00	2.70E-07	0.00E+00	0.00E+00	6.60E-06
4418	ALL	752772.9	4043346.85	NonCancerChronicDerive	0.00E+00	6.34E-10	0.00E+00	0.00E+00	0.00E+00	4.60E-08	6.61E-06	0.00E+00	2.05E-09	0.00E+00	0.00E+00	2.70E-07	0.00E+00	0.00E+00	6.61E-06
4419	ALL	752606.42	4043519.77	NonCancerChronicDerive	0.00E+00	6.01E-10	0.00E+00	0.00E+00	0.00E+00	4.37E-08	6.28E-06	0.00E+00	1.94E-09	0.00E+00	0.00E+00	2.56E-07	0.00E+00	0.00E+00	6.28E-06
4420	ALL	752604.2	4043699.05	NonCancerChronicDerive	0.00E+00	5.73E-10	0.00E+00	0.00E+00	0.00E+00	4.17E-08	5.99E-06	0.00E+00	1.85E-09	0.00E+00	0.00E+00	2.44E-07	0.00E+00	0.00E+00	5.99E-06
4421	ALL	752601.99	4043878.33	NonCancerChronicDerive	0.00E+00	5.48E-10	0.00E+00	0.00E+00	0.00E+00	4.00E-08	5.74E-06	0.00E+00	1.78E-09	0.00E+00	0.00E+00	2.33E-07	0.00E+00	0.00E+00	5.74E-06
4422	ALL	752599.77	4044057.61	NonCancerChronicDerive	0.00E+00	5.27E-10	0.00E+00	0.00E+00	0.00E+00	3.84E-08	5.52E-06	0.00E+00	1.71E-09	0.00E+00	0.00E+00	2.24E-07	0.00E+00	0.00E+00	5.52E-06
4423	ALL	752597.56	4044236.9	NonCancerChronicDerive	0.00E+00	5.09E-10	0.00E+00	0.00E+00	0.00E+00	3.71E-08	5.32E-06	0.00E+00	1.65E-09	0.00E+00	0.00E+00	2.17E-07	0.00E+00	0.00E+00	5.32E-06
4424	ALL	752595.34	4044416.18	NonCancerChronicDerive	0.00E+00	4.93E-10	0.00E+00	0.00E+00	0.00E+00	3.58E-08	5.14E-06	0.00E+00	1.59E-09	0.00E+00	0.00E+00	2.10E-07	0.00E+00	0.00E+00	5.14E-06
4425	ALL	752593.13	4044595.46	NonCancerChronicDerive	0.00E+00	4.78E-10	0.00E+00	0.00E+00	0.00E+00	3.47E-08	4.99E-06	0.00E+00	1.55E-09	0.00E+00	0.00E+00	2.04E-07	0.00E+00	0.00E+00	4.99E-06
4426	ALL	752590.91	4044774.74	NonCancerChronicDerive	0.00E+00	4.66E-10	0.00E+00	0.00E+00	0.00E+00	3.38E-08	4.86E-06	0.00E+00	1.51E-09	0.00E+00	0.00E+00	1.98E-07	0.00E+00	0.00E+00	4.86E-06
4427	ALL	752412.91	4044950.79	NonCancerChronicDerive	0.00E+00	4.57E-10	0.00E+00	0.00E+00	0.00E+00	3.31E-08	4.76E-06	0.00E+00	1.48E-09	0.00E+00	0.00E+00	1.94E-07	0.00E+00	0.00E+00	4.76E-06
4428	ALL	752237.11	4044947.56	NonCancerChronicDerive	0.00E+00	4.58E-10	0.00E+00	0.00E+00	0.00E+00	3.33E-08	4.78E-06	0.00E+00	1.48E-09	0.00E+00	0.00E+00	1.95E-07	0.00E+00	0.00E+00	4.78E-06
4429	ALL	752061.32	4044944.32	NonCancerChronicDerive	0.00E+00	4.59E-10	0.00E+00	0.00E+00	0.00E+00	3.34E-08	4.80E-06	0.00E+00	1.49E-09	0.00E+00	0.00E+00	1.95E-07	0.00E+00	0.00E+00	4.80E-06
4430	ALL	751885.52	4044941.09	NonCancerChronicDerive	0.00E+00	4.59E-10	0.00E+00	0.00E+00	0.00E+00	3.36E-08	4.81E-06	0.00E+00	1.49E-09	0.00E+00	0.00E+00	1.95E-07	0.00E+00	0.00E+00	4.81E-06
4431	ALL	751709.73	4044937.86	NonCancerChronicDerive	0.00E+00	4.61E-10	0.00E+00	0.00E+00	0.00E+00	3.38E-08	4.84E-06	0.00E+00	1.49E-09	0.00E+00	0.00E+00	1.96E-07	0.00E+00	0.00E+00	4.84E-06
4432	ALL	751533.94	4044934.63	NonCancerChronicDerive	0.00E+00	4.61E-10	0.00E+00	0.00E+00	0.00E+00	3.40E-08	4.85E-06	0.00E+00	1.49E-09	0.00E+00	0.00E+00	1.96E-07	0.00E+00	0.00E+00	4.85E-06
4433	ALL	751358.14	4044931.39	NonCancerChronicDerive	0.00E+00	4.62E-10	0.00E+00	0.00E+00	0.00E+00	3.42E-08	4.88E-06	0.00E+00	1.50E-09	0.00E+00	0.00E+00	1.97E-07	0.00E+00	0.00E+00	4.88E-06
4434	ALL	751006.68	4044917.24	NonCancerChronicDerive	0.00E+00	4.75E-10	0.00E+00	0.00E+00	0.00E+00	3.50E-08	5.00E-06	0.00E+00	1.54E-09	0.00E+00	0.00E+00	2.02E-07	0.00E+00	0.00E+00	5.00E-06
4435	ALL	750831.01	4044906.31	NonCancerChronicDerive	0.00E+00	4.85E-10	0.00E+00	0.00E+00	0.00E+00	3.57E-08	5.10E-06	0.00E+00	1.57E-09	0.00E+00	0.00E+00	2.07E-07	0.00E+00	0.00E+00	5.10E-06
4436	ALL	750655.34	4044895.39	NonCancerChronicDerive	0.00E+00	4.99E-10	0.00E+00	0.00E+00	0.00E+00	3.66E-08	5.23E-06	0.00E+00	1.61E-09	0.00E+00	0.00E+00	2.12E-07	0.00E+00	0.00E+00	5.23E-06
4437	ALL	750479.68	4044884.47	NonCancerChronicDerive	0.00E+00	5.14E-10	0.00E+00	0.00E+00	0.00E+00	3.76E-08	5.38E-06	0.00E+00	1.66E-09	0.00E+00	0.00E+00	2.19E-07	0.00E+00	0.00E+00	5.38E-06
4438	ALL	750304.01	4044873.54	NonCancerChronicDerive	0.00E+00	5.29E-10	0.00E+00	0.00E+00	0.00E+00	3.87E-08	5.53E-06	0.00E+00	1.71E-09	0.00E+00	0.00E+00	2.25E-07	0.00E+00	0.00E+00	5.53E-06
4439	ALL	750124.51	4045062.17	NonCancerChronicDerive	0.00E+00	5.27E-10	0.00E+00	0.00E+00	0.00E+00	3.86E-08	5.51E-06	0.00E+00	1.71E-09	0.00E+00	0.00E+00	2.24E-07	0.00E+00	0.00E+00	5.51E-06
4440	ALL	750120.68	4045261.72	NonCancerChronicDerive	0.00E+00	5.13E-10	0.00E+00	0.00E+00	0.00E+00	3.75E-08	5.35E-06	0.00E+00	1.66E-09	0.00E+00	0.00E+00	2.18E-07	0.00E+00	0.00E+00	5.35E-06
4441	ALL	750116.84	4045461.27	NonCancerChronicDerive	0.00E+00	4.99E-10	0.00E+00	0.00E+00	0.00E+00	3.64E-08	5.20E-06	0.00E+00	1.62E-09	0.00E+00	0.00E+00	2.12E-07	0.00E+00	0.00E+00	5.20E-06
4442	ALL	749930.09	4045652.73	NonCancerChronicDerive	0.00E+00	4.83E-10	0.00E+00	0.00E+00	0.00E+00	3.52E-08	5.03E-06	0.00E+00	1.56E-09	0.00E+00	0.00E+00	2.05E-07	0.00E+00	0.00E+00	5.03E-06
4443	ALL	749747.16	4045644.64	NonCancerChronicDerive	0.00E+00	4.82E-10	0.00E+00	0.00E+00	0.00E+00	3.53E-08	5.03E-06	0.00E+00	1.56E-09	0.00E+00	0.00E+00	2.05E-07	0.00E+00	0.00E+00	5.03E-06
4444	ALL	749564.24	4045636.55	NonCancerChronicDerive	0.00E+00	4.86E-10	0.00E+00	0.00E+00	0.00E+00	3.56E-08	5.07E-06	0.00E+00	1.57E-09	0.00E+00	0.00E+00	2.07E-07	0.00E+00	0.00E+00	5.07E-06
4445	ALL	749381.32	4045628.46	NonCancerChronicDerive	0.00E+00	4.93E-10	0.00E+00	0.00E+00	0.00E+00	3.61E-08	5.15E-06	0.00E+00	1.60E-09	0.00E+00	0.00E+00	2.10E-07	0.00E+00	0.00E+00	5.15E-06
4446	ALL	749198.39	4045620.38	NonCancerChronicDerive	0.00E+00	5.04E-10	0.00E+00	0.00E+00	0.00E+00	3.68E-08	5.26E-06	0.00E+00	1.63E-09	0.00E+00	0.00E+00	2.14E-07	0.00E+00	0.00E+00	5.26E-06
4447	ALL	749015.47	4045612.29	NonCancerChronicDerive	0.00E+00	5.15E-10	0.00E+00	0.00E+00	0.00E+00	3.76E-08	5.37E-06	0.00E+00	1.67E-09	0.00E+00	0.00E+00	2.19E-07	0.00E+00	0.00E+00	5.37E-06
4448	ALL	748832.55	4045604.2	NonCancerChronicDerive	0.00E+00	5.26E-10	0.00E+00	0.00E+00	0.00E+00	3.83E-08	5.47E-06	0.00E+00	1.70E-09	0.00E+00	0.00E+00	2.24E-07	0.00E+00	0.00E+00	5.47E-06
4449	ALL	748649.62	4045596.11	NonCancerChronicDerive	0.00E+00	5.38E-10	0.00E+00	0.00E+00	0.00E+00	3.91E-08	5.59E-06	0.00E+00	1.74E-09	0.00E+00	0.00E+00	2.29E-07	0.00E+00	0.00E+00	5.59E-06
4450	ALL	748470.57	4045402.95	NonCancerChronicDerive	0.00E+00	5.68E-10	0.00E+00	0.00E+00	0.00E+00	4.13E-08	5.90E-06	0.00E+00	1.84E-09	0.00E+00	0.00E+00	2.42E-07	0.00E+00	0.00E+00	5.90E-06

4451	ALL	748474.44	4045217.88	NonCancerChronicDerive	0.00E+00	5.84E-10	0.00E+00	0.00E+00	0.00E+00	4.26E-08	6.08E-06	0.00E+00	1.89E-09	0.00E+00	0.00E+00	2.48E-07	0.00E+00	0.00E+00	6.08E-06
4452	ALL	748478.32	4045032.81	NonCancerChronicDerive	0.00E+00	6.00E-10	0.00E+00	0.00E+00	0.00E+00	4.39E-08	6.26E-06	0.00E+00	1.94E-09	0.00E+00	0.00E+00	2.55E-07	0.00E+00	0.00E+00	6.26E-06
4453	ALL	748482.19	4044847.74	NonCancerChronicDerive	0.00E+00	6.18E-10	0.00E+00	0.00E+00	0.00E+00	4.53E-08	6.45E-06	0.00E+00	2.00E-09	0.00E+00	0.00E+00	2.63E-07	0.00E+00	0.00E+00	6.45E-06
4454	ALL	748486.06	4044662.67	NonCancerChronicDerive	0.00E+00	6.34E-10	0.00E+00	0.00E+00	0.00E+00	4.67E-08	6.64E-06	0.00E+00	2.05E-09	0.00E+00	0.00E+00	2.70E-07	0.00E+00	0.00E+00	6.64E-06
4455	ALL	748489.93	4044477.6	NonCancerChronicDerive	0.00E+00	6.57E-10	0.00E+00	0.00E+00	0.00E+00	4.85E-08	6.89E-06	0.00E+00	2.13E-09	0.00E+00	0.00E+00	2.80E-07	0.00E+00	0.00E+00	6.89E-06
4456	ALL	748493.81	4044292.53	NonCancerChronicDerive	0.00E+00	6.79E-10	0.00E+00	0.00E+00	0.00E+00	5.03E-08	7.14E-06	0.00E+00	2.20E-09	0.00E+00	0.00E+00	2.89E-07	0.00E+00	0.00E+00	7.14E-06
4457	ALL	748497.68	4044107.46	NonCancerChronicDerive	0.00E+00	7.03E-10	0.00E+00	0.00E+00	0.00E+00	5.23E-08	7.41E-06	0.00E+00	2.28E-09	0.00E+00	0.00E+00	2.99E-07	0.00E+00	0.00E+00	7.41E-06
4458	ALL	748501.55	4043922.39	NonCancerChronicDerive	0.00E+00	7.29E-10	0.00E+00	0.00E+00	0.00E+00	5.44E-08	7.70E-06	0.00E+00	2.36E-09	0.00E+00	0.00E+00	3.10E-07	0.00E+00	0.00E+00	7.70E-06
4459	ALL	748505.42	4043737.32	NonCancerChronicDerive	0.00E+00	7.56E-10	0.00E+00	0.00E+00	0.00E+00	5.66E-08	8.01E-06	0.00E+00	2.45E-09	0.00E+00	0.00E+00	3.22E-07	0.00E+00	0.00E+00	8.01E-06
4460	ALL	748509.3	4043552.25	NonCancerChronicDerive	0.00E+00	7.85E-10	0.00E+00	0.00E+00	0.00E+00	5.89E-08	8.34E-06	0.00E+00	2.54E-09	0.00E+00	0.00E+00	3.34E-07	0.00E+00	0.00E+00	8.34E-06
4461	ALL	748513.17	4043367.18	NonCancerChronicDerive	0.00E+00	8.16E-10	0.00E+00	0.00E+00	0.00E+00	6.15E-08	8.70E-06	0.00E+00	2.64E-09	0.00E+00	0.00E+00	3.47E-07	0.00E+00	0.00E+00	8.70E-06
4462	ALL	748521.32	4043003.52	NonCancerChronicDerive	0.00E+00	8.86E-10	0.00E+00	0.00E+00	0.00E+00	6.74E-08	9.51E-06	0.00E+00	2.87E-09	0.00E+00	0.00E+00	3.77E-07	0.00E+00	0.00E+00	9.51E-06
4463	ALL	748525.6	4042824.93	NonCancerChronicDerive	0.00E+00	9.26E-10	0.00E+00	0.00E+00	0.00E+00	7.08E-08	9.99E-06	0.00E+00	3.00E-09	0.00E+00	0.00E+00	3.94E-07	0.00E+00	0.00E+00	9.99E-06
4464	ALL	748529.88	4042646.34	NonCancerChronicDerive	0.00E+00	9.72E-10	0.00E+00	0.00E+00	0.00E+00	7.48E-08	1.05E-05	0.00E+00	3.15E-09	0.00E+00	0.00E+00	4.13E-07	0.00E+00	0.00E+00	1.05E-05
4465	ALL	748534.16	4042467.75	NonCancerChronicDerive	0.00E+00	1.02E-09	0.00E+00	0.00E+00	0.00E+00	7.94E-08	1.12E-05	0.00E+00	3.32E-09	0.00E+00	0.00E+00	4.36E-07	0.00E+00	0.00E+00	1.12E-05
4466	ALL	748538.45	4042289.16	NonCancerChronicDerive	0.00E+00	1.08E-09	0.00E+00	0.00E+00	0.00E+00	8.47E-08	1.19E-05	0.00E+00	3.51E-09	0.00E+00	0.00E+00	4.61E-07	0.00E+00	0.00E+00	1.19E-05
4467	ALL	748542.73	4042110.57	NonCancerChronicDerive	0.00E+00	1.15E-09	0.00E+00	0.00E+00	0.00E+00	9.13E-08	1.28E-05	0.00E+00	3.73E-09	0.00E+00	0.00E+00	4.91E-07	0.00E+00	0.00E+00	1.28E-05
4468	ALL	748547.01	4041931.98	NonCancerChronicDerive	0.00E+00	1.24E-09	0.00E+00	0.00E+00	0.00E+00	9.97E-08	1.39E-05	0.00E+00	4.00E-09	0.00E+00	0.00E+00	5.26E-07	0.00E+00	0.00E+00	1.39E-05
4469	ALL	748551.29	4041753.39	NonCancerChronicDerive	0.00E+00	1.34E-09	0.00E+00	0.00E+00	0.00E+00	1.10E-07	1.52E-05	0.00E+00	4.32E-09	0.00E+00	0.00E+00	5.68E-07	0.00E+00	0.00E+00	1.52E-05
4470	ALL	748415.26	4041570.97	NonCancerChronicDerive	0.00E+00	1.57E-09	0.00E+00	0.00E+00	0.00E+00	1.32E-07	1.82E-05	0.00E+00	5.09E-09	0.00E+00	0.00E+00	6.69E-07	0.00E+00	0.00E+00	1.82E-05
4471	ALL	748274.94	4041567.13	NonCancerChronicDerive	0.00E+00	1.71E-09	0.00E+00	0.00E+00	0.00E+00	1.42E-07	1.96E-05	0.00E+00	5.54E-09	0.00E+00	0.00E+00	7.29E-07	0.00E+00	0.00E+00	1.96E-05
4472	ALL	747999.07	4041558.26	NonCancerChronicDerive	0.00E+00	2.03E-09	0.00E+00	0.00E+00	0.00E+00	1.60E-07	2.23E-05	0.00E+00	6.57E-09	0.00E+00	0.00E+00	8.64E-07	0.00E+00	0.00E+00	2.23E-05
4473	ALL	747863.5	4041553.23	NonCancerChronicDerive	0.00E+00	2.22E-09	0.00E+00	0.00E+00	0.00E+00	1.70E-07	2.37E-05	0.00E+00	7.18E-09	0.00E+00	0.00E+00	9.43E-07	0.00E+00	0.00E+00	2.37E-05
4474	ALL	747530.03	4041541.69	NonCancerChronicDerive	0.00E+00	2.92E-09	0.00E+00	0.00E+00	0.00E+00	2.07E-07	2.95E-05	0.00E+00	9.44E-09	0.00E+00	0.00E+00	1.24E-06	0.00E+00	0.00E+00	2.95E-05
4475	ALL	747332.13	4041535.19	NonCancerChronicDerive	0.00E+00	3.29E-09	0.00E+00	0.00E+00	0.00E+00	2.27E-07	3.25E-05	0.00E+00	1.06E-08	0.00E+00	0.00E+00	1.40E-06	0.00E+00	0.00E+00	3.25E-05
4476	ALL	747134.22	4041528.68	NonCancerChronicDerive	0.00E+00	3.50E-09	0.00E+00	0.00E+00	0.00E+00	2.38E-07	3.43E-05	0.00E+00	1.13E-08	0.00E+00	0.00E+00	1.49E-06	0.00E+00	0.00E+00	3.43E-05
4477	ALL	746936.32	4041522.18	NonCancerChronicDerive	0.00E+00	3.48E-09	0.00E+00	0.00E+00	0.00E+00	2.34E-07	3.39E-05	0.00E+00	1.13E-08	0.00E+00	0.00E+00	1.48E-06	0.00E+00	0.00E+00	3.39E-05
4478	ALL	746737.17	4041318.1	NonCancerChronicDerive	0.00E+00	3.28E-09	0.00E+00	0.00E+00	0.00E+00	2.20E-07	3.20E-05	0.00E+00	1.06E-08	0.00E+00	0.00E+00	1.40E-06	0.00E+00	0.00E+00	3.20E-05
4479	ALL	746544.71	4040913.4	NonCancerChronicDerive	0.00E+00	2.47E-09	0.00E+00	0.00E+00	0.00E+00	1.70E-07	2.48E-05	0.00E+00	7.99E-09	0.00E+00	0.00E+00	1.05E-06	0.00E+00	0.00E+00	2.48E-05
4480	ALL	746546.18	4040716.18	NonCancerChronicDerive	0.00E+00	2.25E-09	0.00E+00	0.00E+00	0.00E+00	1.57E-07	2.29E-05	0.00E+00	7.28E-09	0.00E+00	0.00E+00	9.58E-07	0.00E+00	0.00E+00	2.29E-05
4481	ALL	746752.4	4039891.44	NonCancerChronicDerive	0.00E+00	1.81E-09	0.00E+00	0.00E+00	0.00E+00	1.33E-07	1.93E-05	0.00E+00	5.86E-09	0.00E+00	0.00E+00	7.71E-07	0.00E+00	0.00E+00	1.93E-05
4482	ALL	746931.8	4039897.49	NonCancerChronicDerive	0.00E+00	1.86E-09	0.00E+00	0.00E+00	0.00E+00	1.36E-07	1.98E-05	0.00E+00	6.01E-09	0.00E+00	0.00E+00	7.90E-07	0.00E+00	0.00E+00	1.98E-05
4483	ALL	747111.2	4039903.53	NonCancerChronicDerive	0.00E+00	1.91E-09	0.00E+00	0.00E+00	0.00E+00	1.41E-07	2.04E-05	0.00E+00	6.19E-09	0.00E+00	0.00E+00	8.14E-07	0.00E+00	0.00E+00	2.04E-05
4484	ALL	747290.6	4039909.57	NonCancerChronicDerive	0.00E+00	1.99E-09	0.00E+00	0.00E+00	0.00E+00	1.47E-07	2.13E-05	0.00E+00	6.46E-09	0.00E+00	0.00E+00	8.49E-07	0.00E+00	0.00E+00	2.13E-05
4485	ALL	747470.01	4039915.62	NonCancerChronicDerive	0.00E+00	2.11E-09	0.00E+00	0.00E+00	0.00E+00	1.55E-07	2.24E-05	0.00E+00	6.83E-09	0.00E+00	0.00E+00	8.98E-07	0.00E+00	0.00E+00	2.24E-05
4486	ALL	747649.41	4039921.66	NonCancerChronicDerive	0.00E+00	2.30E-09	0.00E+00	0.00E+00	0.00E+00	1.68E-07	2.43E-05	0.00E+00	7.45E-09	0.00E+00	0.00E+00	9.79E-07	0.00E+00	0.00E+00	2.43E-05
4487	ALL	747828.81	4039927.7	NonCancerChronicDerive	0.00E+00	2.66E-09	0.00E+00	0.00E+00	0.00E+00	1.93E-07	2.77E-05	0.00E+00	8.62E-09	0.00E+00	0.00E+00	1.13E-06	0.00E+00	0.00E+00	2.77E-05
4488	ALL	748008.21	4039933.75	NonCancerChronicDerive	0.00E+00	3.40E-09	0.00E+00	0.00E+00	0.00E+00	2.40E-07	3.45E-05	0.00E+00	1.10E-08	0.00E+00	0.00E+00	1.44E-06	0.00E+00	0.00E+00	3.45E-05
4489	ALL	748192.76	4039742.94	NonCancerChronicDerive	0.00E+00	3.80E-09	0.00E+00	0.00E+00	0.00E+00	2.65E-07	3.86E-05	0.00E+00	1.23E-08	0.00E+00	0.00E+00	1.62E-06	0.00E+00	0.00E+00	3.86E-05
4490	ALL	748197.9	4039546.08	NonCancerChronicDerive	0.00E+00	3.28E-09	0.00E+00	0.00E+00	0.00E+00	2.31E-07	3.35E-05	0.00E+00	1.06E-08	0.00E+00	0.00E+00	1.39E-06	0.00E+00	0.00E+00	3.35E-05
4491	ALL	748203.05	4039349.23	NonCancerChronicDerive	0.00E+00	3.02E-09	0.00E+00	0.00E+00	0.00E+00	2.14E-07	3.10E-05	0.00E+00	9.76E-09	0.00E+00	0.00E+00	1.28E-06	0.00E+00	0.00E+00	3.10E-05
4492	ALL	748208.19	4039152.38	NonCancerChronicDerive	0.00E+00	2.80E-09	0.00E+00	0.00E+00	0.00E+00	2.00E-07	2.90E-05	0.00E+00	9.08E-09	0.00E+00	0.00E+00	1.19E-06	0.00E+00	0.00E+00	2.90E-05
4493	ALL	748213.33	4038955.53	NonCancerChronicDerive	0.00E+00	2.60E-09	0.00E+00	0.00E+00	0.00E+00	1.87E-07	2.69E-05	0.00E+00	8.41E-09	0.00E+00	0.00E+00	1.11E-06	0.00E+00	0.00E+00	2.69E-05
4494	ALL	748218.48	4038758.67	NonCancerChronicDerive	0.00E+00	2.41E-09	0.00E+00	0.00E+00	0.00E+00	1.75E-07	2.50E-05	0.00E+00	7.81E-09	0.00E+00	0.00E+00	1.03E-06	0.00E+00	0.00E+00	2.50E-05
4495	ALL	748223.63	4038561.82	NonCancerChronicDerive	0.00E+00	2.26E-09	0.00E+00	0.00E+00	0.00E+00	1.64E-07	2.35E-05	0.00E+00	7.30E-09	0.00E+00	0.00E+00	9.60E-07	0.00E+00	0.00E+00	2.35E-05
4496	ALL	748228.77	4038364.97	NonCancerChronicDerive	0.00E+00	2.12E-09	0.00E+00	0.00E+00	0.00E+00	1.56E-07	2.22E-05	0.00E+00	6.88E-09	0.00E+00	0.00E+00	9.04E-07	0.00E+00	0.00E+00	2.22E-05
4497	ALL	748233.92	4038168.12	NonCancerChronicDerive	0.00E+00	2.02E-09	0.00E+00	0.00E+00	0.00E+00	1.50E-07	2.12E-05	0.00E+00	6.53E-09	0.00E+00	0.00E+00	8.58E-07	0.00E+00	0.00E+00	2.12E-05
4498	ALL	748239.06	4037971.27	NonCancerChronicDerive	0.00E+00	1.94E-09	0.00E+00	0.00E+00	0.00E+00	1.47E-07	2.07E-05	0.00E+00	6.29E-09	0.00E+00	0.00E+00	8.26E-07	0.00E+00	0.00E+00	2.07E-05
4499	ALL	748244.21	4037774.41	NonCancerChronicDerive	0.00E+00	1.90E-09	0.00E+00	0.00E+00	0.00E+00	1.47E-07	2.05E-05	0.00E+00	6.15E-09	0.00E+00	0.00E+00	8.09E-07	0.00E+00	0.00E+00	2.05E-05
4500	ALL	748249.35	4037577.56	NonCancerChronicDerive	0.00E+00	1.89E-09	0.00E+00	0.00E+00	0.00E+00	1.49E-07	2.07E-05	0.00E+00	6.13E-09	0.00E+00	0.00E+00	8.06E-07	0.00E+00	0.00E+00	2.07E-05
4501	ALL	748254.49	4037380.71	NonCancerChronicDerive	0.00E+00	1.93E-09	0.00E+00	0.00E+00	0.00E+00	1.55E-07	2.14E-05	0.00E+00	6.23E-09	0.00E+00	0.00E+00	8.19E-07	0.00E+00	0.00E+00	2.14E-05
4502	ALL	748259.64	4037183.85	NonCancerChronicDerive	0.00E+00	2.01E-09	0.00E+00	0.00E+00	0.00E+00	1.68E-07	2.30E-05	0.00E+00	6.50E-09	0.00E+00	0.00E+00	8.54E-07	0.00E+00	0.00E+00	2.30E-05
4503	ALL	748264.79	4036987	NonCancerChronicDerive	0.00E+00	2.17E-09	0.00E+00	0.00E+00	0.00E+00	1.92E-07	2.59E-05	0.00E+00	7.03E-09	0.00E+00	0.00E+00	9.24E-07	0.00E+00	0.00E+00	2.59E-05

4504	ALL	748073.87	4036783.77	NonCancerChronicDerive	0.00E+00	2.42E-09	0.00E+00	0.00E+00	0.00E+00	2.43E-07	3.17E-05	0.00E+00	7.83E-09	0.00E+00	0.00E+00	1.03E-06	0.00E+00	0.00E+00	3.17E-05
4505	ALL	747877.81	4036777.4	NonCancerChronicDerive	0.00E+00	2.43E-09	0.00E+00	0.00E+00	0.00E+00	2.73E-07	3.45E-05	0.00E+00	7.88E-09	0.00E+00	0.00E+00	1.04E-06	0.00E+00	0.00E+00	3.45E-05
4506	ALL	747681.76	4036771.02	NonCancerChronicDerive	0.00E+00	2.50E-09	0.00E+00	0.00E+00	0.00E+00	3.27E-07	3.96E-05	0.00E+00	8.10E-09	0.00E+00	0.00E+00	1.06E-06	0.00E+00	0.00E+00	3.96E-05
4507	ALL	747478.34	4036933.02	NonCancerChronicDerive	0.00E+00	2.38E-09	0.00E+00	0.00E+00	0.00E+00	2.81E-07	3.48E-05	0.00E+00	7.69E-09	0.00E+00	0.00E+00	1.01E-06	0.00E+00	0.00E+00	3.48E-05
4508	ALL	747470.98	4037101.4	NonCancerChronicDerive	0.00E+00	2.17E-09	0.00E+00	0.00E+00	0.00E+00	2.09E-07	2.73E-05	0.00E+00	7.03E-09	0.00E+00	0.00E+00	9.25E-07	0.00E+00	0.00E+00	2.73E-05
4509	ALL	747463.62	4037269.77	NonCancerChronicDerive	0.00E+00	2.03E-09	0.00E+00	0.00E+00	0.00E+00	1.79E-07	2.40E-05	0.00E+00	6.56E-09	0.00E+00	0.00E+00	8.62E-07	0.00E+00	0.00E+00	2.40E-05
4510	ALL	747456.26	4037438.14	NonCancerChronicDerive	0.00E+00	1.91E-09	0.00E+00	0.00E+00	0.00E+00	1.60E-07	2.18E-05	0.00E+00	6.19E-09	0.00E+00	0.00E+00	8.14E-07	0.00E+00	0.00E+00	2.18E-05
4511	ALL	747448.9	4037606.52	NonCancerChronicDerive	0.00E+00	1.82E-09	0.00E+00	0.00E+00	0.00E+00	1.48E-07	2.04E-05	0.00E+00	5.91E-09	0.00E+00	0.00E+00	7.76E-07	0.00E+00	0.00E+00	2.04E-05
4512	ALL	747280.47	4037769.56	NonCancerChronicDerive	0.00E+00	1.75E-09	0.00E+00	0.00E+00	0.00E+00	1.42E-07	1.97E-05	0.00E+00	5.67E-09	0.00E+00	0.00E+00	7.45E-07	0.00E+00	0.00E+00	1.97E-05
4513	ALL	747119.4	4037764.24	NonCancerChronicDerive	0.00E+00	1.81E-09	0.00E+00	0.00E+00	0.00E+00	1.47E-07	2.04E-05	0.00E+00	5.84E-09	0.00E+00	0.00E+00	7.68E-07	0.00E+00	0.00E+00	2.04E-05
4514	ALL	746958.32	4037758.91	NonCancerChronicDerive	0.00E+00	1.90E-09	0.00E+00	0.00E+00	0.00E+00	1.56E-07	2.16E-05	0.00E+00	6.14E-09	0.00E+00	0.00E+00	8.07E-07	0.00E+00	0.00E+00	2.16E-05
4515	ALL	746797.25	4037753.59	NonCancerChronicDerive	0.00E+00	2.00E-09	0.00E+00	0.00E+00	0.00E+00	1.67E-07	2.30E-05	0.00E+00	6.47E-09	0.00E+00	0.00E+00	8.50E-07	0.00E+00	0.00E+00	2.30E-05
4516	ALL	746641.93	4037581.09	NonCancerChronicDerive	0.00E+00	2.19E-09	0.00E+00	0.00E+00	0.00E+00	1.90E-07	2.58E-05	0.00E+00	7.10E-09	0.00E+00	0.00E+00	9.34E-07	0.00E+00	0.00E+00	2.58E-05
4517	ALL	746647.68	4037413.93	NonCancerChronicDerive	0.00E+00	2.40E-09	0.00E+00	0.00E+00	0.00E+00	2.20E-07	2.93E-05	0.00E+00	7.76E-09	0.00E+00	0.00E+00	1.02E-06	0.00E+00	0.00E+00	2.93E-05
4518	ALL	746653.44	4037246.76	NonCancerChronicDerive	0.00E+00	2.70E-09	0.00E+00	0.00E+00	0.00E+00	2.82E-07	3.62E-05	0.00E+00	8.75E-09	0.00E+00	0.00E+00	1.15E-06	0.00E+00	0.00E+00	3.62E-05
4519	ALL	746659.19	4037079.59	NonCancerChronicDerive	0.00E+00	3.21E-09	0.00E+00	0.00E+00	0.00E+00	4.68E-07	5.53E-05	0.00E+00	1.04E-08	0.00E+00	0.00E+00	1.36E-06	0.00E+00	0.00E+00	5.53E-05
4520	ALL	746664.94	4036912.43	NonCancerChronicDerive	0.00E+00	4.17E-09	0.00E+00	0.00E+00	0.00E+00	6.25E-07	7.34E-05	0.00E+00	1.35E-08	0.00E+00	0.00E+00	1.78E-06	0.00E+00	0.00E+00	7.34E-05
4521	ALL	746484.21	4036739.13	NonCancerChronicDerive	0.00E+00	7.72E-09	0.00E+00	0.00E+00	0.00E+00	5.66E-07	8.02E-05	0.00E+00	2.50E-08	0.00E+00	0.00E+00	3.29E-06	0.00E+00	0.00E+00	8.02E-05
4522	ALL	746297.73	4036733	NonCancerChronicDerive	0.00E+00	7.20E-09	0.00E+00	0.00E+00	0.00E+00	5.12E-07	7.36E-05	0.00E+00	2.33E-08	0.00E+00	0.00E+00	3.06E-06	0.00E+00	0.00E+00	7.36E-05
4523	ALL	746111.25	4036726.86	NonCancerChronicDerive	0.00E+00	5.81E-09	0.00E+00	0.00E+00	0.00E+00	4.15E-07	5.96E-05	0.00E+00	1.88E-08	0.00E+00	0.00E+00	2.47E-06	0.00E+00	0.00E+00	5.96E-05
4524	ALL	745924.77	4036720.73	NonCancerChronicDerive	0.00E+00	4.64E-09	0.00E+00	0.00E+00	0.00E+00	3.34E-07	4.79E-05	0.00E+00	1.50E-08	0.00E+00	0.00E+00	1.97E-06	0.00E+00	0.00E+00	4.79E-05
4525	ALL	745539.2	4036707.71	NonCancerChronicDerive	0.00E+00	3.13E-09	0.00E+00	0.00E+00	0.00E+00	2.29E-07	3.28E-05	0.00E+00	1.01E-08	0.00E+00	0.00E+00	1.33E-06	0.00E+00	0.00E+00	3.28E-05
4526	ALL	745340.1	4036700.83	NonCancerChronicDerive	0.00E+00	2.71E-09	0.00E+00	0.00E+00	0.00E+00	1.99E-07	2.85E-05	0.00E+00	8.76E-09	0.00E+00	0.00E+00	1.15E-06	0.00E+00	0.00E+00	2.85E-05
4527	ALL	745141.01	4036693.94	NonCancerChronicDerive	0.00E+00	2.41E-09	0.00E+00	0.00E+00	0.00E+00	1.78E-07	2.55E-05	0.00E+00	7.82E-09	0.00E+00	0.00E+00	1.03E-06	0.00E+00	0.00E+00	2.55E-05
4528	ALL	744941.92	4036687.06	NonCancerChronicDerive	0.00E+00	2.20E-09	0.00E+00	0.00E+00	0.00E+00	1.62E-07	2.32E-05	0.00E+00	7.12E-09	0.00E+00	0.00E+00	9.36E-07	0.00E+00	0.00E+00	2.32E-05
4529	ALL	744742.83	4036680.17	NonCancerChronicDerive	0.00E+00	2.04E-09	0.00E+00	0.00E+00	0.00E+00	1.50E-07	2.14E-05	0.00E+00	6.60E-09	0.00E+00	0.00E+00	8.68E-07	0.00E+00	0.00E+00	2.14E-05
4530	ALL	744543.73	4036673.29	NonCancerChronicDerive	0.00E+00	1.92E-09	0.00E+00	0.00E+00	0.00E+00	1.40E-07	2.01E-05	0.00E+00	6.20E-09	0.00E+00	0.00E+00	8.15E-07	0.00E+00	0.00E+00	2.01E-05
4531	ALL	744344.64	4036666.4	NonCancerChronicDerive	0.00E+00	1.82E-09	0.00E+00	0.00E+00	0.00E+00	1.32E-07	1.90E-05	0.00E+00	5.88E-09	0.00E+00	0.00E+00	7.73E-07	0.00E+00	0.00E+00	1.90E-05
4532	ALL	744145.55	4036659.51	NonCancerChronicDerive	0.00E+00	1.73E-09	0.00E+00	0.00E+00	0.00E+00	1.25E-07	1.80E-05	0.00E+00	5.60E-09	0.00E+00	0.00E+00	7.36E-07	0.00E+00	0.00E+00	1.80E-05
4533	ALL	743946.45	4036652.63	NonCancerChronicDerive	0.00E+00	1.65E-09	0.00E+00	0.00E+00	0.00E+00	1.19E-07	1.72E-05	0.00E+00	5.36E-09	0.00E+00	0.00E+00	7.04E-07	0.00E+00	0.00E+00	1.72E-05
4534	ALL	743747.36	4036645.74	NonCancerChronicDerive	0.00E+00	1.59E-09	0.00E+00	0.00E+00	0.00E+00	1.14E-07	1.64E-05	0.00E+00	5.13E-09	0.00E+00	0.00E+00	6.75E-07	0.00E+00	0.00E+00	1.64E-05
4535	ALL	743548.27	4036638.86	NonCancerChronicDerive	0.00E+00	1.52E-09	0.00E+00	0.00E+00	0.00E+00	1.09E-07	1.57E-05	0.00E+00	4.93E-09	0.00E+00	0.00E+00	6.48E-07	0.00E+00	0.00E+00	1.57E-05
4536	ALL	743349.18	4036631.97	NonCancerChronicDerive	0.00E+00	1.46E-09	0.00E+00	0.00E+00	0.00E+00	1.05E-07	1.51E-05	0.00E+00	4.74E-09	0.00E+00	0.00E+00	6.23E-07	0.00E+00	0.00E+00	1.51E-05
4537	ALL	743150.08	4036625.09	NonCancerChronicDerive	0.00E+00	1.41E-09	0.00E+00	0.00E+00	0.00E+00	1.00E-07	1.45E-05	0.00E+00	4.56E-09	0.00E+00	0.00E+00	6.00E-07	0.00E+00	0.00E+00	1.45E-05
4538	ALL	742950.99	4036618.2	NonCancerChronicDerive	0.00E+00	1.36E-09	0.00E+00	0.00E+00	0.00E+00	9.69E-08	1.39E-05	0.00E+00	4.41E-09	0.00E+00	0.00E+00	5.79E-07	0.00E+00	0.00E+00	1.39E-05
4539	ALL	742751.9	4036611.31	NonCancerChronicDerive	0.00E+00	1.32E-09	0.00E+00	0.00E+00	0.00E+00	9.37E-08	1.35E-05	0.00E+00	4.27E-09	0.00E+00	0.00E+00	5.61E-07	0.00E+00	0.00E+00	1.35E-05
4540	ALL	742552.8	4036604.43	NonCancerChronicDerive	0.00E+00	1.28E-09	0.00E+00	0.00E+00	0.00E+00	9.09E-08	1.31E-05	0.00E+00	4.14E-09	0.00E+00	0.00E+00	5.45E-07	0.00E+00	0.00E+00	1.31E-05
4541	ALL	742353.71	4036597.54	NonCancerChronicDerive	0.00E+00	1.25E-09	0.00E+00	0.00E+00	0.00E+00	8.84E-08	1.27E-05	0.00E+00	4.04E-09	0.00E+00	0.00E+00	5.30E-07	0.00E+00	0.00E+00	1.27E-05
4542	ALL	742154.62	4036590.66	NonCancerChronicDerive	0.00E+00	1.22E-09	0.00E+00	0.00E+00	0.00E+00	8.62E-08	1.24E-05	0.00E+00	3.94E-09	0.00E+00	0.00E+00	5.18E-07	0.00E+00	0.00E+00	1.24E-05
4543	ALL	741955.53	4036583.77	NonCancerChronicDerive	0.00E+00	1.19E-09	0.00E+00	0.00E+00	0.00E+00	8.44E-08	1.21E-05	0.00E+00	3.87E-09	0.00E+00	0.00E+00	5.08E-07	0.00E+00	0.00E+00	1.21E-05
4544	ALL	741756.43	4036576.89	NonCancerChronicDerive	0.00E+00	1.18E-09	0.00E+00	0.00E+00	0.00E+00	8.32E-08	1.20E-05	0.00E+00	3.83E-09	0.00E+00	0.00E+00	5.03E-07	0.00E+00	0.00E+00	1.20E-05
4545	ALL	741557.34	4036570	NonCancerChronicDerive	0.00E+00	1.16E-09	0.00E+00	0.00E+00	0.00E+00	8.18E-08	1.18E-05	0.00E+00	3.77E-09	0.00E+00	0.00E+00	4.96E-07	0.00E+00	0.00E+00	1.18E-05
4546	ALL	741358.25	4036563.11	NonCancerChronicDerive	0.00E+00	1.15E-09	0.00E+00	0.00E+00	0.00E+00	8.06E-08	1.16E-05	0.00E+00	3.72E-09	0.00E+00	0.00E+00	4.89E-07	0.00E+00	0.00E+00	1.16E-05
4547	ALL	741159.15	4036556.23	NonCancerChronicDerive	0.00E+00	1.14E-09	0.00E+00	0.00E+00	0.00E+00	7.97E-08	1.14E-05	0.00E+00	3.68E-09	0.00E+00	0.00E+00	4.84E-07	0.00E+00	0.00E+00	1.14E-05
4548	ALL	740960.06	4036549.34	NonCancerChronicDerive	0.00E+00	1.12E-09	0.00E+00	0.00E+00	0.00E+00	7.86E-08	1.13E-05	0.00E+00	3.64E-09	0.00E+00	0.00E+00	4.78E-07	0.00E+00	0.00E+00	1.13E-05
4549	ALL	740760.97	4036542.46	NonCancerChronicDerive	0.00E+00	1.11E-09	0.00E+00	0.00E+00	0.00E+00	7.78E-08	1.12E-05	0.00E+00	3.61E-09	0.00E+00	0.00E+00	4.74E-07	0.00E+00	0.00E+00	1.12E-05
4550	ALL	740561.88	4036535.57	NonCancerChronicDerive	0.00E+00	1.11E-09	0.00E+00	0.00E+00	0.00E+00	7.71E-08	1.11E-05	0.00E+00	3.58E-09	0.00E+00	0.00E+00	4.71E-07	0.00E+00	0.00E+00	1.11E-05
4551	ALL	740362.78	4036528.69	NonCancerChronicDerive	0.00E+00	1.10E-09	0.00E+00	0.00E+00	0.00E+00	7.64E-08	1.10E-05	0.00E+00	3.56E-09	0.00E+00	0.00E+00	4.67E-07	0.00E+00	0.00E+00	1.10E-05
4552	ALL	740163.69	4036521.8	NonCancerChronicDerive	0.00E+00	1.10E-09	0.00E+00	0.00E+00	0.00E+00	7.60E-08	1.09E-05	0.00E+00	3.55E-09	0.00E+00	0.00E+00	4.66E-07	0.00E+00	0.00E+00	1.09E-05
4553	ALL	739964.6	4036514.91	NonCancerChronicDerive	0.00E+00	1.09E-09	0.00E+00	0.00E+00	0.00E+00	7.56E-08	1.09E-05	0.00E+00	3.53E-09	0.00E+00	0.00E+00	4.65E-07	0.00E+00	0.00E+00	1.09E-05
4554	ALL	739765.5	4036508.03	NonCancerChronicDerive	0.00E+00	1.09E-09	0.00E+00	0.00E+00	0.00E+00	7.51E-08	1.08E-05	0.00E+00	3.51E-09	0.00E+00	0.00E+00	4.62E-07	0.00E+00	0.00E+00	1.08E-05
4555	ALL	739566.41	4036501.14	NonCancerChronicDerive	0.00E+00	1.08E-09	0.00E+00	0.00E+00	0.00E+00	7.47E-08	1.07E-05	0.00E+00	3.50E-09	0.00E+00	0.00E+00	4.60E-07	0.00E+00	0.00E+00	1.07E-05
4556	ALL	739367.32	4036494.26	NonCancerChronicDerive	0.00E+00	1.08E-09	0.00E+00	0.00E+00	0.00E+00	7.44E-08	1.07E-05	0.00E+00	3.49E-09	0.00E+00	0.00E+00	4.59E-07	0.00E+00	0.00E+00	1.07E-05

4557	ALL	739168.23	4036487.37	NonCancerChronicDerive	0.00E+00	1.07E-09	0.00E+00	0.00E+00	0.00E+00	7.40E-08	1.06E-05	0.00E+00	3.48E-09	0.00E+00	0.00E+00	4.57E-07	0.00E+00	0.00E+00	1.06E-05
4558	ALL	738969.13	4036480.49	NonCancerChronicDerive	0.00E+00	1.07E-09	0.00E+00	0.00E+00	0.00E+00	7.37E-08	1.05E-05	0.00E+00	3.46E-09	0.00E+00	0.00E+00	4.55E-07	0.00E+00	0.00E+00	1.05E-05
4559	ALL	738604.82	4036569.13	NonCancerChronicDerive	0.00E+00	1.04E-09	0.00E+00	0.00E+00	0.00E+00	7.18E-08	1.03E-05	0.00E+00	3.37E-09	0.00E+00	0.00E+00	4.43E-07	0.00E+00	0.00E+00	1.03E-05
4560	ALL	738337.99	4036497.02	NonCancerChronicDerive	0.00E+00	1.04E-09	0.00E+00	0.00E+00	0.00E+00	7.18E-08	1.02E-05	0.00E+00	3.37E-09	0.00E+00	0.00E+00	4.43E-07	0.00E+00	0.00E+00	1.02E-05
4561	ALL	738236.37	4036329.38	NonCancerChronicDerive	0.00E+00	1.06E-09	0.00E+00	0.00E+00	0.00E+00	7.33E-08	1.04E-05	0.00E+00	3.44E-09	0.00E+00	0.00E+00	4.52E-07	0.00E+00	0.00E+00	1.04E-05
4562	ALL	738134.74	4036161.74	NonCancerChronicDerive	0.00E+00	1.09E-09	0.00E+00	0.00E+00	0.00E+00	7.49E-08	1.07E-05	0.00E+00	3.52E-09	0.00E+00	0.00E+00	4.63E-07	0.00E+00	0.00E+00	1.07E-05
4563	ALL	738033.12	4035994.09	NonCancerChronicDerive	0.00E+00	1.11E-09	0.00E+00	0.00E+00	0.00E+00	7.67E-08	1.09E-05	0.00E+00	3.61E-09	0.00E+00	0.00E+00	4.74E-07	0.00E+00	0.00E+00	1.09E-05
4564	ALL	737931.5	4035826.45	NonCancerChronicDerive	0.00E+00	1.14E-09	0.00E+00	0.00E+00	0.00E+00	7.87E-08	1.12E-05	0.00E+00	3.70E-09	0.00E+00	0.00E+00	4.86E-07	0.00E+00	0.00E+00	1.12E-05
4565	ALL	737563.33	4035513.17	NonCancerChronicDerive	0.00E+00	1.19E-09	0.00E+00	0.00E+00	0.00E+00	8.29E-08	1.17E-05	0.00E+00	3.87E-09	0.00E+00	0.00E+00	5.08E-07	0.00E+00	0.00E+00	1.17E-05
4566	ALL	737382.93	4035513.06	NonCancerChronicDerive	0.00E+00	1.19E-09	0.00E+00	0.00E+00	0.00E+00	8.30E-08	1.17E-05	0.00E+00	3.87E-09	0.00E+00	0.00E+00	5.08E-07	0.00E+00	0.00E+00	1.17E-05
4567	ALL	737202.52	4035512.96	NonCancerChronicDerive	0.00E+00	1.19E-09	0.00E+00	0.00E+00	0.00E+00	8.32E-08	1.18E-05	0.00E+00	3.87E-09	0.00E+00	0.00E+00	5.08E-07	0.00E+00	0.00E+00	1.18E-05
4568	ALL	736835.12	4035512.78	NonCancerChronicDerive	0.00E+00	1.19E-09	0.00E+00	0.00E+00	0.00E+00	8.36E-08	1.18E-05	0.00E+00	3.85E-09	0.00E+00	0.00E+00	5.07E-07	0.00E+00	0.00E+00	1.18E-05
4569	ALL	736648.13	4035512.71	NonCancerChronicDerive	0.00E+00	1.19E-09	0.00E+00	0.00E+00	0.00E+00	8.38E-08	1.18E-05	0.00E+00	3.85E-09	0.00E+00	0.00E+00	5.06E-07	0.00E+00	0.00E+00	1.18E-05
4570	ALL	736461.13	4035512.64	NonCancerChronicDerive	0.00E+00	1.18E-09	0.00E+00	0.00E+00	0.00E+00	8.39E-08	1.18E-05	0.00E+00	3.84E-09	0.00E+00	0.00E+00	5.04E-07	0.00E+00	0.00E+00	1.18E-05
4571	ALL	736274.14	4035512.57	NonCancerChronicDerive	0.00E+00	1.18E-09	0.00E+00	0.00E+00	0.00E+00	8.41E-08	1.18E-05	0.00E+00	3.82E-09	0.00E+00	0.00E+00	5.02E-07	0.00E+00	0.00E+00	1.18E-05
4572	ALL	736087.14	4035512.51	NonCancerChronicDerive	0.00E+00	1.18E-09	0.00E+00	0.00E+00	0.00E+00	8.45E-08	1.19E-05	0.00E+00	3.82E-09	0.00E+00	0.00E+00	5.02E-07	0.00E+00	0.00E+00	1.19E-05
4573	ALL	735900.15	4035512.44	NonCancerChronicDerive	0.00E+00	1.18E-09	0.00E+00	0.00E+00	0.00E+00	8.49E-08	1.19E-05	0.00E+00	3.81E-09	0.00E+00	0.00E+00	5.01E-07	0.00E+00	0.00E+00	1.19E-05
4574	ALL	735713.15	4035512.37	NonCancerChronicDerive	0.00E+00	1.17E-09	0.00E+00	0.00E+00	0.00E+00	8.54E-08	1.20E-05	0.00E+00	3.80E-09	0.00E+00	0.00E+00	5.00E-07	0.00E+00	0.00E+00	1.20E-05
4575	ALL	735526.16	4035512.3	NonCancerChronicDerive	0.00E+00	1.17E-09	0.00E+00	0.00E+00	0.00E+00	8.59E-08	1.20E-05	0.00E+00	3.79E-09	0.00E+00	0.00E+00	4.98E-07	0.00E+00	0.00E+00	1.20E-05
4576	ALL	735195.5	4035375.4	NonCancerChronicDerive	0.00E+00	1.21E-09	0.00E+00	0.00E+00	0.00E+00	9.10E-08	1.27E-05	0.00E+00	3.92E-09	0.00E+00	0.00E+00	5.15E-07	0.00E+00	0.00E+00	1.27E-05
4577	ALL	735051.83	4035238.56	NonCancerChronicDerive	0.00E+00	1.28E-09	0.00E+00	0.00E+00	0.00E+00	9.75E-08	1.36E-05	0.00E+00	4.14E-09	0.00E+00	0.00E+00	5.45E-07	0.00E+00	0.00E+00	1.36E-05
4578	ALL	734908.17	4035101.73	NonCancerChronicDerive	0.00E+00	1.36E-09	0.00E+00	0.00E+00	0.00E+00	1.06E-07	1.47E-05	0.00E+00	4.42E-09	0.00E+00	0.00E+00	5.81E-07	0.00E+00	0.00E+00	1.47E-05
4579	ALL	734764.5	4034964.89	NonCancerChronicDerive	0.00E+00	1.48E-09	0.00E+00	0.00E+00	0.00E+00	1.18E-07	1.63E-05	0.00E+00	4.80E-09	0.00E+00	0.00E+00	6.30E-07	0.00E+00	0.00E+00	1.63E-05
4580	ALL	734480.27	4034822.3	NonCancerChronicDerive	0.00E+00	1.65E-09	0.00E+00	0.00E+00	0.00E+00	1.38E-07	1.88E-05	0.00E+00	5.33E-09	0.00E+00	0.00E+00	7.01E-07	0.00E+00	0.00E+00	1.88E-05
4581	ALL	734339.71	4034816.54	NonCancerChronicDerive	0.00E+00	1.64E-09	0.00E+00	0.00E+00	0.00E+00	1.40E-07	1.90E-05	0.00E+00	5.31E-09	0.00E+00	0.00E+00	6.99E-07	0.00E+00	0.00E+00	1.90E-05
4582	ALL	734131.2	4034700.77	NonCancerChronicDerive	0.00E+00	1.85E-09	0.00E+00	0.00E+00	0.00E+00	1.69E-07	2.25E-05	0.00E+00	5.99E-09	0.00E+00	0.00E+00	7.87E-07	0.00E+00	0.00E+00	2.25E-05
4583	ALL	733867.32	4034587.41	NonCancerChronicDerive	0.00E+00	2.25E-09	0.00E+00	0.00E+00	0.00E+00	2.32E-07	2.97E-05	0.00E+00	7.30E-09	0.00E+00	0.00E+00	9.59E-07	0.00E+00	0.00E+00	2.97E-05
4584	ALL	733482	4034637.69	NonCancerChronicDerive	0.00E+00	2.83E-09	0.00E+00	0.00E+00	0.00E+00	2.72E-07	3.52E-05	0.00E+00	9.16E-09	0.00E+00	0.00E+00	1.20E-06	0.00E+00	0.00E+00	3.52E-05
4585	ALL	733297.29	4034632.7	NonCancerChronicDerive	0.00E+00	3.32E-09	0.00E+00	0.00E+00	0.00E+00	3.64E-07	4.57E-05	0.00E+00	1.07E-08	0.00E+00	0.00E+00	1.41E-06	0.00E+00	0.00E+00	4.57E-05
4586	ALL	733112.59	4034627.7	NonCancerChronicDerive	0.00E+00	4.58E-09	0.00E+00	0.00E+00	0.00E+00	6.35E-07	7.59E-05	0.00E+00	1.48E-08	0.00E+00	0.00E+00	1.95E-06	0.00E+00	0.00E+00	7.59E-05
4587	ALL	732927.88	4034622.71	NonCancerChronicDerive	0.00E+00	7.71E-09	0.00E+00	0.00E+00	0.00E+00	6.96E-07	9.23E-05	0.00E+00	2.50E-08	0.00E+00	0.00E+00	3.28E-06	0.00E+00	0.00E+00	9.23E-05
4588	ALL	732574.01	4034614.02	NonCancerChronicDerive	0.00E+00	7.37E-09	0.00E+00	0.00E+00	0.00E+00	5.21E-07	7.53E-05	0.00E+00	2.39E-08	0.00E+00	0.00E+00	3.14E-06	0.00E+00	0.00E+00	7.53E-05
4589	ALL	732404.85	4034610.32	NonCancerChronicDerive	0.00E+00	5.47E-09	0.00E+00	0.00E+00	0.00E+00	3.88E-07	5.60E-05	0.00E+00	1.77E-08	0.00E+00	0.00E+00	2.33E-06	0.00E+00	0.00E+00	5.60E-05
4590	ALL	732235.69	4034606.61	NonCancerChronicDerive	0.00E+00	4.14E-09	0.00E+00	0.00E+00	0.00E+00	2.96E-07	4.26E-05	0.00E+00	1.34E-08	0.00E+00	0.00E+00	1.76E-06	0.00E+00	0.00E+00	4.26E-05

*HARP - HRACalc v21081 3/18/2024 7:11:41 PM - Acute Risk - Input File: C:\HARP2\Projects\DARDEN CLEAN ENERGY PROJECT\hra\Darden_Permit_Resi_HRAInput.hra

REC	GRP	NETID	X	Y	SCENARIO	CV	CNS	IMMUN	KIDNEY	GILV	REPRO/DEVEL	RESP	SKIN	EYE	BONE/TEETH	ENDO	BLOOD	ODOR	GENERAL	MAXHI
1	ALL		732073	4033492	NonCancerAcute	0.00E+00	1.81E-05	3.85E-03	0.00E+00	0.00E+00	3.86E-03	5.40E-03	0.00E+00	2.06E-02	0.00E+00	0.00E+00	3.85E-03	0.00E+00	0.00E+00	2.06E-02
2	ALL		732173	4033492	NonCancerAcute	0.00E+00	1.62E-05	3.44E-03	0.00E+00	0.00E+00	3.45E-03	6.44E-03	0.00E+00	2.04E-02	0.00E+00	0.00E+00	3.44E-03	0.00E+00	0.00E+00	2.04E-02
3	ALL		732273	4033492	NonCancerAcute	0.00E+00	1.48E-05	3.15E-03	0.00E+00	0.00E+00	3.16E-03	8.31E-03	0.00E+00	2.16E-02	0.00E+00	0.00E+00	3.15E-03	0.00E+00	0.00E+00	2.16E-02
4	ALL		732373	4033492	NonCancerAcute	0.00E+00	1.38E-05	2.94E-03	0.00E+00	0.00E+00	2.95E-03	8.19E-03	0.00E+00	2.07E-02	0.00E+00	0.00E+00	2.94E-03	0.00E+00	0.00E+00	2.07E-02
5	ALL		732473	4033492	NonCancerAcute	0.00E+00	1.25E-05	2.65E-03	0.00E+00	0.00E+00	2.66E-03	6.98E-03	0.00E+00	1.82E-02	0.00E+00	0.00E+00	2.65E-03	0.00E+00	0.00E+00	1.82E-02
6	ALL		732573	4033492	NonCancerAcute	0.00E+00	1.16E-05	2.46E-03	0.00E+00	0.00E+00	2.47E-03	7.53E-03	0.00E+00	1.82E-02	0.00E+00	0.00E+00	2.46E-03	0.00E+00	0.00E+00	1.82E-02
7	ALL		732673	4033492	NonCancerAcute	0.00E+00	1.07E-05	2.26E-03	0.00E+00	0.00E+00	2.28E-03	8.01E-03	0.00E+00	1.80E-02	0.00E+00	0.00E+00	2.26E-03	0.00E+00	0.00E+00	1.80E-02
8	ALL		732773	4033492	NonCancerAcute	0.00E+00	1.03E-05	2.19E-03	0.00E+00	0.00E+00	2.20E-03	8.19E-03	0.00E+00	1.80E-02	0.00E+00	0.00E+00	2.19E-03	0.00E+00	0.00E+00	1.80E-02
9	ALL		732873	4033492	NonCancerAcute	0.00E+00	1.24E-05	2.62E-03	0.00E+00	0.00E+00	2.64E-03	7.49E-03	0.00E+00	1.87E-02	0.00E+00	0.00E+00	2.62E-03	0.00E+00	0.00E+00	1.87E-02
10	ALL		732973	4033492	NonCancerAcute	0.00E+00	1.26E-05	2.68E-03	0.00E+00	0.00E+00	2.69E-03	7.75E-03	0.00E+00	1.92E-02	0.00E+00	0.00E+00	2.68E-03	0.00E+00	0.00E+00	1.92E-02
11	ALL		733073	4033492	NonCancerAcute	0.00E+00	1.02E-05	2.17E-03	0.00E+00	0.00E+00	2.18E-03	7.60E-03	0.00E+00	1.72E-02	0.00E+00	0.00E+00	2.17E-03	0.00E+00	0.00E+00	1.72E-02
12	ALL		733173	4033492	NonCancerAcute	0.00E+00	1.13E-05	2.41E-03	0.00E+00	0.00E+00	2.42E-03	7.45E-03	0.00E+00	1.79E-02	0.00E+00	0.00E+00	2.41E-03	0.00E+00	0.00E+00	1.79E-02
13	ALL		733273	4033492	NonCancerAcute	0.00E+00	1.08E-05	2.30E-03	0.00E+00	0.00E+00	2.31E-03	7.25E-03	0.00E+00	1.72E-02	0.00E+00	0.00E+00	2.30E-03	0.00E+00	0.00E+00	1.72E-02
14	ALL		733373	4033492	NonCancerAcute	0.00E+00	1.26E-05	2.68E-03	0.00E+00	0.00E+00	2.69E-03	7.09E-03	0.00E+00	1.84E-02	0.00E+00	0.00E+00	2.68E-03	0.00E+00	0.00E+00	1.84E-02
15	ALL		733473	4033492	NonCancerAcute	0.00E+00	1.20E-05	2.54E-03	0.00E+00	0.00E+00	2.55E-03	7.01E-03	0.00E+00	1.78E-02	0.00E+00	0.00E+00	2.54E-03	0.00E+00	0.00E+00	1.78E-02
16	ALL		733573	4033492	NonCancerAcute	0.00E+00	1.15E-05	2.45E-03	0.00E+00	0.00E+00	2.46E-03	7.26E-03	0.00E+00	1.78E-02	0.00E+00	0.00E+00	2.45E-03	0.00E+00	0.00E+00	1.78E-02
17	ALL		733673	4033492	NonCancerAcute	0.00E+00	1.07E-05	2.26E-03	0.00E+00	0.00E+00	2.27E-03	7.17E-03	0.00E+00	1.70E-02	0.00E+00	0.00E+00	2.26E-03	0.00E+00	0.00E+00	1.70E-02
18	ALL		733773	4033492	NonCancerAcute	0.00E+00	1.03E-05	2.18E-03	0.00E+00	0.00E+00	2.19E-03	7.12E-03	0.00E+00	1.66E-02	0.00E+00	0.00E+00	2.18E-03	0.00E+00	0.00E+00	1.66E-02
19	ALL		733873	4033492	NonCancerAcute	0.00E+00	1.04E-05	2.20E-03	0.00E+00	0.00E+00	2.21E-03	6.70E-03	0.00E+00	1.62E-02	0.00E+00	0.00E+00	2.20E-03	0.00E+00	0.00E+00	1.62E-02
20	ALL		733973	4033492	NonCancerAcute	0.00E+00	9.42E-06	2.00E-03	0.00E+00	0.00E+00	2.01E-03	6.46E-03	0.00E+00	1.52E-02	0.00E+00	0.00E+00	2.00E-03	0.00E+00	0.00E+00	1.52E-02
21	ALL		734073	4033492	NonCancerAcute	0.00E+00	8.92E-06	1.89E-03	0.00E+00	0.00E+00	1.90E-03	6.18E-03	0.00E+00	1.45E-02	0.00E+00	0.00E+00	1.89E-03	0.00E+00	0.00E+00	1.45E-02
22	ALL		732073	4033592	NonCancerAcute	0.00E+00	1.59E-05	3.37E-03	0.00E+00	0.00E+00	3.38E-03	6.35E-03	0.00E+00	2.00E-02	0.00E+00	0.00E+00	3.37E-03	0.00E+00	0.00E+00	2.00E-02
23	ALL		732173	4033592	NonCancerAcute	0.00E+00	1.53E-05	3.24E-03	0.00E+00	0.00E+00	3.26E-03	7.70E-03	0.00E+00	2.12E-02	0.00E+00	0.00E+00	3.24E-03	0.00E+00	0.00E+00	2.12E-02
24	ALL		732273	4033592	NonCancerAcute	0.00E+00	1.46E-05	3.10E-03	0.00E+00	0.00E+00	3.12E-03	8.54E-03	0.00E+00	2.17E-02	0.00E+00	0.00E+00	3.10E-03	0.00E+00	0.00E+00	2.17E-02
25	ALL		732373	4033592	NonCancerAcute	0.00E+00	1.43E-05	3.03E-03	0.00E+00	0.00E+00	3.05E-03	9.34E-03	0.00E+00	2.25E-02	0.00E+00	0.00E+00	3.03E-03	0.00E+00	0.00E+00	2.25E-02
26	ALL		732473	4033592	NonCancerAcute	0.00E+00	1.28E-05	2.72E-03	0.00E+00	0.00E+00	2.73E-03	8.57E-03	0.00E+00	2.04E-02	0.00E+00	0.00E+00	2.72E-03	0.00E+00	0.00E+00	2.04E-02
27	ALL		732573	4033592	NonCancerAcute	0.00E+00	1.16E-05	2.46E-03	0.00E+00	0.00E+00	2.47E-03	7.85E-03	0.00E+00	1.86E-02	0.00E+00	0.00E+00	2.46E-03	0.00E+00	0.00E+00	1.86E-02
28	ALL		732673	4033592	NonCancerAcute	0.00E+00	1.15E-05	2.44E-03	0.00E+00	0.00E+00	2.45E-03	8.39E-03	0.00E+00	1.91E-02	0.00E+00	0.00E+00	2.44E-03	0.00E+00	0.00E+00	1.91E-02
29	ALL		732773	4033592	NonCancerAcute	0.00E+00	1.09E-05	2.31E-03	0.00E+00	0.00E+00	2.32E-03	8.31E-03	0.00E+00	1.86E-02	0.00E+00	0.00E+00	2.31E-03	0.00E+00	0.00E+00	1.86E-02
30	ALL		732873	4033592	NonCancerAcute	0.00E+00	1.17E-05	2.48E-03	0.00E+00	0.00E+00	2.49E-03	8.11E-03	0.00E+00	1.89E-02	0.00E+00	0.00E+00	2.48E-03	0.00E+00	0.00E+00	1.89E-02
31	ALL		732973	4033592	NonCancerAcute	0.00E+00	1.36E-05	2.89E-03	0.00E+00	0.00E+00	2.90E-03	8.15E-03	0.00E+00	2.05E-02	0.00E+00	0.00E+00	2.89E-03	0.00E+00	0.00E+00	2.05E-02
32	ALL		733073	4033592	NonCancerAcute	0.00E+00	1.22E-05	2.59E-03	0.00E+00	0.00E+00	2.60E-03	8.14E-03	0.00E+00	1.94E-02	0.00E+00	0.00E+00	2.59E-03	0.00E+00	0.00E+00	1.94E-02
33	ALL		733173	4033592	NonCancerAcute	0.00E+00	1.39E-05	2.95E-03	0.00E+00	0.00E+00	2.97E-03	8.14E-03	0.00E+00	2.07E-02	0.00E+00	0.00E+00	2.95E-03	0.00E+00	0.00E+00	2.07E-02
34	ALL		733273	4033592	NonCancerAcute	0.00E+00	1.29E-05	2.73E-03	0.00E+00	0.00E+00	2.74E-03	7.66E-03	0.00E+00	1.93E-02	0.00E+00	0.00E+00	2.73E-03	0.00E+00	0.00E+00	1.93E-02
35	ALL		733373	4033592	NonCancerAcute	0.00E+00	1.33E-05	2.82E-03	0.00E+00	0.00E+00	2.83E-03	7.47E-03	0.00E+00	1.94E-02	0.00E+00	0.00E+00	2.82E-03	0.00E+00	0.00E+00	1.94E-02
36	ALL		733473	4033592	NonCancerAcute	0.00E+00	1.31E-05	2.78E-03	0.00E+00	0.00E+00	2.79E-03	7.42E-03	0.00E+00	1.92E-02	0.00E+00	0.00E+00	2.78E-03	0.00E+00	0.00E+00	1.92E-02
37	ALL		733573	4033592	NonCancerAcute	0.00E+00	1.21E-05	2.58E-03	0.00E+00	0.00E+00	2.59E-03	7.43E-03	0.00E+00	1.85E-02	0.00E+00	0.00E+00	2.58E-03	0.00E+00	0.00E+00	1.85E-02
38	ALL		733673	4033592	NonCancerAcute	0.00E+00	1.04E-05	2.20E-03	0.00E+00	0.00E+00	2.21E-03	7.51E-03	0.00E+00	1.72E-02	0.00E+00	0.00E+00	2.20E-03	0.00E+00	0.00E+00	1.72E-02
39	ALL		733773	4033592	NonCancerAcute	0.00E+00	1.07E-05	2.28E-03	0.00E+00	0.00E+00	2.29E-03	7.53E-03	0.00E+00	1.75E-02	0.00E+00	0.00E+00	2.28E-03	0.00E+00	0.00E+00	1.75E-02
40	ALL		733873	4033592	NonCancerAcute	0.00E+00	9.71E-06	2.06E-03	0.00E+00	0.00E+00	2.07E-03	6.98E-03	0.00E+00	1.60E-02	0.00E+00	0.00E+00	2.06E-03	0.00E+00	0.00E+00	1.60E-02
41	ALL		733973	4033592	NonCancerAcute	0.00E+00	9.62E-06	2.04E-03	0.00E+00	0.00E+00	2.05E-03	6.57E-03	0.00E+00	1.55E-02	0.00E+00	0.00E+00	2.04E-03	0.00E+00	0.00E+00	1.55E-02
42	ALL		734073	4033592	NonCancerAcute	0.00E+00	9.52E-06	2.02E-03	0.00E+00	0.00E+00	2.03E-03	6.27E-03	0.00E+00	1.50E-02	0.00E+00	0.00E+00	2.02E-03	0.00E+00	0.00E+00	1.50E-02
43	ALL		732073	4033692	NonCancerAcute	0.00E+00	1.87E-05	3.98E-03	0.00E+00	0.00E+00	3.99E-03	5.40E-03	0.00E+00	2.11E-02	0.00E+00	0.00E+00	3.98E-03	0.00E+00	0.00E+00	2.11E-02
44	ALL		732173	4033692	NonCancerAcute	0.00E+00	1.70E-05	3.60E-03	0.00E+00	0.00E+00	3.62E-03	7.48E-03	0.00E+00	2.23E-02	0.00E+00	0.00E+00	3.60E-03	0.00E+00	0.00E+00	2.23E-02
45	ALL		732273	4033692	NonCancerAcute	0.00E+00	1.56E-05	3.32E-03	0.00E+00	0.00E+00	3.33E-03	9.00E-03	0.00E+00	2.31E-02	0.00E+00	0.00E+00	3.32E-03	0.00E+00	0.00E+00	2.31E-02
46	ALL		732373	4033692	NonCancerAcute	0.00E+00	1.43E-05	3.04E-03	0.00E+00	0.00E+00	3.05E-03	9.29E-03	0.00E+00	2.24E-02	0.00E+00	0.00E+00	3.04E-03	0.00E+00	0.00E+00	2.24E-02
47	ALL		732473	4033692	NonCancerAcute	0.00E+00	1.26E-05	2.67E-03	0.00E+00	0.00E+00	2.68E-03	9.44E-03	0.00E+00	2.12E-02	0.00E+00	0.00E+00	2.67E-03	0.00E+00	0.00E+00	2.12E-02
48	ALL		732573	4033692	NonCancerAcute	0.00E+00	1.14E-05	2.42E-03	0.00E+00	0.00E+00	2.43E-03	8.33E-03	0.00E+00	1.90E-02	0.00E+00	0.00E+00	2.42E-03	0.00E+00	0.00E+00	1.90E-02
49	ALL		732673	4033692	NonCancerAcute	0.00E+00	1.11E-05	2.37E-03	0.00E+00	0.00E+00	2.38E-03	8.65E-03	0.00E+00	1.92E-02	0.00E+00	0.00E+00	2.37E-03	0.00E+00	0.00E+00	1.92E-02
50	ALL		732773	4033692	NonCancerAcute	0.00E+00	1.16E-05	2.46E-03	0.00E+00	0.00E+00	2.47E-03	9.26E-03	0.00E+00	2.03E-02	0.00E+00	0.00E+00	2.46E-03	0.00E+00	0.00E+00	2.03E-02
51	ALL		732873	4033692	NonCancerAcute	0.00E+00	1.18E-05	2.51E-03	0.00E+00	0.00E+00	2.53E-03	9.36E-03	0.00E+00	2.06E-02	0.00E+00	0.00E+00	2.51E-03	0.00E+00	0.00E+00	2.06E-02

52	ALL	732973	4033692	NonCancerAcute	0.00E+00	1.29E-05	2.73E-03	0.00E+00	0.00E+00	2.74E-03	8.28E-03	0.00E+00	2.01E-02	0.00E+00	0.00E+00	2.73E-03	0.00E+00	0.00E+00	2.01E-02
53	ALL	733073	4033692	NonCancerAcute	0.00E+00	1.40E-05	2.98E-03	0.00E+00	0.00E+00	3.00E-03	8.71E-03	0.00E+00	2.15E-02	0.00E+00	0.00E+00	2.98E-03	0.00E+00	0.00E+00	2.15E-02
54	ALL	733173	4033692	NonCancerAcute	0.00E+00	1.55E-05	3.29E-03	0.00E+00	0.00E+00	3.31E-03	8.62E-03	0.00E+00	2.25E-02	0.00E+00	0.00E+00	3.29E-03	0.00E+00	0.00E+00	2.25E-02
55	ALL	733273	4033692	NonCancerAcute	0.00E+00	1.61E-05	3.43E-03	0.00E+00	0.00E+00	3.44E-03	8.06E-03	0.00E+00	2.23E-02	0.00E+00	0.00E+00	3.43E-03	0.00E+00	0.00E+00	2.23E-02
56	ALL	733373	4033692	NonCancerAcute	0.00E+00	1.57E-05	3.33E-03	0.00E+00	0.00E+00	3.35E-03	7.87E-03	0.00E+00	2.18E-02	0.00E+00	0.00E+00	3.33E-03	0.00E+00	0.00E+00	2.18E-02
57	ALL	733473	4033692	NonCancerAcute	0.00E+00	1.54E-05	3.27E-03	0.00E+00	0.00E+00	3.28E-03	7.86E-03	0.00E+00	2.15E-02	0.00E+00	0.00E+00	3.27E-03	0.00E+00	0.00E+00	2.15E-02
58	ALL	733573	4033692	NonCancerAcute	0.00E+00	1.33E-05	2.82E-03	0.00E+00	0.00E+00	2.83E-03	7.85E-03	0.00E+00	1.99E-02	0.00E+00	0.00E+00	2.82E-03	0.00E+00	0.00E+00	1.99E-02
59	ALL	733673	4033692	NonCancerAcute	0.00E+00	1.16E-05	2.46E-03	0.00E+00	0.00E+00	2.47E-03	7.95E-03	0.00E+00	1.87E-02	0.00E+00	0.00E+00	2.46E-03	0.00E+00	0.00E+00	1.87E-02
60	ALL	733773	4033692	NonCancerAcute	0.00E+00	1.02E-05	2.17E-03	0.00E+00	0.00E+00	2.18E-03	7.38E-03	0.00E+00	1.69E-02	0.00E+00	0.00E+00	2.17E-03	0.00E+00	0.00E+00	1.69E-02
61	ALL	733873	4033692	NonCancerAcute	0.00E+00	1.05E-05	2.24E-03	0.00E+00	0.00E+00	2.25E-03	7.03E-03	0.00E+00	1.67E-02	0.00E+00	0.00E+00	2.24E-03	0.00E+00	0.00E+00	1.67E-02
62	ALL	733973	4033692	NonCancerAcute	0.00E+00	1.01E-05	2.15E-03	0.00E+00	0.00E+00	2.17E-03	6.63E-03	0.00E+00	1.59E-02	0.00E+00	0.00E+00	2.15E-03	0.00E+00	0.00E+00	1.59E-02
63	ALL	734073	4033692	NonCancerAcute	0.00E+00	9.56E-06	2.03E-03	0.00E+00	0.00E+00	2.04E-03	6.35E-03	0.00E+00	1.52E-02	0.00E+00	0.00E+00	2.03E-03	0.00E+00	0.00E+00	1.52E-02
64	ALL	732073	4033792	NonCancerAcute	0.00E+00	1.76E-05	3.75E-03	0.00E+00	0.00E+00	3.76E-03	5.52E-03	0.00E+00	2.04E-02	0.00E+00	0.00E+00	3.75E-03	0.00E+00	0.00E+00	2.04E-02
65	ALL	732373	4033792	NonCancerAcute	0.00E+00	1.34E-05	2.85E-03	0.00E+00	0.00E+00	2.86E-03	9.79E-03	0.00E+00	2.24E-02	0.00E+00	0.00E+00	2.85E-03	0.00E+00	0.00E+00	2.24E-02
66	ALL	732473	4033792	NonCancerAcute	0.00E+00	1.26E-05	2.68E-03	0.00E+00	0.00E+00	2.69E-03	9.08E-03	0.00E+00	2.09E-02	0.00E+00	0.00E+00	2.68E-03	0.00E+00	0.00E+00	2.09E-02
67	ALL	732573	4033792	NonCancerAcute	0.00E+00	1.21E-05	2.57E-03	0.00E+00	0.00E+00	2.58E-03	8.79E-03	0.00E+00	2.01E-02	0.00E+00	0.00E+00	2.57E-03	0.00E+00	0.00E+00	2.01E-02
68	ALL	732673	4033792	NonCancerAcute	0.00E+00	1.15E-05	2.45E-03	0.00E+00	0.00E+00	2.46E-03	9.21E-03	0.00E+00	2.02E-02	0.00E+00	0.00E+00	2.45E-03	0.00E+00	0.00E+00	2.02E-02
69	ALL	732773	4033792	NonCancerAcute	0.00E+00	1.15E-05	2.44E-03	0.00E+00	0.00E+00	2.45E-03	9.71E-03	0.00E+00	2.08E-02	0.00E+00	0.00E+00	2.44E-03	0.00E+00	0.00E+00	2.08E-02
70	ALL	732873	4033792	NonCancerAcute	0.00E+00	1.24E-05	2.64E-03	0.00E+00	0.00E+00	2.65E-03	9.89E-03	0.00E+00	2.17E-02	0.00E+00	0.00E+00	2.64E-03	0.00E+00	0.00E+00	2.17E-02
71	ALL	732973	4033792	NonCancerAcute	0.00E+00	1.35E-05	2.87E-03	0.00E+00	0.00E+00	2.88E-03	8.76E-03	0.00E+00	2.11E-02	0.00E+00	0.00E+00	2.87E-03	0.00E+00	0.00E+00	2.11E-02
72	ALL	733073	4033792	NonCancerAcute	0.00E+00	1.63E-05	3.47E-03	0.00E+00	0.00E+00	3.48E-03	9.26E-03	0.00E+00	2.39E-02	0.00E+00	0.00E+00	3.47E-03	0.00E+00	0.00E+00	2.39E-02
73	ALL	733173	4033792	NonCancerAcute	0.00E+00	1.85E-05	3.94E-03	0.00E+00	0.00E+00	3.96E-03	8.84E-03	0.00E+00	2.51E-02	0.00E+00	0.00E+00	3.94E-03	0.00E+00	0.00E+00	2.51E-02
74	ALL	733273	4033792	NonCancerAcute	0.00E+00	2.13E-05	4.51E-03	0.00E+00	0.00E+00	4.53E-03	8.45E-03	0.00E+00	2.68E-02	0.00E+00	0.00E+00	4.51E-03	0.00E+00	0.00E+00	2.68E-02
75	ALL	733373	4033792	NonCancerAcute	0.00E+00	2.15E-05	4.56E-03	0.00E+00	0.00E+00	4.58E-03	8.21E-03	0.00E+00	2.66E-02	0.00E+00	0.00E+00	4.56E-03	0.00E+00	0.00E+00	2.66E-02
76	ALL	733473	4033792	NonCancerAcute	0.00E+00	2.01E-05	4.27E-03	0.00E+00	0.00E+00	4.29E-03	8.38E-03	0.00E+00	2.58E-02	0.00E+00	0.00E+00	4.27E-03	0.00E+00	0.00E+00	2.58E-02
77	ALL	733573	4033792	NonCancerAcute	0.00E+00	1.56E-05	3.32E-03	0.00E+00	0.00E+00	3.33E-03	8.35E-03	0.00E+00	2.23E-02	0.00E+00	0.00E+00	3.32E-03	0.00E+00	0.00E+00	2.23E-02
78	ALL	733673	4033792	NonCancerAcute	0.00E+00	1.31E-05	2.79E-03	0.00E+00	0.00E+00	2.80E-03	8.16E-03	0.00E+00	2.01E-02	0.00E+00	0.00E+00	2.79E-03	0.00E+00	0.00E+00	2.01E-02
79	ALL	733773	4033792	NonCancerAcute	0.00E+00	1.13E-05	2.39E-03	0.00E+00	0.00E+00	2.40E-03	7.73E-03	0.00E+00	1.82E-02	0.00E+00	0.00E+00	2.39E-03	0.00E+00	0.00E+00	1.82E-02
80	ALL	733873	4033792	NonCancerAcute	0.00E+00	1.05E-05	2.24E-03	0.00E+00	0.00E+00	2.25E-03	7.12E-03	0.00E+00	1.69E-02	0.00E+00	0.00E+00	2.24E-03	0.00E+00	0.00E+00	1.69E-02
81	ALL	733973	4033792	NonCancerAcute	0.00E+00	1.03E-05	2.18E-03	0.00E+00	0.00E+00	2.19E-03	6.73E-03	0.00E+00	1.62E-02	0.00E+00	0.00E+00	2.18E-03	0.00E+00	0.00E+00	1.62E-02
82	ALL	734073	4033792	NonCancerAcute	0.00E+00	1.01E-05	2.14E-03	0.00E+00	0.00E+00	2.15E-03	6.37E-03	0.00E+00	1.56E-02	0.00E+00	0.00E+00	2.14E-03	0.00E+00	0.00E+00	1.56E-02
83	ALL	732073	4033892	NonCancerAcute	0.00E+00	1.81E-05	3.84E-03	0.00E+00	0.00E+00	3.86E-03	5.45E-03	0.00E+00	2.06E-02	0.00E+00	0.00E+00	3.84E-03	0.00E+00	0.00E+00	2.06E-02
84	ALL	733773	4033892	NonCancerAcute	0.00E+00	1.10E-05	2.33E-03	0.00E+00	0.00E+00	2.34E-03	7.82E-03	0.00E+00	1.81E-02	0.00E+00	0.00E+00	2.33E-03	0.00E+00	0.00E+00	1.81E-02
85	ALL	733873	4033892	NonCancerAcute	0.00E+00	1.01E-05	2.15E-03	0.00E+00	0.00E+00	2.16E-03	7.19E-03	0.00E+00	1.66E-02	0.00E+00	0.00E+00	2.15E-03	0.00E+00	0.00E+00	1.66E-02
86	ALL	733973	4033892	NonCancerAcute	0.00E+00	9.77E-06	2.08E-03	0.00E+00	0.00E+00	2.08E-03	6.74E-03	0.00E+00	1.58E-02	0.00E+00	0.00E+00	2.08E-03	0.00E+00	0.00E+00	1.58E-02
87	ALL	734073	4033892	NonCancerAcute	0.00E+00	9.16E-06	1.95E-03	0.00E+00	0.00E+00	1.95E-03	6.35E-03	0.00E+00	1.48E-02	0.00E+00	0.00E+00	1.95E-03	0.00E+00	0.00E+00	1.48E-02
88	ALL	732073	4033992	NonCancerAcute	0.00E+00	1.99E-05	4.23E-03	0.00E+00	0.00E+00	4.25E-03	7.21E-03	0.00E+00	2.42E-02	0.00E+00	0.00E+00	4.23E-03	0.00E+00	0.00E+00	2.42E-02
89	ALL	733773	4033992	NonCancerAcute	0.00E+00	1.15E-05	2.45E-03	0.00E+00	0.00E+00	2.46E-03	7.85E-03	0.00E+00	1.85E-02	0.00E+00	0.00E+00	2.45E-03	0.00E+00	0.00E+00	1.85E-02
90	ALL	733873	4033992	NonCancerAcute	0.00E+00	9.90E-06	2.10E-03	0.00E+00	0.00E+00	2.11E-03	7.26E-03	0.00E+00	1.65E-02	0.00E+00	0.00E+00	2.10E-03	0.00E+00	0.00E+00	1.65E-02
91	ALL	733973	4033992	NonCancerAcute	0.00E+00	8.84E-06	1.88E-03	0.00E+00	0.00E+00	1.89E-03	6.79E-03	0.00E+00	1.51E-02	0.00E+00	0.00E+00	1.88E-03	0.00E+00	0.00E+00	1.51E-02
92	ALL	734073	4033992	NonCancerAcute	0.00E+00	8.08E-06	1.72E-03	0.00E+00	0.00E+00	1.72E-03	6.47E-03	0.00E+00	1.42E-02	0.00E+00	0.00E+00	1.72E-03	0.00E+00	0.00E+00	1.42E-02
93	ALL	732073	4034092	NonCancerAcute	0.00E+00	1.73E-05	3.66E-03	0.00E+00	0.00E+00	3.68E-03	6.35E-03	0.00E+00	2.11E-02	0.00E+00	0.00E+00	3.66E-03	0.00E+00	0.00E+00	2.11E-02
94	ALL	733773	4034092	NonCancerAcute	0.00E+00	1.19E-05	2.54E-03	0.00E+00	0.00E+00	2.55E-03	7.75E-03	0.00E+00	1.87E-02	0.00E+00	0.00E+00	2.54E-03	0.00E+00	0.00E+00	1.87E-02
95	ALL	733873	4034092	NonCancerAcute	0.00E+00	1.01E-05	2.14E-03	0.00E+00	0.00E+00	2.15E-03	7.35E-03	0.00E+00	1.68E-02	0.00E+00	0.00E+00	2.14E-03	0.00E+00	0.00E+00	1.68E-02
96	ALL	733973	4034092	NonCancerAcute	0.00E+00	9.18E-06	1.95E-03	0.00E+00	0.00E+00	1.96E-03	6.82E-03	0.00E+00	1.54E-02	0.00E+00	0.00E+00	1.95E-03	0.00E+00	0.00E+00	1.54E-02
97	ALL	734073	4034092	NonCancerAcute	0.00E+00	9.07E-06	1.93E-03	0.00E+00	0.00E+00	1.94E-03	6.53E-03	0.00E+00	1.50E-02	0.00E+00	0.00E+00	1.93E-03	0.00E+00	0.00E+00	1.50E-02
98	ALL	732073	4034192	NonCancerAcute	0.00E+00	1.46E-05	3.11E-03	0.00E+00	0.00E+00	3.12E-03	7.00E-03	0.00E+00	1.99E-02	0.00E+00	0.00E+00	3.11E-03	0.00E+00	0.00E+00	1.99E-02
99	ALL	733773	4034192	NonCancerAcute	0.00E+00	1.18E-05	2.51E-03	0.00E+00	0.00E+00	2.52E-03	7.58E-03	0.00E+00	1.84E-02	0.00E+00	0.00E+00	2.51E-03	0.00E+00	0.00E+00	1.84E-02
100	ALL	733873	4034192	NonCancerAcute	0.00E+00	1.01E-05	2.13E-03	0.00E+00	0.00E+00	2.14E-03	7.22E-03	0.00E+00	1.66E-02	0.00E+00	0.00E+00	2.13E-03	0.00E+00	0.00E+00	1.66E-02
101	ALL	733973	4034192	NonCancerAcute	0.00E+00	9.11E-06	1.94E-03	0.00E+00	0.00E+00	1.94E-03	6.93E-03	0.00E+00	1.55E-02	0.00E+00	0.00E+00	1.94E-03	0.00E+00	0.00E+00	1.55E-02
102	ALL	734073	4034192	NonCancerAcute	0.00E+00	9.31E-06	1.98E-03	0.00E+00	0.00E+00	1.99E-03	6.53E-03	0.00E+00	1.52E-02	0.00E+00	0.00E+00	1.98E-03	0.00E+00	0.00E+00	1.52E-02
103	ALL	732073	4034292	NonCancerAcute	0.00E+00	1.26E-05	2.68E-03	0.00E+00	0.00E+00	2.70E-03	7.88E-03	0.00E+00	1.94E-02	0.00E+00	0.00E+00	2.68E-03	0.00E+00	0.00E+00	1.94E-02
104	ALL	733773	4034292	NonCancerAcute	0.00E+00	1.11E-05	2.36E-03	0.00E+00	0.00E+00	2.38E-03	7.48E-03	0.00E+00	1.78E-02	0.00E+00	0.00E+00	2.36E-03	0.00E+00	0.00E+00	1.78E-02

105	ALL	733873	4034292	NonCancerAcute	0.00E+00	9.61E-06	2.04E-03	0.00E+00	0.00E+00	2.05E-03	7.18E-03	0.00E+00	1.62E-02	0.00E+00	0.00E+00	2.04E-03	0.00E+00	0.00E+00	1.62E-02
106	ALL	733973	4034292	NonCancerAcute	0.00E+00	8.93E-06	1.90E-03	0.00E+00	0.00E+00	1.91E-03	6.86E-03	0.00E+00	1.53E-02	0.00E+00	0.00E+00	1.90E-03	0.00E+00	0.00E+00	1.53E-02
107	ALL	734073	4034292	NonCancerAcute	0.00E+00	8.78E-06	1.87E-03	0.00E+00	0.00E+00	1.87E-03	6.69E-03	0.00E+00	1.50E-02	0.00E+00	0.00E+00	1.87E-03	0.00E+00	0.00E+00	1.50E-02
108	ALL	734173	4034292	NonCancerAcute	0.00E+00	8.63E-06	1.83E-03	0.00E+00	0.00E+00	1.84E-03	6.43E-03	0.00E+00	1.45E-02	0.00E+00	0.00E+00	1.83E-03	0.00E+00	0.00E+00	1.45E-02
109	ALL	732073	4034392	NonCancerAcute	0.00E+00	1.10E-05	2.33E-03	0.00E+00	0.00E+00	2.34E-03	8.32E-03	0.00E+00	1.87E-02	0.00E+00	0.00E+00	2.33E-03	0.00E+00	0.00E+00	1.87E-02
110	ALL	733773	4034392	NonCancerAcute	0.00E+00	1.10E-05	2.34E-03	0.00E+00	0.00E+00	2.36E-03	7.49E-03	0.00E+00	1.77E-02	0.00E+00	0.00E+00	2.34E-03	0.00E+00	0.00E+00	1.77E-02
111	ALL	733873	4034392	NonCancerAcute	0.00E+00	9.01E-06	1.91E-03	0.00E+00	0.00E+00	1.92E-03	7.25E-03	0.00E+00	1.58E-02	0.00E+00	0.00E+00	1.91E-03	0.00E+00	0.00E+00	1.58E-02
112	ALL	733973	4034392	NonCancerAcute	0.00E+00	8.61E-06	1.83E-03	0.00E+00	0.00E+00	1.84E-03	6.94E-03	0.00E+00	1.51E-02	0.00E+00	0.00E+00	1.83E-03	0.00E+00	0.00E+00	1.51E-02
113	ALL	734073	4034392	NonCancerAcute	0.00E+00	8.39E-06	1.78E-03	0.00E+00	0.00E+00	1.79E-03	6.68E-03	0.00E+00	1.47E-02	0.00E+00	0.00E+00	1.78E-03	0.00E+00	0.00E+00	1.47E-02
114	ALL	734173	4034392	NonCancerAcute	0.00E+00	8.35E-06	1.77E-03	0.00E+00	0.00E+00	1.78E-03	6.35E-03	0.00E+00	1.42E-02	0.00E+00	0.00E+00	1.77E-03	0.00E+00	0.00E+00	1.42E-02
115	ALL	734273	4034392	NonCancerAcute	0.00E+00	8.25E-06	1.75E-03	0.00E+00	0.00E+00	1.76E-03	6.08E-03	0.00E+00	1.38E-02	0.00E+00	0.00E+00	1.75E-03	0.00E+00	0.00E+00	1.38E-02
116	ALL	732073	4034492	NonCancerAcute	0.00E+00	9.84E-06	2.09E-03	0.00E+00	0.00E+00	2.10E-03	7.15E-03	0.00E+00	1.64E-02	0.00E+00	0.00E+00	2.09E-03	0.00E+00	0.00E+00	1.64E-02
117	ALL	734173	4034492	NonCancerAcute	0.00E+00	7.93E-06	1.68E-03	0.00E+00	0.00E+00	1.69E-03	6.23E-03	0.00E+00	1.38E-02	0.00E+00	0.00E+00	1.68E-03	0.00E+00	0.00E+00	1.38E-02
118	ALL	734273	4034492	NonCancerAcute	0.00E+00	7.92E-06	1.68E-03	0.00E+00	0.00E+00	1.69E-03	5.96E-03	0.00E+00	1.34E-02	0.00E+00	0.00E+00	1.68E-03	0.00E+00	0.00E+00	1.34E-02
119	ALL	734373	4034492	NonCancerAcute	0.00E+00	7.98E-06	1.69E-03	0.00E+00	0.00E+00	1.70E-03	5.72E-03	0.00E+00	1.32E-02	0.00E+00	0.00E+00	1.69E-03	0.00E+00	0.00E+00	1.32E-02
120	ALL	734473	4034492	NonCancerAcute	0.00E+00	7.98E-06	1.69E-03	0.00E+00	0.00E+00	1.70E-03	5.51E-03	0.00E+00	1.29E-02	0.00E+00	0.00E+00	1.69E-03	0.00E+00	0.00E+00	1.29E-02
121	ALL	734573	4034492	NonCancerAcute	0.00E+00	7.89E-06	1.68E-03	0.00E+00	0.00E+00	1.68E-03	5.32E-03	0.00E+00	1.26E-02	0.00E+00	0.00E+00	1.68E-03	0.00E+00	0.00E+00	1.26E-02
122	ALL	734673	4034492	NonCancerAcute	0.00E+00	7.83E-06	1.66E-03	0.00E+00	0.00E+00	1.67E-03	5.12E-03	0.00E+00	1.23E-02	0.00E+00	0.00E+00	1.66E-03	0.00E+00	0.00E+00	1.23E-02
123	ALL	734773	4034492	NonCancerAcute	0.00E+00	7.82E-06	1.66E-03	0.00E+00	0.00E+00	1.67E-03	4.93E-03	0.00E+00	1.21E-02	0.00E+00	0.00E+00	1.66E-03	0.00E+00	0.00E+00	1.21E-02
124	ALL	734873	4034492	NonCancerAcute	0.00E+00	7.82E-06	1.66E-03	0.00E+00	0.00E+00	1.67E-03	4.74E-03	0.00E+00	1.18E-02	0.00E+00	0.00E+00	1.66E-03	0.00E+00	0.00E+00	1.18E-02
125	ALL	732073	4034592	NonCancerAcute	0.00E+00	9.23E-06	1.96E-03	0.00E+00	0.00E+00	1.97E-03	7.46E-03	0.00E+00	1.63E-02	0.00E+00	0.00E+00	1.96E-03	0.00E+00	0.00E+00	1.63E-02
126	ALL	733773	4034592	NonCancerAcute	0.00E+00	9.44E-06	2.00E-03	0.00E+00	0.00E+00	2.01E-03	7.02E-03	0.00E+00	1.59E-02	0.00E+00	0.00E+00	2.00E-03	0.00E+00	0.00E+00	1.59E-02
127	ALL	733873	4034592	NonCancerAcute	0.00E+00	9.34E-06	1.98E-03	0.00E+00	0.00E+00	1.99E-03	6.96E-03	0.00E+00	1.57E-02	0.00E+00	0.00E+00	1.98E-03	0.00E+00	0.00E+00	1.57E-02
128	ALL	733973	4034592	NonCancerAcute	0.00E+00	8.52E-06	1.81E-03	0.00E+00	0.00E+00	1.82E-03	6.67E-03	0.00E+00	1.47E-02	0.00E+00	0.00E+00	1.81E-03	0.00E+00	0.00E+00	1.47E-02
129	ALL	734273	4034592	NonCancerAcute	0.00E+00	7.79E-06	1.65E-03	0.00E+00	0.00E+00	1.66E-03	5.86E-03	0.00E+00	1.32E-02	0.00E+00	0.00E+00	1.65E-03	0.00E+00	0.00E+00	1.32E-02
130	ALL	734373	4034592	NonCancerAcute	0.00E+00	7.99E-06	1.70E-03	0.00E+00	0.00E+00	1.70E-03	5.61E-03	0.00E+00	1.30E-02	0.00E+00	0.00E+00	1.70E-03	0.00E+00	0.00E+00	1.30E-02
131	ALL	734473	4034592	NonCancerAcute	0.00E+00	7.96E-06	1.69E-03	0.00E+00	0.00E+00	1.70E-03	5.41E-03	0.00E+00	1.28E-02	0.00E+00	0.00E+00	1.69E-03	0.00E+00	0.00E+00	1.28E-02
132	ALL	734573	4034592	NonCancerAcute	0.00E+00	8.00E-06	1.70E-03	0.00E+00	0.00E+00	1.71E-03	5.21E-03	0.00E+00	1.26E-02	0.00E+00	0.00E+00	1.70E-03	0.00E+00	0.00E+00	1.26E-02
133	ALL	734673	4034592	NonCancerAcute	0.00E+00	7.92E-06	1.68E-03	0.00E+00	0.00E+00	1.69E-03	5.03E-03	0.00E+00	1.23E-02	0.00E+00	0.00E+00	1.68E-03	0.00E+00	0.00E+00	1.23E-02
134	ALL	734773	4034592	NonCancerAcute	0.00E+00	7.92E-06	1.68E-03	0.00E+00	0.00E+00	1.69E-03	4.82E-03	0.00E+00	1.20E-02	0.00E+00	0.00E+00	1.68E-03	0.00E+00	0.00E+00	1.20E-02
135	ALL	734873	4034592	NonCancerAcute	0.00E+00	7.88E-06	1.67E-03	0.00E+00	0.00E+00	1.68E-03	4.66E-03	0.00E+00	1.18E-02	0.00E+00	0.00E+00	1.67E-03	0.00E+00	0.00E+00	1.18E-02
136	ALL	734973	4034592	NonCancerAcute	0.00E+00	7.90E-06	1.68E-03	0.00E+00	0.00E+00	1.69E-03	4.49E-03	0.00E+00	1.16E-02	0.00E+00	0.00E+00	1.68E-03	0.00E+00	0.00E+00	1.16E-02
137	ALL	732073	4034692	NonCancerAcute	0.00E+00	9.53E-06	2.02E-03	0.00E+00	0.00E+00	2.03E-03	7.17E-03	0.00E+00	1.61E-02	0.00E+00	0.00E+00	2.02E-03	0.00E+00	0.00E+00	1.61E-02
138	ALL	732173	4034692	NonCancerAcute	0.00E+00	8.54E-06	1.81E-03	0.00E+00	0.00E+00	1.82E-03	7.46E-03	0.00E+00	1.57E-02	0.00E+00	0.00E+00	1.81E-03	0.00E+00	0.00E+00	1.57E-02
139	ALL	732273	4034692	NonCancerAcute	0.00E+00	9.41E-06	2.00E-03	0.00E+00	0.00E+00	2.01E-03	7.75E-03	0.00E+00	1.68E-02	0.00E+00	0.00E+00	2.00E-03	0.00E+00	0.00E+00	1.68E-02
140	ALL	732373	4034692	NonCancerAcute	0.00E+00	8.92E-06	1.89E-03	0.00E+00	0.00E+00	1.90E-03	7.69E-03	0.00E+00	1.63E-02	0.00E+00	0.00E+00	1.89E-03	0.00E+00	0.00E+00	1.63E-02
141	ALL	732473	4034692	NonCancerAcute	0.00E+00	9.75E-06	2.07E-03	0.00E+00	0.00E+00	2.08E-03	7.70E-03	0.00E+00	1.70E-02	0.00E+00	0.00E+00	2.07E-03	0.00E+00	0.00E+00	1.70E-02
142	ALL	732573	4034692	NonCancerAcute	0.00E+00	1.01E-05	2.16E-03	0.00E+00	0.00E+00	2.17E-03	7.79E-03	0.00E+00	1.74E-02	0.00E+00	0.00E+00	2.16E-03	0.00E+00	0.00E+00	1.74E-02
143	ALL	732673	4034692	NonCancerAcute	0.00E+00	1.03E-05	2.18E-03	0.00E+00	0.00E+00	2.19E-03	8.94E-03	0.00E+00	1.89E-02	0.00E+00	0.00E+00	2.18E-03	0.00E+00	0.00E+00	1.89E-02
144	ALL	732773	4034692	NonCancerAcute	0.00E+00	1.15E-05	2.45E-03	0.00E+00	0.00E+00	2.46E-03	9.97E-03	0.00E+00	2.11E-02	0.00E+00	0.00E+00	2.45E-03	0.00E+00	0.00E+00	2.11E-02
145	ALL	732873	4034692	NonCancerAcute	0.00E+00	1.11E-05	2.35E-03	0.00E+00	0.00E+00	2.36E-03	1.08E-02	0.00E+00	2.18E-02	0.00E+00	0.00E+00	2.35E-03	0.00E+00	0.00E+00	2.18E-02
146	ALL	732973	4034692	NonCancerAcute	0.00E+00	1.14E-05	2.42E-03	0.00E+00	0.00E+00	2.43E-03	1.19E-02	0.00E+00	2.33E-02	0.00E+00	0.00E+00	2.42E-03	0.00E+00	0.00E+00	2.33E-02
147	ALL	733073	4034692	NonCancerAcute	0.00E+00	1.19E-05	2.52E-03	0.00E+00	0.00E+00	2.54E-03	1.46E-02	0.00E+00	2.70E-02	0.00E+00	0.00E+00	2.52E-03	0.00E+00	0.00E+00	2.70E-02
148	ALL	733173	4034692	NonCancerAcute	0.00E+00	1.21E-05	2.57E-03	0.00E+00	0.00E+00	2.58E-03	1.32E-02	0.00E+00	2.55E-02	0.00E+00	0.00E+00	2.57E-03	0.00E+00	0.00E+00	2.55E-02
149	ALL	733273	4034692	NonCancerAcute	0.00E+00	1.13E-05	2.40E-03	0.00E+00	0.00E+00	2.41E-03	1.28E-02	0.00E+00	2.44E-02	0.00E+00	0.00E+00	2.40E-03	0.00E+00	0.00E+00	2.44E-02
150	ALL	733373	4034692	NonCancerAcute	0.00E+00	1.12E-05	2.39E-03	0.00E+00	0.00E+00	2.40E-03	1.22E-02	0.00E+00	2.36E-02	0.00E+00	0.00E+00	2.39E-03	0.00E+00	0.00E+00	2.36E-02
151	ALL	733473	4034692	NonCancerAcute	0.00E+00	1.09E-05	2.32E-03	0.00E+00	0.00E+00	2.34E-03	9.89E-03	0.00E+00	2.06E-02	0.00E+00	0.00E+00	2.32E-03	0.00E+00	0.00E+00	2.06E-02
152	ALL	733573	4034692	NonCancerAcute	0.00E+00	1.02E-05	2.17E-03	0.00E+00	0.00E+00	2.18E-03	8.57E-03	0.00E+00	1.84E-02	0.00E+00	0.00E+00	2.17E-03	0.00E+00	0.00E+00	1.84E-02
153	ALL	733673	4034692	NonCancerAcute	0.00E+00	9.59E-06	2.04E-03	0.00E+00	0.00E+00	2.05E-03	8.28E-03	0.00E+00	1.75E-02	0.00E+00	0.00E+00	2.04E-03	0.00E+00	0.00E+00	1.75E-02
154	ALL	733773	4034692	NonCancerAcute	0.00E+00	9.32E-06	1.98E-03	0.00E+00	0.00E+00	1.99E-03	9.19E-03	0.00E+00	1.85E-02	0.00E+00	0.00E+00	1.98E-03	0.00E+00	0.00E+00	1.85E-02
155	ALL	733873	4034692	NonCancerAcute	0.00E+00	8.82E-06	1.87E-03	0.00E+00	0.00E+00	1.88E-03	6.64E-03	0.00E+00	1.49E-02	0.00E+00	0.00E+00	1.87E-03	0.00E+00	0.00E+00	1.49E-02
156	ALL	733973	4034692	NonCancerAcute	0.00E+00	8.62E-06	1.83E-03	0.00E+00	0.00E+00	1.84E-03	6.44E-03	0.00E+00	1.45E-02	0.00E+00	0.00E+00	1.83E-03	0.00E+00	0.00E+00	1.45E-02
157	ALL	734073	4034692	NonCancerAcute	0.00E+00	7.99E-06	1.70E-03	0.00E+00	0.00E+00	1.70E-03	6.12E-03	0.00E+00	1.37E-02	0.00E+00	0.00E+00	1.70E-03	0.00E+00	0.00E+00	1.37E-02

158	ALL	734273	4034692	NonCancerAcute	0.00E+00	8.34E-06	1.77E-03	0.00E+00	0.00E+00	1.78E-03	5.68E-03	0.00E+00	1.34E-02	0.00E+00	0.00E+00	1.77E-03	0.00E+00	0.00E+00	1.34E-02
159	ALL	734373	4034692	NonCancerAcute	0.00E+00	8.05E-06	1.71E-03	0.00E+00	0.00E+00	1.72E-03	5.48E-03	0.00E+00	1.29E-02	0.00E+00	0.00E+00	1.71E-03	0.00E+00	0.00E+00	1.29E-02
160	ALL	734473	4034692	NonCancerAcute	0.00E+00	8.00E-06	1.70E-03	0.00E+00	0.00E+00	1.71E-03	5.31E-03	0.00E+00	1.27E-02	0.00E+00	0.00E+00	1.70E-03	0.00E+00	0.00E+00	1.27E-02
161	ALL	734573	4034692	NonCancerAcute	0.00E+00	8.03E-06	1.71E-03	0.00E+00	0.00E+00	1.71E-03	5.08E-03	0.00E+00	1.24E-02	0.00E+00	0.00E+00	1.71E-03	0.00E+00	0.00E+00	1.24E-02
162	ALL	734673	4034692	NonCancerAcute	0.00E+00	8.01E-06	1.70E-03	0.00E+00	0.00E+00	1.71E-03	4.89E-03	0.00E+00	1.22E-02	0.00E+00	0.00E+00	1.70E-03	0.00E+00	0.00E+00	1.22E-02
163	ALL	734773	4034692	NonCancerAcute	0.00E+00	7.96E-06	1.69E-03	0.00E+00	0.00E+00	1.70E-03	4.76E-03	0.00E+00	1.20E-02	0.00E+00	0.00E+00	1.69E-03	0.00E+00	0.00E+00	1.20E-02
164	ALL	734873	4034692	NonCancerAcute	0.00E+00	7.98E-06	1.69E-03	0.00E+00	0.00E+00	1.70E-03	4.61E-03	0.00E+00	1.18E-02	0.00E+00	0.00E+00	1.69E-03	0.00E+00	0.00E+00	1.18E-02
165	ALL	734973	4034692	NonCancerAcute	0.00E+00	7.98E-06	1.69E-03	0.00E+00	0.00E+00	1.70E-03	4.43E-03	0.00E+00	1.16E-02	0.00E+00	0.00E+00	1.69E-03	0.00E+00	0.00E+00	1.16E-02
166	ALL	732073	4034792	NonCancerAcute	0.00E+00	8.94E-06	1.90E-03	0.00E+00	0.00E+00	1.91E-03	6.93E-03	0.00E+00	1.54E-02	0.00E+00	0.00E+00	1.90E-03	0.00E+00	0.00E+00	1.54E-02
167	ALL	732173	4034792	NonCancerAcute	0.00E+00	8.64E-06	1.84E-03	0.00E+00	0.00E+00	1.85E-03	7.40E-03	0.00E+00	1.57E-02	0.00E+00	0.00E+00	1.84E-03	0.00E+00	0.00E+00	1.57E-02
168	ALL	732273	4034792	NonCancerAcute	0.00E+00	8.24E-06	1.75E-03	0.00E+00	0.00E+00	1.76E-03	7.44E-03	0.00E+00	1.55E-02	0.00E+00	0.00E+00	1.75E-03	0.00E+00	0.00E+00	1.55E-02
169	ALL	732373	4034792	NonCancerAcute	0.00E+00	8.95E-06	1.90E-03	0.00E+00	0.00E+00	1.91E-03	7.47E-03	0.00E+00	1.61E-02	0.00E+00	0.00E+00	1.90E-03	0.00E+00	0.00E+00	1.61E-02
170	ALL	732473	4034792	NonCancerAcute	0.00E+00	9.19E-06	1.95E-03	0.00E+00	0.00E+00	1.96E-03	7.44E-03	0.00E+00	1.62E-02	0.00E+00	0.00E+00	1.95E-03	0.00E+00	0.00E+00	1.62E-02
171	ALL	732573	4034792	NonCancerAcute	0.00E+00	9.32E-06	1.98E-03	0.00E+00	0.00E+00	1.99E-03	7.48E-03	0.00E+00	1.64E-02	0.00E+00	0.00E+00	1.98E-03	0.00E+00	0.00E+00	1.64E-02
172	ALL	732673	4034792	NonCancerAcute	0.00E+00	1.03E-05	2.19E-03	0.00E+00	0.00E+00	2.20E-03	9.02E-03	0.00E+00	1.90E-02	0.00E+00	0.00E+00	2.19E-03	0.00E+00	0.00E+00	1.90E-02
173	ALL	732773	4034792	NonCancerAcute	0.00E+00	1.02E-05	2.16E-03	0.00E+00	0.00E+00	2.17E-03	8.99E-03	0.00E+00	1.89E-02	0.00E+00	0.00E+00	2.16E-03	0.00E+00	0.00E+00	1.89E-02
174	ALL	732873	4034792	NonCancerAcute	0.00E+00	1.02E-05	2.16E-03	0.00E+00	0.00E+00	2.17E-03	9.57E-03	0.00E+00	1.96E-02	0.00E+00	0.00E+00	2.16E-03	0.00E+00	0.00E+00	1.96E-02
175	ALL	732973	4034792	NonCancerAcute	0.00E+00	1.01E-05	2.15E-03	0.00E+00	0.00E+00	2.16E-03	1.09E-02	0.00E+00	2.12E-02	0.00E+00	0.00E+00	2.15E-03	0.00E+00	0.00E+00	2.12E-02
176	ALL	733073	4034792	NonCancerAcute	0.00E+00	1.04E-05	2.22E-03	0.00E+00	0.00E+00	2.23E-03	1.08E-02	0.00E+00	2.13E-02	0.00E+00	0.00E+00	2.22E-03	0.00E+00	0.00E+00	2.13E-02
177	ALL	733173	4034792	NonCancerAcute	0.00E+00	1.03E-05	2.19E-03	0.00E+00	0.00E+00	2.20E-03	1.08E-02	0.00E+00	2.12E-02	0.00E+00	0.00E+00	2.19E-03	0.00E+00	0.00E+00	2.12E-02
178	ALL	733273	4034792	NonCancerAcute	0.00E+00	1.02E-05	2.17E-03	0.00E+00	0.00E+00	2.18E-03	1.03E-02	0.00E+00	2.05E-02	0.00E+00	0.00E+00	2.17E-03	0.00E+00	0.00E+00	2.05E-02
179	ALL	733373	4034792	NonCancerAcute	0.00E+00	1.03E-05	2.20E-03	0.00E+00	0.00E+00	2.21E-03	9.88E-03	0.00E+00	2.01E-02	0.00E+00	0.00E+00	2.20E-03	0.00E+00	0.00E+00	2.01E-02
180	ALL	733473	4034792	NonCancerAcute	0.00E+00	9.79E-06	2.08E-03	0.00E+00	0.00E+00	2.09E-03	8.74E-03	0.00E+00	1.83E-02	0.00E+00	0.00E+00	2.08E-03	0.00E+00	0.00E+00	1.83E-02
181	ALL	733573	4034792	NonCancerAcute	0.00E+00	9.23E-06	1.96E-03	0.00E+00	0.00E+00	1.97E-03	7.32E-03	0.00E+00	1.61E-02	0.00E+00	0.00E+00	1.96E-03	0.00E+00	0.00E+00	1.61E-02
182	ALL	733673	4034792	NonCancerAcute	0.00E+00	9.00E-06	1.91E-03	0.00E+00	0.00E+00	1.92E-03	7.10E-03	0.00E+00	1.56E-02	0.00E+00	0.00E+00	1.91E-03	0.00E+00	0.00E+00	1.56E-02
183	ALL	733773	4034792	NonCancerAcute	0.00E+00	8.67E-06	1.84E-03	0.00E+00	0.00E+00	1.85E-03	7.61E-03	0.00E+00	1.60E-02	0.00E+00	0.00E+00	1.84E-03	0.00E+00	0.00E+00	1.60E-02
184	ALL	733873	4034792	NonCancerAcute	0.00E+00	8.63E-06	1.83E-03	0.00E+00	0.00E+00	1.84E-03	7.29E-03	0.00E+00	1.56E-02	0.00E+00	0.00E+00	1.83E-03	0.00E+00	0.00E+00	1.56E-02
185	ALL	733973	4034792	NonCancerAcute	0.00E+00	8.34E-06	1.77E-03	0.00E+00	0.00E+00	1.78E-03	6.78E-03	0.00E+00	1.47E-02	0.00E+00	0.00E+00	1.77E-03	0.00E+00	0.00E+00	1.47E-02
186	ALL	734073	4034792	NonCancerAcute	0.00E+00	8.26E-06	1.75E-03	0.00E+00	0.00E+00	1.76E-03	6.03E-03	0.00E+00	1.38E-02	0.00E+00	0.00E+00	1.75E-03	0.00E+00	0.00E+00	1.38E-02
187	ALL	734173	4034792	NonCancerAcute	0.00E+00	7.84E-06	1.67E-03	0.00E+00	0.00E+00	1.67E-03	5.77E-03	0.00E+00	1.31E-02	0.00E+00	0.00E+00	1.67E-03	0.00E+00	0.00E+00	1.31E-02
188	ALL	734773	4034792	NonCancerAcute	0.00E+00	8.03E-06	1.70E-03	0.00E+00	0.00E+00	1.71E-03	4.65E-03	0.00E+00	1.19E-02	0.00E+00	0.00E+00	1.70E-03	0.00E+00	0.00E+00	1.19E-02
189	ALL	734873	4034792	NonCancerAcute	0.00E+00	8.03E-06	1.70E-03	0.00E+00	0.00E+00	1.71E-03	4.54E-03	0.00E+00	1.18E-02	0.00E+00	0.00E+00	1.70E-03	0.00E+00	0.00E+00	1.18E-02
190	ALL	734973	4034792	NonCancerAcute	0.00E+00	8.01E-06	1.70E-03	0.00E+00	0.00E+00	1.71E-03	4.38E-03	0.00E+00	1.15E-02	0.00E+00	0.00E+00	1.70E-03	0.00E+00	0.00E+00	1.15E-02
191	ALL	735073	4034792	NonCancerAcute	0.00E+00	8.04E-06	1.71E-03	0.00E+00	0.00E+00	1.72E-03	4.18E-03	0.00E+00	1.13E-02	0.00E+00	0.00E+00	1.71E-03	0.00E+00	0.00E+00	1.13E-02
192	ALL	732073	4034892	NonCancerAcute	0.00E+00	8.76E-06	1.86E-03	0.00E+00	0.00E+00	1.87E-03	7.08E-03	0.00E+00	1.54E-02	0.00E+00	0.00E+00	1.86E-03	0.00E+00	0.00E+00	1.54E-02
193	ALL	732173	4034892	NonCancerAcute	0.00E+00	8.48E-06	1.80E-03	0.00E+00	0.00E+00	1.81E-03	7.17E-03	0.00E+00	1.53E-02	0.00E+00	0.00E+00	1.80E-03	0.00E+00	0.00E+00	1.53E-02
194	ALL	732273	4034892	NonCancerAcute	0.00E+00	8.23E-06	1.75E-03	0.00E+00	0.00E+00	1.76E-03	7.36E-03	0.00E+00	1.54E-02	0.00E+00	0.00E+00	1.75E-03	0.00E+00	0.00E+00	1.54E-02
195	ALL	732373	4034892	NonCancerAcute	0.00E+00	8.61E-06	1.83E-03	0.00E+00	0.00E+00	1.84E-03	7.45E-03	0.00E+00	1.58E-02	0.00E+00	0.00E+00	1.83E-03	0.00E+00	0.00E+00	1.58E-02
196	ALL	732473	4034892	NonCancerAcute	0.00E+00	8.54E-06	1.81E-03	0.00E+00	0.00E+00	1.82E-03	7.41E-03	0.00E+00	1.57E-02	0.00E+00	0.00E+00	1.81E-03	0.00E+00	0.00E+00	1.57E-02
197	ALL	732573	4034892	NonCancerAcute	0.00E+00	9.43E-06	2.00E-03	0.00E+00	0.00E+00	2.01E-03	7.37E-03	0.00E+00	1.63E-02	0.00E+00	0.00E+00	2.00E-03	0.00E+00	0.00E+00	1.63E-02
198	ALL	732673	4034892	NonCancerAcute	0.00E+00	9.56E-06	2.03E-03	0.00E+00	0.00E+00	2.04E-03	7.92E-03	0.00E+00	1.71E-02	0.00E+00	0.00E+00	2.03E-03	0.00E+00	0.00E+00	1.71E-02
199	ALL	732773	4034892	NonCancerAcute	0.00E+00	9.54E-06	2.03E-03	0.00E+00	0.00E+00	2.04E-03	8.52E-03	0.00E+00	1.78E-02	0.00E+00	0.00E+00	2.03E-03	0.00E+00	0.00E+00	1.78E-02
200	ALL	732873	4034892	NonCancerAcute	0.00E+00	9.09E-06	1.93E-03	0.00E+00	0.00E+00	1.94E-03	9.03E-03	0.00E+00	1.81E-02	0.00E+00	0.00E+00	1.93E-03	0.00E+00	0.00E+00	1.81E-02
201	ALL	732973	4034892	NonCancerAcute	0.00E+00	9.48E-06	2.01E-03	0.00E+00	0.00E+00	2.02E-03	9.16E-03	0.00E+00	1.85E-02	0.00E+00	0.00E+00	2.01E-03	0.00E+00	0.00E+00	1.85E-02
202	ALL	733073	4034892	NonCancerAcute	0.00E+00	9.14E-06	1.94E-03	0.00E+00	0.00E+00	1.95E-03	9.17E-03	0.00E+00	1.83E-02	0.00E+00	0.00E+00	1.94E-03	0.00E+00	0.00E+00	1.83E-02
203	ALL	733173	4034892	NonCancerAcute	0.00E+00	9.18E-06	1.95E-03	0.00E+00	0.00E+00	1.96E-03	9.13E-03	0.00E+00	1.83E-02	0.00E+00	0.00E+00	1.95E-03	0.00E+00	0.00E+00	1.83E-02
204	ALL	733273	4034892	NonCancerAcute	0.00E+00	9.47E-06	2.01E-03	0.00E+00	0.00E+00	2.02E-03	8.62E-03	0.00E+00	1.79E-02	0.00E+00	0.00E+00	2.01E-03	0.00E+00	0.00E+00	1.79E-02
205	ALL	733373	4034892	NonCancerAcute	0.00E+00	9.40E-06	2.00E-03	0.00E+00	0.00E+00	2.01E-03	8.44E-03	0.00E+00	1.76E-02	0.00E+00	0.00E+00	2.00E-03	0.00E+00	0.00E+00	1.76E-02
206	ALL	733473	4034892	NonCancerAcute	0.00E+00	9.13E-06	1.94E-03	0.00E+00	0.00E+00	1.95E-03	8.00E-03	0.00E+00	1.68E-02	0.00E+00	0.00E+00	1.94E-03	0.00E+00	0.00E+00	1.68E-02
207	ALL	733573	4034892	NonCancerAcute	0.00E+00	9.22E-06	1.96E-03	0.00E+00	0.00E+00	1.97E-03	7.78E-03	0.00E+00	1.66E-02	0.00E+00	0.00E+00	1.96E-03	0.00E+00	0.00E+00	1.66E-02
208	ALL	733673	4034892	NonCancerAcute	0.00E+00	8.83E-06	1.88E-03	0.00E+00	0.00E+00	1.88E-03	6.53E-03	0.00E+00	1.48E-02	0.00E+00	0.00E+00	1.88E-03	0.00E+00	0.00E+00	1.48E-02
209	ALL	733773	4034892	NonCancerAcute	0.00E+00	8.19E-06	1.74E-03	0.00E+00	0.00E+00	1.75E-03	6.45E-03	0.00E+00	1.42E-02	0.00E+00	0.00E+00	1.74E-03	0.00E+00	0.00E+00	1.42E-02
210	ALL	733873	4034892	NonCancerAcute	0.00E+00	8.22E-06	1.75E-03	0.00E+00	0.00E+00	1.75E-03	6.65E-03	0.00E+00	1.45E-02	0.00E+00	0.00E+00	1.75E-03	0.00E+00	0.00E+00	1.45E-02

211	ALL	733973	4034892	NonCancerAcute	0.00E+00	8.37E-06	1.78E-03	0.00E+00	0.00E+00	1.79E-03	6.32E-03	0.00E+00	1.42E-02	0.00E+00	0.00E+00	1.78E-03	0.00E+00	0.00E+00	1.42E-02
212	ALL	734073	4034892	NonCancerAcute	0.00E+00	8.18E-06	1.74E-03	0.00E+00	0.00E+00	1.75E-03	6.16E-03	0.00E+00	1.39E-02	0.00E+00	0.00E+00	1.74E-03	0.00E+00	0.00E+00	1.39E-02
213	ALL	734173	4034892	NonCancerAcute	0.00E+00	8.14E-06	1.73E-03	0.00E+00	0.00E+00	1.74E-03	5.75E-03	0.00E+00	1.33E-02	0.00E+00	0.00E+00	1.73E-03	0.00E+00	0.00E+00	1.33E-02
214	ALL	734273	4034892	NonCancerAcute	0.00E+00	7.82E-06	1.66E-03	0.00E+00	0.00E+00	1.67E-03	5.40E-03	0.00E+00	1.27E-02	0.00E+00	0.00E+00	1.66E-03	0.00E+00	0.00E+00	1.27E-02
215	ALL	734373	4034892	NonCancerAcute	0.00E+00	7.76E-06	1.65E-03	0.00E+00	0.00E+00	1.66E-03	5.24E-03	0.00E+00	1.24E-02	0.00E+00	0.00E+00	1.65E-03	0.00E+00	0.00E+00	1.24E-02
216	ALL	734473	4034892	NonCancerAcute	0.00E+00	7.98E-06	1.69E-03	0.00E+00	0.00E+00	1.70E-03	5.07E-03	0.00E+00	1.24E-02	0.00E+00	0.00E+00	1.69E-03	0.00E+00	0.00E+00	1.24E-02
217	ALL	734573	4034892	NonCancerAcute	0.00E+00	8.19E-06	1.74E-03	0.00E+00	0.00E+00	1.75E-03	4.89E-03	0.00E+00	1.23E-02	0.00E+00	0.00E+00	1.74E-03	0.00E+00	0.00E+00	1.23E-02
218	ALL	734673	4034892	NonCancerAcute	0.00E+00	8.01E-06	1.70E-03	0.00E+00	0.00E+00	1.71E-03	4.66E-03	0.00E+00	1.19E-02	0.00E+00	0.00E+00	1.70E-03	0.00E+00	0.00E+00	1.19E-02
219	ALL	734873	4034892	NonCancerAcute	0.00E+00	8.02E-06	1.70E-03	0.00E+00	0.00E+00	1.71E-03	4.41E-03	0.00E+00	1.16E-02	0.00E+00	0.00E+00	1.70E-03	0.00E+00	0.00E+00	1.16E-02
220	ALL	734973	4034892	NonCancerAcute	0.00E+00	8.01E-06	1.70E-03	0.00E+00	0.00E+00	1.71E-03	4.26E-03	0.00E+00	1.14E-02	0.00E+00	0.00E+00	1.70E-03	0.00E+00	0.00E+00	1.14E-02
221	ALL	735073	4034892	NonCancerAcute	0.00E+00	8.10E-06	1.72E-03	0.00E+00	0.00E+00	1.73E-03	4.15E-03	0.00E+00	1.13E-02	0.00E+00	0.00E+00	1.72E-03	0.00E+00	0.00E+00	1.13E-02
222	ALL	735173	4034892	NonCancerAcute	0.00E+00	8.11E-06	1.72E-03	0.00E+00	0.00E+00	1.73E-03	4.09E-03	0.00E+00	1.13E-02	0.00E+00	0.00E+00	1.72E-03	0.00E+00	0.00E+00	1.13E-02
223	ALL	732073	4034992	NonCancerAcute	0.00E+00	8.41E-06	1.79E-03	0.00E+00	0.00E+00	1.80E-03	7.02E-03	0.00E+00	1.51E-02	0.00E+00	0.00E+00	1.79E-03	0.00E+00	0.00E+00	1.51E-02
224	ALL	732173	4034992	NonCancerAcute	0.00E+00	8.02E-06	1.70E-03	0.00E+00	0.00E+00	1.71E-03	6.98E-03	0.00E+00	1.47E-02	0.00E+00	0.00E+00	1.70E-03	0.00E+00	0.00E+00	1.47E-02
225	ALL	732273	4034992	NonCancerAcute	0.00E+00	8.33E-06	1.77E-03	0.00E+00	0.00E+00	1.78E-03	7.30E-03	0.00E+00	1.54E-02	0.00E+00	0.00E+00	1.77E-03	0.00E+00	0.00E+00	1.54E-02
226	ALL	732373	4034992	NonCancerAcute	0.00E+00	8.13E-06	1.73E-03	0.00E+00	0.00E+00	1.73E-03	7.33E-03	0.00E+00	1.53E-02	0.00E+00	0.00E+00	1.73E-03	0.00E+00	0.00E+00	1.53E-02
227	ALL	732473	4034992	NonCancerAcute	0.00E+00	8.76E-06	1.86E-03	0.00E+00	0.00E+00	1.87E-03	7.27E-03	0.00E+00	1.57E-02	0.00E+00	0.00E+00	1.86E-03	0.00E+00	0.00E+00	1.57E-02
228	ALL	732573	4034992	NonCancerAcute	0.00E+00	9.04E-06	1.92E-03	0.00E+00	0.00E+00	1.93E-03	7.03E-03	0.00E+00	1.56E-02	0.00E+00	0.00E+00	1.92E-03	0.00E+00	0.00E+00	1.56E-02
229	ALL	732673	4034992	NonCancerAcute	0.00E+00	9.18E-06	1.95E-03	0.00E+00	0.00E+00	1.96E-03	7.48E-03	0.00E+00	1.62E-02	0.00E+00	0.00E+00	1.95E-03	0.00E+00	0.00E+00	1.62E-02
230	ALL	732773	4034992	NonCancerAcute	0.00E+00	8.81E-06	1.87E-03	0.00E+00	0.00E+00	1.88E-03	7.88E-03	0.00E+00	1.65E-02	0.00E+00	0.00E+00	1.87E-03	0.00E+00	0.00E+00	1.65E-02
231	ALL	732873	4034992	NonCancerAcute	0.00E+00	8.47E-06	1.80E-03	0.00E+00	0.00E+00	1.81E-03	8.41E-03	0.00E+00	1.68E-02	0.00E+00	0.00E+00	1.80E-03	0.00E+00	0.00E+00	1.68E-02
232	ALL	732973	4034992	NonCancerAcute	0.00E+00	8.58E-06	1.82E-03	0.00E+00	0.00E+00	1.83E-03	8.22E-03	0.00E+00	1.67E-02	0.00E+00	0.00E+00	1.82E-03	0.00E+00	0.00E+00	1.67E-02
233	ALL	733073	4034992	NonCancerAcute	0.00E+00	8.61E-06	1.83E-03	0.00E+00	0.00E+00	1.84E-03	8.11E-03	0.00E+00	1.66E-02	0.00E+00	0.00E+00	1.83E-03	0.00E+00	0.00E+00	1.66E-02
234	ALL	733173	4034992	NonCancerAcute	0.00E+00	8.62E-06	1.83E-03	0.00E+00	0.00E+00	1.84E-03	7.85E-03	0.00E+00	1.63E-02	0.00E+00	0.00E+00	1.83E-03	0.00E+00	0.00E+00	1.63E-02
235	ALL	733273	4034992	NonCancerAcute	0.00E+00	8.85E-06	1.88E-03	0.00E+00	0.00E+00	1.89E-03	7.56E-03	0.00E+00	1.61E-02	0.00E+00	0.00E+00	1.88E-03	0.00E+00	0.00E+00	1.61E-02
236	ALL	733373	4034992	NonCancerAcute	0.00E+00	8.73E-06	1.85E-03	0.00E+00	0.00E+00	1.86E-03	7.76E-03	0.00E+00	1.62E-02	0.00E+00	0.00E+00	1.85E-03	0.00E+00	0.00E+00	1.62E-02
237	ALL	733473	4034992	NonCancerAcute	0.00E+00	8.65E-06	1.84E-03	0.00E+00	0.00E+00	1.85E-03	7.30E-03	0.00E+00	1.56E-02	0.00E+00	0.00E+00	1.84E-03	0.00E+00	0.00E+00	1.56E-02
238	ALL	733573	4034992	NonCancerAcute	0.00E+00	8.64E-06	1.84E-03	0.00E+00	0.00E+00	1.84E-03	7.29E-03	0.00E+00	1.56E-02	0.00E+00	0.00E+00	1.84E-03	0.00E+00	0.00E+00	1.56E-02
239	ALL	733673	4034992	NonCancerAcute	0.00E+00	8.45E-06	1.79E-03	0.00E+00	0.00E+00	1.80E-03	6.39E-03	0.00E+00	1.44E-02	0.00E+00	0.00E+00	1.79E-03	0.00E+00	0.00E+00	1.44E-02
240	ALL	733773	4034992	NonCancerAcute	0.00E+00	8.22E-06	1.75E-03	0.00E+00	0.00E+00	1.75E-03	6.41E-03	0.00E+00	1.42E-02	0.00E+00	0.00E+00	1.75E-03	0.00E+00	0.00E+00	1.42E-02
241	ALL	733873	4034992	NonCancerAcute	0.00E+00	7.98E-06	1.69E-03	0.00E+00	0.00E+00	1.70E-03	6.31E-03	0.00E+00	1.39E-02	0.00E+00	0.00E+00	1.69E-03	0.00E+00	0.00E+00	1.39E-02
242	ALL	733973	4034992	NonCancerAcute	0.00E+00	7.92E-06	1.68E-03	0.00E+00	0.00E+00	1.69E-03	6.08E-03	0.00E+00	1.36E-02	0.00E+00	0.00E+00	1.68E-03	0.00E+00	0.00E+00	1.36E-02
243	ALL	734073	4034992	NonCancerAcute	0.00E+00	8.22E-06	1.75E-03	0.00E+00	0.00E+00	1.76E-03	6.05E-03	0.00E+00	1.38E-02	0.00E+00	0.00E+00	1.75E-03	0.00E+00	0.00E+00	1.38E-02
244	ALL	734173	4034992	NonCancerAcute	0.00E+00	7.96E-06	1.69E-03	0.00E+00	0.00E+00	1.70E-03	5.88E-03	0.00E+00	1.33E-02	0.00E+00	0.00E+00	1.69E-03	0.00E+00	0.00E+00	1.33E-02
245	ALL	734273	4034992	NonCancerAcute	0.00E+00	8.03E-06	1.70E-03	0.00E+00	0.00E+00	1.71E-03	5.67E-03	0.00E+00	1.31E-02	0.00E+00	0.00E+00	1.70E-03	0.00E+00	0.00E+00	1.31E-02
246	ALL	734373	4034992	NonCancerAcute	0.00E+00	7.88E-06	1.67E-03	0.00E+00	0.00E+00	1.68E-03	5.16E-03	0.00E+00	1.24E-02	0.00E+00	0.00E+00	1.67E-03	0.00E+00	0.00E+00	1.24E-02
247	ALL	734473	4034992	NonCancerAcute	0.00E+00	7.97E-06	1.69E-03	0.00E+00	0.00E+00	1.70E-03	4.94E-03	0.00E+00	1.22E-02	0.00E+00	0.00E+00	1.69E-03	0.00E+00	0.00E+00	1.22E-02
248	ALL	734573	4034992	NonCancerAcute	0.00E+00	8.10E-06	1.72E-03	0.00E+00	0.00E+00	1.73E-03	4.76E-03	0.00E+00	1.21E-02	0.00E+00	0.00E+00	1.72E-03	0.00E+00	0.00E+00	1.21E-02
249	ALL	734673	4034992	NonCancerAcute	0.00E+00	8.12E-06	1.72E-03	0.00E+00	0.00E+00	1.73E-03	4.63E-03	0.00E+00	1.19E-02	0.00E+00	0.00E+00	1.72E-03	0.00E+00	0.00E+00	1.19E-02
250	ALL	734773	4034992	NonCancerAcute	0.00E+00	8.10E-06	1.72E-03	0.00E+00	0.00E+00	1.73E-03	4.49E-03	0.00E+00	1.17E-02	0.00E+00	0.00E+00	1.72E-03	0.00E+00	0.00E+00	1.17E-02
251	ALL	734973	4034992	NonCancerAcute	0.00E+00	8.16E-06	1.73E-03	0.00E+00	0.00E+00	1.74E-03	4.12E-03	0.00E+00	1.13E-02	0.00E+00	0.00E+00	1.73E-03	0.00E+00	0.00E+00	1.13E-02
252	ALL	735073	4034992	NonCancerAcute	0.00E+00	8.15E-06	1.73E-03	0.00E+00	0.00E+00	1.74E-03	4.01E-03	0.00E+00	1.12E-02	0.00E+00	0.00E+00	1.73E-03	0.00E+00	0.00E+00	1.12E-02
253	ALL	735173	4034992	NonCancerAcute	0.00E+00	8.12E-06	1.72E-03	0.00E+00	0.00E+00	1.73E-03	3.97E-03	0.00E+00	1.11E-02	0.00E+00	0.00E+00	1.72E-03	0.00E+00	0.00E+00	1.11E-02
254	ALL	735273	4034992	NonCancerAcute	0.00E+00	8.15E-06	1.73E-03	0.00E+00	0.00E+00	1.74E-03	3.87E-03	0.00E+00	1.10E-02	0.00E+00	0.00E+00	1.73E-03	0.00E+00	0.00E+00	1.10E-02
255	ALL	734073	4035092	NonCancerAcute	0.00E+00	7.89E-06	1.68E-03	0.00E+00	0.00E+00	1.68E-03	5.76E-03	0.00E+00	1.31E-02	0.00E+00	0.00E+00	1.68E-03	0.00E+00	0.00E+00	1.31E-02
256	ALL	734173	4035092	NonCancerAcute	0.00E+00	8.00E-06	1.70E-03	0.00E+00	0.00E+00	1.71E-03	5.81E-03	0.00E+00	1.33E-02	0.00E+00	0.00E+00	1.70E-03	0.00E+00	0.00E+00	1.33E-02
257	ALL	734273	4035092	NonCancerAcute	0.00E+00	7.90E-06	1.68E-03	0.00E+00	0.00E+00	1.69E-03	5.64E-03	0.00E+00	1.30E-02	0.00E+00	0.00E+00	1.68E-03	0.00E+00	0.00E+00	1.30E-02
258	ALL	734373	4035092	NonCancerAcute	0.00E+00	7.99E-06	1.70E-03	0.00E+00	0.00E+00	1.70E-03	5.46E-03	0.00E+00	1.29E-02	0.00E+00	0.00E+00	1.70E-03	0.00E+00	0.00E+00	1.29E-02
259	ALL	734473	4035092	NonCancerAcute	0.00E+00	7.98E-06	1.69E-03	0.00E+00	0.00E+00	1.70E-03	5.21E-03	0.00E+00	1.25E-02	0.00E+00	0.00E+00	1.69E-03	0.00E+00	0.00E+00	1.25E-02
260	ALL	734573	4035092	NonCancerAcute	0.00E+00	8.08E-06	1.72E-03	0.00E+00	0.00E+00	1.72E-03	4.72E-03	0.00E+00	1.20E-02	0.00E+00	0.00E+00	1.72E-03	0.00E+00	0.00E+00	1.20E-02
261	ALL	734673	4035092	NonCancerAcute	0.00E+00	8.20E-06	1.74E-03	0.00E+00	0.00E+00	1.75E-03	4.56E-03	0.00E+00	1.19E-02	0.00E+00	0.00E+00	1.74E-03	0.00E+00	0.00E+00	1.19E-02
262	ALL	734773	4035092	NonCancerAcute	0.00E+00	8.15E-06	1.73E-03	0.00E+00	0.00E+00	1.74E-03	4.40E-03	0.00E+00	1.17E-02	0.00E+00	0.00E+00	1.73E-03	0.00E+00	0.00E+00	1.17E-02
263	ALL	734873	4035092	NonCancerAcute	0.00E+00	8.17E-06	1.74E-03	0.00E+00	0.00E+00	1.74E-03	4.28E-03	0.00E+00	1.15E-02	0.00E+00	0.00E+00	1.74E-03	0.00E+00	0.00E+00	1.15E-02

264	ALL	735073	4035092	NonCancerAcute	0.00E+00	8.21E-06	1.74E-03	0.00E+00	0.00E+00	1.75E-03	4.00E-03	0.00E+00	1.12E-02	0.00E+00	0.00E+00	1.74E-03	0.00E+00	0.00E+00	1.12E-02
265	ALL	735173	4035092	NonCancerAcute	0.00E+00	8.23E-06	1.75E-03	0.00E+00	0.00E+00	1.75E-03	3.88E-03	0.00E+00	1.11E-02	0.00E+00	0.00E+00	1.75E-03	0.00E+00	0.00E+00	1.11E-02
266	ALL	735273	4035092	NonCancerAcute	0.00E+00	8.15E-06	1.73E-03	0.00E+00	0.00E+00	1.74E-03	3.70E-03	0.00E+00	1.08E-02	0.00E+00	0.00E+00	1.73E-03	0.00E+00	0.00E+00	1.08E-02
267	ALL	735373	4035092	NonCancerAcute	0.00E+00	8.11E-06	1.72E-03	0.00E+00	0.00E+00	1.73E-03	3.66E-03	0.00E+00	1.07E-02	0.00E+00	0.00E+00	1.72E-03	0.00E+00	0.00E+00	1.07E-02
268	ALL	734073	4035192	NonCancerAcute	0.00E+00	7.81E-06	1.66E-03	0.00E+00	0.00E+00	1.67E-03	5.90E-03	0.00E+00	1.33E-02	0.00E+00	0.00E+00	1.66E-03	0.00E+00	0.00E+00	1.33E-02
269	ALL	734173	4035192	NonCancerAcute	0.00E+00	7.78E-06	1.65E-03	0.00E+00	0.00E+00	1.66E-03	5.53E-03	0.00E+00	1.28E-02	0.00E+00	0.00E+00	1.65E-03	0.00E+00	0.00E+00	1.28E-02
270	ALL	734273	4035192	NonCancerAcute	0.00E+00	8.05E-06	1.71E-03	0.00E+00	0.00E+00	1.72E-03	5.55E-03	0.00E+00	1.30E-02	0.00E+00	0.00E+00	1.71E-03	0.00E+00	0.00E+00	1.30E-02
271	ALL	734373	4035192	NonCancerAcute	0.00E+00	8.05E-06	1.71E-03	0.00E+00	0.00E+00	1.72E-03	5.30E-03	0.00E+00	1.27E-02	0.00E+00	0.00E+00	1.71E-03	0.00E+00	0.00E+00	1.27E-02
272	ALL	734473	4035192	NonCancerAcute	0.00E+00	8.06E-06	1.71E-03	0.00E+00	0.00E+00	1.72E-03	5.26E-03	0.00E+00	1.27E-02	0.00E+00	0.00E+00	1.71E-03	0.00E+00	0.00E+00	1.27E-02
273	ALL	734573	4035192	NonCancerAcute	0.00E+00	8.06E-06	1.71E-03	0.00E+00	0.00E+00	1.72E-03	5.09E-03	0.00E+00	1.25E-02	0.00E+00	0.00E+00	1.71E-03	0.00E+00	0.00E+00	1.25E-02
274	ALL	734673	4035192	NonCancerAcute	0.00E+00	8.05E-06	1.71E-03	0.00E+00	0.00E+00	1.72E-03	4.80E-03	0.00E+00	1.21E-02	0.00E+00	0.00E+00	1.71E-03	0.00E+00	0.00E+00	1.21E-02
275	ALL	734773	4035192	NonCancerAcute	0.00E+00	8.36E-06	1.78E-03	0.00E+00	0.00E+00	1.78E-03	4.41E-03	0.00E+00	1.19E-02	0.00E+00	0.00E+00	1.78E-03	0.00E+00	0.00E+00	1.19E-02
276	ALL	734873	4035192	NonCancerAcute	0.00E+00	8.34E-06	1.77E-03	0.00E+00	0.00E+00	1.78E-03	4.25E-03	0.00E+00	1.16E-02	0.00E+00	0.00E+00	1.77E-03	0.00E+00	0.00E+00	1.16E-02
277	ALL	734973	4035192	NonCancerAcute	0.00E+00	8.27E-06	1.76E-03	0.00E+00	0.00E+00	1.76E-03	4.11E-03	0.00E+00	1.14E-02	0.00E+00	0.00E+00	1.76E-03	0.00E+00	0.00E+00	1.14E-02
278	ALL	735173	4035192	NonCancerAcute	0.00E+00	8.25E-06	1.75E-03	0.00E+00	0.00E+00	1.76E-03	3.88E-03	0.00E+00	1.11E-02	0.00E+00	0.00E+00	1.75E-03	0.00E+00	0.00E+00	1.11E-02
279	ALL	735273	4035192	NonCancerAcute	0.00E+00	8.18E-06	1.74E-03	0.00E+00	0.00E+00	1.74E-03	3.77E-03	0.00E+00	1.09E-02	0.00E+00	0.00E+00	1.74E-03	0.00E+00	0.00E+00	1.09E-02
280	ALL	735373	4035192	NonCancerAcute	0.00E+00	8.17E-06	1.74E-03	0.00E+00	0.00E+00	1.74E-03	3.65E-03	0.00E+00	1.08E-02	0.00E+00	0.00E+00	1.74E-03	0.00E+00	0.00E+00	1.08E-02
281	ALL	735473	4035192	NonCancerAcute	0.00E+00	8.15E-06	1.73E-03	0.00E+00	0.00E+00	1.74E-03	3.53E-03	0.00E+00	1.06E-02	0.00E+00	0.00E+00	1.73E-03	0.00E+00	0.00E+00	1.06E-02
282	ALL	735573	4035192	NonCancerAcute	0.00E+00	8.17E-06	1.73E-03	0.00E+00	0.00E+00	1.74E-03	3.39E-03	0.00E+00	1.05E-02	0.00E+00	0.00E+00	1.73E-03	0.00E+00	0.00E+00	1.05E-02
283	ALL	735673	4035192	NonCancerAcute	0.00E+00	8.18E-06	1.74E-03	0.00E+00	0.00E+00	1.74E-03	3.38E-03	0.00E+00	1.05E-02	0.00E+00	0.00E+00	1.74E-03	0.00E+00	0.00E+00	1.05E-02
284	ALL	735773	4035192	NonCancerAcute	0.00E+00	8.23E-06	1.75E-03	0.00E+00	0.00E+00	1.75E-03	3.36E-03	0.00E+00	1.05E-02	0.00E+00	0.00E+00	1.75E-03	0.00E+00	0.00E+00	1.05E-02
285	ALL	735873	4035192	NonCancerAcute	0.00E+00	8.27E-06	1.76E-03	0.00E+00	0.00E+00	1.76E-03	3.31E-03	0.00E+00	1.04E-02	0.00E+00	0.00E+00	1.76E-03	0.00E+00	0.00E+00	1.04E-02
286	ALL	735973	4035192	NonCancerAcute	0.00E+00	8.31E-06	1.77E-03	0.00E+00	0.00E+00	1.77E-03	3.24E-03	0.00E+00	1.04E-02	0.00E+00	0.00E+00	1.77E-03	0.00E+00	0.00E+00	1.04E-02
287	ALL	736073	4035192	NonCancerAcute	0.00E+00	8.35E-06	1.77E-03	0.00E+00	0.00E+00	1.78E-03	3.16E-03	0.00E+00	1.03E-02	0.00E+00	0.00E+00	1.77E-03	0.00E+00	0.00E+00	1.03E-02
288	ALL	736173	4035192	NonCancerAcute	0.00E+00	8.36E-06	1.77E-03	0.00E+00	0.00E+00	1.78E-03	3.16E-03	0.00E+00	1.03E-02	0.00E+00	0.00E+00	1.77E-03	0.00E+00	0.00E+00	1.03E-02
289	ALL	736273	4035192	NonCancerAcute	0.00E+00	8.32E-06	1.77E-03	0.00E+00	0.00E+00	1.78E-03	3.15E-03	0.00E+00	1.03E-02	0.00E+00	0.00E+00	1.77E-03	0.00E+00	0.00E+00	1.03E-02
290	ALL	736373	4035192	NonCancerAcute	0.00E+00	8.33E-06	1.77E-03	0.00E+00	0.00E+00	1.78E-03	3.13E-03	0.00E+00	1.03E-02	0.00E+00	0.00E+00	1.77E-03	0.00E+00	0.00E+00	1.03E-02
291	ALL	736473	4035192	NonCancerAcute	0.00E+00	8.34E-06	1.77E-03	0.00E+00	0.00E+00	1.78E-03	3.10E-03	0.00E+00	1.02E-02	0.00E+00	0.00E+00	1.77E-03	0.00E+00	0.00E+00	1.02E-02
292	ALL	736573	4035192	NonCancerAcute	0.00E+00	8.31E-06	1.76E-03	0.00E+00	0.00E+00	1.77E-03	3.06E-03	0.00E+00	1.02E-02	0.00E+00	0.00E+00	1.76E-03	0.00E+00	0.00E+00	1.02E-02
293	ALL	736673	4035192	NonCancerAcute	0.00E+00	8.29E-06	1.76E-03	0.00E+00	0.00E+00	1.77E-03	3.01E-03	0.00E+00	1.01E-02	0.00E+00	0.00E+00	1.76E-03	0.00E+00	0.00E+00	1.01E-02
294	ALL	736773	4035192	NonCancerAcute	0.00E+00	8.29E-06	1.76E-03	0.00E+00	0.00E+00	1.77E-03	2.96E-03	0.00E+00	1.00E-02	0.00E+00	0.00E+00	1.76E-03	0.00E+00	0.00E+00	1.00E-02
295	ALL	736873	4035192	NonCancerAcute	0.00E+00	8.35E-06	1.77E-03	0.00E+00	0.00E+00	1.78E-03	2.90E-03	0.00E+00	1.00E-02	0.00E+00	0.00E+00	1.77E-03	0.00E+00	0.00E+00	1.00E-02
296	ALL	736973	4035192	NonCancerAcute	0.00E+00	8.39E-06	1.78E-03	0.00E+00	0.00E+00	1.79E-03	2.86E-03	0.00E+00	9.98E-03	0.00E+00	0.00E+00	1.78E-03	0.00E+00	0.00E+00	9.98E-03
297	ALL	737073	4035192	NonCancerAcute	0.00E+00	8.42E-06	1.79E-03	0.00E+00	0.00E+00	1.80E-03	2.86E-03	0.00E+00	1.00E-02	0.00E+00	0.00E+00	1.79E-03	0.00E+00	0.00E+00	1.00E-02
298	ALL	737173	4035192	NonCancerAcute	0.00E+00	8.41E-06	1.79E-03	0.00E+00	0.00E+00	1.79E-03	2.85E-03	0.00E+00	9.98E-03	0.00E+00	0.00E+00	1.79E-03	0.00E+00	0.00E+00	9.98E-03
299	ALL	737273	4035192	NonCancerAcute	0.00E+00	8.42E-06	1.79E-03	0.00E+00	0.00E+00	1.80E-03	2.83E-03	0.00E+00	9.97E-03	0.00E+00	0.00E+00	1.79E-03	0.00E+00	0.00E+00	9.97E-03
300	ALL	737373	4035192	NonCancerAcute	0.00E+00	8.50E-06	1.81E-03	0.00E+00	0.00E+00	1.81E-03	2.83E-03	0.00E+00	1.00E-02	0.00E+00	0.00E+00	1.81E-03	0.00E+00	0.00E+00	1.00E-02
301	ALL	737473	4035192	NonCancerAcute	0.00E+00	8.58E-06	1.82E-03	0.00E+00	0.00E+00	1.83E-03	2.81E-03	0.00E+00	1.01E-02	0.00E+00	0.00E+00	1.82E-03	0.00E+00	0.00E+00	1.01E-02
302	ALL	737573	4035192	NonCancerAcute	0.00E+00	8.67E-06	1.84E-03	0.00E+00	0.00E+00	1.85E-03	2.80E-03	0.00E+00	1.01E-02	0.00E+00	0.00E+00	1.84E-03	0.00E+00	0.00E+00	1.01E-02
303	ALL	737673	4035192	NonCancerAcute	0.00E+00	8.73E-06	1.85E-03	0.00E+00	0.00E+00	1.86E-03	2.78E-03	0.00E+00	1.02E-02	0.00E+00	0.00E+00	1.85E-03	0.00E+00	0.00E+00	1.02E-02
304	ALL	737773	4035192	NonCancerAcute	0.00E+00	8.79E-06	1.87E-03	0.00E+00	0.00E+00	1.88E-03	2.77E-03	0.00E+00	1.02E-02	0.00E+00	0.00E+00	1.87E-03	0.00E+00	0.00E+00	1.02E-02
305	ALL	737873	4035192	NonCancerAcute	0.00E+00	8.85E-06	1.88E-03	0.00E+00	0.00E+00	1.89E-03	2.76E-03	0.00E+00	1.02E-02	0.00E+00	0.00E+00	1.88E-03	0.00E+00	0.00E+00	1.02E-02
306	ALL	737973	4035192	NonCancerAcute	0.00E+00	8.89E-06	1.89E-03	0.00E+00	0.00E+00	1.90E-03	2.74E-03	0.00E+00	1.02E-02	0.00E+00	0.00E+00	1.89E-03	0.00E+00	0.00E+00	1.02E-02
307	ALL	734673	4035292	NonCancerAcute	0.00E+00	8.10E-06	1.72E-03	0.00E+00	0.00E+00	1.73E-03	4.91E-03	0.00E+00	1.23E-02	0.00E+00	0.00E+00	1.72E-03	0.00E+00	0.00E+00	1.23E-02
308	ALL	734773	4035292	NonCancerAcute	0.00E+00	8.18E-06	1.74E-03	0.00E+00	0.00E+00	1.75E-03	4.72E-03	0.00E+00	1.21E-02	0.00E+00	0.00E+00	1.74E-03	0.00E+00	0.00E+00	1.21E-02
309	ALL	734873	4035292	NonCancerAcute	0.00E+00	8.42E-06	1.79E-03	0.00E+00	0.00E+00	1.80E-03	4.51E-03	0.00E+00	1.20E-02	0.00E+00	0.00E+00	1.79E-03	0.00E+00	0.00E+00	1.20E-02
310	ALL	734973	4035292	NonCancerAcute	0.00E+00	8.44E-06	1.79E-03	0.00E+00	0.00E+00	1.80E-03	4.13E-03	0.00E+00	1.16E-02	0.00E+00	0.00E+00	1.79E-03	0.00E+00	0.00E+00	1.16E-02
311	ALL	735073	4035292	NonCancerAcute	0.00E+00	8.31E-06	1.76E-03	0.00E+00	0.00E+00	1.77E-03	3.98E-03	0.00E+00	1.13E-02	0.00E+00	0.00E+00	1.76E-03	0.00E+00	0.00E+00	1.13E-02
312	ALL	735273	4035292	NonCancerAcute	0.00E+00	8.37E-06	1.78E-03	0.00E+00	0.00E+00	1.79E-03	3.79E-03	0.00E+00	1.11E-02	0.00E+00	0.00E+00	1.78E-03	0.00E+00	0.00E+00	1.11E-02
313	ALL	735373	4035292	NonCancerAcute	0.00E+00	8.25E-06	1.75E-03	0.00E+00	0.00E+00	1.76E-03	3.68E-03	0.00E+00	1.09E-02	0.00E+00	0.00E+00	1.75E-03	0.00E+00	0.00E+00	1.09E-02
314	ALL	735473	4035292	NonCancerAcute	0.00E+00	8.18E-06	1.74E-03	0.00E+00	0.00E+00	1.75E-03	3.58E-03	0.00E+00	1.07E-02	0.00E+00	0.00E+00	1.74E-03	0.00E+00	0.00E+00	1.07E-02
315	ALL	735573	4035292	NonCancerAcute	0.00E+00	8.20E-06	1.74E-03	0.00E+00	0.00E+00	1.75E-03	3.49E-03	0.00E+00	1.06E-02	0.00E+00	0.00E+00	1.74E-03	0.00E+00	0.00E+00	1.06E-02
316	ALL	735673	4035292	NonCancerAcute	0.00E+00	8.22E-06	1.75E-03	0.00E+00	0.00E+00	1.75E-03	3.40E-03	0.00E+00	1.05E-02	0.00E+00	0.00E+00	1.75E-03	0.00E+00	0.00E+00	1.05E-02

317	ALL	735773	4035292	NonCancerAcute	0.00E+00	8.25E-06	1.75E-03	0.00E+00	0.00E+00	1.76E-03	3.28E-03	0.00E+00	1.04E-02	0.00E+00	0.00E+00	1.75E-03	0.00E+00	0.00E+00	1.04E-02
318	ALL	735873	4035292	NonCancerAcute	0.00E+00	8.27E-06	1.76E-03	0.00E+00	0.00E+00	1.76E-03	3.16E-03	0.00E+00	1.03E-02	0.00E+00	0.00E+00	1.76E-03	0.00E+00	0.00E+00	1.03E-02
319	ALL	735973	4035292	NonCancerAcute	0.00E+00	8.36E-06	1.78E-03	0.00E+00	0.00E+00	1.78E-03	3.17E-03	0.00E+00	1.03E-02	0.00E+00	0.00E+00	1.78E-03	0.00E+00	0.00E+00	1.03E-02
320	ALL	736073	4035292	NonCancerAcute	0.00E+00	8.40E-06	1.78E-03	0.00E+00	0.00E+00	1.79E-03	3.16E-03	0.00E+00	1.04E-02	0.00E+00	0.00E+00	1.78E-03	0.00E+00	0.00E+00	1.04E-02
321	ALL	736173	4035292	NonCancerAcute	0.00E+00	8.42E-06	1.79E-03	0.00E+00	0.00E+00	1.80E-03	3.13E-03	0.00E+00	1.03E-02	0.00E+00	0.00E+00	1.79E-03	0.00E+00	0.00E+00	1.03E-02
322	ALL	736273	4035292	NonCancerAcute	0.00E+00	8.42E-06	1.79E-03	0.00E+00	0.00E+00	1.80E-03	3.09E-03	0.00E+00	1.03E-02	0.00E+00	0.00E+00	1.79E-03	0.00E+00	0.00E+00	1.03E-02
323	ALL	736373	4035292	NonCancerAcute	0.00E+00	8.44E-06	1.79E-03	0.00E+00	0.00E+00	1.80E-03	3.03E-03	0.00E+00	1.02E-02	0.00E+00	0.00E+00	1.79E-03	0.00E+00	0.00E+00	1.02E-02
324	ALL	736473	4035292	NonCancerAcute	0.00E+00	8.45E-06	1.79E-03	0.00E+00	0.00E+00	1.80E-03	3.01E-03	0.00E+00	1.02E-02	0.00E+00	0.00E+00	1.79E-03	0.00E+00	0.00E+00	1.02E-02
325	ALL	736573	4035292	NonCancerAcute	0.00E+00	8.41E-06	1.79E-03	0.00E+00	0.00E+00	1.79E-03	3.01E-03	0.00E+00	1.02E-02	0.00E+00	0.00E+00	1.79E-03	0.00E+00	0.00E+00	1.02E-02
326	ALL	736673	4035292	NonCancerAcute	0.00E+00	8.40E-06	1.78E-03	0.00E+00	0.00E+00	1.79E-03	3.00E-03	0.00E+00	1.02E-02	0.00E+00	0.00E+00	1.78E-03	0.00E+00	0.00E+00	1.02E-02
327	ALL	736773	4035292	NonCancerAcute	0.00E+00	8.37E-06	1.78E-03	0.00E+00	0.00E+00	1.79E-03	2.99E-03	0.00E+00	1.01E-02	0.00E+00	0.00E+00	1.78E-03	0.00E+00	0.00E+00	1.01E-02
328	ALL	736873	4035292	NonCancerAcute	0.00E+00	8.33E-06	1.77E-03	0.00E+00	0.00E+00	1.78E-03	2.96E-03	0.00E+00	1.00E-02	0.00E+00	0.00E+00	1.77E-03	0.00E+00	0.00E+00	1.00E-02
329	ALL	736973	4035292	NonCancerAcute	0.00E+00	8.33E-06	1.77E-03	0.00E+00	0.00E+00	1.78E-03	2.93E-03	0.00E+00	1.00E-02	0.00E+00	0.00E+00	1.77E-03	0.00E+00	0.00E+00	1.00E-02
330	ALL	737073	4035292	NonCancerAcute	0.00E+00	8.34E-06	1.77E-03	0.00E+00	0.00E+00	1.78E-03	2.90E-03	0.00E+00	9.98E-03	0.00E+00	0.00E+00	1.77E-03	0.00E+00	0.00E+00	9.98E-03
331	ALL	737173	4035292	NonCancerAcute	0.00E+00	8.38E-06	1.78E-03	0.00E+00	0.00E+00	1.79E-03	2.86E-03	0.00E+00	9.97E-03	0.00E+00	0.00E+00	1.78E-03	0.00E+00	0.00E+00	9.97E-03
332	ALL	737273	4035292	NonCancerAcute	0.00E+00	8.42E-06	1.79E-03	0.00E+00	0.00E+00	1.80E-03	2.83E-03	0.00E+00	9.97E-03	0.00E+00	0.00E+00	1.79E-03	0.00E+00	0.00E+00	9.97E-03
333	ALL	737373	4035292	NonCancerAcute	0.00E+00	8.45E-06	1.80E-03	0.00E+00	0.00E+00	1.80E-03	2.80E-03	0.00E+00	9.96E-03	0.00E+00	0.00E+00	1.80E-03	0.00E+00	0.00E+00	9.96E-03
334	ALL	737473	4035292	NonCancerAcute	0.00E+00	8.51E-06	1.81E-03	0.00E+00	0.00E+00	1.81E-03	2.80E-03	0.00E+00	9.99E-03	0.00E+00	0.00E+00	1.81E-03	0.00E+00	0.00E+00	9.99E-03
335	ALL	737573	4035292	NonCancerAcute	0.00E+00	8.55E-06	1.82E-03	0.00E+00	0.00E+00	1.82E-03	2.80E-03	0.00E+00	1.00E-02	0.00E+00	0.00E+00	1.82E-03	0.00E+00	0.00E+00	1.00E-02
336	ALL	737673	4035292	NonCancerAcute	0.00E+00	8.62E-06	1.83E-03	0.00E+00	0.00E+00	1.84E-03	2.79E-03	0.00E+00	1.01E-02	0.00E+00	0.00E+00	1.83E-03	0.00E+00	0.00E+00	1.01E-02
337	ALL	737773	4035292	NonCancerAcute	0.00E+00	8.69E-06	1.85E-03	0.00E+00	0.00E+00	1.85E-03	2.78E-03	0.00E+00	1.01E-02	0.00E+00	0.00E+00	1.85E-03	0.00E+00	0.00E+00	1.01E-02
338	ALL	737873	4035292	NonCancerAcute	0.00E+00	8.77E-06	1.86E-03	0.00E+00	0.00E+00	1.87E-03	2.77E-03	0.00E+00	1.02E-02	0.00E+00	0.00E+00	1.86E-03	0.00E+00	0.00E+00	1.02E-02
339	ALL	737973	4035292	NonCancerAcute	0.00E+00	8.84E-06	1.88E-03	0.00E+00	0.00E+00	1.88E-03	2.77E-03	0.00E+00	1.02E-02	0.00E+00	0.00E+00	1.88E-03	0.00E+00	0.00E+00	1.02E-02
340	ALL	734873	4035392	NonCancerAcute	0.00E+00	8.32E-06	1.77E-03	0.00E+00	0.00E+00	1.77E-03	4.60E-03	0.00E+00	1.21E-02	0.00E+00	0.00E+00	1.77E-03	0.00E+00	0.00E+00	1.21E-02
341	ALL	734973	4035392	NonCancerAcute	0.00E+00	8.40E-06	1.78E-03	0.00E+00	0.00E+00	1.79E-03	4.48E-03	0.00E+00	1.20E-02	0.00E+00	0.00E+00	1.78E-03	0.00E+00	0.00E+00	1.20E-02
342	ALL	735073	4035392	NonCancerAcute	0.00E+00	8.45E-06	1.79E-03	0.00E+00	0.00E+00	1.80E-03	4.25E-03	0.00E+00	1.17E-02	0.00E+00	0.00E+00	1.79E-03	0.00E+00	0.00E+00	1.17E-02
343	ALL	735173	4035392	NonCancerAcute	0.00E+00	8.41E-06	1.79E-03	0.00E+00	0.00E+00	1.79E-03	3.90E-03	0.00E+00	1.13E-02	0.00E+00	0.00E+00	1.79E-03	0.00E+00	0.00E+00	1.13E-02
344	ALL	735373	4035392	NonCancerAcute	0.00E+00	8.46E-06	1.80E-03	0.00E+00	0.00E+00	1.81E-03	3.69E-03	0.00E+00	1.11E-02	0.00E+00	0.00E+00	1.80E-03	0.00E+00	0.00E+00	1.11E-02
345	ALL	735473	4035392	NonCancerAcute	0.00E+00	8.41E-06	1.79E-03	0.00E+00	0.00E+00	1.79E-03	3.60E-03	0.00E+00	1.09E-02	0.00E+00	0.00E+00	1.79E-03	0.00E+00	0.00E+00	1.09E-02
346	ALL	735573	4035392	NonCancerAcute	0.00E+00	8.30E-06	1.76E-03	0.00E+00	0.00E+00	1.77E-03	3.52E-03	0.00E+00	1.07E-02	0.00E+00	0.00E+00	1.76E-03	0.00E+00	0.00E+00	1.07E-02
347	ALL	735673	4035392	NonCancerAcute	0.00E+00	8.24E-06	1.75E-03	0.00E+00	0.00E+00	1.76E-03	3.44E-03	0.00E+00	1.06E-02	0.00E+00	0.00E+00	1.75E-03	0.00E+00	0.00E+00	1.06E-02
348	ALL	735773	4035392	NonCancerAcute	0.00E+00	8.30E-06	1.76E-03	0.00E+00	0.00E+00	1.77E-03	3.37E-03	0.00E+00	1.05E-02	0.00E+00	0.00E+00	1.76E-03	0.00E+00	0.00E+00	1.05E-02
349	ALL	735873	4035392	NonCancerAcute	0.00E+00	8.33E-06	1.77E-03	0.00E+00	0.00E+00	1.78E-03	3.29E-03	0.00E+00	1.05E-02	0.00E+00	0.00E+00	1.77E-03	0.00E+00	0.00E+00	1.05E-02
350	ALL	735973	4035392	NonCancerAcute	0.00E+00	8.34E-06	1.77E-03	0.00E+00	0.00E+00	1.78E-03	3.21E-03	0.00E+00	1.04E-02	0.00E+00	0.00E+00	1.77E-03	0.00E+00	0.00E+00	1.04E-02
351	ALL	736073	4035392	NonCancerAcute	0.00E+00	8.38E-06	1.78E-03	0.00E+00	0.00E+00	1.79E-03	3.11E-03	0.00E+00	1.03E-02	0.00E+00	0.00E+00	1.78E-03	0.00E+00	0.00E+00	1.03E-02
352	ALL	736173	4035392	NonCancerAcute	0.00E+00	8.46E-06	1.80E-03	0.00E+00	0.00E+00	1.80E-03	3.02E-03	0.00E+00	1.02E-02	0.00E+00	0.00E+00	1.80E-03	0.00E+00	0.00E+00	1.02E-02
353	ALL	736273	4035392	NonCancerAcute	0.00E+00	8.46E-06	1.80E-03	0.00E+00	0.00E+00	1.81E-03	3.02E-03	0.00E+00	1.02E-02	0.00E+00	0.00E+00	1.80E-03	0.00E+00	0.00E+00	1.02E-02
354	ALL	736373	4035392	NonCancerAcute	0.00E+00	8.50E-06	1.81E-03	0.00E+00	0.00E+00	1.81E-03	3.01E-03	0.00E+00	1.03E-02	0.00E+00	0.00E+00	1.81E-03	0.00E+00	0.00E+00	1.03E-02
355	ALL	736473	4035392	NonCancerAcute	0.00E+00	8.52E-06	1.81E-03	0.00E+00	0.00E+00	1.82E-03	3.00E-03	0.00E+00	1.02E-02	0.00E+00	0.00E+00	1.81E-03	0.00E+00	0.00E+00	1.02E-02
356	ALL	736573	4035392	NonCancerAcute	0.00E+00	8.53E-06	1.81E-03	0.00E+00	0.00E+00	1.82E-03	2.97E-03	0.00E+00	1.02E-02	0.00E+00	0.00E+00	1.81E-03	0.00E+00	0.00E+00	1.02E-02
357	ALL	736673	4035392	NonCancerAcute	0.00E+00	8.54E-06	1.81E-03	0.00E+00	0.00E+00	1.82E-03	2.93E-03	0.00E+00	1.02E-02	0.00E+00	0.00E+00	1.81E-03	0.00E+00	0.00E+00	1.02E-02
358	ALL	736773	4035392	NonCancerAcute	0.00E+00	8.51E-06	1.81E-03	0.00E+00	0.00E+00	1.82E-03	2.89E-03	0.00E+00	1.01E-02	0.00E+00	0.00E+00	1.81E-03	0.00E+00	0.00E+00	1.01E-02
359	ALL	736873	4035392	NonCancerAcute	0.00E+00	8.47E-06	1.80E-03	0.00E+00	0.00E+00	1.81E-03	2.91E-03	0.00E+00	1.01E-02	0.00E+00	0.00E+00	1.80E-03	0.00E+00	0.00E+00	1.01E-02
360	ALL	736973	4035392	NonCancerAcute	0.00E+00	8.43E-06	1.79E-03	0.00E+00	0.00E+00	1.80E-03	2.92E-03	0.00E+00	1.01E-02	0.00E+00	0.00E+00	1.79E-03	0.00E+00	0.00E+00	1.01E-02
361	ALL	737073	4035392	NonCancerAcute	0.00E+00	8.39E-06	1.78E-03	0.00E+00	0.00E+00	1.79E-03	2.91E-03	0.00E+00	1.00E-02	0.00E+00	0.00E+00	1.78E-03	0.00E+00	0.00E+00	1.00E-02
362	ALL	737173	4035392	NonCancerAcute	0.00E+00	8.42E-06	1.79E-03	0.00E+00	0.00E+00	1.80E-03	2.90E-03	0.00E+00	1.01E-02	0.00E+00	0.00E+00	1.79E-03	0.00E+00	0.00E+00	1.01E-02
363	ALL	737273	4035392	NonCancerAcute	0.00E+00	8.45E-06	1.80E-03	0.00E+00	0.00E+00	1.80E-03	2.88E-03	0.00E+00	1.01E-02	0.00E+00	0.00E+00	1.80E-03	0.00E+00	0.00E+00	1.01E-02
364	ALL	737373	4035392	NonCancerAcute	0.00E+00	8.48E-06	1.80E-03	0.00E+00	0.00E+00	1.81E-03	2.85E-03	0.00E+00	1.00E-02	0.00E+00	0.00E+00	1.80E-03	0.00E+00	0.00E+00	1.00E-02
365	ALL	737473	4035392	NonCancerAcute	0.00E+00	8.54E-06	1.81E-03	0.00E+00	0.00E+00	1.82E-03	2.84E-03	0.00E+00	1.01E-02	0.00E+00	0.00E+00	1.81E-03	0.00E+00	0.00E+00	1.01E-02
366	ALL	737573	4035392	NonCancerAcute	0.00E+00	8.56E-06	1.82E-03	0.00E+00	0.00E+00	1.83E-03	2.81E-03	0.00E+00	1.01E-02	0.00E+00	0.00E+00	1.82E-03	0.00E+00	0.00E+00	1.01E-02
367	ALL	737673	4035392	NonCancerAcute	0.00E+00	8.58E-06	1.82E-03	0.00E+00	0.00E+00	1.83E-03	2.80E-03	0.00E+00	1.00E-02	0.00E+00	0.00E+00	1.82E-03	0.00E+00	0.00E+00	1.00E-02
368	ALL	737773	4035392	NonCancerAcute	0.00E+00	8.59E-06	1.82E-03	0.00E+00	0.00E+00	1.83E-03	2.78E-03	0.00E+00	1.00E-02	0.00E+00	0.00E+00	1.82E-03	0.00E+00	0.00E+00	1.00E-02
369	ALL	737873	4035392	NonCancerAcute	0.00E+00	8.59E-06	1.82E-03	0.00E+00	0.00E+00	1.83E-03	2.76E-03	0.00E+00	1.00E-02	0.00E+00	0.00E+00	1.82E-03	0.00E+00	0.00E+00	1.00E-02

370	ALL	737973	4035392	NonCancerAcute	0.00E+00	8.62E-06	1.83E-03	0.00E+00	0.00E+00	1.84E-03	2.76E-03	0.00E+00	1.00E-02	0.00E+00	0.00E+00	1.83E-03	0.00E+00	0.00E+00	1.00E-02
371	ALL	734973	4035492	NonCancerAcute	0.00E+00	8.39E-06	1.78E-03	0.00E+00	0.00E+00	1.79E-03	4.44E-03	0.00E+00	1.19E-02	0.00E+00	0.00E+00	1.78E-03	0.00E+00	0.00E+00	1.19E-02
372	ALL	735073	4035492	NonCancerAcute	0.00E+00	8.37E-06	1.78E-03	0.00E+00	0.00E+00	1.78E-03	4.37E-03	0.00E+00	1.18E-02	0.00E+00	0.00E+00	1.78E-03	0.00E+00	0.00E+00	1.18E-02
373	ALL	735173	4035492	NonCancerAcute	0.00E+00	8.48E-06	1.80E-03	0.00E+00	0.00E+00	1.81E-03	4.26E-03	0.00E+00	1.18E-02	0.00E+00	0.00E+00	1.80E-03	0.00E+00	0.00E+00	1.18E-02
374	ALL	735273	4035492	NonCancerAcute	0.00E+00	8.49E-06	1.80E-03	0.00E+00	0.00E+00	1.81E-03	4.02E-03	0.00E+00	1.15E-02	0.00E+00	0.00E+00	1.80E-03	0.00E+00	0.00E+00	1.15E-02
375	ALL	737873	4035492	NonCancerAcute	0.00E+00	8.61E-06	1.83E-03	0.00E+00	0.00E+00	1.84E-03	2.84E-03	0.00E+00	1.01E-02	0.00E+00	0.00E+00	1.83E-03	0.00E+00	0.00E+00	1.01E-02
376	ALL	737973	4035492	NonCancerAcute	0.00E+00	8.61E-06	1.83E-03	0.00E+00	0.00E+00	1.84E-03	2.82E-03	0.00E+00	1.01E-02	0.00E+00	0.00E+00	1.83E-03	0.00E+00	0.00E+00	1.01E-02
377	ALL	735073	4035592	NonCancerAcute	0.00E+00	8.44E-06	1.79E-03	0.00E+00	0.00E+00	1.80E-03	4.31E-03	0.00E+00	1.18E-02	0.00E+00	0.00E+00	1.79E-03	0.00E+00	0.00E+00	1.18E-02
378	ALL	735173	4035592	NonCancerAcute	0.00E+00	8.46E-06	1.80E-03	0.00E+00	0.00E+00	1.80E-03	4.24E-03	0.00E+00	1.17E-02	0.00E+00	0.00E+00	1.80E-03	0.00E+00	0.00E+00	1.17E-02
379	ALL	735273	4035592	NonCancerAcute	0.00E+00	8.54E-06	1.81E-03	0.00E+00	0.00E+00	1.82E-03	4.17E-03	0.00E+00	1.17E-02	0.00E+00	0.00E+00	1.81E-03	0.00E+00	0.00E+00	1.17E-02
380	ALL	735373	4035592	NonCancerAcute	0.00E+00	8.56E-06	1.82E-03	0.00E+00	0.00E+00	1.83E-03	4.03E-03	0.00E+00	1.15E-02	0.00E+00	0.00E+00	1.82E-03	0.00E+00	0.00E+00	1.15E-02
381	ALL	735473	4035592	NonCancerAcute	0.00E+00	8.61E-06	1.83E-03	0.00E+00	0.00E+00	1.84E-03	3.80E-03	0.00E+00	1.13E-02	0.00E+00	0.00E+00	1.83E-03	0.00E+00	0.00E+00	1.13E-02
382	ALL	735573	4035592	NonCancerAcute	0.00E+00	8.68E-06	1.84E-03	0.00E+00	0.00E+00	1.85E-03	3.52E-03	0.00E+00	1.10E-02	0.00E+00	0.00E+00	1.84E-03	0.00E+00	0.00E+00	1.10E-02
383	ALL	735673	4035592	NonCancerAcute	0.00E+00	8.73E-06	1.85E-03	0.00E+00	0.00E+00	1.86E-03	3.44E-03	0.00E+00	1.09E-02	0.00E+00	0.00E+00	1.85E-03	0.00E+00	0.00E+00	1.09E-02
384	ALL	735773	4035592	NonCancerAcute	0.00E+00	8.68E-06	1.84E-03	0.00E+00	0.00E+00	1.85E-03	3.38E-03	0.00E+00	1.08E-02	0.00E+00	0.00E+00	1.84E-03	0.00E+00	0.00E+00	1.08E-02
385	ALL	735873	4035592	NonCancerAcute	0.00E+00	8.64E-06	1.84E-03	0.00E+00	0.00E+00	1.84E-03	3.30E-03	0.00E+00	1.07E-02	0.00E+00	0.00E+00	1.84E-03	0.00E+00	0.00E+00	1.07E-02
386	ALL	735973	4035592	NonCancerAcute	0.00E+00	8.51E-06	1.81E-03	0.00E+00	0.00E+00	1.82E-03	3.26E-03	0.00E+00	1.06E-02	0.00E+00	0.00E+00	1.81E-03	0.00E+00	0.00E+00	1.06E-02
387	ALL	736073	4035592	NonCancerAcute	0.00E+00	8.52E-06	1.81E-03	0.00E+00	0.00E+00	1.82E-03	3.20E-03	0.00E+00	1.05E-02	0.00E+00	0.00E+00	1.81E-03	0.00E+00	0.00E+00	1.05E-02
388	ALL	736173	4035592	NonCancerAcute	0.00E+00	8.59E-06	1.82E-03	0.00E+00	0.00E+00	1.83E-03	3.17E-03	0.00E+00	1.05E-02	0.00E+00	0.00E+00	1.82E-03	0.00E+00	0.00E+00	1.05E-02
389	ALL	736273	4035592	NonCancerAcute	0.00E+00	8.62E-06	1.83E-03	0.00E+00	0.00E+00	1.84E-03	3.14E-03	0.00E+00	1.05E-02	0.00E+00	0.00E+00	1.83E-03	0.00E+00	0.00E+00	1.05E-02
390	ALL	736373	4035592	NonCancerAcute	0.00E+00	8.62E-06	1.83E-03	0.00E+00	0.00E+00	1.84E-03	3.07E-03	0.00E+00	1.04E-02	0.00E+00	0.00E+00	1.83E-03	0.00E+00	0.00E+00	1.04E-02
391	ALL	736473	4035592	NonCancerAcute	0.00E+00	8.63E-06	1.83E-03	0.00E+00	0.00E+00	1.84E-03	3.02E-03	0.00E+00	1.04E-02	0.00E+00	0.00E+00	1.83E-03	0.00E+00	0.00E+00	1.04E-02
392	ALL	736573	4035592	NonCancerAcute	0.00E+00	8.71E-06	1.85E-03	0.00E+00	0.00E+00	1.86E-03	2.96E-03	0.00E+00	1.03E-02	0.00E+00	0.00E+00	1.85E-03	0.00E+00	0.00E+00	1.03E-02
393	ALL	736673	4035592	NonCancerAcute	0.00E+00	8.73E-06	1.86E-03	0.00E+00	0.00E+00	1.86E-03	2.88E-03	0.00E+00	1.03E-02	0.00E+00	0.00E+00	1.86E-03	0.00E+00	0.00E+00	1.03E-02
394	ALL	736773	4035592	NonCancerAcute	0.00E+00	8.74E-06	1.86E-03	0.00E+00	0.00E+00	1.87E-03	2.86E-03	0.00E+00	1.03E-02	0.00E+00	0.00E+00	1.86E-03	0.00E+00	0.00E+00	1.03E-02
395	ALL	736873	4035592	NonCancerAcute	0.00E+00	8.74E-06	1.86E-03	0.00E+00	0.00E+00	1.86E-03	2.87E-03	0.00E+00	1.03E-02	0.00E+00	0.00E+00	1.86E-03	0.00E+00	0.00E+00	1.03E-02
396	ALL	736973	4035592	NonCancerAcute	0.00E+00	8.75E-06	1.86E-03	0.00E+00	0.00E+00	1.87E-03	2.87E-03	0.00E+00	1.03E-02	0.00E+00	0.00E+00	1.86E-03	0.00E+00	0.00E+00	1.03E-02
397	ALL	737073	4035592	NonCancerAcute	0.00E+00	8.72E-06	1.85E-03	0.00E+00	0.00E+00	1.86E-03	2.86E-03	0.00E+00	1.02E-02	0.00E+00	0.00E+00	1.85E-03	0.00E+00	0.00E+00	1.02E-02
398	ALL	737173	4035592	NonCancerAcute	0.00E+00	8.68E-06	1.84E-03	0.00E+00	0.00E+00	1.85E-03	2.84E-03	0.00E+00	1.02E-02	0.00E+00	0.00E+00	1.84E-03	0.00E+00	0.00E+00	1.02E-02
399	ALL	737273	4035592	NonCancerAcute	0.00E+00	8.63E-06	1.83E-03	0.00E+00	0.00E+00	1.84E-03	2.81E-03	0.00E+00	1.01E-02	0.00E+00	0.00E+00	1.83E-03	0.00E+00	0.00E+00	1.01E-02
400	ALL	737373	4035592	NonCancerAcute	0.00E+00	8.56E-06	1.82E-03	0.00E+00	0.00E+00	1.83E-03	2.79E-03	0.00E+00	1.00E-02	0.00E+00	0.00E+00	1.82E-03	0.00E+00	0.00E+00	1.00E-02
401	ALL	737473	4035592	NonCancerAcute	0.00E+00	8.52E-06	1.81E-03	0.00E+00	0.00E+00	1.82E-03	2.76E-03	0.00E+00	9.96E-03	0.00E+00	0.00E+00	1.81E-03	0.00E+00	0.00E+00	9.96E-03
402	ALL	737573	4035592	NonCancerAcute	0.00E+00	8.46E-06	1.80E-03	0.00E+00	0.00E+00	1.80E-03	2.78E-03	0.00E+00	9.93E-03	0.00E+00	0.00E+00	1.80E-03	0.00E+00	0.00E+00	9.93E-03
403	ALL	737673	4035592	NonCancerAcute	0.00E+00	8.46E-06	1.80E-03	0.00E+00	0.00E+00	1.80E-03	2.80E-03	0.00E+00	9.96E-03	0.00E+00	0.00E+00	1.80E-03	0.00E+00	0.00E+00	9.96E-03
404	ALL	737773	4035592	NonCancerAcute	0.00E+00	8.49E-06	1.80E-03	0.00E+00	0.00E+00	1.81E-03	2.81E-03	0.00E+00	9.99E-03	0.00E+00	0.00E+00	1.80E-03	0.00E+00	0.00E+00	9.99E-03
405	ALL	737973	4035592	NonCancerAcute	0.00E+00	8.54E-06	1.81E-03	0.00E+00	0.00E+00	1.82E-03	2.82E-03	0.00E+00	1.01E-02	0.00E+00	0.00E+00	1.81E-03	0.00E+00	0.00E+00	1.01E-02
406	ALL	735273	4035692	NonCancerAcute	0.00E+00	8.53E-06	1.81E-03	0.00E+00	0.00E+00	1.82E-03	4.06E-03	0.00E+00	1.16E-02	0.00E+00	0.00E+00	1.81E-03	0.00E+00	0.00E+00	1.16E-02
407	ALL	735373	4035692	NonCancerAcute	0.00E+00	8.63E-06	1.83E-03	0.00E+00	0.00E+00	1.84E-03	4.04E-03	0.00E+00	1.16E-02	0.00E+00	0.00E+00	1.83E-03	0.00E+00	0.00E+00	1.16E-02
408	ALL	735473	4035692	NonCancerAcute	0.00E+00	8.64E-06	1.83E-03	0.00E+00	0.00E+00	1.84E-03	3.96E-03	0.00E+00	1.15E-02	0.00E+00	0.00E+00	1.83E-03	0.00E+00	0.00E+00	1.15E-02
409	ALL	735573	4035692	NonCancerAcute	0.00E+00	8.79E-06	1.87E-03	0.00E+00	0.00E+00	1.88E-03	3.82E-03	0.00E+00	1.15E-02	0.00E+00	0.00E+00	1.87E-03	0.00E+00	0.00E+00	1.15E-02
410	ALL	735673	4035692	NonCancerAcute	0.00E+00	8.80E-06	1.87E-03	0.00E+00	0.00E+00	1.88E-03	3.60E-03	0.00E+00	1.12E-02	0.00E+00	0.00E+00	1.87E-03	0.00E+00	0.00E+00	1.12E-02
411	ALL	735773	4035692	NonCancerAcute	0.00E+00	8.86E-06	1.88E-03	0.00E+00	0.00E+00	1.89E-03	3.35E-03	0.00E+00	1.09E-02	0.00E+00	0.00E+00	1.88E-03	0.00E+00	0.00E+00	1.09E-02
412	ALL	735873	4035692	NonCancerAcute	0.00E+00	8.87E-06	1.88E-03	0.00E+00	0.00E+00	1.89E-03	3.29E-03	0.00E+00	1.09E-02	0.00E+00	0.00E+00	1.88E-03	0.00E+00	0.00E+00	1.09E-02
413	ALL	735973	4035692	NonCancerAcute	0.00E+00	8.90E-06	1.89E-03	0.00E+00	0.00E+00	1.90E-03	3.25E-03	0.00E+00	1.09E-02	0.00E+00	0.00E+00	1.89E-03	0.00E+00	0.00E+00	1.09E-02
414	ALL	736073	4035692	NonCancerAcute	0.00E+00	8.85E-06	1.88E-03	0.00E+00	0.00E+00	1.89E-03	3.18E-03	0.00E+00	1.07E-02	0.00E+00	0.00E+00	1.88E-03	0.00E+00	0.00E+00	1.07E-02
415	ALL	736173	4035692	NonCancerAcute	0.00E+00	8.73E-06	1.85E-03	0.00E+00	0.00E+00	1.86E-03	3.14E-03	0.00E+00	1.06E-02	0.00E+00	0.00E+00	1.85E-03	0.00E+00	0.00E+00	1.06E-02
416	ALL	736273	4035692	NonCancerAcute	0.00E+00	8.74E-06	1.86E-03	0.00E+00	0.00E+00	1.87E-03	3.10E-03	0.00E+00	1.05E-02	0.00E+00	0.00E+00	1.86E-03	0.00E+00	0.00E+00	1.05E-02
417	ALL	736373	4035692	NonCancerAcute	0.00E+00	8.80E-06	1.87E-03	0.00E+00	0.00E+00	1.88E-03	3.08E-03	0.00E+00	1.06E-02	0.00E+00	0.00E+00	1.87E-03	0.00E+00	0.00E+00	1.06E-02
418	ALL	736473	4035692	NonCancerAcute	0.00E+00	8.84E-06	1.88E-03	0.00E+00	0.00E+00	1.89E-03	3.06E-03	0.00E+00	1.06E-02	0.00E+00	0.00E+00	1.88E-03	0.00E+00	0.00E+00	1.06E-02
419	ALL	736573	4035692	NonCancerAcute	0.00E+00	8.84E-06	1.88E-03	0.00E+00	0.00E+00	1.89E-03	3.02E-03	0.00E+00	1.05E-02	0.00E+00	0.00E+00	1.88E-03	0.00E+00	0.00E+00	1.05E-02
420	ALL	736673	4035692	NonCancerAcute	0.00E+00	8.84E-06	1.88E-03	0.00E+00	0.00E+00	1.89E-03	2.97E-03	0.00E+00	1.05E-02	0.00E+00	0.00E+00	1.88E-03	0.00E+00	0.00E+00	1.05E-02
421	ALL	736773	4035692	NonCancerAcute	0.00E+00	8.90E-06	1.89E-03	0.00E+00	0.00E+00	1.90E-03	2.93E-03	0.00E+00	1.05E-02	0.00E+00	0.00E+00	1.89E-03	0.00E+00	0.00E+00	1.05E-02
422	ALL	736873	4035692	NonCancerAcute	0.00E+00	8.93E-06	1.90E-03	0.00E+00	0.00E+00	1.90E-03	2.87E-03	0.00E+00	1.04E-02	0.00E+00	0.00E+00	1.90E-03	0.00E+00	0.00E+00	1.04E-02

423	ALL	736973	4035692	NonCancerAcute	0.00E+00	8.92E-06	1.89E-03	0.00E+00	0.00E+00	1.90E-03	2.83E-03	0.00E+00	1.03E-02	0.00E+00	0.00E+00	1.89E-03	0.00E+00	0.00E+00	1.03E-02
424	ALL	737073	4035692	NonCancerAcute	0.00E+00	8.92E-06	1.89E-03	0.00E+00	0.00E+00	1.90E-03	2.84E-03	0.00E+00	1.04E-02	0.00E+00	0.00E+00	1.89E-03	0.00E+00	0.00E+00	1.04E-02
425	ALL	737173	4035692	NonCancerAcute	0.00E+00	8.91E-06	1.89E-03	0.00E+00	0.00E+00	1.90E-03	2.86E-03	0.00E+00	1.04E-02	0.00E+00	0.00E+00	1.89E-03	0.00E+00	0.00E+00	1.04E-02
426	ALL	737273	4035692	NonCancerAcute	0.00E+00	8.90E-06	1.89E-03	0.00E+00	0.00E+00	1.90E-03	2.87E-03	0.00E+00	1.04E-02	0.00E+00	0.00E+00	1.89E-03	0.00E+00	0.00E+00	1.04E-02
427	ALL	737373	4035692	NonCancerAcute	0.00E+00	8.84E-06	1.88E-03	0.00E+00	0.00E+00	1.89E-03	2.87E-03	0.00E+00	1.03E-02	0.00E+00	0.00E+00	1.88E-03	0.00E+00	0.00E+00	1.03E-02
428	ALL	737473	4035692	NonCancerAcute	0.00E+00	8.80E-06	1.87E-03	0.00E+00	0.00E+00	1.88E-03	2.87E-03	0.00E+00	1.03E-02	0.00E+00	0.00E+00	1.87E-03	0.00E+00	0.00E+00	1.03E-02
429	ALL	737573	4035692	NonCancerAcute	0.00E+00	8.73E-06	1.85E-03	0.00E+00	0.00E+00	1.86E-03	2.85E-03	0.00E+00	1.02E-02	0.00E+00	0.00E+00	1.85E-03	0.00E+00	0.00E+00	1.02E-02
430	ALL	737673	4035692	NonCancerAcute	0.00E+00	8.62E-06	1.83E-03	0.00E+00	0.00E+00	1.84E-03	2.83E-03	0.00E+00	1.01E-02	0.00E+00	0.00E+00	1.83E-03	0.00E+00	0.00E+00	1.01E-02
431	ALL	737773	4035692	NonCancerAcute	0.00E+00	8.54E-06	1.81E-03	0.00E+00	0.00E+00	1.82E-03	2.81E-03	0.00E+00	1.00E-02	0.00E+00	0.00E+00	1.81E-03	0.00E+00	0.00E+00	1.00E-02
432	ALL	737973	4035692	NonCancerAcute	0.00E+00	8.49E-06	1.80E-03	0.00E+00	0.00E+00	1.81E-03	2.82E-03	0.00E+00	1.00E-02	0.00E+00	0.00E+00	1.80E-03	0.00E+00	0.00E+00	1.00E-02
433	ALL	735373	4035792	NonCancerAcute	0.00E+00	8.62E-06	1.83E-03	0.00E+00	0.00E+00	1.84E-03	3.94E-03	0.00E+00	1.15E-02	0.00E+00	0.00E+00	1.83E-03	0.00E+00	0.00E+00	1.15E-02
434	ALL	735473	4035792	NonCancerAcute	0.00E+00	8.71E-06	1.85E-03	0.00E+00	0.00E+00	1.86E-03	3.88E-03	0.00E+00	1.15E-02	0.00E+00	0.00E+00	1.85E-03	0.00E+00	0.00E+00	1.15E-02
435	ALL	735573	4035792	NonCancerAcute	0.00E+00	8.79E-06	1.87E-03	0.00E+00	0.00E+00	1.87E-03	3.83E-03	0.00E+00	1.15E-02	0.00E+00	0.00E+00	1.87E-03	0.00E+00	0.00E+00	1.15E-02
436	ALL	735673	4035792	NonCancerAcute	0.00E+00	8.87E-06	1.88E-03	0.00E+00	0.00E+00	1.89E-03	3.76E-03	0.00E+00	1.15E-02	0.00E+00	0.00E+00	1.88E-03	0.00E+00	0.00E+00	1.15E-02
437	ALL	735773	4035792	NonCancerAcute	0.00E+00	8.91E-06	1.89E-03	0.00E+00	0.00E+00	1.90E-03	3.62E-03	0.00E+00	1.13E-02	0.00E+00	0.00E+00	1.89E-03	0.00E+00	0.00E+00	1.13E-02
438	ALL	735873	4035792	NonCancerAcute	0.00E+00	8.97E-06	1.91E-03	0.00E+00	0.00E+00	1.91E-03	3.42E-03	0.00E+00	1.11E-02	0.00E+00	0.00E+00	1.91E-03	0.00E+00	0.00E+00	1.11E-02
439	ALL	735973	4035792	NonCancerAcute	0.00E+00	9.03E-06	1.92E-03	0.00E+00	0.00E+00	1.93E-03	3.19E-03	0.00E+00	1.09E-02	0.00E+00	0.00E+00	1.92E-03	0.00E+00	0.00E+00	1.09E-02
440	ALL	736073	4035792	NonCancerAcute	0.00E+00	9.06E-06	1.92E-03	0.00E+00	0.00E+00	1.93E-03	3.16E-03	0.00E+00	1.09E-02	0.00E+00	0.00E+00	1.92E-03	0.00E+00	0.00E+00	1.09E-02
441	ALL	736173	4035792	NonCancerAcute	0.00E+00	9.11E-06	1.93E-03	0.00E+00	0.00E+00	1.94E-03	3.13E-03	0.00E+00	1.09E-02	0.00E+00	0.00E+00	1.93E-03	0.00E+00	0.00E+00	1.09E-02
442	ALL	736273	4035792	NonCancerAcute	0.00E+00	8.99E-06	1.91E-03	0.00E+00	0.00E+00	1.92E-03	3.06E-03	0.00E+00	1.07E-02	0.00E+00	0.00E+00	1.91E-03	0.00E+00	0.00E+00	1.07E-02
443	ALL	736373	4035792	NonCancerAcute	0.00E+00	8.90E-06	1.89E-03	0.00E+00	0.00E+00	1.90E-03	3.04E-03	0.00E+00	1.06E-02	0.00E+00	0.00E+00	1.89E-03	0.00E+00	0.00E+00	1.06E-02
444	ALL	736473	4035792	NonCancerAcute	0.00E+00	8.92E-06	1.89E-03	0.00E+00	0.00E+00	1.90E-03	3.00E-03	0.00E+00	1.06E-02	0.00E+00	0.00E+00	1.89E-03	0.00E+00	0.00E+00	1.06E-02
445	ALL	736573	4035792	NonCancerAcute	0.00E+00	8.97E-06	1.91E-03	0.00E+00	0.00E+00	1.91E-03	2.98E-03	0.00E+00	1.06E-02	0.00E+00	0.00E+00	1.91E-03	0.00E+00	0.00E+00	1.06E-02
446	ALL	736673	4035792	NonCancerAcute	0.00E+00	9.02E-06	1.92E-03	0.00E+00	0.00E+00	1.92E-03	2.98E-03	0.00E+00	1.06E-02	0.00E+00	0.00E+00	1.92E-03	0.00E+00	0.00E+00	1.06E-02
447	ALL	736773	4035792	NonCancerAcute	0.00E+00	9.03E-06	1.92E-03	0.00E+00	0.00E+00	1.93E-03	2.95E-03	0.00E+00	1.06E-02	0.00E+00	0.00E+00	1.92E-03	0.00E+00	0.00E+00	1.06E-02
448	ALL	736873	4035792	NonCancerAcute	0.00E+00	9.03E-06	1.92E-03	0.00E+00	0.00E+00	1.93E-03	2.92E-03	0.00E+00	1.05E-02	0.00E+00	0.00E+00	1.92E-03	0.00E+00	0.00E+00	1.05E-02
449	ALL	736973	4035792	NonCancerAcute	0.00E+00	9.06E-06	1.92E-03	0.00E+00	0.00E+00	1.93E-03	2.93E-03	0.00E+00	1.06E-02	0.00E+00	0.00E+00	1.92E-03	0.00E+00	0.00E+00	1.06E-02
450	ALL	737073	4035792	NonCancerAcute	0.00E+00	9.09E-06	1.93E-03	0.00E+00	0.00E+00	1.94E-03	2.88E-03	0.00E+00	1.05E-02	0.00E+00	0.00E+00	1.93E-03	0.00E+00	0.00E+00	1.05E-02
451	ALL	737173	4035792	NonCancerAcute	0.00E+00	9.07E-06	1.93E-03	0.00E+00	0.00E+00	1.93E-03	2.85E-03	0.00E+00	1.05E-02	0.00E+00	0.00E+00	1.93E-03	0.00E+00	0.00E+00	1.05E-02
452	ALL	737273	4035792	NonCancerAcute	0.00E+00	9.06E-06	1.92E-03	0.00E+00	0.00E+00	1.93E-03	2.83E-03	0.00E+00	1.05E-02	0.00E+00	0.00E+00	1.92E-03	0.00E+00	0.00E+00	1.05E-02
453	ALL	737373	4035792	NonCancerAcute	0.00E+00	9.04E-06	1.92E-03	0.00E+00	0.00E+00	1.93E-03	2.83E-03	0.00E+00	1.04E-02	0.00E+00	0.00E+00	1.92E-03	0.00E+00	0.00E+00	1.04E-02
454	ALL	737473	4035792	NonCancerAcute	0.00E+00	9.03E-06	1.92E-03	0.00E+00	0.00E+00	1.93E-03	2.87E-03	0.00E+00	1.05E-02	0.00E+00	0.00E+00	1.92E-03	0.00E+00	0.00E+00	1.05E-02
455	ALL	737573	4035792	NonCancerAcute	0.00E+00	8.98E-06	1.91E-03	0.00E+00	0.00E+00	1.91E-03	2.89E-03	0.00E+00	1.05E-02	0.00E+00	0.00E+00	1.91E-03	0.00E+00	0.00E+00	1.05E-02
456	ALL	737673	4035792	NonCancerAcute	0.00E+00	8.91E-06	1.89E-03	0.00E+00	0.00E+00	1.90E-03	2.90E-03	0.00E+00	1.04E-02	0.00E+00	0.00E+00	1.89E-03	0.00E+00	0.00E+00	1.04E-02
457	ALL	737773	4035792	NonCancerAcute	0.00E+00	8.86E-06	1.88E-03	0.00E+00	0.00E+00	1.89E-03	2.91E-03	0.00E+00	1.04E-02	0.00E+00	0.00E+00	1.88E-03	0.00E+00	0.00E+00	1.04E-02
458	ALL	737873	4035792	NonCancerAcute	0.00E+00	8.80E-06	1.87E-03	0.00E+00	0.00E+00	1.88E-03	2.90E-03	0.00E+00	1.03E-02	0.00E+00	0.00E+00	1.87E-03	0.00E+00	0.00E+00	1.03E-02
459	ALL	735473	4035892	NonCancerAcute	0.00E+00	8.67E-06	1.84E-03	0.00E+00	0.00E+00	1.85E-03	3.84E-03	0.00E+00	1.14E-02	0.00E+00	0.00E+00	1.84E-03	0.00E+00	0.00E+00	1.14E-02
460	ALL	735573	4035892	NonCancerAcute	0.00E+00	8.72E-06	1.85E-03	0.00E+00	0.00E+00	1.86E-03	3.70E-03	0.00E+00	1.13E-02	0.00E+00	0.00E+00	1.85E-03	0.00E+00	0.00E+00	1.13E-02
461	ALL	735673	4035892	NonCancerAcute	0.00E+00	8.85E-06	1.88E-03	0.00E+00	0.00E+00	1.89E-03	3.69E-03	0.00E+00	1.14E-02	0.00E+00	0.00E+00	1.88E-03	0.00E+00	0.00E+00	1.14E-02
462	ALL	735773	4035892	NonCancerAcute	0.00E+00	8.85E-06	1.88E-03	0.00E+00	0.00E+00	1.89E-03	3.64E-03	0.00E+00	1.13E-02	0.00E+00	0.00E+00	1.88E-03	0.00E+00	0.00E+00	1.13E-02
463	ALL	735873	4035892	NonCancerAcute	0.00E+00	8.99E-06	1.91E-03	0.00E+00	0.00E+00	1.92E-03	3.56E-03	0.00E+00	1.13E-02	0.00E+00	0.00E+00	1.91E-03	0.00E+00	0.00E+00	1.13E-02
464	ALL	735973	4035892	NonCancerAcute	0.00E+00	9.05E-06	1.92E-03	0.00E+00	0.00E+00	1.93E-03	3.41E-03	0.00E+00	1.12E-02	0.00E+00	0.00E+00	1.92E-03	0.00E+00	0.00E+00	1.12E-02
465	ALL	736073	4035892	NonCancerAcute	0.00E+00	9.16E-06	1.94E-03	0.00E+00	0.00E+00	1.95E-03	3.23E-03	0.00E+00	1.10E-02	0.00E+00	0.00E+00	1.94E-03	0.00E+00	0.00E+00	1.10E-02
466	ALL	736173	4035892	NonCancerAcute	0.00E+00	9.18E-06	1.95E-03	0.00E+00	0.00E+00	1.96E-03	3.03E-03	0.00E+00	1.08E-02	0.00E+00	0.00E+00	1.95E-03	0.00E+00	0.00E+00	1.08E-02
467	ALL	736273	4035892	NonCancerAcute	0.00E+00	9.21E-06	1.96E-03	0.00E+00	0.00E+00	1.97E-03	3.02E-03	0.00E+00	1.08E-02	0.00E+00	0.00E+00	1.96E-03	0.00E+00	0.00E+00	1.08E-02
468	ALL	736373	4035892	NonCancerAcute	0.00E+00	9.21E-06	1.96E-03	0.00E+00	0.00E+00	1.96E-03	3.00E-03	0.00E+00	1.08E-02	0.00E+00	0.00E+00	1.96E-03	0.00E+00	0.00E+00	1.08E-02
469	ALL	736473	4035892	NonCancerAcute	0.00E+00	9.05E-06	1.92E-03	0.00E+00	0.00E+00	1.93E-03	2.94E-03	0.00E+00	1.06E-02	0.00E+00	0.00E+00	1.92E-03	0.00E+00	0.00E+00	1.06E-02
470	ALL	736573	4035892	NonCancerAcute	0.00E+00	8.99E-06	1.91E-03	0.00E+00	0.00E+00	1.92E-03	2.92E-03	0.00E+00	1.05E-02	0.00E+00	0.00E+00	1.91E-03	0.00E+00	0.00E+00	1.05E-02
471	ALL	736673	4035892	NonCancerAcute	0.00E+00	9.05E-06	1.92E-03	0.00E+00	0.00E+00	1.93E-03	2.90E-03	0.00E+00	1.05E-02	0.00E+00	0.00E+00	1.92E-03	0.00E+00	0.00E+00	1.05E-02
472	ALL	736773	4035892	NonCancerAcute	0.00E+00	9.10E-06	1.93E-03	0.00E+00	0.00E+00	1.94E-03	2.88E-03	0.00E+00	1.05E-02	0.00E+00	0.00E+00	1.93E-03	0.00E+00	0.00E+00	1.05E-02
473	ALL	736873	4035892	NonCancerAcute	0.00E+00	9.14E-06	1.94E-03	0.00E+00	0.00E+00	1.95E-03	2.88E-03	0.00E+00	1.06E-02	0.00E+00	0.00E+00	1.94E-03	0.00E+00	0.00E+00	1.06E-02
474	ALL	736973	4035892	NonCancerAcute	0.00E+00	9.17E-06	1.95E-03	0.00E+00	0.00E+00	1.96E-03	2.99E-03	0.00E+00	1.07E-02	0.00E+00	0.00E+00	1.95E-03	0.00E+00	0.00E+00	1.07E-02
475	ALL	737073	4035892	NonCancerAcute	0.00E+00	9.16E-06	1.95E-03	0.00E+00	0.00E+00	1.95E-03	2.96E-03	0.00E+00	1.07E-02	0.00E+00	0.00E+00	1.95E-03	0.00E+00	0.00E+00	1.07E-02

476	ALL	737173	4035892	NonCancerAcute	0.00E+00	9.15E-06	1.94E-03	0.00E+00	0.00E+00	1.95E-03	2.90E-03	0.00E+00	1.06E-02	0.00E+00	0.00E+00	1.94E-03	0.00E+00	0.00E+00	1.06E-02
477	ALL	737273	4035892	NonCancerAcute	0.00E+00	9.19E-06	1.95E-03	0.00E+00	0.00E+00	1.96E-03	2.86E-03	0.00E+00	1.06E-02	0.00E+00	0.00E+00	1.95E-03	0.00E+00	0.00E+00	1.06E-02
478	ALL	737373	4035892	NonCancerAcute	0.00E+00	9.18E-06	1.95E-03	0.00E+00	0.00E+00	1.96E-03	2.84E-03	0.00E+00	1.06E-02	0.00E+00	0.00E+00	1.95E-03	0.00E+00	0.00E+00	1.06E-02
479	ALL	737473	4035892	NonCancerAcute	0.00E+00	9.16E-06	1.95E-03	0.00E+00	0.00E+00	1.95E-03	2.83E-03	0.00E+00	1.05E-02	0.00E+00	0.00E+00	1.95E-03	0.00E+00	0.00E+00	1.05E-02
480	ALL	737573	4035892	NonCancerAcute	0.00E+00	9.13E-06	1.94E-03	0.00E+00	0.00E+00	1.95E-03	2.84E-03	0.00E+00	1.05E-02	0.00E+00	0.00E+00	1.94E-03	0.00E+00	0.00E+00	1.05E-02
481	ALL	737673	4035892	NonCancerAcute	0.00E+00	9.10E-06	1.93E-03	0.00E+00	0.00E+00	1.94E-03	2.85E-03	0.00E+00	1.05E-02	0.00E+00	0.00E+00	1.93E-03	0.00E+00	0.00E+00	1.05E-02
482	ALL	737773	4035892	NonCancerAcute	0.00E+00	9.04E-06	1.92E-03	0.00E+00	0.00E+00	1.93E-03	2.88E-03	0.00E+00	1.05E-02	0.00E+00	0.00E+00	1.92E-03	0.00E+00	0.00E+00	1.05E-02
483	ALL	737873	4035892	NonCancerAcute	0.00E+00	8.99E-06	1.91E-03	0.00E+00	0.00E+00	1.92E-03	2.91E-03	0.00E+00	1.05E-02	0.00E+00	0.00E+00	1.91E-03	0.00E+00	0.00E+00	1.05E-02
484	ALL	737973	4035892	NonCancerAcute	0.00E+00	8.94E-06	1.90E-03	0.00E+00	0.00E+00	1.91E-03	2.93E-03	0.00E+00	1.05E-02	0.00E+00	0.00E+00	1.90E-03	0.00E+00	0.00E+00	1.05E-02
485	ALL	737573	4035992	NonCancerAcute	0.00E+00	9.22E-06	1.96E-03	0.00E+00	0.00E+00	1.97E-03	2.81E-03	0.00E+00	1.06E-02	0.00E+00	0.00E+00	1.96E-03	0.00E+00	0.00E+00	1.06E-02
486	ALL	737673	4035992	NonCancerAcute	0.00E+00	9.19E-06	1.95E-03	0.00E+00	0.00E+00	1.96E-03	2.81E-03	0.00E+00	1.05E-02	0.00E+00	0.00E+00	1.95E-03	0.00E+00	0.00E+00	1.05E-02
487	ALL	737773	4035992	NonCancerAcute	0.00E+00	9.19E-06	1.95E-03	0.00E+00	0.00E+00	1.96E-03	2.83E-03	0.00E+00	1.06E-02	0.00E+00	0.00E+00	1.95E-03	0.00E+00	0.00E+00	1.06E-02
488	ALL	737873	4035992	NonCancerAcute	0.00E+00	9.18E-06	1.95E-03	0.00E+00	0.00E+00	1.96E-03	2.84E-03	0.00E+00	1.06E-02	0.00E+00	0.00E+00	1.95E-03	0.00E+00	0.00E+00	1.06E-02
489	ALL	737973	4035992	NonCancerAcute	0.00E+00	9.16E-06	1.95E-03	0.00E+00	0.00E+00	1.95E-03	2.85E-03	0.00E+00	1.06E-02	0.00E+00	0.00E+00	1.95E-03	0.00E+00	0.00E+00	1.06E-02
490	ALL	737573	4036092	NonCancerAcute	0.00E+00	9.23E-06	1.96E-03	0.00E+00	0.00E+00	1.97E-03	2.92E-03	0.00E+00	1.07E-02	0.00E+00	0.00E+00	1.96E-03	0.00E+00	0.00E+00	1.07E-02
491	ALL	737673	4036092	NonCancerAcute	0.00E+00	9.30E-06	1.97E-03	0.00E+00	0.00E+00	1.98E-03	2.89E-03	0.00E+00	1.07E-02	0.00E+00	0.00E+00	1.97E-03	0.00E+00	0.00E+00	1.07E-02
492	ALL	737773	4036092	NonCancerAcute	0.00E+00	9.32E-06	1.98E-03	0.00E+00	0.00E+00	1.99E-03	2.86E-03	0.00E+00	1.07E-02	0.00E+00	0.00E+00	1.98E-03	0.00E+00	0.00E+00	1.07E-02
493	ALL	737873	4036092	NonCancerAcute	0.00E+00	9.30E-06	1.98E-03	0.00E+00	0.00E+00	1.98E-03	2.85E-03	0.00E+00	1.07E-02	0.00E+00	0.00E+00	1.98E-03	0.00E+00	0.00E+00	1.07E-02
494	ALL	737973	4036092	NonCancerAcute	0.00E+00	9.29E-06	1.97E-03	0.00E+00	0.00E+00	1.98E-03	2.84E-03	0.00E+00	1.07E-02	0.00E+00	0.00E+00	1.97E-03	0.00E+00	0.00E+00	1.07E-02
495	ALL	737573	4036192	NonCancerAcute	0.00E+00	9.24E-06	1.96E-03	0.00E+00	0.00E+00	1.97E-03	2.99E-03	0.00E+00	1.08E-02	0.00E+00	0.00E+00	1.96E-03	0.00E+00	0.00E+00	1.08E-02
496	ALL	737673	4036192	NonCancerAcute	0.00E+00	9.26E-06	1.97E-03	0.00E+00	0.00E+00	1.97E-03	2.97E-03	0.00E+00	1.08E-02	0.00E+00	0.00E+00	1.97E-03	0.00E+00	0.00E+00	1.08E-02
497	ALL	737773	4036192	NonCancerAcute	0.00E+00	9.24E-06	1.96E-03	0.00E+00	0.00E+00	1.97E-03	2.94E-03	0.00E+00	1.07E-02	0.00E+00	0.00E+00	1.96E-03	0.00E+00	0.00E+00	1.07E-02
498	ALL	737873	4036192	NonCancerAcute	0.00E+00	9.28E-06	1.97E-03	0.00E+00	0.00E+00	1.98E-03	2.92E-03	0.00E+00	1.07E-02	0.00E+00	0.00E+00	1.97E-03	0.00E+00	0.00E+00	1.07E-02
499	ALL	737973	4036192	NonCancerAcute	0.00E+00	9.29E-06	1.97E-03	0.00E+00	0.00E+00	1.98E-03	2.90E-03	0.00E+00	1.07E-02	0.00E+00	0.00E+00	1.97E-03	0.00E+00	0.00E+00	1.07E-02
500	ALL	737573	4036292	NonCancerAcute	0.00E+00	9.08E-06	1.93E-03	0.00E+00	0.00E+00	1.94E-03	2.97E-03	0.00E+00	1.07E-02	0.00E+00	0.00E+00	1.93E-03	0.00E+00	0.00E+00	1.07E-02
501	ALL	737673	4036292	NonCancerAcute	0.00E+00	9.13E-06	1.94E-03	0.00E+00	0.00E+00	1.95E-03	2.95E-03	0.00E+00	1.07E-02	0.00E+00	0.00E+00	1.94E-03	0.00E+00	0.00E+00	1.07E-02
502	ALL	737773	4036292	NonCancerAcute	0.00E+00	9.18E-06	1.95E-03	0.00E+00	0.00E+00	1.96E-03	2.95E-03	0.00E+00	1.07E-02	0.00E+00	0.00E+00	1.95E-03	0.00E+00	0.00E+00	1.07E-02
503	ALL	737873	4036292	NonCancerAcute	0.00E+00	9.19E-06	1.95E-03	0.00E+00	0.00E+00	1.96E-03	2.94E-03	0.00E+00	1.07E-02	0.00E+00	0.00E+00	1.95E-03	0.00E+00	0.00E+00	1.07E-02
504	ALL	737973	4036292	NonCancerAcute	0.00E+00	9.15E-06	1.94E-03	0.00E+00	0.00E+00	1.95E-03	2.92E-03	0.00E+00	1.06E-02	0.00E+00	0.00E+00	1.94E-03	0.00E+00	0.00E+00	1.06E-02
505	ALL	738080.96	4035200.87	NonCancerAcute	0.00E+00	8.95E-06	1.90E-03	0.00E+00	0.00E+00	1.91E-03	2.72E-03	0.00E+00	1.02E-02	0.00E+00	0.00E+00	1.90E-03	0.00E+00	0.00E+00	1.02E-02
506	ALL	738180.96	4035200.87	NonCancerAcute	0.00E+00	8.99E-06	1.91E-03	0.00E+00	0.00E+00	1.92E-03	2.70E-03	0.00E+00	1.03E-02	0.00E+00	0.00E+00	1.91E-03	0.00E+00	0.00E+00	1.03E-02
507	ALL	738280.96	4035200.87	NonCancerAcute	0.00E+00	9.04E-06	1.92E-03	0.00E+00	0.00E+00	1.93E-03	2.73E-03	0.00E+00	1.03E-02	0.00E+00	0.00E+00	1.92E-03	0.00E+00	0.00E+00	1.03E-02
508	ALL	738080.96	4035300.87	NonCancerAcute	0.00E+00	8.88E-06	1.89E-03	0.00E+00	0.00E+00	1.89E-03	2.77E-03	0.00E+00	1.02E-02	0.00E+00	0.00E+00	1.89E-03	0.00E+00	0.00E+00	1.02E-02
509	ALL	738180.96	4035300.87	NonCancerAcute	0.00E+00	8.94E-06	1.90E-03	0.00E+00	0.00E+00	1.91E-03	2.77E-03	0.00E+00	1.03E-02	0.00E+00	0.00E+00	1.90E-03	0.00E+00	0.00E+00	1.03E-02
510	ALL	738280.96	4035300.87	NonCancerAcute	0.00E+00	8.99E-06	1.91E-03	0.00E+00	0.00E+00	1.92E-03	2.76E-03	0.00E+00	1.03E-02	0.00E+00	0.00E+00	1.91E-03	0.00E+00	0.00E+00	1.03E-02
511	ALL	738380.96	4035300.87	NonCancerAcute	0.00E+00	9.04E-06	1.92E-03	0.00E+00	0.00E+00	1.93E-03	2.75E-03	0.00E+00	1.03E-02	0.00E+00	0.00E+00	1.92E-03	0.00E+00	0.00E+00	1.03E-02
512	ALL	738080.96	4035400.87	NonCancerAcute	0.00E+00	8.64E-06	1.84E-03	0.00E+00	0.00E+00	1.84E-03	2.75E-03	0.00E+00	1.00E-02	0.00E+00	0.00E+00	1.84E-03	0.00E+00	0.00E+00	1.00E-02
513	ALL	738180.96	4035400.87	NonCancerAcute	0.00E+00	8.70E-06	1.85E-03	0.00E+00	0.00E+00	1.86E-03	2.76E-03	0.00E+00	1.01E-02	0.00E+00	0.00E+00	1.85E-03	0.00E+00	0.00E+00	1.01E-02
514	ALL	738280.96	4035400.87	NonCancerAcute	0.00E+00	8.76E-06	1.86E-03	0.00E+00	0.00E+00	1.87E-03	2.76E-03	0.00E+00	1.01E-02	0.00E+00	0.00E+00	1.86E-03	0.00E+00	0.00E+00	1.01E-02
515	ALL	738380.96	4035400.87	NonCancerAcute	0.00E+00	8.83E-06	1.88E-03	0.00E+00	0.00E+00	1.88E-03	2.77E-03	0.00E+00	1.02E-02	0.00E+00	0.00E+00	1.88E-03	0.00E+00	0.00E+00	1.02E-02
516	ALL	738480.96	4035400.87	NonCancerAcute	0.00E+00	8.90E-06	1.89E-03	0.00E+00	0.00E+00	1.90E-03	2.77E-03	0.00E+00	1.03E-02	0.00E+00	0.00E+00	1.89E-03	0.00E+00	0.00E+00	1.03E-02
517	ALL	738080.96	4035500.87	NonCancerAcute	0.00E+00	8.60E-06	1.83E-03	0.00E+00	0.00E+00	1.83E-03	2.80E-03	0.00E+00	1.01E-02	0.00E+00	0.00E+00	1.83E-03	0.00E+00	0.00E+00	1.01E-02
518	ALL	738180.96	4035500.87	NonCancerAcute	0.00E+00	8.59E-06	1.82E-03	0.00E+00	0.00E+00	1.83E-03	2.77E-03	0.00E+00	1.00E-02	0.00E+00	0.00E+00	1.82E-03	0.00E+00	0.00E+00	1.00E-02
519	ALL	738280.96	4035500.87	NonCancerAcute	0.00E+00	8.56E-06	1.82E-03	0.00E+00	0.00E+00	1.83E-03	2.74E-03	0.00E+00	9.96E-03	0.00E+00	0.00E+00	1.82E-03	0.00E+00	0.00E+00	9.96E-03
520	ALL	738380.96	4035500.87	NonCancerAcute	0.00E+00	8.53E-06	1.81E-03	0.00E+00	0.00E+00	1.82E-03	2.72E-03	0.00E+00	9.91E-03	0.00E+00	0.00E+00	1.81E-03	0.00E+00	0.00E+00	9.91E-03
521	ALL	738480.96	4035500.87	NonCancerAcute	0.00E+00	8.57E-06	1.82E-03	0.00E+00	0.00E+00	1.83E-03	2.75E-03	0.00E+00	9.98E-03	0.00E+00	0.00E+00	1.82E-03	0.00E+00	0.00E+00	9.98E-03
522	ALL	738580.96	4035500.87	NonCancerAcute	0.00E+00	8.64E-06	1.84E-03	0.00E+00	0.00E+00	1.84E-03	2.76E-03	0.00E+00	1.01E-02	0.00E+00	0.00E+00	1.84E-03	0.00E+00	0.00E+00	1.01E-02
523	ALL	738080.96	4035600.87	NonCancerAcute	0.00E+00	8.55E-06	1.82E-03	0.00E+00	0.00E+00	1.82E-03	2.83E-03	0.00E+00	1.01E-02	0.00E+00	0.00E+00	1.82E-03	0.00E+00	0.00E+00	1.01E-02
524	ALL	738180.96	4035600.87	NonCancerAcute	0.00E+00	8.54E-06	1.81E-03	0.00E+00	0.00E+00	1.82E-03	2.83E-03	0.00E+00	1.01E-02	0.00E+00	0.00E+00	1.81E-03	0.00E+00	0.00E+00	1.01E-02
525	ALL	738280.96	4035600.87	NonCancerAcute	0.00E+00	8.52E-06	1.81E-03	0.00E+00	0.00E+00	1.82E-03	2.82E-03	0.00E+00	1.00E-02	0.00E+00	0.00E+00	1.81E-03	0.00E+00	0.00E+00	1.00E-02
526	ALL	738380.96	4035600.87	NonCancerAcute	0.00E+00	8.50E-06	1.81E-03	0.00E+00	0.00E+00	1.81E-03	2.82E-03	0.00E+00	1.00E-02	0.00E+00	0.00E+00	1.81E-03	0.00E+00	0.00E+00	1.00E-02
527	ALL	738480.96	4035600.87	NonCancerAcute	0.00E+00	8.47E-06	1.80E-03	0.00E+00	0.00E+00	1.81E-03	2.80E-03	0.00E+00	9.97E-03	0.00E+00	0.00E+00	1.80E-03	0.00E+00	0.00E+00	9.97E-03
528	ALL	738580.96	4035600.87	NonCancerAcute	0.00E+00	8.47E-06	1.80E-03	0.00E+00	0.00E+00	1.81E-03	2.78E-03	0.00E+00	9.94E-03	0.00E+00	0.00E+00	1.80E-03	0.00E+00	0.00E+00	9.94E-03

529	ALL	738080.96	4035700.87	NonCancerAcute	0.00E+00	8.51E-06	1.81E-03	0.00E+00	0.00E+00	1.82E-03	2.83E-03	0.00E+00	1.00E-02	0.00E+00	0.00E+00	1.81E-03	0.00E+00	0.00E+00	1.00E-02
530	ALL	738180.96	4035700.87	NonCancerAcute	0.00E+00	8.52E-06	1.81E-03	0.00E+00	0.00E+00	1.82E-03	2.83E-03	0.00E+00	1.00E-02	0.00E+00	0.00E+00	1.81E-03	0.00E+00	0.00E+00	1.00E-02
531	ALL	738280.96	4035700.87	NonCancerAcute	0.00E+00	8.57E-06	1.82E-03	0.00E+00	0.00E+00	1.83E-03	2.83E-03	0.00E+00	1.01E-02	0.00E+00	0.00E+00	1.82E-03	0.00E+00	0.00E+00	1.01E-02
532	ALL	738380.96	4035700.87	NonCancerAcute	0.00E+00	8.58E-06	1.82E-03	0.00E+00	0.00E+00	1.83E-03	2.83E-03	0.00E+00	1.01E-02	0.00E+00	0.00E+00	1.82E-03	0.00E+00	0.00E+00	1.01E-02
533	ALL	738480.96	4035700.87	NonCancerAcute	0.00E+00	8.56E-06	1.82E-03	0.00E+00	0.00E+00	1.83E-03	2.83E-03	0.00E+00	1.01E-02	0.00E+00	0.00E+00	1.82E-03	0.00E+00	0.00E+00	1.01E-02
534	ALL	738580.96	4035700.87	NonCancerAcute	0.00E+00	8.55E-06	1.82E-03	0.00E+00	0.00E+00	1.82E-03	2.82E-03	0.00E+00	1.00E-02	0.00E+00	0.00E+00	1.82E-03	0.00E+00	0.00E+00	1.00E-02
535	ALL	738080.96	4035800.87	NonCancerAcute	0.00E+00	8.61E-06	1.83E-03	0.00E+00	0.00E+00	1.84E-03	2.89E-03	0.00E+00	1.02E-02	0.00E+00	0.00E+00	1.83E-03	0.00E+00	0.00E+00	1.02E-02
536	ALL	738180.96	4035800.87	NonCancerAcute	0.00E+00	8.55E-06	1.82E-03	0.00E+00	0.00E+00	1.82E-03	2.88E-03	0.00E+00	1.01E-02	0.00E+00	0.00E+00	1.82E-03	0.00E+00	0.00E+00	1.01E-02
537	ALL	738280.96	4035800.87	NonCancerAcute	0.00E+00	8.56E-06	1.82E-03	0.00E+00	0.00E+00	1.83E-03	2.88E-03	0.00E+00	1.01E-02	0.00E+00	0.00E+00	1.82E-03	0.00E+00	0.00E+00	1.01E-02
538	ALL	738380.96	4035800.87	NonCancerAcute	0.00E+00	8.58E-06	1.82E-03	0.00E+00	0.00E+00	1.83E-03	2.89E-03	0.00E+00	1.02E-02	0.00E+00	0.00E+00	1.82E-03	0.00E+00	0.00E+00	1.02E-02
539	ALL	738480.96	4035800.87	NonCancerAcute	0.00E+00	8.59E-06	1.82E-03	0.00E+00	0.00E+00	1.83E-03	2.91E-03	0.00E+00	1.02E-02	0.00E+00	0.00E+00	1.82E-03	0.00E+00	0.00E+00	1.02E-02
540	ALL	738580.96	4035800.87	NonCancerAcute	0.00E+00	8.63E-06	1.83E-03	0.00E+00	0.00E+00	1.84E-03	2.92E-03	0.00E+00	1.02E-02	0.00E+00	0.00E+00	1.83E-03	0.00E+00	0.00E+00	1.02E-02
541	ALL	738180.96	4035900.87	NonCancerAcute	0.00E+00	8.80E-06	1.87E-03	0.00E+00	0.00E+00	1.88E-03	2.95E-03	0.00E+00	1.04E-02	0.00E+00	0.00E+00	1.87E-03	0.00E+00	0.00E+00	1.04E-02
542	ALL	738280.96	4035900.87	NonCancerAcute	0.00E+00	8.70E-06	1.85E-03	0.00E+00	0.00E+00	1.85E-03	2.94E-03	0.00E+00	1.03E-02	0.00E+00	0.00E+00	1.85E-03	0.00E+00	0.00E+00	1.03E-02
543	ALL	738380.96	4035900.87	NonCancerAcute	0.00E+00	8.60E-06	1.83E-03	0.00E+00	0.00E+00	1.83E-03	2.93E-03	0.00E+00	1.02E-02	0.00E+00	0.00E+00	1.83E-03	0.00E+00	0.00E+00	1.02E-02
544	ALL	738480.96	4035900.87	NonCancerAcute	0.00E+00	8.54E-06	1.81E-03	0.00E+00	0.00E+00	1.82E-03	2.93E-03	0.00E+00	1.02E-02	0.00E+00	0.00E+00	1.81E-03	0.00E+00	0.00E+00	1.02E-02
545	ALL	738580.96	4035900.87	NonCancerAcute	0.00E+00	8.54E-06	1.81E-03	0.00E+00	0.00E+00	1.82E-03	2.93E-03	0.00E+00	1.02E-02	0.00E+00	0.00E+00	1.81E-03	0.00E+00	0.00E+00	1.02E-02
546	ALL	738180.96	4036000.87	NonCancerAcute	0.00E+00	9.05E-06	1.92E-03	0.00E+00	0.00E+00	1.93E-03	2.90E-03	0.00E+00	1.05E-02	0.00E+00	0.00E+00	1.92E-03	0.00E+00	0.00E+00	1.05E-02
547	ALL	738280.96	4036000.87	NonCancerAcute	0.00E+00	8.99E-06	1.91E-03	0.00E+00	0.00E+00	1.92E-03	2.93E-03	0.00E+00	1.05E-02	0.00E+00	0.00E+00	1.91E-03	0.00E+00	0.00E+00	1.05E-02
548	ALL	738380.96	4036000.87	NonCancerAcute	0.00E+00	8.91E-06	1.89E-03	0.00E+00	0.00E+00	1.90E-03	2.94E-03	0.00E+00	1.05E-02	0.00E+00	0.00E+00	1.89E-03	0.00E+00	0.00E+00	1.05E-02
549	ALL	738480.96	4036000.87	NonCancerAcute	0.00E+00	8.82E-06	1.87E-03	0.00E+00	0.00E+00	1.88E-03	2.94E-03	0.00E+00	1.04E-02	0.00E+00	0.00E+00	1.87E-03	0.00E+00	0.00E+00	1.04E-02
550	ALL	738580.96	4036000.87	NonCancerAcute	0.00E+00	8.69E-06	1.85E-03	0.00E+00	0.00E+00	1.85E-03	2.95E-03	0.00E+00	1.03E-02	0.00E+00	0.00E+00	1.85E-03	0.00E+00	0.00E+00	1.03E-02
551	ALL	738080.96	4036100.87	NonCancerAcute	0.00E+00	9.26E-06	1.97E-03	0.00E+00	0.00E+00	1.97E-03	2.85E-03	0.00E+00	1.06E-02	0.00E+00	0.00E+00	1.97E-03	0.00E+00	0.00E+00	1.06E-02
552	ALL	738280.96	4036100.87	NonCancerAcute	0.00E+00	9.19E-06	1.95E-03	0.00E+00	0.00E+00	1.96E-03	2.84E-03	0.00E+00	1.06E-02	0.00E+00	0.00E+00	1.95E-03	0.00E+00	0.00E+00	1.06E-02
553	ALL	738380.96	4036100.87	NonCancerAcute	0.00E+00	9.12E-06	1.94E-03	0.00E+00	0.00E+00	1.94E-03	2.83E-03	0.00E+00	1.05E-02	0.00E+00	0.00E+00	1.94E-03	0.00E+00	0.00E+00	1.05E-02
554	ALL	738480.96	4036100.87	NonCancerAcute	0.00E+00	9.09E-06	1.93E-03	0.00E+00	0.00E+00	1.94E-03	2.83E-03	0.00E+00	1.05E-02	0.00E+00	0.00E+00	1.93E-03	0.00E+00	0.00E+00	1.05E-02
555	ALL	738580.96	4036100.87	NonCancerAcute	0.00E+00	8.95E-06	1.90E-03	0.00E+00	0.00E+00	1.91E-03	2.89E-03	0.00E+00	1.05E-02	0.00E+00	0.00E+00	1.90E-03	0.00E+00	0.00E+00	1.05E-02
556	ALL	738680.96	4036100.87	NonCancerAcute	0.00E+00	8.87E-06	1.88E-03	0.00E+00	0.00E+00	1.89E-03	2.91E-03	0.00E+00	1.04E-02	0.00E+00	0.00E+00	1.88E-03	0.00E+00	0.00E+00	1.04E-02
557	ALL	738780.96	4036100.87	NonCancerAcute	0.00E+00	8.76E-06	1.86E-03	0.00E+00	0.00E+00	1.87E-03	2.92E-03	0.00E+00	1.03E-02	0.00E+00	0.00E+00	1.86E-03	0.00E+00	0.00E+00	1.03E-02
558	ALL	738880.96	4036100.87	NonCancerAcute	0.00E+00	8.65E-06	1.84E-03	0.00E+00	0.00E+00	1.85E-03	2.94E-03	0.00E+00	1.03E-02	0.00E+00	0.00E+00	1.84E-03	0.00E+00	0.00E+00	1.03E-02
559	ALL	738980.96	4036100.87	NonCancerAcute	0.00E+00	8.54E-06	1.81E-03	0.00E+00	0.00E+00	1.82E-03	2.97E-03	0.00E+00	1.02E-02	0.00E+00	0.00E+00	1.81E-03	0.00E+00	0.00E+00	1.02E-02
560	ALL	739080.96	4036100.87	NonCancerAcute	0.00E+00	8.47E-06	1.80E-03	0.00E+00	0.00E+00	1.81E-03	2.99E-03	0.00E+00	1.02E-02	0.00E+00	0.00E+00	1.80E-03	0.00E+00	0.00E+00	1.02E-02
561	ALL	739180.96	4036100.87	NonCancerAcute	0.00E+00	8.49E-06	1.80E-03	0.00E+00	0.00E+00	1.81E-03	3.01E-03	0.00E+00	1.02E-02	0.00E+00	0.00E+00	1.80E-03	0.00E+00	0.00E+00	1.02E-02
562	ALL	739280.96	4036100.87	NonCancerAcute	0.00E+00	8.52E-06	1.81E-03	0.00E+00	0.00E+00	1.82E-03	3.06E-03	0.00E+00	1.03E-02	0.00E+00	0.00E+00	1.81E-03	0.00E+00	0.00E+00	1.03E-02
563	ALL	739380.96	4036100.87	NonCancerAcute	0.00E+00	8.55E-06	1.81E-03	0.00E+00	0.00E+00	1.82E-03	3.13E-03	0.00E+00	1.04E-02	0.00E+00	0.00E+00	1.81E-03	0.00E+00	0.00E+00	1.04E-02
564	ALL	739480.96	4036100.87	NonCancerAcute	0.00E+00	8.58E-06	1.82E-03	0.00E+00	0.00E+00	1.83E-03	3.20E-03	0.00E+00	1.05E-02	0.00E+00	0.00E+00	1.82E-03	0.00E+00	0.00E+00	1.05E-02
565	ALL	739580.96	4036100.87	NonCancerAcute	0.00E+00	8.67E-06	1.84E-03	0.00E+00	0.00E+00	1.85E-03	3.27E-03	0.00E+00	1.07E-02	0.00E+00	0.00E+00	1.84E-03	0.00E+00	0.00E+00	1.07E-02
566	ALL	739680.96	4036100.87	NonCancerAcute	0.00E+00	8.75E-06	1.86E-03	0.00E+00	0.00E+00	1.87E-03	3.33E-03	0.00E+00	1.08E-02	0.00E+00	0.00E+00	1.86E-03	0.00E+00	0.00E+00	1.08E-02
567	ALL	739780.96	4036100.87	NonCancerAcute	0.00E+00	8.88E-06	1.88E-03	0.00E+00	0.00E+00	1.89E-03	3.40E-03	0.00E+00	1.10E-02	0.00E+00	0.00E+00	1.88E-03	0.00E+00	0.00E+00	1.10E-02
568	ALL	739880.96	4036100.87	NonCancerAcute	0.00E+00	8.97E-06	1.90E-03	0.00E+00	0.00E+00	1.91E-03	3.45E-03	0.00E+00	1.11E-02	0.00E+00	0.00E+00	1.90E-03	0.00E+00	0.00E+00	1.11E-02
569	ALL	739980.96	4036100.87	NonCancerAcute	0.00E+00	9.04E-06	1.92E-03	0.00E+00	0.00E+00	1.93E-03	3.50E-03	0.00E+00	1.13E-02	0.00E+00	0.00E+00	1.92E-03	0.00E+00	0.00E+00	1.13E-02
570	ALL	740080.96	4036100.87	NonCancerAcute	0.00E+00	9.07E-06	1.93E-03	0.00E+00	0.00E+00	1.94E-03	3.54E-03	0.00E+00	1.13E-02	0.00E+00	0.00E+00	1.93E-03	0.00E+00	0.00E+00	1.13E-02
571	ALL	740180.96	4036100.87	NonCancerAcute	0.00E+00	9.08E-06	1.93E-03	0.00E+00	0.00E+00	1.94E-03	3.57E-03	0.00E+00	1.14E-02	0.00E+00	0.00E+00	1.93E-03	0.00E+00	0.00E+00	1.14E-02
572	ALL	740280.96	4036100.87	NonCancerAcute	0.00E+00	9.04E-06	1.92E-03	0.00E+00	0.00E+00	1.93E-03	3.60E-03	0.00E+00	1.14E-02	0.00E+00	0.00E+00	1.92E-03	0.00E+00	0.00E+00	1.14E-02
573	ALL	740380.96	4036100.87	NonCancerAcute	0.00E+00	8.96E-06	1.90E-03	0.00E+00	0.00E+00	1.91E-03	3.62E-03	0.00E+00	1.14E-02	0.00E+00	0.00E+00	1.90E-03	0.00E+00	0.00E+00	1.14E-02
574	ALL	740480.96	4036100.87	NonCancerAcute	0.00E+00	8.90E-06	1.89E-03	0.00E+00	0.00E+00	1.90E-03	3.63E-03	0.00E+00	1.13E-02	0.00E+00	0.00E+00	1.89E-03	0.00E+00	0.00E+00	1.13E-02
575	ALL	740580.96	4036100.87	NonCancerAcute	0.00E+00	8.86E-06	1.88E-03	0.00E+00	0.00E+00	1.89E-03	3.64E-03	0.00E+00	1.13E-02	0.00E+00	0.00E+00	1.88E-03	0.00E+00	0.00E+00	1.13E-02
576	ALL	740680.96	4036100.87	NonCancerAcute	0.00E+00	8.80E-06	1.87E-03	0.00E+00	0.00E+00	1.88E-03	3.64E-03	0.00E+00	1.13E-02	0.00E+00	0.00E+00	1.87E-03	0.00E+00	0.00E+00	1.13E-02
577	ALL	740780.96	4036100.87	NonCancerAcute	0.00E+00	8.90E-06	1.89E-03	0.00E+00	0.00E+00	1.90E-03	3.64E-03	0.00E+00	1.13E-02	0.00E+00	0.00E+00	1.89E-03	0.00E+00	0.00E+00	1.13E-02
578	ALL	740880.96	4036100.87	NonCancerAcute	0.00E+00	8.92E-06	1.89E-03	0.00E+00	0.00E+00	1.90E-03	3.63E-03	0.00E+00	1.13E-02	0.00E+00	0.00E+00	1.89E-03	0.00E+00	0.00E+00	1.13E-02
579	ALL	740980.96	4036100.87	NonCancerAcute	0.00E+00	8.90E-06	1.89E-03	0.00E+00	0.00E+00	1.90E-03	3.67E-03	0.00E+00	1.14E-02	0.00E+00	0.00E+00	1.89E-03	0.00E+00	0.00E+00	1.14E-02
580	ALL	741080.96	4036100.87	NonCancerAcute	0.00E+00	8.85E-06	1.88E-03	0.00E+00	0.00E+00	1.89E-03	3.71E-03	0.00E+00	1.14E-02	0.00E+00	0.00E+00	1.88E-03	0.00E+00	0.00E+00	1.14E-02
581	ALL	741180.96	4036100.87	NonCancerAcute	0.00E+00	8.86E-06	1.88E-03	0.00E+00	0.00E+00	1.89E-03	3.74E-03	0.00E+00	1.14E-02	0.00E+00	0.00E+00	1.88E-03	0.00E+00	0.00E+00	1.14E-02

582	ALL	741280.96	4036100.87	NonCancerAcute	0.00E+00	8.81E-06	1.87E-03	0.00E+00	0.00E+00	1.88E-03	3.77E-03	0.00E+00	1.14E-02	0.00E+00	0.00E+00	1.87E-03	0.00E+00	0.00E+00	1.14E-02
583	ALL	741380.96	4036100.87	NonCancerAcute	0.00E+00	8.80E-06	1.87E-03	0.00E+00	0.00E+00	1.88E-03	3.82E-03	0.00E+00	1.15E-02	0.00E+00	0.00E+00	1.87E-03	0.00E+00	0.00E+00	1.15E-02
584	ALL	741480.96	4036100.87	NonCancerAcute	0.00E+00	8.95E-06	1.90E-03	0.00E+00	0.00E+00	1.91E-03	3.88E-03	0.00E+00	1.17E-02	0.00E+00	0.00E+00	1.90E-03	0.00E+00	0.00E+00	1.17E-02
585	ALL	741580.96	4036100.87	NonCancerAcute	0.00E+00	9.05E-06	1.92E-03	0.00E+00	0.00E+00	1.93E-03	3.94E-03	0.00E+00	1.18E-02	0.00E+00	0.00E+00	1.92E-03	0.00E+00	0.00E+00	1.18E-02
586	ALL	741680.96	4036100.87	NonCancerAcute	0.00E+00	9.12E-06	1.94E-03	0.00E+00	0.00E+00	1.95E-03	3.99E-03	0.00E+00	1.19E-02	0.00E+00	0.00E+00	1.94E-03	0.00E+00	0.00E+00	1.19E-02
587	ALL	741780.96	4036100.87	NonCancerAcute	0.00E+00	9.13E-06	1.94E-03	0.00E+00	0.00E+00	1.95E-03	4.04E-03	0.00E+00	1.20E-02	0.00E+00	0.00E+00	1.94E-03	0.00E+00	0.00E+00	1.20E-02
588	ALL	741880.96	4036100.87	NonCancerAcute	0.00E+00	9.16E-06	1.95E-03	0.00E+00	0.00E+00	1.95E-03	4.20E-03	0.00E+00	1.22E-02	0.00E+00	0.00E+00	1.95E-03	0.00E+00	0.00E+00	1.22E-02
589	ALL	741980.96	4036100.87	NonCancerAcute	0.00E+00	9.16E-06	1.95E-03	0.00E+00	0.00E+00	1.95E-03	4.34E-03	0.00E+00	1.24E-02	0.00E+00	0.00E+00	1.95E-03	0.00E+00	0.00E+00	1.24E-02
590	ALL	738080.96	4036200.87	NonCancerAcute	0.00E+00	9.26E-06	1.97E-03	0.00E+00	0.00E+00	1.98E-03	2.88E-03	0.00E+00	1.07E-02	0.00E+00	0.00E+00	1.97E-03	0.00E+00	0.00E+00	1.07E-02
591	ALL	738280.96	4036200.87	NonCancerAcute	0.00E+00	9.20E-06	1.95E-03	0.00E+00	0.00E+00	1.96E-03	2.88E-03	0.00E+00	1.06E-02	0.00E+00	0.00E+00	1.95E-03	0.00E+00	0.00E+00	1.06E-02
592	ALL	738380.96	4036200.87	NonCancerAcute	0.00E+00	9.17E-06	1.95E-03	0.00E+00	0.00E+00	1.96E-03	2.88E-03	0.00E+00	1.06E-02	0.00E+00	0.00E+00	1.95E-03	0.00E+00	0.00E+00	1.06E-02
593	ALL	738480.96	4036200.87	NonCancerAcute	0.00E+00	9.12E-06	1.94E-03	0.00E+00	0.00E+00	1.94E-03	2.89E-03	0.00E+00	1.06E-02	0.00E+00	0.00E+00	1.94E-03	0.00E+00	0.00E+00	1.06E-02
594	ALL	738580.96	4036200.87	NonCancerAcute	0.00E+00	9.05E-06	1.92E-03	0.00E+00	0.00E+00	1.93E-03	2.90E-03	0.00E+00	1.05E-02	0.00E+00	0.00E+00	1.92E-03	0.00E+00	0.00E+00	1.05E-02
595	ALL	738680.96	4036200.87	NonCancerAcute	0.00E+00	8.98E-06	1.91E-03	0.00E+00	0.00E+00	1.92E-03	2.89E-03	0.00E+00	1.05E-02	0.00E+00	0.00E+00	1.91E-03	0.00E+00	0.00E+00	1.05E-02
596	ALL	738780.96	4036200.87	NonCancerAcute	0.00E+00	8.91E-06	1.89E-03	0.00E+00	0.00E+00	1.90E-03	2.91E-03	0.00E+00	1.04E-02	0.00E+00	0.00E+00	1.89E-03	0.00E+00	0.00E+00	1.04E-02
597	ALL	738880.96	4036200.87	NonCancerAcute	0.00E+00	8.82E-06	1.87E-03	0.00E+00	0.00E+00	1.88E-03	2.93E-03	0.00E+00	1.04E-02	0.00E+00	0.00E+00	1.87E-03	0.00E+00	0.00E+00	1.04E-02
598	ALL	738980.96	4036200.87	NonCancerAcute	0.00E+00	8.69E-06	1.85E-03	0.00E+00	0.00E+00	1.85E-03	2.93E-03	0.00E+00	1.03E-02	0.00E+00	0.00E+00	1.85E-03	0.00E+00	0.00E+00	1.03E-02
599	ALL	739080.96	4036200.87	NonCancerAcute	0.00E+00	8.56E-06	1.82E-03	0.00E+00	0.00E+00	1.83E-03	2.93E-03	0.00E+00	1.02E-02	0.00E+00	0.00E+00	1.82E-03	0.00E+00	0.00E+00	1.02E-02
600	ALL	739180.96	4036200.87	NonCancerAcute	0.00E+00	8.43E-06	1.79E-03	0.00E+00	0.00E+00	1.80E-03	2.93E-03	0.00E+00	1.01E-02	0.00E+00	0.00E+00	1.79E-03	0.00E+00	0.00E+00	1.01E-02
601	ALL	739280.96	4036200.87	NonCancerAcute	0.00E+00	8.37E-06	1.78E-03	0.00E+00	0.00E+00	1.79E-03	2.94E-03	0.00E+00	1.01E-02	0.00E+00	0.00E+00	1.78E-03	0.00E+00	0.00E+00	1.01E-02
602	ALL	739380.96	4036200.87	NonCancerAcute	0.00E+00	8.34E-06	1.77E-03	0.00E+00	0.00E+00	1.78E-03	2.96E-03	0.00E+00	1.01E-02	0.00E+00	0.00E+00	1.77E-03	0.00E+00	0.00E+00	1.01E-02
603	ALL	739480.96	4036200.87	NonCancerAcute	0.00E+00	8.34E-06	1.77E-03	0.00E+00	0.00E+00	1.78E-03	3.03E-03	0.00E+00	1.01E-02	0.00E+00	0.00E+00	1.77E-03	0.00E+00	0.00E+00	1.01E-02
604	ALL	739580.96	4036200.87	NonCancerAcute	0.00E+00	8.34E-06	1.77E-03	0.00E+00	0.00E+00	1.78E-03	3.08E-03	0.00E+00	1.02E-02	0.00E+00	0.00E+00	1.77E-03	0.00E+00	0.00E+00	1.02E-02
605	ALL	739680.96	4036200.87	NonCancerAcute	0.00E+00	8.40E-06	1.78E-03	0.00E+00	0.00E+00	1.79E-03	3.15E-03	0.00E+00	1.03E-02	0.00E+00	0.00E+00	1.78E-03	0.00E+00	0.00E+00	1.03E-02
606	ALL	739780.96	4036200.87	NonCancerAcute	0.00E+00	8.50E-06	1.81E-03	0.00E+00	0.00E+00	1.81E-03	3.23E-03	0.00E+00	1.05E-02	0.00E+00	0.00E+00	1.81E-03	0.00E+00	0.00E+00	1.05E-02
607	ALL	739880.96	4036200.87	NonCancerAcute	0.00E+00	8.68E-06	1.84E-03	0.00E+00	0.00E+00	1.85E-03	3.31E-03	0.00E+00	1.07E-02	0.00E+00	0.00E+00	1.84E-03	0.00E+00	0.00E+00	1.07E-02
608	ALL	739980.96	4036200.87	NonCancerAcute	0.00E+00	8.82E-06	1.87E-03	0.00E+00	0.00E+00	1.88E-03	3.38E-03	0.00E+00	1.09E-02	0.00E+00	0.00E+00	1.87E-03	0.00E+00	0.00E+00	1.09E-02
609	ALL	740080.96	4036200.87	NonCancerAcute	0.00E+00	8.94E-06	1.90E-03	0.00E+00	0.00E+00	1.91E-03	3.44E-03	0.00E+00	1.11E-02	0.00E+00	0.00E+00	1.90E-03	0.00E+00	0.00E+00	1.11E-02
610	ALL	740180.96	4036200.87	NonCancerAcute	0.00E+00	9.01E-06	1.91E-03	0.00E+00	0.00E+00	1.92E-03	3.50E-03	0.00E+00	1.12E-02	0.00E+00	0.00E+00	1.91E-03	0.00E+00	0.00E+00	1.12E-02
611	ALL	740280.96	4036200.87	NonCancerAcute	0.00E+00	9.05E-06	1.92E-03	0.00E+00	0.00E+00	1.93E-03	3.55E-03	0.00E+00	1.13E-02	0.00E+00	0.00E+00	1.92E-03	0.00E+00	0.00E+00	1.13E-02
612	ALL	740380.96	4036200.87	NonCancerAcute	0.00E+00	9.05E-06	1.92E-03	0.00E+00	0.00E+00	1.93E-03	3.60E-03	0.00E+00	1.14E-02	0.00E+00	0.00E+00	1.92E-03	0.00E+00	0.00E+00	1.14E-02
613	ALL	740480.96	4036200.87	NonCancerAcute	0.00E+00	9.01E-06	1.91E-03	0.00E+00	0.00E+00	1.92E-03	3.64E-03	0.00E+00	1.14E-02	0.00E+00	0.00E+00	1.91E-03	0.00E+00	0.00E+00	1.14E-02
614	ALL	740580.96	4036200.87	NonCancerAcute	0.00E+00	8.95E-06	1.90E-03	0.00E+00	0.00E+00	1.91E-03	3.67E-03	0.00E+00	1.14E-02	0.00E+00	0.00E+00	1.90E-03	0.00E+00	0.00E+00	1.14E-02
615	ALL	740680.96	4036200.87	NonCancerAcute	0.00E+00	8.86E-06	1.88E-03	0.00E+00	0.00E+00	1.89E-03	3.70E-03	0.00E+00	1.14E-02	0.00E+00	0.00E+00	1.88E-03	0.00E+00	0.00E+00	1.14E-02
616	ALL	740780.96	4036200.87	NonCancerAcute	0.00E+00	8.78E-06	1.87E-03	0.00E+00	0.00E+00	1.87E-03	3.72E-03	0.00E+00	1.13E-02	0.00E+00	0.00E+00	1.87E-03	0.00E+00	0.00E+00	1.13E-02
617	ALL	740880.96	4036200.87	NonCancerAcute	0.00E+00	8.78E-06	1.86E-03	0.00E+00	0.00E+00	1.87E-03	3.74E-03	0.00E+00	1.14E-02	0.00E+00	0.00E+00	1.86E-03	0.00E+00	0.00E+00	1.14E-02
618	ALL	740980.96	4036200.87	NonCancerAcute	0.00E+00	8.81E-06	1.87E-03	0.00E+00	0.00E+00	1.88E-03	3.76E-03	0.00E+00	1.14E-02	0.00E+00	0.00E+00	1.87E-03	0.00E+00	0.00E+00	1.14E-02
619	ALL	741080.96	4036200.87	NonCancerAcute	0.00E+00	8.81E-06	1.87E-03	0.00E+00	0.00E+00	1.88E-03	3.77E-03	0.00E+00	1.14E-02	0.00E+00	0.00E+00	1.87E-03	0.00E+00	0.00E+00	1.14E-02
620	ALL	741180.96	4036200.87	NonCancerAcute	0.00E+00	8.80E-06	1.87E-03	0.00E+00	0.00E+00	1.88E-03	3.83E-03	0.00E+00	1.15E-02	0.00E+00	0.00E+00	1.87E-03	0.00E+00	0.00E+00	1.15E-02
621	ALL	741280.96	4036200.87	NonCancerAcute	0.00E+00	8.84E-06	1.88E-03	0.00E+00	0.00E+00	1.88E-03	3.89E-03	0.00E+00	1.16E-02	0.00E+00	0.00E+00	1.88E-03	0.00E+00	0.00E+00	1.16E-02
622	ALL	741380.96	4036200.87	NonCancerAcute	0.00E+00	8.86E-06	1.88E-03	0.00E+00	0.00E+00	1.89E-03	3.93E-03	0.00E+00	1.17E-02	0.00E+00	0.00E+00	1.88E-03	0.00E+00	0.00E+00	1.17E-02
623	ALL	741480.96	4036200.87	NonCancerAcute	0.00E+00	8.86E-06	1.88E-03	0.00E+00	0.00E+00	1.89E-03	3.96E-03	0.00E+00	1.17E-02	0.00E+00	0.00E+00	1.88E-03	0.00E+00	0.00E+00	1.17E-02
624	ALL	741580.96	4036200.87	NonCancerAcute	0.00E+00	8.94E-06	1.90E-03	0.00E+00	0.00E+00	1.91E-03	4.03E-03	0.00E+00	1.18E-02	0.00E+00	0.00E+00	1.90E-03	0.00E+00	0.00E+00	1.18E-02
625	ALL	741680.96	4036200.87	NonCancerAcute	0.00E+00	9.09E-06	1.93E-03	0.00E+00	0.00E+00	1.94E-03	4.11E-03	0.00E+00	1.21E-02	0.00E+00	0.00E+00	1.93E-03	0.00E+00	0.00E+00	1.21E-02
626	ALL	741780.96	4036200.87	NonCancerAcute	0.00E+00	9.19E-06	1.95E-03	0.00E+00	0.00E+00	1.96E-03	4.21E-03	0.00E+00	1.23E-02	0.00E+00	0.00E+00	1.95E-03	0.00E+00	0.00E+00	1.23E-02
627	ALL	741880.96	4036200.87	NonCancerAcute	0.00E+00	9.22E-06	1.96E-03	0.00E+00	0.00E+00	1.97E-03	4.43E-03	0.00E+00	1.25E-02	0.00E+00	0.00E+00	1.96E-03	0.00E+00	0.00E+00	1.25E-02
628	ALL	741980.96	4036200.87	NonCancerAcute	0.00E+00	9.16E-06	1.95E-03	0.00E+00	0.00E+00	1.95E-03	4.49E-03	0.00E+00	1.26E-02	0.00E+00	0.00E+00	1.95E-03	0.00E+00	0.00E+00	1.26E-02
629	ALL	742080.96	4036200.87	NonCancerAcute	0.00E+00	9.25E-06	1.96E-03	0.00E+00	0.00E+00	1.97E-03	4.56E-03	0.00E+00	1.27E-02	0.00E+00	0.00E+00	1.96E-03	0.00E+00	0.00E+00	1.27E-02
630	ALL	738080.96	4036300.87	NonCancerAcute	0.00E+00	9.16E-06	1.95E-03	0.00E+00	0.00E+00	1.95E-03	2.91E-03	0.00E+00	1.06E-02	0.00E+00	0.00E+00	1.95E-03	0.00E+00	0.00E+00	1.06E-02
631	ALL	738180.96	4036300.87	NonCancerAcute	0.00E+00	9.17E-06	1.95E-03	0.00E+00	0.00E+00	1.96E-03	2.89E-03	0.00E+00	1.06E-02	0.00E+00	0.00E+00	1.95E-03	0.00E+00	0.00E+00	1.06E-02
632	ALL	738380.96	4036300.87	NonCancerAcute	0.00E+00	9.12E-06	1.94E-03	0.00E+00	0.00E+00	1.94E-03	2.87E-03	0.00E+00	1.05E-02	0.00E+00	0.00E+00	1.94E-03	0.00E+00	0.00E+00	1.05E-02
633	ALL	738480.96	4036300.87	NonCancerAcute	0.00E+00	9.10E-06	1.93E-03	0.00E+00	0.00E+00	1.94E-03	2.88E-03	0.00E+00	1.05E-02	0.00E+00	0.00E+00	1.93E-03	0.00E+00	0.00E+00	1.05E-02
634	ALL	738580.96	4036300.87	NonCancerAcute	0.00E+00	9.05E-06	1.92E-03	0.00E+00	0.00E+00	1.93E-03	2.91E-03	0.00E+00	1.05E-02	0.00E+00	0.00E+00	1.92E-03	0.00E+00	0.00E+00	1.05E-02

635	ALL	738680.96	4036300.87	NonCancerAcute	0.00E+00	9.02E-06	1.92E-03	0.00E+00	0.00E+00	1.92E-03	2.93E-03	0.00E+00	1.05E-02	0.00E+00	0.00E+00	1.92E-03	0.00E+00	0.00E+00	1.05E-02
636	ALL	738780.96	4036300.87	NonCancerAcute	0.00E+00	8.96E-06	1.90E-03	0.00E+00	0.00E+00	1.91E-03	2.95E-03	0.00E+00	1.05E-02	0.00E+00	0.00E+00	1.90E-03	0.00E+00	0.00E+00	1.05E-02
637	ALL	738880.96	4036300.87	NonCancerAcute	0.00E+00	8.87E-06	1.88E-03	0.00E+00	0.00E+00	1.89E-03	2.97E-03	0.00E+00	1.05E-02	0.00E+00	0.00E+00	1.88E-03	0.00E+00	0.00E+00	1.05E-02
638	ALL	738980.96	4036300.87	NonCancerAcute	0.00E+00	8.79E-06	1.87E-03	0.00E+00	0.00E+00	1.87E-03	2.98E-03	0.00E+00	1.04E-02	0.00E+00	0.00E+00	1.87E-03	0.00E+00	0.00E+00	1.04E-02
639	ALL	739080.96	4036300.87	NonCancerAcute	0.00E+00	8.69E-06	1.85E-03	0.00E+00	0.00E+00	1.85E-03	3.00E-03	0.00E+00	1.04E-02	0.00E+00	0.00E+00	1.85E-03	0.00E+00	0.00E+00	1.04E-02
640	ALL	739180.96	4036300.87	NonCancerAcute	0.00E+00	8.57E-06	1.82E-03	0.00E+00	0.00E+00	1.83E-03	3.03E-03	0.00E+00	1.03E-02	0.00E+00	0.00E+00	1.82E-03	0.00E+00	0.00E+00	1.03E-02
641	ALL	739280.96	4036300.87	NonCancerAcute	0.00E+00	8.43E-06	1.79E-03	0.00E+00	0.00E+00	1.80E-03	3.04E-03	0.00E+00	1.02E-02	0.00E+00	0.00E+00	1.79E-03	0.00E+00	0.00E+00	1.02E-02
642	ALL	739380.96	4036300.87	NonCancerAcute	0.00E+00	8.34E-06	1.77E-03	0.00E+00	0.00E+00	1.78E-03	3.05E-03	0.00E+00	1.02E-02	0.00E+00	0.00E+00	1.77E-03	0.00E+00	0.00E+00	1.02E-02
643	ALL	739480.96	4036300.87	NonCancerAcute	0.00E+00	8.28E-06	1.76E-03	0.00E+00	0.00E+00	1.77E-03	3.05E-03	0.00E+00	1.01E-02	0.00E+00	0.00E+00	1.76E-03	0.00E+00	0.00E+00	1.01E-02
644	ALL	739580.96	4036300.87	NonCancerAcute	0.00E+00	8.24E-06	1.75E-03	0.00E+00	0.00E+00	1.76E-03	3.08E-03	0.00E+00	1.01E-02	0.00E+00	0.00E+00	1.75E-03	0.00E+00	0.00E+00	1.01E-02
645	ALL	739680.96	4036300.87	NonCancerAcute	0.00E+00	8.22E-06	1.74E-03	0.00E+00	0.00E+00	1.75E-03	3.11E-03	0.00E+00	1.01E-02	0.00E+00	0.00E+00	1.74E-03	0.00E+00	0.00E+00	1.01E-02
646	ALL	739780.96	4036300.87	NonCancerAcute	0.00E+00	8.23E-06	1.75E-03	0.00E+00	0.00E+00	1.76E-03	3.14E-03	0.00E+00	1.02E-02	0.00E+00	0.00E+00	1.75E-03	0.00E+00	0.00E+00	1.02E-02
647	ALL	739880.96	4036300.87	NonCancerAcute	0.00E+00	8.30E-06	1.76E-03	0.00E+00	0.00E+00	1.77E-03	3.17E-03	0.00E+00	1.03E-02	0.00E+00	0.00E+00	1.76E-03	0.00E+00	0.00E+00	1.03E-02
648	ALL	739980.96	4036300.87	NonCancerAcute	0.00E+00	8.46E-06	1.80E-03	0.00E+00	0.00E+00	1.80E-03	3.20E-03	0.00E+00	1.04E-02	0.00E+00	0.00E+00	1.80E-03	0.00E+00	0.00E+00	1.04E-02
649	ALL	740080.96	4036300.87	NonCancerAcute	0.00E+00	8.65E-06	1.84E-03	0.00E+00	0.00E+00	1.84E-03	3.26E-03	0.00E+00	1.07E-02	0.00E+00	0.00E+00	1.84E-03	0.00E+00	0.00E+00	1.07E-02
650	ALL	740180.96	4036300.87	NonCancerAcute	0.00E+00	8.81E-06	1.87E-03	0.00E+00	0.00E+00	1.88E-03	3.30E-03	0.00E+00	1.08E-02	0.00E+00	0.00E+00	1.87E-03	0.00E+00	0.00E+00	1.08E-02
651	ALL	740280.96	4036300.87	NonCancerAcute	0.00E+00	8.94E-06	1.90E-03	0.00E+00	0.00E+00	1.91E-03	3.35E-03	0.00E+00	1.10E-02	0.00E+00	0.00E+00	1.90E-03	0.00E+00	0.00E+00	1.10E-02
652	ALL	740380.96	4036300.87	NonCancerAcute	0.00E+00	9.03E-06	1.92E-03	0.00E+00	0.00E+00	1.93E-03	3.41E-03	0.00E+00	1.11E-02	0.00E+00	0.00E+00	1.92E-03	0.00E+00	0.00E+00	1.11E-02
653	ALL	740480.96	4036300.87	NonCancerAcute	0.00E+00	9.08E-06	1.93E-03	0.00E+00	0.00E+00	1.94E-03	3.47E-03	0.00E+00	1.13E-02	0.00E+00	0.00E+00	1.93E-03	0.00E+00	0.00E+00	1.13E-02
654	ALL	740580.96	4036300.87	NonCancerAcute	0.00E+00	9.08E-06	1.93E-03	0.00E+00	0.00E+00	1.94E-03	3.53E-03	0.00E+00	1.13E-02	0.00E+00	0.00E+00	1.93E-03	0.00E+00	0.00E+00	1.13E-02
655	ALL	740680.96	4036300.87	NonCancerAcute	0.00E+00	9.06E-06	1.92E-03	0.00E+00	0.00E+00	1.93E-03	3.57E-03	0.00E+00	1.14E-02	0.00E+00	0.00E+00	1.92E-03	0.00E+00	0.00E+00	1.14E-02
656	ALL	740780.96	4036300.87	NonCancerAcute	0.00E+00	9.01E-06	1.91E-03	0.00E+00	0.00E+00	1.92E-03	3.61E-03	0.00E+00	1.14E-02	0.00E+00	0.00E+00	1.91E-03	0.00E+00	0.00E+00	1.14E-02
657	ALL	740880.96	4036300.87	NonCancerAcute	0.00E+00	8.88E-06	1.88E-03	0.00E+00	0.00E+00	1.89E-03	3.66E-03	0.00E+00	1.13E-02	0.00E+00	0.00E+00	1.88E-03	0.00E+00	0.00E+00	1.13E-02
658	ALL	740980.96	4036300.87	NonCancerAcute	0.00E+00	8.75E-06	1.86E-03	0.00E+00	0.00E+00	1.87E-03	3.69E-03	0.00E+00	1.13E-02	0.00E+00	0.00E+00	1.86E-03	0.00E+00	0.00E+00	1.13E-02
659	ALL	741080.96	4036300.87	NonCancerAcute	0.00E+00	8.77E-06	1.86E-03	0.00E+00	0.00E+00	1.87E-03	3.73E-03	0.00E+00	1.13E-02	0.00E+00	0.00E+00	1.86E-03	0.00E+00	0.00E+00	1.13E-02
660	ALL	741180.96	4036300.87	NonCancerAcute	0.00E+00	8.82E-06	1.87E-03	0.00E+00	0.00E+00	1.88E-03	3.76E-03	0.00E+00	1.14E-02	0.00E+00	0.00E+00	1.87E-03	0.00E+00	0.00E+00	1.14E-02
661	ALL	741280.96	4036300.87	NonCancerAcute	0.00E+00	8.85E-06	1.88E-03	0.00E+00	0.00E+00	1.89E-03	3.79E-03	0.00E+00	1.15E-02	0.00E+00	0.00E+00	1.88E-03	0.00E+00	0.00E+00	1.15E-02
662	ALL	741380.96	4036300.87	NonCancerAcute	0.00E+00	8.85E-06	1.88E-03	0.00E+00	0.00E+00	1.89E-03	3.85E-03	0.00E+00	1.16E-02	0.00E+00	0.00E+00	1.88E-03	0.00E+00	0.00E+00	1.16E-02
663	ALL	741480.96	4036300.87	NonCancerAcute	0.00E+00	8.90E-06	1.89E-03	0.00E+00	0.00E+00	1.90E-03	3.93E-03	0.00E+00	1.17E-02	0.00E+00	0.00E+00	1.89E-03	0.00E+00	0.00E+00	1.17E-02
664	ALL	741580.96	4036300.87	NonCancerAcute	0.00E+00	8.95E-06	1.90E-03	0.00E+00	0.00E+00	1.91E-03	3.99E-03	0.00E+00	1.18E-02	0.00E+00	0.00E+00	1.90E-03	0.00E+00	0.00E+00	1.18E-02
665	ALL	741680.96	4036300.87	NonCancerAcute	0.00E+00	8.94E-06	1.90E-03	0.00E+00	0.00E+00	1.91E-03	4.04E-03	0.00E+00	1.18E-02	0.00E+00	0.00E+00	1.90E-03	0.00E+00	0.00E+00	1.18E-02
666	ALL	741780.96	4036300.87	NonCancerAcute	0.00E+00	9.07E-06	1.93E-03	0.00E+00	0.00E+00	1.93E-03	4.15E-03	0.00E+00	1.21E-02	0.00E+00	0.00E+00	1.93E-03	0.00E+00	0.00E+00	1.21E-02
667	ALL	741880.96	4036300.87	NonCancerAcute	0.00E+00	9.17E-06	1.95E-03	0.00E+00	0.00E+00	1.96E-03	4.41E-03	0.00E+00	1.25E-02	0.00E+00	0.00E+00	1.95E-03	0.00E+00	0.00E+00	1.25E-02
668	ALL	741980.96	4036300.87	NonCancerAcute	0.00E+00	9.22E-06	1.96E-03	0.00E+00	0.00E+00	1.97E-03	4.50E-03	0.00E+00	1.26E-02	0.00E+00	0.00E+00	1.96E-03	0.00E+00	0.00E+00	1.26E-02
669	ALL	742080.96	4036300.87	NonCancerAcute	0.00E+00	9.26E-06	1.97E-03	0.00E+00	0.00E+00	1.97E-03	4.60E-03	0.00E+00	1.28E-02	0.00E+00	0.00E+00	1.97E-03	0.00E+00	0.00E+00	1.28E-02
670	ALL	742180.96	4036300.87	NonCancerAcute	0.00E+00	9.29E-06	1.97E-03	0.00E+00	0.00E+00	1.98E-03	4.71E-03	0.00E+00	1.29E-02	0.00E+00	0.00E+00	1.97E-03	0.00E+00	0.00E+00	1.29E-02
671	ALL	742280.96	4036300.87	NonCancerAcute	0.00E+00	9.35E-06	1.99E-03	0.00E+00	0.00E+00	1.99E-03	4.80E-03	0.00E+00	1.31E-02	0.00E+00	0.00E+00	1.99E-03	0.00E+00	0.00E+00	1.31E-02
672	ALL	742380.96	4036300.87	NonCancerAcute	0.00E+00	9.35E-06	1.98E-03	0.00E+00	0.00E+00	1.99E-03	4.88E-03	0.00E+00	1.32E-02	0.00E+00	0.00E+00	1.98E-03	0.00E+00	0.00E+00	1.32E-02
673	ALL	742480.96	4036300.87	NonCancerAcute	0.00E+00	9.40E-06	2.00E-03	0.00E+00	0.00E+00	2.00E-03	4.95E-03	0.00E+00	1.33E-02	0.00E+00	0.00E+00	2.00E-03	0.00E+00	0.00E+00	1.33E-02
674	ALL	742580.96	4036300.87	NonCancerAcute	0.00E+00	9.42E-06	2.00E-03	0.00E+00	0.00E+00	2.01E-03	5.00E-03	0.00E+00	1.34E-02	0.00E+00	0.00E+00	2.00E-03	0.00E+00	0.00E+00	1.34E-02
675	ALL	742680.96	4036300.87	NonCancerAcute	0.00E+00	9.41E-06	2.00E-03	0.00E+00	0.00E+00	2.01E-03	5.03E-03	0.00E+00	1.34E-02	0.00E+00	0.00E+00	2.00E-03	0.00E+00	0.00E+00	1.34E-02
676	ALL	742780.96	4036300.87	NonCancerAcute	0.00E+00	9.48E-06	2.01E-03	0.00E+00	0.00E+00	2.02E-03	5.05E-03	0.00E+00	1.35E-02	0.00E+00	0.00E+00	2.01E-03	0.00E+00	0.00E+00	1.35E-02
677	ALL	742880.96	4036300.87	NonCancerAcute	0.00E+00	9.56E-06	2.03E-03	0.00E+00	0.00E+00	2.04E-03	5.05E-03	0.00E+00	1.36E-02	0.00E+00	0.00E+00	2.03E-03	0.00E+00	0.00E+00	1.36E-02
678	ALL	742980.96	4036300.87	NonCancerAcute	0.00E+00	9.61E-06	2.04E-03	0.00E+00	0.00E+00	2.05E-03	5.03E-03	0.00E+00	1.36E-02	0.00E+00	0.00E+00	2.04E-03	0.00E+00	0.00E+00	1.36E-02
679	ALL	743080.96	4036300.87	NonCancerAcute	0.00E+00	9.70E-06	2.06E-03	0.00E+00	0.00E+00	2.07E-03	4.99E-03	0.00E+00	1.36E-02	0.00E+00	0.00E+00	2.06E-03	0.00E+00	0.00E+00	1.36E-02
680	ALL	743180.96	4036300.87	NonCancerAcute	0.00E+00	9.73E-06	2.07E-03	0.00E+00	0.00E+00	2.08E-03	4.94E-03	0.00E+00	1.36E-02	0.00E+00	0.00E+00	2.07E-03	0.00E+00	0.00E+00	1.36E-02
681	ALL	743280.96	4036300.87	NonCancerAcute	0.00E+00	9.75E-06	2.07E-03	0.00E+00	0.00E+00	2.08E-03	4.89E-03	0.00E+00	1.35E-02	0.00E+00	0.00E+00	2.07E-03	0.00E+00	0.00E+00	1.35E-02
682	ALL	743380.96	4036300.87	NonCancerAcute	0.00E+00	9.79E-06	2.08E-03	0.00E+00	0.00E+00	2.09E-03	4.88E-03	0.00E+00	1.35E-02	0.00E+00	0.00E+00	2.08E-03	0.00E+00	0.00E+00	1.35E-02
683	ALL	743480.96	4036300.87	NonCancerAcute	0.00E+00	9.77E-06	2.08E-03	0.00E+00	0.00E+00	2.09E-03	5.00E-03	0.00E+00	1.37E-02	0.00E+00	0.00E+00	2.08E-03	0.00E+00	0.00E+00	1.37E-02
684	ALL	743580.96	4036300.87	NonCancerAcute	0.00E+00	9.81E-06	2.08E-03	0.00E+00	0.00E+00	2.09E-03	5.10E-03	0.00E+00	1.38E-02	0.00E+00	0.00E+00	2.08E-03	0.00E+00	0.00E+00	1.38E-02
685	ALL	743680.96	4036300.87	NonCancerAcute	0.00E+00	9.94E-06	2.11E-03	0.00E+00	0.00E+00	2.12E-03	5.18E-03	0.00E+00	1.40E-02	0.00E+00	0.00E+00	2.11E-03	0.00E+00	0.00E+00	1.40E-02
686	ALL	743780.96	4036300.87	NonCancerAcute	0.00E+00	1.01E-05	2.14E-03	0.00E+00	0.00E+00	2.15E-03	5.28E-03	0.00E+00	1.42E-02	0.00E+00	0.00E+00	2.14E-03	0.00E+00	0.00E+00	1.42E-02
687	ALL	743880.96	4036300.87	NonCancerAcute	0.00E+00	1.02E-05	2.16E-03	0.00E+00	0.00E+00	2.17E-03	5.35E-03	0.00E+00	1.44E-02	0.00E+00	0.00E+00	2.16E-03	0.00E+00	0.00E+00	1.44E-02

688	ALL		743980.96	4036300.87	NonCancerAcute	0.00E+00	1.03E-05	2.18E-03	0.00E+00	0.00E+00	2.19E-03	5.41E-03	0.00E+00	1.46E-02	0.00E+00	0.00E+00	2.18E-03	0.00E+00	0.00E+00	1.46E-02
689	ALL		744080.96	4036300.87	NonCancerAcute	0.00E+00	1.04E-05	2.20E-03	0.00E+00	0.00E+00	2.21E-03	5.46E-03	0.00E+00	1.47E-02	0.00E+00	0.00E+00	2.20E-03	0.00E+00	0.00E+00	1.47E-02
690	ALL		744180.96	4036300.87	NonCancerAcute	0.00E+00	1.02E-05	2.17E-03	0.00E+00	0.00E+00	2.18E-03	5.49E-03	0.00E+00	1.46E-02	0.00E+00	0.00E+00	2.17E-03	0.00E+00	0.00E+00	1.46E-02
691	ALL		744280.96	4036300.87	NonCancerAcute	0.00E+00	1.03E-05	2.18E-03	0.00E+00	0.00E+00	2.19E-03	5.61E-03	0.00E+00	1.48E-02	0.00E+00	0.00E+00	2.18E-03	0.00E+00	0.00E+00	1.48E-02
692	ALL		744380.96	4036300.87	NonCancerAcute	0.00E+00	1.05E-05	2.24E-03	0.00E+00	0.00E+00	2.25E-03	5.73E-03	0.00E+00	1.52E-02	0.00E+00	0.00E+00	2.24E-03	0.00E+00	0.00E+00	1.52E-02
693	ALL		744480.96	4036300.87	NonCancerAcute	0.00E+00	1.07E-05	2.27E-03	0.00E+00	0.00E+00	2.28E-03	5.80E-03	0.00E+00	1.53E-02	0.00E+00	0.00E+00	2.27E-03	0.00E+00	0.00E+00	1.53E-02
694	ALL		738080.96	4036400.87	NonCancerAcute	0.00E+00	9.21E-06	1.96E-03	0.00E+00	0.00E+00	1.96E-03	3.03E-03	0.00E+00	1.08E-02	0.00E+00	0.00E+00	1.96E-03	0.00E+00	0.00E+00	1.08E-02
695	ALL		738180.96	4036400.87	NonCancerAcute	0.00E+00	9.19E-06	1.95E-03	0.00E+00	0.00E+00	1.96E-03	3.05E-03	0.00E+00	1.08E-02	0.00E+00	0.00E+00	1.95E-03	0.00E+00	0.00E+00	1.08E-02
696	ALL		738280.96	4036400.87	NonCancerAcute	0.00E+00	9.20E-06	1.95E-03	0.00E+00	0.00E+00	1.96E-03	3.05E-03	0.00E+00	1.08E-02	0.00E+00	0.00E+00	1.95E-03	0.00E+00	0.00E+00	1.08E-02
697	ALL		738480.96	4036400.87	NonCancerAcute	0.00E+00	9.22E-06	1.96E-03	0.00E+00	0.00E+00	1.97E-03	3.04E-03	0.00E+00	1.08E-02	0.00E+00	0.00E+00	1.96E-03	0.00E+00	0.00E+00	1.08E-02
698	ALL		738580.96	4036400.87	NonCancerAcute	0.00E+00	9.19E-06	1.95E-03	0.00E+00	0.00E+00	1.96E-03	3.04E-03	0.00E+00	1.08E-02	0.00E+00	0.00E+00	1.95E-03	0.00E+00	0.00E+00	1.08E-02
699	ALL		738680.96	4036400.87	NonCancerAcute	0.00E+00	9.16E-06	1.95E-03	0.00E+00	0.00E+00	1.95E-03	3.06E-03	0.00E+00	1.08E-02	0.00E+00	0.00E+00	1.95E-03	0.00E+00	0.00E+00	1.08E-02
700	ALL		739380.96	4036400.87	NonCancerAcute	0.00E+00	8.55E-06	1.82E-03	0.00E+00	0.00E+00	1.82E-03	3.22E-03	0.00E+00	1.05E-02	0.00E+00	0.00E+00	1.82E-03	0.00E+00	0.00E+00	1.05E-02
701	ALL		739480.96	4036400.87	NonCancerAcute	0.00E+00	8.43E-06	1.79E-03	0.00E+00	0.00E+00	1.80E-03	3.24E-03	0.00E+00	1.05E-02	0.00E+00	0.00E+00	1.79E-03	0.00E+00	0.00E+00	1.05E-02
702	ALL		739580.96	4036400.87	NonCancerAcute	0.00E+00	8.34E-06	1.77E-03	0.00E+00	0.00E+00	1.78E-03	3.29E-03	0.00E+00	1.05E-02	0.00E+00	0.00E+00	1.77E-03	0.00E+00	0.00E+00	1.05E-02
703	ALL		739680.96	4036400.87	NonCancerAcute	0.00E+00	8.28E-06	1.76E-03	0.00E+00	0.00E+00	1.77E-03	3.32E-03	0.00E+00	1.05E-02	0.00E+00	0.00E+00	1.76E-03	0.00E+00	0.00E+00	1.05E-02
704	ALL		739780.96	4036400.87	NonCancerAcute	0.00E+00	8.26E-06	1.75E-03	0.00E+00	0.00E+00	1.76E-03	3.35E-03	0.00E+00	1.05E-02	0.00E+00	0.00E+00	1.75E-03	0.00E+00	0.00E+00	1.05E-02
705	ALL		739880.96	4036400.87	NonCancerAcute	0.00E+00	8.22E-06	1.75E-03	0.00E+00	0.00E+00	1.75E-03	3.37E-03	0.00E+00	1.05E-02	0.00E+00	0.00E+00	1.75E-03	0.00E+00	0.00E+00	1.05E-02
706	ALL		739980.96	4036400.87	NonCancerAcute	0.00E+00	8.23E-06	1.75E-03	0.00E+00	0.00E+00	1.76E-03	3.37E-03	0.00E+00	1.05E-02	0.00E+00	0.00E+00	1.75E-03	0.00E+00	0.00E+00	1.05E-02
707	ALL		740080.96	4036400.87	NonCancerAcute	0.00E+00	8.28E-06	1.76E-03	0.00E+00	0.00E+00	1.77E-03	3.39E-03	0.00E+00	1.05E-02	0.00E+00	0.00E+00	1.76E-03	0.00E+00	0.00E+00	1.05E-02
708	ALL		740180.96	4036400.87	NonCancerAcute	0.00E+00	8.42E-06	1.79E-03	0.00E+00	0.00E+00	1.80E-03	3.39E-03	0.00E+00	1.07E-02	0.00E+00	0.00E+00	1.79E-03	0.00E+00	0.00E+00	1.07E-02
709	ALL		740280.96	4036400.87	NonCancerAcute	0.00E+00	8.59E-06	1.82E-03	0.00E+00	0.00E+00	1.83E-03	3.40E-03	0.00E+00	1.08E-02	0.00E+00	0.00E+00	1.82E-03	0.00E+00	0.00E+00	1.08E-02
710	ALL		740380.96	4036400.87	NonCancerAcute	0.00E+00	8.77E-06	1.86E-03	0.00E+00	0.00E+00	1.87E-03	3.41E-03	0.00E+00	1.09E-02	0.00E+00	0.00E+00	1.86E-03	0.00E+00	0.00E+00	1.09E-02
711	ALL		740480.96	4036400.87	NonCancerAcute	0.00E+00	8.91E-06	1.89E-03	0.00E+00	0.00E+00	1.90E-03	3.44E-03	0.00E+00	1.11E-02	0.00E+00	0.00E+00	1.89E-03	0.00E+00	0.00E+00	1.11E-02
712	ALL		740580.96	4036400.87	NonCancerAcute	0.00E+00	9.01E-06	1.91E-03	0.00E+00	0.00E+00	1.92E-03	3.47E-03	0.00E+00	1.12E-02	0.00E+00	0.00E+00	1.91E-03	0.00E+00	0.00E+00	1.12E-02
713	ALL		740680.96	4036400.87	NonCancerAcute	0.00E+00	9.07E-06	1.93E-03	0.00E+00	0.00E+00	1.94E-03	3.50E-03	0.00E+00	1.13E-02	0.00E+00	0.00E+00	1.93E-03	0.00E+00	0.00E+00	1.13E-02
714	ALL		740780.96	4036400.87	NonCancerAcute	0.00E+00	9.11E-06	1.94E-03	0.00E+00	0.00E+00	1.94E-03	3.53E-03	0.00E+00	1.14E-02	0.00E+00	0.00E+00	1.94E-03	0.00E+00	0.00E+00	1.14E-02
715	ALL		740880.96	4036400.87	NonCancerAcute	0.00E+00	9.12E-06	1.94E-03	0.00E+00	0.00E+00	1.94E-03	3.56E-03	0.00E+00	1.14E-02	0.00E+00	0.00E+00	1.94E-03	0.00E+00	0.00E+00	1.14E-02
716	ALL		740980.96	4036400.87	NonCancerAcute	0.00E+00	9.00E-06	1.91E-03	0.00E+00	0.00E+00	1.92E-03	3.59E-03	0.00E+00	1.13E-02	0.00E+00	0.00E+00	1.91E-03	0.00E+00	0.00E+00	1.13E-02
717	ALL		741080.96	4036400.87	NonCancerAcute	0.00E+00	8.91E-06	1.89E-03	0.00E+00	0.00E+00	1.90E-03	3.61E-03	0.00E+00	1.13E-02	0.00E+00	0.00E+00	1.89E-03	0.00E+00	0.00E+00	1.13E-02
718	ALL		741180.96	4036400.87	NonCancerAcute	0.00E+00	8.77E-06	1.86E-03	0.00E+00	0.00E+00	1.87E-03	3.62E-03	0.00E+00	1.12E-02	0.00E+00	0.00E+00	1.86E-03	0.00E+00	0.00E+00	1.12E-02
719	ALL		741280.96	4036400.87	NonCancerAcute	0.00E+00	8.85E-06	1.88E-03	0.00E+00	0.00E+00	1.89E-03	3.64E-03	0.00E+00	1.13E-02	0.00E+00	0.00E+00	1.88E-03	0.00E+00	0.00E+00	1.13E-02
720	ALL		741380.96	4036400.87	NonCancerAcute	0.00E+00	8.90E-06	1.89E-03	0.00E+00	0.00E+00	1.90E-03	3.65E-03	0.00E+00	1.13E-02	0.00E+00	0.00E+00	1.89E-03	0.00E+00	0.00E+00	1.13E-02
721	ALL	SENS	741480.96	4036400.87	NonCancerAcute	0.00E+00	8.92E-06	1.89E-03	0.00E+00	0.00E+00	1.90E-03	3.67E-03	0.00E+00	1.14E-02	0.00E+00	0.00E+00	1.89E-03	0.00E+00	0.00E+00	1.14E-02
722	ALL		741580.96	4036400.87	NonCancerAcute	0.00E+00	8.93E-06	1.90E-03	0.00E+00	0.00E+00	1.90E-03	3.73E-03	0.00E+00	1.15E-02	0.00E+00	0.00E+00	1.90E-03	0.00E+00	0.00E+00	1.15E-02
723	ALL		741680.96	4036400.87	NonCancerAcute	0.00E+00	8.96E-06	1.90E-03	0.00E+00	0.00E+00	1.91E-03	3.82E-03	0.00E+00	1.16E-02	0.00E+00	0.00E+00	1.90E-03	0.00E+00	0.00E+00	1.16E-02
724	ALL		741780.96	4036400.87	NonCancerAcute	0.00E+00	8.96E-06	1.90E-03	0.00E+00	0.00E+00	1.91E-03	3.91E-03	0.00E+00	1.17E-02	0.00E+00	0.00E+00	1.90E-03	0.00E+00	0.00E+00	1.17E-02
725	ALL		741880.96	4036400.87	NonCancerAcute	0.00E+00	8.96E-06	1.90E-03	0.00E+00	0.00E+00	1.91E-03	4.14E-03	0.00E+00	1.20E-02	0.00E+00	0.00E+00	1.90E-03	0.00E+00	0.00E+00	1.20E-02
726	ALL		741980.96	4036400.87	NonCancerAcute	0.00E+00	9.04E-06	1.92E-03	0.00E+00	0.00E+00	1.93E-03	4.25E-03	0.00E+00	1.22E-02	0.00E+00	0.00E+00	1.92E-03	0.00E+00	0.00E+00	1.22E-02
727	ALL		742080.96	4036400.87	NonCancerAcute	0.00E+00	9.18E-06	1.95E-03	0.00E+00	0.00E+00	1.96E-03	4.38E-03	0.00E+00	1.25E-02	0.00E+00	0.00E+00	1.95E-03	0.00E+00	0.00E+00	1.25E-02
728	ALL		742180.96	4036400.87	NonCancerAcute	0.00E+00	9.28E-06	1.97E-03	0.00E+00	0.00E+00	1.98E-03	4.51E-03	0.00E+00	1.27E-02	0.00E+00	0.00E+00	1.97E-03	0.00E+00	0.00E+00	1.27E-02
729	ALL		742280.96	4036400.87	NonCancerAcute	0.00E+00	9.32E-06	1.98E-03	0.00E+00	0.00E+00	1.99E-03	4.63E-03	0.00E+00	1.29E-02	0.00E+00	0.00E+00	1.98E-03	0.00E+00	0.00E+00	1.29E-02
730	ALL		742380.96	4036400.87	NonCancerAcute	0.00E+00	9.41E-06	2.00E-03	0.00E+00	0.00E+00	2.01E-03	4.75E-03	0.00E+00	1.31E-02	0.00E+00	0.00E+00	2.00E-03	0.00E+00	0.00E+00	1.31E-02
731	ALL		742480.96	4036400.87	NonCancerAcute	0.00E+00	9.47E-06	2.01E-03	0.00E+00	0.00E+00	2.02E-03	4.86E-03	0.00E+00	1.33E-02	0.00E+00	0.00E+00	2.01E-03	0.00E+00	0.00E+00	1.33E-02
732	ALL		742580.96	4036400.87	NonCancerAcute	0.00E+00	9.51E-06	2.02E-03	0.00E+00	0.00E+00	2.03E-03	4.96E-03	0.00E+00	1.34E-02	0.00E+00	0.00E+00	2.02E-03	0.00E+00	0.00E+00	1.34E-02
733	ALL		742680.96	4036400.87	NonCancerAcute	0.00E+00	9.58E-06	2.03E-03	0.00E+00	0.00E+00	2.04E-03	5.05E-03	0.00E+00	1.36E-02	0.00E+00	0.00E+00	2.03E-03	0.00E+00	0.00E+00	1.36E-02
734	ALL		742780.96	4036400.87	NonCancerAcute	0.00E+00	9.60E-06	2.04E-03	0.00E+00	0.00E+00	2.05E-03	5.13E-03	0.00E+00	1.37E-02	0.00E+00	0.00E+00	2.04E-03	0.00E+00	0.00E+00	1.37E-02
735	ALL		742880.96	4036400.87	NonCancerAcute	0.00E+00	9.59E-06	2.04E-03	0.00E+00	0.00E+00	2.05E-03	5.19E-03	0.00E+00	1.38E-02	0.00E+00	0.00E+00	2.04E-03	0.00E+00	0.00E+00	1.38E-02
736	ALL		742980.96	4036400.87	NonCancerAcute	0.00E+00	9.71E-06	2.06E-03	0.00E+00	0.00E+00	2.07E-03	5.24E-03	0.00E+00	1.39E-02	0.00E+00	0.00E+00	2.06E-03	0.00E+00	0.00E+00	1.39E-02
737	ALL		743080.96	4036400.87	NonCancerAcute	0.00E+00	9.79E-06	2.08E-03	0.00E+00	0.00E+00	2.09E-03	5.27E-03	0.00E+00	1.40E-02	0.00E+00	0.00E+00	2.08E-03	0.00E+00	0.00E+00	1.40E-02
738	ALL		743180.96	4036400.87	NonCancerAcute	0.00E+00	9.81E-06	2.08E-03	0.00E+00	0.00E+00	2.09E-03	5.29E-03	0.00E+00	1.40E-02	0.00E+00	0.00E+00	2.08E-03	0.00E+00	0.00E+00	1.40E-02
739	ALL		743280.96	4036400.87	NonCancerAcute	0.00E+00	9.87E-06	2.10E-03	0.00E+00	0.00E+00	2.11E-03	5.28E-03	0.00E+00	1.41E-02	0.00E+00	0.00E+00	2.10E-03	0.00E+00	0.00E+00	1.41E-02
740	ALL		743380.96	4036400.87	NonCancerAcute	0.00E+00	9.86E-06	2.09E-03	0.00E+00	0.00E+00	2.10E-03	5.26E-03	0.00E+00	1.41E-02	0.00E+00	0.00E+00	2.09E-03	0.00E+00	0.00E+00	1.41E-02

741	ALL	743480.96	4036400.87	NonCancerAcute	0.00E+00	9.95E-06	2.11E-03	0.00E+00	0.00E+00	2.12E-03	5.26E-03	0.00E+00	1.41E-02	0.00E+00	0.00E+00	2.11E-03	0.00E+00	0.00E+00	1.41E-02
742	ALL	743580.96	4036400.87	NonCancerAcute	0.00E+00	9.90E-06	2.10E-03	0.00E+00	0.00E+00	2.11E-03	5.24E-03	0.00E+00	1.41E-02	0.00E+00	0.00E+00	2.10E-03	0.00E+00	0.00E+00	1.41E-02
743	ALL	743680.96	4036400.87	NonCancerAcute	0.00E+00	9.84E-06	2.09E-03	0.00E+00	0.00E+00	2.10E-03	5.30E-03	0.00E+00	1.41E-02	0.00E+00	0.00E+00	2.09E-03	0.00E+00	0.00E+00	1.41E-02
744	ALL	743780.96	4036400.87	NonCancerAcute	0.00E+00	9.93E-06	2.11E-03	0.00E+00	0.00E+00	2.12E-03	5.35E-03	0.00E+00	1.42E-02	0.00E+00	0.00E+00	2.11E-03	0.00E+00	0.00E+00	1.42E-02
745	ALL	743880.96	4036400.87	NonCancerAcute	0.00E+00	1.01E-05	2.14E-03	0.00E+00	0.00E+00	2.14E-03	5.39E-03	0.00E+00	1.44E-02	0.00E+00	0.00E+00	2.14E-03	0.00E+00	0.00E+00	1.44E-02
746	ALL	743980.96	4036400.87	NonCancerAcute	0.00E+00	1.02E-05	2.17E-03	0.00E+00	0.00E+00	2.18E-03	5.48E-03	0.00E+00	1.46E-02	0.00E+00	0.00E+00	2.17E-03	0.00E+00	0.00E+00	1.46E-02
747	ALL	744080.96	4036400.87	NonCancerAcute	0.00E+00	1.04E-05	2.20E-03	0.00E+00	0.00E+00	2.21E-03	5.55E-03	0.00E+00	1.48E-02	0.00E+00	0.00E+00	2.20E-03	0.00E+00	0.00E+00	1.48E-02
748	ALL	744180.96	4036400.87	NonCancerAcute	0.00E+00	1.05E-05	2.22E-03	0.00E+00	0.00E+00	2.23E-03	5.59E-03	0.00E+00	1.49E-02	0.00E+00	0.00E+00	2.22E-03	0.00E+00	0.00E+00	1.49E-02
749	ALL	744280.96	4036400.87	NonCancerAcute	0.00E+00	1.03E-05	2.20E-03	0.00E+00	0.00E+00	2.21E-03	5.61E-03	0.00E+00	1.49E-02	0.00E+00	0.00E+00	2.20E-03	0.00E+00	0.00E+00	1.49E-02
750	ALL	744380.96	4036400.87	NonCancerAcute	0.00E+00	1.03E-05	2.19E-03	0.00E+00	0.00E+00	2.20E-03	5.73E-03	0.00E+00	1.50E-02	0.00E+00	0.00E+00	2.19E-03	0.00E+00	0.00E+00	1.50E-02
751	ALL	744480.96	4036400.87	NonCancerAcute	0.00E+00	1.06E-05	2.25E-03	0.00E+00	0.00E+00	2.26E-03	5.87E-03	0.00E+00	1.54E-02	0.00E+00	0.00E+00	2.25E-03	0.00E+00	0.00E+00	1.54E-02
752	ALL	744580.96	4036400.87	NonCancerAcute	0.00E+00	1.08E-05	2.29E-03	0.00E+00	0.00E+00	2.30E-03	5.98E-03	0.00E+00	1.56E-02	0.00E+00	0.00E+00	2.29E-03	0.00E+00	0.00E+00	1.56E-02
753	ALL	744680.96	4036400.87	NonCancerAcute	0.00E+00	1.07E-05	2.27E-03	0.00E+00	0.00E+00	2.28E-03	6.09E-03	0.00E+00	1.57E-02	0.00E+00	0.00E+00	2.27E-03	0.00E+00	0.00E+00	1.57E-02
754	ALL	744780.96	4036400.87	NonCancerAcute	0.00E+00	1.05E-05	2.23E-03	0.00E+00	0.00E+00	2.24E-03	6.24E-03	0.00E+00	1.57E-02	0.00E+00	0.00E+00	2.23E-03	0.00E+00	0.00E+00	1.57E-02
755	ALL	744880.96	4036400.87	NonCancerAcute	0.00E+00	1.05E-05	2.22E-03	0.00E+00	0.00E+00	2.23E-03	6.40E-03	0.00E+00	1.59E-02	0.00E+00	0.00E+00	2.22E-03	0.00E+00	0.00E+00	1.59E-02
756	ALL	744980.96	4036400.87	NonCancerAcute	0.00E+00	1.09E-05	2.32E-03	0.00E+00	0.00E+00	2.33E-03	6.61E-03	0.00E+00	1.65E-02	0.00E+00	0.00E+00	2.32E-03	0.00E+00	0.00E+00	1.65E-02
757	ALL	745080.96	4036400.87	NonCancerAcute	0.00E+00	1.12E-05	2.37E-03	0.00E+00	0.00E+00	2.38E-03	6.80E-03	0.00E+00	1.69E-02	0.00E+00	0.00E+00	2.37E-03	0.00E+00	0.00E+00	1.69E-02
758	ALL	745180.96	4036400.87	NonCancerAcute	0.00E+00	1.13E-05	2.41E-03	0.00E+00	0.00E+00	2.42E-03	6.99E-03	0.00E+00	1.73E-02	0.00E+00	0.00E+00	2.41E-03	0.00E+00	0.00E+00	1.73E-02
759	ALL	745280.96	4036400.87	NonCancerAcute	0.00E+00	1.13E-05	2.41E-03	0.00E+00	0.00E+00	2.42E-03	7.19E-03	0.00E+00	1.76E-02	0.00E+00	0.00E+00	2.41E-03	0.00E+00	0.00E+00	1.76E-02
760	ALL	745380.96	4036400.87	NonCancerAcute	0.00E+00	1.15E-05	2.45E-03	0.00E+00	0.00E+00	2.46E-03	7.37E-03	0.00E+00	1.79E-02	0.00E+00	0.00E+00	2.45E-03	0.00E+00	0.00E+00	1.79E-02
761	ALL	745480.96	4036400.87	NonCancerAcute	0.00E+00	1.17E-05	2.48E-03	0.00E+00	0.00E+00	2.49E-03	7.59E-03	0.00E+00	1.83E-02	0.00E+00	0.00E+00	2.48E-03	0.00E+00	0.00E+00	1.83E-02
762	ALL	745580.96	4036400.87	NonCancerAcute	0.00E+00	1.16E-05	2.46E-03	0.00E+00	0.00E+00	2.47E-03	7.75E-03	0.00E+00	1.84E-02	0.00E+00	0.00E+00	2.46E-03	0.00E+00	0.00E+00	1.84E-02
763	ALL	745680.96	4036400.87	NonCancerAcute	0.00E+00	1.20E-05	2.54E-03	0.00E+00	0.00E+00	2.56E-03	7.99E-03	0.00E+00	1.90E-02	0.00E+00	0.00E+00	2.54E-03	0.00E+00	0.00E+00	1.90E-02
764	ALL	745780.96	4036400.87	NonCancerAcute	0.00E+00	1.22E-05	2.59E-03	0.00E+00	0.00E+00	2.60E-03	8.32E-03	0.00E+00	1.96E-02	0.00E+00	0.00E+00	2.59E-03	0.00E+00	0.00E+00	1.96E-02
765	ALL	745880.96	4036400.87	NonCancerAcute	0.00E+00	1.25E-05	2.65E-03	0.00E+00	0.00E+00	2.66E-03	8.49E-03	0.00E+00	2.00E-02	0.00E+00	0.00E+00	2.65E-03	0.00E+00	0.00E+00	2.00E-02
766	ALL	738080.96	4036500.87	NonCancerAcute	0.00E+00	9.12E-06	1.94E-03	0.00E+00	0.00E+00	1.95E-03	3.11E-03	0.00E+00	1.08E-02	0.00E+00	0.00E+00	1.94E-03	0.00E+00	0.00E+00	1.08E-02
767	ALL	738180.96	4036500.87	NonCancerAcute	0.00E+00	9.18E-06	1.95E-03	0.00E+00	0.00E+00	1.96E-03	3.13E-03	0.00E+00	1.09E-02	0.00E+00	0.00E+00	1.95E-03	0.00E+00	0.00E+00	1.09E-02
768	ALL	738280.96	4036500.87	NonCancerAcute	0.00E+00	9.20E-06	1.95E-03	0.00E+00	0.00E+00	1.96E-03	3.16E-03	0.00E+00	1.10E-02	0.00E+00	0.00E+00	1.95E-03	0.00E+00	0.00E+00	1.10E-02
769	ALL	738480.96	4036500.87	NonCancerAcute	0.00E+00	9.18E-06	1.95E-03	0.00E+00	0.00E+00	1.96E-03	3.19E-03	0.00E+00	1.10E-02	0.00E+00	0.00E+00	1.95E-03	0.00E+00	0.00E+00	1.10E-02
770	ALL	738780.96	4036500.87	NonCancerAcute	0.00E+00	9.19E-06	1.95E-03	0.00E+00	0.00E+00	1.96E-03	3.18E-03	0.00E+00	1.10E-02	0.00E+00	0.00E+00	1.95E-03	0.00E+00	0.00E+00	1.10E-02
771	ALL	738880.96	4036500.87	NonCancerAcute	0.00E+00	9.15E-06	1.94E-03	0.00E+00	0.00E+00	1.95E-03	3.20E-03	0.00E+00	1.10E-02	0.00E+00	0.00E+00	1.94E-03	0.00E+00	0.00E+00	1.10E-02
772	ALL	738980.96	4036500.87	NonCancerAcute	0.00E+00	9.08E-06	1.93E-03	0.00E+00	0.00E+00	1.94E-03	3.23E-03	0.00E+00	1.10E-02	0.00E+00	0.00E+00	1.93E-03	0.00E+00	0.00E+00	1.10E-02
773	ALL	739080.96	4036500.87	NonCancerAcute	0.00E+00	9.00E-06	1.91E-03	0.00E+00	0.00E+00	1.92E-03	3.28E-03	0.00E+00	1.10E-02	0.00E+00	0.00E+00	1.91E-03	0.00E+00	0.00E+00	1.10E-02
774	ALL	739180.96	4036500.87	NonCancerAcute	0.00E+00	8.92E-06	1.89E-03	0.00E+00	0.00E+00	1.90E-03	3.32E-03	0.00E+00	1.09E-02	0.00E+00	0.00E+00	1.89E-03	0.00E+00	0.00E+00	1.09E-02
775	ALL	739280.96	4036500.87	NonCancerAcute	0.00E+00	8.80E-06	1.87E-03	0.00E+00	0.00E+00	1.88E-03	3.35E-03	0.00E+00	1.09E-02	0.00E+00	0.00E+00	1.87E-03	0.00E+00	0.00E+00	1.09E-02
776	ALL	739380.96	4036500.87	NonCancerAcute	0.00E+00	8.65E-06	1.84E-03	0.00E+00	0.00E+00	1.84E-03	3.37E-03	0.00E+00	1.08E-02	0.00E+00	0.00E+00	1.84E-03	0.00E+00	0.00E+00	1.08E-02
777	ALL	739480.96	4036500.87	NonCancerAcute	0.00E+00	8.60E-06	1.83E-03	0.00E+00	0.00E+00	1.83E-03	3.39E-03	0.00E+00	1.08E-02	0.00E+00	0.00E+00	1.83E-03	0.00E+00	0.00E+00	1.08E-02
778	ALL	742280.96	4036500.87	NonCancerAcute	0.00E+00	9.34E-06	1.98E-03	0.00E+00	0.00E+00	1.99E-03	4.32E-03	0.00E+00	1.25E-02	0.00E+00	0.00E+00	1.98E-03	0.00E+00	0.00E+00	1.25E-02
779	ALL	742380.96	4036500.87	NonCancerAcute	0.00E+00	9.43E-06	2.00E-03	0.00E+00	0.00E+00	2.01E-03	4.43E-03	0.00E+00	1.27E-02	0.00E+00	0.00E+00	2.00E-03	0.00E+00	0.00E+00	1.27E-02
780	ALL	742480.96	4036500.87	NonCancerAcute	0.00E+00	9.45E-06	2.01E-03	0.00E+00	0.00E+00	2.02E-03	4.53E-03	0.00E+00	1.28E-02	0.00E+00	0.00E+00	2.01E-03	0.00E+00	0.00E+00	1.28E-02
781	ALL	742580.96	4036500.87	NonCancerAcute	0.00E+00	9.55E-06	2.03E-03	0.00E+00	0.00E+00	2.04E-03	4.62E-03	0.00E+00	1.30E-02	0.00E+00	0.00E+00	2.03E-03	0.00E+00	0.00E+00	1.30E-02
782	ALL	742680.96	4036500.87	NonCancerAcute	0.00E+00	9.55E-06	2.03E-03	0.00E+00	0.00E+00	2.04E-03	4.71E-03	0.00E+00	1.31E-02	0.00E+00	0.00E+00	2.03E-03	0.00E+00	0.00E+00	1.31E-02
783	ALL	742780.96	4036500.87	NonCancerAcute	0.00E+00	9.63E-06	2.04E-03	0.00E+00	0.00E+00	2.05E-03	4.82E-03	0.00E+00	1.33E-02	0.00E+00	0.00E+00	2.04E-03	0.00E+00	0.00E+00	1.33E-02
784	ALL	742880.96	4036500.87	NonCancerAcute	0.00E+00	9.64E-06	2.05E-03	0.00E+00	0.00E+00	2.06E-03	4.92E-03	0.00E+00	1.35E-02	0.00E+00	0.00E+00	2.05E-03	0.00E+00	0.00E+00	1.35E-02
785	ALL	742980.96	4036500.87	NonCancerAcute	0.00E+00	9.64E-06	2.05E-03	0.00E+00	0.00E+00	2.06E-03	5.01E-03	0.00E+00	1.36E-02	0.00E+00	0.00E+00	2.05E-03	0.00E+00	0.00E+00	1.36E-02
786	ALL	743080.96	4036500.87	NonCancerAcute	0.00E+00	9.74E-06	2.07E-03	0.00E+00	0.00E+00	2.08E-03	5.09E-03	0.00E+00	1.38E-02	0.00E+00	0.00E+00	2.07E-03	0.00E+00	0.00E+00	1.38E-02
787	ALL	743180.96	4036500.87	NonCancerAcute	0.00E+00	9.87E-06	2.10E-03	0.00E+00	0.00E+00	2.10E-03	5.17E-03	0.00E+00	1.39E-02	0.00E+00	0.00E+00	2.10E-03	0.00E+00	0.00E+00	1.39E-02
788	ALL	743280.96	4036500.87	NonCancerAcute	0.00E+00	9.90E-06	2.10E-03	0.00E+00	0.00E+00	2.11E-03	5.23E-03	0.00E+00	1.40E-02	0.00E+00	0.00E+00	2.10E-03	0.00E+00	0.00E+00	1.40E-02
789	ALL	743380.96	4036500.87	NonCancerAcute	0.00E+00	9.98E-06	2.12E-03	0.00E+00	0.00E+00	2.13E-03	5.27E-03	0.00E+00	1.42E-02	0.00E+00	0.00E+00	2.12E-03	0.00E+00	0.00E+00	1.42E-02
790	ALL	743480.96	4036500.87	NonCancerAcute	0.00E+00	1.00E-05	2.13E-03	0.00E+00	0.00E+00	2.14E-03	5.35E-03	0.00E+00	1.43E-02	0.00E+00	0.00E+00	2.13E-03	0.00E+00	0.00E+00	1.43E-02
791	ALL	743580.96	4036500.87	NonCancerAcute	0.00E+00	1.01E-05	2.14E-03	0.00E+00	0.00E+00	2.15E-03	5.36E-03	0.00E+00	1.44E-02	0.00E+00	0.00E+00	2.14E-03	0.00E+00	0.00E+00	1.44E-02
792	ALL	743680.96	4036500.87	NonCancerAcute	0.00E+00	1.01E-05	2.15E-03	0.00E+00	0.00E+00	2.16E-03	5.36E-03	0.00E+00	1.44E-02	0.00E+00	0.00E+00	2.15E-03	0.00E+00	0.00E+00	1.44E-02
793	ALL	743780.96	4036500.87	NonCancerAcute	0.00E+00	1.00E-05	2.13E-03	0.00E+00	0.00E+00	2.14E-03	5.43E-03	0.00E+00	1.44E-02	0.00E+00	0.00E+00	2.13E-03	0.00E+00	0.00E+00	1.44E-02

794	ALL	743880.96	4036500.87	NonCancerAcute	0.00E+00	1.01E-05	2.15E-03	0.00E+00	0.00E+00	2.16E-03	5.55E-03	0.00E+00	1.46E-02	0.00E+00	0.00E+00	2.15E-03	0.00E+00	0.00E+00	1.46E-02
795	ALL	743980.96	4036500.87	NonCancerAcute	0.00E+00	1.02E-05	2.16E-03	0.00E+00	0.00E+00	2.17E-03	5.63E-03	0.00E+00	1.48E-02	0.00E+00	0.00E+00	2.16E-03	0.00E+00	0.00E+00	1.48E-02
796	ALL	744080.96	4036500.87	NonCancerAcute	0.00E+00	1.04E-05	2.20E-03	0.00E+00	0.00E+00	2.21E-03	5.70E-03	0.00E+00	1.50E-02	0.00E+00	0.00E+00	2.20E-03	0.00E+00	0.00E+00	1.50E-02
797	ALL	744180.96	4036500.87	NonCancerAcute	0.00E+00	1.04E-05	2.22E-03	0.00E+00	0.00E+00	2.23E-03	5.74E-03	0.00E+00	1.51E-02	0.00E+00	0.00E+00	2.22E-03	0.00E+00	0.00E+00	1.51E-02
798	ALL	744280.96	4036500.87	NonCancerAcute	0.00E+00	1.05E-05	2.24E-03	0.00E+00	0.00E+00	2.25E-03	5.77E-03	0.00E+00	1.52E-02	0.00E+00	0.00E+00	2.24E-03	0.00E+00	0.00E+00	1.52E-02
799	ALL	744380.96	4036500.87	NonCancerAcute	0.00E+00	1.04E-05	2.21E-03	0.00E+00	0.00E+00	2.22E-03	5.75E-03	0.00E+00	1.51E-02	0.00E+00	0.00E+00	2.21E-03	0.00E+00	0.00E+00	1.51E-02
800	ALL	744480.96	4036500.87	NonCancerAcute	0.00E+00	1.04E-05	2.20E-03	0.00E+00	0.00E+00	2.21E-03	5.86E-03	0.00E+00	1.52E-02	0.00E+00	0.00E+00	2.20E-03	0.00E+00	0.00E+00	1.52E-02
801	ALL	744580.96	4036500.87	NonCancerAcute	0.00E+00	1.07E-05	2.27E-03	0.00E+00	0.00E+00	2.28E-03	6.02E-03	0.00E+00	1.56E-02	0.00E+00	0.00E+00	2.27E-03	0.00E+00	0.00E+00	1.56E-02
802	ALL	744680.96	4036500.87	NonCancerAcute	0.00E+00	1.08E-05	2.30E-03	0.00E+00	0.00E+00	2.31E-03	6.19E-03	0.00E+00	1.59E-02	0.00E+00	0.00E+00	2.30E-03	0.00E+00	0.00E+00	1.59E-02
803	ALL	744780.96	4036500.87	NonCancerAcute	0.00E+00	1.07E-05	2.27E-03	0.00E+00	0.00E+00	2.29E-03	6.29E-03	0.00E+00	1.60E-02	0.00E+00	0.00E+00	2.27E-03	0.00E+00	0.00E+00	1.60E-02
804	ALL	744880.96	4036500.87	NonCancerAcute	0.00E+00	1.06E-05	2.24E-03	0.00E+00	0.00E+00	2.25E-03	6.42E-03	0.00E+00	1.60E-02	0.00E+00	0.00E+00	2.24E-03	0.00E+00	0.00E+00	1.60E-02
805	ALL	744980.96	4036500.87	NonCancerAcute	0.00E+00	1.06E-05	2.25E-03	0.00E+00	0.00E+00	2.26E-03	6.61E-03	0.00E+00	1.63E-02	0.00E+00	0.00E+00	2.25E-03	0.00E+00	0.00E+00	1.63E-02
806	ALL	745080.96	4036500.87	NonCancerAcute	0.00E+00	1.11E-05	2.35E-03	0.00E+00	0.00E+00	2.36E-03	6.82E-03	0.00E+00	1.69E-02	0.00E+00	0.00E+00	2.35E-03	0.00E+00	0.00E+00	1.69E-02
807	ALL	745180.96	4036500.87	NonCancerAcute	0.00E+00	1.12E-05	2.38E-03	0.00E+00	0.00E+00	2.40E-03	7.01E-03	0.00E+00	1.73E-02	0.00E+00	0.00E+00	2.38E-03	0.00E+00	0.00E+00	1.73E-02
808	ALL	745280.96	4036500.87	NonCancerAcute	0.00E+00	1.13E-05	2.41E-03	0.00E+00	0.00E+00	2.42E-03	7.20E-03	0.00E+00	1.76E-02	0.00E+00	0.00E+00	2.41E-03	0.00E+00	0.00E+00	1.76E-02
809	ALL	745380.96	4036500.87	NonCancerAcute	0.00E+00	1.13E-05	2.41E-03	0.00E+00	0.00E+00	2.42E-03	7.46E-03	0.00E+00	1.79E-02	0.00E+00	0.00E+00	2.41E-03	0.00E+00	0.00E+00	1.79E-02
810	ALL	745480.96	4036500.87	NonCancerAcute	0.00E+00	1.15E-05	2.45E-03	0.00E+00	0.00E+00	2.46E-03	7.69E-03	0.00E+00	1.83E-02	0.00E+00	0.00E+00	2.45E-03	0.00E+00	0.00E+00	1.83E-02
811	ALL	745580.96	4036500.87	NonCancerAcute	0.00E+00	1.16E-05	2.46E-03	0.00E+00	0.00E+00	2.47E-03	7.85E-03	0.00E+00	1.85E-02	0.00E+00	0.00E+00	2.46E-03	0.00E+00	0.00E+00	1.85E-02
812	ALL	745680.96	4036500.87	NonCancerAcute	0.00E+00	1.15E-05	2.45E-03	0.00E+00	0.00E+00	2.46E-03	8.06E-03	0.00E+00	1.88E-02	0.00E+00	0.00E+00	2.45E-03	0.00E+00	0.00E+00	1.88E-02
813	ALL	745780.96	4036500.87	NonCancerAcute	0.00E+00	1.20E-05	2.54E-03	0.00E+00	0.00E+00	2.55E-03	8.26E-03	0.00E+00	1.94E-02	0.00E+00	0.00E+00	2.54E-03	0.00E+00	0.00E+00	1.94E-02
814	ALL	745880.96	4036500.87	NonCancerAcute	0.00E+00	1.20E-05	2.55E-03	0.00E+00	0.00E+00	2.56E-03	8.50E-03	0.00E+00	1.97E-02	0.00E+00	0.00E+00	2.55E-03	0.00E+00	0.00E+00	1.97E-02
815	ALL	738080.96	4036600.87	NonCancerAcute	0.00E+00	9.02E-06	1.92E-03	0.00E+00	0.00E+00	1.92E-03	3.16E-03	0.00E+00	1.08E-02	0.00E+00	0.00E+00	1.92E-03	0.00E+00	0.00E+00	1.08E-02
816	ALL	738180.96	4036600.87	NonCancerAcute	0.00E+00	9.09E-06	1.93E-03	0.00E+00	0.00E+00	1.94E-03	3.20E-03	0.00E+00	1.09E-02	0.00E+00	0.00E+00	1.93E-03	0.00E+00	0.00E+00	1.09E-02
817	ALL	738280.96	4036600.87	NonCancerAcute	0.00E+00	9.14E-06	1.94E-03	0.00E+00	0.00E+00	1.95E-03	3.23E-03	0.00E+00	1.10E-02	0.00E+00	0.00E+00	1.94E-03	0.00E+00	0.00E+00	1.10E-02
818	ALL	738380.96	4036600.87	NonCancerAcute	0.00E+00	9.18E-06	1.95E-03	0.00E+00	0.00E+00	1.96E-03	3.25E-03	0.00E+00	1.11E-02	0.00E+00	0.00E+00	1.95E-03	0.00E+00	0.00E+00	1.11E-02
819	ALL	738580.96	4036600.87	NonCancerAcute	0.00E+00	9.14E-06	1.94E-03	0.00E+00	0.00E+00	1.95E-03	3.31E-03	0.00E+00	1.11E-02	0.00E+00	0.00E+00	1.94E-03	0.00E+00	0.00E+00	1.11E-02
820	ALL	738680.96	4036600.87	NonCancerAcute	0.00E+00	9.14E-06	1.94E-03	0.00E+00	0.00E+00	1.95E-03	3.31E-03	0.00E+00	1.11E-02	0.00E+00	0.00E+00	1.94E-03	0.00E+00	0.00E+00	1.11E-02
821	ALL	738780.96	4036600.87	NonCancerAcute	0.00E+00	9.16E-06	1.95E-03	0.00E+00	0.00E+00	1.95E-03	3.32E-03	0.00E+00	1.11E-02	0.00E+00	0.00E+00	1.95E-03	0.00E+00	0.00E+00	1.11E-02
822	ALL	738880.96	4036600.87	NonCancerAcute	0.00E+00	9.14E-06	1.94E-03	0.00E+00	0.00E+00	1.95E-03	3.33E-03	0.00E+00	1.11E-02	0.00E+00	0.00E+00	1.94E-03	0.00E+00	0.00E+00	1.11E-02
823	ALL	738980.96	4036600.87	NonCancerAcute	0.00E+00	9.08E-06	1.93E-03	0.00E+00	0.00E+00	1.94E-03	3.33E-03	0.00E+00	1.11E-02	0.00E+00	0.00E+00	1.93E-03	0.00E+00	0.00E+00	1.11E-02
824	ALL	739080.96	4036600.87	NonCancerAcute	0.00E+00	9.01E-06	1.91E-03	0.00E+00	0.00E+00	1.92E-03	3.33E-03	0.00E+00	1.10E-02	0.00E+00	0.00E+00	1.91E-03	0.00E+00	0.00E+00	1.10E-02
825	ALL	739180.96	4036600.87	NonCancerAcute	0.00E+00	8.94E-06	1.90E-03	0.00E+00	0.00E+00	1.91E-03	3.36E-03	0.00E+00	1.10E-02	0.00E+00	0.00E+00	1.90E-03	0.00E+00	0.00E+00	1.10E-02
826	ALL	739280.96	4036600.87	NonCancerAcute	0.00E+00	8.81E-06	1.87E-03	0.00E+00	0.00E+00	1.88E-03	3.40E-03	0.00E+00	1.10E-02	0.00E+00	0.00E+00	1.87E-03	0.00E+00	0.00E+00	1.10E-02
827	ALL	739380.96	4036600.87	NonCancerAcute	0.00E+00	8.70E-06	1.85E-03	0.00E+00	0.00E+00	1.86E-03	3.45E-03	0.00E+00	1.09E-02	0.00E+00	0.00E+00	1.85E-03	0.00E+00	0.00E+00	1.09E-02
828	ALL	739480.96	4036600.87	NonCancerAcute	0.00E+00	8.63E-06	1.83E-03	0.00E+00	0.00E+00	1.84E-03	3.49E-03	0.00E+00	1.09E-02	0.00E+00	0.00E+00	1.83E-03	0.00E+00	0.00E+00	1.09E-02
829	ALL	739580.96	4036600.87	NonCancerAcute	0.00E+00	8.60E-06	1.83E-03	0.00E+00	0.00E+00	1.83E-03	3.54E-03	0.00E+00	1.10E-02	0.00E+00	0.00E+00	1.83E-03	0.00E+00	0.00E+00	1.10E-02
830	ALL	739680.96	4036600.87	NonCancerAcute	0.00E+00	8.55E-06	1.82E-03	0.00E+00	0.00E+00	1.82E-03	3.57E-03	0.00E+00	1.10E-02	0.00E+00	0.00E+00	1.82E-03	0.00E+00	0.00E+00	1.10E-02
831	ALL	739780.96	4036600.87	NonCancerAcute	0.00E+00	8.50E-06	1.81E-03	0.00E+00	0.00E+00	1.81E-03	3.60E-03	0.00E+00	1.10E-02	0.00E+00	0.00E+00	1.81E-03	0.00E+00	0.00E+00	1.10E-02
832	ALL	739880.96	4036600.87	NonCancerAcute	0.00E+00	8.45E-06	1.79E-03	0.00E+00	0.00E+00	1.80E-03	3.62E-03	0.00E+00	1.09E-02	0.00E+00	0.00E+00	1.79E-03	0.00E+00	0.00E+00	1.09E-02
833	ALL	739980.96	4036600.87	NonCancerAcute	0.00E+00	8.36E-06	1.78E-03	0.00E+00	0.00E+00	1.78E-03	3.63E-03	0.00E+00	1.09E-02	0.00E+00	0.00E+00	1.78E-03	0.00E+00	0.00E+00	1.09E-02
834	ALL	740080.96	4036600.87	NonCancerAcute	0.00E+00	8.32E-06	1.77E-03	0.00E+00	0.00E+00	1.77E-03	3.66E-03	0.00E+00	1.09E-02	0.00E+00	0.00E+00	1.77E-03	0.00E+00	0.00E+00	1.09E-02
835	ALL	740180.96	4036600.87	NonCancerAcute	0.00E+00	8.32E-06	1.77E-03	0.00E+00	0.00E+00	1.77E-03	3.69E-03	0.00E+00	1.09E-02	0.00E+00	0.00E+00	1.77E-03	0.00E+00	0.00E+00	1.09E-02
836	ALL	740280.96	4036600.87	NonCancerAcute	0.00E+00	8.35E-06	1.77E-03	0.00E+00	0.00E+00	1.78E-03	3.69E-03	0.00E+00	1.10E-02	0.00E+00	0.00E+00	1.77E-03	0.00E+00	0.00E+00	1.10E-02
837	ALL	740380.96	4036600.87	NonCancerAcute	0.00E+00	8.35E-06	1.77E-03	0.00E+00	0.00E+00	1.78E-03	3.69E-03	0.00E+00	1.10E-02	0.00E+00	0.00E+00	1.77E-03	0.00E+00	0.00E+00	1.10E-02
838	ALL	740480.96	4036600.87	NonCancerAcute	0.00E+00	8.33E-06	1.77E-03	0.00E+00	0.00E+00	1.78E-03	3.68E-03	0.00E+00	1.09E-02	0.00E+00	0.00E+00	1.77E-03	0.00E+00	0.00E+00	1.09E-02
839	ALL	740580.96	4036600.87	NonCancerAcute	0.00E+00	8.33E-06	1.77E-03	0.00E+00	0.00E+00	1.78E-03	3.66E-03	0.00E+00	1.09E-02	0.00E+00	0.00E+00	1.77E-03	0.00E+00	0.00E+00	1.09E-02
840	ALL	740680.96	4036600.87	NonCancerAcute	0.00E+00	8.48E-06	1.80E-03	0.00E+00	0.00E+00	1.81E-03	3.65E-03	0.00E+00	1.10E-02	0.00E+00	0.00E+00	1.80E-03	0.00E+00	0.00E+00	1.10E-02
841	ALL	740780.96	4036600.87	NonCancerAcute	0.00E+00	8.67E-06	1.84E-03	0.00E+00	0.00E+00	1.85E-03	3.64E-03	0.00E+00	1.12E-02	0.00E+00	0.00E+00	1.84E-03	0.00E+00	0.00E+00	1.12E-02
842	ALL	740880.96	4036600.87	NonCancerAcute	0.00E+00	8.84E-06	1.88E-03	0.00E+00	0.00E+00	1.89E-03	3.63E-03	0.00E+00	1.13E-02	0.00E+00	0.00E+00	1.88E-03	0.00E+00	0.00E+00	1.13E-02
843	ALL	740980.96	4036600.87	NonCancerAcute	0.00E+00	8.99E-06	1.91E-03	0.00E+00	0.00E+00	1.92E-03	3.63E-03	0.00E+00	1.14E-02	0.00E+00	0.00E+00	1.91E-03	0.00E+00	0.00E+00	1.14E-02
844	ALL	741080.96	4036600.87	NonCancerAcute	0.00E+00	9.11E-06	1.93E-03	0.00E+00	0.00E+00	1.94E-03	3.64E-03	0.00E+00	1.15E-02	0.00E+00	0.00E+00	1.93E-03	0.00E+00	0.00E+00	1.15E-02
845	ALL	741180.96	4036600.87	NonCancerAcute	0.00E+00	9.16E-06	1.94E-03	0.00E+00	0.00E+00	1.95E-03	3.66E-03	0.00E+00	1.16E-02	0.00E+00	0.00E+00	1.94E-03	0.00E+00	0.00E+00	1.16E-02
846	ALL	741280.96	4036600.87	NonCancerAcute	0.00E+00	9.15E-06	1.94E-03	0.00E+00	0.00E+00	1.95E-03	3.68E-03	0.00E+00	1.16E-02	0.00E+00	0.00E+00	1.94E-03	0.00E+00	0.00E+00	1.16E-02

847	ALL	741380.96	4036600.87	NonCancerAcute	0.00E+00	9.09E-06	1.93E-03	0.00E+00	0.00E+00	1.94E-03	3.69E-03	0.00E+00	1.15E-02	0.00E+00	0.00E+00	1.93E-03	0.00E+00	0.00E+00	1.15E-02
848	ALL	741480.96	4036600.87	NonCancerAcute	0.00E+00	9.02E-06	1.92E-03	0.00E+00	0.00E+00	1.92E-03	3.69E-03	0.00E+00	1.15E-02	0.00E+00	0.00E+00	1.92E-03	0.00E+00	0.00E+00	1.15E-02
849	ALL	741580.96	4036600.87	NonCancerAcute	0.00E+00	8.98E-06	1.91E-03	0.00E+00	0.00E+00	1.92E-03	3.72E-03	0.00E+00	1.15E-02	0.00E+00	0.00E+00	1.91E-03	0.00E+00	0.00E+00	1.15E-02
850	ALL	741680.96	4036600.87	NonCancerAcute	0.00E+00	9.06E-06	1.92E-03	0.00E+00	0.00E+00	1.93E-03	3.74E-03	0.00E+00	1.16E-02	0.00E+00	0.00E+00	1.92E-03	0.00E+00	0.00E+00	1.16E-02
851	ALL	741780.96	4036600.87	NonCancerAcute	0.00E+00	9.09E-06	1.93E-03	0.00E+00	0.00E+00	1.94E-03	3.77E-03	0.00E+00	1.16E-02	0.00E+00	0.00E+00	1.93E-03	0.00E+00	0.00E+00	1.16E-02
852	ALL	741880.96	4036600.87	NonCancerAcute	0.00E+00	9.05E-06	1.92E-03	0.00E+00	0.00E+00	1.93E-03	3.79E-03	0.00E+00	1.16E-02	0.00E+00	0.00E+00	1.92E-03	0.00E+00	0.00E+00	1.16E-02
853	ALL	741980.96	4036600.87	NonCancerAcute	0.00E+00	9.07E-06	1.93E-03	0.00E+00	0.00E+00	1.94E-03	3.86E-03	0.00E+00	1.17E-02	0.00E+00	0.00E+00	1.93E-03	0.00E+00	0.00E+00	1.17E-02
854	ALL	742080.96	4036600.87	NonCancerAcute	0.00E+00	9.12E-06	1.94E-03	0.00E+00	0.00E+00	1.94E-03	3.94E-03	0.00E+00	1.19E-02	0.00E+00	0.00E+00	1.94E-03	0.00E+00	0.00E+00	1.19E-02
855	ALL	742180.96	4036600.87	NonCancerAcute	0.00E+00	9.10E-06	1.93E-03	0.00E+00	0.00E+00	1.94E-03	4.04E-03	0.00E+00	1.20E-02	0.00E+00	0.00E+00	1.93E-03	0.00E+00	0.00E+00	1.20E-02
856	ALL	742280.96	4036600.87	NonCancerAcute	0.00E+00	9.13E-06	1.94E-03	0.00E+00	0.00E+00	1.95E-03	4.16E-03	0.00E+00	1.21E-02	0.00E+00	0.00E+00	1.94E-03	0.00E+00	0.00E+00	1.21E-02
857	ALL	745380.96	4036600.87	NonCancerAcute	0.00E+00	1.15E-05	2.44E-03	0.00E+00	0.00E+00	2.45E-03	7.48E-03	0.00E+00	1.80E-02	0.00E+00	0.00E+00	2.44E-03	0.00E+00	0.00E+00	1.80E-02
858	ALL	745480.96	4036600.87	NonCancerAcute	0.00E+00	1.14E-05	2.42E-03	0.00E+00	0.00E+00	2.44E-03	7.74E-03	0.00E+00	1.83E-02	0.00E+00	0.00E+00	2.42E-03	0.00E+00	0.00E+00	1.83E-02
859	ALL	745580.96	4036600.87	NonCancerAcute	0.00E+00	1.14E-05	2.43E-03	0.00E+00	0.00E+00	2.44E-03	7.92E-03	0.00E+00	1.85E-02	0.00E+00	0.00E+00	2.43E-03	0.00E+00	0.00E+00	1.85E-02
860	ALL	745680.96	4036600.87	NonCancerAcute	0.00E+00	1.14E-05	2.43E-03	0.00E+00	0.00E+00	2.44E-03	8.12E-03	0.00E+00	1.88E-02	0.00E+00	0.00E+00	2.43E-03	0.00E+00	0.00E+00	1.88E-02
861	ALL	745780.96	4036600.87	NonCancerAcute	0.00E+00	1.17E-05	2.48E-03	0.00E+00	0.00E+00	2.49E-03	8.32E-03	0.00E+00	1.92E-02	0.00E+00	0.00E+00	2.48E-03	0.00E+00	0.00E+00	1.92E-02
862	ALL	745880.96	4036600.87	NonCancerAcute	0.00E+00	1.23E-05	2.60E-03	0.00E+00	0.00E+00	2.62E-03	8.57E-03	0.00E+00	2.00E-02	0.00E+00	0.00E+00	2.60E-03	0.00E+00	0.00E+00	2.00E-02
863	ALL	745980.96	4036600.87	NonCancerAcute	0.00E+00	1.24E-05	2.63E-03	0.00E+00	0.00E+00	2.64E-03	8.79E-03	0.00E+00	2.03E-02	0.00E+00	0.00E+00	2.63E-03	0.00E+00	0.00E+00	2.03E-02
864	ALL	738080.96	4036700.87	NonCancerAcute	0.00E+00	8.78E-06	1.87E-03	0.00E+00	0.00E+00	1.87E-03	3.17E-03	0.00E+00	1.07E-02	0.00E+00	0.00E+00	1.87E-03	0.00E+00	0.00E+00	1.07E-02
865	ALL	738180.96	4036700.87	NonCancerAcute	0.00E+00	8.79E-06	1.87E-03	0.00E+00	0.00E+00	1.87E-03	3.20E-03	0.00E+00	1.07E-02	0.00E+00	0.00E+00	1.87E-03	0.00E+00	0.00E+00	1.07E-02
866	ALL	738280.96	4036700.87	NonCancerAcute	0.00E+00	8.86E-06	1.88E-03	0.00E+00	0.00E+00	1.89E-03	3.23E-03	0.00E+00	1.08E-02	0.00E+00	0.00E+00	1.88E-03	0.00E+00	0.00E+00	1.08E-02
867	ALL	738380.96	4036700.87	NonCancerAcute	0.00E+00	8.90E-06	1.89E-03	0.00E+00	0.00E+00	1.90E-03	3.28E-03	0.00E+00	1.09E-02	0.00E+00	0.00E+00	1.89E-03	0.00E+00	0.00E+00	1.09E-02
868	ALL	738480.96	4036700.87	NonCancerAcute	0.00E+00	8.93E-06	1.90E-03	0.00E+00	0.00E+00	1.91E-03	3.31E-03	0.00E+00	1.09E-02	0.00E+00	0.00E+00	1.90E-03	0.00E+00	0.00E+00	1.09E-02
869	ALL	738580.96	4036700.87	NonCancerAcute	0.00E+00	8.96E-06	1.90E-03	0.00E+00	0.00E+00	1.91E-03	3.34E-03	0.00E+00	1.10E-02	0.00E+00	0.00E+00	1.90E-03	0.00E+00	0.00E+00	1.10E-02
870	ALL	738680.96	4036700.87	NonCancerAcute	0.00E+00	9.01E-06	1.91E-03	0.00E+00	0.00E+00	1.92E-03	3.36E-03	0.00E+00	1.11E-02	0.00E+00	0.00E+00	1.91E-03	0.00E+00	0.00E+00	1.11E-02
871	ALL	738780.96	4036700.87	NonCancerAcute	0.00E+00	9.01E-06	1.91E-03	0.00E+00	0.00E+00	1.92E-03	3.38E-03	0.00E+00	1.11E-02	0.00E+00	0.00E+00	1.91E-03	0.00E+00	0.00E+00	1.11E-02
872	ALL	738880.96	4036700.87	NonCancerAcute	0.00E+00	8.99E-06	1.91E-03	0.00E+00	0.00E+00	1.92E-03	3.39E-03	0.00E+00	1.11E-02	0.00E+00	0.00E+00	1.91E-03	0.00E+00	0.00E+00	1.11E-02
873	ALL	738980.96	4036700.87	NonCancerAcute	0.00E+00	9.00E-06	1.91E-03	0.00E+00	0.00E+00	1.92E-03	3.41E-03	0.00E+00	1.11E-02	0.00E+00	0.00E+00	1.91E-03	0.00E+00	0.00E+00	1.11E-02
874	ALL	739080.96	4036700.87	NonCancerAcute	0.00E+00	8.99E-06	1.91E-03	0.00E+00	0.00E+00	1.92E-03	3.42E-03	0.00E+00	1.11E-02	0.00E+00	0.00E+00	1.91E-03	0.00E+00	0.00E+00	1.11E-02
875	ALL	739180.96	4036700.87	NonCancerAcute	0.00E+00	8.94E-06	1.90E-03	0.00E+00	0.00E+00	1.91E-03	3.41E-03	0.00E+00	1.11E-02	0.00E+00	0.00E+00	1.90E-03	0.00E+00	0.00E+00	1.11E-02
876	ALL	739280.96	4036700.87	NonCancerAcute	0.00E+00	8.84E-06	1.88E-03	0.00E+00	0.00E+00	1.89E-03	3.41E-03	0.00E+00	1.10E-02	0.00E+00	0.00E+00	1.88E-03	0.00E+00	0.00E+00	1.10E-02
877	ALL	739380.96	4036700.87	NonCancerAcute	0.00E+00	8.78E-06	1.86E-03	0.00E+00	0.00E+00	1.87E-03	3.47E-03	0.00E+00	1.10E-02	0.00E+00	0.00E+00	1.86E-03	0.00E+00	0.00E+00	1.10E-02
878	ALL	739480.96	4036700.87	NonCancerAcute	0.00E+00	8.72E-06	1.85E-03	0.00E+00	0.00E+00	1.86E-03	3.52E-03	0.00E+00	1.10E-02	0.00E+00	0.00E+00	1.85E-03	0.00E+00	0.00E+00	1.10E-02
879	ALL	739580.96	4036700.87	NonCancerAcute	0.00E+00	8.64E-06	1.84E-03	0.00E+00	0.00E+00	1.84E-03	3.57E-03	0.00E+00	1.10E-02	0.00E+00	0.00E+00	1.84E-03	0.00E+00	0.00E+00	1.10E-02
880	ALL	739680.96	4036700.87	NonCancerAcute	0.00E+00	8.65E-06	1.84E-03	0.00E+00	0.00E+00	1.84E-03	3.61E-03	0.00E+00	1.11E-02	0.00E+00	0.00E+00	1.84E-03	0.00E+00	0.00E+00	1.11E-02
881	ALL	739780.96	4036700.87	NonCancerAcute	0.00E+00	8.64E-06	1.84E-03	0.00E+00	0.00E+00	1.84E-03	3.65E-03	0.00E+00	1.11E-02	0.00E+00	0.00E+00	1.84E-03	0.00E+00	0.00E+00	1.11E-02
882	ALL	739880.96	4036700.87	NonCancerAcute	0.00E+00	8.62E-06	1.83E-03	0.00E+00	0.00E+00	1.84E-03	3.68E-03	0.00E+00	1.12E-02	0.00E+00	0.00E+00	1.83E-03	0.00E+00	0.00E+00	1.12E-02
883	ALL	739980.96	4036700.87	NonCancerAcute	0.00E+00	8.58E-06	1.82E-03	0.00E+00	0.00E+00	1.83E-03	3.70E-03	0.00E+00	1.12E-02	0.00E+00	0.00E+00	1.82E-03	0.00E+00	0.00E+00	1.12E-02
884	ALL	740080.96	4036700.87	NonCancerAcute	0.00E+00	8.52E-06	1.81E-03	0.00E+00	0.00E+00	1.82E-03	3.72E-03	0.00E+00	1.11E-02	0.00E+00	0.00E+00	1.81E-03	0.00E+00	0.00E+00	1.11E-02
885	ALL	740180.96	4036700.87	NonCancerAcute	0.00E+00	8.43E-06	1.79E-03	0.00E+00	0.00E+00	1.80E-03	3.73E-03	0.00E+00	1.11E-02	0.00E+00	0.00E+00	1.79E-03	0.00E+00	0.00E+00	1.11E-02
886	ALL	740280.96	4036700.87	NonCancerAcute	0.00E+00	8.41E-06	1.79E-03	0.00E+00	0.00E+00	1.79E-03	3.73E-03	0.00E+00	1.11E-02	0.00E+00	0.00E+00	1.79E-03	0.00E+00	0.00E+00	1.11E-02
887	ALL	740380.96	4036700.87	NonCancerAcute	0.00E+00	8.40E-06	1.78E-03	0.00E+00	0.00E+00	1.79E-03	3.74E-03	0.00E+00	1.11E-02	0.00E+00	0.00E+00	1.78E-03	0.00E+00	0.00E+00	1.11E-02
888	ALL	740480.96	4036700.87	NonCancerAcute	0.00E+00	8.44E-06	1.79E-03	0.00E+00	0.00E+00	1.80E-03	3.75E-03	0.00E+00	1.11E-02	0.00E+00	0.00E+00	1.79E-03	0.00E+00	0.00E+00	1.11E-02
889	ALL	740580.96	4036700.87	NonCancerAcute	0.00E+00	8.46E-06	1.80E-03	0.00E+00	0.00E+00	1.80E-03	3.75E-03	0.00E+00	1.11E-02	0.00E+00	0.00E+00	1.80E-03	0.00E+00	0.00E+00	1.11E-02
890	ALL	740680.96	4036700.87	NonCancerAcute	0.00E+00	8.44E-06	1.79E-03	0.00E+00	0.00E+00	1.80E-03	3.74E-03	0.00E+00	1.11E-02	0.00E+00	0.00E+00	1.79E-03	0.00E+00	0.00E+00	1.11E-02
891	ALL	740780.96	4036700.87	NonCancerAcute	0.00E+00	8.40E-06	1.78E-03	0.00E+00	0.00E+00	1.79E-03	3.73E-03	0.00E+00	1.11E-02	0.00E+00	0.00E+00	1.78E-03	0.00E+00	0.00E+00	1.11E-02
892	ALL	740880.96	4036700.87	NonCancerAcute	0.00E+00	8.45E-06	1.79E-03	0.00E+00	0.00E+00	1.80E-03	3.73E-03	0.00E+00	1.11E-02	0.00E+00	0.00E+00	1.79E-03	0.00E+00	0.00E+00	1.11E-02
893	ALL	740980.96	4036700.87	NonCancerAcute	0.00E+00	8.68E-06	1.84E-03	0.00E+00	0.00E+00	1.85E-03	3.73E-03	0.00E+00	1.13E-02	0.00E+00	0.00E+00	1.84E-03	0.00E+00	0.00E+00	1.13E-02
894	ALL	741080.96	4036700.87	NonCancerAcute	0.00E+00	8.88E-06	1.89E-03	0.00E+00	0.00E+00	1.89E-03	3.75E-03	0.00E+00	1.14E-02	0.00E+00	0.00E+00	1.89E-03	0.00E+00	0.00E+00	1.14E-02
895	ALL	741180.96	4036700.87	NonCancerAcute	0.00E+00	9.03E-06	1.92E-03	0.00E+00	0.00E+00	1.93E-03	3.77E-03	0.00E+00	1.16E-02	0.00E+00	0.00E+00	1.92E-03	0.00E+00	0.00E+00	1.16E-02
896	ALL	741280.96	4036700.87	NonCancerAcute	0.00E+00	9.13E-06	1.94E-03	0.00E+00	0.00E+00	1.95E-03	3.79E-03	0.00E+00	1.17E-02	0.00E+00	0.00E+00	1.94E-03	0.00E+00	0.00E+00	1.17E-02
897	ALL	741380.96	4036700.87	NonCancerAcute	0.00E+00	9.17E-06	1.95E-03	0.00E+00	0.00E+00	1.96E-03	3.80E-03	0.00E+00	1.17E-02	0.00E+00	0.00E+00	1.95E-03	0.00E+00	0.00E+00	1.17E-02
898	ALL	741480.96	4036700.87	NonCancerAcute	0.00E+00	9.18E-06	1.95E-03	0.00E+00	0.00E+00	1.96E-03	3.81E-03	0.00E+00	1.18E-02	0.00E+00	0.00E+00	1.95E-03	0.00E+00	0.00E+00	1.18E-02
899	ALL	741580.96	4036700.87	NonCancerAcute	0.00E+00	9.13E-06	1.94E-03	0.00E+00	0.00E+00	1.95E-03	3.82E-03	0.00E+00	1.17E-02	0.00E+00	0.00E+00	1.94E-03	0.00E+00	0.00E+00	1.17E-02

900	ALL	741680.96	4036700.87	NonCancerAcute	0.00E+00	9.07E-06	1.93E-03	0.00E+00	0.00E+00	1.94E-03	3.82E-03	0.00E+00	1.17E-02	0.00E+00	0.00E+00	1.93E-03	0.00E+00	0.00E+00	1.17E-02
901	ALL	741780.96	4036700.87	NonCancerAcute	0.00E+00	9.06E-06	1.92E-03	0.00E+00	0.00E+00	1.93E-03	3.82E-03	0.00E+00	1.17E-02	0.00E+00	0.00E+00	1.92E-03	0.00E+00	0.00E+00	1.17E-02
902	ALL	741880.96	4036700.87	NonCancerAcute	0.00E+00	9.16E-06	1.95E-03	0.00E+00	0.00E+00	1.95E-03	3.86E-03	0.00E+00	1.18E-02	0.00E+00	0.00E+00	1.95E-03	0.00E+00	0.00E+00	1.18E-02
903	ALL	741980.96	4036700.87	NonCancerAcute	0.00E+00	9.20E-06	1.95E-03	0.00E+00	0.00E+00	1.96E-03	3.89E-03	0.00E+00	1.19E-02	0.00E+00	0.00E+00	1.95E-03	0.00E+00	0.00E+00	1.19E-02
904	ALL	742080.96	4036700.87	NonCancerAcute	0.00E+00	9.23E-06	1.96E-03	0.00E+00	0.00E+00	1.97E-03	3.91E-03	0.00E+00	1.19E-02	0.00E+00	0.00E+00	1.96E-03	0.00E+00	0.00E+00	1.19E-02
905	ALL	742180.96	4036700.87	NonCancerAcute	0.00E+00	9.28E-06	1.97E-03	0.00E+00	0.00E+00	1.98E-03	3.99E-03	0.00E+00	1.20E-02	0.00E+00	0.00E+00	1.97E-03	0.00E+00	0.00E+00	1.20E-02
906	ALL	742280.96	4036700.87	NonCancerAcute	0.00E+00	9.29E-06	1.97E-03	0.00E+00	0.00E+00	1.98E-03	4.07E-03	0.00E+00	1.22E-02	0.00E+00	0.00E+00	1.97E-03	0.00E+00	0.00E+00	1.22E-02
907	ALL	742380.96	4036700.87	NonCancerAcute	0.00E+00	9.22E-06	1.96E-03	0.00E+00	0.00E+00	1.97E-03	4.17E-03	0.00E+00	1.22E-02	0.00E+00	0.00E+00	1.96E-03	0.00E+00	0.00E+00	1.22E-02
908	ALL	742480.96	4036700.87	NonCancerAcute	0.00E+00	9.27E-06	1.97E-03	0.00E+00	0.00E+00	1.98E-03	4.30E-03	0.00E+00	1.24E-02	0.00E+00	0.00E+00	1.97E-03	0.00E+00	0.00E+00	1.24E-02
909	ALL	742580.96	4036700.87	NonCancerAcute	0.00E+00	9.44E-06	2.00E-03	0.00E+00	0.00E+00	2.01E-03	4.43E-03	0.00E+00	1.27E-02	0.00E+00	0.00E+00	2.00E-03	0.00E+00	0.00E+00	1.27E-02
910	ALL	742680.96	4036700.87	NonCancerAcute	0.00E+00	9.56E-06	2.03E-03	0.00E+00	0.00E+00	2.04E-03	4.56E-03	0.00E+00	1.30E-02	0.00E+00	0.00E+00	2.03E-03	0.00E+00	0.00E+00	1.30E-02
911	ALL	742780.96	4036700.87	NonCancerAcute	0.00E+00	9.61E-06	2.04E-03	0.00E+00	0.00E+00	2.05E-03	4.68E-03	0.00E+00	1.31E-02	0.00E+00	0.00E+00	2.04E-03	0.00E+00	0.00E+00	1.31E-02
912	ALL	742880.96	4036700.87	NonCancerAcute	0.00E+00	9.71E-06	2.06E-03	0.00E+00	0.00E+00	2.07E-03	4.79E-03	0.00E+00	1.34E-02	0.00E+00	0.00E+00	2.06E-03	0.00E+00	0.00E+00	1.34E-02
913	ALL	742980.96	4036700.87	NonCancerAcute	0.00E+00	9.75E-06	2.07E-03	0.00E+00	0.00E+00	2.08E-03	4.90E-03	0.00E+00	1.35E-02	0.00E+00	0.00E+00	2.07E-03	0.00E+00	0.00E+00	1.35E-02
914	ALL	743080.96	4036700.87	NonCancerAcute	0.00E+00	9.83E-06	2.09E-03	0.00E+00	0.00E+00	2.10E-03	5.00E-03	0.00E+00	1.37E-02	0.00E+00	0.00E+00	2.09E-03	0.00E+00	0.00E+00	1.37E-02
915	ALL	743180.96	4036700.87	NonCancerAcute	0.00E+00	9.92E-06	2.11E-03	0.00E+00	0.00E+00	2.12E-03	5.09E-03	0.00E+00	1.39E-02	0.00E+00	0.00E+00	2.11E-03	0.00E+00	0.00E+00	1.39E-02
916	ALL	743280.96	4036700.87	NonCancerAcute	0.00E+00	9.92E-06	2.11E-03	0.00E+00	0.00E+00	2.12E-03	5.16E-03	0.00E+00	1.40E-02	0.00E+00	0.00E+00	2.11E-03	0.00E+00	0.00E+00	1.40E-02
917	ALL	743380.96	4036700.87	NonCancerAcute	0.00E+00	1.00E-05	2.12E-03	0.00E+00	0.00E+00	2.13E-03	5.24E-03	0.00E+00	1.41E-02	0.00E+00	0.00E+00	2.12E-03	0.00E+00	0.00E+00	1.41E-02
918	ALL	743480.96	4036700.87	NonCancerAcute	0.00E+00	1.01E-05	2.14E-03	0.00E+00	0.00E+00	2.15E-03	5.26E-03	0.00E+00	1.42E-02	0.00E+00	0.00E+00	2.14E-03	0.00E+00	0.00E+00	1.42E-02
919	ALL	743580.96	4036700.87	NonCancerAcute	0.00E+00	1.01E-05	2.14E-03	0.00E+00	0.00E+00	2.15E-03	5.31E-03	0.00E+00	1.43E-02	0.00E+00	0.00E+00	2.14E-03	0.00E+00	0.00E+00	1.43E-02
920	ALL	743680.96	4036700.87	NonCancerAcute	0.00E+00	1.02E-05	2.17E-03	0.00E+00	0.00E+00	2.18E-03	5.34E-03	0.00E+00	1.44E-02	0.00E+00	0.00E+00	2.17E-03	0.00E+00	0.00E+00	1.44E-02
921	ALL	743780.96	4036700.87	NonCancerAcute	0.00E+00	1.02E-05	2.17E-03	0.00E+00	0.00E+00	2.18E-03	5.36E-03	0.00E+00	1.45E-02	0.00E+00	0.00E+00	2.17E-03	0.00E+00	0.00E+00	1.45E-02
922	ALL	743880.96	4036700.87	NonCancerAcute	0.00E+00	1.03E-05	2.19E-03	0.00E+00	0.00E+00	2.20E-03	5.38E-03	0.00E+00	1.45E-02	0.00E+00	0.00E+00	2.19E-03	0.00E+00	0.00E+00	1.45E-02
923	ALL	743980.96	4036700.87	NonCancerAcute	0.00E+00	1.02E-05	2.17E-03	0.00E+00	0.00E+00	2.18E-03	5.39E-03	0.00E+00	1.45E-02	0.00E+00	0.00E+00	2.17E-03	0.00E+00	0.00E+00	1.45E-02
924	ALL	744080.96	4036700.87	NonCancerAcute	0.00E+00	1.03E-05	2.18E-03	0.00E+00	0.00E+00	2.19E-03	5.42E-03	0.00E+00	1.46E-02	0.00E+00	0.00E+00	2.18E-03	0.00E+00	0.00E+00	1.46E-02
925	ALL	744180.96	4036700.87	NonCancerAcute	0.00E+00	1.04E-05	2.21E-03	0.00E+00	0.00E+00	2.22E-03	5.57E-03	0.00E+00	1.48E-02	0.00E+00	0.00E+00	2.21E-03	0.00E+00	0.00E+00	1.48E-02
926	ALL	744280.96	4036700.87	NonCancerAcute	0.00E+00	1.06E-05	2.25E-03	0.00E+00	0.00E+00	2.26E-03	5.73E-03	0.00E+00	1.52E-02	0.00E+00	0.00E+00	2.25E-03	0.00E+00	0.00E+00	1.52E-02
927	ALL	744380.96	4036700.87	NonCancerAcute	0.00E+00	1.06E-05	2.26E-03	0.00E+00	0.00E+00	2.27E-03	5.86E-03	0.00E+00	1.54E-02	0.00E+00	0.00E+00	2.26E-03	0.00E+00	0.00E+00	1.54E-02
928	ALL	744480.96	4036700.87	NonCancerAcute	0.00E+00	1.07E-05	2.28E-03	0.00E+00	0.00E+00	2.29E-03	5.97E-03	0.00E+00	1.56E-02	0.00E+00	0.00E+00	2.28E-03	0.00E+00	0.00E+00	1.56E-02
929	ALL	744580.96	4036700.87	NonCancerAcute	0.00E+00	1.07E-05	2.27E-03	0.00E+00	0.00E+00	2.28E-03	6.06E-03	0.00E+00	1.57E-02	0.00E+00	0.00E+00	2.27E-03	0.00E+00	0.00E+00	1.57E-02
930	ALL	744680.96	4036700.87	NonCancerAcute	0.00E+00	1.05E-05	2.23E-03	0.00E+00	0.00E+00	2.24E-03	6.20E-03	0.00E+00	1.57E-02	0.00E+00	0.00E+00	2.23E-03	0.00E+00	0.00E+00	1.57E-02
931	ALL	744780.96	4036700.87	NonCancerAcute	0.00E+00	1.08E-05	2.30E-03	0.00E+00	0.00E+00	2.31E-03	6.43E-03	0.00E+00	1.62E-02	0.00E+00	0.00E+00	2.30E-03	0.00E+00	0.00E+00	1.62E-02
932	ALL	744880.96	4036700.87	NonCancerAcute	0.00E+00	1.10E-05	2.33E-03	0.00E+00	0.00E+00	2.34E-03	6.63E-03	0.00E+00	1.66E-02	0.00E+00	0.00E+00	2.33E-03	0.00E+00	0.00E+00	1.66E-02
933	ALL	744980.96	4036700.87	NonCancerAcute	0.00E+00	1.10E-05	2.33E-03	0.00E+00	0.00E+00	2.34E-03	6.77E-03	0.00E+00	1.67E-02	0.00E+00	0.00E+00	2.33E-03	0.00E+00	0.00E+00	1.67E-02
934	ALL	745080.96	4036700.87	NonCancerAcute	0.00E+00	1.07E-05	2.27E-03	0.00E+00	0.00E+00	2.28E-03	6.89E-03	0.00E+00	1.67E-02	0.00E+00	0.00E+00	2.27E-03	0.00E+00	0.00E+00	1.67E-02
935	ALL	745180.96	4036700.87	NonCancerAcute	0.00E+00	1.06E-05	2.26E-03	0.00E+00	0.00E+00	2.27E-03	7.08E-03	0.00E+00	1.69E-02	0.00E+00	0.00E+00	2.26E-03	0.00E+00	0.00E+00	1.69E-02
936	ALL	738080.96	4036800.87	NonCancerAcute	0.00E+00	8.86E-06	1.88E-03	0.00E+00	0.00E+00	1.89E-03	3.15E-03	0.00E+00	1.07E-02	0.00E+00	0.00E+00	1.88E-03	0.00E+00	0.00E+00	1.07E-02
937	ALL	738180.96	4036800.87	NonCancerAcute	0.00E+00	8.84E-06	1.88E-03	0.00E+00	0.00E+00	1.89E-03	3.18E-03	0.00E+00	1.07E-02	0.00E+00	0.00E+00	1.88E-03	0.00E+00	0.00E+00	1.07E-02
938	ALL	738280.96	4036800.87	NonCancerAcute	0.00E+00	8.80E-06	1.87E-03	0.00E+00	0.00E+00	1.88E-03	3.21E-03	0.00E+00	1.07E-02	0.00E+00	0.00E+00	1.87E-03	0.00E+00	0.00E+00	1.07E-02
939	ALL	738380.96	4036800.87	NonCancerAcute	0.00E+00	8.83E-06	1.87E-03	0.00E+00	0.00E+00	1.88E-03	3.24E-03	0.00E+00	1.08E-02	0.00E+00	0.00E+00	1.87E-03	0.00E+00	0.00E+00	1.08E-02
940	ALL	738480.96	4036800.87	NonCancerAcute	0.00E+00	8.90E-06	1.89E-03	0.00E+00	0.00E+00	1.90E-03	3.28E-03	0.00E+00	1.09E-02	0.00E+00	0.00E+00	1.89E-03	0.00E+00	0.00E+00	1.09E-02
941	ALL	738580.96	4036800.87	NonCancerAcute	0.00E+00	8.92E-06	1.90E-03	0.00E+00	0.00E+00	1.90E-03	3.33E-03	0.00E+00	1.10E-02	0.00E+00	0.00E+00	1.90E-03	0.00E+00	0.00E+00	1.10E-02
942	ALL	738680.96	4036800.87	NonCancerAcute	0.00E+00	9.01E-06	1.91E-03	0.00E+00	0.00E+00	1.92E-03	3.34E-03	0.00E+00	1.10E-02	0.00E+00	0.00E+00	1.91E-03	0.00E+00	0.00E+00	1.10E-02
943	ALL	738780.96	4036800.87	NonCancerAcute	0.00E+00	9.06E-06	1.92E-03	0.00E+00	0.00E+00	1.93E-03	3.36E-03	0.00E+00	1.11E-02	0.00E+00	0.00E+00	1.92E-03	0.00E+00	0.00E+00	1.11E-02
944	ALL	738880.96	4036800.87	NonCancerAcute	0.00E+00	9.07E-06	1.93E-03	0.00E+00	0.00E+00	1.93E-03	3.39E-03	0.00E+00	1.12E-02	0.00E+00	0.00E+00	1.93E-03	0.00E+00	0.00E+00	1.12E-02
945	ALL	738980.96	4036800.87	NonCancerAcute	0.00E+00	9.02E-06	1.92E-03	0.00E+00	0.00E+00	1.92E-03	3.42E-03	0.00E+00	1.11E-02	0.00E+00	0.00E+00	1.92E-03	0.00E+00	0.00E+00	1.11E-02
946	ALL	739080.96	4036800.87	NonCancerAcute	0.00E+00	8.96E-06	1.90E-03	0.00E+00	0.00E+00	1.91E-03	3.43E-03	0.00E+00	1.11E-02	0.00E+00	0.00E+00	1.90E-03	0.00E+00	0.00E+00	1.11E-02
947	ALL	739180.96	4036800.87	NonCancerAcute	0.00E+00	8.95E-06	1.90E-03	0.00E+00	0.00E+00	1.91E-03	3.44E-03	0.00E+00	1.11E-02	0.00E+00	0.00E+00	1.90E-03	0.00E+00	0.00E+00	1.11E-02
948	ALL	739280.96	4036800.87	NonCancerAcute	0.00E+00	8.96E-06	1.90E-03	0.00E+00	0.00E+00	1.91E-03	3.44E-03	0.00E+00	1.11E-02	0.00E+00	0.00E+00	1.90E-03	0.00E+00	0.00E+00	1.11E-02
949	ALL	739380.96	4036800.87	NonCancerAcute	0.00E+00	8.94E-06	1.90E-03	0.00E+00	0.00E+00	1.91E-03	3.43E-03	0.00E+00	1.11E-02	0.00E+00	0.00E+00	1.90E-03	0.00E+00	0.00E+00	1.11E-02
950	ALL	739480.96	4036800.87	NonCancerAcute	0.00E+00	8.89E-06	1.89E-03	0.00E+00	0.00E+00	1.90E-03	3.47E-03	0.00E+00	1.11E-02	0.00E+00	0.00E+00	1.89E-03	0.00E+00	0.00E+00	1.11E-02
951	ALL	739580.96	4036800.87	NonCancerAcute	0.00E+00	8.84E-06	1.88E-03	0.00E+00	0.00E+00	1.88E-03	3.52E-03	0.00E+00	1.11E-02	0.00E+00	0.00E+00	1.88E-03	0.00E+00	0.00E+00	1.11E-02
952	ALL	739680.96	4036800.87	NonCancerAcute	0.00E+00	8.77E-06	1.86E-03	0.00E+00	0.00E+00	1.87E-03	3.56E-03	0.00E+00	1.11E-02	0.00E+00	0.00E+00	1.86E-03	0.00E+00	0.00E+00	1.11E-02

953	ALL	739780.96	4036800.87	NonCancerAcute	0.00E+00	8.68E-06	1.84E-03	0.00E+00	0.00E+00	1.85E-03	3.60E-03	0.00E+00	1.11E-02	0.00E+00	0.00E+00	1.84E-03	0.00E+00	0.00E+00	1.11E-02
954	ALL	739880.96	4036800.87	NonCancerAcute	0.00E+00	8.64E-06	1.83E-03	0.00E+00	0.00E+00	1.84E-03	3.64E-03	0.00E+00	1.11E-02	0.00E+00	0.00E+00	1.83E-03	0.00E+00	0.00E+00	1.11E-02
955	ALL	739980.96	4036800.87	NonCancerAcute	0.00E+00	8.64E-06	1.83E-03	0.00E+00	0.00E+00	1.84E-03	3.67E-03	0.00E+00	1.12E-02	0.00E+00	0.00E+00	1.83E-03	0.00E+00	0.00E+00	1.12E-02
956	ALL	740080.96	4036800.87	NonCancerAcute	0.00E+00	8.60E-06	1.83E-03	0.00E+00	0.00E+00	1.84E-03	3.71E-03	0.00E+00	1.12E-02	0.00E+00	0.00E+00	1.83E-03	0.00E+00	0.00E+00	1.12E-02
957	ALL	740180.96	4036800.87	NonCancerAcute	0.00E+00	8.54E-06	1.81E-03	0.00E+00	0.00E+00	1.82E-03	3.72E-03	0.00E+00	1.12E-02	0.00E+00	0.00E+00	1.81E-03	0.00E+00	0.00E+00	1.12E-02
958	ALL	740280.96	4036800.87	NonCancerAcute	0.00E+00	8.52E-06	1.81E-03	0.00E+00	0.00E+00	1.82E-03	3.73E-03	0.00E+00	1.11E-02	0.00E+00	0.00E+00	1.81E-03	0.00E+00	0.00E+00	1.11E-02
959	ALL	740380.96	4036800.87	NonCancerAcute	0.00E+00	8.50E-06	1.80E-03	0.00E+00	0.00E+00	1.81E-03	3.74E-03	0.00E+00	1.11E-02	0.00E+00	0.00E+00	1.80E-03	0.00E+00	0.00E+00	1.11E-02
960	ALL	740480.96	4036800.87	NonCancerAcute	0.00E+00	8.48E-06	1.80E-03	0.00E+00	0.00E+00	1.81E-03	3.74E-03	0.00E+00	1.11E-02	0.00E+00	0.00E+00	1.80E-03	0.00E+00	0.00E+00	1.11E-02
961	ALL	740580.96	4036800.87	NonCancerAcute	0.00E+00	8.48E-06	1.80E-03	0.00E+00	0.00E+00	1.81E-03	3.75E-03	0.00E+00	1.11E-02	0.00E+00	0.00E+00	1.80E-03	0.00E+00	0.00E+00	1.11E-02
962	ALL	740680.96	4036800.87	NonCancerAcute	0.00E+00	8.50E-06	1.81E-03	0.00E+00	0.00E+00	1.81E-03	3.80E-03	0.00E+00	1.12E-02	0.00E+00	0.00E+00	1.81E-03	0.00E+00	0.00E+00	1.12E-02
963	ALL	740780.96	4036800.87	NonCancerAcute	0.00E+00	8.53E-06	1.81E-03	0.00E+00	0.00E+00	1.82E-03	3.84E-03	0.00E+00	1.13E-02	0.00E+00	0.00E+00	1.81E-03	0.00E+00	0.00E+00	1.13E-02
964	ALL	740880.96	4036800.87	NonCancerAcute	0.00E+00	8.52E-06	1.81E-03	0.00E+00	0.00E+00	1.82E-03	3.88E-03	0.00E+00	1.13E-02	0.00E+00	0.00E+00	1.81E-03	0.00E+00	0.00E+00	1.13E-02
965	ALL	740980.96	4036800.87	NonCancerAcute	0.00E+00	8.52E-06	1.81E-03	0.00E+00	0.00E+00	1.82E-03	3.89E-03	0.00E+00	1.13E-02	0.00E+00	0.00E+00	1.81E-03	0.00E+00	0.00E+00	1.13E-02
966	ALL	741080.96	4036800.87	NonCancerAcute	0.00E+00	8.54E-06	1.81E-03	0.00E+00	0.00E+00	1.82E-03	3.91E-03	0.00E+00	1.14E-02	0.00E+00	0.00E+00	1.81E-03	0.00E+00	0.00E+00	1.14E-02
967	ALL	741180.96	4036800.87	NonCancerAcute	0.00E+00	8.71E-06	1.85E-03	0.00E+00	0.00E+00	1.86E-03	3.93E-03	0.00E+00	1.15E-02	0.00E+00	0.00E+00	1.85E-03	0.00E+00	0.00E+00	1.15E-02
968	ALL	741280.96	4036800.87	NonCancerAcute	0.00E+00	8.91E-06	1.89E-03	0.00E+00	0.00E+00	1.90E-03	3.95E-03	0.00E+00	1.17E-02	0.00E+00	0.00E+00	1.89E-03	0.00E+00	0.00E+00	1.17E-02
969	ALL	741380.96	4036800.87	NonCancerAcute	0.00E+00	9.04E-06	1.92E-03	0.00E+00	0.00E+00	1.93E-03	3.97E-03	0.00E+00	1.18E-02	0.00E+00	0.00E+00	1.92E-03	0.00E+00	0.00E+00	1.18E-02
970	ALL	741480.96	4036800.87	NonCancerAcute	0.00E+00	9.15E-06	1.94E-03	0.00E+00	0.00E+00	1.95E-03	3.99E-03	0.00E+00	1.20E-02	0.00E+00	0.00E+00	1.94E-03	0.00E+00	0.00E+00	1.20E-02
971	ALL	741580.96	4036800.87	NonCancerAcute	0.00E+00	9.21E-06	1.96E-03	0.00E+00	0.00E+00	1.96E-03	4.01E-03	0.00E+00	1.20E-02	0.00E+00	0.00E+00	1.96E-03	0.00E+00	0.00E+00	1.20E-02
972	ALL	741680.96	4036800.87	NonCancerAcute	0.00E+00	9.21E-06	1.96E-03	0.00E+00	0.00E+00	1.96E-03	4.01E-03	0.00E+00	1.20E-02	0.00E+00	0.00E+00	1.96E-03	0.00E+00	0.00E+00	1.20E-02
973	ALL	741780.96	4036800.87	NonCancerAcute	0.00E+00	9.18E-06	1.95E-03	0.00E+00	0.00E+00	1.96E-03	4.01E-03	0.00E+00	1.20E-02	0.00E+00	0.00E+00	1.95E-03	0.00E+00	0.00E+00	1.20E-02
974	ALL	741880.96	4036800.87	NonCancerAcute	0.00E+00	9.16E-06	1.94E-03	0.00E+00	0.00E+00	1.95E-03	4.05E-03	0.00E+00	1.20E-02	0.00E+00	0.00E+00	1.94E-03	0.00E+00	0.00E+00	1.20E-02
975	ALL	741980.96	4036800.87	NonCancerAcute	0.00E+00	9.18E-06	1.95E-03	0.00E+00	0.00E+00	1.96E-03	4.08E-03	0.00E+00	1.21E-02	0.00E+00	0.00E+00	1.95E-03	0.00E+00	0.00E+00	1.21E-02
976	ALL	742080.96	4036800.87	NonCancerAcute	0.00E+00	9.30E-06	1.97E-03	0.00E+00	0.00E+00	1.98E-03	4.08E-03	0.00E+00	1.22E-02	0.00E+00	0.00E+00	1.97E-03	0.00E+00	0.00E+00	1.22E-02
977	ALL	742180.96	4036800.87	NonCancerAcute	0.00E+00	9.34E-06	1.98E-03	0.00E+00	0.00E+00	1.99E-03	4.09E-03	0.00E+00	1.22E-02	0.00E+00	0.00E+00	1.98E-03	0.00E+00	0.00E+00	1.22E-02
978	ALL	742280.96	4036800.87	NonCancerAcute	0.00E+00	9.35E-06	1.99E-03	0.00E+00	0.00E+00	1.99E-03	4.12E-03	0.00E+00	1.23E-02	0.00E+00	0.00E+00	1.99E-03	0.00E+00	0.00E+00	1.23E-02
979	ALL	742380.96	4036800.87	NonCancerAcute	0.00E+00	9.37E-06	1.99E-03	0.00E+00	0.00E+00	2.00E-03	4.20E-03	0.00E+00	1.24E-02	0.00E+00	0.00E+00	1.99E-03	0.00E+00	0.00E+00	1.24E-02
980	ALL	742480.96	4036800.87	NonCancerAcute	0.00E+00	9.40E-06	2.00E-03	0.00E+00	0.00E+00	2.01E-03	4.30E-03	0.00E+00	1.25E-02	0.00E+00	0.00E+00	2.00E-03	0.00E+00	0.00E+00	1.25E-02
981	ALL	742580.96	4036800.87	NonCancerAcute	0.00E+00	9.37E-06	1.99E-03	0.00E+00	0.00E+00	2.00E-03	4.42E-03	0.00E+00	1.26E-02	0.00E+00	0.00E+00	1.99E-03	0.00E+00	0.00E+00	1.26E-02
982	ALL	742680.96	4036800.87	NonCancerAcute	0.00E+00	9.49E-06	2.02E-03	0.00E+00	0.00E+00	2.03E-03	4.56E-03	0.00E+00	1.29E-02	0.00E+00	0.00E+00	2.02E-03	0.00E+00	0.00E+00	1.29E-02
983	ALL	742780.96	4036800.87	NonCancerAcute	0.00E+00	9.62E-06	2.04E-03	0.00E+00	0.00E+00	2.05E-03	4.70E-03	0.00E+00	1.32E-02	0.00E+00	0.00E+00	2.04E-03	0.00E+00	0.00E+00	1.32E-02
984	ALL	742880.96	4036800.87	NonCancerAcute	0.00E+00	9.66E-06	2.05E-03	0.00E+00	0.00E+00	2.06E-03	4.83E-03	0.00E+00	1.34E-02	0.00E+00	0.00E+00	2.05E-03	0.00E+00	0.00E+00	1.34E-02
985	ALL	742980.96	4036800.87	NonCancerAcute	0.00E+00	9.65E-06	2.05E-03	0.00E+00	0.00E+00	2.06E-03	4.95E-03	0.00E+00	1.35E-02	0.00E+00	0.00E+00	2.05E-03	0.00E+00	0.00E+00	1.35E-02
986	ALL	743080.96	4036800.87	NonCancerAcute	0.00E+00	9.77E-06	2.07E-03	0.00E+00	0.00E+00	2.08E-03	5.08E-03	0.00E+00	1.38E-02	0.00E+00	0.00E+00	2.07E-03	0.00E+00	0.00E+00	1.38E-02
987	ALL	743180.96	4036800.87	NonCancerAcute	0.00E+00	9.82E-06	2.08E-03	0.00E+00	0.00E+00	2.09E-03	5.18E-03	0.00E+00	1.39E-02	0.00E+00	0.00E+00	2.08E-03	0.00E+00	0.00E+00	1.39E-02
988	ALL	743280.96	4036800.87	NonCancerAcute	0.00E+00	9.91E-06	2.10E-03	0.00E+00	0.00E+00	2.11E-03	5.28E-03	0.00E+00	1.41E-02	0.00E+00	0.00E+00	2.10E-03	0.00E+00	0.00E+00	1.41E-02
989	ALL	743380.96	4036800.87	NonCancerAcute	0.00E+00	9.84E-06	2.09E-03	0.00E+00	0.00E+00	2.10E-03	5.36E-03	0.00E+00	1.42E-02	0.00E+00	0.00E+00	2.09E-03	0.00E+00	0.00E+00	1.42E-02
990	ALL	743480.96	4036800.87	NonCancerAcute	0.00E+00	9.77E-06	2.07E-03	0.00E+00	0.00E+00	2.08E-03	5.41E-03	0.00E+00	1.42E-02	0.00E+00	0.00E+00	2.07E-03	0.00E+00	0.00E+00	1.42E-02
991	ALL	743580.96	4036800.87	NonCancerAcute	0.00E+00	1.00E-05	2.12E-03	0.00E+00	0.00E+00	2.13E-03	5.48E-03	0.00E+00	1.44E-02	0.00E+00	0.00E+00	2.12E-03	0.00E+00	0.00E+00	1.44E-02
992	ALL	743680.96	4036800.87	NonCancerAcute	0.00E+00	1.01E-05	2.15E-03	0.00E+00	0.00E+00	2.16E-03	5.54E-03	0.00E+00	1.46E-02	0.00E+00	0.00E+00	2.15E-03	0.00E+00	0.00E+00	1.46E-02
993	ALL	743780.96	4036800.87	NonCancerAcute	0.00E+00	1.02E-05	2.17E-03	0.00E+00	0.00E+00	2.18E-03	5.59E-03	0.00E+00	1.47E-02	0.00E+00	0.00E+00	2.17E-03	0.00E+00	0.00E+00	1.47E-02
994	ALL	743880.96	4036800.87	NonCancerAcute	0.00E+00	1.03E-05	2.19E-03	0.00E+00	0.00E+00	2.20E-03	5.62E-03	0.00E+00	1.48E-02	0.00E+00	0.00E+00	2.19E-03	0.00E+00	0.00E+00	1.48E-02
995	ALL	743980.96	4036800.87	NonCancerAcute	0.00E+00	1.04E-05	2.20E-03	0.00E+00	0.00E+00	2.21E-03	5.64E-03	0.00E+00	1.49E-02	0.00E+00	0.00E+00	2.20E-03	0.00E+00	0.00E+00	1.49E-02
996	ALL	744080.96	4036800.87	NonCancerAcute	0.00E+00	1.04E-05	2.20E-03	0.00E+00	0.00E+00	2.21E-03	5.64E-03	0.00E+00	1.49E-02	0.00E+00	0.00E+00	2.20E-03	0.00E+00	0.00E+00	1.49E-02
997	ALL	744180.96	4036800.87	NonCancerAcute	0.00E+00	1.03E-05	2.19E-03	0.00E+00	0.00E+00	2.20E-03	5.64E-03	0.00E+00	1.49E-02	0.00E+00	0.00E+00	2.19E-03	0.00E+00	0.00E+00	1.49E-02
998	ALL	744280.96	4036800.87	NonCancerAcute	0.00E+00	1.05E-05	2.22E-03	0.00E+00	0.00E+00	2.23E-03	5.72E-03	0.00E+00	1.51E-02	0.00E+00	0.00E+00	2.22E-03	0.00E+00	0.00E+00	1.51E-02
999	ALL	744380.96	4036800.87	NonCancerAcute	0.00E+00	1.07E-05	2.26E-03	0.00E+00	0.00E+00	2.27E-03	5.86E-03	0.00E+00	1.54E-02	0.00E+00	0.00E+00	2.26E-03	0.00E+00	0.00E+00	1.54E-02
1000	ALL	744480.96	4036800.87	NonCancerAcute	0.00E+00	1.08E-05	2.29E-03	0.00E+00	0.00E+00	2.30E-03	5.99E-03	0.00E+00	1.57E-02	0.00E+00	0.00E+00	2.29E-03	0.00E+00	0.00E+00	1.57E-02
1001	ALL	744580.96	4036800.87	NonCancerAcute	0.00E+00	1.09E-05	2.32E-03	0.00E+00	0.00E+00	2.33E-03	6.12E-03	0.00E+00	1.59E-02	0.00E+00	0.00E+00	2.32E-03	0.00E+00	0.00E+00	1.59E-02
1002	ALL	744680.96	4036800.87	NonCancerAcute	0.00E+00	1.09E-05	2.32E-03	0.00E+00	0.00E+00	2.33E-03	6.24E-03	0.00E+00	1.61E-02	0.00E+00	0.00E+00	2.32E-03	0.00E+00	0.00E+00	1.61E-02
1003	ALL	744780.96	4036800.87	NonCancerAcute	0.00E+00	1.06E-05	2.24E-03	0.00E+00	0.00E+00	2.25E-03	6.37E-03	0.00E+00	1.60E-02	0.00E+00	0.00E+00	2.24E-03	0.00E+00	0.00E+00	1.60E-02
1004	ALL	744880.96	4036800.87	NonCancerAcute	0.00E+00	1.08E-05	2.30E-03	0.00E+00	0.00E+00	2.31E-03	6.62E-03	0.00E+00	1.65E-02	0.00E+00	0.00E+00	2.30E-03	0.00E+00	0.00E+00	1.65E-02
1005	ALL	744980.96	4036800.87	NonCancerAcute	0.00E+00	1.11E-05	2.35E-03	0.00E+00	0.00E+00	2.36E-03	6.84E-03	0.00E+00	1.69E-02	0.00E+00	0.00E+00	2.35E-03	0.00E+00	0.00E+00	1.69E-02

1006	ALL	745080.96	4036800.87	NonCancerAcute	0.00E+00	1.10E-05	2.34E-03	0.00E+00	0.00E+00	2.35E-03	7.00E-03	0.00E+00	1.71E-02	0.00E+00	0.00E+00	2.34E-03	0.00E+00	0.00E+00	1.71E-02
1007	ALL	745180.96	4036800.87	NonCancerAcute	0.00E+00	1.09E-05	2.31E-03	0.00E+00	0.00E+00	2.32E-03	7.12E-03	0.00E+00	1.71E-02	0.00E+00	0.00E+00	2.31E-03	0.00E+00	0.00E+00	1.71E-02
1008	ALL	745280.96	4036800.87	NonCancerAcute	0.00E+00	1.09E-05	2.31E-03	0.00E+00	0.00E+00	2.32E-03	7.31E-03	0.00E+00	1.74E-02	0.00E+00	0.00E+00	2.31E-03	0.00E+00	0.00E+00	1.74E-02
1009	ALL	745380.96	4036800.87	NonCancerAcute	0.00E+00	1.14E-05	2.42E-03	0.00E+00	0.00E+00	2.43E-03	7.53E-03	0.00E+00	1.80E-02	0.00E+00	0.00E+00	2.42E-03	0.00E+00	0.00E+00	1.80E-02
1010	ALL	745480.96	4036800.87	NonCancerAcute	0.00E+00	1.15E-05	2.44E-03	0.00E+00	0.00E+00	2.45E-03	7.76E-03	0.00E+00	1.84E-02	0.00E+00	0.00E+00	2.44E-03	0.00E+00	0.00E+00	1.84E-02
1011	ALL	745580.96	4036800.87	NonCancerAcute	0.00E+00	1.16E-05	2.46E-03	0.00E+00	0.00E+00	2.47E-03	7.98E-03	0.00E+00	1.87E-02	0.00E+00	0.00E+00	2.46E-03	0.00E+00	0.00E+00	1.87E-02
1012	ALL	745680.96	4036800.87	NonCancerAcute	0.00E+00	1.15E-05	2.45E-03	0.00E+00	0.00E+00	2.46E-03	8.20E-03	0.00E+00	1.89E-02	0.00E+00	0.00E+00	2.45E-03	0.00E+00	0.00E+00	1.89E-02
1013	ALL	745780.96	4036800.87	NonCancerAcute	0.00E+00	1.20E-05	2.56E-03	0.00E+00	0.00E+00	2.57E-03	8.43E-03	0.00E+00	1.96E-02	0.00E+00	0.00E+00	2.56E-03	0.00E+00	0.00E+00	1.96E-02
1014	ALL	745880.96	4036800.87	NonCancerAcute	0.00E+00	1.23E-05	2.61E-03	0.00E+00	0.00E+00	2.63E-03	8.56E-03	0.00E+00	2.00E-02	0.00E+00	0.00E+00	2.61E-03	0.00E+00	0.00E+00	2.00E-02
1015	ALL	741480.96	4036900.87	NonCancerAcute	0.00E+00	8.90E-06	1.89E-03	0.00E+00	0.00E+00	1.90E-03	4.01E-03	0.00E+00	1.18E-02	0.00E+00	0.00E+00	1.89E-03	0.00E+00	0.00E+00	1.18E-02
1016	ALL	741580.96	4036900.87	NonCancerAcute	0.00E+00	9.05E-06	1.92E-03	0.00E+00	0.00E+00	1.93E-03	4.01E-03	0.00E+00	1.19E-02	0.00E+00	0.00E+00	1.92E-03	0.00E+00	0.00E+00	1.19E-02
1017	ALL	741680.96	4036900.87	NonCancerAcute	0.00E+00	9.14E-06	1.94E-03	0.00E+00	0.00E+00	1.95E-03	4.02E-03	0.00E+00	1.20E-02	0.00E+00	0.00E+00	1.94E-03	0.00E+00	0.00E+00	1.20E-02
1018	ALL	741780.96	4036900.87	NonCancerAcute	0.00E+00	9.24E-06	1.96E-03	0.00E+00	0.00E+00	1.97E-03	4.03E-03	0.00E+00	1.21E-02	0.00E+00	0.00E+00	1.96E-03	0.00E+00	0.00E+00	1.21E-02
1019	ALL	741880.96	4036900.87	NonCancerAcute	0.00E+00	9.20E-06	1.95E-03	0.00E+00	0.00E+00	1.96E-03	4.06E-03	0.00E+00	1.21E-02	0.00E+00	0.00E+00	1.95E-03	0.00E+00	0.00E+00	1.21E-02
1020	ALL	741980.96	4036900.87	NonCancerAcute	0.00E+00	9.23E-06	1.96E-03	0.00E+00	0.00E+00	1.97E-03	4.09E-03	0.00E+00	1.21E-02	0.00E+00	0.00E+00	1.96E-03	0.00E+00	0.00E+00	1.21E-02
1021	ALL	742080.96	4036900.87	NonCancerAcute	0.00E+00	9.25E-06	1.96E-03	0.00E+00	0.00E+00	1.97E-03	4.08E-03	0.00E+00	1.21E-02	0.00E+00	0.00E+00	1.96E-03	0.00E+00	0.00E+00	1.21E-02
1022	ALL	742180.96	4036900.87	NonCancerAcute	0.00E+00	9.30E-06	1.98E-03	0.00E+00	0.00E+00	1.98E-03	4.08E-03	0.00E+00	1.22E-02	0.00E+00	0.00E+00	1.98E-03	0.00E+00	0.00E+00	1.22E-02
1023	ALL	742280.96	4036900.87	NonCancerAcute	0.00E+00	9.38E-06	1.99E-03	0.00E+00	0.00E+00	2.00E-03	4.08E-03	0.00E+00	1.22E-02	0.00E+00	0.00E+00	1.99E-03	0.00E+00	0.00E+00	1.22E-02
1024	ALL	742380.96	4036900.87	NonCancerAcute	0.00E+00	9.38E-06	1.99E-03	0.00E+00	0.00E+00	2.00E-03	4.07E-03	0.00E+00	1.22E-02	0.00E+00	0.00E+00	1.99E-03	0.00E+00	0.00E+00	1.22E-02
1025	ALL	742480.96	4036900.87	NonCancerAcute	0.00E+00	9.44E-06	2.01E-03	0.00E+00	0.00E+00	2.01E-03	4.10E-03	0.00E+00	1.23E-02	0.00E+00	0.00E+00	2.01E-03	0.00E+00	0.00E+00	1.23E-02
1026	ALL	742580.96	4036900.87	NonCancerAcute	0.00E+00	9.52E-06	2.02E-03	0.00E+00	0.00E+00	2.03E-03	4.19E-03	0.00E+00	1.25E-02	0.00E+00	0.00E+00	2.02E-03	0.00E+00	0.00E+00	1.25E-02
1027	ALL	742680.96	4036900.87	NonCancerAcute	0.00E+00	9.49E-06	2.02E-03	0.00E+00	0.00E+00	2.02E-03	4.29E-03	0.00E+00	1.26E-02	0.00E+00	0.00E+00	2.02E-03	0.00E+00	0.00E+00	1.26E-02
1028	ALL	742780.96	4036900.87	NonCancerAcute	0.00E+00	9.40E-06	2.00E-03	0.00E+00	0.00E+00	2.01E-03	4.40E-03	0.00E+00	1.26E-02	0.00E+00	0.00E+00	2.00E-03	0.00E+00	0.00E+00	1.26E-02
1029	ALL	742880.96	4036900.87	NonCancerAcute	0.00E+00	9.51E-06	2.02E-03	0.00E+00	0.00E+00	2.03E-03	4.55E-03	0.00E+00	1.29E-02	0.00E+00	0.00E+00	2.02E-03	0.00E+00	0.00E+00	1.29E-02
1030	ALL	742980.96	4036900.87	NonCancerAcute	0.00E+00	9.53E-06	2.02E-03	0.00E+00	0.00E+00	2.03E-03	4.69E-03	0.00E+00	1.31E-02	0.00E+00	0.00E+00	2.02E-03	0.00E+00	0.00E+00	1.31E-02
1031	ALL	743080.96	4036900.87	NonCancerAcute	0.00E+00	9.64E-06	2.05E-03	0.00E+00	0.00E+00	2.06E-03	4.83E-03	0.00E+00	1.34E-02	0.00E+00	0.00E+00	2.05E-03	0.00E+00	0.00E+00	1.34E-02
1032	ALL	743180.96	4036900.87	NonCancerAcute	0.00E+00	9.75E-06	2.07E-03	0.00E+00	0.00E+00	2.08E-03	4.97E-03	0.00E+00	1.36E-02	0.00E+00	0.00E+00	2.07E-03	0.00E+00	0.00E+00	1.36E-02
1033	ALL	743280.96	4036900.87	NonCancerAcute	0.00E+00	9.84E-06	2.09E-03	0.00E+00	0.00E+00	2.10E-03	5.09E-03	0.00E+00	1.38E-02	0.00E+00	0.00E+00	2.09E-03	0.00E+00	0.00E+00	1.38E-02
1034	ALL	743380.96	4036900.87	NonCancerAcute	0.00E+00	9.94E-06	2.11E-03	0.00E+00	0.00E+00	2.12E-03	5.22E-03	0.00E+00	1.41E-02	0.00E+00	0.00E+00	2.11E-03	0.00E+00	0.00E+00	1.41E-02
1035	ALL	743480.96	4036900.87	NonCancerAcute	0.00E+00	9.97E-06	2.12E-03	0.00E+00	0.00E+00	2.13E-03	5.29E-03	0.00E+00	1.42E-02	0.00E+00	0.00E+00	2.12E-03	0.00E+00	0.00E+00	1.42E-02
1036	ALL	743580.96	4036900.87	NonCancerAcute	0.00E+00	9.99E-06	2.12E-03	0.00E+00	0.00E+00	2.13E-03	5.39E-03	0.00E+00	1.43E-02	0.00E+00	0.00E+00	2.12E-03	0.00E+00	0.00E+00	1.43E-02
1037	ALL	743680.96	4036900.87	NonCancerAcute	0.00E+00	1.01E-05	2.15E-03	0.00E+00	0.00E+00	2.16E-03	5.48E-03	0.00E+00	1.45E-02	0.00E+00	0.00E+00	2.15E-03	0.00E+00	0.00E+00	1.45E-02
1038	ALL	743780.96	4036900.87	NonCancerAcute	0.00E+00	1.03E-05	2.18E-03	0.00E+00	0.00E+00	2.19E-03	5.56E-03	0.00E+00	1.47E-02	0.00E+00	0.00E+00	2.18E-03	0.00E+00	0.00E+00	1.47E-02
1039	ALL	743880.96	4036900.87	NonCancerAcute	0.00E+00	1.03E-05	2.19E-03	0.00E+00	0.00E+00	2.20E-03	5.62E-03	0.00E+00	1.48E-02	0.00E+00	0.00E+00	2.19E-03	0.00E+00	0.00E+00	1.48E-02
1040	ALL	743980.96	4036900.87	NonCancerAcute	0.00E+00	1.04E-05	2.21E-03	0.00E+00	0.00E+00	2.22E-03	5.67E-03	0.00E+00	1.50E-02	0.00E+00	0.00E+00	2.21E-03	0.00E+00	0.00E+00	1.50E-02
1041	ALL	744080.96	4036900.87	NonCancerAcute	0.00E+00	1.05E-05	2.23E-03	0.00E+00	0.00E+00	2.24E-03	5.71E-03	0.00E+00	1.51E-02	0.00E+00	0.00E+00	2.23E-03	0.00E+00	0.00E+00	1.51E-02
1042	ALL	744180.96	4036900.87	NonCancerAcute	0.00E+00	1.05E-05	2.24E-03	0.00E+00	0.00E+00	2.25E-03	5.73E-03	0.00E+00	1.52E-02	0.00E+00	0.00E+00	2.24E-03	0.00E+00	0.00E+00	1.52E-02
1043	ALL	744280.96	4036900.87	NonCancerAcute	0.00E+00	1.05E-05	2.23E-03	0.00E+00	0.00E+00	2.24E-03	5.76E-03	0.00E+00	1.52E-02	0.00E+00	0.00E+00	2.23E-03	0.00E+00	0.00E+00	1.52E-02
1044	ALL	744380.96	4036900.87	NonCancerAcute	0.00E+00	1.06E-05	2.25E-03	0.00E+00	0.00E+00	2.27E-03	5.78E-03	0.00E+00	1.53E-02	0.00E+00	0.00E+00	2.25E-03	0.00E+00	0.00E+00	1.53E-02
1045	ALL	744480.96	4036900.87	NonCancerAcute	0.00E+00	1.07E-05	2.27E-03	0.00E+00	0.00E+00	2.28E-03	5.91E-03	0.00E+00	1.55E-02	0.00E+00	0.00E+00	2.27E-03	0.00E+00	0.00E+00	1.55E-02
1046	ALL	744580.96	4036900.87	NonCancerAcute	0.00E+00	1.09E-05	2.31E-03	0.00E+00	0.00E+00	2.32E-03	6.06E-03	0.00E+00	1.58E-02	0.00E+00	0.00E+00	2.31E-03	0.00E+00	0.00E+00	1.58E-02
1047	ALL	744680.96	4036900.87	NonCancerAcute	0.00E+00	1.10E-05	2.33E-03	0.00E+00	0.00E+00	2.34E-03	6.20E-03	0.00E+00	1.61E-02	0.00E+00	0.00E+00	2.33E-03	0.00E+00	0.00E+00	1.61E-02
1048	ALL	744780.96	4036900.87	NonCancerAcute	0.00E+00	1.10E-05	2.34E-03	0.00E+00	0.00E+00	2.35E-03	6.34E-03	0.00E+00	1.63E-02	0.00E+00	0.00E+00	2.34E-03	0.00E+00	0.00E+00	1.63E-02
1049	ALL	744880.96	4036900.87	NonCancerAcute	0.00E+00	1.07E-05	2.28E-03	0.00E+00	0.00E+00	2.29E-03	6.48E-03	0.00E+00	1.62E-02	0.00E+00	0.00E+00	2.28E-03	0.00E+00	0.00E+00	1.62E-02
1050	ALL	744980.96	4036900.87	NonCancerAcute	0.00E+00	1.10E-05	2.34E-03	0.00E+00	0.00E+00	2.35E-03	6.77E-03	0.00E+00	1.68E-02	0.00E+00	0.00E+00	2.34E-03	0.00E+00	0.00E+00	1.68E-02
1051	ALL	745080.96	4036900.87	NonCancerAcute	0.00E+00	1.13E-05	2.40E-03	0.00E+00	0.00E+00	2.41E-03	7.01E-03	0.00E+00	1.73E-02	0.00E+00	0.00E+00	2.40E-03	0.00E+00	0.00E+00	1.73E-02
1052	ALL	745180.96	4036900.87	NonCancerAcute	0.00E+00	1.12E-05	2.38E-03	0.00E+00	0.00E+00	2.39E-03	7.18E-03	0.00E+00	1.75E-02	0.00E+00	0.00E+00	2.38E-03	0.00E+00	0.00E+00	1.75E-02
1053	ALL	745280.96	4036900.87	NonCancerAcute	0.00E+00	1.10E-05	2.33E-03	0.00E+00	0.00E+00	2.34E-03	7.32E-03	0.00E+00	1.74E-02	0.00E+00	0.00E+00	2.33E-03	0.00E+00	0.00E+00	1.74E-02
1054	ALL	745380.96	4036900.87	NonCancerAcute	0.00E+00	1.11E-05	2.36E-03	0.00E+00	0.00E+00	2.37E-03	7.52E-03	0.00E+00	1.78E-02	0.00E+00	0.00E+00	2.36E-03	0.00E+00	0.00E+00	1.78E-02
1055	ALL	745480.96	4036900.87	NonCancerAcute	0.00E+00	1.15E-05	2.44E-03	0.00E+00	0.00E+00	2.45E-03	7.75E-03	0.00E+00	1.84E-02	0.00E+00	0.00E+00	2.44E-03	0.00E+00	0.00E+00	1.84E-02
1056	ALL	745580.96	4036900.87	NonCancerAcute	0.00E+00	1.16E-05	2.46E-03	0.00E+00	0.00E+00	2.47E-03	7.97E-03	0.00E+00	1.87E-02	0.00E+00	0.00E+00	2.46E-03	0.00E+00	0.00E+00	1.87E-02
1057	ALL	745680.96	4036900.87	NonCancerAcute	0.00E+00	1.21E-05	2.56E-03	0.00E+00	0.00E+00	2.57E-03	8.20E-03	0.00E+00	1.94E-02	0.00E+00	0.00E+00	2.56E-03	0.00E+00	0.00E+00	1.94E-02
1058	ALL	745780.96	4036900.87	NonCancerAcute	0.00E+00	1.22E-05	2.58E-03	0.00E+00	0.00E+00	2.59E-03	8.42E-03	0.00E+00	1.97E-02	0.00E+00	0.00E+00	2.58E-03	0.00E+00	0.00E+00	1.97E-02

1059	ALL	745880.96	4036900.87	NonCancerAcute	0.00E+00	1.19E-05	2.52E-03	0.00E+00	0.00E+00	2.53E-03	8.61E-03	0.00E+00	1.97E-02	0.00E+00	0.00E+00	2.52E-03	0.00E+00	0.00E+00	1.97E-02
1060	ALL	747188.42	4034760.7	NonCancerAcute	0.00E+00	1.20E-05	2.55E-03	0.00E+00	0.00E+00	2.56E-03	5.69E-03	0.00E+00	1.62E-02	0.00E+00	0.00E+00	2.55E-03	0.00E+00	0.00E+00	1.62E-02
1061	ALL	747288.42	4034760.7	NonCancerAcute	0.00E+00	1.24E-05	2.64E-03	0.00E+00	0.00E+00	2.65E-03	5.63E-03	0.00E+00	1.65E-02	0.00E+00	0.00E+00	2.64E-03	0.00E+00	0.00E+00	1.65E-02
1062	ALL	747388.42	4034760.7	NonCancerAcute	0.00E+00	1.24E-05	2.63E-03	0.00E+00	0.00E+00	2.64E-03	5.56E-03	0.00E+00	1.64E-02	0.00E+00	0.00E+00	2.63E-03	0.00E+00	0.00E+00	1.64E-02
1063	ALL	747488.42	4034760.7	NonCancerAcute	0.00E+00	1.19E-05	2.52E-03	0.00E+00	0.00E+00	2.53E-03	5.61E-03	0.00E+00	1.60E-02	0.00E+00	0.00E+00	2.52E-03	0.00E+00	0.00E+00	1.60E-02
1064	ALL	747588.42	4034760.7	NonCancerAcute	0.00E+00	1.13E-05	2.39E-03	0.00E+00	0.00E+00	2.40E-03	5.49E-03	0.00E+00	1.54E-02	0.00E+00	0.00E+00	2.39E-03	0.00E+00	0.00E+00	1.54E-02
1065	ALL	747688.42	4034760.7	NonCancerAcute	0.00E+00	1.15E-05	2.44E-03	0.00E+00	0.00E+00	2.45E-03	5.53E-03	0.00E+00	1.56E-02	0.00E+00	0.00E+00	2.44E-03	0.00E+00	0.00E+00	1.56E-02
1066	ALL	747788.42	4034760.7	NonCancerAcute	0.00E+00	1.14E-05	2.42E-03	0.00E+00	0.00E+00	2.43E-03	5.64E-03	0.00E+00	1.57E-02	0.00E+00	0.00E+00	2.42E-03	0.00E+00	0.00E+00	1.57E-02
1067	ALL	747888.42	4034760.7	NonCancerAcute	0.00E+00	1.11E-05	2.36E-03	0.00E+00	0.00E+00	2.37E-03	5.54E-03	0.00E+00	1.54E-02	0.00E+00	0.00E+00	2.36E-03	0.00E+00	0.00E+00	1.54E-02
1068	ALL	747988.42	4034760.7	NonCancerAcute	0.00E+00	1.07E-05	2.27E-03	0.00E+00	0.00E+00	2.28E-03	5.22E-03	0.00E+00	1.46E-02	0.00E+00	0.00E+00	2.27E-03	0.00E+00	0.00E+00	1.46E-02
1069	ALL	748088.42	4034760.7	NonCancerAcute	0.00E+00	1.04E-05	2.22E-03	0.00E+00	0.00E+00	2.23E-03	5.16E-03	0.00E+00	1.44E-02	0.00E+00	0.00E+00	2.22E-03	0.00E+00	0.00E+00	1.44E-02
1070	ALL	748188.42	4034760.7	NonCancerAcute	0.00E+00	1.05E-05	2.24E-03	0.00E+00	0.00E+00	2.25E-03	5.09E-03	0.00E+00	1.44E-02	0.00E+00	0.00E+00	2.24E-03	0.00E+00	0.00E+00	1.44E-02
1071	ALL	748288.42	4034760.7	NonCancerAcute	0.00E+00	1.06E-05	2.25E-03	0.00E+00	0.00E+00	2.26E-03	5.03E-03	0.00E+00	1.43E-02	0.00E+00	0.00E+00	2.25E-03	0.00E+00	0.00E+00	1.43E-02
1072	ALL	748388.42	4034760.7	NonCancerAcute	0.00E+00	1.05E-05	2.22E-03	0.00E+00	0.00E+00	2.23E-03	4.71E-03	0.00E+00	1.38E-02	0.00E+00	0.00E+00	2.22E-03	0.00E+00	0.00E+00	1.38E-02
1073	ALL	748488.42	4034760.7	NonCancerAcute	0.00E+00	1.02E-05	2.17E-03	0.00E+00	0.00E+00	2.18E-03	4.68E-03	0.00E+00	1.36E-02	0.00E+00	0.00E+00	2.17E-03	0.00E+00	0.00E+00	1.36E-02
1074	ALL	748588.42	4034760.7	NonCancerAcute	0.00E+00	1.00E-05	2.13E-03	0.00E+00	0.00E+00	2.14E-03	4.71E-03	0.00E+00	1.35E-02	0.00E+00	0.00E+00	2.13E-03	0.00E+00	0.00E+00	1.35E-02
1075	ALL	748688.42	4034760.7	NonCancerAcute	0.00E+00	1.01E-05	2.15E-03	0.00E+00	0.00E+00	2.16E-03	4.56E-03	0.00E+00	1.34E-02	0.00E+00	0.00E+00	2.15E-03	0.00E+00	0.00E+00	1.34E-02
1076	ALL	748788.42	4034760.7	NonCancerAcute	0.00E+00	1.00E-05	2.13E-03	0.00E+00	0.00E+00	2.14E-03	4.48E-03	0.00E+00	1.32E-02	0.00E+00	0.00E+00	2.13E-03	0.00E+00	0.00E+00	1.32E-02
1077	ALL	748888.42	4034760.7	NonCancerAcute	0.00E+00	9.93E-06	2.11E-03	0.00E+00	0.00E+00	2.12E-03	4.61E-03	0.00E+00	1.33E-02	0.00E+00	0.00E+00	2.11E-03	0.00E+00	0.00E+00	1.33E-02
1078	ALL	747188.42	4034860.7	NonCancerAcute	0.00E+00	1.24E-05	2.63E-03	0.00E+00	0.00E+00	2.64E-03	5.90E-03	0.00E+00	1.68E-02	0.00E+00	0.00E+00	2.63E-03	0.00E+00	0.00E+00	1.68E-02
1079	ALL	747288.42	4034860.7	NonCancerAcute	0.00E+00	1.29E-05	2.74E-03	0.00E+00	0.00E+00	2.75E-03	5.90E-03	0.00E+00	1.72E-02	0.00E+00	0.00E+00	2.74E-03	0.00E+00	0.00E+00	1.72E-02
1080	ALL	747388.42	4034860.7	NonCancerAcute	0.00E+00	1.26E-05	2.67E-03	0.00E+00	0.00E+00	2.68E-03	5.78E-03	0.00E+00	1.68E-02	0.00E+00	0.00E+00	2.67E-03	0.00E+00	0.00E+00	1.68E-02
1081	ALL	747488.42	4034860.7	NonCancerAcute	0.00E+00	1.18E-05	2.51E-03	0.00E+00	0.00E+00	2.52E-03	5.79E-03	0.00E+00	1.62E-02	0.00E+00	0.00E+00	2.51E-03	0.00E+00	0.00E+00	1.62E-02
1082	ALL	747588.42	4034860.7	NonCancerAcute	0.00E+00	1.16E-05	2.47E-03	0.00E+00	0.00E+00	2.48E-03	5.66E-03	0.00E+00	1.59E-02	0.00E+00	0.00E+00	2.47E-03	0.00E+00	0.00E+00	1.59E-02
1083	ALL	747688.42	4034860.7	NonCancerAcute	0.00E+00	1.18E-05	2.50E-03	0.00E+00	0.00E+00	2.51E-03	5.82E-03	0.00E+00	1.62E-02	0.00E+00	0.00E+00	2.50E-03	0.00E+00	0.00E+00	1.62E-02
1084	ALL	747788.42	4034860.7	NonCancerAcute	0.00E+00	1.15E-05	2.44E-03	0.00E+00	0.00E+00	2.45E-03	5.64E-03	0.00E+00	1.58E-02	0.00E+00	0.00E+00	2.44E-03	0.00E+00	0.00E+00	1.58E-02
1085	ALL	747888.42	4034860.7	NonCancerAcute	0.00E+00	1.11E-05	2.36E-03	0.00E+00	0.00E+00	2.37E-03	5.63E-03	0.00E+00	1.55E-02	0.00E+00	0.00E+00	2.36E-03	0.00E+00	0.00E+00	1.55E-02
1086	ALL	747988.42	4034860.7	NonCancerAcute	0.00E+00	1.08E-05	2.29E-03	0.00E+00	0.00E+00	2.30E-03	5.35E-03	0.00E+00	1.49E-02	0.00E+00	0.00E+00	2.29E-03	0.00E+00	0.00E+00	1.49E-02
1087	ALL	748088.42	4034860.7	NonCancerAcute	0.00E+00	1.07E-05	2.28E-03	0.00E+00	0.00E+00	2.29E-03	5.26E-03	0.00E+00	1.47E-02	0.00E+00	0.00E+00	2.28E-03	0.00E+00	0.00E+00	1.47E-02
1088	ALL	748188.42	4034860.7	NonCancerAcute	0.00E+00	1.08E-05	2.29E-03	0.00E+00	0.00E+00	2.30E-03	5.25E-03	0.00E+00	1.48E-02	0.00E+00	0.00E+00	2.29E-03	0.00E+00	0.00E+00	1.48E-02
1089	ALL	748288.42	4034860.7	NonCancerAcute	0.00E+00	1.07E-05	2.28E-03	0.00E+00	0.00E+00	2.29E-03	4.97E-03	0.00E+00	1.44E-02	0.00E+00	0.00E+00	2.28E-03	0.00E+00	0.00E+00	1.44E-02
1090	ALL	748388.42	4034860.7	NonCancerAcute	0.00E+00	1.05E-05	2.24E-03	0.00E+00	0.00E+00	2.25E-03	4.87E-03	0.00E+00	1.41E-02	0.00E+00	0.00E+00	2.24E-03	0.00E+00	0.00E+00	1.41E-02
1091	ALL	748488.42	4034860.7	NonCancerAcute	0.00E+00	1.03E-05	2.18E-03	0.00E+00	0.00E+00	2.19E-03	4.89E-03	0.00E+00	1.39E-02	0.00E+00	0.00E+00	2.18E-03	0.00E+00	0.00E+00	1.39E-02
1092	ALL	748588.42	4034860.7	NonCancerAcute	0.00E+00	1.01E-05	2.15E-03	0.00E+00	0.00E+00	2.15E-03	4.79E-03	0.00E+00	1.37E-02	0.00E+00	0.00E+00	2.15E-03	0.00E+00	0.00E+00	1.37E-02
1093	ALL	748688.42	4034860.7	NonCancerAcute	0.00E+00	1.02E-05	2.18E-03	0.00E+00	0.00E+00	2.19E-03	4.63E-03	0.00E+00	1.36E-02	0.00E+00	0.00E+00	2.18E-03	0.00E+00	0.00E+00	1.36E-02
1094	ALL	748788.42	4034860.7	NonCancerAcute	0.00E+00	1.01E-05	2.15E-03	0.00E+00	0.00E+00	2.16E-03	4.69E-03	0.00E+00	1.36E-02	0.00E+00	0.00E+00	2.15E-03	0.00E+00	0.00E+00	1.36E-02
1095	ALL	748888.42	4034860.7	NonCancerAcute	0.00E+00	1.00E-05	2.12E-03	0.00E+00	0.00E+00	2.13E-03	4.68E-03	0.00E+00	1.35E-02	0.00E+00	0.00E+00	2.12E-03	0.00E+00	0.00E+00	1.35E-02
1096	ALL	747188.42	4034960.7	NonCancerAcute	0.00E+00	1.28E-05	2.71E-03	0.00E+00	0.00E+00	2.73E-03	6.12E-03	0.00E+00	1.73E-02	0.00E+00	0.00E+00	2.71E-03	0.00E+00	0.00E+00	1.73E-02
1097	ALL	747288.42	4034960.7	NonCancerAcute	0.00E+00	1.34E-05	2.85E-03	0.00E+00	0.00E+00	2.86E-03	6.14E-03	0.00E+00	1.79E-02	0.00E+00	0.00E+00	2.85E-03	0.00E+00	0.00E+00	1.79E-02
1098	ALL	747388.42	4034960.7	NonCancerAcute	0.00E+00	1.28E-05	2.72E-03	0.00E+00	0.00E+00	2.73E-03	6.04E-03	0.00E+00	1.73E-02	0.00E+00	0.00E+00	2.72E-03	0.00E+00	0.00E+00	1.73E-02
1099	ALL	747488.42	4034960.7	NonCancerAcute	0.00E+00	1.19E-05	2.52E-03	0.00E+00	0.00E+00	2.53E-03	5.95E-03	0.00E+00	1.64E-02	0.00E+00	0.00E+00	2.52E-03	0.00E+00	0.00E+00	1.64E-02
1100	ALL	747588.42	4034960.7	NonCancerAcute	0.00E+00	1.20E-05	2.55E-03	0.00E+00	0.00E+00	2.56E-03	5.85E-03	0.00E+00	1.64E-02	0.00E+00	0.00E+00	2.55E-03	0.00E+00	0.00E+00	1.64E-02
1101	ALL	747688.42	4034960.7	NonCancerAcute	0.00E+00	1.20E-05	2.54E-03	0.00E+00	0.00E+00	2.55E-03	5.98E-03	0.00E+00	1.66E-02	0.00E+00	0.00E+00	2.54E-03	0.00E+00	0.00E+00	1.66E-02
1102	ALL	747788.42	4034960.7	NonCancerAcute	0.00E+00	1.15E-05	2.45E-03	0.00E+00	0.00E+00	2.46E-03	5.89E-03	0.00E+00	1.61E-02	0.00E+00	0.00E+00	2.45E-03	0.00E+00	0.00E+00	1.61E-02
1103	ALL	747888.42	4034960.7	NonCancerAcute	0.00E+00	1.12E-05	2.37E-03	0.00E+00	0.00E+00	2.39E-03	5.67E-03	0.00E+00	1.56E-02	0.00E+00	0.00E+00	2.37E-03	0.00E+00	0.00E+00	1.56E-02
1104	ALL	747988.42	4034960.7	NonCancerAcute	0.00E+00	1.12E-05	2.38E-03	0.00E+00	0.00E+00	2.39E-03	5.53E-03	0.00E+00	1.54E-02	0.00E+00	0.00E+00	2.38E-03	0.00E+00	0.00E+00	1.54E-02
1105	ALL	748088.42	4034960.7	NonCancerAcute	0.00E+00	1.10E-05	2.34E-03	0.00E+00	0.00E+00	2.35E-03	5.49E-03	0.00E+00	1.52E-02	0.00E+00	0.00E+00	2.34E-03	0.00E+00	0.00E+00	1.52E-02
1106	ALL	748188.42	4034960.7	NonCancerAcute	0.00E+00	1.09E-05	2.32E-03	0.00E+00	0.00E+00	2.33E-03	5.24E-03	0.00E+00	1.48E-02	0.00E+00	0.00E+00	2.32E-03	0.00E+00	0.00E+00	1.48E-02
1107	ALL	748288.42	4034960.7	NonCancerAcute	0.00E+00	1.08E-05	2.28E-03	0.00E+00	0.00E+00	2.29E-03	5.13E-03	0.00E+00	1.46E-02	0.00E+00	0.00E+00	2.28E-03	0.00E+00	0.00E+00	1.46E-02
1108	ALL	748388.42	4034960.7	NonCancerAcute	0.00E+00	1.06E-05	2.25E-03	0.00E+00	0.00E+00	2.26E-03	5.07E-03	0.00E+00	1.44E-02	0.00E+00	0.00E+00	2.25E-03	0.00E+00	0.00E+00	1.44E-02
1109	ALL	748488.42	4034960.7	NonCancerAcute	0.00E+00	1.04E-05	2.20E-03	0.00E+00	0.00E+00	2.21E-03	5.00E-03	0.00E+00	1.41E-02	0.00E+00	0.00E+00	2.20E-03	0.00E+00	0.00E+00	1.41E-02
1110	ALL	748588.42	4034960.7	NonCancerAcute	0.00E+00	1.02E-05	2.17E-03	0.00E+00	0.00E+00	2.18E-03	4.83E-03	0.00E+00	1.38E-02	0.00E+00	0.00E+00	2.17E-03	0.00E+00	0.00E+00	1.38E-02
1111	ALL	748688.42	4034960.7	NonCancerAcute	0.00E+00	1.03E-05	2.19E-03	0.00E+00	0.00E+00	2.20E-03	4.86E-03	0.00E+00	1.39E-02	0.00E+00	0.00E+00	2.19E-03	0.00E+00	0.00E+00	1.39E-02

1112	ALL	748788.42	4034960.7	NonCancerAcute	0.00E+00	1.02E-05	2.17E-03	0.00E+00	0.00E+00	2.18E-03	4.79E-03	0.00E+00	1.37E-02	0.00E+00	0.00E+00	2.17E-03	0.00E+00	0.00E+00	1.37E-02
1113	ALL	748888.42	4034960.7	NonCancerAcute	0.00E+00	1.00E-05	2.13E-03	0.00E+00	0.00E+00	2.14E-03	4.67E-03	0.00E+00	1.35E-02	0.00E+00	0.00E+00	2.13E-03	0.00E+00	0.00E+00	1.35E-02
1114	ALL	747188.42	4035060.7	NonCancerAcute	0.00E+00	1.34E-05	2.84E-03	0.00E+00	0.00E+00	2.85E-03	6.37E-03	0.00E+00	1.81E-02	0.00E+00	0.00E+00	2.84E-03	0.00E+00	0.00E+00	1.81E-02
1115	ALL	747288.42	4035060.7	NonCancerAcute	0.00E+00	1.40E-05	2.96E-03	0.00E+00	0.00E+00	2.98E-03	6.33E-03	0.00E+00	1.85E-02	0.00E+00	0.00E+00	2.96E-03	0.00E+00	0.00E+00	1.85E-02
1116	ALL	747388.42	4035060.7	NonCancerAcute	0.00E+00	1.30E-05	2.77E-03	0.00E+00	0.00E+00	2.78E-03	6.28E-03	0.00E+00	1.77E-02	0.00E+00	0.00E+00	2.77E-03	0.00E+00	0.00E+00	1.77E-02
1117	ALL	747488.42	4035060.7	NonCancerAcute	0.00E+00	1.21E-05	2.58E-03	0.00E+00	0.00E+00	2.59E-03	6.12E-03	0.00E+00	1.69E-02	0.00E+00	0.00E+00	2.58E-03	0.00E+00	0.00E+00	1.69E-02
1118	ALL	747588.42	4035060.7	NonCancerAcute	0.00E+00	1.23E-05	2.62E-03	0.00E+00	0.00E+00	2.63E-03	6.15E-03	0.00E+00	1.71E-02	0.00E+00	0.00E+00	2.62E-03	0.00E+00	0.00E+00	1.71E-02
1119	ALL	747688.42	4035060.7	NonCancerAcute	0.00E+00	1.21E-05	2.57E-03	0.00E+00	0.00E+00	2.58E-03	6.00E-03	0.00E+00	1.67E-02	0.00E+00	0.00E+00	2.57E-03	0.00E+00	0.00E+00	1.67E-02
1120	ALL	747788.42	4035060.7	NonCancerAcute	0.00E+00	1.14E-05	2.43E-03	0.00E+00	0.00E+00	2.44E-03	6.00E-03	0.00E+00	1.62E-02	0.00E+00	0.00E+00	2.43E-03	0.00E+00	0.00E+00	1.62E-02
1121	ALL	747888.42	4035060.7	NonCancerAcute	0.00E+00	1.17E-05	2.49E-03	0.00E+00	0.00E+00	2.50E-03	5.84E-03	0.00E+00	1.62E-02	0.00E+00	0.00E+00	2.49E-03	0.00E+00	0.00E+00	1.62E-02
1122	ALL	747988.42	4035060.7	NonCancerAcute	0.00E+00	1.16E-05	2.45E-03	0.00E+00	0.00E+00	2.46E-03	5.70E-03	0.00E+00	1.59E-02	0.00E+00	0.00E+00	2.45E-03	0.00E+00	0.00E+00	1.59E-02
1123	ALL	748088.42	4035060.7	NonCancerAcute	0.00E+00	1.12E-05	2.38E-03	0.00E+00	0.00E+00	2.39E-03	5.56E-03	0.00E+00	1.55E-02	0.00E+00	0.00E+00	2.38E-03	0.00E+00	0.00E+00	1.55E-02
1124	ALL	748188.42	4035060.7	NonCancerAcute	0.00E+00	1.10E-05	2.33E-03	0.00E+00	0.00E+00	2.34E-03	5.36E-03	0.00E+00	1.50E-02	0.00E+00	0.00E+00	2.33E-03	0.00E+00	0.00E+00	1.50E-02
1125	ALL	748288.42	4035060.7	NonCancerAcute	0.00E+00	1.07E-05	2.28E-03	0.00E+00	0.00E+00	2.29E-03	5.26E-03	0.00E+00	1.47E-02	0.00E+00	0.00E+00	2.28E-03	0.00E+00	0.00E+00	1.47E-02
1126	ALL	748388.42	4035060.7	NonCancerAcute	0.00E+00	1.07E-05	2.28E-03	0.00E+00	0.00E+00	2.29E-03	5.24E-03	0.00E+00	1.47E-02	0.00E+00	0.00E+00	2.28E-03	0.00E+00	0.00E+00	1.47E-02
1127	ALL	748488.42	4035060.7	NonCancerAcute	0.00E+00	1.05E-05	2.22E-03	0.00E+00	0.00E+00	2.23E-03	5.02E-03	0.00E+00	1.42E-02	0.00E+00	0.00E+00	2.22E-03	0.00E+00	0.00E+00	1.42E-02
1128	ALL	748588.42	4035060.7	NonCancerAcute	0.00E+00	1.03E-05	2.19E-03	0.00E+00	0.00E+00	2.20E-03	5.05E-03	0.00E+00	1.41E-02	0.00E+00	0.00E+00	2.19E-03	0.00E+00	0.00E+00	1.41E-02
1129	ALL	748688.42	4035060.7	NonCancerAcute	0.00E+00	1.04E-05	2.21E-03	0.00E+00	0.00E+00	2.22E-03	4.98E-03	0.00E+00	1.41E-02	0.00E+00	0.00E+00	2.21E-03	0.00E+00	0.00E+00	1.41E-02
1130	ALL	748788.42	4035060.7	NonCancerAcute	0.00E+00	1.03E-05	2.19E-03	0.00E+00	0.00E+00	2.20E-03	4.81E-03	0.00E+00	1.38E-02	0.00E+00	0.00E+00	2.19E-03	0.00E+00	0.00E+00	1.38E-02
1131	ALL	748888.42	4035060.7	NonCancerAcute	0.00E+00	1.02E-05	2.16E-03	0.00E+00	0.00E+00	2.17E-03	4.70E-03	0.00E+00	1.36E-02	0.00E+00	0.00E+00	2.16E-03	0.00E+00	0.00E+00	1.36E-02
1132	ALL	747188.42	4035160.7	NonCancerAcute	0.00E+00	1.40E-05	2.98E-03	0.00E+00	0.00E+00	3.00E-03	6.59E-03	0.00E+00	1.89E-02	0.00E+00	0.00E+00	2.98E-03	0.00E+00	0.00E+00	1.89E-02
1133	ALL	747288.42	4035160.7	NonCancerAcute	0.00E+00	1.45E-05	3.08E-03	0.00E+00	0.00E+00	3.09E-03	6.48E-03	0.00E+00	1.91E-02	0.00E+00	0.00E+00	3.08E-03	0.00E+00	0.00E+00	1.91E-02
1134	ALL	747388.42	4035160.7	NonCancerAcute	0.00E+00	1.31E-05	2.79E-03	0.00E+00	0.00E+00	2.80E-03	6.49E-03	0.00E+00	1.81E-02	0.00E+00	0.00E+00	2.79E-03	0.00E+00	0.00E+00	1.81E-02
1135	ALL	747488.42	4035160.7	NonCancerAcute	0.00E+00	1.27E-05	2.69E-03	0.00E+00	0.00E+00	2.71E-03	6.34E-03	0.00E+00	1.76E-02	0.00E+00	0.00E+00	2.69E-03	0.00E+00	0.00E+00	1.76E-02
1136	ALL	748388.42	4035160.7	NonCancerAcute	0.00E+00	1.10E-05	2.33E-03	0.00E+00	0.00E+00	2.34E-03	5.33E-03	0.00E+00	1.50E-02	0.00E+00	0.00E+00	2.33E-03	0.00E+00	0.00E+00	1.50E-02
1137	ALL	748488.42	4035160.7	NonCancerAcute	0.00E+00	1.07E-05	2.27E-03	0.00E+00	0.00E+00	2.28E-03	5.27E-03	0.00E+00	1.47E-02	0.00E+00	0.00E+00	2.27E-03	0.00E+00	0.00E+00	1.47E-02
1138	ALL	748588.42	4035160.7	NonCancerAcute	0.00E+00	1.05E-05	2.22E-03	0.00E+00	0.00E+00	2.23E-03	5.22E-03	0.00E+00	1.45E-02	0.00E+00	0.00E+00	2.22E-03	0.00E+00	0.00E+00	1.45E-02
1139	ALL	748688.42	4035160.7	NonCancerAcute	0.00E+00	1.06E-05	2.25E-03	0.00E+00	0.00E+00	2.26E-03	5.04E-03	0.00E+00	1.43E-02	0.00E+00	0.00E+00	2.25E-03	0.00E+00	0.00E+00	1.43E-02
1140	ALL	748788.42	4035160.7	NonCancerAcute	0.00E+00	1.04E-05	2.22E-03	0.00E+00	0.00E+00	2.23E-03	4.90E-03	0.00E+00	1.41E-02	0.00E+00	0.00E+00	2.22E-03	0.00E+00	0.00E+00	1.41E-02
1141	ALL	748888.42	4035160.7	NonCancerAcute	0.00E+00	1.03E-05	2.18E-03	0.00E+00	0.00E+00	2.19E-03	4.96E-03	0.00E+00	1.40E-02	0.00E+00	0.00E+00	2.18E-03	0.00E+00	0.00E+00	1.40E-02
1142	ALL	747188.42	4035260.7	NonCancerAcute	0.00E+00	1.47E-05	3.13E-03	0.00E+00	0.00E+00	3.14E-03	6.76E-03	0.00E+00	1.97E-02	0.00E+00	0.00E+00	3.13E-03	0.00E+00	0.00E+00	1.97E-02
1143	ALL	747288.42	4035260.7	NonCancerAcute	0.00E+00	1.50E-05	3.18E-03	0.00E+00	0.00E+00	3.19E-03	6.79E-03	0.00E+00	1.99E-02	0.00E+00	0.00E+00	3.18E-03	0.00E+00	0.00E+00	1.99E-02
1144	ALL	747388.42	4035260.7	NonCancerAcute	0.00E+00	1.30E-05	2.77E-03	0.00E+00	0.00E+00	2.78E-03	6.66E-03	0.00E+00	1.82E-02	0.00E+00	0.00E+00	2.77E-03	0.00E+00	0.00E+00	1.82E-02
1145	ALL	747488.42	4035260.7	NonCancerAcute	0.00E+00	1.33E-05	2.82E-03	0.00E+00	0.00E+00	2.84E-03	6.61E-03	0.00E+00	1.84E-02	0.00E+00	0.00E+00	2.82E-03	0.00E+00	0.00E+00	1.84E-02
1146	ALL	748388.42	4035260.7	NonCancerAcute	0.00E+00	1.12E-05	2.38E-03	0.00E+00	0.00E+00	2.39E-03	5.55E-03	0.00E+00	1.55E-02	0.00E+00	0.00E+00	2.38E-03	0.00E+00	0.00E+00	1.55E-02
1147	ALL	748488.42	4035260.7	NonCancerAcute	0.00E+00	1.09E-05	2.30E-03	0.00E+00	0.00E+00	2.31E-03	5.42E-03	0.00E+00	1.50E-02	0.00E+00	0.00E+00	2.30E-03	0.00E+00	0.00E+00	1.50E-02
1148	ALL	748588.42	4035260.7	NonCancerAcute	0.00E+00	1.06E-05	2.26E-03	0.00E+00	0.00E+00	2.27E-03	5.24E-03	0.00E+00	1.46E-02	0.00E+00	0.00E+00	2.26E-03	0.00E+00	0.00E+00	1.46E-02
1149	ALL	748688.42	4035260.7	NonCancerAcute	0.00E+00	1.07E-05	2.27E-03	0.00E+00	0.00E+00	2.28E-03	5.16E-03	0.00E+00	1.46E-02	0.00E+00	0.00E+00	2.27E-03	0.00E+00	0.00E+00	1.46E-02
1150	ALL	748788.42	4035260.7	NonCancerAcute	0.00E+00	1.05E-05	2.24E-03	0.00E+00	0.00E+00	2.25E-03	5.14E-03	0.00E+00	1.44E-02	0.00E+00	0.00E+00	2.24E-03	0.00E+00	0.00E+00	1.44E-02
1151	ALL	748888.42	4035260.7	NonCancerAcute	0.00E+00	1.03E-05	2.19E-03	0.00E+00	0.00E+00	2.20E-03	5.01E-03	0.00E+00	1.41E-02	0.00E+00	0.00E+00	2.19E-03	0.00E+00	0.00E+00	1.41E-02
1152	ALL	747188.42	4035360.7	NonCancerAcute	0.00E+00	1.54E-05	3.27E-03	0.00E+00	0.00E+00	3.29E-03	7.05E-03	0.00E+00	2.05E-02	0.00E+00	0.00E+00	3.27E-03	0.00E+00	0.00E+00	2.05E-02
1153	ALL	747288.42	4035360.7	NonCancerAcute	0.00E+00	1.52E-05	3.23E-03	0.00E+00	0.00E+00	3.24E-03	7.05E-03	0.00E+00	2.04E-02	0.00E+00	0.00E+00	3.23E-03	0.00E+00	0.00E+00	2.04E-02
1154	ALL	747388.42	4035360.7	NonCancerAcute	0.00E+00	1.38E-05	2.92E-03	0.00E+00	0.00E+00	2.94E-03	6.85E-03	0.00E+00	1.90E-02	0.00E+00	0.00E+00	2.92E-03	0.00E+00	0.00E+00	1.90E-02
1155	ALL	747488.42	4035360.7	NonCancerAcute	0.00E+00	1.38E-05	2.93E-03	0.00E+00	0.00E+00	2.94E-03	6.90E-03	0.00E+00	1.91E-02	0.00E+00	0.00E+00	2.93E-03	0.00E+00	0.00E+00	1.91E-02
1156	ALL	748388.42	4035360.7	NonCancerAcute	0.00E+00	1.13E-05	2.40E-03	0.00E+00	0.00E+00	2.41E-03	5.67E-03	0.00E+00	1.57E-02	0.00E+00	0.00E+00	2.40E-03	0.00E+00	0.00E+00	1.57E-02
1157	ALL	748488.42	4035360.7	NonCancerAcute	0.00E+00	1.10E-05	2.33E-03	0.00E+00	0.00E+00	2.34E-03	5.47E-03	0.00E+00	1.52E-02	0.00E+00	0.00E+00	2.33E-03	0.00E+00	0.00E+00	1.52E-02
1158	ALL	748588.42	4035360.7	NonCancerAcute	0.00E+00	1.08E-05	2.30E-03	0.00E+00	0.00E+00	2.31E-03	5.41E-03	0.00E+00	1.50E-02	0.00E+00	0.00E+00	2.30E-03	0.00E+00	0.00E+00	1.50E-02
1159	ALL	748688.42	4035360.7	NonCancerAcute	0.00E+00	1.08E-05	2.30E-03	0.00E+00	0.00E+00	2.31E-03	5.39E-03	0.00E+00	1.49E-02	0.00E+00	0.00E+00	2.30E-03	0.00E+00	0.00E+00	1.49E-02
1160	ALL	748788.42	4035360.7	NonCancerAcute	0.00E+00	1.06E-05	2.25E-03	0.00E+00	0.00E+00	2.26E-03	5.13E-03	0.00E+00	1.45E-02	0.00E+00	0.00E+00	2.25E-03	0.00E+00	0.00E+00	1.45E-02
1161	ALL	748888.42	4035360.7	NonCancerAcute	0.00E+00	1.04E-05	2.20E-03	0.00E+00	0.00E+00	2.21E-03	5.04E-03	0.00E+00	1.42E-02	0.00E+00	0.00E+00	2.20E-03	0.00E+00	0.00E+00	1.42E-02
1162	ALL	747188.42	4035460.7	NonCancerAcute	0.00E+00	1.60E-05	3.40E-03	0.00E+00	0.00E+00	3.42E-03	7.39E-03	0.00E+00	2.14E-02	0.00E+00	0.00E+00	3.40E-03	0.00E+00	0.00E+00	2.14E-02
1163	ALL	747288.42	4035460.7	NonCancerAcute	0.00E+00	1.51E-05	3.20E-03	0.00E+00	0.00E+00	3.22E-03	7.27E-03	0.00E+00	2.05E-02	0.00E+00	0.00E+00	3.20E-03	0.00E+00	0.00E+00	2.05E-02
1164	ALL	747388.42	4035460.7	NonCancerAcute	0.00E+00	1.47E-05	3.13E-03	0.00E+00	0.00E+00	3.14E-03	7.16E-03	0.00E+00	2.01E-02	0.00E+00	0.00E+00	3.13E-03	0.00E+00	0.00E+00	2.01E-02

1165	ALL	747488.42	4035460.7	NonCancerAcute	0.00E+00	1.39E-05	2.95E-03	0.00E+00	0.00E+00	2.96E-03	7.05E-03	0.00E+00	1.94E-02	0.00E+00	0.00E+00	2.95E-03	0.00E+00	0.00E+00	1.94E-02
1166	ALL	748388.42	4035460.7	NonCancerAcute	0.00E+00	1.15E-05	2.45E-03	0.00E+00	0.00E+00	2.46E-03	5.71E-03	0.00E+00	1.59E-02	0.00E+00	0.00E+00	2.45E-03	0.00E+00	0.00E+00	1.59E-02
1167	ALL	748488.42	4035460.7	NonCancerAcute	0.00E+00	1.12E-05	2.38E-03	0.00E+00	0.00E+00	2.39E-03	5.68E-03	0.00E+00	1.56E-02	0.00E+00	0.00E+00	2.38E-03	0.00E+00	0.00E+00	1.56E-02
1168	ALL	748588.42	4035460.7	NonCancerAcute	0.00E+00	1.10E-05	2.33E-03	0.00E+00	0.00E+00	2.34E-03	5.58E-03	0.00E+00	1.53E-02	0.00E+00	0.00E+00	2.33E-03	0.00E+00	0.00E+00	1.53E-02
1169	ALL	748688.42	4035460.7	NonCancerAcute	0.00E+00	1.10E-05	2.33E-03	0.00E+00	0.00E+00	2.34E-03	5.35E-03	0.00E+00	1.50E-02	0.00E+00	0.00E+00	2.33E-03	0.00E+00	0.00E+00	1.50E-02
1170	ALL	748788.42	4035460.7	NonCancerAcute	0.00E+00	1.07E-05	2.27E-03	0.00E+00	0.00E+00	2.28E-03	5.23E-03	0.00E+00	1.47E-02	0.00E+00	0.00E+00	2.27E-03	0.00E+00	0.00E+00	1.47E-02
1171	ALL	748888.42	4035460.7	NonCancerAcute	0.00E+00	1.04E-05	2.22E-03	0.00E+00	0.00E+00	2.23E-03	5.15E-03	0.00E+00	1.44E-02	0.00E+00	0.00E+00	2.22E-03	0.00E+00	0.00E+00	1.44E-02
1172	ALL	746388.42	4035560.7	NonCancerAcute	0.00E+00	1.35E-05	2.87E-03	0.00E+00	0.00E+00	2.88E-03	8.05E-03	0.00E+00	2.03E-02	0.00E+00	0.00E+00	2.87E-03	0.00E+00	0.00E+00	2.03E-02
1173	ALL	746488.42	4035560.7	NonCancerAcute	0.00E+00	1.41E-05	2.99E-03	0.00E+00	0.00E+00	3.00E-03	8.07E-03	0.00E+00	2.07E-02	0.00E+00	0.00E+00	2.99E-03	0.00E+00	0.00E+00	2.07E-02
1174	ALL	746588.42	4035560.7	NonCancerAcute	0.00E+00	1.41E-05	2.99E-03	0.00E+00	0.00E+00	3.01E-03	8.00E-03	0.00E+00	2.07E-02	0.00E+00	0.00E+00	2.99E-03	0.00E+00	0.00E+00	2.07E-02
1175	ALL	746688.42	4035560.7	NonCancerAcute	0.00E+00	1.57E-05	3.32E-03	0.00E+00	0.00E+00	3.34E-03	8.16E-03	0.00E+00	2.21E-02	0.00E+00	0.00E+00	3.32E-03	0.00E+00	0.00E+00	2.21E-02
1176	ALL	746788.42	4035560.7	NonCancerAcute	0.00E+00	1.67E-05	3.55E-03	0.00E+00	0.00E+00	3.57E-03	8.09E-03	0.00E+00	2.28E-02	0.00E+00	0.00E+00	3.55E-03	0.00E+00	0.00E+00	2.28E-02
1177	ALL	746888.42	4035560.7	NonCancerAcute	0.00E+00	1.44E-05	3.06E-03	0.00E+00	0.00E+00	3.07E-03	8.25E-03	0.00E+00	2.12E-02	0.00E+00	0.00E+00	3.06E-03	0.00E+00	0.00E+00	2.12E-02
1178	ALL	746988.42	4035560.7	NonCancerAcute	0.00E+00	1.59E-05	3.38E-03	0.00E+00	0.00E+00	3.40E-03	8.20E-03	0.00E+00	2.23E-02	0.00E+00	0.00E+00	3.38E-03	0.00E+00	0.00E+00	2.23E-02
1179	ALL	747088.42	4035560.7	NonCancerAcute	0.00E+00	1.53E-05	3.25E-03	0.00E+00	0.00E+00	3.27E-03	8.09E-03	0.00E+00	2.17E-02	0.00E+00	0.00E+00	3.25E-03	0.00E+00	0.00E+00	2.17E-02
1180	ALL	747188.42	4035560.7	NonCancerAcute	0.00E+00	1.63E-05	3.45E-03	0.00E+00	0.00E+00	3.47E-03	7.70E-03	0.00E+00	2.20E-02	0.00E+00	0.00E+00	3.45E-03	0.00E+00	0.00E+00	2.20E-02
1181	ALL	747288.42	4035560.7	NonCancerAcute	0.00E+00	1.56E-05	3.31E-03	0.00E+00	0.00E+00	3.32E-03	7.58E-03	0.00E+00	2.13E-02	0.00E+00	0.00E+00	3.31E-03	0.00E+00	0.00E+00	2.13E-02
1182	ALL	747388.42	4035560.7	NonCancerAcute	0.00E+00	1.53E-05	3.24E-03	0.00E+00	0.00E+00	3.26E-03	7.44E-03	0.00E+00	2.09E-02	0.00E+00	0.00E+00	3.24E-03	0.00E+00	0.00E+00	2.09E-02
1183	ALL	747488.42	4035560.7	NonCancerAcute	0.00E+00	1.36E-05	2.89E-03	0.00E+00	0.00E+00	2.90E-03	7.25E-03	0.00E+00	1.94E-02	0.00E+00	0.00E+00	2.89E-03	0.00E+00	0.00E+00	1.94E-02
1184	ALL	748388.42	4035560.7	NonCancerAcute	0.00E+00	1.17E-05	2.48E-03	0.00E+00	0.00E+00	2.49E-03	5.95E-03	0.00E+00	1.63E-02	0.00E+00	0.00E+00	2.48E-03	0.00E+00	0.00E+00	1.63E-02
1185	ALL	748488.42	4035560.7	NonCancerAcute	0.00E+00	1.13E-05	2.40E-03	0.00E+00	0.00E+00	2.41E-03	5.81E-03	0.00E+00	1.59E-02	0.00E+00	0.00E+00	2.40E-03	0.00E+00	0.00E+00	1.59E-02
1186	ALL	748588.42	4035560.7	NonCancerAcute	0.00E+00	1.10E-05	2.34E-03	0.00E+00	0.00E+00	2.35E-03	5.56E-03	0.00E+00	1.53E-02	0.00E+00	0.00E+00	2.34E-03	0.00E+00	0.00E+00	1.53E-02
1187	ALL	748688.42	4035560.7	NonCancerAcute	0.00E+00	1.09E-05	2.32E-03	0.00E+00	0.00E+00	2.33E-03	5.48E-03	0.00E+00	1.52E-02	0.00E+00	0.00E+00	2.32E-03	0.00E+00	0.00E+00	1.52E-02
1188	ALL	748788.42	4035560.7	NonCancerAcute	0.00E+00	1.08E-05	2.29E-03	0.00E+00	0.00E+00	2.30E-03	5.34E-03	0.00E+00	1.48E-02	0.00E+00	0.00E+00	2.29E-03	0.00E+00	0.00E+00	1.48E-02
1189	ALL	748888.42	4035560.7	NonCancerAcute	0.00E+00	1.06E-05	2.24E-03	0.00E+00	0.00E+00	2.25E-03	5.43E-03	0.00E+00	1.48E-02	0.00E+00	0.00E+00	2.24E-03	0.00E+00	0.00E+00	1.48E-02
1190	ALL	746388.42	4035660.7	NonCancerAcute	0.00E+00	1.33E-05	2.82E-03	0.00E+00	0.00E+00	2.83E-03	8.28E-03	0.00E+00	2.04E-02	0.00E+00	0.00E+00	2.82E-03	0.00E+00	0.00E+00	2.04E-02
1191	ALL	746488.42	4035660.7	NonCancerAcute	0.00E+00	1.42E-05	3.02E-03	0.00E+00	0.00E+00	3.03E-03	8.52E-03	0.00E+00	2.14E-02	0.00E+00	0.00E+00	3.02E-03	0.00E+00	0.00E+00	2.14E-02
1192	ALL	746588.42	4035660.7	NonCancerAcute	0.00E+00	1.48E-05	3.14E-03	0.00E+00	0.00E+00	3.16E-03	8.38E-03	0.00E+00	2.17E-02	0.00E+00	0.00E+00	3.14E-03	0.00E+00	0.00E+00	2.17E-02
1193	ALL	746688.42	4035660.7	NonCancerAcute	0.00E+00	1.49E-05	3.17E-03	0.00E+00	0.00E+00	3.18E-03	8.43E-03	0.00E+00	2.18E-02	0.00E+00	0.00E+00	3.17E-03	0.00E+00	0.00E+00	2.18E-02
1194	ALL	746788.42	4035660.7	NonCancerAcute	0.00E+00	1.70E-05	3.60E-03	0.00E+00	0.00E+00	3.62E-03	8.47E-03	0.00E+00	2.35E-02	0.00E+00	0.00E+00	3.60E-03	0.00E+00	0.00E+00	2.35E-02
1195	ALL	746888.42	4035660.7	NonCancerAcute	0.00E+00	1.64E-05	3.48E-03	0.00E+00	0.00E+00	3.49E-03	8.64E-03	0.00E+00	2.32E-02	0.00E+00	0.00E+00	3.48E-03	0.00E+00	0.00E+00	2.32E-02
1196	ALL	746988.42	4035660.7	NonCancerAcute	0.00E+00	1.90E-05	4.04E-03	0.00E+00	0.00E+00	4.06E-03	8.66E-03	0.00E+00	2.53E-02	0.00E+00	0.00E+00	4.04E-03	0.00E+00	0.00E+00	2.53E-02
1197	ALL	747088.42	4035660.7	NonCancerAcute	0.00E+00	1.79E-05	3.79E-03	0.00E+00	0.00E+00	3.81E-03	8.65E-03	0.00E+00	2.44E-02	0.00E+00	0.00E+00	3.79E-03	0.00E+00	0.00E+00	2.44E-02
1198	ALL	747188.42	4035660.7	NonCancerAcute	0.00E+00	1.78E-05	3.78E-03	0.00E+00	0.00E+00	3.79E-03	8.23E-03	0.00E+00	2.38E-02	0.00E+00	0.00E+00	3.78E-03	0.00E+00	0.00E+00	2.38E-02
1199	ALL	747288.42	4035660.7	NonCancerAcute	0.00E+00	1.75E-05	3.71E-03	0.00E+00	0.00E+00	3.72E-03	7.92E-03	0.00E+00	2.32E-02	0.00E+00	0.00E+00	3.71E-03	0.00E+00	0.00E+00	2.32E-02
1200	ALL	747388.42	4035660.7	NonCancerAcute	0.00E+00	1.60E-05	3.39E-03	0.00E+00	0.00E+00	3.41E-03	7.82E-03	0.00E+00	2.19E-02	0.00E+00	0.00E+00	3.39E-03	0.00E+00	0.00E+00	2.19E-02
1201	ALL	747488.42	4035660.7	NonCancerAcute	0.00E+00	1.47E-05	3.12E-03	0.00E+00	0.00E+00	3.13E-03	7.63E-03	0.00E+00	2.07E-02	0.00E+00	0.00E+00	3.12E-03	0.00E+00	0.00E+00	2.07E-02
1202	ALL	748388.42	4035660.7	NonCancerAcute	0.00E+00	1.17E-05	2.48E-03	0.00E+00	0.00E+00	2.49E-03	6.00E-03	0.00E+00	1.63E-02	0.00E+00	0.00E+00	2.48E-03	0.00E+00	0.00E+00	1.63E-02
1203	ALL	748488.42	4035660.7	NonCancerAcute	0.00E+00	1.12E-05	2.38E-03	0.00E+00	0.00E+00	2.40E-03	5.84E-03	0.00E+00	1.58E-02	0.00E+00	0.00E+00	2.38E-03	0.00E+00	0.00E+00	1.58E-02
1204	ALL	748588.42	4035660.7	NonCancerAcute	0.00E+00	1.09E-05	2.32E-03	0.00E+00	0.00E+00	2.33E-03	5.68E-03	0.00E+00	1.54E-02	0.00E+00	0.00E+00	2.32E-03	0.00E+00	0.00E+00	1.54E-02
1205	ALL	748688.42	4035660.7	NonCancerAcute	0.00E+00	1.09E-05	2.32E-03	0.00E+00	0.00E+00	2.34E-03	5.67E-03	0.00E+00	1.54E-02	0.00E+00	0.00E+00	2.32E-03	0.00E+00	0.00E+00	1.54E-02
1206	ALL	748788.42	4035660.7	NonCancerAcute	0.00E+00	1.08E-05	2.29E-03	0.00E+00	0.00E+00	2.30E-03	5.66E-03	0.00E+00	1.52E-02	0.00E+00	0.00E+00	2.29E-03	0.00E+00	0.00E+00	1.52E-02
1207	ALL	748888.42	4035660.7	NonCancerAcute	0.00E+00	1.06E-05	2.25E-03	0.00E+00	0.00E+00	2.26E-03	5.48E-03	0.00E+00	1.49E-02	0.00E+00	0.00E+00	2.25E-03	0.00E+00	0.00E+00	1.49E-02
1208	ALL	746388.42	4035760.7	NonCancerAcute	0.00E+00	1.44E-05	3.06E-03	0.00E+00	0.00E+00	3.08E-03	8.48E-03	0.00E+00	2.15E-02	0.00E+00	0.00E+00	3.06E-03	0.00E+00	0.00E+00	2.15E-02
1209	ALL	746488.42	4035760.7	NonCancerAcute	0.00E+00	1.42E-05	3.01E-03	0.00E+00	0.00E+00	3.02E-03	8.87E-03	0.00E+00	2.18E-02	0.00E+00	0.00E+00	3.01E-03	0.00E+00	0.00E+00	2.18E-02
1210	ALL	746588.42	4035760.7	NonCancerAcute	0.00E+00	1.49E-05	3.16E-03	0.00E+00	0.00E+00	3.17E-03	8.85E-03	0.00E+00	2.23E-02	0.00E+00	0.00E+00	3.16E-03	0.00E+00	0.00E+00	2.23E-02
1211	ALL	746688.42	4035760.7	NonCancerAcute	0.00E+00	1.53E-05	3.25E-03	0.00E+00	0.00E+00	3.26E-03	8.71E-03	0.00E+00	2.25E-02	0.00E+00	0.00E+00	3.25E-03	0.00E+00	0.00E+00	2.25E-02
1212	ALL	746788.42	4035760.7	NonCancerAcute	0.00E+00	1.74E-05	3.68E-03	0.00E+00	0.00E+00	3.70E-03	8.90E-03	0.00E+00	2.43E-02	0.00E+00	0.00E+00	3.68E-03	0.00E+00	0.00E+00	2.43E-02
1213	ALL	746888.42	4035760.7	NonCancerAcute	0.00E+00	1.91E-05	4.05E-03	0.00E+00	0.00E+00	4.07E-03	9.03E-03	0.00E+00	2.58E-02	0.00E+00	0.00E+00	4.05E-03	0.00E+00	0.00E+00	2.58E-02
1214	ALL	746988.42	4035760.7	NonCancerAcute	0.00E+00	2.10E-05	4.47E-03	0.00E+00	0.00E+00	4.49E-03	8.99E-03	0.00E+00	2.72E-02	0.00E+00	0.00E+00	4.47E-03	0.00E+00	0.00E+00	2.72E-02
1215	ALL	747088.42	4035760.7	NonCancerAcute	0.00E+00	2.19E-05	4.64E-03	0.00E+00	0.00E+00	4.66E-03	9.13E-03	0.00E+00	2.80E-02	0.00E+00	0.00E+00	4.64E-03	0.00E+00	0.00E+00	2.80E-02
1216	ALL	747188.42	4035760.7	NonCancerAcute	0.00E+00	2.24E-05	4.77E-03	0.00E+00	0.00E+00	4.79E-03	8.91E-03	0.00E+00	2.82E-02	0.00E+00	0.00E+00	4.77E-03	0.00E+00	0.00E+00	2.82E-02
1217	ALL	747288.42	4035760.7	NonCancerAcute	0.00E+00	2.16E-05	4.58E-03	0.00E+00	0.00E+00	4.60E-03	8.68E-03	0.00E+00	2.73E-02	0.00E+00	0.00E+00	4.58E-03	0.00E+00	0.00E+00	2.73E-02

1218	ALL	747388.42	4035760.7	NonCancerAcute	0.00E+00	1.84E-05	3.90E-03	0.00E+00	0.00E+00	3.92E-03	8.23E-03	0.00E+00	2.43E-02	0.00E+00	0.00E+00	3.90E-03	0.00E+00	0.00E+00	2.43E-02
1219	ALL	747488.42	4035760.7	NonCancerAcute	0.00E+00	1.63E-05	3.47E-03	0.00E+00	0.00E+00	3.49E-03	8.03E-03	0.00E+00	2.24E-02	0.00E+00	0.00E+00	3.47E-03	0.00E+00	0.00E+00	2.24E-02
1220	ALL	748388.42	4035760.7	NonCancerAcute	0.00E+00	1.13E-05	2.40E-03	0.00E+00	0.00E+00	2.41E-03	6.11E-03	0.00E+00	1.62E-02	0.00E+00	0.00E+00	2.40E-03	0.00E+00	0.00E+00	1.62E-02
1221	ALL	748488.42	4035760.7	NonCancerAcute	0.00E+00	1.10E-05	2.33E-03	0.00E+00	0.00E+00	2.34E-03	5.92E-03	0.00E+00	1.57E-02	0.00E+00	0.00E+00	2.33E-03	0.00E+00	0.00E+00	1.57E-02
1222	ALL	748588.42	4035760.7	NonCancerAcute	0.00E+00	1.09E-05	2.31E-03	0.00E+00	0.00E+00	2.33E-03	5.94E-03	0.00E+00	1.57E-02	0.00E+00	0.00E+00	2.31E-03	0.00E+00	0.00E+00	1.57E-02
1223	ALL	748688.42	4035760.7	NonCancerAcute	0.00E+00	1.09E-05	2.31E-03	0.00E+00	0.00E+00	2.32E-03	5.83E-03	0.00E+00	1.55E-02	0.00E+00	0.00E+00	2.31E-03	0.00E+00	0.00E+00	1.55E-02
1224	ALL	748788.42	4035760.7	NonCancerAcute	0.00E+00	1.08E-05	2.29E-03	0.00E+00	0.00E+00	2.30E-03	5.54E-03	0.00E+00	1.51E-02	0.00E+00	0.00E+00	2.29E-03	0.00E+00	0.00E+00	1.51E-02
1225	ALL	748888.42	4035760.7	NonCancerAcute	0.00E+00	1.06E-05	2.26E-03	0.00E+00	0.00E+00	2.27E-03	5.21E-03	0.00E+00	1.46E-02	0.00E+00	0.00E+00	2.26E-03	0.00E+00	0.00E+00	1.46E-02
1226	ALL	746388.42	4035860.7	NonCancerAcute	0.00E+00	1.51E-05	3.21E-03	0.00E+00	0.00E+00	3.22E-03	8.62E-03	0.00E+00	2.22E-02	0.00E+00	0.00E+00	3.21E-03	0.00E+00	0.00E+00	2.22E-02
1227	ALL	746488.42	4035860.7	NonCancerAcute	0.00E+00	1.58E-05	3.35E-03	0.00E+00	0.00E+00	3.36E-03	9.26E-03	0.00E+00	2.35E-02	0.00E+00	0.00E+00	3.35E-03	0.00E+00	0.00E+00	2.35E-02
1228	ALL	746588.42	4035860.7	NonCancerAcute	0.00E+00	1.61E-05	3.43E-03	0.00E+00	0.00E+00	3.45E-03	9.43E-03	0.00E+00	2.40E-02	0.00E+00	0.00E+00	3.43E-03	0.00E+00	0.00E+00	2.40E-02
1229	ALL	746688.42	4035860.7	NonCancerAcute	0.00E+00	1.73E-05	3.68E-03	0.00E+00	0.00E+00	3.69E-03	9.44E-03	0.00E+00	2.49E-02	0.00E+00	0.00E+00	3.68E-03	0.00E+00	0.00E+00	2.49E-02
1230	ALL	746788.42	4035860.7	NonCancerAcute	0.00E+00	1.94E-05	4.12E-03	0.00E+00	0.00E+00	4.14E-03	9.46E-03	0.00E+00	2.66E-02	0.00E+00	0.00E+00	4.12E-03	0.00E+00	0.00E+00	2.66E-02
1231	ALL	746888.42	4035860.7	NonCancerAcute	0.00E+00	2.29E-05	4.86E-03	0.00E+00	0.00E+00	4.88E-03	9.57E-03	0.00E+00	2.94E-02	0.00E+00	0.00E+00	4.86E-03	0.00E+00	0.00E+00	2.94E-02
1232	ALL	746988.42	4035860.7	NonCancerAcute	0.00E+00	2.57E-05	5.47E-03	0.00E+00	0.00E+00	5.49E-03	9.40E-03	0.00E+00	3.14E-02	0.00E+00	0.00E+00	5.47E-03	0.00E+00	0.00E+00	3.14E-02
1233	ALL	747088.42	4035860.7	NonCancerAcute	0.00E+00	2.93E-05	6.23E-03	0.00E+00	0.00E+00	6.26E-03	9.60E-03	0.00E+00	3.44E-02	0.00E+00	0.00E+00	6.23E-03	0.00E+00	0.00E+00	3.44E-02
1234	ALL	747188.42	4035860.7	NonCancerAcute	0.00E+00	2.95E-05	6.26E-03	0.00E+00	0.00E+00	6.29E-03	9.86E-03	0.00E+00	3.48E-02	0.00E+00	0.00E+00	6.26E-03	0.00E+00	0.00E+00	3.48E-02
1235	ALL	747288.42	4035860.7	NonCancerAcute	0.00E+00	2.56E-05	5.43E-03	0.00E+00	0.00E+00	5.45E-03	9.37E-03	0.00E+00	3.12E-02	0.00E+00	0.00E+00	5.43E-03	0.00E+00	0.00E+00	3.12E-02
1236	ALL	747388.42	4035860.7	NonCancerAcute	0.00E+00	2.12E-05	4.49E-03	0.00E+00	0.00E+00	4.51E-03	8.79E-03	0.00E+00	2.71E-02	0.00E+00	0.00E+00	4.49E-03	0.00E+00	0.00E+00	2.71E-02
1237	ALL	747488.42	4035860.7	NonCancerAcute	0.00E+00	1.82E-05	3.86E-03	0.00E+00	0.00E+00	3.87E-03	8.16E-03	0.00E+00	2.40E-02	0.00E+00	0.00E+00	3.86E-03	0.00E+00	0.00E+00	2.40E-02
1238	ALL	748388.42	4035860.7	NonCancerAcute	0.00E+00	1.12E-05	2.38E-03	0.00E+00	0.00E+00	2.39E-03	6.26E-03	0.00E+00	1.63E-02	0.00E+00	0.00E+00	2.38E-03	0.00E+00	0.00E+00	1.63E-02
1239	ALL	748488.42	4035860.7	NonCancerAcute	0.00E+00	1.10E-05	2.34E-03	0.00E+00	0.00E+00	2.35E-03	6.14E-03	0.00E+00	1.60E-02	0.00E+00	0.00E+00	2.34E-03	0.00E+00	0.00E+00	1.60E-02
1240	ALL	748588.42	4035860.7	NonCancerAcute	0.00E+00	1.10E-05	2.33E-03	0.00E+00	0.00E+00	2.34E-03	5.92E-03	0.00E+00	1.57E-02	0.00E+00	0.00E+00	2.33E-03	0.00E+00	0.00E+00	1.57E-02
1241	ALL	748688.42	4035860.7	NonCancerAcute	0.00E+00	1.10E-05	2.33E-03	0.00E+00	0.00E+00	2.34E-03	5.60E-03	0.00E+00	1.53E-02	0.00E+00	0.00E+00	2.33E-03	0.00E+00	0.00E+00	1.53E-02
1242	ALL	748788.42	4035860.7	NonCancerAcute	0.00E+00	1.08E-05	2.29E-03	0.00E+00	0.00E+00	2.30E-03	5.38E-03	0.00E+00	1.49E-02	0.00E+00	0.00E+00	2.29E-03	0.00E+00	0.00E+00	1.49E-02
1243	ALL	748888.42	4035860.7	NonCancerAcute	0.00E+00	1.06E-05	2.26E-03	0.00E+00	0.00E+00	2.27E-03	5.21E-03	0.00E+00	1.46E-02	0.00E+00	0.00E+00	2.26E-03	0.00E+00	0.00E+00	1.46E-02
1244	ALL	746388.42	4035960.7	NonCancerAcute	0.00E+00	1.46E-05	3.10E-03	0.00E+00	0.00E+00	3.11E-03	8.98E-03	0.00E+00	2.23E-02	0.00E+00	0.00E+00	3.10E-03	0.00E+00	0.00E+00	2.23E-02
1245	ALL	746488.42	4035960.7	NonCancerAcute	0.00E+00	1.58E-05	3.36E-03	0.00E+00	0.00E+00	3.38E-03	9.36E-03	0.00E+00	2.37E-02	0.00E+00	0.00E+00	3.36E-03	0.00E+00	0.00E+00	2.37E-02
1246	ALL	746588.42	4035960.7	NonCancerAcute	0.00E+00	1.68E-05	3.57E-03	0.00E+00	0.00E+00	3.58E-03	9.83E-03	0.00E+00	2.50E-02	0.00E+00	0.00E+00	3.57E-03	0.00E+00	0.00E+00	2.50E-02
1247	ALL	746688.42	4035960.7	NonCancerAcute	0.00E+00	2.17E-05	4.60E-03	0.00E+00	0.00E+00	4.62E-03	1.01E-02	0.00E+00	2.90E-02	0.00E+00	0.00E+00	4.60E-03	0.00E+00	0.00E+00	2.90E-02
1248	ALL	748388.42	4035960.7	NonCancerAcute	0.00E+00	1.13E-05	2.40E-03	0.00E+00	0.00E+00	2.41E-03	6.40E-03	0.00E+00	1.66E-02	0.00E+00	0.00E+00	2.40E-03	0.00E+00	0.00E+00	1.66E-02
1249	ALL	748488.42	4035960.7	NonCancerAcute	0.00E+00	1.11E-05	2.36E-03	0.00E+00	0.00E+00	2.37E-03	6.04E-03	0.00E+00	1.60E-02	0.00E+00	0.00E+00	2.36E-03	0.00E+00	0.00E+00	1.60E-02
1250	ALL	748588.42	4035960.7	NonCancerAcute	0.00E+00	1.11E-05	2.35E-03	0.00E+00	0.00E+00	2.36E-03	5.79E-03	0.00E+00	1.56E-02	0.00E+00	0.00E+00	2.35E-03	0.00E+00	0.00E+00	1.56E-02
1251	ALL	748688.42	4035960.7	NonCancerAcute	0.00E+00	1.11E-05	2.35E-03	0.00E+00	0.00E+00	2.36E-03	5.61E-03	0.00E+00	1.54E-02	0.00E+00	0.00E+00	2.35E-03	0.00E+00	0.00E+00	1.54E-02
1252	ALL	748788.42	4035960.7	NonCancerAcute	0.00E+00	1.09E-05	2.32E-03	0.00E+00	0.00E+00	2.33E-03	5.49E-03	0.00E+00	1.51E-02	0.00E+00	0.00E+00	2.32E-03	0.00E+00	0.00E+00	1.51E-02
1253	ALL	748888.42	4035960.7	NonCancerAcute	0.00E+00	1.08E-05	2.29E-03	0.00E+00	0.00E+00	2.30E-03	5.33E-03	0.00E+00	1.48E-02	0.00E+00	0.00E+00	2.29E-03	0.00E+00	0.00E+00	1.48E-02
1254	ALL	746388.42	4036060.7	NonCancerAcute	0.00E+00	1.45E-05	3.07E-03	0.00E+00	0.00E+00	3.09E-03	9.08E-03	0.00E+00	2.23E-02	0.00E+00	0.00E+00	3.07E-03	0.00E+00	0.00E+00	2.23E-02
1255	ALL	746488.42	4036060.7	NonCancerAcute	0.00E+00	1.60E-05	3.40E-03	0.00E+00	0.00E+00	3.41E-03	9.27E-03	0.00E+00	2.37E-02	0.00E+00	0.00E+00	3.40E-03	0.00E+00	0.00E+00	2.37E-02
1256	ALL	746588.42	4036060.7	NonCancerAcute	0.00E+00	1.86E-05	3.95E-03	0.00E+00	0.00E+00	3.97E-03	1.01E-02	0.00E+00	2.68E-02	0.00E+00	0.00E+00	3.95E-03	0.00E+00	0.00E+00	2.68E-02
1257	ALL	746688.42	4036060.7	NonCancerAcute	0.00E+00	2.28E-05	4.84E-03	0.00E+00	0.00E+00	4.86E-03	1.04E-02	0.00E+00	3.03E-02	0.00E+00	0.00E+00	4.84E-03	0.00E+00	0.00E+00	3.03E-02
1258	ALL	748388.42	4036060.7	NonCancerAcute	0.00E+00	1.18E-05	2.50E-03	0.00E+00	0.00E+00	2.51E-03	6.28E-03	0.00E+00	1.68E-02	0.00E+00	0.00E+00	2.50E-03	0.00E+00	0.00E+00	1.68E-02
1259	ALL	748488.42	4036060.7	NonCancerAcute	0.00E+00	1.15E-05	2.45E-03	0.00E+00	0.00E+00	2.46E-03	6.08E-03	0.00E+00	1.63E-02	0.00E+00	0.00E+00	2.45E-03	0.00E+00	0.00E+00	1.63E-02
1260	ALL	748588.42	4036060.7	NonCancerAcute	0.00E+00	1.13E-05	2.41E-03	0.00E+00	0.00E+00	2.42E-03	5.90E-03	0.00E+00	1.60E-02	0.00E+00	0.00E+00	2.41E-03	0.00E+00	0.00E+00	1.60E-02
1261	ALL	748688.42	4036060.7	NonCancerAcute	0.00E+00	1.12E-05	2.37E-03	0.00E+00	0.00E+00	2.38E-03	5.72E-03	0.00E+00	1.56E-02	0.00E+00	0.00E+00	2.37E-03	0.00E+00	0.00E+00	1.56E-02
1262	ALL	748788.42	4036060.7	NonCancerAcute	0.00E+00	1.10E-05	2.33E-03	0.00E+00	0.00E+00	2.34E-03	5.67E-03	0.00E+00	1.54E-02	0.00E+00	0.00E+00	2.33E-03	0.00E+00	0.00E+00	1.54E-02
1263	ALL	748888.42	4036060.7	NonCancerAcute	0.00E+00	1.09E-05	2.31E-03	0.00E+00	0.00E+00	2.32E-03	5.51E-03	0.00E+00	1.51E-02	0.00E+00	0.00E+00	2.31E-03	0.00E+00	0.00E+00	1.51E-02
1264	ALL	746388.42	4036160.7	NonCancerAcute	0.00E+00	1.53E-05	3.24E-03	0.00E+00	0.00E+00	3.26E-03	9.42E-03	0.00E+00	2.33E-02	0.00E+00	0.00E+00	3.24E-03	0.00E+00	0.00E+00	2.33E-02
1265	ALL	746488.42	4036160.7	NonCancerAcute	0.00E+00	1.57E-05	3.33E-03	0.00E+00	0.00E+00	3.35E-03	9.43E-03	0.00E+00	2.37E-02	0.00E+00	0.00E+00	3.33E-03	0.00E+00	0.00E+00	2.37E-02
1266	ALL	746588.42	4036160.7	NonCancerAcute	0.00E+00	1.77E-05	3.76E-03	0.00E+00	0.00E+00	3.78E-03	1.02E-02	0.00E+00	2.61E-02	0.00E+00	0.00E+00	3.76E-03	0.00E+00	0.00E+00	2.61E-02
1267	ALL	746688.42	4036160.7	NonCancerAcute	0.00E+00	2.22E-05	4.71E-03	0.00E+00	0.00E+00	4.74E-03	1.06E-02	0.00E+00	3.02E-02	0.00E+00	0.00E+00	4.71E-03	0.00E+00	0.00E+00	3.02E-02
1268	ALL	748388.42	4036160.7	NonCancerAcute	0.00E+00	1.21E-05	2.57E-03	0.00E+00	0.00E+00	2.58E-03	6.41E-03	0.00E+00	1.72E-02	0.00E+00	0.00E+00	2.57E-03	0.00E+00	0.00E+00	1.72E-02
1269	ALL	748488.42	4036160.7	NonCancerAcute	0.00E+00	1.18E-05	2.51E-03	0.00E+00	0.00E+00	2.52E-03	6.26E-03	0.00E+00	1.68E-02	0.00E+00	0.00E+00	2.51E-03	0.00E+00	0.00E+00	1.68E-02
1270	ALL	748588.42	4036160.7	NonCancerAcute	0.00E+00	1.16E-05	2.46E-03	0.00E+00	0.00E+00	2.48E-03	6.08E-03	0.00E+00	1.64E-02	0.00E+00	0.00E+00	2.46E-03	0.00E+00	0.00E+00	1.64E-02

1271	ALL	748688.42	4036160.7	NonCancerAcute	0.00E+00	1.14E-05	2.43E-03	0.00E+00	0.00E+00	2.44E-03	5.93E-03	0.00E+00	1.61E-02	0.00E+00	0.00E+00	2.43E-03	0.00E+00	0.00E+00	1.61E-02
1272	ALL	748788.42	4036160.7	NonCancerAcute	0.00E+00	1.11E-05	2.35E-03	0.00E+00	0.00E+00	2.36E-03	5.80E-03	0.00E+00	1.56E-02	0.00E+00	0.00E+00	2.35E-03	0.00E+00	0.00E+00	1.56E-02
1273	ALL	748888.42	4036160.7	NonCancerAcute	0.00E+00	1.08E-05	2.30E-03	0.00E+00	0.00E+00	2.31E-03	5.59E-03	0.00E+00	1.52E-02	0.00E+00	0.00E+00	2.30E-03	0.00E+00	0.00E+00	1.52E-02
1274	ALL	746388.42	4036260.7	NonCancerAcute	0.00E+00	1.47E-05	3.13E-03	0.00E+00	0.00E+00	3.14E-03	9.69E-03	0.00E+00	2.32E-02	0.00E+00	0.00E+00	3.13E-03	0.00E+00	0.00E+00	2.32E-02
1275	ALL	746488.42	4036260.7	NonCancerAcute	0.00E+00	1.61E-05	3.41E-03	0.00E+00	0.00E+00	3.43E-03	9.58E-03	0.00E+00	2.41E-02	0.00E+00	0.00E+00	3.41E-03	0.00E+00	0.00E+00	2.41E-02
1276	ALL	746588.42	4036260.7	NonCancerAcute	0.00E+00	1.89E-05	4.01E-03	0.00E+00	0.00E+00	4.03E-03	9.99E-03	0.00E+00	2.68E-02	0.00E+00	0.00E+00	4.01E-03	0.00E+00	0.00E+00	2.68E-02
1277	ALL	746688.42	4036260.7	NonCancerAcute	0.00E+00	2.09E-05	4.43E-03	0.00E+00	0.00E+00	4.45E-03	1.05E-02	0.00E+00	2.90E-02	0.00E+00	0.00E+00	4.43E-03	0.00E+00	0.00E+00	2.90E-02
1278	ALL	748388.42	4036260.7	NonCancerAcute	0.00E+00	1.21E-05	2.56E-03	0.00E+00	0.00E+00	2.57E-03	6.59E-03	0.00E+00	1.74E-02	0.00E+00	0.00E+00	2.56E-03	0.00E+00	0.00E+00	1.74E-02
1279	ALL	748488.42	4036260.7	NonCancerAcute	0.00E+00	1.18E-05	2.51E-03	0.00E+00	0.00E+00	2.52E-03	6.40E-03	0.00E+00	1.70E-02	0.00E+00	0.00E+00	2.51E-03	0.00E+00	0.00E+00	1.70E-02
1280	ALL	748588.42	4036260.7	NonCancerAcute	0.00E+00	1.16E-05	2.47E-03	0.00E+00	0.00E+00	2.48E-03	6.12E-03	0.00E+00	1.65E-02	0.00E+00	0.00E+00	2.47E-03	0.00E+00	0.00E+00	1.65E-02
1281	ALL	748688.42	4036260.7	NonCancerAcute	0.00E+00	1.15E-05	2.44E-03	0.00E+00	0.00E+00	2.45E-03	5.94E-03	0.00E+00	1.62E-02	0.00E+00	0.00E+00	2.44E-03	0.00E+00	0.00E+00	1.62E-02
1282	ALL	748788.42	4036260.7	NonCancerAcute	0.00E+00	1.12E-05	2.37E-03	0.00E+00	0.00E+00	2.38E-03	5.76E-03	0.00E+00	1.57E-02	0.00E+00	0.00E+00	2.37E-03	0.00E+00	0.00E+00	1.57E-02
1283	ALL	748888.42	4036260.7	NonCancerAcute	0.00E+00	1.10E-05	2.33E-03	0.00E+00	0.00E+00	2.34E-03	5.62E-03	0.00E+00	1.53E-02	0.00E+00	0.00E+00	2.33E-03	0.00E+00	0.00E+00	1.53E-02
1284	ALL	745988.42	4036360.7	NonCancerAcute	0.00E+00	1.27E-05	2.70E-03	0.00E+00	0.00E+00	2.71E-03	8.46E-03	0.00E+00	2.02E-02	0.00E+00	0.00E+00	2.70E-03	0.00E+00	0.00E+00	2.02E-02
1285	ALL	746088.42	4036360.7	NonCancerAcute	0.00E+00	1.31E-05	2.78E-03	0.00E+00	0.00E+00	2.79E-03	8.62E-03	0.00E+00	2.07E-02	0.00E+00	0.00E+00	2.78E-03	0.00E+00	0.00E+00	2.07E-02
1286	ALL	746188.42	4036360.7	NonCancerAcute	0.00E+00	1.34E-05	2.85E-03	0.00E+00	0.00E+00	2.87E-03	8.97E-03	0.00E+00	2.14E-02	0.00E+00	0.00E+00	2.85E-03	0.00E+00	0.00E+00	2.14E-02
1287	ALL	746288.42	4036360.7	NonCancerAcute	0.00E+00	1.37E-05	2.90E-03	0.00E+00	0.00E+00	2.92E-03	9.17E-03	0.00E+00	2.18E-02	0.00E+00	0.00E+00	2.90E-03	0.00E+00	0.00E+00	2.18E-02
1288	ALL	746388.42	4036360.7	NonCancerAcute	0.00E+00	1.43E-05	3.04E-03	0.00E+00	0.00E+00	3.06E-03	1.01E-02	0.00E+00	2.34E-02	0.00E+00	0.00E+00	3.04E-03	0.00E+00	0.00E+00	2.34E-02
1289	ALL	746488.42	4036360.7	NonCancerAcute	0.00E+00	1.59E-05	3.37E-03	0.00E+00	0.00E+00	3.39E-03	1.08E-02	0.00E+00	2.55E-02	0.00E+00	0.00E+00	3.37E-03	0.00E+00	0.00E+00	2.55E-02
1290	ALL	746588.42	4036360.7	NonCancerAcute	0.00E+00	1.80E-05	3.83E-03	0.00E+00	0.00E+00	3.85E-03	1.14E-02	0.00E+00	2.78E-02	0.00E+00	0.00E+00	3.83E-03	0.00E+00	0.00E+00	2.78E-02
1291	ALL	748388.42	4036360.7	NonCancerAcute	0.00E+00	1.16E-05	2.47E-03	0.00E+00	0.00E+00	2.48E-03	6.60E-03	0.00E+00	1.71E-02	0.00E+00	0.00E+00	2.47E-03	0.00E+00	0.00E+00	1.71E-02
1292	ALL	748488.42	4036360.7	NonCancerAcute	0.00E+00	1.15E-05	2.44E-03	0.00E+00	0.00E+00	2.45E-03	6.38E-03	0.00E+00	1.67E-02	0.00E+00	0.00E+00	2.44E-03	0.00E+00	0.00E+00	1.67E-02
1293	ALL	748588.42	4036360.7	NonCancerAcute	0.00E+00	1.14E-05	2.41E-03	0.00E+00	0.00E+00	2.43E-03	6.18E-03	0.00E+00	1.63E-02	0.00E+00	0.00E+00	2.41E-03	0.00E+00	0.00E+00	1.63E-02
1294	ALL	748688.42	4036360.7	NonCancerAcute	0.00E+00	1.13E-05	2.40E-03	0.00E+00	0.00E+00	2.41E-03	6.01E-03	0.00E+00	1.61E-02	0.00E+00	0.00E+00	2.40E-03	0.00E+00	0.00E+00	1.61E-02
1295	ALL	748788.42	4036360.7	NonCancerAcute	0.00E+00	1.10E-05	2.33E-03	0.00E+00	0.00E+00	2.34E-03	5.83E-03	0.00E+00	1.56E-02	0.00E+00	0.00E+00	2.33E-03	0.00E+00	0.00E+00	1.56E-02
1296	ALL	748888.42	4036360.7	NonCancerAcute	0.00E+00	1.09E-05	2.30E-03	0.00E+00	0.00E+00	2.31E-03	5.69E-03	0.00E+00	1.53E-02	0.00E+00	0.00E+00	2.30E-03	0.00E+00	0.00E+00	1.53E-02
1297	ALL	748988.42	4036360.7	NonCancerAcute	0.00E+00	1.07E-05	2.27E-03	0.00E+00	0.00E+00	2.28E-03	5.52E-03	0.00E+00	1.50E-02	0.00E+00	0.00E+00	2.27E-03	0.00E+00	0.00E+00	1.50E-02
1298	ALL	749088.42	4036360.7	NonCancerAcute	0.00E+00	1.09E-05	2.32E-03	0.00E+00	0.00E+00	2.33E-03	5.46E-03	0.00E+00	1.51E-02	0.00E+00	0.00E+00	2.32E-03	0.00E+00	0.00E+00	1.51E-02
1299	ALL	749188.42	4036360.7	NonCancerAcute	0.00E+00	1.07E-05	2.28E-03	0.00E+00	0.00E+00	2.29E-03	5.67E-03	0.00E+00	1.52E-02	0.00E+00	0.00E+00	2.28E-03	0.00E+00	0.00E+00	1.52E-02
1300	ALL	749288.42	4036360.7	NonCancerAcute	0.00E+00	1.06E-05	2.25E-03	0.00E+00	0.00E+00	2.26E-03	5.63E-03	0.00E+00	1.51E-02	0.00E+00	0.00E+00	2.25E-03	0.00E+00	0.00E+00	1.51E-02
1301	ALL	749388.42	4036360.7	NonCancerAcute	0.00E+00	1.04E-05	2.20E-03	0.00E+00	0.00E+00	2.21E-03	5.32E-03	0.00E+00	1.45E-02	0.00E+00	0.00E+00	2.20E-03	0.00E+00	0.00E+00	1.45E-02
1302	ALL	749488.42	4036360.7	NonCancerAcute	0.00E+00	1.04E-05	2.20E-03	0.00E+00	0.00E+00	2.21E-03	5.14E-03	0.00E+00	1.43E-02	0.00E+00	0.00E+00	2.20E-03	0.00E+00	0.00E+00	1.43E-02
1303	ALL	749588.42	4036360.7	NonCancerAcute	0.00E+00	1.03E-05	2.20E-03	0.00E+00	0.00E+00	2.21E-03	5.01E-03	0.00E+00	1.41E-02	0.00E+00	0.00E+00	2.20E-03	0.00E+00	0.00E+00	1.41E-02
1304	ALL	749688.42	4036360.7	NonCancerAcute	0.00E+00	1.04E-05	2.20E-03	0.00E+00	0.00E+00	2.21E-03	4.69E-03	0.00E+00	1.37E-02	0.00E+00	0.00E+00	2.20E-03	0.00E+00	0.00E+00	1.37E-02
1305	ALL	749788.42	4036360.7	NonCancerAcute	0.00E+00	1.01E-05	2.14E-03	0.00E+00	0.00E+00	2.15E-03	4.56E-03	0.00E+00	1.34E-02	0.00E+00	0.00E+00	2.14E-03	0.00E+00	0.00E+00	1.34E-02
1306	ALL	749888.42	4036360.7	NonCancerAcute	0.00E+00	1.01E-05	2.15E-03	0.00E+00	0.00E+00	2.15E-03	4.51E-03	0.00E+00	1.33E-02	0.00E+00	0.00E+00	2.15E-03	0.00E+00	0.00E+00	1.33E-02
1307	ALL	749988.42	4036360.7	NonCancerAcute	0.00E+00	9.90E-06	2.10E-03	0.00E+00	0.00E+00	2.11E-03	4.58E-03	0.00E+00	1.33E-02	0.00E+00	0.00E+00	2.10E-03	0.00E+00	0.00E+00	1.33E-02
1308	ALL	750088.42	4036360.7	NonCancerAcute	0.00E+00	9.92E-06	2.11E-03	0.00E+00	0.00E+00	2.12E-03	4.52E-03	0.00E+00	1.32E-02	0.00E+00	0.00E+00	2.11E-03	0.00E+00	0.00E+00	1.32E-02
1309	ALL	750188.42	4036360.7	NonCancerAcute	0.00E+00	9.82E-06	2.09E-03	0.00E+00	0.00E+00	2.10E-03	4.36E-03	0.00E+00	1.29E-02	0.00E+00	0.00E+00	2.09E-03	0.00E+00	0.00E+00	1.29E-02
1310	ALL	745988.42	4036460.7	NonCancerAcute	0.00E+00	1.23E-05	2.61E-03	0.00E+00	0.00E+00	2.62E-03	8.76E-03	0.00E+00	2.02E-02	0.00E+00	0.00E+00	2.61E-03	0.00E+00	0.00E+00	2.02E-02
1311	ALL	746088.42	4036460.7	NonCancerAcute	0.00E+00	1.26E-05	2.68E-03	0.00E+00	0.00E+00	2.70E-03	8.72E-03	0.00E+00	2.04E-02	0.00E+00	0.00E+00	2.68E-03	0.00E+00	0.00E+00	2.04E-02
1312	ALL	746188.42	4036460.7	NonCancerAcute	0.00E+00	1.31E-05	2.79E-03	0.00E+00	0.00E+00	2.80E-03	9.01E-03	0.00E+00	2.12E-02	0.00E+00	0.00E+00	2.79E-03	0.00E+00	0.00E+00	2.12E-02
1313	ALL	746288.42	4036460.7	NonCancerAcute	0.00E+00	1.37E-05	2.91E-03	0.00E+00	0.00E+00	2.92E-03	9.89E-03	0.00E+00	2.27E-02	0.00E+00	0.00E+00	2.91E-03	0.00E+00	0.00E+00	2.27E-02
1314	ALL	746388.42	4036460.7	NonCancerAcute	0.00E+00	1.45E-05	3.09E-03	0.00E+00	0.00E+00	3.10E-03	1.06E-02	0.00E+00	2.42E-02	0.00E+00	0.00E+00	3.09E-03	0.00E+00	0.00E+00	2.42E-02
1315	ALL	746488.42	4036460.7	NonCancerAcute	0.00E+00	1.59E-05	3.38E-03	0.00E+00	0.00E+00	3.40E-03	1.13E-02	0.00E+00	2.61E-02	0.00E+00	0.00E+00	3.38E-03	0.00E+00	0.00E+00	2.61E-02
1316	ALL	746588.42	4036460.7	NonCancerAcute	0.00E+00	1.72E-05	3.66E-03	0.00E+00	0.00E+00	3.68E-03	1.25E-02	0.00E+00	2.86E-02	0.00E+00	0.00E+00	3.66E-03	0.00E+00	0.00E+00	2.86E-02
1317	ALL	748388.42	4036460.7	NonCancerAcute	0.00E+00	1.14E-05	2.43E-03	0.00E+00	0.00E+00	2.44E-03	6.69E-03	0.00E+00	1.70E-02	0.00E+00	0.00E+00	2.43E-03	0.00E+00	0.00E+00	1.70E-02
1318	ALL	748488.42	4036460.7	NonCancerAcute	0.00E+00	1.14E-05	2.42E-03	0.00E+00	0.00E+00	2.44E-03	6.49E-03	0.00E+00	1.68E-02	0.00E+00	0.00E+00	2.42E-03	0.00E+00	0.00E+00	1.68E-02
1319	ALL	748588.42	4036460.7	NonCancerAcute	0.00E+00	1.14E-05	2.41E-03	0.00E+00	0.00E+00	2.43E-03	6.29E-03	0.00E+00	1.65E-02	0.00E+00	0.00E+00	2.41E-03	0.00E+00	0.00E+00	1.65E-02
1320	ALL	748688.42	4036460.7	NonCancerAcute	0.00E+00	1.13E-05	2.41E-03	0.00E+00	0.00E+00	2.42E-03	6.13E-03	0.00E+00	1.63E-02	0.00E+00	0.00E+00	2.41E-03	0.00E+00	0.00E+00	1.63E-02
1321	ALL	748788.42	4036460.7	NonCancerAcute	0.00E+00	1.10E-05	2.34E-03	0.00E+00	0.00E+00	2.35E-03	5.98E-03	0.00E+00	1.58E-02	0.00E+00	0.00E+00	2.34E-03	0.00E+00	0.00E+00	1.58E-02
1322	ALL	748888.42	4036460.7	NonCancerAcute	0.00E+00	1.10E-05	2.33E-03	0.00E+00	0.00E+00	2.34E-03	5.91E-03	0.00E+00	1.57E-02	0.00E+00	0.00E+00	2.33E-03	0.00E+00	0.00E+00	1.57E-02
1323	ALL	748988.42	4036460.7	NonCancerAcute	0.00E+00	1.09E-05	2.31E-03	0.00E+00	0.00E+00	2.32E-03	5.75E-03	0.00E+00	1.54E-02	0.00E+00	0.00E+00	2.31E-03	0.00E+00	0.00E+00	1.54E-02

1324	ALL	749088.42	4036460.7	NonCancerAcute	0.00E+00	1.10E-05	2.34E-03	0.00E+00	0.00E+00	2.35E-03	5.67E-03	0.00E+00	1.54E-02	0.00E+00	0.00E+00	2.34E-03	0.00E+00	0.00E+00	1.54E-02
1325	ALL	749188.42	4036460.7	NonCancerAcute	0.00E+00	1.07E-05	2.27E-03	0.00E+00	0.00E+00	2.28E-03	5.83E-03	0.00E+00	1.54E-02	0.00E+00	0.00E+00	2.27E-03	0.00E+00	0.00E+00	1.54E-02
1326	ALL	749288.42	4036460.7	NonCancerAcute	0.00E+00	1.06E-05	2.25E-03	0.00E+00	0.00E+00	2.26E-03	5.76E-03	0.00E+00	1.52E-02	0.00E+00	0.00E+00	2.25E-03	0.00E+00	0.00E+00	1.52E-02
1327	ALL	749388.42	4036460.7	NonCancerAcute	0.00E+00	1.05E-05	2.22E-03	0.00E+00	0.00E+00	2.23E-03	5.40E-03	0.00E+00	1.47E-02	0.00E+00	0.00E+00	2.22E-03	0.00E+00	0.00E+00	1.47E-02
1328	ALL	749488.42	4036460.7	NonCancerAcute	0.00E+00	1.04E-05	2.20E-03	0.00E+00	0.00E+00	2.21E-03	5.14E-03	0.00E+00	1.43E-02	0.00E+00	0.00E+00	2.20E-03	0.00E+00	0.00E+00	1.43E-02
1329	ALL	749588.42	4036460.7	NonCancerAcute	0.00E+00	1.04E-05	2.21E-03	0.00E+00	0.00E+00	2.22E-03	4.98E-03	0.00E+00	1.41E-02	0.00E+00	0.00E+00	2.21E-03	0.00E+00	0.00E+00	1.41E-02
1330	ALL	749688.42	4036460.7	NonCancerAcute	0.00E+00	1.03E-05	2.19E-03	0.00E+00	0.00E+00	2.20E-03	4.61E-03	0.00E+00	1.36E-02	0.00E+00	0.00E+00	2.19E-03	0.00E+00	0.00E+00	1.36E-02
1331	ALL	749788.42	4036460.7	NonCancerAcute	0.00E+00	1.02E-05	2.16E-03	0.00E+00	0.00E+00	2.17E-03	4.50E-03	0.00E+00	1.34E-02	0.00E+00	0.00E+00	2.16E-03	0.00E+00	0.00E+00	1.34E-02
1332	ALL	749888.42	4036460.7	NonCancerAcute	0.00E+00	1.01E-05	2.15E-03	0.00E+00	0.00E+00	2.16E-03	4.47E-03	0.00E+00	1.33E-02	0.00E+00	0.00E+00	2.15E-03	0.00E+00	0.00E+00	1.33E-02
1333	ALL	749988.42	4036460.7	NonCancerAcute	0.00E+00	9.96E-06	2.11E-03	0.00E+00	0.00E+00	2.12E-03	4.56E-03	0.00E+00	1.33E-02	0.00E+00	0.00E+00	2.11E-03	0.00E+00	0.00E+00	1.33E-02
1334	ALL	750088.42	4036460.7	NonCancerAcute	0.00E+00	1.00E-05	2.13E-03	0.00E+00	0.00E+00	2.14E-03	4.50E-03	0.00E+00	1.33E-02	0.00E+00	0.00E+00	2.13E-03	0.00E+00	0.00E+00	1.33E-02
1335	ALL	750188.42	4036460.7	NonCancerAcute	0.00E+00	9.91E-06	2.10E-03	0.00E+00	0.00E+00	2.11E-03	4.38E-03	0.00E+00	1.30E-02	0.00E+00	0.00E+00	2.10E-03	0.00E+00	0.00E+00	1.30E-02
1336	ALL	745988.42	4036560.7	NonCancerAcute	0.00E+00	1.24E-05	2.63E-03	0.00E+00	0.00E+00	2.65E-03	8.66E-03	0.00E+00	2.02E-02	0.00E+00	0.00E+00	2.63E-03	0.00E+00	0.00E+00	2.02E-02
1337	ALL	746088.42	4036560.7	NonCancerAcute	0.00E+00	1.25E-05	2.66E-03	0.00E+00	0.00E+00	2.67E-03	8.96E-03	0.00E+00	2.06E-02	0.00E+00	0.00E+00	2.66E-03	0.00E+00	0.00E+00	2.06E-02
1338	ALL	746188.42	4036560.7	NonCancerAcute	0.00E+00	1.34E-05	2.84E-03	0.00E+00	0.00E+00	2.85E-03	9.29E-03	0.00E+00	2.17E-02	0.00E+00	0.00E+00	2.84E-03	0.00E+00	0.00E+00	2.17E-02
1339	ALL	746288.42	4036560.7	NonCancerAcute	0.00E+00	1.49E-05	3.16E-03	0.00E+00	0.00E+00	3.17E-03	1.01E-02	0.00E+00	2.38E-02	0.00E+00	0.00E+00	3.16E-03	0.00E+00	0.00E+00	2.38E-02
1340	ALL	746388.42	4036560.7	NonCancerAcute	0.00E+00	1.44E-05	3.07E-03	0.00E+00	0.00E+00	3.08E-03	1.12E-02	0.00E+00	2.48E-02	0.00E+00	0.00E+00	3.07E-03	0.00E+00	0.00E+00	2.48E-02
1341	ALL	746488.42	4036560.7	NonCancerAcute	0.00E+00	1.51E-05	3.22E-03	0.00E+00	0.00E+00	3.23E-03	1.20E-02	0.00E+00	2.64E-02	0.00E+00	0.00E+00	3.22E-03	0.00E+00	0.00E+00	2.64E-02
1342	ALL	746588.42	4036560.7	NonCancerAcute	0.00E+00	1.63E-05	3.45E-03	0.00E+00	0.00E+00	3.47E-03	1.30E-02	0.00E+00	2.85E-02	0.00E+00	0.00E+00	3.45E-03	0.00E+00	0.00E+00	2.85E-02
1343	ALL	748388.42	4036560.7	NonCancerAcute	0.00E+00	1.16E-05	2.46E-03	0.00E+00	0.00E+00	2.47E-03	6.83E-03	0.00E+00	1.73E-02	0.00E+00	0.00E+00	2.46E-03	0.00E+00	0.00E+00	1.73E-02
1344	ALL	748488.42	4036560.7	NonCancerAcute	0.00E+00	1.14E-05	2.43E-03	0.00E+00	0.00E+00	2.44E-03	6.68E-03	0.00E+00	1.70E-02	0.00E+00	0.00E+00	2.43E-03	0.00E+00	0.00E+00	1.70E-02
1345	ALL	748588.42	4036560.7	NonCancerAcute	0.00E+00	1.14E-05	2.41E-03	0.00E+00	0.00E+00	2.42E-03	6.46E-03	0.00E+00	1.67E-02	0.00E+00	0.00E+00	2.41E-03	0.00E+00	0.00E+00	1.67E-02
1346	ALL	748688.42	4036560.7	NonCancerAcute	0.00E+00	1.13E-05	2.41E-03	0.00E+00	0.00E+00	2.42E-03	6.22E-03	0.00E+00	1.64E-02	0.00E+00	0.00E+00	2.41E-03	0.00E+00	0.00E+00	1.64E-02
1347	ALL	748788.42	4036560.7	NonCancerAcute	0.00E+00	1.11E-05	2.35E-03	0.00E+00	0.00E+00	2.36E-03	6.02E-03	0.00E+00	1.59E-02	0.00E+00	0.00E+00	2.35E-03	0.00E+00	0.00E+00	1.59E-02
1348	ALL	748888.42	4036560.7	NonCancerAcute	0.00E+00	1.09E-05	2.32E-03	0.00E+00	0.00E+00	2.33E-03	5.89E-03	0.00E+00	1.56E-02	0.00E+00	0.00E+00	2.32E-03	0.00E+00	0.00E+00	1.56E-02
1349	ALL	748988.42	4036560.7	NonCancerAcute	0.00E+00	1.09E-05	2.32E-03	0.00E+00	0.00E+00	2.33E-03	5.74E-03	0.00E+00	1.55E-02	0.00E+00	0.00E+00	2.32E-03	0.00E+00	0.00E+00	1.55E-02
1350	ALL	749088.42	4036560.7	NonCancerAcute	0.00E+00	1.11E-05	2.36E-03	0.00E+00	0.00E+00	2.37E-03	5.65E-03	0.00E+00	1.55E-02	0.00E+00	0.00E+00	2.36E-03	0.00E+00	0.00E+00	1.55E-02
1351	ALL	749188.42	4036560.7	NonCancerAcute	0.00E+00	1.08E-05	2.29E-03	0.00E+00	0.00E+00	2.30E-03	5.78E-03	0.00E+00	1.54E-02	0.00E+00	0.00E+00	2.29E-03	0.00E+00	0.00E+00	1.54E-02
1352	ALL	749288.42	4036560.7	NonCancerAcute	0.00E+00	1.06E-05	2.26E-03	0.00E+00	0.00E+00	2.27E-03	5.75E-03	0.00E+00	1.53E-02	0.00E+00	0.00E+00	2.26E-03	0.00E+00	0.00E+00	1.53E-02
1353	ALL	749388.42	4036560.7	NonCancerAcute	0.00E+00	1.06E-05	2.25E-03	0.00E+00	0.00E+00	2.26E-03	5.43E-03	0.00E+00	1.48E-02	0.00E+00	0.00E+00	2.25E-03	0.00E+00	0.00E+00	1.48E-02
1354	ALL	749488.42	4036560.7	NonCancerAcute	0.00E+00	1.05E-05	2.22E-03	0.00E+00	0.00E+00	2.23E-03	5.20E-03	0.00E+00	1.45E-02	0.00E+00	0.00E+00	2.22E-03	0.00E+00	0.00E+00	1.45E-02
1355	ALL	749588.42	4036560.7	NonCancerAcute	0.00E+00	1.05E-05	2.23E-03	0.00E+00	0.00E+00	2.24E-03	5.08E-03	0.00E+00	1.43E-02	0.00E+00	0.00E+00	2.23E-03	0.00E+00	0.00E+00	1.43E-02
1356	ALL	749688.42	4036560.7	NonCancerAcute	0.00E+00	1.03E-05	2.19E-03	0.00E+00	0.00E+00	2.20E-03	4.74E-03	0.00E+00	1.37E-02	0.00E+00	0.00E+00	2.19E-03	0.00E+00	0.00E+00	1.37E-02
1357	ALL	749788.42	4036560.7	NonCancerAcute	0.00E+00	1.02E-05	2.17E-03	0.00E+00	0.00E+00	2.18E-03	4.63E-03	0.00E+00	1.36E-02	0.00E+00	0.00E+00	2.17E-03	0.00E+00	0.00E+00	1.36E-02
1358	ALL	749888.42	4036560.7	NonCancerAcute	0.00E+00	1.01E-05	2.14E-03	0.00E+00	0.00E+00	2.15E-03	4.61E-03	0.00E+00	1.34E-02	0.00E+00	0.00E+00	2.14E-03	0.00E+00	0.00E+00	1.34E-02
1359	ALL	749988.42	4036560.7	NonCancerAcute	0.00E+00	1.00E-05	2.13E-03	0.00E+00	0.00E+00	2.14E-03	4.71E-03	0.00E+00	1.35E-02	0.00E+00	0.00E+00	2.13E-03	0.00E+00	0.00E+00	1.35E-02
1360	ALL	750088.42	4036560.7	NonCancerAcute	0.00E+00	1.00E-05	2.12E-03	0.00E+00	0.00E+00	2.13E-03	4.62E-03	0.00E+00	1.34E-02	0.00E+00	0.00E+00	2.12E-03	0.00E+00	0.00E+00	1.34E-02
1361	ALL	750188.42	4036560.7	NonCancerAcute	0.00E+00	9.91E-06	2.10E-03	0.00E+00	0.00E+00	2.11E-03	4.52E-03	0.00E+00	1.32E-02	0.00E+00	0.00E+00	2.10E-03	0.00E+00	0.00E+00	1.32E-02
1362	ALL	750288.42	4036560.7	NonCancerAcute	0.00E+00	9.82E-06	2.09E-03	0.00E+00	0.00E+00	2.09E-03	4.42E-03	0.00E+00	1.30E-02	0.00E+00	0.00E+00	2.09E-03	0.00E+00	0.00E+00	1.30E-02
1363	ALL	752388.42	4036560.7	NonCancerAcute	0.00E+00	7.48E-06	1.59E-03	0.00E+00	0.00E+00	1.59E-03	2.90E-03	0.00E+00	9.32E-03	0.00E+00	0.00E+00	1.59E-03	0.00E+00	0.00E+00	9.32E-03
1364	ALL	752488.42	4036560.7	NonCancerAcute	0.00E+00	7.39E-06	1.57E-03	0.00E+00	0.00E+00	1.58E-03	2.82E-03	0.00E+00	9.15E-03	0.00E+00	0.00E+00	1.57E-03	0.00E+00	0.00E+00	9.15E-03
1365	ALL	752588.42	4036560.7	NonCancerAcute	0.00E+00	7.30E-06	1.55E-03	0.00E+00	0.00E+00	1.56E-03	2.82E-03	0.00E+00	9.09E-03	0.00E+00	0.00E+00	1.55E-03	0.00E+00	0.00E+00	9.09E-03
1366	ALL	752688.42	4036560.7	NonCancerAcute	0.00E+00	7.15E-06	1.52E-03	0.00E+00	0.00E+00	1.52E-03	2.80E-03	0.00E+00	8.95E-03	0.00E+00	0.00E+00	1.52E-03	0.00E+00	0.00E+00	8.95E-03
1367	ALL	752788.42	4036560.7	NonCancerAcute	0.00E+00	7.11E-06	1.51E-03	0.00E+00	0.00E+00	1.52E-03	2.73E-03	0.00E+00	8.84E-03	0.00E+00	0.00E+00	1.51E-03	0.00E+00	0.00E+00	8.84E-03
1368	ALL	752888.42	4036560.7	NonCancerAcute	0.00E+00	7.09E-06	1.51E-03	0.00E+00	0.00E+00	1.51E-03	2.66E-03	0.00E+00	8.73E-03	0.00E+00	0.00E+00	1.51E-03	0.00E+00	0.00E+00	8.73E-03
1369	ALL	752988.42	4036560.7	NonCancerAcute	0.00E+00	7.03E-06	1.49E-03	0.00E+00	0.00E+00	1.50E-03	2.57E-03	0.00E+00	8.58E-03	0.00E+00	0.00E+00	1.49E-03	0.00E+00	0.00E+00	8.58E-03
1370	ALL	753088.42	4036560.7	NonCancerAcute	0.00E+00	6.93E-06	1.47E-03	0.00E+00	0.00E+00	1.48E-03	2.55E-03	0.00E+00	8.47E-03	0.00E+00	0.00E+00	1.47E-03	0.00E+00	0.00E+00	8.47E-03
1371	ALL	753188.42	4036560.7	NonCancerAcute	0.00E+00	6.81E-06	1.45E-03	0.00E+00	0.00E+00	1.45E-03	2.55E-03	0.00E+00	8.39E-03	0.00E+00	0.00E+00	1.45E-03	0.00E+00	0.00E+00	8.39E-03
1372	ALL	753288.42	4036560.7	NonCancerAcute	0.00E+00	6.76E-06	1.43E-03	0.00E+00	0.00E+00	1.44E-03	2.53E-03	0.00E+00	8.31E-03	0.00E+00	0.00E+00	1.43E-03	0.00E+00	0.00E+00	8.31E-03
1373	ALL	753388.42	4036560.7	NonCancerAcute	0.00E+00	6.68E-06	1.42E-03	0.00E+00	0.00E+00	1.42E-03	2.47E-03	0.00E+00	8.17E-03	0.00E+00	0.00E+00	1.42E-03	0.00E+00	0.00E+00	8.17E-03
1374	ALL	753488.42	4036560.7	NonCancerAcute	0.00E+00	6.62E-06	1.41E-03	0.00E+00	0.00E+00	1.41E-03	2.37E-03	0.00E+00	8.02E-03	0.00E+00	0.00E+00	1.41E-03	0.00E+00	0.00E+00	8.02E-03
1375	ALL	753588.42	4036560.7	NonCancerAcute	0.00E+00	6.54E-06	1.39E-03	0.00E+00	0.00E+00	1.39E-03	2.31E-03	0.00E+00	7.88E-03	0.00E+00	0.00E+00	1.39E-03	0.00E+00	0.00E+00	7.88E-03
1376	ALL	753688.42	4036560.7	NonCancerAcute	0.00E+00	6.48E-06	1.38E-03	0.00E+00	0.00E+00	1.38E-03	2.26E-03	0.00E+00	7.77E-03	0.00E+00	0.00E+00	1.38E-03	0.00E+00	0.00E+00	7.77E-03

1377	ALL	753788.42	4036560.7	NonCancerAcute	0.00E+00	6.39E-06	1.36E-03	0.00E+00	0.00E+00	1.36E-03	2.21E-03	0.00E+00	7.64E-03	0.00E+00	0.00E+00	1.36E-03	0.00E+00	0.00E+00	7.64E-03
1378	ALL	753888.42	4036560.7	NonCancerAcute	0.00E+00	6.34E-06	1.35E-03	0.00E+00	0.00E+00	1.35E-03	2.21E-03	0.00E+00	7.60E-03	0.00E+00	0.00E+00	1.35E-03	0.00E+00	0.00E+00	7.60E-03
1379	ALL	753988.42	4036560.7	NonCancerAcute	0.00E+00	6.25E-06	1.33E-03	0.00E+00	0.00E+00	1.33E-03	2.22E-03	0.00E+00	7.54E-03	0.00E+00	0.00E+00	1.33E-03	0.00E+00	0.00E+00	7.54E-03
1380	ALL	754088.42	4036560.7	NonCancerAcute	0.00E+00	6.17E-06	1.31E-03	0.00E+00	0.00E+00	1.32E-03	2.21E-03	0.00E+00	7.47E-03	0.00E+00	0.00E+00	1.31E-03	0.00E+00	0.00E+00	7.47E-03
1381	ALL	754188.42	4036560.7	NonCancerAcute	0.00E+00	6.11E-06	1.30E-03	0.00E+00	0.00E+00	1.30E-03	2.18E-03	0.00E+00	7.38E-03	0.00E+00	0.00E+00	1.30E-03	0.00E+00	0.00E+00	7.38E-03
1382	ALL	754288.42	4036560.7	NonCancerAcute	0.00E+00	6.07E-06	1.29E-03	0.00E+00	0.00E+00	1.29E-03	2.12E-03	0.00E+00	7.29E-03	0.00E+00	0.00E+00	1.29E-03	0.00E+00	0.00E+00	7.29E-03
1383	ALL	754388.42	4036560.7	NonCancerAcute	0.00E+00	6.03E-06	1.28E-03	0.00E+00	0.00E+00	1.29E-03	2.06E-03	0.00E+00	7.18E-03	0.00E+00	0.00E+00	1.28E-03	0.00E+00	0.00E+00	7.18E-03
1384	ALL	754488.42	4036560.7	NonCancerAcute	0.00E+00	5.98E-06	1.27E-03	0.00E+00	0.00E+00	1.28E-03	1.98E-03	0.00E+00	7.04E-03	0.00E+00	0.00E+00	1.27E-03	0.00E+00	0.00E+00	7.04E-03
1385	ALL	754588.42	4036560.7	NonCancerAcute	0.00E+00	5.92E-06	1.26E-03	0.00E+00	0.00E+00	1.26E-03	1.96E-03	0.00E+00	6.97E-03	0.00E+00	0.00E+00	1.26E-03	0.00E+00	0.00E+00	6.97E-03
1386	ALL	754688.42	4036560.7	NonCancerAcute	0.00E+00	5.84E-06	1.24E-03	0.00E+00	0.00E+00	1.25E-03	1.93E-03	0.00E+00	6.88E-03	0.00E+00	0.00E+00	1.24E-03	0.00E+00	0.00E+00	6.88E-03
1387	ALL	754788.42	4036560.7	NonCancerAcute	0.00E+00	5.77E-06	1.22E-03	0.00E+00	0.00E+00	1.23E-03	1.90E-03	0.00E+00	6.78E-03	0.00E+00	0.00E+00	1.22E-03	0.00E+00	0.00E+00	6.78E-03
1388	ALL	754888.42	4036560.7	NonCancerAcute	0.00E+00	5.68E-06	1.21E-03	0.00E+00	0.00E+00	1.21E-03	1.87E-03	0.00E+00	6.67E-03	0.00E+00	0.00E+00	1.21E-03	0.00E+00	0.00E+00	6.67E-03
1389	ALL	754988.42	4036560.7	NonCancerAcute	0.00E+00	5.56E-06	1.18E-03	0.00E+00	0.00E+00	1.19E-03	1.85E-03	0.00E+00	6.56E-03	0.00E+00	0.00E+00	1.18E-03	0.00E+00	0.00E+00	6.56E-03
1390	ALL	755088.42	4036560.7	NonCancerAcute	0.00E+00	5.45E-06	1.16E-03	0.00E+00	0.00E+00	1.16E-03	1.82E-03	0.00E+00	6.44E-03	0.00E+00	0.00E+00	1.16E-03	0.00E+00	0.00E+00	6.44E-03
1391	ALL	755188.42	4036560.7	NonCancerAcute	0.00E+00	5.33E-06	1.13E-03	0.00E+00	0.00E+00	1.14E-03	1.84E-03	0.00E+00	6.37E-03	0.00E+00	0.00E+00	1.13E-03	0.00E+00	0.00E+00	6.37E-03
1392	ALL	755288.42	4036560.7	NonCancerAcute	0.00E+00	5.22E-06	1.11E-03	0.00E+00	0.00E+00	1.11E-03	1.86E-03	0.00E+00	6.31E-03	0.00E+00	0.00E+00	1.11E-03	0.00E+00	0.00E+00	6.31E-03
1393	ALL	748388.42	4036660.7	NonCancerAcute	0.00E+00	1.16E-05	2.47E-03	0.00E+00	0.00E+00	2.48E-03	6.88E-03	0.00E+00	1.74E-02	0.00E+00	0.00E+00	2.47E-03	0.00E+00	0.00E+00	1.74E-02
1394	ALL	748488.42	4036660.7	NonCancerAcute	0.00E+00	1.15E-05	2.44E-03	0.00E+00	0.00E+00	2.46E-03	6.69E-03	0.00E+00	1.71E-02	0.00E+00	0.00E+00	2.44E-03	0.00E+00	0.00E+00	1.71E-02
1395	ALL	748588.42	4036660.7	NonCancerAcute	0.00E+00	1.15E-05	2.44E-03	0.00E+00	0.00E+00	2.45E-03	6.51E-03	0.00E+00	1.69E-02	0.00E+00	0.00E+00	2.44E-03	0.00E+00	0.00E+00	1.69E-02
1396	ALL	748688.42	4036660.7	NonCancerAcute	0.00E+00	1.14E-05	2.43E-03	0.00E+00	0.00E+00	2.44E-03	6.33E-03	0.00E+00	1.66E-02	0.00E+00	0.00E+00	2.43E-03	0.00E+00	0.00E+00	1.66E-02
1397	ALL	748788.42	4036660.7	NonCancerAcute	0.00E+00	1.12E-05	2.37E-03	0.00E+00	0.00E+00	2.38E-03	6.19E-03	0.00E+00	1.62E-02	0.00E+00	0.00E+00	2.37E-03	0.00E+00	0.00E+00	1.62E-02
1398	ALL	748888.42	4036660.7	NonCancerAcute	0.00E+00	1.09E-05	2.32E-03	0.00E+00	0.00E+00	2.33E-03	6.04E-03	0.00E+00	1.58E-02	0.00E+00	0.00E+00	2.32E-03	0.00E+00	0.00E+00	1.58E-02
1399	ALL	748988.42	4036660.7	NonCancerAcute	0.00E+00	1.10E-05	2.34E-03	0.00E+00	0.00E+00	2.35E-03	5.89E-03	0.00E+00	1.57E-02	0.00E+00	0.00E+00	2.34E-03	0.00E+00	0.00E+00	1.57E-02
1400	ALL	749088.42	4036660.7	NonCancerAcute	0.00E+00	1.11E-05	2.36E-03	0.00E+00	0.00E+00	2.37E-03	5.78E-03	0.00E+00	1.56E-02	0.00E+00	0.00E+00	2.36E-03	0.00E+00	0.00E+00	1.56E-02
1401	ALL	749188.42	4036660.7	NonCancerAcute	0.00E+00	1.08E-05	2.30E-03	0.00E+00	0.00E+00	2.31E-03	5.87E-03	0.00E+00	1.55E-02	0.00E+00	0.00E+00	2.30E-03	0.00E+00	0.00E+00	1.55E-02
1402	ALL	749288.42	4036660.7	NonCancerAcute	0.00E+00	1.07E-05	2.27E-03	0.00E+00	0.00E+00	2.28E-03	5.88E-03	0.00E+00	1.54E-02	0.00E+00	0.00E+00	2.27E-03	0.00E+00	0.00E+00	1.54E-02
1403	ALL	749388.42	4036660.7	NonCancerAcute	0.00E+00	1.06E-05	2.25E-03	0.00E+00	0.00E+00	2.26E-03	5.58E-03	0.00E+00	1.50E-02	0.00E+00	0.00E+00	2.25E-03	0.00E+00	0.00E+00	1.50E-02
1404	ALL	749488.42	4036660.7	NonCancerAcute	0.00E+00	1.06E-05	2.24E-03	0.00E+00	0.00E+00	2.25E-03	5.30E-03	0.00E+00	1.46E-02	0.00E+00	0.00E+00	2.24E-03	0.00E+00	0.00E+00	1.46E-02
1405	ALL	749588.42	4036660.7	NonCancerAcute	0.00E+00	1.06E-05	2.25E-03	0.00E+00	0.00E+00	2.26E-03	5.16E-03	0.00E+00	1.45E-02	0.00E+00	0.00E+00	2.25E-03	0.00E+00	0.00E+00	1.45E-02
1406	ALL	749688.42	4036660.7	NonCancerAcute	0.00E+00	1.03E-05	2.18E-03	0.00E+00	0.00E+00	2.19E-03	4.79E-03	0.00E+00	1.38E-02	0.00E+00	0.00E+00	2.18E-03	0.00E+00	0.00E+00	1.38E-02
1407	ALL	749788.42	4036660.7	NonCancerAcute	0.00E+00	1.03E-05	2.20E-03	0.00E+00	0.00E+00	2.21E-03	4.67E-03	0.00E+00	1.37E-02	0.00E+00	0.00E+00	2.20E-03	0.00E+00	0.00E+00	1.37E-02
1408	ALL	749888.42	4036660.7	NonCancerAcute	0.00E+00	1.01E-05	2.14E-03	0.00E+00	0.00E+00	2.15E-03	4.64E-03	0.00E+00	1.35E-02	0.00E+00	0.00E+00	2.14E-03	0.00E+00	0.00E+00	1.35E-02
1409	ALL	749988.42	4036660.7	NonCancerAcute	0.00E+00	1.02E-05	2.17E-03	0.00E+00	0.00E+00	2.18E-03	4.74E-03	0.00E+00	1.37E-02	0.00E+00	0.00E+00	2.17E-03	0.00E+00	0.00E+00	1.37E-02
1410	ALL	750088.42	4036660.7	NonCancerAcute	0.00E+00	1.01E-05	2.14E-03	0.00E+00	0.00E+00	2.15E-03	4.61E-03	0.00E+00	1.34E-02	0.00E+00	0.00E+00	2.14E-03	0.00E+00	0.00E+00	1.34E-02
1411	ALL	750188.42	4036660.7	NonCancerAcute	0.00E+00	9.95E-06	2.11E-03	0.00E+00	0.00E+00	2.12E-03	4.53E-03	0.00E+00	1.32E-02	0.00E+00	0.00E+00	2.11E-03	0.00E+00	0.00E+00	1.32E-02
1412	ALL	750288.42	4036660.7	NonCancerAcute	0.00E+00	9.87E-06	2.10E-03	0.00E+00	0.00E+00	2.11E-03	4.39E-03	0.00E+00	1.30E-02	0.00E+00	0.00E+00	2.10E-03	0.00E+00	0.00E+00	1.30E-02
1413	ALL	752388.42	4036660.7	NonCancerAcute	0.00E+00	7.44E-06	1.58E-03	0.00E+00	0.00E+00	1.59E-03	2.88E-03	0.00E+00	9.27E-03	0.00E+00	0.00E+00	1.58E-03	0.00E+00	0.00E+00	9.27E-03
1414	ALL	752488.42	4036660.7	NonCancerAcute	0.00E+00	7.34E-06	1.56E-03	0.00E+00	0.00E+00	1.57E-03	2.87E-03	0.00E+00	9.17E-03	0.00E+00	0.00E+00	1.56E-03	0.00E+00	0.00E+00	9.17E-03
1415	ALL	752588.42	4036660.7	NonCancerAcute	0.00E+00	7.19E-06	1.53E-03	0.00E+00	0.00E+00	1.53E-03	2.86E-03	0.00E+00	9.05E-03	0.00E+00	0.00E+00	1.53E-03	0.00E+00	0.00E+00	9.05E-03
1416	ALL	752688.42	4036660.7	NonCancerAcute	0.00E+00	7.18E-06	1.53E-03	0.00E+00	0.00E+00	1.53E-03	2.80E-03	0.00E+00	8.98E-03	0.00E+00	0.00E+00	1.53E-03	0.00E+00	0.00E+00	8.98E-03
1417	ALL	752788.42	4036660.7	NonCancerAcute	0.00E+00	7.15E-06	1.52E-03	0.00E+00	0.00E+00	1.52E-03	2.72E-03	0.00E+00	8.85E-03	0.00E+00	0.00E+00	1.52E-03	0.00E+00	0.00E+00	8.85E-03
1418	ALL	752888.42	4036660.7	NonCancerAcute	0.00E+00	7.11E-06	1.51E-03	0.00E+00	0.00E+00	1.52E-03	2.63E-03	0.00E+00	8.71E-03	0.00E+00	0.00E+00	1.51E-03	0.00E+00	0.00E+00	8.71E-03
1419	ALL	752988.42	4036660.7	NonCancerAcute	0.00E+00	6.99E-06	1.48E-03	0.00E+00	0.00E+00	1.49E-03	2.61E-03	0.00E+00	8.59E-03	0.00E+00	0.00E+00	1.48E-03	0.00E+00	0.00E+00	8.59E-03
1420	ALL	753088.42	4036660.7	NonCancerAcute	0.00E+00	6.89E-06	1.46E-03	0.00E+00	0.00E+00	1.47E-03	2.62E-03	0.00E+00	8.52E-03	0.00E+00	0.00E+00	1.46E-03	0.00E+00	0.00E+00	8.52E-03
1421	ALL	753188.42	4036660.7	NonCancerAcute	0.00E+00	6.84E-06	1.45E-03	0.00E+00	0.00E+00	1.46E-03	2.60E-03	0.00E+00	8.46E-03	0.00E+00	0.00E+00	1.45E-03	0.00E+00	0.00E+00	8.46E-03
1422	ALL	753288.42	4036660.7	NonCancerAcute	0.00E+00	6.76E-06	1.44E-03	0.00E+00	0.00E+00	1.44E-03	2.54E-03	0.00E+00	8.32E-03	0.00E+00	0.00E+00	1.44E-03	0.00E+00	0.00E+00	8.32E-03
1423	ALL	753388.42	4036660.7	NonCancerAcute	0.00E+00	6.70E-06	1.42E-03	0.00E+00	0.00E+00	1.43E-03	2.44E-03	0.00E+00	8.17E-03	0.00E+00	0.00E+00	1.42E-03	0.00E+00	0.00E+00	8.17E-03
1424	ALL	753488.42	4036660.7	NonCancerAcute	0.00E+00	6.62E-06	1.41E-03	0.00E+00	0.00E+00	1.41E-03	2.38E-03	0.00E+00	8.03E-03	0.00E+00	0.00E+00	1.41E-03	0.00E+00	0.00E+00	8.03E-03
1425	ALL	753588.42	4036660.7	NonCancerAcute	0.00E+00	6.55E-06	1.39E-03	0.00E+00	0.00E+00	1.40E-03	2.34E-03	0.00E+00	7.92E-03	0.00E+00	0.00E+00	1.39E-03	0.00E+00	0.00E+00	7.92E-03
1426	ALL	753688.42	4036660.7	NonCancerAcute	0.00E+00	6.48E-06	1.38E-03	0.00E+00	0.00E+00	1.38E-03	2.28E-03	0.00E+00	7.80E-03	0.00E+00	0.00E+00	1.38E-03	0.00E+00	0.00E+00	7.80E-03
1427	ALL	753788.42	4036660.7	NonCancerAcute	0.00E+00	6.41E-06	1.36E-03	0.00E+00	0.00E+00	1.37E-03	2.30E-03	0.00E+00	7.76E-03	0.00E+00	0.00E+00	1.36E-03	0.00E+00	0.00E+00	7.76E-03
1428	ALL	753888.42	4036660.7	NonCancerAcute	0.00E+00	6.31E-06	1.34E-03	0.00E+00	0.00E+00	1.35E-03	2.30E-03	0.00E+00	7.69E-03	0.00E+00	0.00E+00	1.34E-03	0.00E+00	0.00E+00	7.69E-03
1429	ALL	753988.42	4036660.7	NonCancerAcute	0.00E+00	6.25E-06	1.33E-03	0.00E+00	0.00E+00	1.33E-03	2.29E-03	0.00E+00	7.63E-03	0.00E+00	0.00E+00	1.33E-03	0.00E+00	0.00E+00	7.63E-03

1430	ALL	754088.42	4036660.7	NonCancerAcute	0.00E+00	6.20E-06	1.32E-03	0.00E+00	0.00E+00	1.32E-03	2.25E-03	0.00E+00	7.54E-03	0.00E+00	0.00E+00	1.32E-03	0.00E+00	0.00E+00	7.54E-03
1431	ALL	754188.42	4036660.7	NonCancerAcute	0.00E+00	6.16E-06	1.31E-03	0.00E+00	0.00E+00	1.31E-03	2.19E-03	0.00E+00	7.44E-03	0.00E+00	0.00E+00	1.31E-03	0.00E+00	0.00E+00	7.44E-03
1432	ALL	754288.42	4036660.7	NonCancerAcute	0.00E+00	6.11E-06	1.30E-03	0.00E+00	0.00E+00	1.30E-03	2.11E-03	0.00E+00	7.30E-03	0.00E+00	0.00E+00	1.30E-03	0.00E+00	0.00E+00	7.30E-03
1433	ALL	754388.42	4036660.7	NonCancerAcute	0.00E+00	6.07E-06	1.29E-03	0.00E+00	0.00E+00	1.29E-03	2.05E-03	0.00E+00	7.19E-03	0.00E+00	0.00E+00	1.29E-03	0.00E+00	0.00E+00	7.19E-03
1434	ALL	754488.42	4036660.7	NonCancerAcute	0.00E+00	5.99E-06	1.27E-03	0.00E+00	0.00E+00	1.28E-03	2.03E-03	0.00E+00	7.10E-03	0.00E+00	0.00E+00	1.27E-03	0.00E+00	0.00E+00	7.10E-03
1435	ALL	754588.42	4036660.7	NonCancerAcute	0.00E+00	5.92E-06	1.26E-03	0.00E+00	0.00E+00	1.26E-03	1.99E-03	0.00E+00	7.01E-03	0.00E+00	0.00E+00	1.26E-03	0.00E+00	0.00E+00	7.01E-03
1436	ALL	754688.42	4036660.7	NonCancerAcute	0.00E+00	5.83E-06	1.24E-03	0.00E+00	0.00E+00	1.24E-03	1.96E-03	0.00E+00	6.90E-03	0.00E+00	0.00E+00	1.24E-03	0.00E+00	0.00E+00	6.90E-03
1437	ALL	754788.42	4036660.7	NonCancerAcute	0.00E+00	5.72E-06	1.21E-03	0.00E+00	0.00E+00	1.22E-03	1.93E-03	0.00E+00	6.78E-03	0.00E+00	0.00E+00	1.21E-03	0.00E+00	0.00E+00	6.78E-03
1438	ALL	754888.42	4036660.7	NonCancerAcute	0.00E+00	5.61E-06	1.19E-03	0.00E+00	0.00E+00	1.20E-03	1.91E-03	0.00E+00	6.67E-03	0.00E+00	0.00E+00	1.19E-03	0.00E+00	0.00E+00	6.67E-03
1439	ALL	754988.42	4036660.7	NonCancerAcute	0.00E+00	5.48E-06	1.16E-03	0.00E+00	0.00E+00	1.17E-03	1.90E-03	0.00E+00	6.56E-03	0.00E+00	0.00E+00	1.16E-03	0.00E+00	0.00E+00	6.56E-03
1440	ALL	755088.42	4036660.7	NonCancerAcute	0.00E+00	5.37E-06	1.14E-03	0.00E+00	0.00E+00	1.14E-03	1.93E-03	0.00E+00	6.50E-03	0.00E+00	0.00E+00	1.14E-03	0.00E+00	0.00E+00	6.50E-03
1441	ALL	755188.42	4036660.7	NonCancerAcute	0.00E+00	5.26E-06	1.12E-03	0.00E+00	0.00E+00	1.12E-03	1.94E-03	0.00E+00	6.44E-03	0.00E+00	0.00E+00	1.12E-03	0.00E+00	0.00E+00	6.44E-03
1442	ALL	755288.42	4036660.7	NonCancerAcute	0.00E+00	5.19E-06	1.10E-03	0.00E+00	0.00E+00	1.11E-03	1.95E-03	0.00E+00	6.39E-03	0.00E+00	0.00E+00	1.10E-03	0.00E+00	0.00E+00	6.39E-03
1443	ALL	745988.42	4036760.7	NonCancerAcute	0.00E+00	1.30E-05	2.76E-03	0.00E+00	0.00E+00	2.77E-03	8.86E-03	0.00E+00	2.09E-02	0.00E+00	0.00E+00	2.76E-03	0.00E+00	0.00E+00	2.09E-02
1444	ALL	746088.42	4036760.7	NonCancerAcute	0.00E+00	1.25E-05	2.65E-03	0.00E+00	0.00E+00	2.67E-03	9.13E-03	0.00E+00	2.08E-02	0.00E+00	0.00E+00	2.65E-03	0.00E+00	0.00E+00	2.08E-02
1445	ALL	746188.42	4036760.7	NonCancerAcute	0.00E+00	1.33E-05	2.82E-03	0.00E+00	0.00E+00	2.83E-03	9.88E-03	0.00E+00	2.23E-02	0.00E+00	0.00E+00	2.82E-03	0.00E+00	0.00E+00	2.23E-02
1446	ALL	746288.42	4036760.7	NonCancerAcute	0.00E+00	1.34E-05	2.85E-03	0.00E+00	0.00E+00	2.86E-03	1.07E-02	0.00E+00	2.35E-02	0.00E+00	0.00E+00	2.85E-03	0.00E+00	0.00E+00	2.35E-02
1447	ALL	746388.42	4036760.7	NonCancerAcute	0.00E+00	1.37E-05	2.91E-03	0.00E+00	0.00E+00	2.93E-03	1.17E-02	0.00E+00	2.49E-02	0.00E+00	0.00E+00	2.91E-03	0.00E+00	0.00E+00	2.49E-02
1448	ALL	746488.42	4036760.7	NonCancerAcute	0.00E+00	1.48E-05	3.15E-03	0.00E+00	0.00E+00	3.17E-03	1.33E-02	0.00E+00	2.77E-02	0.00E+00	0.00E+00	3.15E-03	0.00E+00	0.00E+00	2.77E-02
1449	ALL	746588.42	4036760.7	NonCancerAcute	0.00E+00	1.45E-05	3.07E-03	0.00E+00	0.00E+00	3.09E-03	1.58E-02	0.00E+00	3.05E-02	0.00E+00	0.00E+00	3.07E-03	0.00E+00	0.00E+00	3.05E-02
1450	ALL	749888.42	4036760.7	NonCancerAcute	0.00E+00	1.03E-05	2.18E-03	0.00E+00	0.00E+00	2.19E-03	4.77E-03	0.00E+00	1.38E-02	0.00E+00	0.00E+00	2.18E-03	0.00E+00	0.00E+00	1.38E-02
1451	ALL	749988.42	4036760.7	NonCancerAcute	0.00E+00	1.02E-05	2.18E-03	0.00E+00	0.00E+00	2.19E-03	4.86E-03	0.00E+00	1.39E-02	0.00E+00	0.00E+00	2.18E-03	0.00E+00	0.00E+00	1.39E-02
1452	ALL	750088.42	4036760.7	NonCancerAcute	0.00E+00	1.01E-05	2.14E-03	0.00E+00	0.00E+00	2.15E-03	4.71E-03	0.00E+00	1.36E-02	0.00E+00	0.00E+00	2.14E-03	0.00E+00	0.00E+00	1.36E-02
1453	ALL	750188.42	4036760.7	NonCancerAcute	0.00E+00	1.00E-05	2.12E-03	0.00E+00	0.00E+00	2.13E-03	4.66E-03	0.00E+00	1.34E-02	0.00E+00	0.00E+00	2.12E-03	0.00E+00	0.00E+00	1.34E-02
1454	ALL	750288.42	4036760.7	NonCancerAcute	0.00E+00	9.88E-06	2.10E-03	0.00E+00	0.00E+00	2.11E-03	4.50E-03	0.00E+00	1.31E-02	0.00E+00	0.00E+00	2.10E-03	0.00E+00	0.00E+00	1.31E-02
1455	ALL	752388.42	4036760.7	NonCancerAcute	0.00E+00	7.50E-06	1.59E-03	0.00E+00	0.00E+00	1.60E-03	3.03E-03	0.00E+00	9.50E-03	0.00E+00	0.00E+00	1.59E-03	0.00E+00	0.00E+00	9.50E-03
1456	ALL	752488.42	4036760.7	NonCancerAcute	0.00E+00	7.36E-06	1.56E-03	0.00E+00	0.00E+00	1.57E-03	3.03E-03	0.00E+00	9.39E-03	0.00E+00	0.00E+00	1.56E-03	0.00E+00	0.00E+00	9.39E-03
1457	ALL	752588.42	4036760.7	NonCancerAcute	0.00E+00	7.33E-06	1.56E-03	0.00E+00	0.00E+00	1.56E-03	2.97E-03	0.00E+00	9.29E-03	0.00E+00	0.00E+00	1.56E-03	0.00E+00	0.00E+00	9.29E-03
1458	ALL	752688.42	4036760.7	NonCancerAcute	0.00E+00	7.27E-06	1.54E-03	0.00E+00	0.00E+00	1.55E-03	2.88E-03	0.00E+00	9.14E-03	0.00E+00	0.00E+00	1.54E-03	0.00E+00	0.00E+00	9.14E-03
1459	ALL	752788.42	4036760.7	NonCancerAcute	0.00E+00	7.19E-06	1.53E-03	0.00E+00	0.00E+00	1.53E-03	2.78E-03	0.00E+00	8.96E-03	0.00E+00	0.00E+00	1.53E-03	0.00E+00	0.00E+00	8.96E-03
1460	ALL	752888.42	4036760.7	NonCancerAcute	0.00E+00	7.04E-06	1.50E-03	0.00E+00	0.00E+00	1.50E-03	2.75E-03	0.00E+00	8.80E-03	0.00E+00	0.00E+00	1.50E-03	0.00E+00	0.00E+00	8.80E-03
1461	ALL	752988.42	4036760.7	NonCancerAcute	0.00E+00	6.96E-06	1.48E-03	0.00E+00	0.00E+00	1.49E-03	2.76E-03	0.00E+00	8.76E-03	0.00E+00	0.00E+00	1.48E-03	0.00E+00	0.00E+00	8.76E-03
1462	ALL	753088.42	4036760.7	NonCancerAcute	0.00E+00	6.89E-06	1.46E-03	0.00E+00	0.00E+00	1.47E-03	2.74E-03	0.00E+00	8.67E-03	0.00E+00	0.00E+00	1.46E-03	0.00E+00	0.00E+00	8.67E-03
1463	ALL	753188.42	4036760.7	NonCancerAcute	0.00E+00	6.81E-06	1.45E-03	0.00E+00	0.00E+00	1.45E-03	2.67E-03	0.00E+00	8.52E-03	0.00E+00	0.00E+00	1.45E-03	0.00E+00	0.00E+00	8.52E-03
1464	ALL	753288.42	4036760.7	NonCancerAcute	0.00E+00	6.72E-06	1.43E-03	0.00E+00	0.00E+00	1.43E-03	2.57E-03	0.00E+00	8.33E-03	0.00E+00	0.00E+00	1.43E-03	0.00E+00	0.00E+00	8.33E-03
1465	ALL	753388.42	4036760.7	NonCancerAcute	0.00E+00	6.65E-06	1.41E-03	0.00E+00	0.00E+00	1.42E-03	2.51E-03	0.00E+00	8.20E-03	0.00E+00	0.00E+00	1.41E-03	0.00E+00	0.00E+00	8.20E-03
1466	ALL	753488.42	4036760.7	NonCancerAcute	0.00E+00	6.57E-06	1.39E-03	0.00E+00	0.00E+00	1.40E-03	2.46E-03	0.00E+00	8.07E-03	0.00E+00	0.00E+00	1.39E-03	0.00E+00	0.00E+00	8.07E-03
1467	ALL	753588.42	4036760.7	NonCancerAcute	0.00E+00	6.52E-06	1.39E-03	0.00E+00	0.00E+00	1.39E-03	2.40E-03	0.00E+00	7.97E-03	0.00E+00	0.00E+00	1.39E-03	0.00E+00	0.00E+00	7.97E-03
1468	ALL	753688.42	4036760.7	NonCancerAcute	0.00E+00	6.44E-06	1.37E-03	0.00E+00	0.00E+00	1.37E-03	2.42E-03	0.00E+00	7.94E-03	0.00E+00	0.00E+00	1.37E-03	0.00E+00	0.00E+00	7.94E-03
1469	ALL	753788.42	4036760.7	NonCancerAcute	0.00E+00	6.38E-06	1.35E-03	0.00E+00	0.00E+00	1.36E-03	2.42E-03	0.00E+00	7.88E-03	0.00E+00	0.00E+00	1.35E-03	0.00E+00	0.00E+00	7.88E-03
1470	ALL	753888.42	4036760.7	NonCancerAcute	0.00E+00	6.32E-06	1.34E-03	0.00E+00	0.00E+00	1.35E-03	2.39E-03	0.00E+00	7.81E-03	0.00E+00	0.00E+00	1.34E-03	0.00E+00	0.00E+00	7.81E-03
1471	ALL	753988.42	4036760.7	NonCancerAcute	0.00E+00	6.28E-06	1.33E-03	0.00E+00	0.00E+00	1.34E-03	2.34E-03	0.00E+00	7.72E-03	0.00E+00	0.00E+00	1.33E-03	0.00E+00	0.00E+00	7.72E-03
1472	ALL	754088.42	4036760.7	NonCancerAcute	0.00E+00	6.24E-06	1.32E-03	0.00E+00	0.00E+00	1.33E-03	2.28E-03	0.00E+00	7.60E-03	0.00E+00	0.00E+00	1.32E-03	0.00E+00	0.00E+00	7.60E-03
1473	ALL	754188.42	4036760.7	NonCancerAcute	0.00E+00	6.19E-06	1.32E-03	0.00E+00	0.00E+00	1.32E-03	2.19E-03	0.00E+00	7.46E-03	0.00E+00	0.00E+00	1.32E-03	0.00E+00	0.00E+00	7.46E-03
1474	ALL	754288.42	4036760.7	NonCancerAcute	0.00E+00	6.13E-06	1.30E-03	0.00E+00	0.00E+00	1.31E-03	2.14E-03	0.00E+00	7.35E-03	0.00E+00	0.00E+00	1.30E-03	0.00E+00	0.00E+00	7.35E-03
1475	ALL	754388.42	4036760.7	NonCancerAcute	0.00E+00	6.06E-06	1.29E-03	0.00E+00	0.00E+00	1.29E-03	2.11E-03	0.00E+00	7.26E-03	0.00E+00	0.00E+00	1.29E-03	0.00E+00	0.00E+00	7.26E-03
1476	ALL	754488.42	4036760.7	NonCancerAcute	0.00E+00	5.98E-06	1.27E-03	0.00E+00	0.00E+00	1.27E-03	2.07E-03	0.00E+00	7.15E-03	0.00E+00	0.00E+00	1.27E-03	0.00E+00	0.00E+00	7.15E-03
1477	ALL	754588.42	4036760.7	NonCancerAcute	0.00E+00	5.87E-06	1.25E-03	0.00E+00	0.00E+00	1.25E-03	2.04E-03	0.00E+00	7.03E-03	0.00E+00	0.00E+00	1.25E-03	0.00E+00	0.00E+00	7.03E-03
1478	ALL	754688.42	4036760.7	NonCancerAcute	0.00E+00	5.76E-06	1.22E-03	0.00E+00	0.00E+00	1.23E-03	2.01E-03	0.00E+00	6.91E-03	0.00E+00	0.00E+00	1.22E-03	0.00E+00	0.00E+00	6.91E-03
1479	ALL	754788.42	4036760.7	NonCancerAcute	0.00E+00	5.63E-06	1.20E-03	0.00E+00	0.00E+00	1.20E-03	1.98E-03	0.00E+00	6.77E-03	0.00E+00	0.00E+00	1.20E-03	0.00E+00	0.00E+00	6.77E-03
1480	ALL	754888.42	4036760.7	NonCancerAcute	0.00E+00	5.51E-06	1.17E-03	0.00E+00	0.00E+00	1.18E-03	2.00E-03	0.00E+00	6.71E-03	0.00E+00	0.00E+00	1.17E-03	0.00E+00	0.00E+00	6.71E-03
1481	ALL	754988.42	4036760.7	NonCancerAcute	0.00E+00	5.40E-06	1.15E-03	0.00E+00	0.00E+00	1.15E-03	2.02E-03	0.00E+00	6.64E-03	0.00E+00	0.00E+00	1.15E-03	0.00E+00	0.00E+00	6.64E-03
1482	ALL	755088.42	4036760.7	NonCancerAcute	0.00E+00	5.32E-06	1.13E-03	0.00E+00	0.00E+00	1.14E-03	2.03E-03	0.00E+00	6.60E-03	0.00E+00	0.00E+00	1.13E-03	0.00E+00	0.00E+00	6.60E-03

1483	ALL	755188.42	4036760.7	NonCancerAcute	0.00E+00	5.28E-06	1.12E-03	0.00E+00	0.00E+00	1.13E-03	2.03E-03	0.00E+00	6.56E-03	0.00E+00	0.00E+00	1.12E-03	0.00E+00	0.00E+00	6.56E-03
1484	ALL	755288.42	4036760.7	NonCancerAcute	0.00E+00	5.22E-06	1.11E-03	0.00E+00	0.00E+00	1.11E-03	2.02E-03	0.00E+00	6.50E-03	0.00E+00	0.00E+00	1.11E-03	0.00E+00	0.00E+00	6.50E-03
1485	ALL	745988.42	4036860.7	NonCancerAcute	0.00E+00	1.22E-05	2.59E-03	0.00E+00	0.00E+00	2.60E-03	8.91E-03	0.00E+00	2.03E-02	0.00E+00	0.00E+00	2.59E-03	0.00E+00	0.00E+00	2.03E-02
1486	ALL	746088.42	4036860.7	NonCancerAcute	0.00E+00	1.27E-05	2.69E-03	0.00E+00	0.00E+00	2.71E-03	9.23E-03	0.00E+00	2.11E-02	0.00E+00	0.00E+00	2.69E-03	0.00E+00	0.00E+00	2.11E-02
1487	ALL	746188.42	4036860.7	NonCancerAcute	0.00E+00	1.28E-05	2.71E-03	0.00E+00	0.00E+00	2.73E-03	9.96E-03	0.00E+00	2.21E-02	0.00E+00	0.00E+00	2.71E-03	0.00E+00	0.00E+00	2.21E-02
1488	ALL	746288.42	4036860.7	NonCancerAcute	0.00E+00	1.28E-05	2.72E-03	0.00E+00	0.00E+00	2.74E-03	1.12E-02	0.00E+00	2.36E-02	0.00E+00	0.00E+00	2.72E-03	0.00E+00	0.00E+00	2.36E-02
1489	ALL	746388.42	4036860.7	NonCancerAcute	0.00E+00	1.38E-05	2.93E-03	0.00E+00	0.00E+00	2.94E-03	1.31E-02	0.00E+00	2.67E-02	0.00E+00	0.00E+00	2.93E-03	0.00E+00	0.00E+00	2.67E-02
1490	ALL	746488.42	4036860.7	NonCancerAcute	0.00E+00	1.39E-05	2.95E-03	0.00E+00	0.00E+00	2.97E-03	1.47E-02	0.00E+00	2.88E-02	0.00E+00	0.00E+00	2.95E-03	0.00E+00	0.00E+00	2.88E-02
1491	ALL	746588.42	4036860.7	NonCancerAcute	0.00E+00	1.40E-05	2.97E-03	0.00E+00	0.00E+00	2.98E-03	1.84E-02	0.00E+00	3.33E-02	0.00E+00	0.00E+00	2.97E-03	0.00E+00	0.00E+00	3.33E-02
1492	ALL	747488.42	4036860.7	NonCancerAcute	0.00E+00	1.37E-05	2.92E-03	0.00E+00	0.00E+00	2.93E-03	9.94E-03	0.00E+00	2.28E-02	0.00E+00	0.00E+00	2.92E-03	0.00E+00	0.00E+00	2.28E-02
1493	ALL	747588.42	4036860.7	NonCancerAcute	0.00E+00	1.28E-05	2.72E-03	0.00E+00	0.00E+00	2.74E-03	9.63E-03	0.00E+00	2.17E-02	0.00E+00	0.00E+00	2.72E-03	0.00E+00	0.00E+00	2.17E-02
1494	ALL	747688.42	4036860.7	NonCancerAcute	0.00E+00	1.27E-05	2.70E-03	0.00E+00	0.00E+00	2.71E-03	9.38E-03	0.00E+00	2.13E-02	0.00E+00	0.00E+00	2.70E-03	0.00E+00	0.00E+00	2.13E-02
1495	ALL	747788.42	4036860.7	NonCancerAcute	0.00E+00	1.27E-05	2.69E-03	0.00E+00	0.00E+00	2.70E-03	9.07E-03	0.00E+00	2.09E-02	0.00E+00	0.00E+00	2.69E-03	0.00E+00	0.00E+00	2.09E-02
1496	ALL	747888.42	4036860.7	NonCancerAcute	0.00E+00	1.25E-05	2.65E-03	0.00E+00	0.00E+00	2.66E-03	8.51E-03	0.00E+00	2.01E-02	0.00E+00	0.00E+00	2.65E-03	0.00E+00	0.00E+00	2.01E-02
1497	ALL	747988.42	4036860.7	NonCancerAcute	0.00E+00	1.22E-05	2.59E-03	0.00E+00	0.00E+00	2.60E-03	8.09E-03	0.00E+00	1.93E-02	0.00E+00	0.00E+00	2.59E-03	0.00E+00	0.00E+00	1.93E-02
1498	ALL	748088.42	4036860.7	NonCancerAcute	0.00E+00	1.18E-05	2.51E-03	0.00E+00	0.00E+00	2.52E-03	7.77E-03	0.00E+00	1.86E-02	0.00E+00	0.00E+00	2.51E-03	0.00E+00	0.00E+00	1.86E-02
1499	ALL	748188.42	4036860.7	NonCancerAcute	0.00E+00	1.12E-05	2.38E-03	0.00E+00	0.00E+00	2.39E-03	7.53E-03	0.00E+00	1.79E-02	0.00E+00	0.00E+00	2.38E-03	0.00E+00	0.00E+00	1.79E-02
1500	ALL	749988.42	4036860.7	NonCancerAcute	0.00E+00	1.02E-05	2.17E-03	0.00E+00	0.00E+00	2.18E-03	5.01E-03	0.00E+00	1.40E-02	0.00E+00	0.00E+00	2.17E-03	0.00E+00	0.00E+00	1.40E-02
1501	ALL	750088.42	4036860.7	NonCancerAcute	0.00E+00	1.01E-05	2.15E-03	0.00E+00	0.00E+00	2.16E-03	4.83E-03	0.00E+00	1.37E-02	0.00E+00	0.00E+00	2.15E-03	0.00E+00	0.00E+00	1.37E-02
1502	ALL	750188.42	4036860.7	NonCancerAcute	0.00E+00	1.01E-05	2.14E-03	0.00E+00	0.00E+00	2.15E-03	4.81E-03	0.00E+00	1.37E-02	0.00E+00	0.00E+00	2.14E-03	0.00E+00	0.00E+00	1.37E-02
1503	ALL	750288.42	4036860.7	NonCancerAcute	0.00E+00	9.95E-06	2.11E-03	0.00E+00	0.00E+00	2.12E-03	4.67E-03	0.00E+00	1.34E-02	0.00E+00	0.00E+00	2.11E-03	0.00E+00	0.00E+00	1.34E-02
1504	ALL	752388.42	4036860.7	NonCancerAcute	0.00E+00	7.46E-06	1.58E-03	0.00E+00	0.00E+00	1.59E-03	3.16E-03	0.00E+00	9.62E-03	0.00E+00	0.00E+00	1.58E-03	0.00E+00	0.00E+00	9.62E-03
1505	ALL	752488.42	4036860.7	NonCancerAcute	0.00E+00	7.42E-06	1.58E-03	0.00E+00	0.00E+00	1.58E-03	3.11E-03	0.00E+00	9.54E-03	0.00E+00	0.00E+00	1.58E-03	0.00E+00	0.00E+00	9.54E-03
1506	ALL	752588.42	4036860.7	NonCancerAcute	0.00E+00	7.37E-06	1.57E-03	0.00E+00	0.00E+00	1.57E-03	3.01E-03	0.00E+00	9.37E-03	0.00E+00	0.00E+00	1.57E-03	0.00E+00	0.00E+00	9.37E-03
1507	ALL	752688.42	4036860.7	NonCancerAcute	0.00E+00	7.28E-06	1.55E-03	0.00E+00	0.00E+00	1.55E-03	2.91E-03	0.00E+00	9.18E-03	0.00E+00	0.00E+00	1.55E-03	0.00E+00	0.00E+00	9.18E-03
1508	ALL	752788.42	4036860.7	NonCancerAcute	0.00E+00	7.12E-06	1.51E-03	0.00E+00	0.00E+00	1.52E-03	2.86E-03	0.00E+00	9.00E-03	0.00E+00	0.00E+00	1.51E-03	0.00E+00	0.00E+00	9.00E-03
1509	ALL	752888.42	4036860.7	NonCancerAcute	0.00E+00	7.07E-06	1.50E-03	0.00E+00	0.00E+00	1.51E-03	2.88E-03	0.00E+00	8.99E-03	0.00E+00	0.00E+00	1.50E-03	0.00E+00	0.00E+00	8.99E-03
1510	ALL	752988.42	4036860.7	NonCancerAcute	0.00E+00	7.00E-06	1.49E-03	0.00E+00	0.00E+00	1.49E-03	2.85E-03	0.00E+00	8.90E-03	0.00E+00	0.00E+00	1.49E-03	0.00E+00	0.00E+00	8.90E-03
1511	ALL	753088.42	4036860.7	NonCancerAcute	0.00E+00	6.94E-06	1.47E-03	0.00E+00	0.00E+00	1.48E-03	2.78E-03	0.00E+00	8.77E-03	0.00E+00	0.00E+00	1.47E-03	0.00E+00	0.00E+00	8.77E-03
1512	ALL	753188.42	4036860.7	NonCancerAcute	0.00E+00	6.85E-06	1.45E-03	0.00E+00	0.00E+00	1.46E-03	2.68E-03	0.00E+00	8.56E-03	0.00E+00	0.00E+00	1.45E-03	0.00E+00	0.00E+00	8.56E-03
1513	ALL	753288.42	4036860.7	NonCancerAcute	0.00E+00	6.79E-06	1.44E-03	0.00E+00	0.00E+00	1.45E-03	2.62E-03	0.00E+00	8.44E-03	0.00E+00	0.00E+00	1.44E-03	0.00E+00	0.00E+00	8.44E-03
1514	ALL	753388.42	4036860.7	NonCancerAcute	0.00E+00	6.71E-06	1.42E-03	0.00E+00	0.00E+00	1.43E-03	2.56E-03	0.00E+00	8.32E-03	0.00E+00	0.00E+00	1.42E-03	0.00E+00	0.00E+00	8.32E-03
1515	ALL	753488.42	4036860.7	NonCancerAcute	0.00E+00	6.63E-06	1.41E-03	0.00E+00	0.00E+00	1.41E-03	2.51E-03	0.00E+00	8.20E-03	0.00E+00	0.00E+00	1.41E-03	0.00E+00	0.00E+00	8.20E-03
1516	ALL	753588.42	4036860.7	NonCancerAcute	0.00E+00	6.53E-06	1.39E-03	0.00E+00	0.00E+00	1.39E-03	2.53E-03	0.00E+00	8.14E-03	0.00E+00	0.00E+00	1.39E-03	0.00E+00	0.00E+00	8.14E-03
1517	ALL	753688.42	4036860.7	NonCancerAcute	0.00E+00	6.46E-06	1.37E-03	0.00E+00	0.00E+00	1.38E-03	2.53E-03	0.00E+00	8.08E-03	0.00E+00	0.00E+00	1.37E-03	0.00E+00	0.00E+00	8.08E-03
1518	ALL	753788.42	4036860.7	NonCancerAcute	0.00E+00	6.40E-06	1.36E-03	0.00E+00	0.00E+00	1.37E-03	2.49E-03	0.00E+00	7.99E-03	0.00E+00	0.00E+00	1.36E-03	0.00E+00	0.00E+00	7.99E-03
1519	ALL	753888.42	4036860.7	NonCancerAcute	0.00E+00	6.34E-06	1.35E-03	0.00E+00	0.00E+00	1.35E-03	2.43E-03	0.00E+00	7.87E-03	0.00E+00	0.00E+00	1.35E-03	0.00E+00	0.00E+00	7.87E-03
1520	ALL	753988.42	4036860.7	NonCancerAcute	0.00E+00	6.27E-06	1.33E-03	0.00E+00	0.00E+00	1.34E-03	2.35E-03	0.00E+00	7.73E-03	0.00E+00	0.00E+00	1.33E-03	0.00E+00	0.00E+00	7.73E-03
1521	ALL	754088.42	4036860.7	NonCancerAcute	0.00E+00	6.21E-06	1.32E-03	0.00E+00	0.00E+00	1.32E-03	2.26E-03	0.00E+00	7.56E-03	0.00E+00	0.00E+00	1.32E-03	0.00E+00	0.00E+00	7.56E-03
1522	ALL	754188.42	4036860.7	NonCancerAcute	0.00E+00	6.13E-06	1.30E-03	0.00E+00	0.00E+00	1.31E-03	2.23E-03	0.00E+00	7.46E-03	0.00E+00	0.00E+00	1.30E-03	0.00E+00	0.00E+00	7.46E-03
1523	ALL	754288.42	4036860.7	NonCancerAcute	0.00E+00	6.05E-06	1.28E-03	0.00E+00	0.00E+00	1.29E-03	2.19E-03	0.00E+00	7.35E-03	0.00E+00	0.00E+00	1.28E-03	0.00E+00	0.00E+00	7.35E-03
1524	ALL	754388.42	4036860.7	NonCancerAcute	0.00E+00	5.95E-06	1.26E-03	0.00E+00	0.00E+00	1.27E-03	2.15E-03	0.00E+00	7.23E-03	0.00E+00	0.00E+00	1.26E-03	0.00E+00	0.00E+00	7.23E-03
1525	ALL	754488.42	4036860.7	NonCancerAcute	0.00E+00	5.85E-06	1.24E-03	0.00E+00	0.00E+00	1.25E-03	2.12E-03	0.00E+00	7.11E-03	0.00E+00	0.00E+00	1.24E-03	0.00E+00	0.00E+00	7.11E-03
1526	ALL	754588.42	4036860.7	NonCancerAcute	0.00E+00	5.73E-06	1.22E-03	0.00E+00	0.00E+00	1.22E-03	2.09E-03	0.00E+00	6.98E-03	0.00E+00	0.00E+00	1.22E-03	0.00E+00	0.00E+00	6.98E-03
1527	ALL	754688.42	4036860.7	NonCancerAcute	0.00E+00	5.62E-06	1.19E-03	0.00E+00	0.00E+00	1.20E-03	2.08E-03	0.00E+00	6.88E-03	0.00E+00	0.00E+00	1.19E-03	0.00E+00	0.00E+00	6.88E-03
1528	ALL	754788.42	4036860.7	NonCancerAcute	0.00E+00	5.51E-06	1.17E-03	0.00E+00	0.00E+00	1.18E-03	2.10E-03	0.00E+00	6.83E-03	0.00E+00	0.00E+00	1.17E-03	0.00E+00	0.00E+00	6.83E-03
1529	ALL	754888.42	4036860.7	NonCancerAcute	0.00E+00	5.43E-06	1.15E-03	0.00E+00	0.00E+00	1.16E-03	2.12E-03	0.00E+00	6.79E-03	0.00E+00	0.00E+00	1.15E-03	0.00E+00	0.00E+00	6.79E-03
1530	ALL	754988.42	4036860.7	NonCancerAcute	0.00E+00	5.40E-06	1.15E-03	0.00E+00	0.00E+00	1.15E-03	2.12E-03	0.00E+00	6.76E-03	0.00E+00	0.00E+00	1.15E-03	0.00E+00	0.00E+00	6.76E-03
1531	ALL	755088.42	4036860.7	NonCancerAcute	0.00E+00	5.34E-06	1.13E-03	0.00E+00	0.00E+00	1.14E-03	2.11E-03	0.00E+00	6.71E-03	0.00E+00	0.00E+00	1.13E-03	0.00E+00	0.00E+00	6.71E-03
1532	ALL	755188.42	4036860.7	NonCancerAcute	0.00E+00	5.27E-06	1.12E-03	0.00E+00	0.00E+00	1.12E-03	2.09E-03	0.00E+00	6.62E-03	0.00E+00	0.00E+00	1.12E-03	0.00E+00	0.00E+00	6.62E-03
1533	ALL	755288.42	4036860.7	NonCancerAcute	0.00E+00	5.22E-06	1.11E-03	0.00E+00	0.00E+00	1.11E-03	2.05E-03	0.00E+00	6.54E-03	0.00E+00	0.00E+00	1.11E-03	0.00E+00	0.00E+00	6.54E-03
1534	ALL	746388.42	4036960.7	NonCancerAcute	0.00E+00	1.31E-05	2.78E-03	0.00E+00	0.00E+00	2.80E-03	1.19E-02	0.00E+00	2.47E-02	0.00E+00	0.00E+00	2.78E-03	0.00E+00	0.00E+00	2.47E-02
1535	ALL	746488.42	4036960.7	NonCancerAcute	0.00E+00	1.34E-05	2.85E-03	0.00E+00	0.00E+00	2.87E-03	1.32E-02	0.00E+00	2.65E-02	0.00E+00	0.00E+00	2.85E-03	0.00E+00	0.00E+00	2.65E-02

1536	ALL	746588.42	4036960.7	NonCancerAcute	0.00E+00	1.34E-05	2.84E-03	0.00E+00	0.00E+00	2.86E-03	1.63E-02	0.00E+00	3.04E-02	0.00E+00	0.00E+00	2.84E-03	0.00E+00	0.00E+00	3.04E-02
1537	ALL	747488.42	4036960.7	NonCancerAcute	0.00E+00	1.35E-05	2.88E-03	0.00E+00	0.00E+00	2.89E-03	9.86E-03	0.00E+00	2.25E-02	0.00E+00	0.00E+00	2.88E-03	0.00E+00	0.00E+00	2.25E-02
1538	ALL	747588.42	4036960.7	NonCancerAcute	0.00E+00	1.25E-05	2.66E-03	0.00E+00	0.00E+00	2.67E-03	9.55E-03	0.00E+00	2.14E-02	0.00E+00	0.00E+00	2.66E-03	0.00E+00	0.00E+00	2.14E-02
1539	ALL	747688.42	4036960.7	NonCancerAcute	0.00E+00	1.27E-05	2.69E-03	0.00E+00	0.00E+00	2.70E-03	9.30E-03	0.00E+00	2.12E-02	0.00E+00	0.00E+00	2.69E-03	0.00E+00	0.00E+00	2.12E-02
1540	ALL	747788.42	4036960.7	NonCancerAcute	0.00E+00	1.25E-05	2.66E-03	0.00E+00	0.00E+00	2.68E-03	9.11E-03	0.00E+00	2.08E-02	0.00E+00	0.00E+00	2.66E-03	0.00E+00	0.00E+00	2.08E-02
1541	ALL	747888.42	4036960.7	NonCancerAcute	0.00E+00	1.25E-05	2.65E-03	0.00E+00	0.00E+00	2.67E-03	8.63E-03	0.00E+00	2.02E-02	0.00E+00	0.00E+00	2.65E-03	0.00E+00	0.00E+00	2.02E-02
1542	ALL	747988.42	4036960.7	NonCancerAcute	0.00E+00	1.22E-05	2.58E-03	0.00E+00	0.00E+00	2.60E-03	8.06E-03	0.00E+00	1.93E-02	0.00E+00	0.00E+00	2.58E-03	0.00E+00	0.00E+00	1.93E-02
1543	ALL	748088.42	4036960.7	NonCancerAcute	0.00E+00	1.21E-05	2.57E-03	0.00E+00	0.00E+00	2.58E-03	7.82E-03	0.00E+00	1.89E-02	0.00E+00	0.00E+00	2.57E-03	0.00E+00	0.00E+00	1.89E-02
1544	ALL	748188.42	4036960.7	NonCancerAcute	0.00E+00	1.14E-05	2.42E-03	0.00E+00	0.00E+00	2.43E-03	7.56E-03	0.00E+00	1.81E-02	0.00E+00	0.00E+00	2.42E-03	0.00E+00	0.00E+00	1.81E-02
1545	ALL	749988.42	4036960.7	NonCancerAcute	0.00E+00	1.03E-05	2.18E-03	0.00E+00	0.00E+00	2.19E-03	5.01E-03	0.00E+00	1.41E-02	0.00E+00	0.00E+00	2.18E-03	0.00E+00	0.00E+00	1.41E-02
1546	ALL	750088.42	4036960.7	NonCancerAcute	0.00E+00	1.02E-05	2.17E-03	0.00E+00	0.00E+00	2.18E-03	4.82E-03	0.00E+00	1.38E-02	0.00E+00	0.00E+00	2.17E-03	0.00E+00	0.00E+00	1.38E-02
1547	ALL	750188.42	4036960.7	NonCancerAcute	0.00E+00	1.01E-05	2.14E-03	0.00E+00	0.00E+00	2.15E-03	4.80E-03	0.00E+00	1.36E-02	0.00E+00	0.00E+00	2.14E-03	0.00E+00	0.00E+00	1.36E-02
1548	ALL	750288.42	4036960.7	NonCancerAcute	0.00E+00	9.85E-06	2.09E-03	0.00E+00	0.00E+00	2.10E-03	4.69E-03	0.00E+00	1.33E-02	0.00E+00	0.00E+00	2.09E-03	0.00E+00	0.00E+00	1.33E-02
1549	ALL	752388.42	4036960.7	NonCancerAcute	0.00E+00	7.47E-06	1.59E-03	0.00E+00	0.00E+00	1.59E-03	3.19E-03	0.00E+00	9.68E-03	0.00E+00	0.00E+00	1.59E-03	0.00E+00	0.00E+00	9.68E-03
1550	ALL	752488.42	4036960.7	NonCancerAcute	0.00E+00	7.41E-06	1.57E-03	0.00E+00	0.00E+00	1.58E-03	3.09E-03	0.00E+00	9.51E-03	0.00E+00	0.00E+00	1.57E-03	0.00E+00	0.00E+00	9.51E-03
1551	ALL	752588.42	4036960.7	NonCancerAcute	0.00E+00	7.30E-06	1.55E-03	0.00E+00	0.00E+00	1.56E-03	3.00E-03	0.00E+00	9.30E-03	0.00E+00	0.00E+00	1.55E-03	0.00E+00	0.00E+00	9.30E-03
1552	ALL	752688.42	4036960.7	NonCancerAcute	0.00E+00	7.17E-06	1.52E-03	0.00E+00	0.00E+00	1.53E-03	2.94E-03	0.00E+00	9.13E-03	0.00E+00	0.00E+00	1.52E-03	0.00E+00	0.00E+00	9.13E-03
1553	ALL	752788.42	4036960.7	NonCancerAcute	0.00E+00	7.14E-06	1.52E-03	0.00E+00	0.00E+00	1.52E-03	2.96E-03	0.00E+00	9.14E-03	0.00E+00	0.00E+00	1.52E-03	0.00E+00	0.00E+00	9.14E-03
1554	ALL	754888.42	4036960.7	NonCancerAcute	0.00E+00	5.43E-06	1.15E-03	0.00E+00	0.00E+00	1.16E-03	2.21E-03	0.00E+00	6.90E-03	0.00E+00	0.00E+00	1.15E-03	0.00E+00	0.00E+00	6.90E-03
1555	ALL	754988.42	4036960.7	NonCancerAcute	0.00E+00	5.35E-06	1.14E-03	0.00E+00	0.00E+00	1.14E-03	2.19E-03	0.00E+00	6.81E-03	0.00E+00	0.00E+00	1.14E-03	0.00E+00	0.00E+00	6.81E-03
1556	ALL	755088.42	4036960.7	NonCancerAcute	0.00E+00	5.29E-06	1.12E-03	0.00E+00	0.00E+00	1.13E-03	2.16E-03	0.00E+00	6.72E-03	0.00E+00	0.00E+00	1.12E-03	0.00E+00	0.00E+00	6.72E-03
1557	ALL	755188.42	4036960.7	NonCancerAcute	0.00E+00	5.22E-06	1.11E-03	0.00E+00	0.00E+00	1.11E-03	2.11E-03	0.00E+00	6.61E-03	0.00E+00	0.00E+00	1.11E-03	0.00E+00	0.00E+00	6.61E-03
1558	ALL	755288.42	4036960.7	NonCancerAcute	0.00E+00	5.14E-06	1.09E-03	0.00E+00	0.00E+00	1.10E-03	2.05E-03	0.00E+00	6.48E-03	0.00E+00	0.00E+00	1.09E-03	0.00E+00	0.00E+00	6.48E-03
1559	ALL	746388.42	4037060.7	NonCancerAcute	0.00E+00	1.30E-05	2.75E-03	0.00E+00	0.00E+00	2.77E-03	1.18E-02	0.00E+00	2.44E-02	0.00E+00	0.00E+00	2.75E-03	0.00E+00	0.00E+00	2.44E-02
1560	ALL	746488.42	4037060.7	NonCancerAcute	0.00E+00	1.30E-05	2.76E-03	0.00E+00	0.00E+00	2.78E-03	1.35E-02	0.00E+00	2.66E-02	0.00E+00	0.00E+00	2.76E-03	0.00E+00	0.00E+00	2.66E-02
1561	ALL	746588.42	4037060.7	NonCancerAcute	0.00E+00	1.31E-05	2.78E-03	0.00E+00	0.00E+00	2.79E-03	1.41E-02	0.00E+00	2.74E-02	0.00E+00	0.00E+00	2.78E-03	0.00E+00	0.00E+00	2.74E-02
1562	ALL	747488.42	4037060.7	NonCancerAcute	0.00E+00	1.30E-05	2.76E-03	0.00E+00	0.00E+00	2.77E-03	9.86E-03	0.00E+00	2.21E-02	0.00E+00	0.00E+00	2.76E-03	0.00E+00	0.00E+00	2.21E-02
1563	ALL	747588.42	4037060.7	NonCancerAcute	0.00E+00	1.27E-05	2.70E-03	0.00E+00	0.00E+00	2.71E-03	9.33E-03	0.00E+00	2.12E-02	0.00E+00	0.00E+00	2.70E-03	0.00E+00	0.00E+00	2.12E-02
1564	ALL	747688.42	4037060.7	NonCancerAcute	0.00E+00	1.23E-05	2.60E-03	0.00E+00	0.00E+00	2.62E-03	9.04E-03	0.00E+00	2.05E-02	0.00E+00	0.00E+00	2.60E-03	0.00E+00	0.00E+00	2.05E-02
1565	ALL	747788.42	4037060.7	NonCancerAcute	0.00E+00	1.23E-05	2.62E-03	0.00E+00	0.00E+00	2.63E-03	8.97E-03	0.00E+00	2.05E-02	0.00E+00	0.00E+00	2.62E-03	0.00E+00	0.00E+00	2.05E-02
1566	ALL	747888.42	4037060.7	NonCancerAcute	0.00E+00	1.24E-05	2.64E-03	0.00E+00	0.00E+00	2.65E-03	8.75E-03	0.00E+00	2.03E-02	0.00E+00	0.00E+00	2.64E-03	0.00E+00	0.00E+00	2.03E-02
1567	ALL	747988.42	4037060.7	NonCancerAcute	0.00E+00	1.22E-05	2.59E-03	0.00E+00	0.00E+00	2.61E-03	8.20E-03	0.00E+00	1.95E-02	0.00E+00	0.00E+00	2.59E-03	0.00E+00	0.00E+00	1.95E-02
1568	ALL	748088.42	4037060.7	NonCancerAcute	0.00E+00	1.18E-05	2.51E-03	0.00E+00	0.00E+00	2.52E-03	7.76E-03	0.00E+00	1.86E-02	0.00E+00	0.00E+00	2.51E-03	0.00E+00	0.00E+00	1.86E-02
1569	ALL	748188.42	4037060.7	NonCancerAcute	0.00E+00	1.17E-05	2.49E-03	0.00E+00	0.00E+00	2.50E-03	7.53E-03	0.00E+00	1.83E-02	0.00E+00	0.00E+00	2.49E-03	0.00E+00	0.00E+00	1.83E-02
1570	ALL	749988.42	4037060.7	NonCancerAcute	0.00E+00	1.03E-05	2.19E-03	0.00E+00	0.00E+00	2.20E-03	5.14E-03	0.00E+00	1.43E-02	0.00E+00	0.00E+00	2.19E-03	0.00E+00	0.00E+00	1.43E-02
1571	ALL	750088.42	4037060.7	NonCancerAcute	0.00E+00	1.02E-05	2.17E-03	0.00E+00	0.00E+00	2.17E-03	4.96E-03	0.00E+00	1.39E-02	0.00E+00	0.00E+00	2.17E-03	0.00E+00	0.00E+00	1.39E-02
1572	ALL	750188.42	4037060.7	NonCancerAcute	0.00E+00	1.01E-05	2.14E-03	0.00E+00	0.00E+00	2.15E-03	4.90E-03	0.00E+00	1.38E-02	0.00E+00	0.00E+00	2.14E-03	0.00E+00	0.00E+00	1.38E-02
1573	ALL	750288.42	4037060.7	NonCancerAcute	0.00E+00	9.99E-06	2.12E-03	0.00E+00	0.00E+00	2.13E-03	4.83E-03	0.00E+00	1.36E-02	0.00E+00	0.00E+00	2.12E-03	0.00E+00	0.00E+00	1.36E-02
1574	ALL	752388.42	4037060.7	NonCancerAcute	0.00E+00	7.57E-06	1.61E-03	0.00E+00	0.00E+00	1.61E-03	3.18E-03	0.00E+00	9.73E-03	0.00E+00	0.00E+00	1.61E-03	0.00E+00	0.00E+00	9.73E-03
1575	ALL	752488.42	4037060.7	NonCancerAcute	0.00E+00	7.42E-06	1.58E-03	0.00E+00	0.00E+00	1.58E-03	3.08E-03	0.00E+00	9.50E-03	0.00E+00	0.00E+00	1.58E-03	0.00E+00	0.00E+00	9.50E-03
1576	ALL	752588.42	4037060.7	NonCancerAcute	0.00E+00	7.32E-06	1.55E-03	0.00E+00	0.00E+00	1.56E-03	3.01E-03	0.00E+00	9.34E-03	0.00E+00	0.00E+00	1.55E-03	0.00E+00	0.00E+00	9.34E-03
1577	ALL	752688.42	4037060.7	NonCancerAcute	0.00E+00	7.25E-06	1.54E-03	0.00E+00	0.00E+00	1.55E-03	3.05E-03	0.00E+00	9.33E-03	0.00E+00	0.00E+00	1.54E-03	0.00E+00	0.00E+00	9.33E-03
1578	ALL	752788.42	4037060.7	NonCancerAcute	0.00E+00	7.16E-06	1.52E-03	0.00E+00	0.00E+00	1.53E-03	3.02E-03	0.00E+00	9.23E-03	0.00E+00	0.00E+00	1.52E-03	0.00E+00	0.00E+00	9.23E-03
1579	ALL	754888.42	4037060.7	NonCancerAcute	0.00E+00	5.45E-06	1.16E-03	0.00E+00	0.00E+00	1.16E-03	2.28E-03	0.00E+00	7.01E-03	0.00E+00	0.00E+00	1.16E-03	0.00E+00	0.00E+00	7.01E-03
1580	ALL	754988.42	4037060.7	NonCancerAcute	0.00E+00	5.39E-06	1.14E-03	0.00E+00	0.00E+00	1.15E-03	2.24E-03	0.00E+00	6.90E-03	0.00E+00	0.00E+00	1.14E-03	0.00E+00	0.00E+00	6.90E-03
1581	ALL	755088.42	4037060.7	NonCancerAcute	0.00E+00	5.31E-06	1.13E-03	0.00E+00	0.00E+00	1.13E-03	2.18E-03	0.00E+00	6.77E-03	0.00E+00	0.00E+00	1.13E-03	0.00E+00	0.00E+00	6.77E-03
1582	ALL	755188.42	4037060.7	NonCancerAcute	0.00E+00	5.26E-06	1.12E-03	0.00E+00	0.00E+00	1.12E-03	2.12E-03	0.00E+00	6.66E-03	0.00E+00	0.00E+00	1.12E-03	0.00E+00	0.00E+00	6.66E-03
1583	ALL	755288.42	4037060.7	NonCancerAcute	0.00E+00	5.20E-06	1.10E-03	0.00E+00	0.00E+00	1.11E-03	2.09E-03	0.00E+00	6.57E-03	0.00E+00	0.00E+00	1.10E-03	0.00E+00	0.00E+00	6.57E-03
1584	ALL	746388.42	4037160.7	NonCancerAcute	0.00E+00	1.29E-05	2.73E-03	0.00E+00	0.00E+00	2.75E-03	1.11E-02	0.00E+00	2.35E-02	0.00E+00	0.00E+00	2.73E-03	0.00E+00	0.00E+00	2.35E-02
1585	ALL	746488.42	4037160.7	NonCancerAcute	0.00E+00	1.28E-05	2.71E-03	0.00E+00	0.00E+00	2.73E-03	1.17E-02	0.00E+00	2.42E-02	0.00E+00	0.00E+00	2.71E-03	0.00E+00	0.00E+00	2.42E-02
1586	ALL	746588.42	4037160.7	NonCancerAcute	0.00E+00	1.29E-05	2.75E-03	0.00E+00	0.00E+00	2.76E-03	1.28E-02	0.00E+00	2.56E-02	0.00E+00	0.00E+00	2.75E-03	0.00E+00	0.00E+00	2.56E-02
1587	ALL	747488.42	4037160.7	NonCancerAcute	0.00E+00	1.25E-05	2.66E-03	0.00E+00	0.00E+00	2.68E-03	1.10E-02	0.00E+00	2.32E-02	0.00E+00	0.00E+00	2.66E-03	0.00E+00	0.00E+00	2.32E-02
1588	ALL	747588.42	4037160.7	NonCancerAcute	0.00E+00	1.27E-05	2.70E-03	0.00E+00	0.00E+00	2.71E-03	9.32E-03	0.00E+00	2.12E-02	0.00E+00	0.00E+00	2.70E-03	0.00E+00	0.00E+00	2.12E-02

1589	ALL	747688.42	4037160.7	NonCancerAcute	0.00E+00	1.22E-05	2.59E-03	0.00E+00	0.00E+00	2.61E-03	8.89E-03	0.00E+00	2.03E-02	0.00E+00	0.00E+00	2.59E-03	0.00E+00	0.00E+00	2.03E-02
1590	ALL	747788.42	4037160.7	NonCancerAcute	0.00E+00	1.22E-05	2.59E-03	0.00E+00	0.00E+00	2.60E-03	8.86E-03	0.00E+00	2.03E-02	0.00E+00	0.00E+00	2.59E-03	0.00E+00	0.00E+00	2.03E-02
1591	ALL	747888.42	4037160.7	NonCancerAcute	0.00E+00	1.20E-05	2.55E-03	0.00E+00	0.00E+00	2.56E-03	8.66E-03	0.00E+00	1.99E-02	0.00E+00	0.00E+00	2.55E-03	0.00E+00	0.00E+00	1.99E-02
1592	ALL	747988.42	4037160.7	NonCancerAcute	0.00E+00	1.22E-05	2.59E-03	0.00E+00	0.00E+00	2.60E-03	8.17E-03	0.00E+00	1.94E-02	0.00E+00	0.00E+00	2.59E-03	0.00E+00	0.00E+00	1.94E-02
1593	ALL	748088.42	4037160.7	NonCancerAcute	0.00E+00	1.21E-05	2.57E-03	0.00E+00	0.00E+00	2.58E-03	7.70E-03	0.00E+00	1.88E-02	0.00E+00	0.00E+00	2.57E-03	0.00E+00	0.00E+00	1.88E-02
1594	ALL	748188.42	4037160.7	NonCancerAcute	0.00E+00	1.16E-05	2.45E-03	0.00E+00	0.00E+00	2.46E-03	7.49E-03	0.00E+00	1.81E-02	0.00E+00	0.00E+00	2.45E-03	0.00E+00	0.00E+00	1.81E-02
1595	ALL	749988.42	4037160.7	NonCancerAcute	0.00E+00	1.04E-05	2.21E-03	0.00E+00	0.00E+00	2.22E-03	5.12E-03	0.00E+00	1.43E-02	0.00E+00	0.00E+00	2.21E-03	0.00E+00	0.00E+00	1.43E-02
1596	ALL	750088.42	4037160.7	NonCancerAcute	0.00E+00	1.03E-05	2.18E-03	0.00E+00	0.00E+00	2.19E-03	4.98E-03	0.00E+00	1.40E-02	0.00E+00	0.00E+00	2.18E-03	0.00E+00	0.00E+00	1.40E-02
1597	ALL	750188.42	4037160.7	NonCancerAcute	0.00E+00	1.01E-05	2.14E-03	0.00E+00	0.00E+00	2.15E-03	4.89E-03	0.00E+00	1.38E-02	0.00E+00	0.00E+00	2.14E-03	0.00E+00	0.00E+00	1.38E-02
1598	ALL	750288.42	4037160.7	NonCancerAcute	0.00E+00	1.00E-05	2.13E-03	0.00E+00	0.00E+00	2.14E-03	4.88E-03	0.00E+00	1.37E-02	0.00E+00	0.00E+00	2.13E-03	0.00E+00	0.00E+00	1.37E-02
1599	ALL	752388.42	4037160.7	NonCancerAcute	0.00E+00	7.53E-06	1.60E-03	0.00E+00	0.00E+00	1.61E-03	3.22E-03	0.00E+00	9.75E-03	0.00E+00	0.00E+00	1.60E-03	0.00E+00	0.00E+00	9.75E-03
1600	ALL	752488.42	4037160.7	NonCancerAcute	0.00E+00	7.46E-06	1.59E-03	0.00E+00	0.00E+00	1.59E-03	3.14E-03	0.00E+00	9.61E-03	0.00E+00	0.00E+00	1.59E-03	0.00E+00	0.00E+00	9.61E-03
1601	ALL	752588.42	4037160.7	NonCancerAcute	0.00E+00	7.37E-06	1.57E-03	0.00E+00	0.00E+00	1.57E-03	3.17E-03	0.00E+00	9.57E-03	0.00E+00	0.00E+00	1.57E-03	0.00E+00	0.00E+00	9.57E-03
1602	ALL	752688.42	4037160.7	NonCancerAcute	0.00E+00	7.30E-06	1.55E-03	0.00E+00	0.00E+00	1.56E-03	3.14E-03	0.00E+00	9.48E-03	0.00E+00	0.00E+00	1.55E-03	0.00E+00	0.00E+00	9.48E-03
1603	ALL	752788.42	4037160.7	NonCancerAcute	0.00E+00	7.20E-06	1.53E-03	0.00E+00	0.00E+00	1.54E-03	3.06E-03	0.00E+00	9.30E-03	0.00E+00	0.00E+00	1.53E-03	0.00E+00	0.00E+00	9.30E-03
1604	ALL	754888.42	4037160.7	NonCancerAcute	0.00E+00	5.43E-06	1.15E-03	0.00E+00	0.00E+00	1.16E-03	2.30E-03	0.00E+00	7.01E-03	0.00E+00	0.00E+00	1.15E-03	0.00E+00	0.00E+00	7.01E-03
1605	ALL	754988.42	4037160.7	NonCancerAcute	0.00E+00	5.38E-06	1.14E-03	0.00E+00	0.00E+00	1.15E-03	2.24E-03	0.00E+00	6.89E-03	0.00E+00	0.00E+00	1.14E-03	0.00E+00	0.00E+00	6.89E-03
1606	ALL	755088.42	4037160.7	NonCancerAcute	0.00E+00	5.31E-06	1.13E-03	0.00E+00	0.00E+00	1.13E-03	2.19E-03	0.00E+00	6.78E-03	0.00E+00	0.00E+00	1.13E-03	0.00E+00	0.00E+00	6.78E-03
1607	ALL	755188.42	4037160.7	NonCancerAcute	0.00E+00	5.25E-06	1.11E-03	0.00E+00	0.00E+00	1.12E-03	2.15E-03	0.00E+00	6.68E-03	0.00E+00	0.00E+00	1.11E-03	0.00E+00	0.00E+00	6.68E-03
1608	ALL	755288.42	4037160.7	NonCancerAcute	0.00E+00	5.20E-06	1.11E-03	0.00E+00	0.00E+00	1.11E-03	2.10E-03	0.00E+00	6.59E-03	0.00E+00	0.00E+00	1.11E-03	0.00E+00	0.00E+00	6.59E-03
1609	ALL	746388.42	4037260.7	NonCancerAcute	0.00E+00	1.25E-05	2.66E-03	0.00E+00	0.00E+00	2.67E-03	1.05E-02	0.00E+00	2.25E-02	0.00E+00	0.00E+00	2.66E-03	0.00E+00	0.00E+00	2.25E-02
1610	ALL	746488.42	4037260.7	NonCancerAcute	0.00E+00	1.26E-05	2.67E-03	0.00E+00	0.00E+00	2.68E-03	1.10E-02	0.00E+00	2.32E-02	0.00E+00	0.00E+00	2.67E-03	0.00E+00	0.00E+00	2.32E-02
1611	ALL	746588.42	4037260.7	NonCancerAcute	0.00E+00	1.27E-05	2.69E-03	0.00E+00	0.00E+00	2.70E-03	1.16E-02	0.00E+00	2.40E-02	0.00E+00	0.00E+00	2.69E-03	0.00E+00	0.00E+00	2.40E-02
1612	ALL	747488.42	4037260.7	NonCancerAcute	0.00E+00	1.26E-05	2.67E-03	0.00E+00	0.00E+00	2.68E-03	1.03E-02	0.00E+00	2.23E-02	0.00E+00	0.00E+00	2.67E-03	0.00E+00	0.00E+00	2.23E-02
1613	ALL	747588.42	4037260.7	NonCancerAcute	0.00E+00	1.26E-05	2.68E-03	0.00E+00	0.00E+00	2.69E-03	9.64E-03	0.00E+00	2.15E-02	0.00E+00	0.00E+00	2.68E-03	0.00E+00	0.00E+00	2.15E-02
1614	ALL	747688.42	4037260.7	NonCancerAcute	0.00E+00	1.25E-05	2.65E-03	0.00E+00	0.00E+00	2.67E-03	9.07E-03	0.00E+00	2.07E-02	0.00E+00	0.00E+00	2.65E-03	0.00E+00	0.00E+00	2.07E-02
1615	ALL	747788.42	4037260.7	NonCancerAcute	0.00E+00	1.19E-05	2.52E-03	0.00E+00	0.00E+00	2.53E-03	8.61E-03	0.00E+00	1.97E-02	0.00E+00	0.00E+00	2.52E-03	0.00E+00	0.00E+00	1.97E-02
1616	ALL	747888.42	4037260.7	NonCancerAcute	0.00E+00	1.20E-05	2.55E-03	0.00E+00	0.00E+00	2.57E-03	8.55E-03	0.00E+00	1.97E-02	0.00E+00	0.00E+00	2.55E-03	0.00E+00	0.00E+00	1.97E-02
1617	ALL	747988.42	4037260.7	NonCancerAcute	0.00E+00	1.20E-05	2.54E-03	0.00E+00	0.00E+00	2.55E-03	8.38E-03	0.00E+00	1.95E-02	0.00E+00	0.00E+00	2.54E-03	0.00E+00	0.00E+00	1.95E-02
1618	ALL	748088.42	4037260.7	NonCancerAcute	0.00E+00	1.20E-05	2.56E-03	0.00E+00	0.00E+00	2.57E-03	7.89E-03	0.00E+00	1.90E-02	0.00E+00	0.00E+00	2.56E-03	0.00E+00	0.00E+00	1.90E-02
1619	ALL	748188.42	4037260.7	NonCancerAcute	0.00E+00	1.19E-05	2.52E-03	0.00E+00	0.00E+00	2.53E-03	7.42E-03	0.00E+00	1.82E-02	0.00E+00	0.00E+00	2.52E-03	0.00E+00	0.00E+00	1.82E-02
1620	ALL	749988.42	4037260.7	NonCancerAcute	0.00E+00	1.05E-05	2.23E-03	0.00E+00	0.00E+00	2.24E-03	5.15E-03	0.00E+00	1.44E-02	0.00E+00	0.00E+00	2.23E-03	0.00E+00	0.00E+00	1.44E-02
1621	ALL	750088.42	4037260.7	NonCancerAcute	0.00E+00	1.04E-05	2.20E-03	0.00E+00	0.00E+00	2.21E-03	5.03E-03	0.00E+00	1.42E-02	0.00E+00	0.00E+00	2.20E-03	0.00E+00	0.00E+00	1.42E-02
1622	ALL	750188.42	4037260.7	NonCancerAcute	0.00E+00	1.03E-05	2.18E-03	0.00E+00	0.00E+00	2.19E-03	4.88E-03	0.00E+00	1.39E-02	0.00E+00	0.00E+00	2.18E-03	0.00E+00	0.00E+00	1.39E-02
1623	ALL	750288.42	4037260.7	NonCancerAcute	0.00E+00	9.87E-06	2.10E-03	0.00E+00	0.00E+00	2.11E-03	4.87E-03	0.00E+00	1.36E-02	0.00E+00	0.00E+00	2.10E-03	0.00E+00	0.00E+00	1.36E-02
1624	ALL	752388.42	4037260.7	NonCancerAcute	0.00E+00	7.52E-06	1.60E-03	0.00E+00	0.00E+00	1.60E-03	3.27E-03	0.00E+00	9.80E-03	0.00E+00	0.00E+00	1.60E-03	0.00E+00	0.00E+00	9.80E-03
1625	ALL	752488.42	4037260.7	NonCancerAcute	0.00E+00	7.43E-06	1.58E-03	0.00E+00	0.00E+00	1.58E-03	3.29E-03	0.00E+00	9.76E-03	0.00E+00	0.00E+00	1.58E-03	0.00E+00	0.00E+00	9.76E-03
1626	ALL	752588.42	4037260.7	NonCancerAcute	0.00E+00	7.36E-06	1.56E-03	0.00E+00	0.00E+00	1.57E-03	3.27E-03	0.00E+00	9.68E-03	0.00E+00	0.00E+00	1.56E-03	0.00E+00	0.00E+00	9.68E-03
1627	ALL	752688.42	4037260.7	NonCancerAcute	0.00E+00	7.29E-06	1.55E-03	0.00E+00	0.00E+00	1.55E-03	3.18E-03	0.00E+00	9.52E-03	0.00E+00	0.00E+00	1.55E-03	0.00E+00	0.00E+00	9.52E-03
1628	ALL	752788.42	4037260.7	NonCancerAcute	0.00E+00	7.21E-06	1.53E-03	0.00E+00	0.00E+00	1.54E-03	3.06E-03	0.00E+00	9.31E-03	0.00E+00	0.00E+00	1.53E-03	0.00E+00	0.00E+00	9.31E-03
1629	ALL	754888.42	4037260.7	NonCancerAcute	0.00E+00	5.43E-06	1.15E-03	0.00E+00	0.00E+00	1.16E-03	2.28E-03	0.00E+00	6.99E-03	0.00E+00	0.00E+00	1.15E-03	0.00E+00	0.00E+00	6.99E-03
1630	ALL	754988.42	4037260.7	NonCancerAcute	0.00E+00	5.37E-06	1.14E-03	0.00E+00	0.00E+00	1.15E-03	2.24E-03	0.00E+00	6.89E-03	0.00E+00	0.00E+00	1.14E-03	0.00E+00	0.00E+00	6.89E-03
1631	ALL	755088.42	4037260.7	NonCancerAcute	0.00E+00	5.32E-06	1.13E-03	0.00E+00	0.00E+00	1.14E-03	2.20E-03	0.00E+00	6.80E-03	0.00E+00	0.00E+00	1.13E-03	0.00E+00	0.00E+00	6.80E-03
1632	ALL	755188.42	4037260.7	NonCancerAcute	0.00E+00	5.26E-06	1.12E-03	0.00E+00	0.00E+00	1.12E-03	2.15E-03	0.00E+00	6.69E-03	0.00E+00	0.00E+00	1.12E-03	0.00E+00	0.00E+00	6.69E-03
1633	ALL	755288.42	4037260.7	NonCancerAcute	0.00E+00	5.20E-06	1.10E-03	0.00E+00	0.00E+00	1.11E-03	2.10E-03	0.00E+00	6.58E-03	0.00E+00	0.00E+00	1.10E-03	0.00E+00	0.00E+00	6.58E-03
1634	ALL	746388.42	4037360.7	NonCancerAcute	0.00E+00	1.23E-05	2.61E-03	0.00E+00	0.00E+00	2.62E-03	1.00E-02	0.00E+00	2.17E-02	0.00E+00	0.00E+00	2.61E-03	0.00E+00	0.00E+00	2.17E-02
1635	ALL	746488.42	4037360.7	NonCancerAcute	0.00E+00	1.25E-05	2.65E-03	0.00E+00	0.00E+00	2.66E-03	1.05E-02	0.00E+00	2.25E-02	0.00E+00	0.00E+00	2.65E-03	0.00E+00	0.00E+00	2.25E-02
1636	ALL	746588.42	4037360.7	NonCancerAcute	0.00E+00	1.25E-05	2.65E-03	0.00E+00	0.00E+00	2.66E-03	1.09E-02	0.00E+00	2.30E-02	0.00E+00	0.00E+00	2.65E-03	0.00E+00	0.00E+00	2.30E-02
1637	ALL	747488.42	4037360.7	NonCancerAcute	0.00E+00	1.27E-05	2.69E-03	0.00E+00	0.00E+00	2.70E-03	9.52E-03	0.00E+00	2.14E-02	0.00E+00	0.00E+00	2.69E-03	0.00E+00	0.00E+00	2.14E-02
1638	ALL	747588.42	4037360.7	NonCancerAcute	0.00E+00	1.24E-05	2.63E-03	0.00E+00	0.00E+00	2.64E-03	9.52E-03	0.00E+00	2.12E-02	0.00E+00	0.00E+00	2.63E-03	0.00E+00	0.00E+00	2.12E-02
1639	ALL	747688.42	4037360.7	NonCancerAcute	0.00E+00	1.23E-05	2.60E-03	0.00E+00	0.00E+00	2.62E-03	9.27E-03	0.00E+00	2.08E-02	0.00E+00	0.00E+00	2.60E-03	0.00E+00	0.00E+00	2.08E-02
1640	ALL	747788.42	4037360.7	NonCancerAcute	0.00E+00	1.21E-05	2.58E-03	0.00E+00	0.00E+00	2.59E-03	8.84E-03	0.00E+00	2.02E-02	0.00E+00	0.00E+00	2.58E-03	0.00E+00	0.00E+00	2.02E-02
1641	ALL	747888.42	4037360.7	NonCancerAcute	0.00E+00	1.21E-05	2.57E-03	0.00E+00	0.00E+00	2.59E-03	8.53E-03	0.00E+00	1.98E-02	0.00E+00	0.00E+00	2.57E-03	0.00E+00	0.00E+00	1.98E-02

1642	ALL	747988.42	4037360.7	NonCancerAcute	0.00E+00	1.21E-05	2.57E-03	0.00E+00	0.00E+00	2.58E-03	8.27E-03	0.00E+00	1.95E-02	0.00E+00	0.00E+00	2.57E-03	0.00E+00	0.00E+00	1.95E-02
1643	ALL	748088.42	4037360.7	NonCancerAcute	0.00E+00	1.18E-05	2.50E-03	0.00E+00	0.00E+00	2.51E-03	8.00E-03	0.00E+00	1.89E-02	0.00E+00	0.00E+00	2.50E-03	0.00E+00	0.00E+00	1.89E-02
1644	ALL	748188.42	4037360.7	NonCancerAcute	0.00E+00	1.19E-05	2.52E-03	0.00E+00	0.00E+00	2.53E-03	7.45E-03	0.00E+00	1.83E-02	0.00E+00	0.00E+00	2.52E-03	0.00E+00	0.00E+00	1.83E-02
1645	ALL	749888.42	4037360.7	NonCancerAcute	0.00E+00	1.07E-05	2.27E-03	0.00E+00	0.00E+00	2.28E-03	5.38E-03	0.00E+00	1.48E-02	0.00E+00	0.00E+00	2.27E-03	0.00E+00	0.00E+00	1.48E-02
1646	ALL	749988.42	4037360.7	NonCancerAcute	0.00E+00	1.05E-05	2.23E-03	0.00E+00	0.00E+00	2.24E-03	5.31E-03	0.00E+00	1.46E-02	0.00E+00	0.00E+00	2.23E-03	0.00E+00	0.00E+00	1.46E-02
1647	ALL	750088.42	4037360.7	NonCancerAcute	0.00E+00	1.03E-05	2.20E-03	0.00E+00	0.00E+00	2.21E-03	5.19E-03	0.00E+00	1.43E-02	0.00E+00	0.00E+00	2.20E-03	0.00E+00	0.00E+00	1.43E-02
1648	ALL	750188.42	4037360.7	NonCancerAcute	0.00E+00	1.02E-05	2.17E-03	0.00E+00	0.00E+00	2.18E-03	5.02E-03	0.00E+00	1.40E-02	0.00E+00	0.00E+00	2.17E-03	0.00E+00	0.00E+00	1.40E-02
1649	ALL	750288.42	4037360.7	NonCancerAcute	0.00E+00	9.88E-06	2.10E-03	0.00E+00	0.00E+00	2.11E-03	4.96E-03	0.00E+00	1.37E-02	0.00E+00	0.00E+00	2.10E-03	0.00E+00	0.00E+00	1.37E-02
1650	ALL	752388.42	4037360.7	NonCancerAcute	0.00E+00	7.57E-06	1.61E-03	0.00E+00	0.00E+00	1.61E-03	3.39E-03	0.00E+00	1.00E-02	0.00E+00	0.00E+00	1.61E-03	0.00E+00	0.00E+00	1.00E-02
1651	ALL	752488.42	4037360.7	NonCancerAcute	0.00E+00	7.45E-06	1.58E-03	0.00E+00	0.00E+00	1.59E-03	3.37E-03	0.00E+00	9.88E-03	0.00E+00	0.00E+00	1.58E-03	0.00E+00	0.00E+00	9.88E-03
1652	ALL	752588.42	4037360.7	NonCancerAcute	0.00E+00	7.37E-06	1.57E-03	0.00E+00	0.00E+00	1.57E-03	3.28E-03	0.00E+00	9.71E-03	0.00E+00	0.00E+00	1.57E-03	0.00E+00	0.00E+00	9.71E-03
1653	ALL	752688.42	4037360.7	NonCancerAcute	0.00E+00	7.29E-06	1.55E-03	0.00E+00	0.00E+00	1.55E-03	3.16E-03	0.00E+00	9.49E-03	0.00E+00	0.00E+00	1.55E-03	0.00E+00	0.00E+00	9.49E-03
1654	ALL	752788.42	4037360.7	NonCancerAcute	0.00E+00	7.17E-06	1.52E-03	0.00E+00	0.00E+00	1.53E-03	3.09E-03	0.00E+00	9.32E-03	0.00E+00	0.00E+00	1.52E-03	0.00E+00	0.00E+00	9.32E-03
1655	ALL	754888.42	4037360.7	NonCancerAcute	0.00E+00	5.43E-06	1.15E-03	0.00E+00	0.00E+00	1.16E-03	2.28E-03	0.00E+00	6.99E-03	0.00E+00	0.00E+00	1.15E-03	0.00E+00	0.00E+00	6.99E-03
1656	ALL	754988.42	4037360.7	NonCancerAcute	0.00E+00	5.35E-06	1.14E-03	0.00E+00	0.00E+00	1.14E-03	2.23E-03	0.00E+00	6.86E-03	0.00E+00	0.00E+00	1.14E-03	0.00E+00	0.00E+00	6.86E-03
1657	ALL	755088.42	4037360.7	NonCancerAcute	0.00E+00	5.28E-06	1.12E-03	0.00E+00	0.00E+00	1.13E-03	2.17E-03	0.00E+00	6.73E-03	0.00E+00	0.00E+00	1.12E-03	0.00E+00	0.00E+00	6.73E-03
1658	ALL	755188.42	4037360.7	NonCancerAcute	0.00E+00	5.23E-06	1.11E-03	0.00E+00	0.00E+00	1.11E-03	2.11E-03	0.00E+00	6.62E-03	0.00E+00	0.00E+00	1.11E-03	0.00E+00	0.00E+00	6.62E-03
1659	ALL	755288.42	4037360.7	NonCancerAcute	0.00E+00	5.17E-06	1.10E-03	0.00E+00	0.00E+00	1.10E-03	2.06E-03	0.00E+00	6.51E-03	0.00E+00	0.00E+00	1.10E-03	0.00E+00	0.00E+00	6.51E-03
1660	ALL	746388.42	4037460.7	NonCancerAcute	0.00E+00	1.19E-05	2.53E-03	0.00E+00	0.00E+00	2.54E-03	9.54E-03	0.00E+00	2.09E-02	0.00E+00	0.00E+00	2.53E-03	0.00E+00	0.00E+00	2.09E-02
1661	ALL	746488.42	4037460.7	NonCancerAcute	0.00E+00	1.22E-05	2.58E-03	0.00E+00	0.00E+00	2.60E-03	9.92E-03	0.00E+00	2.15E-02	0.00E+00	0.00E+00	2.58E-03	0.00E+00	0.00E+00	2.15E-02
1662	ALL	746588.42	4037460.7	NonCancerAcute	0.00E+00	1.23E-05	2.62E-03	0.00E+00	0.00E+00	2.63E-03	9.83E-03	0.00E+00	2.16E-02	0.00E+00	0.00E+00	2.62E-03	0.00E+00	0.00E+00	2.16E-02
1663	ALL	747488.42	4037460.7	NonCancerAcute	0.00E+00	1.25E-05	2.66E-03	0.00E+00	0.00E+00	2.67E-03	9.45E-03	0.00E+00	2.12E-02	0.00E+00	0.00E+00	2.66E-03	0.00E+00	0.00E+00	2.12E-02
1664	ALL	747588.42	4037460.7	NonCancerAcute	0.00E+00	1.21E-05	2.57E-03	0.00E+00	0.00E+00	2.59E-03	9.35E-03	0.00E+00	2.08E-02	0.00E+00	0.00E+00	2.57E-03	0.00E+00	0.00E+00	2.08E-02
1665	ALL	747688.42	4037460.7	NonCancerAcute	0.00E+00	1.24E-05	2.62E-03	0.00E+00	0.00E+00	2.64E-03	9.28E-03	0.00E+00	2.09E-02	0.00E+00	0.00E+00	2.62E-03	0.00E+00	0.00E+00	2.09E-02
1666	ALL	747788.42	4037460.7	NonCancerAcute	0.00E+00	1.23E-05	2.61E-03	0.00E+00	0.00E+00	2.62E-03	8.84E-03	0.00E+00	2.03E-02	0.00E+00	0.00E+00	2.61E-03	0.00E+00	0.00E+00	2.03E-02
1667	ALL	747888.42	4037460.7	NonCancerAcute	0.00E+00	1.19E-05	2.52E-03	0.00E+00	0.00E+00	2.53E-03	8.62E-03	0.00E+00	1.97E-02	0.00E+00	0.00E+00	2.52E-03	0.00E+00	0.00E+00	1.97E-02
1668	ALL	747988.42	4037460.7	NonCancerAcute	0.00E+00	1.22E-05	2.59E-03	0.00E+00	0.00E+00	2.60E-03	8.56E-03	0.00E+00	1.99E-02	0.00E+00	0.00E+00	2.59E-03	0.00E+00	0.00E+00	1.99E-02
1669	ALL	748088.42	4037460.7	NonCancerAcute	0.00E+00	1.21E-05	2.57E-03	0.00E+00	0.00E+00	2.59E-03	8.18E-03	0.00E+00	1.94E-02	0.00E+00	0.00E+00	2.57E-03	0.00E+00	0.00E+00	1.94E-02
1670	ALL	748188.42	4037460.7	NonCancerAcute	0.00E+00	1.17E-05	2.49E-03	0.00E+00	0.00E+00	2.50E-03	7.57E-03	0.00E+00	1.83E-02	0.00E+00	0.00E+00	2.49E-03	0.00E+00	0.00E+00	1.83E-02
1671	ALL	749888.42	4037460.7	NonCancerAcute	0.00E+00	1.07E-05	2.26E-03	0.00E+00	0.00E+00	2.27E-03	5.44E-03	0.00E+00	1.49E-02	0.00E+00	0.00E+00	2.26E-03	0.00E+00	0.00E+00	1.49E-02
1672	ALL	749988.42	4037460.7	NonCancerAcute	0.00E+00	1.04E-05	2.22E-03	0.00E+00	0.00E+00	2.23E-03	5.33E-03	0.00E+00	1.46E-02	0.00E+00	0.00E+00	2.22E-03	0.00E+00	0.00E+00	1.46E-02
1673	ALL	750088.42	4037460.7	NonCancerAcute	0.00E+00	1.04E-05	2.22E-03	0.00E+00	0.00E+00	2.23E-03	5.28E-03	0.00E+00	1.45E-02	0.00E+00	0.00E+00	2.22E-03	0.00E+00	0.00E+00	1.45E-02
1674	ALL	750188.42	4037460.7	NonCancerAcute	0.00E+00	1.00E-05	2.13E-03	0.00E+00	0.00E+00	2.14E-03	5.16E-03	0.00E+00	1.40E-02	0.00E+00	0.00E+00	2.13E-03	0.00E+00	0.00E+00	1.40E-02
1675	ALL	750288.42	4037460.7	NonCancerAcute	0.00E+00	9.92E-06	2.11E-03	0.00E+00	0.00E+00	2.12E-03	5.06E-03	0.00E+00	1.38E-02	0.00E+00	0.00E+00	2.11E-03	0.00E+00	0.00E+00	1.38E-02
1676	ALL	752388.42	4037460.7	NonCancerAcute	0.00E+00	7.60E-06	1.61E-03	0.00E+00	0.00E+00	1.62E-03	3.45E-03	0.00E+00	1.01E-02	0.00E+00	0.00E+00	1.61E-03	0.00E+00	0.00E+00	1.01E-02
1677	ALL	752488.42	4037460.7	NonCancerAcute	0.00E+00	7.52E-06	1.60E-03	0.00E+00	0.00E+00	1.60E-03	3.35E-03	0.00E+00	9.91E-03	0.00E+00	0.00E+00	1.60E-03	0.00E+00	0.00E+00	9.91E-03
1678	ALL	752588.42	4037460.7	NonCancerAcute	0.00E+00	7.45E-06	1.58E-03	0.00E+00	0.00E+00	1.59E-03	3.23E-03	0.00E+00	9.71E-03	0.00E+00	0.00E+00	1.58E-03	0.00E+00	0.00E+00	9.71E-03
1679	ALL	752688.42	4037460.7	NonCancerAcute	0.00E+00	7.33E-06	1.56E-03	0.00E+00	0.00E+00	1.56E-03	3.16E-03	0.00E+00	9.53E-03	0.00E+00	0.00E+00	1.56E-03	0.00E+00	0.00E+00	9.53E-03
1680	ALL	752788.42	4037460.7	NonCancerAcute	0.00E+00	7.23E-06	1.54E-03	0.00E+00	0.00E+00	1.54E-03	3.10E-03	0.00E+00	9.37E-03	0.00E+00	0.00E+00	1.54E-03	0.00E+00	0.00E+00	9.37E-03
1681	ALL	754888.42	4037460.7	NonCancerAcute	0.00E+00	5.49E-06	1.17E-03	0.00E+00	0.00E+00	1.17E-03	2.27E-03	0.00E+00	7.02E-03	0.00E+00	0.00E+00	1.17E-03	0.00E+00	0.00E+00	7.02E-03
1682	ALL	754988.42	4037460.7	NonCancerAcute	0.00E+00	5.42E-06	1.15E-03	0.00E+00	0.00E+00	1.16E-03	2.21E-03	0.00E+00	6.89E-03	0.00E+00	0.00E+00	1.15E-03	0.00E+00	0.00E+00	6.89E-03
1683	ALL	755088.42	4037460.7	NonCancerAcute	0.00E+00	5.33E-06	1.13E-03	0.00E+00	0.00E+00	1.14E-03	2.15E-03	0.00E+00	6.75E-03	0.00E+00	0.00E+00	1.13E-03	0.00E+00	0.00E+00	6.75E-03
1684	ALL	755188.42	4037460.7	NonCancerAcute	0.00E+00	5.27E-06	1.12E-03	0.00E+00	0.00E+00	1.12E-03	2.09E-03	0.00E+00	6.62E-03	0.00E+00	0.00E+00	1.12E-03	0.00E+00	0.00E+00	6.62E-03
1685	ALL	755288.42	4037460.7	NonCancerAcute	0.00E+00	5.22E-06	1.11E-03	0.00E+00	0.00E+00	1.11E-03	2.03E-03	0.00E+00	6.51E-03	0.00E+00	0.00E+00	1.11E-03	0.00E+00	0.00E+00	6.51E-03
1686	ALL	746388.42	4037560.7	NonCancerAcute	0.00E+00	1.23E-05	2.62E-03	0.00E+00	0.00E+00	2.63E-03	9.25E-03	0.00E+00	2.08E-02	0.00E+00	0.00E+00	2.62E-03	0.00E+00	0.00E+00	2.08E-02
1687	ALL	746488.42	4037560.7	NonCancerAcute	0.00E+00	1.19E-05	2.53E-03	0.00E+00	0.00E+00	2.54E-03	9.26E-03	0.00E+00	2.05E-02	0.00E+00	0.00E+00	2.53E-03	0.00E+00	0.00E+00	2.05E-02
1688	ALL	746588.42	4037560.7	NonCancerAcute	0.00E+00	1.20E-05	2.56E-03	0.00E+00	0.00E+00	2.57E-03	9.68E-03	0.00E+00	2.11E-02	0.00E+00	0.00E+00	2.56E-03	0.00E+00	0.00E+00	2.11E-02
1689	ALL	747488.42	4037560.7	NonCancerAcute	0.00E+00	1.22E-05	2.59E-03	0.00E+00	0.00E+00	2.60E-03	9.19E-03	0.00E+00	2.07E-02	0.00E+00	0.00E+00	2.59E-03	0.00E+00	0.00E+00	2.07E-02
1690	ALL	747588.42	4037560.7	NonCancerAcute	0.00E+00	1.21E-05	2.57E-03	0.00E+00	0.00E+00	2.58E-03	9.11E-03	0.00E+00	2.05E-02	0.00E+00	0.00E+00	2.57E-03	0.00E+00	0.00E+00	2.05E-02
1691	ALL	747688.42	4037560.7	NonCancerAcute	0.00E+00	1.23E-05	2.62E-03	0.00E+00	0.00E+00	2.63E-03	9.15E-03	0.00E+00	2.07E-02	0.00E+00	0.00E+00	2.62E-03	0.00E+00	0.00E+00	2.07E-02
1692	ALL	747788.42	4037560.7	NonCancerAcute	0.00E+00	1.21E-05	2.58E-03	0.00E+00	0.00E+00	2.59E-03	8.92E-03	0.00E+00	2.03E-02	0.00E+00	0.00E+00	2.58E-03	0.00E+00	0.00E+00	2.03E-02
1693	ALL	747888.42	4037560.7	NonCancerAcute	0.00E+00	1.22E-05	2.59E-03	0.00E+00	0.00E+00	2.60E-03	8.52E-03	0.00E+00	1.98E-02	0.00E+00	0.00E+00	2.59E-03	0.00E+00	0.00E+00	1.98E-02
1694	ALL	747988.42	4037560.7	NonCancerAcute	0.00E+00	1.20E-05	2.54E-03	0.00E+00	0.00E+00	2.56E-03	8.43E-03	0.00E+00	1.96E-02	0.00E+00	0.00E+00	2.54E-03	0.00E+00	0.00E+00	1.96E-02

1695	ALL	748088.42	4037560.7	NonCancerAcute	0.00E+00	1.22E-05	2.59E-03	0.00E+00	0.00E+00	2.60E-03	8.43E-03	0.00E+00	1.97E-02	0.00E+00	0.00E+00	2.59E-03	0.00E+00	0.00E+00	1.97E-02
1696	ALL	748188.42	4037560.7	NonCancerAcute	0.00E+00	1.19E-05	2.53E-03	0.00E+00	0.00E+00	2.54E-03	8.15E-03	0.00E+00	1.92E-02	0.00E+00	0.00E+00	2.53E-03	0.00E+00	0.00E+00	1.92E-02
1697	ALL	749888.42	4037560.7	NonCancerAcute	0.00E+00	1.07E-05	2.27E-03	0.00E+00	0.00E+00	2.29E-03	5.62E-03	0.00E+00	1.52E-02	0.00E+00	0.00E+00	2.27E-03	0.00E+00	0.00E+00	1.52E-02
1698	ALL	749988.42	4037560.7	NonCancerAcute	0.00E+00	1.05E-05	2.23E-03	0.00E+00	0.00E+00	2.24E-03	5.48E-03	0.00E+00	1.48E-02	0.00E+00	0.00E+00	2.23E-03	0.00E+00	0.00E+00	1.48E-02
1699	ALL	750088.42	4037560.7	NonCancerAcute	0.00E+00	1.03E-05	2.18E-03	0.00E+00	0.00E+00	2.19E-03	5.40E-03	0.00E+00	1.45E-02	0.00E+00	0.00E+00	2.18E-03	0.00E+00	0.00E+00	1.45E-02
1700	ALL	750188.42	4037560.7	NonCancerAcute	0.00E+00	9.95E-06	2.11E-03	0.00E+00	0.00E+00	2.12E-03	5.28E-03	0.00E+00	1.41E-02	0.00E+00	0.00E+00	2.11E-03	0.00E+00	0.00E+00	1.41E-02
1701	ALL	750288.42	4037560.7	NonCancerAcute	0.00E+00	9.90E-06	2.10E-03	0.00E+00	0.00E+00	2.11E-03	5.08E-03	0.00E+00	1.39E-02	0.00E+00	0.00E+00	2.10E-03	0.00E+00	0.00E+00	1.39E-02
1702	ALL	752388.42	4037560.7	NonCancerAcute	0.00E+00	7.57E-06	1.61E-03	0.00E+00	0.00E+00	1.62E-03	3.39E-03	0.00E+00	1.00E-02	0.00E+00	0.00E+00	1.61E-03	0.00E+00	0.00E+00	1.00E-02
1703	ALL	752488.42	4037560.7	NonCancerAcute	0.00E+00	7.48E-06	1.59E-03	0.00E+00	0.00E+00	1.59E-03	3.27E-03	0.00E+00	9.78E-03	0.00E+00	0.00E+00	1.59E-03	0.00E+00	0.00E+00	9.78E-03
1704	ALL	752588.42	4037560.7	NonCancerAcute	0.00E+00	7.39E-06	1.57E-03	0.00E+00	0.00E+00	1.58E-03	3.21E-03	0.00E+00	9.63E-03	0.00E+00	0.00E+00	1.57E-03	0.00E+00	0.00E+00	9.63E-03
1705	ALL	752688.42	4037560.7	NonCancerAcute	0.00E+00	7.34E-06	1.56E-03	0.00E+00	0.00E+00	1.57E-03	3.16E-03	0.00E+00	9.53E-03	0.00E+00	0.00E+00	1.56E-03	0.00E+00	0.00E+00	9.53E-03
1706	ALL	752788.42	4037560.7	NonCancerAcute	0.00E+00	7.27E-06	1.54E-03	0.00E+00	0.00E+00	1.55E-03	3.20E-03	0.00E+00	9.53E-03	0.00E+00	0.00E+00	1.54E-03	0.00E+00	0.00E+00	9.53E-03
1707	ALL	754888.42	4037560.7	NonCancerAcute	0.00E+00	5.52E-06	1.17E-03	0.00E+00	0.00E+00	1.18E-03	2.24E-03	0.00E+00	6.99E-03	0.00E+00	0.00E+00	1.17E-03	0.00E+00	0.00E+00	6.99E-03
1708	ALL	754988.42	4037560.7	NonCancerAcute	0.00E+00	5.46E-06	1.16E-03	0.00E+00	0.00E+00	1.17E-03	2.17E-03	0.00E+00	6.88E-03	0.00E+00	0.00E+00	1.16E-03	0.00E+00	0.00E+00	6.88E-03
1709	ALL	755088.42	4037560.7	NonCancerAcute	0.00E+00	5.41E-06	1.15E-03	0.00E+00	0.00E+00	1.15E-03	2.11E-03	0.00E+00	6.76E-03	0.00E+00	0.00E+00	1.15E-03	0.00E+00	0.00E+00	6.76E-03
1710	ALL	755188.42	4037560.7	NonCancerAcute	0.00E+00	5.37E-06	1.14E-03	0.00E+00	0.00E+00	1.15E-03	2.09E-03	0.00E+00	6.70E-03	0.00E+00	0.00E+00	1.14E-03	0.00E+00	0.00E+00	6.70E-03
1711	ALL	755288.42	4037560.7	NonCancerAcute	0.00E+00	5.32E-06	1.13E-03	0.00E+00	0.00E+00	1.14E-03	2.10E-03	0.00E+00	6.67E-03	0.00E+00	0.00E+00	1.13E-03	0.00E+00	0.00E+00	6.67E-03
1712	ALL	746388.42	4037660.7	NonCancerAcute	0.00E+00	1.21E-05	2.58E-03	0.00E+00	0.00E+00	2.59E-03	9.16E-03	0.00E+00	2.06E-02	0.00E+00	0.00E+00	2.58E-03	0.00E+00	0.00E+00	2.06E-02
1713	ALL	746488.42	4037660.7	NonCancerAcute	0.00E+00	1.21E-05	2.57E-03	0.00E+00	0.00E+00	2.58E-03	9.39E-03	0.00E+00	2.08E-02	0.00E+00	0.00E+00	2.57E-03	0.00E+00	0.00E+00	2.08E-02
1714	ALL	746588.42	4037660.7	NonCancerAcute	0.00E+00	1.19E-05	2.53E-03	0.00E+00	0.00E+00	2.54E-03	9.37E-03	0.00E+00	2.07E-02	0.00E+00	0.00E+00	2.53E-03	0.00E+00	0.00E+00	2.07E-02
1715	ALL	747488.42	4037660.7	NonCancerAcute	0.00E+00	1.21E-05	2.57E-03	0.00E+00	0.00E+00	2.58E-03	9.10E-03	0.00E+00	2.05E-02	0.00E+00	0.00E+00	2.57E-03	0.00E+00	0.00E+00	2.05E-02
1716	ALL	747588.42	4037660.7	NonCancerAcute	0.00E+00	1.25E-05	2.65E-03	0.00E+00	0.00E+00	2.66E-03	9.04E-03	0.00E+00	2.07E-02	0.00E+00	0.00E+00	2.65E-03	0.00E+00	0.00E+00	2.07E-02
1717	ALL	747688.42	4037660.7	NonCancerAcute	0.00E+00	1.21E-05	2.58E-03	0.00E+00	0.00E+00	2.59E-03	8.78E-03	0.00E+00	2.01E-02	0.00E+00	0.00E+00	2.58E-03	0.00E+00	0.00E+00	2.01E-02
1718	ALL	747788.42	4037660.7	NonCancerAcute	0.00E+00	1.24E-05	2.62E-03	0.00E+00	0.00E+00	2.64E-03	8.91E-03	0.00E+00	2.04E-02	0.00E+00	0.00E+00	2.62E-03	0.00E+00	0.00E+00	2.04E-02
1719	ALL	747888.42	4037660.7	NonCancerAcute	0.00E+00	1.23E-05	2.61E-03	0.00E+00	0.00E+00	2.63E-03	8.53E-03	0.00E+00	1.99E-02	0.00E+00	0.00E+00	2.61E-03	0.00E+00	0.00E+00	1.99E-02
1720	ALL	747988.42	4037660.7	NonCancerAcute	0.00E+00	1.19E-05	2.52E-03	0.00E+00	0.00E+00	2.54E-03	8.23E-03	0.00E+00	1.92E-02	0.00E+00	0.00E+00	2.52E-03	0.00E+00	0.00E+00	1.92E-02
1721	ALL	748088.42	4037660.7	NonCancerAcute	0.00E+00	1.22E-05	2.58E-03	0.00E+00	0.00E+00	2.59E-03	8.17E-03	0.00E+00	1.94E-02	0.00E+00	0.00E+00	2.58E-03	0.00E+00	0.00E+00	1.94E-02
1722	ALL	748188.42	4037660.7	NonCancerAcute	0.00E+00	1.21E-05	2.58E-03	0.00E+00	0.00E+00	2.59E-03	8.28E-03	0.00E+00	1.95E-02	0.00E+00	0.00E+00	2.58E-03	0.00E+00	0.00E+00	1.95E-02
1723	ALL	749888.42	4037660.7	NonCancerAcute	0.00E+00	1.06E-05	2.26E-03	0.00E+00	0.00E+00	2.27E-03	5.59E-03	0.00E+00	1.50E-02	0.00E+00	0.00E+00	2.26E-03	0.00E+00	0.00E+00	1.50E-02
1724	ALL	749988.42	4037660.7	NonCancerAcute	0.00E+00	1.05E-05	2.23E-03	0.00E+00	0.00E+00	2.24E-03	5.45E-03	0.00E+00	1.48E-02	0.00E+00	0.00E+00	2.23E-03	0.00E+00	0.00E+00	1.48E-02
1725	ALL	750088.42	4037660.7	NonCancerAcute	0.00E+00	1.01E-05	2.15E-03	0.00E+00	0.00E+00	2.16E-03	5.43E-03	0.00E+00	1.45E-02	0.00E+00	0.00E+00	2.15E-03	0.00E+00	0.00E+00	1.45E-02
1726	ALL	750188.42	4037660.7	NonCancerAcute	0.00E+00	1.00E-05	2.12E-03	0.00E+00	0.00E+00	2.13E-03	5.40E-03	0.00E+00	1.43E-02	0.00E+00	0.00E+00	2.12E-03	0.00E+00	0.00E+00	1.43E-02
1727	ALL	750288.42	4037660.7	NonCancerAcute	0.00E+00	9.91E-06	2.11E-03	0.00E+00	0.00E+00	2.11E-03	5.28E-03	0.00E+00	1.41E-02	0.00E+00	0.00E+00	2.11E-03	0.00E+00	0.00E+00	1.41E-02
1728	ALL	752388.42	4037660.7	NonCancerAcute	0.00E+00	7.57E-06	1.61E-03	0.00E+00	0.00E+00	1.62E-03	3.28E-03	0.00E+00	9.86E-03	0.00E+00	0.00E+00	1.61E-03	0.00E+00	0.00E+00	9.86E-03
1729	ALL	752488.42	4037660.7	NonCancerAcute	0.00E+00	7.48E-06	1.59E-03	0.00E+00	0.00E+00	1.60E-03	3.22E-03	0.00E+00	9.72E-03	0.00E+00	0.00E+00	1.59E-03	0.00E+00	0.00E+00	9.72E-03
1730	ALL	752588.42	4037660.7	NonCancerAcute	0.00E+00	7.41E-06	1.57E-03	0.00E+00	0.00E+00	1.58E-03	3.19E-03	0.00E+00	9.63E-03	0.00E+00	0.00E+00	1.57E-03	0.00E+00	0.00E+00	9.63E-03
1731	ALL	752688.42	4037660.7	NonCancerAcute	0.00E+00	7.30E-06	1.55E-03	0.00E+00	0.00E+00	1.56E-03	3.23E-03	0.00E+00	9.58E-03	0.00E+00	0.00E+00	1.55E-03	0.00E+00	0.00E+00	9.58E-03
1732	ALL	752788.42	4037660.7	NonCancerAcute	0.00E+00	7.22E-06	1.53E-03	0.00E+00	0.00E+00	1.54E-03	3.20E-03	0.00E+00	9.50E-03	0.00E+00	0.00E+00	1.53E-03	0.00E+00	0.00E+00	9.50E-03
1733	ALL	754888.42	4037660.7	NonCancerAcute	0.00E+00	5.58E-06	1.19E-03	0.00E+00	0.00E+00	1.19E-03	2.17E-03	0.00E+00	6.97E-03	0.00E+00	0.00E+00	1.19E-03	0.00E+00	0.00E+00	6.97E-03
1734	ALL	754988.42	4037660.7	NonCancerAcute	0.00E+00	5.55E-06	1.18E-03	0.00E+00	0.00E+00	1.18E-03	2.15E-03	0.00E+00	6.92E-03	0.00E+00	0.00E+00	1.18E-03	0.00E+00	0.00E+00	6.92E-03
1735	ALL	755088.42	4037660.7	NonCancerAcute	0.00E+00	5.50E-06	1.17E-03	0.00E+00	0.00E+00	1.17E-03	2.17E-03	0.00E+00	6.90E-03	0.00E+00	0.00E+00	1.17E-03	0.00E+00	0.00E+00	6.90E-03
1736	ALL	755188.42	4037660.7	NonCancerAcute	0.00E+00	5.43E-06	1.15E-03	0.00E+00	0.00E+00	1.16E-03	2.18E-03	0.00E+00	6.86E-03	0.00E+00	0.00E+00	1.15E-03	0.00E+00	0.00E+00	6.86E-03
1737	ALL	755288.42	4037660.7	NonCancerAcute	0.00E+00	5.36E-06	1.14E-03	0.00E+00	0.00E+00	1.14E-03	2.18E-03	0.00E+00	6.80E-03	0.00E+00	0.00E+00	1.14E-03	0.00E+00	0.00E+00	6.80E-03
1738	ALL	746388.42	4037760.7	NonCancerAcute	0.00E+00	1.21E-05	2.57E-03	0.00E+00	0.00E+00	2.58E-03	9.17E-03	0.00E+00	2.06E-02	0.00E+00	0.00E+00	2.57E-03	0.00E+00	0.00E+00	2.06E-02
1739	ALL	746488.42	4037760.7	NonCancerAcute	0.00E+00	1.19E-05	2.54E-03	0.00E+00	0.00E+00	2.55E-03	9.12E-03	0.00E+00	2.04E-02	0.00E+00	0.00E+00	2.54E-03	0.00E+00	0.00E+00	2.04E-02
1740	ALL	746588.42	4037760.7	NonCancerAcute	0.00E+00	1.23E-05	2.61E-03	0.00E+00	0.00E+00	2.63E-03	9.50E-03	0.00E+00	2.11E-02	0.00E+00	0.00E+00	2.61E-03	0.00E+00	0.00E+00	2.11E-02
1741	ALL	746688.42	4037760.7	NonCancerAcute	0.00E+00	1.21E-05	2.56E-03	0.00E+00	0.00E+00	2.57E-03	9.47E-03	0.00E+00	2.09E-02	0.00E+00	0.00E+00	2.56E-03	0.00E+00	0.00E+00	2.09E-02
1742	ALL	746788.42	4037760.7	NonCancerAcute	0.00E+00	1.25E-05	2.65E-03	0.00E+00	0.00E+00	2.67E-03	9.59E-03	0.00E+00	2.14E-02	0.00E+00	0.00E+00	2.65E-03	0.00E+00	0.00E+00	2.14E-02
1743	ALL	746888.42	4037760.7	NonCancerAcute	0.00E+00	1.24E-05	2.64E-03	0.00E+00	0.00E+00	2.65E-03	9.61E-03	0.00E+00	2.14E-02	0.00E+00	0.00E+00	2.64E-03	0.00E+00	0.00E+00	2.14E-02
1744	ALL	746988.42	4037760.7	NonCancerAcute	0.00E+00	1.28E-05	2.72E-03	0.00E+00	0.00E+00	2.74E-03	9.54E-03	0.00E+00	2.16E-02	0.00E+00	0.00E+00	2.72E-03	0.00E+00	0.00E+00	2.16E-02
1745	ALL	747488.42	4037760.7	NonCancerAcute	0.00E+00	1.21E-05	2.57E-03	0.00E+00	0.00E+00	2.58E-03	8.84E-03	0.00E+00	2.02E-02	0.00E+00	0.00E+00	2.57E-03	0.00E+00	0.00E+00	2.02E-02
1746	ALL	747588.42	4037760.7	NonCancerAcute	0.00E+00	1.24E-05	2.63E-03	0.00E+00	0.00E+00	2.65E-03	8.81E-03	0.00E+00	2.04E-02	0.00E+00	0.00E+00	2.63E-03	0.00E+00	0.00E+00	2.04E-02
1747	ALL	747688.42	4037760.7	NonCancerAcute	0.00E+00	1.21E-05	2.56E-03	0.00E+00	0.00E+00	2.58E-03	8.76E-03	0.00E+00	2.00E-02	0.00E+00	0.00E+00	2.56E-03	0.00E+00	0.00E+00	2.00E-02

1748	ALL	747788.42	4037760.7	NonCancerAcute	0.00E+00	1.23E-05	2.62E-03	0.00E+00	0.00E+00	2.63E-03	8.52E-03	0.00E+00	2.00E-02	0.00E+00	0.00E+00	2.62E-03	0.00E+00	0.00E+00	2.00E-02
1749	ALL	747888.42	4037760.7	NonCancerAcute	0.00E+00	1.21E-05	2.56E-03	0.00E+00	0.00E+00	2.58E-03	8.64E-03	0.00E+00	1.99E-02	0.00E+00	0.00E+00	2.56E-03	0.00E+00	0.00E+00	1.99E-02
1750	ALL	747988.42	4037760.7	NonCancerAcute	0.00E+00	1.21E-05	2.56E-03	0.00E+00	0.00E+00	2.57E-03	8.17E-03	0.00E+00	1.93E-02	0.00E+00	0.00E+00	2.56E-03	0.00E+00	0.00E+00	1.93E-02
1751	ALL	748088.42	4037760.7	NonCancerAcute	0.00E+00	1.20E-05	2.55E-03	0.00E+00	0.00E+00	2.56E-03	8.07E-03	0.00E+00	1.91E-02	0.00E+00	0.00E+00	2.55E-03	0.00E+00	0.00E+00	1.91E-02
1752	ALL	748188.42	4037760.7	NonCancerAcute	0.00E+00	1.22E-05	2.59E-03	0.00E+00	0.00E+00	2.60E-03	8.05E-03	0.00E+00	1.93E-02	0.00E+00	0.00E+00	2.59E-03	0.00E+00	0.00E+00	1.93E-02
1753	ALL	749888.42	4037760.7	NonCancerAcute	0.00E+00	1.09E-05	2.32E-03	0.00E+00	0.00E+00	2.33E-03	5.72E-03	0.00E+00	1.54E-02	0.00E+00	0.00E+00	2.32E-03	0.00E+00	0.00E+00	1.54E-02
1754	ALL	749988.42	4037760.7	NonCancerAcute	0.00E+00	1.04E-05	2.21E-03	0.00E+00	0.00E+00	2.22E-03	5.54E-03	0.00E+00	1.48E-02	0.00E+00	0.00E+00	2.21E-03	0.00E+00	0.00E+00	1.48E-02
1755	ALL	750088.42	4037760.7	NonCancerAcute	0.00E+00	1.01E-05	2.15E-03	0.00E+00	0.00E+00	2.16E-03	5.44E-03	0.00E+00	1.45E-02	0.00E+00	0.00E+00	2.15E-03	0.00E+00	0.00E+00	1.45E-02
1756	ALL	750188.42	4037760.7	NonCancerAcute	0.00E+00	9.99E-06	2.12E-03	0.00E+00	0.00E+00	2.13E-03	5.39E-03	0.00E+00	1.43E-02	0.00E+00	0.00E+00	2.12E-03	0.00E+00	0.00E+00	1.43E-02
1757	ALL	750288.42	4037760.7	NonCancerAcute	0.00E+00	9.90E-06	2.10E-03	0.00E+00	0.00E+00	2.11E-03	5.30E-03	0.00E+00	1.41E-02	0.00E+00	0.00E+00	2.10E-03	0.00E+00	0.00E+00	1.41E-02
1758	ALL	752388.42	4037760.7	NonCancerAcute	0.00E+00	7.57E-06	1.61E-03	0.00E+00	0.00E+00	1.62E-03	3.30E-03	0.00E+00	9.88E-03	0.00E+00	0.00E+00	1.61E-03	0.00E+00	0.00E+00	9.88E-03
1759	ALL	752488.42	4037760.7	NonCancerAcute	0.00E+00	7.48E-06	1.59E-03	0.00E+00	0.00E+00	1.60E-03	3.26E-03	0.00E+00	9.77E-03	0.00E+00	0.00E+00	1.59E-03	0.00E+00	0.00E+00	9.77E-03
1760	ALL	752588.42	4037760.7	NonCancerAcute	0.00E+00	7.40E-06	1.57E-03	0.00E+00	0.00E+00	1.58E-03	3.27E-03	0.00E+00	9.71E-03	0.00E+00	0.00E+00	1.57E-03	0.00E+00	0.00E+00	9.71E-03
1761	ALL	752688.42	4037760.7	NonCancerAcute	0.00E+00	7.35E-06	1.56E-03	0.00E+00	0.00E+00	1.57E-03	3.21E-03	0.00E+00	9.60E-03	0.00E+00	0.00E+00	1.56E-03	0.00E+00	0.00E+00	9.60E-03
1762	ALL	752788.42	4037760.7	NonCancerAcute	0.00E+00	7.26E-06	1.54E-03	0.00E+00	0.00E+00	1.55E-03	3.12E-03	0.00E+00	9.42E-03	0.00E+00	0.00E+00	1.54E-03	0.00E+00	0.00E+00	9.42E-03
1763	ALL	754888.42	4037760.7	NonCancerAcute	0.00E+00	5.58E-06	1.19E-03	0.00E+00	0.00E+00	1.19E-03	2.22E-03	0.00E+00	7.02E-03	0.00E+00	0.00E+00	1.19E-03	0.00E+00	0.00E+00	7.02E-03
1764	ALL	754988.42	4037760.7	NonCancerAcute	0.00E+00	5.51E-06	1.17E-03	0.00E+00	0.00E+00	1.18E-03	2.23E-03	0.00E+00	6.98E-03	0.00E+00	0.00E+00	1.17E-03	0.00E+00	0.00E+00	6.98E-03
1765	ALL	755088.42	4037760.7	NonCancerAcute	0.00E+00	5.43E-06	1.15E-03	0.00E+00	0.00E+00	1.16E-03	2.23E-03	0.00E+00	6.93E-03	0.00E+00	0.00E+00	1.15E-03	0.00E+00	0.00E+00	6.93E-03
1766	ALL	755188.42	4037760.7	NonCancerAcute	0.00E+00	5.37E-06	1.14E-03	0.00E+00	0.00E+00	1.15E-03	2.23E-03	0.00E+00	6.88E-03	0.00E+00	0.00E+00	1.14E-03	0.00E+00	0.00E+00	6.88E-03
1767	ALL	755288.42	4037760.7	NonCancerAcute	0.00E+00	5.34E-06	1.14E-03	0.00E+00	0.00E+00	1.14E-03	2.23E-03	0.00E+00	6.86E-03	0.00E+00	0.00E+00	1.14E-03	0.00E+00	0.00E+00	6.86E-03
1768	ALL	746388.42	4037860.7	NonCancerAcute	0.00E+00	1.19E-05	2.53E-03	0.00E+00	0.00E+00	2.54E-03	9.13E-03	0.00E+00	2.04E-02	0.00E+00	0.00E+00	2.53E-03	0.00E+00	0.00E+00	2.04E-02
1769	ALL	746488.42	4037860.7	NonCancerAcute	0.00E+00	1.17E-05	2.48E-03	0.00E+00	0.00E+00	2.49E-03	9.20E-03	0.00E+00	2.03E-02	0.00E+00	0.00E+00	2.48E-03	0.00E+00	0.00E+00	2.03E-02
1770	ALL	746588.42	4037860.7	NonCancerAcute	0.00E+00	1.24E-05	2.64E-03	0.00E+00	0.00E+00	2.66E-03	9.26E-03	0.00E+00	2.09E-02	0.00E+00	0.00E+00	2.64E-03	0.00E+00	0.00E+00	2.09E-02
1771	ALL	746688.42	4037860.7	NonCancerAcute	0.00E+00	1.21E-05	2.56E-03	0.00E+00	0.00E+00	2.57E-03	9.37E-03	0.00E+00	2.08E-02	0.00E+00	0.00E+00	2.56E-03	0.00E+00	0.00E+00	2.08E-02
1772	ALL	746788.42	4037860.7	NonCancerAcute	0.00E+00	1.22E-05	2.60E-03	0.00E+00	0.00E+00	2.61E-03	9.39E-03	0.00E+00	2.09E-02	0.00E+00	0.00E+00	2.60E-03	0.00E+00	0.00E+00	2.09E-02
1773	ALL	746888.42	4037860.7	NonCancerAcute	0.00E+00	1.23E-05	2.62E-03	0.00E+00	0.00E+00	2.63E-03	9.39E-03	0.00E+00	2.10E-02	0.00E+00	0.00E+00	2.62E-03	0.00E+00	0.00E+00	2.10E-02
1774	ALL	746988.42	4037860.7	NonCancerAcute	0.00E+00	1.26E-05	2.68E-03	0.00E+00	0.00E+00	2.69E-03	9.27E-03	0.00E+00	2.11E-02	0.00E+00	0.00E+00	2.68E-03	0.00E+00	0.00E+00	2.11E-02
1775	ALL	747088.42	4037860.7	NonCancerAcute	0.00E+00	1.28E-05	2.72E-03	0.00E+00	0.00E+00	2.73E-03	9.30E-03	0.00E+00	2.13E-02	0.00E+00	0.00E+00	2.72E-03	0.00E+00	0.00E+00	2.13E-02
1776	ALL	747188.42	4037860.7	NonCancerAcute	0.00E+00	1.24E-05	2.63E-03	0.00E+00	0.00E+00	2.64E-03	8.80E-03	0.00E+00	2.03E-02	0.00E+00	0.00E+00	2.63E-03	0.00E+00	0.00E+00	2.03E-02
1777	ALL	747288.42	4037860.7	NonCancerAcute	0.00E+00	1.24E-05	2.64E-03	0.00E+00	0.00E+00	2.65E-03	9.06E-03	0.00E+00	2.07E-02	0.00E+00	0.00E+00	2.64E-03	0.00E+00	0.00E+00	2.07E-02
1778	ALL	747388.42	4037860.7	NonCancerAcute	0.00E+00	1.20E-05	2.55E-03	0.00E+00	0.00E+00	2.56E-03	8.84E-03	0.00E+00	2.01E-02	0.00E+00	0.00E+00	2.55E-03	0.00E+00	0.00E+00	2.01E-02
1779	ALL	747488.42	4037860.7	NonCancerAcute	0.00E+00	1.21E-05	2.56E-03	0.00E+00	0.00E+00	2.58E-03	8.71E-03	0.00E+00	2.00E-02	0.00E+00	0.00E+00	2.56E-03	0.00E+00	0.00E+00	2.00E-02
1780	ALL	747588.42	4037860.7	NonCancerAcute	0.00E+00	1.23E-05	2.60E-03	0.00E+00	0.00E+00	2.62E-03	8.76E-03	0.00E+00	2.02E-02	0.00E+00	0.00E+00	2.60E-03	0.00E+00	0.00E+00	2.02E-02
1781	ALL	747688.42	4037860.7	NonCancerAcute	0.00E+00	1.22E-05	2.59E-03	0.00E+00	0.00E+00	2.60E-03	8.48E-03	0.00E+00	1.98E-02	0.00E+00	0.00E+00	2.59E-03	0.00E+00	0.00E+00	1.98E-02
1782	ALL	747788.42	4037860.7	NonCancerAcute	0.00E+00	1.22E-05	2.59E-03	0.00E+00	0.00E+00	2.60E-03	8.51E-03	0.00E+00	1.98E-02	0.00E+00	0.00E+00	2.59E-03	0.00E+00	0.00E+00	1.98E-02
1783	ALL	747888.42	4037860.7	NonCancerAcute	0.00E+00	1.22E-05	2.60E-03	0.00E+00	0.00E+00	2.61E-03	8.38E-03	0.00E+00	1.97E-02	0.00E+00	0.00E+00	2.60E-03	0.00E+00	0.00E+00	1.97E-02
1784	ALL	747988.42	4037860.7	NonCancerAcute	0.00E+00	1.22E-05	2.59E-03	0.00E+00	0.00E+00	2.60E-03	8.38E-03	0.00E+00	1.97E-02	0.00E+00	0.00E+00	2.59E-03	0.00E+00	0.00E+00	1.97E-02
1785	ALL	748088.42	4037860.7	NonCancerAcute	0.00E+00	1.20E-05	2.55E-03	0.00E+00	0.00E+00	2.56E-03	7.93E-03	0.00E+00	1.90E-02	0.00E+00	0.00E+00	2.55E-03	0.00E+00	0.00E+00	1.90E-02
1786	ALL	748188.42	4037860.7	NonCancerAcute	0.00E+00	1.21E-05	2.56E-03	0.00E+00	0.00E+00	2.57E-03	8.04E-03	0.00E+00	1.91E-02	0.00E+00	0.00E+00	2.56E-03	0.00E+00	0.00E+00	1.91E-02
1787	ALL	749888.42	4037860.7	NonCancerAcute	0.00E+00	1.10E-05	2.33E-03	0.00E+00	0.00E+00	2.34E-03	5.73E-03	0.00E+00	1.55E-02	0.00E+00	0.00E+00	2.33E-03	0.00E+00	0.00E+00	1.55E-02
1788	ALL	749988.42	4037860.7	NonCancerAcute	0.00E+00	1.05E-05	2.24E-03	0.00E+00	0.00E+00	2.25E-03	5.57E-03	0.00E+00	1.50E-02	0.00E+00	0.00E+00	2.24E-03	0.00E+00	0.00E+00	1.50E-02
1789	ALL	750088.42	4037860.7	NonCancerAcute	0.00E+00	1.04E-05	2.21E-03	0.00E+00	0.00E+00	2.22E-03	5.47E-03	0.00E+00	1.47E-02	0.00E+00	0.00E+00	2.21E-03	0.00E+00	0.00E+00	1.47E-02
1790	ALL	750188.42	4037860.7	NonCancerAcute	0.00E+00	1.01E-05	2.15E-03	0.00E+00	0.00E+00	2.16E-03	5.45E-03	0.00E+00	1.45E-02	0.00E+00	0.00E+00	2.15E-03	0.00E+00	0.00E+00	1.45E-02
1791	ALL	750288.42	4037860.7	NonCancerAcute	0.00E+00	9.90E-06	2.10E-03	0.00E+00	0.00E+00	2.11E-03	5.42E-03	0.00E+00	1.43E-02	0.00E+00	0.00E+00	2.10E-03	0.00E+00	0.00E+00	1.43E-02
1792	ALL	752388.42	4037860.7	NonCancerAcute	0.00E+00	7.50E-06	1.59E-03	0.00E+00	0.00E+00	1.60E-03	3.40E-03	0.00E+00	9.95E-03	0.00E+00	0.00E+00	1.59E-03	0.00E+00	0.00E+00	9.95E-03
1793	ALL	752488.42	4037860.7	NonCancerAcute	0.00E+00	7.42E-06	1.58E-03	0.00E+00	0.00E+00	1.58E-03	3.40E-03	0.00E+00	9.89E-03	0.00E+00	0.00E+00	1.58E-03	0.00E+00	0.00E+00	9.89E-03
1794	ALL	752588.42	4037860.7	NonCancerAcute	0.00E+00	7.39E-06	1.57E-03	0.00E+00	0.00E+00	1.58E-03	3.33E-03	0.00E+00	9.78E-03	0.00E+00	0.00E+00	1.57E-03	0.00E+00	0.00E+00	9.78E-03
1795	ALL	752688.42	4037860.7	NonCancerAcute	0.00E+00	7.32E-06	1.55E-03	0.00E+00	0.00E+00	1.56E-03	3.20E-03	0.00E+00	9.57E-03	0.00E+00	0.00E+00	1.55E-03	0.00E+00	0.00E+00	9.57E-03
1796	ALL	752788.42	4037860.7	NonCancerAcute	0.00E+00	7.19E-06	1.53E-03	0.00E+00	0.00E+00	1.53E-03	3.05E-03	0.00E+00	9.28E-03	0.00E+00	0.00E+00	1.53E-03	0.00E+00	0.00E+00	9.28E-03
1797	ALL	754888.42	4037860.7	NonCancerAcute	0.00E+00	5.55E-06	1.18E-03	0.00E+00	0.00E+00	1.18E-03	2.27E-03	0.00E+00	7.06E-03	0.00E+00	0.00E+00	1.18E-03	0.00E+00	0.00E+00	7.06E-03
1798	ALL	754988.42	4037860.7	NonCancerAcute	0.00E+00	5.48E-06	1.16E-03	0.00E+00	0.00E+00	1.17E-03	2.27E-03	0.00E+00	7.02E-03	0.00E+00	0.00E+00	1.16E-03	0.00E+00	0.00E+00	7.02E-03
1799	ALL	755088.42	4037860.7	NonCancerAcute	0.00E+00	5.43E-06	1.15E-03	0.00E+00	0.00E+00	1.16E-03	2.27E-03	0.00E+00	6.98E-03	0.00E+00	0.00E+00	1.15E-03	0.00E+00	0.00E+00	6.98E-03
1800	ALL	755188.42	4037860.7	NonCancerAcute	0.00E+00	5.39E-06	1.15E-03	0.00E+00	0.00E+00	1.15E-03	2.27E-03	0.00E+00	6.94E-03	0.00E+00	0.00E+00	1.15E-03	0.00E+00	0.00E+00	6.94E-03

1801	ALL	755288.42	4037860.7	NonCancerAcute	0.00E+00	5.35E-06	1.14E-03	0.00E+00	0.00E+00	1.14E-03	2.26E-03	0.00E+00	6.90E-03	0.00E+00	0.00E+00	1.14E-03	0.00E+00	0.00E+00	6.90E-03
1802	ALL	746388.42	4037960.7	NonCancerAcute	0.00E+00	1.17E-05	2.48E-03	0.00E+00	0.00E+00	2.49E-03	8.74E-03	0.00E+00	1.97E-02	0.00E+00	0.00E+00	2.48E-03	0.00E+00	0.00E+00	1.97E-02
1803	ALL	746488.42	4037960.7	NonCancerAcute	0.00E+00	1.19E-05	2.53E-03	0.00E+00	0.00E+00	2.54E-03	8.88E-03	0.00E+00	2.01E-02	0.00E+00	0.00E+00	2.53E-03	0.00E+00	0.00E+00	2.01E-02
1804	ALL	746588.42	4037960.7	NonCancerAcute	0.00E+00	1.22E-05	2.58E-03	0.00E+00	0.00E+00	2.60E-03	9.04E-03	0.00E+00	2.05E-02	0.00E+00	0.00E+00	2.58E-03	0.00E+00	0.00E+00	2.05E-02
1805	ALL	746688.42	4037960.7	NonCancerAcute	0.00E+00	1.24E-05	2.63E-03	0.00E+00	0.00E+00	2.64E-03	9.14E-03	0.00E+00	2.08E-02	0.00E+00	0.00E+00	2.63E-03	0.00E+00	0.00E+00	2.08E-02
1806	ALL	746788.42	4037960.7	NonCancerAcute	0.00E+00	1.20E-05	2.55E-03	0.00E+00	0.00E+00	2.56E-03	9.13E-03	0.00E+00	2.04E-02	0.00E+00	0.00E+00	2.55E-03	0.00E+00	0.00E+00	2.04E-02
1807	ALL	746888.42	4037960.7	NonCancerAcute	0.00E+00	1.23E-05	2.61E-03	0.00E+00	0.00E+00	2.62E-03	9.17E-03	0.00E+00	2.07E-02	0.00E+00	0.00E+00	2.61E-03	0.00E+00	0.00E+00	2.07E-02
1808	ALL	746988.42	4037960.7	NonCancerAcute	0.00E+00	1.22E-05	2.60E-03	0.00E+00	0.00E+00	2.61E-03	9.12E-03	0.00E+00	2.06E-02	0.00E+00	0.00E+00	2.60E-03	0.00E+00	0.00E+00	2.06E-02
1809	ALL	747088.42	4037960.7	NonCancerAcute	0.00E+00	1.27E-05	2.69E-03	0.00E+00	0.00E+00	2.70E-03	9.10E-03	0.00E+00	2.09E-02	0.00E+00	0.00E+00	2.69E-03	0.00E+00	0.00E+00	2.09E-02
1810	ALL	747188.42	4037960.7	NonCancerAcute	0.00E+00	1.25E-05	2.66E-03	0.00E+00	0.00E+00	2.67E-03	8.48E-03	0.00E+00	2.01E-02	0.00E+00	0.00E+00	2.66E-03	0.00E+00	0.00E+00	2.01E-02
1811	ALL	747288.42	4037960.7	NonCancerAcute	0.00E+00	1.22E-05	2.59E-03	0.00E+00	0.00E+00	2.60E-03	8.94E-03	0.00E+00	2.03E-02	0.00E+00	0.00E+00	2.59E-03	0.00E+00	0.00E+00	2.03E-02
1812	ALL	747388.42	4037960.7	NonCancerAcute	0.00E+00	1.23E-05	2.62E-03	0.00E+00	0.00E+00	2.63E-03	8.72E-03	0.00E+00	2.02E-02	0.00E+00	0.00E+00	2.62E-03	0.00E+00	0.00E+00	2.02E-02
1813	ALL	747488.42	4037960.7	NonCancerAcute	0.00E+00	1.18E-05	2.51E-03	0.00E+00	0.00E+00	2.52E-03	8.32E-03	0.00E+00	1.93E-02	0.00E+00	0.00E+00	2.51E-03	0.00E+00	0.00E+00	1.93E-02
1814	ALL	747588.42	4037960.7	NonCancerAcute	0.00E+00	1.20E-05	2.54E-03	0.00E+00	0.00E+00	2.55E-03	8.53E-03	0.00E+00	1.97E-02	0.00E+00	0.00E+00	2.54E-03	0.00E+00	0.00E+00	1.97E-02
1815	ALL	747688.42	4037960.7	NonCancerAcute	0.00E+00	1.23E-05	2.61E-03	0.00E+00	0.00E+00	2.63E-03	8.50E-03	0.00E+00	1.99E-02	0.00E+00	0.00E+00	2.61E-03	0.00E+00	0.00E+00	1.99E-02
1816	ALL	747788.42	4037960.7	NonCancerAcute	0.00E+00	1.20E-05	2.54E-03	0.00E+00	0.00E+00	2.56E-03	8.38E-03	0.00E+00	1.95E-02	0.00E+00	0.00E+00	2.54E-03	0.00E+00	0.00E+00	1.95E-02
1817	ALL	747888.42	4037960.7	NonCancerAcute	0.00E+00	1.23E-05	2.61E-03	0.00E+00	0.00E+00	2.62E-03	8.31E-03	0.00E+00	1.97E-02	0.00E+00	0.00E+00	2.61E-03	0.00E+00	0.00E+00	1.97E-02
1818	ALL	747988.42	4037960.7	NonCancerAcute	0.00E+00	1.20E-05	2.55E-03	0.00E+00	0.00E+00	2.57E-03	8.23E-03	0.00E+00	1.94E-02	0.00E+00	0.00E+00	2.55E-03	0.00E+00	0.00E+00	1.94E-02
1819	ALL	748088.42	4037960.7	NonCancerAcute	0.00E+00	1.21E-05	2.57E-03	0.00E+00	0.00E+00	2.59E-03	8.13E-03	0.00E+00	1.93E-02	0.00E+00	0.00E+00	2.57E-03	0.00E+00	0.00E+00	1.93E-02
1820	ALL	748188.42	4037960.7	NonCancerAcute	0.00E+00	1.20E-05	2.54E-03	0.00E+00	0.00E+00	2.55E-03	7.81E-03	0.00E+00	1.88E-02	0.00E+00	0.00E+00	2.54E-03	0.00E+00	0.00E+00	1.88E-02
1821	ALL	749888.42	4037960.7	NonCancerAcute	0.00E+00	1.08E-05	2.29E-03	0.00E+00	0.00E+00	2.30E-03	5.90E-03	0.00E+00	1.56E-02	0.00E+00	0.00E+00	2.29E-03	0.00E+00	0.00E+00	1.56E-02
1822	ALL	749988.42	4037960.7	NonCancerAcute	0.00E+00	1.07E-05	2.27E-03	0.00E+00	0.00E+00	2.28E-03	5.75E-03	0.00E+00	1.53E-02	0.00E+00	0.00E+00	2.27E-03	0.00E+00	0.00E+00	1.53E-02
1823	ALL	750088.42	4037960.7	NonCancerAcute	0.00E+00	1.05E-05	2.23E-03	0.00E+00	0.00E+00	2.24E-03	5.60E-03	0.00E+00	1.50E-02	0.00E+00	0.00E+00	2.23E-03	0.00E+00	0.00E+00	1.50E-02
1824	ALL	750188.42	4037960.7	NonCancerAcute	0.00E+00	1.03E-05	2.20E-03	0.00E+00	0.00E+00	2.21E-03	5.40E-03	0.00E+00	1.46E-02	0.00E+00	0.00E+00	2.20E-03	0.00E+00	0.00E+00	1.46E-02
1825	ALL	750288.42	4037960.7	NonCancerAcute	0.00E+00	1.01E-05	2.15E-03	0.00E+00	0.00E+00	2.16E-03	5.46E-03	0.00E+00	1.45E-02	0.00E+00	0.00E+00	2.15E-03	0.00E+00	0.00E+00	1.45E-02
1826	ALL	752388.42	4037960.7	NonCancerAcute	0.00E+00	7.49E-06	1.59E-03	0.00E+00	0.00E+00	1.60E-03	3.48E-03	0.00E+00	1.00E-02	0.00E+00	0.00E+00	1.59E-03	0.00E+00	0.00E+00	1.00E-02
1827	ALL	752488.42	4037960.7	NonCancerAcute	0.00E+00	7.38E-06	1.57E-03	0.00E+00	0.00E+00	1.57E-03	3.39E-03	0.00E+00	9.85E-03	0.00E+00	0.00E+00	1.57E-03	0.00E+00	0.00E+00	9.85E-03
1828	ALL	752588.42	4037960.7	NonCancerAcute	0.00E+00	7.27E-06	1.54E-03	0.00E+00	0.00E+00	1.55E-03	3.24E-03	0.00E+00	9.58E-03	0.00E+00	0.00E+00	1.54E-03	0.00E+00	0.00E+00	9.58E-03
1829	ALL	752688.42	4037960.7	NonCancerAcute	0.00E+00	7.14E-06	1.52E-03	0.00E+00	0.00E+00	1.52E-03	3.13E-03	0.00E+00	9.35E-03	0.00E+00	0.00E+00	1.52E-03	0.00E+00	0.00E+00	9.35E-03
1830	ALL	752788.42	4037960.7	NonCancerAcute	0.00E+00	7.05E-06	1.50E-03	0.00E+00	0.00E+00	1.50E-03	3.07E-03	0.00E+00	9.20E-03	0.00E+00	0.00E+00	1.50E-03	0.00E+00	0.00E+00	9.20E-03
1831	ALL	754888.42	4037960.7	NonCancerAcute	0.00E+00	5.64E-06	1.20E-03	0.00E+00	0.00E+00	1.20E-03	2.30E-03	0.00E+00	7.17E-03	0.00E+00	0.00E+00	1.20E-03	0.00E+00	0.00E+00	7.17E-03
1832	ALL	754988.42	4037960.7	NonCancerAcute	0.00E+00	5.58E-06	1.19E-03	0.00E+00	0.00E+00	1.19E-03	2.30E-03	0.00E+00	7.12E-03	0.00E+00	0.00E+00	1.19E-03	0.00E+00	0.00E+00	7.12E-03
1833	ALL	755088.42	4037960.7	NonCancerAcute	0.00E+00	5.51E-06	1.17E-03	0.00E+00	0.00E+00	1.18E-03	2.29E-03	0.00E+00	7.06E-03	0.00E+00	0.00E+00	1.17E-03	0.00E+00	0.00E+00	7.06E-03
1834	ALL	755188.42	4037960.7	NonCancerAcute	0.00E+00	5.43E-06	1.15E-03	0.00E+00	0.00E+00	1.16E-03	2.28E-03	0.00E+00	6.98E-03	0.00E+00	0.00E+00	1.15E-03	0.00E+00	0.00E+00	6.98E-03
1835	ALL	755288.42	4037960.7	NonCancerAcute	0.00E+00	5.34E-06	1.13E-03	0.00E+00	0.00E+00	1.14E-03	2.26E-03	0.00E+00	6.89E-03	0.00E+00	0.00E+00	1.13E-03	0.00E+00	0.00E+00	6.89E-03
1836	ALL	747888.42	4038060.7	NonCancerAcute	0.00E+00	1.21E-05	2.57E-03	0.00E+00	0.00E+00	2.58E-03	8.23E-03	0.00E+00	1.94E-02	0.00E+00	0.00E+00	2.57E-03	0.00E+00	0.00E+00	1.94E-02
1837	ALL	747988.42	4038060.7	NonCancerAcute	0.00E+00	1.21E-05	2.57E-03	0.00E+00	0.00E+00	2.58E-03	8.09E-03	0.00E+00	1.92E-02	0.00E+00	0.00E+00	2.57E-03	0.00E+00	0.00E+00	1.92E-02
1838	ALL	748088.42	4038060.7	NonCancerAcute	0.00E+00	1.21E-05	2.57E-03	0.00E+00	0.00E+00	2.58E-03	8.09E-03	0.00E+00	1.92E-02	0.00E+00	0.00E+00	2.57E-03	0.00E+00	0.00E+00	1.92E-02
1839	ALL	748188.42	4038060.7	NonCancerAcute	0.00E+00	1.20E-05	2.55E-03	0.00E+00	0.00E+00	2.56E-03	7.97E-03	0.00E+00	1.90E-02	0.00E+00	0.00E+00	2.55E-03	0.00E+00	0.00E+00	1.90E-02
1840	ALL	749888.42	4038060.7	NonCancerAcute	0.00E+00	1.09E-05	2.31E-03	0.00E+00	0.00E+00	2.32E-03	6.01E-03	0.00E+00	1.58E-02	0.00E+00	0.00E+00	2.31E-03	0.00E+00	0.00E+00	1.58E-02
1841	ALL	749988.42	4038060.7	NonCancerAcute	0.00E+00	1.07E-05	2.27E-03	0.00E+00	0.00E+00	2.29E-03	5.91E-03	0.00E+00	1.55E-02	0.00E+00	0.00E+00	2.27E-03	0.00E+00	0.00E+00	1.55E-02
1842	ALL	750088.42	4038060.7	NonCancerAcute	0.00E+00	1.06E-05	2.24E-03	0.00E+00	0.00E+00	2.25E-03	5.80E-03	0.00E+00	1.53E-02	0.00E+00	0.00E+00	2.24E-03	0.00E+00	0.00E+00	1.53E-02
1843	ALL	750188.42	4038060.7	NonCancerAcute	0.00E+00	1.04E-05	2.22E-03	0.00E+00	0.00E+00	2.23E-03	5.65E-03	0.00E+00	1.50E-02	0.00E+00	0.00E+00	2.22E-03	0.00E+00	0.00E+00	1.50E-02
1844	ALL	750288.42	4038060.7	NonCancerAcute	0.00E+00	1.02E-05	2.16E-03	0.00E+00	0.00E+00	2.17E-03	5.59E-03	0.00E+00	1.47E-02	0.00E+00	0.00E+00	2.16E-03	0.00E+00	0.00E+00	1.47E-02
1845	ALL	750388.42	4038060.7	NonCancerAcute	0.00E+00	1.01E-05	2.15E-03	0.00E+00	0.00E+00	2.16E-03	5.46E-03	0.00E+00	1.45E-02	0.00E+00	0.00E+00	2.15E-03	0.00E+00	0.00E+00	1.45E-02
1846	ALL	750488.42	4038060.7	NonCancerAcute	0.00E+00	9.91E-06	2.10E-03	0.00E+00	0.00E+00	2.11E-03	5.49E-03	0.00E+00	1.44E-02	0.00E+00	0.00E+00	2.10E-03	0.00E+00	0.00E+00	1.44E-02
1847	ALL	750588.42	4038060.7	NonCancerAcute	0.00E+00	9.59E-06	2.04E-03	0.00E+00	0.00E+00	2.05E-03	5.55E-03	0.00E+00	1.42E-02	0.00E+00	0.00E+00	2.04E-03	0.00E+00	0.00E+00	1.42E-02
1848	ALL	750688.42	4038060.7	NonCancerAcute	0.00E+00	9.43E-06	2.00E-03	0.00E+00	0.00E+00	2.01E-03	5.36E-03	0.00E+00	1.38E-02	0.00E+00	0.00E+00	2.00E-03	0.00E+00	0.00E+00	1.38E-02
1849	ALL	750788.42	4038060.7	NonCancerAcute	0.00E+00	9.31E-06	1.98E-03	0.00E+00	0.00E+00	1.99E-03	5.08E-03	0.00E+00	1.34E-02	0.00E+00	0.00E+00	1.98E-03	0.00E+00	0.00E+00	1.34E-02
1850	ALL	750888.42	4038060.7	NonCancerAcute	0.00E+00	9.20E-06	1.95E-03	0.00E+00	0.00E+00	1.96E-03	4.99E-03	0.00E+00	1.32E-02	0.00E+00	0.00E+00	1.95E-03	0.00E+00	0.00E+00	1.32E-02
1851	ALL	750988.42	4038060.7	NonCancerAcute	0.00E+00	9.04E-06	1.92E-03	0.00E+00	0.00E+00	1.93E-03	4.93E-03	0.00E+00	1.30E-02	0.00E+00	0.00E+00	1.92E-03	0.00E+00	0.00E+00	1.30E-02
1852	ALL	751088.42	4038060.7	NonCancerAcute	0.00E+00	8.91E-06	1.89E-03	0.00E+00	0.00E+00	1.90E-03	4.83E-03	0.00E+00	1.28E-02	0.00E+00	0.00E+00	1.89E-03	0.00E+00	0.00E+00	1.28E-02
1853	ALL	751188.42	4038060.7	NonCancerAcute	0.00E+00	8.78E-06	1.87E-03	0.00E+00	0.00E+00	1.87E-03	4.44E-03	0.00E+00	1.22E-02	0.00E+00	0.00E+00	1.87E-03	0.00E+00	0.00E+00	1.22E-02

1854	ALL	751288.42	4038060.7	NonCancerAcute	0.00E+00	8.61E-06	1.83E-03	0.00E+00	0.00E+00	1.84E-03	4.37E-03	0.00E+00	1.20E-02	0.00E+00	0.00E+00	1.83E-03	0.00E+00	0.00E+00	1.20E-02
1855	ALL	751388.42	4038060.7	NonCancerAcute	0.00E+00	8.54E-06	1.81E-03	0.00E+00	0.00E+00	1.82E-03	4.37E-03	0.00E+00	1.19E-02	0.00E+00	0.00E+00	1.81E-03	0.00E+00	0.00E+00	1.19E-02
1856	ALL	752388.42	4038060.7	NonCancerAcute	0.00E+00	7.57E-06	1.61E-03	0.00E+00	0.00E+00	1.61E-03	3.51E-03	0.00E+00	1.01E-02	0.00E+00	0.00E+00	1.61E-03	0.00E+00	0.00E+00	1.01E-02
1857	ALL	752488.42	4038060.7	NonCancerAcute	0.00E+00	7.38E-06	1.57E-03	0.00E+00	0.00E+00	1.57E-03	3.31E-03	0.00E+00	9.75E-03	0.00E+00	0.00E+00	1.57E-03	0.00E+00	0.00E+00	9.75E-03
1858	ALL	752588.42	4038060.7	NonCancerAcute	0.00E+00	7.21E-06	1.53E-03	0.00E+00	0.00E+00	1.54E-03	3.22E-03	0.00E+00	9.51E-03	0.00E+00	0.00E+00	1.53E-03	0.00E+00	0.00E+00	9.51E-03
1859	ALL	752688.42	4038060.7	NonCancerAcute	0.00E+00	7.12E-06	1.51E-03	0.00E+00	0.00E+00	1.52E-03	3.13E-03	0.00E+00	9.33E-03	0.00E+00	0.00E+00	1.51E-03	0.00E+00	0.00E+00	9.33E-03
1860	ALL	754788.42	4038060.7	NonCancerAcute	0.00E+00	5.71E-06	1.21E-03	0.00E+00	0.00E+00	1.22E-03	2.30E-03	0.00E+00	7.23E-03	0.00E+00	0.00E+00	1.21E-03	0.00E+00	0.00E+00	7.23E-03
1861	ALL	754888.42	4038060.7	NonCancerAcute	0.00E+00	5.65E-06	1.20E-03	0.00E+00	0.00E+00	1.21E-03	2.30E-03	0.00E+00	7.18E-03	0.00E+00	0.00E+00	1.20E-03	0.00E+00	0.00E+00	7.18E-03
1862	ALL	754988.42	4038060.7	NonCancerAcute	0.00E+00	5.57E-06	1.18E-03	0.00E+00	0.00E+00	1.19E-03	2.29E-03	0.00E+00	7.10E-03	0.00E+00	0.00E+00	1.18E-03	0.00E+00	0.00E+00	7.10E-03
1863	ALL	755088.42	4038060.7	NonCancerAcute	0.00E+00	5.49E-06	1.17E-03	0.00E+00	0.00E+00	1.17E-03	2.27E-03	0.00E+00	7.02E-03	0.00E+00	0.00E+00	1.17E-03	0.00E+00	0.00E+00	7.02E-03
1864	ALL	755188.42	4038060.7	NonCancerAcute	0.00E+00	5.41E-06	1.15E-03	0.00E+00	0.00E+00	1.15E-03	2.25E-03	0.00E+00	6.93E-03	0.00E+00	0.00E+00	1.15E-03	0.00E+00	0.00E+00	6.93E-03
1865	ALL	755288.42	4038060.7	NonCancerAcute	0.00E+00	5.33E-06	1.13E-03	0.00E+00	0.00E+00	1.14E-03	2.23E-03	0.00E+00	6.84E-03	0.00E+00	0.00E+00	1.13E-03	0.00E+00	0.00E+00	6.84E-03
1866	ALL	747888.42	4038160.7	NonCancerAcute	0.00E+00	1.20E-05	2.54E-03	0.00E+00	0.00E+00	2.55E-03	8.02E-03	0.00E+00	1.91E-02	0.00E+00	0.00E+00	2.54E-03	0.00E+00	0.00E+00	1.91E-02
1867	ALL	747988.42	4038160.7	NonCancerAcute	0.00E+00	1.20E-05	2.55E-03	0.00E+00	0.00E+00	2.56E-03	8.10E-03	0.00E+00	1.92E-02	0.00E+00	0.00E+00	2.55E-03	0.00E+00	0.00E+00	1.92E-02
1868	ALL	748088.42	4038160.7	NonCancerAcute	0.00E+00	1.19E-05	2.52E-03	0.00E+00	0.00E+00	2.53E-03	7.89E-03	0.00E+00	1.88E-02	0.00E+00	0.00E+00	2.52E-03	0.00E+00	0.00E+00	1.88E-02
1869	ALL	748188.42	4038160.7	NonCancerAcute	0.00E+00	1.19E-05	2.53E-03	0.00E+00	0.00E+00	2.55E-03	7.94E-03	0.00E+00	1.89E-02	0.00E+00	0.00E+00	2.53E-03	0.00E+00	0.00E+00	1.89E-02
1870	ALL	749888.42	4038160.7	NonCancerAcute	0.00E+00	1.08E-05	2.30E-03	0.00E+00	0.00E+00	2.31E-03	6.11E-03	0.00E+00	1.58E-02	0.00E+00	0.00E+00	2.30E-03	0.00E+00	0.00E+00	1.58E-02
1871	ALL	749988.42	4038160.7	NonCancerAcute	0.00E+00	1.07E-05	2.28E-03	0.00E+00	0.00E+00	2.29E-03	6.00E-03	0.00E+00	1.56E-02	0.00E+00	0.00E+00	2.28E-03	0.00E+00	0.00E+00	1.56E-02
1872	ALL	750088.42	4038160.7	NonCancerAcute	0.00E+00	1.06E-05	2.26E-03	0.00E+00	0.00E+00	2.27E-03	5.92E-03	0.00E+00	1.55E-02	0.00E+00	0.00E+00	2.26E-03	0.00E+00	0.00E+00	1.55E-02
1873	ALL	750188.42	4038160.7	NonCancerAcute	0.00E+00	1.04E-05	2.21E-03	0.00E+00	0.00E+00	2.22E-03	5.83E-03	0.00E+00	1.52E-02	0.00E+00	0.00E+00	2.21E-03	0.00E+00	0.00E+00	1.52E-02
1874	ALL	750288.42	4038160.7	NonCancerAcute	0.00E+00	1.03E-05	2.19E-03	0.00E+00	0.00E+00	2.20E-03	5.76E-03	0.00E+00	1.50E-02	0.00E+00	0.00E+00	2.19E-03	0.00E+00	0.00E+00	1.50E-02
1875	ALL	750388.42	4038160.7	NonCancerAcute	0.00E+00	1.02E-05	2.16E-03	0.00E+00	0.00E+00	2.17E-03	5.59E-03	0.00E+00	1.47E-02	0.00E+00	0.00E+00	2.16E-03	0.00E+00	0.00E+00	1.47E-02
1876	ALL	750488.42	4038160.7	NonCancerAcute	0.00E+00	1.00E-05	2.13E-03	0.00E+00	0.00E+00	2.14E-03	5.77E-03	0.00E+00	1.48E-02	0.00E+00	0.00E+00	2.13E-03	0.00E+00	0.00E+00	1.48E-02
1877	ALL	750588.42	4038160.7	NonCancerAcute	0.00E+00	9.90E-06	2.10E-03	0.00E+00	0.00E+00	2.11E-03	5.52E-03	0.00E+00	1.44E-02	0.00E+00	0.00E+00	2.10E-03	0.00E+00	0.00E+00	1.44E-02
1878	ALL	750688.42	4038160.7	NonCancerAcute	0.00E+00	9.65E-06	2.05E-03	0.00E+00	0.00E+00	2.06E-03	5.38E-03	0.00E+00	1.40E-02	0.00E+00	0.00E+00	2.05E-03	0.00E+00	0.00E+00	1.40E-02
1879	ALL	750788.42	4038160.7	NonCancerAcute	0.00E+00	9.38E-06	1.99E-03	0.00E+00	0.00E+00	2.00E-03	5.07E-03	0.00E+00	1.34E-02	0.00E+00	0.00E+00	1.99E-03	0.00E+00	0.00E+00	1.34E-02
1880	ALL	750888.42	4038160.7	NonCancerAcute	0.00E+00	9.16E-06	1.95E-03	0.00E+00	0.00E+00	1.95E-03	4.98E-03	0.00E+00	1.32E-02	0.00E+00	0.00E+00	1.95E-03	0.00E+00	0.00E+00	1.32E-02
1881	ALL	750988.42	4038160.7	NonCancerAcute	0.00E+00	9.07E-06	1.93E-03	0.00E+00	0.00E+00	1.93E-03	5.01E-03	0.00E+00	1.31E-02	0.00E+00	0.00E+00	1.93E-03	0.00E+00	0.00E+00	1.31E-02
1882	ALL	751088.42	4038160.7	NonCancerAcute	0.00E+00	8.93E-06	1.90E-03	0.00E+00	0.00E+00	1.90E-03	4.70E-03	0.00E+00	1.27E-02	0.00E+00	0.00E+00	1.90E-03	0.00E+00	0.00E+00	1.27E-02
1883	ALL	751188.42	4038160.7	NonCancerAcute	0.00E+00	8.85E-06	1.88E-03	0.00E+00	0.00E+00	1.89E-03	4.57E-03	0.00E+00	1.24E-02	0.00E+00	0.00E+00	1.88E-03	0.00E+00	0.00E+00	1.24E-02
1884	ALL	751288.42	4038160.7	NonCancerAcute	0.00E+00	8.73E-06	1.85E-03	0.00E+00	0.00E+00	1.86E-03	4.51E-03	0.00E+00	1.23E-02	0.00E+00	0.00E+00	1.85E-03	0.00E+00	0.00E+00	1.23E-02
1885	ALL	751388.42	4038160.7	NonCancerAcute	0.00E+00	8.60E-06	1.83E-03	0.00E+00	0.00E+00	1.83E-03	4.46E-03	0.00E+00	1.21E-02	0.00E+00	0.00E+00	1.83E-03	0.00E+00	0.00E+00	1.21E-02
1886	ALL	751488.42	4038160.7	NonCancerAcute	0.00E+00	8.44E-06	1.79E-03	0.00E+00	0.00E+00	1.80E-03	4.25E-03	0.00E+00	1.17E-02	0.00E+00	0.00E+00	1.79E-03	0.00E+00	0.00E+00	1.17E-02
1887	ALL	751588.42	4038160.7	NonCancerAcute	0.00E+00	8.33E-06	1.77E-03	0.00E+00	0.00E+00	1.78E-03	4.17E-03	0.00E+00	1.15E-02	0.00E+00	0.00E+00	1.77E-03	0.00E+00	0.00E+00	1.15E-02
1888	ALL	751688.42	4038160.7	NonCancerAcute	0.00E+00	8.24E-06	1.75E-03	0.00E+00	0.00E+00	1.76E-03	4.15E-03	0.00E+00	1.14E-02	0.00E+00	0.00E+00	1.75E-03	0.00E+00	0.00E+00	1.14E-02
1889	ALL	751788.42	4038160.7	NonCancerAcute	0.00E+00	8.15E-06	1.73E-03	0.00E+00	0.00E+00	1.74E-03	4.01E-03	0.00E+00	1.12E-02	0.00E+00	0.00E+00	1.73E-03	0.00E+00	0.00E+00	1.12E-02
1890	ALL	751888.42	4038160.7	NonCancerAcute	0.00E+00	8.06E-06	1.71E-03	0.00E+00	0.00E+00	1.72E-03	3.87E-03	0.00E+00	1.10E-02	0.00E+00	0.00E+00	1.71E-03	0.00E+00	0.00E+00	1.10E-02
1891	ALL	751988.42	4038160.7	NonCancerAcute	0.00E+00	7.95E-06	1.69E-03	0.00E+00	0.00E+00	1.70E-03	3.77E-03	0.00E+00	1.08E-02	0.00E+00	0.00E+00	1.69E-03	0.00E+00	0.00E+00	1.08E-02
1892	ALL	752088.42	4038160.7	NonCancerAcute	0.00E+00	7.89E-06	1.67E-03	0.00E+00	0.00E+00	1.68E-03	3.83E-03	0.00E+00	1.08E-02	0.00E+00	0.00E+00	1.67E-03	0.00E+00	0.00E+00	1.08E-02
1893	ALL	752188.42	4038160.7	NonCancerAcute	0.00E+00	7.79E-06	1.65E-03	0.00E+00	0.00E+00	1.66E-03	3.78E-03	0.00E+00	1.06E-02	0.00E+00	0.00E+00	1.65E-03	0.00E+00	0.00E+00	1.06E-02
1894	ALL	752288.42	4038160.7	NonCancerAcute	0.00E+00	7.63E-06	1.62E-03	0.00E+00	0.00E+00	1.63E-03	3.63E-03	0.00E+00	1.03E-02	0.00E+00	0.00E+00	1.62E-03	0.00E+00	0.00E+00	1.03E-02
1895	ALL	752388.42	4038160.7	NonCancerAcute	0.00E+00	7.51E-06	1.60E-03	0.00E+00	0.00E+00	1.60E-03	3.45E-03	0.00E+00	1.00E-02	0.00E+00	0.00E+00	1.60E-03	0.00E+00	0.00E+00	1.00E-02
1896	ALL	752488.42	4038160.7	NonCancerAcute	0.00E+00	7.44E-06	1.58E-03	0.00E+00	0.00E+00	1.59E-03	3.38E-03	0.00E+00	9.88E-03	0.00E+00	0.00E+00	1.58E-03	0.00E+00	0.00E+00	9.88E-03
1897	ALL	752588.42	4038160.7	NonCancerAcute	0.00E+00	7.31E-06	1.55E-03	0.00E+00	0.00E+00	1.56E-03	3.29E-03	0.00E+00	9.68E-03	0.00E+00	0.00E+00	1.55E-03	0.00E+00	0.00E+00	9.68E-03
1898	ALL	752688.42	4038160.7	NonCancerAcute	0.00E+00	7.21E-06	1.53E-03	0.00E+00	0.00E+00	1.54E-03	3.23E-03	0.00E+00	9.52E-03	0.00E+00	0.00E+00	1.53E-03	0.00E+00	0.00E+00	9.52E-03
1899	ALL	754788.42	4038160.7	NonCancerAcute	0.00E+00	5.65E-06	1.20E-03	0.00E+00	0.00E+00	1.20E-03	2.28E-03	0.00E+00	7.15E-03	0.00E+00	0.00E+00	1.20E-03	0.00E+00	0.00E+00	7.15E-03
1900	ALL	754888.42	4038160.7	NonCancerAcute	0.00E+00	5.58E-06	1.19E-03	0.00E+00	0.00E+00	1.19E-03	2.26E-03	0.00E+00	7.08E-03	0.00E+00	0.00E+00	1.19E-03	0.00E+00	0.00E+00	7.08E-03
1901	ALL	754988.42	4038160.7	NonCancerAcute	0.00E+00	5.51E-06	1.17E-03	0.00E+00	0.00E+00	1.17E-03	2.24E-03	0.00E+00	7.00E-03	0.00E+00	0.00E+00	1.17E-03	0.00E+00	0.00E+00	7.00E-03
1902	ALL	755088.42	4038160.7	NonCancerAcute	0.00E+00	5.45E-06	1.16E-03	0.00E+00	0.00E+00	1.16E-03	2.22E-03	0.00E+00	6.92E-03	0.00E+00	0.00E+00	1.16E-03	0.00E+00	0.00E+00	6.92E-03
1903	ALL	755188.42	4038160.7	NonCancerAcute	0.00E+00	5.40E-06	1.15E-03	0.00E+00	0.00E+00	1.15E-03	2.19E-03	0.00E+00	6.85E-03	0.00E+00	0.00E+00	1.15E-03	0.00E+00	0.00E+00	6.85E-03
1904	ALL	755288.42	4038160.7	NonCancerAcute	0.00E+00	5.34E-06	1.13E-03	0.00E+00	0.00E+00	1.14E-03	2.16E-03	0.00E+00	6.77E-03	0.00E+00	0.00E+00	1.13E-03	0.00E+00	0.00E+00	6.77E-03
1905	ALL	747888.42	4038260.7	NonCancerAcute	0.00E+00	1.18E-05	2.51E-03	0.00E+00	0.00E+00	2.52E-03	8.05E-03	0.00E+00	1.90E-02	0.00E+00	0.00E+00	2.51E-03	0.00E+00	0.00E+00	1.90E-02
1906	ALL	747988.42	4038260.7	NonCancerAcute	0.00E+00	1.20E-05	2.54E-03	0.00E+00	0.00E+00	2.55E-03	7.98E-03	0.00E+00	1.90E-02	0.00E+00	0.00E+00	2.54E-03	0.00E+00	0.00E+00	1.90E-02

1907	ALL	748088.42	4038260.7	NonCancerAcute	0.00E+00	1.19E-05	2.53E-03	0.00E+00	0.00E+00	2.54E-03	7.98E-03	0.00E+00	1.90E-02	0.00E+00	0.00E+00	2.53E-03	0.00E+00	0.00E+00	1.90E-02
1908	ALL	748188.42	4038260.7	NonCancerAcute	0.00E+00	1.19E-05	2.52E-03	0.00E+00	0.00E+00	2.53E-03	7.80E-03	0.00E+00	1.87E-02	0.00E+00	0.00E+00	2.52E-03	0.00E+00	0.00E+00	1.87E-02
1909	ALL	749888.42	4038260.7	NonCancerAcute	0.00E+00	1.09E-05	2.31E-03	0.00E+00	0.00E+00	2.32E-03	6.22E-03	0.00E+00	1.60E-02	0.00E+00	0.00E+00	2.31E-03	0.00E+00	0.00E+00	1.60E-02
1910	ALL	749988.42	4038260.7	NonCancerAcute	0.00E+00	1.08E-05	2.29E-03	0.00E+00	0.00E+00	2.30E-03	6.10E-03	0.00E+00	1.58E-02	0.00E+00	0.00E+00	2.29E-03	0.00E+00	0.00E+00	1.58E-02
1911	ALL	750088.42	4038260.7	NonCancerAcute	0.00E+00	1.05E-05	2.24E-03	0.00E+00	0.00E+00	2.25E-03	6.02E-03	0.00E+00	1.55E-02	0.00E+00	0.00E+00	2.24E-03	0.00E+00	0.00E+00	1.55E-02
1912	ALL	750188.42	4038260.7	NonCancerAcute	0.00E+00	1.05E-05	2.23E-03	0.00E+00	0.00E+00	2.24E-03	5.96E-03	0.00E+00	1.54E-02	0.00E+00	0.00E+00	2.23E-03	0.00E+00	0.00E+00	1.54E-02
1913	ALL	750288.42	4038260.7	NonCancerAcute	0.00E+00	1.04E-05	2.20E-03	0.00E+00	0.00E+00	2.21E-03	5.85E-03	0.00E+00	1.52E-02	0.00E+00	0.00E+00	2.20E-03	0.00E+00	0.00E+00	1.52E-02
1914	ALL	750388.42	4038260.7	NonCancerAcute	0.00E+00	1.02E-05	2.17E-03	0.00E+00	0.00E+00	2.18E-03	5.76E-03	0.00E+00	1.49E-02	0.00E+00	0.00E+00	2.17E-03	0.00E+00	0.00E+00	1.49E-02
1915	ALL	750488.42	4038260.7	NonCancerAcute	0.00E+00	1.01E-05	2.14E-03	0.00E+00	0.00E+00	2.15E-03	5.92E-03	0.00E+00	1.50E-02	0.00E+00	0.00E+00	2.14E-03	0.00E+00	0.00E+00	1.50E-02
1916	ALL	750588.42	4038260.7	NonCancerAcute	0.00E+00	9.97E-06	2.12E-03	0.00E+00	0.00E+00	2.13E-03	5.72E-03	0.00E+00	1.47E-02	0.00E+00	0.00E+00	2.12E-03	0.00E+00	0.00E+00	1.47E-02
1917	ALL	750688.42	4038260.7	NonCancerAcute	0.00E+00	9.82E-06	2.09E-03	0.00E+00	0.00E+00	2.09E-03	5.39E-03	0.00E+00	1.42E-02	0.00E+00	0.00E+00	2.09E-03	0.00E+00	0.00E+00	1.42E-02
1918	ALL	750788.42	4038260.7	NonCancerAcute	0.00E+00	9.61E-06	2.04E-03	0.00E+00	0.00E+00	2.05E-03	5.26E-03	0.00E+00	1.39E-02	0.00E+00	0.00E+00	2.04E-03	0.00E+00	0.00E+00	1.39E-02
1919	ALL	750888.42	4038260.7	NonCancerAcute	0.00E+00	9.37E-06	1.99E-03	0.00E+00	0.00E+00	2.00E-03	5.19E-03	0.00E+00	1.36E-02	0.00E+00	0.00E+00	1.99E-03	0.00E+00	0.00E+00	1.36E-02
1920	ALL	750988.42	4038260.7	NonCancerAcute	0.00E+00	9.09E-06	1.93E-03	0.00E+00	0.00E+00	1.94E-03	4.95E-03	0.00E+00	1.31E-02	0.00E+00	0.00E+00	1.93E-03	0.00E+00	0.00E+00	1.31E-02
1921	ALL	751088.42	4038260.7	NonCancerAcute	0.00E+00	8.95E-06	1.90E-03	0.00E+00	0.00E+00	1.91E-03	4.68E-03	0.00E+00	1.26E-02	0.00E+00	0.00E+00	1.90E-03	0.00E+00	0.00E+00	1.26E-02
1922	ALL	751188.42	4038260.7	NonCancerAcute	0.00E+00	8.84E-06	1.88E-03	0.00E+00	0.00E+00	1.89E-03	4.58E-03	0.00E+00	1.24E-02	0.00E+00	0.00E+00	1.88E-03	0.00E+00	0.00E+00	1.24E-02
1923	ALL	751288.42	4038260.7	NonCancerAcute	0.00E+00	8.73E-06	1.85E-03	0.00E+00	0.00E+00	1.86E-03	4.60E-03	0.00E+00	1.24E-02	0.00E+00	0.00E+00	1.85E-03	0.00E+00	0.00E+00	1.24E-02
1924	ALL	751388.42	4038260.7	NonCancerAcute	0.00E+00	8.63E-06	1.83E-03	0.00E+00	0.00E+00	1.84E-03	4.42E-03	0.00E+00	1.21E-02	0.00E+00	0.00E+00	1.83E-03	0.00E+00	0.00E+00	1.21E-02
1925	ALL	751488.42	4038260.7	NonCancerAcute	0.00E+00	8.52E-06	1.81E-03	0.00E+00	0.00E+00	1.82E-03	4.33E-03	0.00E+00	1.19E-02	0.00E+00	0.00E+00	1.81E-03	0.00E+00	0.00E+00	1.19E-02
1926	ALL	751588.42	4038260.7	NonCancerAcute	0.00E+00	8.38E-06	1.78E-03	0.00E+00	0.00E+00	1.79E-03	4.32E-03	0.00E+00	1.18E-02	0.00E+00	0.00E+00	1.78E-03	0.00E+00	0.00E+00	1.18E-02
1927	ALL	751688.42	4038260.7	NonCancerAcute	0.00E+00	8.24E-06	1.75E-03	0.00E+00	0.00E+00	1.76E-03	4.14E-03	0.00E+00	1.14E-02	0.00E+00	0.00E+00	1.75E-03	0.00E+00	0.00E+00	1.14E-02
1928	ALL	751788.42	4038260.7	NonCancerAcute	0.00E+00	8.15E-06	1.73E-03	0.00E+00	0.00E+00	1.74E-03	3.97E-03	0.00E+00	1.12E-02	0.00E+00	0.00E+00	1.73E-03	0.00E+00	0.00E+00	1.12E-02
1929	ALL	751888.42	4038260.7	NonCancerAcute	0.00E+00	8.09E-06	1.72E-03	0.00E+00	0.00E+00	1.73E-03	3.89E-03	0.00E+00	1.10E-02	0.00E+00	0.00E+00	1.72E-03	0.00E+00	0.00E+00	1.10E-02
1930	ALL	751988.42	4038260.7	NonCancerAcute	0.00E+00	7.98E-06	1.70E-03	0.00E+00	0.00E+00	1.70E-03	3.90E-03	0.00E+00	1.09E-02	0.00E+00	0.00E+00	1.70E-03	0.00E+00	0.00E+00	1.09E-02
1931	ALL	752088.42	4038260.7	NonCancerAcute	0.00E+00	7.81E-06	1.66E-03	0.00E+00	0.00E+00	1.67E-03	3.83E-03	0.00E+00	1.07E-02	0.00E+00	0.00E+00	1.66E-03	0.00E+00	0.00E+00	1.07E-02
1932	ALL	752188.42	4038260.7	NonCancerAcute	0.00E+00	7.71E-06	1.64E-03	0.00E+00	0.00E+00	1.64E-03	3.67E-03	0.00E+00	1.04E-02	0.00E+00	0.00E+00	1.64E-03	0.00E+00	0.00E+00	1.04E-02
1933	ALL	752288.42	4038260.7	NonCancerAcute	0.00E+00	7.61E-06	1.62E-03	0.00E+00	0.00E+00	1.62E-03	3.54E-03	0.00E+00	1.02E-02	0.00E+00	0.00E+00	1.62E-03	0.00E+00	0.00E+00	1.02E-02
1934	ALL	752388.42	4038260.7	NonCancerAcute	0.00E+00	7.51E-06	1.60E-03	0.00E+00	0.00E+00	1.60E-03	3.47E-03	0.00E+00	1.00E-02	0.00E+00	0.00E+00	1.60E-03	0.00E+00	0.00E+00	1.00E-02
1935	ALL	752488.42	4038260.7	NonCancerAcute	0.00E+00	7.43E-06	1.58E-03	0.00E+00	0.00E+00	1.58E-03	3.41E-03	0.00E+00	9.91E-03	0.00E+00	0.00E+00	1.58E-03	0.00E+00	0.00E+00	9.91E-03
1936	ALL	752588.42	4038260.7	NonCancerAcute	0.00E+00	7.30E-06	1.55E-03	0.00E+00	0.00E+00	1.56E-03	3.40E-03	0.00E+00	9.80E-03	0.00E+00	0.00E+00	1.55E-03	0.00E+00	0.00E+00	9.80E-03
1937	ALL	752688.42	4038260.7	NonCancerAcute	0.00E+00	7.22E-06	1.53E-03	0.00E+00	0.00E+00	1.54E-03	3.47E-03	0.00E+00	9.82E-03	0.00E+00	0.00E+00	1.53E-03	0.00E+00	0.00E+00	9.82E-03
1938	ALL	754788.42	4038260.7	NonCancerAcute	0.00E+00	5.58E-06	1.19E-03	0.00E+00	0.00E+00	1.19E-03	2.27E-03	0.00E+00	7.09E-03	0.00E+00	0.00E+00	1.19E-03	0.00E+00	0.00E+00	7.09E-03
1939	ALL	754888.42	4038260.7	NonCancerAcute	0.00E+00	5.52E-06	1.17E-03	0.00E+00	0.00E+00	1.18E-03	2.24E-03	0.00E+00	7.00E-03	0.00E+00	0.00E+00	1.17E-03	0.00E+00	0.00E+00	7.00E-03
1940	ALL	754988.42	4038260.7	NonCancerAcute	0.00E+00	5.47E-06	1.16E-03	0.00E+00	0.00E+00	1.17E-03	2.20E-03	0.00E+00	6.91E-03	0.00E+00	0.00E+00	1.16E-03	0.00E+00	0.00E+00	6.91E-03
1941	ALL	755088.42	4038260.7	NonCancerAcute	0.00E+00	5.41E-06	1.15E-03	0.00E+00	0.00E+00	1.15E-03	2.15E-03	0.00E+00	6.81E-03	0.00E+00	0.00E+00	1.15E-03	0.00E+00	0.00E+00	6.81E-03
1942	ALL	755188.42	4038260.7	NonCancerAcute	0.00E+00	5.36E-06	1.14E-03	0.00E+00	0.00E+00	1.14E-03	2.11E-03	0.00E+00	6.72E-03	0.00E+00	0.00E+00	1.14E-03	0.00E+00	0.00E+00	6.72E-03
1943	ALL	755288.42	4038260.7	NonCancerAcute	0.00E+00	5.31E-06	1.13E-03	0.00E+00	0.00E+00	1.13E-03	2.07E-03	0.00E+00	6.63E-03	0.00E+00	0.00E+00	1.13E-03	0.00E+00	0.00E+00	6.63E-03
1944	ALL	747888.42	4038360.7	NonCancerAcute	0.00E+00	1.20E-05	2.54E-03	0.00E+00	0.00E+00	2.55E-03	7.85E-03	0.00E+00	1.88E-02	0.00E+00	0.00E+00	2.54E-03	0.00E+00	0.00E+00	1.88E-02
1945	ALL	747988.42	4038360.7	NonCancerAcute	0.00E+00	1.19E-05	2.53E-03	0.00E+00	0.00E+00	2.54E-03	7.96E-03	0.00E+00	1.90E-02	0.00E+00	0.00E+00	2.53E-03	0.00E+00	0.00E+00	1.90E-02
1946	ALL	748088.42	4038360.7	NonCancerAcute	0.00E+00	1.20E-05	2.56E-03	0.00E+00	0.00E+00	2.57E-03	7.94E-03	0.00E+00	1.90E-02	0.00E+00	0.00E+00	2.56E-03	0.00E+00	0.00E+00	1.90E-02
1947	ALL	748188.42	4038360.7	NonCancerAcute	0.00E+00	1.18E-05	2.50E-03	0.00E+00	0.00E+00	2.51E-03	7.87E-03	0.00E+00	1.87E-02	0.00E+00	0.00E+00	2.50E-03	0.00E+00	0.00E+00	1.87E-02
1948	ALL	749888.42	4038360.7	NonCancerAcute	0.00E+00	1.08E-05	2.30E-03	0.00E+00	0.00E+00	2.31E-03	6.33E-03	0.00E+00	1.61E-02	0.00E+00	0.00E+00	2.30E-03	0.00E+00	0.00E+00	1.61E-02
1949	ALL	749988.42	4038360.7	NonCancerAcute	0.00E+00	1.08E-05	2.29E-03	0.00E+00	0.00E+00	2.30E-03	6.18E-03	0.00E+00	1.59E-02	0.00E+00	0.00E+00	2.29E-03	0.00E+00	0.00E+00	1.59E-02
1950	ALL	750088.42	4038360.7	NonCancerAcute	0.00E+00	1.06E-05	2.25E-03	0.00E+00	0.00E+00	2.26E-03	6.10E-03	0.00E+00	1.57E-02	0.00E+00	0.00E+00	2.25E-03	0.00E+00	0.00E+00	1.57E-02
1951	ALL	750188.42	4038360.7	NonCancerAcute	0.00E+00	1.04E-05	2.21E-03	0.00E+00	0.00E+00	2.22E-03	6.10E-03	0.00E+00	1.55E-02	0.00E+00	0.00E+00	2.21E-03	0.00E+00	0.00E+00	1.55E-02
1952	ALL	750288.42	4038360.7	NonCancerAcute	0.00E+00	1.04E-05	2.21E-03	0.00E+00	0.00E+00	2.22E-03	5.98E-03	0.00E+00	1.53E-02	0.00E+00	0.00E+00	2.21E-03	0.00E+00	0.00E+00	1.53E-02
1953	ALL	750388.42	4038360.7	NonCancerAcute	0.00E+00	1.02E-05	2.17E-03	0.00E+00	0.00E+00	2.18E-03	6.00E-03	0.00E+00	1.52E-02	0.00E+00	0.00E+00	2.17E-03	0.00E+00	0.00E+00	1.52E-02
1954	ALL	750488.42	4038360.7	NonCancerAcute	0.00E+00	1.01E-05	2.15E-03	0.00E+00	0.00E+00	2.16E-03	5.85E-03	0.00E+00	1.50E-02	0.00E+00	0.00E+00	2.15E-03	0.00E+00	0.00E+00	1.50E-02
1955	ALL	750588.42	4038360.7	NonCancerAcute	0.00E+00	9.98E-06	2.12E-03	0.00E+00	0.00E+00	2.13E-03	5.76E-03	0.00E+00	1.48E-02	0.00E+00	0.00E+00	2.12E-03	0.00E+00	0.00E+00	1.48E-02
1956	ALL	750688.42	4038360.7	NonCancerAcute	0.00E+00	9.83E-06	2.09E-03	0.00E+00	0.00E+00	2.10E-03	5.53E-03	0.00E+00	1.44E-02	0.00E+00	0.00E+00	2.09E-03	0.00E+00	0.00E+00	1.44E-02
1957	ALL	750788.42	4038360.7	NonCancerAcute	0.00E+00	9.72E-06	2.06E-03	0.00E+00	0.00E+00	2.07E-03	5.40E-03	0.00E+00	1.41E-02	0.00E+00	0.00E+00	2.06E-03	0.00E+00	0.00E+00	1.41E-02
1958	ALL	750888.42	4038360.7	NonCancerAcute	0.00E+00	9.54E-06	2.03E-03	0.00E+00	0.00E+00	2.04E-03	5.30E-03	0.00E+00	1.39E-02	0.00E+00	0.00E+00	2.03E-03	0.00E+00	0.00E+00	1.39E-02
1959	ALL	750988.42	4038360.7	NonCancerAcute	0.00E+00	9.35E-06	1.99E-03	0.00E+00	0.00E+00	1.99E-03	4.91E-03	0.00E+00	1.32E-02	0.00E+00	0.00E+00	1.99E-03	0.00E+00	0.00E+00	1.32E-02

1960	ALL	751088.42	4038360.7	NonCancerAcute	0.00E+00	9.05E-06	1.92E-03	0.00E+00	0.00E+00	1.93E-03	4.79E-03	0.00E+00	1.29E-02	0.00E+00	0.00E+00	1.92E-03	0.00E+00	0.00E+00	1.29E-02
1961	ALL	751188.42	4038360.7	NonCancerAcute	0.00E+00	8.85E-06	1.88E-03	0.00E+00	0.00E+00	1.89E-03	4.80E-03	0.00E+00	1.27E-02	0.00E+00	0.00E+00	1.88E-03	0.00E+00	0.00E+00	1.27E-02
1962	ALL	751288.42	4038360.7	NonCancerAcute	0.00E+00	8.68E-06	1.84E-03	0.00E+00	0.00E+00	1.85E-03	4.58E-03	0.00E+00	1.23E-02	0.00E+00	0.00E+00	1.84E-03	0.00E+00	0.00E+00	1.23E-02
1963	ALL	751388.42	4038360.7	NonCancerAcute	0.00E+00	8.57E-06	1.82E-03	0.00E+00	0.00E+00	1.83E-03	4.44E-03	0.00E+00	1.21E-02	0.00E+00	0.00E+00	1.82E-03	0.00E+00	0.00E+00	1.21E-02
1964	ALL	751488.42	4038360.7	NonCancerAcute	0.00E+00	8.50E-06	1.81E-03	0.00E+00	0.00E+00	1.81E-03	4.43E-03	0.00E+00	1.20E-02	0.00E+00	0.00E+00	1.81E-03	0.00E+00	0.00E+00	1.20E-02
1965	ALL	751588.42	4038360.7	NonCancerAcute	0.00E+00	8.42E-06	1.79E-03	0.00E+00	0.00E+00	1.80E-03	4.25E-03	0.00E+00	1.17E-02	0.00E+00	0.00E+00	1.79E-03	0.00E+00	0.00E+00	1.17E-02
1966	ALL	751688.42	4038360.7	NonCancerAcute	0.00E+00	8.32E-06	1.77E-03	0.00E+00	0.00E+00	1.78E-03	4.11E-03	0.00E+00	1.15E-02	0.00E+00	0.00E+00	1.77E-03	0.00E+00	0.00E+00	1.15E-02
1967	ALL	751788.42	4038360.7	NonCancerAcute	0.00E+00	8.23E-06	1.75E-03	0.00E+00	0.00E+00	1.75E-03	4.06E-03	0.00E+00	1.13E-02	0.00E+00	0.00E+00	1.75E-03	0.00E+00	0.00E+00	1.13E-02
1968	ALL	751888.42	4038360.7	NonCancerAcute	0.00E+00	8.02E-06	1.70E-03	0.00E+00	0.00E+00	1.71E-03	4.07E-03	0.00E+00	1.12E-02	0.00E+00	0.00E+00	1.70E-03	0.00E+00	0.00E+00	1.12E-02
1969	ALL	751988.42	4038360.7	NonCancerAcute	0.00E+00	7.91E-06	1.68E-03	0.00E+00	0.00E+00	1.69E-03	3.95E-03	0.00E+00	1.09E-02	0.00E+00	0.00E+00	1.68E-03	0.00E+00	0.00E+00	1.09E-02
1970	ALL	752088.42	4038360.7	NonCancerAcute	0.00E+00	7.85E-06	1.67E-03	0.00E+00	0.00E+00	1.67E-03	3.74E-03	0.00E+00	1.06E-02	0.00E+00	0.00E+00	1.67E-03	0.00E+00	0.00E+00	1.06E-02
1971	ALL	752188.42	4038360.7	NonCancerAcute	0.00E+00	7.73E-06	1.64E-03	0.00E+00	0.00E+00	1.65E-03	3.63E-03	0.00E+00	1.04E-02	0.00E+00	0.00E+00	1.64E-03	0.00E+00	0.00E+00	1.04E-02
1972	ALL	752288.42	4038360.7	NonCancerAcute	0.00E+00	7.62E-06	1.62E-03	0.00E+00	0.00E+00	1.63E-03	3.53E-03	0.00E+00	1.02E-02	0.00E+00	0.00E+00	1.62E-03	0.00E+00	0.00E+00	1.02E-02
1973	ALL	752388.42	4038360.7	NonCancerAcute	0.00E+00	7.51E-06	1.60E-03	0.00E+00	0.00E+00	1.60E-03	3.46E-03	0.00E+00	1.00E-02	0.00E+00	0.00E+00	1.60E-03	0.00E+00	0.00E+00	1.00E-02
1974	ALL	752488.42	4038360.7	NonCancerAcute	0.00E+00	7.41E-06	1.57E-03	0.00E+00	0.00E+00	1.58E-03	3.54E-03	0.00E+00	1.01E-02	0.00E+00	0.00E+00	1.57E-03	0.00E+00	0.00E+00	1.01E-02
1975	ALL	752588.42	4038360.7	NonCancerAcute	0.00E+00	7.31E-06	1.55E-03	0.00E+00	0.00E+00	1.56E-03	3.58E-03	0.00E+00	1.00E-02	0.00E+00	0.00E+00	1.55E-03	0.00E+00	0.00E+00	1.00E-02
1976	ALL	752688.42	4038360.7	NonCancerAcute	0.00E+00	7.22E-06	1.53E-03	0.00E+00	0.00E+00	1.54E-03	3.56E-03	0.00E+00	9.93E-03	0.00E+00	0.00E+00	1.53E-03	0.00E+00	0.00E+00	9.93E-03
1977	ALL	754788.42	4038360.7	NonCancerAcute	0.00E+00	5.58E-06	1.19E-03	0.00E+00	0.00E+00	1.19E-03	2.25E-03	0.00E+00	7.06E-03	0.00E+00	0.00E+00	1.19E-03	0.00E+00	0.00E+00	7.06E-03
1978	ALL	754888.42	4038360.7	NonCancerAcute	0.00E+00	5.52E-06	1.17E-03	0.00E+00	0.00E+00	1.18E-03	2.20E-03	0.00E+00	6.95E-03	0.00E+00	0.00E+00	1.17E-03	0.00E+00	0.00E+00	6.95E-03
1979	ALL	754988.42	4038360.7	NonCancerAcute	0.00E+00	5.44E-06	1.16E-03	0.00E+00	0.00E+00	1.16E-03	2.15E-03	0.00E+00	6.84E-03	0.00E+00	0.00E+00	1.16E-03	0.00E+00	0.00E+00	6.84E-03
1980	ALL	755088.42	4038360.7	NonCancerAcute	0.00E+00	5.37E-06	1.14E-03	0.00E+00	0.00E+00	1.15E-03	2.10E-03	0.00E+00	6.72E-03	0.00E+00	0.00E+00	1.14E-03	0.00E+00	0.00E+00	6.72E-03
1981	ALL	755188.42	4038360.7	NonCancerAcute	0.00E+00	5.31E-06	1.13E-03	0.00E+00	0.00E+00	1.13E-03	2.05E-03	0.00E+00	6.62E-03	0.00E+00	0.00E+00	1.13E-03	0.00E+00	0.00E+00	6.62E-03
1982	ALL	755288.42	4038360.7	NonCancerAcute	0.00E+00	5.27E-06	1.12E-03	0.00E+00	0.00E+00	1.12E-03	2.00E-03	0.00E+00	6.52E-03	0.00E+00	0.00E+00	1.12E-03	0.00E+00	0.00E+00	6.52E-03
1983	ALL	747888.42	4038460.7	NonCancerAcute	0.00E+00	1.20E-05	2.56E-03	0.00E+00	0.00E+00	2.57E-03	7.89E-03	0.00E+00	1.90E-02	0.00E+00	0.00E+00	2.56E-03	0.00E+00	0.00E+00	1.90E-02
1984	ALL	747988.42	4038460.7	NonCancerAcute	0.00E+00	1.19E-05	2.53E-03	0.00E+00	0.00E+00	2.54E-03	7.77E-03	0.00E+00	1.87E-02	0.00E+00	0.00E+00	2.53E-03	0.00E+00	0.00E+00	1.87E-02
1985	ALL	748088.42	4038460.7	NonCancerAcute	0.00E+00	1.20E-05	2.54E-03	0.00E+00	0.00E+00	2.55E-03	7.92E-03	0.00E+00	1.89E-02	0.00E+00	0.00E+00	2.54E-03	0.00E+00	0.00E+00	1.89E-02
1986	ALL	748188.42	4038460.7	NonCancerAcute	0.00E+00	1.19E-05	2.53E-03	0.00E+00	0.00E+00	2.54E-03	7.92E-03	0.00E+00	1.89E-02	0.00E+00	0.00E+00	2.53E-03	0.00E+00	0.00E+00	1.89E-02
1987	ALL	749888.42	4038460.7	NonCancerAcute	0.00E+00	1.09E-05	2.32E-03	0.00E+00	0.00E+00	2.33E-03	6.76E-03	0.00E+00	1.67E-02	0.00E+00	0.00E+00	2.32E-03	0.00E+00	0.00E+00	1.67E-02
1988	ALL	749988.42	4038460.7	NonCancerAcute	0.00E+00	1.07E-05	2.28E-03	0.00E+00	0.00E+00	2.29E-03	6.56E-03	0.00E+00	1.63E-02	0.00E+00	0.00E+00	2.28E-03	0.00E+00	0.00E+00	1.63E-02
1989	ALL	750088.42	4038460.7	NonCancerAcute	0.00E+00	1.06E-05	2.26E-03	0.00E+00	0.00E+00	2.27E-03	6.32E-03	0.00E+00	1.59E-02	0.00E+00	0.00E+00	2.26E-03	0.00E+00	0.00E+00	1.59E-02
1990	ALL	750188.42	4038460.7	NonCancerAcute	0.00E+00	1.05E-05	2.24E-03	0.00E+00	0.00E+00	2.25E-03	6.25E-03	0.00E+00	1.58E-02	0.00E+00	0.00E+00	2.24E-03	0.00E+00	0.00E+00	1.58E-02
1991	ALL	750288.42	4038460.7	NonCancerAcute	0.00E+00	1.03E-05	2.20E-03	0.00E+00	0.00E+00	2.21E-03	6.07E-03	0.00E+00	1.54E-02	0.00E+00	0.00E+00	2.20E-03	0.00E+00	0.00E+00	1.54E-02
1992	ALL	750388.42	4038460.7	NonCancerAcute	0.00E+00	1.02E-05	2.16E-03	0.00E+00	0.00E+00	2.17E-03	6.17E-03	0.00E+00	1.54E-02	0.00E+00	0.00E+00	2.16E-03	0.00E+00	0.00E+00	1.54E-02
1993	ALL	750488.42	4038460.7	NonCancerAcute	0.00E+00	1.01E-05	2.15E-03	0.00E+00	0.00E+00	2.16E-03	6.03E-03	0.00E+00	1.52E-02	0.00E+00	0.00E+00	2.15E-03	0.00E+00	0.00E+00	1.52E-02
1994	ALL	750588.42	4038460.7	NonCancerAcute	0.00E+00	9.95E-06	2.11E-03	0.00E+00	0.00E+00	2.12E-03	5.75E-03	0.00E+00	1.47E-02	0.00E+00	0.00E+00	2.11E-03	0.00E+00	0.00E+00	1.47E-02
1995	ALL	750688.42	4038460.7	NonCancerAcute	0.00E+00	9.83E-06	2.09E-03	0.00E+00	0.00E+00	2.10E-03	5.60E-03	0.00E+00	1.45E-02	0.00E+00	0.00E+00	2.09E-03	0.00E+00	0.00E+00	1.45E-02
1996	ALL	750788.42	4038460.7	NonCancerAcute	0.00E+00	9.71E-06	2.06E-03	0.00E+00	0.00E+00	2.07E-03	5.55E-03	0.00E+00	1.43E-02	0.00E+00	0.00E+00	2.06E-03	0.00E+00	0.00E+00	1.43E-02
1997	ALL	750888.42	4038460.7	NonCancerAcute	0.00E+00	9.59E-06	2.04E-03	0.00E+00	0.00E+00	2.05E-03	5.16E-03	0.00E+00	1.37E-02	0.00E+00	0.00E+00	2.04E-03	0.00E+00	0.00E+00	1.37E-02
1998	ALL	750988.42	4038460.7	NonCancerAcute	0.00E+00	9.43E-06	2.00E-03	0.00E+00	0.00E+00	2.01E-03	5.06E-03	0.00E+00	1.35E-02	0.00E+00	0.00E+00	2.00E-03	0.00E+00	0.00E+00	1.35E-02
1999	ALL	751088.42	4038460.7	NonCancerAcute	0.00E+00	9.30E-06	1.97E-03	0.00E+00	0.00E+00	1.98E-03	5.04E-03	0.00E+00	1.33E-02	0.00E+00	0.00E+00	1.97E-03	0.00E+00	0.00E+00	1.33E-02
2000	ALL	751188.42	4038460.7	NonCancerAcute	0.00E+00	9.07E-06	1.93E-03	0.00E+00	0.00E+00	1.94E-03	4.83E-03	0.00E+00	1.29E-02	0.00E+00	0.00E+00	1.93E-03	0.00E+00	0.00E+00	1.29E-02
2001	ALL	751288.42	4038460.7	NonCancerAcute	0.00E+00	8.77E-06	1.86E-03	0.00E+00	0.00E+00	1.87E-03	4.65E-03	0.00E+00	1.25E-02	0.00E+00	0.00E+00	1.86E-03	0.00E+00	0.00E+00	1.25E-02
2002	ALL	751388.42	4038460.7	NonCancerAcute	0.00E+00	8.63E-06	1.83E-03	0.00E+00	0.00E+00	1.84E-03	4.65E-03	0.00E+00	1.24E-02	0.00E+00	0.00E+00	1.83E-03	0.00E+00	0.00E+00	1.24E-02
2003	ALL	751888.42	4038460.7	NonCancerAcute	0.00E+00	8.09E-06	1.72E-03	0.00E+00	0.00E+00	1.73E-03	4.03E-03	0.00E+00	1.12E-02	0.00E+00	0.00E+00	1.72E-03	0.00E+00	0.00E+00	1.12E-02
2004	ALL	751988.42	4038460.7	NonCancerAcute	0.00E+00	7.96E-06	1.69E-03	0.00E+00	0.00E+00	1.70E-03	3.83E-03	0.00E+00	1.08E-02	0.00E+00	0.00E+00	1.69E-03	0.00E+00	0.00E+00	1.08E-02
2005	ALL	752088.42	4038460.7	NonCancerAcute	0.00E+00	7.83E-06	1.66E-03	0.00E+00	0.00E+00	1.67E-03	3.75E-03	0.00E+00	1.06E-02	0.00E+00	0.00E+00	1.66E-03	0.00E+00	0.00E+00	1.06E-02
2006	ALL	752188.42	4038460.7	NonCancerAcute	0.00E+00	7.70E-06	1.64E-03	0.00E+00	0.00E+00	1.64E-03	3.68E-03	0.00E+00	1.04E-02	0.00E+00	0.00E+00	1.64E-03	0.00E+00	0.00E+00	1.04E-02
2007	ALL	752288.42	4038460.7	NonCancerAcute	0.00E+00	7.63E-06	1.62E-03	0.00E+00	0.00E+00	1.63E-03	3.66E-03	0.00E+00	1.04E-02	0.00E+00	0.00E+00	1.62E-03	0.00E+00	0.00E+00	1.04E-02
2008	ALL	752388.42	4038460.7	NonCancerAcute	0.00E+00	7.54E-06	1.60E-03	0.00E+00	0.00E+00	1.61E-03	3.73E-03	0.00E+00	1.04E-02	0.00E+00	0.00E+00	1.60E-03	0.00E+00	0.00E+00	1.04E-02
2009	ALL	752488.42	4038460.7	NonCancerAcute	0.00E+00	7.42E-06	1.58E-03	0.00E+00	0.00E+00	1.58E-03	3.71E-03	0.00E+00	1.03E-02	0.00E+00	0.00E+00	1.58E-03	0.00E+00	0.00E+00	1.03E-02
2010	ALL	752588.42	4038460.7	NonCancerAcute	0.00E+00	7.34E-06	1.56E-03	0.00E+00	0.00E+00	1.57E-03	3.62E-03	0.00E+00	1.01E-02	0.00E+00	0.00E+00	1.56E-03	0.00E+00	0.00E+00	1.01E-02
2011	ALL	752688.42	4038460.7	NonCancerAcute	0.00E+00	7.23E-06	1.54E-03	0.00E+00	0.00E+00	1.54E-03	3.47E-03	0.00E+00	9.83E-03	0.00E+00	0.00E+00	1.54E-03	0.00E+00	0.00E+00	9.83E-03
2012	ALL	754788.42	4038460.7	NonCancerAcute	0.00E+00	5.58E-06	1.19E-03	0.00E+00	0.00E+00	1.19E-03	2.18E-03	0.00E+00	6.97E-03	0.00E+00	0.00E+00	1.19E-03	0.00E+00	0.00E+00	6.97E-03

2013	ALL	754888.42	4038460.7	NonCancerAcute	0.00E+00	5.52E-06	1.17E-03	0.00E+00	0.00E+00	1.18E-03	2.12E-03	0.00E+00	6.86E-03	0.00E+00	0.00E+00	1.17E-03	0.00E+00	0.00E+00	6.86E-03
2014	ALL	754988.42	4038460.7	NonCancerAcute	0.00E+00	5.46E-06	1.16E-03	0.00E+00	0.00E+00	1.16E-03	2.07E-03	0.00E+00	6.75E-03	0.00E+00	0.00E+00	1.16E-03	0.00E+00	0.00E+00	6.75E-03
2015	ALL	755088.42	4038460.7	NonCancerAcute	0.00E+00	5.39E-06	1.15E-03	0.00E+00	0.00E+00	1.15E-03	2.02E-03	0.00E+00	6.64E-03	0.00E+00	0.00E+00	1.15E-03	0.00E+00	0.00E+00	6.64E-03
2016	ALL	755188.42	4038460.7	NonCancerAcute	0.00E+00	5.32E-06	1.13E-03	0.00E+00	0.00E+00	1.14E-03	1.97E-03	0.00E+00	6.52E-03	0.00E+00	0.00E+00	1.13E-03	0.00E+00	0.00E+00	6.52E-03
2017	ALL	755288.42	4038460.7	NonCancerAcute	0.00E+00	5.25E-06	1.11E-03	0.00E+00	0.00E+00	1.12E-03	1.92E-03	0.00E+00	6.40E-03	0.00E+00	0.00E+00	1.11E-03	0.00E+00	0.00E+00	6.40E-03
2018	ALL	747888.42	4038560.7	NonCancerAcute	0.00E+00	1.21E-05	2.58E-03	0.00E+00	0.00E+00	2.59E-03	7.86E-03	0.00E+00	1.90E-02	0.00E+00	0.00E+00	2.58E-03	0.00E+00	0.00E+00	1.90E-02
2019	ALL	747988.42	4038560.7	NonCancerAcute	0.00E+00	1.20E-05	2.54E-03	0.00E+00	0.00E+00	2.55E-03	7.72E-03	0.00E+00	1.87E-02	0.00E+00	0.00E+00	2.54E-03	0.00E+00	0.00E+00	1.87E-02
2020	ALL	748088.42	4038560.7	NonCancerAcute	0.00E+00	1.19E-05	2.52E-03	0.00E+00	0.00E+00	2.53E-03	7.73E-03	0.00E+00	1.86E-02	0.00E+00	0.00E+00	2.52E-03	0.00E+00	0.00E+00	1.86E-02
2021	ALL	748188.42	4038560.7	NonCancerAcute	0.00E+00	1.20E-05	2.55E-03	0.00E+00	0.00E+00	2.56E-03	7.91E-03	0.00E+00	1.90E-02	0.00E+00	0.00E+00	2.55E-03	0.00E+00	0.00E+00	1.90E-02
2022	ALL	749888.42	4038560.7	NonCancerAcute	0.00E+00	1.06E-05	2.25E-03	0.00E+00	0.00E+00	2.26E-03	7.09E-03	0.00E+00	1.69E-02	0.00E+00	0.00E+00	2.25E-03	0.00E+00	0.00E+00	1.69E-02
2023	ALL	749988.42	4038560.7	NonCancerAcute	0.00E+00	1.08E-05	2.29E-03	0.00E+00	0.00E+00	2.30E-03	6.97E-03	0.00E+00	1.69E-02	0.00E+00	0.00E+00	2.29E-03	0.00E+00	0.00E+00	1.69E-02
2024	ALL	750088.42	4038560.7	NonCancerAcute	0.00E+00	1.06E-05	2.26E-03	0.00E+00	0.00E+00	2.27E-03	6.78E-03	0.00E+00	1.65E-02	0.00E+00	0.00E+00	2.26E-03	0.00E+00	0.00E+00	1.65E-02
2025	ALL	750188.42	4038560.7	NonCancerAcute	0.00E+00	1.05E-05	2.23E-03	0.00E+00	0.00E+00	2.24E-03	6.54E-03	0.00E+00	1.61E-02	0.00E+00	0.00E+00	2.23E-03	0.00E+00	0.00E+00	1.61E-02
2026	ALL	750288.42	4038560.7	NonCancerAcute	0.00E+00	1.03E-05	2.19E-03	0.00E+00	0.00E+00	2.21E-03	6.31E-03	0.00E+00	1.57E-02	0.00E+00	0.00E+00	2.19E-03	0.00E+00	0.00E+00	1.57E-02
2027	ALL	750388.42	4038560.7	NonCancerAcute	0.00E+00	1.02E-05	2.17E-03	0.00E+00	0.00E+00	2.18E-03	6.16E-03	0.00E+00	1.54E-02	0.00E+00	0.00E+00	2.17E-03	0.00E+00	0.00E+00	1.54E-02
2028	ALL	750488.42	4038560.7	NonCancerAcute	0.00E+00	9.99E-06	2.12E-03	0.00E+00	0.00E+00	2.13E-03	6.11E-03	0.00E+00	1.52E-02	0.00E+00	0.00E+00	2.12E-03	0.00E+00	0.00E+00	1.52E-02
2029	ALL	750588.42	4038560.7	NonCancerAcute	0.00E+00	9.99E-06	2.12E-03	0.00E+00	0.00E+00	2.13E-03	5.90E-03	0.00E+00	1.49E-02	0.00E+00	0.00E+00	2.12E-03	0.00E+00	0.00E+00	1.49E-02
2030	ALL	750688.42	4038560.7	NonCancerAcute	0.00E+00	9.84E-06	2.09E-03	0.00E+00	0.00E+00	2.10E-03	5.75E-03	0.00E+00	1.46E-02	0.00E+00	0.00E+00	2.09E-03	0.00E+00	0.00E+00	1.46E-02
2031	ALL	750788.42	4038560.7	NonCancerAcute	0.00E+00	9.73E-06	2.07E-03	0.00E+00	0.00E+00	2.08E-03	5.51E-03	0.00E+00	1.43E-02	0.00E+00	0.00E+00	2.07E-03	0.00E+00	0.00E+00	1.43E-02
2032	ALL	750888.42	4038560.7	NonCancerAcute	0.00E+00	9.57E-06	2.03E-03	0.00E+00	0.00E+00	2.04E-03	5.28E-03	0.00E+00	1.39E-02	0.00E+00	0.00E+00	2.03E-03	0.00E+00	0.00E+00	1.39E-02
2033	ALL	750988.42	4038560.7	NonCancerAcute	0.00E+00	9.46E-06	2.01E-03	0.00E+00	0.00E+00	2.02E-03	5.23E-03	0.00E+00	1.37E-02	0.00E+00	0.00E+00	2.01E-03	0.00E+00	0.00E+00	1.37E-02
2034	ALL	751088.42	4038560.7	NonCancerAcute	0.00E+00	9.32E-06	1.98E-03	0.00E+00	0.00E+00	1.99E-03	5.07E-03	0.00E+00	1.34E-02	0.00E+00	0.00E+00	1.98E-03	0.00E+00	0.00E+00	1.34E-02
2035	ALL	751188.42	4038560.7	NonCancerAcute	0.00E+00	9.20E-06	1.95E-03	0.00E+00	0.00E+00	1.96E-03	4.88E-03	0.00E+00	1.31E-02	0.00E+00	0.00E+00	1.95E-03	0.00E+00	0.00E+00	1.31E-02
2036	ALL	751288.42	4038560.7	NonCancerAcute	0.00E+00	9.05E-06	1.92E-03	0.00E+00	0.00E+00	1.93E-03	4.89E-03	0.00E+00	1.30E-02	0.00E+00	0.00E+00	1.92E-03	0.00E+00	0.00E+00	1.30E-02
2037	ALL	751388.42	4038560.7	NonCancerAcute	0.00E+00	8.82E-06	1.87E-03	0.00E+00	0.00E+00	1.88E-03	4.63E-03	0.00E+00	1.25E-02	0.00E+00	0.00E+00	1.87E-03	0.00E+00	0.00E+00	1.25E-02
2038	ALL	752788.42	4038560.7	NonCancerAcute	0.00E+00	7.20E-06	1.53E-03	0.00E+00	0.00E+00	1.54E-03	3.06E-03	0.00E+00	9.30E-03	0.00E+00	0.00E+00	1.53E-03	0.00E+00	0.00E+00	9.30E-03
2039	ALL	752888.42	4038560.7	NonCancerAcute	0.00E+00	7.09E-06	1.51E-03	0.00E+00	0.00E+00	1.51E-03	2.88E-03	0.00E+00	9.00E-03	0.00E+00	0.00E+00	1.51E-03	0.00E+00	0.00E+00	9.00E-03
2040	ALL	752988.42	4038560.7	NonCancerAcute	0.00E+00	6.96E-06	1.48E-03	0.00E+00	0.00E+00	1.49E-03	2.80E-03	0.00E+00	8.80E-03	0.00E+00	0.00E+00	1.48E-03	0.00E+00	0.00E+00	8.80E-03
2041	ALL	753088.42	4038560.7	NonCancerAcute	0.00E+00	6.89E-06	1.46E-03	0.00E+00	0.00E+00	1.47E-03	2.72E-03	0.00E+00	8.65E-03	0.00E+00	0.00E+00	1.46E-03	0.00E+00	0.00E+00	8.65E-03
2042	ALL	753188.42	4038560.7	NonCancerAcute	0.00E+00	6.82E-06	1.45E-03	0.00E+00	0.00E+00	1.46E-03	2.68E-03	0.00E+00	8.55E-03	0.00E+00	0.00E+00	1.45E-03	0.00E+00	0.00E+00	8.55E-03
2043	ALL	753288.42	4038560.7	NonCancerAcute	0.00E+00	6.73E-06	1.43E-03	0.00E+00	0.00E+00	1.43E-03	2.68E-03	0.00E+00	8.47E-03	0.00E+00	0.00E+00	1.43E-03	0.00E+00	0.00E+00	8.47E-03
2044	ALL	753388.42	4038560.7	NonCancerAcute	0.00E+00	6.61E-06	1.40E-03	0.00E+00	0.00E+00	1.41E-03	2.69E-03	0.00E+00	8.40E-03	0.00E+00	0.00E+00	1.40E-03	0.00E+00	0.00E+00	8.40E-03
2045	ALL	753488.42	4038560.7	NonCancerAcute	0.00E+00	6.52E-06	1.38E-03	0.00E+00	0.00E+00	1.39E-03	2.70E-03	0.00E+00	8.33E-03	0.00E+00	0.00E+00	1.38E-03	0.00E+00	0.00E+00	8.33E-03
2046	ALL	753588.42	4038560.7	NonCancerAcute	0.00E+00	6.42E-06	1.36E-03	0.00E+00	0.00E+00	1.37E-03	2.69E-03	0.00E+00	8.25E-03	0.00E+00	0.00E+00	1.36E-03	0.00E+00	0.00E+00	8.25E-03
2047	ALL	753688.42	4038560.7	NonCancerAcute	0.00E+00	6.30E-06	1.34E-03	0.00E+00	0.00E+00	1.34E-03	2.67E-03	0.00E+00	8.13E-03	0.00E+00	0.00E+00	1.34E-03	0.00E+00	0.00E+00	8.13E-03
2048	ALL	753788.42	4038560.7	NonCancerAcute	0.00E+00	6.20E-06	1.32E-03	0.00E+00	0.00E+00	1.32E-03	2.64E-03	0.00E+00	8.02E-03	0.00E+00	0.00E+00	1.32E-03	0.00E+00	0.00E+00	8.02E-03
2049	ALL	753888.42	4038560.7	NonCancerAcute	0.00E+00	6.10E-06	1.30E-03	0.00E+00	0.00E+00	1.30E-03	2.61E-03	0.00E+00	7.90E-03	0.00E+00	0.00E+00	1.30E-03	0.00E+00	0.00E+00	7.90E-03
2050	ALL	753988.42	4038560.7	NonCancerAcute	0.00E+00	5.98E-06	1.27E-03	0.00E+00	0.00E+00	1.27E-03	2.57E-03	0.00E+00	7.76E-03	0.00E+00	0.00E+00	1.27E-03	0.00E+00	0.00E+00	7.76E-03
2051	ALL	754088.42	4038560.7	NonCancerAcute	0.00E+00	5.85E-06	1.24E-03	0.00E+00	0.00E+00	1.25E-03	2.52E-03	0.00E+00	7.60E-03	0.00E+00	0.00E+00	1.24E-03	0.00E+00	0.00E+00	7.60E-03
2052	ALL	754188.42	4038560.7	NonCancerAcute	0.00E+00	5.76E-06	1.22E-03	0.00E+00	0.00E+00	1.23E-03	2.47E-03	0.00E+00	7.47E-03	0.00E+00	0.00E+00	1.22E-03	0.00E+00	0.00E+00	7.47E-03
2053	ALL	754288.42	4038560.7	NonCancerAcute	0.00E+00	5.71E-06	1.21E-03	0.00E+00	0.00E+00	1.22E-03	2.42E-03	0.00E+00	7.36E-03	0.00E+00	0.00E+00	1.21E-03	0.00E+00	0.00E+00	7.36E-03
2054	ALL	754388.42	4038560.7	NonCancerAcute	0.00E+00	5.65E-06	1.20E-03	0.00E+00	0.00E+00	1.21E-03	2.36E-03	0.00E+00	7.25E-03	0.00E+00	0.00E+00	1.20E-03	0.00E+00	0.00E+00	7.25E-03
2055	ALL	754488.42	4038560.7	NonCancerAcute	0.00E+00	5.63E-06	1.20E-03	0.00E+00	0.00E+00	1.20E-03	2.30E-03	0.00E+00	7.16E-03	0.00E+00	0.00E+00	1.20E-03	0.00E+00	0.00E+00	7.16E-03
2056	ALL	754588.42	4038560.7	NonCancerAcute	0.00E+00	5.61E-06	1.19E-03	0.00E+00	0.00E+00	1.20E-03	2.23E-03	0.00E+00	7.07E-03	0.00E+00	0.00E+00	1.19E-03	0.00E+00	0.00E+00	7.07E-03
2057	ALL	754688.42	4038560.7	NonCancerAcute	0.00E+00	5.58E-06	1.18E-03	0.00E+00	0.00E+00	1.19E-03	2.17E-03	0.00E+00	6.96E-03	0.00E+00	0.00E+00	1.18E-03	0.00E+00	0.00E+00	6.96E-03
2058	ALL	754788.42	4038560.7	NonCancerAcute	0.00E+00	5.54E-06	1.18E-03	0.00E+00	0.00E+00	1.18E-03	2.11E-03	0.00E+00	6.85E-03	0.00E+00	0.00E+00	1.18E-03	0.00E+00	0.00E+00	6.85E-03
2059	ALL	754888.42	4038560.7	NonCancerAcute	0.00E+00	5.48E-06	1.16E-03	0.00E+00	0.00E+00	1.17E-03	2.04E-03	0.00E+00	6.72E-03	0.00E+00	0.00E+00	1.16E-03	0.00E+00	0.00E+00	6.72E-03
2060	ALL	754988.42	4038560.7	NonCancerAcute	0.00E+00	5.44E-06	1.15E-03	0.00E+00	0.00E+00	1.16E-03	1.97E-03	0.00E+00	6.61E-03	0.00E+00	0.00E+00	1.15E-03	0.00E+00	0.00E+00	6.61E-03
2061	ALL	755088.42	4038560.7	NonCancerAcute	0.00E+00	5.38E-06	1.14E-03	0.00E+00	0.00E+00	1.15E-03	1.91E-03	0.00E+00	6.50E-03	0.00E+00	0.00E+00	1.14E-03	0.00E+00	0.00E+00	6.50E-03
2062	ALL	755188.42	4038560.7	NonCancerAcute	0.00E+00	5.32E-06	1.13E-03	0.00E+00	0.00E+00	1.13E-03	1.86E-03	0.00E+00	6.39E-03	0.00E+00	0.00E+00	1.13E-03	0.00E+00	0.00E+00	6.39E-03
2063	ALL	755288.42	4038560.7	NonCancerAcute	0.00E+00	5.26E-06	1.12E-03	0.00E+00	0.00E+00	1.12E-03	1.81E-03	0.00E+00	6.27E-03	0.00E+00	0.00E+00	1.12E-03	0.00E+00	0.00E+00	6.27E-03
2064	ALL	747888.42	4038660.7	NonCancerAcute	0.00E+00	1.20E-05	2.55E-03	0.00E+00	0.00E+00	2.56E-03	7.83E-03	0.00E+00	1.89E-02	0.00E+00	0.00E+00	2.55E-03	0.00E+00	0.00E+00	1.89E-02
2065	ALL	747988.42	4038660.7	NonCancerAcute	0.00E+00	1.20E-05	2.55E-03	0.00E+00	0.00E+00	2.56E-03	7.82E-03	0.00E+00	1.88E-02	0.00E+00	0.00E+00	2.55E-03	0.00E+00	0.00E+00	1.88E-02

2066	ALL	748088.42	4038660.7	NonCancerAcute	0.00E+00	1.20E-05	2.54E-03	0.00E+00	0.00E+00	2.55E-03	7.82E-03	0.00E+00	1.88E-02	0.00E+00	0.00E+00	2.54E-03	0.00E+00	0.00E+00	1.88E-02
2067	ALL	748188.42	4038660.7	NonCancerAcute	0.00E+00	1.19E-05	2.53E-03	0.00E+00	0.00E+00	2.54E-03	7.71E-03	0.00E+00	1.86E-02	0.00E+00	0.00E+00	2.53E-03	0.00E+00	0.00E+00	1.86E-02
2068	ALL	749888.42	4038660.7	NonCancerAcute	0.00E+00	1.06E-05	2.26E-03	0.00E+00	0.00E+00	2.27E-03	7.30E-03	0.00E+00	1.72E-02	0.00E+00	0.00E+00	2.26E-03	0.00E+00	0.00E+00	1.72E-02
2069	ALL	749988.42	4038660.7	NonCancerAcute	0.00E+00	1.05E-05	2.22E-03	0.00E+00	0.00E+00	2.24E-03	7.19E-03	0.00E+00	1.69E-02	0.00E+00	0.00E+00	2.22E-03	0.00E+00	0.00E+00	1.69E-02
2070	ALL	750088.42	4038660.7	NonCancerAcute	0.00E+00	1.07E-05	2.27E-03	0.00E+00	0.00E+00	2.28E-03	7.11E-03	0.00E+00	1.69E-02	0.00E+00	0.00E+00	2.27E-03	0.00E+00	0.00E+00	1.69E-02
2071	ALL	750188.42	4038660.7	NonCancerAcute	0.00E+00	1.05E-05	2.23E-03	0.00E+00	0.00E+00	2.24E-03	6.90E-03	0.00E+00	1.66E-02	0.00E+00	0.00E+00	2.23E-03	0.00E+00	0.00E+00	1.66E-02
2072	ALL	750288.42	4038660.7	NonCancerAcute	0.00E+00	1.03E-05	2.18E-03	0.00E+00	0.00E+00	2.19E-03	6.72E-03	0.00E+00	1.62E-02	0.00E+00	0.00E+00	2.18E-03	0.00E+00	0.00E+00	1.62E-02
2073	ALL	750388.42	4038660.7	NonCancerAcute	0.00E+00	1.02E-05	2.17E-03	0.00E+00	0.00E+00	2.18E-03	6.53E-03	0.00E+00	1.59E-02	0.00E+00	0.00E+00	2.17E-03	0.00E+00	0.00E+00	1.59E-02
2074	ALL	750488.42	4038660.7	NonCancerAcute	0.00E+00	1.00E-05	2.13E-03	0.00E+00	0.00E+00	2.14E-03	6.14E-03	0.00E+00	1.53E-02	0.00E+00	0.00E+00	2.13E-03	0.00E+00	0.00E+00	1.53E-02
2075	ALL	750588.42	4038660.7	NonCancerAcute	0.00E+00	9.84E-06	2.09E-03	0.00E+00	0.00E+00	2.10E-03	5.93E-03	0.00E+00	1.49E-02	0.00E+00	0.00E+00	2.09E-03	0.00E+00	0.00E+00	1.49E-02
2076	ALL	750688.42	4038660.7	NonCancerAcute	0.00E+00	9.80E-06	2.08E-03	0.00E+00	0.00E+00	2.09E-03	5.86E-03	0.00E+00	1.47E-02	0.00E+00	0.00E+00	2.08E-03	0.00E+00	0.00E+00	1.47E-02
2077	ALL	750788.42	4038660.7	NonCancerAcute	0.00E+00	9.71E-06	2.06E-03	0.00E+00	0.00E+00	2.07E-03	5.53E-03	0.00E+00	1.43E-02	0.00E+00	0.00E+00	2.06E-03	0.00E+00	0.00E+00	1.43E-02
2078	ALL	750888.42	4038660.7	NonCancerAcute	0.00E+00	9.59E-06	2.04E-03	0.00E+00	0.00E+00	2.05E-03	5.42E-03	0.00E+00	1.40E-02	0.00E+00	0.00E+00	2.04E-03	0.00E+00	0.00E+00	1.40E-02
2079	ALL	750988.42	4038660.7	NonCancerAcute	0.00E+00	9.41E-06	2.00E-03	0.00E+00	0.00E+00	2.01E-03	5.30E-03	0.00E+00	1.38E-02	0.00E+00	0.00E+00	2.00E-03	0.00E+00	0.00E+00	1.38E-02
2080	ALL	751088.42	4038660.7	NonCancerAcute	0.00E+00	9.34E-06	1.98E-03	0.00E+00	0.00E+00	1.99E-03	5.08E-03	0.00E+00	1.34E-02	0.00E+00	0.00E+00	1.98E-03	0.00E+00	0.00E+00	1.34E-02
2081	ALL	751188.42	4038660.7	NonCancerAcute	0.00E+00	9.25E-06	1.96E-03	0.00E+00	0.00E+00	1.97E-03	5.08E-03	0.00E+00	1.34E-02	0.00E+00	0.00E+00	1.96E-03	0.00E+00	0.00E+00	1.34E-02
2082	ALL	751288.42	4038660.7	NonCancerAcute	0.00E+00	9.09E-06	1.93E-03	0.00E+00	0.00E+00	1.94E-03	4.82E-03	0.00E+00	1.29E-02	0.00E+00	0.00E+00	1.93E-03	0.00E+00	0.00E+00	1.29E-02
2083	ALL	751388.42	4038660.7	NonCancerAcute	0.00E+00	8.96E-06	1.90E-03	0.00E+00	0.00E+00	1.91E-03	4.67E-03	0.00E+00	1.26E-02	0.00E+00	0.00E+00	1.90E-03	0.00E+00	0.00E+00	1.26E-02
2084	ALL	752788.42	4038660.7	NonCancerAcute	0.00E+00	7.19E-06	1.53E-03	0.00E+00	0.00E+00	1.53E-03	2.97E-03	0.00E+00	9.18E-03	0.00E+00	0.00E+00	1.53E-03	0.00E+00	0.00E+00	9.18E-03
2085	ALL	752888.42	4038660.7	NonCancerAcute	0.00E+00	7.11E-06	1.51E-03	0.00E+00	0.00E+00	1.52E-03	2.89E-03	0.00E+00	9.03E-03	0.00E+00	0.00E+00	1.51E-03	0.00E+00	0.00E+00	9.03E-03
2086	ALL	752988.42	4038660.7	NonCancerAcute	0.00E+00	7.01E-06	1.49E-03	0.00E+00	0.00E+00	1.50E-03	2.83E-03	0.00E+00	8.87E-03	0.00E+00	0.00E+00	1.49E-03	0.00E+00	0.00E+00	8.87E-03
2087	ALL	753088.42	4038660.7	NonCancerAcute	0.00E+00	6.91E-06	1.47E-03	0.00E+00	0.00E+00	1.47E-03	2.77E-03	0.00E+00	8.73E-03	0.00E+00	0.00E+00	1.47E-03	0.00E+00	0.00E+00	8.73E-03
2088	ALL	753188.42	4038660.7	NonCancerAcute	0.00E+00	6.81E-06	1.45E-03	0.00E+00	0.00E+00	1.45E-03	2.77E-03	0.00E+00	8.64E-03	0.00E+00	0.00E+00	1.45E-03	0.00E+00	0.00E+00	8.64E-03
2089	ALL	753288.42	4038660.7	NonCancerAcute	0.00E+00	6.70E-06	1.42E-03	0.00E+00	0.00E+00	1.43E-03	2.76E-03	0.00E+00	8.55E-03	0.00E+00	0.00E+00	1.42E-03	0.00E+00	0.00E+00	8.55E-03
2090	ALL	753388.42	4038660.7	NonCancerAcute	0.00E+00	6.60E-06	1.40E-03	0.00E+00	0.00E+00	1.41E-03	2.73E-03	0.00E+00	8.44E-03	0.00E+00	0.00E+00	1.40E-03	0.00E+00	0.00E+00	8.44E-03
2091	ALL	753488.42	4038660.7	NonCancerAcute	0.00E+00	6.52E-06	1.38E-03	0.00E+00	0.00E+00	1.39E-03	2.71E-03	0.00E+00	8.35E-03	0.00E+00	0.00E+00	1.38E-03	0.00E+00	0.00E+00	8.35E-03
2092	ALL	753588.42	4038660.7	NonCancerAcute	0.00E+00	6.42E-06	1.36E-03	0.00E+00	0.00E+00	1.37E-03	2.69E-03	0.00E+00	8.25E-03	0.00E+00	0.00E+00	1.36E-03	0.00E+00	0.00E+00	8.25E-03
2093	ALL	753688.42	4038660.7	NonCancerAcute	0.00E+00	6.31E-06	1.34E-03	0.00E+00	0.00E+00	1.35E-03	2.66E-03	0.00E+00	8.13E-03	0.00E+00	0.00E+00	1.34E-03	0.00E+00	0.00E+00	8.13E-03
2094	ALL	753788.42	4038660.7	NonCancerAcute	0.00E+00	6.24E-06	1.32E-03	0.00E+00	0.00E+00	1.33E-03	2.62E-03	0.00E+00	8.03E-03	0.00E+00	0.00E+00	1.32E-03	0.00E+00	0.00E+00	8.03E-03
2095	ALL	753888.42	4038660.7	NonCancerAcute	0.00E+00	6.15E-06	1.31E-03	0.00E+00	0.00E+00	1.31E-03	2.58E-03	0.00E+00	7.91E-03	0.00E+00	0.00E+00	1.31E-03	0.00E+00	0.00E+00	7.91E-03
2096	ALL	753988.42	4038660.7	NonCancerAcute	0.00E+00	6.05E-06	1.28E-03	0.00E+00	0.00E+00	1.29E-03	2.53E-03	0.00E+00	7.77E-03	0.00E+00	0.00E+00	1.28E-03	0.00E+00	0.00E+00	7.77E-03
2097	ALL	754088.42	4038660.7	NonCancerAcute	0.00E+00	5.95E-06	1.26E-03	0.00E+00	0.00E+00	1.27E-03	2.48E-03	0.00E+00	7.63E-03	0.00E+00	0.00E+00	1.26E-03	0.00E+00	0.00E+00	7.63E-03
2098	ALL	754188.42	4038660.7	NonCancerAcute	0.00E+00	5.86E-06	1.24E-03	0.00E+00	0.00E+00	1.25E-03	2.42E-03	0.00E+00	7.48E-03	0.00E+00	0.00E+00	1.24E-03	0.00E+00	0.00E+00	7.48E-03
2099	ALL	754288.42	4038660.7	NonCancerAcute	0.00E+00	5.75E-06	1.22E-03	0.00E+00	0.00E+00	1.23E-03	2.36E-03	0.00E+00	7.33E-03	0.00E+00	0.00E+00	1.22E-03	0.00E+00	0.00E+00	7.33E-03
2100	ALL	754388.42	4038660.7	NonCancerAcute	0.00E+00	5.63E-06	1.20E-03	0.00E+00	0.00E+00	1.20E-03	2.29E-03	0.00E+00	7.15E-03	0.00E+00	0.00E+00	1.20E-03	0.00E+00	0.00E+00	7.15E-03
2101	ALL	754488.42	4038660.7	NonCancerAcute	0.00E+00	5.52E-06	1.17E-03	0.00E+00	0.00E+00	1.18E-03	2.22E-03	0.00E+00	6.99E-03	0.00E+00	0.00E+00	1.17E-03	0.00E+00	0.00E+00	6.99E-03
2102	ALL	754588.42	4038660.7	NonCancerAcute	0.00E+00	5.48E-06	1.16E-03	0.00E+00	0.00E+00	1.17E-03	2.16E-03	0.00E+00	6.88E-03	0.00E+00	0.00E+00	1.16E-03	0.00E+00	0.00E+00	6.88E-03
2103	ALL	754688.42	4038660.7	NonCancerAcute	0.00E+00	5.44E-06	1.15E-03	0.00E+00	0.00E+00	1.16E-03	2.09E-03	0.00E+00	6.76E-03	0.00E+00	0.00E+00	1.15E-03	0.00E+00	0.00E+00	6.76E-03
2104	ALL	754788.42	4038660.7	NonCancerAcute	0.00E+00	5.41E-06	1.15E-03	0.00E+00	0.00E+00	1.15E-03	2.02E-03	0.00E+00	6.65E-03	0.00E+00	0.00E+00	1.15E-03	0.00E+00	0.00E+00	6.65E-03
2105	ALL	754888.42	4038660.7	NonCancerAcute	0.00E+00	5.39E-06	1.14E-03	0.00E+00	0.00E+00	1.15E-03	1.96E-03	0.00E+00	6.56E-03	0.00E+00	0.00E+00	1.14E-03	0.00E+00	0.00E+00	6.56E-03
2106	ALL	754988.42	4038660.7	NonCancerAcute	0.00E+00	5.37E-06	1.14E-03	0.00E+00	0.00E+00	1.15E-03	1.90E-03	0.00E+00	6.47E-03	0.00E+00	0.00E+00	1.14E-03	0.00E+00	0.00E+00	6.47E-03
2107	ALL	755088.42	4038660.7	NonCancerAcute	0.00E+00	5.35E-06	1.14E-03	0.00E+00	0.00E+00	1.14E-03	1.84E-03	0.00E+00	6.38E-03	0.00E+00	0.00E+00	1.14E-03	0.00E+00	0.00E+00	6.38E-03
2108	ALL	755188.42	4038660.7	NonCancerAcute	0.00E+00	5.31E-06	1.13E-03	0.00E+00	0.00E+00	1.13E-03	1.80E-03	0.00E+00	6.30E-03	0.00E+00	0.00E+00	1.13E-03	0.00E+00	0.00E+00	6.30E-03
2109	ALL	755288.42	4038660.7	NonCancerAcute	0.00E+00	5.26E-06	1.12E-03	0.00E+00	0.00E+00	1.12E-03	1.77E-03	0.00E+00	6.22E-03	0.00E+00	0.00E+00	1.12E-03	0.00E+00	0.00E+00	6.22E-03
2110	ALL	747888.42	4038760.7	NonCancerAcute	0.00E+00	1.19E-05	2.52E-03	0.00E+00	0.00E+00	2.53E-03	7.92E-03	0.00E+00	1.89E-02	0.00E+00	0.00E+00	2.52E-03	0.00E+00	0.00E+00	1.89E-02
2111	ALL	747988.42	4038760.7	NonCancerAcute	0.00E+00	1.21E-05	2.57E-03	0.00E+00	0.00E+00	2.58E-03	7.82E-03	0.00E+00	1.89E-02	0.00E+00	0.00E+00	2.57E-03	0.00E+00	0.00E+00	1.89E-02
2112	ALL	748088.42	4038760.7	NonCancerAcute	0.00E+00	1.20E-05	2.54E-03	0.00E+00	0.00E+00	2.55E-03	7.69E-03	0.00E+00	1.87E-02	0.00E+00	0.00E+00	2.54E-03	0.00E+00	0.00E+00	1.87E-02
2113	ALL	748188.42	4038760.7	NonCancerAcute	0.00E+00	1.18E-05	2.50E-03	0.00E+00	0.00E+00	2.51E-03	7.91E-03	0.00E+00	1.88E-02	0.00E+00	0.00E+00	2.50E-03	0.00E+00	0.00E+00	1.88E-02
2114	ALL	749888.42	4038760.7	NonCancerAcute	0.00E+00	1.09E-05	2.30E-03	0.00E+00	0.00E+00	2.32E-03	7.43E-03	0.00E+00	1.75E-02	0.00E+00	0.00E+00	2.30E-03	0.00E+00	0.00E+00	1.75E-02
2115	ALL	749988.42	4038760.7	NonCancerAcute	0.00E+00	1.06E-05	2.25E-03	0.00E+00	0.00E+00	2.26E-03	7.30E-03	0.00E+00	1.71E-02	0.00E+00	0.00E+00	2.25E-03	0.00E+00	0.00E+00	1.71E-02
2116	ALL	750088.42	4038760.7	NonCancerAcute	0.00E+00	1.03E-05	2.19E-03	0.00E+00	0.00E+00	2.20E-03	7.28E-03	0.00E+00	1.69E-02	0.00E+00	0.00E+00	2.19E-03	0.00E+00	0.00E+00	1.69E-02
2117	ALL	750188.42	4038760.7	NonCancerAcute	0.00E+00	1.04E-05	2.21E-03	0.00E+00	0.00E+00	2.22E-03	7.09E-03	0.00E+00	1.67E-02	0.00E+00	0.00E+00	2.21E-03	0.00E+00	0.00E+00	1.67E-02
2118	ALL	750288.42	4038760.7	NonCancerAcute	0.00E+00	1.04E-05	2.20E-03	0.00E+00	0.00E+00	2.21E-03	6.96E-03	0.00E+00	1.65E-02	0.00E+00	0.00E+00	2.20E-03	0.00E+00	0.00E+00	1.65E-02

2119	ALL	750388.42	4038760.7	NonCancerAcute	0.00E+00	1.01E-05	2.14E-03	0.00E+00	0.00E+00	2.15E-03	6.78E-03	0.00E+00	1.61E-02	0.00E+00	0.00E+00	2.14E-03	0.00E+00	0.00E+00	1.61E-02
2120	ALL	750488.42	4038760.7	NonCancerAcute	0.00E+00	1.01E-05	2.14E-03	0.00E+00	0.00E+00	2.15E-03	6.54E-03	0.00E+00	1.58E-02	0.00E+00	0.00E+00	2.14E-03	0.00E+00	0.00E+00	1.58E-02
2121	ALL	750588.42	4038760.7	NonCancerAcute	0.00E+00	9.88E-06	2.10E-03	0.00E+00	0.00E+00	2.11E-03	6.25E-03	0.00E+00	1.53E-02	0.00E+00	0.00E+00	2.10E-03	0.00E+00	0.00E+00	1.53E-02
2122	ALL	750688.42	4038760.7	NonCancerAcute	0.00E+00	9.71E-06	2.06E-03	0.00E+00	0.00E+00	2.07E-03	5.75E-03	0.00E+00	1.45E-02	0.00E+00	0.00E+00	2.06E-03	0.00E+00	0.00E+00	1.45E-02
2123	ALL	750788.42	4038760.7	NonCancerAcute	0.00E+00	9.59E-06	2.04E-03	0.00E+00	0.00E+00	2.05E-03	5.64E-03	0.00E+00	1.43E-02	0.00E+00	0.00E+00	2.04E-03	0.00E+00	0.00E+00	1.43E-02
2124	ALL	750888.42	4038760.7	NonCancerAcute	0.00E+00	9.59E-06	2.04E-03	0.00E+00	0.00E+00	2.05E-03	5.60E-03	0.00E+00	1.43E-02	0.00E+00	0.00E+00	2.04E-03	0.00E+00	0.00E+00	1.43E-02
2125	ALL	750988.42	4038760.7	NonCancerAcute	0.00E+00	9.45E-06	2.01E-03	0.00E+00	0.00E+00	2.02E-03	5.33E-03	0.00E+00	1.38E-02	0.00E+00	0.00E+00	2.01E-03	0.00E+00	0.00E+00	1.38E-02
2126	ALL	751088.42	4038760.7	NonCancerAcute	0.00E+00	9.35E-06	1.98E-03	0.00E+00	0.00E+00	1.99E-03	5.30E-03	0.00E+00	1.37E-02	0.00E+00	0.00E+00	1.98E-03	0.00E+00	0.00E+00	1.37E-02
2127	ALL	751188.42	4038760.7	NonCancerAcute	0.00E+00	9.24E-06	1.96E-03	0.00E+00	0.00E+00	1.97E-03	5.04E-03	0.00E+00	1.33E-02	0.00E+00	0.00E+00	1.96E-03	0.00E+00	0.00E+00	1.33E-02
2128	ALL	751288.42	4038760.7	NonCancerAcute	0.00E+00	9.09E-06	1.93E-03	0.00E+00	0.00E+00	1.94E-03	4.85E-03	0.00E+00	1.30E-02	0.00E+00	0.00E+00	1.93E-03	0.00E+00	0.00E+00	1.30E-02
2129	ALL	751388.42	4038760.7	NonCancerAcute	0.00E+00	8.97E-06	1.91E-03	0.00E+00	0.00E+00	1.91E-03	4.86E-03	0.00E+00	1.29E-02	0.00E+00	0.00E+00	1.91E-03	0.00E+00	0.00E+00	1.29E-02
2130	ALL	752788.42	4038760.7	NonCancerAcute	0.00E+00	7.15E-06	1.52E-03	0.00E+00	0.00E+00	1.53E-03	2.95E-03	0.00E+00	9.13E-03	0.00E+00	0.00E+00	1.52E-03	0.00E+00	0.00E+00	9.13E-03
2131	ALL	752888.42	4038760.7	NonCancerAcute	0.00E+00	7.08E-06	1.50E-03	0.00E+00	0.00E+00	1.51E-03	2.89E-03	0.00E+00	9.00E-03	0.00E+00	0.00E+00	1.50E-03	0.00E+00	0.00E+00	9.00E-03
2132	ALL	752988.42	4038760.7	NonCancerAcute	0.00E+00	7.00E-06	1.49E-03	0.00E+00	0.00E+00	1.49E-03	2.87E-03	0.00E+00	8.91E-03	0.00E+00	0.00E+00	1.49E-03	0.00E+00	0.00E+00	8.91E-03
2133	ALL	753088.42	4038760.7	NonCancerAcute	0.00E+00	6.89E-06	1.46E-03	0.00E+00	0.00E+00	1.47E-03	2.86E-03	0.00E+00	8.83E-03	0.00E+00	0.00E+00	1.46E-03	0.00E+00	0.00E+00	8.83E-03
2134	ALL	753188.42	4038760.7	NonCancerAcute	0.00E+00	6.80E-06	1.44E-03	0.00E+00	0.00E+00	1.45E-03	2.85E-03	0.00E+00	8.73E-03	0.00E+00	0.00E+00	1.44E-03	0.00E+00	0.00E+00	8.73E-03
2135	ALL	753288.42	4038760.7	NonCancerAcute	0.00E+00	6.70E-06	1.42E-03	0.00E+00	0.00E+00	1.43E-03	2.82E-03	0.00E+00	8.62E-03	0.00E+00	0.00E+00	1.42E-03	0.00E+00	0.00E+00	8.62E-03
2136	ALL	753388.42	4038760.7	NonCancerAcute	0.00E+00	6.60E-06	1.40E-03	0.00E+00	0.00E+00	1.41E-03	2.78E-03	0.00E+00	8.50E-03	0.00E+00	0.00E+00	1.40E-03	0.00E+00	0.00E+00	8.50E-03
2137	ALL	753488.42	4038760.7	NonCancerAcute	0.00E+00	6.51E-06	1.38E-03	0.00E+00	0.00E+00	1.39E-03	2.73E-03	0.00E+00	8.37E-03	0.00E+00	0.00E+00	1.38E-03	0.00E+00	0.00E+00	8.37E-03
2138	ALL	753588.42	4038760.7	NonCancerAcute	0.00E+00	6.43E-06	1.37E-03	0.00E+00	0.00E+00	1.37E-03	2.67E-03	0.00E+00	8.23E-03	0.00E+00	0.00E+00	1.37E-03	0.00E+00	0.00E+00	8.23E-03
2139	ALL	753688.42	4038760.7	NonCancerAcute	0.00E+00	6.34E-06	1.35E-03	0.00E+00	0.00E+00	1.35E-03	2.60E-03	0.00E+00	8.08E-03	0.00E+00	0.00E+00	1.35E-03	0.00E+00	0.00E+00	8.08E-03
2140	ALL	753788.42	4038760.7	NonCancerAcute	0.00E+00	6.27E-06	1.33E-03	0.00E+00	0.00E+00	1.34E-03	2.54E-03	0.00E+00	7.94E-03	0.00E+00	0.00E+00	1.33E-03	0.00E+00	0.00E+00	7.94E-03
2141	ALL	753888.42	4038760.7	NonCancerAcute	0.00E+00	6.18E-06	1.31E-03	0.00E+00	0.00E+00	1.32E-03	2.49E-03	0.00E+00	7.81E-03	0.00E+00	0.00E+00	1.31E-03	0.00E+00	0.00E+00	7.81E-03
2142	ALL	753988.42	4038760.7	NonCancerAcute	0.00E+00	6.10E-06	1.30E-03	0.00E+00	0.00E+00	1.30E-03	2.43E-03	0.00E+00	7.69E-03	0.00E+00	0.00E+00	1.30E-03	0.00E+00	0.00E+00	7.69E-03
2143	ALL	754088.42	4038760.7	NonCancerAcute	0.00E+00	6.01E-06	1.28E-03	0.00E+00	0.00E+00	1.28E-03	2.38E-03	0.00E+00	7.54E-03	0.00E+00	0.00E+00	1.28E-03	0.00E+00	0.00E+00	7.54E-03
2144	ALL	754188.42	4038760.7	NonCancerAcute	0.00E+00	5.92E-06	1.26E-03	0.00E+00	0.00E+00	1.26E-03	2.32E-03	0.00E+00	7.41E-03	0.00E+00	0.00E+00	1.26E-03	0.00E+00	0.00E+00	7.41E-03
2145	ALL	754288.42	4038760.7	NonCancerAcute	0.00E+00	5.83E-06	1.24E-03	0.00E+00	0.00E+00	1.24E-03	2.25E-03	0.00E+00	7.26E-03	0.00E+00	0.00E+00	1.24E-03	0.00E+00	0.00E+00	7.26E-03
2146	ALL	754388.42	4038760.7	NonCancerAcute	0.00E+00	5.73E-06	1.22E-03	0.00E+00	0.00E+00	1.22E-03	2.19E-03	0.00E+00	7.10E-03	0.00E+00	0.00E+00	1.22E-03	0.00E+00	0.00E+00	7.10E-03
2147	ALL	754488.42	4038760.7	NonCancerAcute	0.00E+00	5.62E-06	1.19E-03	0.00E+00	0.00E+00	1.20E-03	2.12E-03	0.00E+00	6.94E-03	0.00E+00	0.00E+00	1.19E-03	0.00E+00	0.00E+00	6.94E-03
2148	ALL	754588.42	4038760.7	NonCancerAcute	0.00E+00	5.52E-06	1.17E-03	0.00E+00	0.00E+00	1.18E-03	2.06E-03	0.00E+00	6.78E-03	0.00E+00	0.00E+00	1.17E-03	0.00E+00	0.00E+00	6.78E-03
2149	ALL	754688.42	4038760.7	NonCancerAcute	0.00E+00	5.42E-06	1.15E-03	0.00E+00	0.00E+00	1.16E-03	2.00E-03	0.00E+00	6.63E-03	0.00E+00	0.00E+00	1.15E-03	0.00E+00	0.00E+00	6.63E-03
2150	ALL	754788.42	4038760.7	NonCancerAcute	0.00E+00	5.33E-06	1.13E-03	0.00E+00	0.00E+00	1.14E-03	1.96E-03	0.00E+00	6.52E-03	0.00E+00	0.00E+00	1.13E-03	0.00E+00	0.00E+00	6.52E-03
2151	ALL	754888.42	4038760.7	NonCancerAcute	0.00E+00	5.29E-06	1.12E-03	0.00E+00	0.00E+00	1.13E-03	1.93E-03	0.00E+00	6.45E-03	0.00E+00	0.00E+00	1.12E-03	0.00E+00	0.00E+00	6.45E-03
2152	ALL	754988.42	4038760.7	NonCancerAcute	0.00E+00	5.24E-06	1.11E-03	0.00E+00	0.00E+00	1.12E-03	1.90E-03	0.00E+00	6.37E-03	0.00E+00	0.00E+00	1.11E-03	0.00E+00	0.00E+00	6.37E-03
2153	ALL	755088.42	4038760.7	NonCancerAcute	0.00E+00	5.23E-06	1.11E-03	0.00E+00	0.00E+00	1.12E-03	1.86E-03	0.00E+00	6.32E-03	0.00E+00	0.00E+00	1.11E-03	0.00E+00	0.00E+00	6.32E-03
2154	ALL	755188.42	4038760.7	NonCancerAcute	0.00E+00	5.22E-06	1.11E-03	0.00E+00	0.00E+00	1.11E-03	1.83E-03	0.00E+00	6.26E-03	0.00E+00	0.00E+00	1.11E-03	0.00E+00	0.00E+00	6.26E-03
2155	ALL	755288.42	4038760.7	NonCancerAcute	0.00E+00	5.19E-06	1.10E-03	0.00E+00	0.00E+00	1.11E-03	1.79E-03	0.00E+00	6.19E-03	0.00E+00	0.00E+00	1.10E-03	0.00E+00	0.00E+00	6.19E-03
2156	ALL	747888.42	4038860.7	NonCancerAcute	0.00E+00	1.17E-05	2.49E-03	0.00E+00	0.00E+00	2.50E-03	8.00E-03	0.00E+00	1.88E-02	0.00E+00	0.00E+00	2.49E-03	0.00E+00	0.00E+00	1.88E-02
2157	ALL	747988.42	4038860.7	NonCancerAcute	0.00E+00	1.20E-05	2.54E-03	0.00E+00	0.00E+00	2.55E-03	7.79E-03	0.00E+00	1.88E-02	0.00E+00	0.00E+00	2.54E-03	0.00E+00	0.00E+00	1.88E-02
2158	ALL	748088.42	4038860.7	NonCancerAcute	0.00E+00	1.19E-05	2.53E-03	0.00E+00	0.00E+00	2.54E-03	7.90E-03	0.00E+00	1.89E-02	0.00E+00	0.00E+00	2.53E-03	0.00E+00	0.00E+00	1.89E-02
2159	ALL	748188.42	4038860.7	NonCancerAcute	0.00E+00	1.18E-05	2.51E-03	0.00E+00	0.00E+00	2.52E-03	7.70E-03	0.00E+00	1.86E-02	0.00E+00	0.00E+00	2.51E-03	0.00E+00	0.00E+00	1.86E-02
2160	ALL	749888.42	4038860.7	NonCancerAcute	0.00E+00	1.09E-05	2.31E-03	0.00E+00	0.00E+00	2.32E-03	7.69E-03	0.00E+00	1.78E-02	0.00E+00	0.00E+00	2.31E-03	0.00E+00	0.00E+00	1.78E-02
2161	ALL	749988.42	4038860.7	NonCancerAcute	0.00E+00	1.07E-05	2.28E-03	0.00E+00	0.00E+00	2.29E-03	7.53E-03	0.00E+00	1.75E-02	0.00E+00	0.00E+00	2.28E-03	0.00E+00	0.00E+00	1.75E-02
2162	ALL	750088.42	4038860.7	NonCancerAcute	0.00E+00	1.04E-05	2.20E-03	0.00E+00	0.00E+00	2.22E-03	7.43E-03	0.00E+00	1.71E-02	0.00E+00	0.00E+00	2.20E-03	0.00E+00	0.00E+00	1.71E-02
2163	ALL	750188.42	4038860.7	NonCancerAcute	0.00E+00	1.01E-05	2.15E-03	0.00E+00	0.00E+00	2.16E-03	7.37E-03	0.00E+00	1.68E-02	0.00E+00	0.00E+00	2.15E-03	0.00E+00	0.00E+00	1.68E-02
2164	ALL	750288.42	4038860.7	NonCancerAcute	0.00E+00	1.03E-05	2.18E-03	0.00E+00	0.00E+00	2.19E-03	7.21E-03	0.00E+00	1.67E-02	0.00E+00	0.00E+00	2.18E-03	0.00E+00	0.00E+00	1.67E-02
2165	ALL	750388.42	4038860.7	NonCancerAcute	0.00E+00	1.02E-05	2.16E-03	0.00E+00	0.00E+00	2.17E-03	7.01E-03	0.00E+00	1.64E-02	0.00E+00	0.00E+00	2.16E-03	0.00E+00	0.00E+00	1.64E-02
2166	ALL	750488.42	4038860.7	NonCancerAcute	0.00E+00	9.93E-06	2.11E-03	0.00E+00	0.00E+00	2.12E-03	6.73E-03	0.00E+00	1.59E-02	0.00E+00	0.00E+00	2.11E-03	0.00E+00	0.00E+00	1.59E-02
2167	ALL	750588.42	4038860.7	NonCancerAcute	0.00E+00	9.86E-06	2.09E-03	0.00E+00	0.00E+00	2.10E-03	6.39E-03	0.00E+00	1.54E-02	0.00E+00	0.00E+00	2.09E-03	0.00E+00	0.00E+00	1.54E-02
2168	ALL	750688.42	4038860.7	NonCancerAcute	0.00E+00	9.74E-06	2.07E-03	0.00E+00	0.00E+00	2.08E-03	6.11E-03	0.00E+00	1.50E-02	0.00E+00	0.00E+00	2.07E-03	0.00E+00	0.00E+00	1.50E-02
2169	ALL	750788.42	4038860.7	NonCancerAcute	0.00E+00	9.57E-06	2.03E-03	0.00E+00	0.00E+00	2.04E-03	5.95E-03	0.00E+00	1.47E-02	0.00E+00	0.00E+00	2.03E-03	0.00E+00	0.00E+00	1.47E-02
2170	ALL	750888.42	4038860.7	NonCancerAcute	0.00E+00	9.41E-06	2.00E-03	0.00E+00	0.00E+00	2.01E-03	5.55E-03	0.00E+00	1.41E-02	0.00E+00	0.00E+00	2.00E-03	0.00E+00	0.00E+00	1.41E-02
2171	ALL	750988.42	4038860.7	NonCancerAcute	0.00E+00	9.45E-06	2.01E-03	0.00E+00	0.00E+00	2.02E-03	5.56E-03	0.00E+00	1.41E-02	0.00E+00	0.00E+00	2.01E-03	0.00E+00	0.00E+00	1.41E-02

2172	ALL	751088.42	4038860.7	NonCancerAcute	0.00E+00	9.32E-06	1.98E-03	0.00E+00	0.00E+00	1.99E-03	5.28E-03	0.00E+00	1.37E-02	0.00E+00	0.00E+00	1.98E-03	0.00E+00	0.00E+00	1.37E-02
2173	ALL	751188.42	4038860.7	NonCancerAcute	0.00E+00	9.20E-06	1.95E-03	0.00E+00	0.00E+00	1.96E-03	5.07E-03	0.00E+00	1.33E-02	0.00E+00	0.00E+00	1.95E-03	0.00E+00	0.00E+00	1.33E-02
2174	ALL	751288.42	4038860.7	NonCancerAcute	0.00E+00	9.04E-06	1.92E-03	0.00E+00	0.00E+00	1.93E-03	5.08E-03	0.00E+00	1.32E-02	0.00E+00	0.00E+00	1.92E-03	0.00E+00	0.00E+00	1.32E-02
2175	ALL	751388.42	4038860.7	NonCancerAcute	0.00E+00	8.90E-06	1.89E-03	0.00E+00	0.00E+00	1.90E-03	4.85E-03	0.00E+00	1.28E-02	0.00E+00	0.00E+00	1.89E-03	0.00E+00	0.00E+00	1.28E-02
2176	ALL	752788.42	4038860.7	NonCancerAcute	0.00E+00	7.18E-06	1.52E-03	0.00E+00	0.00E+00	1.53E-03	3.00E-03	0.00E+00	9.22E-03	0.00E+00	0.00E+00	1.52E-03	0.00E+00	0.00E+00	9.22E-03
2177	ALL	752888.42	4038860.7	NonCancerAcute	0.00E+00	7.07E-06	1.50E-03	0.00E+00	0.00E+00	1.51E-03	2.97E-03	0.00E+00	9.09E-03	0.00E+00	0.00E+00	1.50E-03	0.00E+00	0.00E+00	9.09E-03
2178	ALL	752988.42	4038860.7	NonCancerAcute	0.00E+00	6.94E-06	1.47E-03	0.00E+00	0.00E+00	1.48E-03	2.93E-03	0.00E+00	8.94E-03	0.00E+00	0.00E+00	1.47E-03	0.00E+00	0.00E+00	8.94E-03
2179	ALL	753088.42	4038860.7	NonCancerAcute	0.00E+00	6.86E-06	1.46E-03	0.00E+00	0.00E+00	1.46E-03	2.88E-03	0.00E+00	8.82E-03	0.00E+00	0.00E+00	1.46E-03	0.00E+00	0.00E+00	8.82E-03
2180	ALL	753188.42	4038860.7	NonCancerAcute	0.00E+00	6.80E-06	1.44E-03	0.00E+00	0.00E+00	1.45E-03	2.84E-03	0.00E+00	8.73E-03	0.00E+00	0.00E+00	1.44E-03	0.00E+00	0.00E+00	8.73E-03
2181	ALL	753288.42	4038860.7	NonCancerAcute	0.00E+00	6.71E-06	1.42E-03	0.00E+00	0.00E+00	1.43E-03	2.80E-03	0.00E+00	8.61E-03	0.00E+00	0.00E+00	1.42E-03	0.00E+00	0.00E+00	8.61E-03
2182	ALL	753388.42	4038860.7	NonCancerAcute	0.00E+00	6.62E-06	1.41E-03	0.00E+00	0.00E+00	1.41E-03	2.75E-03	0.00E+00	8.47E-03	0.00E+00	0.00E+00	1.41E-03	0.00E+00	0.00E+00	8.47E-03
2183	ALL	753488.42	4038860.7	NonCancerAcute	0.00E+00	6.54E-06	1.39E-03	0.00E+00	0.00E+00	1.39E-03	2.68E-03	0.00E+00	8.33E-03	0.00E+00	0.00E+00	1.39E-03	0.00E+00	0.00E+00	8.33E-03
2184	ALL	753588.42	4038860.7	NonCancerAcute	0.00E+00	6.45E-06	1.37E-03	0.00E+00	0.00E+00	1.38E-03	2.62E-03	0.00E+00	8.18E-03	0.00E+00	0.00E+00	1.37E-03	0.00E+00	0.00E+00	8.18E-03
2185	ALL	753688.42	4038860.7	NonCancerAcute	0.00E+00	6.34E-06	1.35E-03	0.00E+00	0.00E+00	1.35E-03	2.54E-03	0.00E+00	8.01E-03	0.00E+00	0.00E+00	1.35E-03	0.00E+00	0.00E+00	8.01E-03
2186	ALL	753788.42	4038860.7	NonCancerAcute	0.00E+00	6.26E-06	1.33E-03	0.00E+00	0.00E+00	1.34E-03	2.47E-03	0.00E+00	7.85E-03	0.00E+00	0.00E+00	1.33E-03	0.00E+00	0.00E+00	7.85E-03
2187	ALL	753888.42	4038860.7	NonCancerAcute	0.00E+00	6.19E-06	1.32E-03	0.00E+00	0.00E+00	1.32E-03	2.39E-03	0.00E+00	7.71E-03	0.00E+00	0.00E+00	1.32E-03	0.00E+00	0.00E+00	7.71E-03
2188	ALL	753988.42	4038860.7	NonCancerAcute	0.00E+00	6.11E-06	1.30E-03	0.00E+00	0.00E+00	1.30E-03	2.31E-03	0.00E+00	7.55E-03	0.00E+00	0.00E+00	1.30E-03	0.00E+00	0.00E+00	7.55E-03
2189	ALL	754088.42	4038860.7	NonCancerAcute	0.00E+00	6.02E-06	1.28E-03	0.00E+00	0.00E+00	1.28E-03	2.23E-03	0.00E+00	7.38E-03	0.00E+00	0.00E+00	1.28E-03	0.00E+00	0.00E+00	7.38E-03
2190	ALL	754188.42	4038860.7	NonCancerAcute	0.00E+00	5.96E-06	1.27E-03	0.00E+00	0.00E+00	1.27E-03	2.16E-03	0.00E+00	7.25E-03	0.00E+00	0.00E+00	1.27E-03	0.00E+00	0.00E+00	7.25E-03
2191	ALL	754288.42	4038860.7	NonCancerAcute	0.00E+00	5.89E-06	1.25E-03	0.00E+00	0.00E+00	1.26E-03	2.13E-03	0.00E+00	7.15E-03	0.00E+00	0.00E+00	1.25E-03	0.00E+00	0.00E+00	7.15E-03
2192	ALL	754388.42	4038860.7	NonCancerAcute	0.00E+00	5.81E-06	1.23E-03	0.00E+00	0.00E+00	1.24E-03	2.09E-03	0.00E+00	7.05E-03	0.00E+00	0.00E+00	1.23E-03	0.00E+00	0.00E+00	7.05E-03
2193	ALL	754488.42	4038860.7	NonCancerAcute	0.00E+00	5.72E-06	1.21E-03	0.00E+00	0.00E+00	1.22E-03	2.07E-03	0.00E+00	6.94E-03	0.00E+00	0.00E+00	1.21E-03	0.00E+00	0.00E+00	6.94E-03
2194	ALL	754588.42	4038860.7	NonCancerAcute	0.00E+00	5.62E-06	1.19E-03	0.00E+00	0.00E+00	1.20E-03	2.04E-03	0.00E+00	6.83E-03	0.00E+00	0.00E+00	1.19E-03	0.00E+00	0.00E+00	6.83E-03
2195	ALL	754688.42	4038860.7	NonCancerAcute	0.00E+00	5.53E-06	1.17E-03	0.00E+00	0.00E+00	1.18E-03	2.00E-03	0.00E+00	6.72E-03	0.00E+00	0.00E+00	1.17E-03	0.00E+00	0.00E+00	6.72E-03
2196	ALL	754788.42	4038860.7	NonCancerAcute	0.00E+00	5.43E-06	1.15E-03	0.00E+00	0.00E+00	1.16E-03	1.97E-03	0.00E+00	6.60E-03	0.00E+00	0.00E+00	1.15E-03	0.00E+00	0.00E+00	6.60E-03
2197	ALL	754888.42	4038860.7	NonCancerAcute	0.00E+00	5.33E-06	1.13E-03	0.00E+00	0.00E+00	1.14E-03	1.93E-03	0.00E+00	6.47E-03	0.00E+00	0.00E+00	1.13E-03	0.00E+00	0.00E+00	6.47E-03
2198	ALL	754988.42	4038860.7	NonCancerAcute	0.00E+00	5.21E-06	1.11E-03	0.00E+00	0.00E+00	1.11E-03	1.89E-03	0.00E+00	6.34E-03	0.00E+00	0.00E+00	1.11E-03	0.00E+00	0.00E+00	6.34E-03
2199	ALL	755088.42	4038860.7	NonCancerAcute	0.00E+00	5.12E-06	1.09E-03	0.00E+00	0.00E+00	1.09E-03	1.86E-03	0.00E+00	6.23E-03	0.00E+00	0.00E+00	1.09E-03	0.00E+00	0.00E+00	6.23E-03
2200	ALL	755188.42	4038860.7	NonCancerAcute	0.00E+00	5.09E-06	1.08E-03	0.00E+00	0.00E+00	1.09E-03	1.84E-03	0.00E+00	6.18E-03	0.00E+00	0.00E+00	1.08E-03	0.00E+00	0.00E+00	6.18E-03
2201	ALL	755288.42	4038860.7	NonCancerAcute	0.00E+00	5.07E-06	1.08E-03	0.00E+00	0.00E+00	1.08E-03	1.81E-03	0.00E+00	6.13E-03	0.00E+00	0.00E+00	1.08E-03	0.00E+00	0.00E+00	6.13E-03
2202	ALL	747888.42	4038960.7	NonCancerAcute	0.00E+00	1.24E-05	2.64E-03	0.00E+00	0.00E+00	2.65E-03	8.06E-03	0.00E+00	1.95E-02	0.00E+00	0.00E+00	2.64E-03	0.00E+00	0.00E+00	1.95E-02
2203	ALL	747988.42	4038960.7	NonCancerAcute	0.00E+00	1.18E-05	2.50E-03	0.00E+00	0.00E+00	2.51E-03	8.04E-03	0.00E+00	1.89E-02	0.00E+00	0.00E+00	2.50E-03	0.00E+00	0.00E+00	1.89E-02
2204	ALL	748088.42	4038960.7	NonCancerAcute	0.00E+00	1.19E-05	2.52E-03	0.00E+00	0.00E+00	2.53E-03	7.65E-03	0.00E+00	1.85E-02	0.00E+00	0.00E+00	2.52E-03	0.00E+00	0.00E+00	1.85E-02
2205	ALL	748188.42	4038960.7	NonCancerAcute	0.00E+00	1.17E-05	2.49E-03	0.00E+00	0.00E+00	2.51E-03	7.88E-03	0.00E+00	1.87E-02	0.00E+00	0.00E+00	2.49E-03	0.00E+00	0.00E+00	1.87E-02
2206	ALL	749888.42	4038960.7	NonCancerAcute	0.00E+00	1.08E-05	2.30E-03	0.00E+00	0.00E+00	2.31E-03	7.97E-03	0.00E+00	1.81E-02	0.00E+00	0.00E+00	2.30E-03	0.00E+00	0.00E+00	1.81E-02
2207	ALL	749988.42	4038960.7	NonCancerAcute	0.00E+00	1.06E-05	2.26E-03	0.00E+00	0.00E+00	2.27E-03	7.92E-03	0.00E+00	1.79E-02	0.00E+00	0.00E+00	2.26E-03	0.00E+00	0.00E+00	1.79E-02
2208	ALL	750088.42	4038960.7	NonCancerAcute	0.00E+00	1.06E-05	2.25E-03	0.00E+00	0.00E+00	2.26E-03	7.69E-03	0.00E+00	1.76E-02	0.00E+00	0.00E+00	2.25E-03	0.00E+00	0.00E+00	1.76E-02
2209	ALL	750188.42	4038960.7	NonCancerAcute	0.00E+00	1.03E-05	2.18E-03	0.00E+00	0.00E+00	2.19E-03	7.49E-03	0.00E+00	1.71E-02	0.00E+00	0.00E+00	2.18E-03	0.00E+00	0.00E+00	1.71E-02
2210	ALL	750288.42	4038960.7	NonCancerAcute	0.00E+00	9.95E-06	2.11E-03	0.00E+00	0.00E+00	2.12E-03	7.36E-03	0.00E+00	1.67E-02	0.00E+00	0.00E+00	2.11E-03	0.00E+00	0.00E+00	1.67E-02
2211	ALL	750388.42	4038960.7	NonCancerAcute	0.00E+00	1.00E-05	2.13E-03	0.00E+00	0.00E+00	2.14E-03	7.18E-03	0.00E+00	1.66E-02	0.00E+00	0.00E+00	2.13E-03	0.00E+00	0.00E+00	1.66E-02
2212	ALL	750488.42	4038960.7	NonCancerAcute	0.00E+00	1.00E-05	2.12E-03	0.00E+00	0.00E+00	2.13E-03	6.90E-03	0.00E+00	1.62E-02	0.00E+00	0.00E+00	2.12E-03	0.00E+00	0.00E+00	1.62E-02
2213	ALL	750588.42	4038960.7	NonCancerAcute	0.00E+00	9.85E-06	2.09E-03	0.00E+00	0.00E+00	2.10E-03	6.64E-03	0.00E+00	1.57E-02	0.00E+00	0.00E+00	2.09E-03	0.00E+00	0.00E+00	1.57E-02
2214	ALL	750688.42	4038960.7	NonCancerAcute	0.00E+00	9.71E-06	2.06E-03	0.00E+00	0.00E+00	2.07E-03	6.50E-03	0.00E+00	1.55E-02	0.00E+00	0.00E+00	2.06E-03	0.00E+00	0.00E+00	1.55E-02
2215	ALL	750788.42	4038960.7	NonCancerAcute	0.00E+00	9.64E-06	2.05E-03	0.00E+00	0.00E+00	2.06E-03	6.13E-03	0.00E+00	1.49E-02	0.00E+00	0.00E+00	2.05E-03	0.00E+00	0.00E+00	1.49E-02
2216	ALL	750888.42	4038960.7	NonCancerAcute	0.00E+00	9.46E-06	2.01E-03	0.00E+00	0.00E+00	2.02E-03	5.98E-03	0.00E+00	1.46E-02	0.00E+00	0.00E+00	2.01E-03	0.00E+00	0.00E+00	1.46E-02
2217	ALL	750988.42	4038960.7	NonCancerAcute	0.00E+00	9.25E-06	1.96E-03	0.00E+00	0.00E+00	1.97E-03	5.59E-03	0.00E+00	1.40E-02	0.00E+00	0.00E+00	1.96E-03	0.00E+00	0.00E+00	1.40E-02
2218	ALL	751088.42	4038960.7	NonCancerAcute	0.00E+00	9.21E-06	1.96E-03	0.00E+00	0.00E+00	1.97E-03	5.32E-03	0.00E+00	1.36E-02	0.00E+00	0.00E+00	1.96E-03	0.00E+00	0.00E+00	1.36E-02
2219	ALL	751188.42	4038960.7	NonCancerAcute	0.00E+00	9.11E-06	1.93E-03	0.00E+00	0.00E+00	1.94E-03	5.32E-03	0.00E+00	1.35E-02	0.00E+00	0.00E+00	1.93E-03	0.00E+00	0.00E+00	1.35E-02
2220	ALL	751288.42	4038960.7	NonCancerAcute	0.00E+00	8.98E-06	1.91E-03	0.00E+00	0.00E+00	1.92E-03	5.01E-03	0.00E+00	1.31E-02	0.00E+00	0.00E+00	1.91E-03	0.00E+00	0.00E+00	1.31E-02
2221	ALL	751388.42	4038960.7	NonCancerAcute	0.00E+00	8.85E-06	1.88E-03	0.00E+00	0.00E+00	1.89E-03	4.85E-03	0.00E+00	1.28E-02	0.00E+00	0.00E+00	1.88E-03	0.00E+00	0.00E+00	1.28E-02
2222	ALL	752788.42	4038960.7	NonCancerAcute	0.00E+00	7.15E-06	1.52E-03	0.00E+00	0.00E+00	1.52E-03	3.11E-03	0.00E+00	9.33E-03	0.00E+00	0.00E+00	1.52E-03	0.00E+00	0.00E+00	9.33E-03
2223	ALL	752888.42	4038960.7	NonCancerAcute	0.00E+00	7.07E-06	1.50E-03	0.00E+00	0.00E+00	1.51E-03	3.04E-03	0.00E+00	9.18E-03	0.00E+00	0.00E+00	1.50E-03	0.00E+00	0.00E+00	9.18E-03
2224	ALL	752988.42	4038960.7	NonCancerAcute	0.00E+00	6.99E-06	1.48E-03	0.00E+00	0.00E+00	1.49E-03	2.97E-03	0.00E+00	9.02E-03	0.00E+00	0.00E+00	1.48E-03	0.00E+00	0.00E+00	9.02E-03

2225	ALL	753088.42	4038960.7	NonCancerAcute	0.00E+00	6.89E-06	1.46E-03	0.00E+00	0.00E+00	1.47E-03	2.90E-03	0.00E+00	8.86E-03	0.00E+00	0.00E+00	1.46E-03	0.00E+00	0.00E+00	8.86E-03
2226	ALL	753188.42	4038960.7	NonCancerAcute	0.00E+00	6.77E-06	1.44E-03	0.00E+00	0.00E+00	1.44E-03	2.81E-03	0.00E+00	8.67E-03	0.00E+00	0.00E+00	1.44E-03	0.00E+00	0.00E+00	8.67E-03
2227	ALL	753288.42	4038960.7	NonCancerAcute	0.00E+00	6.67E-06	1.42E-03	0.00E+00	0.00E+00	1.42E-03	2.73E-03	0.00E+00	8.49E-03	0.00E+00	0.00E+00	1.42E-03	0.00E+00	0.00E+00	8.49E-03
2228	ALL	753388.42	4038960.7	NonCancerAcute	0.00E+00	6.61E-06	1.40E-03	0.00E+00	0.00E+00	1.41E-03	2.65E-03	0.00E+00	8.35E-03	0.00E+00	0.00E+00	1.40E-03	0.00E+00	0.00E+00	8.35E-03
2229	ALL	753488.42	4038960.7	NonCancerAcute	0.00E+00	6.54E-06	1.39E-03	0.00E+00	0.00E+00	1.39E-03	2.57E-03	0.00E+00	8.19E-03	0.00E+00	0.00E+00	1.39E-03	0.00E+00	0.00E+00	8.19E-03
2230	ALL	753588.42	4038960.7	NonCancerAcute	0.00E+00	6.44E-06	1.37E-03	0.00E+00	0.00E+00	1.37E-03	2.49E-03	0.00E+00	8.02E-03	0.00E+00	0.00E+00	1.37E-03	0.00E+00	0.00E+00	8.02E-03
2231	ALL	753688.42	4038960.7	NonCancerAcute	0.00E+00	6.34E-06	1.35E-03	0.00E+00	0.00E+00	1.35E-03	2.43E-03	0.00E+00	7.87E-03	0.00E+00	0.00E+00	1.35E-03	0.00E+00	0.00E+00	7.87E-03
2232	ALL	753788.42	4038960.7	NonCancerAcute	0.00E+00	6.28E-06	1.33E-03	0.00E+00	0.00E+00	1.34E-03	2.37E-03	0.00E+00	7.75E-03	0.00E+00	0.00E+00	1.33E-03	0.00E+00	0.00E+00	7.75E-03
2233	ALL	753888.42	4038960.7	NonCancerAcute	0.00E+00	6.21E-06	1.32E-03	0.00E+00	0.00E+00	1.32E-03	2.31E-03	0.00E+00	7.62E-03	0.00E+00	0.00E+00	1.32E-03	0.00E+00	0.00E+00	7.62E-03
2234	ALL	753988.42	4038960.7	NonCancerAcute	0.00E+00	6.11E-06	1.30E-03	0.00E+00	0.00E+00	1.30E-03	2.27E-03	0.00E+00	7.49E-03	0.00E+00	0.00E+00	1.30E-03	0.00E+00	0.00E+00	7.49E-03
2235	ALL	754088.42	4038960.7	NonCancerAcute	0.00E+00	6.04E-06	1.28E-03	0.00E+00	0.00E+00	1.29E-03	2.22E-03	0.00E+00	7.38E-03	0.00E+00	0.00E+00	1.28E-03	0.00E+00	0.00E+00	7.38E-03
2236	ALL	754188.42	4038960.7	NonCancerAcute	0.00E+00	5.98E-06	1.27E-03	0.00E+00	0.00E+00	1.28E-03	2.18E-03	0.00E+00	7.28E-03	0.00E+00	0.00E+00	1.27E-03	0.00E+00	0.00E+00	7.28E-03
2237	ALL	754288.42	4038960.7	NonCancerAcute	0.00E+00	5.91E-06	1.25E-03	0.00E+00	0.00E+00	1.26E-03	2.13E-03	0.00E+00	7.17E-03	0.00E+00	0.00E+00	1.25E-03	0.00E+00	0.00E+00	7.17E-03
2238	ALL	754388.42	4038960.7	NonCancerAcute	0.00E+00	5.82E-06	1.24E-03	0.00E+00	0.00E+00	1.24E-03	2.08E-03	0.00E+00	7.04E-03	0.00E+00	0.00E+00	1.24E-03	0.00E+00	0.00E+00	7.04E-03
2239	ALL	754488.42	4038960.7	NonCancerAcute	0.00E+00	5.75E-06	1.22E-03	0.00E+00	0.00E+00	1.23E-03	2.03E-03	0.00E+00	6.93E-03	0.00E+00	0.00E+00	1.22E-03	0.00E+00	0.00E+00	6.93E-03
2240	ALL	754588.42	4038960.7	NonCancerAcute	0.00E+00	5.67E-06	1.20E-03	0.00E+00	0.00E+00	1.21E-03	2.00E-03	0.00E+00	6.82E-03	0.00E+00	0.00E+00	1.20E-03	0.00E+00	0.00E+00	6.82E-03
2241	ALL	754688.42	4038960.7	NonCancerAcute	0.00E+00	5.59E-06	1.19E-03	0.00E+00	0.00E+00	1.19E-03	1.98E-03	0.00E+00	6.74E-03	0.00E+00	0.00E+00	1.19E-03	0.00E+00	0.00E+00	6.74E-03
2242	ALL	754788.42	4038960.7	NonCancerAcute	0.00E+00	5.51E-06	1.17E-03	0.00E+00	0.00E+00	1.18E-03	1.95E-03	0.00E+00	6.65E-03	0.00E+00	0.00E+00	1.17E-03	0.00E+00	0.00E+00	6.65E-03
2243	ALL	754888.42	4038960.7	NonCancerAcute	0.00E+00	5.43E-06	1.15E-03	0.00E+00	0.00E+00	1.16E-03	1.93E-03	0.00E+00	6.55E-03	0.00E+00	0.00E+00	1.15E-03	0.00E+00	0.00E+00	6.55E-03
2244	ALL	754988.42	4038960.7	NonCancerAcute	0.00E+00	5.33E-06	1.13E-03	0.00E+00	0.00E+00	1.14E-03	1.90E-03	0.00E+00	6.44E-03	0.00E+00	0.00E+00	1.13E-03	0.00E+00	0.00E+00	6.44E-03
2245	ALL	755088.42	4038960.7	NonCancerAcute	0.00E+00	5.23E-06	1.11E-03	0.00E+00	0.00E+00	1.12E-03	1.87E-03	0.00E+00	6.33E-03	0.00E+00	0.00E+00	1.11E-03	0.00E+00	0.00E+00	6.33E-03
2246	ALL	755188.42	4038960.7	NonCancerAcute	0.00E+00	5.14E-06	1.09E-03	0.00E+00	0.00E+00	1.10E-03	1.84E-03	0.00E+00	6.22E-03	0.00E+00	0.00E+00	1.09E-03	0.00E+00	0.00E+00	6.22E-03
2247	ALL	755288.42	4038960.7	NonCancerAcute	0.00E+00	5.05E-06	1.07E-03	0.00E+00	0.00E+00	1.08E-03	1.80E-03	0.00E+00	6.11E-03	0.00E+00	0.00E+00	1.07E-03	0.00E+00	0.00E+00	6.11E-03
2248	ALL	747788.42	4039060.7	NonCancerAcute	0.00E+00	1.31E-05	2.78E-03	0.00E+00	0.00E+00	2.79E-03	7.86E-03	0.00E+00	1.97E-02	0.00E+00	0.00E+00	2.78E-03	0.00E+00	0.00E+00	1.97E-02
2249	ALL	747888.42	4039060.7	NonCancerAcute	0.00E+00	1.29E-05	2.74E-03	0.00E+00	0.00E+00	2.75E-03	8.08E-03	0.00E+00	1.99E-02	0.00E+00	0.00E+00	2.74E-03	0.00E+00	0.00E+00	1.99E-02
2250	ALL	747988.42	4039060.7	NonCancerAcute	0.00E+00	1.22E-05	2.59E-03	0.00E+00	0.00E+00	2.60E-03	8.03E-03	0.00E+00	1.92E-02	0.00E+00	0.00E+00	2.59E-03	0.00E+00	0.00E+00	1.92E-02
2251	ALL	748088.42	4039060.7	NonCancerAcute	0.00E+00	1.18E-05	2.50E-03	0.00E+00	0.00E+00	2.51E-03	7.99E-03	0.00E+00	1.89E-02	0.00E+00	0.00E+00	2.50E-03	0.00E+00	0.00E+00	1.89E-02
2252	ALL	748188.42	4039060.7	NonCancerAcute	0.00E+00	1.18E-05	2.51E-03	0.00E+00	0.00E+00	2.52E-03	7.85E-03	0.00E+00	1.87E-02	0.00E+00	0.00E+00	2.51E-03	0.00E+00	0.00E+00	1.87E-02
2253	ALL	749888.42	4039060.7	NonCancerAcute	0.00E+00	1.08E-05	2.28E-03	0.00E+00	0.00E+00	2.29E-03	8.18E-03	0.00E+00	1.83E-02	0.00E+00	0.00E+00	2.28E-03	0.00E+00	0.00E+00	1.83E-02
2254	ALL	749988.42	4039060.7	NonCancerAcute	0.00E+00	1.07E-05	2.27E-03	0.00E+00	0.00E+00	2.28E-03	8.30E-03	0.00E+00	1.84E-02	0.00E+00	0.00E+00	2.27E-03	0.00E+00	0.00E+00	1.84E-02
2255	ALL	750088.42	4039060.7	NonCancerAcute	0.00E+00	1.05E-05	2.24E-03	0.00E+00	0.00E+00	2.25E-03	8.03E-03	0.00E+00	1.80E-02	0.00E+00	0.00E+00	2.24E-03	0.00E+00	0.00E+00	1.80E-02
2256	ALL	750188.42	4039060.7	NonCancerAcute	0.00E+00	1.04E-05	2.22E-03	0.00E+00	0.00E+00	2.23E-03	7.87E-03	0.00E+00	1.77E-02	0.00E+00	0.00E+00	2.22E-03	0.00E+00	0.00E+00	1.77E-02
2257	ALL	750288.42	4039060.7	NonCancerAcute	0.00E+00	1.01E-05	2.15E-03	0.00E+00	0.00E+00	2.16E-03	7.55E-03	0.00E+00	1.71E-02	0.00E+00	0.00E+00	2.15E-03	0.00E+00	0.00E+00	1.71E-02
2258	ALL	750388.42	4039060.7	NonCancerAcute	0.00E+00	9.85E-06	2.09E-03	0.00E+00	0.00E+00	2.10E-03	7.20E-03	0.00E+00	1.64E-02	0.00E+00	0.00E+00	2.09E-03	0.00E+00	0.00E+00	1.64E-02
2259	ALL	750488.42	4039060.7	NonCancerAcute	0.00E+00	9.90E-06	2.10E-03	0.00E+00	0.00E+00	2.11E-03	7.00E-03	0.00E+00	1.62E-02	0.00E+00	0.00E+00	2.10E-03	0.00E+00	0.00E+00	1.62E-02
2260	ALL	750588.42	4039060.7	NonCancerAcute	0.00E+00	9.88E-06	2.10E-03	0.00E+00	0.00E+00	2.11E-03	6.88E-03	0.00E+00	1.61E-02	0.00E+00	0.00E+00	2.10E-03	0.00E+00	0.00E+00	1.61E-02
2261	ALL	750688.42	4039060.7	NonCancerAcute	0.00E+00	9.73E-06	2.07E-03	0.00E+00	0.00E+00	2.08E-03	6.58E-03	0.00E+00	1.56E-02	0.00E+00	0.00E+00	2.07E-03	0.00E+00	0.00E+00	1.56E-02
2262	ALL	750788.42	4039060.7	NonCancerAcute	0.00E+00	9.50E-06	2.02E-03	0.00E+00	0.00E+00	2.03E-03	6.46E-03	0.00E+00	1.53E-02	0.00E+00	0.00E+00	2.02E-03	0.00E+00	0.00E+00	1.53E-02
2263	ALL	750888.42	4039060.7	NonCancerAcute	0.00E+00	9.42E-06	2.00E-03	0.00E+00	0.00E+00	2.01E-03	6.11E-03	0.00E+00	1.48E-02	0.00E+00	0.00E+00	2.00E-03	0.00E+00	0.00E+00	1.48E-02
2264	ALL	750988.42	4039060.7	NonCancerAcute	0.00E+00	9.21E-06	1.96E-03	0.00E+00	0.00E+00	1.96E-03	5.87E-03	0.00E+00	1.43E-02	0.00E+00	0.00E+00	1.96E-03	0.00E+00	0.00E+00	1.43E-02
2265	ALL	751088.42	4039060.7	NonCancerAcute	0.00E+00	9.05E-06	1.92E-03	0.00E+00	0.00E+00	1.93E-03	5.68E-03	0.00E+00	1.40E-02	0.00E+00	0.00E+00	1.92E-03	0.00E+00	0.00E+00	1.40E-02
2266	ALL	751188.42	4039060.7	NonCancerAcute	0.00E+00	8.95E-06	1.90E-03	0.00E+00	0.00E+00	1.91E-03	5.28E-03	0.00E+00	1.34E-02	0.00E+00	0.00E+00	1.90E-03	0.00E+00	0.00E+00	1.34E-02
2267	ALL	751288.42	4039060.7	NonCancerAcute	0.00E+00	8.97E-06	1.90E-03	0.00E+00	0.00E+00	1.91E-03	5.06E-03	0.00E+00	1.31E-02	0.00E+00	0.00E+00	1.90E-03	0.00E+00	0.00E+00	1.31E-02
2268	ALL	751388.42	4039060.7	NonCancerAcute	0.00E+00	8.84E-06	1.88E-03	0.00E+00	0.00E+00	1.89E-03	4.92E-03	0.00E+00	1.28E-02	0.00E+00	0.00E+00	1.88E-03	0.00E+00	0.00E+00	1.28E-02
2269	ALL	752788.42	4039060.7	NonCancerAcute	0.00E+00	7.10E-06	1.51E-03	0.00E+00	0.00E+00	1.51E-03	3.14E-03	0.00E+00	9.33E-03	0.00E+00	0.00E+00	1.51E-03	0.00E+00	0.00E+00	9.33E-03
2270	ALL	752888.42	4039060.7	NonCancerAcute	0.00E+00	7.02E-06	1.49E-03	0.00E+00	0.00E+00	1.50E-03	3.08E-03	0.00E+00	9.19E-03	0.00E+00	0.00E+00	1.49E-03	0.00E+00	0.00E+00	9.19E-03
2271	ALL	752988.42	4039060.7	NonCancerAcute	0.00E+00	6.94E-06	1.47E-03	0.00E+00	0.00E+00	1.48E-03	3.01E-03	0.00E+00	9.04E-03	0.00E+00	0.00E+00	1.47E-03	0.00E+00	0.00E+00	9.04E-03
2272	ALL	753088.42	4039060.7	NonCancerAcute	0.00E+00	6.88E-06	1.46E-03	0.00E+00	0.00E+00	1.47E-03	2.92E-03	0.00E+00	8.89E-03	0.00E+00	0.00E+00	1.46E-03	0.00E+00	0.00E+00	8.89E-03
2273	ALL	753188.42	4039060.7	NonCancerAcute	0.00E+00	6.79E-06	1.44E-03	0.00E+00	0.00E+00	1.45E-03	2.82E-03	0.00E+00	8.69E-03	0.00E+00	0.00E+00	1.44E-03	0.00E+00	0.00E+00	8.69E-03
2274	ALL	747788.42	4039160.7	NonCancerAcute	0.00E+00	1.31E-05	2.79E-03	0.00E+00	0.00E+00	2.81E-03	7.97E-03	0.00E+00	1.99E-02	0.00E+00	0.00E+00	2.79E-03	0.00E+00	0.00E+00	1.99E-02
2275	ALL	747888.42	4039160.7	NonCancerAcute	0.00E+00	1.34E-05	2.85E-03	0.00E+00	0.00E+00	2.87E-03	8.07E-03	0.00E+00	2.03E-02	0.00E+00	0.00E+00	2.85E-03	0.00E+00	0.00E+00	2.03E-02
2276	ALL	747988.42	4039160.7	NonCancerAcute	0.00E+00	1.28E-05	2.71E-03	0.00E+00	0.00E+00	2.72E-03	8.06E-03	0.00E+00	1.97E-02	0.00E+00	0.00E+00	2.71E-03	0.00E+00	0.00E+00	1.97E-02
2277	ALL	748088.42	4039160.7	NonCancerAcute	0.00E+00	1.21E-05	2.57E-03	0.00E+00	0.00E+00	2.58E-03	8.08E-03	0.00E+00	1.92E-02	0.00E+00	0.00E+00	2.57E-03	0.00E+00	0.00E+00	1.92E-02

2278	ALL	748188.42	4039160.7	NonCancerAcute	0.00E+00	1.19E-05	2.53E-03	0.00E+00	0.00E+00	2.54E-03	7.86E-03	0.00E+00	1.88E-02	0.00E+00	0.00E+00	2.53E-03	0.00E+00	0.00E+00	1.88E-02
2279	ALL	749888.42	4039160.7	NonCancerAcute	0.00E+00	1.07E-05	2.27E-03	0.00E+00	0.00E+00	2.29E-03	8.33E-03	0.00E+00	1.85E-02	0.00E+00	0.00E+00	2.27E-03	0.00E+00	0.00E+00	1.85E-02
2280	ALL	749988.42	4039160.7	NonCancerAcute	0.00E+00	1.06E-05	2.25E-03	0.00E+00	0.00E+00	2.26E-03	8.45E-03	0.00E+00	1.85E-02	0.00E+00	0.00E+00	2.25E-03	0.00E+00	0.00E+00	1.85E-02
2281	ALL	750088.42	4039160.7	NonCancerAcute	0.00E+00	1.05E-05	2.24E-03	0.00E+00	0.00E+00	2.25E-03	8.46E-03	0.00E+00	1.85E-02	0.00E+00	0.00E+00	2.24E-03	0.00E+00	0.00E+00	1.85E-02
2282	ALL	750188.42	4039160.7	NonCancerAcute	0.00E+00	1.04E-05	2.20E-03	0.00E+00	0.00E+00	2.21E-03	8.25E-03	0.00E+00	1.81E-02	0.00E+00	0.00E+00	2.20E-03	0.00E+00	0.00E+00	1.81E-02
2283	ALL	750288.42	4039160.7	NonCancerAcute	0.00E+00	1.03E-05	2.20E-03	0.00E+00	0.00E+00	2.21E-03	7.80E-03	0.00E+00	1.75E-02	0.00E+00	0.00E+00	2.20E-03	0.00E+00	0.00E+00	1.75E-02
2284	ALL	750388.42	4039160.7	NonCancerAcute	0.00E+00	1.00E-05	2.13E-03	0.00E+00	0.00E+00	2.14E-03	7.43E-03	0.00E+00	1.68E-02	0.00E+00	0.00E+00	2.13E-03	0.00E+00	0.00E+00	1.68E-02
2285	ALL	750488.42	4039160.7	NonCancerAcute	0.00E+00	9.69E-06	2.06E-03	0.00E+00	0.00E+00	2.07E-03	7.13E-03	0.00E+00	1.62E-02	0.00E+00	0.00E+00	2.06E-03	0.00E+00	0.00E+00	1.62E-02
2286	ALL	750588.42	4039160.7	NonCancerAcute	0.00E+00	9.64E-06	2.05E-03	0.00E+00	0.00E+00	2.06E-03	6.93E-03	0.00E+00	1.59E-02	0.00E+00	0.00E+00	2.05E-03	0.00E+00	0.00E+00	1.59E-02
2287	ALL	750688.42	4039160.7	NonCancerAcute	0.00E+00	9.65E-06	2.05E-03	0.00E+00	0.00E+00	2.06E-03	6.80E-03	0.00E+00	1.58E-02	0.00E+00	0.00E+00	2.05E-03	0.00E+00	0.00E+00	1.58E-02
2288	ALL	750788.42	4039160.7	NonCancerAcute	0.00E+00	9.48E-06	2.01E-03	0.00E+00	0.00E+00	2.02E-03	6.49E-03	0.00E+00	1.53E-02	0.00E+00	0.00E+00	2.01E-03	0.00E+00	0.00E+00	1.53E-02
2289	ALL	750888.42	4039160.7	NonCancerAcute	0.00E+00	9.25E-06	1.96E-03	0.00E+00	0.00E+00	1.97E-03	6.33E-03	0.00E+00	1.49E-02	0.00E+00	0.00E+00	1.96E-03	0.00E+00	0.00E+00	1.49E-02
2290	ALL	750988.42	4039160.7	NonCancerAcute	0.00E+00	9.25E-06	1.96E-03	0.00E+00	0.00E+00	1.97E-03	6.09E-03	0.00E+00	1.46E-02	0.00E+00	0.00E+00	1.96E-03	0.00E+00	0.00E+00	1.46E-02
2291	ALL	751088.42	4039160.7	NonCancerAcute	0.00E+00	9.14E-06	1.94E-03	0.00E+00	0.00E+00	1.95E-03	5.79E-03	0.00E+00	1.41E-02	0.00E+00	0.00E+00	1.94E-03	0.00E+00	0.00E+00	1.41E-02
2292	ALL	751188.42	4039160.7	NonCancerAcute	0.00E+00	8.98E-06	1.91E-03	0.00E+00	0.00E+00	1.92E-03	5.54E-03	0.00E+00	1.37E-02	0.00E+00	0.00E+00	1.91E-03	0.00E+00	0.00E+00	1.37E-02
2293	ALL	751288.42	4039160.7	NonCancerAcute	0.00E+00	8.78E-06	1.87E-03	0.00E+00	0.00E+00	1.87E-03	5.38E-03	0.00E+00	1.34E-02	0.00E+00	0.00E+00	1.87E-03	0.00E+00	0.00E+00	1.34E-02
2294	ALL	751388.42	4039160.7	NonCancerAcute	0.00E+00	8.77E-06	1.86E-03	0.00E+00	0.00E+00	1.87E-03	5.25E-03	0.00E+00	1.32E-02	0.00E+00	0.00E+00	1.86E-03	0.00E+00	0.00E+00	1.32E-02
2295	ALL	752788.42	4039160.7	NonCancerAcute	0.00E+00	6.99E-06	1.48E-03	0.00E+00	0.00E+00	1.49E-03	3.16E-03	0.00E+00	9.26E-03	0.00E+00	0.00E+00	1.48E-03	0.00E+00	0.00E+00	9.26E-03
2296	ALL	752888.42	4039160.7	NonCancerAcute	0.00E+00	6.95E-06	1.48E-03	0.00E+00	0.00E+00	1.48E-03	3.05E-03	0.00E+00	9.10E-03	0.00E+00	0.00E+00	1.48E-03	0.00E+00	0.00E+00	9.10E-03
2297	ALL	752988.42	4039160.7	NonCancerAcute	0.00E+00	6.90E-06	1.47E-03	0.00E+00	0.00E+00	1.47E-03	2.95E-03	0.00E+00	8.93E-03	0.00E+00	0.00E+00	1.47E-03	0.00E+00	0.00E+00	8.93E-03
2298	ALL	753088.42	4039160.7	NonCancerAcute	0.00E+00	6.82E-06	1.45E-03	0.00E+00	0.00E+00	1.46E-03	2.85E-03	0.00E+00	8.76E-03	0.00E+00	0.00E+00	1.45E-03	0.00E+00	0.00E+00	8.76E-03
2299	ALL	753188.42	4039160.7	NonCancerAcute	0.00E+00	6.75E-06	1.43E-03	0.00E+00	0.00E+00	1.44E-03	2.77E-03	0.00E+00	8.60E-03	0.00E+00	0.00E+00	1.43E-03	0.00E+00	0.00E+00	8.60E-03
2300	ALL	747788.42	4039260.7	NonCancerAcute	0.00E+00	1.29E-05	2.74E-03	0.00E+00	0.00E+00	2.75E-03	7.94E-03	0.00E+00	1.97E-02	0.00E+00	0.00E+00	2.74E-03	0.00E+00	0.00E+00	1.97E-02
2301	ALL	747888.42	4039260.7	NonCancerAcute	0.00E+00	1.38E-05	2.93E-03	0.00E+00	0.00E+00	2.94E-03	8.05E-03	0.00E+00	2.05E-02	0.00E+00	0.00E+00	2.93E-03	0.00E+00	0.00E+00	2.05E-02
2302	ALL	747988.42	4039260.7	NonCancerAcute	0.00E+00	1.38E-05	2.93E-03	0.00E+00	0.00E+00	2.94E-03	8.15E-03	0.00E+00	2.06E-02	0.00E+00	0.00E+00	2.93E-03	0.00E+00	0.00E+00	2.06E-02
2303	ALL	748088.42	4039260.7	NonCancerAcute	0.00E+00	1.27E-05	2.70E-03	0.00E+00	0.00E+00	2.72E-03	8.18E-03	0.00E+00	1.99E-02	0.00E+00	0.00E+00	2.70E-03	0.00E+00	0.00E+00	1.99E-02
2304	ALL	748188.42	4039260.7	NonCancerAcute	0.00E+00	1.22E-05	2.59E-03	0.00E+00	0.00E+00	2.60E-03	8.12E-03	0.00E+00	1.94E-02	0.00E+00	0.00E+00	2.59E-03	0.00E+00	0.00E+00	1.94E-02
2305	ALL	749888.42	4039260.7	NonCancerAcute	0.00E+00	1.07E-05	2.27E-03	0.00E+00	0.00E+00	2.28E-03	8.65E-03	0.00E+00	1.88E-02	0.00E+00	0.00E+00	2.27E-03	0.00E+00	0.00E+00	1.88E-02
2306	ALL	749988.42	4039260.7	NonCancerAcute	0.00E+00	1.05E-05	2.24E-03	0.00E+00	0.00E+00	2.25E-03	8.88E-03	0.00E+00	1.90E-02	0.00E+00	0.00E+00	2.24E-03	0.00E+00	0.00E+00	1.90E-02
2307	ALL	750088.42	4039260.7	NonCancerAcute	0.00E+00	1.05E-05	2.24E-03	0.00E+00	0.00E+00	2.25E-03	8.64E-03	0.00E+00	1.87E-02	0.00E+00	0.00E+00	2.24E-03	0.00E+00	0.00E+00	1.87E-02
2308	ALL	750188.42	4039260.7	NonCancerAcute	0.00E+00	1.04E-05	2.21E-03	0.00E+00	0.00E+00	2.22E-03	8.54E-03	0.00E+00	1.85E-02	0.00E+00	0.00E+00	2.21E-03	0.00E+00	0.00E+00	1.85E-02
2309	ALL	750288.42	4039260.7	NonCancerAcute	0.00E+00	1.02E-05	2.17E-03	0.00E+00	0.00E+00	2.18E-03	8.01E-03	0.00E+00	1.77E-02	0.00E+00	0.00E+00	2.17E-03	0.00E+00	0.00E+00	1.77E-02
2310	ALL	750388.42	4039260.7	NonCancerAcute	0.00E+00	1.01E-05	2.14E-03	0.00E+00	0.00E+00	2.15E-03	7.74E-03	0.00E+00	1.73E-02	0.00E+00	0.00E+00	2.14E-03	0.00E+00	0.00E+00	1.73E-02
2311	ALL	750488.42	4039260.7	NonCancerAcute	0.00E+00	9.79E-06	2.08E-03	0.00E+00	0.00E+00	2.09E-03	7.41E-03	0.00E+00	1.66E-02	0.00E+00	0.00E+00	2.08E-03	0.00E+00	0.00E+00	1.66E-02
2312	ALL	750588.42	4039260.7	NonCancerAcute	0.00E+00	9.37E-06	1.99E-03	0.00E+00	0.00E+00	2.00E-03	7.09E-03	0.00E+00	1.59E-02	0.00E+00	0.00E+00	1.99E-03	0.00E+00	0.00E+00	1.59E-02
2313	ALL	750688.42	4039260.7	NonCancerAcute	0.00E+00	9.35E-06	1.99E-03	0.00E+00	0.00E+00	2.00E-03	6.81E-03	0.00E+00	1.56E-02	0.00E+00	0.00E+00	1.99E-03	0.00E+00	0.00E+00	1.56E-02
2314	ALL	750788.42	4039260.7	NonCancerAcute	0.00E+00	9.47E-06	2.01E-03	0.00E+00	0.00E+00	2.02E-03	6.68E-03	0.00E+00	1.55E-02	0.00E+00	0.00E+00	2.01E-03	0.00E+00	0.00E+00	1.55E-02
2315	ALL	750888.42	4039260.7	NonCancerAcute	0.00E+00	9.41E-06	2.00E-03	0.00E+00	0.00E+00	2.01E-03	6.37E-03	0.00E+00	1.51E-02	0.00E+00	0.00E+00	2.00E-03	0.00E+00	0.00E+00	1.51E-02
2316	ALL	750988.42	4039260.7	NonCancerAcute	0.00E+00	9.20E-06	1.95E-03	0.00E+00	0.00E+00	1.96E-03	6.16E-03	0.00E+00	1.46E-02	0.00E+00	0.00E+00	1.95E-03	0.00E+00	0.00E+00	1.46E-02
2317	ALL	751088.42	4039260.7	NonCancerAcute	0.00E+00	9.10E-06	1.93E-03	0.00E+00	0.00E+00	1.94E-03	5.92E-03	0.00E+00	1.43E-02	0.00E+00	0.00E+00	1.93E-03	0.00E+00	0.00E+00	1.43E-02
2318	ALL	751188.42	4039260.7	NonCancerAcute	0.00E+00	9.02E-06	1.92E-03	0.00E+00	0.00E+00	1.92E-03	5.87E-03	0.00E+00	1.41E-02	0.00E+00	0.00E+00	1.92E-03	0.00E+00	0.00E+00	1.41E-02
2319	ALL	751288.42	4039260.7	NonCancerAcute	0.00E+00	8.88E-06	1.89E-03	0.00E+00	0.00E+00	1.90E-03	5.59E-03	0.00E+00	1.37E-02	0.00E+00	0.00E+00	1.89E-03	0.00E+00	0.00E+00	1.37E-02
2320	ALL	751388.42	4039260.7	NonCancerAcute	0.00E+00	8.75E-06	1.86E-03	0.00E+00	0.00E+00	1.87E-03	5.13E-03	0.00E+00	1.30E-02	0.00E+00	0.00E+00	1.86E-03	0.00E+00	0.00E+00	1.30E-02
2321	ALL	752788.42	4039260.7	NonCancerAcute	0.00E+00	7.12E-06	1.51E-03	0.00E+00	0.00E+00	1.52E-03	3.06E-03	0.00E+00	9.24E-03	0.00E+00	0.00E+00	1.51E-03	0.00E+00	0.00E+00	9.24E-03
2322	ALL	752888.42	4039260.7	NonCancerAcute	0.00E+00	6.95E-06	1.48E-03	0.00E+00	0.00E+00	1.48E-03	2.98E-03	0.00E+00	9.01E-03	0.00E+00	0.00E+00	1.48E-03	0.00E+00	0.00E+00	9.01E-03
2323	ALL	752988.42	4039260.7	NonCancerAcute	0.00E+00	6.81E-06	1.45E-03	0.00E+00	0.00E+00	1.45E-03	2.91E-03	0.00E+00	8.82E-03	0.00E+00	0.00E+00	1.45E-03	0.00E+00	0.00E+00	8.82E-03
2324	ALL	753088.42	4039260.7	NonCancerAcute	0.00E+00	6.75E-06	1.43E-03	0.00E+00	0.00E+00	1.44E-03	2.85E-03	0.00E+00	8.70E-03	0.00E+00	0.00E+00	1.43E-03	0.00E+00	0.00E+00	8.70E-03
2325	ALL	753188.42	4039260.7	NonCancerAcute	0.00E+00	6.69E-06	1.42E-03	0.00E+00	0.00E+00	1.43E-03	2.79E-03	0.00E+00	8.57E-03	0.00E+00	0.00E+00	1.42E-03	0.00E+00	0.00E+00	8.57E-03
2326	ALL	747788.42	4039360.7	NonCancerAcute	0.00E+00	1.25E-05	2.66E-03	0.00E+00	0.00E+00	2.67E-03	7.93E-03	0.00E+00	1.94E-02	0.00E+00	0.00E+00	2.66E-03	0.00E+00	0.00E+00	1.94E-02
2327	ALL	747888.42	4039360.7	NonCancerAcute	0.00E+00	1.38E-05	2.93E-03	0.00E+00	0.00E+00	2.95E-03	7.94E-03	0.00E+00	2.04E-02	0.00E+00	0.00E+00	2.93E-03	0.00E+00	0.00E+00	2.04E-02
2328	ALL	747988.42	4039360.7	NonCancerAcute	0.00E+00	1.46E-05	3.10E-03	0.00E+00	0.00E+00	3.11E-03	8.24E-03	0.00E+00	2.13E-02	0.00E+00	0.00E+00	3.10E-03	0.00E+00	0.00E+00	2.13E-02
2329	ALL	748088.42	4039360.7	NonCancerAcute	0.00E+00	1.39E-05	2.95E-03	0.00E+00	0.00E+00	2.97E-03	8.18E-03	0.00E+00	2.08E-02	0.00E+00	0.00E+00	2.95E-03	0.00E+00	0.00E+00	2.08E-02
2330	ALL	748188.42	4039360.7	NonCancerAcute	0.00E+00	1.24E-05	2.64E-03	0.00E+00	0.00E+00	2.65E-03	8.18E-03	0.00E+00	1.96E-02	0.00E+00	0.00E+00	2.64E-03	0.00E+00	0.00E+00	1.96E-02

2331	ALL	749888.42	4039360.7	NonCancerAcute	0.00E+00	1.08E-05	2.29E-03	0.00E+00	0.00E+00	2.30E-03	9.20E-03	0.00E+00	1.96E-02	0.00E+00	0.00E+00	2.29E-03	0.00E+00	0.00E+00	1.96E-02
2332	ALL	749988.42	4039360.7	NonCancerAcute	0.00E+00	1.05E-05	2.24E-03	0.00E+00	0.00E+00	2.25E-03	9.15E-03	0.00E+00	1.93E-02	0.00E+00	0.00E+00	2.24E-03	0.00E+00	0.00E+00	1.93E-02
2333	ALL	750088.42	4039360.7	NonCancerAcute	0.00E+00	1.04E-05	2.22E-03	0.00E+00	0.00E+00	2.23E-03	9.02E-03	0.00E+00	1.91E-02	0.00E+00	0.00E+00	2.22E-03	0.00E+00	0.00E+00	1.91E-02
2334	ALL	750188.42	4039360.7	NonCancerAcute	0.00E+00	1.03E-05	2.19E-03	0.00E+00	0.00E+00	2.20E-03	8.34E-03	0.00E+00	1.82E-02	0.00E+00	0.00E+00	2.19E-03	0.00E+00	0.00E+00	1.82E-02
2335	ALL	750288.42	4039360.7	NonCancerAcute	0.00E+00	1.02E-05	2.16E-03	0.00E+00	0.00E+00	2.17E-03	8.13E-03	0.00E+00	1.78E-02	0.00E+00	0.00E+00	2.16E-03	0.00E+00	0.00E+00	1.78E-02
2336	ALL	750388.42	4039360.7	NonCancerAcute	0.00E+00	9.95E-06	2.11E-03	0.00E+00	0.00E+00	2.12E-03	7.92E-03	0.00E+00	1.74E-02	0.00E+00	0.00E+00	2.11E-03	0.00E+00	0.00E+00	1.74E-02
2337	ALL	750488.42	4039360.7	NonCancerAcute	0.00E+00	9.86E-06	2.09E-03	0.00E+00	0.00E+00	2.10E-03	7.68E-03	0.00E+00	1.70E-02	0.00E+00	0.00E+00	2.09E-03	0.00E+00	0.00E+00	1.70E-02
2338	ALL	750588.42	4039360.7	NonCancerAcute	0.00E+00	9.62E-06	2.04E-03	0.00E+00	0.00E+00	2.05E-03	7.36E-03	0.00E+00	1.64E-02	0.00E+00	0.00E+00	2.04E-03	0.00E+00	0.00E+00	1.64E-02
2339	ALL	750688.42	4039360.7	NonCancerAcute	0.00E+00	9.32E-06	1.98E-03	0.00E+00	0.00E+00	1.99E-03	7.02E-03	0.00E+00	1.58E-02	0.00E+00	0.00E+00	1.98E-03	0.00E+00	0.00E+00	1.58E-02
2340	ALL	750788.42	4039360.7	NonCancerAcute	0.00E+00	9.24E-06	1.96E-03	0.00E+00	0.00E+00	1.97E-03	6.67E-03	0.00E+00	1.53E-02	0.00E+00	0.00E+00	1.96E-03	0.00E+00	0.00E+00	1.53E-02
2341	ALL	750888.42	4039360.7	NonCancerAcute	0.00E+00	9.31E-06	1.98E-03	0.00E+00	0.00E+00	1.99E-03	6.46E-03	0.00E+00	1.51E-02	0.00E+00	0.00E+00	1.98E-03	0.00E+00	0.00E+00	1.51E-02
2342	ALL	750988.42	4039360.7	NonCancerAcute	0.00E+00	9.31E-06	1.98E-03	0.00E+00	0.00E+00	1.99E-03	6.28E-03	0.00E+00	1.49E-02	0.00E+00	0.00E+00	1.98E-03	0.00E+00	0.00E+00	1.49E-02
2343	ALL	751088.42	4039360.7	NonCancerAcute	0.00E+00	9.15E-06	1.94E-03	0.00E+00	0.00E+00	1.95E-03	6.10E-03	0.00E+00	1.45E-02	0.00E+00	0.00E+00	1.94E-03	0.00E+00	0.00E+00	1.45E-02
2344	ALL	751188.42	4039360.7	NonCancerAcute	0.00E+00	9.03E-06	1.92E-03	0.00E+00	0.00E+00	1.93E-03	5.76E-03	0.00E+00	1.40E-02	0.00E+00	0.00E+00	1.92E-03	0.00E+00	0.00E+00	1.40E-02
2345	ALL	751288.42	4039360.7	NonCancerAcute	0.00E+00	8.97E-06	1.90E-03	0.00E+00	0.00E+00	1.91E-03	5.29E-03	0.00E+00	1.34E-02	0.00E+00	0.00E+00	1.90E-03	0.00E+00	0.00E+00	1.34E-02
2346	ALL	751388.42	4039360.7	NonCancerAcute	0.00E+00	8.81E-06	1.87E-03	0.00E+00	0.00E+00	1.88E-03	5.06E-03	0.00E+00	1.30E-02	0.00E+00	0.00E+00	1.87E-03	0.00E+00	0.00E+00	1.30E-02
2347	ALL	752788.42	4039360.7	NonCancerAcute	0.00E+00	7.21E-06	1.53E-03	0.00E+00	0.00E+00	1.54E-03	3.05E-03	0.00E+00	9.30E-03	0.00E+00	0.00E+00	1.53E-03	0.00E+00	0.00E+00	9.30E-03
2348	ALL	752888.42	4039360.7	NonCancerAcute	0.00E+00	7.06E-06	1.50E-03	0.00E+00	0.00E+00	1.51E-03	2.97E-03	0.00E+00	9.09E-03	0.00E+00	0.00E+00	1.50E-03	0.00E+00	0.00E+00	9.09E-03
2349	ALL	752988.42	4039360.7	NonCancerAcute	0.00E+00	6.89E-06	1.46E-03	0.00E+00	0.00E+00	1.47E-03	2.90E-03	0.00E+00	8.87E-03	0.00E+00	0.00E+00	1.46E-03	0.00E+00	0.00E+00	8.87E-03
2350	ALL	753088.42	4039360.7	NonCancerAcute	0.00E+00	6.72E-06	1.43E-03	0.00E+00	0.00E+00	1.43E-03	2.84E-03	0.00E+00	8.67E-03	0.00E+00	0.00E+00	1.43E-03	0.00E+00	0.00E+00	8.67E-03
2351	ALL	753188.42	4039360.7	NonCancerAcute	0.00E+00	6.61E-06	1.40E-03	0.00E+00	0.00E+00	1.41E-03	2.79E-03	0.00E+00	8.52E-03	0.00E+00	0.00E+00	1.40E-03	0.00E+00	0.00E+00	8.52E-03
2352	ALL	747788.42	4039460.7	NonCancerAcute	0.00E+00	1.31E-05	2.77E-03	0.00E+00	0.00E+00	2.79E-03	7.90E-03	0.00E+00	1.98E-02	0.00E+00	0.00E+00	2.77E-03	0.00E+00	0.00E+00	1.98E-02
2353	ALL	747888.42	4039460.7	NonCancerAcute	0.00E+00	1.34E-05	2.85E-03	0.00E+00	0.00E+00	2.86E-03	8.02E-03	0.00E+00	2.02E-02	0.00E+00	0.00E+00	2.85E-03	0.00E+00	0.00E+00	2.02E-02
2354	ALL	747988.42	4039460.7	NonCancerAcute	0.00E+00	1.49E-05	3.16E-03	0.00E+00	0.00E+00	3.17E-03	8.26E-03	0.00E+00	2.16E-02	0.00E+00	0.00E+00	3.16E-03	0.00E+00	0.00E+00	2.16E-02
2355	ALL	748088.42	4039460.7	NonCancerAcute	0.00E+00	1.51E-05	3.20E-03	0.00E+00	0.00E+00	3.21E-03	8.32E-03	0.00E+00	2.18E-02	0.00E+00	0.00E+00	3.20E-03	0.00E+00	0.00E+00	2.18E-02
2356	ALL	748188.42	4039460.7	NonCancerAcute	0.00E+00	1.37E-05	2.90E-03	0.00E+00	0.00E+00	2.92E-03	8.34E-03	0.00E+00	2.08E-02	0.00E+00	0.00E+00	2.90E-03	0.00E+00	0.00E+00	2.08E-02
2357	ALL	749888.42	4039460.7	NonCancerAcute	0.00E+00	1.08E-05	2.29E-03	0.00E+00	0.00E+00	2.30E-03	9.52E-03	0.00E+00	2.00E-02	0.00E+00	0.00E+00	2.29E-03	0.00E+00	0.00E+00	2.00E-02
2358	ALL	749988.42	4039460.7	NonCancerAcute	0.00E+00	1.06E-05	2.25E-03	0.00E+00	0.00E+00	2.26E-03	9.43E-03	0.00E+00	1.97E-02	0.00E+00	0.00E+00	2.25E-03	0.00E+00	0.00E+00	1.97E-02
2359	ALL	750088.42	4039460.7	NonCancerAcute	0.00E+00	1.04E-05	2.21E-03	0.00E+00	0.00E+00	2.22E-03	9.28E-03	0.00E+00	1.94E-02	0.00E+00	0.00E+00	2.21E-03	0.00E+00	0.00E+00	1.94E-02
2360	ALL	750188.42	4039460.7	NonCancerAcute	0.00E+00	1.02E-05	2.16E-03	0.00E+00	0.00E+00	2.17E-03	8.58E-03	0.00E+00	1.84E-02	0.00E+00	0.00E+00	2.16E-03	0.00E+00	0.00E+00	1.84E-02
2361	ALL	750288.42	4039460.7	NonCancerAcute	0.00E+00	1.01E-05	2.14E-03	0.00E+00	0.00E+00	2.15E-03	8.28E-03	0.00E+00	1.79E-02	0.00E+00	0.00E+00	2.14E-03	0.00E+00	0.00E+00	1.79E-02
2362	ALL	750388.42	4039460.7	NonCancerAcute	0.00E+00	9.98E-06	2.12E-03	0.00E+00	0.00E+00	2.13E-03	7.97E-03	0.00E+00	1.75E-02	0.00E+00	0.00E+00	2.12E-03	0.00E+00	0.00E+00	1.75E-02
2363	ALL	750488.42	4039460.7	NonCancerAcute	0.00E+00	9.79E-06	2.08E-03	0.00E+00	0.00E+00	2.09E-03	7.83E-03	0.00E+00	1.71E-02	0.00E+00	0.00E+00	2.08E-03	0.00E+00	0.00E+00	1.71E-02
2364	ALL	750588.42	4039460.7	NonCancerAcute	0.00E+00	9.70E-06	2.06E-03	0.00E+00	0.00E+00	2.07E-03	7.51E-03	0.00E+00	1.67E-02	0.00E+00	0.00E+00	2.06E-03	0.00E+00	0.00E+00	1.67E-02
2365	ALL	750688.42	4039460.7	NonCancerAcute	0.00E+00	9.56E-06	2.03E-03	0.00E+00	0.00E+00	2.04E-03	7.23E-03	0.00E+00	1.62E-02	0.00E+00	0.00E+00	2.03E-03	0.00E+00	0.00E+00	1.62E-02
2366	ALL	750788.42	4039460.7	NonCancerAcute	0.00E+00	9.29E-06	1.97E-03	0.00E+00	0.00E+00	1.98E-03	6.88E-03	0.00E+00	1.56E-02	0.00E+00	0.00E+00	1.97E-03	0.00E+00	0.00E+00	1.56E-02
2367	ALL	750888.42	4039460.7	NonCancerAcute	0.00E+00	9.16E-06	1.95E-03	0.00E+00	0.00E+00	1.95E-03	6.54E-03	0.00E+00	1.51E-02	0.00E+00	0.00E+00	1.95E-03	0.00E+00	0.00E+00	1.51E-02
2368	ALL	750988.42	4039460.7	NonCancerAcute	0.00E+00	9.24E-06	1.96E-03	0.00E+00	0.00E+00	1.97E-03	6.27E-03	0.00E+00	1.48E-02	0.00E+00	0.00E+00	1.96E-03	0.00E+00	0.00E+00	1.48E-02
2369	ALL	751088.42	4039460.7	NonCancerAcute	0.00E+00	9.23E-06	1.96E-03	0.00E+00	0.00E+00	1.97E-03	5.80E-03	0.00E+00	1.42E-02	0.00E+00	0.00E+00	1.96E-03	0.00E+00	0.00E+00	1.42E-02
2370	ALL	751188.42	4039460.7	NonCancerAcute	0.00E+00	9.06E-06	1.92E-03	0.00E+00	0.00E+00	1.93E-03	5.57E-03	0.00E+00	1.38E-02	0.00E+00	0.00E+00	1.92E-03	0.00E+00	0.00E+00	1.38E-02
2371	ALL	751288.42	4039460.7	NonCancerAcute	0.00E+00	8.86E-06	1.88E-03	0.00E+00	0.00E+00	1.89E-03	5.35E-03	0.00E+00	1.34E-02	0.00E+00	0.00E+00	1.88E-03	0.00E+00	0.00E+00	1.34E-02
2372	ALL	751388.42	4039460.7	NonCancerAcute	0.00E+00	8.83E-06	1.87E-03	0.00E+00	0.00E+00	1.88E-03	5.16E-03	0.00E+00	1.31E-02	0.00E+00	0.00E+00	1.87E-03	0.00E+00	0.00E+00	1.31E-02
2373	ALL	752788.42	4039460.7	NonCancerAcute	0.00E+00	7.30E-06	1.55E-03	0.00E+00	0.00E+00	1.56E-03	3.06E-03	0.00E+00	9.38E-03	0.00E+00	0.00E+00	1.55E-03	0.00E+00	0.00E+00	9.38E-03
2374	ALL	752888.42	4039460.7	NonCancerAcute	0.00E+00	7.15E-06	1.52E-03	0.00E+00	0.00E+00	1.53E-03	2.97E-03	0.00E+00	9.16E-03	0.00E+00	0.00E+00	1.52E-03	0.00E+00	0.00E+00	9.16E-03
2375	ALL	752988.42	4039460.7	NonCancerAcute	0.00E+00	6.98E-06	1.48E-03	0.00E+00	0.00E+00	1.49E-03	2.89E-03	0.00E+00	8.93E-03	0.00E+00	0.00E+00	1.48E-03	0.00E+00	0.00E+00	8.93E-03
2376	ALL	753088.42	4039460.7	NonCancerAcute	0.00E+00	6.86E-06	1.46E-03	0.00E+00	0.00E+00	1.46E-03	2.83E-03	0.00E+00	8.76E-03	0.00E+00	0.00E+00	1.46E-03	0.00E+00	0.00E+00	8.76E-03
2377	ALL	753188.42	4039460.7	NonCancerAcute	0.00E+00	6.71E-06	1.42E-03	0.00E+00	0.00E+00	1.43E-03	2.77E-03	0.00E+00	8.56E-03	0.00E+00	0.00E+00	1.42E-03	0.00E+00	0.00E+00	8.56E-03
2378	ALL	747788.42	4039560.7	NonCancerAcute	0.00E+00	1.37E-05	2.92E-03	0.00E+00	0.00E+00	2.93E-03	7.77E-03	0.00E+00	2.01E-02	0.00E+00	0.00E+00	2.92E-03	0.00E+00	0.00E+00	2.01E-02
2379	ALL	747888.42	4039560.7	NonCancerAcute	0.00E+00	1.33E-05	2.83E-03	0.00E+00	0.00E+00	2.85E-03	8.03E-03	0.00E+00	2.01E-02	0.00E+00	0.00E+00	2.83E-03	0.00E+00	0.00E+00	2.01E-02
2380	ALL	747988.42	4039560.7	NonCancerAcute	0.00E+00	1.44E-05	3.06E-03	0.00E+00	0.00E+00	3.08E-03	8.05E-03	0.00E+00	2.10E-02	0.00E+00	0.00E+00	3.06E-03	0.00E+00	0.00E+00	2.10E-02
2381	ALL	748088.42	4039560.7	NonCancerAcute	0.00E+00	1.59E-05	3.38E-03	0.00E+00	0.00E+00	3.40E-03	8.46E-03	0.00E+00	2.26E-02	0.00E+00	0.00E+00	3.38E-03	0.00E+00	0.00E+00	2.26E-02
2382	ALL	748188.42	4039560.7	NonCancerAcute	0.00E+00	1.54E-05	3.27E-03	0.00E+00	0.00E+00	3.28E-03	8.41E-03	0.00E+00	2.22E-02	0.00E+00	0.00E+00	3.27E-03	0.00E+00	0.00E+00	2.22E-02
2383	ALL	749888.42	4039560.7	NonCancerAcute	0.00E+00	1.09E-05	2.32E-03	0.00E+00	0.00E+00	2.33E-03	9.91E-03	0.00E+00	2.06E-02	0.00E+00	0.00E+00	2.32E-03	0.00E+00	0.00E+00	2.06E-02

2384	ALL	749988.42	4039560.7	NonCancerAcute	0.00E+00	1.07E-05	2.27E-03	0.00E+00	0.00E+00	2.28E-03	9.69E-03	0.00E+00	2.01E-02	0.00E+00	0.00E+00	2.27E-03	0.00E+00	0.00E+00	2.01E-02
2385	ALL	750088.42	4039560.7	NonCancerAcute	0.00E+00	1.04E-05	2.21E-03	0.00E+00	0.00E+00	2.22E-03	8.95E-03	0.00E+00	1.90E-02	0.00E+00	0.00E+00	2.21E-03	0.00E+00	0.00E+00	1.90E-02
2386	ALL	750188.42	4039560.7	NonCancerAcute	0.00E+00	1.02E-05	2.16E-03	0.00E+00	0.00E+00	2.17E-03	8.67E-03	0.00E+00	1.85E-02	0.00E+00	0.00E+00	2.16E-03	0.00E+00	0.00E+00	1.85E-02
2387	ALL	750288.42	4039560.7	NonCancerAcute	0.00E+00	9.97E-06	2.12E-03	0.00E+00	0.00E+00	2.13E-03	8.41E-03	0.00E+00	1.80E-02	0.00E+00	0.00E+00	2.12E-03	0.00E+00	0.00E+00	1.80E-02
2388	ALL	750388.42	4039560.7	NonCancerAcute	0.00E+00	9.98E-06	2.12E-03	0.00E+00	0.00E+00	2.13E-03	8.17E-03	0.00E+00	1.77E-02	0.00E+00	0.00E+00	2.12E-03	0.00E+00	0.00E+00	1.77E-02
2389	ALL	750488.42	4039560.7	NonCancerAcute	0.00E+00	9.86E-06	2.09E-03	0.00E+00	0.00E+00	2.10E-03	7.85E-03	0.00E+00	1.72E-02	0.00E+00	0.00E+00	2.09E-03	0.00E+00	0.00E+00	1.72E-02
2390	ALL	750588.42	4039560.7	NonCancerAcute	0.00E+00	9.69E-06	2.06E-03	0.00E+00	0.00E+00	2.07E-03	7.65E-03	0.00E+00	1.68E-02	0.00E+00	0.00E+00	2.06E-03	0.00E+00	0.00E+00	1.68E-02
2391	ALL	750688.42	4039560.7	NonCancerAcute	0.00E+00	9.70E-06	2.06E-03	0.00E+00	0.00E+00	2.07E-03	7.38E-03	0.00E+00	1.65E-02	0.00E+00	0.00E+00	2.06E-03	0.00E+00	0.00E+00	1.65E-02
2392	ALL	750788.42	4039560.7	NonCancerAcute	0.00E+00	9.48E-06	2.01E-03	0.00E+00	0.00E+00	2.02E-03	7.09E-03	0.00E+00	1.60E-02	0.00E+00	0.00E+00	2.01E-03	0.00E+00	0.00E+00	1.60E-02
2393	ALL	750888.42	4039560.7	NonCancerAcute	0.00E+00	9.16E-06	1.95E-03	0.00E+00	0.00E+00	1.96E-03	6.49E-03	0.00E+00	1.50E-02	0.00E+00	0.00E+00	1.95E-03	0.00E+00	0.00E+00	1.50E-02
2394	ALL	750988.42	4039560.7	NonCancerAcute	0.00E+00	9.02E-06	1.91E-03	0.00E+00	0.00E+00	1.92E-03	6.13E-03	0.00E+00	1.45E-02	0.00E+00	0.00E+00	1.91E-03	0.00E+00	0.00E+00	1.45E-02
2395	ALL	751088.42	4039560.7	NonCancerAcute	0.00E+00	9.06E-06	1.92E-03	0.00E+00	0.00E+00	1.93E-03	5.84E-03	0.00E+00	1.41E-02	0.00E+00	0.00E+00	1.92E-03	0.00E+00	0.00E+00	1.41E-02
2396	ALL	751188.42	4039560.7	NonCancerAcute	0.00E+00	9.03E-06	1.92E-03	0.00E+00	0.00E+00	1.93E-03	5.62E-03	0.00E+00	1.39E-02	0.00E+00	0.00E+00	1.92E-03	0.00E+00	0.00E+00	1.39E-02
2397	ALL	751288.42	4039560.7	NonCancerAcute	0.00E+00	8.88E-06	1.88E-03	0.00E+00	0.00E+00	1.89E-03	5.51E-03	0.00E+00	1.36E-02	0.00E+00	0.00E+00	1.88E-03	0.00E+00	0.00E+00	1.36E-02
2398	ALL	751388.42	4039560.7	NonCancerAcute	0.00E+00	8.66E-06	1.84E-03	0.00E+00	0.00E+00	1.85E-03	5.27E-03	0.00E+00	1.31E-02	0.00E+00	0.00E+00	1.84E-03	0.00E+00	0.00E+00	1.31E-02
2399	ALL	752788.42	4039560.7	NonCancerAcute	0.00E+00	7.27E-06	1.54E-03	0.00E+00	0.00E+00	1.55E-03	3.03E-03	0.00E+00	9.32E-03	0.00E+00	0.00E+00	1.54E-03	0.00E+00	0.00E+00	9.32E-03
2400	ALL	752888.42	4039560.7	NonCancerAcute	0.00E+00	7.19E-06	1.53E-03	0.00E+00	0.00E+00	1.53E-03	2.99E-03	0.00E+00	9.21E-03	0.00E+00	0.00E+00	1.53E-03	0.00E+00	0.00E+00	9.21E-03
2401	ALL	752988.42	4039560.7	NonCancerAcute	0.00E+00	7.08E-06	1.50E-03	0.00E+00	0.00E+00	1.51E-03	2.96E-03	0.00E+00	9.08E-03	0.00E+00	0.00E+00	1.50E-03	0.00E+00	0.00E+00	9.08E-03
2402	ALL	753088.42	4039560.7	NonCancerAcute	0.00E+00	6.93E-06	1.47E-03	0.00E+00	0.00E+00	1.48E-03	2.91E-03	0.00E+00	8.91E-03	0.00E+00	0.00E+00	1.47E-03	0.00E+00	0.00E+00	8.91E-03
2403	ALL	753188.42	4039560.7	NonCancerAcute	0.00E+00	6.77E-06	1.44E-03	0.00E+00	0.00E+00	1.44E-03	2.86E-03	0.00E+00	8.73E-03	0.00E+00	0.00E+00	1.44E-03	0.00E+00	0.00E+00	8.73E-03
2404	ALL	746288.42	4039660.7	NonCancerAcute	0.00E+00	1.18E-05	2.51E-03	0.00E+00	0.00E+00	2.52E-03	6.60E-03	0.00E+00	1.72E-02	0.00E+00	0.00E+00	2.51E-03	0.00E+00	0.00E+00	1.72E-02
2405	ALL	746388.42	4039660.7	NonCancerAcute	0.00E+00	1.19E-05	2.53E-03	0.00E+00	0.00E+00	2.54E-03	6.66E-03	0.00E+00	1.74E-02	0.00E+00	0.00E+00	2.53E-03	0.00E+00	0.00E+00	1.74E-02
2406	ALL	746488.42	4039660.7	NonCancerAcute	0.00E+00	1.19E-05	2.52E-03	0.00E+00	0.00E+00	2.54E-03	6.71E-03	0.00E+00	1.74E-02	0.00E+00	0.00E+00	2.52E-03	0.00E+00	0.00E+00	1.74E-02
2407	ALL	746588.42	4039660.7	NonCancerAcute	0.00E+00	1.22E-05	2.60E-03	0.00E+00	0.00E+00	2.61E-03	6.80E-03	0.00E+00	1.78E-02	0.00E+00	0.00E+00	2.60E-03	0.00E+00	0.00E+00	1.78E-02
2408	ALL	746688.42	4039660.7	NonCancerAcute	0.00E+00	1.24E-05	2.63E-03	0.00E+00	0.00E+00	2.64E-03	6.87E-03	0.00E+00	1.80E-02	0.00E+00	0.00E+00	2.63E-03	0.00E+00	0.00E+00	1.80E-02
2409	ALL	746788.42	4039660.7	NonCancerAcute	0.00E+00	1.23E-05	2.61E-03	0.00E+00	0.00E+00	2.62E-03	6.71E-03	0.00E+00	1.77E-02	0.00E+00	0.00E+00	2.61E-03	0.00E+00	0.00E+00	1.77E-02
2410	ALL	746888.42	4039660.7	NonCancerAcute	0.00E+00	1.21E-05	2.56E-03	0.00E+00	0.00E+00	2.58E-03	7.01E-03	0.00E+00	1.79E-02	0.00E+00	0.00E+00	2.56E-03	0.00E+00	0.00E+00	1.79E-02
2411	ALL	746988.42	4039660.7	NonCancerAcute	0.00E+00	1.22E-05	2.59E-03	0.00E+00	0.00E+00	2.61E-03	7.06E-03	0.00E+00	1.81E-02	0.00E+00	0.00E+00	2.59E-03	0.00E+00	0.00E+00	1.81E-02
2412	ALL	747088.42	4039660.7	NonCancerAcute	0.00E+00	1.25E-05	2.65E-03	0.00E+00	0.00E+00	2.66E-03	7.16E-03	0.00E+00	1.84E-02	0.00E+00	0.00E+00	2.65E-03	0.00E+00	0.00E+00	1.84E-02
2413	ALL	747188.42	4039660.7	NonCancerAcute	0.00E+00	1.23E-05	2.61E-03	0.00E+00	0.00E+00	2.62E-03	7.21E-03	0.00E+00	1.83E-02	0.00E+00	0.00E+00	2.61E-03	0.00E+00	0.00E+00	1.83E-02
2414	ALL	747288.42	4039660.7	NonCancerAcute	0.00E+00	1.25E-05	2.65E-03	0.00E+00	0.00E+00	2.66E-03	7.32E-03	0.00E+00	1.86E-02	0.00E+00	0.00E+00	2.65E-03	0.00E+00	0.00E+00	1.86E-02
2415	ALL	747388.42	4039660.7	NonCancerAcute	0.00E+00	1.28E-05	2.72E-03	0.00E+00	0.00E+00	2.73E-03	7.27E-03	0.00E+00	1.88E-02	0.00E+00	0.00E+00	2.72E-03	0.00E+00	0.00E+00	1.88E-02
2416	ALL	747488.42	4039660.7	NonCancerAcute	0.00E+00	1.32E-05	2.80E-03	0.00E+00	0.00E+00	2.81E-03	7.17E-03	0.00E+00	1.90E-02	0.00E+00	0.00E+00	2.80E-03	0.00E+00	0.00E+00	1.90E-02
2417	ALL	747588.42	4039660.7	NonCancerAcute	0.00E+00	1.31E-05	2.77E-03	0.00E+00	0.00E+00	2.79E-03	7.17E-03	0.00E+00	1.89E-02	0.00E+00	0.00E+00	2.77E-03	0.00E+00	0.00E+00	1.89E-02
2418	ALL	747688.42	4039660.7	NonCancerAcute	0.00E+00	1.33E-05	2.82E-03	0.00E+00	0.00E+00	2.83E-03	7.69E-03	0.00E+00	1.97E-02	0.00E+00	0.00E+00	2.82E-03	0.00E+00	0.00E+00	1.97E-02
2419	ALL	747788.42	4039660.7	NonCancerAcute	0.00E+00	1.40E-05	2.98E-03	0.00E+00	0.00E+00	3.00E-03	7.89E-03	0.00E+00	2.05E-02	0.00E+00	0.00E+00	2.98E-03	0.00E+00	0.00E+00	2.05E-02
2420	ALL	747888.42	4039660.7	NonCancerAcute	0.00E+00	1.41E-05	2.99E-03	0.00E+00	0.00E+00	3.01E-03	7.89E-03	0.00E+00	2.05E-02	0.00E+00	0.00E+00	2.99E-03	0.00E+00	0.00E+00	2.05E-02
2421	ALL	747988.42	4039660.7	NonCancerAcute	0.00E+00	1.41E-05	2.99E-03	0.00E+00	0.00E+00	3.00E-03	7.93E-03	0.00E+00	2.06E-02	0.00E+00	0.00E+00	2.99E-03	0.00E+00	0.00E+00	2.06E-02
2422	ALL	748088.42	4039660.7	NonCancerAcute	0.00E+00	1.57E-05	3.33E-03	0.00E+00	0.00E+00	3.35E-03	8.38E-03	0.00E+00	2.24E-02	0.00E+00	0.00E+00	3.33E-03	0.00E+00	0.00E+00	2.24E-02
2423	ALL	748188.42	4039660.7	NonCancerAcute	0.00E+00	1.67E-05	3.55E-03	0.00E+00	0.00E+00	3.57E-03	8.59E-03	0.00E+00	2.34E-02	0.00E+00	0.00E+00	3.55E-03	0.00E+00	0.00E+00	2.34E-02
2424	ALL	749888.42	4039660.7	NonCancerAcute	0.00E+00	1.09E-05	2.31E-03	0.00E+00	0.00E+00	2.32E-03	1.02E-02	0.00E+00	2.08E-02	0.00E+00	0.00E+00	2.31E-03	0.00E+00	0.00E+00	2.08E-02
2425	ALL	749988.42	4039660.7	NonCancerAcute	0.00E+00	1.06E-05	2.25E-03	0.00E+00	0.00E+00	2.26E-03	9.71E-03	0.00E+00	2.01E-02	0.00E+00	0.00E+00	2.25E-03	0.00E+00	0.00E+00	2.01E-02
2426	ALL	750088.42	4039660.7	NonCancerAcute	0.00E+00	1.04E-05	2.20E-03	0.00E+00	0.00E+00	2.21E-03	9.22E-03	0.00E+00	1.93E-02	0.00E+00	0.00E+00	2.20E-03	0.00E+00	0.00E+00	1.93E-02
2427	ALL	750188.42	4039660.7	NonCancerAcute	0.00E+00	1.01E-05	2.15E-03	0.00E+00	0.00E+00	2.16E-03	8.87E-03	0.00E+00	1.87E-02	0.00E+00	0.00E+00	2.15E-03	0.00E+00	0.00E+00	1.87E-02
2428	ALL	750288.42	4039660.7	NonCancerAcute	0.00E+00	1.00E-05	2.13E-03	0.00E+00	0.00E+00	2.14E-03	8.56E-03	0.00E+00	1.82E-02	0.00E+00	0.00E+00	2.13E-03	0.00E+00	0.00E+00	1.82E-02
2429	ALL	750388.42	4039660.7	NonCancerAcute	0.00E+00	9.85E-06	2.09E-03	0.00E+00	0.00E+00	2.10E-03	8.30E-03	0.00E+00	1.78E-02	0.00E+00	0.00E+00	2.09E-03	0.00E+00	0.00E+00	1.78E-02
2430	ALL	750488.42	4039660.7	NonCancerAcute	0.00E+00	9.81E-06	2.08E-03	0.00E+00	0.00E+00	2.09E-03	8.00E-03	0.00E+00	1.74E-02	0.00E+00	0.00E+00	2.08E-03	0.00E+00	0.00E+00	1.74E-02
2431	ALL	750588.42	4039660.7	NonCancerAcute	0.00E+00	9.65E-06	2.05E-03	0.00E+00	0.00E+00	2.06E-03	7.70E-03	0.00E+00	1.69E-02	0.00E+00	0.00E+00	2.05E-03	0.00E+00	0.00E+00	1.69E-02
2432	ALL	750688.42	4039660.7	NonCancerAcute	0.00E+00	9.51E-06	2.02E-03	0.00E+00	0.00E+00	2.03E-03	7.23E-03	0.00E+00	1.62E-02	0.00E+00	0.00E+00	2.02E-03	0.00E+00	0.00E+00	1.62E-02
2433	ALL	750788.42	4039660.7	NonCancerAcute	0.00E+00	9.44E-06	2.01E-03	0.00E+00	0.00E+00	2.02E-03	6.95E-03	0.00E+00	1.58E-02	0.00E+00	0.00E+00	2.01E-03	0.00E+00	0.00E+00	1.58E-02
2434	ALL	750888.42	4039660.7	NonCancerAcute	0.00E+00	9.22E-06	1.96E-03	0.00E+00	0.00E+00	1.97E-03	6.64E-03	0.00E+00	1.52E-02	0.00E+00	0.00E+00	1.96E-03	0.00E+00	0.00E+00	1.52E-02
2435	ALL	750988.42	4039660.7	NonCancerAcute	0.00E+00	8.95E-06	1.90E-03	0.00E+00	0.00E+00	1.91E-03	6.37E-03	0.00E+00	1.47E-02	0.00E+00	0.00E+00	1.90E-03	0.00E+00	0.00E+00	1.47E-02
2436	ALL	751088.42	4039660.7	NonCancerAcute	0.00E+00	8.84E-06	1.88E-03	0.00E+00	0.00E+00	1.89E-03	6.07E-03	0.00E+00	1.43E-02	0.00E+00	0.00E+00	1.88E-03	0.00E+00	0.00E+00	1.43E-02

2437	ALL	751188.42	4039660.7	NonCancerAcute	0.00E+00	8.88E-06	1.89E-03	0.00E+00	0.00E+00	1.89E-03	5.78E-03	0.00E+00	1.39E-02	0.00E+00	0.00E+00	1.89E-03	0.00E+00	0.00E+00	1.39E-02
2438	ALL	751288.42	4039660.7	NonCancerAcute	0.00E+00	8.87E-06	1.88E-03	0.00E+00	0.00E+00	1.89E-03	5.52E-03	0.00E+00	1.36E-02	0.00E+00	0.00E+00	1.88E-03	0.00E+00	0.00E+00	1.36E-02
2439	ALL	751388.42	4039660.7	NonCancerAcute	0.00E+00	8.76E-06	1.86E-03	0.00E+00	0.00E+00	1.87E-03	5.25E-03	0.00E+00	1.32E-02	0.00E+00	0.00E+00	1.86E-03	0.00E+00	0.00E+00	1.32E-02
2440	ALL	752788.42	4039660.7	NonCancerAcute	0.00E+00	7.26E-06	1.54E-03	0.00E+00	0.00E+00	1.55E-03	3.23E-03	0.00E+00	9.56E-03	0.00E+00	0.00E+00	1.54E-03	0.00E+00	0.00E+00	9.56E-03
2441	ALL	752888.42	4039660.7	NonCancerAcute	0.00E+00	7.16E-06	1.52E-03	0.00E+00	0.00E+00	1.53E-03	3.13E-03	0.00E+00	9.36E-03	0.00E+00	0.00E+00	1.52E-03	0.00E+00	0.00E+00	9.36E-03
2442	ALL	752988.42	4039660.7	NonCancerAcute	0.00E+00	7.07E-06	1.50E-03	0.00E+00	0.00E+00	1.51E-03	3.05E-03	0.00E+00	9.19E-03	0.00E+00	0.00E+00	1.50E-03	0.00E+00	0.00E+00	9.19E-03
2443	ALL	753088.42	4039660.7	NonCancerAcute	0.00E+00	6.99E-06	1.48E-03	0.00E+00	0.00E+00	1.49E-03	2.97E-03	0.00E+00	9.04E-03	0.00E+00	0.00E+00	1.48E-03	0.00E+00	0.00E+00	9.04E-03
2444	ALL	753188.42	4039660.7	NonCancerAcute	0.00E+00	6.88E-06	1.46E-03	0.00E+00	0.00E+00	1.47E-03	2.90E-03	0.00E+00	8.86E-03	0.00E+00	0.00E+00	1.46E-03	0.00E+00	0.00E+00	8.86E-03
2445	ALL	746288.42	4039760.7	NonCancerAcute	0.00E+00	1.19E-05	2.52E-03	0.00E+00	0.00E+00	2.54E-03	6.59E-03	0.00E+00	1.72E-02	0.00E+00	0.00E+00	2.52E-03	0.00E+00	0.00E+00	1.72E-02
2446	ALL	746388.42	4039760.7	NonCancerAcute	0.00E+00	1.21E-05	2.56E-03	0.00E+00	0.00E+00	2.57E-03	6.61E-03	0.00E+00	1.74E-02	0.00E+00	0.00E+00	2.56E-03	0.00E+00	0.00E+00	1.74E-02
2447	ALL	746488.42	4039760.7	NonCancerAcute	0.00E+00	1.19E-05	2.53E-03	0.00E+00	0.00E+00	2.54E-03	6.67E-03	0.00E+00	1.74E-02	0.00E+00	0.00E+00	2.53E-03	0.00E+00	0.00E+00	1.74E-02
2448	ALL	746588.42	4039760.7	NonCancerAcute	0.00E+00	1.22E-05	2.58E-03	0.00E+00	0.00E+00	2.60E-03	6.74E-03	0.00E+00	1.76E-02	0.00E+00	0.00E+00	2.58E-03	0.00E+00	0.00E+00	1.76E-02
2449	ALL	746688.42	4039760.7	NonCancerAcute	0.00E+00	1.22E-05	2.60E-03	0.00E+00	0.00E+00	2.61E-03	6.81E-03	0.00E+00	1.78E-02	0.00E+00	0.00E+00	2.60E-03	0.00E+00	0.00E+00	1.78E-02
2450	ALL	746788.42	4039760.7	NonCancerAcute	0.00E+00	1.21E-05	2.57E-03	0.00E+00	0.00E+00	2.58E-03	6.57E-03	0.00E+00	1.74E-02	0.00E+00	0.00E+00	2.57E-03	0.00E+00	0.00E+00	1.74E-02
2451	ALL	746888.42	4039760.7	NonCancerAcute	0.00E+00	1.21E-05	2.57E-03	0.00E+00	0.00E+00	2.58E-03	6.91E-03	0.00E+00	1.78E-02	0.00E+00	0.00E+00	2.57E-03	0.00E+00	0.00E+00	1.78E-02
2452	ALL	746988.42	4039760.7	NonCancerAcute	0.00E+00	1.23E-05	2.61E-03	0.00E+00	0.00E+00	2.62E-03	6.97E-03	0.00E+00	1.80E-02	0.00E+00	0.00E+00	2.61E-03	0.00E+00	0.00E+00	1.80E-02
2453	ALL	747088.42	4039760.7	NonCancerAcute	0.00E+00	1.23E-05	2.61E-03	0.00E+00	0.00E+00	2.62E-03	7.07E-03	0.00E+00	1.81E-02	0.00E+00	0.00E+00	2.61E-03	0.00E+00	0.00E+00	1.81E-02
2454	ALL	747188.42	4039760.7	NonCancerAcute	0.00E+00	1.23E-05	2.61E-03	0.00E+00	0.00E+00	2.62E-03	7.16E-03	0.00E+00	1.83E-02	0.00E+00	0.00E+00	2.61E-03	0.00E+00	0.00E+00	1.83E-02
2455	ALL	747288.42	4039760.7	NonCancerAcute	0.00E+00	1.28E-05	2.71E-03	0.00E+00	0.00E+00	2.72E-03	7.26E-03	0.00E+00	1.87E-02	0.00E+00	0.00E+00	2.71E-03	0.00E+00	0.00E+00	1.87E-02
2456	ALL	747388.42	4039760.7	NonCancerAcute	0.00E+00	1.33E-05	2.82E-03	0.00E+00	0.00E+00	2.83E-03	7.32E-03	0.00E+00	1.92E-02	0.00E+00	0.00E+00	2.82E-03	0.00E+00	0.00E+00	1.92E-02
2457	ALL	747488.42	4039760.7	NonCancerAcute	0.00E+00	1.37E-05	2.90E-03	0.00E+00	0.00E+00	2.92E-03	7.22E-03	0.00E+00	1.94E-02	0.00E+00	0.00E+00	2.90E-03	0.00E+00	0.00E+00	1.94E-02
2458	ALL	747588.42	4039760.7	NonCancerAcute	0.00E+00	1.35E-05	2.88E-03	0.00E+00	0.00E+00	2.89E-03	7.11E-03	0.00E+00	1.92E-02	0.00E+00	0.00E+00	2.88E-03	0.00E+00	0.00E+00	1.92E-02
2459	ALL	747688.42	4039760.7	NonCancerAcute	0.00E+00	1.40E-05	2.97E-03	0.00E+00	0.00E+00	2.98E-03	7.64E-03	0.00E+00	2.02E-02	0.00E+00	0.00E+00	2.97E-03	0.00E+00	0.00E+00	2.02E-02
2460	ALL	747788.42	4039760.7	NonCancerAcute	0.00E+00	1.38E-05	2.92E-03	0.00E+00	0.00E+00	2.94E-03	7.86E-03	0.00E+00	2.02E-02	0.00E+00	0.00E+00	2.92E-03	0.00E+00	0.00E+00	2.02E-02
2461	ALL	747888.42	4039760.7	NonCancerAcute	0.00E+00	1.42E-05	3.01E-03	0.00E+00	0.00E+00	3.02E-03	7.97E-03	0.00E+00	2.07E-02	0.00E+00	0.00E+00	3.01E-03	0.00E+00	0.00E+00	2.07E-02
2462	ALL	747988.42	4039760.7	NonCancerAcute	0.00E+00	1.47E-05	3.12E-03	0.00E+00	0.00E+00	3.13E-03	8.12E-03	0.00E+00	2.13E-02	0.00E+00	0.00E+00	3.12E-03	0.00E+00	0.00E+00	2.13E-02
2463	ALL	748088.42	4039760.7	NonCancerAcute	0.00E+00	1.49E-05	3.16E-03	0.00E+00	0.00E+00	3.18E-03	8.32E-03	0.00E+00	2.17E-02	0.00E+00	0.00E+00	3.16E-03	0.00E+00	0.00E+00	2.17E-02
2464	ALL	748188.42	4039760.7	NonCancerAcute	0.00E+00	1.68E-05	3.56E-03	0.00E+00	0.00E+00	3.57E-03	8.56E-03	0.00E+00	2.34E-02	0.00E+00	0.00E+00	3.56E-03	0.00E+00	0.00E+00	2.34E-02
2465	ALL	749888.42	4039760.7	NonCancerAcute	0.00E+00	1.06E-05	2.25E-03	0.00E+00	0.00E+00	2.26E-03	1.01E-02	0.00E+00	2.05E-02	0.00E+00	0.00E+00	2.25E-03	0.00E+00	0.00E+00	2.05E-02
2466	ALL	749988.42	4039760.7	NonCancerAcute	0.00E+00	1.04E-05	2.20E-03	0.00E+00	0.00E+00	2.21E-03	9.94E-03	0.00E+00	2.02E-02	0.00E+00	0.00E+00	2.20E-03	0.00E+00	0.00E+00	2.02E-02
2467	ALL	750088.42	4039760.7	NonCancerAcute	0.00E+00	1.03E-05	2.19E-03	0.00E+00	0.00E+00	2.20E-03	9.58E-03	0.00E+00	1.97E-02	0.00E+00	0.00E+00	2.19E-03	0.00E+00	0.00E+00	1.97E-02
2468	ALL	750188.42	4039760.7	NonCancerAcute	0.00E+00	1.01E-05	2.15E-03	0.00E+00	0.00E+00	2.16E-03	9.13E-03	0.00E+00	1.90E-02	0.00E+00	0.00E+00	2.15E-03	0.00E+00	0.00E+00	1.90E-02
2469	ALL	750288.42	4039760.7	NonCancerAcute	0.00E+00	9.89E-06	2.10E-03	0.00E+00	0.00E+00	2.11E-03	8.67E-03	0.00E+00	1.83E-02	0.00E+00	0.00E+00	2.10E-03	0.00E+00	0.00E+00	1.83E-02
2470	ALL	750388.42	4039760.7	NonCancerAcute	0.00E+00	9.81E-06	2.08E-03	0.00E+00	0.00E+00	2.09E-03	8.35E-03	0.00E+00	1.78E-02	0.00E+00	0.00E+00	2.08E-03	0.00E+00	0.00E+00	1.78E-02
2471	ALL	750488.42	4039760.7	NonCancerAcute	0.00E+00	9.62E-06	2.04E-03	0.00E+00	0.00E+00	2.05E-03	8.07E-03	0.00E+00	1.73E-02	0.00E+00	0.00E+00	2.04E-03	0.00E+00	0.00E+00	1.73E-02
2472	ALL	750588.42	4039760.7	NonCancerAcute	0.00E+00	9.56E-06	2.03E-03	0.00E+00	0.00E+00	2.04E-03	7.69E-03	0.00E+00	1.68E-02	0.00E+00	0.00E+00	2.03E-03	0.00E+00	0.00E+00	1.68E-02
2473	ALL	750688.42	4039760.7	NonCancerAcute	0.00E+00	9.43E-06	2.00E-03	0.00E+00	0.00E+00	2.01E-03	7.30E-03	0.00E+00	1.62E-02	0.00E+00	0.00E+00	2.00E-03	0.00E+00	0.00E+00	1.62E-02
2474	ALL	750788.42	4039760.7	NonCancerAcute	0.00E+00	9.29E-06	1.97E-03	0.00E+00	0.00E+00	1.98E-03	7.04E-03	0.00E+00	1.58E-02	0.00E+00	0.00E+00	1.97E-03	0.00E+00	0.00E+00	1.58E-02
2475	ALL	750888.42	4039760.7	NonCancerAcute	0.00E+00	9.26E-06	1.97E-03	0.00E+00	0.00E+00	1.98E-03	6.79E-03	0.00E+00	1.55E-02	0.00E+00	0.00E+00	1.97E-03	0.00E+00	0.00E+00	1.55E-02
2476	ALL	750988.42	4039760.7	NonCancerAcute	0.00E+00	9.09E-06	1.93E-03	0.00E+00	0.00E+00	1.94E-03	6.50E-03	0.00E+00	1.50E-02	0.00E+00	0.00E+00	1.93E-03	0.00E+00	0.00E+00	1.50E-02
2477	ALL	751088.42	4039760.7	NonCancerAcute	0.00E+00	8.88E-06	1.89E-03	0.00E+00	0.00E+00	1.89E-03	6.13E-03	0.00E+00	1.44E-02	0.00E+00	0.00E+00	1.89E-03	0.00E+00	0.00E+00	1.44E-02
2478	ALL	751188.42	4039760.7	NonCancerAcute	0.00E+00	8.72E-06	1.85E-03	0.00E+00	0.00E+00	1.86E-03	5.80E-03	0.00E+00	1.38E-02	0.00E+00	0.00E+00	1.85E-03	0.00E+00	0.00E+00	1.38E-02
2479	ALL	751288.42	4039760.7	NonCancerAcute	0.00E+00	8.75E-06	1.86E-03	0.00E+00	0.00E+00	1.87E-03	5.51E-03	0.00E+00	1.35E-02	0.00E+00	0.00E+00	1.86E-03	0.00E+00	0.00E+00	1.35E-02
2480	ALL	751388.42	4039760.7	NonCancerAcute	0.00E+00	8.72E-06	1.85E-03	0.00E+00	0.00E+00	1.86E-03	5.23E-03	0.00E+00	1.31E-02	0.00E+00	0.00E+00	1.85E-03	0.00E+00	0.00E+00	1.31E-02
2481	ALL	752788.42	4039760.7	NonCancerAcute	0.00E+00	7.31E-06	1.55E-03	0.00E+00	0.00E+00	1.56E-03	3.27E-03	0.00E+00	9.64E-03	0.00E+00	0.00E+00	1.55E-03	0.00E+00	0.00E+00	9.64E-03
2482	ALL	752888.42	4039760.7	NonCancerAcute	0.00E+00	7.23E-06	1.54E-03	0.00E+00	0.00E+00	1.54E-03	3.14E-03	0.00E+00	9.43E-03	0.00E+00	0.00E+00	1.54E-03	0.00E+00	0.00E+00	9.43E-03
2483	ALL	752988.42	4039760.7	NonCancerAcute	0.00E+00	7.14E-06	1.52E-03	0.00E+00	0.00E+00	1.52E-03	3.02E-03	0.00E+00	9.21E-03	0.00E+00	0.00E+00	1.52E-03	0.00E+00	0.00E+00	9.21E-03
2484	ALL	753088.42	4039760.7	NonCancerAcute	0.00E+00	7.01E-06	1.49E-03	0.00E+00	0.00E+00	1.50E-03	2.90E-03	0.00E+00	8.97E-03	0.00E+00	0.00E+00	1.49E-03	0.00E+00	0.00E+00	8.97E-03
2485	ALL	753188.42	4039760.7	NonCancerAcute	0.00E+00	6.90E-06	1.47E-03	0.00E+00	0.00E+00	1.47E-03	2.78E-03	0.00E+00	8.74E-03	0.00E+00	0.00E+00	1.47E-03	0.00E+00	0.00E+00	8.74E-03
2486	ALL	746588.42	4039860.7	NonCancerAcute	0.00E+00	1.19E-05	2.54E-03	0.00E+00	0.00E+00	2.55E-03	6.80E-03	0.00E+00	1.75E-02	0.00E+00	0.00E+00	2.54E-03	0.00E+00	0.00E+00	1.75E-02
2487	ALL	746688.42	4039860.7	NonCancerAcute	0.00E+00	1.23E-05	2.61E-03	0.00E+00	0.00E+00	2.62E-03	6.86E-03	0.00E+00	1.79E-02	0.00E+00	0.00E+00	2.61E-03	0.00E+00	0.00E+00	1.79E-02
2488	ALL	746788.42	4039860.7	NonCancerAcute	0.00E+00	1.23E-05	2.61E-03	0.00E+00	0.00E+00	2.62E-03	6.60E-03	0.00E+00	1.76E-02	0.00E+00	0.00E+00	2.61E-03	0.00E+00	0.00E+00	1.76E-02
2489	ALL	746888.42	4039860.7	NonCancerAcute	0.00E+00	1.24E-05	2.62E-03	0.00E+00	0.00E+00	2.64E-03	6.88E-03	0.00E+00	1.80E-02	0.00E+00	0.00E+00	2.62E-03	0.00E+00	0.00E+00	1.80E-02

2490	ALL	746988.42	4039860.7	NonCancerAcute	0.00E+00	1.26E-05	2.67E-03	0.00E+00	0.00E+00	2.68E-03	6.91E-03	0.00E+00	1.82E-02	0.00E+00	0.00E+00	2.67E-03	0.00E+00	0.00E+00	1.82E-02
2491	ALL	747088.42	4039860.7	NonCancerAcute	0.00E+00	1.27E-05	2.69E-03	0.00E+00	0.00E+00	2.70E-03	7.03E-03	0.00E+00	1.84E-02	0.00E+00	0.00E+00	2.69E-03	0.00E+00	0.00E+00	1.84E-02
2492	ALL	747188.42	4039860.7	NonCancerAcute	0.00E+00	1.24E-05	2.63E-03	0.00E+00	0.00E+00	2.64E-03	7.10E-03	0.00E+00	1.82E-02	0.00E+00	0.00E+00	2.63E-03	0.00E+00	0.00E+00	1.82E-02
2493	ALL	747288.42	4039860.7	NonCancerAcute	0.00E+00	1.25E-05	2.64E-03	0.00E+00	0.00E+00	2.66E-03	7.20E-03	0.00E+00	1.84E-02	0.00E+00	0.00E+00	2.64E-03	0.00E+00	0.00E+00	1.84E-02
2494	ALL	747388.42	4039860.7	NonCancerAcute	0.00E+00	1.30E-05	2.76E-03	0.00E+00	0.00E+00	2.77E-03	7.27E-03	0.00E+00	1.89E-02	0.00E+00	0.00E+00	2.76E-03	0.00E+00	0.00E+00	1.89E-02
2495	ALL	747488.42	4039860.7	NonCancerAcute	0.00E+00	1.38E-05	2.93E-03	0.00E+00	0.00E+00	2.95E-03	7.26E-03	0.00E+00	1.95E-02	0.00E+00	0.00E+00	2.93E-03	0.00E+00	0.00E+00	1.95E-02
2496	ALL	747588.42	4039860.7	NonCancerAcute	0.00E+00	1.42E-05	3.01E-03	0.00E+00	0.00E+00	3.03E-03	7.00E-03	0.00E+00	1.95E-02	0.00E+00	0.00E+00	3.01E-03	0.00E+00	0.00E+00	1.95E-02
2497	ALL	747688.42	4039860.7	NonCancerAcute	0.00E+00	1.48E-05	3.15E-03	0.00E+00	0.00E+00	3.17E-03	7.56E-03	0.00E+00	2.07E-02	0.00E+00	0.00E+00	3.15E-03	0.00E+00	0.00E+00	2.07E-02
2498	ALL	747788.42	4039860.7	NonCancerAcute	0.00E+00	1.49E-05	3.16E-03	0.00E+00	0.00E+00	3.18E-03	7.86E-03	0.00E+00	2.11E-02	0.00E+00	0.00E+00	3.16E-03	0.00E+00	0.00E+00	2.11E-02
2499	ALL	747888.42	4039860.7	NonCancerAcute	0.00E+00	1.42E-05	3.02E-03	0.00E+00	0.00E+00	3.03E-03	7.96E-03	0.00E+00	2.07E-02	0.00E+00	0.00E+00	3.02E-03	0.00E+00	0.00E+00	2.07E-02
2500	ALL	747988.42	4039860.7	NonCancerAcute	0.00E+00	1.47E-05	3.12E-03	0.00E+00	0.00E+00	3.13E-03	8.12E-03	0.00E+00	2.13E-02	0.00E+00	0.00E+00	3.12E-03	0.00E+00	0.00E+00	2.13E-02
2501	ALL	748088.42	4039860.7	NonCancerAcute	0.00E+00	1.51E-05	3.21E-03	0.00E+00	0.00E+00	3.23E-03	8.28E-03	0.00E+00	2.18E-02	0.00E+00	0.00E+00	3.21E-03	0.00E+00	0.00E+00	2.18E-02
2502	ALL	749888.42	4039860.7	NonCancerAcute	0.00E+00	1.01E-05	2.15E-03	0.00E+00	0.00E+00	2.16E-03	1.12E-02	0.00E+00	2.15E-02	0.00E+00	0.00E+00	2.15E-03	0.00E+00	0.00E+00	2.15E-02
2503	ALL	749988.42	4039860.7	NonCancerAcute	0.00E+00	1.02E-05	2.17E-03	0.00E+00	0.00E+00	2.18E-03	9.89E-03	0.00E+00	2.00E-02	0.00E+00	0.00E+00	2.17E-03	0.00E+00	0.00E+00	2.00E-02
2504	ALL	750088.42	4039860.7	NonCancerAcute	0.00E+00	1.01E-05	2.14E-03	0.00E+00	0.00E+00	2.15E-03	9.73E-03	0.00E+00	1.97E-02	0.00E+00	0.00E+00	2.14E-03	0.00E+00	0.00E+00	1.97E-02
2505	ALL	750188.42	4039860.7	NonCancerAcute	0.00E+00	1.00E-05	2.13E-03	0.00E+00	0.00E+00	2.14E-03	9.33E-03	0.00E+00	1.92E-02	0.00E+00	0.00E+00	2.13E-03	0.00E+00	0.00E+00	1.92E-02
2506	ALL	750288.42	4039860.7	NonCancerAcute	0.00E+00	9.94E-06	2.11E-03	0.00E+00	0.00E+00	2.12E-03	8.87E-03	0.00E+00	1.85E-02	0.00E+00	0.00E+00	2.11E-03	0.00E+00	0.00E+00	1.85E-02
2507	ALL	750388.42	4039860.7	NonCancerAcute	0.00E+00	9.68E-06	2.06E-03	0.00E+00	0.00E+00	2.07E-03	8.39E-03	0.00E+00	1.78E-02	0.00E+00	0.00E+00	2.06E-03	0.00E+00	0.00E+00	1.78E-02
2508	ALL	750488.42	4039860.7	NonCancerAcute	0.00E+00	9.61E-06	2.04E-03	0.00E+00	0.00E+00	2.05E-03	8.08E-03	0.00E+00	1.73E-02	0.00E+00	0.00E+00	2.04E-03	0.00E+00	0.00E+00	1.73E-02
2509	ALL	750588.42	4039860.7	NonCancerAcute	0.00E+00	9.45E-06	2.01E-03	0.00E+00	0.00E+00	2.02E-03	7.75E-03	0.00E+00	1.68E-02	0.00E+00	0.00E+00	2.01E-03	0.00E+00	0.00E+00	1.68E-02
2510	ALL	750688.42	4039860.7	NonCancerAcute	0.00E+00	9.43E-06	2.00E-03	0.00E+00	0.00E+00	2.01E-03	7.41E-03	0.00E+00	1.63E-02	0.00E+00	0.00E+00	2.00E-03	0.00E+00	0.00E+00	1.63E-02
2511	ALL	750788.42	4039860.7	NonCancerAcute	0.00E+00	9.28E-06	1.97E-03	0.00E+00	0.00E+00	1.98E-03	7.03E-03	0.00E+00	1.58E-02	0.00E+00	0.00E+00	1.97E-03	0.00E+00	0.00E+00	1.58E-02
2512	ALL	750888.42	4039860.7	NonCancerAcute	0.00E+00	9.12E-06	1.94E-03	0.00E+00	0.00E+00	1.95E-03	6.68E-03	0.00E+00	1.52E-02	0.00E+00	0.00E+00	1.94E-03	0.00E+00	0.00E+00	1.52E-02
2513	ALL	750988.42	4039860.7	NonCancerAcute	0.00E+00	9.09E-06	1.93E-03	0.00E+00	0.00E+00	1.94E-03	6.44E-03	0.00E+00	1.49E-02	0.00E+00	0.00E+00	1.93E-03	0.00E+00	0.00E+00	1.49E-02
2514	ALL	751088.42	4039860.7	NonCancerAcute	0.00E+00	8.95E-06	1.90E-03	0.00E+00	0.00E+00	1.91E-03	6.19E-03	0.00E+00	1.45E-02	0.00E+00	0.00E+00	1.90E-03	0.00E+00	0.00E+00	1.45E-02
2515	ALL	751188.42	4039860.7	NonCancerAcute	0.00E+00	8.73E-06	1.85E-03	0.00E+00	0.00E+00	1.86E-03	5.91E-03	0.00E+00	1.40E-02	0.00E+00	0.00E+00	1.85E-03	0.00E+00	0.00E+00	1.40E-02
2516	ALL	751288.42	4039860.7	NonCancerAcute	0.00E+00	8.58E-06	1.82E-03	0.00E+00	0.00E+00	1.83E-03	5.63E-03	0.00E+00	1.35E-02	0.00E+00	0.00E+00	1.82E-03	0.00E+00	0.00E+00	1.35E-02
2517	ALL	751388.42	4039860.7	NonCancerAcute	0.00E+00	8.60E-06	1.83E-03	0.00E+00	0.00E+00	1.83E-03	5.35E-03	0.00E+00	1.32E-02	0.00E+00	0.00E+00	1.83E-03	0.00E+00	0.00E+00	1.32E-02
2518	ALL	752788.42	4039860.7	NonCancerAcute	0.00E+00	7.27E-06	1.54E-03	0.00E+00	0.00E+00	1.55E-03	3.20E-03	0.00E+00	9.53E-03	0.00E+00	0.00E+00	1.54E-03	0.00E+00	0.00E+00	9.53E-03
2519	ALL	752888.42	4039860.7	NonCancerAcute	0.00E+00	7.17E-06	1.52E-03	0.00E+00	0.00E+00	1.53E-03	3.11E-03	0.00E+00	9.34E-03	0.00E+00	0.00E+00	1.52E-03	0.00E+00	0.00E+00	9.34E-03
2520	ALL	752988.42	4039860.7	NonCancerAcute	0.00E+00	7.09E-06	1.51E-03	0.00E+00	0.00E+00	1.51E-03	3.01E-03	0.00E+00	9.16E-03	0.00E+00	0.00E+00	1.51E-03	0.00E+00	0.00E+00	9.16E-03
2521	ALL	753088.42	4039860.7	NonCancerAcute	0.00E+00	7.03E-06	1.49E-03	0.00E+00	0.00E+00	1.50E-03	2.91E-03	0.00E+00	8.99E-03	0.00E+00	0.00E+00	1.49E-03	0.00E+00	0.00E+00	8.99E-03
2522	ALL	753188.42	4039860.7	NonCancerAcute	0.00E+00	6.93E-06	1.47E-03	0.00E+00	0.00E+00	1.48E-03	2.83E-03	0.00E+00	8.81E-03	0.00E+00	0.00E+00	1.47E-03	0.00E+00	0.00E+00	8.81E-03
2523	ALL	749888.42	4039960.7	NonCancerAcute	0.00E+00	1.01E-05	2.15E-03	0.00E+00	0.00E+00	2.16E-03	1.15E-02	0.00E+00	2.19E-02	0.00E+00	0.00E+00	2.15E-03	0.00E+00	0.00E+00	2.19E-02
2524	ALL	749988.42	4039960.7	NonCancerAcute	0.00E+00	9.99E-06	2.12E-03	0.00E+00	0.00E+00	2.13E-03	1.01E-02	0.00E+00	2.01E-02	0.00E+00	0.00E+00	2.12E-03	0.00E+00	0.00E+00	2.01E-02
2525	ALL	750088.42	4039960.7	NonCancerAcute	0.00E+00	1.01E-05	2.14E-03	0.00E+00	0.00E+00	2.15E-03	9.82E-03	0.00E+00	1.98E-02	0.00E+00	0.00E+00	2.14E-03	0.00E+00	0.00E+00	1.98E-02
2526	ALL	750188.42	4039960.7	NonCancerAcute	0.00E+00	9.97E-06	2.12E-03	0.00E+00	0.00E+00	2.13E-03	9.38E-03	0.00E+00	1.92E-02	0.00E+00	0.00E+00	2.12E-03	0.00E+00	0.00E+00	1.92E-02
2527	ALL	750288.42	4039960.7	NonCancerAcute	0.00E+00	9.84E-06	2.09E-03	0.00E+00	0.00E+00	2.10E-03	9.02E-03	0.00E+00	1.86E-02	0.00E+00	0.00E+00	2.09E-03	0.00E+00	0.00E+00	1.86E-02
2528	ALL	750388.42	4039960.7	NonCancerAcute	0.00E+00	9.74E-06	2.07E-03	0.00E+00	0.00E+00	2.08E-03	8.51E-03	0.00E+00	1.79E-02	0.00E+00	0.00E+00	2.07E-03	0.00E+00	0.00E+00	1.79E-02
2529	ALL	750488.42	4039960.7	NonCancerAcute	0.00E+00	9.48E-06	2.01E-03	0.00E+00	0.00E+00	2.02E-03	8.06E-03	0.00E+00	1.72E-02	0.00E+00	0.00E+00	2.01E-03	0.00E+00	0.00E+00	1.72E-02
2530	ALL	750588.42	4039960.7	NonCancerAcute	0.00E+00	9.40E-06	2.00E-03	0.00E+00	0.00E+00	2.01E-03	7.72E-03	0.00E+00	1.67E-02	0.00E+00	0.00E+00	2.00E-03	0.00E+00	0.00E+00	1.67E-02
2531	ALL	750688.42	4039960.7	NonCancerAcute	0.00E+00	9.26E-06	1.97E-03	0.00E+00	0.00E+00	1.98E-03	7.42E-03	0.00E+00	1.62E-02	0.00E+00	0.00E+00	1.97E-03	0.00E+00	0.00E+00	1.62E-02
2532	ALL	750788.42	4039960.7	NonCancerAcute	0.00E+00	9.25E-06	1.96E-03	0.00E+00	0.00E+00	1.97E-03	7.11E-03	0.00E+00	1.58E-02	0.00E+00	0.00E+00	1.96E-03	0.00E+00	0.00E+00	1.58E-02
2533	ALL	750888.42	4039960.7	NonCancerAcute	0.00E+00	9.13E-06	1.94E-03	0.00E+00	0.00E+00	1.95E-03	6.75E-03	0.00E+00	1.53E-02	0.00E+00	0.00E+00	1.94E-03	0.00E+00	0.00E+00	1.53E-02
2534	ALL	750988.42	4039960.7	NonCancerAcute	0.00E+00	9.00E-06	1.91E-03	0.00E+00	0.00E+00	1.92E-03	6.43E-03	0.00E+00	1.48E-02	0.00E+00	0.00E+00	1.91E-03	0.00E+00	0.00E+00	1.48E-02
2535	ALL	751088.42	4039960.7	NonCancerAcute	0.00E+00	9.00E-06	1.91E-03	0.00E+00	0.00E+00	1.92E-03	6.29E-03	0.00E+00	1.47E-02	0.00E+00	0.00E+00	1.91E-03	0.00E+00	0.00E+00	1.47E-02
2536	ALL	751188.42	4039960.7	NonCancerAcute	0.00E+00	8.85E-06	1.88E-03	0.00E+00	0.00E+00	1.89E-03	6.09E-03	0.00E+00	1.43E-02	0.00E+00	0.00E+00	1.88E-03	0.00E+00	0.00E+00	1.43E-02
2537	ALL	751288.42	4039960.7	NonCancerAcute	0.00E+00	8.64E-06	1.84E-03	0.00E+00	0.00E+00	1.84E-03	5.84E-03	0.00E+00	1.38E-02	0.00E+00	0.00E+00	1.84E-03	0.00E+00	0.00E+00	1.38E-02
2538	ALL	751388.42	4039960.7	NonCancerAcute	0.00E+00	8.54E-06	1.81E-03	0.00E+00	0.00E+00	1.82E-03	5.61E-03	0.00E+00	1.35E-02	0.00E+00	0.00E+00	1.81E-03	0.00E+00	0.00E+00	1.35E-02
2539	ALL	752788.42	4039960.7	NonCancerAcute	0.00E+00	7.29E-06	1.55E-03	0.00E+00	0.00E+00	1.55E-03	3.30E-03	0.00E+00	9.66E-03	0.00E+00	0.00E+00	1.55E-03	0.00E+00	0.00E+00	9.66E-03
2540	ALL	752888.42	4039960.7	NonCancerAcute	0.00E+00	7.19E-06	1.53E-03	0.00E+00	0.00E+00	1.53E-03	3.21E-03	0.00E+00	9.47E-03	0.00E+00	0.00E+00	1.53E-03	0.00E+00	0.00E+00	9.47E-03
2541	ALL	752988.42	4039960.7	NonCancerAcute	0.00E+00	7.08E-06	1.50E-03	0.00E+00	0.00E+00	1.51E-03	3.11E-03	0.00E+00	9.27E-03	0.00E+00	0.00E+00	1.50E-03	0.00E+00	0.00E+00	9.27E-03
2542	ALL	753088.42	4039960.7	NonCancerAcute	0.00E+00	6.98E-06	1.48E-03	0.00E+00	0.00E+00	1.49E-03	3.02E-03	0.00E+00	9.09E-03	0.00E+00	0.00E+00	1.48E-03	0.00E+00	0.00E+00	9.09E-03

2543	ALL	753188.42	4039960.7	NonCancerAcute	0.00E+00	6.90E-06	1.47E-03	0.00E+00	0.00E+00	1.47E-03	2.93E-03	0.00E+00	8.91E-03	0.00E+00	0.00E+00	1.47E-03	0.00E+00	0.00E+00	8.91E-03
2544	ALL	746288.42	4040060.7	NonCancerAcute	0.00E+00	1.14E-05	2.43E-03	0.00E+00	0.00E+00	2.44E-03	6.15E-03	0.00E+00	1.64E-02	0.00E+00	0.00E+00	2.43E-03	0.00E+00	0.00E+00	1.64E-02
2545	ALL	746388.42	4040060.7	NonCancerAcute	0.00E+00	1.15E-05	2.44E-03	0.00E+00	0.00E+00	2.45E-03	6.19E-03	0.00E+00	1.64E-02	0.00E+00	0.00E+00	2.44E-03	0.00E+00	0.00E+00	1.64E-02
2546	ALL	746488.42	4040060.7	NonCancerAcute	0.00E+00	1.16E-05	2.47E-03	0.00E+00	0.00E+00	2.48E-03	6.29E-03	0.00E+00	1.67E-02	0.00E+00	0.00E+00	2.47E-03	0.00E+00	0.00E+00	1.67E-02
2547	ALL	752788.42	4040060.7	NonCancerAcute	0.00E+00	7.19E-06	1.53E-03	0.00E+00	0.00E+00	1.53E-03	3.24E-03	0.00E+00	9.53E-03	0.00E+00	0.00E+00	1.53E-03	0.00E+00	0.00E+00	9.53E-03
2548	ALL	752888.42	4040060.7	NonCancerAcute	0.00E+00	7.12E-06	1.51E-03	0.00E+00	0.00E+00	1.52E-03	3.15E-03	0.00E+00	9.35E-03	0.00E+00	0.00E+00	1.51E-03	0.00E+00	0.00E+00	9.35E-03
2549	ALL	752988.42	4040060.7	NonCancerAcute	0.00E+00	7.05E-06	1.50E-03	0.00E+00	0.00E+00	1.50E-03	3.06E-03	0.00E+00	9.19E-03	0.00E+00	0.00E+00	1.50E-03	0.00E+00	0.00E+00	9.19E-03
2550	ALL	753088.42	4040060.7	NonCancerAcute	0.00E+00	6.93E-06	1.47E-03	0.00E+00	0.00E+00	1.48E-03	2.97E-03	0.00E+00	8.98E-03	0.00E+00	0.00E+00	1.47E-03	0.00E+00	0.00E+00	8.98E-03
2551	ALL	753188.42	4040060.7	NonCancerAcute	0.00E+00	6.83E-06	1.45E-03	0.00E+00	0.00E+00	1.46E-03	2.87E-03	0.00E+00	8.79E-03	0.00E+00	0.00E+00	1.45E-03	0.00E+00	0.00E+00	8.79E-03
2552	ALL	746288.42	4040160.7	NonCancerAcute	0.00E+00	1.19E-05	2.52E-03	0.00E+00	0.00E+00	2.53E-03	6.17E-03	0.00E+00	1.67E-02	0.00E+00	0.00E+00	2.52E-03	0.00E+00	0.00E+00	1.67E-02
2553	ALL	746388.42	4040160.7	NonCancerAcute	0.00E+00	1.17E-05	2.49E-03	0.00E+00	0.00E+00	2.50E-03	6.17E-03	0.00E+00	1.66E-02	0.00E+00	0.00E+00	2.49E-03	0.00E+00	0.00E+00	1.66E-02
2554	ALL	746488.42	4040160.7	NonCancerAcute	0.00E+00	1.19E-05	2.53E-03	0.00E+00	0.00E+00	2.54E-03	6.29E-03	0.00E+00	1.69E-02	0.00E+00	0.00E+00	2.53E-03	0.00E+00	0.00E+00	1.69E-02
2555	ALL	751488.42	4040160.7	NonCancerAcute	0.00E+00	8.40E-06	1.78E-03	0.00E+00	0.00E+00	1.79E-03	5.24E-03	0.00E+00	1.29E-02	0.00E+00	0.00E+00	1.78E-03	0.00E+00	0.00E+00	1.29E-02
2556	ALL	751588.42	4040160.7	NonCancerAcute	0.00E+00	8.22E-06	1.75E-03	0.00E+00	0.00E+00	1.75E-03	5.05E-03	0.00E+00	1.25E-02	0.00E+00	0.00E+00	1.75E-03	0.00E+00	0.00E+00	1.25E-02
2557	ALL	751688.42	4040160.7	NonCancerAcute	0.00E+00	8.16E-06	1.73E-03	0.00E+00	0.00E+00	1.74E-03	4.86E-03	0.00E+00	1.23E-02	0.00E+00	0.00E+00	1.73E-03	0.00E+00	0.00E+00	1.23E-02
2558	ALL	751788.42	4040160.7	NonCancerAcute	0.00E+00	8.17E-06	1.73E-03	0.00E+00	0.00E+00	1.74E-03	4.66E-03	0.00E+00	1.20E-02	0.00E+00	0.00E+00	1.73E-03	0.00E+00	0.00E+00	1.20E-02
2559	ALL	751888.42	4040160.7	NonCancerAcute	0.00E+00	8.10E-06	1.72E-03	0.00E+00	0.00E+00	1.73E-03	4.45E-03	0.00E+00	1.17E-02	0.00E+00	0.00E+00	1.72E-03	0.00E+00	0.00E+00	1.17E-02
2560	ALL	751988.42	4040160.7	NonCancerAcute	0.00E+00	7.99E-06	1.70E-03	0.00E+00	0.00E+00	1.70E-03	4.27E-03	0.00E+00	1.14E-02	0.00E+00	0.00E+00	1.70E-03	0.00E+00	0.00E+00	1.14E-02
2561	ALL	752088.42	4040160.7	NonCancerAcute	0.00E+00	7.84E-06	1.67E-03	0.00E+00	0.00E+00	1.67E-03	4.14E-03	0.00E+00	1.11E-02	0.00E+00	0.00E+00	1.67E-03	0.00E+00	0.00E+00	1.11E-02
2562	ALL	752188.42	4040160.7	NonCancerAcute	0.00E+00	7.76E-06	1.65E-03	0.00E+00	0.00E+00	1.65E-03	4.04E-03	0.00E+00	1.09E-02	0.00E+00	0.00E+00	1.65E-03	0.00E+00	0.00E+00	1.09E-02
2563	ALL	752288.42	4040160.7	NonCancerAcute	0.00E+00	7.68E-06	1.63E-03	0.00E+00	0.00E+00	1.64E-03	3.92E-03	0.00E+00	1.07E-02	0.00E+00	0.00E+00	1.63E-03	0.00E+00	0.00E+00	1.07E-02
2564	ALL	752388.42	4040160.7	NonCancerAcute	0.00E+00	7.59E-06	1.61E-03	0.00E+00	0.00E+00	1.62E-03	3.81E-03	0.00E+00	1.05E-02	0.00E+00	0.00E+00	1.61E-03	0.00E+00	0.00E+00	1.05E-02
2565	ALL	752488.42	4040160.7	NonCancerAcute	0.00E+00	7.47E-06	1.59E-03	0.00E+00	0.00E+00	1.59E-03	3.70E-03	0.00E+00	1.03E-02	0.00E+00	0.00E+00	1.59E-03	0.00E+00	0.00E+00	1.03E-02
2566	ALL	752588.42	4040160.7	NonCancerAcute	0.00E+00	7.35E-06	1.56E-03	0.00E+00	0.00E+00	1.57E-03	3.60E-03	0.00E+00	1.01E-02	0.00E+00	0.00E+00	1.56E-03	0.00E+00	0.00E+00	1.01E-02
2567	ALL	752688.42	4040160.7	NonCancerAcute	0.00E+00	7.23E-06	1.54E-03	0.00E+00	0.00E+00	1.54E-03	3.48E-03	0.00E+00	9.85E-03	0.00E+00	0.00E+00	1.54E-03	0.00E+00	0.00E+00	9.85E-03
2568	ALL	752788.42	4040160.7	NonCancerAcute	0.00E+00	7.17E-06	1.52E-03	0.00E+00	0.00E+00	1.53E-03	3.36E-03	0.00E+00	9.65E-03	0.00E+00	0.00E+00	1.52E-03	0.00E+00	0.00E+00	9.65E-03
2569	ALL	752888.42	4040160.7	NonCancerAcute	0.00E+00	7.10E-06	1.51E-03	0.00E+00	0.00E+00	1.51E-03	3.24E-03	0.00E+00	9.45E-03	0.00E+00	0.00E+00	1.51E-03	0.00E+00	0.00E+00	9.45E-03
2570	ALL	752988.42	4040160.7	NonCancerAcute	0.00E+00	7.02E-06	1.49E-03	0.00E+00	0.00E+00	1.50E-03	3.14E-03	0.00E+00	9.26E-03	0.00E+00	0.00E+00	1.49E-03	0.00E+00	0.00E+00	9.26E-03
2571	ALL	753088.42	4040160.7	NonCancerAcute	0.00E+00	6.96E-06	1.48E-03	0.00E+00	0.00E+00	1.48E-03	3.06E-03	0.00E+00	9.12E-03	0.00E+00	0.00E+00	1.48E-03	0.00E+00	0.00E+00	9.12E-03
2572	ALL	753188.42	4040160.7	NonCancerAcute	0.00E+00	6.86E-06	1.46E-03	0.00E+00	0.00E+00	1.46E-03	2.98E-03	0.00E+00	8.95E-03	0.00E+00	0.00E+00	1.46E-03	0.00E+00	0.00E+00	8.95E-03
2573	ALL	746288.42	4040260.7	NonCancerAcute	0.00E+00	1.17E-05	2.49E-03	0.00E+00	0.00E+00	2.50E-03	6.06E-03	0.00E+00	1.65E-02	0.00E+00	0.00E+00	2.49E-03	0.00E+00	0.00E+00	1.65E-02
2574	ALL	746388.42	4040260.7	NonCancerAcute	0.00E+00	1.15E-05	2.45E-03	0.00E+00	0.00E+00	2.46E-03	6.04E-03	0.00E+00	1.63E-02	0.00E+00	0.00E+00	2.45E-03	0.00E+00	0.00E+00	1.63E-02
2575	ALL	746488.42	4040260.7	NonCancerAcute	0.00E+00	1.18E-05	2.52E-03	0.00E+00	0.00E+00	2.53E-03	6.13E-03	0.00E+00	1.66E-02	0.00E+00	0.00E+00	2.52E-03	0.00E+00	0.00E+00	1.66E-02
2576	ALL	751488.42	4040260.7	NonCancerAcute	0.00E+00	8.38E-06	1.78E-03	0.00E+00	0.00E+00	1.79E-03	5.34E-03	0.00E+00	1.30E-02	0.00E+00	0.00E+00	1.78E-03	0.00E+00	0.00E+00	1.30E-02
2577	ALL	751588.42	4040260.7	NonCancerAcute	0.00E+00	8.20E-06	1.74E-03	0.00E+00	0.00E+00	1.75E-03	5.19E-03	0.00E+00	1.27E-02	0.00E+00	0.00E+00	1.74E-03	0.00E+00	0.00E+00	1.27E-02
2578	ALL	751688.42	4040260.7	NonCancerAcute	0.00E+00	8.03E-06	1.71E-03	0.00E+00	0.00E+00	1.71E-03	5.02E-03	0.00E+00	1.23E-02	0.00E+00	0.00E+00	1.71E-03	0.00E+00	0.00E+00	1.23E-02
2579	ALL	751788.42	4040260.7	NonCancerAcute	0.00E+00	7.96E-06	1.69E-03	0.00E+00	0.00E+00	1.70E-03	4.84E-03	0.00E+00	1.21E-02	0.00E+00	0.00E+00	1.69E-03	0.00E+00	0.00E+00	1.21E-02
2580	ALL	751888.42	4040260.7	NonCancerAcute	0.00E+00	7.98E-06	1.70E-03	0.00E+00	0.00E+00	1.70E-03	4.65E-03	0.00E+00	1.19E-02	0.00E+00	0.00E+00	1.70E-03	0.00E+00	0.00E+00	1.19E-02
2581	ALL	751988.42	4040260.7	NonCancerAcute	0.00E+00	7.93E-06	1.68E-03	0.00E+00	0.00E+00	1.69E-03	4.45E-03	0.00E+00	1.16E-02	0.00E+00	0.00E+00	1.68E-03	0.00E+00	0.00E+00	1.16E-02
2582	ALL	752088.42	4040260.7	NonCancerAcute	0.00E+00	7.84E-06	1.66E-03	0.00E+00	0.00E+00	1.67E-03	4.25E-03	0.00E+00	1.13E-02	0.00E+00	0.00E+00	1.66E-03	0.00E+00	0.00E+00	1.13E-02
2583	ALL	752188.42	4040260.7	NonCancerAcute	0.00E+00	7.71E-06	1.64E-03	0.00E+00	0.00E+00	1.64E-03	4.11E-03	0.00E+00	1.10E-02	0.00E+00	0.00E+00	1.64E-03	0.00E+00	0.00E+00	1.10E-02
2584	ALL	752288.42	4040260.7	NonCancerAcute	0.00E+00	7.62E-06	1.62E-03	0.00E+00	0.00E+00	1.62E-03	4.01E-03	0.00E+00	1.08E-02	0.00E+00	0.00E+00	1.62E-03	0.00E+00	0.00E+00	1.08E-02
2585	ALL	752388.42	4040260.7	NonCancerAcute	0.00E+00	7.55E-06	1.60E-03	0.00E+00	0.00E+00	1.61E-03	3.91E-03	0.00E+00	1.06E-02	0.00E+00	0.00E+00	1.60E-03	0.00E+00	0.00E+00	1.06E-02
2586	ALL	752488.42	4040260.7	NonCancerAcute	0.00E+00	7.48E-06	1.59E-03	0.00E+00	0.00E+00	1.60E-03	3.80E-03	0.00E+00	1.04E-02	0.00E+00	0.00E+00	1.59E-03	0.00E+00	0.00E+00	1.04E-02
2587	ALL	752588.42	4040260.7	NonCancerAcute	0.00E+00	7.37E-06	1.57E-03	0.00E+00	0.00E+00	1.57E-03	3.69E-03	0.00E+00	1.02E-02	0.00E+00	0.00E+00	1.57E-03	0.00E+00	0.00E+00	1.02E-02
2588	ALL	752688.42	4040260.7	NonCancerAcute	0.00E+00	7.26E-06	1.54E-03	0.00E+00	0.00E+00	1.55E-03	3.59E-03	0.00E+00	1.00E-02	0.00E+00	0.00E+00	1.54E-03	0.00E+00	0.00E+00	1.00E-02
2589	ALL	752788.42	4040260.7	NonCancerAcute	0.00E+00	7.13E-06	1.51E-03	0.00E+00	0.00E+00	1.52E-03	3.48E-03	0.00E+00	9.76E-03	0.00E+00	0.00E+00	1.51E-03	0.00E+00	0.00E+00	9.76E-03
2590	ALL	752888.42	4040260.7	NonCancerAcute	0.00E+00	7.09E-06	1.51E-03	0.00E+00	0.00E+00	1.51E-03	3.37E-03	0.00E+00	9.60E-03	0.00E+00	0.00E+00	1.51E-03	0.00E+00	0.00E+00	9.60E-03
2591	ALL	752988.42	4040260.7	NonCancerAcute	0.00E+00	7.02E-06	1.49E-03	0.00E+00	0.00E+00	1.50E-03	3.26E-03	0.00E+00	9.41E-03	0.00E+00	0.00E+00	1.49E-03	0.00E+00	0.00E+00	9.41E-03
2592	ALL	753088.42	4040260.7	NonCancerAcute	0.00E+00	6.97E-06	1.48E-03	0.00E+00	0.00E+00	1.49E-03	3.15E-03	0.00E+00	9.23E-03	0.00E+00	0.00E+00	1.48E-03	0.00E+00	0.00E+00	9.23E-03
2593	ALL	753188.42	4040260.7	NonCancerAcute	0.00E+00	6.90E-06	1.47E-03	0.00E+00	0.00E+00	1.47E-03	3.07E-03	0.00E+00	9.09E-03	0.00E+00	0.00E+00	1.47E-03	0.00E+00	0.00E+00	9.09E-03
2594	ALL	746288.42	4040360.7	NonCancerAcute	0.00E+00	1.11E-05	2.37E-03	0.00E+00	0.00E+00	2.38E-03	5.93E-03	0.00E+00	1.59E-02	0.00E+00	0.00E+00	2.37E-03	0.00E+00	0.00E+00	1.59E-02
2595	ALL	746388.42	4040360.7	NonCancerAcute	0.00E+00	1.09E-05	2.32E-03	0.00E+00	0.00E+00	2.33E-03	5.93E-03	0.00E+00	1.57E-02	0.00E+00	0.00E+00	2.32E-03	0.00E+00	0.00E+00	1.57E-02

2596	ALL	751488.42	4040360.7	NonCancerAcute	0.00E+00	8.29E-06	1.76E-03	0.00E+00	0.00E+00	1.77E-03	5.27E-03	0.00E+00	1.28E-02	0.00E+00	0.00E+00	1.76E-03	0.00E+00	0.00E+00	1.28E-02
2597	ALL	751588.42	4040360.7	NonCancerAcute	0.00E+00	8.18E-06	1.74E-03	0.00E+00	0.00E+00	1.75E-03	5.11E-03	0.00E+00	1.26E-02	0.00E+00	0.00E+00	1.74E-03	0.00E+00	0.00E+00	1.26E-02
2598	ALL	751688.42	4040360.7	NonCancerAcute	0.00E+00	8.01E-06	1.70E-03	0.00E+00	0.00E+00	1.71E-03	4.97E-03	0.00E+00	1.23E-02	0.00E+00	0.00E+00	1.70E-03	0.00E+00	0.00E+00	1.23E-02
2599	ALL	751788.42	4040360.7	NonCancerAcute	0.00E+00	7.85E-06	1.67E-03	0.00E+00	0.00E+00	1.67E-03	4.81E-03	0.00E+00	1.19E-02	0.00E+00	0.00E+00	1.67E-03	0.00E+00	0.00E+00	1.19E-02
2600	ALL	751888.42	4040360.7	NonCancerAcute	0.00E+00	7.77E-06	1.65E-03	0.00E+00	0.00E+00	1.66E-03	4.63E-03	0.00E+00	1.17E-02	0.00E+00	0.00E+00	1.65E-03	0.00E+00	0.00E+00	1.17E-02
2601	ALL	751988.42	4040360.7	NonCancerAcute	0.00E+00	7.79E-06	1.66E-03	0.00E+00	0.00E+00	1.66E-03	4.45E-03	0.00E+00	1.15E-02	0.00E+00	0.00E+00	1.66E-03	0.00E+00	0.00E+00	1.15E-02
2602	ALL	752088.42	4040360.7	NonCancerAcute	0.00E+00	7.76E-06	1.65E-03	0.00E+00	0.00E+00	1.65E-03	4.26E-03	0.00E+00	1.12E-02	0.00E+00	0.00E+00	1.65E-03	0.00E+00	0.00E+00	1.12E-02
2603	ALL	752188.42	4040360.7	NonCancerAcute	0.00E+00	7.67E-06	1.63E-03	0.00E+00	0.00E+00	1.64E-03	4.06E-03	0.00E+00	1.09E-02	0.00E+00	0.00E+00	1.63E-03	0.00E+00	0.00E+00	1.09E-02
2604	ALL	752288.42	4040360.7	NonCancerAcute	0.00E+00	7.57E-06	1.61E-03	0.00E+00	0.00E+00	1.61E-03	3.91E-03	0.00E+00	1.06E-02	0.00E+00	0.00E+00	1.61E-03	0.00E+00	0.00E+00	1.06E-02
2605	ALL	752388.42	4040360.7	NonCancerAcute	0.00E+00	7.46E-06	1.58E-03	0.00E+00	0.00E+00	1.59E-03	3.79E-03	0.00E+00	1.04E-02	0.00E+00	0.00E+00	1.58E-03	0.00E+00	0.00E+00	1.04E-02
2606	ALL	752488.42	4040360.7	NonCancerAcute	0.00E+00	7.41E-06	1.57E-03	0.00E+00	0.00E+00	1.58E-03	3.69E-03	0.00E+00	1.02E-02	0.00E+00	0.00E+00	1.57E-03	0.00E+00	0.00E+00	1.02E-02
2607	ALL	752588.42	4040360.7	NonCancerAcute	0.00E+00	7.35E-06	1.56E-03	0.00E+00	0.00E+00	1.57E-03	3.60E-03	0.00E+00	1.01E-02	0.00E+00	0.00E+00	1.56E-03	0.00E+00	0.00E+00	1.01E-02
2608	ALL	752688.42	4040360.7	NonCancerAcute	0.00E+00	7.25E-06	1.54E-03	0.00E+00	0.00E+00	1.55E-03	3.49E-03	0.00E+00	9.87E-03	0.00E+00	0.00E+00	1.54E-03	0.00E+00	0.00E+00	9.87E-03
2609	ALL	752788.42	4040360.7	NonCancerAcute	0.00E+00	7.12E-06	1.51E-03	0.00E+00	0.00E+00	1.52E-03	3.40E-03	0.00E+00	9.66E-03	0.00E+00	0.00E+00	1.51E-03	0.00E+00	0.00E+00	9.66E-03
2610	ALL	752888.42	4040360.7	NonCancerAcute	0.00E+00	7.00E-06	1.49E-03	0.00E+00	0.00E+00	1.49E-03	3.30E-03	0.00E+00	9.45E-03	0.00E+00	0.00E+00	1.49E-03	0.00E+00	0.00E+00	9.45E-03
2611	ALL	752988.42	4040360.7	NonCancerAcute	0.00E+00	6.94E-06	1.47E-03	0.00E+00	0.00E+00	1.48E-03	3.21E-03	0.00E+00	9.28E-03	0.00E+00	0.00E+00	1.47E-03	0.00E+00	0.00E+00	9.28E-03
2612	ALL	753088.42	4040360.7	NonCancerAcute	0.00E+00	6.89E-06	1.46E-03	0.00E+00	0.00E+00	1.47E-03	3.10E-03	0.00E+00	9.12E-03	0.00E+00	0.00E+00	1.46E-03	0.00E+00	0.00E+00	9.12E-03
2613	ALL	753188.42	4040360.7	NonCancerAcute	0.00E+00	6.83E-06	1.45E-03	0.00E+00	0.00E+00	1.46E-03	3.00E-03	0.00E+00	8.94E-03	0.00E+00	0.00E+00	1.45E-03	0.00E+00	0.00E+00	8.94E-03
2614	ALL	746288.42	4040460.7	NonCancerAcute	0.00E+00	1.10E-05	2.33E-03	0.00E+00	0.00E+00	2.34E-03	5.84E-03	0.00E+00	1.56E-02	0.00E+00	0.00E+00	2.33E-03	0.00E+00	0.00E+00	1.56E-02
2615	ALL	746388.42	4040460.7	NonCancerAcute	0.00E+00	1.08E-05	2.30E-03	0.00E+00	0.00E+00	2.31E-03	5.86E-03	0.00E+00	1.55E-02	0.00E+00	0.00E+00	2.30E-03	0.00E+00	0.00E+00	1.55E-02
2616	ALL	751488.42	4040460.7	NonCancerAcute	0.00E+00	8.24E-06	1.75E-03	0.00E+00	0.00E+00	1.76E-03	5.19E-03	0.00E+00	1.27E-02	0.00E+00	0.00E+00	1.75E-03	0.00E+00	0.00E+00	1.27E-02
2617	ALL	751588.42	4040460.7	NonCancerAcute	0.00E+00	8.20E-06	1.74E-03	0.00E+00	0.00E+00	1.75E-03	4.98E-03	0.00E+00	1.24E-02	0.00E+00	0.00E+00	1.74E-03	0.00E+00	0.00E+00	1.24E-02
2618	ALL	751688.42	4040460.7	NonCancerAcute	0.00E+00	8.08E-06	1.72E-03	0.00E+00	0.00E+00	1.72E-03	4.82E-03	0.00E+00	1.21E-02	0.00E+00	0.00E+00	1.72E-03	0.00E+00	0.00E+00	1.21E-02
2619	ALL	751788.42	4040460.7	NonCancerAcute	0.00E+00	7.89E-06	1.68E-03	0.00E+00	0.00E+00	1.68E-03	4.69E-03	0.00E+00	1.18E-02	0.00E+00	0.00E+00	1.68E-03	0.00E+00	0.00E+00	1.18E-02
2620	ALL	751888.42	4040460.7	NonCancerAcute	0.00E+00	7.71E-06	1.64E-03	0.00E+00	0.00E+00	1.64E-03	4.55E-03	0.00E+00	1.15E-02	0.00E+00	0.00E+00	1.64E-03	0.00E+00	0.00E+00	1.15E-02
2621	ALL	751988.42	4040460.7	NonCancerAcute	0.00E+00	7.62E-06	1.62E-03	0.00E+00	0.00E+00	1.63E-03	4.41E-03	0.00E+00	1.13E-02	0.00E+00	0.00E+00	1.62E-03	0.00E+00	0.00E+00	1.13E-02
2622	ALL	752088.42	4040460.7	NonCancerAcute	0.00E+00	7.63E-06	1.62E-03	0.00E+00	0.00E+00	1.63E-03	4.29E-03	0.00E+00	1.11E-02	0.00E+00	0.00E+00	1.62E-03	0.00E+00	0.00E+00	1.11E-02
2623	ALL	752188.42	4040460.7	NonCancerAcute	0.00E+00	7.60E-06	1.61E-03	0.00E+00	0.00E+00	1.62E-03	4.15E-03	0.00E+00	1.09E-02	0.00E+00	0.00E+00	1.61E-03	0.00E+00	0.00E+00	1.09E-02
2624	ALL	752288.42	4040460.7	NonCancerAcute	0.00E+00	7.51E-06	1.60E-03	0.00E+00	0.00E+00	1.60E-03	3.99E-03	0.00E+00	1.07E-02	0.00E+00	0.00E+00	1.60E-03	0.00E+00	0.00E+00	1.07E-02
2625	ALL	752388.42	4040460.7	NonCancerAcute	0.00E+00	7.41E-06	1.57E-03	0.00E+00	0.00E+00	1.58E-03	3.84E-03	0.00E+00	1.04E-02	0.00E+00	0.00E+00	1.57E-03	0.00E+00	0.00E+00	1.04E-02
2626	ALL	752488.42	4040460.7	NonCancerAcute	0.00E+00	7.29E-06	1.55E-03	0.00E+00	0.00E+00	1.56E-03	3.72E-03	0.00E+00	1.02E-02	0.00E+00	0.00E+00	1.55E-03	0.00E+00	0.00E+00	1.02E-02
2627	ALL	752588.42	4040460.7	NonCancerAcute	0.00E+00	7.27E-06	1.54E-03	0.00E+00	0.00E+00	1.55E-03	3.64E-03	0.00E+00	1.01E-02	0.00E+00	0.00E+00	1.54E-03	0.00E+00	0.00E+00	1.01E-02
2628	ALL	752688.42	4040460.7	NonCancerAcute	0.00E+00	7.20E-06	1.53E-03	0.00E+00	0.00E+00	1.54E-03	3.55E-03	0.00E+00	9.91E-03	0.00E+00	0.00E+00	1.53E-03	0.00E+00	0.00E+00	9.91E-03
2629	ALL	752788.42	4040460.7	NonCancerAcute	0.00E+00	7.12E-06	1.51E-03	0.00E+00	0.00E+00	1.52E-03	3.45E-03	0.00E+00	9.72E-03	0.00E+00	0.00E+00	1.51E-03	0.00E+00	0.00E+00	9.72E-03
2630	ALL	752888.42	4040460.7	NonCancerAcute	0.00E+00	7.01E-06	1.49E-03	0.00E+00	0.00E+00	1.50E-03	3.36E-03	0.00E+00	9.52E-03	0.00E+00	0.00E+00	1.49E-03	0.00E+00	0.00E+00	9.52E-03
2631	ALL	752988.42	4040460.7	NonCancerAcute	0.00E+00	6.91E-06	1.47E-03	0.00E+00	0.00E+00	1.47E-03	3.27E-03	0.00E+00	9.33E-03	0.00E+00	0.00E+00	1.47E-03	0.00E+00	0.00E+00	9.33E-03
2632	ALL	753088.42	4040460.7	NonCancerAcute	0.00E+00	6.82E-06	1.45E-03	0.00E+00	0.00E+00	1.46E-03	3.18E-03	0.00E+00	9.16E-03	0.00E+00	0.00E+00	1.45E-03	0.00E+00	0.00E+00	9.16E-03
2633	ALL	753188.42	4040460.7	NonCancerAcute	0.00E+00	6.80E-06	1.44E-03	0.00E+00	0.00E+00	1.45E-03	3.08E-03	0.00E+00	9.02E-03	0.00E+00	0.00E+00	1.44E-03	0.00E+00	0.00E+00	9.02E-03
2634	ALL	746288.42	4040560.7	NonCancerAcute	0.00E+00	1.09E-05	2.31E-03	0.00E+00	0.00E+00	2.33E-03	5.81E-03	0.00E+00	1.55E-02	0.00E+00	0.00E+00	2.31E-03	0.00E+00	0.00E+00	1.55E-02
2635	ALL	746388.42	4040560.7	NonCancerAcute	0.00E+00	1.09E-05	2.31E-03	0.00E+00	0.00E+00	2.32E-03	5.84E-03	0.00E+00	1.55E-02	0.00E+00	0.00E+00	2.31E-03	0.00E+00	0.00E+00	1.55E-02
2636	ALL	751488.42	4040560.7	NonCancerAcute	0.00E+00	8.25E-06	1.75E-03	0.00E+00	0.00E+00	1.76E-03	5.28E-03	0.00E+00	1.28E-02	0.00E+00	0.00E+00	1.75E-03	0.00E+00	0.00E+00	1.28E-02
2637	ALL	751588.42	4040560.7	NonCancerAcute	0.00E+00	8.13E-06	1.73E-03	0.00E+00	0.00E+00	1.73E-03	5.09E-03	0.00E+00	1.25E-02	0.00E+00	0.00E+00	1.73E-03	0.00E+00	0.00E+00	1.25E-02
2638	ALL	751688.42	4040560.7	NonCancerAcute	0.00E+00	8.10E-06	1.72E-03	0.00E+00	0.00E+00	1.73E-03	4.87E-03	0.00E+00	1.22E-02	0.00E+00	0.00E+00	1.72E-03	0.00E+00	0.00E+00	1.22E-02
2639	ALL	751788.42	4040560.7	NonCancerAcute	0.00E+00	7.99E-06	1.70E-03	0.00E+00	0.00E+00	1.70E-03	4.64E-03	0.00E+00	1.18E-02	0.00E+00	0.00E+00	1.70E-03	0.00E+00	0.00E+00	1.18E-02
2640	ALL	751888.42	4040560.7	NonCancerAcute	0.00E+00	7.80E-06	1.66E-03	0.00E+00	0.00E+00	1.66E-03	4.48E-03	0.00E+00	1.15E-02	0.00E+00	0.00E+00	1.66E-03	0.00E+00	0.00E+00	1.15E-02
2641	ALL	751988.42	4040560.7	NonCancerAcute	0.00E+00	7.61E-06	1.62E-03	0.00E+00	0.00E+00	1.62E-03	4.31E-03	0.00E+00	1.12E-02	0.00E+00	0.00E+00	1.62E-03	0.00E+00	0.00E+00	1.12E-02
2642	ALL	752088.42	4040560.7	NonCancerAcute	0.00E+00	7.52E-06	1.60E-03	0.00E+00	0.00E+00	1.61E-03	4.20E-03	0.00E+00	1.10E-02	0.00E+00	0.00E+00	1.60E-03	0.00E+00	0.00E+00	1.10E-02
2643	ALL	752188.42	4040560.7	NonCancerAcute	0.00E+00	7.51E-06	1.60E-03	0.00E+00	0.00E+00	1.60E-03	4.07E-03	0.00E+00	1.08E-02	0.00E+00	0.00E+00	1.60E-03	0.00E+00	0.00E+00	1.08E-02
2644	ALL	752288.42	4040560.7	NonCancerAcute	0.00E+00	7.51E-06	1.59E-03	0.00E+00	0.00E+00	1.60E-03	3.94E-03	0.00E+00	1.06E-02	0.00E+00	0.00E+00	1.59E-03	0.00E+00	0.00E+00	1.06E-02
2645	ALL	752388.42	4040560.7	NonCancerAcute	0.00E+00	7.43E-06	1.58E-03	0.00E+00	0.00E+00	1.59E-03	3.80E-03	0.00E+00	1.04E-02	0.00E+00	0.00E+00	1.58E-03	0.00E+00	0.00E+00	1.04E-02
2646	ALL	752488.42	4040560.7	NonCancerAcute	0.00E+00	7.33E-06	1.56E-03	0.00E+00	0.00E+00	1.56E-03	3.64E-03	0.00E+00	1.01E-02	0.00E+00	0.00E+00	1.56E-03	0.00E+00	0.00E+00	1.01E-02
2647	ALL	752588.42	4040560.7	NonCancerAcute	0.00E+00	7.23E-06	1.53E-03	0.00E+00	0.00E+00	1.54E-03	3.52E-03	0.00E+00	9.88E-03	0.00E+00	0.00E+00	1.53E-03	0.00E+00	0.00E+00	9.88E-03
2648	ALL	752688.42	4040560.7	NonCancerAcute	0.00E+00	7.16E-06	1.52E-03	0.00E+00	0.00E+00	1.53E-03	3.41E-03	0.00E+00	9.71E-03	0.00E+00	0.00E+00	1.52E-03	0.00E+00	0.00E+00	9.71E-03

2649	ALL	752788.42	4040560.7	NonCancerAcute	0.00E+00	7.08E-06	1.50E-03	0.00E+00	0.00E+00	1.51E-03	3.35E-03	0.00E+00	9.56E-03	0.00E+00	0.00E+00	1.50E-03	0.00E+00	0.00E+00	9.56E-03
2650	ALL	752888.42	4040560.7	NonCancerAcute	0.00E+00	7.01E-06	1.49E-03	0.00E+00	0.00E+00	1.50E-03	3.29E-03	0.00E+00	9.44E-03	0.00E+00	0.00E+00	1.49E-03	0.00E+00	0.00E+00	9.44E-03
2651	ALL	752988.42	4040560.7	NonCancerAcute	0.00E+00	6.90E-06	1.47E-03	0.00E+00	0.00E+00	1.47E-03	3.22E-03	0.00E+00	9.26E-03	0.00E+00	0.00E+00	1.47E-03	0.00E+00	0.00E+00	9.26E-03
2652	ALL	753088.42	4040560.7	NonCancerAcute	0.00E+00	6.80E-06	1.44E-03	0.00E+00	0.00E+00	1.45E-03	3.15E-03	0.00E+00	9.10E-03	0.00E+00	0.00E+00	1.44E-03	0.00E+00	0.00E+00	9.10E-03
2653	ALL	753188.42	4040560.7	NonCancerAcute	0.00E+00	6.68E-06	1.42E-03	0.00E+00	0.00E+00	1.43E-03	3.08E-03	0.00E+00	8.93E-03	0.00E+00	0.00E+00	1.42E-03	0.00E+00	0.00E+00	8.93E-03
2654	ALL	746288.42	4040660.7	NonCancerAcute	0.00E+00	1.07E-05	2.27E-03	0.00E+00	0.00E+00	2.28E-03	5.72E-03	0.00E+00	1.53E-02	0.00E+00	0.00E+00	2.27E-03	0.00E+00	0.00E+00	1.53E-02
2655	ALL	746388.42	4040660.7	NonCancerAcute	0.00E+00	1.08E-05	2.29E-03	0.00E+00	0.00E+00	2.30E-03	5.80E-03	0.00E+00	1.54E-02	0.00E+00	0.00E+00	2.29E-03	0.00E+00	0.00E+00	1.54E-02
2656	ALL	746488.42	4040660.7	NonCancerAcute	0.00E+00	1.09E-05	2.31E-03	0.00E+00	0.00E+00	2.32E-03	5.91E-03	0.00E+00	1.56E-02	0.00E+00	0.00E+00	2.31E-03	0.00E+00	0.00E+00	1.56E-02
2657	ALL	751388.42	4040660.7	NonCancerAcute	0.00E+00	8.22E-06	1.75E-03	0.00E+00	0.00E+00	1.75E-03	5.33E-03	0.00E+00	1.29E-02	0.00E+00	0.00E+00	1.75E-03	0.00E+00	0.00E+00	1.29E-02
2658	ALL	751488.42	4040660.7	NonCancerAcute	0.00E+00	8.19E-06	1.74E-03	0.00E+00	0.00E+00	1.75E-03	5.24E-03	0.00E+00	1.27E-02	0.00E+00	0.00E+00	1.74E-03	0.00E+00	0.00E+00	1.27E-02
2659	ALL	751588.42	4040660.7	NonCancerAcute	0.00E+00	8.07E-06	1.71E-03	0.00E+00	0.00E+00	1.72E-03	5.07E-03	0.00E+00	1.24E-02	0.00E+00	0.00E+00	1.71E-03	0.00E+00	0.00E+00	1.24E-02
2660	ALL	751688.42	4040660.7	NonCancerAcute	0.00E+00	7.93E-06	1.68E-03	0.00E+00	0.00E+00	1.69E-03	4.86E-03	0.00E+00	1.21E-02	0.00E+00	0.00E+00	1.68E-03	0.00E+00	0.00E+00	1.21E-02
2661	ALL	751788.42	4040660.7	NonCancerAcute	0.00E+00	7.90E-06	1.68E-03	0.00E+00	0.00E+00	1.69E-03	4.65E-03	0.00E+00	1.18E-02	0.00E+00	0.00E+00	1.68E-03	0.00E+00	0.00E+00	1.18E-02
2662	ALL	751888.42	4040660.7	NonCancerAcute	0.00E+00	7.81E-06	1.66E-03	0.00E+00	0.00E+00	1.67E-03	4.50E-03	0.00E+00	1.15E-02	0.00E+00	0.00E+00	1.66E-03	0.00E+00	0.00E+00	1.15E-02
2663	ALL	751988.42	4040660.7	NonCancerAcute	0.00E+00	7.64E-06	1.62E-03	0.00E+00	0.00E+00	1.63E-03	4.41E-03	0.00E+00	1.13E-02	0.00E+00	0.00E+00	1.62E-03	0.00E+00	0.00E+00	1.13E-02
2664	ALL	752088.42	4040660.7	NonCancerAcute	0.00E+00	7.49E-06	1.59E-03	0.00E+00	0.00E+00	1.60E-03	4.31E-03	0.00E+00	1.11E-02	0.00E+00	0.00E+00	1.59E-03	0.00E+00	0.00E+00	1.11E-02
2665	ALL	746288.42	4040760.7	NonCancerAcute	0.00E+00	1.06E-05	2.26E-03	0.00E+00	0.00E+00	2.27E-03	5.74E-03	0.00E+00	1.52E-02	0.00E+00	0.00E+00	2.26E-03	0.00E+00	0.00E+00	1.52E-02
2666	ALL	746388.42	4040760.7	NonCancerAcute	0.00E+00	1.08E-05	2.29E-03	0.00E+00	0.00E+00	2.30E-03	5.78E-03	0.00E+00	1.54E-02	0.00E+00	0.00E+00	2.29E-03	0.00E+00	0.00E+00	1.54E-02
2667	ALL	746488.42	4040760.7	NonCancerAcute	0.00E+00	1.09E-05	2.33E-03	0.00E+00	0.00E+00	2.34E-03	5.81E-03	0.00E+00	1.56E-02	0.00E+00	0.00E+00	2.33E-03	0.00E+00	0.00E+00	1.56E-02
2668	ALL	751388.42	4040760.7	NonCancerAcute	0.00E+00	8.18E-06	1.74E-03	0.00E+00	0.00E+00	1.75E-03	5.10E-03	0.00E+00	1.26E-02	0.00E+00	0.00E+00	1.74E-03	0.00E+00	0.00E+00	1.26E-02
2669	ALL	751488.42	4040760.7	NonCancerAcute	0.00E+00	8.16E-06	1.73E-03	0.00E+00	0.00E+00	1.74E-03	4.98E-03	0.00E+00	1.24E-02	0.00E+00	0.00E+00	1.73E-03	0.00E+00	0.00E+00	1.24E-02
2670	ALL	751588.42	4040760.7	NonCancerAcute	0.00E+00	8.09E-06	1.72E-03	0.00E+00	0.00E+00	1.73E-03	4.84E-03	0.00E+00	1.22E-02	0.00E+00	0.00E+00	1.72E-03	0.00E+00	0.00E+00	1.22E-02
2671	ALL	751688.42	4040760.7	NonCancerAcute	0.00E+00	7.94E-06	1.69E-03	0.00E+00	0.00E+00	1.69E-03	4.79E-03	0.00E+00	1.20E-02	0.00E+00	0.00E+00	1.69E-03	0.00E+00	0.00E+00	1.20E-02
2672	ALL	751788.42	4040760.7	NonCancerAcute	0.00E+00	7.79E-06	1.65E-03	0.00E+00	0.00E+00	1.66E-03	4.70E-03	0.00E+00	1.18E-02	0.00E+00	0.00E+00	1.65E-03	0.00E+00	0.00E+00	1.18E-02
2673	ALL	751888.42	4040760.7	NonCancerAcute	0.00E+00	7.77E-06	1.65E-03	0.00E+00	0.00E+00	1.66E-03	4.57E-03	0.00E+00	1.16E-02	0.00E+00	0.00E+00	1.65E-03	0.00E+00	0.00E+00	1.16E-02
2674	ALL	751988.42	4040760.7	NonCancerAcute	0.00E+00	7.66E-06	1.63E-03	0.00E+00	0.00E+00	1.64E-03	4.40E-03	0.00E+00	1.13E-02	0.00E+00	0.00E+00	1.63E-03	0.00E+00	0.00E+00	1.13E-02
2675	ALL	752088.42	4040760.7	NonCancerAcute	0.00E+00	7.51E-06	1.59E-03	0.00E+00	0.00E+00	1.60E-03	4.25E-03	0.00E+00	1.10E-02	0.00E+00	0.00E+00	1.59E-03	0.00E+00	0.00E+00	1.10E-02
2676	ALL	746288.42	4040860.7	NonCancerAcute	0.00E+00	1.04E-05	2.22E-03	0.00E+00	0.00E+00	2.23E-03	5.61E-03	0.00E+00	1.49E-02	0.00E+00	0.00E+00	2.22E-03	0.00E+00	0.00E+00	1.49E-02
2677	ALL	746388.42	4040860.7	NonCancerAcute	0.00E+00	1.07E-05	2.26E-03	0.00E+00	0.00E+00	2.27E-03	5.73E-03	0.00E+00	1.52E-02	0.00E+00	0.00E+00	2.26E-03	0.00E+00	0.00E+00	1.52E-02
2678	ALL	746488.42	4040860.7	NonCancerAcute	0.00E+00	1.08E-05	2.28E-03	0.00E+00	0.00E+00	2.30E-03	5.80E-03	0.00E+00	1.54E-02	0.00E+00	0.00E+00	2.28E-03	0.00E+00	0.00E+00	1.54E-02
2679	ALL	751388.42	4040860.7	NonCancerAcute	0.00E+00	8.14E-06	1.73E-03	0.00E+00	0.00E+00	1.74E-03	5.06E-03	0.00E+00	1.25E-02	0.00E+00	0.00E+00	1.73E-03	0.00E+00	0.00E+00	1.25E-02
2680	ALL	751488.42	4040860.7	NonCancerAcute	0.00E+00	8.02E-06	1.70E-03	0.00E+00	0.00E+00	1.71E-03	4.77E-03	0.00E+00	1.20E-02	0.00E+00	0.00E+00	1.70E-03	0.00E+00	0.00E+00	1.20E-02
2681	ALL	751588.42	4040860.7	NonCancerAcute	0.00E+00	8.00E-06	1.70E-03	0.00E+00	0.00E+00	1.71E-03	4.61E-03	0.00E+00	1.18E-02	0.00E+00	0.00E+00	1.70E-03	0.00E+00	0.00E+00	1.18E-02
2682	ALL	751688.42	4040860.7	NonCancerAcute	0.00E+00	7.95E-06	1.69E-03	0.00E+00	0.00E+00	1.70E-03	4.61E-03	0.00E+00	1.18E-02	0.00E+00	0.00E+00	1.69E-03	0.00E+00	0.00E+00	1.18E-02
2683	ALL	751788.42	4040860.7	NonCancerAcute	0.00E+00	7.85E-06	1.67E-03	0.00E+00	0.00E+00	1.68E-03	4.53E-03	0.00E+00	1.16E-02	0.00E+00	0.00E+00	1.67E-03	0.00E+00	0.00E+00	1.16E-02
2684	ALL	751888.42	4040860.7	NonCancerAcute	0.00E+00	7.73E-06	1.64E-03	0.00E+00	0.00E+00	1.65E-03	4.40E-03	0.00E+00	1.13E-02	0.00E+00	0.00E+00	1.64E-03	0.00E+00	0.00E+00	1.13E-02
2685	ALL	751988.42	4040860.7	NonCancerAcute	0.00E+00	7.69E-06	1.63E-03	0.00E+00	0.00E+00	1.64E-03	4.28E-03	0.00E+00	1.12E-02	0.00E+00	0.00E+00	1.63E-03	0.00E+00	0.00E+00	1.12E-02
2686	ALL	752088.42	4040860.7	NonCancerAcute	0.00E+00	7.57E-06	1.61E-03	0.00E+00	0.00E+00	1.62E-03	4.19E-03	0.00E+00	1.10E-02	0.00E+00	0.00E+00	1.61E-03	0.00E+00	0.00E+00	1.10E-02
2687	ALL	746288.42	4040960.7	NonCancerAcute	0.00E+00	1.03E-05	2.19E-03	0.00E+00	0.00E+00	2.20E-03	5.58E-03	0.00E+00	1.48E-02	0.00E+00	0.00E+00	2.19E-03	0.00E+00	0.00E+00	1.48E-02
2688	ALL	746388.42	4040960.7	NonCancerAcute	0.00E+00	1.07E-05	2.28E-03	0.00E+00	0.00E+00	2.29E-03	5.60E-03	0.00E+00	1.51E-02	0.00E+00	0.00E+00	2.28E-03	0.00E+00	0.00E+00	1.51E-02
2689	ALL	746488.42	4040960.7	NonCancerAcute	0.00E+00	1.08E-05	2.29E-03	0.00E+00	0.00E+00	2.30E-03	5.56E-03	0.00E+00	1.51E-02	0.00E+00	0.00E+00	2.29E-03	0.00E+00	0.00E+00	1.51E-02
2690	ALL	751388.42	4040960.7	NonCancerAcute	0.00E+00	8.00E-06	1.70E-03	0.00E+00	0.00E+00	1.71E-03	5.05E-03	0.00E+00	1.24E-02	0.00E+00	0.00E+00	1.70E-03	0.00E+00	0.00E+00	1.24E-02
2691	ALL	751488.42	4040960.7	NonCancerAcute	0.00E+00	7.93E-06	1.68E-03	0.00E+00	0.00E+00	1.69E-03	4.81E-03	0.00E+00	1.20E-02	0.00E+00	0.00E+00	1.68E-03	0.00E+00	0.00E+00	1.20E-02
2692	ALL	751588.42	4040960.7	NonCancerAcute	0.00E+00	7.89E-06	1.68E-03	0.00E+00	0.00E+00	1.68E-03	4.59E-03	0.00E+00	1.17E-02	0.00E+00	0.00E+00	1.68E-03	0.00E+00	0.00E+00	1.17E-02
2693	ALL	751688.42	4040960.7	NonCancerAcute	0.00E+00	7.90E-06	1.68E-03	0.00E+00	0.00E+00	1.69E-03	4.44E-03	0.00E+00	1.15E-02	0.00E+00	0.00E+00	1.68E-03	0.00E+00	0.00E+00	1.15E-02
2694	ALL	751788.42	4040960.7	NonCancerAcute	0.00E+00	7.86E-06	1.67E-03	0.00E+00	0.00E+00	1.68E-03	4.29E-03	0.00E+00	1.13E-02	0.00E+00	0.00E+00	1.67E-03	0.00E+00	0.00E+00	1.13E-02
2695	ALL	751888.42	4040960.7	NonCancerAcute	0.00E+00	7.72E-06	1.64E-03	0.00E+00	0.00E+00	1.65E-03	4.22E-03	0.00E+00	1.11E-02	0.00E+00	0.00E+00	1.64E-03	0.00E+00	0.00E+00	1.11E-02
2696	ALL	751988.42	4040960.7	NonCancerAcute	0.00E+00	7.58E-06	1.61E-03	0.00E+00	0.00E+00	1.62E-03	4.19E-03	0.00E+00	1.10E-02	0.00E+00	0.00E+00	1.61E-03	0.00E+00	0.00E+00	1.10E-02
2697	ALL	752088.42	4040960.7	NonCancerAcute	0.00E+00	7.53E-06	1.60E-03	0.00E+00	0.00E+00	1.61E-03	4.11E-03	0.00E+00	1.08E-02	0.00E+00	0.00E+00	1.60E-03	0.00E+00	0.00E+00	1.08E-02
2698	ALL	746288.42	4041060.7	NonCancerAcute	0.00E+00	1.04E-05	2.22E-03	0.00E+00	0.00E+00	2.23E-03	5.38E-03	0.00E+00	1.47E-02	0.00E+00	0.00E+00	2.22E-03	0.00E+00	0.00E+00	1.47E-02
2699	ALL	746388.42	4041060.7	NonCancerAcute	0.00E+00	1.07E-05	2.28E-03	0.00E+00	0.00E+00	2.29E-03	5.49E-03	0.00E+00	1.50E-02	0.00E+00	0.00E+00	2.28E-03	0.00E+00	0.00E+00	1.50E-02
2700	ALL	746488.42	4041060.7	NonCancerAcute	0.00E+00	1.08E-05	2.29E-03	0.00E+00	0.00E+00	2.30E-03	5.54E-03	0.00E+00	1.51E-02	0.00E+00	0.00E+00	2.29E-03	0.00E+00	0.00E+00	1.51E-02
2701	ALL	751388.42	4041060.7	NonCancerAcute	0.00E+00	8.05E-06	1.71E-03	0.00E+00	0.00E+00	1.72E-03	5.01E-03	0.00E+00	1.24E-02	0.00E+00	0.00E+00	1.71E-03	0.00E+00	0.00E+00	1.24E-02

2702	ALL	751488.42	4041060.7	NonCancerAcute	0.00E+00	7.92E-06	1.68E-03	0.00E+00	0.00E+00	1.69E-03	4.78E-03	0.00E+00	1.20E-02	0.00E+00	0.00E+00	1.68E-03	0.00E+00	0.00E+00	1.20E-02
2703	ALL	751588.42	4041060.7	NonCancerAcute	0.00E+00	7.81E-06	1.66E-03	0.00E+00	0.00E+00	1.67E-03	4.60E-03	0.00E+00	1.17E-02	0.00E+00	0.00E+00	1.66E-03	0.00E+00	0.00E+00	1.17E-02
2704	ALL	751688.42	4041060.7	NonCancerAcute	0.00E+00	7.74E-06	1.64E-03	0.00E+00	0.00E+00	1.65E-03	4.39E-03	0.00E+00	1.13E-02	0.00E+00	0.00E+00	1.64E-03	0.00E+00	0.00E+00	1.13E-02
2705	ALL	751788.42	4041060.7	NonCancerAcute	0.00E+00	7.72E-06	1.64E-03	0.00E+00	0.00E+00	1.65E-03	4.26E-03	0.00E+00	1.12E-02	0.00E+00	0.00E+00	1.64E-03	0.00E+00	0.00E+00	1.12E-02
2706	ALL	751888.42	4041060.7	NonCancerAcute	0.00E+00	7.70E-06	1.63E-03	0.00E+00	0.00E+00	1.64E-03	4.17E-03	0.00E+00	1.11E-02	0.00E+00	0.00E+00	1.63E-03	0.00E+00	0.00E+00	1.11E-02
2707	ALL	751988.42	4041060.7	NonCancerAcute	0.00E+00	7.59E-06	1.61E-03	0.00E+00	0.00E+00	1.62E-03	4.07E-03	0.00E+00	1.08E-02	0.00E+00	0.00E+00	1.61E-03	0.00E+00	0.00E+00	1.08E-02
2708	ALL	752088.42	4041060.7	NonCancerAcute	0.00E+00	7.47E-06	1.59E-03	0.00E+00	0.00E+00	1.59E-03	3.91E-03	0.00E+00	1.06E-02	0.00E+00	0.00E+00	1.59E-03	0.00E+00	0.00E+00	1.06E-02
2709	ALL	746288.42	4041160.7	NonCancerAcute	0.00E+00	1.03E-05	2.20E-03	0.00E+00	0.00E+00	2.21E-03	5.37E-03	0.00E+00	1.46E-02	0.00E+00	0.00E+00	2.20E-03	0.00E+00	0.00E+00	1.46E-02
2710	ALL	746388.42	4041160.7	NonCancerAcute	0.00E+00	1.06E-05	2.25E-03	0.00E+00	0.00E+00	2.26E-03	5.42E-03	0.00E+00	1.48E-02	0.00E+00	0.00E+00	2.25E-03	0.00E+00	0.00E+00	1.48E-02
2711	ALL	746488.42	4041160.7	NonCancerAcute	0.00E+00	1.07E-05	2.27E-03	0.00E+00	0.00E+00	2.28E-03	5.49E-03	0.00E+00	1.50E-02	0.00E+00	0.00E+00	2.27E-03	0.00E+00	0.00E+00	1.50E-02
2712	ALL	746588.42	4041160.7	NonCancerAcute	0.00E+00	1.07E-05	2.28E-03	0.00E+00	0.00E+00	2.29E-03	5.56E-03	0.00E+00	1.51E-02	0.00E+00	0.00E+00	2.28E-03	0.00E+00	0.00E+00	1.51E-02
2713	ALL	746688.42	4041160.7	NonCancerAcute	0.00E+00	1.07E-05	2.27E-03	0.00E+00	0.00E+00	2.28E-03	5.54E-03	0.00E+00	1.50E-02	0.00E+00	0.00E+00	2.27E-03	0.00E+00	0.00E+00	1.50E-02
2714	ALL	751388.42	4041160.7	NonCancerAcute	0.00E+00	8.06E-06	1.71E-03	0.00E+00	0.00E+00	1.72E-03	5.24E-03	0.00E+00	1.26E-02	0.00E+00	0.00E+00	1.71E-03	0.00E+00	0.00E+00	1.26E-02
2715	ALL	751488.42	4041160.7	NonCancerAcute	0.00E+00	7.84E-06	1.66E-03	0.00E+00	0.00E+00	1.67E-03	4.75E-03	0.00E+00	1.19E-02	0.00E+00	0.00E+00	1.66E-03	0.00E+00	0.00E+00	1.19E-02
2716	ALL	751588.42	4041160.7	NonCancerAcute	0.00E+00	7.69E-06	1.63E-03	0.00E+00	0.00E+00	1.64E-03	4.59E-03	0.00E+00	1.16E-02	0.00E+00	0.00E+00	1.63E-03	0.00E+00	0.00E+00	1.16E-02
2717	ALL	751688.42	4041160.7	NonCancerAcute	0.00E+00	7.64E-06	1.62E-03	0.00E+00	0.00E+00	1.63E-03	4.37E-03	0.00E+00	1.13E-02	0.00E+00	0.00E+00	1.62E-03	0.00E+00	0.00E+00	1.13E-02
2718	ALL	751788.42	4041160.7	NonCancerAcute	0.00E+00	7.64E-06	1.62E-03	0.00E+00	0.00E+00	1.63E-03	4.20E-03	0.00E+00	1.10E-02	0.00E+00	0.00E+00	1.62E-03	0.00E+00	0.00E+00	1.10E-02
2719	ALL	751888.42	4041160.7	NonCancerAcute	0.00E+00	7.64E-06	1.62E-03	0.00E+00	0.00E+00	1.63E-03	4.08E-03	0.00E+00	1.09E-02	0.00E+00	0.00E+00	1.62E-03	0.00E+00	0.00E+00	1.09E-02
2720	ALL	751988.42	4041160.7	NonCancerAcute	0.00E+00	7.57E-06	1.61E-03	0.00E+00	0.00E+00	1.62E-03	4.01E-03	0.00E+00	1.08E-02	0.00E+00	0.00E+00	1.61E-03	0.00E+00	0.00E+00	1.08E-02
2721	ALL	752088.42	4041160.7	NonCancerAcute	0.00E+00	7.43E-06	1.58E-03	0.00E+00	0.00E+00	1.58E-03	3.94E-03	0.00E+00	1.06E-02	0.00E+00	0.00E+00	1.58E-03	0.00E+00	0.00E+00	1.06E-02
2722	ALL	752188.42	4041160.7	NonCancerAcute	0.00E+00	7.31E-06	1.55E-03	0.00E+00	0.00E+00	1.56E-03	3.84E-03	0.00E+00	1.03E-02	0.00E+00	0.00E+00	1.55E-03	0.00E+00	0.00E+00	1.03E-02
2723	ALL	752288.42	4041160.7	NonCancerAcute	0.00E+00	7.31E-06	1.55E-03	0.00E+00	0.00E+00	1.56E-03	3.71E-03	0.00E+00	1.02E-02	0.00E+00	0.00E+00	1.55E-03	0.00E+00	0.00E+00	1.02E-02
2724	ALL	752388.42	4041160.7	NonCancerAcute	0.00E+00	7.22E-06	1.53E-03	0.00E+00	0.00E+00	1.54E-03	3.54E-03	0.00E+00	9.90E-03	0.00E+00	0.00E+00	1.53E-03	0.00E+00	0.00E+00	9.90E-03
2725	ALL	752488.42	4041160.7	NonCancerAcute	0.00E+00	7.07E-06	1.50E-03	0.00E+00	0.00E+00	1.51E-03	3.48E-03	0.00E+00	9.72E-03	0.00E+00	0.00E+00	1.50E-03	0.00E+00	0.00E+00	9.72E-03
2726	ALL	752588.42	4041160.7	NonCancerAcute	0.00E+00	6.93E-06	1.47E-03	0.00E+00	0.00E+00	1.48E-03	3.44E-03	0.00E+00	9.56E-03	0.00E+00	0.00E+00	1.47E-03	0.00E+00	0.00E+00	9.56E-03
2727	ALL	752688.42	4041160.7	NonCancerAcute	0.00E+00	6.83E-06	1.45E-03	0.00E+00	0.00E+00	1.46E-03	3.42E-03	0.00E+00	9.46E-03	0.00E+00	0.00E+00	1.45E-03	0.00E+00	0.00E+00	9.46E-03
2728	ALL	752788.42	4041160.7	NonCancerAcute	0.00E+00	6.73E-06	1.43E-03	0.00E+00	0.00E+00	1.43E-03	3.36E-03	0.00E+00	9.31E-03	0.00E+00	0.00E+00	1.43E-03	0.00E+00	0.00E+00	9.31E-03
2729	ALL	752888.42	4041160.7	NonCancerAcute	0.00E+00	6.69E-06	1.42E-03	0.00E+00	0.00E+00	1.43E-03	3.28E-03	0.00E+00	9.18E-03	0.00E+00	0.00E+00	1.42E-03	0.00E+00	0.00E+00	9.18E-03
2730	ALL	752988.42	4041160.7	NonCancerAcute	0.00E+00	6.68E-06	1.42E-03	0.00E+00	0.00E+00	1.42E-03	3.18E-03	0.00E+00	9.05E-03	0.00E+00	0.00E+00	1.42E-03	0.00E+00	0.00E+00	9.05E-03
2731	ALL	753088.42	4041160.7	NonCancerAcute	0.00E+00	6.61E-06	1.40E-03	0.00E+00	0.00E+00	1.41E-03	3.14E-03	0.00E+00	8.94E-03	0.00E+00	0.00E+00	1.40E-03	0.00E+00	0.00E+00	8.94E-03
2732	ALL	753188.42	4041160.7	NonCancerAcute	0.00E+00	6.55E-06	1.39E-03	0.00E+00	0.00E+00	1.40E-03	3.08E-03	0.00E+00	8.82E-03	0.00E+00	0.00E+00	1.39E-03	0.00E+00	0.00E+00	8.82E-03
2733	ALL	753288.42	4041160.7	NonCancerAcute	0.00E+00	6.49E-06	1.38E-03	0.00E+00	0.00E+00	1.38E-03	3.00E-03	0.00E+00	8.68E-03	0.00E+00	0.00E+00	1.38E-03	0.00E+00	0.00E+00	8.68E-03
2734	ALL	753388.42	4041160.7	NonCancerAcute	0.00E+00	6.43E-06	1.37E-03	0.00E+00	0.00E+00	1.37E-03	2.91E-03	0.00E+00	8.52E-03	0.00E+00	0.00E+00	1.37E-03	0.00E+00	0.00E+00	8.52E-03
2735	ALL	753488.42	4041160.7	NonCancerAcute	0.00E+00	6.39E-06	1.36E-03	0.00E+00	0.00E+00	1.36E-03	2.83E-03	0.00E+00	8.40E-03	0.00E+00	0.00E+00	1.36E-03	0.00E+00	0.00E+00	8.40E-03
2736	ALL	753588.42	4041160.7	NonCancerAcute	0.00E+00	6.30E-06	1.34E-03	0.00E+00	0.00E+00	1.34E-03	2.76E-03	0.00E+00	8.25E-03	0.00E+00	0.00E+00	1.34E-03	0.00E+00	0.00E+00	8.25E-03
2737	ALL	753688.42	4041160.7	NonCancerAcute	0.00E+00	6.23E-06	1.32E-03	0.00E+00	0.00E+00	1.33E-03	2.71E-03	0.00E+00	8.13E-03	0.00E+00	0.00E+00	1.32E-03	0.00E+00	0.00E+00	8.13E-03
2738	ALL	753788.42	4041160.7	NonCancerAcute	0.00E+00	6.13E-06	1.30E-03	0.00E+00	0.00E+00	1.31E-03	2.65E-03	0.00E+00	7.98E-03	0.00E+00	0.00E+00	1.30E-03	0.00E+00	0.00E+00	7.98E-03
2739	ALL	753888.42	4041160.7	NonCancerAcute	0.00E+00	6.04E-06	1.28E-03	0.00E+00	0.00E+00	1.29E-03	2.58E-03	0.00E+00	7.82E-03	0.00E+00	0.00E+00	1.28E-03	0.00E+00	0.00E+00	7.82E-03
2740	ALL	753988.42	4041160.7	NonCancerAcute	0.00E+00	5.97E-06	1.27E-03	0.00E+00	0.00E+00	1.27E-03	2.51E-03	0.00E+00	7.68E-03	0.00E+00	0.00E+00	1.27E-03	0.00E+00	0.00E+00	7.68E-03
2741	ALL	746288.42	4041260.7	NonCancerAcute	0.00E+00	1.04E-05	2.20E-03	0.00E+00	0.00E+00	2.21E-03	5.29E-03	0.00E+00	1.45E-02	0.00E+00	0.00E+00	2.20E-03	0.00E+00	0.00E+00	1.45E-02
2742	ALL	746388.42	4041260.7	NonCancerAcute	0.00E+00	1.06E-05	2.26E-03	0.00E+00	0.00E+00	2.27E-03	5.36E-03	0.00E+00	1.48E-02	0.00E+00	0.00E+00	2.26E-03	0.00E+00	0.00E+00	1.48E-02
2743	ALL	746488.42	4041260.7	NonCancerAcute	0.00E+00	1.06E-05	2.25E-03	0.00E+00	0.00E+00	2.26E-03	5.40E-03	0.00E+00	1.48E-02	0.00E+00	0.00E+00	2.25E-03	0.00E+00	0.00E+00	1.48E-02
2744	ALL	746588.42	4041260.7	NonCancerAcute	0.00E+00	1.07E-05	2.26E-03	0.00E+00	0.00E+00	2.27E-03	5.51E-03	0.00E+00	1.50E-02	0.00E+00	0.00E+00	2.26E-03	0.00E+00	0.00E+00	1.50E-02
2745	ALL	746688.42	4041260.7	NonCancerAcute	0.00E+00	1.07E-05	2.28E-03	0.00E+00	0.00E+00	2.29E-03	5.44E-03	0.00E+00	1.49E-02	0.00E+00	0.00E+00	2.28E-03	0.00E+00	0.00E+00	1.49E-02
2746	ALL	751388.42	4041260.7	NonCancerAcute	0.00E+00	7.99E-06	1.70E-03	0.00E+00	0.00E+00	1.70E-03	5.35E-03	0.00E+00	1.27E-02	0.00E+00	0.00E+00	1.70E-03	0.00E+00	0.00E+00	1.27E-02
2747	ALL	751488.42	4041260.7	NonCancerAcute	0.00E+00	7.92E-06	1.68E-03	0.00E+00	0.00E+00	1.69E-03	5.19E-03	0.00E+00	1.25E-02	0.00E+00	0.00E+00	1.68E-03	0.00E+00	0.00E+00	1.25E-02
2748	ALL	751588.42	4041260.7	NonCancerAcute	0.00E+00	7.75E-06	1.65E-03	0.00E+00	0.00E+00	1.65E-03	4.84E-03	0.00E+00	1.19E-02	0.00E+00	0.00E+00	1.65E-03	0.00E+00	0.00E+00	1.19E-02
2749	ALL	751688.42	4041260.7	NonCancerAcute	0.00E+00	7.58E-06	1.61E-03	0.00E+00	0.00E+00	1.62E-03	4.38E-03	0.00E+00	1.12E-02	0.00E+00	0.00E+00	1.61E-03	0.00E+00	0.00E+00	1.12E-02
2750	ALL	751788.42	4041260.7	NonCancerAcute	0.00E+00	7.46E-06	1.58E-03	0.00E+00	0.00E+00	1.59E-03	4.20E-03	0.00E+00	1.09E-02	0.00E+00	0.00E+00	1.58E-03	0.00E+00	0.00E+00	1.09E-02
2751	ALL	751888.42	4041260.7	NonCancerAcute	0.00E+00	7.41E-06	1.57E-03	0.00E+00	0.00E+00	1.58E-03	4.01E-03	0.00E+00	1.06E-02	0.00E+00	0.00E+00	1.57E-03	0.00E+00	0.00E+00	1.06E-02
2752	ALL	751988.42	4041260.7	NonCancerAcute	0.00E+00	7.46E-06	1.59E-03	0.00E+00	0.00E+00	1.59E-03	3.91E-03	0.00E+00	1.05E-02	0.00E+00	0.00E+00	1.59E-03	0.00E+00	0.00E+00	1.05E-02
2753	ALL	752088.42	4041260.7	NonCancerAcute	0.00E+00	7.45E-06	1.58E-03	0.00E+00	0.00E+00	1.59E-03	3.83E-03	0.00E+00	1.04E-02	0.00E+00	0.00E+00	1.58E-03	0.00E+00	0.00E+00	1.04E-02
2754	ALL	752188.42	4041260.7	NonCancerAcute	0.00E+00	7.35E-06	1.56E-03	0.00E+00	0.00E+00	1.57E-03	3.79E-03	0.00E+00	1.03E-02	0.00E+00	0.00E+00	1.56E-03	0.00E+00	0.00E+00	1.03E-02

2755	ALL	752288.42	4041260.7	NonCancerAcute	0.00E+00	7.21E-06	1.53E-03	0.00E+00	0.00E+00	1.54E-03	3.73E-03	0.00E+00	1.01E-02	0.00E+00	0.00E+00	1.53E-03	0.00E+00	0.00E+00	1.01E-02
2756	ALL	752388.42	4041260.7	NonCancerAcute	0.00E+00	7.17E-06	1.52E-03	0.00E+00	0.00E+00	1.53E-03	3.62E-03	0.00E+00	9.96E-03	0.00E+00	0.00E+00	1.52E-03	0.00E+00	0.00E+00	9.96E-03
2757	ALL	752488.42	4041260.7	NonCancerAcute	0.00E+00	7.06E-06	1.50E-03	0.00E+00	0.00E+00	1.51E-03	3.49E-03	0.00E+00	9.72E-03	0.00E+00	0.00E+00	1.50E-03	0.00E+00	0.00E+00	9.72E-03
2758	ALL	752588.42	4041260.7	NonCancerAcute	0.00E+00	6.94E-06	1.47E-03	0.00E+00	0.00E+00	1.48E-03	3.35E-03	0.00E+00	9.45E-03	0.00E+00	0.00E+00	1.47E-03	0.00E+00	0.00E+00	9.45E-03
2759	ALL	752688.42	4041260.7	NonCancerAcute	0.00E+00	6.81E-06	1.45E-03	0.00E+00	0.00E+00	1.45E-03	3.19E-03	0.00E+00	9.16E-03	0.00E+00	0.00E+00	1.45E-03	0.00E+00	0.00E+00	9.16E-03
2760	ALL	752788.42	4041260.7	NonCancerAcute	0.00E+00	6.72E-06	1.43E-03	0.00E+00	0.00E+00	1.43E-03	3.21E-03	0.00E+00	9.12E-03	0.00E+00	0.00E+00	1.43E-03	0.00E+00	0.00E+00	9.12E-03
2761	ALL	752888.42	4041260.7	NonCancerAcute	0.00E+00	6.63E-06	1.41E-03	0.00E+00	0.00E+00	1.41E-03	3.21E-03	0.00E+00	9.04E-03	0.00E+00	0.00E+00	1.41E-03	0.00E+00	0.00E+00	9.04E-03
2762	ALL	752988.42	4041260.7	NonCancerAcute	0.00E+00	6.57E-06	1.40E-03	0.00E+00	0.00E+00	1.40E-03	3.17E-03	0.00E+00	8.95E-03	0.00E+00	0.00E+00	1.40E-03	0.00E+00	0.00E+00	8.95E-03
2763	ALL	753088.42	4041260.7	NonCancerAcute	0.00E+00	6.56E-06	1.39E-03	0.00E+00	0.00E+00	1.40E-03	3.11E-03	0.00E+00	8.87E-03	0.00E+00	0.00E+00	1.39E-03	0.00E+00	0.00E+00	8.87E-03
2764	ALL	753188.42	4041260.7	NonCancerAcute	0.00E+00	6.50E-06	1.38E-03	0.00E+00	0.00E+00	1.39E-03	3.03E-03	0.00E+00	8.73E-03	0.00E+00	0.00E+00	1.38E-03	0.00E+00	0.00E+00	8.73E-03
2765	ALL	753288.42	4041260.7	NonCancerAcute	0.00E+00	6.42E-06	1.36E-03	0.00E+00	0.00E+00	1.37E-03	2.93E-03	0.00E+00	8.54E-03	0.00E+00	0.00E+00	1.36E-03	0.00E+00	0.00E+00	8.54E-03
2766	ALL	753388.42	4041260.7	NonCancerAcute	0.00E+00	6.37E-06	1.35E-03	0.00E+00	0.00E+00	1.36E-03	2.84E-03	0.00E+00	8.40E-03	0.00E+00	0.00E+00	1.35E-03	0.00E+00	0.00E+00	8.40E-03
2767	ALL	753488.42	4041260.7	NonCancerAcute	0.00E+00	6.28E-06	1.33E-03	0.00E+00	0.00E+00	1.34E-03	2.78E-03	0.00E+00	8.26E-03	0.00E+00	0.00E+00	1.33E-03	0.00E+00	0.00E+00	8.26E-03
2768	ALL	753588.42	4041260.7	NonCancerAcute	0.00E+00	6.26E-06	1.33E-03	0.00E+00	0.00E+00	1.34E-03	2.72E-03	0.00E+00	8.17E-03	0.00E+00	0.00E+00	1.33E-03	0.00E+00	0.00E+00	8.17E-03
2769	ALL	753688.42	4041260.7	NonCancerAcute	0.00E+00	6.21E-06	1.32E-03	0.00E+00	0.00E+00	1.32E-03	2.67E-03	0.00E+00	8.07E-03	0.00E+00	0.00E+00	1.32E-03	0.00E+00	0.00E+00	8.07E-03
2770	ALL	753788.42	4041260.7	NonCancerAcute	0.00E+00	6.15E-06	1.31E-03	0.00E+00	0.00E+00	1.31E-03	2.64E-03	0.00E+00	7.98E-03	0.00E+00	0.00E+00	1.31E-03	0.00E+00	0.00E+00	7.98E-03
2771	ALL	753888.42	4041260.7	NonCancerAcute	0.00E+00	6.08E-06	1.29E-03	0.00E+00	0.00E+00	1.30E-03	2.60E-03	0.00E+00	7.88E-03	0.00E+00	0.00E+00	1.29E-03	0.00E+00	0.00E+00	7.88E-03
2772	ALL	753988.42	4041260.7	NonCancerAcute	0.00E+00	6.00E-06	1.27E-03	0.00E+00	0.00E+00	1.28E-03	2.56E-03	0.00E+00	7.76E-03	0.00E+00	0.00E+00	1.27E-03	0.00E+00	0.00E+00	7.76E-03
2773	ALL	746288.42	4041360.7	NonCancerAcute	0.00E+00	1.05E-05	2.23E-03	0.00E+00	0.00E+00	2.24E-03	5.24E-03	0.00E+00	1.45E-02	0.00E+00	0.00E+00	2.23E-03	0.00E+00	0.00E+00	1.45E-02
2774	ALL	746388.42	4041360.7	NonCancerAcute	0.00E+00	1.06E-05	2.25E-03	0.00E+00	0.00E+00	2.26E-03	5.28E-03	0.00E+00	1.46E-02	0.00E+00	0.00E+00	2.25E-03	0.00E+00	0.00E+00	1.46E-02
2775	ALL	746488.42	4041360.7	NonCancerAcute	0.00E+00	1.06E-05	2.26E-03	0.00E+00	0.00E+00	2.27E-03	5.29E-03	0.00E+00	1.47E-02	0.00E+00	0.00E+00	2.26E-03	0.00E+00	0.00E+00	1.47E-02
2776	ALL	746588.42	4041360.7	NonCancerAcute	0.00E+00	1.05E-05	2.23E-03	0.00E+00	0.00E+00	2.24E-03	5.45E-03	0.00E+00	1.48E-02	0.00E+00	0.00E+00	2.23E-03	0.00E+00	0.00E+00	1.48E-02
2777	ALL	746688.42	4041360.7	NonCancerAcute	0.00E+00	1.05E-05	2.24E-03	0.00E+00	0.00E+00	2.25E-03	5.49E-03	0.00E+00	1.49E-02	0.00E+00	0.00E+00	2.24E-03	0.00E+00	0.00E+00	1.49E-02
2778	ALL	751388.42	4041360.7	NonCancerAcute	0.00E+00	7.97E-06	1.69E-03	0.00E+00	0.00E+00	1.70E-03	5.20E-03	0.00E+00	1.25E-02	0.00E+00	0.00E+00	1.69E-03	0.00E+00	0.00E+00	1.25E-02
2779	ALL	751488.42	4041360.7	NonCancerAcute	0.00E+00	7.91E-06	1.68E-03	0.00E+00	0.00E+00	1.69E-03	5.15E-03	0.00E+00	1.24E-02	0.00E+00	0.00E+00	1.68E-03	0.00E+00	0.00E+00	1.24E-02
2780	ALL	751588.42	4041360.7	NonCancerAcute	0.00E+00	7.79E-06	1.65E-03	0.00E+00	0.00E+00	1.66E-03	5.05E-03	0.00E+00	1.22E-02	0.00E+00	0.00E+00	1.65E-03	0.00E+00	0.00E+00	1.22E-02
2781	ALL	751688.42	4041360.7	NonCancerAcute	0.00E+00	7.58E-06	1.61E-03	0.00E+00	0.00E+00	1.62E-03	4.82E-03	0.00E+00	1.18E-02	0.00E+00	0.00E+00	1.61E-03	0.00E+00	0.00E+00	1.18E-02
2782	ALL	751788.42	4041360.7	NonCancerAcute	0.00E+00	7.45E-06	1.58E-03	0.00E+00	0.00E+00	1.59E-03	4.47E-03	0.00E+00	1.12E-02	0.00E+00	0.00E+00	1.58E-03	0.00E+00	0.00E+00	1.12E-02
2783	ALL	751888.42	4041360.7	NonCancerAcute	0.00E+00	7.37E-06	1.56E-03	0.00E+00	0.00E+00	1.57E-03	4.03E-03	0.00E+00	1.06E-02	0.00E+00	0.00E+00	1.56E-03	0.00E+00	0.00E+00	1.06E-02
2784	ALL	751988.42	4041360.7	NonCancerAcute	0.00E+00	7.30E-06	1.55E-03	0.00E+00	0.00E+00	1.56E-03	3.86E-03	0.00E+00	1.04E-02	0.00E+00	0.00E+00	1.55E-03	0.00E+00	0.00E+00	1.04E-02
2785	ALL	752088.42	4041360.7	NonCancerAcute	0.00E+00	7.30E-06	1.55E-03	0.00E+00	0.00E+00	1.56E-03	3.74E-03	0.00E+00	1.02E-02	0.00E+00	0.00E+00	1.55E-03	0.00E+00	0.00E+00	1.02E-02
2786	ALL	752188.42	4041360.7	NonCancerAcute	0.00E+00	7.23E-06	1.54E-03	0.00E+00	0.00E+00	1.54E-03	3.67E-03	0.00E+00	1.01E-02	0.00E+00	0.00E+00	1.54E-03	0.00E+00	0.00E+00	1.01E-02
2787	ALL	752288.42	4041360.7	NonCancerAcute	0.00E+00	7.15E-06	1.52E-03	0.00E+00	0.00E+00	1.53E-03	3.62E-03	0.00E+00	9.95E-03	0.00E+00	0.00E+00	1.52E-03	0.00E+00	0.00E+00	9.95E-03
2788	ALL	752388.42	4041360.7	NonCancerAcute	0.00E+00	7.07E-06	1.50E-03	0.00E+00	0.00E+00	1.51E-03	3.56E-03	0.00E+00	9.81E-03	0.00E+00	0.00E+00	1.50E-03	0.00E+00	0.00E+00	9.81E-03
2789	ALL	752488.42	4041360.7	NonCancerAcute	0.00E+00	7.06E-06	1.50E-03	0.00E+00	0.00E+00	1.51E-03	3.51E-03	0.00E+00	9.75E-03	0.00E+00	0.00E+00	1.50E-03	0.00E+00	0.00E+00	9.75E-03
2790	ALL	752588.42	4041360.7	NonCancerAcute	0.00E+00	6.98E-06	1.48E-03	0.00E+00	0.00E+00	1.49E-03	3.42E-03	0.00E+00	9.57E-03	0.00E+00	0.00E+00	1.48E-03	0.00E+00	0.00E+00	9.57E-03
2791	ALL	752688.42	4041360.7	NonCancerAcute	0.00E+00	6.82E-06	1.45E-03	0.00E+00	0.00E+00	1.46E-03	3.28E-03	0.00E+00	9.28E-03	0.00E+00	0.00E+00	1.45E-03	0.00E+00	0.00E+00	9.28E-03
2792	ALL	752788.42	4041360.7	NonCancerAcute	0.00E+00	6.65E-06	1.41E-03	0.00E+00	0.00E+00	1.42E-03	3.15E-03	0.00E+00	8.99E-03	0.00E+00	0.00E+00	1.41E-03	0.00E+00	0.00E+00	8.99E-03
2793	ALL	752888.42	4041360.7	NonCancerAcute	0.00E+00	6.58E-06	1.40E-03	0.00E+00	0.00E+00	1.40E-03	3.06E-03	0.00E+00	8.83E-03	0.00E+00	0.00E+00	1.40E-03	0.00E+00	0.00E+00	8.83E-03
2794	ALL	752988.42	4041360.7	NonCancerAcute	0.00E+00	6.53E-06	1.39E-03	0.00E+00	0.00E+00	1.39E-03	3.00E-03	0.00E+00	8.70E-03	0.00E+00	0.00E+00	1.39E-03	0.00E+00	0.00E+00	8.70E-03
2795	ALL	753088.42	4041360.7	NonCancerAcute	0.00E+00	6.47E-06	1.38E-03	0.00E+00	0.00E+00	1.38E-03	3.00E-03	0.00E+00	8.67E-03	0.00E+00	0.00E+00	1.38E-03	0.00E+00	0.00E+00	8.67E-03
2796	ALL	753188.42	4041360.7	NonCancerAcute	0.00E+00	6.47E-06	1.37E-03	0.00E+00	0.00E+00	1.38E-03	2.98E-03	0.00E+00	8.64E-03	0.00E+00	0.00E+00	1.37E-03	0.00E+00	0.00E+00	8.64E-03
2797	ALL	753288.42	4041360.7	NonCancerAcute	0.00E+00	6.42E-06	1.36E-03	0.00E+00	0.00E+00	1.37E-03	2.94E-03	0.00E+00	8.55E-03	0.00E+00	0.00E+00	1.36E-03	0.00E+00	0.00E+00	8.55E-03
2798	ALL	753388.42	4041360.7	NonCancerAcute	0.00E+00	6.35E-06	1.35E-03	0.00E+00	0.00E+00	1.35E-03	2.87E-03	0.00E+00	8.41E-03	0.00E+00	0.00E+00	1.35E-03	0.00E+00	0.00E+00	8.41E-03
2799	ALL	753488.42	4041360.7	NonCancerAcute	0.00E+00	6.28E-06	1.33E-03	0.00E+00	0.00E+00	1.34E-03	2.78E-03	0.00E+00	8.25E-03	0.00E+00	0.00E+00	1.33E-03	0.00E+00	0.00E+00	8.25E-03
2800	ALL	753588.42	4041360.7	NonCancerAcute	0.00E+00	6.18E-06	1.31E-03	0.00E+00	0.00E+00	1.32E-03	2.68E-03	0.00E+00	8.05E-03	0.00E+00	0.00E+00	1.31E-03	0.00E+00	0.00E+00	8.05E-03
2801	ALL	753688.42	4041360.7	NonCancerAcute	0.00E+00	6.14E-06	1.30E-03	0.00E+00	0.00E+00	1.31E-03	2.57E-03	0.00E+00	7.89E-03	0.00E+00	0.00E+00	1.30E-03	0.00E+00	0.00E+00	7.89E-03
2802	ALL	753788.42	4041360.7	NonCancerAcute	0.00E+00	6.08E-06	1.29E-03	0.00E+00	0.00E+00	1.30E-03	2.54E-03	0.00E+00	7.81E-03	0.00E+00	0.00E+00	1.29E-03	0.00E+00	0.00E+00	7.81E-03
2803	ALL	753888.42	4041360.7	NonCancerAcute	0.00E+00	6.01E-06	1.28E-03	0.00E+00	0.00E+00	1.28E-03	2.51E-03	0.00E+00	7.71E-03	0.00E+00	0.00E+00	1.28E-03	0.00E+00	0.00E+00	7.71E-03
2804	ALL	753988.42	4041360.7	NonCancerAcute	0.00E+00	5.96E-06	1.27E-03	0.00E+00	0.00E+00	1.27E-03	2.50E-03	0.00E+00	7.66E-03	0.00E+00	0.00E+00	1.27E-03	0.00E+00	0.00E+00	7.66E-03
2805	ALL	746288.42	4041460.7	NonCancerAcute	0.00E+00	1.05E-05	2.24E-03	0.00E+00	0.00E+00	2.25E-03	5.16E-03	0.00E+00	1.45E-02	0.00E+00	0.00E+00	2.24E-03	0.00E+00	0.00E+00	1.45E-02
2806	ALL	746388.42	4041460.7	NonCancerAcute	0.00E+00	1.05E-05	2.23E-03	0.00E+00	0.00E+00	2.24E-03	5.32E-03	0.00E+00	1.46E-02	0.00E+00	0.00E+00	2.23E-03	0.00E+00	0.00E+00	1.46E-02
2807	ALL	746488.42	4041460.7	NonCancerAcute	0.00E+00	1.05E-05	2.23E-03	0.00E+00	0.00E+00	2.24E-03	5.38E-03	0.00E+00	1.47E-02	0.00E+00	0.00E+00	2.23E-03	0.00E+00	0.00E+00	1.47E-02

2808	ALL	746588.42	4041460.7	NonCancerAcute	0.00E+00	1.06E-05	2.24E-03	0.00E+00	0.00E+00	2.25E-03	5.50E-03	0.00E+00	1.49E-02	0.00E+00	0.00E+00	2.24E-03	0.00E+00	0.00E+00	1.49E-02
2809	ALL	746688.42	4041460.7	NonCancerAcute	0.00E+00	1.06E-05	2.26E-03	0.00E+00	0.00E+00	2.27E-03	5.36E-03	0.00E+00	1.48E-02	0.00E+00	0.00E+00	2.26E-03	0.00E+00	0.00E+00	1.48E-02
2810	ALL	751388.42	4041460.7	NonCancerAcute	0.00E+00	7.88E-06	1.67E-03	0.00E+00	0.00E+00	1.68E-03	5.14E-03	0.00E+00	1.24E-02	0.00E+00	0.00E+00	1.67E-03	0.00E+00	0.00E+00	1.24E-02
2811	ALL	751488.42	4041460.7	NonCancerAcute	0.00E+00	7.84E-06	1.66E-03	0.00E+00	0.00E+00	1.67E-03	4.99E-03	0.00E+00	1.22E-02	0.00E+00	0.00E+00	1.66E-03	0.00E+00	0.00E+00	1.22E-02
2812	ALL	751588.42	4041460.7	NonCancerAcute	0.00E+00	7.77E-06	1.65E-03	0.00E+00	0.00E+00	1.66E-03	4.90E-03	0.00E+00	1.20E-02	0.00E+00	0.00E+00	1.65E-03	0.00E+00	0.00E+00	1.20E-02
2813	ALL	751688.42	4041460.7	NonCancerAcute	0.00E+00	7.66E-06	1.63E-03	0.00E+00	0.00E+00	1.63E-03	4.85E-03	0.00E+00	1.19E-02	0.00E+00	0.00E+00	1.63E-03	0.00E+00	0.00E+00	1.19E-02
2814	ALL	751788.42	4041460.7	NonCancerAcute	0.00E+00	7.48E-06	1.59E-03	0.00E+00	0.00E+00	1.60E-03	4.72E-03	0.00E+00	1.16E-02	0.00E+00	0.00E+00	1.59E-03	0.00E+00	0.00E+00	1.16E-02
2815	ALL	751888.42	4041460.7	NonCancerAcute	0.00E+00	7.34E-06	1.56E-03	0.00E+00	0.00E+00	1.57E-03	4.47E-03	0.00E+00	1.11E-02	0.00E+00	0.00E+00	1.56E-03	0.00E+00	0.00E+00	1.11E-02
2816	ALL	751988.42	4041460.7	NonCancerAcute	0.00E+00	7.25E-06	1.54E-03	0.00E+00	0.00E+00	1.55E-03	4.12E-03	0.00E+00	1.06E-02	0.00E+00	0.00E+00	1.54E-03	0.00E+00	0.00E+00	1.06E-02
2817	ALL	752088.42	4041460.7	NonCancerAcute	0.00E+00	7.19E-06	1.53E-03	0.00E+00	0.00E+00	1.53E-03	3.70E-03	0.00E+00	1.01E-02	0.00E+00	0.00E+00	1.53E-03	0.00E+00	0.00E+00	1.01E-02
2818	ALL	752188.42	4041460.7	NonCancerAcute	0.00E+00	7.19E-06	1.53E-03	0.00E+00	0.00E+00	1.53E-03	3.61E-03	0.00E+00	9.97E-03	0.00E+00	0.00E+00	1.53E-03	0.00E+00	0.00E+00	9.97E-03
2819	ALL	752288.42	4041460.7	NonCancerAcute	0.00E+00	7.12E-06	1.51E-03	0.00E+00	0.00E+00	1.52E-03	3.52E-03	0.00E+00	9.81E-03	0.00E+00	0.00E+00	1.51E-03	0.00E+00	0.00E+00	9.81E-03
2820	ALL	752388.42	4041460.7	NonCancerAcute	0.00E+00	6.99E-06	1.49E-03	0.00E+00	0.00E+00	1.49E-03	3.47E-03	0.00E+00	9.64E-03	0.00E+00	0.00E+00	1.49E-03	0.00E+00	0.00E+00	9.64E-03
2821	ALL	752488.42	4041460.7	NonCancerAcute	0.00E+00	6.84E-06	1.45E-03	0.00E+00	0.00E+00	1.46E-03	3.42E-03	0.00E+00	9.47E-03	0.00E+00	0.00E+00	1.45E-03	0.00E+00	0.00E+00	9.47E-03
2822	ALL	752588.42	4041460.7	NonCancerAcute	0.00E+00	6.86E-06	1.46E-03	0.00E+00	0.00E+00	1.46E-03	3.35E-03	0.00E+00	9.40E-03	0.00E+00	0.00E+00	1.46E-03	0.00E+00	0.00E+00	9.40E-03
2823	ALL	752688.42	4041460.7	NonCancerAcute	0.00E+00	6.82E-06	1.45E-03	0.00E+00	0.00E+00	1.45E-03	3.30E-03	0.00E+00	9.31E-03	0.00E+00	0.00E+00	1.45E-03	0.00E+00	0.00E+00	9.31E-03
2824	ALL	752788.42	4041460.7	NonCancerAcute	0.00E+00	6.71E-06	1.42E-03	0.00E+00	0.00E+00	1.43E-03	3.22E-03	0.00E+00	9.11E-03	0.00E+00	0.00E+00	1.42E-03	0.00E+00	0.00E+00	9.11E-03
2825	ALL	752888.42	4041460.7	NonCancerAcute	0.00E+00	6.56E-06	1.39E-03	0.00E+00	0.00E+00	1.40E-03	3.09E-03	0.00E+00	8.85E-03	0.00E+00	0.00E+00	1.39E-03	0.00E+00	0.00E+00	8.85E-03
2826	ALL	752988.42	4041460.7	NonCancerAcute	0.00E+00	6.47E-06	1.37E-03	0.00E+00	0.00E+00	1.38E-03	3.00E-03	0.00E+00	8.66E-03	0.00E+00	0.00E+00	1.37E-03	0.00E+00	0.00E+00	8.66E-03
2827	ALL	753088.42	4041460.7	NonCancerAcute	0.00E+00	6.40E-06	1.36E-03	0.00E+00	0.00E+00	1.37E-03	2.94E-03	0.00E+00	8.54E-03	0.00E+00	0.00E+00	1.36E-03	0.00E+00	0.00E+00	8.54E-03
2828	ALL	753188.42	4041460.7	NonCancerAcute	0.00E+00	6.34E-06	1.35E-03	0.00E+00	0.00E+00	1.35E-03	2.87E-03	0.00E+00	8.41E-03	0.00E+00	0.00E+00	1.35E-03	0.00E+00	0.00E+00	8.41E-03
2829	ALL	753288.42	4041460.7	NonCancerAcute	0.00E+00	6.33E-06	1.34E-03	0.00E+00	0.00E+00	1.35E-03	2.81E-03	0.00E+00	8.33E-03	0.00E+00	0.00E+00	1.34E-03	0.00E+00	0.00E+00	8.33E-03
2830	ALL	753388.42	4041460.7	NonCancerAcute	0.00E+00	6.33E-06	1.34E-03	0.00E+00	0.00E+00	1.35E-03	2.79E-03	0.00E+00	8.30E-03	0.00E+00	0.00E+00	1.34E-03	0.00E+00	0.00E+00	8.30E-03
2831	ALL	753488.42	4041460.7	NonCancerAcute	0.00E+00	6.28E-06	1.33E-03	0.00E+00	0.00E+00	1.34E-03	2.76E-03	0.00E+00	8.23E-03	0.00E+00	0.00E+00	1.33E-03	0.00E+00	0.00E+00	8.23E-03
2832	ALL	753588.42	4041460.7	NonCancerAcute	0.00E+00	6.24E-06	1.32E-03	0.00E+00	0.00E+00	1.33E-03	2.71E-03	0.00E+00	8.13E-03	0.00E+00	0.00E+00	1.32E-03	0.00E+00	0.00E+00	8.13E-03
2833	ALL	753688.42	4041460.7	NonCancerAcute	0.00E+00	6.15E-06	1.31E-03	0.00E+00	0.00E+00	1.31E-03	2.63E-03	0.00E+00	7.97E-03	0.00E+00	0.00E+00	1.31E-03	0.00E+00	0.00E+00	7.97E-03
2834	ALL	753788.42	4041460.7	NonCancerAcute	0.00E+00	6.09E-06	1.29E-03	0.00E+00	0.00E+00	1.30E-03	2.55E-03	0.00E+00	7.82E-03	0.00E+00	0.00E+00	1.29E-03	0.00E+00	0.00E+00	7.82E-03
2835	ALL	753888.42	4041460.7	NonCancerAcute	0.00E+00	6.03E-06	1.28E-03	0.00E+00	0.00E+00	1.29E-03	2.47E-03	0.00E+00	7.67E-03	0.00E+00	0.00E+00	1.28E-03	0.00E+00	0.00E+00	7.67E-03
2836	ALL	753988.42	4041460.7	NonCancerAcute	0.00E+00	5.94E-06	1.26E-03	0.00E+00	0.00E+00	1.27E-03	2.40E-03	0.00E+00	7.52E-03	0.00E+00	0.00E+00	1.26E-03	0.00E+00	0.00E+00	7.52E-03
2837	ALL	746288.42	4041560.7	NonCancerAcute	0.00E+00	1.04E-05	2.21E-03	0.00E+00	0.00E+00	2.22E-03	5.24E-03	0.00E+00	1.45E-02	0.00E+00	0.00E+00	2.21E-03	0.00E+00	0.00E+00	1.45E-02
2838	ALL	746388.42	4041560.7	NonCancerAcute	0.00E+00	1.04E-05	2.22E-03	0.00E+00	0.00E+00	2.23E-03	5.27E-03	0.00E+00	1.45E-02	0.00E+00	0.00E+00	2.22E-03	0.00E+00	0.00E+00	1.45E-02
2839	ALL	746488.42	4041560.7	NonCancerAcute	0.00E+00	1.05E-05	2.24E-03	0.00E+00	0.00E+00	2.25E-03	5.20E-03	0.00E+00	1.45E-02	0.00E+00	0.00E+00	2.24E-03	0.00E+00	0.00E+00	1.45E-02
2840	ALL	746588.42	4041560.7	NonCancerAcute	0.00E+00	1.05E-05	2.23E-03	0.00E+00	0.00E+00	2.24E-03	5.28E-03	0.00E+00	1.46E-02	0.00E+00	0.00E+00	2.23E-03	0.00E+00	0.00E+00	1.46E-02
2841	ALL	746688.42	4041560.7	NonCancerAcute	0.00E+00	1.05E-05	2.24E-03	0.00E+00	0.00E+00	2.25E-03	5.27E-03	0.00E+00	1.46E-02	0.00E+00	0.00E+00	2.24E-03	0.00E+00	0.00E+00	1.46E-02
2842	ALL	746788.42	4041560.7	NonCancerAcute	0.00E+00	1.04E-05	2.21E-03	0.00E+00	0.00E+00	2.22E-03	5.30E-03	0.00E+00	1.45E-02	0.00E+00	0.00E+00	2.21E-03	0.00E+00	0.00E+00	1.45E-02
2843	ALL	746888.42	4041560.7	NonCancerAcute	0.00E+00	1.02E-05	2.17E-03	0.00E+00	0.00E+00	2.18E-03	5.48E-03	0.00E+00	1.46E-02	0.00E+00	0.00E+00	2.17E-03	0.00E+00	0.00E+00	1.46E-02
2844	ALL	746988.42	4041560.7	NonCancerAcute	0.00E+00	1.06E-05	2.26E-03	0.00E+00	0.00E+00	2.27E-03	5.65E-03	0.00E+00	1.51E-02	0.00E+00	0.00E+00	2.26E-03	0.00E+00	0.00E+00	1.51E-02
2845	ALL	747088.42	4041560.7	NonCancerAcute	0.00E+00	1.07E-05	2.26E-03	0.00E+00	0.00E+00	2.27E-03	5.64E-03	0.00E+00	1.51E-02	0.00E+00	0.00E+00	2.26E-03	0.00E+00	0.00E+00	1.51E-02
2846	ALL	747188.42	4041560.7	NonCancerAcute	0.00E+00	1.04E-05	2.21E-03	0.00E+00	0.00E+00	2.22E-03	5.71E-03	0.00E+00	1.50E-02	0.00E+00	0.00E+00	2.21E-03	0.00E+00	0.00E+00	1.50E-02
2847	ALL	747288.42	4041560.7	NonCancerAcute	0.00E+00	1.04E-05	2.21E-03	0.00E+00	0.00E+00	2.22E-03	5.84E-03	0.00E+00	1.52E-02	0.00E+00	0.00E+00	2.21E-03	0.00E+00	0.00E+00	1.52E-02
2848	ALL	747388.42	4041560.7	NonCancerAcute	0.00E+00	1.07E-05	2.26E-03	0.00E+00	0.00E+00	2.27E-03	5.98E-03	0.00E+00	1.55E-02	0.00E+00	0.00E+00	2.26E-03	0.00E+00	0.00E+00	1.55E-02
2849	ALL	747488.42	4041560.7	NonCancerAcute	0.00E+00	1.07E-05	2.27E-03	0.00E+00	0.00E+00	2.28E-03	5.96E-03	0.00E+00	1.56E-02	0.00E+00	0.00E+00	2.27E-03	0.00E+00	0.00E+00	1.56E-02
2850	ALL	747588.42	4041560.7	NonCancerAcute	0.00E+00	1.08E-05	2.28E-03	0.00E+00	0.00E+00	2.29E-03	6.13E-03	0.00E+00	1.58E-02	0.00E+00	0.00E+00	2.28E-03	0.00E+00	0.00E+00	1.58E-02
2851	ALL	747688.42	4041560.7	NonCancerAcute	0.00E+00	1.08E-05	2.30E-03	0.00E+00	0.00E+00	2.31E-03	6.14E-03	0.00E+00	1.59E-02	0.00E+00	0.00E+00	2.30E-03	0.00E+00	0.00E+00	1.59E-02
2852	ALL	747788.42	4041560.7	NonCancerAcute	0.00E+00	1.04E-05	2.22E-03	0.00E+00	0.00E+00	2.23E-03	6.10E-03	0.00E+00	1.55E-02	0.00E+00	0.00E+00	2.22E-03	0.00E+00	0.00E+00	1.55E-02
2853	ALL	747888.42	4041560.7	NonCancerAcute	0.00E+00	1.05E-05	2.22E-03	0.00E+00	0.00E+00	2.23E-03	6.05E-03	0.00E+00	1.55E-02	0.00E+00	0.00E+00	2.22E-03	0.00E+00	0.00E+00	1.55E-02
2854	ALL	747988.42	4041560.7	NonCancerAcute	0.00E+00	1.06E-05	2.24E-03	0.00E+00	0.00E+00	2.25E-03	6.00E-03	0.00E+00	1.55E-02	0.00E+00	0.00E+00	2.24E-03	0.00E+00	0.00E+00	1.55E-02
2855	ALL	748088.42	4041560.7	NonCancerAcute	0.00E+00	1.07E-05	2.27E-03	0.00E+00	0.00E+00	2.28E-03	6.35E-03	0.00E+00	1.60E-02	0.00E+00	0.00E+00	2.27E-03	0.00E+00	0.00E+00	1.60E-02
2856	ALL	751388.42	4041560.7	NonCancerAcute	0.00E+00	7.74E-06	1.64E-03	0.00E+00	0.00E+00	1.65E-03	4.96E-03	0.00E+00	1.20E-02	0.00E+00	0.00E+00	1.64E-03	0.00E+00	0.00E+00	1.20E-02
2857	ALL	751488.42	4041560.7	NonCancerAcute	0.00E+00	7.74E-06	1.64E-03	0.00E+00	0.00E+00	1.65E-03	4.96E-03	0.00E+00	1.20E-02	0.00E+00	0.00E+00	1.64E-03	0.00E+00	0.00E+00	1.20E-02
2858	ALL	751588.42	4041560.7	NonCancerAcute	0.00E+00	7.69E-06	1.63E-03	0.00E+00	0.00E+00	1.64E-03	4.90E-03	0.00E+00	1.19E-02	0.00E+00	0.00E+00	1.63E-03	0.00E+00	0.00E+00	1.19E-02
2859	ALL	751688.42	4041560.7	NonCancerAcute	0.00E+00	7.64E-06	1.62E-03	0.00E+00	0.00E+00	1.63E-03	4.73E-03	0.00E+00	1.17E-02	0.00E+00	0.00E+00	1.62E-03	0.00E+00	0.00E+00	1.17E-02
2860	ALL	751788.42	4041560.7	NonCancerAcute	0.00E+00	7.52E-06	1.60E-03	0.00E+00	0.00E+00	1.60E-03	4.67E-03	0.00E+00	1.15E-02	0.00E+00	0.00E+00	1.60E-03	0.00E+00	0.00E+00	1.15E-02

2861	ALL	751888.42	4041560.7	NonCancerAcute	0.00E+00	7.33E-06	1.56E-03	0.00E+00	0.00E+00	1.56E-03	4.56E-03	0.00E+00	1.12E-02	0.00E+00	0.00E+00	1.56E-03	0.00E+00	0.00E+00	1.12E-02
2862	ALL	751988.42	4041560.7	NonCancerAcute	0.00E+00	7.23E-06	1.54E-03	0.00E+00	0.00E+00	1.54E-03	4.41E-03	0.00E+00	1.10E-02	0.00E+00	0.00E+00	1.54E-03	0.00E+00	0.00E+00	1.10E-02
2863	ALL	752088.42	4041560.7	NonCancerAcute	0.00E+00	7.17E-06	1.52E-03	0.00E+00	0.00E+00	1.53E-03	4.14E-03	0.00E+00	1.06E-02	0.00E+00	0.00E+00	1.52E-03	0.00E+00	0.00E+00	1.06E-02
2864	ALL	752188.42	4041560.7	NonCancerAcute	0.00E+00	7.11E-06	1.51E-03	0.00E+00	0.00E+00	1.52E-03	3.80E-03	0.00E+00	1.01E-02	0.00E+00	0.00E+00	1.51E-03	0.00E+00	0.00E+00	1.01E-02
2865	ALL	752288.42	4041560.7	NonCancerAcute	0.00E+00	7.09E-06	1.51E-03	0.00E+00	0.00E+00	1.51E-03	3.45E-03	0.00E+00	9.70E-03	0.00E+00	0.00E+00	1.51E-03	0.00E+00	0.00E+00	9.70E-03
2866	ALL	752388.42	4041560.7	NonCancerAcute	0.00E+00	7.00E-06	1.49E-03	0.00E+00	0.00E+00	1.49E-03	3.39E-03	0.00E+00	9.55E-03	0.00E+00	0.00E+00	1.49E-03	0.00E+00	0.00E+00	9.55E-03
2867	ALL	752488.42	4041560.7	NonCancerAcute	0.00E+00	6.86E-06	1.46E-03	0.00E+00	0.00E+00	1.46E-03	3.35E-03	0.00E+00	9.39E-03	0.00E+00	0.00E+00	1.46E-03	0.00E+00	0.00E+00	9.39E-03
2868	ALL	752588.42	4041560.7	NonCancerAcute	0.00E+00	6.74E-06	1.43E-03	0.00E+00	0.00E+00	1.44E-03	3.28E-03	0.00E+00	9.21E-03	0.00E+00	0.00E+00	1.43E-03	0.00E+00	0.00E+00	9.21E-03
2869	ALL	752688.42	4041560.7	NonCancerAcute	0.00E+00	6.72E-06	1.43E-03	0.00E+00	0.00E+00	1.43E-03	3.24E-03	0.00E+00	9.16E-03	0.00E+00	0.00E+00	1.43E-03	0.00E+00	0.00E+00	9.16E-03
2870	ALL	752788.42	4041560.7	NonCancerAcute	0.00E+00	6.64E-06	1.41E-03	0.00E+00	0.00E+00	1.42E-03	3.16E-03	0.00E+00	8.99E-03	0.00E+00	0.00E+00	1.41E-03	0.00E+00	0.00E+00	8.99E-03
2871	ALL	752888.42	4041560.7	NonCancerAcute	0.00E+00	6.54E-06	1.39E-03	0.00E+00	0.00E+00	1.40E-03	3.10E-03	0.00E+00	8.84E-03	0.00E+00	0.00E+00	1.39E-03	0.00E+00	0.00E+00	8.84E-03
2872	ALL	752988.42	4041560.7	NonCancerAcute	0.00E+00	6.41E-06	1.36E-03	0.00E+00	0.00E+00	1.37E-03	3.02E-03	0.00E+00	8.64E-03	0.00E+00	0.00E+00	1.36E-03	0.00E+00	0.00E+00	8.64E-03
2873	ALL	753088.42	4041560.7	NonCancerAcute	0.00E+00	6.36E-06	1.35E-03	0.00E+00	0.00E+00	1.36E-03	2.93E-03	0.00E+00	8.50E-03	0.00E+00	0.00E+00	1.35E-03	0.00E+00	0.00E+00	8.50E-03
2874	ALL	753188.42	4041560.7	NonCancerAcute	0.00E+00	6.32E-06	1.34E-03	0.00E+00	0.00E+00	1.35E-03	2.88E-03	0.00E+00	8.41E-03	0.00E+00	0.00E+00	1.34E-03	0.00E+00	0.00E+00	8.41E-03
2875	ALL	753288.42	4041560.7	NonCancerAcute	0.00E+00	6.25E-06	1.33E-03	0.00E+00	0.00E+00	1.33E-03	2.83E-03	0.00E+00	8.29E-03	0.00E+00	0.00E+00	1.33E-03	0.00E+00	0.00E+00	8.29E-03
2876	ALL	753388.42	4041560.7	NonCancerAcute	0.00E+00	6.21E-06	1.32E-03	0.00E+00	0.00E+00	1.32E-03	2.78E-03	0.00E+00	8.20E-03	0.00E+00	0.00E+00	1.32E-03	0.00E+00	0.00E+00	8.20E-03
2877	ALL	753488.42	4041560.7	NonCancerAcute	0.00E+00	6.20E-06	1.32E-03	0.00E+00	0.00E+00	1.32E-03	2.72E-03	0.00E+00	8.12E-03	0.00E+00	0.00E+00	1.32E-03	0.00E+00	0.00E+00	8.12E-03
2878	ALL	753588.42	4041560.7	NonCancerAcute	0.00E+00	6.14E-06	1.30E-03	0.00E+00	0.00E+00	1.31E-03	2.65E-03	0.00E+00	7.98E-03	0.00E+00	0.00E+00	1.30E-03	0.00E+00	0.00E+00	7.98E-03
2879	ALL	753688.42	4041560.7	NonCancerAcute	0.00E+00	6.12E-06	1.30E-03	0.00E+00	0.00E+00	1.31E-03	2.59E-03	0.00E+00	7.89E-03	0.00E+00	0.00E+00	1.30E-03	0.00E+00	0.00E+00	7.89E-03
2880	ALL	753788.42	4041560.7	NonCancerAcute	0.00E+00	6.07E-06	1.29E-03	0.00E+00	0.00E+00	1.30E-03	2.54E-03	0.00E+00	7.80E-03	0.00E+00	0.00E+00	1.29E-03	0.00E+00	0.00E+00	7.80E-03
2881	ALL	753888.42	4041560.7	NonCancerAcute	0.00E+00	6.02E-06	1.28E-03	0.00E+00	0.00E+00	1.28E-03	2.48E-03	0.00E+00	7.69E-03	0.00E+00	0.00E+00	1.28E-03	0.00E+00	0.00E+00	7.69E-03
2882	ALL	753988.42	4041560.7	NonCancerAcute	0.00E+00	5.98E-06	1.27E-03	0.00E+00	0.00E+00	1.28E-03	2.41E-03	0.00E+00	7.57E-03	0.00E+00	0.00E+00	1.27E-03	0.00E+00	0.00E+00	7.57E-03
2883	ALL	746288.42	4041660.7	NonCancerAcute	0.00E+00	1.04E-05	2.22E-03	0.00E+00	0.00E+00	2.23E-03	5.02E-03	0.00E+00	1.42E-02	0.00E+00	0.00E+00	2.22E-03	0.00E+00	0.00E+00	1.42E-02
2884	ALL	746388.42	4041660.7	NonCancerAcute	0.00E+00	1.05E-05	2.22E-03	0.00E+00	0.00E+00	2.23E-03	5.18E-03	0.00E+00	1.44E-02	0.00E+00	0.00E+00	2.22E-03	0.00E+00	0.00E+00	1.44E-02
2885	ALL	746488.42	4041660.7	NonCancerAcute	0.00E+00	1.04E-05	2.22E-03	0.00E+00	0.00E+00	2.23E-03	5.23E-03	0.00E+00	1.45E-02	0.00E+00	0.00E+00	2.22E-03	0.00E+00	0.00E+00	1.45E-02
2886	ALL	746588.42	4041660.7	NonCancerAcute	0.00E+00	1.04E-05	2.21E-03	0.00E+00	0.00E+00	2.22E-03	5.28E-03	0.00E+00	1.45E-02	0.00E+00	0.00E+00	2.21E-03	0.00E+00	0.00E+00	1.45E-02
2887	ALL	746688.42	4041660.7	NonCancerAcute	0.00E+00	1.05E-05	2.23E-03	0.00E+00	0.00E+00	2.24E-03	5.16E-03	0.00E+00	1.44E-02	0.00E+00	0.00E+00	2.23E-03	0.00E+00	0.00E+00	1.44E-02
2888	ALL	746788.42	4041660.7	NonCancerAcute	0.00E+00	1.04E-05	2.21E-03	0.00E+00	0.00E+00	2.22E-03	5.28E-03	0.00E+00	1.45E-02	0.00E+00	0.00E+00	2.21E-03	0.00E+00	0.00E+00	1.45E-02
2889	ALL	746888.42	4041660.7	NonCancerAcute	0.00E+00	1.04E-05	2.20E-03	0.00E+00	0.00E+00	2.21E-03	5.40E-03	0.00E+00	1.46E-02	0.00E+00	0.00E+00	2.20E-03	0.00E+00	0.00E+00	1.46E-02
2890	ALL	746988.42	4041660.7	NonCancerAcute	0.00E+00	1.05E-05	2.24E-03	0.00E+00	0.00E+00	2.25E-03	5.52E-03	0.00E+00	1.49E-02	0.00E+00	0.00E+00	2.24E-03	0.00E+00	0.00E+00	1.49E-02
2891	ALL	747088.42	4041660.7	NonCancerAcute	0.00E+00	1.04E-05	2.21E-03	0.00E+00	0.00E+00	2.22E-03	5.60E-03	0.00E+00	1.49E-02	0.00E+00	0.00E+00	2.21E-03	0.00E+00	0.00E+00	1.49E-02
2892	ALL	747188.42	4041660.7	NonCancerAcute	0.00E+00	1.06E-05	2.24E-03	0.00E+00	0.00E+00	2.25E-03	5.73E-03	0.00E+00	1.52E-02	0.00E+00	0.00E+00	2.24E-03	0.00E+00	0.00E+00	1.52E-02
2893	ALL	747288.42	4041660.7	NonCancerAcute	0.00E+00	1.03E-05	2.18E-03	0.00E+00	0.00E+00	2.19E-03	5.75E-03	0.00E+00	1.50E-02	0.00E+00	0.00E+00	2.18E-03	0.00E+00	0.00E+00	1.50E-02
2894	ALL	747388.42	4041660.7	NonCancerAcute	0.00E+00	1.04E-05	2.21E-03	0.00E+00	0.00E+00	2.22E-03	5.86E-03	0.00E+00	1.52E-02	0.00E+00	0.00E+00	2.21E-03	0.00E+00	0.00E+00	1.52E-02
2895	ALL	747488.42	4041660.7	NonCancerAcute	0.00E+00	1.08E-05	2.29E-03	0.00E+00	0.00E+00	2.30E-03	5.93E-03	0.00E+00	1.56E-02	0.00E+00	0.00E+00	2.29E-03	0.00E+00	0.00E+00	1.56E-02
2896	ALL	747588.42	4041660.7	NonCancerAcute	0.00E+00	1.06E-05	2.25E-03	0.00E+00	0.00E+00	2.26E-03	6.01E-03	0.00E+00	1.55E-02	0.00E+00	0.00E+00	2.25E-03	0.00E+00	0.00E+00	1.55E-02
2897	ALL	747688.42	4041660.7	NonCancerAcute	0.00E+00	1.08E-05	2.29E-03	0.00E+00	0.00E+00	2.30E-03	6.05E-03	0.00E+00	1.57E-02	0.00E+00	0.00E+00	2.29E-03	0.00E+00	0.00E+00	1.57E-02
2898	ALL	747788.42	4041660.7	NonCancerAcute	0.00E+00	1.05E-05	2.24E-03	0.00E+00	0.00E+00	2.25E-03	6.00E-03	0.00E+00	1.55E-02	0.00E+00	0.00E+00	2.24E-03	0.00E+00	0.00E+00	1.55E-02
2899	ALL	747888.42	4041660.7	NonCancerAcute	0.00E+00	1.04E-05	2.20E-03	0.00E+00	0.00E+00	2.21E-03	5.97E-03	0.00E+00	1.53E-02	0.00E+00	0.00E+00	2.20E-03	0.00E+00	0.00E+00	1.53E-02
2900	ALL	747988.42	4041660.7	NonCancerAcute	0.00E+00	1.02E-05	2.17E-03	0.00E+00	0.00E+00	2.18E-03	5.90E-03	0.00E+00	1.51E-02	0.00E+00	0.00E+00	2.17E-03	0.00E+00	0.00E+00	1.51E-02
2901	ALL	748088.42	4041660.7	NonCancerAcute	0.00E+00	1.05E-05	2.23E-03	0.00E+00	0.00E+00	2.24E-03	6.15E-03	0.00E+00	1.56E-02	0.00E+00	0.00E+00	2.23E-03	0.00E+00	0.00E+00	1.56E-02
2902	ALL	748188.42	4041660.7	NonCancerAcute	0.00E+00	1.04E-05	2.20E-03	0.00E+00	0.00E+00	2.21E-03	6.43E-03	0.00E+00	1.59E-02	0.00E+00	0.00E+00	2.20E-03	0.00E+00	0.00E+00	1.59E-02
2903	ALL	748288.42	4041660.7	NonCancerAcute	0.00E+00	9.80E-06	2.08E-03	0.00E+00	0.00E+00	2.09E-03	6.50E-03	0.00E+00	1.55E-02	0.00E+00	0.00E+00	2.08E-03	0.00E+00	0.00E+00	1.55E-02
2904	ALL	748388.42	4041660.7	NonCancerAcute	0.00E+00	9.89E-06	2.10E-03	0.00E+00	0.00E+00	2.11E-03	6.73E-03	0.00E+00	1.59E-02	0.00E+00	0.00E+00	2.10E-03	0.00E+00	0.00E+00	1.59E-02
2905	ALL	748488.42	4041660.7	NonCancerAcute	0.00E+00	9.96E-06	2.12E-03	0.00E+00	0.00E+00	2.13E-03	6.76E-03	0.00E+00	1.60E-02	0.00E+00	0.00E+00	2.12E-03	0.00E+00	0.00E+00	1.60E-02
2906	ALL	751388.42	4041660.7	NonCancerAcute	0.00E+00	7.75E-06	1.65E-03	0.00E+00	0.00E+00	1.65E-03	4.85E-03	0.00E+00	1.19E-02	0.00E+00	0.00E+00	1.65E-03	0.00E+00	0.00E+00	1.19E-02
2907	ALL	751488.42	4041660.7	NonCancerAcute	0.00E+00	7.62E-06	1.62E-03	0.00E+00	0.00E+00	1.63E-03	4.82E-03	0.00E+00	1.18E-02	0.00E+00	0.00E+00	1.62E-03	0.00E+00	0.00E+00	1.18E-02
2908	ALL	751588.42	4041660.7	NonCancerAcute	0.00E+00	7.53E-06	1.60E-03	0.00E+00	0.00E+00	1.61E-03	4.75E-03	0.00E+00	1.16E-02	0.00E+00	0.00E+00	1.60E-03	0.00E+00	0.00E+00	1.16E-02
2909	ALL	751688.42	4041660.7	NonCancerAcute	0.00E+00	7.53E-06	1.60E-03	0.00E+00	0.00E+00	1.61E-03	4.78E-03	0.00E+00	1.17E-02	0.00E+00	0.00E+00	1.60E-03	0.00E+00	0.00E+00	1.17E-02
2910	ALL	751788.42	4041660.7	NonCancerAcute	0.00E+00	7.50E-06	1.59E-03	0.00E+00	0.00E+00	1.60E-03	4.59E-03	0.00E+00	1.14E-02	0.00E+00	0.00E+00	1.59E-03	0.00E+00	0.00E+00	1.14E-02
2911	ALL	751888.42	4041660.7	NonCancerAcute	0.00E+00	7.37E-06	1.57E-03	0.00E+00	0.00E+00	1.57E-03	4.44E-03	0.00E+00	1.11E-02	0.00E+00	0.00E+00	1.57E-03	0.00E+00	0.00E+00	1.11E-02
2912	ALL	751988.42	4041660.7	NonCancerAcute	0.00E+00	7.21E-06	1.53E-03	0.00E+00	0.00E+00	1.54E-03	4.40E-03	0.00E+00	1.10E-02	0.00E+00	0.00E+00	1.53E-03	0.00E+00	0.00E+00	1.10E-02
2913	ALL	752088.42	4041660.7	NonCancerAcute	0.00E+00	7.10E-06	1.51E-03	0.00E+00	0.00E+00	1.51E-03	4.28E-03	0.00E+00	1.07E-02	0.00E+00	0.00E+00	1.51E-03	0.00E+00	0.00E+00	1.07E-02

2914	ALL	752188.42	4041660.7	NonCancerAcute	0.00E+00	7.05E-06	1.50E-03	0.00E+00	0.00E+00	1.50E-03	4.10E-03	0.00E+00	1.05E-02	0.00E+00	0.00E+00	1.50E-03	0.00E+00	0.00E+00	1.05E-02
2915	ALL	752288.42	4041660.7	NonCancerAcute	0.00E+00	7.04E-06	1.49E-03	0.00E+00	0.00E+00	1.50E-03	3.83E-03	0.00E+00	1.01E-02	0.00E+00	0.00E+00	1.49E-03	0.00E+00	0.00E+00	1.01E-02
2916	ALL	752388.42	4041660.7	NonCancerAcute	0.00E+00	7.02E-06	1.49E-03	0.00E+00	0.00E+00	1.50E-03	3.52E-03	0.00E+00	9.73E-03	0.00E+00	0.00E+00	1.49E-03	0.00E+00	0.00E+00	9.73E-03
2917	ALL	752488.42	4041660.7	NonCancerAcute	0.00E+00	6.91E-06	1.47E-03	0.00E+00	0.00E+00	1.47E-03	3.24E-03	0.00E+00	9.29E-03	0.00E+00	0.00E+00	1.47E-03	0.00E+00	0.00E+00	9.29E-03
2918	ALL	752588.42	4041660.7	NonCancerAcute	0.00E+00	6.77E-06	1.44E-03	0.00E+00	0.00E+00	1.44E-03	3.22E-03	0.00E+00	9.17E-03	0.00E+00	0.00E+00	1.44E-03	0.00E+00	0.00E+00	9.17E-03
2919	ALL	752688.42	4041660.7	NonCancerAcute	0.00E+00	6.63E-06	1.41E-03	0.00E+00	0.00E+00	1.41E-03	3.18E-03	0.00E+00	9.01E-03	0.00E+00	0.00E+00	1.41E-03	0.00E+00	0.00E+00	9.01E-03
2920	ALL	752788.42	4041660.7	NonCancerAcute	0.00E+00	6.57E-06	1.40E-03	0.00E+00	0.00E+00	1.40E-03	3.10E-03	0.00E+00	8.87E-03	0.00E+00	0.00E+00	1.40E-03	0.00E+00	0.00E+00	8.87E-03
2921	ALL	752888.42	4041660.7	NonCancerAcute	0.00E+00	6.52E-06	1.38E-03	0.00E+00	0.00E+00	1.39E-03	3.06E-03	0.00E+00	8.78E-03	0.00E+00	0.00E+00	1.38E-03	0.00E+00	0.00E+00	8.78E-03
2922	ALL	752988.42	4041660.7	NonCancerAcute	0.00E+00	6.40E-06	1.36E-03	0.00E+00	0.00E+00	1.37E-03	2.98E-03	0.00E+00	8.59E-03	0.00E+00	0.00E+00	1.36E-03	0.00E+00	0.00E+00	8.59E-03
2923	ALL	753088.42	4041660.7	NonCancerAcute	0.00E+00	6.28E-06	1.33E-03	0.00E+00	0.00E+00	1.34E-03	2.91E-03	0.00E+00	8.41E-03	0.00E+00	0.00E+00	1.33E-03	0.00E+00	0.00E+00	8.41E-03
2924	ALL	753188.42	4041660.7	NonCancerAcute	0.00E+00	6.25E-06	1.33E-03	0.00E+00	0.00E+00	1.33E-03	2.84E-03	0.00E+00	8.31E-03	0.00E+00	0.00E+00	1.33E-03	0.00E+00	0.00E+00	8.31E-03
2925	ALL	753288.42	4041660.7	NonCancerAcute	0.00E+00	6.21E-06	1.32E-03	0.00E+00	0.00E+00	1.33E-03	2.82E-03	0.00E+00	8.25E-03	0.00E+00	0.00E+00	1.32E-03	0.00E+00	0.00E+00	8.25E-03
2926	ALL	753388.42	4041660.7	NonCancerAcute	0.00E+00	6.15E-06	1.31E-03	0.00E+00	0.00E+00	1.31E-03	2.78E-03	0.00E+00	8.14E-03	0.00E+00	0.00E+00	1.31E-03	0.00E+00	0.00E+00	8.14E-03
2927	ALL	753488.42	4041660.7	NonCancerAcute	0.00E+00	6.12E-06	1.30E-03	0.00E+00	0.00E+00	1.31E-03	2.73E-03	0.00E+00	8.07E-03	0.00E+00	0.00E+00	1.30E-03	0.00E+00	0.00E+00	8.07E-03
2928	ALL	753588.42	4041660.7	NonCancerAcute	0.00E+00	6.11E-06	1.30E-03	0.00E+00	0.00E+00	1.30E-03	2.69E-03	0.00E+00	8.01E-03	0.00E+00	0.00E+00	1.30E-03	0.00E+00	0.00E+00	8.01E-03
2929	ALL	753688.42	4041660.7	NonCancerAcute	0.00E+00	6.05E-06	1.28E-03	0.00E+00	0.00E+00	1.29E-03	2.63E-03	0.00E+00	7.89E-03	0.00E+00	0.00E+00	1.28E-03	0.00E+00	0.00E+00	7.89E-03
2930	ALL	753788.42	4041660.7	NonCancerAcute	0.00E+00	6.01E-06	1.28E-03	0.00E+00	0.00E+00	1.28E-03	2.56E-03	0.00E+00	7.77E-03	0.00E+00	0.00E+00	1.28E-03	0.00E+00	0.00E+00	7.77E-03
2931	ALL	753888.42	4041660.7	NonCancerAcute	0.00E+00	5.95E-06	1.26E-03	0.00E+00	0.00E+00	1.27E-03	2.48E-03	0.00E+00	7.62E-03	0.00E+00	0.00E+00	1.26E-03	0.00E+00	0.00E+00	7.62E-03
2932	ALL	753988.42	4041660.7	NonCancerAcute	0.00E+00	5.90E-06	1.25E-03	0.00E+00	0.00E+00	1.26E-03	2.38E-03	0.00E+00	7.47E-03	0.00E+00	0.00E+00	1.25E-03	0.00E+00	0.00E+00	7.47E-03
2933	ALL	746288.42	4041760.7	NonCancerAcute	0.00E+00	1.05E-05	2.22E-03	0.00E+00	0.00E+00	2.23E-03	5.15E-03	0.00E+00	1.44E-02	0.00E+00	0.00E+00	2.22E-03	0.00E+00	0.00E+00	1.44E-02
2934	ALL	746388.42	4041760.7	NonCancerAcute	0.00E+00	1.05E-05	2.22E-03	0.00E+00	0.00E+00	2.23E-03	5.15E-03	0.00E+00	1.44E-02	0.00E+00	0.00E+00	2.22E-03	0.00E+00	0.00E+00	1.44E-02
2935	ALL	746488.42	4041760.7	NonCancerAcute	0.00E+00	1.05E-05	2.22E-03	0.00E+00	0.00E+00	2.23E-03	5.07E-03	0.00E+00	1.43E-02	0.00E+00	0.00E+00	2.22E-03	0.00E+00	0.00E+00	1.43E-02
2936	ALL	746588.42	4041760.7	NonCancerAcute	0.00E+00	1.03E-05	2.20E-03	0.00E+00	0.00E+00	2.21E-03	5.18E-03	0.00E+00	1.43E-02	0.00E+00	0.00E+00	2.20E-03	0.00E+00	0.00E+00	1.43E-02
2937	ALL	746688.42	4041760.7	NonCancerAcute	0.00E+00	1.05E-05	2.23E-03	0.00E+00	0.00E+00	2.24E-03	5.07E-03	0.00E+00	1.43E-02	0.00E+00	0.00E+00	2.23E-03	0.00E+00	0.00E+00	1.43E-02
2938	ALL	746788.42	4041760.7	NonCancerAcute	0.00E+00	1.04E-05	2.22E-03	0.00E+00	0.00E+00	2.23E-03	5.15E-03	0.00E+00	1.44E-02	0.00E+00	0.00E+00	2.22E-03	0.00E+00	0.00E+00	1.44E-02
2939	ALL	746888.42	4041760.7	NonCancerAcute	0.00E+00	1.03E-05	2.18E-03	0.00E+00	0.00E+00	2.19E-03	5.32E-03	0.00E+00	1.44E-02	0.00E+00	0.00E+00	2.18E-03	0.00E+00	0.00E+00	1.44E-02
2940	ALL	746988.42	4041760.7	NonCancerAcute	0.00E+00	1.03E-05	2.20E-03	0.00E+00	0.00E+00	2.21E-03	5.52E-03	0.00E+00	1.47E-02	0.00E+00	0.00E+00	2.20E-03	0.00E+00	0.00E+00	1.47E-02
2941	ALL	747088.42	4041760.7	NonCancerAcute	0.00E+00	1.06E-05	2.26E-03	0.00E+00	0.00E+00	2.27E-03	5.59E-03	0.00E+00	1.51E-02	0.00E+00	0.00E+00	2.26E-03	0.00E+00	0.00E+00	1.51E-02
2942	ALL	747188.42	4041760.7	NonCancerAcute	0.00E+00	1.04E-05	2.21E-03	0.00E+00	0.00E+00	2.22E-03	5.58E-03	0.00E+00	1.49E-02	0.00E+00	0.00E+00	2.21E-03	0.00E+00	0.00E+00	1.49E-02
2943	ALL	747288.42	4041760.7	NonCancerAcute	0.00E+00	1.02E-05	2.16E-03	0.00E+00	0.00E+00	2.17E-03	5.65E-03	0.00E+00	1.48E-02	0.00E+00	0.00E+00	2.16E-03	0.00E+00	0.00E+00	1.48E-02
2944	ALL	747388.42	4041760.7	NonCancerAcute	0.00E+00	1.04E-05	2.21E-03	0.00E+00	0.00E+00	2.22E-03	5.73E-03	0.00E+00	1.51E-02	0.00E+00	0.00E+00	2.21E-03	0.00E+00	0.00E+00	1.51E-02
2945	ALL	747488.42	4041760.7	NonCancerAcute	0.00E+00	1.07E-05	2.28E-03	0.00E+00	0.00E+00	2.29E-03	5.84E-03	0.00E+00	1.54E-02	0.00E+00	0.00E+00	2.28E-03	0.00E+00	0.00E+00	1.54E-02
2946	ALL	747588.42	4041760.7	NonCancerAcute	0.00E+00	1.06E-05	2.25E-03	0.00E+00	0.00E+00	2.26E-03	5.93E-03	0.00E+00	1.55E-02	0.00E+00	0.00E+00	2.25E-03	0.00E+00	0.00E+00	1.55E-02
2947	ALL	747688.42	4041760.7	NonCancerAcute	0.00E+00	1.06E-05	2.25E-03	0.00E+00	0.00E+00	2.26E-03	5.96E-03	0.00E+00	1.55E-02	0.00E+00	0.00E+00	2.25E-03	0.00E+00	0.00E+00	1.55E-02
2948	ALL	747788.42	4041760.7	NonCancerAcute	0.00E+00	1.04E-05	2.20E-03	0.00E+00	0.00E+00	2.21E-03	5.90E-03	0.00E+00	1.52E-02	0.00E+00	0.00E+00	2.20E-03	0.00E+00	0.00E+00	1.52E-02
2949	ALL	747888.42	4041760.7	NonCancerAcute	0.00E+00	1.01E-05	2.15E-03	0.00E+00	0.00E+00	2.16E-03	5.87E-03	0.00E+00	1.50E-02	0.00E+00	0.00E+00	2.15E-03	0.00E+00	0.00E+00	1.50E-02
2950	ALL	747988.42	4041760.7	NonCancerAcute	0.00E+00	1.02E-05	2.17E-03	0.00E+00	0.00E+00	2.18E-03	5.79E-03	0.00E+00	1.50E-02	0.00E+00	0.00E+00	2.17E-03	0.00E+00	0.00E+00	1.50E-02
2951	ALL	748088.42	4041760.7	NonCancerAcute	0.00E+00	1.03E-05	2.19E-03	0.00E+00	0.00E+00	2.20E-03	5.99E-03	0.00E+00	1.53E-02	0.00E+00	0.00E+00	2.19E-03	0.00E+00	0.00E+00	1.53E-02
2952	ALL	748188.42	4041760.7	NonCancerAcute	0.00E+00	1.02E-05	2.17E-03	0.00E+00	0.00E+00	2.18E-03	6.18E-03	0.00E+00	1.55E-02	0.00E+00	0.00E+00	2.17E-03	0.00E+00	0.00E+00	1.55E-02
2953	ALL	748288.42	4041760.7	NonCancerAcute	0.00E+00	9.58E-06	2.04E-03	0.00E+00	0.00E+00	2.04E-03	6.44E-03	0.00E+00	1.53E-02	0.00E+00	0.00E+00	2.04E-03	0.00E+00	0.00E+00	1.53E-02
2954	ALL	748388.42	4041760.7	NonCancerAcute	0.00E+00	9.75E-06	2.07E-03	0.00E+00	0.00E+00	2.08E-03	6.57E-03	0.00E+00	1.56E-02	0.00E+00	0.00E+00	2.07E-03	0.00E+00	0.00E+00	1.56E-02
2955	ALL	748488.42	4041760.7	NonCancerAcute	0.00E+00	9.80E-06	2.08E-03	0.00E+00	0.00E+00	2.09E-03	6.63E-03	0.00E+00	1.57E-02	0.00E+00	0.00E+00	2.08E-03	0.00E+00	0.00E+00	1.57E-02
2956	ALL	753588.42	4041760.7	NonCancerAcute	0.00E+00	6.04E-06	1.28E-03	0.00E+00	0.00E+00	1.29E-03	2.68E-03	0.00E+00	7.94E-03	0.00E+00	0.00E+00	1.28E-03	0.00E+00	0.00E+00	7.94E-03
2957	ALL	753688.42	4041760.7	NonCancerAcute	0.00E+00	6.01E-06	1.28E-03	0.00E+00	0.00E+00	1.28E-03	2.65E-03	0.00E+00	7.88E-03	0.00E+00	0.00E+00	1.28E-03	0.00E+00	0.00E+00	7.88E-03
2958	ALL	753788.42	4041760.7	NonCancerAcute	0.00E+00	5.98E-06	1.27E-03	0.00E+00	0.00E+00	1.28E-03	2.60E-03	0.00E+00	7.80E-03	0.00E+00	0.00E+00	1.27E-03	0.00E+00	0.00E+00	7.80E-03
2959	ALL	753888.42	4041760.7	NonCancerAcute	0.00E+00	5.94E-06	1.26E-03	0.00E+00	0.00E+00	1.27E-03	2.54E-03	0.00E+00	7.70E-03	0.00E+00	0.00E+00	1.26E-03	0.00E+00	0.00E+00	7.70E-03
2960	ALL	753988.42	4041760.7	NonCancerAcute	0.00E+00	5.88E-06	1.25E-03	0.00E+00	0.00E+00	1.25E-03	2.47E-03	0.00E+00	7.56E-03	0.00E+00	0.00E+00	1.25E-03	0.00E+00	0.00E+00	7.56E-03
2961	ALL	746288.42	4041860.7	NonCancerAcute	0.00E+00	1.04E-05	2.22E-03	0.00E+00	0.00E+00	2.23E-03	4.95E-03	0.00E+00	1.41E-02	0.00E+00	0.00E+00	2.22E-03	0.00E+00	0.00E+00	1.41E-02
2962	ALL	746388.42	4041860.7	NonCancerAcute	0.00E+00	1.04E-05	2.20E-03	0.00E+00	0.00E+00	2.21E-03	4.99E-03	0.00E+00	1.41E-02	0.00E+00	0.00E+00	2.20E-03	0.00E+00	0.00E+00	1.41E-02
2963	ALL	746488.42	4041860.7	NonCancerAcute	0.00E+00	1.03E-05	2.20E-03	0.00E+00	0.00E+00	2.21E-03	5.00E-03	0.00E+00	1.41E-02	0.00E+00	0.00E+00	2.20E-03	0.00E+00	0.00E+00	1.41E-02
2964	ALL	746588.42	4041860.7	NonCancerAcute	0.00E+00	1.03E-05	2.20E-03	0.00E+00	0.00E+00	2.21E-03	5.03E-03	0.00E+00	1.41E-02	0.00E+00	0.00E+00	2.20E-03	0.00E+00	0.00E+00	1.41E-02
2965	ALL	746688.42	4041860.7	NonCancerAcute	0.00E+00	1.04E-05	2.22E-03	0.00E+00	0.00E+00	2.23E-03	4.97E-03	0.00E+00	1.41E-02	0.00E+00	0.00E+00	2.22E-03	0.00E+00	0.00E+00	1.41E-02
2966	ALL	746788.42	4041860.7	NonCancerAcute	0.00E+00	1.03E-05	2.19E-03	0.00E+00	0.00E+00	2.20E-03	5.14E-03	0.00E+00	1.43E-02	0.00E+00	0.00E+00	2.19E-03	0.00E+00	0.00E+00	1.43E-02

2967	ALL	746888.42	4041860.7	NonCancerAcute	0.00E+00	1.01E-05	2.15E-03	0.00E+00	0.00E+00	2.16E-03	5.35E-03	0.00E+00	1.44E-02	0.00E+00	0.00E+00	2.15E-03	0.00E+00	0.00E+00	1.44E-02
2968	ALL	746988.42	4041860.7	NonCancerAcute	0.00E+00	1.05E-05	2.23E-03	0.00E+00	0.00E+00	2.24E-03	5.41E-03	0.00E+00	1.47E-02	0.00E+00	0.00E+00	2.23E-03	0.00E+00	0.00E+00	1.47E-02
2969	ALL	747088.42	4041860.7	NonCancerAcute	0.00E+00	1.05E-05	2.22E-03	0.00E+00	0.00E+00	2.23E-03	5.45E-03	0.00E+00	1.47E-02	0.00E+00	0.00E+00	2.22E-03	0.00E+00	0.00E+00	1.47E-02
2970	ALL	747188.42	4041860.7	NonCancerAcute	0.00E+00	1.04E-05	2.22E-03	0.00E+00	0.00E+00	2.23E-03	5.51E-03	0.00E+00	1.48E-02	0.00E+00	0.00E+00	2.22E-03	0.00E+00	0.00E+00	1.48E-02
2971	ALL	747288.42	4041860.7	NonCancerAcute	0.00E+00	1.01E-05	2.15E-03	0.00E+00	0.00E+00	2.16E-03	5.56E-03	0.00E+00	1.46E-02	0.00E+00	0.00E+00	2.15E-03	0.00E+00	0.00E+00	1.46E-02
2972	ALL	747388.42	4041860.7	NonCancerAcute	0.00E+00	1.05E-05	2.23E-03	0.00E+00	0.00E+00	2.24E-03	5.66E-03	0.00E+00	1.50E-02	0.00E+00	0.00E+00	2.23E-03	0.00E+00	0.00E+00	1.50E-02
2973	ALL	747488.42	4041860.7	NonCancerAcute	0.00E+00	1.06E-05	2.25E-03	0.00E+00	0.00E+00	2.26E-03	5.71E-03	0.00E+00	1.52E-02	0.00E+00	0.00E+00	2.25E-03	0.00E+00	0.00E+00	1.52E-02
2974	ALL	747588.42	4041860.7	NonCancerAcute	0.00E+00	1.05E-05	2.24E-03	0.00E+00	0.00E+00	2.25E-03	5.86E-03	0.00E+00	1.53E-02	0.00E+00	0.00E+00	2.24E-03	0.00E+00	0.00E+00	1.53E-02
2975	ALL	747688.42	4041860.7	NonCancerAcute	0.00E+00	1.05E-05	2.23E-03	0.00E+00	0.00E+00	2.24E-03	5.87E-03	0.00E+00	1.53E-02	0.00E+00	0.00E+00	2.23E-03	0.00E+00	0.00E+00	1.53E-02
2976	ALL	747788.42	4041860.7	NonCancerAcute	0.00E+00	1.04E-05	2.20E-03	0.00E+00	0.00E+00	2.21E-03	5.82E-03	0.00E+00	1.51E-02	0.00E+00	0.00E+00	2.20E-03	0.00E+00	0.00E+00	1.51E-02
2977	ALL	747888.42	4041860.7	NonCancerAcute	0.00E+00	9.81E-06	2.08E-03	0.00E+00	0.00E+00	2.09E-03	5.77E-03	0.00E+00	1.46E-02	0.00E+00	0.00E+00	2.08E-03	0.00E+00	0.00E+00	1.46E-02
2978	ALL	747988.42	4041860.7	NonCancerAcute	0.00E+00	1.03E-05	2.19E-03	0.00E+00	0.00E+00	2.20E-03	5.73E-03	0.00E+00	1.50E-02	0.00E+00	0.00E+00	2.19E-03	0.00E+00	0.00E+00	1.50E-02
2979	ALL	748088.42	4041860.7	NonCancerAcute	0.00E+00	1.01E-05	2.14E-03	0.00E+00	0.00E+00	2.15E-03	5.76E-03	0.00E+00	1.48E-02	0.00E+00	0.00E+00	2.14E-03	0.00E+00	0.00E+00	1.48E-02
2980	ALL	748188.42	4041860.7	NonCancerAcute	0.00E+00	1.01E-05	2.15E-03	0.00E+00	0.00E+00	2.16E-03	6.06E-03	0.00E+00	1.52E-02	0.00E+00	0.00E+00	2.15E-03	0.00E+00	0.00E+00	1.52E-02
2981	ALL	748288.42	4041860.7	NonCancerAcute	0.00E+00	9.60E-06	2.04E-03	0.00E+00	0.00E+00	2.05E-03	6.26E-03	0.00E+00	1.51E-02	0.00E+00	0.00E+00	2.04E-03	0.00E+00	0.00E+00	1.51E-02
2982	ALL	748388.42	4041860.7	NonCancerAcute	0.00E+00	9.60E-06	2.04E-03	0.00E+00	0.00E+00	2.05E-03	6.40E-03	0.00E+00	1.52E-02	0.00E+00	0.00E+00	2.04E-03	0.00E+00	0.00E+00	1.52E-02
2983	ALL	748488.42	4041860.7	NonCancerAcute	0.00E+00	9.67E-06	2.05E-03	0.00E+00	0.00E+00	2.06E-03	6.39E-03	0.00E+00	1.53E-02	0.00E+00	0.00E+00	2.05E-03	0.00E+00	0.00E+00	1.53E-02
2984	ALL	753488.42	4041860.7	NonCancerAcute	0.00E+00	5.98E-06	1.27E-03	0.00E+00	0.00E+00	1.28E-03	2.61E-03	0.00E+00	7.81E-03	0.00E+00	0.00E+00	1.27E-03	0.00E+00	0.00E+00	7.81E-03
2985	ALL	753588.42	4041860.7	NonCancerAcute	0.00E+00	5.94E-06	1.26E-03	0.00E+00	0.00E+00	1.27E-03	2.62E-03	0.00E+00	7.79E-03	0.00E+00	0.00E+00	1.26E-03	0.00E+00	0.00E+00	7.79E-03
2986	ALL	753688.42	4041860.7	NonCancerAcute	0.00E+00	5.93E-06	1.26E-03	0.00E+00	0.00E+00	1.27E-03	2.61E-03	0.00E+00	7.77E-03	0.00E+00	0.00E+00	1.26E-03	0.00E+00	0.00E+00	7.77E-03
2987	ALL	753788.42	4041860.7	NonCancerAcute	0.00E+00	5.93E-06	1.26E-03	0.00E+00	0.00E+00	1.26E-03	2.59E-03	0.00E+00	7.74E-03	0.00E+00	0.00E+00	1.26E-03	0.00E+00	0.00E+00	7.74E-03
2988	ALL	753888.42	4041860.7	NonCancerAcute	0.00E+00	5.89E-06	1.25E-03	0.00E+00	0.00E+00	1.26E-03	2.56E-03	0.00E+00	7.68E-03	0.00E+00	0.00E+00	1.25E-03	0.00E+00	0.00E+00	7.68E-03
2989	ALL	753988.42	4041860.7	NonCancerAcute	0.00E+00	5.87E-06	1.25E-03	0.00E+00	0.00E+00	1.25E-03	2.52E-03	0.00E+00	7.62E-03	0.00E+00	0.00E+00	1.25E-03	0.00E+00	0.00E+00	7.62E-03
2990	ALL	748188.42	4041960.7	NonCancerAcute	0.00E+00	9.96E-06	2.12E-03	0.00E+00	0.00E+00	2.12E-03	5.84E-03	0.00E+00	1.48E-02	0.00E+00	0.00E+00	2.12E-03	0.00E+00	0.00E+00	1.48E-02
2991	ALL	748288.42	4041960.7	NonCancerAcute	0.00E+00	9.63E-06	2.05E-03	0.00E+00	0.00E+00	2.05E-03	6.10E-03	0.00E+00	1.49E-02	0.00E+00	0.00E+00	2.05E-03	0.00E+00	0.00E+00	1.49E-02
2992	ALL	748388.42	4041960.7	NonCancerAcute	0.00E+00	9.47E-06	2.01E-03	0.00E+00	0.00E+00	2.02E-03	6.22E-03	0.00E+00	1.49E-02	0.00E+00	0.00E+00	2.01E-03	0.00E+00	0.00E+00	1.49E-02
2993	ALL	748488.42	4041960.7	NonCancerAcute	0.00E+00	9.55E-06	2.03E-03	0.00E+00	0.00E+00	2.04E-03	6.33E-03	0.00E+00	1.51E-02	0.00E+00	0.00E+00	2.03E-03	0.00E+00	0.00E+00	1.51E-02
2994	ALL	753488.42	4041960.7	NonCancerAcute	0.00E+00	5.93E-06	1.26E-03	0.00E+00	0.00E+00	1.27E-03	2.60E-03	0.00E+00	7.76E-03	0.00E+00	0.00E+00	1.26E-03	0.00E+00	0.00E+00	7.76E-03
2995	ALL	753588.42	4041960.7	NonCancerAcute	0.00E+00	5.88E-06	1.25E-03	0.00E+00	0.00E+00	1.25E-03	2.54E-03	0.00E+00	7.65E-03	0.00E+00	0.00E+00	1.25E-03	0.00E+00	0.00E+00	7.65E-03
2996	ALL	753688.42	4041960.7	NonCancerAcute	0.00E+00	5.83E-06	1.24E-03	0.00E+00	0.00E+00	1.24E-03	2.52E-03	0.00E+00	7.58E-03	0.00E+00	0.00E+00	1.24E-03	0.00E+00	0.00E+00	7.58E-03
2997	ALL	753788.42	4041960.7	NonCancerAcute	0.00E+00	5.80E-06	1.23E-03	0.00E+00	0.00E+00	1.24E-03	2.52E-03	0.00E+00	7.56E-03	0.00E+00	0.00E+00	1.23E-03	0.00E+00	0.00E+00	7.56E-03
2998	ALL	753888.42	4041960.7	NonCancerAcute	0.00E+00	5.77E-06	1.23E-03	0.00E+00	0.00E+00	1.23E-03	2.51E-03	0.00E+00	7.53E-03	0.00E+00	0.00E+00	1.23E-03	0.00E+00	0.00E+00	7.53E-03
2999	ALL	753988.42	4041960.7	NonCancerAcute	0.00E+00	5.78E-06	1.23E-03	0.00E+00	0.00E+00	1.23E-03	2.49E-03	0.00E+00	7.51E-03	0.00E+00	0.00E+00	1.23E-03	0.00E+00	0.00E+00	7.51E-03
3000	ALL	748188.42	4042060.7	NonCancerAcute	0.00E+00	9.88E-06	2.10E-03	0.00E+00	0.00E+00	2.11E-03	5.71E-03	0.00E+00	1.46E-02	0.00E+00	0.00E+00	2.10E-03	0.00E+00	0.00E+00	1.46E-02
3001	ALL	748288.42	4042060.7	NonCancerAcute	0.00E+00	9.67E-06	2.05E-03	0.00E+00	0.00E+00	2.06E-03	5.93E-03	0.00E+00	1.47E-02	0.00E+00	0.00E+00	2.05E-03	0.00E+00	0.00E+00	1.47E-02
3002	ALL	748388.42	4042060.7	NonCancerAcute	0.00E+00	9.37E-06	1.99E-03	0.00E+00	0.00E+00	2.00E-03	5.95E-03	0.00E+00	1.45E-02	0.00E+00	0.00E+00	1.99E-03	0.00E+00	0.00E+00	1.45E-02
3003	ALL	748488.42	4042060.7	NonCancerAcute	0.00E+00	9.43E-06	2.00E-03	0.00E+00	0.00E+00	2.01E-03	6.08E-03	0.00E+00	1.47E-02	0.00E+00	0.00E+00	2.00E-03	0.00E+00	0.00E+00	1.47E-02
3004	ALL	753488.42	4042060.7	NonCancerAcute	0.00E+00	6.00E-06	1.27E-03	0.00E+00	0.00E+00	1.28E-03	2.62E-03	0.00E+00	7.84E-03	0.00E+00	0.00E+00	1.27E-03	0.00E+00	0.00E+00	7.84E-03
3005	ALL	753588.42	4042060.7	NonCancerAcute	0.00E+00	5.93E-06	1.26E-03	0.00E+00	0.00E+00	1.26E-03	2.55E-03	0.00E+00	7.69E-03	0.00E+00	0.00E+00	1.26E-03	0.00E+00	0.00E+00	7.69E-03
3006	ALL	753688.42	4042060.7	NonCancerAcute	0.00E+00	5.85E-06	1.24E-03	0.00E+00	0.00E+00	1.25E-03	2.47E-03	0.00E+00	7.54E-03	0.00E+00	0.00E+00	1.24E-03	0.00E+00	0.00E+00	7.54E-03
3007	ALL	753788.42	4042060.7	NonCancerAcute	0.00E+00	5.76E-06	1.22E-03	0.00E+00	0.00E+00	1.23E-03	2.46E-03	0.00E+00	7.45E-03	0.00E+00	0.00E+00	1.22E-03	0.00E+00	0.00E+00	7.45E-03
3008	ALL	753888.42	4042060.7	NonCancerAcute	0.00E+00	5.68E-06	1.21E-03	0.00E+00	0.00E+00	1.21E-03	2.43E-03	0.00E+00	7.36E-03	0.00E+00	0.00E+00	1.21E-03	0.00E+00	0.00E+00	7.36E-03
3009	ALL	753988.42	4042060.7	NonCancerAcute	0.00E+00	5.65E-06	1.20E-03	0.00E+00	0.00E+00	1.21E-03	2.43E-03	0.00E+00	7.33E-03	0.00E+00	0.00E+00	1.20E-03	0.00E+00	0.00E+00	7.33E-03
3010	ALL	748188.42	4042160.7	NonCancerAcute	0.00E+00	9.72E-06	2.06E-03	0.00E+00	0.00E+00	2.07E-03	5.55E-03	0.00E+00	1.43E-02	0.00E+00	0.00E+00	2.06E-03	0.00E+00	0.00E+00	1.43E-02
3011	ALL	748288.42	4042160.7	NonCancerAcute	0.00E+00	9.66E-06	2.05E-03	0.00E+00	0.00E+00	2.06E-03	5.61E-03	0.00E+00	1.43E-02	0.00E+00	0.00E+00	2.05E-03	0.00E+00	0.00E+00	1.43E-02
3012	ALL	748388.42	4042160.7	NonCancerAcute	0.00E+00	9.25E-06	1.96E-03	0.00E+00	0.00E+00	1.97E-03	5.91E-03	0.00E+00	1.44E-02	0.00E+00	0.00E+00	1.96E-03	0.00E+00	0.00E+00	1.44E-02
3013	ALL	748488.42	4042160.7	NonCancerAcute	0.00E+00	9.32E-06	1.98E-03	0.00E+00	0.00E+00	1.99E-03	5.76E-03	0.00E+00	1.42E-02	0.00E+00	0.00E+00	1.98E-03	0.00E+00	0.00E+00	1.42E-02
3014	ALL	753488.42	4042160.7	NonCancerAcute	0.00E+00	6.06E-06	1.29E-03	0.00E+00	0.00E+00	1.29E-03	2.58E-03	0.00E+00	7.84E-03	0.00E+00	0.00E+00	1.29E-03	0.00E+00	0.00E+00	7.84E-03
3015	ALL	753588.42	4042160.7	NonCancerAcute	0.00E+00	5.95E-06	1.26E-03	0.00E+00	0.00E+00	1.27E-03	2.55E-03	0.00E+00	7.72E-03	0.00E+00	0.00E+00	1.26E-03	0.00E+00	0.00E+00	7.72E-03
3016	ALL	753688.42	4042160.7	NonCancerAcute	0.00E+00	5.90E-06	1.25E-03	0.00E+00	0.00E+00	1.26E-03	2.50E-03	0.00E+00	7.62E-03	0.00E+00	0.00E+00	1.25E-03	0.00E+00	0.00E+00	7.62E-03
3017	ALL	753788.42	4042160.7	NonCancerAcute	0.00E+00	5.86E-06	1.24E-03	0.00E+00	0.00E+00	1.25E-03	2.43E-03	0.00E+00	7.49E-03	0.00E+00	0.00E+00	1.24E-03	0.00E+00	0.00E+00	7.49E-03
3018	ALL	753888.42	4042160.7	NonCancerAcute	0.00E+00	5.76E-06	1.22E-03	0.00E+00	0.00E+00	1.23E-03	2.38E-03	0.00E+00	7.36E-03	0.00E+00	0.00E+00	1.22E-03	0.00E+00	0.00E+00	7.36E-03
3019	ALL	753988.42	4042160.7	NonCancerAcute	0.00E+00	5.66E-06	1.20E-03	0.00E+00	0.00E+00	1.21E-03	2.37E-03	0.00E+00	7.27E-03	0.00E+00	0.00E+00	1.20E-03	0.00E+00	0.00E+00	7.27E-03

3020	ALL	748188.42	4042260.7	NonCancerAcute	0.00E+00	9.63E-06	2.04E-03	0.00E+00	0.00E+00	2.05E-03	5.33E-03	0.00E+00	1.40E-02	0.00E+00	0.00E+00	2.04E-03	0.00E+00	0.00E+00	1.40E-02
3021	ALL	748288.42	4042260.7	NonCancerAcute	0.00E+00	9.60E-06	2.04E-03	0.00E+00	0.00E+00	2.05E-03	5.56E-03	0.00E+00	1.42E-02	0.00E+00	0.00E+00	2.04E-03	0.00E+00	0.00E+00	1.42E-02
3022	ALL	748388.42	4042260.7	NonCancerAcute	0.00E+00	9.12E-06	1.94E-03	0.00E+00	0.00E+00	1.95E-03	5.61E-03	0.00E+00	1.39E-02	0.00E+00	0.00E+00	1.94E-03	0.00E+00	0.00E+00	1.39E-02
3023	ALL	748488.42	4042260.7	NonCancerAcute	0.00E+00	9.19E-06	1.95E-03	0.00E+00	0.00E+00	1.96E-03	5.64E-03	0.00E+00	1.40E-02	0.00E+00	0.00E+00	1.95E-03	0.00E+00	0.00E+00	1.40E-02
3024	ALL	753488.42	4042260.7	NonCancerAcute	0.00E+00	6.06E-06	1.29E-03	0.00E+00	0.00E+00	1.29E-03	2.74E-03	0.00E+00	8.03E-03	0.00E+00	0.00E+00	1.29E-03	0.00E+00	0.00E+00	8.03E-03
3025	ALL	753588.42	4042260.7	NonCancerAcute	0.00E+00	6.00E-06	1.27E-03	0.00E+00	0.00E+00	1.28E-03	2.59E-03	0.00E+00	7.80E-03	0.00E+00	0.00E+00	1.27E-03	0.00E+00	0.00E+00	7.80E-03
3026	ALL	753688.42	4042260.7	NonCancerAcute	0.00E+00	5.88E-06	1.25E-03	0.00E+00	0.00E+00	1.25E-03	2.47E-03	0.00E+00	7.57E-03	0.00E+00	0.00E+00	1.25E-03	0.00E+00	0.00E+00	7.57E-03
3027	ALL	753788.42	4042260.7	NonCancerAcute	0.00E+00	5.83E-06	1.24E-03	0.00E+00	0.00E+00	1.24E-03	2.44E-03	0.00E+00	7.49E-03	0.00E+00	0.00E+00	1.24E-03	0.00E+00	0.00E+00	7.49E-03
3028	ALL	753888.42	4042260.7	NonCancerAcute	0.00E+00	5.81E-06	1.23E-03	0.00E+00	0.00E+00	1.24E-03	2.39E-03	0.00E+00	7.41E-03	0.00E+00	0.00E+00	1.23E-03	0.00E+00	0.00E+00	7.41E-03
3029	ALL	753988.42	4042260.7	NonCancerAcute	0.00E+00	5.75E-06	1.22E-03	0.00E+00	0.00E+00	1.23E-03	2.32E-03	0.00E+00	7.29E-03	0.00E+00	0.00E+00	1.22E-03	0.00E+00	0.00E+00	7.29E-03
3030	ALL	748188.42	4042360.7	NonCancerAcute	0.00E+00	9.59E-06	2.04E-03	0.00E+00	0.00E+00	2.05E-03	5.12E-03	0.00E+00	1.37E-02	0.00E+00	0.00E+00	2.04E-03	0.00E+00	0.00E+00	1.37E-02
3031	ALL	748288.42	4042360.7	NonCancerAcute	0.00E+00	9.51E-06	2.02E-03	0.00E+00	0.00E+00	2.03E-03	5.34E-03	0.00E+00	1.39E-02	0.00E+00	0.00E+00	2.02E-03	0.00E+00	0.00E+00	1.39E-02
3032	ALL	748388.42	4042360.7	NonCancerAcute	0.00E+00	9.01E-06	1.91E-03	0.00E+00	0.00E+00	1.92E-03	5.30E-03	0.00E+00	1.34E-02	0.00E+00	0.00E+00	1.91E-03	0.00E+00	0.00E+00	1.34E-02
3033	ALL	748488.42	4042360.7	NonCancerAcute	0.00E+00	9.04E-06	1.92E-03	0.00E+00	0.00E+00	1.93E-03	5.63E-03	0.00E+00	1.39E-02	0.00E+00	0.00E+00	1.92E-03	0.00E+00	0.00E+00	1.39E-02
3034	ALL	753488.42	4042360.7	NonCancerAcute	0.00E+00	5.98E-06	1.27E-03	0.00E+00	0.00E+00	1.28E-03	2.86E-03	0.00E+00	8.12E-03	0.00E+00	0.00E+00	1.27E-03	0.00E+00	0.00E+00	8.12E-03
3035	ALL	753588.42	4042360.7	NonCancerAcute	0.00E+00	5.97E-06	1.27E-03	0.00E+00	0.00E+00	1.27E-03	2.75E-03	0.00E+00	7.98E-03	0.00E+00	0.00E+00	1.27E-03	0.00E+00	0.00E+00	7.98E-03
3036	ALL	753688.42	4042360.7	NonCancerAcute	0.00E+00	5.90E-06	1.25E-03	0.00E+00	0.00E+00	1.26E-03	2.62E-03	0.00E+00	7.76E-03	0.00E+00	0.00E+00	1.25E-03	0.00E+00	0.00E+00	7.76E-03
3037	ALL	753788.42	4042360.7	NonCancerAcute	0.00E+00	5.81E-06	1.23E-03	0.00E+00	0.00E+00	1.24E-03	2.47E-03	0.00E+00	7.51E-03	0.00E+00	0.00E+00	1.23E-03	0.00E+00	0.00E+00	7.51E-03
3038	ALL	753888.42	4042360.7	NonCancerAcute	0.00E+00	5.77E-06	1.22E-03	0.00E+00	0.00E+00	1.23E-03	2.37E-03	0.00E+00	7.35E-03	0.00E+00	0.00E+00	1.22E-03	0.00E+00	0.00E+00	7.35E-03
3039	ALL	753988.42	4042360.7	NonCancerAcute	0.00E+00	5.73E-06	1.22E-03	0.00E+00	0.00E+00	1.22E-03	2.33E-03	0.00E+00	7.28E-03	0.00E+00	0.00E+00	1.22E-03	0.00E+00	0.00E+00	7.28E-03
3040	ALL	748188.42	4042460.7	NonCancerAcute	0.00E+00	9.52E-06	2.02E-03	0.00E+00	0.00E+00	2.03E-03	5.09E-03	0.00E+00	1.36E-02	0.00E+00	0.00E+00	2.02E-03	0.00E+00	0.00E+00	1.36E-02
3041	ALL	748288.42	4042460.7	NonCancerAcute	0.00E+00	9.46E-06	2.01E-03	0.00E+00	0.00E+00	2.02E-03	5.09E-03	0.00E+00	1.35E-02	0.00E+00	0.00E+00	2.01E-03	0.00E+00	0.00E+00	1.35E-02
3042	ALL	748388.42	4042460.7	NonCancerAcute	0.00E+00	8.99E-06	1.91E-03	0.00E+00	0.00E+00	1.92E-03	5.28E-03	0.00E+00	1.34E-02	0.00E+00	0.00E+00	1.91E-03	0.00E+00	0.00E+00	1.34E-02
3043	ALL	748488.42	4042460.7	NonCancerAcute	0.00E+00	8.98E-06	1.91E-03	0.00E+00	0.00E+00	1.92E-03	5.49E-03	0.00E+00	1.37E-02	0.00E+00	0.00E+00	1.91E-03	0.00E+00	0.00E+00	1.37E-02
3044	ALL	753488.42	4042460.7	NonCancerAcute	0.00E+00	5.89E-06	1.25E-03	0.00E+00	0.00E+00	1.26E-03	2.88E-03	0.00E+00	8.08E-03	0.00E+00	0.00E+00	1.25E-03	0.00E+00	0.00E+00	8.08E-03
3045	ALL	753588.42	4042460.7	NonCancerAcute	0.00E+00	5.92E-06	1.26E-03	0.00E+00	0.00E+00	1.26E-03	2.84E-03	0.00E+00	8.04E-03	0.00E+00	0.00E+00	1.26E-03	0.00E+00	0.00E+00	8.04E-03
3046	ALL	753688.42	4042460.7	NonCancerAcute	0.00E+00	5.88E-06	1.25E-03	0.00E+00	0.00E+00	1.25E-03	2.75E-03	0.00E+00	7.90E-03	0.00E+00	0.00E+00	1.25E-03	0.00E+00	0.00E+00	7.90E-03
3047	ALL	753788.42	4042460.7	NonCancerAcute	0.00E+00	5.82E-06	1.24E-03	0.00E+00	0.00E+00	1.24E-03	2.64E-03	0.00E+00	7.72E-03	0.00E+00	0.00E+00	1.24E-03	0.00E+00	0.00E+00	7.72E-03
3048	ALL	753888.42	4042460.7	NonCancerAcute	0.00E+00	5.72E-06	1.21E-03	0.00E+00	0.00E+00	1.22E-03	2.50E-03	0.00E+00	7.48E-03	0.00E+00	0.00E+00	1.21E-03	0.00E+00	0.00E+00	7.48E-03
3049	ALL	753988.42	4042460.7	NonCancerAcute	0.00E+00	5.68E-06	1.21E-03	0.00E+00	0.00E+00	1.21E-03	2.35E-03	0.00E+00	7.26E-03	0.00E+00	0.00E+00	1.21E-03	0.00E+00	0.00E+00	7.26E-03
3050	ALL	748188.42	4042560.7	NonCancerAcute	0.00E+00	9.39E-06	2.00E-03	0.00E+00	0.00E+00	2.00E-03	4.88E-03	0.00E+00	1.32E-02	0.00E+00	0.00E+00	2.00E-03	0.00E+00	0.00E+00	1.32E-02
3051	ALL	748288.42	4042560.7	NonCancerAcute	0.00E+00	9.38E-06	1.99E-03	0.00E+00	0.00E+00	2.00E-03	4.88E-03	0.00E+00	1.32E-02	0.00E+00	0.00E+00	1.99E-03	0.00E+00	0.00E+00	1.32E-02
3052	ALL	748388.42	4042560.7	NonCancerAcute	0.00E+00	8.99E-06	1.91E-03	0.00E+00	0.00E+00	1.92E-03	5.20E-03	0.00E+00	1.33E-02	0.00E+00	0.00E+00	1.91E-03	0.00E+00	0.00E+00	1.33E-02
3053	ALL	748488.42	4042560.7	NonCancerAcute	0.00E+00	8.94E-06	1.90E-03	0.00E+00	0.00E+00	1.91E-03	5.34E-03	0.00E+00	1.34E-02	0.00E+00	0.00E+00	1.90E-03	0.00E+00	0.00E+00	1.34E-02
3054	ALL	753488.42	4042560.7	NonCancerAcute	0.00E+00	5.85E-06	1.24E-03	0.00E+00	0.00E+00	1.25E-03	2.85E-03	0.00E+00	8.01E-03	0.00E+00	0.00E+00	1.24E-03	0.00E+00	0.00E+00	8.01E-03
3055	ALL	753588.42	4042560.7	NonCancerAcute	0.00E+00	5.76E-06	1.22E-03	0.00E+00	0.00E+00	1.23E-03	2.81E-03	0.00E+00	7.89E-03	0.00E+00	0.00E+00	1.22E-03	0.00E+00	0.00E+00	7.89E-03
3056	ALL	753688.42	4042560.7	NonCancerAcute	0.00E+00	5.82E-06	1.24E-03	0.00E+00	0.00E+00	1.24E-03	2.79E-03	0.00E+00	7.90E-03	0.00E+00	0.00E+00	1.24E-03	0.00E+00	0.00E+00	7.90E-03
3057	ALL	753788.42	4042560.7	NonCancerAcute	0.00E+00	5.81E-06	1.23E-03	0.00E+00	0.00E+00	1.24E-03	2.73E-03	0.00E+00	7.83E-03	0.00E+00	0.00E+00	1.23E-03	0.00E+00	0.00E+00	7.83E-03
3058	ALL	753888.42	4042560.7	NonCancerAcute	0.00E+00	5.74E-06	1.22E-03	0.00E+00	0.00E+00	1.22E-03	2.64E-03	0.00E+00	7.66E-03	0.00E+00	0.00E+00	1.22E-03	0.00E+00	0.00E+00	7.66E-03
3059	ALL	753988.42	4042560.7	NonCancerAcute	0.00E+00	5.64E-06	1.20E-03	0.00E+00	0.00E+00	1.20E-03	2.52E-03	0.00E+00	7.44E-03	0.00E+00	0.00E+00	1.20E-03	0.00E+00	0.00E+00	7.44E-03
3060	ALL	748188.42	4042660.7	NonCancerAcute	0.00E+00	9.27E-06	1.97E-03	0.00E+00	0.00E+00	1.98E-03	4.77E-03	0.00E+00	1.30E-02	0.00E+00	0.00E+00	1.97E-03	0.00E+00	0.00E+00	1.30E-02
3061	ALL	748288.42	4042660.7	NonCancerAcute	0.00E+00	9.31E-06	1.98E-03	0.00E+00	0.00E+00	1.99E-03	4.84E-03	0.00E+00	1.31E-02	0.00E+00	0.00E+00	1.98E-03	0.00E+00	0.00E+00	1.31E-02
3062	ALL	748388.42	4042660.7	NonCancerAcute	0.00E+00	8.98E-06	1.91E-03	0.00E+00	0.00E+00	1.92E-03	5.03E-03	0.00E+00	1.31E-02	0.00E+00	0.00E+00	1.91E-03	0.00E+00	0.00E+00	1.31E-02
3063	ALL	748488.42	4042660.7	NonCancerAcute	0.00E+00	8.89E-06	1.89E-03	0.00E+00	0.00E+00	1.90E-03	5.18E-03	0.00E+00	1.32E-02	0.00E+00	0.00E+00	1.89E-03	0.00E+00	0.00E+00	1.32E-02
3064	ALL	753488.42	4042660.7	NonCancerAcute	0.00E+00	5.86E-06	1.24E-03	0.00E+00	0.00E+00	1.25E-03	2.82E-03	0.00E+00	7.97E-03	0.00E+00	0.00E+00	1.24E-03	0.00E+00	0.00E+00	7.97E-03
3065	ALL	753588.42	4042660.7	NonCancerAcute	0.00E+00	5.78E-06	1.23E-03	0.00E+00	0.00E+00	1.23E-03	2.79E-03	0.00E+00	7.87E-03	0.00E+00	0.00E+00	1.23E-03	0.00E+00	0.00E+00	7.87E-03
3066	ALL	753688.42	4042660.7	NonCancerAcute	0.00E+00	5.69E-06	1.21E-03	0.00E+00	0.00E+00	1.21E-03	2.73E-03	0.00E+00	7.73E-03	0.00E+00	0.00E+00	1.21E-03	0.00E+00	0.00E+00	7.73E-03
3067	ALL	753788.42	4042660.7	NonCancerAcute	0.00E+00	5.67E-06	1.20E-03	0.00E+00	0.00E+00	1.21E-03	2.72E-03	0.00E+00	7.70E-03	0.00E+00	0.00E+00	1.20E-03	0.00E+00	0.00E+00	7.70E-03
3068	ALL	753888.42	4042660.7	NonCancerAcute	0.00E+00	5.69E-06	1.21E-03	0.00E+00	0.00E+00	1.21E-03	2.68E-03	0.00E+00	7.67E-03	0.00E+00	0.00E+00	1.21E-03	0.00E+00	0.00E+00	7.67E-03
3069	ALL	753988.42	4042660.7	NonCancerAcute	0.00E+00	5.64E-06	1.20E-03	0.00E+00	0.00E+00	1.20E-03	2.61E-03	0.00E+00	7.55E-03	0.00E+00	0.00E+00	1.20E-03	0.00E+00	0.00E+00	7.55E-03
3070	ALL	748188.42	4042760.7	NonCancerAcute	0.00E+00	9.25E-06	1.96E-03	0.00E+00	0.00E+00	1.97E-03	4.61E-03	0.00E+00	1.28E-02	0.00E+00	0.00E+00	1.96E-03	0.00E+00	0.00E+00	1.28E-02
3071	ALL	748288.42	4042760.7	NonCancerAcute	0.00E+00	9.20E-06	1.95E-03	0.00E+00	0.00E+00	1.96E-03	4.76E-03	0.00E+00	1.29E-02	0.00E+00	0.00E+00	1.95E-03	0.00E+00	0.00E+00	1.29E-02
3072	ALL	748388.42	4042760.7	NonCancerAcute	0.00E+00	8.96E-06	1.90E-03	0.00E+00	0.00E+00	1.91E-03	4.86E-03	0.00E+00	1.29E-02	0.00E+00	0.00E+00	1.90E-03	0.00E+00	0.00E+00	1.29E-02

3073	ALL	748488.42	4042760.7	NonCancerAcute	0.00E+00	8.84E-06	1.88E-03	0.00E+00	0.00E+00	1.89E-03	4.99E-03	0.00E+00	1.29E-02	0.00E+00	0.00E+00	1.88E-03	0.00E+00	0.00E+00	1.29E-02
3074	ALL	753488.42	4042760.7	NonCancerAcute	0.00E+00	5.76E-06	1.22E-03	0.00E+00	0.00E+00	1.23E-03	2.78E-03	0.00E+00	7.85E-03	0.00E+00	0.00E+00	1.22E-03	0.00E+00	0.00E+00	7.85E-03
3075	ALL	753588.42	4042760.7	NonCancerAcute	0.00E+00	5.74E-06	1.22E-03	0.00E+00	0.00E+00	1.22E-03	2.73E-03	0.00E+00	7.77E-03	0.00E+00	0.00E+00	1.22E-03	0.00E+00	0.00E+00	7.77E-03
3076	ALL	753688.42	4042760.7	NonCancerAcute	0.00E+00	5.68E-06	1.21E-03	0.00E+00	0.00E+00	1.21E-03	2.72E-03	0.00E+00	7.71E-03	0.00E+00	0.00E+00	1.21E-03	0.00E+00	0.00E+00	7.71E-03
3077	ALL	753788.42	4042760.7	NonCancerAcute	0.00E+00	5.62E-06	1.19E-03	0.00E+00	0.00E+00	1.20E-03	2.67E-03	0.00E+00	7.61E-03	0.00E+00	0.00E+00	1.19E-03	0.00E+00	0.00E+00	7.61E-03
3078	ALL	753888.42	4042760.7	NonCancerAcute	0.00E+00	5.62E-06	1.19E-03	0.00E+00	0.00E+00	1.20E-03	2.65E-03	0.00E+00	7.58E-03	0.00E+00	0.00E+00	1.19E-03	0.00E+00	0.00E+00	7.58E-03
3079	ALL	753988.42	4042760.7	NonCancerAcute	0.00E+00	5.55E-06	1.18E-03	0.00E+00	0.00E+00	1.18E-03	2.63E-03	0.00E+00	7.50E-03	0.00E+00	0.00E+00	1.18E-03	0.00E+00	0.00E+00	7.50E-03
3080	ALL	748188.42	4042860.7	NonCancerAcute	0.00E+00	9.20E-06	1.95E-03	0.00E+00	0.00E+00	1.96E-03	4.59E-03	0.00E+00	1.27E-02	0.00E+00	0.00E+00	1.95E-03	0.00E+00	0.00E+00	1.27E-02
3081	ALL	748288.42	4042860.7	NonCancerAcute	0.00E+00	9.12E-06	1.94E-03	0.00E+00	0.00E+00	1.95E-03	4.61E-03	0.00E+00	1.27E-02	0.00E+00	0.00E+00	1.94E-03	0.00E+00	0.00E+00	1.27E-02
3082	ALL	748388.42	4042860.7	NonCancerAcute	0.00E+00	8.93E-06	1.90E-03	0.00E+00	0.00E+00	1.91E-03	4.70E-03	0.00E+00	1.27E-02	0.00E+00	0.00E+00	1.90E-03	0.00E+00	0.00E+00	1.27E-02
3083	ALL	748488.42	4042860.7	NonCancerAcute	0.00E+00	8.80E-06	1.87E-03	0.00E+00	0.00E+00	1.88E-03	4.77E-03	0.00E+00	1.26E-02	0.00E+00	0.00E+00	1.87E-03	0.00E+00	0.00E+00	1.26E-02
3084	ALL	753488.42	4042860.7	NonCancerAcute	0.00E+00	5.61E-06	1.19E-03	0.00E+00	0.00E+00	1.20E-03	2.93E-03	0.00E+00	7.92E-03	0.00E+00	0.00E+00	1.19E-03	0.00E+00	0.00E+00	7.92E-03
3085	ALL	753588.42	4042860.7	NonCancerAcute	0.00E+00	5.65E-06	1.20E-03	0.00E+00	0.00E+00	1.20E-03	2.77E-03	0.00E+00	7.75E-03	0.00E+00	0.00E+00	1.20E-03	0.00E+00	0.00E+00	7.75E-03
3086	ALL	753688.42	4042860.7	NonCancerAcute	0.00E+00	5.62E-06	1.19E-03	0.00E+00	0.00E+00	1.20E-03	2.65E-03	0.00E+00	7.59E-03	0.00E+00	0.00E+00	1.19E-03	0.00E+00	0.00E+00	7.59E-03
3087	ALL	753788.42	4042860.7	NonCancerAcute	0.00E+00	5.56E-06	1.18E-03	0.00E+00	0.00E+00	1.19E-03	2.64E-03	0.00E+00	7.52E-03	0.00E+00	0.00E+00	1.18E-03	0.00E+00	0.00E+00	7.52E-03
3088	ALL	753888.42	4042860.7	NonCancerAcute	0.00E+00	5.54E-06	1.18E-03	0.00E+00	0.00E+00	1.18E-03	2.61E-03	0.00E+00	7.47E-03	0.00E+00	0.00E+00	1.18E-03	0.00E+00	0.00E+00	7.47E-03
3089	ALL	753988.42	4042860.7	NonCancerAcute	0.00E+00	5.55E-06	1.18E-03	0.00E+00	0.00E+00	1.18E-03	2.57E-03	0.00E+00	7.44E-03	0.00E+00	0.00E+00	1.18E-03	0.00E+00	0.00E+00	7.44E-03
3090	ALL	748188.42	4042960.7	NonCancerAcute	0.00E+00	9.14E-06	1.94E-03	0.00E+00	0.00E+00	1.95E-03	4.55E-03	0.00E+00	1.26E-02	0.00E+00	0.00E+00	1.94E-03	0.00E+00	0.00E+00	1.26E-02
3091	ALL	748288.42	4042960.7	NonCancerAcute	0.00E+00	9.04E-06	1.92E-03	0.00E+00	0.00E+00	1.93E-03	4.49E-03	0.00E+00	1.25E-02	0.00E+00	0.00E+00	1.92E-03	0.00E+00	0.00E+00	1.25E-02
3092	ALL	748388.42	4042960.7	NonCancerAcute	0.00E+00	8.88E-06	1.89E-03	0.00E+00	0.00E+00	1.90E-03	4.55E-03	0.00E+00	1.24E-02	0.00E+00	0.00E+00	1.89E-03	0.00E+00	0.00E+00	1.24E-02
3093	ALL	748488.42	4042960.7	NonCancerAcute	0.00E+00	8.77E-06	1.86E-03	0.00E+00	0.00E+00	1.87E-03	4.72E-03	0.00E+00	1.25E-02	0.00E+00	0.00E+00	1.86E-03	0.00E+00	0.00E+00	1.25E-02
3094	ALL	753488.42	4042960.7	NonCancerAcute	0.00E+00	5.61E-06	1.19E-03	0.00E+00	0.00E+00	1.20E-03	2.99E-03	0.00E+00	7.99E-03	0.00E+00	0.00E+00	1.19E-03	0.00E+00	0.00E+00	7.99E-03
3095	ALL	753588.42	4042960.7	NonCancerAcute	0.00E+00	5.52E-06	1.17E-03	0.00E+00	0.00E+00	1.18E-03	2.88E-03	0.00E+00	7.79E-03	0.00E+00	0.00E+00	1.17E-03	0.00E+00	0.00E+00	7.79E-03
3096	ALL	753688.42	4042960.7	NonCancerAcute	0.00E+00	5.51E-06	1.17E-03	0.00E+00	0.00E+00	1.18E-03	2.74E-03	0.00E+00	7.61E-03	0.00E+00	0.00E+00	1.17E-03	0.00E+00	0.00E+00	7.61E-03
3097	ALL	753788.42	4042960.7	NonCancerAcute	0.00E+00	5.51E-06	1.17E-03	0.00E+00	0.00E+00	1.18E-03	2.61E-03	0.00E+00	7.45E-03	0.00E+00	0.00E+00	1.17E-03	0.00E+00	0.00E+00	7.45E-03
3098	ALL	753888.42	4042960.7	NonCancerAcute	0.00E+00	5.45E-06	1.16E-03	0.00E+00	0.00E+00	1.16E-03	2.55E-03	0.00E+00	7.33E-03	0.00E+00	0.00E+00	1.16E-03	0.00E+00	0.00E+00	7.33E-03
3099	ALL	753988.42	4042960.7	NonCancerAcute	0.00E+00	5.42E-06	1.15E-03	0.00E+00	0.00E+00	1.16E-03	2.54E-03	0.00E+00	7.30E-03	0.00E+00	0.00E+00	1.15E-03	0.00E+00	0.00E+00	7.30E-03
3100	ALL	748188.42	4043060.7	NonCancerAcute	0.00E+00	9.05E-06	1.92E-03	0.00E+00	0.00E+00	1.93E-03	4.42E-03	0.00E+00	1.24E-02	0.00E+00	0.00E+00	1.92E-03	0.00E+00	0.00E+00	1.24E-02
3101	ALL	748288.42	4043060.7	NonCancerAcute	0.00E+00	8.93E-06	1.90E-03	0.00E+00	0.00E+00	1.91E-03	4.36E-03	0.00E+00	1.22E-02	0.00E+00	0.00E+00	1.90E-03	0.00E+00	0.00E+00	1.22E-02
3102	ALL	748388.42	4043060.7	NonCancerAcute	0.00E+00	8.82E-06	1.87E-03	0.00E+00	0.00E+00	1.88E-03	4.31E-03	0.00E+00	1.21E-02	0.00E+00	0.00E+00	1.87E-03	0.00E+00	0.00E+00	1.21E-02
3103	ALL	748488.42	4043060.7	NonCancerAcute	0.00E+00	8.73E-06	1.85E-03	0.00E+00	0.00E+00	1.86E-03	4.61E-03	0.00E+00	1.24E-02	0.00E+00	0.00E+00	1.85E-03	0.00E+00	0.00E+00	1.24E-02
3104	ALL	753488.42	4043060.7	NonCancerAcute	0.00E+00	5.71E-06	1.21E-03	0.00E+00	0.00E+00	1.22E-03	2.95E-03	0.00E+00	8.02E-03	0.00E+00	0.00E+00	1.21E-03	0.00E+00	0.00E+00	8.02E-03
3105	ALL	753588.42	4043060.7	NonCancerAcute	0.00E+00	5.62E-06	1.19E-03	0.00E+00	0.00E+00	1.20E-03	2.92E-03	0.00E+00	7.91E-03	0.00E+00	0.00E+00	1.19E-03	0.00E+00	0.00E+00	7.91E-03
3106	ALL	753688.42	4043060.7	NonCancerAcute	0.00E+00	5.53E-06	1.18E-03	0.00E+00	0.00E+00	1.18E-03	2.84E-03	0.00E+00	7.75E-03	0.00E+00	0.00E+00	1.18E-03	0.00E+00	0.00E+00	7.75E-03
3107	ALL	753788.42	4043060.7	NonCancerAcute	0.00E+00	5.41E-06	1.15E-03	0.00E+00	0.00E+00	1.15E-03	2.71E-03	0.00E+00	7.49E-03	0.00E+00	0.00E+00	1.15E-03	0.00E+00	0.00E+00	7.49E-03
3108	ALL	753888.42	4043060.7	NonCancerAcute	0.00E+00	5.38E-06	1.14E-03	0.00E+00	0.00E+00	1.15E-03	2.60E-03	0.00E+00	7.34E-03	0.00E+00	0.00E+00	1.14E-03	0.00E+00	0.00E+00	7.34E-03
3109	ALL	753988.42	4043060.7	NonCancerAcute	0.00E+00	5.34E-06	1.13E-03	0.00E+00	0.00E+00	1.14E-03	2.49E-03	0.00E+00	7.17E-03	0.00E+00	0.00E+00	1.13E-03	0.00E+00	0.00E+00	7.17E-03
3110	ALL	748188.42	4043160.7	NonCancerAcute	0.00E+00	8.94E-06	1.90E-03	0.00E+00	0.00E+00	1.91E-03	4.34E-03	0.00E+00	1.22E-02	0.00E+00	0.00E+00	1.90E-03	0.00E+00	0.00E+00	1.22E-02
3111	ALL	748288.42	4043160.7	NonCancerAcute	0.00E+00	8.81E-06	1.87E-03	0.00E+00	0.00E+00	1.88E-03	4.25E-03	0.00E+00	1.20E-02	0.00E+00	0.00E+00	1.87E-03	0.00E+00	0.00E+00	1.20E-02
3112	ALL	748388.42	4043160.7	NonCancerAcute	0.00E+00	8.74E-06	1.86E-03	0.00E+00	0.00E+00	1.86E-03	4.30E-03	0.00E+00	1.20E-02	0.00E+00	0.00E+00	1.86E-03	0.00E+00	0.00E+00	1.20E-02
3113	ALL	748488.42	4043160.7	NonCancerAcute	0.00E+00	8.69E-06	1.85E-03	0.00E+00	0.00E+00	1.85E-03	4.44E-03	0.00E+00	1.21E-02	0.00E+00	0.00E+00	1.85E-03	0.00E+00	0.00E+00	1.21E-02
3114	ALL	753488.42	4043160.7	NonCancerAcute	0.00E+00	5.79E-06	1.23E-03	0.00E+00	0.00E+00	1.23E-03	2.83E-03	0.00E+00	7.93E-03	0.00E+00	0.00E+00	1.23E-03	0.00E+00	0.00E+00	7.93E-03
3115	ALL	753588.42	4043160.7	NonCancerAcute	0.00E+00	5.71E-06	1.21E-03	0.00E+00	0.00E+00	1.22E-03	2.87E-03	0.00E+00	7.92E-03	0.00E+00	0.00E+00	1.21E-03	0.00E+00	0.00E+00	7.92E-03
3116	ALL	753688.42	4043160.7	NonCancerAcute	0.00E+00	5.62E-06	1.19E-03	0.00E+00	0.00E+00	1.20E-03	2.85E-03	0.00E+00	7.83E-03	0.00E+00	0.00E+00	1.19E-03	0.00E+00	0.00E+00	7.83E-03
3117	ALL	753788.42	4043160.7	NonCancerAcute	0.00E+00	5.54E-06	1.18E-03	0.00E+00	0.00E+00	1.18E-03	2.79E-03	0.00E+00	7.69E-03	0.00E+00	0.00E+00	1.18E-03	0.00E+00	0.00E+00	7.69E-03
3118	ALL	753888.42	4043160.7	NonCancerAcute	0.00E+00	5.42E-06	1.15E-03	0.00E+00	0.00E+00	1.16E-03	2.68E-03	0.00E+00	7.47E-03	0.00E+00	0.00E+00	1.15E-03	0.00E+00	0.00E+00	7.47E-03
3119	ALL	753988.42	4043160.7	NonCancerAcute	0.00E+00	5.27E-06	1.12E-03	0.00E+00	0.00E+00	1.12E-03	2.58E-03	0.00E+00	7.22E-03	0.00E+00	0.00E+00	1.12E-03	0.00E+00	0.00E+00	7.22E-03
3120	ALL	748188.42	4043260.7	NonCancerAcute	0.00E+00	8.82E-06	1.87E-03	0.00E+00	0.00E+00	1.88E-03	4.24E-03	0.00E+00	1.20E-02	0.00E+00	0.00E+00	1.87E-03	0.00E+00	0.00E+00	1.20E-02
3121	ALL	748288.42	4043260.7	NonCancerAcute	0.00E+00	8.66E-06	1.84E-03	0.00E+00	0.00E+00	1.85E-03	4.06E-03	0.00E+00	1.17E-02	0.00E+00	0.00E+00	1.84E-03	0.00E+00	0.00E+00	1.17E-02
3122	ALL	748388.42	4043260.7	NonCancerAcute	0.00E+00	8.63E-06	1.83E-03	0.00E+00	0.00E+00	1.84E-03	4.24E-03	0.00E+00	1.18E-02	0.00E+00	0.00E+00	1.83E-03	0.00E+00	0.00E+00	1.18E-02
3123	ALL	748488.42	4043260.7	NonCancerAcute	0.00E+00	8.60E-06	1.83E-03	0.00E+00	0.00E+00	1.83E-03	4.30E-03	0.00E+00	1.19E-02	0.00E+00	0.00E+00	1.83E-03	0.00E+00	0.00E+00	1.19E-02
3124	ALL	753488.42	4043260.7	NonCancerAcute	0.00E+00	5.77E-06	1.23E-03	0.00E+00	0.00E+00	1.23E-03	2.84E-03	0.00E+00	7.93E-03	0.00E+00	0.00E+00	1.23E-03	0.00E+00	0.00E+00	7.93E-03
3125	ALL	753588.42	4043260.7	NonCancerAcute	0.00E+00	5.72E-06	1.22E-03	0.00E+00	0.00E+00	1.22E-03	2.76E-03	0.00E+00	7.80E-03	0.00E+00	0.00E+00	1.22E-03	0.00E+00	0.00E+00	7.80E-03

3126	ALL	753688.42	4043260.7	NonCancerAcute	0.00E+00	5.68E-06	1.21E-03	0.00E+00	0.00E+00	1.21E-03	2.78E-03	0.00E+00	7.78E-03	0.00E+00	0.00E+00	1.21E-03	0.00E+00	0.00E+00	7.78E-03
3127	ALL	753788.42	4043260.7	NonCancerAcute	0.00E+00	5.63E-06	1.20E-03	0.00E+00	0.00E+00	1.20E-03	2.78E-03	0.00E+00	7.75E-03	0.00E+00	0.00E+00	1.20E-03	0.00E+00	0.00E+00	7.75E-03
3128	ALL	753888.42	4043260.7	NonCancerAcute	0.00E+00	5.53E-06	1.17E-03	0.00E+00	0.00E+00	1.18E-03	2.73E-03	0.00E+00	7.61E-03	0.00E+00	0.00E+00	1.17E-03	0.00E+00	0.00E+00	7.61E-03
3129	ALL	753988.42	4043260.7	NonCancerAcute	0.00E+00	5.43E-06	1.15E-03	0.00E+00	0.00E+00	1.16E-03	2.64E-03	0.00E+00	7.43E-03	0.00E+00	0.00E+00	1.15E-03	0.00E+00	0.00E+00	7.43E-03
3130	ALL	748188.42	4043360.7	NonCancerAcute	0.00E+00	8.70E-06	1.85E-03	0.00E+00	0.00E+00	1.86E-03	4.13E-03	0.00E+00	1.18E-02	0.00E+00	0.00E+00	1.85E-03	0.00E+00	0.00E+00	1.18E-02
3131	ALL	748288.42	4043360.7	NonCancerAcute	0.00E+00	8.55E-06	1.82E-03	0.00E+00	0.00E+00	1.82E-03	4.04E-03	0.00E+00	1.16E-02	0.00E+00	0.00E+00	1.82E-03	0.00E+00	0.00E+00	1.16E-02
3132	ALL	748388.42	4043360.7	NonCancerAcute	0.00E+00	8.52E-06	1.81E-03	0.00E+00	0.00E+00	1.82E-03	4.13E-03	0.00E+00	1.16E-02	0.00E+00	0.00E+00	1.81E-03	0.00E+00	0.00E+00	1.16E-02
3133	ALL	748488.42	4043360.7	NonCancerAcute	0.00E+00	8.52E-06	1.81E-03	0.00E+00	0.00E+00	1.82E-03	4.17E-03	0.00E+00	1.17E-02	0.00E+00	0.00E+00	1.81E-03	0.00E+00	0.00E+00	1.17E-02
3134	ALL	752688.42	4043360.7	NonCancerAcute	0.00E+00	6.22E-06	1.32E-03	0.00E+00	0.00E+00	1.33E-03	2.86E-03	0.00E+00	8.31E-03	0.00E+00	0.00E+00	1.32E-03	0.00E+00	0.00E+00	8.31E-03
3135	ALL	752788.42	4043360.7	NonCancerAcute	0.00E+00	6.12E-06	1.30E-03	0.00E+00	0.00E+00	1.31E-03	2.96E-03	0.00E+00	8.35E-03	0.00E+00	0.00E+00	1.30E-03	0.00E+00	0.00E+00	8.35E-03
3136	ALL	752888.42	4043360.7	NonCancerAcute	0.00E+00	6.10E-06	1.30E-03	0.00E+00	0.00E+00	1.30E-03	2.98E-03	0.00E+00	8.35E-03	0.00E+00	0.00E+00	1.30E-03	0.00E+00	0.00E+00	8.35E-03
3137	ALL	752988.42	4043360.7	NonCancerAcute	0.00E+00	6.14E-06	1.30E-03	0.00E+00	0.00E+00	1.31E-03	2.92E-03	0.00E+00	8.32E-03	0.00E+00	0.00E+00	1.30E-03	0.00E+00	0.00E+00	8.32E-03
3138	ALL	753088.42	4043360.7	NonCancerAcute	0.00E+00	6.07E-06	1.29E-03	0.00E+00	0.00E+00	1.30E-03	2.80E-03	0.00E+00	8.11E-03	0.00E+00	0.00E+00	1.29E-03	0.00E+00	0.00E+00	8.11E-03
3139	ALL	753188.42	4043360.7	NonCancerAcute	0.00E+00	6.06E-06	1.29E-03	0.00E+00	0.00E+00	1.29E-03	2.63E-03	0.00E+00	7.90E-03	0.00E+00	0.00E+00	1.29E-03	0.00E+00	0.00E+00	7.90E-03
3140	ALL	753488.42	4043360.7	NonCancerAcute	0.00E+00	5.76E-06	1.22E-03	0.00E+00	0.00E+00	1.23E-03	2.78E-03	0.00E+00	7.85E-03	0.00E+00	0.00E+00	1.22E-03	0.00E+00	0.00E+00	7.85E-03
3141	ALL	753588.42	4043360.7	NonCancerAcute	0.00E+00	5.71E-06	1.21E-03	0.00E+00	0.00E+00	1.22E-03	2.77E-03	0.00E+00	7.80E-03	0.00E+00	0.00E+00	1.21E-03	0.00E+00	0.00E+00	7.80E-03
3142	ALL	753688.42	4043360.7	NonCancerAcute	0.00E+00	5.64E-06	1.20E-03	0.00E+00	0.00E+00	1.20E-03	2.71E-03	0.00E+00	7.67E-03	0.00E+00	0.00E+00	1.20E-03	0.00E+00	0.00E+00	7.67E-03
3143	ALL	753788.42	4043360.7	NonCancerAcute	0.00E+00	5.63E-06	1.20E-03	0.00E+00	0.00E+00	1.20E-03	2.69E-03	0.00E+00	7.64E-03	0.00E+00	0.00E+00	1.20E-03	0.00E+00	0.00E+00	7.64E-03
3144	ALL	753888.42	4043360.7	NonCancerAcute	0.00E+00	5.62E-06	1.19E-03	0.00E+00	0.00E+00	1.20E-03	2.70E-03	0.00E+00	7.64E-03	0.00E+00	0.00E+00	1.19E-03	0.00E+00	0.00E+00	7.64E-03
3145	ALL	753988.42	4043360.7	NonCancerAcute	0.00E+00	5.54E-06	1.18E-03	0.00E+00	0.00E+00	1.18E-03	2.67E-03	0.00E+00	7.54E-03	0.00E+00	0.00E+00	1.18E-03	0.00E+00	0.00E+00	7.54E-03
3146	ALL	748188.42	4043460.7	NonCancerAcute	0.00E+00	8.57E-06	1.82E-03	0.00E+00	0.00E+00	1.83E-03	3.98E-03	0.00E+00	1.15E-02	0.00E+00	0.00E+00	1.82E-03	0.00E+00	0.00E+00	1.15E-02
3147	ALL	748288.42	4043460.7	NonCancerAcute	0.00E+00	8.44E-06	1.79E-03	0.00E+00	0.00E+00	1.80E-03	4.03E-03	0.00E+00	1.14E-02	0.00E+00	0.00E+00	1.79E-03	0.00E+00	0.00E+00	1.14E-02
3148	ALL	748388.42	4043460.7	NonCancerAcute	0.00E+00	8.43E-06	1.79E-03	0.00E+00	0.00E+00	1.80E-03	4.00E-03	0.00E+00	1.14E-02	0.00E+00	0.00E+00	1.79E-03	0.00E+00	0.00E+00	1.14E-02
3149	ALL	748488.42	4043460.7	NonCancerAcute	0.00E+00	8.46E-06	1.80E-03	0.00E+00	0.00E+00	1.80E-03	4.09E-03	0.00E+00	1.15E-02	0.00E+00	0.00E+00	1.80E-03	0.00E+00	0.00E+00	1.15E-02
3150	ALL	752688.42	4043460.7	NonCancerAcute	0.00E+00	6.25E-06	1.33E-03	0.00E+00	0.00E+00	1.33E-03	2.82E-03	0.00E+00	8.28E-03	0.00E+00	0.00E+00	1.33E-03	0.00E+00	0.00E+00	8.28E-03
3151	ALL	752788.42	4043460.7	NonCancerAcute	0.00E+00	6.13E-06	1.30E-03	0.00E+00	0.00E+00	1.31E-03	2.80E-03	0.00E+00	8.16E-03	0.00E+00	0.00E+00	1.30E-03	0.00E+00	0.00E+00	8.16E-03
3152	ALL	752888.42	4043460.7	NonCancerAcute	0.00E+00	6.04E-06	1.28E-03	0.00E+00	0.00E+00	1.29E-03	2.88E-03	0.00E+00	8.20E-03	0.00E+00	0.00E+00	1.28E-03	0.00E+00	0.00E+00	8.20E-03
3153	ALL	752988.42	4043460.7	NonCancerAcute	0.00E+00	5.96E-06	1.27E-03	0.00E+00	0.00E+00	1.27E-03	2.90E-03	0.00E+00	8.15E-03	0.00E+00	0.00E+00	1.27E-03	0.00E+00	0.00E+00	8.15E-03
3154	ALL	753088.42	4043460.7	NonCancerAcute	0.00E+00	6.03E-06	1.28E-03	0.00E+00	0.00E+00	1.29E-03	2.85E-03	0.00E+00	8.14E-03	0.00E+00	0.00E+00	1.28E-03	0.00E+00	0.00E+00	8.14E-03
3155	ALL	753188.42	4043460.7	NonCancerAcute	0.00E+00	5.99E-06	1.27E-03	0.00E+00	0.00E+00	1.28E-03	2.74E-03	0.00E+00	7.97E-03	0.00E+00	0.00E+00	1.27E-03	0.00E+00	0.00E+00	7.97E-03
3156	ALL	753288.42	4043460.7	NonCancerAcute	0.00E+00	5.95E-06	1.26E-03	0.00E+00	0.00E+00	1.27E-03	2.57E-03	0.00E+00	7.74E-03	0.00E+00	0.00E+00	1.26E-03	0.00E+00	0.00E+00	7.74E-03
3157	ALL	753388.42	4043460.7	NonCancerAcute	0.00E+00	5.88E-06	1.25E-03	0.00E+00	0.00E+00	1.25E-03	2.54E-03	0.00E+00	7.65E-03	0.00E+00	0.00E+00	1.25E-03	0.00E+00	0.00E+00	7.65E-03
3158	ALL	753488.42	4043460.7	NonCancerAcute	0.00E+00	5.78E-06	1.23E-03	0.00E+00	0.00E+00	1.23E-03	2.64E-03	0.00E+00	7.70E-03	0.00E+00	0.00E+00	1.23E-03	0.00E+00	0.00E+00	7.70E-03
3159	ALL	753588.42	4043460.7	NonCancerAcute	0.00E+00	5.65E-06	1.20E-03	0.00E+00	0.00E+00	1.21E-03	2.69E-03	0.00E+00	7.66E-03	0.00E+00	0.00E+00	1.20E-03	0.00E+00	0.00E+00	7.66E-03
3160	ALL	753688.42	4043460.7	NonCancerAcute	0.00E+00	5.61E-06	1.19E-03	0.00E+00	0.00E+00	1.20E-03	2.69E-03	0.00E+00	7.63E-03	0.00E+00	0.00E+00	1.19E-03	0.00E+00	0.00E+00	7.63E-03
3161	ALL	753788.42	4043460.7	NonCancerAcute	0.00E+00	5.57E-06	1.18E-03	0.00E+00	0.00E+00	1.19E-03	2.65E-03	0.00E+00	7.54E-03	0.00E+00	0.00E+00	1.18E-03	0.00E+00	0.00E+00	7.54E-03
3162	ALL	753888.42	4043460.7	NonCancerAcute	0.00E+00	5.55E-06	1.18E-03	0.00E+00	0.00E+00	1.18E-03	2.59E-03	0.00E+00	7.45E-03	0.00E+00	0.00E+00	1.18E-03	0.00E+00	0.00E+00	7.45E-03
3163	ALL	753988.42	4043460.7	NonCancerAcute	0.00E+00	5.57E-06	1.18E-03	0.00E+00	0.00E+00	1.19E-03	2.62E-03	0.00E+00	7.50E-03	0.00E+00	0.00E+00	1.18E-03	0.00E+00	0.00E+00	7.50E-03
3164	ALL	748188.42	4043560.7	NonCancerAcute	0.00E+00	8.42E-06	1.79E-03	0.00E+00	0.00E+00	1.80E-03	3.92E-03	0.00E+00	1.13E-02	0.00E+00	0.00E+00	1.79E-03	0.00E+00	0.00E+00	1.13E-02
3165	ALL	748288.42	4043560.7	NonCancerAcute	0.00E+00	8.32E-06	1.77E-03	0.00E+00	0.00E+00	1.77E-03	3.97E-03	0.00E+00	1.13E-02	0.00E+00	0.00E+00	1.77E-03	0.00E+00	0.00E+00	1.13E-02
3166	ALL	748388.42	4043560.7	NonCancerAcute	0.00E+00	8.34E-06	1.77E-03	0.00E+00	0.00E+00	1.78E-03	3.90E-03	0.00E+00	1.12E-02	0.00E+00	0.00E+00	1.77E-03	0.00E+00	0.00E+00	1.12E-02
3167	ALL	748488.42	4043560.7	NonCancerAcute	0.00E+00	8.39E-06	1.78E-03	0.00E+00	0.00E+00	1.79E-03	4.01E-03	0.00E+00	1.14E-02	0.00E+00	0.00E+00	1.78E-03	0.00E+00	0.00E+00	1.14E-02
3168	ALL	752688.42	4043560.7	NonCancerAcute	0.00E+00	6.13E-06	1.30E-03	0.00E+00	0.00E+00	1.31E-03	2.77E-03	0.00E+00	8.13E-03	0.00E+00	0.00E+00	1.30E-03	0.00E+00	0.00E+00	8.13E-03
3169	ALL	752788.42	4043560.7	NonCancerAcute	0.00E+00	6.15E-06	1.31E-03	0.00E+00	0.00E+00	1.31E-03	2.75E-03	0.00E+00	8.11E-03	0.00E+00	0.00E+00	1.31E-03	0.00E+00	0.00E+00	8.11E-03
3170	ALL	752888.42	4043560.7	NonCancerAcute	0.00E+00	6.06E-06	1.29E-03	0.00E+00	0.00E+00	1.29E-03	2.74E-03	0.00E+00	8.03E-03	0.00E+00	0.00E+00	1.29E-03	0.00E+00	0.00E+00	8.03E-03
3171	ALL	752988.42	4043560.7	NonCancerAcute	0.00E+00	5.96E-06	1.27E-03	0.00E+00	0.00E+00	1.27E-03	2.82E-03	0.00E+00	8.05E-03	0.00E+00	0.00E+00	1.27E-03	0.00E+00	0.00E+00	8.05E-03
3172	ALL	753088.42	4043560.7	NonCancerAcute	0.00E+00	5.87E-06	1.25E-03	0.00E+00	0.00E+00	1.25E-03	2.83E-03	0.00E+00	8.00E-03	0.00E+00	0.00E+00	1.25E-03	0.00E+00	0.00E+00	8.00E-03
3173	ALL	753188.42	4043560.7	NonCancerAcute	0.00E+00	5.90E-06	1.25E-03	0.00E+00	0.00E+00	1.26E-03	2.79E-03	0.00E+00	7.97E-03	0.00E+00	0.00E+00	1.25E-03	0.00E+00	0.00E+00	7.97E-03
3174	ALL	753288.42	4043560.7	NonCancerAcute	0.00E+00	5.91E-06	1.25E-03	0.00E+00	0.00E+00	1.26E-03	2.68E-03	0.00E+00	7.84E-03	0.00E+00	0.00E+00	1.25E-03	0.00E+00	0.00E+00	7.84E-03
3175	ALL	753388.42	4043560.7	NonCancerAcute	0.00E+00	5.84E-06	1.24E-03	0.00E+00	0.00E+00	1.25E-03	2.52E-03	0.00E+00	7.60E-03	0.00E+00	0.00E+00	1.24E-03	0.00E+00	0.00E+00	7.60E-03
3176	ALL	753488.42	4043560.7	NonCancerAcute	0.00E+00	5.81E-06	1.23E-03	0.00E+00	0.00E+00	1.24E-03	2.48E-03	0.00E+00	7.52E-03	0.00E+00	0.00E+00	1.23E-03	0.00E+00	0.00E+00	7.52E-03
3177	ALL	753588.42	4043560.7	NonCancerAcute	0.00E+00	5.69E-06	1.21E-03	0.00E+00	0.00E+00	1.21E-03	2.56E-03	0.00E+00	7.52E-03	0.00E+00	0.00E+00	1.21E-03	0.00E+00	0.00E+00	7.52E-03
3178	ALL	753688.42	4043560.7	NonCancerAcute	0.00E+00	5.58E-06	1.19E-03	0.00E+00	0.00E+00	1.19E-03	2.61E-03	0.00E+00	7.51E-03	0.00E+00	0.00E+00	1.19E-03	0.00E+00	0.00E+00	7.51E-03

3179	ALL	753788.42	4043560.7	NonCancerAcute	0.00E+00	5.51E-06	1.17E-03	0.00E+00	0.00E+00	1.18E-03	2.62E-03	0.00E+00	7.47E-03	0.00E+00	0.00E+00	1.17E-03	0.00E+00	0.00E+00	7.47E-03
3180	ALL	753888.42	4043560.7	NonCancerAcute	0.00E+00	5.51E-06	1.17E-03	0.00E+00	0.00E+00	1.18E-03	2.59E-03	0.00E+00	7.42E-03	0.00E+00	0.00E+00	1.17E-03	0.00E+00	0.00E+00	7.42E-03
3181	ALL	753988.42	4043560.7	NonCancerAcute	0.00E+00	5.49E-06	1.17E-03	0.00E+00	0.00E+00	1.17E-03	2.52E-03	0.00E+00	7.32E-03	0.00E+00	0.00E+00	1.17E-03	0.00E+00	0.00E+00	7.32E-03
3182	ALL	748188.42	4043660.7	NonCancerAcute	0.00E+00	8.27E-06	1.76E-03	0.00E+00	0.00E+00	1.76E-03	3.90E-03	0.00E+00	1.12E-02	0.00E+00	0.00E+00	1.76E-03	0.00E+00	0.00E+00	1.12E-02
3183	ALL	748288.42	4043660.7	NonCancerAcute	0.00E+00	8.19E-06	1.74E-03	0.00E+00	0.00E+00	1.75E-03	3.87E-03	0.00E+00	1.11E-02	0.00E+00	0.00E+00	1.74E-03	0.00E+00	0.00E+00	1.11E-02
3184	ALL	748388.42	4043660.7	NonCancerAcute	0.00E+00	8.26E-06	1.75E-03	0.00E+00	0.00E+00	1.76E-03	3.82E-03	0.00E+00	1.10E-02	0.00E+00	0.00E+00	1.75E-03	0.00E+00	0.00E+00	1.10E-02
3185	ALL	748488.42	4043660.7	NonCancerAcute	0.00E+00	8.30E-06	1.76E-03	0.00E+00	0.00E+00	1.77E-03	3.89E-03	0.00E+00	1.12E-02	0.00E+00	0.00E+00	1.76E-03	0.00E+00	0.00E+00	1.12E-02
3186	ALL	752688.42	4043660.7	NonCancerAcute	0.00E+00	6.13E-06	1.30E-03	0.00E+00	0.00E+00	1.31E-03	2.96E-03	0.00E+00	8.36E-03	0.00E+00	0.00E+00	1.30E-03	0.00E+00	0.00E+00	8.36E-03
3187	ALL	752788.42	4043660.7	NonCancerAcute	0.00E+00	6.01E-06	1.28E-03	0.00E+00	0.00E+00	1.28E-03	2.68E-03	0.00E+00	7.92E-03	0.00E+00	0.00E+00	1.28E-03	0.00E+00	0.00E+00	7.92E-03
3188	ALL	752888.42	4043660.7	NonCancerAcute	0.00E+00	6.05E-06	1.28E-03	0.00E+00	0.00E+00	1.29E-03	2.67E-03	0.00E+00	7.94E-03	0.00E+00	0.00E+00	1.28E-03	0.00E+00	0.00E+00	7.94E-03
3189	ALL	752988.42	4043660.7	NonCancerAcute	0.00E+00	5.99E-06	1.27E-03	0.00E+00	0.00E+00	1.28E-03	2.68E-03	0.00E+00	7.91E-03	0.00E+00	0.00E+00	1.27E-03	0.00E+00	0.00E+00	7.91E-03
3190	ALL	753088.42	4043660.7	NonCancerAcute	0.00E+00	5.88E-06	1.25E-03	0.00E+00	0.00E+00	1.26E-03	2.76E-03	0.00E+00	7.92E-03	0.00E+00	0.00E+00	1.25E-03	0.00E+00	0.00E+00	7.92E-03
3191	ALL	753188.42	4043660.7	NonCancerAcute	0.00E+00	5.82E-06	1.24E-03	0.00E+00	0.00E+00	1.24E-03	2.77E-03	0.00E+00	7.88E-03	0.00E+00	0.00E+00	1.24E-03	0.00E+00	0.00E+00	7.88E-03
3192	ALL	753288.42	4043660.7	NonCancerAcute	0.00E+00	5.77E-06	1.23E-03	0.00E+00	0.00E+00	1.23E-03	2.72E-03	0.00E+00	7.79E-03	0.00E+00	0.00E+00	1.23E-03	0.00E+00	0.00E+00	7.79E-03
3193	ALL	753388.42	4043660.7	NonCancerAcute	0.00E+00	5.81E-06	1.23E-03	0.00E+00	0.00E+00	1.24E-03	2.63E-03	0.00E+00	7.70E-03	0.00E+00	0.00E+00	1.23E-03	0.00E+00	0.00E+00	7.70E-03
3194	ALL	753488.42	4043660.7	NonCancerAcute	0.00E+00	5.78E-06	1.23E-03	0.00E+00	0.00E+00	1.23E-03	2.49E-03	0.00E+00	7.51E-03	0.00E+00	0.00E+00	1.23E-03	0.00E+00	0.00E+00	7.51E-03
3195	ALL	753588.42	4043660.7	NonCancerAcute	0.00E+00	5.73E-06	1.22E-03	0.00E+00	0.00E+00	1.22E-03	2.42E-03	0.00E+00	7.38E-03	0.00E+00	0.00E+00	1.22E-03	0.00E+00	0.00E+00	7.38E-03
3196	ALL	753688.42	4043660.7	NonCancerAcute	0.00E+00	5.64E-06	1.20E-03	0.00E+00	0.00E+00	1.20E-03	2.48E-03	0.00E+00	7.39E-03	0.00E+00	0.00E+00	1.20E-03	0.00E+00	0.00E+00	7.39E-03
3197	ALL	753788.42	4043660.7	NonCancerAcute	0.00E+00	5.50E-06	1.17E-03	0.00E+00	0.00E+00	1.17E-03	2.54E-03	0.00E+00	7.36E-03	0.00E+00	0.00E+00	1.17E-03	0.00E+00	0.00E+00	7.36E-03
3198	ALL	753888.42	4043660.7	NonCancerAcute	0.00E+00	5.43E-06	1.15E-03	0.00E+00	0.00E+00	1.16E-03	2.56E-03	0.00E+00	7.32E-03	0.00E+00	0.00E+00	1.15E-03	0.00E+00	0.00E+00	7.32E-03
3199	ALL	753988.42	4043660.7	NonCancerAcute	0.00E+00	5.43E-06	1.15E-03	0.00E+00	0.00E+00	1.16E-03	2.53E-03	0.00E+00	7.29E-03	0.00E+00	0.00E+00	1.15E-03	0.00E+00	0.00E+00	7.29E-03
3200	ALL	748188.42	4043760.7	NonCancerAcute	0.00E+00	8.12E-06	1.73E-03	0.00E+00	0.00E+00	1.73E-03	3.84E-03	0.00E+00	1.10E-02	0.00E+00	0.00E+00	1.73E-03	0.00E+00	0.00E+00	1.10E-02
3201	ALL	748288.42	4043760.7	NonCancerAcute	0.00E+00	8.10E-06	1.72E-03	0.00E+00	0.00E+00	1.73E-03	3.79E-03	0.00E+00	1.09E-02	0.00E+00	0.00E+00	1.72E-03	0.00E+00	0.00E+00	1.09E-02
3202	ALL	748388.42	4043760.7	NonCancerAcute	0.00E+00	8.16E-06	1.73E-03	0.00E+00	0.00E+00	1.74E-03	3.76E-03	0.00E+00	1.09E-02	0.00E+00	0.00E+00	1.73E-03	0.00E+00	0.00E+00	1.09E-02
3203	ALL	748488.42	4043760.7	NonCancerAcute	0.00E+00	8.21E-06	1.74E-03	0.00E+00	0.00E+00	1.75E-03	3.76E-03	0.00E+00	1.09E-02	0.00E+00	0.00E+00	1.74E-03	0.00E+00	0.00E+00	1.09E-02
3204	ALL	752688.42	4043760.7	NonCancerAcute	0.00E+00	6.05E-06	1.28E-03	0.00E+00	0.00E+00	1.29E-03	3.09E-03	0.00E+00	8.45E-03	0.00E+00	0.00E+00	1.28E-03	0.00E+00	0.00E+00	8.45E-03
3205	ALL	752788.42	4043760.7	NonCancerAcute	0.00E+00	6.06E-06	1.29E-03	0.00E+00	0.00E+00	1.29E-03	2.87E-03	0.00E+00	8.19E-03	0.00E+00	0.00E+00	1.29E-03	0.00E+00	0.00E+00	8.19E-03
3206	ALL	752888.42	4043760.7	NonCancerAcute	0.00E+00	5.93E-06	1.26E-03	0.00E+00	0.00E+00	1.27E-03	2.61E-03	0.00E+00	7.78E-03	0.00E+00	0.00E+00	1.26E-03	0.00E+00	0.00E+00	7.78E-03
3207	ALL	752988.42	4043760.7	NonCancerAcute	0.00E+00	5.94E-06	1.26E-03	0.00E+00	0.00E+00	1.27E-03	2.60E-03	0.00E+00	7.77E-03	0.00E+00	0.00E+00	1.26E-03	0.00E+00	0.00E+00	7.77E-03
3208	ALL	753088.42	4043760.7	NonCancerAcute	0.00E+00	5.90E-06	1.25E-03	0.00E+00	0.00E+00	1.26E-03	2.62E-03	0.00E+00	7.77E-03	0.00E+00	0.00E+00	1.25E-03	0.00E+00	0.00E+00	7.77E-03
3209	ALL	753188.42	4043760.7	NonCancerAcute	0.00E+00	5.80E-06	1.23E-03	0.00E+00	0.00E+00	1.24E-03	2.69E-03	0.00E+00	7.77E-03	0.00E+00	0.00E+00	1.23E-03	0.00E+00	0.00E+00	7.77E-03
3210	ALL	753288.42	4043760.7	NonCancerAcute	0.00E+00	5.77E-06	1.22E-03	0.00E+00	0.00E+00	1.23E-03	2.71E-03	0.00E+00	7.77E-03	0.00E+00	0.00E+00	1.22E-03	0.00E+00	0.00E+00	7.77E-03
3211	ALL	753388.42	4043760.7	NonCancerAcute	0.00E+00	5.67E-06	1.20E-03	0.00E+00	0.00E+00	1.21E-03	2.66E-03	0.00E+00	7.64E-03	0.00E+00	0.00E+00	1.20E-03	0.00E+00	0.00E+00	7.64E-03
3212	ALL	753488.42	4043760.7	NonCancerAcute	0.00E+00	5.73E-06	1.22E-03	0.00E+00	0.00E+00	1.22E-03	2.58E-03	0.00E+00	7.58E-03	0.00E+00	0.00E+00	1.22E-03	0.00E+00	0.00E+00	7.58E-03
3213	ALL	753588.42	4043760.7	NonCancerAcute	0.00E+00	5.71E-06	1.21E-03	0.00E+00	0.00E+00	1.22E-03	2.45E-03	0.00E+00	7.41E-03	0.00E+00	0.00E+00	1.21E-03	0.00E+00	0.00E+00	7.41E-03
3214	ALL	753688.42	4043760.7	NonCancerAcute	0.00E+00	5.64E-06	1.20E-03	0.00E+00	0.00E+00	1.20E-03	2.36E-03	0.00E+00	7.24E-03	0.00E+00	0.00E+00	1.20E-03	0.00E+00	0.00E+00	7.24E-03
3215	ALL	753788.42	4043760.7	NonCancerAcute	0.00E+00	5.57E-06	1.18E-03	0.00E+00	0.00E+00	1.19E-03	2.42E-03	0.00E+00	7.26E-03	0.00E+00	0.00E+00	1.18E-03	0.00E+00	0.00E+00	7.26E-03
3216	ALL	753888.42	4043760.7	NonCancerAcute	0.00E+00	5.43E-06	1.15E-03	0.00E+00	0.00E+00	1.16E-03	2.47E-03	0.00E+00	7.22E-03	0.00E+00	0.00E+00	1.15E-03	0.00E+00	0.00E+00	7.22E-03
3217	ALL	753988.42	4043760.7	NonCancerAcute	0.00E+00	5.35E-06	1.14E-03	0.00E+00	0.00E+00	1.14E-03	2.49E-03	0.00E+00	7.18E-03	0.00E+00	0.00E+00	1.14E-03	0.00E+00	0.00E+00	7.18E-03
3218	ALL	748188.42	4043860.7	NonCancerAcute	0.00E+00	8.03E-06	1.70E-03	0.00E+00	0.00E+00	1.71E-03	3.76E-03	0.00E+00	1.08E-02	0.00E+00	0.00E+00	1.70E-03	0.00E+00	0.00E+00	1.08E-02
3219	ALL	748288.42	4043860.7	NonCancerAcute	0.00E+00	7.99E-06	1.70E-03	0.00E+00	0.00E+00	1.70E-03	3.70E-03	0.00E+00	1.07E-02	0.00E+00	0.00E+00	1.70E-03	0.00E+00	0.00E+00	1.07E-02
3220	ALL	748388.42	4043860.7	NonCancerAcute	0.00E+00	8.05E-06	1.71E-03	0.00E+00	0.00E+00	1.72E-03	3.70E-03	0.00E+00	1.07E-02	0.00E+00	0.00E+00	1.71E-03	0.00E+00	0.00E+00	1.07E-02
3221	ALL	748488.42	4043860.7	NonCancerAcute	0.00E+00	8.10E-06	1.72E-03	0.00E+00	0.00E+00	1.73E-03	3.64E-03	0.00E+00	1.07E-02	0.00E+00	0.00E+00	1.72E-03	0.00E+00	0.00E+00	1.07E-02
3222	ALL	752688.42	4043860.7	NonCancerAcute	0.00E+00	5.90E-06	1.25E-03	0.00E+00	0.00E+00	1.26E-03	3.15E-03	0.00E+00	8.41E-03	0.00E+00	0.00E+00	1.25E-03	0.00E+00	0.00E+00	8.41E-03
3223	ALL	752788.42	4043860.7	NonCancerAcute	0.00E+00	5.96E-06	1.27E-03	0.00E+00	0.00E+00	1.27E-03	3.00E-03	0.00E+00	8.27E-03	0.00E+00	0.00E+00	1.27E-03	0.00E+00	0.00E+00	8.27E-03
3224	ALL	752888.42	4043860.7	NonCancerAcute	0.00E+00	5.98E-06	1.27E-03	0.00E+00	0.00E+00	1.27E-03	2.77E-03	0.00E+00	8.01E-03	0.00E+00	0.00E+00	1.27E-03	0.00E+00	0.00E+00	8.01E-03
3225	ALL	752988.42	4043860.7	NonCancerAcute	0.00E+00	5.86E-06	1.25E-03	0.00E+00	0.00E+00	1.25E-03	2.55E-03	0.00E+00	7.65E-03	0.00E+00	0.00E+00	1.25E-03	0.00E+00	0.00E+00	7.65E-03
3226	ALL	748088.42	4043960.7	NonCancerAcute	0.00E+00	8.11E-06	1.72E-03	0.00E+00	0.00E+00	1.73E-03	3.73E-03	0.00E+00	1.08E-02	0.00E+00	0.00E+00	1.72E-03	0.00E+00	0.00E+00	1.08E-02
3227	ALL	748188.42	4043960.7	NonCancerAcute	0.00E+00	7.94E-06	1.69E-03	0.00E+00	0.00E+00	1.69E-03	3.65E-03	0.00E+00	1.06E-02	0.00E+00	0.00E+00	1.69E-03	0.00E+00	0.00E+00	1.06E-02
3228	ALL	748288.42	4043960.7	NonCancerAcute	0.00E+00	7.91E-06	1.68E-03	0.00E+00	0.00E+00	1.69E-03	3.64E-03	0.00E+00	1.06E-02	0.00E+00	0.00E+00	1.68E-03	0.00E+00	0.00E+00	1.06E-02
3229	ALL	748388.42	4043960.7	NonCancerAcute	0.00E+00	7.97E-06	1.69E-03	0.00E+00	0.00E+00	1.70E-03	3.62E-03	0.00E+00	1.06E-02	0.00E+00	0.00E+00	1.69E-03	0.00E+00	0.00E+00	1.06E-02
3230	ALL	748488.42	4043960.7	NonCancerAcute	0.00E+00	8.00E-06	1.70E-03	0.00E+00	0.00E+00	1.71E-03	3.52E-03	0.00E+00	1.05E-02	0.00E+00	0.00E+00	1.70E-03	0.00E+00	0.00E+00	1.05E-02
3231	ALL	752688.42	4043960.7	NonCancerAcute	0.00E+00	5.74E-06	1.22E-03	0.00E+00	0.00E+00	1.23E-03	3.14E-03	0.00E+00	8.28E-03	0.00E+00	0.00E+00	1.22E-03	0.00E+00	0.00E+00	8.28E-03

3232	ALL	752788.42	4043960.7	NonCancerAcute	0.00E+00	5.78E-06	1.23E-03	0.00E+00	0.00E+00	1.23E-03	3.07E-03	0.00E+00	8.22E-03	0.00E+00	0.00E+00	1.23E-03	0.00E+00	0.00E+00	8.22E-03
3233	ALL	752888.42	4043960.7	NonCancerAcute	0.00E+00	5.87E-06	1.25E-03	0.00E+00	0.00E+00	1.25E-03	2.91E-03	0.00E+00	8.09E-03	0.00E+00	0.00E+00	1.25E-03	0.00E+00	0.00E+00	8.09E-03
3234	ALL	752988.42	4043960.7	NonCancerAcute	0.00E+00	5.89E-06	1.25E-03	0.00E+00	0.00E+00	1.26E-03	2.68E-03	0.00E+00	7.83E-03	0.00E+00	0.00E+00	1.25E-03	0.00E+00	0.00E+00	7.83E-03
3235	ALL	748088.42	4044060.7	NonCancerAcute	0.00E+00	8.04E-06	1.71E-03	0.00E+00	0.00E+00	1.72E-03	3.67E-03	0.00E+00	1.07E-02	0.00E+00	0.00E+00	1.71E-03	0.00E+00	0.00E+00	1.07E-02
3236	ALL	748188.42	4044060.7	NonCancerAcute	0.00E+00	7.85E-06	1.67E-03	0.00E+00	0.00E+00	1.67E-03	3.57E-03	0.00E+00	1.04E-02	0.00E+00	0.00E+00	1.67E-03	0.00E+00	0.00E+00	1.04E-02
3237	ALL	748288.42	4044060.7	NonCancerAcute	0.00E+00	7.83E-06	1.66E-03	0.00E+00	0.00E+00	1.67E-03	3.60E-03	0.00E+00	1.04E-02	0.00E+00	0.00E+00	1.66E-03	0.00E+00	0.00E+00	1.04E-02
3238	ALL	748388.42	4044060.7	NonCancerAcute	0.00E+00	7.90E-06	1.68E-03	0.00E+00	0.00E+00	1.68E-03	3.51E-03	0.00E+00	1.04E-02	0.00E+00	0.00E+00	1.68E-03	0.00E+00	0.00E+00	1.04E-02
3239	ALL	748488.42	4044060.7	NonCancerAcute	0.00E+00	7.89E-06	1.68E-03	0.00E+00	0.00E+00	1.68E-03	3.42E-03	0.00E+00	1.03E-02	0.00E+00	0.00E+00	1.68E-03	0.00E+00	0.00E+00	1.03E-02
3240	ALL	752688.42	4044060.7	NonCancerAcute	0.00E+00	5.80E-06	1.23E-03	0.00E+00	0.00E+00	1.24E-03	3.08E-03	0.00E+00	8.24E-03	0.00E+00	0.00E+00	1.23E-03	0.00E+00	0.00E+00	8.24E-03
3241	ALL	752788.42	4044060.7	NonCancerAcute	0.00E+00	5.66E-06	1.20E-03	0.00E+00	0.00E+00	1.21E-03	3.07E-03	0.00E+00	8.13E-03	0.00E+00	0.00E+00	1.20E-03	0.00E+00	0.00E+00	8.13E-03
3242	ALL	752888.42	4044060.7	NonCancerAcute	0.00E+00	5.68E-06	1.21E-03	0.00E+00	0.00E+00	1.21E-03	2.98E-03	0.00E+00	8.04E-03	0.00E+00	0.00E+00	1.21E-03	0.00E+00	0.00E+00	8.04E-03
3243	ALL	752988.42	4044060.7	NonCancerAcute	0.00E+00	5.79E-06	1.23E-03	0.00E+00	0.00E+00	1.23E-03	2.82E-03	0.00E+00	7.92E-03	0.00E+00	0.00E+00	1.23E-03	0.00E+00	0.00E+00	7.92E-03
3244	ALL	748088.42	4044160.7	NonCancerAcute	0.00E+00	7.98E-06	1.69E-03	0.00E+00	0.00E+00	1.70E-03	3.61E-03	0.00E+00	1.06E-02	0.00E+00	0.00E+00	1.69E-03	0.00E+00	0.00E+00	1.06E-02
3245	ALL	748188.42	4044160.7	NonCancerAcute	0.00E+00	7.78E-06	1.65E-03	0.00E+00	0.00E+00	1.66E-03	3.52E-03	0.00E+00	1.03E-02	0.00E+00	0.00E+00	1.65E-03	0.00E+00	0.00E+00	1.03E-02
3246	ALL	748288.42	4044160.7	NonCancerAcute	0.00E+00	7.74E-06	1.64E-03	0.00E+00	0.00E+00	1.65E-03	3.53E-03	0.00E+00	1.03E-02	0.00E+00	0.00E+00	1.64E-03	0.00E+00	0.00E+00	1.03E-02
3247	ALL	748388.42	4044160.7	NonCancerAcute	0.00E+00	7.84E-06	1.67E-03	0.00E+00	0.00E+00	1.67E-03	3.42E-03	0.00E+00	1.02E-02	0.00E+00	0.00E+00	1.67E-03	0.00E+00	0.00E+00	1.02E-02
3248	ALL	748488.42	4044160.7	NonCancerAcute	0.00E+00	7.82E-06	1.66E-03	0.00E+00	0.00E+00	1.67E-03	3.35E-03	0.00E+00	1.01E-02	0.00E+00	0.00E+00	1.66E-03	0.00E+00	0.00E+00	1.01E-02
3249	ALL	752688.42	4044160.7	NonCancerAcute	0.00E+00	5.87E-06	1.25E-03	0.00E+00	0.00E+00	1.25E-03	2.96E-03	0.00E+00	8.16E-03	0.00E+00	0.00E+00	1.25E-03	0.00E+00	0.00E+00	8.16E-03
3250	ALL	752788.42	4044160.7	NonCancerAcute	0.00E+00	5.73E-06	1.22E-03	0.00E+00	0.00E+00	1.22E-03	3.03E-03	0.00E+00	8.14E-03	0.00E+00	0.00E+00	1.22E-03	0.00E+00	0.00E+00	8.14E-03
3251	ALL	752888.42	4044160.7	NonCancerAcute	0.00E+00	5.58E-06	1.19E-03	0.00E+00	0.00E+00	1.19E-03	3.01E-03	0.00E+00	8.00E-03	0.00E+00	0.00E+00	1.19E-03	0.00E+00	0.00E+00	8.00E-03
3252	ALL	752988.42	4044160.7	NonCancerAcute	0.00E+00	5.60E-06	1.19E-03	0.00E+00	0.00E+00	1.20E-03	2.91E-03	0.00E+00	7.89E-03	0.00E+00	0.00E+00	1.19E-03	0.00E+00	0.00E+00	7.89E-03
3253	ALL	748088.42	4044260.7	NonCancerAcute	0.00E+00	7.91E-06	1.68E-03	0.00E+00	0.00E+00	1.69E-03	3.55E-03	0.00E+00	1.04E-02	0.00E+00	0.00E+00	1.68E-03	0.00E+00	0.00E+00	1.04E-02
3254	ALL	748188.42	4044260.7	NonCancerAcute	0.00E+00	7.73E-06	1.64E-03	0.00E+00	0.00E+00	1.65E-03	3.50E-03	0.00E+00	1.03E-02	0.00E+00	0.00E+00	1.64E-03	0.00E+00	0.00E+00	1.03E-02
3255	ALL	748288.42	4044260.7	NonCancerAcute	0.00E+00	7.64E-06	1.62E-03	0.00E+00	0.00E+00	1.63E-03	3.46E-03	0.00E+00	1.01E-02	0.00E+00	0.00E+00	1.62E-03	0.00E+00	0.00E+00	1.01E-02
3256	ALL	748388.42	4044260.7	NonCancerAcute	0.00E+00	7.77E-06	1.65E-03	0.00E+00	0.00E+00	1.66E-03	3.35E-03	0.00E+00	1.01E-02	0.00E+00	0.00E+00	1.65E-03	0.00E+00	0.00E+00	1.01E-02
3257	ALL	748488.42	4044260.7	NonCancerAcute	0.00E+00	7.74E-06	1.64E-03	0.00E+00	0.00E+00	1.65E-03	3.28E-03	0.00E+00	9.98E-03	0.00E+00	0.00E+00	1.64E-03	0.00E+00	0.00E+00	9.98E-03
3258	ALL	752688.42	4044260.7	NonCancerAcute	0.00E+00	5.88E-06	1.25E-03	0.00E+00	0.00E+00	1.25E-03	2.80E-03	0.00E+00	7.96E-03	0.00E+00	0.00E+00	1.25E-03	0.00E+00	0.00E+00	7.96E-03
3259	ALL	752788.42	4044260.7	NonCancerAcute	0.00E+00	5.80E-06	1.23E-03	0.00E+00	0.00E+00	1.24E-03	2.93E-03	0.00E+00	8.06E-03	0.00E+00	0.00E+00	1.23E-03	0.00E+00	0.00E+00	8.06E-03
3260	ALL	752888.42	4044260.7	NonCancerAcute	0.00E+00	5.65E-06	1.20E-03	0.00E+00	0.00E+00	1.20E-03	2.97E-03	0.00E+00	8.00E-03	0.00E+00	0.00E+00	1.20E-03	0.00E+00	0.00E+00	8.00E-03
3261	ALL	752988.42	4044260.7	NonCancerAcute	0.00E+00	5.49E-06	1.17E-03	0.00E+00	0.00E+00	1.17E-03	2.93E-03	0.00E+00	7.83E-03	0.00E+00	0.00E+00	1.17E-03	0.00E+00	0.00E+00	7.83E-03
3262	ALL	748088.42	4044360.7	NonCancerAcute	0.00E+00	7.86E-06	1.67E-03	0.00E+00	0.00E+00	1.68E-03	3.49E-03	0.00E+00	1.03E-02	0.00E+00	0.00E+00	1.67E-03	0.00E+00	0.00E+00	1.03E-02
3263	ALL	748188.42	4044360.7	NonCancerAcute	0.00E+00	7.68E-06	1.63E-03	0.00E+00	0.00E+00	1.64E-03	3.48E-03	0.00E+00	1.02E-02	0.00E+00	0.00E+00	1.63E-03	0.00E+00	0.00E+00	1.02E-02
3264	ALL	748288.42	4044360.7	NonCancerAcute	0.00E+00	7.54E-06	1.60E-03	0.00E+00	0.00E+00	1.61E-03	3.38E-03	0.00E+00	9.96E-03	0.00E+00	0.00E+00	1.60E-03	0.00E+00	0.00E+00	9.96E-03
3265	ALL	748388.42	4044360.7	NonCancerAcute	0.00E+00	7.71E-06	1.64E-03	0.00E+00	0.00E+00	1.64E-03	3.27E-03	0.00E+00	9.96E-03	0.00E+00	0.00E+00	1.64E-03	0.00E+00	0.00E+00	9.96E-03
3266	ALL	748488.42	4044360.7	NonCancerAcute	0.00E+00	7.64E-06	1.62E-03	0.00E+00	0.00E+00	1.63E-03	3.23E-03	0.00E+00	9.85E-03	0.00E+00	0.00E+00	1.62E-03	0.00E+00	0.00E+00	9.85E-03
3267	ALL	752688.42	4044360.7	NonCancerAcute	0.00E+00	5.79E-06	1.23E-03	0.00E+00	0.00E+00	1.23E-03	2.60E-03	0.00E+00	7.64E-03	0.00E+00	0.00E+00	1.23E-03	0.00E+00	0.00E+00	7.64E-03
3268	ALL	752788.42	4044360.7	NonCancerAcute	0.00E+00	5.80E-06	1.23E-03	0.00E+00	0.00E+00	1.24E-03	2.78E-03	0.00E+00	7.88E-03	0.00E+00	0.00E+00	1.23E-03	0.00E+00	0.00E+00	7.88E-03
3269	ALL	752888.42	4044360.7	NonCancerAcute	0.00E+00	5.73E-06	1.22E-03	0.00E+00	0.00E+00	1.22E-03	2.89E-03	0.00E+00	7.97E-03	0.00E+00	0.00E+00	1.22E-03	0.00E+00	0.00E+00	7.97E-03
3270	ALL	752988.42	4044360.7	NonCancerAcute	0.00E+00	5.57E-06	1.18E-03	0.00E+00	0.00E+00	1.19E-03	2.92E-03	0.00E+00	7.87E-03	0.00E+00	0.00E+00	1.18E-03	0.00E+00	0.00E+00	7.87E-03
3271	ALL	748088.42	4044460.7	NonCancerAcute	0.00E+00	7.81E-06	1.66E-03	0.00E+00	0.00E+00	1.67E-03	3.44E-03	0.00E+00	1.02E-02	0.00E+00	0.00E+00	1.66E-03	0.00E+00	0.00E+00	1.02E-02
3272	ALL	748188.42	4044460.7	NonCancerAcute	0.00E+00	7.65E-06	1.63E-03	0.00E+00	0.00E+00	1.63E-03	3.44E-03	0.00E+00	1.01E-02	0.00E+00	0.00E+00	1.63E-03	0.00E+00	0.00E+00	1.01E-02
3273	ALL	748288.42	4044460.7	NonCancerAcute	0.00E+00	7.46E-06	1.58E-03	0.00E+00	0.00E+00	1.59E-03	3.30E-03	0.00E+00	9.80E-03	0.00E+00	0.00E+00	1.58E-03	0.00E+00	0.00E+00	9.80E-03
3274	ALL	748388.42	4044460.7	NonCancerAcute	0.00E+00	7.64E-06	1.62E-03	0.00E+00	0.00E+00	1.63E-03	3.25E-03	0.00E+00	9.88E-03	0.00E+00	0.00E+00	1.62E-03	0.00E+00	0.00E+00	9.88E-03
3275	ALL	748488.42	4044460.7	NonCancerAcute	0.00E+00	7.57E-06	1.61E-03	0.00E+00	0.00E+00	1.61E-03	3.21E-03	0.00E+00	9.77E-03	0.00E+00	0.00E+00	1.61E-03	0.00E+00	0.00E+00	9.77E-03
3276	ALL	752688.42	4044460.7	NonCancerAcute	0.00E+00	5.79E-06	1.23E-03	0.00E+00	0.00E+00	1.24E-03	2.54E-03	0.00E+00	7.59E-03	0.00E+00	0.00E+00	1.23E-03	0.00E+00	0.00E+00	7.59E-03
3277	ALL	752788.42	4044460.7	NonCancerAcute	0.00E+00	5.71E-06	1.21E-03	0.00E+00	0.00E+00	1.22E-03	2.60E-03	0.00E+00	7.59E-03	0.00E+00	0.00E+00	1.21E-03	0.00E+00	0.00E+00	7.59E-03
3278	ALL	752888.42	4044460.7	NonCancerAcute	0.00E+00	5.73E-06	1.22E-03	0.00E+00	0.00E+00	1.22E-03	2.76E-03	0.00E+00	7.80E-03	0.00E+00	0.00E+00	1.22E-03	0.00E+00	0.00E+00	7.80E-03
3279	ALL	752988.42	4044460.7	NonCancerAcute	0.00E+00	5.66E-06	1.20E-03	0.00E+00	0.00E+00	1.21E-03	2.85E-03	0.00E+00	7.86E-03	0.00E+00	0.00E+00	1.20E-03	0.00E+00	0.00E+00	7.86E-03
3280	ALL	748088.42	4044560.7	NonCancerAcute	0.00E+00	7.74E-06	1.64E-03	0.00E+00	0.00E+00	1.65E-03	3.43E-03	0.00E+00	1.02E-02	0.00E+00	0.00E+00	1.64E-03	0.00E+00	0.00E+00	1.02E-02
3281	ALL	748188.42	4044560.7	NonCancerAcute	0.00E+00	7.61E-06	1.62E-03	0.00E+00	0.00E+00	1.62E-03	3.38E-03	0.00E+00	1.00E-02	0.00E+00	0.00E+00	1.62E-03	0.00E+00	0.00E+00	1.00E-02
3282	ALL	748288.42	4044560.7	NonCancerAcute	0.00E+00	7.38E-06	1.57E-03	0.00E+00	0.00E+00	1.57E-03	3.23E-03	0.00E+00	9.66E-03	0.00E+00	0.00E+00	1.57E-03	0.00E+00	0.00E+00	9.66E-03
3283	ALL	748388.42	4044560.7	NonCancerAcute	0.00E+00	7.60E-06	1.61E-03	0.00E+00	0.00E+00	1.62E-03	3.21E-03	0.00E+00	9.80E-03	0.00E+00	0.00E+00	1.61E-03	0.00E+00	0.00E+00	9.80E-03
3284	ALL	748488.42	4044560.7	NonCancerAcute	0.00E+00	7.44E-06	1.58E-03	0.00E+00	0.00E+00	1.59E-03	3.15E-03	0.00E+00	9.59E-03	0.00E+00	0.00E+00	1.58E-03	0.00E+00	0.00E+00	9.59E-03

3285	ALL	752688.42	4044560.7	NonCancerAcute	0.00E+00	5.77E-06	1.23E-03	0.00E+00	0.00E+00	1.23E-03	2.48E-03	0.00E+00	7.49E-03	0.00E+00	0.00E+00	1.23E-03	0.00E+00	0.00E+00	7.49E-03
3286	ALL	752788.42	4044560.7	NonCancerAcute	0.00E+00	5.72E-06	1.22E-03	0.00E+00	0.00E+00	1.22E-03	2.49E-03	0.00E+00	7.46E-03	0.00E+00	0.00E+00	1.22E-03	0.00E+00	0.00E+00	7.46E-03
3287	ALL	752888.42	4044560.7	NonCancerAcute	0.00E+00	5.63E-06	1.19E-03	0.00E+00	0.00E+00	1.20E-03	2.59E-03	0.00E+00	7.51E-03	0.00E+00	0.00E+00	1.19E-03	0.00E+00	0.00E+00	7.51E-03
3288	ALL	752988.42	4044560.7	NonCancerAcute	0.00E+00	5.66E-06	1.20E-03	0.00E+00	0.00E+00	1.21E-03	2.73E-03	0.00E+00	7.72E-03	0.00E+00	0.00E+00	1.20E-03	0.00E+00	0.00E+00	7.72E-03
3289	ALL	748088.42	4044660.7	NonCancerAcute	0.00E+00	7.66E-06	1.63E-03	0.00E+00	0.00E+00	1.63E-03	3.41E-03	0.00E+00	1.01E-02	0.00E+00	0.00E+00	1.63E-03	0.00E+00	0.00E+00	1.01E-02
3290	ALL	748188.42	4044660.7	NonCancerAcute	0.00E+00	7.57E-06	1.61E-03	0.00E+00	0.00E+00	1.61E-03	3.33E-03	0.00E+00	9.91E-03	0.00E+00	0.00E+00	1.61E-03	0.00E+00	0.00E+00	9.91E-03
3291	ALL	748288.42	4044660.7	NonCancerAcute	0.00E+00	7.30E-06	1.55E-03	0.00E+00	0.00E+00	1.56E-03	3.17E-03	0.00E+00	9.52E-03	0.00E+00	0.00E+00	1.55E-03	0.00E+00	0.00E+00	9.52E-03
3292	ALL	748388.42	4044660.7	NonCancerAcute	0.00E+00	7.55E-06	1.60E-03	0.00E+00	0.00E+00	1.61E-03	3.17E-03	0.00E+00	9.71E-03	0.00E+00	0.00E+00	1.60E-03	0.00E+00	0.00E+00	9.71E-03
3293	ALL	748488.42	4044660.7	NonCancerAcute	0.00E+00	7.45E-06	1.58E-03	0.00E+00	0.00E+00	1.59E-03	3.12E-03	0.00E+00	9.57E-03	0.00E+00	0.00E+00	1.58E-03	0.00E+00	0.00E+00	9.57E-03
3294	ALL	752688.42	4044660.7	NonCancerAcute	0.00E+00	5.66E-06	1.20E-03	0.00E+00	0.00E+00	1.21E-03	2.40E-03	0.00E+00	7.31E-03	0.00E+00	0.00E+00	1.20E-03	0.00E+00	0.00E+00	7.31E-03
3295	ALL	752788.42	4044660.7	NonCancerAcute	0.00E+00	5.71E-06	1.21E-03	0.00E+00	0.00E+00	1.22E-03	2.44E-03	0.00E+00	7.39E-03	0.00E+00	0.00E+00	1.21E-03	0.00E+00	0.00E+00	7.39E-03
3296	ALL	752888.42	4044660.7	NonCancerAcute	0.00E+00	5.65E-06	1.20E-03	0.00E+00	0.00E+00	1.20E-03	2.43E-03	0.00E+00	7.33E-03	0.00E+00	0.00E+00	1.20E-03	0.00E+00	0.00E+00	7.33E-03
3297	ALL	752988.42	4044660.7	NonCancerAcute	0.00E+00	5.55E-06	1.18E-03	0.00E+00	0.00E+00	1.18E-03	2.58E-03	0.00E+00	7.44E-03	0.00E+00	0.00E+00	1.18E-03	0.00E+00	0.00E+00	7.44E-03
3298	ALL	748088.42	4044760.7	NonCancerAcute	0.00E+00	7.57E-06	1.61E-03	0.00E+00	0.00E+00	1.61E-03	3.37E-03	0.00E+00	9.97E-03	0.00E+00	0.00E+00	1.61E-03	0.00E+00	0.00E+00	9.97E-03
3299	ALL	748188.42	4044760.7	NonCancerAcute	0.00E+00	7.51E-06	1.59E-03	0.00E+00	0.00E+00	1.60E-03	3.27E-03	0.00E+00	9.80E-03	0.00E+00	0.00E+00	1.59E-03	0.00E+00	0.00E+00	9.80E-03
3300	ALL	748288.42	4044760.7	NonCancerAcute	0.00E+00	7.22E-06	1.53E-03	0.00E+00	0.00E+00	1.54E-03	3.15E-03	0.00E+00	9.43E-03	0.00E+00	0.00E+00	1.53E-03	0.00E+00	0.00E+00	9.43E-03
3301	ALL	748388.42	4044760.7	NonCancerAcute	0.00E+00	7.50E-06	1.59E-03	0.00E+00	0.00E+00	1.60E-03	3.15E-03	0.00E+00	9.64E-03	0.00E+00	0.00E+00	1.59E-03	0.00E+00	0.00E+00	9.64E-03
3302	ALL	748488.42	4044760.7	NonCancerAcute	0.00E+00	7.44E-06	1.58E-03	0.00E+00	0.00E+00	1.59E-03	3.07E-03	0.00E+00	9.51E-03	0.00E+00	0.00E+00	1.58E-03	0.00E+00	0.00E+00	9.51E-03
3303	ALL	752688.42	4044760.7	NonCancerAcute	0.00E+00	5.52E-06	1.17E-03	0.00E+00	0.00E+00	1.18E-03	2.35E-03	0.00E+00	7.15E-03	0.00E+00	0.00E+00	1.17E-03	0.00E+00	0.00E+00	7.15E-03
3304	ALL	752788.42	4044760.7	NonCancerAcute	0.00E+00	5.59E-06	1.19E-03	0.00E+00	0.00E+00	1.19E-03	2.36E-03	0.00E+00	7.20E-03	0.00E+00	0.00E+00	1.19E-03	0.00E+00	0.00E+00	7.20E-03
3305	ALL	752888.42	4044760.7	NonCancerAcute	0.00E+00	5.64E-06	1.20E-03	0.00E+00	0.00E+00	1.20E-03	2.39E-03	0.00E+00	7.28E-03	0.00E+00	0.00E+00	1.20E-03	0.00E+00	0.00E+00	7.28E-03
3306	ALL	752988.42	4044760.7	NonCancerAcute	0.00E+00	5.57E-06	1.18E-03	0.00E+00	0.00E+00	1.19E-03	2.41E-03	0.00E+00	7.25E-03	0.00E+00	0.00E+00	1.18E-03	0.00E+00	0.00E+00	7.25E-03
3307	ALL	748088.42	4044860.7	NonCancerAcute	0.00E+00	7.48E-06	1.59E-03	0.00E+00	0.00E+00	1.60E-03	3.32E-03	0.00E+00	9.83E-03	0.00E+00	0.00E+00	1.59E-03	0.00E+00	0.00E+00	9.83E-03
3308	ALL	748188.42	4044860.7	NonCancerAcute	0.00E+00	7.45E-06	1.58E-03	0.00E+00	0.00E+00	1.59E-03	3.22E-03	0.00E+00	9.70E-03	0.00E+00	0.00E+00	1.58E-03	0.00E+00	0.00E+00	9.70E-03
3309	ALL	748288.42	4044860.7	NonCancerAcute	0.00E+00	7.15E-06	1.52E-03	0.00E+00	0.00E+00	1.53E-03	3.14E-03	0.00E+00	9.36E-03	0.00E+00	0.00E+00	1.52E-03	0.00E+00	0.00E+00	9.36E-03
3310	ALL	748388.42	4044860.7	NonCancerAcute	0.00E+00	7.45E-06	1.58E-03	0.00E+00	0.00E+00	1.59E-03	3.12E-03	0.00E+00	9.57E-03	0.00E+00	0.00E+00	1.58E-03	0.00E+00	0.00E+00	9.57E-03
3311	ALL	750188.42	4044860.7	NonCancerAcute	0.00E+00	6.86E-06	1.46E-03	0.00E+00	0.00E+00	1.46E-03	3.12E-03	0.00E+00	9.12E-03	0.00E+00	0.00E+00	1.46E-03	0.00E+00	0.00E+00	9.12E-03
3312	ALL	752688.42	4044860.7	NonCancerAcute	0.00E+00	5.47E-06	1.16E-03	0.00E+00	0.00E+00	1.17E-03	2.31E-03	0.00E+00	7.05E-03	0.00E+00	0.00E+00	1.16E-03	0.00E+00	0.00E+00	7.05E-03
3313	ALL	752788.42	4044860.7	NonCancerAcute	0.00E+00	5.47E-06	1.16E-03	0.00E+00	0.00E+00	1.17E-03	2.31E-03	0.00E+00	7.05E-03	0.00E+00	0.00E+00	1.16E-03	0.00E+00	0.00E+00	7.05E-03
3314	ALL	752888.42	4044860.7	NonCancerAcute	0.00E+00	5.54E-06	1.18E-03	0.00E+00	0.00E+00	1.18E-03	2.32E-03	0.00E+00	7.12E-03	0.00E+00	0.00E+00	1.18E-03	0.00E+00	0.00E+00	7.12E-03
3315	ALL	752988.42	4044860.7	NonCancerAcute	0.00E+00	5.57E-06	1.18E-03	0.00E+00	0.00E+00	1.19E-03	2.34E-03	0.00E+00	7.17E-03	0.00E+00	0.00E+00	1.18E-03	0.00E+00	0.00E+00	7.17E-03
3316	ALL	748088.42	4044960.7	NonCancerAcute	0.00E+00	7.38E-06	1.57E-03	0.00E+00	0.00E+00	1.57E-03	3.24E-03	0.00E+00	9.67E-03	0.00E+00	0.00E+00	1.57E-03	0.00E+00	0.00E+00	9.67E-03
3317	ALL	748188.42	4044960.7	NonCancerAcute	0.00E+00	7.37E-06	1.57E-03	0.00E+00	0.00E+00	1.57E-03	3.16E-03	0.00E+00	9.56E-03	0.00E+00	0.00E+00	1.57E-03	0.00E+00	0.00E+00	9.56E-03
3318	ALL	748288.42	4044960.7	NonCancerAcute	0.00E+00	7.09E-06	1.51E-03	0.00E+00	0.00E+00	1.51E-03	3.11E-03	0.00E+00	9.28E-03	0.00E+00	0.00E+00	1.51E-03	0.00E+00	0.00E+00	9.28E-03
3319	ALL	748388.42	4044960.7	NonCancerAcute	0.00E+00	7.39E-06	1.57E-03	0.00E+00	0.00E+00	1.58E-03	3.09E-03	0.00E+00	9.49E-03	0.00E+00	0.00E+00	1.57E-03	0.00E+00	0.00E+00	9.49E-03
3320	ALL	750188.42	4044960.7	NonCancerAcute	0.00E+00	6.79E-06	1.44E-03	0.00E+00	0.00E+00	1.45E-03	3.05E-03	0.00E+00	8.97E-03	0.00E+00	0.00E+00	1.44E-03	0.00E+00	0.00E+00	8.97E-03
3321	ALL	750288.42	4044960.7	NonCancerAcute	0.00E+00	6.74E-06	1.43E-03	0.00E+00	0.00E+00	1.44E-03	3.07E-03	0.00E+00	8.96E-03	0.00E+00	0.00E+00	1.43E-03	0.00E+00	0.00E+00	8.96E-03
3322	ALL	750388.42	4044960.7	NonCancerAcute	0.00E+00	6.39E-06	1.36E-03	0.00E+00	0.00E+00	1.36E-03	3.03E-03	0.00E+00	8.65E-03	0.00E+00	0.00E+00	1.36E-03	0.00E+00	0.00E+00	8.65E-03
3323	ALL	750488.42	4044960.7	NonCancerAcute	0.00E+00	6.39E-06	1.36E-03	0.00E+00	0.00E+00	1.36E-03	2.88E-03	0.00E+00	8.45E-03	0.00E+00	0.00E+00	1.36E-03	0.00E+00	0.00E+00	8.45E-03
3324	ALL	750588.42	4044960.7	NonCancerAcute	0.00E+00	6.50E-06	1.38E-03	0.00E+00	0.00E+00	1.39E-03	2.72E-03	0.00E+00	8.35E-03	0.00E+00	0.00E+00	1.38E-03	0.00E+00	0.00E+00	8.35E-03
3325	ALL	750688.42	4044960.7	NonCancerAcute	0.00E+00	6.44E-06	1.37E-03	0.00E+00	0.00E+00	1.37E-03	2.47E-03	0.00E+00	8.00E-03	0.00E+00	0.00E+00	1.37E-03	0.00E+00	0.00E+00	8.00E-03
3326	ALL	750788.42	4044960.7	NonCancerAcute	0.00E+00	6.21E-06	1.32E-03	0.00E+00	0.00E+00	1.32E-03	2.55E-03	0.00E+00	7.91E-03	0.00E+00	0.00E+00	1.32E-03	0.00E+00	0.00E+00	7.91E-03
3327	ALL	750888.42	4044960.7	NonCancerAcute	0.00E+00	6.35E-06	1.35E-03	0.00E+00	0.00E+00	1.36E-03	2.75E-03	0.00E+00	8.27E-03	0.00E+00	0.00E+00	1.35E-03	0.00E+00	0.00E+00	8.27E-03
3328	ALL	750988.42	4044960.7	NonCancerAcute	0.00E+00	6.33E-06	1.34E-03	0.00E+00	0.00E+00	1.35E-03	2.85E-03	0.00E+00	8.37E-03	0.00E+00	0.00E+00	1.34E-03	0.00E+00	0.00E+00	8.37E-03
3329	ALL	751088.42	4044960.7	NonCancerAcute	0.00E+00	6.20E-06	1.32E-03	0.00E+00	0.00E+00	1.32E-03	2.85E-03	0.00E+00	8.27E-03	0.00E+00	0.00E+00	1.32E-03	0.00E+00	0.00E+00	8.27E-03
3330	ALL	751188.42	4044960.7	NonCancerAcute	0.00E+00	6.35E-06	1.35E-03	0.00E+00	0.00E+00	1.35E-03	2.77E-03	0.00E+00	8.29E-03	0.00E+00	0.00E+00	1.35E-03	0.00E+00	0.00E+00	8.29E-03
3331	ALL	751288.42	4044960.7	NonCancerAcute	0.00E+00	6.29E-06	1.34E-03	0.00E+00	0.00E+00	1.34E-03	2.70E-03	0.00E+00	8.16E-03	0.00E+00	0.00E+00	1.34E-03	0.00E+00	0.00E+00	8.16E-03
3332	ALL	751388.42	4044960.7	NonCancerAcute	0.00E+00	6.05E-06	1.29E-03	0.00E+00	0.00E+00	1.29E-03	2.68E-03	0.00E+00	7.95E-03	0.00E+00	0.00E+00	1.29E-03	0.00E+00	0.00E+00	7.95E-03
3333	ALL	751488.42	4044960.7	NonCancerAcute	0.00E+00	6.09E-06	1.29E-03	0.00E+00	0.00E+00	1.30E-03	2.73E-03	0.00E+00	8.04E-03	0.00E+00	0.00E+00	1.29E-03	0.00E+00	0.00E+00	8.04E-03
3334	ALL	751588.42	4044960.7	NonCancerAcute	0.00E+00	6.13E-06	1.30E-03	0.00E+00	0.00E+00	1.31E-03	2.85E-03	0.00E+00	8.23E-03	0.00E+00	0.00E+00	1.30E-03	0.00E+00	0.00E+00	8.23E-03
3335	ALL	751688.42	4044960.7	NonCancerAcute	0.00E+00	6.01E-06	1.28E-03	0.00E+00	0.00E+00	1.28E-03	2.87E-03	0.00E+00	8.16E-03	0.00E+00	0.00E+00	1.28E-03	0.00E+00	0.00E+00	8.16E-03
3336	ALL	751788.42	4044960.7	NonCancerAcute	0.00E+00	5.88E-06	1.25E-03	0.00E+00	0.00E+00	1.25E-03	2.80E-03	0.00E+00	7.97E-03	0.00E+00	0.00E+00	1.25E-03	0.00E+00	0.00E+00	7.97E-03
3337	ALL	751888.42	4044960.7	NonCancerAcute	0.00E+00	5.70E-06	1.21E-03	0.00E+00	0.00E+00	1.22E-03	2.67E-03	0.00E+00	7.67E-03	0.00E+00	0.00E+00	1.21E-03	0.00E+00	0.00E+00	7.67E-03

3338	ALL	751988.42	4044960.7	NonCancerAcute	0.00E+00	5.62E-06	1.19E-03	0.00E+00	0.00E+00	1.20E-03	2.66E-03	0.00E+00	7.60E-03	0.00E+00	0.00E+00	1.19E-03	0.00E+00	0.00E+00	7.60E-03
3339	ALL	752088.42	4044960.7	NonCancerAcute	0.00E+00	5.75E-06	1.22E-03	0.00E+00	0.00E+00	1.23E-03	2.59E-03	0.00E+00	7.61E-03	0.00E+00	0.00E+00	1.22E-03	0.00E+00	0.00E+00	7.61E-03
3340	ALL	752188.42	4044960.7	NonCancerAcute	0.00E+00	5.81E-06	1.23E-03	0.00E+00	0.00E+00	1.24E-03	2.44E-03	0.00E+00	7.47E-03	0.00E+00	0.00E+00	1.23E-03	0.00E+00	0.00E+00	7.47E-03
3341	ALL	752288.42	4044960.7	NonCancerAcute	0.00E+00	5.75E-06	1.22E-03	0.00E+00	0.00E+00	1.23E-03	2.26E-03	0.00E+00	7.20E-03	0.00E+00	0.00E+00	1.22E-03	0.00E+00	0.00E+00	7.20E-03
3342	ALL	752388.42	4044960.7	NonCancerAcute	0.00E+00	5.67E-06	1.20E-03	0.00E+00	0.00E+00	1.21E-03	2.29E-03	0.00E+00	7.17E-03	0.00E+00	0.00E+00	1.20E-03	0.00E+00	0.00E+00	7.17E-03
3343	ALL	752488.42	4044960.7	NonCancerAcute	0.00E+00	5.52E-06	1.17E-03	0.00E+00	0.00E+00	1.18E-03	2.23E-03	0.00E+00	6.99E-03	0.00E+00	0.00E+00	1.17E-03	0.00E+00	0.00E+00	6.99E-03
3344	ALL	752588.42	4044960.7	NonCancerAcute	0.00E+00	5.45E-06	1.16E-03	0.00E+00	0.00E+00	1.16E-03	2.18E-03	0.00E+00	6.87E-03	0.00E+00	0.00E+00	1.16E-03	0.00E+00	0.00E+00	6.87E-03
3345	ALL	752688.42	4044960.7	NonCancerAcute	0.00E+00	5.40E-06	1.15E-03	0.00E+00	0.00E+00	1.15E-03	2.25E-03	0.00E+00	6.92E-03	0.00E+00	0.00E+00	1.15E-03	0.00E+00	0.00E+00	6.92E-03
3346	ALL	752788.42	4044960.7	NonCancerAcute	0.00E+00	5.41E-06	1.15E-03	0.00E+00	0.00E+00	1.15E-03	2.27E-03	0.00E+00	6.96E-03	0.00E+00	0.00E+00	1.15E-03	0.00E+00	0.00E+00	6.96E-03
3347	ALL	752888.42	4044960.7	NonCancerAcute	0.00E+00	5.41E-06	1.15E-03	0.00E+00	0.00E+00	1.15E-03	2.26E-03	0.00E+00	6.94E-03	0.00E+00	0.00E+00	1.15E-03	0.00E+00	0.00E+00	6.94E-03
3348	ALL	752988.42	4044960.7	NonCancerAcute	0.00E+00	5.49E-06	1.17E-03	0.00E+00	0.00E+00	1.17E-03	2.29E-03	0.00E+00	7.04E-03	0.00E+00	0.00E+00	1.17E-03	0.00E+00	0.00E+00	7.04E-03
3349	ALL	748088.42	4045060.7	NonCancerAcute	0.00E+00	7.31E-06	1.55E-03	0.00E+00	0.00E+00	1.56E-03	3.17E-03	0.00E+00	9.53E-03	0.00E+00	0.00E+00	1.55E-03	0.00E+00	0.00E+00	9.53E-03
3350	ALL	748188.42	4045060.7	NonCancerAcute	0.00E+00	7.31E-06	1.55E-03	0.00E+00	0.00E+00	1.56E-03	3.11E-03	0.00E+00	9.45E-03	0.00E+00	0.00E+00	1.55E-03	0.00E+00	0.00E+00	9.45E-03
3351	ALL	748288.42	4045060.7	NonCancerAcute	0.00E+00	7.03E-06	1.49E-03	0.00E+00	0.00E+00	1.50E-03	3.08E-03	0.00E+00	9.20E-03	0.00E+00	0.00E+00	1.49E-03	0.00E+00	0.00E+00	9.20E-03
3352	ALL	748388.42	4045060.7	NonCancerAcute	0.00E+00	7.33E-06	1.56E-03	0.00E+00	0.00E+00	1.56E-03	3.05E-03	0.00E+00	9.39E-03	0.00E+00	0.00E+00	1.56E-03	0.00E+00	0.00E+00	9.39E-03
3353	ALL	750188.42	4045060.7	NonCancerAcute	0.00E+00	6.75E-06	1.43E-03	0.00E+00	0.00E+00	1.44E-03	2.98E-03	0.00E+00	8.86E-03	0.00E+00	0.00E+00	1.43E-03	0.00E+00	0.00E+00	8.86E-03
3354	ALL	750288.42	4045060.7	NonCancerAcute	0.00E+00	6.70E-06	1.42E-03	0.00E+00	0.00E+00	1.43E-03	3.00E-03	0.00E+00	8.84E-03	0.00E+00	0.00E+00	1.42E-03	0.00E+00	0.00E+00	8.84E-03
3355	ALL	750388.42	4045060.7	NonCancerAcute	0.00E+00	6.49E-06	1.38E-03	0.00E+00	0.00E+00	1.38E-03	2.99E-03	0.00E+00	8.67E-03	0.00E+00	0.00E+00	1.38E-03	0.00E+00	0.00E+00	8.67E-03
3356	ALL	750488.42	4045060.7	NonCancerAcute	0.00E+00	6.21E-06	1.32E-03	0.00E+00	0.00E+00	1.33E-03	2.85E-03	0.00E+00	8.29E-03	0.00E+00	0.00E+00	1.32E-03	0.00E+00	0.00E+00	8.29E-03
3357	ALL	750588.42	4045060.7	NonCancerAcute	0.00E+00	6.39E-06	1.36E-03	0.00E+00	0.00E+00	1.36E-03	2.71E-03	0.00E+00	8.25E-03	0.00E+00	0.00E+00	1.36E-03	0.00E+00	0.00E+00	8.25E-03
3358	ALL	750688.42	4045060.7	NonCancerAcute	0.00E+00	6.42E-06	1.36E-03	0.00E+00	0.00E+00	1.37E-03	2.49E-03	0.00E+00	8.01E-03	0.00E+00	0.00E+00	1.36E-03	0.00E+00	0.00E+00	8.01E-03
3359	ALL	750788.42	4045060.7	NonCancerAcute	0.00E+00	6.27E-06	1.33E-03	0.00E+00	0.00E+00	1.34E-03	2.45E-03	0.00E+00	7.83E-03	0.00E+00	0.00E+00	1.33E-03	0.00E+00	0.00E+00	7.83E-03
3360	ALL	750888.42	4045060.7	NonCancerAcute	0.00E+00	6.23E-06	1.32E-03	0.00E+00	0.00E+00	1.33E-03	2.64E-03	0.00E+00	8.04E-03	0.00E+00	0.00E+00	1.32E-03	0.00E+00	0.00E+00	8.04E-03
3361	ALL	750988.42	4045060.7	NonCancerAcute	0.00E+00	6.31E-06	1.34E-03	0.00E+00	0.00E+00	1.35E-03	2.79E-03	0.00E+00	8.28E-03	0.00E+00	0.00E+00	1.34E-03	0.00E+00	0.00E+00	8.28E-03
3362	ALL	751088.42	4045060.7	NonCancerAcute	0.00E+00	6.16E-06	1.31E-03	0.00E+00	0.00E+00	1.31E-03	2.80E-03	0.00E+00	8.18E-03	0.00E+00	0.00E+00	1.31E-03	0.00E+00	0.00E+00	8.18E-03
3363	ALL	751188.42	4045060.7	NonCancerAcute	0.00E+00	6.21E-06	1.32E-03	0.00E+00	0.00E+00	1.32E-03	2.75E-03	0.00E+00	8.16E-03	0.00E+00	0.00E+00	1.32E-03	0.00E+00	0.00E+00	8.16E-03
3364	ALL	751288.42	4045060.7	NonCancerAcute	0.00E+00	6.27E-06	1.33E-03	0.00E+00	0.00E+00	1.34E-03	2.67E-03	0.00E+00	8.11E-03	0.00E+00	0.00E+00	1.33E-03	0.00E+00	0.00E+00	8.11E-03
3365	ALL	751388.42	4045060.7	NonCancerAcute	0.00E+00	6.11E-06	1.30E-03	0.00E+00	0.00E+00	1.30E-03	2.62E-03	0.00E+00	7.93E-03	0.00E+00	0.00E+00	1.30E-03	0.00E+00	0.00E+00	7.93E-03
3366	ALL	751488.42	4045060.7	NonCancerAcute	0.00E+00	5.90E-06	1.25E-03	0.00E+00	0.00E+00	1.26E-03	2.59E-03	0.00E+00	7.73E-03	0.00E+00	0.00E+00	1.25E-03	0.00E+00	0.00E+00	7.73E-03
3367	ALL	751588.42	4045060.7	NonCancerAcute	0.00E+00	6.05E-06	1.28E-03	0.00E+00	0.00E+00	1.29E-03	2.76E-03	0.00E+00	8.05E-03	0.00E+00	0.00E+00	1.28E-03	0.00E+00	0.00E+00	8.05E-03
3368	ALL	751688.42	4045060.7	NonCancerAcute	0.00E+00	6.02E-06	1.28E-03	0.00E+00	0.00E+00	1.28E-03	2.82E-03	0.00E+00	8.10E-03	0.00E+00	0.00E+00	1.28E-03	0.00E+00	0.00E+00	8.10E-03
3369	ALL	751788.42	4045060.7	NonCancerAcute	0.00E+00	5.89E-06	1.25E-03	0.00E+00	0.00E+00	1.26E-03	2.79E-03	0.00E+00	7.96E-03	0.00E+00	0.00E+00	1.25E-03	0.00E+00	0.00E+00	7.96E-03
3370	ALL	751888.42	4045060.7	NonCancerAcute	0.00E+00	5.74E-06	1.22E-03	0.00E+00	0.00E+00	1.22E-03	2.66E-03	0.00E+00	7.69E-03	0.00E+00	0.00E+00	1.22E-03	0.00E+00	0.00E+00	7.69E-03
3371	ALL	751988.42	4045060.7	NonCancerAcute	0.00E+00	5.60E-06	1.19E-03	0.00E+00	0.00E+00	1.19E-03	2.62E-03	0.00E+00	7.53E-03	0.00E+00	0.00E+00	1.19E-03	0.00E+00	0.00E+00	7.53E-03
3372	ALL	752088.42	4045060.7	NonCancerAcute	0.00E+00	5.56E-06	1.18E-03	0.00E+00	0.00E+00	1.19E-03	2.58E-03	0.00E+00	7.46E-03	0.00E+00	0.00E+00	1.18E-03	0.00E+00	0.00E+00	7.46E-03
3373	ALL	752188.42	4045060.7	NonCancerAcute	0.00E+00	5.73E-06	1.22E-03	0.00E+00	0.00E+00	1.22E-03	2.48E-03	0.00E+00	7.46E-03	0.00E+00	0.00E+00	1.22E-03	0.00E+00	0.00E+00	7.46E-03
3374	ALL	752288.42	4045060.7	NonCancerAcute	0.00E+00	5.74E-06	1.22E-03	0.00E+00	0.00E+00	1.22E-03	2.32E-03	0.00E+00	7.27E-03	0.00E+00	0.00E+00	1.22E-03	0.00E+00	0.00E+00	7.27E-03
3375	ALL	752388.42	4045060.7	NonCancerAcute	0.00E+00	5.67E-06	1.20E-03	0.00E+00	0.00E+00	1.21E-03	2.23E-03	0.00E+00	7.11E-03	0.00E+00	0.00E+00	1.20E-03	0.00E+00	0.00E+00	7.11E-03
3376	ALL	752488.42	4045060.7	NonCancerAcute	0.00E+00	5.55E-06	1.18E-03	0.00E+00	0.00E+00	1.18E-03	2.23E-03	0.00E+00	7.01E-03	0.00E+00	0.00E+00	1.18E-03	0.00E+00	0.00E+00	7.01E-03
3377	ALL	752588.42	4045060.7	NonCancerAcute	0.00E+00	5.41E-06	1.15E-03	0.00E+00	0.00E+00	1.15E-03	2.14E-03	0.00E+00	6.80E-03	0.00E+00	0.00E+00	1.15E-03	0.00E+00	0.00E+00	6.80E-03
3378	ALL	752688.42	4045060.7	NonCancerAcute	0.00E+00	5.40E-06	1.15E-03	0.00E+00	0.00E+00	1.15E-03	2.17E-03	0.00E+00	6.82E-03	0.00E+00	0.00E+00	1.15E-03	0.00E+00	0.00E+00	6.82E-03
3379	ALL	752788.42	4045060.7	NonCancerAcute	0.00E+00	5.35E-06	1.14E-03	0.00E+00	0.00E+00	1.14E-03	2.22E-03	0.00E+00	6.85E-03	0.00E+00	0.00E+00	1.14E-03	0.00E+00	0.00E+00	6.85E-03
3380	ALL	752888.42	4045060.7	NonCancerAcute	0.00E+00	5.35E-06	1.14E-03	0.00E+00	0.00E+00	1.14E-03	2.22E-03	0.00E+00	6.85E-03	0.00E+00	0.00E+00	1.14E-03	0.00E+00	0.00E+00	6.85E-03
3381	ALL	752988.42	4045060.7	NonCancerAcute	0.00E+00	5.37E-06	1.14E-03	0.00E+00	0.00E+00	1.14E-03	2.21E-03	0.00E+00	6.85E-03	0.00E+00	0.00E+00	1.14E-03	0.00E+00	0.00E+00	6.85E-03
3382	ALL	748088.42	4045160.7	NonCancerAcute	0.00E+00	7.26E-06	1.54E-03	0.00E+00	0.00E+00	1.55E-03	3.12E-03	0.00E+00	9.42E-03	0.00E+00	0.00E+00	1.54E-03	0.00E+00	0.00E+00	9.42E-03
3383	ALL	748188.42	4045160.7	NonCancerAcute	0.00E+00	7.25E-06	1.54E-03	0.00E+00	0.00E+00	1.55E-03	3.09E-03	0.00E+00	9.37E-03	0.00E+00	0.00E+00	1.54E-03	0.00E+00	0.00E+00	9.37E-03
3384	ALL	748288.42	4045160.7	NonCancerAcute	0.00E+00	6.96E-06	1.48E-03	0.00E+00	0.00E+00	1.48E-03	3.06E-03	0.00E+00	9.11E-03	0.00E+00	0.00E+00	1.48E-03	0.00E+00	0.00E+00	9.11E-03
3385	ALL	748388.42	4045160.7	NonCancerAcute	0.00E+00	7.24E-06	1.54E-03	0.00E+00	0.00E+00	1.54E-03	2.99E-03	0.00E+00	9.25E-03	0.00E+00	0.00E+00	1.54E-03	0.00E+00	0.00E+00	9.25E-03
3386	ALL	750188.42	4045160.7	NonCancerAcute	0.00E+00	6.69E-06	1.42E-03	0.00E+00	0.00E+00	1.43E-03	2.90E-03	0.00E+00	8.71E-03	0.00E+00	0.00E+00	1.42E-03	0.00E+00	0.00E+00	8.71E-03
3387	ALL	750288.42	4045160.7	NonCancerAcute	0.00E+00	6.63E-06	1.41E-03	0.00E+00	0.00E+00	1.41E-03	2.92E-03	0.00E+00	8.69E-03	0.00E+00	0.00E+00	1.41E-03	0.00E+00	0.00E+00	8.69E-03
3388	ALL	750388.42	4045160.7	NonCancerAcute	0.00E+00	6.52E-06	1.39E-03	0.00E+00	0.00E+00	1.39E-03	2.94E-03	0.00E+00	8.63E-03	0.00E+00	0.00E+00	1.39E-03	0.00E+00	0.00E+00	8.63E-03
3389	ALL	750488.42	4045160.7	NonCancerAcute	0.00E+00	6.13E-06	1.30E-03	0.00E+00	0.00E+00	1.31E-03	2.82E-03	0.00E+00	8.19E-03	0.00E+00	0.00E+00	1.30E-03	0.00E+00	0.00E+00	8.19E-03
3390	ALL	750588.42	4045160.7	NonCancerAcute	0.00E+00	6.26E-06	1.33E-03	0.00E+00	0.00E+00	1.34E-03	2.68E-03	0.00E+00	8.12E-03	0.00E+00	0.00E+00	1.33E-03	0.00E+00	0.00E+00	8.12E-03

3391	ALL	750688.42	4045160.7	NonCancerAcute	0.00E+00	6.34E-06	1.35E-03	0.00E+00	0.00E+00	1.35E-03	2.50E-03	0.00E+00	7.96E-03	0.00E+00	0.00E+00	1.35E-03	0.00E+00	0.00E+00	7.96E-03
3392	ALL	750788.42	4045160.7	NonCancerAcute	0.00E+00	6.31E-06	1.34E-03	0.00E+00	0.00E+00	1.35E-03	2.35E-03	0.00E+00	7.75E-03	0.00E+00	0.00E+00	1.34E-03	0.00E+00	0.00E+00	7.75E-03
3393	ALL	750888.42	4045160.7	NonCancerAcute	0.00E+00	6.08E-06	1.29E-03	0.00E+00	0.00E+00	1.30E-03	2.52E-03	0.00E+00	7.78E-03	0.00E+00	0.00E+00	1.29E-03	0.00E+00	0.00E+00	7.78E-03
3394	ALL	750988.42	4045160.7	NonCancerAcute	0.00E+00	6.22E-06	1.32E-03	0.00E+00	0.00E+00	1.33E-03	2.71E-03	0.00E+00	8.12E-03	0.00E+00	0.00E+00	1.32E-03	0.00E+00	0.00E+00	8.12E-03
3395	ALL	751088.42	4045160.7	NonCancerAcute	0.00E+00	6.19E-06	1.32E-03	0.00E+00	0.00E+00	1.32E-03	2.75E-03	0.00E+00	8.14E-03	0.00E+00	0.00E+00	1.32E-03	0.00E+00	0.00E+00	8.14E-03
3396	ALL	751188.42	4045160.7	NonCancerAcute	0.00E+00	6.02E-06	1.28E-03	0.00E+00	0.00E+00	1.28E-03	2.73E-03	0.00E+00	7.98E-03	0.00E+00	0.00E+00	1.28E-03	0.00E+00	0.00E+00	7.98E-03
3397	ALL	751288.42	4045160.7	NonCancerAcute	0.00E+00	6.17E-06	1.31E-03	0.00E+00	0.00E+00	1.32E-03	2.63E-03	0.00E+00	7.98E-03	0.00E+00	0.00E+00	1.31E-03	0.00E+00	0.00E+00	7.98E-03
3398	ALL	751388.42	4045160.7	NonCancerAcute	0.00E+00	6.14E-06	1.30E-03	0.00E+00	0.00E+00	1.31E-03	2.59E-03	0.00E+00	7.90E-03	0.00E+00	0.00E+00	1.30E-03	0.00E+00	0.00E+00	7.90E-03
3399	ALL	751488.42	4045160.7	NonCancerAcute	0.00E+00	5.96E-06	1.27E-03	0.00E+00	0.00E+00	1.27E-03	2.56E-03	0.00E+00	7.74E-03	0.00E+00	0.00E+00	1.27E-03	0.00E+00	0.00E+00	7.74E-03
3400	ALL	751588.42	4045160.7	NonCancerAcute	0.00E+00	5.90E-06	1.25E-03	0.00E+00	0.00E+00	1.26E-03	2.65E-03	0.00E+00	7.80E-03	0.00E+00	0.00E+00	1.25E-03	0.00E+00	0.00E+00	7.80E-03
3401	ALL	751688.42	4045160.7	NonCancerAcute	0.00E+00	5.98E-06	1.27E-03	0.00E+00	0.00E+00	1.28E-03	2.76E-03	0.00E+00	8.00E-03	0.00E+00	0.00E+00	1.27E-03	0.00E+00	0.00E+00	8.00E-03
3402	ALL	751788.42	4045160.7	NonCancerAcute	0.00E+00	5.88E-06	1.25E-03	0.00E+00	0.00E+00	1.25E-03	2.76E-03	0.00E+00	7.93E-03	0.00E+00	0.00E+00	1.25E-03	0.00E+00	0.00E+00	7.93E-03
3403	ALL	751888.42	4045160.7	NonCancerAcute	0.00E+00	5.76E-06	1.22E-03	0.00E+00	0.00E+00	1.23E-03	2.68E-03	0.00E+00	7.73E-03	0.00E+00	0.00E+00	1.22E-03	0.00E+00	0.00E+00	7.73E-03
3404	ALL	751988.42	4045160.7	NonCancerAcute	0.00E+00	5.61E-06	1.19E-03	0.00E+00	0.00E+00	1.20E-03	2.57E-03	0.00E+00	7.48E-03	0.00E+00	0.00E+00	1.19E-03	0.00E+00	0.00E+00	7.48E-03
3405	ALL	752088.42	4045160.7	NonCancerAcute	0.00E+00	5.53E-06	1.18E-03	0.00E+00	0.00E+00	1.18E-03	2.57E-03	0.00E+00	7.41E-03	0.00E+00	0.00E+00	1.18E-03	0.00E+00	0.00E+00	7.41E-03
3406	ALL	752188.42	4045160.7	NonCancerAcute	0.00E+00	5.57E-06	1.18E-03	0.00E+00	0.00E+00	1.19E-03	2.50E-03	0.00E+00	7.36E-03	0.00E+00	0.00E+00	1.18E-03	0.00E+00	0.00E+00	7.36E-03
3407	ALL	752288.42	4045160.7	NonCancerAcute	0.00E+00	5.68E-06	1.21E-03	0.00E+00	0.00E+00	1.21E-03	2.37E-03	0.00E+00	7.29E-03	0.00E+00	0.00E+00	1.21E-03	0.00E+00	0.00E+00	7.29E-03
3408	ALL	752388.42	4045160.7	NonCancerAcute	0.00E+00	5.65E-06	1.20E-03	0.00E+00	0.00E+00	1.21E-03	2.19E-03	0.00E+00	7.04E-03	0.00E+00	0.00E+00	1.20E-03	0.00E+00	0.00E+00	7.04E-03
3409	ALL	752488.42	4045160.7	NonCancerAcute	0.00E+00	5.57E-06	1.18E-03	0.00E+00	0.00E+00	1.19E-03	2.20E-03	0.00E+00	6.99E-03	0.00E+00	0.00E+00	1.18E-03	0.00E+00	0.00E+00	6.99E-03
3410	ALL	752588.42	4045160.7	NonCancerAcute	0.00E+00	5.44E-06	1.16E-03	0.00E+00	0.00E+00	1.16E-03	2.16E-03	0.00E+00	6.84E-03	0.00E+00	0.00E+00	1.16E-03	0.00E+00	0.00E+00	6.84E-03
3411	ALL	752688.42	4045160.7	NonCancerAcute	0.00E+00	5.37E-06	1.14E-03	0.00E+00	0.00E+00	1.14E-03	2.07E-03	0.00E+00	6.68E-03	0.00E+00	0.00E+00	1.14E-03	0.00E+00	0.00E+00	6.68E-03
3412	ALL	752788.42	4045160.7	NonCancerAcute	0.00E+00	5.35E-06	1.14E-03	0.00E+00	0.00E+00	1.14E-03	2.15E-03	0.00E+00	6.76E-03	0.00E+00	0.00E+00	1.14E-03	0.00E+00	0.00E+00	6.76E-03
3413	ALL	752888.42	4045160.7	NonCancerAcute	0.00E+00	5.30E-06	1.13E-03	0.00E+00	0.00E+00	1.13E-03	2.18E-03	0.00E+00	6.77E-03	0.00E+00	0.00E+00	1.13E-03	0.00E+00	0.00E+00	6.77E-03
3414	ALL	752988.42	4045160.7	NonCancerAcute	0.00E+00	5.28E-06	1.12E-03	0.00E+00	0.00E+00	1.13E-03	2.18E-03	0.00E+00	6.75E-03	0.00E+00	0.00E+00	1.12E-03	0.00E+00	0.00E+00	6.75E-03
3415	ALL	748088.42	4045260.7	NonCancerAcute	0.00E+00	7.20E-06	1.53E-03	0.00E+00	0.00E+00	1.53E-03	3.05E-03	0.00E+00	9.28E-03	0.00E+00	0.00E+00	1.53E-03	0.00E+00	0.00E+00	9.28E-03
3416	ALL	748188.42	4045260.7	NonCancerAcute	0.00E+00	7.18E-06	1.52E-03	0.00E+00	0.00E+00	1.53E-03	3.05E-03	0.00E+00	9.28E-03	0.00E+00	0.00E+00	1.52E-03	0.00E+00	0.00E+00	9.28E-03
3417	ALL	748288.42	4045260.7	NonCancerAcute	0.00E+00	6.88E-06	1.46E-03	0.00E+00	0.00E+00	1.47E-03	3.02E-03	0.00E+00	9.01E-03	0.00E+00	0.00E+00	1.46E-03	0.00E+00	0.00E+00	9.01E-03
3418	ALL	748388.42	4045260.7	NonCancerAcute	0.00E+00	7.15E-06	1.52E-03	0.00E+00	0.00E+00	1.53E-03	2.94E-03	0.00E+00	9.12E-03	0.00E+00	0.00E+00	1.52E-03	0.00E+00	0.00E+00	9.12E-03
3419	ALL	750188.42	4045260.7	NonCancerAcute	0.00E+00	6.61E-06	1.40E-03	0.00E+00	0.00E+00	1.41E-03	2.82E-03	0.00E+00	8.55E-03	0.00E+00	0.00E+00	1.40E-03	0.00E+00	0.00E+00	8.55E-03
3420	ALL	750288.42	4045260.7	NonCancerAcute	0.00E+00	6.58E-06	1.40E-03	0.00E+00	0.00E+00	1.40E-03	2.84E-03	0.00E+00	8.56E-03	0.00E+00	0.00E+00	1.40E-03	0.00E+00	0.00E+00	8.56E-03
3421	ALL	750388.42	4045260.7	NonCancerAcute	0.00E+00	6.51E-06	1.38E-03	0.00E+00	0.00E+00	1.39E-03	2.88E-03	0.00E+00	8.56E-03	0.00E+00	0.00E+00	1.38E-03	0.00E+00	0.00E+00	8.56E-03
3422	ALL	750488.42	4045260.7	NonCancerAcute	0.00E+00	6.23E-06	1.32E-03	0.00E+00	0.00E+00	1.33E-03	2.80E-03	0.00E+00	8.24E-03	0.00E+00	0.00E+00	1.32E-03	0.00E+00	0.00E+00	8.24E-03
3423	ALL	750588.42	4045260.7	NonCancerAcute	0.00E+00	6.09E-06	1.29E-03	0.00E+00	0.00E+00	1.30E-03	2.65E-03	0.00E+00	7.94E-03	0.00E+00	0.00E+00	1.29E-03	0.00E+00	0.00E+00	7.94E-03
3424	ALL	750688.42	4045260.7	NonCancerAcute	0.00E+00	6.25E-06	1.33E-03	0.00E+00	0.00E+00	1.33E-03	2.51E-03	0.00E+00	7.89E-03	0.00E+00	0.00E+00	1.33E-03	0.00E+00	0.00E+00	7.89E-03
3425	ALL	750788.42	4045260.7	NonCancerAcute	0.00E+00	6.29E-06	1.34E-03	0.00E+00	0.00E+00	1.34E-03	2.32E-03	0.00E+00	7.69E-03	0.00E+00	0.00E+00	1.34E-03	0.00E+00	0.00E+00	7.69E-03
3426	ALL	750888.42	4045260.7	NonCancerAcute	0.00E+00	6.13E-06	1.30E-03	0.00E+00	0.00E+00	1.31E-03	2.42E-03	0.00E+00	7.70E-03	0.00E+00	0.00E+00	1.30E-03	0.00E+00	0.00E+00	7.70E-03
3427	ALL	750988.42	4045260.7	NonCancerAcute	0.00E+00	6.12E-06	1.30E-03	0.00E+00	0.00E+00	1.31E-03	2.62E-03	0.00E+00	7.93E-03	0.00E+00	0.00E+00	1.30E-03	0.00E+00	0.00E+00	7.93E-03
3428	ALL	751088.42	4045260.7	NonCancerAcute	0.00E+00	6.16E-06	1.31E-03	0.00E+00	0.00E+00	1.32E-03	2.69E-03	0.00E+00	8.05E-03	0.00E+00	0.00E+00	1.31E-03	0.00E+00	0.00E+00	8.05E-03
3429	ALL	751188.42	4045260.7	NonCancerAcute	0.00E+00	6.02E-06	1.28E-03	0.00E+00	0.00E+00	1.28E-03	2.69E-03	0.00E+00	7.95E-03	0.00E+00	0.00E+00	1.28E-03	0.00E+00	0.00E+00	7.95E-03
3430	ALL	751288.42	4045260.7	NonCancerAcute	0.00E+00	6.04E-06	1.28E-03	0.00E+00	0.00E+00	1.29E-03	2.62E-03	0.00E+00	7.87E-03	0.00E+00	0.00E+00	1.28E-03	0.00E+00	0.00E+00	7.87E-03
3431	ALL	751388.42	4045260.7	NonCancerAcute	0.00E+00	6.11E-06	1.30E-03	0.00E+00	0.00E+00	1.30E-03	2.57E-03	0.00E+00	7.86E-03	0.00E+00	0.00E+00	1.30E-03	0.00E+00	0.00E+00	7.86E-03
3432	ALL	751488.42	4045260.7	NonCancerAcute	0.00E+00	6.00E-06	1.27E-03	0.00E+00	0.00E+00	1.28E-03	2.52E-03	0.00E+00	7.71E-03	0.00E+00	0.00E+00	1.27E-03	0.00E+00	0.00E+00	7.71E-03
3433	ALL	751588.42	4045260.7	NonCancerAcute	0.00E+00	5.78E-06	1.23E-03	0.00E+00	0.00E+00	1.23E-03	2.53E-03	0.00E+00	7.56E-03	0.00E+00	0.00E+00	1.23E-03	0.00E+00	0.00E+00	7.56E-03
3434	ALL	751688.42	4045260.7	NonCancerAcute	0.00E+00	5.87E-06	1.25E-03	0.00E+00	0.00E+00	1.25E-03	2.67E-03	0.00E+00	7.81E-03	0.00E+00	0.00E+00	1.25E-03	0.00E+00	0.00E+00	7.81E-03
3435	ALL	751788.42	4045260.7	NonCancerAcute	0.00E+00	5.88E-06	1.25E-03	0.00E+00	0.00E+00	1.26E-03	2.72E-03	0.00E+00	7.88E-03	0.00E+00	0.00E+00	1.25E-03	0.00E+00	0.00E+00	7.88E-03
3436	ALL	751888.42	4045260.7	NonCancerAcute	0.00E+00	5.78E-06	1.23E-03	0.00E+00	0.00E+00	1.23E-03	2.68E-03	0.00E+00	7.74E-03	0.00E+00	0.00E+00	1.23E-03	0.00E+00	0.00E+00	7.74E-03
3437	ALL	751988.42	4045260.7	NonCancerAcute	0.00E+00	5.63E-06	1.20E-03	0.00E+00	0.00E+00	1.20E-03	2.56E-03	0.00E+00	7.48E-03	0.00E+00	0.00E+00	1.20E-03	0.00E+00	0.00E+00	7.48E-03
3438	ALL	752088.42	4045260.7	NonCancerAcute	0.00E+00	5.52E-06	1.17E-03	0.00E+00	0.00E+00	1.18E-03	2.53E-03	0.00E+00	7.36E-03	0.00E+00	0.00E+00	1.17E-03	0.00E+00	0.00E+00	7.36E-03
3439	ALL	752188.42	4045260.7	NonCancerAcute	0.00E+00	5.48E-06	1.16E-03	0.00E+00	0.00E+00	1.17E-03	2.50E-03	0.00E+00	7.28E-03	0.00E+00	0.00E+00	1.16E-03	0.00E+00	0.00E+00	7.28E-03
3440	ALL	752288.42	4045260.7	NonCancerAcute	0.00E+00	5.56E-06	1.18E-03	0.00E+00	0.00E+00	1.19E-03	2.40E-03	0.00E+00	7.23E-03	0.00E+00	0.00E+00	1.18E-03	0.00E+00	0.00E+00	7.23E-03
3441	ALL	752388.42	4045260.7	NonCancerAcute	0.00E+00	5.62E-06	1.19E-03	0.00E+00	0.00E+00	1.20E-03	2.25E-03	0.00E+00	7.09E-03	0.00E+00	0.00E+00	1.19E-03	0.00E+00	0.00E+00	7.09E-03
3442	ALL	752488.42	4045260.7	NonCancerAcute	0.00E+00	5.56E-06	1.18E-03	0.00E+00	0.00E+00	1.19E-03	2.14E-03	0.00E+00	6.91E-03	0.00E+00	0.00E+00	1.18E-03	0.00E+00	0.00E+00	6.91E-03
3443	ALL	752588.42	4045260.7	NonCancerAcute	0.00E+00	5.48E-06	1.16E-03	0.00E+00	0.00E+00	1.17E-03	2.15E-03	0.00E+00	6.86E-03	0.00E+00	0.00E+00	1.16E-03	0.00E+00	0.00E+00	6.86E-03

3444	ALL	752688.42	4045260.7	NonCancerAcute	0.00E+00	5.33E-06	1.13E-03	0.00E+00	0.00E+00	1.14E-03	2.08E-03	0.00E+00	6.66E-03	0.00E+00	0.00E+00	1.13E-03	0.00E+00	0.00E+00	6.66E-03
3445	ALL	752788.42	4045260.7	NonCancerAcute	0.00E+00	5.34E-06	1.13E-03	0.00E+00	0.00E+00	1.14E-03	2.07E-03	0.00E+00	6.65E-03	0.00E+00	0.00E+00	1.13E-03	0.00E+00	0.00E+00	6.65E-03
3446	ALL	752888.42	4045260.7	NonCancerAcute	0.00E+00	5.30E-06	1.13E-03	0.00E+00	0.00E+00	1.13E-03	2.13E-03	0.00E+00	6.70E-03	0.00E+00	0.00E+00	1.13E-03	0.00E+00	0.00E+00	6.70E-03
3447	ALL	752988.42	4045260.7	NonCancerAcute	0.00E+00	5.25E-06	1.11E-03	0.00E+00	0.00E+00	1.12E-03	2.15E-03	0.00E+00	6.68E-03	0.00E+00	0.00E+00	1.11E-03	0.00E+00	0.00E+00	6.68E-03
3448	ALL	748088.42	4045360.7	NonCancerAcute	0.00E+00	7.11E-06	1.51E-03	0.00E+00	0.00E+00	1.52E-03	2.97E-03	0.00E+00	9.13E-03	0.00E+00	0.00E+00	1.51E-03	0.00E+00	0.00E+00	9.13E-03
3449	ALL	748188.42	4045360.7	NonCancerAcute	0.00E+00	7.08E-06	1.50E-03	0.00E+00	0.00E+00	1.51E-03	3.00E-03	0.00E+00	9.13E-03	0.00E+00	0.00E+00	1.50E-03	0.00E+00	0.00E+00	9.13E-03
3450	ALL	748288.42	4045360.7	NonCancerAcute	0.00E+00	6.79E-06	1.44E-03	0.00E+00	0.00E+00	1.45E-03	2.98E-03	0.00E+00	8.89E-03	0.00E+00	0.00E+00	1.44E-03	0.00E+00	0.00E+00	8.89E-03
3451	ALL	748388.42	4045360.7	NonCancerAcute	0.00E+00	7.04E-06	1.50E-03	0.00E+00	0.00E+00	1.50E-03	2.90E-03	0.00E+00	8.98E-03	0.00E+00	0.00E+00	1.50E-03	0.00E+00	0.00E+00	8.98E-03
3452	ALL	750188.42	4045360.7	NonCancerAcute	0.00E+00	6.52E-06	1.38E-03	0.00E+00	0.00E+00	1.39E-03	2.74E-03	0.00E+00	8.39E-03	0.00E+00	0.00E+00	1.38E-03	0.00E+00	0.00E+00	8.39E-03
3453	ALL	750288.42	4045360.7	NonCancerAcute	0.00E+00	6.57E-06	1.40E-03	0.00E+00	0.00E+00	1.40E-03	2.76E-03	0.00E+00	8.45E-03	0.00E+00	0.00E+00	1.40E-03	0.00E+00	0.00E+00	8.45E-03
3454	ALL	750388.42	4045360.7	NonCancerAcute	0.00E+00	6.50E-06	1.38E-03	0.00E+00	0.00E+00	1.39E-03	2.82E-03	0.00E+00	8.47E-03	0.00E+00	0.00E+00	1.38E-03	0.00E+00	0.00E+00	8.47E-03
3455	ALL	750488.42	4045360.7	NonCancerAcute	0.00E+00	6.32E-06	1.34E-03	0.00E+00	0.00E+00	1.35E-03	2.77E-03	0.00E+00	8.27E-03	0.00E+00	0.00E+00	1.34E-03	0.00E+00	0.00E+00	8.27E-03
3456	ALL	748088.42	4045460.7	NonCancerAcute	0.00E+00	7.02E-06	1.49E-03	0.00E+00	0.00E+00	1.50E-03	2.93E-03	0.00E+00	9.00E-03	0.00E+00	0.00E+00	1.49E-03	0.00E+00	0.00E+00	9.00E-03
3457	ALL	748188.42	4045460.7	NonCancerAcute	0.00E+00	6.96E-06	1.48E-03	0.00E+00	0.00E+00	1.48E-03	2.95E-03	0.00E+00	8.98E-03	0.00E+00	0.00E+00	1.48E-03	0.00E+00	0.00E+00	8.98E-03
3458	ALL	748288.42	4045460.7	NonCancerAcute	0.00E+00	6.71E-06	1.42E-03	0.00E+00	0.00E+00	1.43E-03	2.92E-03	0.00E+00	8.75E-03	0.00E+00	0.00E+00	1.42E-03	0.00E+00	0.00E+00	8.75E-03
3459	ALL	748388.42	4045460.7	NonCancerAcute	0.00E+00	6.94E-06	1.47E-03	0.00E+00	0.00E+00	1.48E-03	2.87E-03	0.00E+00	8.87E-03	0.00E+00	0.00E+00	1.47E-03	0.00E+00	0.00E+00	8.87E-03
3460	ALL	750188.42	4045460.7	NonCancerAcute	0.00E+00	6.42E-06	1.36E-03	0.00E+00	0.00E+00	1.37E-03	2.68E-03	0.00E+00	8.23E-03	0.00E+00	0.00E+00	1.36E-03	0.00E+00	0.00E+00	8.23E-03
3461	ALL	750288.42	4045460.7	NonCancerAcute	0.00E+00	6.52E-06	1.38E-03	0.00E+00	0.00E+00	1.39E-03	2.69E-03	0.00E+00	8.33E-03	0.00E+00	0.00E+00	1.38E-03	0.00E+00	0.00E+00	8.33E-03
3462	ALL	750388.42	4045460.7	NonCancerAcute	0.00E+00	6.47E-06	1.37E-03	0.00E+00	0.00E+00	1.38E-03	2.76E-03	0.00E+00	8.37E-03	0.00E+00	0.00E+00	1.37E-03	0.00E+00	0.00E+00	8.37E-03
3463	ALL	750488.42	4045460.7	NonCancerAcute	0.00E+00	6.37E-06	1.35E-03	0.00E+00	0.00E+00	1.36E-03	2.73E-03	0.00E+00	8.26E-03	0.00E+00	0.00E+00	1.35E-03	0.00E+00	0.00E+00	8.26E-03
3464	ALL	748088.42	4045560.7	NonCancerAcute	0.00E+00	6.97E-06	1.48E-03	0.00E+00	0.00E+00	1.49E-03	2.87E-03	0.00E+00	8.90E-03	0.00E+00	0.00E+00	1.48E-03	0.00E+00	0.00E+00	8.90E-03
3465	ALL	748188.42	4045560.7	NonCancerAcute	0.00E+00	6.86E-06	1.46E-03	0.00E+00	0.00E+00	1.46E-03	2.90E-03	0.00E+00	8.84E-03	0.00E+00	0.00E+00	1.46E-03	0.00E+00	0.00E+00	8.84E-03
3466	ALL	748288.42	4045560.7	NonCancerAcute	0.00E+00	6.61E-06	1.40E-03	0.00E+00	0.00E+00	1.41E-03	2.85E-03	0.00E+00	8.60E-03	0.00E+00	0.00E+00	1.40E-03	0.00E+00	0.00E+00	8.60E-03
3467	ALL	748388.42	4045560.7	NonCancerAcute	0.00E+00	6.84E-06	1.45E-03	0.00E+00	0.00E+00	1.46E-03	2.83E-03	0.00E+00	8.74E-03	0.00E+00	0.00E+00	1.45E-03	0.00E+00	0.00E+00	8.74E-03
3468	ALL	750188.42	4045560.7	NonCancerAcute	0.00E+00	6.31E-06	1.34E-03	0.00E+00	0.00E+00	1.35E-03	2.65E-03	0.00E+00	8.11E-03	0.00E+00	0.00E+00	1.34E-03	0.00E+00	0.00E+00	8.11E-03
3469	ALL	750288.42	4045560.7	NonCancerAcute	0.00E+00	6.42E-06	1.36E-03	0.00E+00	0.00E+00	1.37E-03	2.64E-03	0.00E+00	8.19E-03	0.00E+00	0.00E+00	1.36E-03	0.00E+00	0.00E+00	8.19E-03
3470	ALL	750388.42	4045560.7	NonCancerAcute	0.00E+00	6.43E-06	1.37E-03	0.00E+00	0.00E+00	1.37E-03	2.70E-03	0.00E+00	8.27E-03	0.00E+00	0.00E+00	1.37E-03	0.00E+00	0.00E+00	8.27E-03
3471	ALL	750488.42	4045560.7	NonCancerAcute	0.00E+00	6.37E-06	1.35E-03	0.00E+00	0.00E+00	1.36E-03	2.68E-03	0.00E+00	8.20E-03	0.00E+00	0.00E+00	1.35E-03	0.00E+00	0.00E+00	8.20E-03
3472	ALL	748088.42	4045660.7	NonCancerAcute	0.00E+00	6.94E-06	1.47E-03	0.00E+00	0.00E+00	1.48E-03	2.83E-03	0.00E+00	8.82E-03	0.00E+00	0.00E+00	1.47E-03	0.00E+00	0.00E+00	8.82E-03
3473	ALL	748188.42	4045660.7	NonCancerAcute	0.00E+00	6.81E-06	1.45E-03	0.00E+00	0.00E+00	1.45E-03	2.84E-03	0.00E+00	8.74E-03	0.00E+00	0.00E+00	1.45E-03	0.00E+00	0.00E+00	8.74E-03
3474	ALL	748288.42	4045660.7	NonCancerAcute	0.00E+00	6.53E-06	1.39E-03	0.00E+00	0.00E+00	1.39E-03	2.78E-03	0.00E+00	8.44E-03	0.00E+00	0.00E+00	1.39E-03	0.00E+00	0.00E+00	8.44E-03
3475	ALL	748388.42	4045660.7	NonCancerAcute	0.00E+00	6.73E-06	1.43E-03	0.00E+00	0.00E+00	1.43E-03	2.78E-03	0.00E+00	8.60E-03	0.00E+00	0.00E+00	1.43E-03	0.00E+00	0.00E+00	8.60E-03
3476	ALL	748488.42	4045660.7	NonCancerAcute	0.00E+00	6.80E-06	1.44E-03	0.00E+00	0.00E+00	1.45E-03	2.76E-03	0.00E+00	8.63E-03	0.00E+00	0.00E+00	1.44E-03	0.00E+00	0.00E+00	8.63E-03
3477	ALL	748588.42	4045660.7	NonCancerAcute	0.00E+00	6.69E-06	1.42E-03	0.00E+00	0.00E+00	1.43E-03	2.71E-03	0.00E+00	8.48E-03	0.00E+00	0.00E+00	1.42E-03	0.00E+00	0.00E+00	8.48E-03
3478	ALL	748688.42	4045660.7	NonCancerAcute	0.00E+00	6.38E-06	1.35E-03	0.00E+00	0.00E+00	1.36E-03	2.68E-03	0.00E+00	8.21E-03	0.00E+00	0.00E+00	1.35E-03	0.00E+00	0.00E+00	8.21E-03
3479	ALL	748788.42	4045660.7	NonCancerAcute	0.00E+00	6.64E-06	1.41E-03	0.00E+00	0.00E+00	1.42E-03	2.61E-03	0.00E+00	8.32E-03	0.00E+00	0.00E+00	1.41E-03	0.00E+00	0.00E+00	8.32E-03
3480	ALL	748888.42	4045660.7	NonCancerAcute	0.00E+00	6.73E-06	1.43E-03	0.00E+00	0.00E+00	1.44E-03	2.59E-03	0.00E+00	8.37E-03	0.00E+00	0.00E+00	1.43E-03	0.00E+00	0.00E+00	8.37E-03
3481	ALL	748988.42	4045660.7	NonCancerAcute	0.00E+00	6.48E-06	1.38E-03	0.00E+00	0.00E+00	1.38E-03	2.60E-03	0.00E+00	8.18E-03	0.00E+00	0.00E+00	1.38E-03	0.00E+00	0.00E+00	8.18E-03
3482	ALL	749088.42	4045660.7	NonCancerAcute	0.00E+00	6.40E-06	1.36E-03	0.00E+00	0.00E+00	1.37E-03	2.60E-03	0.00E+00	8.12E-03	0.00E+00	0.00E+00	1.36E-03	0.00E+00	0.00E+00	8.12E-03
3483	ALL	749188.42	4045660.7	NonCancerAcute	0.00E+00	6.12E-06	1.30E-03	0.00E+00	0.00E+00	1.31E-03	2.60E-03	0.00E+00	7.91E-03	0.00E+00	0.00E+00	1.30E-03	0.00E+00	0.00E+00	7.91E-03
3484	ALL	749288.42	4045660.7	NonCancerAcute	0.00E+00	6.20E-06	1.32E-03	0.00E+00	0.00E+00	1.32E-03	2.68E-03	0.00E+00	8.07E-03	0.00E+00	0.00E+00	1.32E-03	0.00E+00	0.00E+00	8.07E-03
3485	ALL	749388.42	4045660.7	NonCancerAcute	0.00E+00	6.29E-06	1.34E-03	0.00E+00	0.00E+00	1.34E-03	2.61E-03	0.00E+00	8.06E-03	0.00E+00	0.00E+00	1.34E-03	0.00E+00	0.00E+00	8.06E-03
3486	ALL	749488.42	4045660.7	NonCancerAcute	0.00E+00	6.33E-06	1.34E-03	0.00E+00	0.00E+00	1.35E-03	2.55E-03	0.00E+00	8.01E-03	0.00E+00	0.00E+00	1.34E-03	0.00E+00	0.00E+00	8.01E-03
3487	ALL	749588.42	4045660.7	NonCancerAcute	0.00E+00	6.16E-06	1.31E-03	0.00E+00	0.00E+00	1.31E-03	2.66E-03	0.00E+00	8.02E-03	0.00E+00	0.00E+00	1.31E-03	0.00E+00	0.00E+00	8.02E-03
3488	ALL	749688.42	4045660.7	NonCancerAcute	0.00E+00	5.98E-06	1.27E-03	0.00E+00	0.00E+00	1.28E-03	2.70E-03	0.00E+00	7.93E-03	0.00E+00	0.00E+00	1.27E-03	0.00E+00	0.00E+00	7.93E-03
3489	ALL	749788.42	4045660.7	NonCancerAcute	0.00E+00	6.10E-06	1.29E-03	0.00E+00	0.00E+00	1.30E-03	2.67E-03	0.00E+00	7.98E-03	0.00E+00	0.00E+00	1.29E-03	0.00E+00	0.00E+00	7.98E-03
3490	ALL	749888.42	4045660.7	NonCancerAcute	0.00E+00	6.12E-06	1.30E-03	0.00E+00	0.00E+00	1.31E-03	2.64E-03	0.00E+00	7.96E-03	0.00E+00	0.00E+00	1.30E-03	0.00E+00	0.00E+00	7.96E-03
3491	ALL	749988.42	4045660.7	NonCancerAcute	0.00E+00	6.20E-06	1.32E-03	0.00E+00	0.00E+00	1.32E-03	2.65E-03	0.00E+00	8.02E-03	0.00E+00	0.00E+00	1.32E-03	0.00E+00	0.00E+00	8.02E-03
3492	ALL	750088.42	4045660.7	NonCancerAcute	0.00E+00	6.20E-06	1.32E-03	0.00E+00	0.00E+00	1.32E-03	2.62E-03	0.00E+00	7.99E-03	0.00E+00	0.00E+00	1.32E-03	0.00E+00	0.00E+00	7.99E-03
3493	ALL	750188.42	4045660.7	NonCancerAcute	0.00E+00	6.21E-06	1.32E-03	0.00E+00	0.00E+00	1.33E-03	2.62E-03	0.00E+00	8.00E-03	0.00E+00	0.00E+00	1.32E-03	0.00E+00	0.00E+00	8.00E-03
3494	ALL	750288.42	4045660.7	NonCancerAcute	0.00E+00	6.34E-06	1.35E-03	0.00E+00	0.00E+00	1.35E-03	2.59E-03	0.00E+00	8.07E-03	0.00E+00	0.00E+00	1.35E-03	0.00E+00	0.00E+00	8.07E-03
3495	ALL	750388.42	4045660.7	NonCancerAcute	0.00E+00	6.40E-06	1.36E-03	0.00E+00	0.00E+00	1.37E-03	2.65E-03	0.00E+00	8.18E-03	0.00E+00	0.00E+00	1.36E-03	0.00E+00	0.00E+00	8.18E-03
3496	ALL	750488.42	4045660.7	NonCancerAcute	0.00E+00	6.33E-06	1.34E-03	0.00E+00	0.00E+00	1.35E-03	2.65E-03	0.00E+00	8.13E-03	0.00E+00	0.00E+00	1.34E-03	0.00E+00	0.00E+00	8.13E-03

3497	ALL	748088.42	4045760.7	NonCancerAcute	0.00E+00	6.90E-06	1.47E-03	0.00E+00	0.00E+00	1.47E-03	2.78E-03	0.00E+00	8.73E-03	0.00E+00	0.00E+00	1.47E-03	0.00E+00	0.00E+00	8.73E-03
3498	ALL	748188.42	4045760.7	NonCancerAcute	0.00E+00	6.76E-06	1.43E-03	0.00E+00	0.00E+00	1.44E-03	2.80E-03	0.00E+00	8.64E-03	0.00E+00	0.00E+00	1.43E-03	0.00E+00	0.00E+00	8.64E-03
3499	ALL	748288.42	4045760.7	NonCancerAcute	0.00E+00	6.50E-06	1.38E-03	0.00E+00	0.00E+00	1.39E-03	2.73E-03	0.00E+00	8.36E-03	0.00E+00	0.00E+00	1.38E-03	0.00E+00	0.00E+00	8.36E-03
3500	ALL	748388.42	4045760.7	NonCancerAcute	0.00E+00	6.66E-06	1.41E-03	0.00E+00	0.00E+00	1.42E-03	2.73E-03	0.00E+00	8.48E-03	0.00E+00	0.00E+00	1.41E-03	0.00E+00	0.00E+00	8.48E-03
3501	ALL	748488.42	4045760.7	NonCancerAcute	0.00E+00	6.69E-06	1.42E-03	0.00E+00	0.00E+00	1.43E-03	2.70E-03	0.00E+00	8.47E-03	0.00E+00	0.00E+00	1.42E-03	0.00E+00	0.00E+00	8.47E-03
3502	ALL	748588.42	4045760.7	NonCancerAcute	0.00E+00	6.59E-06	1.40E-03	0.00E+00	0.00E+00	1.41E-03	2.66E-03	0.00E+00	8.35E-03	0.00E+00	0.00E+00	1.40E-03	0.00E+00	0.00E+00	8.35E-03
3503	ALL	748688.42	4045760.7	NonCancerAcute	0.00E+00	6.31E-06	1.34E-03	0.00E+00	0.00E+00	1.35E-03	2.64E-03	0.00E+00	8.10E-03	0.00E+00	0.00E+00	1.34E-03	0.00E+00	0.00E+00	8.10E-03
3504	ALL	748788.42	4045760.7	NonCancerAcute	0.00E+00	6.53E-06	1.39E-03	0.00E+00	0.00E+00	1.39E-03	2.55E-03	0.00E+00	8.16E-03	0.00E+00	0.00E+00	1.39E-03	0.00E+00	0.00E+00	8.16E-03
3505	ALL	748888.42	4045760.7	NonCancerAcute	0.00E+00	6.66E-06	1.41E-03	0.00E+00	0.00E+00	1.42E-03	2.54E-03	0.00E+00	8.25E-03	0.00E+00	0.00E+00	1.41E-03	0.00E+00	0.00E+00	8.25E-03
3506	ALL	748988.42	4045760.7	NonCancerAcute	0.00E+00	6.42E-06	1.36E-03	0.00E+00	0.00E+00	1.37E-03	2.55E-03	0.00E+00	8.07E-03	0.00E+00	0.00E+00	1.36E-03	0.00E+00	0.00E+00	8.07E-03
3507	ALL	749088.42	4045760.7	NonCancerAcute	0.00E+00	6.34E-06	1.35E-03	0.00E+00	0.00E+00	1.35E-03	2.56E-03	0.00E+00	8.03E-03	0.00E+00	0.00E+00	1.35E-03	0.00E+00	0.00E+00	8.03E-03
3508	ALL	749188.42	4045760.7	NonCancerAcute	0.00E+00	6.10E-06	1.30E-03	0.00E+00	0.00E+00	1.30E-03	2.56E-03	0.00E+00	7.84E-03	0.00E+00	0.00E+00	1.30E-03	0.00E+00	0.00E+00	7.84E-03
3509	ALL	749288.42	4045760.7	NonCancerAcute	0.00E+00	6.08E-06	1.29E-03	0.00E+00	0.00E+00	1.30E-03	2.63E-03	0.00E+00	7.92E-03	0.00E+00	0.00E+00	1.29E-03	0.00E+00	0.00E+00	7.92E-03
3510	ALL	749388.42	4045760.7	NonCancerAcute	0.00E+00	6.23E-06	1.32E-03	0.00E+00	0.00E+00	1.33E-03	2.57E-03	0.00E+00	7.96E-03	0.00E+00	0.00E+00	1.32E-03	0.00E+00	0.00E+00	7.96E-03
3511	ALL	749488.42	4045760.7	NonCancerAcute	0.00E+00	6.27E-06	1.33E-03	0.00E+00	0.00E+00	1.34E-03	2.52E-03	0.00E+00	7.92E-03	0.00E+00	0.00E+00	1.33E-03	0.00E+00	0.00E+00	7.92E-03
3512	ALL	749588.42	4045760.7	NonCancerAcute	0.00E+00	6.14E-06	1.30E-03	0.00E+00	0.00E+00	1.31E-03	2.63E-03	0.00E+00	7.96E-03	0.00E+00	0.00E+00	1.30E-03	0.00E+00	0.00E+00	7.96E-03
3513	ALL	749688.42	4045760.7	NonCancerAcute	0.00E+00	5.94E-06	1.26E-03	0.00E+00	0.00E+00	1.27E-03	2.68E-03	0.00E+00	7.87E-03	0.00E+00	0.00E+00	1.26E-03	0.00E+00	0.00E+00	7.87E-03
3514	ALL	749788.42	4045760.7	NonCancerAcute	0.00E+00	6.02E-06	1.28E-03	0.00E+00	0.00E+00	1.28E-03	2.65E-03	0.00E+00	7.90E-03	0.00E+00	0.00E+00	1.28E-03	0.00E+00	0.00E+00	7.90E-03
3515	ALL	749888.42	4045760.7	NonCancerAcute	0.00E+00	6.07E-06	1.29E-03	0.00E+00	0.00E+00	1.30E-03	2.61E-03	0.00E+00	7.89E-03	0.00E+00	0.00E+00	1.29E-03	0.00E+00	0.00E+00	7.89E-03
3516	ALL	749988.42	4045760.7	NonCancerAcute	0.00E+00	6.16E-06	1.31E-03	0.00E+00	0.00E+00	1.31E-03	2.62E-03	0.00E+00	7.96E-03	0.00E+00	0.00E+00	1.31E-03	0.00E+00	0.00E+00	7.96E-03
3517	ALL	750088.42	4045760.7	NonCancerAcute	0.00E+00	6.18E-06	1.31E-03	0.00E+00	0.00E+00	1.32E-03	2.59E-03	0.00E+00	7.94E-03	0.00E+00	0.00E+00	1.31E-03	0.00E+00	0.00E+00	7.94E-03
3518	ALL	750188.42	4045760.7	NonCancerAcute	0.00E+00	6.16E-06	1.31E-03	0.00E+00	0.00E+00	1.31E-03	2.58E-03	0.00E+00	7.92E-03	0.00E+00	0.00E+00	1.31E-03	0.00E+00	0.00E+00	7.92E-03
3519	ALL	750288.42	4045760.7	NonCancerAcute	0.00E+00	6.25E-06	1.33E-03	0.00E+00	0.00E+00	1.33E-03	2.55E-03	0.00E+00	7.95E-03	0.00E+00	0.00E+00	1.33E-03	0.00E+00	0.00E+00	7.95E-03
3520	ALL	750388.42	4045760.7	NonCancerAcute	0.00E+00	6.34E-06	1.35E-03	0.00E+00	0.00E+00	1.35E-03	2.59E-03	0.00E+00	8.07E-03	0.00E+00	0.00E+00	1.35E-03	0.00E+00	0.00E+00	8.07E-03
3521	ALL	750488.42	4045760.7	NonCancerAcute	0.00E+00	6.28E-06	1.33E-03	0.00E+00	0.00E+00	1.34E-03	2.61E-03	0.00E+00	8.04E-03	0.00E+00	0.00E+00	1.33E-03	0.00E+00	0.00E+00	8.04E-03
3522	ALL	748088.42	4045860.7	NonCancerAcute	0.00E+00	6.85E-06	1.45E-03	0.00E+00	0.00E+00	1.46E-03	2.74E-03	0.00E+00	8.65E-03	0.00E+00	0.00E+00	1.45E-03	0.00E+00	0.00E+00	8.65E-03
3523	ALL	748188.42	4045860.7	NonCancerAcute	0.00E+00	6.71E-06	1.42E-03	0.00E+00	0.00E+00	1.43E-03	2.74E-03	0.00E+00	8.54E-03	0.00E+00	0.00E+00	1.42E-03	0.00E+00	0.00E+00	8.54E-03
3524	ALL	748288.42	4045860.7	NonCancerAcute	0.00E+00	6.47E-06	1.37E-03	0.00E+00	0.00E+00	1.38E-03	2.70E-03	0.00E+00	8.31E-03	0.00E+00	0.00E+00	1.37E-03	0.00E+00	0.00E+00	8.31E-03
3525	ALL	748388.42	4045860.7	NonCancerAcute	0.00E+00	6.62E-06	1.41E-03	0.00E+00	0.00E+00	1.41E-03	2.69E-03	0.00E+00	8.41E-03	0.00E+00	0.00E+00	1.41E-03	0.00E+00	0.00E+00	8.41E-03
3526	ALL	748488.42	4045860.7	NonCancerAcute	0.00E+00	6.63E-06	1.41E-03	0.00E+00	0.00E+00	1.41E-03	2.65E-03	0.00E+00	8.36E-03	0.00E+00	0.00E+00	1.41E-03	0.00E+00	0.00E+00	8.36E-03
3527	ALL	748588.42	4045860.7	NonCancerAcute	0.00E+00	6.50E-06	1.38E-03	0.00E+00	0.00E+00	1.39E-03	2.62E-03	0.00E+00	8.23E-03	0.00E+00	0.00E+00	1.38E-03	0.00E+00	0.00E+00	8.23E-03
3528	ALL	748688.42	4045860.7	NonCancerAcute	0.00E+00	6.22E-06	1.32E-03	0.00E+00	0.00E+00	1.33E-03	2.60E-03	0.00E+00	7.98E-03	0.00E+00	0.00E+00	1.32E-03	0.00E+00	0.00E+00	7.98E-03
3529	ALL	748788.42	4045860.7	NonCancerAcute	0.00E+00	6.41E-06	1.36E-03	0.00E+00	0.00E+00	1.37E-03	2.49E-03	0.00E+00	8.00E-03	0.00E+00	0.00E+00	1.36E-03	0.00E+00	0.00E+00	8.00E-03
3530	ALL	748888.42	4045860.7	NonCancerAcute	0.00E+00	6.57E-06	1.40E-03	0.00E+00	0.00E+00	1.40E-03	2.50E-03	0.00E+00	8.13E-03	0.00E+00	0.00E+00	1.40E-03	0.00E+00	0.00E+00	8.13E-03
3531	ALL	748988.42	4045860.7	NonCancerAcute	0.00E+00	6.36E-06	1.35E-03	0.00E+00	0.00E+00	1.36E-03	2.50E-03	0.00E+00	7.97E-03	0.00E+00	0.00E+00	1.35E-03	0.00E+00	0.00E+00	7.97E-03
3532	ALL	749088.42	4045860.7	NonCancerAcute	0.00E+00	6.28E-06	1.33E-03	0.00E+00	0.00E+00	1.34E-03	2.51E-03	0.00E+00	7.92E-03	0.00E+00	0.00E+00	1.33E-03	0.00E+00	0.00E+00	7.92E-03
3533	ALL	749188.42	4045860.7	NonCancerAcute	0.00E+00	6.08E-06	1.29E-03	0.00E+00	0.00E+00	1.30E-03	2.51E-03	0.00E+00	7.76E-03	0.00E+00	0.00E+00	1.29E-03	0.00E+00	0.00E+00	7.76E-03
3534	ALL	749288.42	4045860.7	NonCancerAcute	0.00E+00	5.96E-06	1.27E-03	0.00E+00	0.00E+00	1.27E-03	2.58E-03	0.00E+00	7.75E-03	0.00E+00	0.00E+00	1.27E-03	0.00E+00	0.00E+00	7.75E-03
3535	ALL	749388.42	4045860.7	NonCancerAcute	0.00E+00	6.16E-06	1.31E-03	0.00E+00	0.00E+00	1.31E-03	2.52E-03	0.00E+00	7.84E-03	0.00E+00	0.00E+00	1.31E-03	0.00E+00	0.00E+00	7.84E-03
3536	ALL	749488.42	4045860.7	NonCancerAcute	0.00E+00	6.19E-06	1.32E-03	0.00E+00	0.00E+00	1.32E-03	2.49E-03	0.00E+00	7.83E-03	0.00E+00	0.00E+00	1.32E-03	0.00E+00	0.00E+00	7.83E-03
3537	ALL	749588.42	4045860.7	NonCancerAcute	0.00E+00	6.12E-06	1.30E-03	0.00E+00	0.00E+00	1.31E-03	2.61E-03	0.00E+00	7.91E-03	0.00E+00	0.00E+00	1.30E-03	0.00E+00	0.00E+00	7.91E-03
3538	ALL	749688.42	4045860.7	NonCancerAcute	0.00E+00	5.91E-06	1.25E-03	0.00E+00	0.00E+00	1.26E-03	2.65E-03	0.00E+00	7.81E-03	0.00E+00	0.00E+00	1.25E-03	0.00E+00	0.00E+00	7.81E-03
3539	ALL	749788.42	4045860.7	NonCancerAcute	0.00E+00	5.93E-06	1.26E-03	0.00E+00	0.00E+00	1.26E-03	2.63E-03	0.00E+00	7.80E-03	0.00E+00	0.00E+00	1.26E-03	0.00E+00	0.00E+00	7.80E-03
3540	ALL	749888.42	4045860.7	NonCancerAcute	0.00E+00	6.04E-06	1.28E-03	0.00E+00	0.00E+00	1.29E-03	2.59E-03	0.00E+00	7.83E-03	0.00E+00	0.00E+00	1.28E-03	0.00E+00	0.00E+00	7.83E-03
3541	ALL	749988.42	4045860.7	NonCancerAcute	0.00E+00	6.10E-06	1.30E-03	0.00E+00	0.00E+00	1.30E-03	2.59E-03	0.00E+00	7.88E-03	0.00E+00	0.00E+00	1.30E-03	0.00E+00	0.00E+00	7.88E-03
3542	ALL	750088.42	4045860.7	NonCancerAcute	0.00E+00	6.14E-06	1.30E-03	0.00E+00	0.00E+00	1.31E-03	2.57E-03	0.00E+00	7.89E-03	0.00E+00	0.00E+00	1.30E-03	0.00E+00	0.00E+00	7.89E-03
3543	ALL	750188.42	4045860.7	NonCancerAcute	0.00E+00	6.11E-06	1.30E-03	0.00E+00	0.00E+00	1.30E-03	2.55E-03	0.00E+00	7.84E-03	0.00E+00	0.00E+00	1.30E-03	0.00E+00	0.00E+00	7.84E-03
3544	ALL	750288.42	4045860.7	NonCancerAcute	0.00E+00	6.17E-06	1.31E-03	0.00E+00	0.00E+00	1.32E-03	2.53E-03	0.00E+00	7.87E-03	0.00E+00	0.00E+00	1.31E-03	0.00E+00	0.00E+00	7.87E-03
3545	ALL	750388.42	4045860.7	NonCancerAcute	0.00E+00	6.27E-06	1.33E-03	0.00E+00	0.00E+00	1.34E-03	2.53E-03	0.00E+00	7.93E-03	0.00E+00	0.00E+00	1.33E-03	0.00E+00	0.00E+00	7.93E-03
3546	ALL	750488.42	4045860.7	NonCancerAcute	0.00E+00	6.26E-06	1.33E-03	0.00E+00	0.00E+00	1.33E-03	2.57E-03	0.00E+00	7.97E-03	0.00E+00	0.00E+00	1.33E-03	0.00E+00	0.00E+00	7.97E-03
3547	ALL	745916	4035023	NonCancerAcute	0.00E+00	1.12E-05	2.38E-03	0.00E+00	0.00E+00	2.39E-03	6.61E-03	0.00E+00	1.67E-02	0.00E+00	0.00E+00	2.38E-03	0.00E+00	0.00E+00	1.67E-02
3548	ALL	745966	4035023	NonCancerAcute	0.00E+00	1.13E-05	2.40E-03	0.00E+00	0.00E+00	2.41E-03	6.40E-03	0.00E+00	1.66E-02	0.00E+00	0.00E+00	2.40E-03	0.00E+00	0.00E+00	1.66E-02
3549	ALL	746016	4035023	NonCancerAcute	0.00E+00	1.13E-05	2.40E-03	0.00E+00	0.00E+00	2.42E-03	6.38E-03	0.00E+00	1.66E-02	0.00E+00	0.00E+00	2.40E-03	0.00E+00	0.00E+00	1.66E-02

3550	ALL	746066	4035023	NonCancerAcute	0.00E+00	1.13E-05	2.40E-03	0.00E+00	0.00E+00	2.42E-03	6.33E-03	0.00E+00	1.65E-02	0.00E+00	0.00E+00	2.40E-03	0.00E+00	0.00E+00	1.65E-02
3551	ALL	746116	4035023	NonCancerAcute	0.00E+00	1.14E-05	2.42E-03	0.00E+00	0.00E+00	2.43E-03	6.35E-03	0.00E+00	1.66E-02	0.00E+00	0.00E+00	2.42E-03	0.00E+00	0.00E+00	1.66E-02
3552	ALL	746166	4035023	NonCancerAcute	0.00E+00	1.14E-05	2.41E-03	0.00E+00	0.00E+00	2.42E-03	6.27E-03	0.00E+00	1.64E-02	0.00E+00	0.00E+00	2.41E-03	0.00E+00	0.00E+00	1.64E-02
3553	ALL	746216	4035023	NonCancerAcute	0.00E+00	1.14E-05	2.42E-03	0.00E+00	0.00E+00	2.43E-03	6.21E-03	0.00E+00	1.64E-02	0.00E+00	0.00E+00	2.42E-03	0.00E+00	0.00E+00	1.64E-02
3554	ALL	746266	4035023	NonCancerAcute	0.00E+00	1.17E-05	2.49E-03	0.00E+00	0.00E+00	2.50E-03	6.28E-03	0.00E+00	1.67E-02	0.00E+00	0.00E+00	2.49E-03	0.00E+00	0.00E+00	1.67E-02
3555	ALL	746316	4035023	NonCancerAcute	0.00E+00	1.20E-05	2.54E-03	0.00E+00	0.00E+00	2.55E-03	6.32E-03	0.00E+00	1.70E-02	0.00E+00	0.00E+00	2.54E-03	0.00E+00	0.00E+00	1.70E-02
3556	ALL	746366	4035023	NonCancerAcute	0.00E+00	1.23E-05	2.62E-03	0.00E+00	0.00E+00	2.63E-03	6.39E-03	0.00E+00	1.73E-02	0.00E+00	0.00E+00	2.62E-03	0.00E+00	0.00E+00	1.73E-02
3557	ALL	745916	4035073	NonCancerAcute	0.00E+00	1.13E-05	2.40E-03	0.00E+00	0.00E+00	2.41E-03	6.74E-03	0.00E+00	1.70E-02	0.00E+00	0.00E+00	2.40E-03	0.00E+00	0.00E+00	1.70E-02
3558	ALL	745966	4035073	NonCancerAcute	0.00E+00	1.13E-05	2.41E-03	0.00E+00	0.00E+00	2.42E-03	6.59E-03	0.00E+00	1.68E-02	0.00E+00	0.00E+00	2.41E-03	0.00E+00	0.00E+00	1.68E-02
3559	ALL	746016	4035073	NonCancerAcute	0.00E+00	1.14E-05	2.42E-03	0.00E+00	0.00E+00	2.43E-03	6.48E-03	0.00E+00	1.67E-02	0.00E+00	0.00E+00	2.42E-03	0.00E+00	0.00E+00	1.67E-02
3560	ALL	746066	4035073	NonCancerAcute	0.00E+00	1.15E-05	2.44E-03	0.00E+00	0.00E+00	2.45E-03	6.51E-03	0.00E+00	1.69E-02	0.00E+00	0.00E+00	2.44E-03	0.00E+00	0.00E+00	1.69E-02
3561	ALL	746116	4035073	NonCancerAcute	0.00E+00	1.15E-05	2.44E-03	0.00E+00	0.00E+00	2.45E-03	6.49E-03	0.00E+00	1.68E-02	0.00E+00	0.00E+00	2.44E-03	0.00E+00	0.00E+00	1.68E-02
3562	ALL	746166	4035073	NonCancerAcute	0.00E+00	1.16E-05	2.47E-03	0.00E+00	0.00E+00	2.48E-03	6.41E-03	0.00E+00	1.68E-02	0.00E+00	0.00E+00	2.47E-03	0.00E+00	0.00E+00	1.68E-02
3563	ALL	746216	4035073	NonCancerAcute	0.00E+00	1.16E-05	2.47E-03	0.00E+00	0.00E+00	2.48E-03	6.39E-03	0.00E+00	1.68E-02	0.00E+00	0.00E+00	2.47E-03	0.00E+00	0.00E+00	1.68E-02
3564	ALL	746266	4035073	NonCancerAcute	0.00E+00	1.17E-05	2.50E-03	0.00E+00	0.00E+00	2.51E-03	6.40E-03	0.00E+00	1.69E-02	0.00E+00	0.00E+00	2.50E-03	0.00E+00	0.00E+00	1.69E-02
3565	ALL	746316	4035073	NonCancerAcute	0.00E+00	1.20E-05	2.55E-03	0.00E+00	0.00E+00	2.56E-03	6.38E-03	0.00E+00	1.71E-02	0.00E+00	0.00E+00	2.55E-03	0.00E+00	0.00E+00	1.71E-02
3566	ALL	746366	4035073	NonCancerAcute	0.00E+00	1.24E-05	2.63E-03	0.00E+00	0.00E+00	2.64E-03	6.47E-03	0.00E+00	1.75E-02	0.00E+00	0.00E+00	2.63E-03	0.00E+00	0.00E+00	1.75E-02
3567	ALL	745916	4035123	NonCancerAcute	0.00E+00	1.14E-05	2.43E-03	0.00E+00	0.00E+00	2.44E-03	6.87E-03	0.00E+00	1.72E-02	0.00E+00	0.00E+00	2.43E-03	0.00E+00	0.00E+00	1.72E-02
3568	ALL	745966	4035123	NonCancerAcute	0.00E+00	1.15E-05	2.44E-03	0.00E+00	0.00E+00	2.45E-03	6.80E-03	0.00E+00	1.72E-02	0.00E+00	0.00E+00	2.44E-03	0.00E+00	0.00E+00	1.72E-02
3569	ALL	746016	4035123	NonCancerAcute	0.00E+00	1.15E-05	2.45E-03	0.00E+00	0.00E+00	2.46E-03	6.63E-03	0.00E+00	1.70E-02	0.00E+00	0.00E+00	2.45E-03	0.00E+00	0.00E+00	1.70E-02
3570	ALL	746066	4035123	NonCancerAcute	0.00E+00	1.15E-05	2.45E-03	0.00E+00	0.00E+00	2.46E-03	6.63E-03	0.00E+00	1.70E-02	0.00E+00	0.00E+00	2.45E-03	0.00E+00	0.00E+00	1.70E-02
3571	ALL	746116	4035123	NonCancerAcute	0.00E+00	1.17E-05	2.48E-03	0.00E+00	0.00E+00	2.49E-03	6.58E-03	0.00E+00	1.71E-02	0.00E+00	0.00E+00	2.48E-03	0.00E+00	0.00E+00	1.71E-02
3572	ALL	746166	4035123	NonCancerAcute	0.00E+00	1.17E-05	2.49E-03	0.00E+00	0.00E+00	2.50E-03	6.62E-03	0.00E+00	1.72E-02	0.00E+00	0.00E+00	2.49E-03	0.00E+00	0.00E+00	1.72E-02
3573	ALL	746216	4035123	NonCancerAcute	0.00E+00	1.19E-05	2.52E-03	0.00E+00	0.00E+00	2.53E-03	6.57E-03	0.00E+00	1.72E-02	0.00E+00	0.00E+00	2.52E-03	0.00E+00	0.00E+00	1.72E-02
3574	ALL	746266	4035123	NonCancerAcute	0.00E+00	1.18E-05	2.50E-03	0.00E+00	0.00E+00	2.51E-03	6.48E-03	0.00E+00	1.70E-02	0.00E+00	0.00E+00	2.50E-03	0.00E+00	0.00E+00	1.70E-02
3575	ALL	746316	4035123	NonCancerAcute	0.00E+00	1.20E-05	2.55E-03	0.00E+00	0.00E+00	2.56E-03	6.50E-03	0.00E+00	1.72E-02	0.00E+00	0.00E+00	2.55E-03	0.00E+00	0.00E+00	1.72E-02
3576	ALL	746366	4035123	NonCancerAcute	0.00E+00	1.24E-05	2.62E-03	0.00E+00	0.00E+00	2.63E-03	6.54E-03	0.00E+00	1.75E-02	0.00E+00	0.00E+00	2.62E-03	0.00E+00	0.00E+00	1.75E-02
3577	ALL	745916	4035173	NonCancerAcute	0.00E+00	1.15E-05	2.45E-03	0.00E+00	0.00E+00	2.46E-03	6.98E-03	0.00E+00	1.75E-02	0.00E+00	0.00E+00	2.45E-03	0.00E+00	0.00E+00	1.75E-02
3578	ALL	745966	4035173	NonCancerAcute	0.00E+00	1.16E-05	2.47E-03	0.00E+00	0.00E+00	2.48E-03	6.91E-03	0.00E+00	1.74E-02	0.00E+00	0.00E+00	2.47E-03	0.00E+00	0.00E+00	1.74E-02
3579	ALL	746016	4035173	NonCancerAcute	0.00E+00	1.17E-05	2.48E-03	0.00E+00	0.00E+00	2.50E-03	6.80E-03	0.00E+00	1.74E-02	0.00E+00	0.00E+00	2.48E-03	0.00E+00	0.00E+00	1.74E-02
3580	ALL	746066	4035173	NonCancerAcute	0.00E+00	1.17E-05	2.48E-03	0.00E+00	0.00E+00	2.50E-03	6.73E-03	0.00E+00	1.73E-02	0.00E+00	0.00E+00	2.48E-03	0.00E+00	0.00E+00	1.73E-02
3581	ALL	746116	4035173	NonCancerAcute	0.00E+00	1.17E-05	2.49E-03	0.00E+00	0.00E+00	2.50E-03	6.76E-03	0.00E+00	1.73E-02	0.00E+00	0.00E+00	2.49E-03	0.00E+00	0.00E+00	1.73E-02
3582	ALL	746166	4035173	NonCancerAcute	0.00E+00	1.19E-05	2.53E-03	0.00E+00	0.00E+00	2.54E-03	6.78E-03	0.00E+00	1.75E-02	0.00E+00	0.00E+00	2.53E-03	0.00E+00	0.00E+00	1.75E-02
3583	ALL	746216	4035173	NonCancerAcute	0.00E+00	1.20E-05	2.54E-03	0.00E+00	0.00E+00	2.55E-03	6.70E-03	0.00E+00	1.74E-02	0.00E+00	0.00E+00	2.54E-03	0.00E+00	0.00E+00	1.74E-02
3584	ALL	746266	4035173	NonCancerAcute	0.00E+00	1.21E-05	2.57E-03	0.00E+00	0.00E+00	2.58E-03	6.66E-03	0.00E+00	1.75E-02	0.00E+00	0.00E+00	2.57E-03	0.00E+00	0.00E+00	1.75E-02
3585	ALL	746316	4035173	NonCancerAcute	0.00E+00	1.20E-05	2.55E-03	0.00E+00	0.00E+00	2.56E-03	6.65E-03	0.00E+00	1.74E-02	0.00E+00	0.00E+00	2.55E-03	0.00E+00	0.00E+00	1.74E-02
3586	ALL	746366	4035173	NonCancerAcute	0.00E+00	1.24E-05	2.63E-03	0.00E+00	0.00E+00	2.64E-03	6.67E-03	0.00E+00	1.77E-02	0.00E+00	0.00E+00	2.63E-03	0.00E+00	0.00E+00	1.77E-02
3587	ALL	745916	4035223	NonCancerAcute	0.00E+00	1.16E-05	2.46E-03	0.00E+00	0.00E+00	2.47E-03	7.06E-03	0.00E+00	1.76E-02	0.00E+00	0.00E+00	2.46E-03	0.00E+00	0.00E+00	1.76E-02
3588	ALL	745966	4035223	NonCancerAcute	0.00E+00	1.17E-05	2.49E-03	0.00E+00	0.00E+00	2.50E-03	7.12E-03	0.00E+00	1.77E-02	0.00E+00	0.00E+00	2.49E-03	0.00E+00	0.00E+00	1.77E-02
3589	ALL	746016	4035223	NonCancerAcute	0.00E+00	1.18E-05	2.51E-03	0.00E+00	0.00E+00	2.52E-03	7.00E-03	0.00E+00	1.77E-02	0.00E+00	0.00E+00	2.51E-03	0.00E+00	0.00E+00	1.77E-02
3590	ALL	746066	4035223	NonCancerAcute	0.00E+00	1.19E-05	2.53E-03	0.00E+00	0.00E+00	2.54E-03	6.89E-03	0.00E+00	1.76E-02	0.00E+00	0.00E+00	2.53E-03	0.00E+00	0.00E+00	1.76E-02
3591	ALL	746116	4035223	NonCancerAcute	0.00E+00	1.19E-05	2.53E-03	0.00E+00	0.00E+00	2.54E-03	6.89E-03	0.00E+00	1.76E-02	0.00E+00	0.00E+00	2.53E-03	0.00E+00	0.00E+00	1.76E-02
3592	ALL	746166	4035223	NonCancerAcute	0.00E+00	1.19E-05	2.53E-03	0.00E+00	0.00E+00	2.54E-03	6.87E-03	0.00E+00	1.76E-02	0.00E+00	0.00E+00	2.53E-03	0.00E+00	0.00E+00	1.76E-02
3593	ALL	746216	4035223	NonCancerAcute	0.00E+00	1.21E-05	2.56E-03	0.00E+00	0.00E+00	2.57E-03	6.88E-03	0.00E+00	1.77E-02	0.00E+00	0.00E+00	2.56E-03	0.00E+00	0.00E+00	1.77E-02
3594	ALL	746266	4035223	NonCancerAcute	0.00E+00	1.22E-05	2.58E-03	0.00E+00	0.00E+00	2.59E-03	6.85E-03	0.00E+00	1.78E-02	0.00E+00	0.00E+00	2.58E-03	0.00E+00	0.00E+00	1.78E-02
3595	ALL	746316	4035223	NonCancerAcute	0.00E+00	1.23E-05	2.61E-03	0.00E+00	0.00E+00	2.62E-03	6.80E-03	0.00E+00	1.78E-02	0.00E+00	0.00E+00	2.61E-03	0.00E+00	0.00E+00	1.78E-02
3596	ALL	746366	4035223	NonCancerAcute	0.00E+00	1.23E-05	2.60E-03	0.00E+00	0.00E+00	2.61E-03	6.76E-03	0.00E+00	1.77E-02	0.00E+00	0.00E+00	2.60E-03	0.00E+00	0.00E+00	1.77E-02
3597	ALL	745916	4035273	NonCancerAcute	0.00E+00	1.14E-05	2.43E-03	0.00E+00	0.00E+00	2.44E-03	7.02E-03	0.00E+00	1.74E-02	0.00E+00	0.00E+00	2.43E-03	0.00E+00	0.00E+00	1.74E-02
3598	ALL	745966	4035273	NonCancerAcute	0.00E+00	1.17E-05	2.49E-03	0.00E+00	0.00E+00	2.50E-03	7.18E-03	0.00E+00	1.78E-02	0.00E+00	0.00E+00	2.49E-03	0.00E+00	0.00E+00	1.78E-02
3599	ALL	746016	4035273	NonCancerAcute	0.00E+00	1.19E-05	2.54E-03	0.00E+00	0.00E+00	2.55E-03	7.21E-03	0.00E+00	1.81E-02	0.00E+00	0.00E+00	2.54E-03	0.00E+00	0.00E+00	1.81E-02
3600	ALL	746066	4035273	NonCancerAcute	0.00E+00	1.20E-05	2.56E-03	0.00E+00	0.00E+00	2.57E-03	7.02E-03	0.00E+00	1.79E-02	0.00E+00	0.00E+00	2.56E-03	0.00E+00	0.00E+00	1.79E-02
3601	ALL	746116	4035273	NonCancerAcute	0.00E+00	1.20E-05	2.56E-03	0.00E+00	0.00E+00	2.57E-03	6.99E-03	0.00E+00	1.79E-02	0.00E+00	0.00E+00	2.56E-03	0.00E+00	0.00E+00	1.79E-02
3602	ALL	746166	4035273	NonCancerAcute	0.00E+00	1.21E-05	2.58E-03	0.00E+00	0.00E+00	2.59E-03	7.04E-03	0.00E+00	1.80E-02	0.00E+00	0.00E+00	2.58E-03	0.00E+00	0.00E+00	1.80E-02

3603	ALL	746216	4035273	NonCancerAcute	0.00E+00	1.21E-05	2.57E-03	0.00E+00	0.00E+00	2.59E-03	7.06E-03	0.00E+00	1.80E-02	0.00E+00	0.00E+00	2.57E-03	0.00E+00	0.00E+00	1.80E-02
3604	ALL	746266	4035273	NonCancerAcute	0.00E+00	1.23E-05	2.61E-03	0.00E+00	0.00E+00	2.62E-03	7.01E-03	0.00E+00	1.81E-02	0.00E+00	0.00E+00	2.61E-03	0.00E+00	0.00E+00	1.81E-02
3605	ALL	746316	4035273	NonCancerAcute	0.00E+00	1.24E-05	2.64E-03	0.00E+00	0.00E+00	2.65E-03	6.98E-03	0.00E+00	1.82E-02	0.00E+00	0.00E+00	2.64E-03	0.00E+00	0.00E+00	1.82E-02
3606	ALL	746366	4035273	NonCancerAcute	0.00E+00	1.24E-05	2.64E-03	0.00E+00	0.00E+00	2.65E-03	6.90E-03	0.00E+00	1.81E-02	0.00E+00	0.00E+00	2.64E-03	0.00E+00	0.00E+00	1.81E-02
3607	ALL	745916	4035323	NonCancerAcute	0.00E+00	1.13E-05	2.41E-03	0.00E+00	0.00E+00	2.42E-03	6.91E-03	0.00E+00	1.72E-02	0.00E+00	0.00E+00	2.41E-03	0.00E+00	0.00E+00	1.72E-02
3608	ALL	745966	4035323	NonCancerAcute	0.00E+00	1.16E-05	2.46E-03	0.00E+00	0.00E+00	2.47E-03	7.25E-03	0.00E+00	1.78E-02	0.00E+00	0.00E+00	2.46E-03	0.00E+00	0.00E+00	1.78E-02
3609	ALL	746016	4035323	NonCancerAcute	0.00E+00	1.18E-05	2.51E-03	0.00E+00	0.00E+00	2.53E-03	7.37E-03	0.00E+00	1.82E-02	0.00E+00	0.00E+00	2.51E-03	0.00E+00	0.00E+00	1.82E-02
3610	ALL	746066	4035323	NonCancerAcute	0.00E+00	1.21E-05	2.57E-03	0.00E+00	0.00E+00	2.58E-03	7.20E-03	0.00E+00	1.82E-02	0.00E+00	0.00E+00	2.57E-03	0.00E+00	0.00E+00	1.82E-02
3611	ALL	746116	4035323	NonCancerAcute	0.00E+00	1.22E-05	2.59E-03	0.00E+00	0.00E+00	2.60E-03	7.13E-03	0.00E+00	1.81E-02	0.00E+00	0.00E+00	2.59E-03	0.00E+00	0.00E+00	1.81E-02
3612	ALL	746166	4035323	NonCancerAcute	0.00E+00	1.22E-05	2.60E-03	0.00E+00	0.00E+00	2.61E-03	7.16E-03	0.00E+00	1.82E-02	0.00E+00	0.00E+00	2.60E-03	0.00E+00	0.00E+00	1.82E-02
3613	ALL	746216	4035323	NonCancerAcute	0.00E+00	1.23E-05	2.62E-03	0.00E+00	0.00E+00	2.63E-03	7.16E-03	0.00E+00	1.83E-02	0.00E+00	0.00E+00	2.62E-03	0.00E+00	0.00E+00	1.83E-02
3614	ALL	746266	4035323	NonCancerAcute	0.00E+00	1.23E-05	2.62E-03	0.00E+00	0.00E+00	2.63E-03	7.18E-03	0.00E+00	1.83E-02	0.00E+00	0.00E+00	2.62E-03	0.00E+00	0.00E+00	1.83E-02
3615	ALL	746316	4035323	NonCancerAcute	0.00E+00	1.26E-05	2.67E-03	0.00E+00	0.00E+00	2.68E-03	7.15E-03	0.00E+00	1.84E-02	0.00E+00	0.00E+00	2.67E-03	0.00E+00	0.00E+00	1.84E-02
3616	ALL	746366	4035323	NonCancerAcute	0.00E+00	1.27E-05	2.69E-03	0.00E+00	0.00E+00	2.70E-03	7.14E-03	0.00E+00	1.85E-02	0.00E+00	0.00E+00	2.69E-03	0.00E+00	0.00E+00	1.85E-02
3617	ALL	745916	4035373	NonCancerAcute	0.00E+00	1.13E-05	2.41E-03	0.00E+00	0.00E+00	2.42E-03	7.10E-03	0.00E+00	1.75E-02	0.00E+00	0.00E+00	2.41E-03	0.00E+00	0.00E+00	1.75E-02
3618	ALL	745966	4035373	NonCancerAcute	0.00E+00	1.14E-05	2.43E-03	0.00E+00	0.00E+00	2.44E-03	7.13E-03	0.00E+00	1.75E-02	0.00E+00	0.00E+00	2.43E-03	0.00E+00	0.00E+00	1.75E-02
3619	ALL	746016	4035373	NonCancerAcute	0.00E+00	1.17E-05	2.48E-03	0.00E+00	0.00E+00	2.49E-03	7.44E-03	0.00E+00	1.81E-02	0.00E+00	0.00E+00	2.48E-03	0.00E+00	0.00E+00	1.81E-02
3620	ALL	746066	4035373	NonCancerAcute	0.00E+00	1.19E-05	2.53E-03	0.00E+00	0.00E+00	2.54E-03	7.46E-03	0.00E+00	1.83E-02	0.00E+00	0.00E+00	2.53E-03	0.00E+00	0.00E+00	1.83E-02
3621	ALL	746116	4035373	NonCancerAcute	0.00E+00	1.22E-05	2.60E-03	0.00E+00	0.00E+00	2.61E-03	7.22E-03	0.00E+00	1.83E-02	0.00E+00	0.00E+00	2.60E-03	0.00E+00	0.00E+00	1.83E-02
3622	ALL	746166	4035373	NonCancerAcute	0.00E+00	1.24E-05	2.63E-03	0.00E+00	0.00E+00	2.64E-03	7.26E-03	0.00E+00	1.84E-02	0.00E+00	0.00E+00	2.63E-03	0.00E+00	0.00E+00	1.84E-02
3623	ALL	746216	4035373	NonCancerAcute	0.00E+00	1.25E-05	2.65E-03	0.00E+00	0.00E+00	2.66E-03	7.31E-03	0.00E+00	1.86E-02	0.00E+00	0.00E+00	2.65E-03	0.00E+00	0.00E+00	1.86E-02
3624	ALL	746266	4035373	NonCancerAcute	0.00E+00	1.26E-05	2.68E-03	0.00E+00	0.00E+00	2.69E-03	7.35E-03	0.00E+00	1.87E-02	0.00E+00	0.00E+00	2.68E-03	0.00E+00	0.00E+00	1.87E-02
3625	ALL	746316	4035373	NonCancerAcute	0.00E+00	1.27E-05	2.69E-03	0.00E+00	0.00E+00	2.70E-03	7.31E-03	0.00E+00	1.87E-02	0.00E+00	0.00E+00	2.69E-03	0.00E+00	0.00E+00	1.87E-02
3626	ALL	746366	4035373	NonCancerAcute	0.00E+00	1.28E-05	2.72E-03	0.00E+00	0.00E+00	2.73E-03	7.32E-03	0.00E+00	1.88E-02	0.00E+00	0.00E+00	2.72E-03	0.00E+00	0.00E+00	1.88E-02
3627	ALL	745916	4035423	NonCancerAcute	0.00E+00	1.16E-05	2.47E-03	0.00E+00	0.00E+00	2.48E-03	7.13E-03	0.00E+00	1.77E-02	0.00E+00	0.00E+00	2.47E-03	0.00E+00	0.00E+00	1.77E-02
3628	ALL	745966	4035423	NonCancerAcute	0.00E+00	1.17E-05	2.48E-03	0.00E+00	0.00E+00	2.49E-03	7.24E-03	0.00E+00	1.79E-02	0.00E+00	0.00E+00	2.48E-03	0.00E+00	0.00E+00	1.79E-02
3629	ALL	746016	4035423	NonCancerAcute	0.00E+00	1.17E-05	2.47E-03	0.00E+00	0.00E+00	2.49E-03	7.43E-03	0.00E+00	1.81E-02	0.00E+00	0.00E+00	2.47E-03	0.00E+00	0.00E+00	1.81E-02
3630	ALL	746066	4035423	NonCancerAcute	0.00E+00	1.17E-05	2.49E-03	0.00E+00	0.00E+00	2.50E-03	7.56E-03	0.00E+00	1.83E-02	0.00E+00	0.00E+00	2.49E-03	0.00E+00	0.00E+00	1.83E-02
3631	ALL	746116	4035423	NonCancerAcute	0.00E+00	1.20E-05	2.54E-03	0.00E+00	0.00E+00	2.55E-03	7.48E-03	0.00E+00	1.84E-02	0.00E+00	0.00E+00	2.54E-03	0.00E+00	0.00E+00	1.84E-02
3632	ALL	746166	4035423	NonCancerAcute	0.00E+00	1.24E-05	2.63E-03	0.00E+00	0.00E+00	2.64E-03	7.40E-03	0.00E+00	1.86E-02	0.00E+00	0.00E+00	2.63E-03	0.00E+00	0.00E+00	1.86E-02
3633	ALL	746216	4035423	NonCancerAcute	0.00E+00	1.26E-05	2.67E-03	0.00E+00	0.00E+00	2.68E-03	7.44E-03	0.00E+00	1.88E-02	0.00E+00	0.00E+00	2.67E-03	0.00E+00	0.00E+00	1.88E-02
3634	ALL	746266	4035423	NonCancerAcute	0.00E+00	1.28E-05	2.71E-03	0.00E+00	0.00E+00	2.72E-03	7.47E-03	0.00E+00	1.90E-02	0.00E+00	0.00E+00	2.71E-03	0.00E+00	0.00E+00	1.90E-02
3635	ALL	746316	4035423	NonCancerAcute	0.00E+00	1.29E-05	2.75E-03	0.00E+00	0.00E+00	2.76E-03	7.56E-03	0.00E+00	1.92E-02	0.00E+00	0.00E+00	2.75E-03	0.00E+00	0.00E+00	1.92E-02
3636	ALL	746366	4035423	NonCancerAcute	0.00E+00	1.31E-05	2.77E-03	0.00E+00	0.00E+00	2.79E-03	7.54E-03	0.00E+00	1.93E-02	0.00E+00	0.00E+00	2.77E-03	0.00E+00	0.00E+00	1.93E-02
3637	ALL	745916	4035473	NonCancerAcute	0.00E+00	1.18E-05	2.51E-03	0.00E+00	0.00E+00	2.52E-03	7.21E-03	0.00E+00	1.79E-02	0.00E+00	0.00E+00	2.51E-03	0.00E+00	0.00E+00	1.79E-02
3638	ALL	745966	4035473	NonCancerAcute	0.00E+00	1.19E-05	2.53E-03	0.00E+00	0.00E+00	2.54E-03	7.37E-03	0.00E+00	1.82E-02	0.00E+00	0.00E+00	2.53E-03	0.00E+00	0.00E+00	1.82E-02
3639	ALL	746016	4035473	NonCancerAcute	0.00E+00	1.20E-05	2.55E-03	0.00E+00	0.00E+00	2.56E-03	7.34E-03	0.00E+00	1.83E-02	0.00E+00	0.00E+00	2.55E-03	0.00E+00	0.00E+00	1.83E-02
3640	ALL	746066	4035473	NonCancerAcute	0.00E+00	1.20E-05	2.54E-03	0.00E+00	0.00E+00	2.55E-03	7.68E-03	0.00E+00	1.86E-02	0.00E+00	0.00E+00	2.54E-03	0.00E+00	0.00E+00	1.86E-02
3641	ALL	746116	4035473	NonCancerAcute	0.00E+00	1.19E-05	2.52E-03	0.00E+00	0.00E+00	2.53E-03	7.75E-03	0.00E+00	1.87E-02	0.00E+00	0.00E+00	2.52E-03	0.00E+00	0.00E+00	1.87E-02
3642	ALL	746166	4035473	NonCancerAcute	0.00E+00	1.21E-05	2.57E-03	0.00E+00	0.00E+00	2.58E-03	7.47E-03	0.00E+00	1.85E-02	0.00E+00	0.00E+00	2.57E-03	0.00E+00	0.00E+00	1.85E-02
3643	ALL	746216	4035473	NonCancerAcute	0.00E+00	1.24E-05	2.64E-03	0.00E+00	0.00E+00	2.65E-03	7.52E-03	0.00E+00	1.88E-02	0.00E+00	0.00E+00	2.64E-03	0.00E+00	0.00E+00	1.88E-02
3644	ALL	746266	4035473	NonCancerAcute	0.00E+00	1.28E-05	2.71E-03	0.00E+00	0.00E+00	2.73E-03	7.59E-03	0.00E+00	1.92E-02	0.00E+00	0.00E+00	2.71E-03	0.00E+00	0.00E+00	1.92E-02
3645	ALL	746316	4035473	NonCancerAcute	0.00E+00	1.30E-05	2.77E-03	0.00E+00	0.00E+00	2.78E-03	7.68E-03	0.00E+00	1.95E-02	0.00E+00	0.00E+00	2.77E-03	0.00E+00	0.00E+00	1.95E-02
3646	ALL	746366	4035473	NonCancerAcute	0.00E+00	1.33E-05	2.83E-03	0.00E+00	0.00E+00	2.84E-03	7.67E-03	0.00E+00	1.97E-02	0.00E+00	0.00E+00	2.83E-03	0.00E+00	0.00E+00	1.97E-02
3647	ALL	746762.33	4034654.27	NonCancerAcute	0.00E+00	1.12E-05	2.37E-03	0.00E+00	0.00E+00	2.38E-03	5.63E-03	0.00E+00	1.55E-02	0.00E+00	0.00E+00	2.37E-03	0.00E+00	0.00E+00	1.55E-02
3648	ALL	746812.33	4034654.27	NonCancerAcute	0.00E+00	1.11E-05	2.35E-03	0.00E+00	0.00E+00	2.36E-03	5.62E-03	0.00E+00	1.54E-02	0.00E+00	0.00E+00	2.35E-03	0.00E+00	0.00E+00	1.54E-02
3649	ALL	746862.33	4034654.27	NonCancerAcute	0.00E+00	1.11E-05	2.36E-03	0.00E+00	0.00E+00	2.37E-03	5.58E-03	0.00E+00	1.54E-02	0.00E+00	0.00E+00	2.36E-03	0.00E+00	0.00E+00	1.54E-02
3650	ALL	746912.33	4034654.27	NonCancerAcute	0.00E+00	1.13E-05	2.39E-03	0.00E+00	0.00E+00	2.41E-03	5.39E-03	0.00E+00	1.53E-02	0.00E+00	0.00E+00	2.39E-03	0.00E+00	0.00E+00	1.53E-02
3651	ALL	746962.33	4034654.27	NonCancerAcute	0.00E+00	1.11E-05	2.35E-03	0.00E+00	0.00E+00	2.36E-03	5.30E-03	0.00E+00	1.50E-02	0.00E+00	0.00E+00	2.35E-03	0.00E+00	0.00E+00	1.50E-02
3652	ALL	746762.33	4034704.27	NonCancerAcute	0.00E+00	1.12E-05	2.38E-03	0.00E+00	0.00E+00	2.39E-03	5.76E-03	0.00E+00	1.57E-02	0.00E+00	0.00E+00	2.38E-03	0.00E+00	0.00E+00	1.57E-02
3653	ALL	746812.33	4034704.27	NonCancerAcute	0.00E+00	1.11E-05	2.35E-03	0.00E+00	0.00E+00	2.36E-03	5.73E-03	0.00E+00	1.55E-02	0.00E+00	0.00E+00	2.35E-03	0.00E+00	0.00E+00	1.55E-02
3654	ALL	746862.33	4034704.27	NonCancerAcute	0.00E+00	1.11E-05	2.36E-03	0.00E+00	0.00E+00	2.37E-03	5.66E-03	0.00E+00	1.55E-02	0.00E+00	0.00E+00	2.36E-03	0.00E+00	0.00E+00	1.55E-02
3655	ALL	746912.33	4034704.27	NonCancerAcute	0.00E+00	1.14E-05	2.41E-03	0.00E+00	0.00E+00	2.43E-03	5.48E-03	0.00E+00	1.55E-02	0.00E+00	0.00E+00	2.41E-03	0.00E+00	0.00E+00	1.55E-02

3656	ALL		746962.33	4034704.27	NonCancerAcute	0.00E+00	1.12E-05	2.39E-03	0.00E+00	0.00E+00	2.40E-03	5.41E-03	0.00E+00	1.53E-02	0.00E+00	0.00E+00	2.39E-03	0.00E+00	0.00E+00	1.53E-02
3657	ALL		746762.33	4034754.27	NonCancerAcute	0.00E+00	1.12E-05	2.38E-03	0.00E+00	0.00E+00	2.39E-03	5.90E-03	0.00E+00	1.59E-02	0.00E+00	0.00E+00	2.38E-03	0.00E+00	0.00E+00	1.59E-02
3658	ALL		746812.33	4034754.27	NonCancerAcute	0.00E+00	1.11E-05	2.37E-03	0.00E+00	0.00E+00	2.38E-03	5.84E-03	0.00E+00	1.57E-02	0.00E+00	0.00E+00	2.37E-03	0.00E+00	0.00E+00	1.57E-02
3659	ALL		746862.33	4034754.27	NonCancerAcute	0.00E+00	1.12E-05	2.37E-03	0.00E+00	0.00E+00	2.38E-03	5.78E-03	0.00E+00	1.57E-02	0.00E+00	0.00E+00	2.37E-03	0.00E+00	0.00E+00	1.57E-02
3660	ALL		746912.33	4034754.27	NonCancerAcute	0.00E+00	1.14E-05	2.43E-03	0.00E+00	0.00E+00	2.44E-03	5.57E-03	0.00E+00	1.57E-02	0.00E+00	0.00E+00	2.43E-03	0.00E+00	0.00E+00	1.57E-02
3661	ALL		746962.33	4034754.27	NonCancerAcute	0.00E+00	1.14E-05	2.42E-03	0.00E+00	0.00E+00	2.43E-03	5.52E-03	0.00E+00	1.56E-02	0.00E+00	0.00E+00	2.42E-03	0.00E+00	0.00E+00	1.56E-02
3662	ALL		746762.33	4034804.27	NonCancerAcute	0.00E+00	1.13E-05	2.39E-03	0.00E+00	0.00E+00	2.40E-03	6.04E-03	0.00E+00	1.61E-02	0.00E+00	0.00E+00	2.39E-03	0.00E+00	0.00E+00	1.61E-02
3663	ALL		746812.33	4034804.27	NonCancerAcute	0.00E+00	1.12E-05	2.39E-03	0.00E+00	0.00E+00	2.40E-03	5.99E-03	0.00E+00	1.60E-02	0.00E+00	0.00E+00	2.39E-03	0.00E+00	0.00E+00	1.60E-02
3664	ALL		746862.33	4034804.27	NonCancerAcute	0.00E+00	1.12E-05	2.38E-03	0.00E+00	0.00E+00	2.39E-03	5.89E-03	0.00E+00	1.59E-02	0.00E+00	0.00E+00	2.38E-03	0.00E+00	0.00E+00	1.59E-02
3665	ALL		746912.33	4034804.27	NonCancerAcute	0.00E+00	1.15E-05	2.44E-03	0.00E+00	0.00E+00	2.45E-03	5.65E-03	0.00E+00	1.58E-02	0.00E+00	0.00E+00	2.44E-03	0.00E+00	0.00E+00	1.58E-02
3666	ALL		746962.33	4034804.27	NonCancerAcute	0.00E+00	1.16E-05	2.45E-03	0.00E+00	0.00E+00	2.47E-03	5.63E-03	0.00E+00	1.58E-02	0.00E+00	0.00E+00	2.45E-03	0.00E+00	0.00E+00	1.58E-02
3667	ALL		746762.33	4034854.27	NonCancerAcute	0.00E+00	1.13E-05	2.39E-03	0.00E+00	0.00E+00	2.40E-03	6.18E-03	0.00E+00	1.63E-02	0.00E+00	0.00E+00	2.39E-03	0.00E+00	0.00E+00	1.63E-02
3668	ALL		746812.33	4034854.27	NonCancerAcute	0.00E+00	1.13E-05	2.40E-03	0.00E+00	0.00E+00	2.41E-03	6.15E-03	0.00E+00	1.62E-02	0.00E+00	0.00E+00	2.40E-03	0.00E+00	0.00E+00	1.62E-02
3669	ALL		746862.33	4034854.27	NonCancerAcute	0.00E+00	1.12E-05	2.38E-03	0.00E+00	0.00E+00	2.40E-03	6.01E-03	0.00E+00	1.60E-02	0.00E+00	0.00E+00	2.38E-03	0.00E+00	0.00E+00	1.60E-02
3670	ALL		746912.33	4034854.27	NonCancerAcute	0.00E+00	1.15E-05	2.44E-03	0.00E+00	0.00E+00	2.45E-03	5.76E-03	0.00E+00	1.59E-02	0.00E+00	0.00E+00	2.44E-03	0.00E+00	0.00E+00	1.59E-02
3671	ALL		746962.33	4034854.27	NonCancerAcute	0.00E+00	1.17E-05	2.48E-03	0.00E+00	0.00E+00	2.50E-03	5.73E-03	0.00E+00	1.61E-02	0.00E+00	0.00E+00	2.48E-03	0.00E+00	0.00E+00	1.61E-02
3672	ALL		746762.33	4034904.27	NonCancerAcute	0.00E+00	1.12E-05	2.38E-03	0.00E+00	0.00E+00	2.40E-03	6.31E-03	0.00E+00	1.64E-02	0.00E+00	0.00E+00	2.38E-03	0.00E+00	0.00E+00	1.64E-02
3673	ALL		746812.33	4034904.27	NonCancerAcute	0.00E+00	1.12E-05	2.38E-03	0.00E+00	0.00E+00	2.39E-03	6.30E-03	0.00E+00	1.64E-02	0.00E+00	0.00E+00	2.38E-03	0.00E+00	0.00E+00	1.64E-02
3674	ALL		746862.33	4034904.27	NonCancerAcute	0.00E+00	1.13E-05	2.39E-03	0.00E+00	0.00E+00	2.40E-03	6.17E-03	0.00E+00	1.62E-02	0.00E+00	0.00E+00	2.39E-03	0.00E+00	0.00E+00	1.62E-02
3675	ALL		746912.33	4034904.27	NonCancerAcute	0.00E+00	1.15E-05	2.45E-03	0.00E+00	0.00E+00	2.46E-03	5.87E-03	0.00E+00	1.61E-02	0.00E+00	0.00E+00	2.45E-03	0.00E+00	0.00E+00	1.61E-02
3676	ALL		746962.33	4034904.27	NonCancerAcute	0.00E+00	1.18E-05	2.51E-03	0.00E+00	0.00E+00	2.52E-03	5.84E-03	0.00E+00	1.63E-02	0.00E+00	0.00E+00	2.51E-03	0.00E+00	0.00E+00	1.63E-02
3677	ALL		746762.33	4034954.27	NonCancerAcute	0.00E+00	1.13E-05	2.39E-03	0.00E+00	0.00E+00	2.40E-03	6.45E-03	0.00E+00	1.66E-02	0.00E+00	0.00E+00	2.39E-03	0.00E+00	0.00E+00	1.66E-02
3678	ALL		746812.33	4034954.27	NonCancerAcute	0.00E+00	1.13E-05	2.39E-03	0.00E+00	0.00E+00	2.41E-03	6.46E-03	0.00E+00	1.66E-02	0.00E+00	0.00E+00	2.39E-03	0.00E+00	0.00E+00	1.66E-02
3679	ALL		746862.33	4034954.27	NonCancerAcute	0.00E+00	1.13E-05	2.41E-03	0.00E+00	0.00E+00	2.42E-03	6.34E-03	0.00E+00	1.65E-02	0.00E+00	0.00E+00	2.41E-03	0.00E+00	0.00E+00	1.65E-02
3680	ALL		746912.33	4034954.27	NonCancerAcute	0.00E+00	1.17E-05	2.47E-03	0.00E+00	0.00E+00	2.49E-03	6.00E-03	0.00E+00	1.63E-02	0.00E+00	0.00E+00	2.47E-03	0.00E+00	0.00E+00	1.63E-02
3681	ALL		746962.33	4034954.27	NonCancerAcute	0.00E+00	1.20E-05	2.54E-03	0.00E+00	0.00E+00	2.55E-03	5.97E-03	0.00E+00	1.66E-02	0.00E+00	0.00E+00	2.54E-03	0.00E+00	0.00E+00	1.66E-02
3682	ALL	SENS	746762.33	4035004.27	NonCancerAcute	0.00E+00	1.12E-05	2.38E-03	0.00E+00	0.00E+00	2.39E-03	6.57E-03	0.00E+00	1.67E-02	0.00E+00	0.00E+00	2.38E-03	0.00E+00	0.00E+00	1.67E-02
3683	ALL	SENS	746812.33	4035004.27	NonCancerAcute	0.00E+00	1.14E-05	2.42E-03	0.00E+00	0.00E+00	2.43E-03	6.62E-03	0.00E+00	1.69E-02	0.00E+00	0.00E+00	2.42E-03	0.00E+00	0.00E+00	1.69E-02
3684	ALL	SENS	746862.33	4035004.27	NonCancerAcute	0.00E+00	1.15E-05	2.44E-03	0.00E+00	0.00E+00	2.46E-03	6.51E-03	0.00E+00	1.69E-02	0.00E+00	0.00E+00	2.44E-03	0.00E+00	0.00E+00	1.69E-02
3685	ALL	SENS	746912.33	4035004.27	NonCancerAcute	0.00E+00	1.18E-05	2.50E-03	0.00E+00	0.00E+00	2.51E-03	6.17E-03	0.00E+00	1.66E-02	0.00E+00	0.00E+00	2.50E-03	0.00E+00	0.00E+00	1.66E-02
3686	ALL		746962.33	4035004.27	NonCancerAcute	0.00E+00	1.21E-05	2.57E-03	0.00E+00	0.00E+00	2.58E-03	6.12E-03	0.00E+00	1.68E-02	0.00E+00	0.00E+00	2.57E-03	0.00E+00	0.00E+00	1.68E-02
3687	ALL		746762.33	4035054.27	NonCancerAcute	0.00E+00	1.13E-05	2.41E-03	0.00E+00	0.00E+00	2.42E-03	6.70E-03	0.00E+00	1.69E-02	0.00E+00	0.00E+00	2.41E-03	0.00E+00	0.00E+00	1.69E-02
3688	ALL		746812.33	4035054.27	NonCancerAcute	0.00E+00	1.15E-05	2.45E-03	0.00E+00	0.00E+00	2.46E-03	6.77E-03	0.00E+00	1.72E-02	0.00E+00	0.00E+00	2.45E-03	0.00E+00	0.00E+00	1.72E-02
3689	ALL		746862.33	4035054.27	NonCancerAcute	0.00E+00	1.17E-05	2.49E-03	0.00E+00	0.00E+00	2.51E-03	6.68E-03	0.00E+00	1.72E-02	0.00E+00	0.00E+00	2.49E-03	0.00E+00	0.00E+00	1.72E-02
3690	ALL		746912.33	4035054.27	NonCancerAcute	0.00E+00	1.19E-05	2.52E-03	0.00E+00	0.00E+00	2.53E-03	6.33E-03	0.00E+00	1.69E-02	0.00E+00	0.00E+00	2.52E-03	0.00E+00	0.00E+00	1.69E-02
3691	ALL		746962.33	4035054.27	NonCancerAcute	0.00E+00	1.22E-05	2.59E-03	0.00E+00	0.00E+00	2.60E-03	6.27E-03	0.00E+00	1.71E-02	0.00E+00	0.00E+00	2.59E-03	0.00E+00	0.00E+00	1.71E-02
3692	ALL		747420	4038175	NonCancerAcute	0.00E+00	1.22E-05	2.59E-03	0.00E+00	0.00E+00	2.61E-03	8.51E-03	0.00E+00	1.99E-02	0.00E+00	0.00E+00	2.59E-03	0.00E+00	0.00E+00	1.99E-02
3693	ALL		747470	4038175	NonCancerAcute	0.00E+00	1.22E-05	2.59E-03	0.00E+00	0.00E+00	2.60E-03	8.36E-03	0.00E+00	1.96E-02	0.00E+00	0.00E+00	2.59E-03	0.00E+00	0.00E+00	1.96E-02
3694	ALL		747520	4038175	NonCancerAcute	0.00E+00	1.19E-05	2.53E-03	0.00E+00	0.00E+00	2.54E-03	8.51E-03	0.00E+00	1.96E-02	0.00E+00	0.00E+00	2.53E-03	0.00E+00	0.00E+00	1.96E-02
3695	ALL	SENS	747420	4038225	NonCancerAcute	0.00E+00	1.23E-05	2.61E-03	0.00E+00	0.00E+00	2.62E-03	8.53E-03	0.00E+00	1.99E-02	0.00E+00	0.00E+00	2.61E-03	0.00E+00	0.00E+00	1.99E-02
3696	ALL	SENS	747470	4038225	NonCancerAcute	0.00E+00	1.22E-05	2.59E-03	0.00E+00	0.00E+00	2.60E-03	8.20E-03	0.00E+00	1.94E-02	0.00E+00	0.00E+00	2.59E-03	0.00E+00	0.00E+00	1.94E-02
3697	ALL	SENS	747520	4038225	NonCancerAcute	0.00E+00	1.21E-05	2.57E-03	0.00E+00	0.00E+00	2.58E-03	8.48E-03	0.00E+00	1.97E-02	0.00E+00	0.00E+00	2.57E-03	0.00E+00	0.00E+00	1.97E-02
3698	ALL	SENS	747420	4038275	NonCancerAcute	0.00E+00	1.24E-05	2.63E-03	0.00E+00	0.00E+00	2.64E-03	8.49E-03	0.00E+00	1.99E-02	0.00E+00	0.00E+00	2.63E-03	0.00E+00	0.00E+00	1.99E-02
3699	ALL	SENS	747470	4038275	NonCancerAcute	0.00E+00	1.23E-05	2.61E-03	0.00E+00	0.00E+00	2.62E-03	8.36E-03	0.00E+00	1.97E-02	0.00E+00	0.00E+00	2.61E-03	0.00E+00	0.00E+00	1.97E-02
3700	ALL	SENS	747520	4038275	NonCancerAcute	0.00E+00	1.21E-05	2.58E-03	0.00E+00	0.00E+00	2.59E-03	8.26E-03	0.00E+00	1.95E-02	0.00E+00	0.00E+00	2.58E-03	0.00E+00	0.00E+00	1.95E-02
3701	ALL		747420	4038325	NonCancerAcute	0.00E+00	1.24E-05	2.64E-03	0.00E+00	0.00E+00	2.66E-03	8.42E-03	0.00E+00	1.99E-02	0.00E+00	0.00E+00	2.64E-03	0.00E+00	0.00E+00	1.99E-02
3702	ALL		747470	4038325	NonCancerAcute	0.00E+00	1.23E-05	2.61E-03	0.00E+00	0.00E+00	2.62E-03	8.38E-03	0.00E+00	1.97E-02	0.00E+00	0.00E+00	2.61E-03	0.00E+00	0.00E+00	1.97E-02
3703	ALL		747520	4038325	NonCancerAcute	0.00E+00	1.21E-05	2.57E-03	0.00E+00	0.00E+00	2.59E-03	8.05E-03	0.00E+00	1.92E-02	0.00E+00	0.00E+00	2.57E-03	0.00E+00	0.00E+00	1.92E-02
3704	ALL		746279	4039819	NonCancerAcute	0.00E+00	1.17E-05	2.48E-03	0.00E+00	0.00E+00	2.49E-03	6.68E-03	0.00E+00	1.72E-02	0.00E+00	0.00E+00	2.48E-03	0.00E+00	0.00E+00	1.72E-02
3705	ALL		746329	4039819	NonCancerAcute	0.00E+00	1.18E-05	2.50E-03	0.00E+00	0.00E+00	2.51E-03	6.69E-03	0.00E+00	1.73E-02	0.00E+00	0.00E+00	2.50E-03	0.00E+00	0.00E+00	1.73E-02
3706	ALL		746379	4039819	NonCancerAcute	0.00E+00	1.19E-05	2.52E-03	0.00E+00	0.00E+00	2.53E-03	6.74E-03	0.00E+00	1.74E-02	0.00E+00	0.00E+00	2.52E-03	0.00E+00	0.00E+00	1.74E-02
3707	ALL	SENS	746429	4039819	NonCancerAcute	0.00E+00	1.19E-05	2.52E-03	0.00E+00	0.00E+00	2.53E-03	6.69E-03	0.00E+00	1.74E-02	0.00E+00	0.00E+00	2.52E-03	0.00E+00	0.00E+00	1.74E-02
3708	ALL	SENS	746479	4039819	NonCancerAcute	0.00E+00	1.18E-05	2.51E-03	0.00E+00	0.00E+00	2.52E-03	6.74E-03	0.00E+00	1.74E-02	0.00E+00	0.00E+00	2.51E-03	0.00E+00	0.00E+00	1.74E-02

3709	ALL		746529	4039819	NonCancerAcute	0.00E+00	1.21E-05	2.56E-03	0.00E+00	0.00E+00	2.57E-03	6.77E-03	0.00E+00	1.76E-02	0.00E+00	0.00E+00	2.56E-03	0.00E+00	0.00E+00	1.76E-02
3710	ALL	SENS	746279	4039869	NonCancerAcute	0.00E+00	1.16E-05	2.45E-03	0.00E+00	0.00E+00	2.47E-03	6.63E-03	0.00E+00	1.70E-02	0.00E+00	0.00E+00	2.45E-03	0.00E+00	0.00E+00	1.70E-02
3711	ALL	SENS	746329	4039869	NonCancerAcute	0.00E+00	1.16E-05	2.47E-03	0.00E+00	0.00E+00	2.48E-03	6.67E-03	0.00E+00	1.71E-02	0.00E+00	0.00E+00	2.47E-03	0.00E+00	0.00E+00	1.71E-02
3712	ALL	SENS	746379	4039869	NonCancerAcute	0.00E+00	1.16E-05	2.47E-03	0.00E+00	0.00E+00	2.48E-03	6.71E-03	0.00E+00	1.72E-02	0.00E+00	0.00E+00	2.47E-03	0.00E+00	0.00E+00	1.72E-02
3713	ALL	SENS	746429	4039869	NonCancerAcute	0.00E+00	1.16E-05	2.46E-03	0.00E+00	0.00E+00	2.47E-03	6.67E-03	0.00E+00	1.71E-02	0.00E+00	0.00E+00	2.46E-03	0.00E+00	0.00E+00	1.71E-02
3714	ALL	SENS	746479	4039869	NonCancerAcute	0.00E+00	1.16E-05	2.45E-03	0.00E+00	0.00E+00	2.46E-03	6.74E-03	0.00E+00	1.72E-02	0.00E+00	0.00E+00	2.45E-03	0.00E+00	0.00E+00	1.72E-02
3715	ALL		746529	4039869	NonCancerAcute	0.00E+00	1.18E-05	2.50E-03	0.00E+00	0.00E+00	2.51E-03	6.79E-03	0.00E+00	1.74E-02	0.00E+00	0.00E+00	2.50E-03	0.00E+00	0.00E+00	1.74E-02
3716	ALL	SENS	746279	4039919	NonCancerAcute	0.00E+00	1.17E-05	2.48E-03	0.00E+00	0.00E+00	2.49E-03	6.44E-03	0.00E+00	1.69E-02	0.00E+00	0.00E+00	2.48E-03	0.00E+00	0.00E+00	1.69E-02
3717	ALL	SENS	746329	4039919	NonCancerAcute	0.00E+00	1.17E-05	2.49E-03	0.00E+00	0.00E+00	2.50E-03	6.51E-03	0.00E+00	1.70E-02	0.00E+00	0.00E+00	2.49E-03	0.00E+00	0.00E+00	1.70E-02
3718	ALL	SENS	746379	4039919	NonCancerAcute	0.00E+00	1.17E-05	2.49E-03	0.00E+00	0.00E+00	2.50E-03	6.55E-03	0.00E+00	1.71E-02	0.00E+00	0.00E+00	2.49E-03	0.00E+00	0.00E+00	1.71E-02
3719	ALL		746429	4039919	NonCancerAcute	0.00E+00	1.16E-05	2.46E-03	0.00E+00	0.00E+00	2.47E-03	6.53E-03	0.00E+00	1.69E-02	0.00E+00	0.00E+00	2.46E-03	0.00E+00	0.00E+00	1.69E-02
3720	ALL		746479	4039919	NonCancerAcute	0.00E+00	1.16E-05	2.46E-03	0.00E+00	0.00E+00	2.47E-03	6.60E-03	0.00E+00	1.70E-02	0.00E+00	0.00E+00	2.46E-03	0.00E+00	0.00E+00	1.70E-02
3721	ALL		746529	4039919	NonCancerAcute	0.00E+00	1.18E-05	2.50E-03	0.00E+00	0.00E+00	2.51E-03	6.66E-03	0.00E+00	1.72E-02	0.00E+00	0.00E+00	2.50E-03	0.00E+00	0.00E+00	1.72E-02
3722	ALL		746279	4039969	NonCancerAcute	0.00E+00	1.16E-05	2.46E-03	0.00E+00	0.00E+00	2.47E-03	6.24E-03	0.00E+00	1.66E-02	0.00E+00	0.00E+00	2.46E-03	0.00E+00	0.00E+00	1.66E-02
3723	ALL		746329	4039969	NonCancerAcute	0.00E+00	1.17E-05	2.48E-03	0.00E+00	0.00E+00	2.49E-03	6.32E-03	0.00E+00	1.68E-02	0.00E+00	0.00E+00	2.48E-03	0.00E+00	0.00E+00	1.68E-02
3724	ALL		746379	4039969	NonCancerAcute	0.00E+00	1.17E-05	2.49E-03	0.00E+00	0.00E+00	2.50E-03	6.33E-03	0.00E+00	1.68E-02	0.00E+00	0.00E+00	2.49E-03	0.00E+00	0.00E+00	1.68E-02
3725	ALL		746429	4039969	NonCancerAcute	0.00E+00	1.16E-05	2.47E-03	0.00E+00	0.00E+00	2.48E-03	6.34E-03	0.00E+00	1.67E-02	0.00E+00	0.00E+00	2.47E-03	0.00E+00	0.00E+00	1.67E-02
3726	ALL		746479	4039969	NonCancerAcute	0.00E+00	1.17E-05	2.49E-03	0.00E+00	0.00E+00	2.50E-03	6.39E-03	0.00E+00	1.69E-02	0.00E+00	0.00E+00	2.49E-03	0.00E+00	0.00E+00	1.69E-02
3727	ALL		746529	4039969	NonCancerAcute	0.00E+00	1.19E-05	2.52E-03	0.00E+00	0.00E+00	2.53E-03	6.43E-03	0.00E+00	1.70E-02	0.00E+00	0.00E+00	2.52E-03	0.00E+00	0.00E+00	1.70E-02
3728	ALL		746279	4040019	NonCancerAcute	0.00E+00	1.16E-05	2.46E-03	0.00E+00	0.00E+00	2.47E-03	6.19E-03	0.00E+00	1.65E-02	0.00E+00	0.00E+00	2.46E-03	0.00E+00	0.00E+00	1.65E-02
3729	ALL		746329	4040019	NonCancerAcute	0.00E+00	1.16E-05	2.47E-03	0.00E+00	0.00E+00	2.48E-03	6.27E-03	0.00E+00	1.67E-02	0.00E+00	0.00E+00	2.47E-03	0.00E+00	0.00E+00	1.67E-02
3730	ALL		746379	4040019	NonCancerAcute	0.00E+00	1.16E-05	2.47E-03	0.00E+00	0.00E+00	2.48E-03	6.27E-03	0.00E+00	1.66E-02	0.00E+00	0.00E+00	2.47E-03	0.00E+00	0.00E+00	1.66E-02
3731	ALL		746429	4040019	NonCancerAcute	0.00E+00	1.15E-05	2.43E-03	0.00E+00	0.00E+00	2.45E-03	6.29E-03	0.00E+00	1.65E-02	0.00E+00	0.00E+00	2.43E-03	0.00E+00	0.00E+00	1.65E-02
3732	ALL		746479	4040019	NonCancerAcute	0.00E+00	1.16E-05	2.47E-03	0.00E+00	0.00E+00	2.48E-03	6.34E-03	0.00E+00	1.67E-02	0.00E+00	0.00E+00	2.47E-03	0.00E+00	0.00E+00	1.67E-02
3733	ALL		746529	4040019	NonCancerAcute	0.00E+00	1.18E-05	2.50E-03	0.00E+00	0.00E+00	2.51E-03	6.37E-03	0.00E+00	1.69E-02	0.00E+00	0.00E+00	2.50E-03	0.00E+00	0.00E+00	1.69E-02
3734	ALL		746566	4040066	NonCancerAcute	0.00E+00	1.18E-05	2.51E-03	0.00E+00	0.00E+00	2.52E-03	6.37E-03	0.00E+00	1.69E-02	0.00E+00	0.00E+00	2.51E-03	0.00E+00	0.00E+00	1.69E-02
3735	ALL	SENS	746576	4040066	NonCancerAcute	0.00E+00	1.18E-05	2.50E-03	0.00E+00	0.00E+00	2.51E-03	6.36E-03	0.00E+00	1.69E-02	0.00E+00	0.00E+00	2.50E-03	0.00E+00	0.00E+00	1.69E-02
3736	ALL	SENS	746586	4040066	NonCancerAcute	0.00E+00	1.18E-05	2.50E-03	0.00E+00	0.00E+00	2.51E-03	6.35E-03	0.00E+00	1.69E-02	0.00E+00	0.00E+00	2.50E-03	0.00E+00	0.00E+00	1.69E-02
3737	ALL	SENS	746596	4040066	NonCancerAcute	0.00E+00	1.18E-05	2.51E-03	0.00E+00	0.00E+00	2.52E-03	6.34E-03	0.00E+00	1.69E-02	0.00E+00	0.00E+00	2.51E-03	0.00E+00	0.00E+00	1.69E-02
3738	ALL	SENS	746606	4040066	NonCancerAcute	0.00E+00	1.18E-05	2.51E-03	0.00E+00	0.00E+00	2.52E-03	6.33E-03	0.00E+00	1.69E-02	0.00E+00	0.00E+00	2.51E-03	0.00E+00	0.00E+00	1.69E-02
3739	ALL	SENS	746616	4040066	NonCancerAcute	0.00E+00	1.18E-05	2.51E-03	0.00E+00	0.00E+00	2.53E-03	6.32E-03	0.00E+00	1.69E-02	0.00E+00	0.00E+00	2.51E-03	0.00E+00	0.00E+00	1.69E-02
3740	ALL	SENS	746566	4040076	NonCancerAcute	0.00E+00	1.17E-05	2.49E-03	0.00E+00	0.00E+00	2.50E-03	6.37E-03	0.00E+00	1.69E-02	0.00E+00	0.00E+00	2.49E-03	0.00E+00	0.00E+00	1.69E-02
3741	ALL	SENS	746576	4040076	NonCancerAcute	0.00E+00	1.17E-05	2.49E-03	0.00E+00	0.00E+00	2.50E-03	6.36E-03	0.00E+00	1.68E-02	0.00E+00	0.00E+00	2.49E-03	0.00E+00	0.00E+00	1.68E-02
3742	ALL	SENS	746586	4040076	NonCancerAcute	0.00E+00	1.17E-05	2.49E-03	0.00E+00	0.00E+00	2.50E-03	6.35E-03	0.00E+00	1.68E-02	0.00E+00	0.00E+00	2.49E-03	0.00E+00	0.00E+00	1.68E-02
3743	ALL	SENS	746596	4040076	NonCancerAcute	0.00E+00	1.18E-05	2.50E-03	0.00E+00	0.00E+00	2.51E-03	6.34E-03	0.00E+00	1.68E-02	0.00E+00	0.00E+00	2.50E-03	0.00E+00	0.00E+00	1.68E-02
3744	ALL	SENS	746606	4040076	NonCancerAcute	0.00E+00	1.18E-05	2.50E-03	0.00E+00	0.00E+00	2.51E-03	6.33E-03	0.00E+00	1.68E-02	0.00E+00	0.00E+00	2.50E-03	0.00E+00	0.00E+00	1.68E-02
3745	ALL	SENS	746616	4040076	NonCancerAcute	0.00E+00	1.18E-05	2.50E-03	0.00E+00	0.00E+00	2.52E-03	6.33E-03	0.00E+00	1.69E-02	0.00E+00	0.00E+00	2.50E-03	0.00E+00	0.00E+00	1.69E-02
3746	ALL	SENS	746566	4040086	NonCancerAcute	0.00E+00	1.17E-05	2.49E-03	0.00E+00	0.00E+00	2.50E-03	6.36E-03	0.00E+00	1.68E-02	0.00E+00	0.00E+00	2.49E-03	0.00E+00	0.00E+00	1.68E-02
3747	ALL	SENS	746576	4040086	NonCancerAcute	0.00E+00	1.17E-05	2.48E-03	0.00E+00	0.00E+00	2.49E-03	6.35E-03	0.00E+00	1.68E-02	0.00E+00	0.00E+00	2.48E-03	0.00E+00	0.00E+00	1.68E-02
3748	ALL	SENS	746586	4040086	NonCancerAcute	0.00E+00	1.17E-05	2.48E-03	0.00E+00	0.00E+00	2.50E-03	6.34E-03	0.00E+00	1.68E-02	0.00E+00	0.00E+00	2.48E-03	0.00E+00	0.00E+00	1.68E-02
3749	ALL	SENS	746596	4040086	NonCancerAcute	0.00E+00	1.17E-05	2.49E-03	0.00E+00	0.00E+00	2.50E-03	6.33E-03	0.00E+00	1.68E-02	0.00E+00	0.00E+00	2.49E-03	0.00E+00	0.00E+00	1.68E-02
3750	ALL	SENS	746606	4040086	NonCancerAcute	0.00E+00	1.17E-05	2.49E-03	0.00E+00	0.00E+00	2.50E-03	6.32E-03	0.00E+00	1.68E-02	0.00E+00	0.00E+00	2.49E-03	0.00E+00	0.00E+00	1.68E-02
3751	ALL	SENS	746616	4040086	NonCancerAcute	0.00E+00	1.17E-05	2.49E-03	0.00E+00	0.00E+00	2.50E-03	6.32E-03	0.00E+00	1.68E-02	0.00E+00	0.00E+00	2.49E-03	0.00E+00	0.00E+00	1.68E-02
3752	ALL	SENS	746566	4040096	NonCancerAcute	0.00E+00	1.18E-05	2.50E-03	0.00E+00	0.00E+00	2.52E-03	6.35E-03	0.00E+00	1.69E-02	0.00E+00	0.00E+00	2.50E-03	0.00E+00	0.00E+00	1.69E-02
3753	ALL	SENS	746576	4040096	NonCancerAcute	0.00E+00	1.18E-05	2.50E-03	0.00E+00	0.00E+00	2.51E-03	6.34E-03	0.00E+00	1.68E-02	0.00E+00	0.00E+00	2.50E-03	0.00E+00	0.00E+00	1.68E-02
3754	ALL	SENS	746586	4040096	NonCancerAcute	0.00E+00	1.18E-05	2.50E-03	0.00E+00	0.00E+00	2.51E-03	6.33E-03	0.00E+00	1.68E-02	0.00E+00	0.00E+00	2.50E-03	0.00E+00	0.00E+00	1.68E-02
3755	ALL	SENS	746596	4040096	NonCancerAcute	0.00E+00	1.18E-05	2.50E-03	0.00E+00	0.00E+00	2.51E-03	6.32E-03	0.00E+00	1.68E-02	0.00E+00	0.00E+00	2.50E-03	0.00E+00	0.00E+00	1.68E-02
3756	ALL	SENS	746606	4040096	NonCancerAcute	0.00E+00	1.18E-05	2.50E-03	0.00E+00	0.00E+00	2.52E-03	6.31E-03	0.00E+00	1.68E-02	0.00E+00	0.00E+00	2.50E-03	0.00E+00	0.00E+00	1.68E-02
3757	ALL	SENS	746616	4040096	NonCancerAcute	0.00E+00	1.18E-05	2.51E-03	0.00E+00	0.00E+00	2.52E-03	6.32E-03	0.00E+00	1.69E-02	0.00E+00	0.00E+00	2.51E-03	0.00E+00	0.00E+00	1.69E-02
3758	ALL	SENS	746566	4040106	NonCancerAcute	0.00E+00	1.18E-05	2.52E-03	0.00E+00	0.00E+00	2.53E-03	6.34E-03	0.00E+00	1.69E-02	0.00E+00	0.00E+00	2.52E-03	0.00E+00	0.00E+00	1.69E-02
3759	ALL	SENS	746576	4040106	NonCancerAcute	0.00E+00	1.18E-05	2.51E-03	0.00E+00	0.00E+00	2.52E-03	6.33E-03	0.00E+00	1.69E-02	0.00E+00	0.00E+00	2.51E-03	0.00E+00	0.00E+00	1.69E-02
3760	ALL	SENS	746586	4040106	NonCancerAcute	0.00E+00	1.18E-05	2.52E-03	0.00E+00	0.00E+00	2.53E-03	6.32E-03	0.00E+00	1.69E-02	0.00E+00	0.00E+00	2.52E-03	0.00E+00	0.00E+00	1.69E-02
3761	ALL	SENS	746596	4040106	NonCancerAcute	0.00E+00	1.19E-05	2.52E-03	0.00E+00	0.00E+00	2.53E-03	6.31E-03	0.00E+00	1.69E-02	0.00E+00	0.00E+00	2.52E-03	0.00E+00	0.00E+00	1.69E-02

3762	ALL	SENS	746606	4040106	NonCancerAcute	0.00E+00	1.19E-05	2.52E-03	0.00E+00	0.00E+00	2.53E-03	6.30E-03	0.00E+00	1.69E-02	0.00E+00	0.00E+00	2.52E-03	0.00E+00	0.00E+00	1.69E-02
3763	ALL	SENS	746616	4040106	NonCancerAcute	0.00E+00	1.19E-05	2.52E-03	0.00E+00	0.00E+00	2.53E-03	6.31E-03	0.00E+00	1.69E-02	0.00E+00	0.00E+00	2.52E-03	0.00E+00	0.00E+00	1.69E-02
3764	ALL	SENS	746566	4040116	NonCancerAcute	0.00E+00	1.19E-05	2.53E-03	0.00E+00	0.00E+00	2.54E-03	6.32E-03	0.00E+00	1.69E-02	0.00E+00	0.00E+00	2.53E-03	0.00E+00	0.00E+00	1.69E-02
3765	ALL	SENS	746576	4040116	NonCancerAcute	0.00E+00	1.19E-05	2.52E-03	0.00E+00	0.00E+00	2.53E-03	6.31E-03	0.00E+00	1.69E-02	0.00E+00	0.00E+00	2.52E-03	0.00E+00	0.00E+00	1.69E-02
3766	ALL	SENS	746586	4040116	NonCancerAcute	0.00E+00	1.19E-05	2.53E-03	0.00E+00	0.00E+00	2.54E-03	6.30E-03	0.00E+00	1.69E-02	0.00E+00	0.00E+00	2.53E-03	0.00E+00	0.00E+00	1.69E-02
3767	ALL	SENS	746596	4040116	NonCancerAcute	0.00E+00	1.19E-05	2.53E-03	0.00E+00	0.00E+00	2.54E-03	6.29E-03	0.00E+00	1.69E-02	0.00E+00	0.00E+00	2.53E-03	0.00E+00	0.00E+00	1.69E-02
3768	ALL	SENS	746606	4040116	NonCancerAcute	0.00E+00	1.19E-05	2.53E-03	0.00E+00	0.00E+00	2.54E-03	6.28E-03	0.00E+00	1.69E-02	0.00E+00	0.00E+00	2.53E-03	0.00E+00	0.00E+00	1.69E-02
3769	ALL	SENS	746616	4040116	NonCancerAcute	0.00E+00	1.19E-05	2.53E-03	0.00E+00	0.00E+00	2.54E-03	6.30E-03	0.00E+00	1.69E-02	0.00E+00	0.00E+00	2.53E-03	0.00E+00	0.00E+00	1.69E-02
3770	ALL	SENS	746566	4040126	NonCancerAcute	0.00E+00	1.20E-05	2.54E-03	0.00E+00	0.00E+00	2.55E-03	6.31E-03	0.00E+00	1.70E-02	0.00E+00	0.00E+00	2.54E-03	0.00E+00	0.00E+00	1.70E-02
3771	ALL	SENS	746576	4040126	NonCancerAcute	0.00E+00	1.19E-05	2.54E-03	0.00E+00	0.00E+00	2.55E-03	6.30E-03	0.00E+00	1.69E-02	0.00E+00	0.00E+00	2.54E-03	0.00E+00	0.00E+00	1.69E-02
3772	ALL	SENS	746586	4040126	NonCancerAcute	0.00E+00	1.20E-05	2.54E-03	0.00E+00	0.00E+00	2.55E-03	6.29E-03	0.00E+00	1.69E-02	0.00E+00	0.00E+00	2.54E-03	0.00E+00	0.00E+00	1.69E-02
3773	ALL	SENS	746596	4040126	NonCancerAcute	0.00E+00	1.20E-05	2.54E-03	0.00E+00	0.00E+00	2.56E-03	6.28E-03	0.00E+00	1.69E-02	0.00E+00	0.00E+00	2.54E-03	0.00E+00	0.00E+00	1.69E-02
3774	ALL	SENS	746606	4040126	NonCancerAcute	0.00E+00	1.20E-05	2.55E-03	0.00E+00	0.00E+00	2.56E-03	6.27E-03	0.00E+00	1.69E-02	0.00E+00	0.00E+00	2.55E-03	0.00E+00	0.00E+00	1.69E-02
3775	ALL	SENS	746616	4040126	NonCancerAcute	0.00E+00	1.20E-05	2.55E-03	0.00E+00	0.00E+00	2.56E-03	6.30E-03	0.00E+00	1.70E-02	0.00E+00	0.00E+00	2.55E-03	0.00E+00	0.00E+00	1.70E-02
3776	ALL	SENS	746566	4040136	NonCancerAcute	0.00E+00	1.20E-05	2.55E-03	0.00E+00	0.00E+00	2.56E-03	6.31E-03	0.00E+00	1.70E-02	0.00E+00	0.00E+00	2.55E-03	0.00E+00	0.00E+00	1.70E-02
3777	ALL	SENS	746576	4040136	NonCancerAcute	0.00E+00	1.20E-05	2.55E-03	0.00E+00	0.00E+00	2.56E-03	6.30E-03	0.00E+00	1.70E-02	0.00E+00	0.00E+00	2.55E-03	0.00E+00	0.00E+00	1.70E-02
3778	ALL	SENS	746586	4040136	NonCancerAcute	0.00E+00	1.20E-05	2.55E-03	0.00E+00	0.00E+00	2.56E-03	6.29E-03	0.00E+00	1.70E-02	0.00E+00	0.00E+00	2.55E-03	0.00E+00	0.00E+00	1.70E-02
3779	ALL	SENS	746596	4040136	NonCancerAcute	0.00E+00	1.20E-05	2.56E-03	0.00E+00	0.00E+00	2.57E-03	6.28E-03	0.00E+00	1.70E-02	0.00E+00	0.00E+00	2.56E-03	0.00E+00	0.00E+00	1.70E-02
3780	ALL	SENS	746606	4040136	NonCancerAcute	0.00E+00	1.20E-05	2.56E-03	0.00E+00	0.00E+00	2.57E-03	6.27E-03	0.00E+00	1.70E-02	0.00E+00	0.00E+00	2.56E-03	0.00E+00	0.00E+00	1.70E-02
3781	ALL	SENS	746616	4040136	NonCancerAcute	0.00E+00	1.21E-05	2.56E-03	0.00E+00	0.00E+00	2.57E-03	6.30E-03	0.00E+00	1.70E-02	0.00E+00	0.00E+00	2.56E-03	0.00E+00	0.00E+00	1.70E-02
3782	ALL	SENS	746566	4040146	NonCancerAcute	0.00E+00	1.20E-05	2.56E-03	0.00E+00	0.00E+00	2.57E-03	6.33E-03	0.00E+00	1.70E-02	0.00E+00	0.00E+00	2.56E-03	0.00E+00	0.00E+00	1.70E-02
3783	ALL	SENS	746576	4040146	NonCancerAcute	0.00E+00	1.20E-05	2.56E-03	0.00E+00	0.00E+00	2.57E-03	6.32E-03	0.00E+00	1.70E-02	0.00E+00	0.00E+00	2.56E-03	0.00E+00	0.00E+00	1.70E-02
3784	ALL	SENS	746586	4040146	NonCancerAcute	0.00E+00	1.20E-05	2.56E-03	0.00E+00	0.00E+00	2.57E-03	6.31E-03	0.00E+00	1.70E-02	0.00E+00	0.00E+00	2.56E-03	0.00E+00	0.00E+00	1.70E-02
3785	ALL	SENS	746596	4040146	NonCancerAcute	0.00E+00	1.21E-05	2.56E-03	0.00E+00	0.00E+00	2.57E-03	6.30E-03	0.00E+00	1.70E-02	0.00E+00	0.00E+00	2.56E-03	0.00E+00	0.00E+00	1.70E-02
3786	ALL	SENS	746606	4040146	NonCancerAcute	0.00E+00	1.21E-05	2.56E-03	0.00E+00	0.00E+00	2.58E-03	6.28E-03	0.00E+00	1.70E-02	0.00E+00	0.00E+00	2.56E-03	0.00E+00	0.00E+00	1.70E-02
3787	ALL	SENS	746616	4040146	NonCancerAcute	0.00E+00	1.21E-05	2.57E-03	0.00E+00	0.00E+00	2.58E-03	6.31E-03	0.00E+00	1.71E-02	0.00E+00	0.00E+00	2.57E-03	0.00E+00	0.00E+00	1.71E-02
3788	ALL	SENS	746566	4040156	NonCancerAcute	0.00E+00	1.20E-05	2.56E-03	0.00E+00	0.00E+00	2.57E-03	6.34E-03	0.00E+00	1.71E-02	0.00E+00	0.00E+00	2.56E-03	0.00E+00	0.00E+00	1.71E-02
3789	ALL	SENS	746576	4040156	NonCancerAcute	0.00E+00	1.20E-05	2.56E-03	0.00E+00	0.00E+00	2.57E-03	6.33E-03	0.00E+00	1.70E-02	0.00E+00	0.00E+00	2.56E-03	0.00E+00	0.00E+00	1.70E-02
3790	ALL	SENS	746586	4040156	NonCancerAcute	0.00E+00	1.21E-05	2.56E-03	0.00E+00	0.00E+00	2.57E-03	6.32E-03	0.00E+00	1.70E-02	0.00E+00	0.00E+00	2.56E-03	0.00E+00	0.00E+00	1.70E-02
3791	ALL	SENS	746596	4040156	NonCancerAcute	0.00E+00	1.21E-05	2.56E-03	0.00E+00	0.00E+00	2.57E-03	6.31E-03	0.00E+00	1.70E-02	0.00E+00	0.00E+00	2.56E-03	0.00E+00	0.00E+00	1.70E-02
3792	ALL	SENS	746606	4040156	NonCancerAcute	0.00E+00	1.21E-05	2.56E-03	0.00E+00	0.00E+00	2.58E-03	6.30E-03	0.00E+00	1.70E-02	0.00E+00	0.00E+00	2.56E-03	0.00E+00	0.00E+00	1.70E-02
3793	ALL	SENS	746616	4040156	NonCancerAcute	0.00E+00	1.21E-05	2.57E-03	0.00E+00	0.00E+00	2.58E-03	6.33E-03	0.00E+00	1.71E-02	0.00E+00	0.00E+00	2.57E-03	0.00E+00	0.00E+00	1.71E-02
3794	ALL	SENS	746566	4040166	NonCancerAcute	0.00E+00	1.20E-05	2.55E-03	0.00E+00	0.00E+00	2.56E-03	6.35E-03	0.00E+00	1.71E-02	0.00E+00	0.00E+00	2.55E-03	0.00E+00	0.00E+00	1.71E-02
3795	ALL	SENS	746576	4040166	NonCancerAcute	0.00E+00	1.20E-05	2.55E-03	0.00E+00	0.00E+00	2.56E-03	6.34E-03	0.00E+00	1.70E-02	0.00E+00	0.00E+00	2.55E-03	0.00E+00	0.00E+00	1.70E-02
3796	ALL	SENS	746586	4040166	NonCancerAcute	0.00E+00	1.20E-05	2.55E-03	0.00E+00	0.00E+00	2.57E-03	6.33E-03	0.00E+00	1.70E-02	0.00E+00	0.00E+00	2.55E-03	0.00E+00	0.00E+00	1.70E-02
3797	ALL	SENS	746596	4040166	NonCancerAcute	0.00E+00	1.20E-05	2.56E-03	0.00E+00	0.00E+00	2.57E-03	6.32E-03	0.00E+00	1.70E-02	0.00E+00	0.00E+00	2.56E-03	0.00E+00	0.00E+00	1.70E-02
3798	ALL	SENS	746606	4040166	NonCancerAcute	0.00E+00	1.21E-05	2.56E-03	0.00E+00	0.00E+00	2.57E-03	6.31E-03	0.00E+00	1.70E-02	0.00E+00	0.00E+00	2.56E-03	0.00E+00	0.00E+00	1.70E-02
3799	ALL	SENS	746616	4040166	NonCancerAcute	0.00E+00	1.21E-05	2.57E-03	0.00E+00	0.00E+00	2.58E-03	6.34E-03	0.00E+00	1.71E-02	0.00E+00	0.00E+00	2.57E-03	0.00E+00	0.00E+00	1.71E-02
3800	ALL		746559.72	4040315.67	NonCancerAcute	0.00E+00	1.15E-05	2.45E-03	0.00E+00	0.00E+00	2.46E-03	6.10E-03	0.00E+00	1.64E-02	0.00E+00	0.00E+00	2.45E-03	0.00E+00	0.00E+00	1.64E-02
3801	ALL		746569.72	4040315.67	NonCancerAcute	0.00E+00	1.15E-05	2.44E-03	0.00E+00	0.00E+00	2.45E-03	6.08E-03	0.00E+00	1.63E-02	0.00E+00	0.00E+00	2.44E-03	0.00E+00	0.00E+00	1.63E-02
3802	ALL		746579.72	4040315.67	NonCancerAcute	0.00E+00	1.15E-05	2.44E-03	0.00E+00	0.00E+00	2.45E-03	6.07E-03	0.00E+00	1.63E-02	0.00E+00	0.00E+00	2.44E-03	0.00E+00	0.00E+00	1.63E-02
3803	ALL		746589.72	4040315.67	NonCancerAcute	0.00E+00	1.15E-05	2.44E-03	0.00E+00	0.00E+00	2.45E-03	6.05E-03	0.00E+00	1.63E-02	0.00E+00	0.00E+00	2.44E-03	0.00E+00	0.00E+00	1.63E-02
3804	ALL		746599.72	4040315.67	NonCancerAcute	0.00E+00	1.15E-05	2.45E-03	0.00E+00	0.00E+00	2.46E-03	6.08E-03	0.00E+00	1.63E-02	0.00E+00	0.00E+00	2.45E-03	0.00E+00	0.00E+00	1.63E-02
3805	ALL		746609.72	4040315.67	NonCancerAcute	0.00E+00	1.16E-05	2.45E-03	0.00E+00	0.00E+00	2.46E-03	6.11E-03	0.00E+00	1.64E-02	0.00E+00	0.00E+00	2.45E-03	0.00E+00	0.00E+00	1.64E-02
3806	ALL		746619.72	4040315.67	NonCancerAcute	0.00E+00	1.16E-05	2.46E-03	0.00E+00	0.00E+00	2.47E-03	6.13E-03	0.00E+00	1.64E-02	0.00E+00	0.00E+00	2.46E-03	0.00E+00	0.00E+00	1.64E-02
3807	ALL		746559.72	4040325.67	NonCancerAcute	0.00E+00	1.15E-05	2.45E-03	0.00E+00	0.00E+00	2.46E-03	6.09E-03	0.00E+00	1.63E-02	0.00E+00	0.00E+00	2.45E-03	0.00E+00	0.00E+00	1.63E-02
3808	ALL		746569.72	4040325.67	NonCancerAcute	0.00E+00	1.15E-05	2.44E-03	0.00E+00	0.00E+00	2.45E-03	6.07E-03	0.00E+00	1.63E-02	0.00E+00	0.00E+00	2.44E-03	0.00E+00	0.00E+00	1.63E-02
3809	ALL		746579.72	4040325.67	NonCancerAcute	0.00E+00	1.15E-05	2.44E-03	0.00E+00	0.00E+00	2.45E-03	6.06E-03	0.00E+00	1.63E-02	0.00E+00	0.00E+00	2.44E-03	0.00E+00	0.00E+00	1.63E-02
3810	ALL		746589.72	4040325.67	NonCancerAcute	0.00E+00	1.15E-05	2.44E-03	0.00E+00	0.00E+00	2.45E-03	6.04E-03	0.00E+00	1.63E-02	0.00E+00	0.00E+00	2.44E-03	0.00E+00	0.00E+00	1.63E-02
3811	ALL		746599.72	4040325.67	NonCancerAcute	0.00E+00	1.15E-05	2.45E-03	0.00E+00	0.00E+00	2.46E-03	6.07E-03	0.00E+00	1.63E-02	0.00E+00	0.00E+00	2.45E-03	0.00E+00	0.00E+00	1.63E-02
3812	ALL		746609.72	4040325.67	NonCancerAcute	0.00E+00	1.16E-05	2.46E-03	0.00E+00	0.00E+00	2.47E-03	6.09E-03	0.00E+00	1.64E-02	0.00E+00	0.00E+00	2.46E-03	0.00E+00	0.00E+00	1.64E-02
3813	ALL		746619.72	4040325.67	NonCancerAcute	0.00E+00	1.16E-05	2.46E-03	0.00E+00	0.00E+00	2.47E-03	6.12E-03	0.00E+00	1.64E-02	0.00E+00	0.00E+00	2.46E-03	0.00E+00	0.00E+00	1.64E-02
3814	ALL		746559.72	4040335.67	NonCancerAcute	0.00E+00	1.15E-05	2.44E-03	0.00E+00	0.00E+00	2.46E-03	6.07E-03	0.00E+00	1.63E-02	0.00E+00	0.00E+00	2.44E-03	0.00E+00	0.00E+00	1.63E-02

3815	ALL		746569.72	4040335.67	NonCancerAcute	0.00E+00	1.15E-05	2.44E-03	0.00E+00	0.00E+00	2.45E-03	6.05E-03	0.00E+00	1.63E-02	0.00E+00	0.00E+00	2.44E-03	0.00E+00	0.00E+00	1.63E-02
3816	ALL		746579.72	4040335.67	NonCancerAcute	0.00E+00	1.15E-05	2.44E-03	0.00E+00	0.00E+00	2.45E-03	6.03E-03	0.00E+00	1.63E-02	0.00E+00	0.00E+00	2.44E-03	0.00E+00	0.00E+00	1.63E-02
3817	ALL		746589.72	4040335.67	NonCancerAcute	0.00E+00	1.15E-05	2.44E-03	0.00E+00	0.00E+00	2.45E-03	6.02E-03	0.00E+00	1.63E-02	0.00E+00	0.00E+00	2.44E-03	0.00E+00	0.00E+00	1.63E-02
3818	ALL		746599.72	4040335.67	NonCancerAcute	0.00E+00	1.15E-05	2.45E-03	0.00E+00	0.00E+00	2.46E-03	6.05E-03	0.00E+00	1.63E-02	0.00E+00	0.00E+00	2.45E-03	0.00E+00	0.00E+00	1.63E-02
3819	ALL		746609.72	4040335.67	NonCancerAcute	0.00E+00	1.16E-05	2.45E-03	0.00E+00	0.00E+00	2.46E-03	6.08E-03	0.00E+00	1.64E-02	0.00E+00	0.00E+00	2.45E-03	0.00E+00	0.00E+00	1.64E-02
3820	ALL		746619.72	4040335.67	NonCancerAcute	0.00E+00	1.16E-05	2.46E-03	0.00E+00	0.00E+00	2.47E-03	6.10E-03	0.00E+00	1.64E-02	0.00E+00	0.00E+00	2.46E-03	0.00E+00	0.00E+00	1.64E-02
3821	ALL		746559.72	4040345.67	NonCancerAcute	0.00E+00	1.15E-05	2.44E-03	0.00E+00	0.00E+00	2.45E-03	6.07E-03	0.00E+00	1.63E-02	0.00E+00	0.00E+00	2.44E-03	0.00E+00	0.00E+00	1.63E-02
3822	ALL		746569.72	4040345.67	NonCancerAcute	0.00E+00	1.15E-05	2.44E-03	0.00E+00	0.00E+00	2.45E-03	6.05E-03	0.00E+00	1.63E-02	0.00E+00	0.00E+00	2.44E-03	0.00E+00	0.00E+00	1.63E-02
3823	ALL		746579.72	4040345.67	NonCancerAcute	0.00E+00	1.15E-05	2.43E-03	0.00E+00	0.00E+00	2.45E-03	6.03E-03	0.00E+00	1.62E-02	0.00E+00	0.00E+00	2.43E-03	0.00E+00	0.00E+00	1.62E-02
3824	ALL		746589.72	4040345.67	NonCancerAcute	0.00E+00	1.15E-05	2.44E-03	0.00E+00	0.00E+00	2.45E-03	6.03E-03	0.00E+00	1.62E-02	0.00E+00	0.00E+00	2.44E-03	0.00E+00	0.00E+00	1.62E-02
3825	ALL		746599.72	4040345.67	NonCancerAcute	0.00E+00	1.15E-05	2.44E-03	0.00E+00	0.00E+00	2.45E-03	6.06E-03	0.00E+00	1.63E-02	0.00E+00	0.00E+00	2.44E-03	0.00E+00	0.00E+00	1.63E-02
3826	ALL		746609.72	4040345.67	NonCancerAcute	0.00E+00	1.15E-05	2.45E-03	0.00E+00	0.00E+00	2.46E-03	6.09E-03	0.00E+00	1.64E-02	0.00E+00	0.00E+00	2.45E-03	0.00E+00	0.00E+00	1.64E-02
3827	ALL		746619.72	4040345.67	NonCancerAcute	0.00E+00	1.15E-05	2.45E-03	0.00E+00	0.00E+00	2.46E-03	6.11E-03	0.00E+00	1.64E-02	0.00E+00	0.00E+00	2.45E-03	0.00E+00	0.00E+00	1.64E-02
3828	ALL		746559.72	4040355.67	NonCancerAcute	0.00E+00	1.14E-05	2.43E-03	0.00E+00	0.00E+00	2.44E-03	6.06E-03	0.00E+00	1.63E-02	0.00E+00	0.00E+00	2.43E-03	0.00E+00	0.00E+00	1.63E-02
3829	ALL		746569.72	4040355.67	NonCancerAcute	0.00E+00	1.14E-05	2.43E-03	0.00E+00	0.00E+00	2.44E-03	6.04E-03	0.00E+00	1.62E-02	0.00E+00	0.00E+00	2.43E-03	0.00E+00	0.00E+00	1.62E-02
3830	ALL		746579.72	4040355.67	NonCancerAcute	0.00E+00	1.14E-05	2.42E-03	0.00E+00	0.00E+00	2.44E-03	6.03E-03	0.00E+00	1.62E-02	0.00E+00	0.00E+00	2.42E-03	0.00E+00	0.00E+00	1.62E-02
3831	ALL		746589.72	4040355.67	NonCancerAcute	0.00E+00	1.14E-05	2.43E-03	0.00E+00	0.00E+00	2.44E-03	6.02E-03	0.00E+00	1.62E-02	0.00E+00	0.00E+00	2.43E-03	0.00E+00	0.00E+00	1.62E-02
3832	ALL		746599.72	4040355.67	NonCancerAcute	0.00E+00	1.15E-05	2.43E-03	0.00E+00	0.00E+00	2.44E-03	6.06E-03	0.00E+00	1.63E-02	0.00E+00	0.00E+00	2.43E-03	0.00E+00	0.00E+00	1.63E-02
3833	ALL		746609.72	4040355.67	NonCancerAcute	0.00E+00	1.15E-05	2.44E-03	0.00E+00	0.00E+00	2.45E-03	6.08E-03	0.00E+00	1.63E-02	0.00E+00	0.00E+00	2.44E-03	0.00E+00	0.00E+00	1.63E-02
3834	ALL		746619.72	4040355.67	NonCancerAcute	0.00E+00	1.15E-05	2.44E-03	0.00E+00	0.00E+00	2.45E-03	6.10E-03	0.00E+00	1.63E-02	0.00E+00	0.00E+00	2.44E-03	0.00E+00	0.00E+00	1.63E-02
3835	ALL		746554	4040469	NonCancerAcute	0.00E+00	1.12E-05	2.38E-03	0.00E+00	0.00E+00	2.39E-03	5.98E-03	0.00E+00	1.60E-02	0.00E+00	0.00E+00	2.38E-03	0.00E+00	0.00E+00	1.60E-02
3836	ALL	SENS	746564	4040469	NonCancerAcute	0.00E+00	1.12E-05	2.37E-03	0.00E+00	0.00E+00	2.38E-03	5.96E-03	0.00E+00	1.59E-02	0.00E+00	0.00E+00	2.37E-03	0.00E+00	0.00E+00	1.59E-02
3837	ALL	SENS	746574	4040469	NonCancerAcute	0.00E+00	1.12E-05	2.37E-03	0.00E+00	0.00E+00	2.38E-03	5.95E-03	0.00E+00	1.59E-02	0.00E+00	0.00E+00	2.37E-03	0.00E+00	0.00E+00	1.59E-02
3838	ALL	SENS	746584	4040469	NonCancerAcute	0.00E+00	1.12E-05	2.37E-03	0.00E+00	0.00E+00	2.38E-03	5.96E-03	0.00E+00	1.59E-02	0.00E+00	0.00E+00	2.37E-03	0.00E+00	0.00E+00	1.59E-02
3839	ALL	SENS	746594	4040469	NonCancerAcute	0.00E+00	1.12E-05	2.38E-03	0.00E+00	0.00E+00	2.39E-03	5.99E-03	0.00E+00	1.60E-02	0.00E+00	0.00E+00	2.38E-03	0.00E+00	0.00E+00	1.60E-02
3840	ALL	SENS	746604	4040469	NonCancerAcute	0.00E+00	1.12E-05	2.38E-03	0.00E+00	0.00E+00	2.39E-03	6.01E-03	0.00E+00	1.60E-02	0.00E+00	0.00E+00	2.38E-03	0.00E+00	0.00E+00	1.60E-02
3841	ALL	SENS	746614	4040469	NonCancerAcute	0.00E+00	1.12E-05	2.38E-03	0.00E+00	0.00E+00	2.39E-03	6.03E-03	0.00E+00	1.60E-02	0.00E+00	0.00E+00	2.38E-03	0.00E+00	0.00E+00	1.60E-02
3842	ALL	SENS	746624	4040469	NonCancerAcute	0.00E+00	1.12E-05	2.39E-03	0.00E+00	0.00E+00	2.40E-03	6.04E-03	0.00E+00	1.61E-02	0.00E+00	0.00E+00	2.39E-03	0.00E+00	0.00E+00	1.61E-02
3843	ALL	SENS	746634	4040469	NonCancerAcute	0.00E+00	1.12E-05	2.39E-03	0.00E+00	0.00E+00	2.40E-03	6.05E-03	0.00E+00	1.61E-02	0.00E+00	0.00E+00	2.39E-03	0.00E+00	0.00E+00	1.61E-02
3844	ALL	SENS	746554	4040479	NonCancerAcute	0.00E+00	1.12E-05	2.38E-03	0.00E+00	0.00E+00	2.39E-03	5.97E-03	0.00E+00	1.60E-02	0.00E+00	0.00E+00	2.38E-03	0.00E+00	0.00E+00	1.60E-02
3845	ALL	SENS	746564	4040479	NonCancerAcute	0.00E+00	1.12E-05	2.37E-03	0.00E+00	0.00E+00	2.38E-03	5.95E-03	0.00E+00	1.59E-02	0.00E+00	0.00E+00	2.37E-03	0.00E+00	0.00E+00	1.59E-02
3846	ALL	SENS	746574	4040479	NonCancerAcute	0.00E+00	1.12E-05	2.37E-03	0.00E+00	0.00E+00	2.38E-03	5.93E-03	0.00E+00	1.59E-02	0.00E+00	0.00E+00	2.37E-03	0.00E+00	0.00E+00	1.59E-02
3847	ALL	SENS	746584	4040479	NonCancerAcute	0.00E+00	1.12E-05	2.38E-03	0.00E+00	0.00E+00	2.39E-03	5.95E-03	0.00E+00	1.59E-02	0.00E+00	0.00E+00	2.38E-03	0.00E+00	0.00E+00	1.59E-02
3848	ALL	SENS	746594	4040479	NonCancerAcute	0.00E+00	1.12E-05	2.38E-03	0.00E+00	0.00E+00	2.39E-03	5.97E-03	0.00E+00	1.60E-02	0.00E+00	0.00E+00	2.38E-03	0.00E+00	0.00E+00	1.60E-02
3849	ALL	SENS	746604	4040479	NonCancerAcute	0.00E+00	1.12E-05	2.38E-03	0.00E+00	0.00E+00	2.39E-03	6.00E-03	0.00E+00	1.60E-02	0.00E+00	0.00E+00	2.38E-03	0.00E+00	0.00E+00	1.60E-02
3850	ALL	SENS	746614	4040479	NonCancerAcute	0.00E+00	1.12E-05	2.39E-03	0.00E+00	0.00E+00	2.40E-03	6.02E-03	0.00E+00	1.60E-02	0.00E+00	0.00E+00	2.39E-03	0.00E+00	0.00E+00	1.60E-02
3851	ALL	SENS	746624	4040479	NonCancerAcute	0.00E+00	1.12E-05	2.39E-03	0.00E+00	0.00E+00	2.40E-03	6.03E-03	0.00E+00	1.61E-02	0.00E+00	0.00E+00	2.39E-03	0.00E+00	0.00E+00	1.61E-02
3852	ALL	SENS	746634	4040479	NonCancerAcute	0.00E+00	1.12E-05	2.39E-03	0.00E+00	0.00E+00	2.40E-03	6.04E-03	0.00E+00	1.61E-02	0.00E+00	0.00E+00	2.39E-03	0.00E+00	0.00E+00	1.61E-02
3853	ALL	SENS	746554	4040489	NonCancerAcute	0.00E+00	1.12E-05	2.38E-03	0.00E+00	0.00E+00	2.39E-03	5.96E-03	0.00E+00	1.59E-02	0.00E+00	0.00E+00	2.38E-03	0.00E+00	0.00E+00	1.59E-02
3854	ALL	SENS	746564	4040489	NonCancerAcute	0.00E+00	1.12E-05	2.37E-03	0.00E+00	0.00E+00	2.38E-03	5.94E-03	0.00E+00	1.59E-02	0.00E+00	0.00E+00	2.37E-03	0.00E+00	0.00E+00	1.59E-02
3855	ALL	SENS	746574	4040489	NonCancerAcute	0.00E+00	1.12E-05	2.37E-03	0.00E+00	0.00E+00	2.38E-03	5.93E-03	0.00E+00	1.59E-02	0.00E+00	0.00E+00	2.37E-03	0.00E+00	0.00E+00	1.59E-02
3856	ALL	SENS	746584	4040489	NonCancerAcute	0.00E+00	1.12E-05	2.38E-03	0.00E+00	0.00E+00	2.39E-03	5.95E-03	0.00E+00	1.59E-02	0.00E+00	0.00E+00	2.38E-03	0.00E+00	0.00E+00	1.59E-02
3857	ALL	SENS	746594	4040489	NonCancerAcute	0.00E+00	1.12E-05	2.38E-03	0.00E+00	0.00E+00	2.39E-03	5.98E-03	0.00E+00	1.60E-02	0.00E+00	0.00E+00	2.38E-03	0.00E+00	0.00E+00	1.60E-02
3858	ALL	SENS	746604	4040489	NonCancerAcute	0.00E+00	1.12E-05	2.38E-03	0.00E+00	0.00E+00	2.39E-03	6.01E-03	0.00E+00	1.60E-02	0.00E+00	0.00E+00	2.38E-03	0.00E+00	0.00E+00	1.60E-02
3859	ALL	SENS	746614	4040489	NonCancerAcute	0.00E+00	1.13E-05	2.39E-03	0.00E+00	0.00E+00	2.40E-03	6.03E-03	0.00E+00	1.61E-02	0.00E+00	0.00E+00	2.39E-03	0.00E+00	0.00E+00	1.61E-02
3860	ALL	SENS	746624	4040489	NonCancerAcute	0.00E+00	1.13E-05	2.39E-03	0.00E+00	0.00E+00	2.40E-03	6.04E-03	0.00E+00	1.61E-02	0.00E+00	0.00E+00	2.39E-03	0.00E+00	0.00E+00	1.61E-02
3861	ALL	SENS	746634	4040489	NonCancerAcute	0.00E+00	1.13E-05	2.39E-03	0.00E+00	0.00E+00	2.40E-03	6.06E-03	0.00E+00	1.61E-02	0.00E+00	0.00E+00	2.39E-03	0.00E+00	0.00E+00	1.61E-02
3862	ALL	SENS	746554	4040499	NonCancerAcute	0.00E+00	1.12E-05	2.38E-03	0.00E+00	0.00E+00	2.39E-03	5.97E-03	0.00E+00	1.60E-02	0.00E+00	0.00E+00	2.38E-03	0.00E+00	0.00E+00	1.60E-02
3863	ALL	SENS	746564	4040499	NonCancerAcute	0.00E+00	1.12E-05	2.38E-03	0.00E+00	0.00E+00	2.39E-03	5.95E-03	0.00E+00	1.59E-02	0.00E+00	0.00E+00	2.38E-03	0.00E+00	0.00E+00	1.59E-02
3864	ALL	SENS	746574	4040499	NonCancerAcute	0.00E+00	1.12E-05	2.38E-03	0.00E+00	0.00E+00	2.39E-03	5.94E-03	0.00E+00	1.59E-02	0.00E+00	0.00E+00	2.38E-03	0.00E+00	0.00E+00	1.59E-02
3865	ALL	SENS	746584	4040499	NonCancerAcute	0.00E+00	1.12E-05	2.38E-03	0.00E+00	0.00E+00	2.39E-03	5.96E-03	0.00E+00	1.59E-02	0.00E+00	0.00E+00	2.38E-03	0.00E+00	0.00E+00	1.59E-02
3866	ALL	SENS	746594	4040499	NonCancerAcute	0.00E+00	1.12E-05	2.38E-03	0.00E+00	0.00E+00	2.39E-03	5.99E-03	0.00E+00	1.60E-02	0.00E+00	0.00E+00	2.38E-03	0.00E+00	0.00E+00	1.60E-02
3867	ALL	SENS	746604	4040499	NonCancerAcute	0.00E+00	1.12E-05	2.39E-03	0.00E+00	0.00E+00	2.40E-03	6.01E-03	0.00E+00	1.60E-02	0.00E+00	0.00E+00	2.39E-03	0.00E+00	0.00E+00	1.60E-02

3868	ALL	SENS	746614	4040499	NonCancerAcute	0.00E+00	1.13E-05	2.39E-03	0.00E+00	0.00E+00	2.40E-03	6.04E-03	0.00E+00	1.61E-02	0.00E+00	0.00E+00	2.39E-03	0.00E+00	0.00E+00	1.61E-02
3869	ALL	SENS	746624	4040499	NonCancerAcute	0.00E+00	1.13E-05	2.39E-03	0.00E+00	0.00E+00	2.40E-03	6.05E-03	0.00E+00	1.61E-02	0.00E+00	0.00E+00	2.39E-03	0.00E+00	0.00E+00	1.61E-02
3870	ALL	SENS	746634	4040499	NonCancerAcute	0.00E+00	1.13E-05	2.39E-03	0.00E+00	0.00E+00	2.40E-03	6.06E-03	0.00E+00	1.61E-02	0.00E+00	0.00E+00	2.39E-03	0.00E+00	0.00E+00	1.61E-02
3871	ALL	SENS	746554	4040509	NonCancerAcute	0.00E+00	1.12E-05	2.38E-03	0.00E+00	0.00E+00	2.39E-03	5.98E-03	0.00E+00	1.60E-02	0.00E+00	0.00E+00	2.38E-03	0.00E+00	0.00E+00	1.60E-02
3872	ALL	SENS	746564	4040509	NonCancerAcute	0.00E+00	1.12E-05	2.38E-03	0.00E+00	0.00E+00	2.39E-03	5.95E-03	0.00E+00	1.59E-02	0.00E+00	0.00E+00	2.38E-03	0.00E+00	0.00E+00	1.59E-02
3873	ALL	SENS	746574	4040509	NonCancerAcute	0.00E+00	1.12E-05	2.38E-03	0.00E+00	0.00E+00	2.39E-03	5.94E-03	0.00E+00	1.59E-02	0.00E+00	0.00E+00	2.38E-03	0.00E+00	0.00E+00	1.59E-02
3874	ALL	SENS	746584	4040509	NonCancerAcute	0.00E+00	1.12E-05	2.38E-03	0.00E+00	0.00E+00	2.39E-03	5.96E-03	0.00E+00	1.59E-02	0.00E+00	0.00E+00	2.38E-03	0.00E+00	0.00E+00	1.59E-02
3875	ALL	SENS	746594	4040509	NonCancerAcute	0.00E+00	1.12E-05	2.38E-03	0.00E+00	0.00E+00	2.39E-03	5.99E-03	0.00E+00	1.60E-02	0.00E+00	0.00E+00	2.38E-03	0.00E+00	0.00E+00	1.60E-02
3876	ALL	SENS	746604	4040509	NonCancerAcute	0.00E+00	1.12E-05	2.38E-03	0.00E+00	0.00E+00	2.39E-03	6.02E-03	0.00E+00	1.60E-02	0.00E+00	0.00E+00	2.38E-03	0.00E+00	0.00E+00	1.60E-02
3877	ALL	SENS	746614	4040509	NonCancerAcute	0.00E+00	1.12E-05	2.39E-03	0.00E+00	0.00E+00	2.40E-03	6.04E-03	0.00E+00	1.61E-02	0.00E+00	0.00E+00	2.39E-03	0.00E+00	0.00E+00	1.61E-02
3878	ALL	SENS	746624	4040509	NonCancerAcute	0.00E+00	1.12E-05	2.39E-03	0.00E+00	0.00E+00	2.40E-03	6.05E-03	0.00E+00	1.61E-02	0.00E+00	0.00E+00	2.39E-03	0.00E+00	0.00E+00	1.61E-02
3879	ALL	SENS	746634	4040509	NonCancerAcute	0.00E+00	1.12E-05	2.39E-03	0.00E+00	0.00E+00	2.40E-03	6.06E-03	0.00E+00	1.61E-02	0.00E+00	0.00E+00	2.39E-03	0.00E+00	0.00E+00	1.61E-02
3880	ALL	SENS	746554	4040519	NonCancerAcute	0.00E+00	1.12E-05	2.38E-03	0.00E+00	0.00E+00	2.39E-03	5.97E-03	0.00E+00	1.60E-02	0.00E+00	0.00E+00	2.38E-03	0.00E+00	0.00E+00	1.60E-02
3881	ALL	SENS	746564	4040519	NonCancerAcute	0.00E+00	1.12E-05	2.37E-03	0.00E+00	0.00E+00	2.38E-03	5.95E-03	0.00E+00	1.59E-02	0.00E+00	0.00E+00	2.37E-03	0.00E+00	0.00E+00	1.59E-02
3882	ALL	SENS	746574	4040519	NonCancerAcute	0.00E+00	1.12E-05	2.37E-03	0.00E+00	0.00E+00	2.38E-03	5.94E-03	0.00E+00	1.59E-02	0.00E+00	0.00E+00	2.37E-03	0.00E+00	0.00E+00	1.59E-02
3883	ALL	SENS	746584	4040519	NonCancerAcute	0.00E+00	1.12E-05	2.37E-03	0.00E+00	0.00E+00	2.38E-03	5.96E-03	0.00E+00	1.59E-02	0.00E+00	0.00E+00	2.37E-03	0.00E+00	0.00E+00	1.59E-02
3884	ALL	SENS	746594	4040519	NonCancerAcute	0.00E+00	1.12E-05	2.38E-03	0.00E+00	0.00E+00	2.39E-03	5.99E-03	0.00E+00	1.60E-02	0.00E+00	0.00E+00	2.38E-03	0.00E+00	0.00E+00	1.60E-02
3885	ALL	SENS	746604	4040519	NonCancerAcute	0.00E+00	1.12E-05	2.38E-03	0.00E+00	0.00E+00	2.39E-03	6.01E-03	0.00E+00	1.60E-02	0.00E+00	0.00E+00	2.38E-03	0.00E+00	0.00E+00	1.60E-02
3886	ALL	SENS	746614	4040519	NonCancerAcute	0.00E+00	1.12E-05	2.38E-03	0.00E+00	0.00E+00	2.39E-03	6.03E-03	0.00E+00	1.61E-02	0.00E+00	0.00E+00	2.38E-03	0.00E+00	0.00E+00	1.61E-02
3887	ALL	SENS	746624	4040519	NonCancerAcute	0.00E+00	1.12E-05	2.39E-03	0.00E+00	0.00E+00	2.40E-03	6.05E-03	0.00E+00	1.61E-02	0.00E+00	0.00E+00	2.39E-03	0.00E+00	0.00E+00	1.61E-02
3888	ALL	SENS	746634	4040519	NonCancerAcute	0.00E+00	1.12E-05	2.39E-03	0.00E+00	0.00E+00	2.40E-03	6.06E-03	0.00E+00	1.61E-02	0.00E+00	0.00E+00	2.39E-03	0.00E+00	0.00E+00	1.61E-02
3889	ALL	SENS	746491	4040326	NonCancerAcute	0.00E+00	1.14E-05	2.42E-03	0.00E+00	0.00E+00	2.43E-03	6.04E-03	0.00E+00	1.62E-02	0.00E+00	0.00E+00	2.42E-03	0.00E+00	0.00E+00	1.62E-02
3890	ALL	SENS	746501	4040326	NonCancerAcute	0.00E+00	1.14E-05	2.43E-03	0.00E+00	0.00E+00	2.44E-03	6.05E-03	0.00E+00	1.62E-02	0.00E+00	0.00E+00	2.43E-03	0.00E+00	0.00E+00	1.62E-02
3891	ALL	SENS	746511	4040326	NonCancerAcute	0.00E+00	1.14E-05	2.43E-03	0.00E+00	0.00E+00	2.44E-03	6.06E-03	0.00E+00	1.62E-02	0.00E+00	0.00E+00	2.43E-03	0.00E+00	0.00E+00	1.62E-02
3892	ALL	SENS	746521	4040326	NonCancerAcute	0.00E+00	1.14E-05	2.43E-03	0.00E+00	0.00E+00	2.44E-03	6.07E-03	0.00E+00	1.63E-02	0.00E+00	0.00E+00	2.43E-03	0.00E+00	0.00E+00	1.63E-02
3893	ALL	SENS	746531	4040326	NonCancerAcute	0.00E+00	1.14E-05	2.43E-03	0.00E+00	0.00E+00	2.44E-03	6.08E-03	0.00E+00	1.63E-02	0.00E+00	0.00E+00	2.43E-03	0.00E+00	0.00E+00	1.63E-02
3894	ALL	SENS	746541	4040326	NonCancerAcute	0.00E+00	1.14E-05	2.43E-03	0.00E+00	0.00E+00	2.44E-03	6.08E-03	0.00E+00	1.63E-02	0.00E+00	0.00E+00	2.43E-03	0.00E+00	0.00E+00	1.63E-02
3895	ALL	SENS	746491	4040336	NonCancerAcute	0.00E+00	1.14E-05	2.42E-03	0.00E+00	0.00E+00	2.43E-03	6.02E-03	0.00E+00	1.62E-02	0.00E+00	0.00E+00	2.42E-03	0.00E+00	0.00E+00	1.62E-02
3896	ALL	SENS	746501	4040336	NonCancerAcute	0.00E+00	1.14E-05	2.43E-03	0.00E+00	0.00E+00	2.44E-03	6.03E-03	0.00E+00	1.62E-02	0.00E+00	0.00E+00	2.43E-03	0.00E+00	0.00E+00	1.62E-02
3897	ALL	SENS	746511	4040336	NonCancerAcute	0.00E+00	1.14E-05	2.43E-03	0.00E+00	0.00E+00	2.44E-03	6.05E-03	0.00E+00	1.62E-02	0.00E+00	0.00E+00	2.43E-03	0.00E+00	0.00E+00	1.62E-02
3898	ALL	SENS	746521	4040336	NonCancerAcute	0.00E+00	1.14E-05	2.43E-03	0.00E+00	0.00E+00	2.44E-03	6.06E-03	0.00E+00	1.63E-02	0.00E+00	0.00E+00	2.43E-03	0.00E+00	0.00E+00	1.63E-02
3899	ALL	SENS	746531	4040336	NonCancerAcute	0.00E+00	1.14E-05	2.43E-03	0.00E+00	0.00E+00	2.44E-03	6.06E-03	0.00E+00	1.63E-02	0.00E+00	0.00E+00	2.43E-03	0.00E+00	0.00E+00	1.63E-02
3900	ALL	SENS	746541	4040336	NonCancerAcute	0.00E+00	1.14E-05	2.43E-03	0.00E+00	0.00E+00	2.44E-03	6.06E-03	0.00E+00	1.63E-02	0.00E+00	0.00E+00	2.43E-03	0.00E+00	0.00E+00	1.63E-02
3901	ALL	SENS	746491	4040346	NonCancerAcute	0.00E+00	1.14E-05	2.42E-03	0.00E+00	0.00E+00	2.43E-03	6.02E-03	0.00E+00	1.62E-02	0.00E+00	0.00E+00	2.42E-03	0.00E+00	0.00E+00	1.62E-02
3902	ALL	SENS	746501	4040346	NonCancerAcute	0.00E+00	1.14E-05	2.42E-03	0.00E+00	0.00E+00	2.43E-03	6.02E-03	0.00E+00	1.62E-02	0.00E+00	0.00E+00	2.42E-03	0.00E+00	0.00E+00	1.62E-02
3903	ALL	SENS	746511	4040346	NonCancerAcute	0.00E+00	1.14E-05	2.42E-03	0.00E+00	0.00E+00	2.44E-03	6.04E-03	0.00E+00	1.62E-02	0.00E+00	0.00E+00	2.42E-03	0.00E+00	0.00E+00	1.62E-02
3904	ALL	SENS	746521	4040346	NonCancerAcute	0.00E+00	1.14E-05	2.43E-03	0.00E+00	0.00E+00	2.44E-03	6.06E-03	0.00E+00	1.62E-02	0.00E+00	0.00E+00	2.43E-03	0.00E+00	0.00E+00	1.62E-02
3905	ALL	SENS	746531	4040346	NonCancerAcute	0.00E+00	1.14E-05	2.42E-03	0.00E+00	0.00E+00	2.44E-03	6.06E-03	0.00E+00	1.62E-02	0.00E+00	0.00E+00	2.42E-03	0.00E+00	0.00E+00	1.62E-02
3906	ALL	SENS	746541	4040346	NonCancerAcute	0.00E+00	1.14E-05	2.42E-03	0.00E+00	0.00E+00	2.43E-03	6.06E-03	0.00E+00	1.62E-02	0.00E+00	0.00E+00	2.42E-03	0.00E+00	0.00E+00	1.62E-02
3907	ALL	SENS	746491	4040356	NonCancerAcute	0.00E+00	1.14E-05	2.41E-03	0.00E+00	0.00E+00	2.42E-03	6.02E-03	0.00E+00	1.61E-02	0.00E+00	0.00E+00	2.41E-03	0.00E+00	0.00E+00	1.61E-02
3908	ALL	SENS	746501	4040356	NonCancerAcute	0.00E+00	1.14E-05	2.41E-03	0.00E+00	0.00E+00	2.43E-03	6.02E-03	0.00E+00	1.62E-02	0.00E+00	0.00E+00	2.41E-03	0.00E+00	0.00E+00	1.62E-02
3909	ALL	SENS	746511	4040356	NonCancerAcute	0.00E+00	1.14E-05	2.42E-03	0.00E+00	0.00E+00	2.43E-03	6.04E-03	0.00E+00	1.62E-02	0.00E+00	0.00E+00	2.42E-03	0.00E+00	0.00E+00	1.62E-02
3910	ALL	SENS	746521	4040356	NonCancerAcute	0.00E+00	1.14E-05	2.42E-03	0.00E+00	0.00E+00	2.43E-03	6.06E-03	0.00E+00	1.62E-02	0.00E+00	0.00E+00	2.42E-03	0.00E+00	0.00E+00	1.62E-02
3911	ALL	SENS	746531	4040356	NonCancerAcute	0.00E+00	1.14E-05	2.42E-03	0.00E+00	0.00E+00	2.43E-03	6.06E-03	0.00E+00	1.62E-02	0.00E+00	0.00E+00	2.42E-03	0.00E+00	0.00E+00	1.62E-02
3912	ALL	SENS	746541	4040356	NonCancerAcute	0.00E+00	1.14E-05	2.42E-03	0.00E+00	0.00E+00	2.43E-03	6.06E-03	0.00E+00	1.62E-02	0.00E+00	0.00E+00	2.42E-03	0.00E+00	0.00E+00	1.62E-02
3913	ALL	SENS	746491	4040366	NonCancerAcute	0.00E+00	1.13E-05	2.40E-03	0.00E+00	0.00E+00	2.41E-03	6.01E-03	0.00E+00	1.61E-02	0.00E+00	0.00E+00	2.40E-03	0.00E+00	0.00E+00	1.61E-02
3914	ALL	SENS	746501	4040366	NonCancerAcute	0.00E+00	1.13E-05	2.41E-03	0.00E+00	0.00E+00	2.42E-03	6.02E-03	0.00E+00	1.61E-02	0.00E+00	0.00E+00	2.41E-03	0.00E+00	0.00E+00	1.61E-02
3915	ALL	SENS	746511	4040366	NonCancerAcute	0.00E+00	1.13E-05	2.41E-03	0.00E+00	0.00E+00	2.42E-03	6.04E-03	0.00E+00	1.61E-02	0.00E+00	0.00E+00	2.41E-03	0.00E+00	0.00E+00	1.61E-02
3916	ALL	SENS	746521	4040366	NonCancerAcute	0.00E+00	1.13E-05	2.41E-03	0.00E+00	0.00E+00	2.42E-03	6.05E-03	0.00E+00	1.62E-02	0.00E+00	0.00E+00	2.41E-03	0.00E+00	0.00E+00	1.62E-02
3917	ALL	SENS	746531	4040366	NonCancerAcute	0.00E+00	1.13E-05	2.41E-03	0.00E+00	0.00E+00	2.42E-03	6.05E-03	0.00E+00	1.62E-02	0.00E+00	0.00E+00	2.41E-03	0.00E+00	0.00E+00	1.62E-02
3918	ALL	SENS	746541	4040366	NonCancerAcute	0.00E+00	1.13E-05	2.41E-03	0.00E+00	0.00E+00	2.42E-03	6.05E-03	0.00E+00	1.62E-02	0.00E+00	0.00E+00	2.41E-03	0.00E+00	0.00E+00	1.62E-02
3919	ALL	SENS	746491	4040376	NonCancerAcute	0.00E+00	1.13E-05	2.39E-03	0.00E+00	0.00E+00	2.40E-03	6.00E-03	0.00E+00	1.60E-02	0.00E+00	0.00E+00	2.39E-03	0.00E+00	0.00E+00	1.60E-02
3920	ALL	SENS	746501	4040376	NonCancerAcute	0.00E+00	1.13E-05	2.40E-03	0.00E+00	0.00E+00	2.41E-03	6.01E-03	0.00E+00	1.61E-02	0.00E+00	0.00E+00	2.40E-03	0.00E+00	0.00E+00	1.61E-02

3921	ALL	SENS	746511	4040376	NonCancerAcute	0.00E+00	1.13E-05	2.40E-03	0.00E+00	0.00E+00	2.41E-03	6.02E-03	0.00E+00	1.61E-02	0.00E+00	0.00E+00	2.40E-03	0.00E+00	0.00E+00	1.61E-02
3922	ALL	SENS	746521	4040376	NonCancerAcute	0.00E+00	1.13E-05	2.40E-03	0.00E+00	0.00E+00	2.41E-03	6.04E-03	0.00E+00	1.61E-02	0.00E+00	0.00E+00	2.40E-03	0.00E+00	0.00E+00	1.61E-02
3923	ALL	SENS	746531	4040376	NonCancerAcute	0.00E+00	1.13E-05	2.40E-03	0.00E+00	0.00E+00	2.41E-03	6.04E-03	0.00E+00	1.61E-02	0.00E+00	0.00E+00	2.40E-03	0.00E+00	0.00E+00	1.61E-02
3924	ALL	SENS	746541	4040376	NonCancerAcute	0.00E+00	1.13E-05	2.40E-03	0.00E+00	0.00E+00	2.41E-03	6.04E-03	0.00E+00	1.61E-02	0.00E+00	0.00E+00	2.40E-03	0.00E+00	0.00E+00	1.61E-02
3925	ALL	SENS	746491	4040386	NonCancerAcute	0.00E+00	1.13E-05	2.39E-03	0.00E+00	0.00E+00	2.41E-03	5.98E-03	0.00E+00	1.60E-02	0.00E+00	0.00E+00	2.39E-03	0.00E+00	0.00E+00	1.60E-02
3926	ALL	SENS	746501	4040386	NonCancerAcute	0.00E+00	1.13E-05	2.40E-03	0.00E+00	0.00E+00	2.41E-03	6.00E-03	0.00E+00	1.61E-02	0.00E+00	0.00E+00	2.40E-03	0.00E+00	0.00E+00	1.61E-02
3927	ALL	SENS	746511	4040386	NonCancerAcute	0.00E+00	1.13E-05	2.40E-03	0.00E+00	0.00E+00	2.41E-03	6.01E-03	0.00E+00	1.61E-02	0.00E+00	0.00E+00	2.40E-03	0.00E+00	0.00E+00	1.61E-02
3928	ALL	SENS	746521	4040386	NonCancerAcute	0.00E+00	1.13E-05	2.40E-03	0.00E+00	0.00E+00	2.41E-03	6.02E-03	0.00E+00	1.61E-02	0.00E+00	0.00E+00	2.40E-03	0.00E+00	0.00E+00	1.61E-02
3929	ALL	SENS	746531	4040386	NonCancerAcute	0.00E+00	1.13E-05	2.40E-03	0.00E+00	0.00E+00	2.41E-03	6.02E-03	0.00E+00	1.61E-02	0.00E+00	0.00E+00	2.40E-03	0.00E+00	0.00E+00	1.61E-02
3930	ALL	SENS	746541	4040386	NonCancerAcute	0.00E+00	1.13E-05	2.41E-03	0.00E+00	0.00E+00	2.42E-03	6.02E-03	0.00E+00	1.61E-02	0.00E+00	0.00E+00	2.41E-03	0.00E+00	0.00E+00	1.61E-02
3931	ALL	SENS	746491	4040396	NonCancerAcute	0.00E+00	1.13E-05	2.39E-03	0.00E+00	0.00E+00	2.41E-03	5.96E-03	0.00E+00	1.60E-02	0.00E+00	0.00E+00	2.39E-03	0.00E+00	0.00E+00	1.60E-02
3932	ALL	SENS	746501	4040396	NonCancerAcute	0.00E+00	1.13E-05	2.40E-03	0.00E+00	0.00E+00	2.41E-03	5.98E-03	0.00E+00	1.60E-02	0.00E+00	0.00E+00	2.40E-03	0.00E+00	0.00E+00	1.60E-02
3933	ALL	SENS	746511	4040396	NonCancerAcute	0.00E+00	1.13E-05	2.40E-03	0.00E+00	0.00E+00	2.41E-03	5.99E-03	0.00E+00	1.61E-02	0.00E+00	0.00E+00	2.40E-03	0.00E+00	0.00E+00	1.61E-02
3934	ALL	SENS	746521	4040396	NonCancerAcute	0.00E+00	1.13E-05	2.40E-03	0.00E+00	0.00E+00	2.41E-03	6.00E-03	0.00E+00	1.61E-02	0.00E+00	0.00E+00	2.40E-03	0.00E+00	0.00E+00	1.61E-02
3935	ALL	SENS	746531	4040396	NonCancerAcute	0.00E+00	1.13E-05	2.40E-03	0.00E+00	0.00E+00	2.41E-03	6.00E-03	0.00E+00	1.61E-02	0.00E+00	0.00E+00	2.40E-03	0.00E+00	0.00E+00	1.61E-02
3936	ALL	SENS	746541	4040396	NonCancerAcute	0.00E+00	1.13E-05	2.40E-03	0.00E+00	0.00E+00	2.42E-03	6.00E-03	0.00E+00	1.61E-02	0.00E+00	0.00E+00	2.40E-03	0.00E+00	0.00E+00	1.61E-02
3937	ALL	SENS	746491	4040406	NonCancerAcute	0.00E+00	1.13E-05	2.39E-03	0.00E+00	0.00E+00	2.40E-03	5.94E-03	0.00E+00	1.60E-02	0.00E+00	0.00E+00	2.39E-03	0.00E+00	0.00E+00	1.60E-02
3938	ALL	SENS	746501	4040406	NonCancerAcute	0.00E+00	1.13E-05	2.39E-03	0.00E+00	0.00E+00	2.40E-03	5.95E-03	0.00E+00	1.60E-02	0.00E+00	0.00E+00	2.39E-03	0.00E+00	0.00E+00	1.60E-02
3939	ALL	SENS	746511	4040406	NonCancerAcute	0.00E+00	1.13E-05	2.39E-03	0.00E+00	0.00E+00	2.40E-03	5.96E-03	0.00E+00	1.60E-02	0.00E+00	0.00E+00	2.39E-03	0.00E+00	0.00E+00	1.60E-02
3940	ALL	SENS	746521	4040406	NonCancerAcute	0.00E+00	1.13E-05	2.39E-03	0.00E+00	0.00E+00	2.40E-03	5.97E-03	0.00E+00	1.60E-02	0.00E+00	0.00E+00	2.39E-03	0.00E+00	0.00E+00	1.60E-02
3941	ALL	SENS	746531	4040406	NonCancerAcute	0.00E+00	1.13E-05	2.39E-03	0.00E+00	0.00E+00	2.40E-03	5.98E-03	0.00E+00	1.60E-02	0.00E+00	0.00E+00	2.39E-03	0.00E+00	0.00E+00	1.60E-02
3942	ALL	SENS	746541	4040406	NonCancerAcute	0.00E+00	1.13E-05	2.40E-03	0.00E+00	0.00E+00	2.41E-03	5.99E-03	0.00E+00	1.61E-02	0.00E+00	0.00E+00	2.40E-03	0.00E+00	0.00E+00	1.61E-02
3943	ALL	SENS	746491	4040416	NonCancerAcute	0.00E+00	1.12E-05	2.39E-03	0.00E+00	0.00E+00	2.40E-03	5.94E-03	0.00E+00	1.59E-02	0.00E+00	0.00E+00	2.39E-03	0.00E+00	0.00E+00	1.59E-02
3944	ALL	SENS	746501	4040416	NonCancerAcute	0.00E+00	1.12E-05	2.39E-03	0.00E+00	0.00E+00	2.40E-03	5.95E-03	0.00E+00	1.60E-02	0.00E+00	0.00E+00	2.39E-03	0.00E+00	0.00E+00	1.60E-02
3945	ALL	SENS	746511	4040416	NonCancerAcute	0.00E+00	1.12E-05	2.38E-03	0.00E+00	0.00E+00	2.40E-03	5.96E-03	0.00E+00	1.60E-02	0.00E+00	0.00E+00	2.38E-03	0.00E+00	0.00E+00	1.60E-02
3946	ALL	SENS	746521	4040416	NonCancerAcute	0.00E+00	1.12E-05	2.38E-03	0.00E+00	0.00E+00	2.39E-03	5.97E-03	0.00E+00	1.60E-02	0.00E+00	0.00E+00	2.38E-03	0.00E+00	0.00E+00	1.60E-02
3947	ALL	SENS	746531	4040416	NonCancerAcute	0.00E+00	1.12E-05	2.38E-03	0.00E+00	0.00E+00	2.39E-03	5.98E-03	0.00E+00	1.60E-02	0.00E+00	0.00E+00	2.38E-03	0.00E+00	0.00E+00	1.60E-02
3948	ALL	SENS	746541	4040416	NonCancerAcute	0.00E+00	1.13E-05	2.39E-03	0.00E+00	0.00E+00	2.40E-03	5.98E-03	0.00E+00	1.60E-02	0.00E+00	0.00E+00	2.39E-03	0.00E+00	0.00E+00	1.60E-02
3949	ALL	SENS	746491	4040426	NonCancerAcute	0.00E+00	1.12E-05	2.38E-03	0.00E+00	0.00E+00	2.39E-03	5.93E-03	0.00E+00	1.59E-02	0.00E+00	0.00E+00	2.38E-03	0.00E+00	0.00E+00	1.59E-02
3950	ALL	SENS	746501	4040426	NonCancerAcute	0.00E+00	1.12E-05	2.38E-03	0.00E+00	0.00E+00	2.39E-03	5.95E-03	0.00E+00	1.59E-02	0.00E+00	0.00E+00	2.38E-03	0.00E+00	0.00E+00	1.59E-02
3951	ALL	SENS	746511	4040426	NonCancerAcute	0.00E+00	1.12E-05	2.38E-03	0.00E+00	0.00E+00	2.39E-03	5.96E-03	0.00E+00	1.59E-02	0.00E+00	0.00E+00	2.38E-03	0.00E+00	0.00E+00	1.59E-02
3952	ALL	SENS	746521	4040426	NonCancerAcute	0.00E+00	1.12E-05	2.37E-03	0.00E+00	0.00E+00	2.39E-03	5.96E-03	0.00E+00	1.59E-02	0.00E+00	0.00E+00	2.37E-03	0.00E+00	0.00E+00	1.59E-02
3953	ALL	SENS	746531	4040426	NonCancerAcute	0.00E+00	1.12E-05	2.37E-03	0.00E+00	0.00E+00	2.38E-03	5.97E-03	0.00E+00	1.59E-02	0.00E+00	0.00E+00	2.37E-03	0.00E+00	0.00E+00	1.59E-02
3954	ALL	SENS	746541	4040426	NonCancerAcute	0.00E+00	1.12E-05	2.38E-03	0.00E+00	0.00E+00	2.39E-03	5.97E-03	0.00E+00	1.60E-02	0.00E+00	0.00E+00	2.38E-03	0.00E+00	0.00E+00	1.60E-02
3955	ALL	SENS	746491	4040436	NonCancerAcute	0.00E+00	1.12E-05	2.37E-03	0.00E+00	0.00E+00	2.38E-03	5.92E-03	0.00E+00	1.59E-02	0.00E+00	0.00E+00	2.37E-03	0.00E+00	0.00E+00	1.59E-02
3956	ALL	SENS	746501	4040436	NonCancerAcute	0.00E+00	1.12E-05	2.37E-03	0.00E+00	0.00E+00	2.38E-03	5.94E-03	0.00E+00	1.59E-02	0.00E+00	0.00E+00	2.37E-03	0.00E+00	0.00E+00	1.59E-02
3957	ALL	SENS	746511	4040436	NonCancerAcute	0.00E+00	1.12E-05	2.37E-03	0.00E+00	0.00E+00	2.38E-03	5.95E-03	0.00E+00	1.59E-02	0.00E+00	0.00E+00	2.37E-03	0.00E+00	0.00E+00	1.59E-02
3958	ALL	SENS	746521	4040436	NonCancerAcute	0.00E+00	1.12E-05	2.37E-03	0.00E+00	0.00E+00	2.38E-03	5.96E-03	0.00E+00	1.59E-02	0.00E+00	0.00E+00	2.37E-03	0.00E+00	0.00E+00	1.59E-02
3959	ALL	SENS	746531	4040436	NonCancerAcute	0.00E+00	1.12E-05	2.37E-03	0.00E+00	0.00E+00	2.38E-03	5.97E-03	0.00E+00	1.59E-02	0.00E+00	0.00E+00	2.37E-03	0.00E+00	0.00E+00	1.59E-02
3960	ALL	SENS	746541	4040436	NonCancerAcute	0.00E+00	1.12E-05	2.37E-03	0.00E+00	0.00E+00	2.39E-03	5.97E-03	0.00E+00	1.59E-02	0.00E+00	0.00E+00	2.37E-03	0.00E+00	0.00E+00	1.59E-02
3961	ALL	SENS	746491	4040446	NonCancerAcute	0.00E+00	1.12E-05	2.37E-03	0.00E+00	0.00E+00	2.38E-03	5.93E-03	0.00E+00	1.59E-02	0.00E+00	0.00E+00	2.37E-03	0.00E+00	0.00E+00	1.59E-02
3962	ALL	SENS	746501	4040446	NonCancerAcute	0.00E+00	1.12E-05	2.37E-03	0.00E+00	0.00E+00	2.38E-03	5.95E-03	0.00E+00	1.59E-02	0.00E+00	0.00E+00	2.37E-03	0.00E+00	0.00E+00	1.59E-02
3963	ALL	SENS	746511	4040446	NonCancerAcute	0.00E+00	1.12E-05	2.37E-03	0.00E+00	0.00E+00	2.38E-03	5.97E-03	0.00E+00	1.59E-02	0.00E+00	0.00E+00	2.37E-03	0.00E+00	0.00E+00	1.59E-02
3964	ALL	SENS	746521	4040446	NonCancerAcute	0.00E+00	1.12E-05	2.37E-03	0.00E+00	0.00E+00	2.38E-03	5.98E-03	0.00E+00	1.59E-02	0.00E+00	0.00E+00	2.37E-03	0.00E+00	0.00E+00	1.59E-02
3965	ALL	SENS	746531	4040446	NonCancerAcute	0.00E+00	1.12E-05	2.37E-03	0.00E+00	0.00E+00	2.38E-03	5.98E-03	0.00E+00	1.59E-02	0.00E+00	0.00E+00	2.37E-03	0.00E+00	0.00E+00	1.59E-02
3966	ALL	SENS	746541	4040446	NonCancerAcute	0.00E+00	1.12E-05	2.37E-03	0.00E+00	0.00E+00	2.38E-03	5.98E-03	0.00E+00	1.60E-02	0.00E+00	0.00E+00	2.37E-03	0.00E+00	0.00E+00	1.60E-02
3967	ALL	SENS	746491	4040456	NonCancerAcute	0.00E+00	1.11E-05	2.37E-03	0.00E+00	0.00E+00	2.38E-03	5.94E-03	0.00E+00	1.59E-02	0.00E+00	0.00E+00	2.37E-03	0.00E+00	0.00E+00	1.59E-02
3968	ALL	SENS	746501	4040456	NonCancerAcute	0.00E+00	1.11E-05	2.37E-03	0.00E+00	0.00E+00	2.38E-03	5.96E-03	0.00E+00	1.59E-02	0.00E+00	0.00E+00	2.37E-03	0.00E+00	0.00E+00	1.59E-02
3969	ALL	SENS	746511	4040456	NonCancerAcute	0.00E+00	1.12E-05	2.37E-03	0.00E+00	0.00E+00	2.38E-03	5.97E-03	0.00E+00	1.59E-02	0.00E+00	0.00E+00	2.37E-03	0.00E+00	0.00E+00	1.59E-02
3970	ALL	SENS	746521	4040456	NonCancerAcute	0.00E+00	1.11E-05	2.37E-03	0.00E+00	0.00E+00	2.38E-03	5.98E-03	0.00E+00	1.59E-02	0.00E+00	0.00E+00	2.37E-03	0.00E+00	0.00E+00	1.59E-02
3971	ALL	SENS	746531	4040456	NonCancerAcute	0.00E+00	1.12E-05	2.37E-03	0.00E+00	0.00E+00	2.38E-03	5.98E-03	0.00E+00	1.59E-02	0.00E+00	0.00E+00	2.37E-03	0.00E+00	0.00E+00	1.59E-02
3972	ALL	SENS	746541	4040456	NonCancerAcute	0.00E+00	1.12E-05	2.37E-03	0.00E+00	0.00E+00	2.38E-03	5.98E-03	0.00E+00	1.59E-02	0.00E+00	0.00E+00	2.37E-03	0.00E+00	0.00E+00	1.59E-02
3973	ALL	SENS	746491	4040466	NonCancerAcute	0.00E+00	1.12E-05	2.37E-03	0.00E+00	0.00E+00	2.38E-03	5.94E-03	0.00E+00	1.59E-02	0.00E+00	0.00E+00	2.37E-03	0.00E+00	0.00E+00	1.59E-02

3974	ALL	SENS	746501	4040466	NonCancerAcute	0.00E+00	1.12E-05	2.37E-03	0.00E+00	0.00E+00	2.38E-03	5.96E-03	0.00E+00	1.59E-02	0.00E+00	0.00E+00	2.37E-03	0.00E+00	0.00E+00	1.59E-02
3975	ALL	SENS	746511	4040466	NonCancerAcute	0.00E+00	1.11E-05	2.37E-03	0.00E+00	0.00E+00	2.38E-03	5.97E-03	0.00E+00	1.59E-02	0.00E+00	0.00E+00	2.37E-03	0.00E+00	0.00E+00	1.59E-02
3976	ALL	SENS	746521	4040466	NonCancerAcute	0.00E+00	1.11E-05	2.36E-03	0.00E+00	0.00E+00	2.37E-03	5.97E-03	0.00E+00	1.59E-02	0.00E+00	0.00E+00	2.36E-03	0.00E+00	0.00E+00	1.59E-02
3977	ALL	SENS	746531	4040466	NonCancerAcute	0.00E+00	1.11E-05	2.37E-03	0.00E+00	0.00E+00	2.38E-03	5.97E-03	0.00E+00	1.59E-02	0.00E+00	0.00E+00	2.37E-03	0.00E+00	0.00E+00	1.59E-02
3978	ALL	SENS	746541	4040466	NonCancerAcute	0.00E+00	1.12E-05	2.37E-03	0.00E+00	0.00E+00	2.38E-03	5.98E-03	0.00E+00	1.59E-02	0.00E+00	0.00E+00	2.37E-03	0.00E+00	0.00E+00	1.59E-02
3979	ALL	SENS	746491	4040476	NonCancerAcute	0.00E+00	1.11E-05	2.37E-03	0.00E+00	0.00E+00	2.38E-03	5.94E-03	0.00E+00	1.59E-02	0.00E+00	0.00E+00	2.37E-03	0.00E+00	0.00E+00	1.59E-02
3980	ALL	SENS	746501	4040476	NonCancerAcute	0.00E+00	1.11E-05	2.37E-03	0.00E+00	0.00E+00	2.38E-03	5.96E-03	0.00E+00	1.59E-02	0.00E+00	0.00E+00	2.37E-03	0.00E+00	0.00E+00	1.59E-02
3981	ALL	SENS	746511	4040476	NonCancerAcute	0.00E+00	1.11E-05	2.36E-03	0.00E+00	0.00E+00	2.37E-03	5.96E-03	0.00E+00	1.59E-02	0.00E+00	0.00E+00	2.36E-03	0.00E+00	0.00E+00	1.59E-02
3982	ALL	SENS	746521	4040476	NonCancerAcute	0.00E+00	1.11E-05	2.36E-03	0.00E+00	0.00E+00	2.37E-03	5.96E-03	0.00E+00	1.59E-02	0.00E+00	0.00E+00	2.36E-03	0.00E+00	0.00E+00	1.59E-02
3983	ALL	SENS	746531	4040476	NonCancerAcute	0.00E+00	1.11E-05	2.36E-03	0.00E+00	0.00E+00	2.37E-03	5.97E-03	0.00E+00	1.59E-02	0.00E+00	0.00E+00	2.36E-03	0.00E+00	0.00E+00	1.59E-02
3984	ALL	SENS	746541	4040476	NonCancerAcute	0.00E+00	1.12E-05	2.37E-03	0.00E+00	0.00E+00	2.38E-03	5.97E-03	0.00E+00	1.59E-02	0.00E+00	0.00E+00	2.37E-03	0.00E+00	0.00E+00	1.59E-02
3985	ALL	SENS	746491	4040486	NonCancerAcute	0.00E+00	1.11E-05	2.37E-03	0.00E+00	0.00E+00	2.38E-03	5.93E-03	0.00E+00	1.59E-02	0.00E+00	0.00E+00	2.37E-03	0.00E+00	0.00E+00	1.59E-02
3986	ALL	SENS	746501	4040486	NonCancerAcute	0.00E+00	1.11E-05	2.37E-03	0.00E+00	0.00E+00	2.38E-03	5.95E-03	0.00E+00	1.59E-02	0.00E+00	0.00E+00	2.37E-03	0.00E+00	0.00E+00	1.59E-02
3987	ALL	SENS	746511	4040486	NonCancerAcute	0.00E+00	1.11E-05	2.36E-03	0.00E+00	0.00E+00	2.38E-03	5.95E-03	0.00E+00	1.59E-02	0.00E+00	0.00E+00	2.36E-03	0.00E+00	0.00E+00	1.59E-02
3988	ALL	SENS	746521	4040486	NonCancerAcute	0.00E+00	1.11E-05	2.36E-03	0.00E+00	0.00E+00	2.37E-03	5.96E-03	0.00E+00	1.59E-02	0.00E+00	0.00E+00	2.36E-03	0.00E+00	0.00E+00	1.59E-02
3989	ALL	SENS	746531	4040486	NonCancerAcute	0.00E+00	1.11E-05	2.37E-03	0.00E+00	0.00E+00	2.38E-03	5.96E-03	0.00E+00	1.59E-02	0.00E+00	0.00E+00	2.37E-03	0.00E+00	0.00E+00	1.59E-02
3990	ALL	SENS	746541	4040486	NonCancerAcute	0.00E+00	1.12E-05	2.37E-03	0.00E+00	0.00E+00	2.38E-03	5.96E-03	0.00E+00	1.59E-02	0.00E+00	0.00E+00	2.37E-03	0.00E+00	0.00E+00	1.59E-02
3991	ALL	SENS	746491	4040496	NonCancerAcute	0.00E+00	1.11E-05	2.37E-03	0.00E+00	0.00E+00	2.38E-03	5.94E-03	0.00E+00	1.59E-02	0.00E+00	0.00E+00	2.37E-03	0.00E+00	0.00E+00	1.59E-02
3992	ALL	SENS	746501	4040496	NonCancerAcute	0.00E+00	1.11E-05	2.37E-03	0.00E+00	0.00E+00	2.38E-03	5.95E-03	0.00E+00	1.59E-02	0.00E+00	0.00E+00	2.37E-03	0.00E+00	0.00E+00	1.59E-02
3993	ALL	SENS	746511	4040496	NonCancerAcute	0.00E+00	1.11E-05	2.36E-03	0.00E+00	0.00E+00	2.38E-03	5.96E-03	0.00E+00	1.59E-02	0.00E+00	0.00E+00	2.36E-03	0.00E+00	0.00E+00	1.59E-02
3994	ALL	SENS	746521	4040496	NonCancerAcute	0.00E+00	1.11E-05	2.36E-03	0.00E+00	0.00E+00	2.38E-03	5.97E-03	0.00E+00	1.59E-02	0.00E+00	0.00E+00	2.36E-03	0.00E+00	0.00E+00	1.59E-02
3995	ALL	SENS	746531	4040496	NonCancerAcute	0.00E+00	1.12E-05	2.37E-03	0.00E+00	0.00E+00	2.38E-03	5.97E-03	0.00E+00	1.59E-02	0.00E+00	0.00E+00	2.37E-03	0.00E+00	0.00E+00	1.59E-02
3996	ALL	SENS	746541	4040496	NonCancerAcute	0.00E+00	1.12E-05	2.38E-03	0.00E+00	0.00E+00	2.39E-03	5.97E-03	0.00E+00	1.59E-02	0.00E+00	0.00E+00	2.38E-03	0.00E+00	0.00E+00	1.59E-02
3997	ALL	SENS	746491	4040506	NonCancerAcute	0.00E+00	1.12E-05	2.37E-03	0.00E+00	0.00E+00	2.38E-03	5.94E-03	0.00E+00	1.59E-02	0.00E+00	0.00E+00	2.37E-03	0.00E+00	0.00E+00	1.59E-02
3998	ALL	SENS	746501	4040506	NonCancerAcute	0.00E+00	1.12E-05	2.37E-03	0.00E+00	0.00E+00	2.38E-03	5.96E-03	0.00E+00	1.59E-02	0.00E+00	0.00E+00	2.37E-03	0.00E+00	0.00E+00	1.59E-02
3999	ALL	SENS	746511	4040506	NonCancerAcute	0.00E+00	1.12E-05	2.37E-03	0.00E+00	0.00E+00	2.38E-03	5.97E-03	0.00E+00	1.59E-02	0.00E+00	0.00E+00	2.37E-03	0.00E+00	0.00E+00	1.59E-02
4000	ALL	SENS	746521	4040506	NonCancerAcute	0.00E+00	1.12E-05	2.37E-03	0.00E+00	0.00E+00	2.38E-03	5.97E-03	0.00E+00	1.59E-02	0.00E+00	0.00E+00	2.37E-03	0.00E+00	0.00E+00	1.59E-02
4001	ALL	SENS	746531	4040506	NonCancerAcute	0.00E+00	1.12E-05	2.37E-03	0.00E+00	0.00E+00	2.39E-03	5.98E-03	0.00E+00	1.60E-02	0.00E+00	0.00E+00	2.37E-03	0.00E+00	0.00E+00	1.60E-02
4002	ALL	SENS	746541	4040506	NonCancerAcute	0.00E+00	1.12E-05	2.38E-03	0.00E+00	0.00E+00	2.39E-03	5.98E-03	0.00E+00	1.60E-02	0.00E+00	0.00E+00	2.38E-03	0.00E+00	0.00E+00	1.60E-02
4003	ALL	SENS	746491	4040516	NonCancerAcute	0.00E+00	1.12E-05	2.37E-03	0.00E+00	0.00E+00	2.38E-03	5.95E-03	0.00E+00	1.59E-02	0.00E+00	0.00E+00	2.37E-03	0.00E+00	0.00E+00	1.59E-02
4004	ALL	SENS	746501	4040516	NonCancerAcute	0.00E+00	1.12E-05	2.37E-03	0.00E+00	0.00E+00	2.38E-03	5.96E-03	0.00E+00	1.59E-02	0.00E+00	0.00E+00	2.37E-03	0.00E+00	0.00E+00	1.59E-02
4005	ALL	SENS	746511	4040516	NonCancerAcute	0.00E+00	1.12E-05	2.37E-03	0.00E+00	0.00E+00	2.38E-03	5.97E-03	0.00E+00	1.59E-02	0.00E+00	0.00E+00	2.37E-03	0.00E+00	0.00E+00	1.59E-02
4006	ALL	SENS	746521	4040516	NonCancerAcute	0.00E+00	1.12E-05	2.37E-03	0.00E+00	0.00E+00	2.38E-03	5.98E-03	0.00E+00	1.59E-02	0.00E+00	0.00E+00	2.37E-03	0.00E+00	0.00E+00	1.59E-02
4007	ALL	SENS	746531	4040516	NonCancerAcute	0.00E+00	1.12E-05	2.37E-03	0.00E+00	0.00E+00	2.38E-03	5.98E-03	0.00E+00	1.59E-02	0.00E+00	0.00E+00	2.37E-03	0.00E+00	0.00E+00	1.59E-02
4008	ALL	SENS	746541	4040516	NonCancerAcute	0.00E+00	1.12E-05	2.38E-03	0.00E+00	0.00E+00	2.39E-03	5.98E-03	0.00E+00	1.60E-02	0.00E+00	0.00E+00	2.38E-03	0.00E+00	0.00E+00	1.60E-02
4009	ALL	SENS	746491	4040526	NonCancerAcute	0.00E+00	1.12E-05	2.37E-03	0.00E+00	0.00E+00	2.38E-03	5.95E-03	0.00E+00	1.59E-02	0.00E+00	0.00E+00	2.37E-03	0.00E+00	0.00E+00	1.59E-02
4010	ALL	SENS	746501	4040526	NonCancerAcute	0.00E+00	1.11E-05	2.37E-03	0.00E+00	0.00E+00	2.38E-03	5.96E-03	0.00E+00	1.59E-02	0.00E+00	0.00E+00	2.37E-03	0.00E+00	0.00E+00	1.59E-02
4011	ALL	SENS	746511	4040526	NonCancerAcute	0.00E+00	1.11E-05	2.36E-03	0.00E+00	0.00E+00	2.37E-03	5.97E-03	0.00E+00	1.59E-02	0.00E+00	0.00E+00	2.36E-03	0.00E+00	0.00E+00	1.59E-02
4012	ALL	SENS	746521	4040526	NonCancerAcute	0.00E+00	1.11E-05	2.37E-03	0.00E+00	0.00E+00	2.38E-03	5.97E-03	0.00E+00	1.59E-02	0.00E+00	0.00E+00	2.37E-03	0.00E+00	0.00E+00	1.59E-02
4013	ALL	SENS	746531	4040526	NonCancerAcute	0.00E+00	1.12E-05	2.37E-03	0.00E+00	0.00E+00	2.38E-03	5.97E-03	0.00E+00	1.59E-02	0.00E+00	0.00E+00	2.37E-03	0.00E+00	0.00E+00	1.59E-02
4014	ALL	SENS	746541	4040526	NonCancerAcute	0.00E+00	1.12E-05	2.37E-03	0.00E+00	0.00E+00	2.38E-03	5.97E-03	0.00E+00	1.59E-02	0.00E+00	0.00E+00	2.37E-03	0.00E+00	0.00E+00	1.59E-02
4015	ALL	SENS	746491	4040536	NonCancerAcute	0.00E+00	1.11E-05	2.36E-03	0.00E+00	0.00E+00	2.37E-03	5.94E-03	0.00E+00	1.59E-02	0.00E+00	0.00E+00	2.36E-03	0.00E+00	0.00E+00	1.59E-02
4016	ALL	SENS	746501	4040536	NonCancerAcute	0.00E+00	1.11E-05	2.36E-03	0.00E+00	0.00E+00	2.37E-03	5.95E-03	0.00E+00	1.59E-02	0.00E+00	0.00E+00	2.36E-03	0.00E+00	0.00E+00	1.59E-02
4017	ALL	SENS	746511	4040536	NonCancerAcute	0.00E+00	1.11E-05	2.36E-03	0.00E+00	0.00E+00	2.37E-03	5.96E-03	0.00E+00	1.59E-02	0.00E+00	0.00E+00	2.36E-03	0.00E+00	0.00E+00	1.59E-02
4018	ALL	SENS	746521	4040536	NonCancerAcute	0.00E+00	1.11E-05	2.36E-03	0.00E+00	0.00E+00	2.37E-03	5.96E-03	0.00E+00	1.59E-02	0.00E+00	0.00E+00	2.36E-03	0.00E+00	0.00E+00	1.59E-02
4019	ALL	SENS	746531	4040536	NonCancerAcute	0.00E+00	1.11E-05	2.37E-03	0.00E+00	0.00E+00	2.38E-03	5.96E-03	0.00E+00	1.59E-02	0.00E+00	0.00E+00	2.37E-03	0.00E+00	0.00E+00	1.59E-02
4020	ALL	SENS	746541	4040536	NonCancerAcute	0.00E+00	1.12E-05	2.37E-03	0.00E+00	0.00E+00	2.38E-03	5.96E-03	0.00E+00	1.59E-02	0.00E+00	0.00E+00	2.37E-03	0.00E+00	0.00E+00	1.59E-02
4021	ALL	SENS	746491	4040546	NonCancerAcute	0.00E+00	1.11E-05	2.36E-03	0.00E+00	0.00E+00	2.37E-03	5.93E-03	0.00E+00	1.58E-02	0.00E+00	0.00E+00	2.36E-03	0.00E+00	0.00E+00	1.58E-02
4022	ALL	SENS	746501	4040546	NonCancerAcute	0.00E+00	1.11E-05	2.36E-03	0.00E+00	0.00E+00	2.37E-03	5.94E-03	0.00E+00	1.58E-02	0.00E+00	0.00E+00	2.36E-03	0.00E+00	0.00E+00	1.58E-02
4023	ALL	SENS	746511	4040546	NonCancerAcute	0.00E+00	1.11E-05	2.36E-03	0.00E+00	0.00E+00	2.37E-03	5.95E-03	0.00E+00	1.58E-02	0.00E+00	0.00E+00	2.36E-03	0.00E+00	0.00E+00	1.58E-02
4024	ALL	SENS	746521	4040546	NonCancerAcute	0.00E+00	1.11E-05	2.36E-03	0.00E+00	0.00E+00	2.37E-03	5.95E-03	0.00E+00	1.59E-02	0.00E+00	0.00E+00	2.36E-03	0.00E+00	0.00E+00	1.59E-02
4025	ALL	SENS	746531	4040546	NonCancerAcute	0.00E+00	1.11E-05	2.36E-03	0.00E+00	0.00E+00	2.37E-03	5.95E-03	0.00E+00	1.59E-02	0.00E+00	0.00E+00	2.36E-03	0.00E+00	0.00E+00	1.59E-02
4026	ALL	SENS	746541	4040546	NonCancerAcute	0.00E+00	1.11E-05	2.37E-03	0.00E+00	0.00E+00	2.38E-03	5.95E-03	0.00E+00	1.59E-02	0.00E+00	0.00E+00	2.37E-03	0.00E+00	0.00E+00	1.59E-02

4027	ALL	746491	4040556	NonCancerAcute	0.00E+00	1.11E-05	2.35E-03	0.00E+00	0.00E+00	2.36E-03	5.92E-03	0.00E+00	1.58E-02	0.00E+00	0.00E+00	2.35E-03	0.00E+00	0.00E+00	1.58E-02
4028	ALL	746501	4040556	NonCancerAcute	0.00E+00	1.11E-05	2.35E-03	0.00E+00	0.00E+00	2.36E-03	5.92E-03	0.00E+00	1.58E-02	0.00E+00	0.00E+00	2.35E-03	0.00E+00	0.00E+00	1.58E-02
4029	ALL	746511	4040556	NonCancerAcute	0.00E+00	1.11E-05	2.35E-03	0.00E+00	0.00E+00	2.36E-03	5.93E-03	0.00E+00	1.58E-02	0.00E+00	0.00E+00	2.35E-03	0.00E+00	0.00E+00	1.58E-02
4030	ALL	746521	4040556	NonCancerAcute	0.00E+00	1.11E-05	2.36E-03	0.00E+00	0.00E+00	2.37E-03	5.93E-03	0.00E+00	1.58E-02	0.00E+00	0.00E+00	2.36E-03	0.00E+00	0.00E+00	1.58E-02
4031	ALL	746531	4040556	NonCancerAcute	0.00E+00	1.11E-05	2.36E-03	0.00E+00	0.00E+00	2.37E-03	5.93E-03	0.00E+00	1.58E-02	0.00E+00	0.00E+00	2.36E-03	0.00E+00	0.00E+00	1.58E-02
4032	ALL	746541	4040556	NonCancerAcute	0.00E+00	1.11E-05	2.37E-03	0.00E+00	0.00E+00	2.38E-03	5.93E-03	0.00E+00	1.59E-02	0.00E+00	0.00E+00	2.37E-03	0.00E+00	0.00E+00	1.59E-02
4033	ALL	746491	4040566	NonCancerAcute	0.00E+00	1.11E-05	2.36E-03	0.00E+00	0.00E+00	2.37E-03	5.90E-03	0.00E+00	1.58E-02	0.00E+00	0.00E+00	2.36E-03	0.00E+00	0.00E+00	1.58E-02
4034	ALL	746501	4040566	NonCancerAcute	0.00E+00	1.11E-05	2.35E-03	0.00E+00	0.00E+00	2.37E-03	5.90E-03	0.00E+00	1.58E-02	0.00E+00	0.00E+00	2.35E-03	0.00E+00	0.00E+00	1.58E-02
4035	ALL	746511	4040566	NonCancerAcute	0.00E+00	1.11E-05	2.35E-03	0.00E+00	0.00E+00	2.36E-03	5.91E-03	0.00E+00	1.58E-02	0.00E+00	0.00E+00	2.35E-03	0.00E+00	0.00E+00	1.58E-02
4036	ALL	746521	4040566	NonCancerAcute	0.00E+00	1.11E-05	2.36E-03	0.00E+00	0.00E+00	2.37E-03	5.91E-03	0.00E+00	1.58E-02	0.00E+00	0.00E+00	2.36E-03	0.00E+00	0.00E+00	1.58E-02
4037	ALL	746531	4040566	NonCancerAcute	0.00E+00	1.11E-05	2.36E-03	0.00E+00	0.00E+00	2.37E-03	5.91E-03	0.00E+00	1.58E-02	0.00E+00	0.00E+00	2.36E-03	0.00E+00	0.00E+00	1.58E-02
4038	ALL	746541	4040566	NonCancerAcute	0.00E+00	1.11E-05	2.37E-03	0.00E+00	0.00E+00	2.38E-03	5.91E-03	0.00E+00	1.58E-02	0.00E+00	0.00E+00	2.37E-03	0.00E+00	0.00E+00	1.58E-02
4039	ALL	746548	4041125	NonCancerAcute	0.00E+00	1.07E-05	2.28E-03	0.00E+00	0.00E+00	2.29E-03	5.54E-03	0.00E+00	1.51E-02	0.00E+00	0.00E+00	2.28E-03	0.00E+00	0.00E+00	1.51E-02
4040	ALL	746573	4041125	NonCancerAcute	0.00E+00	1.07E-05	2.28E-03	0.00E+00	0.00E+00	2.29E-03	5.58E-03	0.00E+00	1.51E-02	0.00E+00	0.00E+00	2.28E-03	0.00E+00	0.00E+00	1.51E-02
4041	ALL	746598	4041125	NonCancerAcute	0.00E+00	1.07E-05	2.27E-03	0.00E+00	0.00E+00	2.28E-03	5.60E-03	0.00E+00	1.51E-02	0.00E+00	0.00E+00	2.27E-03	0.00E+00	0.00E+00	1.51E-02
4042	ALL	746623	4041125	NonCancerAcute	0.00E+00	1.07E-05	2.27E-03	0.00E+00	0.00E+00	2.28E-03	5.61E-03	0.00E+00	1.51E-02	0.00E+00	0.00E+00	2.27E-03	0.00E+00	0.00E+00	1.51E-02
4043	ALL	746648	4041125	NonCancerAcute	0.00E+00	1.06E-05	2.26E-03	0.00E+00	0.00E+00	2.27E-03	5.60E-03	0.00E+00	1.51E-02	0.00E+00	0.00E+00	2.26E-03	0.00E+00	0.00E+00	1.51E-02
4044	ALL	746673	4041125	NonCancerAcute	0.00E+00	1.07E-05	2.27E-03	0.00E+00	0.00E+00	2.28E-03	5.58E-03	0.00E+00	1.51E-02	0.00E+00	0.00E+00	2.27E-03	0.00E+00	0.00E+00	1.51E-02
4045	ALL	746698	4041125	NonCancerAcute	0.00E+00	1.07E-05	2.28E-03	0.00E+00	0.00E+00	2.29E-03	5.54E-03	0.00E+00	1.51E-02	0.00E+00	0.00E+00	2.28E-03	0.00E+00	0.00E+00	1.51E-02
4046	ALL	746723	4041125	NonCancerAcute	0.00E+00	1.08E-05	2.29E-03	0.00E+00	0.00E+00	2.30E-03	5.49E-03	0.00E+00	1.51E-02	0.00E+00	0.00E+00	2.29E-03	0.00E+00	0.00E+00	1.51E-02
4047	ALL	746548	4041150	NonCancerAcute	0.00E+00	1.07E-05	2.27E-03	0.00E+00	0.00E+00	2.28E-03	5.53E-03	0.00E+00	1.50E-02	0.00E+00	0.00E+00	2.27E-03	0.00E+00	0.00E+00	1.50E-02
4048	ALL	746573	4041150	NonCancerAcute	0.00E+00	1.07E-05	2.27E-03	0.00E+00	0.00E+00	2.28E-03	5.57E-03	0.00E+00	1.51E-02	0.00E+00	0.00E+00	2.27E-03	0.00E+00	0.00E+00	1.51E-02
4049	ALL	746598	4041150	NonCancerAcute	0.00E+00	1.07E-05	2.28E-03	0.00E+00	0.00E+00	2.29E-03	5.58E-03	0.00E+00	1.51E-02	0.00E+00	0.00E+00	2.28E-03	0.00E+00	0.00E+00	1.51E-02
4050	ALL	746623	4041150	NonCancerAcute	0.00E+00	1.07E-05	2.27E-03	0.00E+00	0.00E+00	2.28E-03	5.58E-03	0.00E+00	1.51E-02	0.00E+00	0.00E+00	2.27E-03	0.00E+00	0.00E+00	1.51E-02
4051	ALL	746648	4041150	NonCancerAcute	0.00E+00	1.06E-05	2.26E-03	0.00E+00	0.00E+00	2.27E-03	5.57E-03	0.00E+00	1.50E-02	0.00E+00	0.00E+00	2.26E-03	0.00E+00	0.00E+00	1.50E-02
4052	ALL	746673	4041150	NonCancerAcute	0.00E+00	1.07E-05	2.26E-03	0.00E+00	0.00E+00	2.27E-03	5.55E-03	0.00E+00	1.50E-02	0.00E+00	0.00E+00	2.26E-03	0.00E+00	0.00E+00	1.50E-02
4053	ALL	746698	4041150	NonCancerAcute	0.00E+00	1.07E-05	2.28E-03	0.00E+00	0.00E+00	2.29E-03	5.53E-03	0.00E+00	1.51E-02	0.00E+00	0.00E+00	2.28E-03	0.00E+00	0.00E+00	1.51E-02
4054	ALL	746723	4041150	NonCancerAcute	0.00E+00	1.08E-05	2.29E-03	0.00E+00	0.00E+00	2.30E-03	5.49E-03	0.00E+00	1.50E-02	0.00E+00	0.00E+00	2.29E-03	0.00E+00	0.00E+00	1.50E-02
4055	ALL	746548	4041175	NonCancerAcute	0.00E+00	1.07E-05	2.27E-03	0.00E+00	0.00E+00	2.28E-03	5.51E-03	0.00E+00	1.50E-02	0.00E+00	0.00E+00	2.27E-03	0.00E+00	0.00E+00	1.50E-02
4056	ALL	746573	4041175	NonCancerAcute	0.00E+00	1.07E-05	2.28E-03	0.00E+00	0.00E+00	2.29E-03	5.54E-03	0.00E+00	1.51E-02	0.00E+00	0.00E+00	2.28E-03	0.00E+00	0.00E+00	1.51E-02
4057	ALL	746598	4041175	NonCancerAcute	0.00E+00	1.07E-05	2.28E-03	0.00E+00	0.00E+00	2.29E-03	5.56E-03	0.00E+00	1.51E-02	0.00E+00	0.00E+00	2.28E-03	0.00E+00	0.00E+00	1.51E-02
4058	ALL	746623	4041175	NonCancerAcute	0.00E+00	1.07E-05	2.27E-03	0.00E+00	0.00E+00	2.28E-03	5.57E-03	0.00E+00	1.51E-02	0.00E+00	0.00E+00	2.27E-03	0.00E+00	0.00E+00	1.51E-02
4059	ALL	746648	4041175	NonCancerAcute	0.00E+00	1.06E-05	2.25E-03	0.00E+00	0.00E+00	2.26E-03	5.56E-03	0.00E+00	1.50E-02	0.00E+00	0.00E+00	2.25E-03	0.00E+00	0.00E+00	1.50E-02
4060	ALL	746673	4041175	NonCancerAcute	0.00E+00	1.06E-05	2.26E-03	0.00E+00	0.00E+00	2.27E-03	5.54E-03	0.00E+00	1.50E-02	0.00E+00	0.00E+00	2.26E-03	0.00E+00	0.00E+00	1.50E-02
4061	ALL	746698	4041175	NonCancerAcute	0.00E+00	1.07E-05	2.27E-03	0.00E+00	0.00E+00	2.28E-03	5.51E-03	0.00E+00	1.50E-02	0.00E+00	0.00E+00	2.27E-03	0.00E+00	0.00E+00	1.50E-02
4062	ALL	746723	4041175	NonCancerAcute	0.00E+00	1.07E-05	2.27E-03	0.00E+00	0.00E+00	2.28E-03	5.46E-03	0.00E+00	1.49E-02	0.00E+00	0.00E+00	2.27E-03	0.00E+00	0.00E+00	1.49E-02
4063	ALL	746548	4041200	NonCancerAcute	0.00E+00	1.07E-05	2.28E-03	0.00E+00	0.00E+00	2.29E-03	5.50E-03	0.00E+00	1.50E-02	0.00E+00	0.00E+00	2.28E-03	0.00E+00	0.00E+00	1.50E-02
4064	ALL	746573	4041200	NonCancerAcute	0.00E+00	1.07E-05	2.27E-03	0.00E+00	0.00E+00	2.28E-03	5.53E-03	0.00E+00	1.50E-02	0.00E+00	0.00E+00	2.27E-03	0.00E+00	0.00E+00	1.50E-02
4065	ALL	746598	4041200	NonCancerAcute	0.00E+00	1.07E-05	2.27E-03	0.00E+00	0.00E+00	2.28E-03	5.55E-03	0.00E+00	1.50E-02	0.00E+00	0.00E+00	2.27E-03	0.00E+00	0.00E+00	1.50E-02
4066	ALL	746623	4041200	NonCancerAcute	0.00E+00	1.06E-05	2.26E-03	0.00E+00	0.00E+00	2.27E-03	5.55E-03	0.00E+00	1.50E-02	0.00E+00	0.00E+00	2.26E-03	0.00E+00	0.00E+00	1.50E-02
4067	ALL	746648	4041200	NonCancerAcute	0.00E+00	1.06E-05	2.24E-03	0.00E+00	0.00E+00	2.25E-03	5.53E-03	0.00E+00	1.49E-02	0.00E+00	0.00E+00	2.24E-03	0.00E+00	0.00E+00	1.49E-02
4068	ALL	746673	4041200	NonCancerAcute	0.00E+00	1.06E-05	2.24E-03	0.00E+00	0.00E+00	2.25E-03	5.51E-03	0.00E+00	1.49E-02	0.00E+00	0.00E+00	2.24E-03	0.00E+00	0.00E+00	1.49E-02
4069	ALL	746698	4041200	NonCancerAcute	0.00E+00	1.07E-05	2.27E-03	0.00E+00	0.00E+00	2.28E-03	5.50E-03	0.00E+00	1.50E-02	0.00E+00	0.00E+00	2.27E-03	0.00E+00	0.00E+00	1.50E-02
4070	ALL	746723	4041200	NonCancerAcute	0.00E+00	1.08E-05	2.29E-03	0.00E+00	0.00E+00	2.30E-03	5.46E-03	0.00E+00	1.50E-02	0.00E+00	0.00E+00	2.29E-03	0.00E+00	0.00E+00	1.50E-02
4071	ALL	746548	4041225	NonCancerAcute	0.00E+00	1.07E-05	2.26E-03	0.00E+00	0.00E+00	2.27E-03	5.48E-03	0.00E+00	1.49E-02	0.00E+00	0.00E+00	2.26E-03	0.00E+00	0.00E+00	1.49E-02
4072	ALL	746573	4041225	NonCancerAcute	0.00E+00	1.07E-05	2.26E-03	0.00E+00	0.00E+00	2.27E-03	5.50E-03	0.00E+00	1.50E-02	0.00E+00	0.00E+00	2.26E-03	0.00E+00	0.00E+00	1.50E-02
4073	ALL	746598	4041225	NonCancerAcute	0.00E+00	1.06E-05	2.26E-03	0.00E+00	0.00E+00	2.27E-03	5.52E-03	0.00E+00	1.50E-02	0.00E+00	0.00E+00	2.26E-03	0.00E+00	0.00E+00	1.50E-02
4074	ALL	746623	4041225	NonCancerAcute	0.00E+00	1.06E-05	2.25E-03	0.00E+00	0.00E+00	2.26E-03	5.53E-03	0.00E+00	1.49E-02	0.00E+00	0.00E+00	2.25E-03	0.00E+00	0.00E+00	1.49E-02
4075	ALL	746648	4041225	NonCancerAcute	0.00E+00	1.06E-05	2.24E-03	0.00E+00	0.00E+00	2.25E-03	5.53E-03	0.00E+00	1.49E-02	0.00E+00	0.00E+00	2.24E-03	0.00E+00	0.00E+00	1.49E-02
4076	ALL	746673	4041225	NonCancerAcute	0.00E+00	1.07E-05	2.26E-03	0.00E+00	0.00E+00	2.27E-03	5.51E-03	0.00E+00	1.50E-02	0.00E+00	0.00E+00	2.26E-03	0.00E+00	0.00E+00	1.50E-02
4077	ALL	746698	4041225	NonCancerAcute	0.00E+00	1.08E-05	2.29E-03	0.00E+00	0.00E+00	2.30E-03	5.48E-03	0.00E+00	1.50E-02	0.00E+00	0.00E+00	2.29E-03	0.00E+00	0.00E+00	1.50E-02
4078	ALL	746723	4041225	NonCancerAcute	0.00E+00	1.08E-05	2.30E-03	0.00E+00	0.00E+00	2.31E-03	5.44E-03	0.00E+00	1.50E-02	0.00E+00	0.00E+00	2.30E-03	0.00E+00	0.00E+00	1.50E-02
4079	ALL	746548	4041250	NonCancerAcute	0.00E+00	1.06E-05	2.25E-03	0.00E+00	0.00E+00	2.26E-03	5.47E-03	0.00E+00	1.49E-02	0.00E+00	0.00E+00	2.25E-03	0.00E+00	0.00E+00	1.49E-02

4080	ALL	746573	4041250	NonCancerAcute	0.00E+00	1.06E-05	2.26E-03	0.00E+00	0.00E+00	2.27E-03	5.50E-03	0.00E+00	1.49E-02	0.00E+00	0.00E+00	2.26E-03	0.00E+00	0.00E+00	1.49E-02
4081	ALL	746598	4041250	NonCancerAcute	0.00E+00	1.06E-05	2.26E-03	0.00E+00	0.00E+00	2.27E-03	5.52E-03	0.00E+00	1.50E-02	0.00E+00	0.00E+00	2.26E-03	0.00E+00	0.00E+00	1.50E-02
4082	ALL	746623	4041250	NonCancerAcute	0.00E+00	1.06E-05	2.26E-03	0.00E+00	0.00E+00	2.27E-03	5.52E-03	0.00E+00	1.50E-02	0.00E+00	0.00E+00	2.26E-03	0.00E+00	0.00E+00	1.50E-02
4083	ALL	746648	4041250	NonCancerAcute	0.00E+00	1.06E-05	2.25E-03	0.00E+00	0.00E+00	2.26E-03	5.51E-03	0.00E+00	1.49E-02	0.00E+00	0.00E+00	2.25E-03	0.00E+00	0.00E+00	1.49E-02
4084	ALL	746673	4041250	NonCancerAcute	0.00E+00	1.07E-05	2.27E-03	0.00E+00	0.00E+00	2.29E-03	5.48E-03	0.00E+00	1.50E-02	0.00E+00	0.00E+00	2.27E-03	0.00E+00	0.00E+00	1.50E-02
4085	ALL	746698	4041250	NonCancerAcute	0.00E+00	1.08E-05	2.29E-03	0.00E+00	0.00E+00	2.30E-03	5.44E-03	0.00E+00	1.50E-02	0.00E+00	0.00E+00	2.29E-03	0.00E+00	0.00E+00	1.50E-02
4086	ALL	746723	4041250	NonCancerAcute	0.00E+00	1.08E-05	2.29E-03	0.00E+00	0.00E+00	2.30E-03	5.38E-03	0.00E+00	1.49E-02	0.00E+00	0.00E+00	2.29E-03	0.00E+00	0.00E+00	1.49E-02
4087	ALL	746548	4041275	NonCancerAcute	0.00E+00	1.06E-05	2.26E-03	0.00E+00	0.00E+00	2.27E-03	5.46E-03	0.00E+00	1.49E-02	0.00E+00	0.00E+00	2.26E-03	0.00E+00	0.00E+00	1.49E-02
4088	ALL	746573	4041275	NonCancerAcute	0.00E+00	1.07E-05	2.26E-03	0.00E+00	0.00E+00	2.27E-03	5.48E-03	0.00E+00	1.49E-02	0.00E+00	0.00E+00	2.26E-03	0.00E+00	0.00E+00	1.49E-02
4089	ALL	746598	4041275	NonCancerAcute	0.00E+00	1.07E-05	2.27E-03	0.00E+00	0.00E+00	2.28E-03	5.49E-03	0.00E+00	1.50E-02	0.00E+00	0.00E+00	2.27E-03	0.00E+00	0.00E+00	1.50E-02
4090	ALL	746623	4041275	NonCancerAcute	0.00E+00	1.07E-05	2.26E-03	0.00E+00	0.00E+00	2.28E-03	5.49E-03	0.00E+00	1.49E-02	0.00E+00	0.00E+00	2.26E-03	0.00E+00	0.00E+00	1.49E-02
4091	ALL	746648	4041275	NonCancerAcute	0.00E+00	1.06E-05	2.25E-03	0.00E+00	0.00E+00	2.27E-03	5.46E-03	0.00E+00	1.49E-02	0.00E+00	0.00E+00	2.25E-03	0.00E+00	0.00E+00	1.49E-02
4092	ALL	746673	4041275	NonCancerAcute	0.00E+00	1.07E-05	2.27E-03	0.00E+00	0.00E+00	2.28E-03	5.44E-03	0.00E+00	1.49E-02	0.00E+00	0.00E+00	2.27E-03	0.00E+00	0.00E+00	1.49E-02
4093	ALL	746698	4041275	NonCancerAcute	0.00E+00	1.07E-05	2.27E-03	0.00E+00	0.00E+00	2.28E-03	5.41E-03	0.00E+00	1.49E-02	0.00E+00	0.00E+00	2.27E-03	0.00E+00	0.00E+00	1.49E-02
4094	ALL	746723	4041275	NonCancerAcute	0.00E+00	1.07E-05	2.27E-03	0.00E+00	0.00E+00	2.28E-03	5.36E-03	0.00E+00	1.48E-02	0.00E+00	0.00E+00	2.27E-03	0.00E+00	0.00E+00	1.48E-02
4095	ALL	746548	4041300	NonCancerAcute	0.00E+00	1.07E-05	2.26E-03	0.00E+00	0.00E+00	2.27E-03	5.43E-03	0.00E+00	1.49E-02	0.00E+00	0.00E+00	2.26E-03	0.00E+00	0.00E+00	1.49E-02
4096	ALL	746573	4041300	NonCancerAcute	0.00E+00	1.07E-05	2.27E-03	0.00E+00	0.00E+00	2.28E-03	5.44E-03	0.00E+00	1.49E-02	0.00E+00	0.00E+00	2.27E-03	0.00E+00	0.00E+00	1.49E-02
4097	ALL	746598	4041300	NonCancerAcute	0.00E+00	1.07E-05	2.27E-03	0.00E+00	0.00E+00	2.28E-03	5.44E-03	0.00E+00	1.49E-02	0.00E+00	0.00E+00	2.27E-03	0.00E+00	0.00E+00	1.49E-02
4098	ALL	746623	4041300	NonCancerAcute	0.00E+00	1.06E-05	2.26E-03	0.00E+00	0.00E+00	2.27E-03	5.45E-03	0.00E+00	1.49E-02	0.00E+00	0.00E+00	2.26E-03	0.00E+00	0.00E+00	1.49E-02
4099	ALL	746648	4041300	NonCancerAcute	0.00E+00	1.05E-05	2.24E-03	0.00E+00	0.00E+00	2.25E-03	5.43E-03	0.00E+00	1.48E-02	0.00E+00	0.00E+00	2.24E-03	0.00E+00	0.00E+00	1.48E-02
4100	ALL	746673	4041300	NonCancerAcute	0.00E+00	1.06E-05	2.25E-03	0.00E+00	0.00E+00	2.26E-03	5.42E-03	0.00E+00	1.48E-02	0.00E+00	0.00E+00	2.25E-03	0.00E+00	0.00E+00	1.48E-02
4101	ALL	746698	4041300	NonCancerAcute	0.00E+00	1.06E-05	2.25E-03	0.00E+00	0.00E+00	2.26E-03	5.40E-03	0.00E+00	1.48E-02	0.00E+00	0.00E+00	2.25E-03	0.00E+00	0.00E+00	1.48E-02
4102	ALL	746723	4041300	NonCancerAcute	0.00E+00	1.06E-05	2.25E-03	0.00E+00	0.00E+00	2.26E-03	5.36E-03	0.00E+00	1.47E-02	0.00E+00	0.00E+00	2.25E-03	0.00E+00	0.00E+00	1.47E-02
4103	ALL	746561.71	4041116.1	NonCancerAcute	0.00E+00	1.08E-05	2.29E-03	0.00E+00	0.00E+00	2.30E-03	5.56E-03	0.00E+00	1.51E-02	0.00E+00	0.00E+00	2.29E-03	0.00E+00	0.00E+00	1.51E-02
4104	ALL	746586.71	4041116.1	NonCancerAcute	0.00E+00	1.07E-05	2.28E-03	0.00E+00	0.00E+00	2.29E-03	5.59E-03	0.00E+00	1.51E-02	0.00E+00	0.00E+00	2.28E-03	0.00E+00	0.00E+00	1.51E-02
4105	ALL	746611.71	4041116.1	NonCancerAcute	0.00E+00	1.07E-05	2.27E-03	0.00E+00	0.00E+00	2.28E-03	5.61E-03	0.00E+00	1.51E-02	0.00E+00	0.00E+00	2.27E-03	0.00E+00	0.00E+00	1.51E-02
4106	ALL	746561.71	4041141.1	NonCancerAcute	0.00E+00	1.07E-05	2.27E-03	0.00E+00	0.00E+00	2.28E-03	5.56E-03	0.00E+00	1.51E-02	0.00E+00	0.00E+00	2.27E-03	0.00E+00	0.00E+00	1.51E-02
4107	ALL	746586.71	4041141.1	NonCancerAcute	0.00E+00	1.07E-05	2.28E-03	0.00E+00	0.00E+00	2.29E-03	5.59E-03	0.00E+00	1.51E-02	0.00E+00	0.00E+00	2.28E-03	0.00E+00	0.00E+00	1.51E-02
4108	ALL	746611.71	4041141.1	NonCancerAcute	0.00E+00	1.07E-05	2.27E-03	0.00E+00	0.00E+00	2.28E-03	5.60E-03	0.00E+00	1.51E-02	0.00E+00	0.00E+00	2.27E-03	0.00E+00	0.00E+00	1.51E-02
4109	ALL	746561.71	4041166.1	NonCancerAcute	0.00E+00	1.07E-05	2.28E-03	0.00E+00	0.00E+00	2.29E-03	5.53E-03	0.00E+00	1.50E-02	0.00E+00	0.00E+00	2.28E-03	0.00E+00	0.00E+00	1.50E-02
4110	ALL	746586.71	4041166.1	NonCancerAcute	0.00E+00	1.07E-05	2.28E-03	0.00E+00	0.00E+00	2.29E-03	5.55E-03	0.00E+00	1.51E-02	0.00E+00	0.00E+00	2.28E-03	0.00E+00	0.00E+00	1.51E-02
4111	ALL	746611.71	4041166.1	NonCancerAcute	0.00E+00	1.07E-05	2.28E-03	0.00E+00	0.00E+00	2.29E-03	5.57E-03	0.00E+00	1.51E-02	0.00E+00	0.00E+00	2.28E-03	0.00E+00	0.00E+00	1.51E-02
4112	ALL	732066.53	4034602.91	NonCancerAcute	0.00E+00	9.35E-06	1.99E-03	0.00E+00	0.00E+00	2.00E-03	7.45E-03	0.00E+00	1.63E-02	0.00E+00	0.00E+00	1.99E-03	0.00E+00	0.00E+00	1.63E-02
4113	ALL	732091.13	4033774.4	NonCancerAcute	0.00E+00	1.74E-05	3.69E-03	0.00E+00	0.00E+00	3.70E-03	5.85E-03	0.00E+00	2.06E-02	0.00E+00	0.00E+00	3.69E-03	0.00E+00	0.00E+00	2.06E-02
4114	ALL	733692.71	4033824.33	NonCancerAcute	0.00E+00	1.32E-05	2.79E-03	0.00E+00	0.00E+00	2.81E-03	8.14E-03	0.00E+00	2.01E-02	0.00E+00	0.00E+00	2.79E-03	0.00E+00	0.00E+00	2.01E-02
4115	ALL	733674.04	4034495.29	NonCancerAcute	0.00E+00	1.03E-05	2.19E-03	0.00E+00	0.00E+00	2.20E-03	7.63E-03	0.00E+00	1.73E-02	0.00E+00	0.00E+00	2.19E-03	0.00E+00	0.00E+00	1.73E-02
4116	ALL	734110.13	4034487.33	NonCancerAcute	0.00E+00	8.01E-06	1.70E-03	0.00E+00	0.00E+00	1.71E-03	6.43E-03	0.00E+00	1.41E-02	0.00E+00	0.00E+00	1.70E-03	0.00E+00	0.00E+00	1.41E-02
4117	ALL	734257.24	4034696.21	NonCancerAcute	0.00E+00	8.40E-06	1.78E-03	0.00E+00	0.00E+00	1.79E-03	5.67E-03	0.00E+00	1.34E-02	0.00E+00	0.00E+00	1.78E-03	0.00E+00	0.00E+00	1.34E-02
4118	ALL	734627.91	4034703.99	NonCancerAcute	0.00E+00	8.04E-06	1.71E-03	0.00E+00	0.00E+00	1.72E-03	4.97E-03	0.00E+00	1.23E-02	0.00E+00	0.00E+00	1.71E-03	0.00E+00	0.00E+00	1.23E-02
4119	ALL	735392.15	4035430.99	NonCancerAcute	0.00E+00	8.49E-06	1.80E-03	0.00E+00	0.00E+00	1.81E-03	3.67E-03	0.00E+00	1.11E-02	0.00E+00	0.00E+00	1.80E-03	0.00E+00	0.00E+00	1.11E-02
4120	ALL	737808.42	4035430.09	NonCancerAcute	0.00E+00	8.61E-06	1.83E-03	0.00E+00	0.00E+00	1.84E-03	2.80E-03	0.00E+00	1.01E-02	0.00E+00	0.00E+00	1.83E-03	0.00E+00	0.00E+00	1.01E-02
4121	ALL	738465.19	4036541.12	NonCancerAcute	0.00E+00	9.20E-06	1.95E-03	0.00E+00	0.00E+00	1.96E-03	3.23E-03	0.00E+00	1.11E-02	0.00E+00	0.00E+00	1.95E-03	0.00E+00	0.00E+00	1.11E-02
4122	ALL	738750.39	4036380.31	NonCancerAcute	0.00E+00	9.12E-06	1.94E-03	0.00E+00	0.00E+00	1.95E-03	3.05E-03	0.00E+00	1.08E-02	0.00E+00	0.00E+00	1.94E-03	0.00E+00	0.00E+00	1.08E-02
4123	ALL	742069.46	4036499.23	NonCancerAcute	0.00E+00	8.98E-06	1.91E-03	0.00E+00	0.00E+00	1.91E-03	4.07E-03	0.00E+00	1.19E-02	0.00E+00	0.00E+00	1.91E-03	0.00E+00	0.00E+00	1.19E-02
4124	ALL	745283.68	4036598.92	NonCancerAcute	0.00E+00	1.13E-05	2.40E-03	0.00E+00	0.00E+00	2.41E-03	7.18E-03	0.00E+00	1.75E-02	0.00E+00	0.00E+00	2.40E-03	0.00E+00	0.00E+00	1.75E-02
4125	ALL	746673.96	4036659.94	NonCancerAcute	0.00E+00	1.59E-05	3.38E-03	0.00E+00	0.00E+00	3.39E-03	1.68E-02	0.00E+00	3.29E-02	0.00E+00	0.00E+00	3.38E-03	0.00E+00	0.00E+00	3.29E-02
4126	ALL	746708.07	4035860.27	NonCancerAcute	0.00E+00	1.72E-05	3.66E-03	0.00E+00	0.00E+00	3.68E-03	9.27E-03	0.00E+00	2.47E-02	0.00E+00	0.00E+00	3.66E-03	0.00E+00	0.00E+00	2.47E-02
4127	ALL	747515.51	4035882.35	NonCancerAcute	0.00E+00	1.74E-05	3.70E-03	0.00E+00	0.00E+00	3.72E-03	8.15E-03	0.00E+00	2.34E-02	0.00E+00	0.00E+00	3.70E-03	0.00E+00	0.00E+00	2.34E-02
4128	ALL	747536.38	4035076.16	NonCancerAcute	0.00E+00	1.24E-05	2.64E-03	0.00E+00	0.00E+00	2.65E-03	6.12E-03	0.00E+00	1.71E-02	0.00E+00	0.00E+00	2.64E-03	0.00E+00	0.00E+00	1.71E-02
4129	ALL	748342.31	4035116.19	NonCancerAcute	0.00E+00	1.09E-05	2.32E-03	0.00E+00	0.00E+00	2.33E-03	5.43E-03	0.00E+00	1.51E-02	0.00E+00	0.00E+00	2.32E-03	0.00E+00	0.00E+00	1.51E-02
4130	ALL	748310.9	4036726.09	NonCancerAcute	0.00E+00	1.14E-05	2.42E-03	0.00E+00	0.00E+00	2.44E-03	7.07E-03	0.00E+00	1.75E-02	0.00E+00	0.00E+00	2.42E-03	0.00E+00	0.00E+00	1.75E-02
4131	ALL	749907.56	4036767.46	NonCancerAcute	0.00E+00	1.03E-05	2.19E-03	0.00E+00	0.00E+00	2.20E-03	4.83E-03	0.00E+00	1.39E-02	0.00E+00	0.00E+00	2.19E-03	0.00E+00	0.00E+00	1.39E-02
4132	ALL	749811.98	4039992.18	NonCancerAcute	0.00E+00	1.04E-05	2.21E-03	0.00E+00	0.00E+00	2.22E-03	1.35E-02	0.00E+00	2.46E-02	0.00E+00	0.00E+00	2.21E-03	0.00E+00	0.00E+00	2.46E-02

4133	ALL	751400.39	4040064.69	NonCancerAcute	0.00E+00	8.49E-06	1.80E-03	0.00E+00	0.00E+00	1.81E-03	5.53E-03	0.00E+00	1.33E-02	0.00E+00	0.00E+00	1.80E-03	0.00E+00	0.00E+00	1.33E-02
4134	ALL	751462.23	4038438.34	NonCancerAcute	0.00E+00	8.54E-06	1.81E-03	0.00E+00	0.00E+00	1.82E-03	4.53E-03	0.00E+00	1.21E-02	0.00E+00	0.00E+00	1.81E-03	0.00E+00	0.00E+00	1.21E-02
4135	ALL	752772.2	4038498.22	NonCancerAcute	0.00E+00	7.20E-06	1.53E-03	0.00E+00	0.00E+00	1.54E-03	3.26E-03	0.00E+00	9.55E-03	0.00E+00	0.00E+00	1.53E-03	0.00E+00	0.00E+00	9.55E-03
4136	ALL	752832.11	4036888.4	NonCancerAcute	0.00E+00	7.14E-06	1.52E-03	0.00E+00	0.00E+00	1.52E-03	2.91E-03	0.00E+00	9.08E-03	0.00E+00	0.00E+00	1.52E-03	0.00E+00	0.00E+00	9.08E-03
4137	ALL	754818.78	4036951.87	NonCancerAcute	0.00E+00	5.48E-06	1.16E-03	0.00E+00	0.00E+00	1.17E-03	2.21E-03	0.00E+00	6.93E-03	0.00E+00	0.00E+00	1.16E-03	0.00E+00	0.00E+00	6.93E-03
4138	ALL	754771.03	4038559.27	NonCancerAcute	0.00E+00	5.56E-06	1.18E-03	0.00E+00	0.00E+00	1.19E-03	2.12E-03	0.00E+00	6.89E-03	0.00E+00	0.00E+00	1.18E-03	0.00E+00	0.00E+00	6.89E-03
4139	ALL	752787.25	4038507.84	NonCancerAcute	0.00E+00	7.20E-06	1.53E-03	0.00E+00	0.00E+00	1.54E-03	3.21E-03	0.00E+00	9.49E-03	0.00E+00	0.00E+00	1.53E-03	0.00E+00	0.00E+00	9.49E-03
4140	ALL	752734.04	4040110.04	NonCancerAcute	0.00E+00	7.27E-06	1.54E-03	0.00E+00	0.00E+00	1.55E-03	3.29E-03	0.00E+00	9.64E-03	0.00E+00	0.00E+00	1.54E-03	0.00E+00	0.00E+00	9.64E-03
4141	ALL	751403.83	4040076.27	NonCancerAcute	0.00E+00	8.58E-06	1.82E-03	0.00E+00	0.00E+00	1.83E-03	5.59E-03	0.00E+00	1.35E-02	0.00E+00	0.00E+00	1.82E-03	0.00E+00	0.00E+00	1.35E-02
4142	ALL	751355.71	4041673.39	NonCancerAcute	0.00E+00	7.75E-06	1.65E-03	0.00E+00	0.00E+00	1.65E-03	4.82E-03	0.00E+00	1.19E-02	0.00E+00	0.00E+00	1.65E-03	0.00E+00	0.00E+00	1.19E-02
4143	ALL	753494.58	4041753.1	NonCancerAcute	0.00E+00	6.07E-06	1.29E-03	0.00E+00	0.00E+00	1.29E-03	2.72E-03	0.00E+00	8.01E-03	0.00E+00	0.00E+00	1.29E-03	0.00E+00	0.00E+00	8.01E-03
4144	ALL	753492.55	4041789.93	NonCancerAcute	0.00E+00	6.04E-06	1.28E-03	0.00E+00	0.00E+00	1.29E-03	2.69E-03	0.00E+00	7.96E-03	0.00E+00	0.00E+00	1.28E-03	0.00E+00	0.00E+00	7.96E-03
4145	ALL	753430	4043372.28	NonCancerAcute	0.00E+00	5.84E-06	1.24E-03	0.00E+00	0.00E+00	1.25E-03	2.75E-03	0.00E+00	7.87E-03	0.00E+00	0.00E+00	1.24E-03	0.00E+00	0.00E+00	7.87E-03
4146	ALL	752608.63	4043340.49	NonCancerAcute	0.00E+00	6.30E-06	1.34E-03	0.00E+00	0.00E+00	1.34E-03	2.91E-03	0.00E+00	8.43E-03	0.00E+00	0.00E+00	1.34E-03	0.00E+00	0.00E+00	8.43E-03
4147	ALL	752588.7	4044954.02	NonCancerAcute	0.00E+00	5.46E-06	1.16E-03	0.00E+00	0.00E+00	1.16E-03	2.19E-03	0.00E+00	6.89E-03	0.00E+00	0.00E+00	1.16E-03	0.00E+00	0.00E+00	6.89E-03
4148	ALL	751182.35	4044928.16	NonCancerAcute	0.00E+00	6.39E-06	1.36E-03	0.00E+00	0.00E+00	1.36E-03	2.78E-03	0.00E+00	8.34E-03	0.00E+00	0.00E+00	1.36E-03	0.00E+00	0.00E+00	8.34E-03
4149	ALL	750128.34	4044862.62	NonCancerAcute	0.00E+00	6.93E-06	1.47E-03	0.00E+00	0.00E+00	1.48E-03	3.13E-03	0.00E+00	9.19E-03	0.00E+00	0.00E+00	1.47E-03	0.00E+00	0.00E+00	9.19E-03
4150	ALL	750113.01	4045660.82	NonCancerAcute	0.00E+00	6.18E-06	1.31E-03	0.00E+00	0.00E+00	1.32E-03	2.60E-03	0.00E+00	7.95E-03	0.00E+00	0.00E+00	1.31E-03	0.00E+00	0.00E+00	7.95E-03
4151	ALL	748466.7	4045588.02	NonCancerAcute	0.00E+00	6.88E-06	1.46E-03	0.00E+00	0.00E+00	1.47E-03	2.80E-03	0.00E+00	8.74E-03	0.00E+00	0.00E+00	1.46E-03	0.00E+00	0.00E+00	8.74E-03
4152	ALL	748517.04	4043182.11	NonCancerAcute	0.00E+00	8.59E-06	1.83E-03	0.00E+00	0.00E+00	1.83E-03	4.46E-03	0.00E+00	1.21E-02	0.00E+00	0.00E+00	1.83E-03	0.00E+00	0.00E+00	1.21E-02
4153	ALL	748555.57	4041574.8	NonCancerAcute	0.00E+00	1.01E-05	2.14E-03	0.00E+00	0.00E+00	2.15E-03	6.98E-03	0.00E+00	1.63E-02	0.00E+00	0.00E+00	2.14E-03	0.00E+00	0.00E+00	1.63E-02
4154	ALL	748134.63	4041563.3	NonCancerAcute	0.00E+00	1.07E-05	2.27E-03	0.00E+00	0.00E+00	2.28E-03	6.49E-03	0.00E+00	1.62E-02	0.00E+00	0.00E+00	2.27E-03	0.00E+00	0.00E+00	1.62E-02
4155	ALL	747727.94	4041548.19	NonCancerAcute	0.00E+00	1.08E-05	2.30E-03	0.00E+00	0.00E+00	2.31E-03	6.13E-03	0.00E+00	1.59E-02	0.00E+00	0.00E+00	2.30E-03	0.00E+00	0.00E+00	1.59E-02
4156	ALL	746738.41	4041515.68	NonCancerAcute	0.00E+00	1.05E-05	2.24E-03	0.00E+00	0.00E+00	2.25E-03	5.22E-03	0.00E+00	1.45E-02	0.00E+00	0.00E+00	2.24E-03	0.00E+00	0.00E+00	1.45E-02
4157	ALL	746735.92	4041120.52	NonCancerAcute	0.00E+00	1.08E-05	2.30E-03	0.00E+00	0.00E+00	2.31E-03	5.47E-03	0.00E+00	1.50E-02	0.00E+00	0.00E+00	2.30E-03	0.00E+00	0.00E+00	1.50E-02
4158	ALL	746543.23	4041110.63	NonCancerAcute	0.00E+00	1.08E-05	2.28E-03	0.00E+00	0.00E+00	2.29E-03	5.54E-03	0.00E+00	1.51E-02	0.00E+00	0.00E+00	2.28E-03	0.00E+00	0.00E+00	1.51E-02
4159	ALL	746547.66	4040518.95	NonCancerAcute	0.00E+00	1.12E-05	2.38E-03	0.00E+00	0.00E+00	2.39E-03	5.98E-03	0.00E+00	1.60E-02	0.00E+00	0.00E+00	2.38E-03	0.00E+00	0.00E+00	1.60E-02
4160	ALL	746633.93	4040521.31	NonCancerAcute	0.00E+00	1.12E-05	2.39E-03	0.00E+00	0.00E+00	2.40E-03	6.06E-03	0.00E+00	1.61E-02	0.00E+00	0.00E+00	2.39E-03	0.00E+00	0.00E+00	1.61E-02
4161	ALL	746634.88	4040467.3	NonCancerAcute	0.00E+00	1.12E-05	2.39E-03	0.00E+00	0.00E+00	2.40E-03	6.05E-03	0.00E+00	1.61E-02	0.00E+00	0.00E+00	2.39E-03	0.00E+00	0.00E+00	1.61E-02
4162	ALL	746550.33	4040468.06	NonCancerAcute	0.00E+00	1.12E-05	2.38E-03	0.00E+00	0.00E+00	2.39E-03	5.98E-03	0.00E+00	1.60E-02	0.00E+00	0.00E+00	2.38E-03	0.00E+00	0.00E+00	1.60E-02
4163	ALL	746553.92	4040355.79	NonCancerAcute	0.00E+00	1.14E-05	2.43E-03	0.00E+00	0.00E+00	2.44E-03	6.07E-03	0.00E+00	1.63E-02	0.00E+00	0.00E+00	2.43E-03	0.00E+00	0.00E+00	1.63E-02
4164	ALL	746620.22	4040356.68	NonCancerAcute	0.00E+00	1.15E-05	2.44E-03	0.00E+00	0.00E+00	2.45E-03	6.10E-03	0.00E+00	1.63E-02	0.00E+00	0.00E+00	2.44E-03	0.00E+00	0.00E+00	1.63E-02
4165	ALL	746621.12	4040314.75	NonCancerAcute	0.00E+00	1.16E-05	2.46E-03	0.00E+00	0.00E+00	2.47E-03	6.13E-03	0.00E+00	1.64E-02	0.00E+00	0.00E+00	2.46E-03	0.00E+00	0.00E+00	1.64E-02
4166	ALL	746554.62	4040315.5	NonCancerAcute	0.00E+00	1.15E-05	2.45E-03	0.00E+00	0.00E+00	2.46E-03	6.11E-03	0.00E+00	1.64E-02	0.00E+00	0.00E+00	2.45E-03	0.00E+00	0.00E+00	1.64E-02
4167	ALL	746560.36	4040168.37	NonCancerAcute	0.00E+00	1.20E-05	2.55E-03	0.00E+00	0.00E+00	2.56E-03	6.35E-03	0.00E+00	1.71E-02	0.00E+00	0.00E+00	2.55E-03	0.00E+00	0.00E+00	1.71E-02
4168	ALL	746603.42	4040169.72	NonCancerAcute	0.00E+00	1.21E-05	2.56E-03	0.00E+00	0.00E+00	2.57E-03	6.31E-03	0.00E+00	1.70E-02	0.00E+00	0.00E+00	2.56E-03	0.00E+00	0.00E+00	1.70E-02
4169	ALL	746617.4	4040169.94	NonCancerAcute	0.00E+00	1.21E-05	2.57E-03	0.00E+00	0.00E+00	2.58E-03	6.35E-03	0.00E+00	1.71E-02	0.00E+00	0.00E+00	2.57E-03	0.00E+00	0.00E+00	1.71E-02
4170	ALL	746619.21	4040066.32	NonCancerAcute	0.00E+00	1.18E-05	2.52E-03	0.00E+00	0.00E+00	2.53E-03	6.33E-03	0.00E+00	1.69E-02	0.00E+00	0.00E+00	2.52E-03	0.00E+00	0.00E+00	1.69E-02
4171	ALL	746619.25	4040065.57	NonCancerAcute	0.00E+00	1.19E-05	2.52E-03	0.00E+00	0.00E+00	2.53E-03	6.34E-03	0.00E+00	1.69E-02	0.00E+00	0.00E+00	2.52E-03	0.00E+00	0.00E+00	1.69E-02
4172	ALL	746566.34	4040064.96	NonCancerAcute	0.00E+00	1.18E-05	2.51E-03	0.00E+00	0.00E+00	2.52E-03	6.37E-03	0.00E+00	1.69E-02	0.00E+00	0.00E+00	2.51E-03	0.00E+00	0.00E+00	1.69E-02
4173	ALL	746573	4039885.4	NonCancerAcute	0.00E+00	1.18E-05	2.51E-03	0.00E+00	0.00E+00	2.52E-03	6.80E-03	0.00E+00	1.74E-02	0.00E+00	0.00E+00	2.51E-03	0.00E+00	0.00E+00	1.74E-02
4174	ALL	748187.61	4039939.79	NonCancerAcute	0.00E+00	1.84E-05	3.90E-03	0.00E+00	0.00E+00	3.92E-03	8.69E-03	0.00E+00	2.48E-02	0.00E+00	0.00E+00	3.90E-03	0.00E+00	0.00E+00	2.48E-02
4175	ALL	748269.93	4036790.15	NonCancerAcute	0.00E+00	1.14E-05	2.42E-03	0.00E+00	0.00E+00	2.43E-03	7.27E-03	0.00E+00	1.77E-02	0.00E+00	0.00E+00	2.42E-03	0.00E+00	0.00E+00	1.77E-02
4176	ALL	747485.7	4036764.65	NonCancerAcute	0.00E+00	1.32E-05	2.81E-03	0.00E+00	0.00E+00	2.82E-03	1.01E-02	0.00E+00	2.25E-02	0.00E+00	0.00E+00	2.81E-03	0.00E+00	0.00E+00	2.25E-02
4177	ALL	747441.54	4037774.89	NonCancerAcute	0.00E+00	1.22E-05	2.58E-03	0.00E+00	0.00E+00	2.59E-03	9.01E-03	0.00E+00	2.04E-02	0.00E+00	0.00E+00	2.58E-03	0.00E+00	0.00E+00	2.04E-02
4178	ALL	746636.18	4037748.26	NonCancerAcute	0.00E+00	1.21E-05	2.57E-03	0.00E+00	0.00E+00	2.59E-03	9.20E-03	0.00E+00	2.06E-02	0.00E+00	0.00E+00	2.57E-03	0.00E+00	0.00E+00	2.06E-02
4179	ALL	746670.69	4036745.26	NonCancerAcute	0.00E+00	1.49E-05	3.16E-03	0.00E+00	0.00E+00	3.18E-03	1.88E-02	0.00E+00	3.46E-02	0.00E+00	0.00E+00	3.16E-03	0.00E+00	0.00E+00	3.46E-02
4180	ALL	745738.29	4036714.6	NonCancerAcute	0.00E+00	1.18E-05	2.51E-03	0.00E+00	0.00E+00	2.52E-03	8.33E-03	0.00E+00	1.93E-02	0.00E+00	0.00E+00	2.51E-03	0.00E+00	0.00E+00	1.93E-02
4181	ALL	738770.04	4036473.6	NonCancerAcute	0.00E+00	9.15E-06	1.94E-03	0.00E+00	0.00E+00	1.95E-03	3.15E-03	0.00E+00	1.09E-02	0.00E+00	0.00E+00	1.94E-03	0.00E+00	0.00E+00	1.09E-02
4182	ALL	738439.61	4036664.66	NonCancerAcute	0.00E+00	9.05E-06	1.92E-03	0.00E+00	0.00E+00	1.93E-03	3.29E-03	0.00E+00	1.10E-02	0.00E+00	0.00E+00	1.92E-03	0.00E+00	0.00E+00	1.10E-02
4183	ALL	737829.88	4035658.81	NonCancerAcute	0.00E+00	8.46E-06	1.80E-03	0.00E+00	0.00E+00	1.80E-03	2.80E-03	0.00E+00	9.96E-03	0.00E+00	0.00E+00	1.80E-03	0.00E+00	0.00E+00	9.96E-03
4184	ALL	737743.73	4035513.27	NonCancerAcute	0.00E+00	8.59E-06	1.82E-03	0.00E+00	0.00E+00	1.83E-03	2.85E-03	0.00E+00	1.01E-02	0.00E+00	0.00E+00	1.82E-03	0.00E+00	0.00E+00	1.01E-02
4185	ALL	737022.12	4035512.85	NonCancerAcute	0.00E+00	8.59E-06	1.82E-03	0.00E+00	0.00E+00	1.83E-03	2.84E-03	0.00E+00	1.01E-02	0.00E+00	0.00E+00	1.82E-03	0.00E+00	0.00E+00	1.01E-02

4186	ALL	735339.16	4035512.23	NonCancerAcute	0.00E+00	8.50E-06	1.81E-03	0.00E+00	0.00E+00	1.81E-03	3.89E-03	0.00E+00	1.13E-02	0.00E+00	0.00E+00	1.81E-03	0.00E+00	0.00E+00	1.13E-02
4187	ALL	734620.84	4034828.06	NonCancerAcute	0.00E+00	8.06E-06	1.71E-03	0.00E+00	0.00E+00	1.72E-03	4.80E-03	0.00E+00	1.21E-02	0.00E+00	0.00E+00	1.71E-03	0.00E+00	0.00E+00	1.21E-02
4188	ALL	734199.14	4034810.78	NonCancerAcute	0.00E+00	7.83E-06	1.66E-03	0.00E+00	0.00E+00	1.67E-03	5.69E-03	0.00E+00	1.30E-02	0.00E+00	0.00E+00	1.66E-03	0.00E+00	0.00E+00	1.30E-02
4189	ALL	734063.26	4034590.76	NonCancerAcute	0.00E+00	8.74E-06	1.86E-03	0.00E+00	0.00E+00	1.86E-03	6.41E-03	0.00E+00	1.46E-02	0.00E+00	0.00E+00	1.86E-03	0.00E+00	0.00E+00	1.46E-02
4190	ALL	733671.38	4034584.06	NonCancerAcute	0.00E+00	1.03E-05	2.19E-03	0.00E+00	0.00E+00	2.21E-03	8.07E-03	0.00E+00	1.79E-02	0.00E+00	0.00E+00	2.19E-03	0.00E+00	0.00E+00	1.79E-02
4191	ALL	733670.9	4034611.62	NonCancerAcute	0.00E+00	1.02E-05	2.17E-03	0.00E+00	0.00E+00	2.18E-03	1.03E-02	0.00E+00	2.05E-02	0.00E+00	0.00E+00	2.17E-03	0.00E+00	0.00E+00	2.05E-02
4192	ALL	733666.71	4034642.68	NonCancerAcute	0.00E+00	1.02E-05	2.17E-03	0.00E+00	0.00E+00	2.18E-03	1.04E-02	0.00E+00	2.06E-02	0.00E+00	0.00E+00	2.17E-03	0.00E+00	0.00E+00	2.06E-02
4193	ALL	732743.17	4034617.72	NonCancerAcute	0.00E+00	1.13E-05	2.40E-03	0.00E+00	0.00E+00	2.41E-03	9.21E-03	0.00E+00	2.00E-02	0.00E+00	0.00E+00	2.40E-03	0.00E+00	0.00E+00	2.00E-02
4194	ALL	732071.45	4034437.21	NonCancerAcute	0.00E+00	1.14E-05	2.42E-03	0.00E+00	0.00E+00	2.43E-03	8.08E-03	0.00E+00	1.87E-02	0.00E+00	0.00E+00	2.42E-03	0.00E+00	0.00E+00	1.87E-02
4195	ALL	732076.37	4034271.51	NonCancerAcute	0.00E+00	1.28E-05	2.72E-03	0.00E+00	0.00E+00	2.73E-03	7.40E-03	0.00E+00	1.90E-02	0.00E+00	0.00E+00	2.72E-03	0.00E+00	0.00E+00	1.90E-02
4196	ALL	732081.29	4034105.8	NonCancerAcute	0.00E+00	1.68E-05	3.56E-03	0.00E+00	0.00E+00	3.57E-03	6.65E-03	0.00E+00	2.11E-02	0.00E+00	0.00E+00	3.56E-03	0.00E+00	0.00E+00	2.11E-02
4197	ALL	732086.21	4033940.1	NonCancerAcute	0.00E+00	2.09E-05	4.43E-03	0.00E+00	0.00E+00	4.45E-03	5.82E-03	0.00E+00	2.32E-02	0.00E+00	0.00E+00	4.43E-03	0.00E+00	0.00E+00	2.32E-02
4198	ALL	732269.08	4033779.95	NonCancerAcute	0.00E+00	1.48E-05	3.15E-03	0.00E+00	0.00E+00	3.16E-03	9.30E-03	0.00E+00	2.28E-02	0.00E+00	0.00E+00	3.15E-03	0.00E+00	0.00E+00	2.28E-02
4199	ALL	732447.04	4033785.5	NonCancerAcute	0.00E+00	1.31E-05	2.77E-03	0.00E+00	0.00E+00	2.79E-03	9.41E-03	0.00E+00	2.16E-02	0.00E+00	0.00E+00	2.77E-03	0.00E+00	0.00E+00	2.16E-02
4200	ALL	732624.99	4033791.04	NonCancerAcute	0.00E+00	1.19E-05	2.52E-03	0.00E+00	0.00E+00	2.53E-03	8.89E-03	0.00E+00	2.01E-02	0.00E+00	0.00E+00	2.52E-03	0.00E+00	0.00E+00	2.01E-02
4201	ALL	732802.94	4033796.59	NonCancerAcute	0.00E+00	1.19E-05	2.53E-03	0.00E+00	0.00E+00	2.55E-03	9.72E-03	0.00E+00	2.11E-02	0.00E+00	0.00E+00	2.53E-03	0.00E+00	0.00E+00	2.11E-02
4202	ALL	732980.9	4033802.14	NonCancerAcute	0.00E+00	1.37E-05	2.92E-03	0.00E+00	0.00E+00	2.93E-03	8.87E-03	0.00E+00	2.15E-02	0.00E+00	0.00E+00	2.92E-03	0.00E+00	0.00E+00	2.15E-02
4203	ALL	733158.85	4033807.69	NonCancerAcute	0.00E+00	1.87E-05	3.98E-03	0.00E+00	0.00E+00	4.00E-03	9.08E-03	0.00E+00	2.56E-02	0.00E+00	0.00E+00	3.98E-03	0.00E+00	0.00E+00	2.56E-02
4204	ALL	733336.8	4033813.23	NonCancerAcute	0.00E+00	2.32E-05	4.93E-03	0.00E+00	0.00E+00	4.95E-03	8.76E-03	0.00E+00	2.87E-02	0.00E+00	0.00E+00	4.93E-03	0.00E+00	0.00E+00	2.87E-02
4205	ALL	733514.76	4033818.78	NonCancerAcute	0.00E+00	1.85E-05	3.92E-03	0.00E+00	0.00E+00	3.94E-03	8.42E-03	0.00E+00	2.46E-02	0.00E+00	0.00E+00	3.92E-03	0.00E+00	0.00E+00	2.46E-02
4206	ALL	733688.04	4033992.07	NonCancerAcute	0.00E+00	1.39E-05	2.94E-03	0.00E+00	0.00E+00	2.96E-03	8.60E-03	0.00E+00	2.12E-02	0.00E+00	0.00E+00	2.94E-03	0.00E+00	0.00E+00	2.12E-02
4207	ALL	733683.38	4034159.81	NonCancerAcute	0.00E+00	1.48E-05	3.13E-03	0.00E+00	0.00E+00	3.15E-03	8.35E-03	0.00E+00	2.16E-02	0.00E+00	0.00E+00	3.13E-03	0.00E+00	0.00E+00	2.16E-02
4208	ALL	733678.71	4034327.55	NonCancerAcute	0.00E+00	1.28E-05	2.72E-03	0.00E+00	0.00E+00	2.73E-03	7.95E-03	0.00E+00	1.96E-02	0.00E+00	0.00E+00	2.72E-03	0.00E+00	0.00E+00	1.96E-02
4209	ALL	733819.4	4034492.64	NonCancerAcute	0.00E+00	9.90E-06	2.10E-03	0.00E+00	0.00E+00	2.11E-03	7.18E-03	0.00E+00	1.64E-02	0.00E+00	0.00E+00	2.10E-03	0.00E+00	0.00E+00	1.64E-02
4210	ALL	733964.77	4034489.98	NonCancerAcute	0.00E+00	8.89E-06	1.89E-03	0.00E+00	0.00E+00	1.90E-03	6.82E-03	0.00E+00	1.52E-02	0.00E+00	0.00E+00	1.89E-03	0.00E+00	0.00E+00	1.52E-02
4211	ALL	734183.69	4034591.77	NonCancerAcute	0.00E+00	8.07E-06	1.71E-03	0.00E+00	0.00E+00	1.72E-03	6.02E-03	0.00E+00	1.36E-02	0.00E+00	0.00E+00	1.71E-03	0.00E+00	0.00E+00	1.36E-02
4212	ALL	734442.57	4034700.1	NonCancerAcute	0.00E+00	8.05E-06	1.71E-03	0.00E+00	0.00E+00	1.72E-03	5.34E-03	0.00E+00	1.28E-02	0.00E+00	0.00E+00	1.71E-03	0.00E+00	0.00E+00	1.28E-02
4213	ALL	734755.28	4034825.16	NonCancerAcute	0.00E+00	8.01E-06	1.70E-03	0.00E+00	0.00E+00	1.71E-03	4.64E-03	0.00E+00	1.19E-02	0.00E+00	0.00E+00	1.70E-03	0.00E+00	0.00E+00	1.19E-02
4214	ALL	734882.66	4034946.32	NonCancerAcute	0.00E+00	8.08E-06	1.72E-03	0.00E+00	0.00E+00	1.72E-03	4.23E-03	0.00E+00	1.14E-02	0.00E+00	0.00E+00	1.72E-03	0.00E+00	0.00E+00	1.14E-02
4215	ALL	735010.03	4035067.49	NonCancerAcute	0.00E+00	8.20E-06	1.74E-03	0.00E+00	0.00E+00	1.75E-03	4.09E-03	0.00E+00	1.13E-02	0.00E+00	0.00E+00	1.74E-03	0.00E+00	0.00E+00	1.13E-02
4216	ALL	735137.4	4035188.66	NonCancerAcute	0.00E+00	8.26E-06	1.75E-03	0.00E+00	0.00E+00	1.76E-03	3.92E-03	0.00E+00	1.12E-02	0.00E+00	0.00E+00	1.75E-03	0.00E+00	0.00E+00	1.12E-02
4217	ALL	735264.78	4035309.82	NonCancerAcute	0.00E+00	8.39E-06	1.78E-03	0.00E+00	0.00E+00	1.79E-03	3.78E-03	0.00E+00	1.11E-02	0.00E+00	0.00E+00	1.78E-03	0.00E+00	0.00E+00	1.11E-02
4218	ALL	735578.02	4035430.92	NonCancerAcute	0.00E+00	8.40E-06	1.78E-03	0.00E+00	0.00E+00	1.79E-03	3.52E-03	0.00E+00	1.08E-02	0.00E+00	0.00E+00	1.78E-03	0.00E+00	0.00E+00	1.08E-02
4219	ALL	735763.88	4035430.85	NonCancerAcute	0.00E+00	8.29E-06	1.76E-03	0.00E+00	0.00E+00	1.77E-03	3.38E-03	0.00E+00	1.05E-02	0.00E+00	0.00E+00	1.76E-03	0.00E+00	0.00E+00	1.05E-02
4220	ALL	735949.75	4035430.78	NonCancerAcute	0.00E+00	8.38E-06	1.78E-03	0.00E+00	0.00E+00	1.79E-03	3.25E-03	0.00E+00	1.05E-02	0.00E+00	0.00E+00	1.78E-03	0.00E+00	0.00E+00	1.05E-02
4221	ALL	736135.62	4035430.71	NonCancerAcute	0.00E+00	8.41E-06	1.79E-03	0.00E+00	0.00E+00	1.79E-03	3.10E-03	0.00E+00	1.03E-02	0.00E+00	0.00E+00	1.79E-03	0.00E+00	0.00E+00	1.03E-02
4222	ALL	736321.48	4035430.64	NonCancerAcute	0.00E+00	8.50E-06	1.80E-03	0.00E+00	0.00E+00	1.81E-03	2.98E-03	0.00E+00	1.02E-02	0.00E+00	0.00E+00	1.80E-03	0.00E+00	0.00E+00	1.02E-02
4223	ALL	736507.35	4035430.57	NonCancerAcute	0.00E+00	8.54E-06	1.81E-03	0.00E+00	0.00E+00	1.82E-03	2.97E-03	0.00E+00	1.02E-02	0.00E+00	0.00E+00	1.81E-03	0.00E+00	0.00E+00	1.02E-02
4224	ALL	736693.22	4035430.51	NonCancerAcute	0.00E+00	8.55E-06	1.82E-03	0.00E+00	0.00E+00	1.82E-03	2.93E-03	0.00E+00	1.02E-02	0.00E+00	0.00E+00	1.82E-03	0.00E+00	0.00E+00	1.02E-02
4225	ALL	736879.09	4035430.44	NonCancerAcute	0.00E+00	8.52E-06	1.81E-03	0.00E+00	0.00E+00	1.82E-03	2.86E-03	0.00E+00	1.01E-02	0.00E+00	0.00E+00	1.81E-03	0.00E+00	0.00E+00	1.01E-02
4226	ALL	737064.95	4035430.37	NonCancerAcute	0.00E+00	8.46E-06	1.80E-03	0.00E+00	0.00E+00	1.80E-03	2.88E-03	0.00E+00	1.01E-02	0.00E+00	0.00E+00	1.80E-03	0.00E+00	0.00E+00	1.01E-02
4227	ALL	737250.82	4035430.3	NonCancerAcute	0.00E+00	8.45E-06	1.79E-03	0.00E+00	0.00E+00	1.80E-03	2.88E-03	0.00E+00	1.01E-02	0.00E+00	0.00E+00	1.79E-03	0.00E+00	0.00E+00	1.01E-02
4228	ALL	737436.69	4035430.23	NonCancerAcute	0.00E+00	8.51E-06	1.81E-03	0.00E+00	0.00E+00	1.82E-03	2.86E-03	0.00E+00	1.01E-02	0.00E+00	0.00E+00	1.81E-03	0.00E+00	0.00E+00	1.01E-02
4229	ALL	737622.55	4035430.16	NonCancerAcute	0.00E+00	8.59E-06	1.82E-03	0.00E+00	0.00E+00	1.83E-03	2.83E-03	0.00E+00	1.01E-02	0.00E+00	0.00E+00	1.82E-03	0.00E+00	0.00E+00	1.01E-02
4230	ALL	737902.24	4035588.81	NonCancerAcute	0.00E+00	8.53E-06	1.81E-03	0.00E+00	0.00E+00	1.82E-03	2.82E-03	0.00E+00	1.00E-02	0.00E+00	0.00E+00	1.81E-03	0.00E+00	0.00E+00	1.00E-02
4231	ALL	737996.07	4035747.53	NonCancerAcute	0.00E+00	8.55E-06	1.82E-03	0.00E+00	0.00E+00	1.82E-03	2.84E-03	0.00E+00	1.01E-02	0.00E+00	0.00E+00	1.82E-03	0.00E+00	0.00E+00	1.01E-02
4232	ALL	738089.89	4035906.25	NonCancerAcute	0.00E+00	8.90E-06	1.89E-03	0.00E+00	0.00E+00	1.90E-03	2.94E-03	0.00E+00	1.05E-02	0.00E+00	0.00E+00	1.89E-03	0.00E+00	0.00E+00	1.05E-02
4233	ALL	738183.72	4036064.96	NonCancerAcute	0.00E+00	9.19E-06	1.95E-03	0.00E+00	0.00E+00	1.96E-03	2.83E-03	0.00E+00	1.06E-02	0.00E+00	0.00E+00	1.95E-03	0.00E+00	0.00E+00	1.06E-02
4234	ALL	738277.54	4036223.68	NonCancerAcute	0.00E+00	9.19E-06	1.95E-03	0.00E+00	0.00E+00	1.96E-03	2.88E-03	0.00E+00	1.06E-02	0.00E+00	0.00E+00	1.95E-03	0.00E+00	0.00E+00	1.06E-02
4235	ALL	738371.37	4036382.4	NonCancerAcute	0.00E+00	9.23E-06	1.96E-03	0.00E+00	0.00E+00	1.97E-03	3.01E-03	0.00E+00	1.08E-02	0.00E+00	0.00E+00	1.96E-03	0.00E+00	0.00E+00	1.08E-02
4236	ALL	738607.79	4036460.71	NonCancerAcute	0.00E+00	9.23E-06	1.96E-03	0.00E+00	0.00E+00	1.97E-03	3.10E-03	0.00E+00	1.09E-02	0.00E+00	0.00E+00	1.96E-03	0.00E+00	0.00E+00	1.09E-02
4237	ALL	738945.63	4036387.31	NonCancerAcute	0.00E+00	9.00E-06	1.91E-03	0.00E+00	0.00E+00	1.92E-03	3.12E-03	0.00E+00	1.08E-02	0.00E+00	0.00E+00	1.91E-03	0.00E+00	0.00E+00	1.08E-02
4238	ALL	739140.87	4036394.3	NonCancerAcute	0.00E+00	8.80E-06	1.87E-03	0.00E+00	0.00E+00	1.88E-03	3.18E-03	0.00E+00	1.07E-02	0.00E+00	0.00E+00	1.87E-03	0.00E+00	0.00E+00	1.07E-02

4239	ALL	739336.11	4036401.3	NonCancerAcute	0.00E+00	8.59E-06	1.82E-03	0.00E+00	0.00E+00	1.83E-03	3.21E-03	0.00E+00	1.06E-02	0.00E+00	0.00E+00	1.82E-03	0.00E+00	0.00E+00	1.06E-02
4240	ALL	739531.35	4036408.29	NonCancerAcute	0.00E+00	8.38E-06	1.78E-03	0.00E+00	0.00E+00	1.79E-03	3.27E-03	0.00E+00	1.05E-02	0.00E+00	0.00E+00	1.78E-03	0.00E+00	0.00E+00	1.05E-02
4241	ALL	739726.59	4036415.29	NonCancerAcute	0.00E+00	8.26E-06	1.75E-03	0.00E+00	0.00E+00	1.76E-03	3.36E-03	0.00E+00	1.05E-02	0.00E+00	0.00E+00	1.75E-03	0.00E+00	0.00E+00	1.05E-02
4242	ALL	739921.83	4036422.28	NonCancerAcute	0.00E+00	8.23E-06	1.75E-03	0.00E+00	0.00E+00	1.75E-03	3.41E-03	0.00E+00	1.05E-02	0.00E+00	0.00E+00	1.75E-03	0.00E+00	0.00E+00	1.05E-02
4243	ALL	740117.07	4036429.28	NonCancerAcute	0.00E+00	8.28E-06	1.76E-03	0.00E+00	0.00E+00	1.77E-03	3.44E-03	0.00E+00	1.06E-02	0.00E+00	0.00E+00	1.76E-03	0.00E+00	0.00E+00	1.06E-02
4244	ALL	740312.31	4036436.27	NonCancerAcute	0.00E+00	8.52E-06	1.81E-03	0.00E+00	0.00E+00	1.82E-03	3.47E-03	0.00E+00	1.08E-02	0.00E+00	0.00E+00	1.81E-03	0.00E+00	0.00E+00	1.08E-02
4245	ALL	740507.54	4036443.27	NonCancerAcute	0.00E+00	8.82E-06	1.87E-03	0.00E+00	0.00E+00	1.88E-03	3.46E-03	0.00E+00	1.10E-02	0.00E+00	0.00E+00	1.87E-03	0.00E+00	0.00E+00	1.10E-02
4246	ALL	740702.78	4036450.26	NonCancerAcute	0.00E+00	9.02E-06	1.92E-03	0.00E+00	0.00E+00	1.92E-03	3.51E-03	0.00E+00	1.13E-02	0.00E+00	0.00E+00	1.92E-03	0.00E+00	0.00E+00	1.13E-02
4247	ALL	740898.02	4036457.26	NonCancerAcute	0.00E+00	9.08E-06	1.93E-03	0.00E+00	0.00E+00	1.94E-03	3.59E-03	0.00E+00	1.14E-02	0.00E+00	0.00E+00	1.93E-03	0.00E+00	0.00E+00	1.14E-02
4248	ALL	741093.26	4036464.25	NonCancerAcute	0.00E+00	9.02E-06	1.91E-03	0.00E+00	0.00E+00	1.92E-03	3.59E-03	0.00E+00	1.14E-02	0.00E+00	0.00E+00	1.91E-03	0.00E+00	0.00E+00	1.14E-02
4249	ALL	741288.5	4036471.25	NonCancerAcute	0.00E+00	8.86E-06	1.88E-03	0.00E+00	0.00E+00	1.89E-03	3.64E-03	0.00E+00	1.13E-02	0.00E+00	0.00E+00	1.88E-03	0.00E+00	0.00E+00	1.13E-02
4250	ALL	741483.74	4036478.24	NonCancerAcute	0.00E+00	8.96E-06	1.90E-03	0.00E+00	0.00E+00	1.91E-03	3.69E-03	0.00E+00	1.14E-02	0.00E+00	0.00E+00	1.90E-03	0.00E+00	0.00E+00	1.14E-02
4251	ALL	741678.98	4036485.24	NonCancerAcute	0.00E+00	8.99E-06	1.91E-03	0.00E+00	0.00E+00	1.92E-03	3.72E-03	0.00E+00	1.15E-02	0.00E+00	0.00E+00	1.91E-03	0.00E+00	0.00E+00	1.15E-02
4252	ALL	741874.22	4036492.23	NonCancerAcute	0.00E+00	9.03E-06	1.92E-03	0.00E+00	0.00E+00	1.93E-03	3.86E-03	0.00E+00	1.17E-02	0.00E+00	0.00E+00	1.92E-03	0.00E+00	0.00E+00	1.17E-02
4253	ALL	742258.53	4036505.09	NonCancerAcute	0.00E+00	9.31E-06	1.98E-03	0.00E+00	0.00E+00	1.99E-03	4.29E-03	0.00E+00	1.24E-02	0.00E+00	0.00E+00	1.98E-03	0.00E+00	0.00E+00	1.24E-02
4254	ALL	742447.6	4036510.96	NonCancerAcute	0.00E+00	9.45E-06	2.01E-03	0.00E+00	0.00E+00	2.02E-03	4.49E-03	0.00E+00	1.28E-02	0.00E+00	0.00E+00	2.01E-03	0.00E+00	0.00E+00	1.28E-02
4255	ALL	742636.68	4036516.82	NonCancerAcute	0.00E+00	9.54E-06	2.03E-03	0.00E+00	0.00E+00	2.04E-03	4.66E-03	0.00E+00	1.31E-02	0.00E+00	0.00E+00	2.03E-03	0.00E+00	0.00E+00	1.31E-02
4256	ALL	742825.75	4036522.69	NonCancerAcute	0.00E+00	9.66E-06	2.05E-03	0.00E+00	0.00E+00	2.06E-03	4.82E-03	0.00E+00	1.34E-02	0.00E+00	0.00E+00	2.05E-03	0.00E+00	0.00E+00	1.34E-02
4257	ALL	743014.82	4036528.55	NonCancerAcute	0.00E+00	9.72E-06	2.06E-03	0.00E+00	0.00E+00	2.07E-03	4.95E-03	0.00E+00	1.36E-02	0.00E+00	0.00E+00	2.06E-03	0.00E+00	0.00E+00	1.36E-02
4258	ALL	743203.89	4036534.41	NonCancerAcute	0.00E+00	9.85E-06	2.09E-03	0.00E+00	0.00E+00	2.10E-03	5.06E-03	0.00E+00	1.38E-02	0.00E+00	0.00E+00	2.09E-03	0.00E+00	0.00E+00	1.38E-02
4259	ALL	743392.96	4036540.28	NonCancerAcute	0.00E+00	1.00E-05	2.13E-03	0.00E+00	0.00E+00	2.14E-03	5.15E-03	0.00E+00	1.40E-02	0.00E+00	0.00E+00	2.13E-03	0.00E+00	0.00E+00	1.40E-02
4260	ALL	743582.03	4036546.14	NonCancerAcute	0.00E+00	1.01E-05	2.15E-03	0.00E+00	0.00E+00	2.16E-03	5.24E-03	0.00E+00	1.42E-02	0.00E+00	0.00E+00	2.15E-03	0.00E+00	0.00E+00	1.42E-02
4261	ALL	743771.11	4036552.01	NonCancerAcute	0.00E+00	1.01E-05	2.15E-03	0.00E+00	0.00E+00	2.16E-03	5.26E-03	0.00E+00	1.43E-02	0.00E+00	0.00E+00	2.15E-03	0.00E+00	0.00E+00	1.43E-02
4262	ALL	743960.18	4036557.87	NonCancerAcute	0.00E+00	1.02E-05	2.17E-03	0.00E+00	0.00E+00	2.18E-03	5.45E-03	0.00E+00	1.46E-02	0.00E+00	0.00E+00	2.17E-03	0.00E+00	0.00E+00	1.46E-02
4263	ALL	744149.25	4036563.74	NonCancerAcute	0.00E+00	1.05E-05	2.23E-03	0.00E+00	0.00E+00	2.24E-03	5.65E-03	0.00E+00	1.50E-02	0.00E+00	0.00E+00	2.23E-03	0.00E+00	0.00E+00	1.50E-02
4264	ALL	744338.32	4036569.6	NonCancerAcute	0.00E+00	1.06E-05	2.25E-03	0.00E+00	0.00E+00	2.27E-03	5.80E-03	0.00E+00	1.53E-02	0.00E+00	0.00E+00	2.25E-03	0.00E+00	0.00E+00	1.53E-02
4265	ALL	744527.39	4036575.46	NonCancerAcute	0.00E+00	1.03E-05	2.19E-03	0.00E+00	0.00E+00	2.20E-03	5.93E-03	0.00E+00	1.52E-02	0.00E+00	0.00E+00	2.19E-03	0.00E+00	0.00E+00	1.52E-02
4266	ALL	744716.46	4036581.33	NonCancerAcute	0.00E+00	1.08E-05	2.29E-03	0.00E+00	0.00E+00	2.30E-03	6.24E-03	0.00E+00	1.60E-02	0.00E+00	0.00E+00	2.29E-03	0.00E+00	0.00E+00	1.60E-02
4267	ALL	744905.54	4036587.19	NonCancerAcute	0.00E+00	1.07E-05	2.27E-03	0.00E+00	0.00E+00	2.28E-03	6.43E-03	0.00E+00	1.61E-02	0.00E+00	0.00E+00	2.27E-03	0.00E+00	0.00E+00	1.61E-02
4268	ALL	745094.61	4036593.06	NonCancerAcute	0.00E+00	1.08E-05	2.29E-03	0.00E+00	0.00E+00	2.30E-03	6.69E-03	0.00E+00	1.65E-02	0.00E+00	0.00E+00	2.29E-03	0.00E+00	0.00E+00	1.65E-02
4269	ALL	745482.29	4036607.64	NonCancerAcute	0.00E+00	1.14E-05	2.42E-03	0.00E+00	0.00E+00	2.43E-03	7.73E-03	0.00E+00	1.83E-02	0.00E+00	0.00E+00	2.42E-03	0.00E+00	0.00E+00	1.83E-02
4270	ALL	745680.9	4036616.35	NonCancerAcute	0.00E+00	1.15E-05	2.44E-03	0.00E+00	0.00E+00	2.45E-03	8.10E-03	0.00E+00	1.88E-02	0.00E+00	0.00E+00	2.44E-03	0.00E+00	0.00E+00	1.88E-02
4271	ALL	745879.51	4036625.07	NonCancerAcute	0.00E+00	1.22E-05	2.60E-03	0.00E+00	0.00E+00	2.61E-03	8.57E-03	0.00E+00	1.99E-02	0.00E+00	0.00E+00	2.60E-03	0.00E+00	0.00E+00	1.99E-02
4272	ALL	746078.13	4036633.79	NonCancerAcute	0.00E+00	1.29E-05	2.74E-03	0.00E+00	0.00E+00	2.76E-03	8.98E-03	0.00E+00	2.10E-02	0.00E+00	0.00E+00	2.74E-03	0.00E+00	0.00E+00	2.10E-02
4273	ALL	746276.74	4036642.51	NonCancerAcute	0.00E+00	1.34E-05	2.85E-03	0.00E+00	0.00E+00	2.87E-03	1.03E-02	0.00E+00	2.30E-02	0.00E+00	0.00E+00	2.85E-03	0.00E+00	0.00E+00	2.30E-02
4274	ALL	746475.35	4036651.22	NonCancerAcute	0.00E+00	1.50E-05	3.19E-03	0.00E+00	0.00E+00	3.21E-03	1.19E-02	0.00E+00	2.62E-02	0.00E+00	0.00E+00	3.19E-03	0.00E+00	0.00E+00	2.62E-02
4275	ALL	746680.78	4036500.01	NonCancerAcute	0.00E+00	1.82E-05	3.87E-03	0.00E+00	0.00E+00	3.89E-03	1.43E-02	0.00E+00	3.16E-02	0.00E+00	0.00E+00	3.87E-03	0.00E+00	0.00E+00	3.16E-02
4276	ALL	746687.6	4036340.07	NonCancerAcute	0.00E+00	2.12E-05	4.50E-03	0.00E+00	0.00E+00	4.52E-03	1.05E-02	0.00E+00	2.93E-02	0.00E+00	0.00E+00	4.50E-03	0.00E+00	0.00E+00	2.93E-02
4277	ALL	746694.43	4036180.14	NonCancerAcute	0.00E+00	2.20E-05	4.68E-03	0.00E+00	0.00E+00	4.70E-03	1.06E-02	0.00E+00	3.00E-02	0.00E+00	0.00E+00	4.68E-03	0.00E+00	0.00E+00	3.00E-02
4278	ALL	746701.25	4036020.2	NonCancerAcute	0.00E+00	2.05E-05	4.35E-03	0.00E+00	0.00E+00	4.37E-03	1.02E-02	0.00E+00	2.83E-02	0.00E+00	0.00E+00	4.35E-03	0.00E+00	0.00E+00	2.83E-02
4279	ALL	746869.56	4035864.69	NonCancerAcute	0.00E+00	2.20E-05	4.67E-03	0.00E+00	0.00E+00	4.69E-03	9.46E-03	0.00E+00	2.85E-02	0.00E+00	0.00E+00	4.67E-03	0.00E+00	0.00E+00	2.85E-02
4280	ALL	747031.05	4035869.1	NonCancerAcute	0.00E+00	2.97E-05	6.31E-03	0.00E+00	0.00E+00	6.33E-03	9.94E-03	0.00E+00	3.51E-02	0.00E+00	0.00E+00	6.31E-03	0.00E+00	0.00E+00	3.51E-02
4281	ALL	747192.53	4035873.52	NonCancerAcute	0.00E+00	3.12E-05	6.62E-03	0.00E+00	0.00E+00	6.65E-03	9.96E-03	0.00E+00	3.62E-02	0.00E+00	0.00E+00	6.62E-03	0.00E+00	0.00E+00	3.62E-02
4282	ALL	747354.02	4035877.93	NonCancerAcute	0.00E+00	2.32E-05	4.92E-03	0.00E+00	0.00E+00	4.94E-03	9.12E-03	0.00E+00	2.91E-02	0.00E+00	0.00E+00	4.92E-03	0.00E+00	0.00E+00	2.91E-02
4283	ALL	747519.68	4035721.11	NonCancerAcute	0.00E+00	1.51E-05	3.20E-03	0.00E+00	0.00E+00	3.21E-03	7.80E-03	0.00E+00	2.12E-02	0.00E+00	0.00E+00	3.20E-03	0.00E+00	0.00E+00	2.12E-02
4284	ALL	747523.86	4035559.87	NonCancerAcute	0.00E+00	1.40E-05	2.97E-03	0.00E+00	0.00E+00	2.98E-03	7.29E-03	0.00E+00	1.97E-02	0.00E+00	0.00E+00	2.97E-03	0.00E+00	0.00E+00	1.97E-02
4285	ALL	747528.03	4035398.64	NonCancerAcute	0.00E+00	1.36E-05	2.88E-03	0.00E+00	0.00E+00	2.90E-03	6.87E-03	0.00E+00	1.89E-02	0.00E+00	0.00E+00	2.88E-03	0.00E+00	0.00E+00	1.89E-02
4286	ALL	747532.21	4035237.4	NonCancerAcute	0.00E+00	1.31E-05	2.79E-03	0.00E+00	0.00E+00	2.80E-03	6.56E-03	0.00E+00	1.82E-02	0.00E+00	0.00E+00	2.79E-03	0.00E+00	0.00E+00	1.82E-02
4287	ALL	747697.57	4035084.17	NonCancerAcute	0.00E+00	1.21E-05	2.57E-03	0.00E+00	0.00E+00	2.58E-03	6.10E-03	0.00E+00	1.68E-02	0.00E+00	0.00E+00	2.57E-03	0.00E+00	0.00E+00	1.68E-02
4288	ALL	747858.75	4035092.17	NonCancerAcute	0.00E+00	1.18E-05	2.51E-03	0.00E+00	0.00E+00	2.52E-03	5.91E-03	0.00E+00	1.64E-02	0.00E+00	0.00E+00	2.51E-03	0.00E+00	0.00E+00	1.64E-02
4289	ALL	748019.94	4035100.18	NonCancerAcute	0.00E+00	1.16E-05	2.47E-03	0.00E+00	0.00E+00	2.48E-03	5.83E-03	0.00E+00	1.61E-02	0.00E+00	0.00E+00	2.47E-03	0.00E+00	0.00E+00	1.61E-02
4290	ALL	748181.12	4035108.18	NonCancerAcute	0.00E+00	1.10E-05	2.33E-03	0.00E+00	0.00E+00	2.34E-03	5.48E-03	0.00E+00	1.52E-02	0.00E+00	0.00E+00	2.33E-03	0.00E+00	0.00E+00	1.52E-02
4291	ALL	748338.82	4035295.07	NonCancerAcute	0.00E+00	1.13E-05	2.41E-03	0.00E+00	0.00E+00	2.42E-03	5.59E-03	0.00E+00	1.56E-02	0.00E+00	0.00E+00	2.41E-03	0.00E+00	0.00E+00	1.56E-02

4292	ALL	748335.33	4035473.95	NonCancerAcute	0.00E+00	1.16E-05	2.46E-03	0.00E+00	0.00E+00	2.47E-03	5.85E-03	0.00E+00	1.61E-02	0.00E+00	0.00E+00	2.46E-03	0.00E+00	0.00E+00	1.61E-02
4293	ALL	748331.84	4035652.82	NonCancerAcute	0.00E+00	1.18E-05	2.51E-03	0.00E+00	0.00E+00	2.52E-03	6.20E-03	0.00E+00	1.67E-02	0.00E+00	0.00E+00	2.51E-03	0.00E+00	0.00E+00	1.67E-02
4294	ALL	748328.35	4035831.7	NonCancerAcute	0.00E+00	1.12E-05	2.38E-03	0.00E+00	0.00E+00	2.39E-03	6.31E-03	0.00E+00	1.64E-02	0.00E+00	0.00E+00	2.38E-03	0.00E+00	0.00E+00	1.64E-02
4295	ALL	748324.86	4036010.58	NonCancerAcute	0.00E+00	1.14E-05	2.42E-03	0.00E+00	0.00E+00	2.43E-03	6.57E-03	0.00E+00	1.68E-02	0.00E+00	0.00E+00	2.42E-03	0.00E+00	0.00E+00	1.68E-02
4296	ALL	748321.37	4036189.46	NonCancerAcute	0.00E+00	1.21E-05	2.57E-03	0.00E+00	0.00E+00	2.58E-03	6.60E-03	0.00E+00	1.74E-02	0.00E+00	0.00E+00	2.57E-03	0.00E+00	0.00E+00	1.74E-02
4297	ALL	748317.88	4036368.33	NonCancerAcute	0.00E+00	1.14E-05	2.43E-03	0.00E+00	0.00E+00	2.44E-03	6.73E-03	0.00E+00	1.71E-02	0.00E+00	0.00E+00	2.43E-03	0.00E+00	0.00E+00	1.71E-02
4298	ALL	748314.39	4036547.21	NonCancerAcute	0.00E+00	1.13E-05	2.41E-03	0.00E+00	0.00E+00	2.42E-03	6.96E-03	0.00E+00	1.73E-02	0.00E+00	0.00E+00	2.41E-03	0.00E+00	0.00E+00	1.73E-02
4299	ALL	748510.48	4036731.26	NonCancerAcute	0.00E+00	1.15E-05	2.44E-03	0.00E+00	0.00E+00	2.45E-03	6.66E-03	0.00E+00	1.70E-02	0.00E+00	0.00E+00	2.44E-03	0.00E+00	0.00E+00	1.70E-02
4300	ALL	748710.07	4036736.43	NonCancerAcute	0.00E+00	1.14E-05	2.43E-03	0.00E+00	0.00E+00	2.44E-03	6.22E-03	0.00E+00	1.64E-02	0.00E+00	0.00E+00	2.43E-03	0.00E+00	0.00E+00	1.64E-02
4301	ALL	748909.65	4036741.6	NonCancerAcute	0.00E+00	1.09E-05	2.32E-03	0.00E+00	0.00E+00	2.33E-03	5.95E-03	0.00E+00	1.57E-02	0.00E+00	0.00E+00	2.32E-03	0.00E+00	0.00E+00	1.57E-02
4302	ALL	749109.23	4036746.77	NonCancerAcute	0.00E+00	1.10E-05	2.34E-03	0.00E+00	0.00E+00	2.35E-03	5.70E-03	0.00E+00	1.55E-02	0.00E+00	0.00E+00	2.34E-03	0.00E+00	0.00E+00	1.55E-02
4303	ALL	749308.81	4036751.95	NonCancerAcute	0.00E+00	1.07E-05	2.27E-03	0.00E+00	0.00E+00	2.28E-03	5.85E-03	0.00E+00	1.54E-02	0.00E+00	0.00E+00	2.27E-03	0.00E+00	0.00E+00	1.54E-02
4304	ALL	749508.4	4036757.12	NonCancerAcute	0.00E+00	1.07E-05	2.27E-03	0.00E+00	0.00E+00	2.28E-03	5.33E-03	0.00E+00	1.48E-02	0.00E+00	0.00E+00	2.27E-03	0.00E+00	0.00E+00	1.48E-02
4305	ALL	749707.98	4036762.29	NonCancerAcute	0.00E+00	1.04E-05	2.22E-03	0.00E+00	0.00E+00	2.23E-03	4.78E-03	0.00E+00	1.39E-02	0.00E+00	0.00E+00	2.22E-03	0.00E+00	0.00E+00	1.39E-02
4306	ALL	749901.94	4036957.15	NonCancerAcute	0.00E+00	1.04E-05	2.20E-03	0.00E+00	0.00E+00	2.21E-03	4.98E-03	0.00E+00	1.41E-02	0.00E+00	0.00E+00	2.20E-03	0.00E+00	0.00E+00	1.41E-02
4307	ALL	749896.32	4037146.84	NonCancerAcute	0.00E+00	1.05E-05	2.23E-03	0.00E+00	0.00E+00	2.24E-03	5.11E-03	0.00E+00	1.44E-02	0.00E+00	0.00E+00	2.23E-03	0.00E+00	0.00E+00	1.44E-02
4308	ALL	749890.69	4037336.53	NonCancerAcute	0.00E+00	1.07E-05	2.26E-03	0.00E+00	0.00E+00	2.28E-03	5.34E-03	0.00E+00	1.48E-02	0.00E+00	0.00E+00	2.26E-03	0.00E+00	0.00E+00	1.48E-02
4309	ALL	749885.07	4037526.22	NonCancerAcute	0.00E+00	1.07E-05	2.27E-03	0.00E+00	0.00E+00	2.28E-03	5.58E-03	0.00E+00	1.51E-02	0.00E+00	0.00E+00	2.27E-03	0.00E+00	0.00E+00	1.51E-02
4310	ALL	749879.45	4037715.91	NonCancerAcute	0.00E+00	1.07E-05	2.28E-03	0.00E+00	0.00E+00	2.29E-03	5.68E-03	0.00E+00	1.52E-02	0.00E+00	0.00E+00	2.28E-03	0.00E+00	0.00E+00	1.52E-02
4311	ALL	749873.83	4037905.6	NonCancerAcute	0.00E+00	1.10E-05	2.34E-03	0.00E+00	0.00E+00	2.35E-03	5.83E-03	0.00E+00	1.56E-02	0.00E+00	0.00E+00	2.34E-03	0.00E+00	0.00E+00	1.56E-02
4312	ALL	749868.2	4038095.29	NonCancerAcute	0.00E+00	1.08E-05	2.30E-03	0.00E+00	0.00E+00	2.31E-03	6.06E-03	0.00E+00	1.58E-02	0.00E+00	0.00E+00	2.30E-03	0.00E+00	0.00E+00	1.58E-02
4313	ALL	749862.58	4038284.98	NonCancerAcute	0.00E+00	1.09E-05	2.32E-03	0.00E+00	0.00E+00	2.33E-03	6.32E-03	0.00E+00	1.62E-02	0.00E+00	0.00E+00	2.32E-03	0.00E+00	0.00E+00	1.62E-02
4314	ALL	749856.96	4038474.66	NonCancerAcute	0.00E+00	1.09E-05	2.32E-03	0.00E+00	0.00E+00	2.33E-03	6.94E-03	0.00E+00	1.69E-02	0.00E+00	0.00E+00	2.32E-03	0.00E+00	0.00E+00	1.69E-02
4315	ALL	749851.34	4038664.35	NonCancerAcute	0.00E+00	1.08E-05	2.29E-03	0.00E+00	0.00E+00	2.30E-03	7.25E-03	0.00E+00	1.72E-02	0.00E+00	0.00E+00	2.29E-03	0.00E+00	0.00E+00	1.72E-02
4316	ALL	749845.71	4038854.04	NonCancerAcute	0.00E+00	1.09E-05	2.32E-03	0.00E+00	0.00E+00	2.33E-03	7.80E-03	0.00E+00	1.80E-02	0.00E+00	0.00E+00	2.32E-03	0.00E+00	0.00E+00	1.80E-02
4317	ALL	749840.09	4039043.73	NonCancerAcute	0.00E+00	1.08E-05	2.30E-03	0.00E+00	0.00E+00	2.31E-03	8.34E-03	0.00E+00	1.86E-02	0.00E+00	0.00E+00	2.30E-03	0.00E+00	0.00E+00	1.86E-02
4318	ALL	749834.47	4039233.42	NonCancerAcute	0.00E+00	1.08E-05	2.28E-03	0.00E+00	0.00E+00	2.30E-03	8.71E-03	0.00E+00	1.90E-02	0.00E+00	0.00E+00	2.28E-03	0.00E+00	0.00E+00	1.90E-02
4319	ALL	749828.85	4039423.11	NonCancerAcute	0.00E+00	1.09E-05	2.32E-03	0.00E+00	0.00E+00	2.33E-03	9.15E-03	0.00E+00	1.96E-02	0.00E+00	0.00E+00	2.32E-03	0.00E+00	0.00E+00	1.96E-02
4320	ALL	749823.22	4039612.8	NonCancerAcute	0.00E+00	1.10E-05	2.34E-03	0.00E+00	0.00E+00	2.36E-03	1.01E-02	0.00E+00	2.09E-02	0.00E+00	0.00E+00	2.34E-03	0.00E+00	0.00E+00	2.09E-02
4321	ALL	749817.6	4039802.49	NonCancerAcute	0.00E+00	1.06E-05	2.24E-03	0.00E+00	0.00E+00	2.26E-03	1.08E-02	0.00E+00	2.14E-02	0.00E+00	0.00E+00	2.24E-03	0.00E+00	0.00E+00	2.14E-02
4322	ALL	750010.53	4040001.24	NonCancerAcute	0.00E+00	9.94E-06	2.11E-03	0.00E+00	0.00E+00	2.12E-03	1.03E-02	0.00E+00	2.02E-02	0.00E+00	0.00E+00	2.11E-03	0.00E+00	0.00E+00	2.02E-02
4323	ALL	750209.08	4040010.31	NonCancerAcute	0.00E+00	9.92E-06	2.11E-03	0.00E+00	0.00E+00	2.12E-03	9.49E-03	0.00E+00	1.93E-02	0.00E+00	0.00E+00	2.11E-03	0.00E+00	0.00E+00	1.93E-02
4324	ALL	750407.63	4040019.37	NonCancerAcute	0.00E+00	9.69E-06	2.06E-03	0.00E+00	0.00E+00	2.07E-03	8.51E-03	0.00E+00	1.79E-02	0.00E+00	0.00E+00	2.06E-03	0.00E+00	0.00E+00	1.79E-02
4325	ALL	750606.19	4040028.44	NonCancerAcute	0.00E+00	9.38E-06	1.99E-03	0.00E+00	0.00E+00	2.00E-03	7.66E-03	0.00E+00	1.66E-02	0.00E+00	0.00E+00	1.99E-03	0.00E+00	0.00E+00	1.66E-02
4326	ALL	750804.74	4040037.5	NonCancerAcute	0.00E+00	9.24E-06	1.96E-03	0.00E+00	0.00E+00	1.97E-03	7.05E-03	0.00E+00	1.58E-02	0.00E+00	0.00E+00	1.96E-03	0.00E+00	0.00E+00	1.58E-02
4327	ALL	751003.29	4040046.56	NonCancerAcute	0.00E+00	9.04E-06	1.92E-03	0.00E+00	0.00E+00	1.93E-03	6.46E-03	0.00E+00	1.49E-02	0.00E+00	0.00E+00	1.92E-03	0.00E+00	0.00E+00	1.49E-02
4328	ALL	751201.84	4040055.63	NonCancerAcute	0.00E+00	8.90E-06	1.89E-03	0.00E+00	0.00E+00	1.90E-03	5.92E-03	0.00E+00	1.41E-02	0.00E+00	0.00E+00	1.89E-03	0.00E+00	0.00E+00	1.41E-02
4329	ALL	751407.26	4039883.98	NonCancerAcute	0.00E+00	8.57E-06	1.82E-03	0.00E+00	0.00E+00	1.83E-03	5.43E-03	0.00E+00	1.33E-02	0.00E+00	0.00E+00	1.82E-03	0.00E+00	0.00E+00	1.33E-02
4330	ALL	751414.13	4039703.28	NonCancerAcute	0.00E+00	8.73E-06	1.85E-03	0.00E+00	0.00E+00	1.86E-03	5.17E-03	0.00E+00	1.31E-02	0.00E+00	0.00E+00	1.85E-03	0.00E+00	0.00E+00	1.31E-02
4331	ALL	751421	4039522.57	NonCancerAcute	0.00E+00	8.74E-06	1.86E-03	0.00E+00	0.00E+00	1.87E-03	5.22E-03	0.00E+00	1.31E-02	0.00E+00	0.00E+00	1.86E-03	0.00E+00	0.00E+00	1.31E-02
4332	ALL	751427.87	4039341.87	NonCancerAcute	0.00E+00	8.75E-06	1.86E-03	0.00E+00	0.00E+00	1.87E-03	4.94E-03	0.00E+00	1.28E-02	0.00E+00	0.00E+00	1.86E-03	0.00E+00	0.00E+00	1.28E-02
4333	ALL	751434.75	4039161.16	NonCancerAcute	0.00E+00	8.74E-06	1.86E-03	0.00E+00	0.00E+00	1.86E-03	5.11E-03	0.00E+00	1.30E-02	0.00E+00	0.00E+00	1.86E-03	0.00E+00	0.00E+00	1.30E-02
4334	ALL	751441.62	4038980.46	NonCancerAcute	0.00E+00	8.81E-06	1.87E-03	0.00E+00	0.00E+00	1.88E-03	4.80E-03	0.00E+00	1.27E-02	0.00E+00	0.00E+00	1.87E-03	0.00E+00	0.00E+00	1.27E-02
4335	ALL	751448.49	4038799.75	NonCancerAcute	0.00E+00	8.88E-06	1.89E-03	0.00E+00	0.00E+00	1.90E-03	4.77E-03	0.00E+00	1.27E-02	0.00E+00	0.00E+00	1.89E-03	0.00E+00	0.00E+00	1.27E-02
4336	ALL	751455.36	4038619.05	NonCancerAcute	0.00E+00	8.78E-06	1.86E-03	0.00E+00	0.00E+00	1.87E-03	4.54E-03	0.00E+00	1.23E-02	0.00E+00	0.00E+00	1.86E-03	0.00E+00	0.00E+00	1.23E-02
4337	ALL	751649.37	4038446.89	NonCancerAcute	0.00E+00	8.36E-06	1.78E-03	0.00E+00	0.00E+00	1.78E-03	4.16E-03	0.00E+00	1.15E-02	0.00E+00	0.00E+00	1.78E-03	0.00E+00	0.00E+00	1.15E-02
4338	ALL	751836.51	4038455.45	NonCancerAcute	0.00E+00	8.12E-06	1.72E-03	0.00E+00	0.00E+00	1.73E-03	4.12E-03	0.00E+00	1.13E-02	0.00E+00	0.00E+00	1.72E-03	0.00E+00	0.00E+00	1.13E-02
4339	ALL	752023.65	4038464	NonCancerAcute	0.00E+00	7.92E-06	1.68E-03	0.00E+00	0.00E+00	1.69E-03	3.81E-03	0.00E+00	1.08E-02	0.00E+00	0.00E+00	1.68E-03	0.00E+00	0.00E+00	1.08E-02
4340	ALL	752210.78	4038472.56	NonCancerAcute	0.00E+00	7.68E-06	1.63E-03	0.00E+00	0.00E+00	1.64E-03	3.67E-03	0.00E+00	1.04E-02	0.00E+00	0.00E+00	1.63E-03	0.00E+00	0.00E+00	1.04E-02
4341	ALL	752397.92	4038481.11	NonCancerAcute	0.00E+00	7.53E-06	1.60E-03	0.00E+00	0.00E+00	1.61E-03	3.76E-03	0.00E+00	1.04E-02	0.00E+00	0.00E+00	1.60E-03	0.00E+00	0.00E+00	1.04E-02
4342	ALL	752585.06	4038489.67	NonCancerAcute	0.00E+00	7.34E-06	1.56E-03	0.00E+00	0.00E+00	1.57E-03	3.62E-03	0.00E+00	1.01E-02	0.00E+00	0.00E+00	1.56E-03	0.00E+00	0.00E+00	1.01E-02
4343	ALL	752778.86	4038319.35	NonCancerAcute	0.00E+00	7.12E-06	1.51E-03	0.00E+00	0.00E+00	1.52E-03	3.50E-03	0.00E+00	9.79E-03	0.00E+00	0.00E+00	1.51E-03	0.00E+00	0.00E+00	9.79E-03
4344	ALL	752785.51	4038140.48	NonCancerAcute	0.00E+00	7.05E-06	1.50E-03	0.00E+00	0.00E+00	1.50E-03	3.22E-03	0.00E+00	9.38E-03	0.00E+00	0.00E+00	1.50E-03	0.00E+00	0.00E+00	9.38E-03

4345	ALL	752792.17	4037961.61	NonCancerAcute	0.00E+00	7.05E-06	1.50E-03	0.00E+00	0.00E+00	1.50E-03	3.07E-03	0.00E+00	9.20E-03	0.00E+00	0.00E+00	1.50E-03	0.00E+00	0.00E+00	9.20E-03
4346	ALL	752798.83	4037782.74	NonCancerAcute	0.00E+00	7.24E-06	1.54E-03	0.00E+00	0.00E+00	1.54E-03	3.07E-03	0.00E+00	9.34E-03	0.00E+00	0.00E+00	1.54E-03	0.00E+00	0.00E+00	9.34E-03
4347	ALL	752805.48	4037603.88	NonCancerAcute	0.00E+00	7.23E-06	1.54E-03	0.00E+00	0.00E+00	1.54E-03	3.21E-03	0.00E+00	9.51E-03	0.00E+00	0.00E+00	1.54E-03	0.00E+00	0.00E+00	9.51E-03
4348	ALL	752812.14	4037425.01	NonCancerAcute	0.00E+00	7.19E-06	1.53E-03	0.00E+00	0.00E+00	1.53E-03	3.08E-03	0.00E+00	9.32E-03	0.00E+00	0.00E+00	1.53E-03	0.00E+00	0.00E+00	9.32E-03
4349	ALL	752818.8	4037246.14	NonCancerAcute	0.00E+00	7.20E-06	1.53E-03	0.00E+00	0.00E+00	1.54E-03	3.03E-03	0.00E+00	9.27E-03	0.00E+00	0.00E+00	1.53E-03	0.00E+00	0.00E+00	9.27E-03
4350	ALL	752825.45	4037067.27	NonCancerAcute	0.00E+00	7.13E-06	1.51E-03	0.00E+00	0.00E+00	1.52E-03	3.00E-03	0.00E+00	9.18E-03	0.00E+00	0.00E+00	1.51E-03	0.00E+00	0.00E+00	9.18E-03
4351	ALL	753030.78	4036894.75	NonCancerAcute	0.00E+00	6.98E-06	1.48E-03	0.00E+00	0.00E+00	1.49E-03	2.84E-03	0.00E+00	8.86E-03	0.00E+00	0.00E+00	1.48E-03	0.00E+00	0.00E+00	8.86E-03
4352	ALL	753229.44	4036901.09	NonCancerAcute	0.00E+00	6.82E-06	1.45E-03	0.00E+00	0.00E+00	1.45E-03	2.66E-03	0.00E+00	8.52E-03	0.00E+00	0.00E+00	1.45E-03	0.00E+00	0.00E+00	8.52E-03
4353	ALL	753428.11	4036907.44	NonCancerAcute	0.00E+00	6.68E-06	1.42E-03	0.00E+00	0.00E+00	1.42E-03	2.55E-03	0.00E+00	8.28E-03	0.00E+00	0.00E+00	1.42E-03	0.00E+00	0.00E+00	8.28E-03
4354	ALL	753626.78	4036913.79	NonCancerAcute	0.00E+00	6.52E-06	1.38E-03	0.00E+00	0.00E+00	1.39E-03	2.57E-03	0.00E+00	8.18E-03	0.00E+00	0.00E+00	1.38E-03	0.00E+00	0.00E+00	8.18E-03
4355	ALL	753825.45	4036920.13	NonCancerAcute	0.00E+00	6.41E-06	1.36E-03	0.00E+00	0.00E+00	1.37E-03	2.48E-03	0.00E+00	7.98E-03	0.00E+00	0.00E+00	1.36E-03	0.00E+00	0.00E+00	7.98E-03
4356	ALL	754024.11	4036926.48	NonCancerAcute	0.00E+00	6.28E-06	1.33E-03	0.00E+00	0.00E+00	1.34E-03	2.31E-03	0.00E+00	7.67E-03	0.00E+00	0.00E+00	1.33E-03	0.00E+00	0.00E+00	7.67E-03
4357	ALL	754222.78	4036932.83	NonCancerAcute	0.00E+00	6.10E-06	1.30E-03	0.00E+00	0.00E+00	1.30E-03	2.23E-03	0.00E+00	7.45E-03	0.00E+00	0.00E+00	1.30E-03	0.00E+00	0.00E+00	7.45E-03
4358	ALL	754421.45	4036939.18	NonCancerAcute	0.00E+00	5.87E-06	1.25E-03	0.00E+00	0.00E+00	1.25E-03	2.17E-03	0.00E+00	7.18E-03	0.00E+00	0.00E+00	1.25E-03	0.00E+00	0.00E+00	7.18E-03
4359	ALL	754620.11	4036945.52	NonCancerAcute	0.00E+00	5.61E-06	1.19E-03	0.00E+00	0.00E+00	1.20E-03	2.17E-03	0.00E+00	6.99E-03	0.00E+00	0.00E+00	1.19E-03	0.00E+00	0.00E+00	6.99E-03
4360	ALL	754813.47	4037130.47	NonCancerAcute	0.00E+00	5.48E-06	1.16E-03	0.00E+00	0.00E+00	1.17E-03	2.33E-03	0.00E+00	7.09E-03	0.00E+00	0.00E+00	1.16E-03	0.00E+00	0.00E+00	7.09E-03
4361	ALL	754808.17	4037309.07	NonCancerAcute	0.00E+00	5.43E-06	1.15E-03	0.00E+00	0.00E+00	1.16E-03	2.30E-03	0.00E+00	7.01E-03	0.00E+00	0.00E+00	1.15E-03	0.00E+00	0.00E+00	7.01E-03
4362	ALL	754802.86	4037487.67	NonCancerAcute	0.00E+00	5.54E-06	1.18E-03	0.00E+00	0.00E+00	1.18E-03	2.31E-03	0.00E+00	7.10E-03	0.00E+00	0.00E+00	1.18E-03	0.00E+00	0.00E+00	7.10E-03
4363	ALL	754797.56	4037666.27	NonCancerAcute	0.00E+00	5.59E-06	1.19E-03	0.00E+00	0.00E+00	1.19E-03	2.22E-03	0.00E+00	7.03E-03	0.00E+00	0.00E+00	1.19E-03	0.00E+00	0.00E+00	7.03E-03
4364	ALL	754792.25	4037844.87	NonCancerAcute	0.00E+00	5.63E-06	1.19E-03	0.00E+00	0.00E+00	1.20E-03	2.24E-03	0.00E+00	7.09E-03	0.00E+00	0.00E+00	1.19E-03	0.00E+00	0.00E+00	7.09E-03
4365	ALL	754786.95	4038023.47	NonCancerAcute	0.00E+00	5.72E-06	1.21E-03	0.00E+00	0.00E+00	1.22E-03	2.30E-03	0.00E+00	7.23E-03	0.00E+00	0.00E+00	1.21E-03	0.00E+00	0.00E+00	7.23E-03
4366	ALL	754781.64	4038202.07	NonCancerAcute	0.00E+00	5.61E-06	1.19E-03	0.00E+00	0.00E+00	1.20E-03	2.27E-03	0.00E+00	7.11E-03	0.00E+00	0.00E+00	1.19E-03	0.00E+00	0.00E+00	7.11E-03
4367	ALL	754776.34	4038380.67	NonCancerAcute	0.00E+00	5.58E-06	1.19E-03	0.00E+00	0.00E+00	1.19E-03	2.23E-03	0.00E+00	7.04E-03	0.00E+00	0.00E+00	1.19E-03	0.00E+00	0.00E+00	7.04E-03
4368	ALL	754572.65	4038554.13	NonCancerAcute	0.00E+00	5.62E-06	1.19E-03	0.00E+00	0.00E+00	1.20E-03	2.25E-03	0.00E+00	7.09E-03	0.00E+00	0.00E+00	1.19E-03	0.00E+00	0.00E+00	7.09E-03
4369	ALL	754374.27	4038548.98	NonCancerAcute	0.00E+00	5.67E-06	1.20E-03	0.00E+00	0.00E+00	1.21E-03	2.37E-03	0.00E+00	7.28E-03	0.00E+00	0.00E+00	1.20E-03	0.00E+00	0.00E+00	7.28E-03
4370	ALL	754175.9	4038543.84	NonCancerAcute	0.00E+00	5.77E-06	1.23E-03	0.00E+00	0.00E+00	1.23E-03	2.48E-03	0.00E+00	7.49E-03	0.00E+00	0.00E+00	1.23E-03	0.00E+00	0.00E+00	7.49E-03
4371	ALL	753977.52	4038538.7	NonCancerAcute	0.00E+00	5.99E-06	1.27E-03	0.00E+00	0.00E+00	1.28E-03	2.58E-03	0.00E+00	7.78E-03	0.00E+00	0.00E+00	1.27E-03	0.00E+00	0.00E+00	7.78E-03
4372	ALL	753779.14	4038533.55	NonCancerAcute	0.00E+00	6.20E-06	1.32E-03	0.00E+00	0.00E+00	1.32E-03	2.64E-03	0.00E+00	8.02E-03	0.00E+00	0.00E+00	1.32E-03	0.00E+00	0.00E+00	8.02E-03
4373	ALL	753580.76	4038528.41	NonCancerAcute	0.00E+00	6.43E-06	1.37E-03	0.00E+00	0.00E+00	1.37E-03	2.68E-03	0.00E+00	8.24E-03	0.00E+00	0.00E+00	1.37E-03	0.00E+00	0.00E+00	8.24E-03
4374	ALL	753382.38	4038523.27	NonCancerAcute	0.00E+00	6.63E-06	1.41E-03	0.00E+00	0.00E+00	1.42E-03	2.67E-03	0.00E+00	8.39E-03	0.00E+00	0.00E+00	1.41E-03	0.00E+00	0.00E+00	8.39E-03
4375	ALL	753184.01	4038518.13	NonCancerAcute	0.00E+00	6.79E-06	1.44E-03	0.00E+00	0.00E+00	1.45E-03	2.69E-03	0.00E+00	8.54E-03	0.00E+00	0.00E+00	1.44E-03	0.00E+00	0.00E+00	8.54E-03
4376	ALL	752985.63	4038512.98	NonCancerAcute	0.00E+00	7.00E-06	1.49E-03	0.00E+00	0.00E+00	1.49E-03	2.83E-03	0.00E+00	8.86E-03	0.00E+00	0.00E+00	1.49E-03	0.00E+00	0.00E+00	8.86E-03
4377	ALL	752781.34	4038685.86	NonCancerAcute	0.00E+00	7.20E-06	1.53E-03	0.00E+00	0.00E+00	1.54E-03	2.97E-03	0.00E+00	9.19E-03	0.00E+00	0.00E+00	1.53E-03	0.00E+00	0.00E+00	9.19E-03
4378	ALL	752775.43	4038863.88	NonCancerAcute	0.00E+00	7.19E-06	1.53E-03	0.00E+00	0.00E+00	1.53E-03	3.02E-03	0.00E+00	9.25E-03	0.00E+00	0.00E+00	1.53E-03	0.00E+00	0.00E+00	9.25E-03
4379	ALL	752769.51	4039041.91	NonCancerAcute	0.00E+00	7.13E-06	1.51E-03	0.00E+00	0.00E+00	1.52E-03	3.15E-03	0.00E+00	9.35E-03	0.00E+00	0.00E+00	1.51E-03	0.00E+00	0.00E+00	9.35E-03
4380	ALL	752763.6	4039219.93	NonCancerAcute	0.00E+00	7.11E-06	1.51E-03	0.00E+00	0.00E+00	1.52E-03	3.12E-03	0.00E+00	9.32E-03	0.00E+00	0.00E+00	1.51E-03	0.00E+00	0.00E+00	9.32E-03
4381	ALL	752757.69	4039397.95	NonCancerAcute	0.00E+00	7.30E-06	1.55E-03	0.00E+00	0.00E+00	1.56E-03	3.06E-03	0.00E+00	9.39E-03	0.00E+00	0.00E+00	1.55E-03	0.00E+00	0.00E+00	9.39E-03
4382	ALL	752751.78	4039575.97	NonCancerAcute	0.00E+00	7.32E-06	1.55E-03	0.00E+00	0.00E+00	1.56E-03	3.08E-03	0.00E+00	9.42E-03	0.00E+00	0.00E+00	1.55E-03	0.00E+00	0.00E+00	9.42E-03
4383	ALL	752745.86	4039754	NonCancerAcute	0.00E+00	7.36E-06	1.56E-03	0.00E+00	0.00E+00	1.57E-03	3.32E-03	0.00E+00	9.75E-03	0.00E+00	0.00E+00	1.56E-03	0.00E+00	0.00E+00	9.75E-03
4384	ALL	752739.95	4039932.02	NonCancerAcute	0.00E+00	7.35E-06	1.56E-03	0.00E+00	0.00E+00	1.57E-03	3.32E-03	0.00E+00	9.73E-03	0.00E+00	0.00E+00	1.56E-03	0.00E+00	0.00E+00	9.73E-03
4385	ALL	752544.01	4040105.22	NonCancerAcute	0.00E+00	7.39E-06	1.57E-03	0.00E+00	0.00E+00	1.58E-03	3.51E-03	0.00E+00	1.00E-02	0.00E+00	0.00E+00	1.57E-03	0.00E+00	0.00E+00	1.00E-02
4386	ALL	752353.98	4040100.39	NonCancerAcute	0.00E+00	7.62E-06	1.62E-03	0.00E+00	0.00E+00	1.63E-03	3.76E-03	0.00E+00	1.05E-02	0.00E+00	0.00E+00	1.62E-03	0.00E+00	0.00E+00	1.05E-02
4387	ALL	752163.95	4040095.57	NonCancerAcute	0.00E+00	7.81E-06	1.66E-03	0.00E+00	0.00E+00	1.67E-03	4.02E-03	0.00E+00	1.10E-02	0.00E+00	0.00E+00	1.66E-03	0.00E+00	0.00E+00	1.10E-02
4388	ALL	751973.92	4040090.74	NonCancerAcute	0.00E+00	7.97E-06	1.69E-03	0.00E+00	0.00E+00	1.70E-03	4.29E-03	0.00E+00	1.14E-02	0.00E+00	0.00E+00	1.69E-03	0.00E+00	0.00E+00	1.14E-02
4389	ALL	751783.89	4040085.92	NonCancerAcute	0.00E+00	8.17E-06	1.74E-03	0.00E+00	0.00E+00	1.74E-03	4.64E-03	0.00E+00	1.20E-02	0.00E+00	0.00E+00	1.74E-03	0.00E+00	0.00E+00	1.20E-02
4390	ALL	751593.86	4040081.09	NonCancerAcute	0.00E+00	8.25E-06	1.75E-03	0.00E+00	0.00E+00	1.76E-03	5.11E-03	0.00E+00	1.26E-02	0.00E+00	0.00E+00	1.75E-03	0.00E+00	0.00E+00	1.26E-02
4391	ALL	751397.81	4040275.91	NonCancerAcute	0.00E+00	8.45E-06	1.80E-03	0.00E+00	0.00E+00	1.80E-03	5.44E-03	0.00E+00	1.32E-02	0.00E+00	0.00E+00	1.80E-03	0.00E+00	0.00E+00	1.32E-02
4392	ALL	751391.8	4040475.55	NonCancerAcute	0.00E+00	8.41E-06	1.79E-03	0.00E+00	0.00E+00	1.79E-03	5.38E-03	0.00E+00	1.31E-02	0.00E+00	0.00E+00	1.79E-03	0.00E+00	0.00E+00	1.31E-02
4393	ALL	751385.78	4040675.19	NonCancerAcute	0.00E+00	8.20E-06	1.74E-03	0.00E+00	0.00E+00	1.75E-03	5.27E-03	0.00E+00	1.28E-02	0.00E+00	0.00E+00	1.74E-03	0.00E+00	0.00E+00	1.28E-02
4394	ALL	751379.77	4040874.83	NonCancerAcute	0.00E+00	8.13E-06	1.73E-03	0.00E+00	0.00E+00	1.73E-03	5.08E-03	0.00E+00	1.25E-02	0.00E+00	0.00E+00	1.73E-03	0.00E+00	0.00E+00	1.25E-02
4395	ALL	751373.76	4041074.47	NonCancerAcute	0.00E+00	8.05E-06	1.71E-03	0.00E+00	0.00E+00	1.72E-03	5.00E-03	0.00E+00	1.23E-02	0.00E+00	0.00E+00	1.71E-03	0.00E+00	0.00E+00	1.23E-02
4396	ALL	751367.74	4041274.11	NonCancerAcute	0.00E+00	8.02E-06	1.70E-03	0.00E+00	0.00E+00	1.71E-03	5.36E-03	0.00E+00	1.28E-02	0.00E+00	0.00E+00	1.70E-03	0.00E+00	0.00E+00	1.28E-02
4397	ALL	751361.72	4041473.75	NonCancerAcute	0.00E+00	7.88E-06	1.67E-03	0.00E+00	0.00E+00	1.68E-03	5.12E-03	0.00E+00	1.23E-02	0.00E+00	0.00E+00	1.67E-03	0.00E+00	0.00E+00	1.23E-02

4398	ALL	751550.15	4041680.64	NonCancerAcute	0.00E+00	7.56E-06	1.61E-03	0.00E+00	0.00E+00	1.61E-03	4.72E-03	0.00E+00	1.16E-02	0.00E+00	0.00E+00	1.61E-03	0.00E+00	0.00E+00	1.16E-02
4399	ALL	751744.6	4041687.88	NonCancerAcute	0.00E+00	7.49E-06	1.59E-03	0.00E+00	0.00E+00	1.60E-03	4.72E-03	0.00E+00	1.16E-02	0.00E+00	0.00E+00	1.59E-03	0.00E+00	0.00E+00	1.16E-02
4400	ALL	751939.04	4041695.13	NonCancerAcute	0.00E+00	7.29E-06	1.55E-03	0.00E+00	0.00E+00	1.56E-03	4.37E-03	0.00E+00	1.10E-02	0.00E+00	0.00E+00	1.55E-03	0.00E+00	0.00E+00	1.10E-02
4401	ALL	752133.48	4041702.38	NonCancerAcute	0.00E+00	7.05E-06	1.50E-03	0.00E+00	0.00E+00	1.50E-03	4.22E-03	0.00E+00	1.06E-02	0.00E+00	0.00E+00	1.50E-03	0.00E+00	0.00E+00	1.06E-02
4402	ALL	752327.92	4041709.62	NonCancerAcute	0.00E+00	6.97E-06	1.48E-03	0.00E+00	0.00E+00	1.49E-03	3.85E-03	0.00E+00	1.01E-02	0.00E+00	0.00E+00	1.48E-03	0.00E+00	0.00E+00	1.01E-02
4403	ALL	752522.37	4041716.87	NonCancerAcute	0.00E+00	6.91E-06	1.47E-03	0.00E+00	0.00E+00	1.47E-03	3.34E-03	0.00E+00	9.43E-03	0.00E+00	0.00E+00	1.47E-03	0.00E+00	0.00E+00	9.43E-03
4404	ALL	752716.81	4041724.11	NonCancerAcute	0.00E+00	6.59E-06	1.40E-03	0.00E+00	0.00E+00	1.40E-03	3.12E-03	0.00E+00	8.91E-03	0.00E+00	0.00E+00	1.40E-03	0.00E+00	0.00E+00	8.91E-03
4405	ALL	752911.25	4041731.36	NonCancerAcute	0.00E+00	6.47E-06	1.37E-03	0.00E+00	0.00E+00	1.38E-03	3.01E-03	0.00E+00	8.67E-03	0.00E+00	0.00E+00	1.37E-03	0.00E+00	0.00E+00	8.67E-03
4406	ALL	753105.69	4041738.61	NonCancerAcute	0.00E+00	6.26E-06	1.33E-03	0.00E+00	0.00E+00	1.34E-03	2.89E-03	0.00E+00	8.37E-03	0.00E+00	0.00E+00	1.33E-03	0.00E+00	0.00E+00	8.37E-03
4407	ALL	753300.14	4041745.85	NonCancerAcute	0.00E+00	6.13E-06	1.30E-03	0.00E+00	0.00E+00	1.31E-03	2.74E-03	0.00E+00	8.09E-03	0.00E+00	0.00E+00	1.30E-03	0.00E+00	0.00E+00	8.09E-03
4408	ALL	753484.73	4041987.72	NonCancerAcute	0.00E+00	5.92E-06	1.26E-03	0.00E+00	0.00E+00	1.26E-03	2.59E-03	0.00E+00	7.74E-03	0.00E+00	0.00E+00	1.26E-03	0.00E+00	0.00E+00	7.74E-03
4409	ALL	753476.91	4042185.52	NonCancerAcute	0.00E+00	6.07E-06	1.29E-03	0.00E+00	0.00E+00	1.30E-03	2.61E-03	0.00E+00	7.88E-03	0.00E+00	0.00E+00	1.29E-03	0.00E+00	0.00E+00	7.88E-03
4410	ALL	753469.09	4042383.31	NonCancerAcute	0.00E+00	5.97E-06	1.27E-03	0.00E+00	0.00E+00	1.27E-03	2.89E-03	0.00E+00	8.14E-03	0.00E+00	0.00E+00	1.27E-03	0.00E+00	0.00E+00	8.14E-03
4411	ALL	753461.28	4042581.1	NonCancerAcute	0.00E+00	5.89E-06	1.25E-03	0.00E+00	0.00E+00	1.26E-03	2.87E-03	0.00E+00	8.06E-03	0.00E+00	0.00E+00	1.25E-03	0.00E+00	0.00E+00	8.06E-03
4412	ALL	753453.46	4042778.9	NonCancerAcute	0.00E+00	5.74E-06	1.22E-03	0.00E+00	0.00E+00	1.22E-03	2.88E-03	0.00E+00	7.95E-03	0.00E+00	0.00E+00	1.22E-03	0.00E+00	0.00E+00	7.95E-03
4413	ALL	753445.64	4042976.69	NonCancerAcute	0.00E+00	5.67E-06	1.20E-03	0.00E+00	0.00E+00	1.21E-03	3.01E-03	0.00E+00	8.06E-03	0.00E+00	0.00E+00	1.20E-03	0.00E+00	0.00E+00	8.06E-03
4414	ALL	753437.82	4043174.49	NonCancerAcute	0.00E+00	5.82E-06	1.24E-03	0.00E+00	0.00E+00	1.24E-03	2.87E-03	0.00E+00	8.01E-03	0.00E+00	0.00E+00	1.24E-03	0.00E+00	0.00E+00	8.01E-03
4415	ALL	753265.73	4043365.92	NonCancerAcute	0.00E+00	5.99E-06	1.27E-03	0.00E+00	0.00E+00	1.28E-03	2.61E-03	0.00E+00	7.82E-03	0.00E+00	0.00E+00	1.27E-03	0.00E+00	0.00E+00	7.82E-03
4416	ALL	753101.45	4043359.56	NonCancerAcute	0.00E+00	6.06E-06	1.29E-03	0.00E+00	0.00E+00	1.29E-03	2.77E-03	0.00E+00	8.08E-03	0.00E+00	0.00E+00	1.29E-03	0.00E+00	0.00E+00	8.08E-03
4417	ALL	752937.18	4043353.21	NonCancerAcute	0.00E+00	6.15E-06	1.31E-03	0.00E+00	0.00E+00	1.31E-03	2.96E-03	0.00E+00	8.37E-03	0.00E+00	0.00E+00	1.31E-03	0.00E+00	0.00E+00	8.37E-03
4418	ALL	752772.9	4043346.85	NonCancerAcute	0.00E+00	6.14E-06	1.30E-03	0.00E+00	0.00E+00	1.31E-03	2.97E-03	0.00E+00	8.37E-03	0.00E+00	0.00E+00	1.30E-03	0.00E+00	0.00E+00	8.37E-03
4419	ALL	752606.42	4043519.77	NonCancerAcute	0.00E+00	6.13E-06	1.30E-03	0.00E+00	0.00E+00	1.31E-03	2.93E-03	0.00E+00	8.33E-03	0.00E+00	0.00E+00	1.30E-03	0.00E+00	0.00E+00	8.33E-03
4420	ALL	752604.2	4043699.05	NonCancerAcute	0.00E+00	6.09E-06	1.29E-03	0.00E+00	0.00E+00	1.30E-03	3.19E-03	0.00E+00	8.61E-03	0.00E+00	0.00E+00	1.29E-03	0.00E+00	0.00E+00	8.61E-03
4421	ALL	752601.99	4043878.33	NonCancerAcute	0.00E+00	5.82E-06	1.24E-03	0.00E+00	0.00E+00	1.24E-03	3.20E-03	0.00E+00	8.41E-03	0.00E+00	0.00E+00	1.24E-03	0.00E+00	0.00E+00	8.41E-03
4422	ALL	752599.77	4044057.61	NonCancerAcute	0.00E+00	5.92E-06	1.26E-03	0.00E+00	0.00E+00	1.26E-03	3.01E-03	0.00E+00	8.25E-03	0.00E+00	0.00E+00	1.26E-03	0.00E+00	0.00E+00	8.25E-03
4423	ALL	752597.56	4044236.9	NonCancerAcute	0.00E+00	5.90E-06	1.25E-03	0.00E+00	0.00E+00	1.26E-03	2.66E-03	0.00E+00	7.82E-03	0.00E+00	0.00E+00	1.25E-03	0.00E+00	0.00E+00	7.82E-03
4424	ALL	752595.34	4044416.18	NonCancerAcute	0.00E+00	5.86E-06	1.24E-03	0.00E+00	0.00E+00	1.25E-03	2.56E-03	0.00E+00	7.66E-03	0.00E+00	0.00E+00	1.24E-03	0.00E+00	0.00E+00	7.66E-03
4425	ALL	752593.13	4044595.46	NonCancerAcute	0.00E+00	5.67E-06	1.20E-03	0.00E+00	0.00E+00	1.21E-03	2.44E-03	0.00E+00	7.37E-03	0.00E+00	0.00E+00	1.20E-03	0.00E+00	0.00E+00	7.37E-03
4426	ALL	752590.91	4044774.74	NonCancerAcute	0.00E+00	5.51E-06	1.17E-03	0.00E+00	0.00E+00	1.18E-03	2.34E-03	0.00E+00	7.12E-03	0.00E+00	0.00E+00	1.17E-03	0.00E+00	0.00E+00	7.12E-03
4427	ALL	752412.91	4044950.79	NonCancerAcute	0.00E+00	5.62E-06	1.19E-03	0.00E+00	0.00E+00	1.20E-03	2.28E-03	0.00E+00	7.13E-03	0.00E+00	0.00E+00	1.19E-03	0.00E+00	0.00E+00	7.13E-03
4428	ALL	752237.11	4044947.56	NonCancerAcute	0.00E+00	5.80E-06	1.23E-03	0.00E+00	0.00E+00	1.24E-03	2.34E-03	0.00E+00	7.34E-03	0.00E+00	0.00E+00	1.23E-03	0.00E+00	0.00E+00	7.34E-03
4429	ALL	752061.32	4044944.32	NonCancerAcute	0.00E+00	5.74E-06	1.22E-03	0.00E+00	0.00E+00	1.23E-03	2.61E-03	0.00E+00	7.64E-03	0.00E+00	0.00E+00	1.22E-03	0.00E+00	0.00E+00	7.64E-03
4430	ALL	751885.52	4044941.09	NonCancerAcute	0.00E+00	5.71E-06	1.21E-03	0.00E+00	0.00E+00	1.22E-03	2.68E-03	0.00E+00	7.68E-03	0.00E+00	0.00E+00	1.21E-03	0.00E+00	0.00E+00	7.68E-03
4431	ALL	751709.73	4044937.86	NonCancerAcute	0.00E+00	6.05E-06	1.28E-03	0.00E+00	0.00E+00	1.29E-03	2.90E-03	0.00E+00	8.22E-03	0.00E+00	0.00E+00	1.28E-03	0.00E+00	0.00E+00	8.22E-03
4432	ALL	751533.94	4044934.63	NonCancerAcute	0.00E+00	6.20E-06	1.32E-03	0.00E+00	0.00E+00	1.32E-03	2.84E-03	0.00E+00	8.27E-03	0.00E+00	0.00E+00	1.32E-03	0.00E+00	0.00E+00	8.27E-03
4433	ALL	751358.14	4044931.39	NonCancerAcute	0.00E+00	6.13E-06	1.30E-03	0.00E+00	0.00E+00	1.31E-03	2.70E-03	0.00E+00	8.04E-03	0.00E+00	0.00E+00	1.30E-03	0.00E+00	0.00E+00	8.04E-03
4434	ALL	751006.68	4044917.24	NonCancerAcute	0.00E+00	6.29E-06	1.34E-03	0.00E+00	0.00E+00	1.34E-03	2.87E-03	0.00E+00	8.37E-03	0.00E+00	0.00E+00	1.34E-03	0.00E+00	0.00E+00	8.37E-03
4435	ALL	750831.01	4044906.31	NonCancerAcute	0.00E+00	6.36E-06	1.35E-03	0.00E+00	0.00E+00	1.36E-03	2.70E-03	0.00E+00	8.21E-03	0.00E+00	0.00E+00	1.35E-03	0.00E+00	0.00E+00	8.21E-03
4436	ALL	750655.34	4044895.39	NonCancerAcute	0.00E+00	6.49E-06	1.38E-03	0.00E+00	0.00E+00	1.39E-03	2.55E-03	0.00E+00	8.14E-03	0.00E+00	0.00E+00	1.38E-03	0.00E+00	0.00E+00	8.14E-03
4437	ALL	750479.68	4044884.47	NonCancerAcute	0.00E+00	6.49E-06	1.38E-03	0.00E+00	0.00E+00	1.39E-03	2.91E-03	0.00E+00	8.58E-03	0.00E+00	0.00E+00	1.38E-03	0.00E+00	0.00E+00	8.58E-03
4438	ALL	750304.01	4044873.54	NonCancerAcute	0.00E+00	6.67E-06	1.42E-03	0.00E+00	0.00E+00	1.42E-03	3.13E-03	0.00E+00	8.99E-03	0.00E+00	0.00E+00	1.42E-03	0.00E+00	0.00E+00	8.99E-03
4439	ALL	750124.51	4045062.17	NonCancerAcute	0.00E+00	6.75E-06	1.43E-03	0.00E+00	0.00E+00	1.44E-03	2.95E-03	0.00E+00	8.83E-03	0.00E+00	0.00E+00	1.43E-03	0.00E+00	0.00E+00	8.83E-03
4440	ALL	750120.68	4045261.72	NonCancerAcute	0.00E+00	6.56E-06	1.39E-03	0.00E+00	0.00E+00	1.40E-03	2.77E-03	0.00E+00	8.45E-03	0.00E+00	0.00E+00	1.39E-03	0.00E+00	0.00E+00	8.45E-03
4441	ALL	750116.84	4045461.27	NonCancerAcute	0.00E+00	6.32E-06	1.34E-03	0.00E+00	0.00E+00	1.35E-03	2.67E-03	0.00E+00	8.15E-03	0.00E+00	0.00E+00	1.34E-03	0.00E+00	0.00E+00	8.15E-03
4442	ALL	749930.09	4045652.73	NonCancerAcute	0.00E+00	6.17E-06	1.31E-03	0.00E+00	0.00E+00	1.32E-03	2.62E-03	0.00E+00	7.98E-03	0.00E+00	0.00E+00	1.31E-03	0.00E+00	0.00E+00	7.98E-03
4443	ALL	749747.16	4045644.64	NonCancerAcute	0.00E+00	6.05E-06	1.29E-03	0.00E+00	0.00E+00	1.29E-03	2.70E-03	0.00E+00	7.98E-03	0.00E+00	0.00E+00	1.29E-03	0.00E+00	0.00E+00	7.98E-03
4444	ALL	749564.24	4045636.55	NonCancerAcute	0.00E+00	6.22E-06	1.32E-03	0.00E+00	0.00E+00	1.33E-03	2.65E-03	0.00E+00	8.05E-03	0.00E+00	0.00E+00	1.32E-03	0.00E+00	0.00E+00	8.05E-03
4445	ALL	749381.32	4045628.46	NonCancerAcute	0.00E+00	6.32E-06	1.34E-03	0.00E+00	0.00E+00	1.35E-03	2.64E-03	0.00E+00	8.11E-03	0.00E+00	0.00E+00	1.34E-03	0.00E+00	0.00E+00	8.11E-03
4446	ALL	749198.39	4045620.38	NonCancerAcute	0.00E+00	6.10E-06	1.30E-03	0.00E+00	0.00E+00	1.30E-03	2.63E-03	0.00E+00	7.93E-03	0.00E+00	0.00E+00	1.30E-03	0.00E+00	0.00E+00	7.93E-03
4447	ALL	749015.47	4045612.29	NonCancerAcute	0.00E+00	6.50E-06	1.38E-03	0.00E+00	0.00E+00	1.39E-03	2.61E-03	0.00E+00	8.22E-03	0.00E+00	0.00E+00	1.38E-03	0.00E+00	0.00E+00	8.22E-03
4448	ALL	748832.55	4045604.2	NonCancerAcute	0.00E+00	6.78E-06	1.44E-03	0.00E+00	0.00E+00	1.45E-03	2.60E-03	0.00E+00	8.42E-03	0.00E+00	0.00E+00	1.44E-03	0.00E+00	0.00E+00	8.42E-03
4449	ALL	748649.62	4045596.11	NonCancerAcute	0.00E+00	6.49E-06	1.38E-03	0.00E+00	0.00E+00	1.38E-03	2.72E-03	0.00E+00	8.34E-03	0.00E+00	0.00E+00	1.38E-03	0.00E+00	0.00E+00	8.34E-03
4450	ALL	748470.57	4045402.95	NonCancerAcute	0.00E+00	7.07E-06	1.50E-03	0.00E+00	0.00E+00	1.51E-03	2.88E-03	0.00E+00	8.98E-03	0.00E+00	0.00E+00	1.50E-03	0.00E+00	0.00E+00	8.98E-03

4451	ALL	748474.44	4045217.88	NonCancerAcute	0.00E+00	7.24E-06	1.54E-03	0.00E+00	0.00E+00	1.54E-03	2.96E-03	0.00E+00	9.21E-03	0.00E+00	0.00E+00	1.54E-03	0.00E+00	0.00E+00	9.21E-03
4452	ALL	748478.32	4045032.81	NonCancerAcute	0.00E+00	7.36E-06	1.56E-03	0.00E+00	0.00E+00	1.57E-03	3.00E-03	0.00E+00	9.35E-03	0.00E+00	0.00E+00	1.56E-03	0.00E+00	0.00E+00	9.35E-03
4453	ALL	748482.19	4044847.74	NonCancerAcute	0.00E+00	7.44E-06	1.58E-03	0.00E+00	0.00E+00	1.59E-03	3.05E-03	0.00E+00	9.48E-03	0.00E+00	0.00E+00	1.58E-03	0.00E+00	0.00E+00	9.48E-03
4454	ALL	748486.06	4044662.67	NonCancerAcute	0.00E+00	7.44E-06	1.58E-03	0.00E+00	0.00E+00	1.59E-03	3.11E-03	0.00E+00	9.55E-03	0.00E+00	0.00E+00	1.58E-03	0.00E+00	0.00E+00	9.55E-03
4455	ALL	748489.93	4044477.6	NonCancerAcute	0.00E+00	7.56E-06	1.60E-03	0.00E+00	0.00E+00	1.61E-03	3.20E-03	0.00E+00	9.75E-03	0.00E+00	0.00E+00	1.60E-03	0.00E+00	0.00E+00	9.75E-03
4456	ALL	748493.81	4044292.53	NonCancerAcute	0.00E+00	7.71E-06	1.64E-03	0.00E+00	0.00E+00	1.64E-03	3.26E-03	0.00E+00	9.94E-03	0.00E+00	0.00E+00	1.64E-03	0.00E+00	0.00E+00	9.94E-03
4457	ALL	748497.68	4044107.46	NonCancerAcute	0.00E+00	7.86E-06	1.67E-03	0.00E+00	0.00E+00	1.68E-03	3.40E-03	0.00E+00	1.02E-02	0.00E+00	0.00E+00	1.67E-03	0.00E+00	0.00E+00	1.02E-02
4458	ALL	748501.55	4043922.39	NonCancerAcute	0.00E+00	8.05E-06	1.71E-03	0.00E+00	0.00E+00	1.72E-03	3.56E-03	0.00E+00	1.06E-02	0.00E+00	0.00E+00	1.71E-03	0.00E+00	0.00E+00	1.06E-02
4459	ALL	748505.42	4043737.32	NonCancerAcute	0.00E+00	8.24E-06	1.75E-03	0.00E+00	0.00E+00	1.76E-03	3.78E-03	0.00E+00	1.10E-02	0.00E+00	0.00E+00	1.75E-03	0.00E+00	0.00E+00	1.10E-02
4460	ALL	748509.3	4043552.25	NonCancerAcute	0.00E+00	8.39E-06	1.78E-03	0.00E+00	0.00E+00	1.79E-03	4.03E-03	0.00E+00	1.14E-02	0.00E+00	0.00E+00	1.78E-03	0.00E+00	0.00E+00	1.14E-02
4461	ALL	748513.17	4043367.18	NonCancerAcute	0.00E+00	8.49E-06	1.80E-03	0.00E+00	0.00E+00	1.81E-03	4.23E-03	0.00E+00	1.17E-02	0.00E+00	0.00E+00	1.80E-03	0.00E+00	0.00E+00	1.17E-02
4462	ALL	748521.32	4043003.52	NonCancerAcute	0.00E+00	8.59E-06	1.82E-03	0.00E+00	0.00E+00	1.83E-03	4.74E-03	0.00E+00	1.24E-02	0.00E+00	0.00E+00	1.82E-03	0.00E+00	0.00E+00	1.24E-02
4463	ALL	748525.6	4042824.93	NonCancerAcute	0.00E+00	8.60E-06	1.83E-03	0.00E+00	0.00E+00	1.83E-03	4.92E-03	0.00E+00	1.27E-02	0.00E+00	0.00E+00	1.83E-03	0.00E+00	0.00E+00	1.27E-02
4464	ALL	748529.88	4042646.34	NonCancerAcute	0.00E+00	8.68E-06	1.84E-03	0.00E+00	0.00E+00	1.85E-03	5.23E-03	0.00E+00	1.31E-02	0.00E+00	0.00E+00	1.84E-03	0.00E+00	0.00E+00	1.31E-02
4465	ALL	748534.16	4042467.75	NonCancerAcute	0.00E+00	8.81E-06	1.87E-03	0.00E+00	0.00E+00	1.88E-03	5.50E-03	0.00E+00	1.35E-02	0.00E+00	0.00E+00	1.87E-03	0.00E+00	0.00E+00	1.35E-02
4466	ALL	748538.45	4042289.16	NonCancerAcute	0.00E+00	9.03E-06	1.92E-03	0.00E+00	0.00E+00	1.93E-03	5.79E-03	0.00E+00	1.41E-02	0.00E+00	0.00E+00	1.92E-03	0.00E+00	0.00E+00	1.41E-02
4467	ALL	748542.73	4042110.57	NonCancerAcute	0.00E+00	9.19E-06	1.95E-03	0.00E+00	0.00E+00	1.96E-03	5.80E-03	0.00E+00	1.42E-02	0.00E+00	0.00E+00	1.95E-03	0.00E+00	0.00E+00	1.42E-02
4468	ALL	748547.01	4041931.98	NonCancerAcute	0.00E+00	9.33E-06	1.98E-03	0.00E+00	0.00E+00	1.99E-03	6.37E-03	0.00E+00	1.50E-02	0.00E+00	0.00E+00	1.98E-03	0.00E+00	0.00E+00	1.50E-02
4469	ALL	748551.29	4041753.39	NonCancerAcute	0.00E+00	9.66E-06	2.05E-03	0.00E+00	0.00E+00	2.06E-03	6.63E-03	0.00E+00	1.56E-02	0.00E+00	0.00E+00	2.05E-03	0.00E+00	0.00E+00	1.56E-02
4470	ALL	748415.26	4041570.97	NonCancerAcute	0.00E+00	1.01E-05	2.14E-03	0.00E+00	0.00E+00	2.15E-03	6.90E-03	0.00E+00	1.62E-02	0.00E+00	0.00E+00	2.14E-03	0.00E+00	0.00E+00	1.62E-02
4471	ALL	748274.94	4041567.13	NonCancerAcute	0.00E+00	1.01E-05	2.15E-03	0.00E+00	0.00E+00	2.16E-03	6.72E-03	0.00E+00	1.60E-02	0.00E+00	0.00E+00	2.15E-03	0.00E+00	0.00E+00	1.60E-02
4472	ALL	747999.07	4041558.26	NonCancerAcute	0.00E+00	1.05E-05	2.24E-03	0.00E+00	0.00E+00	2.25E-03	6.05E-03	0.00E+00	1.55E-02	0.00E+00	0.00E+00	2.24E-03	0.00E+00	0.00E+00	1.55E-02
4473	ALL	747863.5	4041553.23	NonCancerAcute	0.00E+00	1.05E-05	2.23E-03	0.00E+00	0.00E+00	2.24E-03	6.09E-03	0.00E+00	1.56E-02	0.00E+00	0.00E+00	2.23E-03	0.00E+00	0.00E+00	1.56E-02
4474	ALL	747530.03	4041541.69	NonCancerAcute	0.00E+00	1.08E-05	2.29E-03	0.00E+00	0.00E+00	2.30E-03	6.06E-03	0.00E+00	1.57E-02	0.00E+00	0.00E+00	2.29E-03	0.00E+00	0.00E+00	1.57E-02
4475	ALL	747332.13	4041535.19	NonCancerAcute	0.00E+00	1.04E-05	2.22E-03	0.00E+00	0.00E+00	2.23E-03	5.91E-03	0.00E+00	1.53E-02	0.00E+00	0.00E+00	2.22E-03	0.00E+00	0.00E+00	1.53E-02
4476	ALL	747134.22	4041528.68	NonCancerAcute	0.00E+00	1.06E-05	2.26E-03	0.00E+00	0.00E+00	2.27E-03	5.68E-03	0.00E+00	1.52E-02	0.00E+00	0.00E+00	2.26E-03	0.00E+00	0.00E+00	1.52E-02
4477	ALL	746936.32	4041522.18	NonCancerAcute	0.00E+00	1.04E-05	2.20E-03	0.00E+00	0.00E+00	2.21E-03	5.58E-03	0.00E+00	1.48E-02	0.00E+00	0.00E+00	2.20E-03	0.00E+00	0.00E+00	1.48E-02
4478	ALL	746737.17	4041318.1	NonCancerAcute	0.00E+00	1.06E-05	2.25E-03	0.00E+00	0.00E+00	2.26E-03	5.41E-03	0.00E+00	1.48E-02	0.00E+00	0.00E+00	2.25E-03	0.00E+00	0.00E+00	1.48E-02
4479	ALL	746544.71	4040913.4	NonCancerAcute	0.00E+00	1.09E-05	2.31E-03	0.00E+00	0.00E+00	2.33E-03	5.69E-03	0.00E+00	1.54E-02	0.00E+00	0.00E+00	2.31E-03	0.00E+00	0.00E+00	1.54E-02
4480	ALL	746546.18	4040716.18	NonCancerAcute	0.00E+00	1.10E-05	2.34E-03	0.00E+00	0.00E+00	2.35E-03	5.91E-03	0.00E+00	1.58E-02	0.00E+00	0.00E+00	2.34E-03	0.00E+00	0.00E+00	1.58E-02
4481	ALL	746752.4	4039891.44	NonCancerAcute	0.00E+00	1.21E-05	2.57E-03	0.00E+00	0.00E+00	2.58E-03	6.74E-03	0.00E+00	1.76E-02	0.00E+00	0.00E+00	2.57E-03	0.00E+00	0.00E+00	1.76E-02
4482	ALL	746931.8	4039897.49	NonCancerAcute	0.00E+00	1.23E-05	2.60E-03	0.00E+00	0.00E+00	2.61E-03	6.95E-03	0.00E+00	1.80E-02	0.00E+00	0.00E+00	2.60E-03	0.00E+00	0.00E+00	1.80E-02
4483	ALL	747111.2	4039903.53	NonCancerAcute	0.00E+00	1.28E-05	2.72E-03	0.00E+00	0.00E+00	2.73E-03	7.02E-03	0.00E+00	1.85E-02	0.00E+00	0.00E+00	2.72E-03	0.00E+00	0.00E+00	1.85E-02
4484	ALL	747290.6	4039909.57	NonCancerAcute	0.00E+00	1.28E-05	2.71E-03	0.00E+00	0.00E+00	2.73E-03	7.13E-03	0.00E+00	1.86E-02	0.00E+00	0.00E+00	2.71E-03	0.00E+00	0.00E+00	1.86E-02
4485	ALL	747470.01	4039915.62	NonCancerAcute	0.00E+00	1.33E-05	2.83E-03	0.00E+00	0.00E+00	2.84E-03	7.19E-03	0.00E+00	1.91E-02	0.00E+00	0.00E+00	2.83E-03	0.00E+00	0.00E+00	1.91E-02
4486	ALL	747649.41	4039921.66	NonCancerAcute	0.00E+00	1.45E-05	3.08E-03	0.00E+00	0.00E+00	3.09E-03	7.26E-03	0.00E+00	2.01E-02	0.00E+00	0.00E+00	3.08E-03	0.00E+00	0.00E+00	2.01E-02
4487	ALL	747828.81	4039927.7	NonCancerAcute	0.00E+00	1.57E-05	3.32E-03	0.00E+00	0.00E+00	3.34E-03	7.94E-03	0.00E+00	2.18E-02	0.00E+00	0.00E+00	3.32E-03	0.00E+00	0.00E+00	2.18E-02
4488	ALL	748008.21	4039933.75	NonCancerAcute	0.00E+00	1.57E-05	3.34E-03	0.00E+00	0.00E+00	3.36E-03	8.20E-03	0.00E+00	2.22E-02	0.00E+00	0.00E+00	3.34E-03	0.00E+00	0.00E+00	2.22E-02
4489	ALL	748192.76	4039742.94	NonCancerAcute	0.00E+00	1.70E-05	3.60E-03	0.00E+00	0.00E+00	3.62E-03	8.47E-03	0.00E+00	2.35E-02	0.00E+00	0.00E+00	3.60E-03	0.00E+00	0.00E+00	2.35E-02
4490	ALL	748197.9	4039546.08	NonCancerAcute	0.00E+00	1.49E-05	3.17E-03	0.00E+00	0.00E+00	3.19E-03	8.43E-03	0.00E+00	2.19E-02	0.00E+00	0.00E+00	3.17E-03	0.00E+00	0.00E+00	2.19E-02
4491	ALL	748203.05	4039349.23	NonCancerAcute	0.00E+00	1.24E-05	2.64E-03	0.00E+00	0.00E+00	2.65E-03	8.21E-03	0.00E+00	1.97E-02	0.00E+00	0.00E+00	2.64E-03	0.00E+00	0.00E+00	1.97E-02
4492	ALL	748208.19	4039152.38	NonCancerAcute	0.00E+00	1.19E-05	2.54E-03	0.00E+00	0.00E+00	2.55E-03	7.93E-03	0.00E+00	1.89E-02	0.00E+00	0.00E+00	2.54E-03	0.00E+00	0.00E+00	1.89E-02
4493	ALL	748213.33	4038955.53	NonCancerAcute	0.00E+00	1.18E-05	2.50E-03	0.00E+00	0.00E+00	2.51E-03	7.85E-03	0.00E+00	1.87E-02	0.00E+00	0.00E+00	2.50E-03	0.00E+00	0.00E+00	1.87E-02
4494	ALL	748218.48	4038758.67	NonCancerAcute	0.00E+00	1.19E-05	2.52E-03	0.00E+00	0.00E+00	2.54E-03	7.88E-03	0.00E+00	1.88E-02	0.00E+00	0.00E+00	2.52E-03	0.00E+00	0.00E+00	1.88E-02
4495	ALL	748223.63	4038561.82	NonCancerAcute	0.00E+00	1.19E-05	2.53E-03	0.00E+00	0.00E+00	2.54E-03	7.96E-03	0.00E+00	1.89E-02	0.00E+00	0.00E+00	2.53E-03	0.00E+00	0.00E+00	1.89E-02
4496	ALL	748228.77	4038364.97	NonCancerAcute	0.00E+00	1.19E-05	2.52E-03	0.00E+00	0.00E+00	2.53E-03	7.86E-03	0.00E+00	1.88E-02	0.00E+00	0.00E+00	2.52E-03	0.00E+00	0.00E+00	1.88E-02
4497	ALL	748233.92	4038168.12	NonCancerAcute	0.00E+00	1.19E-05	2.53E-03	0.00E+00	0.00E+00	2.54E-03	7.95E-03	0.00E+00	1.89E-02	0.00E+00	0.00E+00	2.53E-03	0.00E+00	0.00E+00	1.89E-02
4498	ALL	748239.06	4037971.27	NonCancerAcute	0.00E+00	1.19E-05	2.52E-03	0.00E+00	0.00E+00	2.53E-03	7.91E-03	0.00E+00	1.88E-02	0.00E+00	0.00E+00	2.52E-03	0.00E+00	0.00E+00	1.88E-02
4499	ALL	748244.21	4037774.41	NonCancerAcute	0.00E+00	1.19E-05	2.54E-03	0.00E+00	0.00E+00	2.55E-03	8.10E-03	0.00E+00	1.91E-02	0.00E+00	0.00E+00	2.54E-03	0.00E+00	0.00E+00	1.91E-02
4500	ALL	748249.35	4037577.56	NonCancerAcute	0.00E+00	1.15E-05	2.43E-03	0.00E+00	0.00E+00	2.44E-03	7.78E-03	0.00E+00	1.84E-02	0.00E+00	0.00E+00	2.43E-03	0.00E+00	0.00E+00	1.84E-02
4501	ALL	748254.49	4037380.71	NonCancerAcute	0.00E+00	1.14E-05	2.42E-03	0.00E+00	0.00E+00	2.43E-03	7.32E-03	0.00E+00	1.78E-02	0.00E+00	0.00E+00	2.42E-03	0.00E+00	0.00E+00	1.78E-02
4502	ALL	748259.64	4037183.85	NonCancerAcute	0.00E+00	1.11E-05	2.36E-03	0.00E+00	0.00E+00	2.37E-03	7.32E-03	0.00E+00	1.75E-02	0.00E+00	0.00E+00	2.36E-03	0.00E+00	0.00E+00	1.75E-02
4503	ALL	748264.79	4036987	NonCancerAcute	0.00E+00	1.09E-05	2.31E-03	0.00E+00	0.00E+00	2.32E-03	7.33E-03	0.00E+00	1.74E-02	0.00E+00	0.00E+00	2.31E-03	0.00E+00	0.00E+00	1.74E-02

4504	ALL	748073.87	4036783.77	NonCancerAcute	0.00E+00	1.19E-05	2.53E-03	0.00E+00	0.00E+00	2.54E-03	7.73E-03	0.00E+00	1.87E-02	0.00E+00	0.00E+00	2.53E-03	0.00E+00	0.00E+00	1.87E-02
4505	ALL	747877.81	4036777.4	NonCancerAcute	0.00E+00	1.26E-05	2.67E-03	0.00E+00	0.00E+00	2.68E-03	8.36E-03	0.00E+00	1.99E-02	0.00E+00	0.00E+00	2.67E-03	0.00E+00	0.00E+00	1.99E-02
4506	ALL	747681.76	4036771.02	NonCancerAcute	0.00E+00	1.33E-05	2.81E-03	0.00E+00	0.00E+00	2.83E-03	9.48E-03	0.00E+00	2.18E-02	0.00E+00	0.00E+00	2.81E-03	0.00E+00	0.00E+00	2.18E-02
4507	ALL	747478.34	4036933.02	NonCancerAcute	0.00E+00	1.37E-05	2.91E-03	0.00E+00	0.00E+00	2.92E-03	9.98E-03	0.00E+00	2.28E-02	0.00E+00	0.00E+00	2.91E-03	0.00E+00	0.00E+00	2.28E-02
4508	ALL	747470.98	4037101.4	NonCancerAcute	0.00E+00	1.27E-05	2.71E-03	0.00E+00	0.00E+00	2.72E-03	9.99E-03	0.00E+00	2.21E-02	0.00E+00	0.00E+00	2.71E-03	0.00E+00	0.00E+00	2.21E-02
4509	ALL	747463.62	4037269.77	NonCancerAcute	0.00E+00	1.28E-05	2.72E-03	0.00E+00	0.00E+00	2.73E-03	1.04E-02	0.00E+00	2.26E-02	0.00E+00	0.00E+00	2.72E-03	0.00E+00	0.00E+00	2.26E-02
4510	ALL	747456.26	4037438.14	NonCancerAcute	0.00E+00	1.23E-05	2.61E-03	0.00E+00	0.00E+00	2.63E-03	9.49E-03	0.00E+00	2.11E-02	0.00E+00	0.00E+00	2.61E-03	0.00E+00	0.00E+00	2.11E-02
4511	ALL	747448.9	4037606.52	NonCancerAcute	0.00E+00	1.22E-05	2.60E-03	0.00E+00	0.00E+00	2.61E-03	9.31E-03	0.00E+00	2.08E-02	0.00E+00	0.00E+00	2.60E-03	0.00E+00	0.00E+00	2.08E-02
4512	ALL	747280.47	4037769.56	NonCancerAcute	0.00E+00	1.25E-05	2.66E-03	0.00E+00	0.00E+00	2.67E-03	8.98E-03	0.00E+00	2.07E-02	0.00E+00	0.00E+00	2.66E-03	0.00E+00	0.00E+00	2.07E-02
4513	ALL	747119.4	4037764.24	NonCancerAcute	0.00E+00	1.25E-05	2.65E-03	0.00E+00	0.00E+00	2.66E-03	9.17E-03	0.00E+00	2.09E-02	0.00E+00	0.00E+00	2.65E-03	0.00E+00	0.00E+00	2.09E-02
4514	ALL	746958.32	4037758.91	NonCancerAcute	0.00E+00	1.27E-05	2.70E-03	0.00E+00	0.00E+00	2.71E-03	9.38E-03	0.00E+00	2.13E-02	0.00E+00	0.00E+00	2.70E-03	0.00E+00	0.00E+00	2.13E-02
4515	ALL	746797.25	4037753.59	NonCancerAcute	0.00E+00	1.25E-05	2.65E-03	0.00E+00	0.00E+00	2.66E-03	9.64E-03	0.00E+00	2.14E-02	0.00E+00	0.00E+00	2.65E-03	0.00E+00	0.00E+00	2.14E-02
4516	ALL	746641.93	4037581.09	NonCancerAcute	0.00E+00	1.23E-05	2.61E-03	0.00E+00	0.00E+00	2.62E-03	9.78E-03	0.00E+00	2.15E-02	0.00E+00	0.00E+00	2.61E-03	0.00E+00	0.00E+00	2.15E-02
4517	ALL	746647.68	4037413.93	NonCancerAcute	0.00E+00	1.23E-05	2.62E-03	0.00E+00	0.00E+00	2.63E-03	1.08E-02	0.00E+00	2.28E-02	0.00E+00	0.00E+00	2.62E-03	0.00E+00	0.00E+00	2.28E-02
4518	ALL	746653.44	4037246.76	NonCancerAcute	0.00E+00	1.27E-05	2.70E-03	0.00E+00	0.00E+00	2.72E-03	1.22E-02	0.00E+00	2.47E-02	0.00E+00	0.00E+00	2.70E-03	0.00E+00	0.00E+00	2.47E-02
4519	ALL	746659.19	4037079.59	NonCancerAcute	0.00E+00	1.31E-05	2.78E-03	0.00E+00	0.00E+00	2.79E-03	1.50E-02	0.00E+00	2.85E-02	0.00E+00	0.00E+00	2.78E-03	0.00E+00	0.00E+00	2.85E-02
4520	ALL	746664.94	4036912.43	NonCancerAcute	0.00E+00	1.34E-05	2.85E-03	0.00E+00	0.00E+00	2.86E-03	1.85E-02	0.00E+00	3.31E-02	0.00E+00	0.00E+00	2.85E-03	0.00E+00	0.00E+00	3.31E-02
4521	ALL	746484.21	4036739.13	NonCancerAcute	0.00E+00	1.48E-05	3.14E-03	0.00E+00	0.00E+00	3.16E-03	1.31E-02	0.00E+00	2.74E-02	0.00E+00	0.00E+00	3.14E-03	0.00E+00	0.00E+00	2.74E-02
4522	ALL	746297.73	4036733	NonCancerAcute	0.00E+00	1.35E-05	2.86E-03	0.00E+00	0.00E+00	2.87E-03	1.05E-02	0.00E+00	2.32E-02	0.00E+00	0.00E+00	2.86E-03	0.00E+00	0.00E+00	2.32E-02
4523	ALL	746111.25	4036726.86	NonCancerAcute	0.00E+00	1.29E-05	2.73E-03	0.00E+00	0.00E+00	2.75E-03	9.17E-03	0.00E+00	2.12E-02	0.00E+00	0.00E+00	2.73E-03	0.00E+00	0.00E+00	2.12E-02
4524	ALL	745924.77	4036720.73	NonCancerAcute	0.00E+00	1.24E-05	2.64E-03	0.00E+00	0.00E+00	2.65E-03	8.71E-03	0.00E+00	2.03E-02	0.00E+00	0.00E+00	2.64E-03	0.00E+00	0.00E+00	2.03E-02
4525	ALL	745539.2	4036707.71	NonCancerAcute	0.00E+00	1.15E-05	2.45E-03	0.00E+00	0.00E+00	2.46E-03	7.89E-03	0.00E+00	1.86E-02	0.00E+00	0.00E+00	2.45E-03	0.00E+00	0.00E+00	1.86E-02
4526	ALL	745340.1	4036700.83	NonCancerAcute	0.00E+00	1.13E-05	2.40E-03	0.00E+00	0.00E+00	2.41E-03	7.43E-03	0.00E+00	1.78E-02	0.00E+00	0.00E+00	2.40E-03	0.00E+00	0.00E+00	1.78E-02
4527	ALL	745141.01	4036693.94	NonCancerAcute	0.00E+00	1.07E-05	2.26E-03	0.00E+00	0.00E+00	2.27E-03	6.98E-03	0.00E+00	1.68E-02	0.00E+00	0.00E+00	2.26E-03	0.00E+00	0.00E+00	1.68E-02
4528	ALL	744941.92	4036687.06	NonCancerAcute	0.00E+00	1.09E-05	2.32E-03	0.00E+00	0.00E+00	2.33E-03	6.69E-03	0.00E+00	1.66E-02	0.00E+00	0.00E+00	2.32E-03	0.00E+00	0.00E+00	1.66E-02
4529	ALL	744742.83	4036680.17	NonCancerAcute	0.00E+00	1.08E-05	2.29E-03	0.00E+00	0.00E+00	2.30E-03	6.37E-03	0.00E+00	1.61E-02	0.00E+00	0.00E+00	2.29E-03	0.00E+00	0.00E+00	1.61E-02
4530	ALL	744543.73	4036673.29	NonCancerAcute	0.00E+00	1.06E-05	2.26E-03	0.00E+00	0.00E+00	2.27E-03	6.04E-03	0.00E+00	1.56E-02	0.00E+00	0.00E+00	2.26E-03	0.00E+00	0.00E+00	1.56E-02
4531	ALL	744344.64	4036666.4	NonCancerAcute	0.00E+00	1.06E-05	2.25E-03	0.00E+00	0.00E+00	2.26E-03	5.83E-03	0.00E+00	1.53E-02	0.00E+00	0.00E+00	2.25E-03	0.00E+00	0.00E+00	1.53E-02
4532	ALL	744145.55	4036659.51	NonCancerAcute	0.00E+00	1.03E-05	2.19E-03	0.00E+00	0.00E+00	2.20E-03	5.54E-03	0.00E+00	1.48E-02	0.00E+00	0.00E+00	2.19E-03	0.00E+00	0.00E+00	1.48E-02
4533	ALL	743946.45	4036652.63	NonCancerAcute	0.00E+00	1.02E-05	2.17E-03	0.00E+00	0.00E+00	2.18E-03	5.31E-03	0.00E+00	1.44E-02	0.00E+00	0.00E+00	2.17E-03	0.00E+00	0.00E+00	1.44E-02
4534	ALL	743747.36	4036645.74	NonCancerAcute	0.00E+00	1.03E-05	2.18E-03	0.00E+00	0.00E+00	2.19E-03	5.29E-03	0.00E+00	1.44E-02	0.00E+00	0.00E+00	2.18E-03	0.00E+00	0.00E+00	1.44E-02
4535	ALL	743548.27	4036638.86	NonCancerAcute	0.00E+00	1.01E-05	2.15E-03	0.00E+00	0.00E+00	2.16E-03	5.23E-03	0.00E+00	1.42E-02	0.00E+00	0.00E+00	2.15E-03	0.00E+00	0.00E+00	1.42E-02
4536	ALL	743349.18	4036631.97	NonCancerAcute	0.00E+00	1.00E-05	2.13E-03	0.00E+00	0.00E+00	2.14E-03	5.18E-03	0.00E+00	1.41E-02	0.00E+00	0.00E+00	2.13E-03	0.00E+00	0.00E+00	1.41E-02
4537	ALL	743150.08	4036625.09	NonCancerAcute	0.00E+00	9.82E-06	2.08E-03	0.00E+00	0.00E+00	2.09E-03	5.07E-03	0.00E+00	1.38E-02	0.00E+00	0.00E+00	2.08E-03	0.00E+00	0.00E+00	1.38E-02
4538	ALL	742950.99	4036618.2	NonCancerAcute	0.00E+00	9.80E-06	2.08E-03	0.00E+00	0.00E+00	2.09E-03	4.91E-03	0.00E+00	1.36E-02	0.00E+00	0.00E+00	2.08E-03	0.00E+00	0.00E+00	1.36E-02
4539	ALL	742751.9	4036611.31	NonCancerAcute	0.00E+00	9.65E-06	2.05E-03	0.00E+00	0.00E+00	2.06E-03	4.72E-03	0.00E+00	1.32E-02	0.00E+00	0.00E+00	2.05E-03	0.00E+00	0.00E+00	1.32E-02
4540	ALL	742552.8	4036604.43	NonCancerAcute	0.00E+00	9.48E-06	2.01E-03	0.00E+00	0.00E+00	2.02E-03	4.50E-03	0.00E+00	1.28E-02	0.00E+00	0.00E+00	2.01E-03	0.00E+00	0.00E+00	1.28E-02
4541	ALL	742353.71	4036597.54	NonCancerAcute	0.00E+00	9.28E-06	1.97E-03	0.00E+00	0.00E+00	1.98E-03	4.26E-03	0.00E+00	1.24E-02	0.00E+00	0.00E+00	1.97E-03	0.00E+00	0.00E+00	1.24E-02
4542	ALL	742154.62	4036590.66	NonCancerAcute	0.00E+00	9.08E-06	1.93E-03	0.00E+00	0.00E+00	1.94E-03	4.02E-03	0.00E+00	1.19E-02	0.00E+00	0.00E+00	1.93E-03	0.00E+00	0.00E+00	1.19E-02
4543	ALL	741955.53	4036583.77	NonCancerAcute	0.00E+00	9.07E-06	1.93E-03	0.00E+00	0.00E+00	1.94E-03	3.83E-03	0.00E+00	1.17E-02	0.00E+00	0.00E+00	1.93E-03	0.00E+00	0.00E+00	1.17E-02
4544	ALL	741756.43	4036576.89	NonCancerAcute	0.00E+00	9.10E-06	1.93E-03	0.00E+00	0.00E+00	1.94E-03	3.74E-03	0.00E+00	1.16E-02	0.00E+00	0.00E+00	1.93E-03	0.00E+00	0.00E+00	1.16E-02
4545	ALL	741557.34	4036570	NonCancerAcute	0.00E+00	8.99E-06	1.91E-03	0.00E+00	0.00E+00	1.92E-03	3.69E-03	0.00E+00	1.15E-02	0.00E+00	0.00E+00	1.91E-03	0.00E+00	0.00E+00	1.15E-02
4546	ALL	741358.25	4036563.11	NonCancerAcute	0.00E+00	9.00E-06	1.91E-03	0.00E+00	0.00E+00	1.92E-03	3.64E-03	0.00E+00	1.14E-02	0.00E+00	0.00E+00	1.91E-03	0.00E+00	0.00E+00	1.14E-02
4547	ALL	741159.15	4036556.23	NonCancerAcute	0.00E+00	9.11E-06	1.93E-03	0.00E+00	0.00E+00	1.94E-03	3.61E-03	0.00E+00	1.15E-02	0.00E+00	0.00E+00	1.93E-03	0.00E+00	0.00E+00	1.15E-02
4548	ALL	740960.06	4036549.34	NonCancerAcute	0.00E+00	9.03E-06	1.92E-03	0.00E+00	0.00E+00	1.93E-03	3.59E-03	0.00E+00	1.14E-02	0.00E+00	0.00E+00	1.92E-03	0.00E+00	0.00E+00	1.14E-02
4549	ALL	740760.97	4036542.46	NonCancerAcute	0.00E+00	8.87E-06	1.88E-03	0.00E+00	0.00E+00	1.89E-03	3.58E-03	0.00E+00	1.12E-02	0.00E+00	0.00E+00	1.88E-03	0.00E+00	0.00E+00	1.12E-02
4550	ALL	740561.88	4036535.57	NonCancerAcute	0.00E+00	8.55E-06	1.82E-03	0.00E+00	0.00E+00	1.82E-03	3.59E-03	0.00E+00	1.10E-02	0.00E+00	0.00E+00	1.82E-03	0.00E+00	0.00E+00	1.10E-02
4551	ALL	740362.78	4036528.69	NonCancerAcute	0.00E+00	8.28E-06	1.76E-03	0.00E+00	0.00E+00	1.77E-03	3.60E-03	0.00E+00	1.08E-02	0.00E+00	0.00E+00	1.76E-03	0.00E+00	0.00E+00	1.08E-02
4552	ALL	740163.69	4036521.8	NonCancerAcute	0.00E+00	8.29E-06	1.76E-03	0.00E+00	0.00E+00	1.77E-03	3.60E-03	0.00E+00	1.08E-02	0.00E+00	0.00E+00	1.76E-03	0.00E+00	0.00E+00	1.08E-02
4553	ALL	739964.6	4036514.91	NonCancerAcute	0.00E+00	8.28E-06	1.76E-03	0.00E+00	0.00E+00	1.77E-03	3.56E-03	0.00E+00	1.07E-02	0.00E+00	0.00E+00	1.76E-03	0.00E+00	0.00E+00	1.07E-02
4554	ALL	739765.5	4036508.03	NonCancerAcute	0.00E+00	8.39E-06	1.78E-03	0.00E+00	0.00E+00	1.79E-03	3.50E-03	0.00E+00	1.08E-02	0.00E+00	0.00E+00	1.78E-03	0.00E+00	0.00E+00	1.08E-02
4555	ALL	739566.41	4036501.14	NonCancerAcute	0.00E+00	8.55E-06	1.82E-03	0.00E+00	0.00E+00	1.82E-03	3.42E-03	0.00E+00	1.08E-02	0.00E+00	0.00E+00	1.82E-03	0.00E+00	0.00E+00	1.08E-02
4556	ALL	739367.32	4036494.26	NonCancerAcute	0.00E+00	8.67E-06	1.84E-03	0.00E+00	0.00E+00	1.85E-03	3.36E-03	0.00E+00	1.08E-02	0.00E+00	0.00E+00	1.84E-03	0.00E+00	0.00E+00	1.08E-02

4557	ALL	739168.23	4036487.37	NonCancerAcute	0.00E+00	8.91E-06	1.89E-03	0.00E+00	0.00E+00	1.90E-03	3.30E-03	0.00E+00	1.09E-02	0.00E+00	0.00E+00	1.89E-03	0.00E+00	0.00E+00	1.09E-02
4558	ALL	738969.13	4036480.49	NonCancerAcute	0.00E+00	9.06E-06	1.93E-03	0.00E+00	0.00E+00	1.93E-03	3.22E-03	0.00E+00	1.09E-02	0.00E+00	0.00E+00	1.93E-03	0.00E+00	0.00E+00	1.09E-02
4559	ALL	738604.82	4036569.13	NonCancerAcute	0.00E+00	9.16E-06	1.94E-03	0.00E+00	0.00E+00	1.95E-03	3.29E-03	0.00E+00	1.11E-02	0.00E+00	0.00E+00	1.94E-03	0.00E+00	0.00E+00	1.11E-02
4560	ALL	738337.99	4036497.02	NonCancerAcute	0.00E+00	9.19E-06	1.95E-03	0.00E+00	0.00E+00	1.96E-03	3.16E-03	0.00E+00	1.10E-02	0.00E+00	0.00E+00	1.95E-03	0.00E+00	0.00E+00	1.10E-02
4561	ALL	738236.37	4036329.38	NonCancerAcute	0.00E+00	9.17E-06	1.95E-03	0.00E+00	0.00E+00	1.96E-03	2.91E-03	0.00E+00	1.06E-02	0.00E+00	0.00E+00	1.95E-03	0.00E+00	0.00E+00	1.06E-02
4562	ALL	738134.74	4036161.74	NonCancerAcute	0.00E+00	9.26E-06	1.97E-03	0.00E+00	0.00E+00	1.98E-03	2.87E-03	0.00E+00	1.07E-02	0.00E+00	0.00E+00	1.97E-03	0.00E+00	0.00E+00	1.07E-02
4563	ALL	738033.12	4035994.09	NonCancerAcute	0.00E+00	9.13E-06	1.94E-03	0.00E+00	0.00E+00	1.95E-03	2.86E-03	0.00E+00	1.06E-02	0.00E+00	0.00E+00	1.94E-03	0.00E+00	0.00E+00	1.06E-02
4564	ALL	737931.5	4035826.45	NonCancerAcute	0.00E+00	8.84E-06	1.88E-03	0.00E+00	0.00E+00	1.88E-03	2.92E-03	0.00E+00	1.04E-02	0.00E+00	0.00E+00	1.88E-03	0.00E+00	0.00E+00	1.04E-02
4565	ALL	737563.33	4035513.17	NonCancerAcute	0.00E+00	8.52E-06	1.81E-03	0.00E+00	0.00E+00	1.82E-03	2.84E-03	0.00E+00	1.01E-02	0.00E+00	0.00E+00	1.81E-03	0.00E+00	0.00E+00	1.01E-02
4566	ALL	737382.93	4035513.06	NonCancerAcute	0.00E+00	8.46E-06	1.80E-03	0.00E+00	0.00E+00	1.80E-03	2.83E-03	0.00E+00	1.00E-02	0.00E+00	0.00E+00	1.80E-03	0.00E+00	0.00E+00	1.00E-02
4567	ALL	737202.52	4035512.96	NonCancerAcute	0.00E+00	8.52E-06	1.81E-03	0.00E+00	0.00E+00	1.82E-03	2.80E-03	0.00E+00	1.00E-02	0.00E+00	0.00E+00	1.81E-03	0.00E+00	0.00E+00	1.00E-02
4568	ALL	736835.12	4035512.78	NonCancerAcute	0.00E+00	8.62E-06	1.83E-03	0.00E+00	0.00E+00	1.84E-03	2.89E-03	0.00E+00	1.02E-02	0.00E+00	0.00E+00	1.83E-03	0.00E+00	0.00E+00	1.02E-02
4569	ALL	736648.13	4035512.71	NonCancerAcute	0.00E+00	8.65E-06	1.84E-03	0.00E+00	0.00E+00	1.84E-03	2.92E-03	0.00E+00	1.02E-02	0.00E+00	0.00E+00	1.84E-03	0.00E+00	0.00E+00	1.02E-02
4570	ALL	736461.13	4035512.64	NonCancerAcute	0.00E+00	8.62E-06	1.83E-03	0.00E+00	0.00E+00	1.84E-03	2.93E-03	0.00E+00	1.02E-02	0.00E+00	0.00E+00	1.83E-03	0.00E+00	0.00E+00	1.02E-02
4571	ALL	736274.14	4035512.57	NonCancerAcute	0.00E+00	8.49E-06	1.80E-03	0.00E+00	0.00E+00	1.81E-03	3.08E-03	0.00E+00	1.03E-02	0.00E+00	0.00E+00	1.80E-03	0.00E+00	0.00E+00	1.03E-02
4572	ALL	736087.14	4035512.51	NonCancerAcute	0.00E+00	8.50E-06	1.81E-03	0.00E+00	0.00E+00	1.81E-03	3.21E-03	0.00E+00	1.05E-02	0.00E+00	0.00E+00	1.81E-03	0.00E+00	0.00E+00	1.05E-02
4573	ALL	735900.15	4035512.44	NonCancerAcute	0.00E+00	8.38E-06	1.78E-03	0.00E+00	0.00E+00	1.79E-03	3.30E-03	0.00E+00	1.05E-02	0.00E+00	0.00E+00	1.78E-03	0.00E+00	0.00E+00	1.05E-02
4574	ALL	735713.15	4035512.37	NonCancerAcute	0.00E+00	8.53E-06	1.81E-03	0.00E+00	0.00E+00	1.82E-03	3.41E-03	0.00E+00	1.08E-02	0.00E+00	0.00E+00	1.81E-03	0.00E+00	0.00E+00	1.08E-02
4575	ALL	735526.16	4035512.3	NonCancerAcute	0.00E+00	8.59E-06	1.82E-03	0.00E+00	0.00E+00	1.83E-03	3.55E-03	0.00E+00	1.10E-02	0.00E+00	0.00E+00	1.82E-03	0.00E+00	0.00E+00	1.10E-02
4576	ALL	735195.5	4035375.4	NonCancerAcute	0.00E+00	8.32E-06	1.77E-03	0.00E+00	0.00E+00	1.77E-03	3.81E-03	0.00E+00	1.11E-02	0.00E+00	0.00E+00	1.77E-03	0.00E+00	0.00E+00	1.11E-02
4577	ALL	735051.83	4035238.56	NonCancerAcute	0.00E+00	8.33E-06	1.77E-03	0.00E+00	0.00E+00	1.78E-03	4.02E-03	0.00E+00	1.14E-02	0.00E+00	0.00E+00	1.77E-03	0.00E+00	0.00E+00	1.14E-02
4578	ALL	734908.17	4035101.73	NonCancerAcute	0.00E+00	8.17E-06	1.74E-03	0.00E+00	0.00E+00	1.74E-03	4.22E-03	0.00E+00	1.15E-02	0.00E+00	0.00E+00	1.74E-03	0.00E+00	0.00E+00	1.15E-02
4579	ALL	734764.5	4034964.89	NonCancerAcute	0.00E+00	7.99E-06	1.70E-03	0.00E+00	0.00E+00	1.70E-03	4.51E-03	0.00E+00	1.17E-02	0.00E+00	0.00E+00	1.70E-03	0.00E+00	0.00E+00	1.17E-02
4580	ALL	734480.27	4034822.3	NonCancerAcute	0.00E+00	8.18E-06	1.74E-03	0.00E+00	0.00E+00	1.75E-03	5.08E-03	0.00E+00	1.25E-02	0.00E+00	0.00E+00	1.74E-03	0.00E+00	0.00E+00	1.25E-02
4581	ALL	734339.71	4034816.54	NonCancerAcute	0.00E+00	7.85E-06	1.67E-03	0.00E+00	0.00E+00	1.68E-03	5.44E-03	0.00E+00	1.27E-02	0.00E+00	0.00E+00	1.67E-03	0.00E+00	0.00E+00	1.27E-02
4582	ALL	734131.2	4034700.77	NonCancerAcute	0.00E+00	7.94E-06	1.69E-03	0.00E+00	0.00E+00	1.69E-03	6.00E-03	0.00E+00	1.35E-02	0.00E+00	0.00E+00	1.69E-03	0.00E+00	0.00E+00	1.35E-02
4583	ALL	733867.32	4034587.41	NonCancerAcute	0.00E+00	9.39E-06	2.00E-03	0.00E+00	0.00E+00	2.00E-03	6.98E-03	0.00E+00	1.58E-02	0.00E+00	0.00E+00	2.00E-03	0.00E+00	0.00E+00	1.58E-02
4584	ALL	733482	4034637.69	NonCancerAcute	0.00E+00	1.18E-05	2.51E-03	0.00E+00	0.00E+00	2.52E-03	1.11E-02	0.00E+00	2.28E-02	0.00E+00	0.00E+00	2.51E-03	0.00E+00	0.00E+00	2.28E-02
4585	ALL	733297.29	4034632.7	NonCancerAcute	0.00E+00	1.24E-05	2.64E-03	0.00E+00	0.00E+00	2.66E-03	1.64E-02	0.00E+00	2.96E-02	0.00E+00	0.00E+00	2.64E-03	0.00E+00	0.00E+00	2.96E-02
4586	ALL	733112.59	4034627.7	NonCancerAcute	0.00E+00	1.33E-05	2.83E-03	0.00E+00	0.00E+00	2.84E-03	1.61E-02	0.00E+00	3.00E-02	0.00E+00	0.00E+00	2.83E-03	0.00E+00	0.00E+00	3.00E-02
4587	ALL	732927.88	4034622.71	NonCancerAcute	0.00E+00	1.25E-05	2.65E-03	0.00E+00	0.00E+00	2.67E-03	1.32E-02	0.00E+00	2.58E-02	0.00E+00	0.00E+00	2.65E-03	0.00E+00	0.00E+00	2.58E-02
4588	ALL	732574.01	4034614.02	NonCancerAcute	0.00E+00	1.06E-05	2.25E-03	0.00E+00	0.00E+00	2.26E-03	7.97E-03	0.00E+00	1.79E-02	0.00E+00	0.00E+00	2.25E-03	0.00E+00	0.00E+00	1.79E-02
4589	ALL	732404.85	4034610.32	NonCancerAcute	0.00E+00	1.02E-05	2.17E-03	0.00E+00	0.00E+00	2.18E-03	7.96E-03	0.00E+00	1.76E-02	0.00E+00	0.00E+00	2.17E-03	0.00E+00	0.00E+00	1.76E-02
4590	ALL	732235.69	4034606.61	NonCancerAcute	0.00E+00	8.40E-06	1.78E-03	0.00E+00	0.00E+00	1.79E-03	7.64E-03	0.00E+00	1.58E-02	0.00E+00	0.00E+00	1.78E-03	0.00E+00	0.00E+00	1.58E-02

AERMOD (21112): C:\Lakes\P Files\Darde Con Nox\Darde Con Nox.is #####
AERMET (18081): 18:11:33
MODELING OPTIONS USED: RegDFAULT CONC ELEV RURAL ADJ_U*
PLOT FILE OF HIGH 1ST HIGH 24-HR VALUES FOR SOURC GROUP: 3B_FIRE
FOR A TOTAL OF 4590 RECEPTORS.
FORMAT: (3(1X,F13.5),3(1X,F8.2),3X,A5,2X,A8,2X,A5,5X,A8,2X,I8)

X	Y	CONC ENG 3B	CONC ENG 3C	ZELEV	ZHILL	ZFLAG	AVE	GRP	RANK	NET	ID	DATE(CONC)
NET												
732073	4033492	0.12038	9.95114	195.1	195.1	0	24-HR	3B_FIRE	1ST	7E+06		Max Concentration (ug/m3/g/s)
732173	4033492	0.12175	7.40119	192.32	192.32	0	24-HR	3B_FIRE	1ST	7E+06		@ Sensitive Receptors
732273	4033492	0.12365	4.79285	188.13	188.13	0	24-HR	3B_FIRE	1ST	7E+06		3B_FIRE 4.2594
732373	4033492	0.12627	4.67125	185.45	185.45	0	24-HR	3B_FIRE	1ST	7E+06		3C_FIRE 0.6574
732473	4033492	0.13186	4.26923	182.9	182.9	0	24-HR	3B_FIRE	1ST	7E+06		
732573	4033492	0.14019	5.34314	180.49	180.49	0	24-HR	3B_FIRE	1ST	7E+06		
732673	4033492	0.14994	5.13101	177.71	177.71	0	24-HR	3B_FIRE	1ST	7E+06		
732773	4033492	0.1566	4.22646	175.95	175.95	0	24-HR	3B_FIRE	1ST	7E+06		
732873	4033492	0.16325	4.01759	174.19	174.19	0	24-HR	3B_FIRE	1ST	7E+06		
732973	4033492	0.17153	5.0605	171.98	171.98	0	24-HR	3B_FIRE	1ST	7E+06		
733073	4033492	0.17884	5.28896	170.02	170.02	0	24-HR	3B_FIRE	1ST	7E+06		
733173	4033492	0.18771	5.63644	167.96	167.96	0	24-HR	3B_FIRE	1ST	9E+06		
733273	4033492	0.20782	7.26353	165.88	165.88	0	24-HR	3B_FIRE	1ST	8E+06		
733373	4033492	0.22952	9.38264	163.97	163.97	0	24-HR	3B_FIRE	1ST	8E+06		
733473	4033492	0.25306	9.22517	162.14	162.14	0	24-HR	3B_FIRE	1ST	8E+06		
733573	4033492	0.27712	8.70634	160.51	160.51	0	24-HR	3B_FIRE	1ST	8E+06		
733673	4033492	0.30189	8.78748	159.02	159.02	0	24-HR	3B_FIRE	1ST	8E+06		
733773	4033492	0.32937	8.66522	157.49	157.49	0	24-HR	3B_FIRE	1ST	8E+06		
733873	4033492	0.41389	8.00883	156.24	156.24	0	24-HR	3B_FIRE	1ST	7E+06		
733973	4033492	0.42357	8.41062	155.26	155.26	0	24-HR	3B_FIRE	1ST	7E+06		
734073	4033492	0.43478	7.49388	154.41	154.41	0	24-HR	3B_FIRE	1ST	7E+06		
732073	4033592	0.12149	11.03128	192.55	192.55	0	24-HR	3B_FIRE	1ST	7E+06		
732173	4033592	0.12337	9.27428	189.41	189.41	0	24-HR	3B_FIRE	1ST	7E+06		
732273	4033592	0.12666	7.34291	187.2	187.2	0	24-HR	3B_FIRE	1ST	7E+06		
732373	4033592	0.12793	5.21457	185.28	185.28	0	24-HR	3B_FIRE	1ST	7E+06		
732473	4033592	0.1295	4.74376	182.87	182.87	0	24-HR	3B_FIRE	1ST	7E+06		
732573	4033592	0.13588	3.87899	180.1	180.1	0	24-HR	3B_FIRE	1ST	7E+06		
732673	4033592	0.14382	4.45385	178.07	178.07	0	24-HR	3B_FIRE	1ST	7E+06		
732773	4033592	0.15205	4.70542	176.01	176.01	0	24-HR	3B_FIRE	1ST	7E+06		
732873	4033592	0.16103	4.45305	173.8	173.8	0	24-HR	3B_FIRE	1ST	7E+06		
732973	4033592	0.16916	5.26188	171.84	171.84	0	24-HR	3B_FIRE	1ST	7E+06		
733073	4033592	0.17746	5.46632	169.86	169.86	0	24-HR	3B_FIRE	1ST	7E+06		
733173	4033592	0.18627	6.48895	167.75	167.75	0	24-HR	3B_FIRE	1ST	7E+06		
733273	4033592	0.19515	8.39848	165.62	165.62	0	24-HR	3B_FIRE	1ST	7E+06		
733373	4033592	0.20525	11.46325	163.7	163.7	0	24-HR	3B_FIRE	1ST	8E+06		
733473	4033592	0.22809	11.36261	161.75	161.75	0	24-HR	3B_FIRE	1ST	8E+06		
733573	4033592	0.25256	11.46679	159.93	159.93	0	24-HR	3B_FIRE	1ST	8E+06		
733673	4033592	0.27747	10.46329	158.32	158.32	0	24-HR	3B_FIRE	1ST	8E+06		
733773	4033592	0.41238	9.28213	156.71	156.71	0	24-HR	3B_FIRE	1ST	7E+06		
733873	4033592	0.42545	9.8341	155.32	155.32	0	24-HR	3B_FIRE	1ST	7E+06		
733973	4033592	0.44198	8.40849	154.18	154.18	0	24-HR	3B_FIRE	1ST	7E+06		
734073	4033592	0.45763	7.25026	153.34	153.34	0	24-HR	3B_FIRE	1ST	7E+06		
732073	4033692	0.12024	15.51007	196.66	196.66	0	24-HR	3B_FIRE	1ST	7E+06		
732173	4033692	0.12327	11.97306	190.64	190.64	0	24-HR	3B_FIRE	1ST	7E+06		
732273	4033692	0.12772	9.40546	187.64	187.64	0	24-HR	3B_FIRE	1ST	7E+06		
732373	4033692	0.12951	7.85401	184.8	184.8	0	24-HR	3B_FIRE	1ST	7E+06		
732473	4033692	0.13152	5.77612	182.19	182.19	0	24-HR	3B_FIRE	1ST	7E+06		
732573	4033692	0.13377	3.96688	179.63	179.63	0	24-HR	3B_FIRE	1ST	7E+06		
732673	4033692	0.13792	3.71728	177.14	177.14	0	24-HR	3B_FIRE	1ST	7E+06		
732773	4033692	0.16041	4.05902	175.33	175.33	0	24-HR	3B_FIRE	1ST	9E+06		
732873	4033692	0.15918	4.48057	173.43	173.43	0	24-HR	3B_FIRE	1ST	9E+06		
732973	4033692	0.16418	5.10123	171.06	171.06	0	24-HR	3B_FIRE	1ST	7E+06		
733073	4033692	0.17377	6.54395	168.89	168.89	0	24-HR	3B_FIRE	1ST	7E+06		
733173	4033692	0.18218	7.1353	167.12	167.12	0	24-HR	3B_FIRE	1ST	7E+06		
733273	4033692	0.19165	9.98501	165.06	165.06	0	24-HR	3B_FIRE	1ST	7E+06		
733373	4033692	0.2012	14.96692	163	163	0	24-HR	3B_FIRE	1ST	7E+06		
733473	4033692	0.21033	15.63585	161.16	161.16	0	24-HR	3B_FIRE	1ST	8E+06		
733573	4033692	0.23351	13.91306	159.31	159.31	0	24-HR	3B_FIRE	1ST	8E+06		
733673	4033692	0.25816	12.90759	157.59	157.59	0	24-HR	3B_FIRE	1ST	8E+06		

733773	4033692	0.41683	11.67294	155.81	155.81	0	24-HR	3B_FIRE	1ST	7E+06
733873	4033692	0.43558	9.5287	154.41	154.41	0	24-HR	3B_FIRE	1ST	7E+06
733973	4033692	0.45867	8.00673	153.17	153.17	0	24-HR	3B_FIRE	1ST	7E+06
734073	4033692	0.48053	7.16353	152.23	152.23	0	24-HR	3B_FIRE	1ST	7E+06
732073	4033792	0.11988	13.86317	196.15	196.15	0	24-HR	3B_FIRE	1ST	7E+06
732373	4033792	0.13106	9.35049	184.12	184.12	0	24-HR	3B_FIRE	1ST	7E+06
732473	4033792	0.13357	6.9751	181.44	181.44	0	24-HR	3B_FIRE	1ST	7E+06
732573	4033792	0.13625	5.82594	178.98	178.98	0	24-HR	3B_FIRE	1ST	7E+06
732673	4033792	0.13941	4.54865	176.37	176.37	0	24-HR	3B_FIRE	1ST	7E+06
732773	4033792	0.18274	4.3338	173.86	173.86	0	24-HR	3B_FIRE	1ST	9E+06
732873	4033792	0.18237	5.05389	172.02	172.02	0	24-HR	3B_FIRE	1ST	9E+06
732973	4033792	0.18189	5.49772	170.16	170.16	0	24-HR	3B_FIRE	1ST	9E+06
733073	4033792	0.1814	5.71924	168.21	168.21	0	24-HR	3B_FIRE	1ST	9E+06
733173	4033792	0.18088	7.27748	166.19	166.19	0	24-HR	3B_FIRE	1ST	9E+06
733273	4033792	0.18267	13.01112	164.56	164.56	0	24-HR	3B_FIRE	1ST	7E+06
733373	4033792	0.19158	21.82914	162.86	162.86	0	24-HR	3B_FIRE	1ST	7E+06
733473	4033792	0.20171	22.06612	160.84	160.84	0	24-HR	3B_FIRE	1ST	7E+06
733573	4033792	0.22157	19.37128	158.77	158.77	0	24-HR	3B_FIRE	1ST	7E+06
733673	4033792	0.40028	16.28542	156.96	156.96	0	24-HR	3B_FIRE	1ST	7E+06
733773	4033792	0.41957	12.6768	154.98	154.98	0	24-HR	3B_FIRE	1ST	7E+06
733873	4033792	0.44523	9.99937	153.45	153.45	0	24-HR	3B_FIRE	1ST	7E+06
733973	4033792	0.47307	8.59762	152.21	152.21	0	24-HR	3B_FIRE	1ST	7E+06
734073	4033792	0.4967	7.66391	151.35	151.35	0	24-HR	3B_FIRE	1ST	7E+06
732073	4033892	0.11953	10.66008	196.93	196.93	0	24-HR	3B_FIRE	1ST	9E+06
733773	4033892	0.42282	14.66117	154.06	154.06	0	24-HR	3B_FIRE	1ST	7E+06
733873	4033892	0.45485	11.70947	152.46	152.46	0	24-HR	3B_FIRE	1ST	7E+06
733973	4033892	0.4886	9.07258	151.15	151.15	0	24-HR	3B_FIRE	1ST	7E+06
734073	4033892	0.51179	8.13048	150.43	150.43	0	24-HR	3B_FIRE	1ST	7E+06
732073	4033992	0.1221	9.58905	194.23	198.83	0	24-HR	3B_FIRE	1ST	9E+06
733773	4033992	0.42753	13.33472	153.09	153.09	0	24-HR	3B_FIRE	1ST	7E+06
733873	4033992	0.46088	11.02366	151.64	151.64	0	24-HR	3B_FIRE	1ST	7E+06
733973	4033992	0.49223	9.27726	150.54	150.54	0	24-HR	3B_FIRE	1ST	7E+06
734073	4033992	0.51736	7.89303	149.8	149.8	0	24-HR	3B_FIRE	1ST	7E+06
732073	4034092	0.12325	7.55854	192.65	192.65	0	24-HR	3B_FIRE	1ST	9E+06
733773	4034092	0.43463	11.75217	152.1	152.1	0	24-HR	3B_FIRE	1ST	7E+06
733873	4034092	0.47127	9.49035	150.67	150.67	0	24-HR	3B_FIRE	1ST	7E+06
733973	4034092	0.50193	7.85993	149.69	149.69	0	24-HR	3B_FIRE	1ST	7E+06
734073	4034092	0.52736	7.15483	148.99	148.99	0	24-HR	3B_FIRE	1ST	7E+06
732073	4034192	0.12355	7.58306	188.19	191.69	0	24-HR	3B_FIRE	1ST	7E+06
733773	4034192	0.4483	6.80869	150.97	150.97	0	24-HR	3B_FIRE	1ST	7E+06
733873	4034192	0.48257	6.44288	149.77	149.77	0	24-HR	3B_FIRE	1ST	7E+06
733973	4034192	0.50967	5.9983	148.97	148.97	0	24-HR	3B_FIRE	1ST	7E+06
734073	4034192	0.53864	5.50202	148.18	148.18	0	24-HR	3B_FIRE	1ST	7E+06
732073	4034292	0.12477	7.17049	184.87	187.15	0	24-HR	3B_FIRE	1ST	7E+06
733773	4034292	0.46802	3.70001	149.82	149.82	0	24-HR	3B_FIRE	1ST	7E+06
733873	4034292	0.49704	4.02129	148.9	148.9	0	24-HR	3B_FIRE	1ST	7E+06
733973	4034292	0.5257	4.2385	148.08	148.08	0	24-HR	3B_FIRE	1ST	7E+06
734073	4034292	0.54885	4.23527	147.5	147.5	0	24-HR	3B_FIRE	1ST	7E+06
734173	4034292	0.56662	4.1186	147.12	147.12	0	24-HR	3B_FIRE	1ST	7E+06
732073	4034392	0.12667	6.68789	182.63	182.63	0	24-HR	3B_FIRE	1ST	7E+06
733773	4034392	0.484	3.41213	149.06	149.06	0	24-HR	3B_FIRE	1ST	7E+06
733873	4034392	0.51002	2.74551	148.27	148.27	0	24-HR	3B_FIRE	1ST	7E+06
733973	4034392	0.53067	2.80991	147.72	147.72	0	24-HR	3B_FIRE	1ST	7E+06
734073	4034392	0.56462	3.08166	146.79	146.79	0	24-HR	3B_FIRE	1ST	7E+06
734173	4034392	0.58025	3.18524	146.47	146.47	0	24-HR	3B_FIRE	1ST	7E+06
734273	4034392	0.59475	3.15002	146.2	146.2	0	24-HR	3B_FIRE	1ST	7E+06
732073	4034492	0.12635	4.86483	180.73	180.73	0	24-HR	3B_FIRE	1ST	7E+06
734173	4034492	0.59619	2.41516	145.93	145.93	0	24-HR	3B_FIRE	1ST	7E+06
734273	4034492	0.61782	2.40804	145.44	145.44	0	24-HR	3B_FIRE	1ST	7E+06
734373	4034492	0.64105	2.52508	144.93	144.93	0	24-HR	3B_FIRE	1ST	7E+06
734473	4034492	0.65055	2.58842	144.82	144.82	0	24-HR	3B_FIRE	1ST	7E+06
734573	4034492	0.65702	2.59105	144.8	144.8	0	24-HR	3B_FIRE	1ST	7E+06
734673	4034492	0.67418	2.54404	144.5	144.5	0	24-HR	3B_FIRE	1ST	7E+06
734773	4034492	0.68921	2.46861	144.27	144.27	0	24-HR	3B_FIRE	1ST	7E+06
734873	4034492	0.70903	2.36134	143.93	143.93	0	24-HR	3B_FIRE	1ST	7E+06
732073	4034592	0.12864	5.73714	179.29	181.08	0	24-HR	3B_FIRE	1ST	9E+06
733773	4034592	0.538	2.31758	147.5	147.5	0	24-HR	3B_FIRE	1ST	7E+06

733873	4034592	0.56795	2.25375	146.62	146.62	0	24-HR	3B_FIRE	1ST	7E+06
733973	4034592	0.59188	2.49956	145.98	145.98	0	24-HR	3B_FIRE	1ST	7E+06
734273	4034592	0.65073	2.43434	144.61	144.61	0	24-HR	3B_FIRE	1ST	7E+06
734373	4034592	0.67229	2.18271	144.14	144.14	0	24-HR	3B_FIRE	1ST	7E+06
734473	4034592	0.6689	2.3415	144.37	144.37	0	24-HR	3B_FIRE	1ST	7E+06
734573	4034592	0.68359	2.37659	144.11	144.11	0	24-HR	3B_FIRE	1ST	7E+06
734673	4034592	0.69158	2.29698	144.04	144.04	0	24-HR	3B_FIRE	1ST	7E+06
734773	4034592	0.72131	2.18199	143.41	143.41	0	24-HR	3B_FIRE	1ST	7E+06
734873	4034592	0.73677	2.18396	143.17	143.17	0	24-HR	3B_FIRE	1ST	7E+06
734973	4034592	0.75549	2.15572	142.86	142.86	0	24-HR	3B_FIRE	1ST	7E+06
732073	4034692	0.1339	5.31946	180.45	180.45	0	24-HR	3B_FIRE	1ST	9E+06
732173	4034692	0.18337	6.38548	173.64	173.64	0	24-HR	3B_FIRE	1ST	1E+07
732273	4034692	0.21389	7.39075	170.92	170.92	0	24-HR	3B_FIRE	1ST	1E+07
732373	4034692	0.24766	8.16352	168.2	168.2	0	24-HR	3B_FIRE	1ST	1E+07
732473	4034692	0.28378	9.15169	165.5	165.5	0	24-HR	3B_FIRE	1ST	1E+07
732573	4034692	0.31051	12.18947	163.6	163.6	0	24-HR	3B_FIRE	1ST	1E+07
732673	4034692	0.32775	13.76879	162.41	162.41	0	24-HR	3B_FIRE	1ST	1E+07
732773	4034692	0.34361	11.13113	161.34	161.34	0	24-HR	3B_FIRE	1ST	1E+07
732873	4034692	0.38647	10.52893	158.54	158.54	0	24-HR	3B_FIRE	1ST	1E+07
732973	4034692	0.40541	11.87215	157.33	157.33	0	24-HR	3B_FIRE	1ST	1E+07
733073	4034692	0.43189	8.8846	155.65	155.65	0	24-HR	3B_FIRE	1ST	1E+07
733173	4034692	0.46336	5.46286	153.66	153.66	0	24-HR	3B_FIRE	1ST	1E+07
733273	4034692	0.4948	3.50003	151.67	151.67	0	24-HR	3B_FIRE	1ST	1E+07
733373	4034692	0.52424	3.23823	149.78	149.78	0	24-HR	3B_FIRE	1ST	1E+07
733473	4034692	0.54941	2.65936	148.13	148.13	0	24-HR	3B_FIRE	1ST	1E+07
733573	4034692	0.56794	1.7634	146.9	146.9	0	24-HR	3B_FIRE	1ST	1E+07
733673	4034692	0.56959	1.18604	146.87	146.87	0	24-HR	3B_FIRE	1ST	7E+06
733773	4034692	0.6044	1.49105	145.84	145.84	0	24-HR	3B_FIRE	1ST	7E+06
733873	4034692	0.61967	1.9918	145.46	145.46	0	24-HR	3B_FIRE	1ST	7E+06
733973	4034692	0.63783	1.96122	145.01	145.01	0	24-HR	3B_FIRE	1ST	7E+06
734073	4034692	0.6618	2.06558	144.41	144.41	0	24-HR	3B_FIRE	1ST	7E+06
734273	4034692	0.68894	2.4696	143.86	143.86	0	24-HR	3B_FIRE	1ST	7E+06
734373	4034692	0.7033	2.40488	143.58	143.58	0	24-HR	3B_FIRE	1ST	7E+06
734473	4034692	0.70739	2.23839	143.59	143.59	0	24-HR	3B_FIRE	1ST	7E+06
734573	4034692	0.72731	2.05005	143.18	143.18	0	24-HR	3B_FIRE	1ST	7E+06
734673	4034692	0.74442	2.18386	142.86	142.86	0	24-HR	3B_FIRE	1ST	7E+06
734773	4034692	0.7601	2.21792	142.59	142.59	0	24-HR	3B_FIRE	1ST	7E+06
734873	4034692	0.77153	2.17339	142.44	142.44	0	24-HR	3B_FIRE	1ST	7E+06
734973	4034692	0.78291	2.07217	142.3	142.3	0	24-HR	3B_FIRE	1ST	7E+06
732073	4034792	0.14567	6.21917	177.91	177.91	0	24-HR	3B_FIRE	1ST	1E+07
732173	4034792	0.18631	6.73783	173.76	173.76	0	24-HR	3B_FIRE	1ST	1E+07
732273	4034792	0.23308	7.38798	169.82	169.82	0	24-HR	3B_FIRE	1ST	1E+07
732373	4034792	0.2684	7.99504	167.14	167.14	0	24-HR	3B_FIRE	1ST	1E+07
732473	4034792	0.30145	10.53968	164.8	164.8	0	24-HR	3B_FIRE	1ST	1E+07
732573	4034792	0.3331	11.3777	162.67	162.67	0	24-HR	3B_FIRE	1ST	1E+07
732673	4034792	0.36077	9.44591	160.88	160.88	0	24-HR	3B_FIRE	1ST	1E+07
732773	4034792	0.38164	8.31724	159.57	159.57	0	24-HR	3B_FIRE	1ST	1E+07
732873	4034792	0.41235	10.09887	157.67	157.67	0	24-HR	3B_FIRE	1ST	1E+07
732973	4034792	0.44028	9.6887	155.97	155.97	0	24-HR	3B_FIRE	1ST	1E+07
733073	4034792	0.47131	6.336	154.09	154.09	0	24-HR	3B_FIRE	1ST	1E+07
733173	4034792	0.49615	4.21163	152.61	152.61	0	24-HR	3B_FIRE	1ST	1E+07
733273	4034792	0.52909	3.22882	150.61	150.61	0	24-HR	3B_FIRE	1ST	1E+07
733373	4034792	0.56282	2.90328	148.51	148.51	0	24-HR	3B_FIRE	1ST	1E+07
733473	4034792	0.58735	2.41505	146.96	146.96	0	24-HR	3B_FIRE	1ST	1E+07
733573	4034792	0.60935	2.05084	146.22	146.22	0	24-HR	3B_FIRE	1ST	7E+06
733673	4034792	0.61849	1.13084	146	146	0	24-HR	3B_FIRE	1ST	7E+06
733773	4034792	0.635	1.28509	145.56	145.56	0	24-HR	3B_FIRE	1ST	7E+06
733873	4034792	0.6382	1.66178	145.54	145.54	0	24-HR	3B_FIRE	1ST	7E+06
733973	4034792	0.65418	1.73792	145.14	145.14	0	24-HR	3B_FIRE	1ST	7E+06
734073	4034792	0.67515	1.75656	144.61	144.61	0	24-HR	3B_FIRE	1ST	7E+06
734173	4034792	0.71562	1.75267	143.55	143.55	0	24-HR	3B_FIRE	1ST	7E+06
734773	4034792	0.79516	2.04575	142.09	142.09	0	24-HR	3B_FIRE	1ST	7E+06
734873	4034792	0.81036	2.00706	141.83	141.83	0	24-HR	3B_FIRE	1ST	7E+06
734973	4034792	0.82359	2.05168	141.63	141.63	0	24-HR	3B_FIRE	1ST	7E+06
735073	4034792	0.85039	2.02934	141.1	141.1	0	24-HR	3B_FIRE	1ST	7E+06
732073	4034892	0.14711	6.20621	178.68	178.68	0	24-HR	3B_FIRE	1ST	1E+07
732173	4034892	0.18138	6.76313	174.48	174.48	0	24-HR	3B_FIRE	1ST	1E+07

732273	4034892	0.22237	7.34538	170.95	170.95	0	24-HR	3B_FIRE	1ST	1E+07
732373	4034892	0.25778	9.08893	168.25	168.25	0	24-HR	3B_FIRE	1ST	1E+07
732473	4034892	0.29843	9.51027	165.39	165.39	0	24-HR	3B_FIRE	1ST	1E+07
732573	4034892	0.34144	8.14956	162.56	162.56	0	24-HR	3B_FIRE	1ST	1E+07
732673	4034892	0.37916	7.4561	160.2	160.2	0	24-HR	3B_FIRE	1ST	1E+07
732773	4034892	0.4179	8.13114	157.85	157.85	0	24-HR	3B_FIRE	1ST	1E+07
732873	4034892	0.44145	8.53526	156.47	156.47	0	24-HR	3B_FIRE	1ST	1E+07
732973	4034892	0.47032	7.78057	154.78	154.78	0	24-HR	3B_FIRE	1ST	1E+07
733073	4034892	0.5033	4.81883	152.86	152.86	0	24-HR	3B_FIRE	1ST	1E+07
733173	4034892	0.5315	3.29267	151.23	151.23	0	24-HR	3B_FIRE	1ST	1E+07
733273	4034892	0.55838	2.95203	149.67	149.67	0	24-HR	3B_FIRE	1ST	1E+07
733373	4034892	0.59236	2.56241	147.61	147.61	0	24-HR	3B_FIRE	1ST	1E+07
733473	4034892	0.64179	2.48408	145.98	145.98	0	24-HR	3B_FIRE	1ST	7E+06
733573	4034892	0.66463	2.1435	145.33	145.33	0	24-HR	3B_FIRE	1ST	7E+06
733673	4034892	0.65367	1.34137	145.74	145.74	0	24-HR	3B_FIRE	1ST	7E+06
733773	4034892	0.69023	1.10667	144.7	144.7	0	24-HR	3B_FIRE	1ST	7E+06
733873	4034892	0.71362	1.43291	144.09	144.09	0	24-HR	3B_FIRE	1ST	7E+06
733973	4034892	0.70306	1.65421	144.48	144.48	0	24-HR	3B_FIRE	1ST	7E+06
734073	4034892	0.74269	1.55823	143.43	143.43	0	24-HR	3B_FIRE	1ST	7E+06
734173	4034892	0.76244	1.65404	142.97	142.97	0	24-HR	3B_FIRE	1ST	7E+06
734273	4034892	0.77796	1.64989	142.64	142.64	0	24-HR	3B_FIRE	1ST	7E+06
734373	4034892	0.78797	1.73558	142.47	142.47	0	24-HR	3B_FIRE	1ST	7E+06
734473	4034892	0.80194	1.97728	142.2	142.2	0	24-HR	3B_FIRE	1ST	7E+06
734573	4034892	0.82341	2.06679	141.74	141.74	0	24-HR	3B_FIRE	1ST	7E+06
734673	4034892	0.82937	2.04566	141.7	141.7	0	24-HR	3B_FIRE	1ST	7E+06
734873	4034892	0.8593	2.00723	141.17	141.17	0	24-HR	3B_FIRE	1ST	7E+06
734973	4034892	0.87265	1.98539	140.96	140.96	0	24-HR	3B_FIRE	1ST	7E+06
735073	4034892	0.9034	1.92027	140.32	140.32	0	24-HR	3B_FIRE	1ST	7E+06
735173	4034892	0.92277	1.8861	139.98	139.98	0	24-HR	3B_FIRE	1ST	7E+06
732073	4034992	0.16891	6.11588	176.98	176.98	0	24-HR	3B_FIRE	1ST	1E+07
732173	4034992	0.18867	6.68743	173.95	173.95	0	24-HR	3B_FIRE	1ST	1E+07
732273	4034992	0.21886	7.88092	171.39	171.39	0	24-HR	3B_FIRE	1ST	1E+07
732373	4034992	0.25407	8.05998	168.71	168.71	0	24-HR	3B_FIRE	1ST	1E+07
732473	4034992	0.29701	6.98375	165.71	165.71	0	24-HR	3B_FIRE	1ST	1E+07
732573	4034992	0.342	6.65284	162.79	162.79	0	24-HR	3B_FIRE	1ST	1E+07
732673	4034992	0.38693	6.62618	160.03	160.03	0	24-HR	3B_FIRE	1ST	1E+07
732773	4034992	0.4449	7.45703	157.34	157.34	0	24-HR	3B_FIRE	1ST	7E+06
732873	4034992	0.4662	7.75431	155.38	155.38	0	24-HR	3B_FIRE	1ST	1E+07
732973	4034992	0.49752	6.01316	153.6	153.6	0	24-HR	3B_FIRE	1ST	1E+07
733073	4034992	0.53263	3.96241	151.6	151.6	0	24-HR	3B_FIRE	1ST	1E+07
733173	4034992	0.56101	2.73208	150	150	0	24-HR	3B_FIRE	1ST	1E+07
733273	4034992	0.5961	2.72825	148.4	148.4	0	24-HR	3B_FIRE	1ST	7E+06
733373	4034992	0.6482	2.32741	146.66	146.66	0	24-HR	3B_FIRE	1ST	7E+06
733473	4034992	0.69262	2.48741	145.31	145.31	0	24-HR	3B_FIRE	1ST	7E+06
733573	4034992	0.71595	2.07769	144.67	144.67	0	24-HR	3B_FIRE	1ST	7E+06
733673	4034992	0.7219	1.52603	144.57	144.57	0	24-HR	3B_FIRE	1ST	7E+06
733773	4034992	0.75008	1.14949	143.82	143.82	0	24-HR	3B_FIRE	1ST	7E+06
733873	4034992	0.74856	1.11411	143.95	143.95	0	24-HR	3B_FIRE	1ST	7E+06
733973	4034992	0.77289	1.48637	143.34	143.34	0	24-HR	3B_FIRE	1ST	7E+06
734073	4034992	0.79357	1.59728	142.85	142.85	0	24-HR	3B_FIRE	1ST	7E+06
734173	4034992	0.81113	1.48554	142.46	142.46	0	24-HR	3B_FIRE	1ST	7E+06
734273	4034992	0.82542	1.55741	142.17	142.17	0	24-HR	3B_FIRE	1ST	7E+06
734373	4034992	0.84148	1.567	141.84	141.84	0	24-HR	3B_FIRE	1ST	7E+06
734473	4034992	0.85976	1.62884	141.46	141.46	0	24-HR	3B_FIRE	1ST	7E+06
734573	4034992	0.87765	1.72933	141.1	141.1	0	24-HR	3B_FIRE	1ST	7E+06
734673	4034992	0.87419	1.86508	141.31	141.31	0	24-HR	3B_FIRE	1ST	7E+06
734773	4034992	0.88723	1.89551	141.09	141.09	0	24-HR	3B_FIRE	1ST	7E+06
734973	4034992	0.947	1.9167	139.81	139.81	0	24-HR	3B_FIRE	1ST	7E+06
735073	4034992	0.96938	1.93347	139.38	139.38	0	24-HR	3B_FIRE	1ST	7E+06
735173	4034992	0.98863	1.90823	139.04	139.04	0	24-HR	3B_FIRE	1ST	7E+06
735273	4034992	0.9984	1.85219	138.95	138.95	0	24-HR	3B_FIRE	1ST	7E+06
734073	4035092	0.84703	1.48535	142.23	142.23	0	24-HR	3B_FIRE	1ST	7E+06
734173	4035092	0.86005	1.52446	141.98	141.98	0	24-HR	3B_FIRE	1ST	7E+06
734273	4035092	0.87954	1.40999	141.56	141.56	0	24-HR	3B_FIRE	1ST	7E+06
734373	4035092	0.89866	1.46386	141.16	141.16	0	24-HR	3B_FIRE	1ST	7E+06
734473	4035092	0.91997	1.54867	140.71	140.71	0	24-HR	3B_FIRE	1ST	7E+06
734573	4035092	0.93305	1.61473	140.49	140.49	0	24-HR	3B_FIRE	1ST	7E+06

734673	4035092	0.92814	1.63239	140.75	140.75	0	24-HR	3B_FIRE	1ST	7E+06
734773	4035092	0.94691	1.66335	140.39	140.39	0	24-HR	3B_FIRE	1ST	7E+06
734873	4035092	0.96175	1.73132	140.14	140.14	0	24-HR	3B_FIRE	1ST	7E+06
735073	4035092	1.02413	1.79706	138.82	138.82	0	24-HR	3B_FIRE	1ST	7E+06
735173	4035092	1.04578	1.84614	138.42	138.42	0	24-HR	3B_FIRE	1ST	7E+06
735273	4035092	1.04683	1.8552	138.56	138.56	0	24-HR	3B_FIRE	1ST	7E+06
735373	4035092	1.06608	1.83006	138.24	138.24	0	24-HR	3B_FIRE	1ST	7E+06
734073	4035192	0.89217	1.23423	141.77	141.77	0	24-HR	3B_FIRE	1ST	7E+06
734173	4035192	0.91377	1.45166	141.3	141.3	0	24-HR	3B_FIRE	1ST	7E+06
734273	4035192	0.93391	1.44154	140.88	140.88	0	24-HR	3B_FIRE	1ST	7E+06
734373	4035192	0.95439	1.3344	140.46	140.46	0	24-HR	3B_FIRE	1ST	7E+06
734473	4035192	0.97628	1.41175	140.01	140.01	0	24-HR	3B_FIRE	1ST	7E+06
734573	4035192	0.9837	1.50446	139.96	139.96	0	24-HR	3B_FIRE	1ST	7E+06
734673	4035192	0.98595	1.57074	140.05	140.05	0	24-HR	3B_FIRE	1ST	7E+06
734773	4035192	1.01208	1.56924	139.51	139.51	0	24-HR	3B_FIRE	1ST	7E+06
734873	4035192	1.01844	1.58184	139.5	139.5	0	24-HR	3B_FIRE	1ST	7E+06
734973	4035192	1.04254	1.56695	139.03	139.03	0	24-HR	3B_FIRE	1ST	7E+06
735173	4035192	1.08921	1.66218	138.16	138.16	0	24-HR	3B_FIRE	1ST	7E+06
735273	4035192	1.09701	1.73761	138.14	138.14	0	24-HR	3B_FIRE	1ST	7E+06
735373	4035192	1.1169	1.77214	137.83	137.83	0	24-HR	3B_FIRE	1ST	7E+06
735473	4035192	1.13959	1.77361	137.46	137.46	0	24-HR	3B_FIRE	1ST	7E+06
735573	4035192	1.16957	1.74891	136.92	136.92	0	24-HR	3B_FIRE	1ST	7E+06
735673	4035192	1.19572	1.70493	136.48	136.48	0	24-HR	3B_FIRE	1ST	7E+06
735773	4035192	1.22374	1.64557	136	136	0	24-HR	3B_FIRE	1ST	7E+06
735873	4035192	1.25394	1.57425	135.47	135.47	0	24-HR	3B_FIRE	1ST	7E+06
735973	4035192	1.28695	1.53879	134.87	134.87	0	24-HR	3B_FIRE	1ST	7E+06
736073	4035192	1.32098	1.50601	134.24	134.24	0	24-HR	3B_FIRE	1ST	7E+06
736173	4035192	1.34674	1.46364	133.83	133.83	0	24-HR	3B_FIRE	1ST	7E+06
736273	4035192	1.37479	1.41164	133.36	133.36	0	24-HR	3B_FIRE	1ST	7E+06
736373	4035192	1.40699	1.35495	132.77	132.77	0	24-HR	3B_FIRE	1ST	7E+06
736473	4035192	1.44076	1.29711	132.12	132.12	0	24-HR	3B_FIRE	1ST	7E+06
736573	4035192	1.4714	1.24057	131.55	131.55	0	24-HR	3B_FIRE	1ST	7E+06
736673	4035192	1.50243	1.19656	130.95	130.95	0	24-HR	3B_FIRE	1ST	7E+06
736773	4035192	1.53172	1.17172	130.39	130.39	0	24-HR	3B_FIRE	1ST	7E+06
736873	4035192	1.55944	1.14008	129.87	129.87	0	24-HR	3B_FIRE	1ST	7E+06
736973	4035192	1.58553	1.10309	129.4	129.4	0	24-HR	3B_FIRE	1ST	7E+06
737073	4035192	1.61889	1.06129	128.55	128.55	0	24-HR	3B_FIRE	1ST	7E+06
737173	4035192	1.64712	1.0211	127.86	127.86	0	24-HR	3B_FIRE	1ST	7E+06
737273	4035192	1.67134	1.01133	127.35	127.35	0	24-HR	3B_FIRE	1ST	7E+06
737373	4035192	1.69588	0.9988	126.74	126.74	0	24-HR	3B_FIRE	1ST	7E+06
737473	4035192	1.7186	0.98426	126.19	126.19	0	24-HR	3B_FIRE	1ST	7E+06
737573	4035192	1.74051	0.9708	125.64	125.64	0	24-HR	3B_FIRE	1ST	7E+06
737673	4035192	1.7616	0.99743	125.12	125.12	0	24-HR	3B_FIRE	1ST	7E+06
737773	4035192	1.78165	1.02082	124.59	124.59	0	24-HR	3B_FIRE	1ST	7E+06
737873	4035192	1.80005	1.04077	123.94	123.94	0	24-HR	3B_FIRE	1ST	7E+06
737973	4035192	1.81854	1.05809	123.56	123.56	0	24-HR	3B_FIRE	1ST	7E+06
734673	4035292	1.03051	1.45411	139.54	139.54	0	24-HR	3B_FIRE	1ST	7E+06
734773	4035292	1.06268	1.51862	138.85	138.85	0	24-HR	3B_FIRE	1ST	7E+06
734873	4035292	1.07628	1.53763	138.67	138.67	0	24-HR	3B_FIRE	1ST	7E+06
734973	4035292	1.08935	1.49988	138.51	138.51	0	24-HR	3B_FIRE	1ST	7E+06
735073	4035292	1.10645	1.47273	138.25	138.25	0	24-HR	3B_FIRE	1ST	7E+06
735273	4035292	1.14612	1.52171	137.64	137.64	0	24-HR	3B_FIRE	1ST	7E+06
735373	4035292	1.16218	1.6151	137.44	137.44	0	24-HR	3B_FIRE	1ST	7E+06
735473	4035292	1.18781	1.671	137.01	137.01	0	24-HR	3B_FIRE	1ST	7E+06
735573	4035292	1.21612	1.69445	136.52	136.52	0	24-HR	3B_FIRE	1ST	7E+06
735673	4035292	1.24108	1.69228	136.12	136.12	0	24-HR	3B_FIRE	1ST	7E+06
735773	4035292	1.27022	1.66965	135.62	135.62	0	24-HR	3B_FIRE	1ST	7E+06
735873	4035292	1.30064	1.63123	135.09	135.09	0	24-HR	3B_FIRE	1ST	7E+06
735973	4035292	1.3341	1.58006	134.48	134.48	0	24-HR	3B_FIRE	1ST	7E+06
736073	4035292	1.36701	1.51894	133.88	133.88	0	24-HR	3B_FIRE	1ST	7E+06
736173	4035292	1.39439	1.45242	133.43	133.43	0	24-HR	3B_FIRE	1ST	7E+06
736273	4035292	1.42041	1.42541	133.02	133.02	0	24-HR	3B_FIRE	1ST	7E+06
736373	4035292	1.45316	1.38734	132.41	132.41	0	24-HR	3B_FIRE	1ST	7E+06
736473	4035292	1.48538	1.34227	131.8	131.8	0	24-HR	3B_FIRE	1ST	7E+06
736573	4035292	1.51583	1.29309	131.23	131.23	0	24-HR	3B_FIRE	1ST	7E+06
736673	4035292	1.54951	1.24141	130.52	130.52	0	24-HR	3B_FIRE	1ST	7E+06
736773	4035292	1.57899	1.18998	129.93	129.93	0	24-HR	3B_FIRE	1ST	7E+06

736873	4035292	1.60518	1.14005	129.45	129.45	0	24-HR	3B_FIRE	1ST	7E+06
736973	4035292	1.6328	1.12323	128.88	128.88	0	24-HR	3B_FIRE	1ST	7E+06
737073	4035292	1.65867	1.1012	128.36	128.36	0	24-HR	3B_FIRE	1ST	7E+06
737173	4035292	1.6866	1.07319	127.66	127.66	0	24-HR	3B_FIRE	1ST	7E+06
737273	4035292	1.71117	1.04069	127.09	127.09	0	24-HR	3B_FIRE	1ST	7E+06
737373	4035292	1.73479	1.00457	126.5	126.5	0	24-HR	3B_FIRE	1ST	7E+06
737473	4035292	1.75709	0.9658	125.91	125.91	0	24-HR	3B_FIRE	1ST	7E+06
737573	4035292	1.7782	0.93484	125.42	125.42	0	24-HR	3B_FIRE	1ST	7E+06
737673	4035292	1.79858	0.92998	124.87	124.87	0	24-HR	3B_FIRE	1ST	7E+06
737773	4035292	1.81759	0.93047	124.29	124.29	0	24-HR	3B_FIRE	1ST	7E+06
737873	4035292	1.83517	0.92944	123.73	123.73	0	24-HR	3B_FIRE	1ST	7E+06
737973	4035292	1.8521	0.92716	123.26	123.26	0	24-HR	3B_FIRE	1ST	7E+06
734873	4035392	1.11835	1.46531	137.98	137.98	0	24-HR	3B_FIRE	1ST	7E+06
734973	4035392	1.13186	1.49572	137.84	137.84	0	24-HR	3B_FIRE	1ST	7E+06
735073	4035392	1.14597	1.4697	137.69	137.69	0	24-HR	3B_FIRE	1ST	7E+06
735173	4035392	1.15639	1.4211	137.64	137.64	0	24-HR	3B_FIRE	1ST	7E+06
735373	4035392	1.19795	1.38227	137.03	137.03	0	24-HR	3B_FIRE	1ST	7E+06
735473	4035392	1.22566	1.4872	136.56	136.56	0	24-HR	3B_FIRE	1ST	7E+06
735573	4035392	1.25165	1.55997	136.14	136.14	0	24-HR	3B_FIRE	1ST	7E+06
735673	4035392	1.27981	1.60201	135.67	135.67	0	24-HR	3B_FIRE	1ST	7E+06
735773	4035392	1.30776	1.61822	135.21	135.21	0	24-HR	3B_FIRE	1ST	7E+06
735873	4035392	1.3392	1.6136	134.66	134.66	0	24-HR	3B_FIRE	1ST	7E+06
735973	4035392	1.37204	1.59285	134.07	134.07	0	24-HR	3B_FIRE	1ST	7E+06
736073	4035392	1.40468	1.55944	133.48	133.48	0	24-HR	3B_FIRE	1ST	7E+06
736173	4035392	1.43099	1.51631	133.07	133.07	0	24-HR	3B_FIRE	1ST	7E+06
736273	4035392	1.45671	1.46469	132.68	132.68	0	24-HR	3B_FIRE	1ST	7E+06
736373	4035392	1.4892	1.40541	132.08	132.08	0	24-HR	3B_FIRE	1ST	7E+06
736473	4035392	1.52234	1.34367	131.44	131.44	0	24-HR	3B_FIRE	1ST	7E+06
736573	4035392	1.55305	1.31309	130.86	130.86	0	24-HR	3B_FIRE	1ST	7E+06
736673	4035392	1.58517	1.27519	130.2	130.2	0	24-HR	3B_FIRE	1ST	7E+06
736773	4035392	1.61459	1.23282	129.61	129.61	0	24-HR	3B_FIRE	1ST	7E+06
736873	4035392	1.64295	1.18775	129.03	129.03	0	24-HR	3B_FIRE	1ST	7E+06
736973	4035392	1.67238	1.14128	128.34	128.34	0	24-HR	3B_FIRE	1ST	7E+06
737073	4035392	1.6963	1.09579	127.91	127.91	0	24-HR	3B_FIRE	1ST	7E+06
737173	4035392	1.72262	1.06863	127.27	127.27	0	24-HR	3B_FIRE	1ST	7E+06
737273	4035392	1.74543	1.05471	126.83	126.83	0	24-HR	3B_FIRE	1ST	7E+06
737373	4035392	1.76714	1.03525	126.46	126.46	0	24-HR	3B_FIRE	1ST	7E+06
737473	4035392	1.79117	1.01037	125.67	125.67	0	24-HR	3B_FIRE	1ST	7E+06
737573	4035392	1.8123	0.982	125.19	125.19	0	24-HR	3B_FIRE	1ST	7E+06
737673	4035392	1.83254	0.95025	124.59	124.59	0	24-HR	3B_FIRE	1ST	7E+06
737773	4035392	1.85082	0.916	123.92	123.92	0	24-HR	3B_FIRE	1ST	7E+06
737873	4035392	1.86741	0.91032	123.32	123.32	0	24-HR	3B_FIRE	1ST	7E+06
737973	4035392	1.88379	0.91103	122.86	122.86	0	24-HR	3B_FIRE	1ST	7E+06
734973	4035492	1.15633	1.4124	137.25	137.25	0	24-HR	3B_FIRE	1ST	7E+06
735073	4035492	1.16596	1.449	137.24	137.24	0	24-HR	3B_FIRE	1ST	7E+06
735173	4035492	1.18025	1.44219	137.11	137.11	0	24-HR	3B_FIRE	1ST	7E+06
735273	4035492	1.20574	1.37918	136.69	136.69	0	24-HR	3B_FIRE	1ST	7E+06
737873	4035492	1.88249	0.92582	122.6	122.6	0	24-HR	3B_FIRE	1ST	7E+06
737973	4035492	1.90067	0.89835	122.33	122.33	0	24-HR	3B_FIRE	1ST	7E+06
735073	4035592	1.16603	1.36149	136.83	136.83	0	24-HR	3B_FIRE	1ST	7E+06
735173	4035592	1.18404	1.40004	136.61	136.61	0	24-HR	3B_FIRE	1ST	7E+06
735273	4035592	1.212	1.40557	136.12	136.12	0	24-HR	3B_FIRE	1ST	7E+06
735373	4035592	1.23416	1.36631	135.8	135.8	0	24-HR	3B_FIRE	1ST	7E+06
735473	4035592	1.25837	1.27513	135.43	135.43	0	24-HR	3B_FIRE	1ST	7E+06
735573	4035592	1.28388	1.19403	135.03	135.03	0	24-HR	3B_FIRE	1ST	7E+06
735673	4035592	1.30719	1.23698	134.7	134.7	0	24-HR	3B_FIRE	1ST	7E+06
735773	4035592	1.32594	1.33036	134.51	134.51	0	24-HR	3B_FIRE	1ST	7E+06
735873	4035592	1.35356	1.399	134.07	134.07	0	24-HR	3B_FIRE	1ST	7E+06
735973	4035592	1.38659	1.4436	133.47	133.47	0	24-HR	3B_FIRE	1ST	7E+06
736073	4035592	1.41875	1.46758	132.89	132.89	0	24-HR	3B_FIRE	1ST	7E+06
736173	4035592	1.45064	1.47475	132.31	132.31	0	24-HR	3B_FIRE	1ST	7E+06
736273	4035592	1.47787	1.46912	131.88	131.88	0	24-HR	3B_FIRE	1ST	7E+06
736373	4035592	1.50951	1.45267	131.29	131.29	0	24-HR	3B_FIRE	1ST	7E+06
736473	4035592	1.54038	1.42777	130.71	130.71	0	24-HR	3B_FIRE	1ST	7E+06
736573	4035592	1.57021	1.39571	130.15	130.15	0	24-HR	3B_FIRE	1ST	7E+06
736673	4035592	1.59969	1.35731	129.58	129.58	0	24-HR	3B_FIRE	1ST	7E+06
736773	4035592	1.62926	1.31326	128.97	128.97	0	24-HR	3B_FIRE	1ST	7E+06

736873	4035592	1.65789	1.26445	128.36	128.36	0	24-HR	3B_FIRE	1ST	7E+06
736973	4035592	1.68822	1.21135	127.55	127.55	0	24-HR	3B_FIRE	1ST	7E+06
737073	4035592	1.71455	1.15575	126.9	126.9	0	24-HR	3B_FIRE	1ST	7E+06
737173	4035592	1.73828	1.11897	126.4	126.4	0	24-HR	3B_FIRE	1ST	7E+06
737273	4035592	1.76122	1.08514	125.91	125.91	0	24-HR	3B_FIRE	1ST	7E+06
737373	4035592	1.78428	1.04885	125.31	125.31	0	24-HR	3B_FIRE	1ST	7E+06
737473	4035592	1.80598	1.01131	124.62	124.62	0	24-HR	3B_FIRE	1ST	7E+06
737573	4035592	1.82566	0.97374	123.96	123.96	0	24-HR	3B_FIRE	1ST	7E+06
737673	4035592	1.84357	0.95019	123.33	123.33	0	24-HR	3B_FIRE	1ST	7E+06
737773	4035592	1.86191	0.94319	122.92	122.92	0	24-HR	3B_FIRE	1ST	7E+06
737973	4035592	1.89397	0.91582	121.91	121.91	0	24-HR	3B_FIRE	1ST	7E+06
735273	4035692	1.18678	1.35106	135.85	135.85	0	24-HR	3B_FIRE	1ST	7E+06
735373	4035692	1.21136	1.36302	135.45	135.45	0	24-HR	3B_FIRE	1ST	7E+06
735473	4035692	1.23651	1.33648	135.04	135.04	0	24-HR	3B_FIRE	1ST	7E+06
735573	4035692	1.26351	1.26793	134.58	134.58	0	24-HR	3B_FIRE	1ST	7E+06
735673	4035692	1.28712	1.16921	134.23	134.23	0	24-HR	3B_FIRE	1ST	7E+06
735773	4035692	1.30456	1.14702	134.08	134.08	0	24-HR	3B_FIRE	1ST	7E+06
735873	4035692	1.32713	1.21894	133.78	133.78	0	24-HR	3B_FIRE	1ST	7E+06
735973	4035692	1.35903	1.29557	133.19	133.19	0	24-HR	3B_FIRE	1ST	7E+06
736073	4035692	1.39392	1.35056	132.49	132.49	0	24-HR	3B_FIRE	1ST	7E+06
736173	4035692	1.42513	1.3858	131.9	131.9	0	24-HR	3B_FIRE	1ST	7E+06
736273	4035692	1.45333	1.40429	131.41	131.41	0	24-HR	3B_FIRE	1ST	7E+06
736373	4035692	1.48312	1.40901	130.85	130.85	0	24-HR	3B_FIRE	1ST	7E+06
736473	4035692	1.51247	1.40303	130.29	130.29	0	24-HR	3B_FIRE	1ST	7E+06
736573	4035692	1.54091	1.38862	129.75	129.75	0	24-HR	3B_FIRE	1ST	7E+06
736673	4035692	1.56944	1.36712	129.18	129.18	0	24-HR	3B_FIRE	1ST	7E+06
736773	4035692	1.59781	1.33946	128.58	128.58	0	24-HR	3B_FIRE	1ST	7E+06
736873	4035692	1.62516	1.30635	127.99	127.99	0	24-HR	3B_FIRE	1ST	7E+06
736973	4035692	1.65336	1.26796	127.25	127.25	0	24-HR	3B_FIRE	1ST	7E+06
737073	4035692	1.6785	1.22546	126.65	126.65	0	24-HR	3B_FIRE	1ST	7E+06
737173	4035692	1.7017	1.17949	126.18	126.18	0	24-HR	3B_FIRE	1ST	7E+06
737273	4035692	1.72454	1.13054	125.7	125.7	0	24-HR	3B_FIRE	1ST	7E+06
737373	4035692	1.74723	1.07937	125.16	125.16	0	24-HR	3B_FIRE	1ST	7E+06
737473	4035692	1.76888	1.03713	124.54	124.54	0	24-HR	3B_FIRE	1ST	7E+06
737573	4035692	1.78906	1.00525	123.94	123.94	0	24-HR	3B_FIRE	1ST	7E+06
737673	4035692	1.80756	0.97187	123.31	123.31	0	24-HR	3B_FIRE	1ST	7E+06
737773	4035692	1.82494	0.93803	122.74	122.74	0	24-HR	3B_FIRE	1ST	7E+06
737973	4035692	1.85533	0.89482	121.59	121.59	0	24-HR	3B_FIRE	1ST	7E+06
735373	4035792	1.1729	1.29659	134.94	134.94	0	24-HR	3B_FIRE	1ST	7E+06
735473	4035792	1.19606	1.31169	134.56	134.56	0	24-HR	3B_FIRE	1ST	7E+06
735573	4035792	1.22004	1.29811	134.16	134.16	0	24-HR	3B_FIRE	1ST	7E+06
735673	4035792	1.24508	1.2492	133.73	133.73	0	24-HR	3B_FIRE	1ST	7E+06
735773	4035792	1.26473	1.16473	133.49	133.49	0	24-HR	3B_FIRE	1ST	7E+06
735873	4035792	1.28612	1.09136	133.2	133.2	0	24-HR	3B_FIRE	1ST	7E+06
735973	4035792	1.31538	1.12666	132.64	132.64	0	24-HR	3B_FIRE	1ST	7E+06
736073	4035792	1.34311	1.19409	132.13	132.13	0	24-HR	3B_FIRE	1ST	7E+06
736173	4035792	1.37424	1.25731	131.48	131.48	0	24-HR	3B_FIRE	1ST	7E+06
736273	4035792	1.40149	1.30215	130.97	130.97	0	24-HR	3B_FIRE	1ST	7E+06
736373	4035792	1.42895	1.33021	130.44	130.44	0	24-HR	3B_FIRE	1ST	7E+06
736473	4035792	1.45484	1.34445	129.97	129.97	0	24-HR	3B_FIRE	1ST	7E+06
736573	4035792	1.48355	1.34727	129.34	129.34	0	24-HR	3B_FIRE	1ST	7E+06
736673	4035792	1.5106	1.34148	128.76	128.76	0	24-HR	3B_FIRE	1ST	7E+06
736773	4035792	1.53637	1.3288	128.22	128.22	0	24-HR	3B_FIRE	1ST	7E+06
736873	4035792	1.56217	1.31015	127.63	127.63	0	24-HR	3B_FIRE	1ST	7E+06
736973	4035792	1.58877	1.28592	126.86	126.86	0	24-HR	3B_FIRE	1ST	7E+06
737073	4035792	1.61179	1.25741	126.34	126.34	0	24-HR	3B_FIRE	1ST	7E+06
737173	4035792	1.63348	1.22474	125.95	125.95	0	24-HR	3B_FIRE	1ST	7E+06
737273	4035792	1.65511	1.18808	125.59	125.59	0	24-HR	3B_FIRE	1ST	7E+06
737373	4035792	1.67712	1.14751	125.05	125.05	0	24-HR	3B_FIRE	1ST	7E+06
737473	4035792	1.6981	1.10383	124.42	124.42	0	24-HR	3B_FIRE	1ST	7E+06
737573	4035792	1.71735	1.05783	123.74	123.74	0	24-HR	3B_FIRE	1ST	7E+06
737673	4035792	1.73468	1.01035	123.06	123.06	0	24-HR	3B_FIRE	1ST	7E+06
737773	4035792	1.75164	0.96309	122.52	122.52	0	24-HR	3B_FIRE	1ST	7E+06
737873	4035792	1.76534	0.93327	121.83	121.83	0	24-HR	3B_FIRE	1ST	7E+06
735473	4035892	1.13652	1.24238	134.07	134.07	0	24-HR	3B_FIRE	1ST	7E+06
735573	4035892	1.16024	1.26033	133.62	133.62	0	24-HR	3B_FIRE	1ST	7E+06
735673	4035892	1.18112	1.25605	133.28	133.28	0	24-HR	3B_FIRE	1ST	7E+06

735773	4035892	1.20298	1.22249	132.91	132.91	0	24-HR	3B_FIRE	1ST	7E+06
735873	4035892	1.22113	1.15749	132.69	132.69	0	24-HR	3B_FIRE	1ST	7E+06
735973	4035892	1.25131	1.06239	132	132	0	24-HR	3B_FIRE	1ST	7E+06
736073	4035892	1.27811	1.08145	131.43	131.43	0	24-HR	3B_FIRE	1ST	7E+06
736173	4035892	1.30043	1.0966	131.05	131.05	0	24-HR	3B_FIRE	1ST	7E+06
736273	4035892	1.32388	1.16592	130.62	130.62	0	24-HR	3B_FIRE	1ST	7E+06
736373	4035892	1.34885	1.21838	130.11	130.11	0	24-HR	3B_FIRE	1ST	7E+06
736473	4035892	1.37059	1.2551	129.76	129.76	0	24-HR	3B_FIRE	1ST	7E+06
736573	4035892	1.39672	1.27736	129.16	129.16	0	24-HR	3B_FIRE	1ST	7E+06
736673	4035892	1.42433	1.28785	128.41	128.41	0	24-HR	3B_FIRE	1ST	7E+06
736773	4035892	1.44882	1.2895	127.8	127.8	0	24-HR	3B_FIRE	1ST	7E+06
736873	4035892	1.47111	1.28425	127.32	127.32	0	24-HR	3B_FIRE	1ST	7E+06
736973	4035892	1.49494	1.27271	126.59	126.59	0	24-HR	3B_FIRE	1ST	7E+06
737073	4035892	1.51586	1.25669	126.11	126.11	0	24-HR	3B_FIRE	1ST	7E+06
737173	4035892	1.53594	1.23646	125.75	125.75	0	24-HR	3B_FIRE	1ST	7E+06
737273	4035892	1.55613	1.21204	125.39	125.39	0	24-HR	3B_FIRE	1ST	7E+06
737373	4035892	1.57642	1.18329	124.84	124.84	0	24-HR	3B_FIRE	1ST	7E+06
737473	4035892	1.59584	1.15091	124.33	124.33	0	24-HR	3B_FIRE	1ST	7E+06
737573	4035892	1.61299	1.11465	123.51	123.51	0	24-HR	3B_FIRE	1ST	7E+06
737673	4035892	1.62905	1.07588	122.88	122.88	0	24-HR	3B_FIRE	1ST	7E+06
737773	4035892	1.64451	1.03493	122.33	122.33	0	24-HR	3B_FIRE	1ST	7E+06
737873	4035892	1.65714	0.99212	121.66	121.66	0	24-HR	3B_FIRE	1ST	7E+06
737973	4035892	1.66719	0.94821	120.95	120.95	0	24-HR	3B_FIRE	1ST	7E+06
737573	4035992	1.48281	1.14262	123.33	123.33	0	24-HR	3B_FIRE	1ST	7E+06
737673	4035992	1.49589	1.11386	122.62	122.62	0	24-HR	3B_FIRE	1ST	7E+06
737773	4035992	1.50778	1.0821	121.97	121.97	0	24-HR	3B_FIRE	1ST	7E+06
737873	4035992	1.51999	1.04779	121.45	121.45	0	24-HR	3B_FIRE	1ST	7E+06
737973	4035992	1.53059	1.01111	120.89	120.89	0	24-HR	3B_FIRE	1ST	7E+06
737573	4036092	1.33524	1.1447	123.07	123.07	0	24-HR	3B_FIRE	1ST	7E+06
737673	4036092	1.3453	1.1256	122.36	122.36	0	24-HR	3B_FIRE	1ST	7E+06
737773	4036092	1.35328	1.1033	121.63	121.63	0	24-HR	3B_FIRE	1ST	7E+06
737873	4036092	1.36192	1.07821	121.07	121.07	0	24-HR	3B_FIRE	1ST	7E+06
737973	4036092	1.36983	1.05025	120.53	120.53	0	24-HR	3B_FIRE	1ST	7E+06
737573	4036192	1.17935	1.12667	122.62	122.62	0	24-HR	3B_FIRE	1ST	7E+06
737673	4036192	1.18701	1.11586	122.03	122.03	0	24-HR	3B_FIRE	1ST	7E+06
737773	4036192	1.19228	1.102	121.34	121.34	0	24-HR	3B_FIRE	1ST	7E+06
737873	4036192	1.1982	1.08552	120.8	120.8	0	24-HR	3B_FIRE	1ST	7E+06
737973	4036192	1.20302	1.06617	120.25	120.25	0	24-HR	3B_FIRE	1ST	7E+06
737573	4036292	1.02531	1.09434	122.15	122.15	0	24-HR	3B_FIRE	1ST	7E+06
737673	4036292	1.02963	1.09038	121.56	121.56	0	24-HR	3B_FIRE	1ST	7E+06
737773	4036292	1.03823	1.08331	120.83	120.83	0	24-HR	3B_FIRE	1ST	1E+07
737873	4036292	1.04988	1.07421	120.53	120.53	0	24-HR	3B_FIRE	1ST	1E+07
737973	4036292	1.0607	1.06222	119.97	119.97	0	24-HR	3B_FIRE	1ST	1E+07
738081	4035201	1.84056	1.06131	123.11	123.11	0	24-HR	3B_FIRE	1ST	7E+06
738181	4035201	1.85749	1.07319	122.68	122.68	0	24-HR	3B_FIRE	1ST	7E+06
738281	4035201	1.87408	1.08255	122.27	122.27	0	24-HR	3B_FIRE	1ST	7E+06
738081	4035301	1.87372	0.92133	122.84	122.84	0	24-HR	3B_FIRE	1ST	7E+06
738181	4035301	1.88968	0.93477	122.42	122.42	0	24-HR	3B_FIRE	1ST	7E+06
738281	4035301	1.9046	0.95264	121.98	121.98	0	24-HR	3B_FIRE	1ST	7E+06
738381	4035301	1.91623	0.96789	121.42	121.42	0	24-HR	3B_FIRE	1ST	7E+06
738081	4035401	1.90555	0.90796	122.53	122.53	0	24-HR	3B_FIRE	1ST	7E+06
738181	4035401	1.92197	0.90505	122.16	122.16	0	24-HR	3B_FIRE	1ST	7E+06
738281	4035401	1.93551	0.90076	121.66	121.66	0	24-HR	3B_FIRE	1ST	7E+06
738381	4035401	1.94442	0.89526	121.01	121.01	0	24-HR	3B_FIRE	1ST	7E+06
738481	4035401	1.95385	0.88883	120.47	120.47	0	24-HR	3B_FIRE	1ST	7E+06
738081	4035501	1.92203	0.88885	122.08	122.08	0	24-HR	3B_FIRE	1ST	7E+06
738181	4035501	1.93935	0.88941	121.76	121.76	0	24-HR	3B_FIRE	1ST	7E+06
738281	4035501	1.954	0.88826	121.32	121.32	0	24-HR	3B_FIRE	1ST	7E+06
738381	4035501	1.96589	0.88559	120.8	120.8	0	24-HR	3B_FIRE	1ST	7E+06
738481	4035501	1.9728	0.88153	120.15	120.15	0	24-HR	3B_FIRE	1ST	7E+06
738581	4035501	1.98564	0.87643	119.77	119.77	0	24-HR	3B_FIRE	1ST	7E+06
738081	4035601	1.91043	0.89601	121.5	121.5	0	24-HR	3B_FIRE	1ST	7E+06
738181	4035601	1.92574	0.87477	121.08	121.08	0	24-HR	3B_FIRE	1ST	7E+06
738281	4035601	1.94418	0.86858	120.83	120.83	0	24-HR	3B_FIRE	1ST	7E+06
738381	4035601	1.95617	0.86949	120.32	120.32	0	24-HR	3B_FIRE	1ST	7E+06
738481	4035601	1.96627	0.86875	119.79	119.79	0	24-HR	3B_FIRE	1ST	7E+06
738581	4035601	1.98429	0.86664	119.56	119.56	0	24-HR	3B_FIRE	1ST	7E+06

738081	4035701	1.86478	0.88491	120.98	120.98	0	24-HR	3B_FIRE	1ST	7E+06
738181	4035701	1.87766	0.87506	120.47	120.47	0	24-HR	3B_FIRE	1ST	7E+06
738281	4035701	1.9017	0.86231	120.46	120.46	0	24-HR	3B_FIRE	1ST	7E+06
738381	4035701	1.91631	0.84609	120.05	120.05	0	24-HR	3B_FIRE	1ST	7E+06
738481	4035701	1.92624	0.84804	119.5	119.5	0	24-HR	3B_FIRE	1ST	7E+06
738581	4035701	1.94723	0.84955	119.35	119.35	0	24-HR	3B_FIRE	1ST	7E+06
738081	4035801	1.78096	0.87193	120.49	120.49	0	24-HR	3B_FIRE	1ST	7E+06
738181	4035801	1.7949	0.842	120.07	120.07	0	24-HR	3B_FIRE	1ST	7E+06
738281	4035801	1.81487	0.84038	119.91	119.91	0	24-HR	3B_FIRE	1ST	7E+06
738381	4035801	1.83277	0.83499	119.66	119.66	0	24-HR	3B_FIRE	1ST	7E+06
738481	4035801	1.84294	0.82598	119.14	119.14	0	24-HR	3B_FIRE	1ST	7E+06
738581	4035801	1.8672	0.82365	119.11	119.11	0	24-HR	3B_FIRE	1ST	7E+06
738181	4035901	1.67629	0.86841	119.73	119.73	0	24-HR	3B_FIRE	1ST	7E+06
738281	4035901	1.6887	0.84107	119.33	119.33	0	24-HR	3B_FIRE	1ST	7E+06
738381	4035901	1.70535	0.81385	119.1	119.1	0	24-HR	3B_FIRE	1ST	7E+06
738481	4035901	1.71774	0.79592	118.72	118.72	0	24-HR	3B_FIRE	1ST	7E+06
738581	4035901	1.73221	0.79393	118.42	118.42	0	24-HR	3B_FIRE	1ST	7E+06
738181	4036001	1.53058	0.93506	119.51	119.51	0	24-HR	3B_FIRE	1ST	7E+06
738281	4036001	1.54071	0.89516	119.1	119.1	0	24-HR	3B_FIRE	1ST	7E+06
738381	4036001	1.55197	0.85506	118.75	118.75	0	24-HR	3B_FIRE	1ST	7E+06
738481	4036001	1.56494	0.81523	118.47	118.47	0	24-HR	3B_FIRE	1ST	7E+06
738581	4036001	1.56628	0.78606	117.81	117.81	0	24-HR	3B_FIRE	1ST	7E+06
738081	4036101	1.35826	1.01997	119.72	119.72	0	24-HR	3B_FIRE	1ST	7E+06
738281	4036101	1.37388	0.95371	118.9	118.9	0	24-HR	3B_FIRE	1ST	7E+06
738381	4036101	1.383	0.91826	118.57	118.57	0	24-HR	3B_FIRE	1ST	7E+06
738481	4036101	1.40567	0.88245	118.77	118.77	0	24-HR	3B_FIRE	1ST	7E+06
738581	4036101	1.3825	0.84413	117.29	117.29	0	24-HR	3B_FIRE	1ST	7E+06
738681	4036101	1.39168	0.80714	117.01	117.01	0	24-HR	3B_FIRE	1ST	7E+06
738781	4036101	1.3906	0.77017	116.42	116.42	0	24-HR	3B_FIRE	1ST	7E+06
738881	4036101	1.38663	0.73476	115.78	115.78	0	24-HR	3B_FIRE	1ST	7E+06
738981	4036101	1.38024	0.7432	115.11	115.11	0	24-HR	3B_FIRE	1ST	7E+06
739081	4036101	1.37484	0.75099	114.5	114.5	0	24-HR	3B_FIRE	1ST	7E+06
739181	4036101	1.3675	0.75715	113.87	113.87	0	24-HR	3B_FIRE	1ST	7E+06
739281	4036101	1.35903	0.76173	113.24	113.24	0	24-HR	3B_FIRE	1ST	7E+06
739381	4036101	1.3451	0.7648	112.51	112.51	0	24-HR	3B_FIRE	1ST	7E+06
739481	4036101	1.32128	0.76643	111.59	111.59	0	24-HR	3B_FIRE	1ST	7E+06
739581	4036101	1.3064	0.76678	110.89	110.89	0	24-HR	3B_FIRE	1ST	7E+06
739681	4036101	1.29287	0.76592	110.21	110.21	0	24-HR	3B_FIRE	1ST	7E+06
739781	4036101	1.27688	0.7639	109.46	109.46	0	24-HR	3B_FIRE	1ST	7E+06
739881	4036101	1.26178	0.76086	108.71	108.71	0	24-HR	3B_FIRE	1ST	7E+06
739981	4036101	1.25375	0.75685	108.11	108.11	0	24-HR	3B_FIRE	1ST	7E+06
740081	4036101	1.24633	0.75204	107.51	107.51	0	24-HR	3B_FIRE	1ST	7E+06
740181	4036101	1.24218	0.74659	106.98	106.98	0	24-HR	3B_FIRE	1ST	7E+06
740281	4036101	1.25519	0.74049	106.42	106.42	0	24-HR	3B_FIRE	1ST	8E+06
740381	4036101	1.28211	0.73383	105.87	105.87	0	24-HR	3B_FIRE	1ST	8E+06
740481	4036101	1.30875	0.72669	105.41	105.41	0	24-HR	3B_FIRE	1ST	8E+06
740581	4036101	1.33564	0.71912	104.99	104.99	0	24-HR	3B_FIRE	1ST	8E+06
740681	4036101	1.3646	0.71115	104.43	104.43	0	24-HR	3B_FIRE	1ST	8E+06
740781	4036101	1.38802	0.70298	104.49	104.49	0	24-HR	3B_FIRE	1ST	8E+06
740881	4036101	1.41846	0.69441	103.92	103.92	0	24-HR	3B_FIRE	1ST	8E+06
740981	4036101	1.4496	0.68561	103.35	103.35	0	24-HR	3B_FIRE	1ST	8E+06
741081	4036101	1.48213	0.67661	102.71	102.71	0	24-HR	3B_FIRE	1ST	8E+06
741181	4036101	1.5148	0.66749	102.13	102.13	0	24-HR	3B_FIRE	1ST	8E+06
741281	4036101	1.54899	0.65823	101.47	101.47	0	24-HR	3B_FIRE	1ST	8E+06
741381	4036101	1.5818	0.64895	101.03	101.03	0	24-HR	3B_FIRE	1ST	8E+06
741481	4036101	1.61255	0.63969	100.89	100.89	0	24-HR	3B_FIRE	1ST	8E+06
741581	4036101	1.64399	0.63042	100.77	100.77	0	24-HR	3B_FIRE	1ST	8E+06
741681	4036101	1.67588	0.62117	100.7	100.7	0	24-HR	3B_FIRE	1ST	8E+06
741781	4036101	1.71074	0.6119	100.41	100.41	0	24-HR	3B_FIRE	1ST	8E+06
741881	4036101	1.75411	0.60253	99.43	102.34	0	24-HR	3B_FIRE	1ST	8E+06
741981	4036101	1.80866	0.59294	97.16	99.47	0	24-HR	3B_FIRE	1ST	8E+06
738081	4036201	1.19107	1.04323	119.58	119.58	0	24-HR	3B_FIRE	1ST	7E+06
738281	4036201	1.20153	0.99247	118.77	118.77	0	24-HR	3B_FIRE	1ST	7E+06
738381	4036201	1.21018	0.96381	118.54	118.54	0	24-HR	3B_FIRE	1ST	7E+06
738481	4036201	1.20859	0.93269	117.9	117.9	0	24-HR	3B_FIRE	1ST	7E+06
738581	4036201	1.19722	0.8997	116.95	116.95	0	24-HR	3B_FIRE	1ST	7E+06
738681	4036201	1.20094	0.86631	116.59	116.59	0	24-HR	3B_FIRE	1ST	7E+06

738781	4036201	1.19818	0.832	116.03	116.03	0	24-HR	3B_FIRE	1ST	7E+06
738881	4036201	1.19354	0.79738	115.44	115.44	0	24-HR	3B_FIRE	1ST	7E+06
738981	4036201	1.18446	0.76275	114.75	114.75	0	24-HR	3B_FIRE	1ST	7E+06
739081	4036201	1.17698	0.72865	114.14	114.14	0	24-HR	3B_FIRE	1ST	7E+06
739181	4036201	1.16701	0.7205	113.49	113.49	0	24-HR	3B_FIRE	1ST	7E+06
739281	4036201	1.15559	0.72835	112.83	112.83	0	24-HR	3B_FIRE	1ST	7E+06
739381	4036201	1.1409	0.73468	112.11	112.11	0	24-HR	3B_FIRE	1ST	7E+06
739481	4036201	1.11686	0.73951	111.19	111.19	0	24-HR	3B_FIRE	1ST	7E+06
739581	4036201	1.10087	0.74297	110.47	110.47	0	24-HR	3B_FIRE	1ST	7E+06
739681	4036201	1.11323	0.7451	109.79	109.79	0	24-HR	3B_FIRE	1ST	8E+06
739781	4036201	1.13794	0.74594	109.04	109.04	0	24-HR	3B_FIRE	1ST	8E+06
739881	4036201	1.16247	0.7456	108.36	108.36	0	24-HR	3B_FIRE	1ST	8E+06
739981	4036201	1.18682	0.74408	107.77	107.77	0	24-HR	3B_FIRE	1ST	8E+06
740081	4036201	1.21198	0.74163	107.19	107.19	0	24-HR	3B_FIRE	1ST	8E+06
740181	4036201	1.23733	0.73839	106.66	106.66	0	24-HR	3B_FIRE	1ST	8E+06
740281	4036201	1.26312	0.73438	106.15	106.15	0	24-HR	3B_FIRE	1ST	8E+06
740381	4036201	1.28964	0.72965	105.63	105.63	0	24-HR	3B_FIRE	1ST	8E+06
740481	4036201	1.317	0.72428	105.09	105.09	0	24-HR	3B_FIRE	1ST	8E+06
740581	4036201	1.34342	0.71837	104.71	104.71	0	24-HR	3B_FIRE	1ST	8E+06
740681	4036201	1.36933	0.71196	104.45	104.45	0	24-HR	3B_FIRE	1ST	8E+06
740781	4036201	1.39691	0.70507	104.09	104.09	0	24-HR	3B_FIRE	1ST	8E+06
740881	4036201	1.42432	0.6978	103.82	103.82	0	24-HR	3B_FIRE	1ST	8E+06
740981	4036201	1.45669	0.6901	103.12	103.12	0	24-HR	3B_FIRE	1ST	8E+06
741081	4036201	1.48978	0.68209	102.42	102.42	0	24-HR	3B_FIRE	1ST	8E+06
741181	4036201	1.52303	0.67384	101.78	101.78	0	24-HR	3B_FIRE	1ST	8E+06
741281	4036201	1.55471	0.66542	101.38	101.38	0	24-HR	3B_FIRE	1ST	8E+06
741381	4036201	1.58593	0.65685	101.11	101.11	0	24-HR	3B_FIRE	1ST	8E+06
741481	4036201	1.61733	0.64816	100.91	100.91	0	24-HR	3B_FIRE	1ST	8E+06
741581	4036201	1.64809	0.63939	100.87	100.87	0	24-HR	3B_FIRE	1ST	8E+06
741681	4036201	1.6798	0.63055	100.83	100.83	0	24-HR	3B_FIRE	1ST	8E+06
741781	4036201	1.71534	0.6216	100.48	100.48	0	24-HR	3B_FIRE	1ST	8E+06
741881	4036201	1.76233	0.61243	99.14	102.24	0	24-HR	3B_FIRE	1ST	8E+06
741981	4036201	1.81684	0.60309	96.9	96.9	0	24-HR	3B_FIRE	1ST	8E+06
742081	4036201	1.85606	0.59412	96.47	96.47	0	24-HR	3B_FIRE	1ST	8E+06
738081	4036301	1.07803	1.04595	119.34	119.34	0	24-HR	3B_FIRE	1ST	1E+07
738181	4036301	1.0883	1.02938	118.84	118.84	0	24-HR	3B_FIRE	1ST	1E+07
738381	4036301	1.10828	0.98874	117.88	117.88	0	24-HR	3B_FIRE	1ST	1E+07
738481	4036301	1.11679	0.96467	117.28	117.28	0	24-HR	3B_FIRE	1ST	1E+07
738581	4036301	1.12478	0.93845	116.68	116.68	0	24-HR	3B_FIRE	1ST	1E+07
738681	4036301	1.13418	0.91057	116.25	116.25	0	24-HR	3B_FIRE	1ST	1E+07
738781	4036301	1.14183	0.88097	115.69	115.69	0	24-HR	3B_FIRE	1ST	1E+07
738881	4036301	1.14842	0.85013	115.08	115.08	0	24-HR	3B_FIRE	1ST	1E+07
738981	4036301	1.15337	0.81839	114.39	114.39	0	24-HR	3B_FIRE	1ST	1E+07
739081	4036301	1.15861	0.78625	113.76	113.76	0	24-HR	3B_FIRE	1ST	1E+07
739181	4036301	1.16288	0.75399	113.1	113.1	0	24-HR	3B_FIRE	1ST	1E+07
739281	4036301	1.16654	0.72193	112.43	112.43	0	24-HR	3B_FIRE	1ST	1E+07
739381	4036301	1.16851	0.69795	111.69	111.69	0	24-HR	3B_FIRE	1ST	1E+07
739481	4036301	1.16704	0.70584	110.79	110.79	0	24-HR	3B_FIRE	1ST	1E+07
739581	4036301	1.1699	0.71235	110.12	110.12	0	24-HR	3B_FIRE	1ST	1E+07
739681	4036301	1.17259	0.71748	109.43	109.43	0	24-HR	3B_FIRE	1ST	1E+07
739781	4036301	1.17379	0.7214	108.64	108.64	0	24-HR	3B_FIRE	1ST	1E+07
739881	4036301	1.17823	0.72369	108.02	108.02	0	24-HR	3B_FIRE	1ST	1E+07
739981	4036301	1.18811	0.72484	107.51	107.51	0	24-HR	3B_FIRE	1ST	8E+06
740081	4036301	1.21326	0.72495	106.87	106.87	0	24-HR	3B_FIRE	1ST	8E+06
740181	4036301	1.23722	0.72416	106.42	106.42	0	24-HR	3B_FIRE	1ST	8E+06
740281	4036301	1.26205	0.72248	105.94	105.94	0	24-HR	3B_FIRE	1ST	8E+06
740381	4036301	1.28672	0.71996	105.54	105.54	0	24-HR	3B_FIRE	1ST	8E+06
740481	4036301	1.31285	0.71667	105.05	105.05	0	24-HR	3B_FIRE	1ST	8E+06
740581	4036301	1.34046	0.71265	104.47	104.47	0	24-HR	3B_FIRE	1ST	8E+06
740681	4036301	1.36584	0.70804	104.19	104.19	0	24-HR	3B_FIRE	1ST	8E+06
740781	4036301	1.39129	0.70285	103.97	103.97	0	24-HR	3B_FIRE	1ST	8E+06
740881	4036301	1.42257	0.69704	103.21	103.21	0	24-HR	3B_FIRE	1ST	8E+06
740981	4036301	1.45072	0.69082	102.85	102.85	0	24-HR	3B_FIRE	1ST	8E+06
741081	4036301	1.47956	0.68418	102.49	102.49	0	24-HR	3B_FIRE	1ST	8E+06
741181	4036301	1.51056	0.67714	101.98	101.98	0	24-HR	3B_FIRE	1ST	8E+06
741281	4036301	1.54209	0.66978	101.49	101.49	0	24-HR	3B_FIRE	1ST	8E+06
741381	4036301	1.57277	0.66217	101.17	101.17	0	24-HR	3B_FIRE	1ST	8E+06

	741481	4036301	1.60207	0.65435	101.08	101.08	0	24-HR	3B_FIRE	1ST	8E+06
	741581	4036301	1.63184	0.64635	101.03	101.03	0	24-HR	3B_FIRE	1ST	8E+06
	741681	4036301	1.6635	0.63815	100.87	100.87	0	24-HR	3B_FIRE	1ST	8E+06
	741781	4036301	1.69756	0.62979	100.54	100.54	0	24-HR	3B_FIRE	1ST	8E+06
	741881	4036301	1.74653	0.62108	98.83	102.24	0	24-HR	3B_FIRE	1ST	8E+06
	741981	4036301	1.79881	0.61222	96.69	96.69	0	24-HR	3B_FIRE	1ST	8E+06
	742081	4036301	1.83619	0.60361	96.3	96.3	0	24-HR	3B_FIRE	1ST	8E+06
	742181	4036301	1.8744	0.59498	95.92	95.92	0	24-HR	3B_FIRE	1ST	8E+06
	742281	4036301	1.91321	0.58635	95.57	95.57	0	24-HR	3B_FIRE	1ST	8E+06
	742381	4036301	1.95355	0.57772	95.17	95.17	0	24-HR	3B_FIRE	1ST	8E+06
	742481	4036301	1.9947	0.56913	94.78	94.78	0	24-HR	3B_FIRE	1ST	8E+06
	742581	4036301	2.03656	0.56059	94.41	94.41	0	24-HR	3B_FIRE	1ST	8E+06
	742681	4036301	2.08309	0.55206	93.74	93.74	0	24-HR	3B_FIRE	1ST	8E+06
	742781	4036301	2.12627	0.54367	93.42	93.42	0	24-HR	3B_FIRE	1ST	8E+06
	742881	4036301	2.17035	0.53537	93.1	93.1	0	24-HR	3B_FIRE	1ST	8E+06
	742981	4036301	2.21545	0.52716	92.77	92.77	0	24-HR	3B_FIRE	1ST	8E+06
	743081	4036301	2.26085	0.52909	92.48	92.48	0	24-HR	3B_FIRE	1ST	8E+06
	743181	4036301	2.30705	0.53088	92.19	92.19	0	24-HR	3B_FIRE	1ST	8E+06
	743281	4036301	2.35454	0.53223	91.86	91.86	0	24-HR	3B_FIRE	1ST	8E+06
	743381	4036301	2.40258	0.53317	91.54	91.54	0	24-HR	3B_FIRE	1ST	8E+06
	743481	4036301	2.44585	0.53383	91.63	91.63	0	24-HR	3B_FIRE	1ST	8E+06
	743581	4036301	2.49575	0.53397	91.25	91.25	0	24-HR	3B_FIRE	1ST	8E+06
	743681	4036301	2.54632	0.53374	90.85	90.85	0	24-HR	3B_FIRE	1ST	8E+06
	743781	4036301	2.63597	0.53316	90.46	90.46	0	24-HR	3B_FIRE	1ST	9E+06
	743881	4036301	2.75009	0.53225	90.07	90.07	0	24-HR	3B_FIRE	1ST	9E+06
	743981	4036301	2.87019	0.53102	89.69	89.69	0	24-HR	3B_FIRE	1ST	9E+06
	744081	4036301	2.99778	0.52948	89.26	89.26	0	24-HR	3B_FIRE	1ST	9E+06
	744181	4036301	3.13153	0.52767	88.85	88.85	0	24-HR	3B_FIRE	1ST	9E+06
	744281	4036301	3.2681	0.52563	88.61	88.61	0	24-HR	3B_FIRE	1ST	9E+06
	744381	4036301	3.414	0.5233	88.25	88.25	0	24-HR	3B_FIRE	1ST	9E+06
	744481	4036301	3.56754	0.52075	87.84	87.84	0	24-HR	3B_FIRE	1ST	9E+06
	738081	4036401	1.11711	1.03201	118.53	118.53	0	24-HR	3B_FIRE	1ST	1E+07
	738181	4036401	1.12483	1.02175	117.94	117.94	0	24-HR	3B_FIRE	1ST	1E+07
	738281	4036401	1.13272	1.00936	117.43	117.43	0	24-HR	3B_FIRE	1ST	1E+07
	738481	4036401	1.14904	0.97791	116.57	116.57	0	24-HR	3B_FIRE	1ST	1E+07
	738581	4036401	1.15622	0.95868	116.09	116.09	0	24-HR	3B_FIRE	1ST	1E+07
	738681	4036401	1.1628	0.93723	115.59	115.59	0	24-HR	3B_FIRE	1ST	1E+07
	739381	4036401	1.1817	0.7439	111.18	111.18	0	24-HR	3B_FIRE	1ST	1E+07
	739481	4036401	1.1753	0.7136	110.15	110.15	0	24-HR	3B_FIRE	1ST	1E+07
	739581	4036401	1.17523	0.68385	109.45	109.45	0	24-HR	3B_FIRE	1ST	1E+07
	739681	4036401	1.17534	0.68368	108.75	108.75	0	24-HR	3B_FIRE	1ST	1E+07
	739781	4036401	1.17546	0.6904	108.04	108.04	0	24-HR	3B_FIRE	1ST	1E+07
	739881	4036401	1.17935	0.69543	107.54	107.54	0	24-HR	3B_FIRE	1ST	1E+07
	739981	4036401	1.18294	0.69927	107.02	107.02	0	24-HR	3B_FIRE	1ST	1E+07
	740081	4036401	1.20373	0.70204	106.47	106.47	0	24-HR	3B_FIRE	1ST	8E+06
	740181	4036401	1.22549	0.7038	106.15	106.15	0	24-HR	3B_FIRE	1ST	8E+06
	740281	4036401	1.25076	0.70454	105.51	105.51	0	24-HR	3B_FIRE	1ST	8E+06
	740381	4036401	1.27472	0.70438	105.07	105.07	0	24-HR	3B_FIRE	1ST	8E+06
	740481	4036401	1.29923	0.70334	104.63	104.63	0	24-HR	3B_FIRE	1ST	8E+06
	740581	4036401	1.3244	0.70149	104.18	104.18	0	24-HR	3B_FIRE	1ST	8E+06
	740681	4036401	1.34932	0.69889	103.82	103.82	0	24-HR	3B_FIRE	1ST	8E+06
	740781	4036401	1.37276	0.69562	103.68	103.68	0	24-HR	3B_FIRE	1ST	8E+06
	740881	4036401	1.39662	0.6917	103.56	103.56	0	24-HR	3B_FIRE	1ST	8E+06
	740981	4036401	1.42966	0.68707	102.53	102.53	0	24-HR	3B_FIRE	1ST	8E+06
	741081	4036401	1.456	0.68201	102.28	102.28	0	24-HR	3B_FIRE	1ST	8E+06
	741181	4036401	1.48478	0.67644	101.84	101.84	0	24-HR	3B_FIRE	1ST	8E+06
	741281	4036401	1.51282	0.67045	101.55	101.55	0	24-HR	3B_FIRE	1ST	8E+06
	741381	4036401	1.54051	0.6641	101.37	101.37	0	24-HR	3B_FIRE	1ST	8E+06
SEN	741481	4036401	1.56854	0.6574	101.23	101.23	0	24-HR	3B_FIRE	1ST	8E+06
	741581	4036401	1.59739	0.6504	101.08	101.08	0	24-HR	3B_FIRE	1ST	8E+06
	741681	4036401	1.62618	0.64315	101.02	101.02	0	24-HR	3B_FIRE	1ST	8E+06
	741781	4036401	1.65916	0.63561	100.58	100.58	0	24-HR	3B_FIRE	1ST	8E+06
	741881	4036401	1.70891	0.62762	98.53	101.88	0	24-HR	3B_FIRE	1ST	8E+06
	741981	4036401	1.75814	0.61948	96.51	96.51	0	24-HR	3B_FIRE	1ST	8E+06
	742081	4036401	1.79323	0.61146	96.11	96.11	0	24-HR	3B_FIRE	1ST	8E+06
	742181	4036401	1.82853	0.60334	95.76	95.76	0	24-HR	3B_FIRE	1ST	8E+06
	742281	4036401	1.86483	0.59514	95.39	95.39	0	24-HR	3B_FIRE	1ST	8E+06

742381	4036401	1.90223	0.58689	94.99	94.99	0	24-HR	3B_FIRE	1ST	8E+06
742481	4036401	1.94008	0.57861	94.61	94.61	0	24-HR	3B_FIRE	1ST	8E+06
742581	4036401	1.97841	0.57032	94.25	94.25	0	24-HR	3B_FIRE	1ST	8E+06
742681	4036401	2.021	0.562	93.6	93.6	0	24-HR	3B_FIRE	1ST	8E+06
742781	4036401	2.06014	0.55375	93.28	93.28	0	24-HR	3B_FIRE	1ST	8E+06
742881	4036401	2.10774	0.54554	92.95	92.95	0	24-HR	3B_FIRE	1ST	9E+06
742981	4036401	2.18963	0.53739	92.63	92.63	0	24-HR	3B_FIRE	1ST	9E+06
743081	4036401	2.27456	0.52932	92.36	92.36	0	24-HR	3B_FIRE	1ST	9E+06
743181	4036401	2.36368	0.52132	92.07	92.07	0	24-HR	3B_FIRE	1ST	9E+06
743281	4036401	2.45788	0.51339	91.71	91.71	0	24-HR	3B_FIRE	1ST	9E+06
743381	4036401	2.55618	0.50557	91.35	91.35	0	24-HR	3B_FIRE	1ST	9E+06
743481	4036401	2.64653	0.50078	91.78	91.78	0	24-HR	3B_FIRE	1ST	9E+06
743581	4036401	2.75321	0.50253	91.4	91.4	0	24-HR	3B_FIRE	1ST	9E+06
743681	4036401	2.86477	0.50389	90.96	90.96	0	24-HR	3B_FIRE	1ST	9E+06
743781	4036401	2.97922	0.50488	90.58	90.58	0	24-HR	3B_FIRE	1ST	9E+06
743881	4036401	3.09701	0.50552	90.21	90.21	0	24-HR	3B_FIRE	1ST	9E+06
743981	4036401	3.21843	0.50579	89.8	89.8	0	24-HR	3B_FIRE	1ST	9E+06
744081	4036401	3.34286	0.50572	89.35	89.35	0	24-HR	3B_FIRE	1ST	9E+06
744181	4036401	3.46777	0.50535	88.97	88.97	0	24-HR	3B_FIRE	1ST	9E+06
744281	4036401	3.5913	0.50471	88.71	88.71	0	24-HR	3B_FIRE	1ST	9E+06
744381	4036401	3.71471	0.50375	88.39	88.39	0	24-HR	3B_FIRE	1ST	9E+06
744481	4036401	3.83592	0.50255	88.02	88.02	0	24-HR	3B_FIRE	1ST	9E+06
744581	4036401	3.95189	0.50109	87.64	87.64	0	24-HR	3B_FIRE	1ST	9E+06
744681	4036401	4.05884	0.49942	87.3	87.3	0	24-HR	3B_FIRE	1ST	9E+06
744781	4036401	4.15461	0.49749	86.89	86.89	0	24-HR	3B_FIRE	1ST	9E+06
744881	4036401	4.23367	0.49536	86.47	86.47	0	24-HR	3B_FIRE	1ST	9E+06
744981	4036401	4.2901	0.49303	86.06	86.06	0	24-HR	3B_FIRE	1ST	9E+06
745081	4036401	4.31193	0.49061	85.96	85.96	0	24-HR	3B_FIRE	1ST	9E+06
745181	4036401	4.30339	0.4879	85.47	85.47	0	24-HR	3B_FIRE	1ST	9E+06
745281	4036401	4.245	0.48509	85.19	85.19	0	24-HR	3B_FIRE	1ST	9E+06
745381	4036401	4.13172	0.48211	84.87	84.87	0	24-HR	3B_FIRE	1ST	9E+06
745481	4036401	3.95311	0.479	84.56	84.56	0	24-HR	3B_FIRE	1ST	9E+06
745581	4036401	3.82161	0.47576	84.26	84.26	0	24-HR	3B_FIRE	1ST	1E+07
745681	4036401	4.06829	0.47239	83.92	83.92	0	24-HR	3B_FIRE	1ST	1E+07
745781	4036401	4.38944	0.46893	83.64	83.64	0	24-HR	3B_FIRE	1ST	9E+06
745881	4036401	4.80996	0.46518	82.67	82.67	0	24-HR	3B_FIRE	1ST	9E+06
738081	4036501	1.11024	1.00795	118.59	118.59	0	24-HR	3B_FIRE	1ST	1E+07
738181	4036501	1.11467	1.00261	117.87	117.87	0	24-HR	3B_FIRE	1ST	1E+07
738281	4036501	1.11974	0.9955	117.32	117.32	0	24-HR	3B_FIRE	1ST	1E+07
738481	4036501	1.12713	0.97536	116.14	116.14	0	24-HR	3B_FIRE	1ST	1E+07
738781	4036501	1.1413	0.93033	114.92	114.92	0	24-HR	3B_FIRE	1ST	1E+07
738881	4036501	1.14336	0.911	114.38	114.38	0	24-HR	3B_FIRE	1ST	1E+07
738981	4036501	1.1407	0.88946	113.58	113.58	0	24-HR	3B_FIRE	1ST	1E+07
739081	4036501	1.1398	0.86634	112.94	112.94	0	24-HR	3B_FIRE	1ST	1E+07
739181	4036501	1.13654	0.8416	112.2	112.2	0	24-HR	3B_FIRE	1ST	1E+07
739281	4036501	1.13123	0.81554	111.39	111.39	0	24-HR	3B_FIRE	1ST	1E+07
739381	4036501	1.12322	0.78842	110.46	110.46	0	24-HR	3B_FIRE	1ST	1E+07
739481	4036501	1.12113	0.76087	109.85	109.85	0	24-HR	3B_FIRE	1ST	1E+07
742281	4036501	1.89957	0.60203	95.54	95.54	0	24-HR	3B_FIRE	1ST	9E+06
742381	4036501	1.9686	0.59436	95.15	95.15	0	24-HR	3B_FIRE	1ST	9E+06
742481	4036501	2.04084	0.58658	94.7	94.7	0	24-HR	3B_FIRE	1ST	9E+06
742581	4036501	2.11582	0.57872	94.23	94.23	0	24-HR	3B_FIRE	1ST	9E+06
742681	4036501	2.19831	0.57075	93.32	93.32	0	24-HR	3B_FIRE	1ST	9E+06
742781	4036501	2.27582	0.56284	93.06	93.06	0	24-HR	3B_FIRE	1ST	9E+06
742881	4036501	2.35627	0.5549	92.75	92.75	0	24-HR	3B_FIRE	1ST	9E+06
742981	4036501	2.43861	0.54698	92.47	92.47	0	24-HR	3B_FIRE	1ST	9E+06
743081	4036501	2.52324	0.53907	92.17	92.17	0	24-HR	3B_FIRE	1ST	9E+06
743181	4036501	2.60945	0.5312	91.89	91.89	0	24-HR	3B_FIRE	1ST	9E+06
743281	4036501	2.69798	0.52336	91.54	91.54	0	24-HR	3B_FIRE	1ST	9E+06
743381	4036501	2.78775	0.51559	91.18	91.18	0	24-HR	3B_FIRE	1ST	9E+06
743481	4036501	2.86644	0.50805	91.91	91.91	0	24-HR	3B_FIRE	1ST	9E+06
743581	4036501	2.95736	0.50042	91.49	91.49	0	24-HR	3B_FIRE	1ST	9E+06
743681	4036501	3.04734	0.49287	91.08	91.08	0	24-HR	3B_FIRE	1ST	9E+06
743781	4036501	3.13542	0.48543	90.68	90.68	0	24-HR	3B_FIRE	1ST	9E+06
743881	4036501	3.22021	0.47809	90.31	90.31	0	24-HR	3B_FIRE	1ST	9E+06
743981	4036501	3.30101	0.47613	89.9	89.9	0	24-HR	3B_FIRE	1ST	9E+06
744081	4036501	3.37596	0.4775	89.47	89.47	0	24-HR	3B_FIRE	1ST	9E+06

744181	4036501	3.4424	0.47855	89.08	89.08	0	24-HR	3B_FIRE	1ST	9E+06
744281	4036501	3.49676	0.4793	88.83	88.83	0	24-HR	3B_FIRE	1ST	9E+06
744381	4036501	3.53867	0.47971	88.51	88.51	0	24-HR	3B_FIRE	1ST	9E+06
744481	4036501	3.56433	0.47987	88.18	88.18	0	24-HR	3B_FIRE	1ST	9E+06
744581	4036501	3.57062	0.47971	87.81	87.81	0	24-HR	3B_FIRE	1ST	9E+06
744681	4036501	3.55315	0.47928	87.44	87.44	0	24-HR	3B_FIRE	1ST	9E+06
744781	4036501	3.5079	0.47859	87.06	87.06	0	24-HR	3B_FIRE	1ST	9E+06
744881	4036501	3.43174	0.47764	86.61	86.61	0	24-HR	3B_FIRE	1ST	9E+06
744981	4036501	3.38527	0.47647	86.21	86.21	0	24-HR	3B_FIRE	1ST	1E+07
745081	4036501	3.57261	0.47514	86.01	86.01	0	24-HR	3B_FIRE	1ST	1E+07
745181	4036501	3.75217	0.47353	85.55	85.55	0	24-HR	3B_FIRE	1ST	1E+07
745281	4036501	3.90031	0.47176	85.27	85.27	0	24-HR	3B_FIRE	1ST	1E+07
745381	4036501	3.99814	0.4698	84.95	84.95	0	24-HR	3B_FIRE	1ST	1E+07
745481	4036501	4.01531	0.46765	84.59	84.59	0	24-HR	3B_FIRE	1ST	1E+07
745581	4036501	3.92863	0.46536	84.3	84.3	0	24-HR	3B_FIRE	1ST	1E+07
745681	4036501	4.2012	0.46289	83.96	83.96	0	24-HR	3B_FIRE	1ST	9E+06
745781	4036501	4.51086	0.46029	83.67	83.67	0	24-HR	3B_FIRE	1ST	9E+06
745881	4036501	4.91909	0.45734	82.56	82.56	0	24-HR	3B_FIRE	1ST	1E+07
738081	4036601	1.05283	0.97546	118.34	118.34	0	24-HR	3B_FIRE	1ST	1E+07
738181	4036601	1.05396	0.9746	117.63	117.63	0	24-HR	3B_FIRE	1ST	1E+07
738281	4036601	1.05442	0.97167	116.96	116.96	0	24-HR	3B_FIRE	1ST	1E+07
738381	4036601	1.05383	0.96692	116.28	116.28	0	24-HR	3B_FIRE	1ST	1E+07
738581	4036601	1.04867	0.95224	114.83	114.83	0	24-HR	3B_FIRE	1ST	1E+07
738681	4036601	1.05327	0.94289	114.71	114.71	0	24-HR	3B_FIRE	1ST	1E+07
738781	4036601	1.05341	0.93139	114.29	114.29	0	24-HR	3B_FIRE	1ST	1E+07
738881	4036601	1.05067	0.91781	113.71	113.71	0	24-HR	3B_FIRE	1ST	1E+07
738981	4036601	1.06852	0.90217	113.02	113.02	0	24-HR	3B_FIRE	1ST	7E+06
739081	4036601	1.08883	0.88476	112.46	112.46	0	24-HR	3B_FIRE	1ST	7E+06
739181	4036601	1.10936	0.86548	111.87	111.87	0	24-HR	3B_FIRE	1ST	7E+06
739281	4036601	1.13079	0.84423	110.96	110.96	0	24-HR	3B_FIRE	1ST	7E+06
739381	4036601	1.15217	0.82148	110	110	0	24-HR	3B_FIRE	1ST	7E+06
739481	4036601	1.1726	0.79779	109.44	109.44	0	24-HR	3B_FIRE	1ST	7E+06
739581	4036601	1.19329	0.77296	108.73	108.73	0	24-HR	3B_FIRE	1ST	7E+06
739681	4036601	1.21381	0.74742	108.09	108.09	0	24-HR	3B_FIRE	1ST	7E+06
739781	4036601	1.23423	0.72142	107.52	107.52	0	24-HR	3B_FIRE	1ST	7E+06
739881	4036601	1.25445	0.69527	107.14	107.14	0	24-HR	3B_FIRE	1ST	7E+06
739981	4036601	1.27482	0.66897	106.57	106.57	0	24-HR	3B_FIRE	1ST	7E+06
740081	4036601	1.29508	0.64287	106	106	0	24-HR	3B_FIRE	1ST	7E+06
740181	4036601	1.31525	0.64616	105.15	105.15	0	24-HR	3B_FIRE	1ST	7E+06
740281	4036601	1.33509	0.65168	104.22	104.22	0	24-HR	3B_FIRE	1ST	7E+06
740381	4036601	1.35463	0.65625	103.83	103.83	0	24-HR	3B_FIRE	1ST	7E+06
740481	4036601	1.37396	0.65986	103.41	103.41	0	24-HR	3B_FIRE	1ST	7E+06
740581	4036601	1.39303	0.66254	103.02	103.02	0	24-HR	3B_FIRE	1ST	7E+06
740681	4036601	1.41176	0.66431	102.59	102.59	0	24-HR	3B_FIRE	1ST	7E+06
740781	4036601	1.43019	0.66523	102.23	102.23	0	24-HR	3B_FIRE	1ST	7E+06
740881	4036601	1.44817	0.66534	101.85	101.85	0	24-HR	3B_FIRE	1ST	7E+06
740981	4036601	1.46604	0.6647	101.68	101.68	0	24-HR	3B_FIRE	1ST	7E+06
741081	4036601	1.48383	0.66336	101.7	101.7	0	24-HR	3B_FIRE	1ST	7E+06
741181	4036601	1.50044	0.6613	101.37	101.37	0	24-HR	3B_FIRE	1ST	7E+06
741281	4036601	1.51611	0.65861	100.94	100.94	0	24-HR	3B_FIRE	1ST	7E+06
741381	4036601	1.54956	0.65533	100.53	100.53	0	24-HR	3B_FIRE	1ST	9E+06
741481	4036601	1.59925	0.65154	100.4	100.4	0	24-HR	3B_FIRE	1ST	9E+06
741581	4036601	1.65218	0.64724	100.09	100.09	0	24-HR	3B_FIRE	1ST	9E+06
741681	4036601	1.70578	0.6425	99.89	99.89	0	24-HR	3B_FIRE	1ST	9E+06
741781	4036601	1.76136	0.63735	99.65	99.65	0	24-HR	3B_FIRE	1ST	9E+06
741881	4036601	1.82835	0.63167	98.26	98.26	0	24-HR	3B_FIRE	1ST	9E+06
741981	4036601	1.8981	0.62564	96.71	96.71	0	24-HR	3B_FIRE	1ST	9E+06
742081	4036601	1.95894	0.61945	96.37	96.37	0	24-HR	3B_FIRE	1ST	9E+06
742181	4036601	2.02131	0.613	96.01	96.01	0	24-HR	3B_FIRE	1ST	9E+06
742281	4036601	2.08474	0.60632	95.67	95.67	0	24-HR	3B_FIRE	1ST	9E+06
745381	4036601	3.50039	0.45361	84.95	84.95	0	24-HR	3B_FIRE	1ST	1E+07
745481	4036601	3.68831	0.45251	84.63	84.63	0	24-HR	3B_FIRE	1ST	9E+06
745581	4036601	3.94015	0.45122	84.35	84.35	0	24-HR	3B_FIRE	1ST	9E+06
745681	4036601	4.29438	0.44974	84.06	84.06	0	24-HR	3B_FIRE	1ST	1E+07
745781	4036601	4.78643	0.44809	83.77	83.77	0	24-HR	3B_FIRE	1ST	1E+07
745881	4036601	5.24422	0.44599	82.44	82.44	0	24-HR	3B_FIRE	1ST	1E+07
745981	4036601	5.48419	0.44402	82.18	82.18	0	24-HR	3B_FIRE	1ST	1E+07

738081	4036701	0.98589	0.93573	117.98	117.98	0	24-HR	3B_FIRE	1ST	1E+07
738181	4036701	0.99189	0.93982	117.31	117.31	0	24-HR	3B_FIRE	1ST	7E+06
738281	4036701	1.00998	0.94111	116.65	116.65	0	24-HR	3B_FIRE	1ST	7E+06
738381	4036701	1.02847	0.94012	115.89	115.89	0	24-HR	3B_FIRE	1ST	7E+06
738481	4036701	1.04666	0.93737	115.17	115.17	0	24-HR	3B_FIRE	1ST	7E+06
738581	4036701	1.0651	0.93297	114.35	114.35	0	24-HR	3B_FIRE	1ST	7E+06
738681	4036701	1.0812	0.92765	114.15	114.15	0	24-HR	3B_FIRE	1ST	7E+06
738781	4036701	1.09821	0.9206	113.7	113.7	0	24-HR	3B_FIRE	1ST	7E+06
738881	4036701	1.11538	0.91191	113.18	113.18	0	24-HR	3B_FIRE	1ST	7E+06
738981	4036701	1.13282	0.90142	112.52	112.52	0	24-HR	3B_FIRE	1ST	7E+06
739081	4036701	1.15005	0.88919	111.87	111.87	0	24-HR	3B_FIRE	1ST	7E+06
739181	4036701	1.16703	0.87517	111.22	111.22	0	24-HR	3B_FIRE	1ST	7E+06
739281	4036701	1.18403	0.85923	110.4	110.4	0	24-HR	3B_FIRE	1ST	7E+06
739381	4036701	1.20065	0.84157	109.56	109.56	0	24-HR	3B_FIRE	1ST	7E+06
739481	4036701	1.21655	0.82252	108.98	108.98	0	24-HR	3B_FIRE	1ST	7E+06
739581	4036701	1.23218	0.80196	108.33	108.33	0	24-HR	3B_FIRE	1ST	7E+06
739681	4036701	1.2474	0.78017	107.72	107.72	0	24-HR	3B_FIRE	1ST	7E+06
739781	4036701	1.26221	0.75737	107.17	107.17	0	24-HR	3B_FIRE	1ST	7E+06
739881	4036701	1.27658	0.73383	106.74	106.74	0	24-HR	3B_FIRE	1ST	7E+06
739981	4036701	1.29054	0.70969	106.31	106.31	0	24-HR	3B_FIRE	1ST	7E+06
740081	4036701	1.30399	0.68505	105.67	105.67	0	24-HR	3B_FIRE	1ST	7E+06
740181	4036701	1.31672	0.66015	104.78	104.78	0	24-HR	3B_FIRE	1ST	7E+06
740281	4036701	1.32881	0.63539	104.02	104.02	0	24-HR	3B_FIRE	1ST	7E+06
740381	4036701	1.34045	0.62484	103.62	103.62	0	24-HR	3B_FIRE	1ST	7E+06
740481	4036701	1.35143	0.63061	103.22	103.22	0	24-HR	3B_FIRE	1ST	7E+06
740581	4036701	1.36172	0.63546	102.85	102.85	0	24-HR	3B_FIRE	1ST	7E+06
740681	4036701	1.39051	0.63939	102.42	102.42	0	24-HR	3B_FIRE	1ST	1E+07
740781	4036701	1.4372	0.64244	102.03	102.03	0	24-HR	3B_FIRE	1ST	1E+07
740881	4036701	1.48482	0.64464	101.61	101.61	0	24-HR	3B_FIRE	1ST	1E+07
740981	4036701	1.53517	0.64604	101.49	101.49	0	24-HR	3B_FIRE	1ST	1E+07
741081	4036701	1.58706	0.64667	101.39	101.39	0	24-HR	3B_FIRE	1ST	1E+07
741181	4036701	1.63862	0.64654	101.08	101.08	0	24-HR	3B_FIRE	1ST	1E+07
741281	4036701	1.69119	0.6457	100.78	100.78	0	24-HR	3B_FIRE	1ST	1E+07
741381	4036701	1.74357	0.64419	100.38	100.38	0	24-HR	3B_FIRE	1ST	1E+07
741481	4036701	1.79832	0.64209	100.14	100.14	0	24-HR	3B_FIRE	1ST	1E+07
741581	4036701	1.8536	0.63941	99.88	99.88	0	24-HR	3B_FIRE	1ST	1E+07
741681	4036701	1.91034	0.6362	99.68	99.68	0	24-HR	3B_FIRE	1ST	1E+07
741781	4036701	1.97028	0.63251	99.64	99.64	0	24-HR	3B_FIRE	1ST	1E+07
741881	4036701	2.00852	0.62821	98.26	98.26	0	24-HR	3B_FIRE	1ST	1E+07
741981	4036701	2.04359	0.62348	96.73	96.73	0	24-HR	3B_FIRE	1ST	1E+07
742081	4036701	2.09578	0.61849	96.38	96.38	0	24-HR	3B_FIRE	1ST	1E+07
742181	4036701	2.14748	0.61316	96.04	96.04	0	24-HR	3B_FIRE	1ST	1E+07
742281	4036701	2.19827	0.60753	95.7	95.7	0	24-HR	3B_FIRE	1ST	1E+07
742381	4036701	2.24731	0.60161	95.33	95.33	0	24-HR	3B_FIRE	1ST	1E+07
742481	4036701	2.29509	0.59544	94.98	94.98	0	24-HR	3B_FIRE	1ST	1E+07
742581	4036701	2.34065	0.58906	94.62	94.62	0	24-HR	3B_FIRE	1ST	1E+07
742681	4036701	2.37983	0.58247	94.07	94.07	0	24-HR	3B_FIRE	1ST	1E+07
742781	4036701	2.42105	0.57573	93.74	93.74	0	24-HR	3B_FIRE	1ST	1E+07
742881	4036701	2.45991	0.56887	93.43	93.43	0	24-HR	3B_FIRE	1ST	1E+07
742981	4036701	2.49645	0.56189	93.16	93.16	0	24-HR	3B_FIRE	1ST	1E+07
743081	4036701	2.5276	0.55482	92.82	92.82	0	24-HR	3B_FIRE	1ST	1E+07
743181	4036701	2.55358	0.54767	92.44	92.44	0	24-HR	3B_FIRE	1ST	1E+07
743281	4036701	2.57255	0.54045	91.96	91.96	0	24-HR	3B_FIRE	1ST	1E+07
743381	4036701	2.5906	0.53322	91.64	91.64	0	24-HR	3B_FIRE	1ST	1E+07
743481	4036701	2.59072	0.5259	90.74	90.74	0	24-HR	3B_FIRE	1ST	1E+07
743581	4036701	2.59974	0.51865	90.47	90.47	0	24-HR	3B_FIRE	1ST	1E+07
743681	4036701	2.60344	0.51141	90.19	90.19	0	24-HR	3B_FIRE	1ST	1E+07
743781	4036701	2.60234	0.50419	89.92	89.92	0	24-HR	3B_FIRE	1ST	1E+07
743881	4036701	2.59645	0.49701	89.64	89.64	0	24-HR	3B_FIRE	1ST	1E+07
743981	4036701	2.70914	0.48993	89.41	89.41	0	24-HR	3B_FIRE	1ST	1E+07
744081	4036701	2.86364	0.48274	89.18	89.18	0	24-HR	3B_FIRE	1ST	1E+07
744181	4036701	3.01894	0.4756	88.94	88.94	0	24-HR	3B_FIRE	1ST	1E+07
744281	4036701	3.16829	0.46853	88.83	88.83	0	24-HR	3B_FIRE	1ST	1E+07
744381	4036701	3.30967	0.46151	88.53	88.53	0	24-HR	3B_FIRE	1ST	1E+07
744481	4036701	3.43259	0.45456	88.21	88.21	0	24-HR	3B_FIRE	1ST	1E+07
744581	4036701	3.52732	0.44769	87.9	87.9	0	24-HR	3B_FIRE	1ST	1E+07
744681	4036701	3.58358	0.4409	87.57	87.57	0	24-HR	3B_FIRE	1ST	1E+07

744781	4036701	3.59004	0.43421	87.25	87.25	0	24-HR	3B_FIRE	1ST	1E+07
744881	4036701	3.53606	0.43056	86.94	86.94	0	24-HR	3B_FIRE	1ST	1E+07
744981	4036701	3.41304	0.43173	86.62	86.62	0	24-HR	3B_FIRE	1ST	1E+07
745081	4036701	3.21706	0.43261	86.21	86.21	0	24-HR	3B_FIRE	1ST	1E+07
745181	4036701	3.05065	0.43325	85.83	85.83	0	24-HR	3B_FIRE	1ST	9E+06
738081	4036801	1.01569	0.88791	117.62	117.62	0	24-HR	3B_FIRE	1ST	7E+06
738181	4036801	1.03085	0.89814	116.9	116.9	0	24-HR	3B_FIRE	1ST	7E+06
738281	4036801	1.04534	0.90452	116.27	116.27	0	24-HR	3B_FIRE	1ST	7E+06
738381	4036801	1.05994	0.90775	115.54	115.54	0	24-HR	3B_FIRE	1ST	7E+06
738481	4036801	1.07432	0.90855	114.77	114.77	0	24-HR	3B_FIRE	1ST	7E+06
738581	4036801	1.08879	0.90736	113.83	113.83	0	24-HR	3B_FIRE	1ST	7E+06
738681	4036801	1.10058	0.90525	113.65	113.65	0	24-HR	3B_FIRE	1ST	7E+06
738781	4036801	1.11277	0.90163	113.25	113.25	0	24-HR	3B_FIRE	1ST	7E+06
738881	4036801	1.12498	0.8966	112.72	112.72	0	24-HR	3B_FIRE	1ST	7E+06
738981	4036801	1.13731	0.89004	111.96	111.96	0	24-HR	3B_FIRE	1ST	7E+06
739081	4036801	1.14882	0.88218	111.34	111.34	0	24-HR	3B_FIRE	1ST	7E+06
739181	4036801	1.15996	0.87273	110.62	110.62	0	24-HR	3B_FIRE	1ST	7E+06
739281	4036801	1.17045	0.86173	109.95	109.95	0	24-HR	3B_FIRE	1ST	7E+06
739381	4036801	1.1805	0.84894	109.1	109.1	0	24-HR	3B_FIRE	1ST	7E+06
739481	4036801	1.18965	0.83469	108.49	108.49	0	24-HR	3B_FIRE	1ST	7E+06
739581	4036801	1.1981	0.81891	107.98	107.98	0	24-HR	3B_FIRE	1ST	7E+06
739681	4036801	1.22862	0.8016	107.48	107.48	0	24-HR	3B_FIRE	1ST	1E+07
739781	4036801	1.26939	0.78287	106.97	106.97	0	24-HR	3B_FIRE	1ST	1E+07
739881	4036801	1.31114	0.76293	106.51	106.51	0	24-HR	3B_FIRE	1ST	1E+07
739981	4036801	1.35333	0.74183	105.89	105.89	0	24-HR	3B_FIRE	1ST	1E+07
740081	4036801	1.39592	0.71982	105.2	105.2	0	24-HR	3B_FIRE	1ST	1E+07
740181	4036801	1.43889	0.69717	104.49	104.49	0	24-HR	3B_FIRE	1ST	1E+07
740281	4036801	1.48246	0.67411	103.83	103.83	0	24-HR	3B_FIRE	1ST	1E+07
740381	4036801	1.52771	0.65096	103.42	103.42	0	24-HR	3B_FIRE	1ST	1E+07
740481	4036801	1.57378	0.62777	103.04	103.04	0	24-HR	3B_FIRE	1ST	1E+07
740581	4036801	1.62052	0.6047	102.67	102.67	0	24-HR	3B_FIRE	1ST	1E+07
740681	4036801	1.66741	0.61008	102.25	102.25	0	24-HR	3B_FIRE	1ST	1E+07
740781	4036801	1.71483	0.61514	101.84	101.84	0	24-HR	3B_FIRE	1ST	1E+07
740881	4036801	1.76252	0.61935	101.42	101.42	0	24-HR	3B_FIRE	1ST	1E+07
740981	4036801	1.81338	0.62275	101.3	101.3	0	24-HR	3B_FIRE	1ST	1E+07
741081	4036801	1.8633	0.62533	101.04	101.04	0	24-HR	3B_FIRE	1ST	1E+07
741181	4036801	1.91367	0.62713	100.8	100.8	0	24-HR	3B_FIRE	1ST	1E+07
741281	4036801	1.96402	0.62818	100.55	100.55	0	24-HR	3B_FIRE	1ST	1E+07
741381	4036801	2.01209	0.62851	100.15	100.15	0	24-HR	3B_FIRE	1ST	1E+07
741481	4036801	2.06255	0.62817	99.94	99.94	0	24-HR	3B_FIRE	1ST	1E+07
741581	4036801	2.11317	0.62721	99.76	99.76	0	24-HR	3B_FIRE	1ST	1E+07
741681	4036801	2.16238	0.62563	99.53	99.53	0	24-HR	3B_FIRE	1ST	1E+07
741781	4036801	2.21535	0.62351	99.53	99.53	0	24-HR	3B_FIRE	1ST	1E+07
741881	4036801	2.24122	0.62073	98.26	98.26	0	24-HR	3B_FIRE	1ST	1E+07
741981	4036801	2.2601	0.61743	96.72	96.72	0	24-HR	3B_FIRE	1ST	1E+07
742081	4036801	2.29947	0.61379	96.38	96.38	0	24-HR	3B_FIRE	1ST	1E+07
742181	4036801	2.33663	0.60974	96.04	96.04	0	24-HR	3B_FIRE	1ST	1E+07
742281	4036801	2.3715	0.6053	95.71	95.71	0	24-HR	3B_FIRE	1ST	1E+07
742381	4036801	2.40315	0.60051	95.36	95.36	0	24-HR	3B_FIRE	1ST	1E+07
742481	4036801	2.4316	0.5954	95.01	95.01	0	24-HR	3B_FIRE	1ST	1E+07
742581	4036801	2.45624	0.59	94.65	94.65	0	24-HR	3B_FIRE	1ST	1E+07
742681	4036801	2.47604	0.58433	94.24	94.24	0	24-HR	3B_FIRE	1ST	1E+07
742781	4036801	2.49593	0.57846	94.01	94.01	0	24-HR	3B_FIRE	1ST	1E+07
742881	4036801	2.50939	0.57238	93.68	93.68	0	24-HR	3B_FIRE	1ST	1E+07
742981	4036801	2.51819	0.56611	93.33	93.33	0	24-HR	3B_FIRE	1ST	1E+07
743081	4036801	2.5206	0.55968	92.89	92.89	0	24-HR	3B_FIRE	1ST	1E+07
743181	4036801	2.51769	0.55312	92.4	92.4	0	24-HR	3B_FIRE	1ST	1E+07
743281	4036801	2.51235	0.54646	91.99	91.99	0	24-HR	3B_FIRE	1ST	1E+07
743381	4036801	2.50381	0.53972	91.61	91.61	0	24-HR	3B_FIRE	1ST	1E+07
743481	4036801	2.48582	0.53285	90.81	90.81	0	24-HR	3B_FIRE	1ST	1E+07
743581	4036801	2.53876	0.52599	90.54	90.54	0	24-HR	3B_FIRE	1ST	1E+07
743681	4036801	2.67543	0.5191	90.27	90.27	0	24-HR	3B_FIRE	1ST	1E+07
743781	4036801	2.8109	0.51219	90.02	90.02	0	24-HR	3B_FIRE	1ST	1E+07
743881	4036801	2.94221	0.50533	89.73	89.73	0	24-HR	3B_FIRE	1ST	1E+07
743981	4036801	3.06338	0.49838	89.5	89.5	0	24-HR	3B_FIRE	1ST	1E+07
744081	4036801	3.16973	0.4914	89.26	89.26	0	24-HR	3B_FIRE	1ST	1E+07
744181	4036801	3.25466	0.48444	89.02	89.02	0	24-HR	3B_FIRE	1ST	1E+07

744281	4036801	3.31034	0.47751	88.88	88.88	0	24-HR	3B_FIRE	1ST	1E+07
744381	4036801	3.33137	0.4706	88.56	88.56	0	24-HR	3B_FIRE	1ST	1E+07
744481	4036801	3.30929	0.46373	88.24	88.24	0	24-HR	3B_FIRE	1ST	1E+07
744581	4036801	3.23805	0.45691	87.92	87.92	0	24-HR	3B_FIRE	1ST	1E+07
744681	4036801	3.11359	0.45016	87.6	87.6	0	24-HR	3B_FIRE	1ST	1E+07
744781	4036801	2.93453	0.44347	87.31	87.31	0	24-HR	3B_FIRE	1ST	1E+07
744881	4036801	2.7131	0.43684	86.98	86.98	0	24-HR	3B_FIRE	1ST	1E+07
744981	4036801	2.94745	0.4303	86.65	86.65	0	24-HR	3B_FIRE	1ST	1E+07
745081	4036801	3.29396	0.42382	86.21	86.21	0	24-HR	3B_FIRE	1ST	1E+07
745181	4036801	3.63179	0.41742	85.78	85.78	0	24-HR	3B_FIRE	1ST	1E+07
745281	4036801	3.93711	0.41114	85.52	85.52	0	24-HR	3B_FIRE	1ST	1E+07
745381	4036801	4.23828	0.41076	85.23	85.23	0	24-HR	3B_FIRE	1ST	1E+07
745481	4036801	4.42717	0.41172	84.85	84.85	0	24-HR	3B_FIRE	1ST	1E+07
745581	4036801	4.41625	0.41244	84.44	84.44	0	24-HR	3B_FIRE	1ST	1E+07
745681	4036801	4.67887	0.41293	84.03	84.03	0	24-HR	3B_FIRE	1ST	8E+06
745781	4036801	5.56614	0.41322	83.66	83.66	0	24-HR	3B_FIRE	1ST	8E+06
745881	4036801	6.35337	0.41324	83.08	83.08	0	24-HR	3B_FIRE	1ST	8E+06
741481	4036901	2.21763	0.60995	99.67	99.67	0	24-HR	3B_FIRE	1ST	1E+07
741581	4036901	2.25467	0.61072	99.5	99.5	0	24-HR	3B_FIRE	1ST	1E+07
741681	4036901	2.28981	0.61084	99.33	99.33	0	24-HR	3B_FIRE	1ST	1E+07
741781	4036901	2.32514	0.61035	99.27	99.27	0	24-HR	3B_FIRE	1ST	1E+07
741881	4036901	2.33763	0.60918	98.26	98.26	0	24-HR	3B_FIRE	1ST	1E+07
741981	4036901	2.33727	0.60741	96.73	96.73	0	24-HR	3B_FIRE	1ST	1E+07
742081	4036901	2.35675	0.60522	96.37	96.37	0	24-HR	3B_FIRE	1ST	1E+07
742181	4036901	2.37332	0.60255	96.03	96.03	0	24-HR	3B_FIRE	1ST	1E+07
742281	4036901	2.38643	0.59943	95.69	95.69	0	24-HR	3B_FIRE	1ST	1E+07
742381	4036901	2.39612	0.5959	95.36	95.36	0	24-HR	3B_FIRE	1ST	1E+07
742481	4036901	2.40166	0.59198	95.01	95.01	0	24-HR	3B_FIRE	1ST	1E+07
742581	4036901	2.40311	0.5877	94.65	94.65	0	24-HR	3B_FIRE	1ST	1E+07
742681	4036901	2.40305	0.58311	94.41	94.41	0	24-HR	3B_FIRE	1ST	1E+07
742781	4036901	2.39911	0.57822	94.16	94.16	0	24-HR	3B_FIRE	1ST	1E+07
742881	4036901	2.39025	0.57306	93.83	93.83	0	24-HR	3B_FIRE	1ST	1E+07
742981	4036901	2.37747	0.56766	93.44	93.44	0	24-HR	3B_FIRE	1ST	1E+07
743081	4036901	2.36038	0.56203	92.91	92.91	0	24-HR	3B_FIRE	1ST	1E+07
743181	4036901	2.36182	0.55621	92.4	92.4	0	24-HR	3B_FIRE	1ST	1E+07
743281	4036901	2.48307	0.55025	92.03	92.03	0	24-HR	3B_FIRE	1ST	1E+07
743381	4036901	2.60185	0.54414	91.72	91.72	0	24-HR	3B_FIRE	1ST	1E+07
743481	4036901	2.72132	0.53786	90.89	90.89	0	24-HR	3B_FIRE	1ST	1E+07
743581	4036901	2.82662	0.53152	90.58	90.58	0	24-HR	3B_FIRE	1ST	1E+07
743681	4036901	2.91898	0.52511	90.33	90.33	0	24-HR	3B_FIRE	1ST	1E+07
743781	4036901	2.99457	0.51863	90.07	90.07	0	24-HR	3B_FIRE	1ST	1E+07
743881	4036901	3.04862	0.51216	89.78	89.78	0	24-HR	3B_FIRE	1ST	1E+07
743981	4036901	3.0754	0.50555	89.54	89.54	0	24-HR	3B_FIRE	1ST	1E+07
744081	4036901	3.07058	0.49891	89.29	89.29	0	24-HR	3B_FIRE	1ST	1E+07
744181	4036901	3.02963	0.49224	89.06	89.06	0	24-HR	3B_FIRE	1ST	1E+07
744281	4036901	2.94866	0.48557	88.92	88.92	0	24-HR	3B_FIRE	1ST	1E+07
744381	4036901	2.82849	0.47888	88.63	88.63	0	24-HR	3B_FIRE	1ST	1E+07
744481	4036901	2.66915	0.4722	88.3	88.3	0	24-HR	3B_FIRE	1ST	1E+07
744581	4036901	2.59114	0.46554	87.97	87.97	0	24-HR	3B_FIRE	1ST	1E+07
744681	4036901	2.72422	0.45891	87.63	87.63	0	24-HR	3B_FIRE	1ST	1E+07
744781	4036901	3.00745	0.45232	87.3	87.3	0	24-HR	3B_FIRE	1ST	1E+07
744881	4036901	3.28436	0.44577	87	87	0	24-HR	3B_FIRE	1ST	1E+07
744981	4036901	3.54291	0.43927	86.67	86.67	0	24-HR	3B_FIRE	1ST	1E+07
745081	4036901	3.7706	0.43281	86.15	86.15	0	24-HR	3B_FIRE	1ST	1E+07
745181	4036901	3.95287	0.42642	85.75	85.75	0	24-HR	3B_FIRE	1ST	1E+07
745281	4036901	4.05498	0.42011	85.44	85.44	0	24-HR	3B_FIRE	1ST	1E+07
745381	4036901	4.00996	0.41388	85.16	85.16	0	24-HR	3B_FIRE	1ST	1E+07
745481	4036901	4.09038	0.40771	84.8	84.8	0	24-HR	3B_FIRE	1ST	8E+06
745581	4036901	4.76963	0.40162	84.42	84.42	0	24-HR	3B_FIRE	1ST	8E+06
745681	4036901	5.40028	0.39561	83.98	83.98	0	24-HR	3B_FIRE	1ST	8E+06
745781	4036901	6.0152	0.39118	83.53	83.53	0	24-HR	3B_FIRE	1ST	9E+06
745881	4036901	6.57511	0.39215	82.99	82.99	0	24-HR	3B_FIRE	1ST	9E+06
747188.4	4034761	4.15043	0.59921	77.94	77.94	0	24-HR	3B_FIRE	1ST	1E+07
747288.4	4034761	3.80033	0.59338	77.61	77.61	0	24-HR	3B_FIRE	1ST	1E+07
747388.4	4034761	3.5306	0.58765	77.32	77.32	0	24-HR	3B_FIRE	1ST	1E+07
747488.4	4034761	3.39915	0.58197	77	77	0	24-HR	3B_FIRE	1ST	1E+07
747588.4	4034761	3.48116	0.57649	76.86	76.86	0	24-HR	3B_FIRE	1ST	1E+07

747688.4	4034761	3.56528	0.57112	76.76	76.76	0	24-HR	3B_FIRE	1ST	7E+06
747788.4	4034761	4.09421	0.56581	76.66	76.66	0	24-HR	3B_FIRE	1ST	9E+06
747888.4	4034761	4.62888	0.56054	76.52	76.52	0	24-HR	3B_FIRE	1ST	9E+06
747988.4	4034761	4.41103	0.55464	75.4	75.4	0	24-HR	3B_FIRE	1ST	9E+06
748088.4	4034761	3.97428	0.54951	75.27	75.27	0	24-HR	3B_FIRE	1ST	1E+07
748188.4	4034761	4.36216	0.54445	75.15	75.15	0	24-HR	3B_FIRE	1ST	1E+07
748288.4	4034761	4.42846	0.53948	75.05	75.05	0	24-HR	3B_FIRE	1ST	1E+07
748388.4	4034761	4.12576	0.53399	74.12	74.12	0	24-HR	3B_FIRE	1ST	1E+07
748488.4	4034761	4.214	0.52914	74.02	74.02	0	24-HR	3B_FIRE	1ST	8E+06
748588.4	4034761	4.54861	0.52431	73.86	73.86	0	24-HR	3B_FIRE	1ST	7E+06
748688.4	4034761	4.72647	0.51952	73.67	73.67	0	24-HR	3B_FIRE	1ST	7E+06
748788.4	4034761	4.6369	0.51482	73.53	73.53	0	24-HR	3B_FIRE	1ST	7E+06
748888.4	4034761	4.34236	0.51017	73.38	73.38	0	24-HR	3B_FIRE	1ST	7E+06
747188.4	4034861	4.36691	0.59009	77.85	77.85	0	24-HR	3B_FIRE	1ST	1E+07
747288.4	4034861	4.03973	0.58469	77.52	77.52	0	24-HR	3B_FIRE	1ST	1E+07
747388.4	4034861	3.76204	0.57936	77.21	77.21	0	24-HR	3B_FIRE	1ST	1E+07
747488.4	4034861	3.63546	0.57411	76.92	76.92	0	24-HR	3B_FIRE	1ST	1E+07
747588.4	4034861	3.82736	0.569	76.75	76.75	0	24-HR	3B_FIRE	1ST	1E+07
747688.4	4034861	3.7698	0.56402	76.67	76.67	0	24-HR	3B_FIRE	1ST	1E+07
747788.4	4034861	4.39547	0.55907	76.57	76.57	0	24-HR	3B_FIRE	1ST	9E+06
747888.4	4034861	4.55851	0.55415	76.43	76.43	0	24-HR	3B_FIRE	1ST	9E+06
747988.4	4034861	3.98457	0.54858	75.29	75.29	0	24-HR	3B_FIRE	1ST	9E+06
748088.4	4034861	4.44853	0.54378	75.16	75.16	0	24-HR	3B_FIRE	1ST	1E+07
748188.4	4034861	4.56402	0.53904	75.05	75.05	0	24-HR	3B_FIRE	1ST	1E+07
748288.4	4034861	4.3446	0.53437	74.95	74.95	0	24-HR	3B_FIRE	1ST	1E+07
748388.4	4034861	4.47388	0.52922	74.08	74.08	0	24-HR	3B_FIRE	1ST	8E+06
748488.4	4034861	4.89997	0.52464	73.95	73.95	0	24-HR	3B_FIRE	1ST	7E+06
748588.4	4034861	5.05331	0.52006	73.76	73.76	0	24-HR	3B_FIRE	1ST	7E+06
748688.4	4034861	4.89423	0.51556	73.61	73.61	0	24-HR	3B_FIRE	1ST	7E+06
748788.4	4034861	4.5124	0.5111	73.44	73.44	0	24-HR	3B_FIRE	1ST	7E+06
748888.4	4034861	4.01809	0.50671	73.31	73.31	0	24-HR	3B_FIRE	1ST	7E+06
747188.4	4034961	4.58644	0.57544	77.76	77.76	0	24-HR	3B_FIRE	1ST	1E+07
747288.4	4034961	4.47979	0.57057	77.43	77.43	0	24-HR	3B_FIRE	1ST	1E+07
747388.4	4034961	3.9799	0.56577	77.12	77.12	0	24-HR	3B_FIRE	1ST	1E+07
747488.4	4034961	4.00669	0.561	76.8	76.8	0	24-HR	3B_FIRE	1ST	1E+07
747588.4	4034961	4.18148	0.55638	76.64	76.64	0	24-HR	3B_FIRE	1ST	1E+07
747688.4	4034961	4.16969	0.55187	76.56	76.56	0	24-HR	3B_FIRE	1ST	8E+06
747788.4	4034961	4.46538	0.54738	76.46	76.46	0	24-HR	3B_FIRE	1ST	9E+06
747888.4	4034961	4.18636	0.54292	76.35	76.35	0	24-HR	3B_FIRE	1ST	9E+06
747988.4	4034961	4.50615	0.53777	75.17	75.17	0	24-HR	3B_FIRE	1ST	1E+07
748088.4	4034961	4.69438	0.53339	75.06	75.06	0	24-HR	3B_FIRE	1ST	1E+07
748188.4	4034961	4.46707	0.52906	74.95	74.95	0	24-HR	3B_FIRE	1ST	1E+07
748288.4	4034961	4.79558	0.52472	74.76	74.76	0	24-HR	3B_FIRE	1ST	8E+06
748388.4	4034961	5.28223	0.52002	73.99	73.99	0	24-HR	3B_FIRE	1ST	7E+06
748488.4	4034961	5.40467	0.51583	73.9	73.9	0	24-HR	3B_FIRE	1ST	7E+06
748588.4	4034961	5.1515	0.5116	73.7	73.7	0	24-HR	3B_FIRE	1ST	7E+06
748688.4	4034961	4.66778	0.50745	73.55	73.55	0	24-HR	3B_FIRE	1ST	7E+06
748788.4	4034961	4.0822	0.50331	73.37	73.37	0	24-HR	3B_FIRE	1ST	7E+06
748888.4	4034961	3.73753	0.49925	73.25	73.25	0	24-HR	3B_FIRE	1ST	8E+06
747188.4	4035061	4.80242	0.55556	77.67	77.67	0	24-HR	3B_FIRE	1ST	1E+07
747288.4	4035061	4.96885	0.55131	77.32	77.32	0	24-HR	3B_FIRE	1ST	1E+07
747388.4	4035061	4.57187	0.54713	77.04	77.04	0	24-HR	3B_FIRE	1ST	1E+07
747488.4	4035061	4.4763	0.54295	76.72	76.72	0	24-HR	3B_FIRE	1ST	1E+07
747588.4	4035061	4.56063	0.53889	76.55	76.55	0	24-HR	3B_FIRE	1ST	8E+06
747688.4	4035061	4.61682	0.53493	76.47	76.47	0	24-HR	3B_FIRE	1ST	8E+06
747788.4	4035061	4.47258	0.53097	76.36	76.36	0	24-HR	3B_FIRE	1ST	9E+06
747888.4	4035061	4.93095	0.52703	76.25	76.25	0	24-HR	3B_FIRE	1ST	9E+06
747988.4	4035061	4.80895	0.52241	75.08	75.08	0	24-HR	3B_FIRE	1ST	1E+07
748088.4	4035061	4.71377	0.51852	74.96	74.96	0	24-HR	3B_FIRE	1ST	1E+07
748188.4	4035061	5.16807	0.51466	74.85	74.85	0	24-HR	3B_FIRE	1ST	7E+06
748288.4	4035061	5.76427	0.5108	74.69	74.69	0	24-HR	3B_FIRE	1ST	7E+06
748388.4	4035061	5.7627	0.50659	73.95	73.95	0	24-HR	3B_FIRE	1ST	7E+06
748488.4	4035061	5.40078	0.50282	73.84	73.84	0	24-HR	3B_FIRE	1ST	7E+06
748588.4	4035061	4.79144	0.49902	73.64	73.64	0	24-HR	3B_FIRE	1ST	7E+06
748688.4	4035061	4.19787	0.49527	73.48	73.48	0	24-HR	3B_FIRE	1ST	8E+06
748788.4	4035061	3.95691	0.49155	73.32	73.32	0	24-HR	3B_FIRE	1ST	7E+06
748888.4	4035061	4.00609	0.48786	73.17	73.17	0	24-HR	3B_FIRE	1ST	7E+06

747188.4	4035161	5.35947	0.53099	77.67	77.67	0	24-HR	3B_FIRE	1ST	1E+07
747288.4	4035161	5.51433	0.52749	77.42	77.42	0	24-HR	3B_FIRE	1ST	1E+07
747388.4	4035161	5.25291	0.52397	77.12	77.12	0	24-HR	3B_FIRE	1ST	1E+07
747488.4	4035161	4.99572	0.52047	76.85	76.85	0	24-HR	3B_FIRE	1ST	1E+07
748388.4	4035161	5.70053	0.4897	74.79	74.79	0	24-HR	3B_FIRE	1ST	7E+06
748488.4	4035161	4.93308	0.48633	74.54	74.54	0	24-HR	3B_FIRE	1ST	7E+06
748588.4	4035161	4.48682	0.48296	74.25	74.25	0	24-HR	3B_FIRE	1ST	8E+06
748688.4	4035161	4.44084	0.4796	73.97	73.97	0	24-HR	3B_FIRE	1ST	7E+06
748788.4	4035161	4.42307	0.47627	73.7	73.7	0	24-HR	3B_FIRE	1ST	7E+06
748888.4	4035161	4.29266	0.47297	73.46	73.46	0	24-HR	3B_FIRE	1ST	7E+06
747188.4	4035261	6.2335	0.50213	77.45	77.45	0	24-HR	3B_FIRE	1ST	1E+07
747288.4	4035261	6.06491	0.49933	77.15	77.15	0	24-HR	3B_FIRE	1ST	1E+07
747388.4	4035261	5.95704	0.49654	76.88	76.88	0	24-HR	3B_FIRE	1ST	1E+07
747488.4	4035261	5.9558	0.49382	76.75	76.75	0	24-HR	3B_FIRE	1ST	8E+06
748388.4	4035261	5.12636	0.46855	74.67	74.67	0	24-HR	3B_FIRE	1ST	8E+06
748488.4	4035261	4.90703	0.46572	74.42	74.42	0	24-HR	3B_FIRE	1ST	7E+06
748588.4	4035261	4.93555	0.46287	74.13	74.13	0	24-HR	3B_FIRE	1ST	7E+06
748688.4	4035261	4.79827	0.46002	73.83	73.83	0	24-HR	3B_FIRE	1ST	7E+06
748788.4	4035261	4.5489	0.4572	73.57	73.57	0	24-HR	3B_FIRE	1ST	7E+06
748888.4	4035261	4.2286	0.45437	73.29	73.29	0	24-HR	3B_FIRE	1ST	7E+06
747188.4	4035361	7.32251	0.46987	77.19	77.19	0	24-HR	3B_FIRE	1ST	1E+07
747288.4	4035361	6.98876	0.4678	76.88	76.88	0	24-HR	3B_FIRE	1ST	1E+07
747388.4	4035361	6.62408	0.46574	76.63	76.63	0	24-HR	3B_FIRE	1ST	1E+07
747488.4	4035361	7.25213	0.46385	76.71	76.71	0	24-HR	3B_FIRE	1ST	8E+06
748388.4	4035361	5.5265	0.44424	74.58	74.58	0	24-HR	3B_FIRE	1ST	7E+06
748488.4	4035361	5.40093	0.44197	74.31	74.31	0	24-HR	3B_FIRE	1ST	7E+06
748588.4	4035361	5.10244	0.43967	74	74	0	24-HR	3B_FIRE	1ST	7E+06
748688.4	4035361	4.70577	0.43736	73.71	73.71	0	24-HR	3B_FIRE	1ST	7E+06
748788.4	4035361	4.2641	0.43506	73.43	73.43	0	24-HR	3B_FIRE	1ST	7E+06
748888.4	4035361	3.81479	0.43276	73.16	73.16	0	24-HR	3B_FIRE	1ST	7E+06
747188.4	4035461	8.73649	0.43524	77.3	77.3	0	24-HR	3B_FIRE	1ST	1E+07
747288.4	4035461	8.58192	0.43392	77.03	77.03	0	24-HR	3B_FIRE	1ST	1E+07
747388.4	4035461	8.12419	0.43262	76.88	76.88	0	24-HR	3B_FIRE	1ST	1E+07
747488.4	4035461	8.32446	0.43126	76.68	76.68	0	24-HR	3B_FIRE	1ST	1E+07
748388.4	4035461	5.75811	0.41731	74.47	74.47	0	24-HR	3B_FIRE	1ST	7E+06
748488.4	4035461	5.25809	0.41559	74.16	74.16	0	24-HR	3B_FIRE	1ST	7E+06
748588.4	4035461	4.69733	0.41385	73.85	73.85	0	24-HR	3B_FIRE	1ST	7E+06
748688.4	4035461	4.13446	0.4121	73.56	73.56	0	24-HR	3B_FIRE	1ST	7E+06
748788.4	4035461	3.60359	0.41035	73.31	73.31	0	24-HR	3B_FIRE	1ST	7E+06
748888.4	4035461	3.38644	0.40858	73.05	73.05	0	24-HR	3B_FIRE	1ST	1E+07
746388.4	4035561	3.23522	0.42164	80.8	80.8	0	24-HR	3B_FIRE	1ST	1E+07
746488.4	4035561	3.25029	0.41667	80.45	80.45	0	24-HR	3B_FIRE	1ST	1E+07
746588.4	4035561	4.13223	0.4118	80.12	80.12	0	24-HR	3B_FIRE	1ST	7E+06
746688.4	4035561	4.4072	0.4071	80.15	80.15	0	24-HR	3B_FIRE	1ST	7E+06
746788.4	4035561	5.80982	0.40227	79.12	79.12	0	24-HR	3B_FIRE	1ST	9E+06
746888.4	4035561	5.70407	0.40064	78.57	78.57	0	24-HR	3B_FIRE	1ST	1E+07
746988.4	4035561	6.41367	0.40009	78.16	78.16	0	24-HR	3B_FIRE	1ST	1E+07
747088.4	4035561	8.3061	0.39941	77.59	77.59	0	24-HR	3B_FIRE	1ST	8E+06
747188.4	4035561	10.46726	0.39881	77.28	77.28	0	24-HR	3B_FIRE	1ST	1E+07
747288.4	4035561	10.36967	0.39819	77.05	77.05	0	24-HR	3B_FIRE	1ST	1E+07
747388.4	4035561	10.65207	0.3975	76.77	76.77	0	24-HR	3B_FIRE	1ST	1E+07
747488.4	4035561	10.03075	0.39685	76.67	76.67	0	24-HR	3B_FIRE	1ST	9E+06
748388.4	4035561	5.16898	0.38834	74.33	74.33	0	24-HR	3B_FIRE	1ST	7E+06
748488.4	4035561	4.45445	0.38718	74.01	74.01	0	24-HR	3B_FIRE	1ST	7E+06
748588.4	4035561	4.15277	0.38599	73.7	73.7	0	24-HR	3B_FIRE	1ST	1E+07
748688.4	4035561	3.84232	0.38481	73.45	73.45	0	24-HR	3B_FIRE	1ST	1E+07
748788.4	4035561	3.52117	0.38359	73.18	73.18	0	24-HR	3B_FIRE	1ST	1E+07
748888.4	4035561	3.33118	0.38235	72.94	72.94	0	24-HR	3B_FIRE	1ST	1E+07
746388.4	4035661	3.51625	0.42427	80.93	80.93	0	24-HR	3B_FIRE	1ST	1E+07
746488.4	4035661	3.84999	0.41914	80.59	80.59	0	24-HR	3B_FIRE	1ST	1E+07
746588.4	4035661	4.03546	0.41411	80.27	80.27	0	24-HR	3B_FIRE	1ST	1E+07
746688.4	4035661	4.86783	0.40922	80.15	80.15	0	24-HR	3B_FIRE	1ST	7E+06
746788.4	4035661	5.3934	0.40428	79.38	79.38	0	24-HR	3B_FIRE	1ST	9E+06
746888.4	4035661	6.65704	0.39946	78.73	78.73	0	24-HR	3B_FIRE	1ST	9E+06
746988.4	4035661	7.2475	0.39478	78.33	78.33	0	24-HR	3B_FIRE	1ST	1E+07
747088.4	4035661	10.26391	0.39016	77.81	77.81	0	24-HR	3B_FIRE	1ST	1E+07
747188.4	4035661	13.56594	0.38564	77.35	77.35	0	24-HR	3B_FIRE	1ST	1E+07

747288.4	4035661	13.97405	0.38124	77.05	77.05	0	24-HR	3B_FIRE	1ST	1E+07
747388.4	4035661	12.98593	0.37692	76.74	76.74	0	24-HR	3B_FIRE	1ST	1E+07
747488.4	4035661	11.87798	0.37272	76.67	76.67	0	24-HR	3B_FIRE	1ST	8E+06
748388.4	4035661	4.93304	0.35796	74.14	74.14	0	24-HR	3B_FIRE	1ST	1E+07
748488.4	4035661	4.471	0.35737	73.87	73.87	0	24-HR	3B_FIRE	1ST	1E+07
748588.4	4035661	4.16527	0.35673	73.59	73.59	0	24-HR	3B_FIRE	1ST	7E+06
748688.4	4035661	4.09201	0.35606	73.33	73.33	0	24-HR	3B_FIRE	1ST	7E+06
748788.4	4035661	3.99827	0.35536	73.09	73.09	0	24-HR	3B_FIRE	1ST	7E+06
748888.4	4035661	3.88944	0.35462	72.83	72.83	0	24-HR	3B_FIRE	1ST	7E+06
746388.4	4035761	4.26823	0.42808	80.98	80.98	0	24-HR	3B_FIRE	1ST	1E+07
746488.4	4035761	4.10067	0.42282	80.66	80.66	0	24-HR	3B_FIRE	1ST	1E+07
746588.4	4035761	4.57379	0.41766	80.35	80.35	0	24-HR	3B_FIRE	1ST	1E+07
746688.4	4035761	5.11579	0.41265	80.35	80.35	0	24-HR	3B_FIRE	1ST	1E+07
746788.4	4035761	5.907	0.4075	79.27	79.27	0	24-HR	3B_FIRE	1ST	7E+06
746888.4	4035761	7.14581	0.40257	78.78	78.78	0	24-HR	3B_FIRE	1ST	9E+06
746988.4	4035761	8.16238	0.39775	78.43	78.43	0	24-HR	3B_FIRE	1ST	1E+07
747088.4	4035761	13.78466	0.39299	77.92	77.92	0	24-HR	3B_FIRE	1ST	1E+07
747188.4	4035761	19.3219	0.38832	77.45	77.45	0	24-HR	3B_FIRE	1ST	1E+07
747288.4	4035761	19.36485	0.38377	77.14	77.14	0	24-HR	3B_FIRE	1ST	1E+07
747388.4	4035761	17.15046	0.37931	76.89	76.89	0	24-HR	3B_FIRE	1ST	8E+06
747488.4	4035761	15.75135	0.37495	76.77	76.77	0	24-HR	3B_FIRE	1ST	7E+06
748388.4	4035761	5.3356	0.33886	74.04	74.04	0	24-HR	3B_FIRE	1ST	7E+06
748488.4	4035761	5.1049	0.33521	73.76	73.76	0	24-HR	3B_FIRE	1ST	7E+06
748588.4	4035761	4.86406	0.33163	73.5	73.5	0	24-HR	3B_FIRE	1ST	7E+06
748688.4	4035761	4.6212	0.32811	73.25	73.25	0	24-HR	3B_FIRE	1ST	7E+06
748788.4	4035761	4.38139	0.32622	73	73	0	24-HR	3B_FIRE	1ST	7E+06
748888.4	4035761	4.14823	0.32595	72.73	72.73	0	24-HR	3B_FIRE	1ST	7E+06
746388.4	4035861	4.29618	0.43261	80.89	80.89	0	24-HR	3B_FIRE	1ST	1E+07
746488.4	4035861	4.70145	0.42729	80.61	80.61	0	24-HR	3B_FIRE	1ST	1E+07
746588.4	4035861	4.74008	0.42205	80.32	80.32	0	24-HR	3B_FIRE	1ST	1E+07
746688.4	4035861	5.30866	0.41687	79.99	79.99	0	24-HR	3B_FIRE	1ST	1E+07
746788.4	4035861	6.73144	0.41166	79.08	79.08	0	24-HR	3B_FIRE	1ST	1E+07
746888.4	4035861	7.1994	0.40663	78.65	78.65	0	24-HR	3B_FIRE	1ST	7E+06
746988.4	4035861	8.4438	0.4017	78.28	78.28	0	24-HR	3B_FIRE	1ST	1E+07
747088.4	4035861	19.74425	0.39685	77.91	77.91	0	24-HR	3B_FIRE	1ST	1E+07
747188.4	4035861	30.05117	0.39208	77.54	77.54	0	24-HR	3B_FIRE	1ST	8E+06
747288.4	4035861	26.87457	0.38739	77.2	77.2	0	24-HR	3B_FIRE	1ST	8E+06
747388.4	4035861	24.39644	0.38284	77.12	77.12	0	24-HR	3B_FIRE	1ST	7E+06
747488.4	4035861	18.03783	0.37834	76.95	76.95	0	24-HR	3B_FIRE	1ST	8E+06
748388.4	4035861	5.71054	0.34098	73.93	73.93	0	24-HR	3B_FIRE	1ST	7E+06
748488.4	4035861	5.25996	0.33719	73.63	73.63	0	24-HR	3B_FIRE	1ST	7E+06
748588.4	4035861	4.85439	0.33348	73.39	73.39	0	24-HR	3B_FIRE	1ST	7E+06
748688.4	4035861	4.48717	0.32983	73.15	73.15	0	24-HR	3B_FIRE	1ST	7E+06
748788.4	4035861	4.15371	0.32624	72.88	72.88	0	24-HR	3B_FIRE	1ST	7E+06
748888.4	4035861	3.8767	0.32272	72.61	72.61	0	24-HR	3B_FIRE	1ST	7E+06
746388.4	4035961	3.61262	0.4374	80.9	80.9	0	24-HR	3B_FIRE	1ST	7E+06
746488.4	4035961	3.78759	0.43207	80.61	80.61	0	24-HR	3B_FIRE	1ST	7E+06
746588.4	4035961	3.83739	0.42681	80.31	80.31	0	24-HR	3B_FIRE	1ST	1E+07
746688.4	4035961	4.41474	0.42162	80.01	80.01	0	24-HR	3B_FIRE	1ST	1E+07
748388.4	4035961	5.75981	0.34419	74.24	74.24	0	24-HR	3B_FIRE	1ST	7E+06
748488.4	4035961	5.62852	0.34027	73.9	73.9	0	24-HR	3B_FIRE	1ST	7E+06
748588.4	4035961	5.50429	0.33642	73.56	73.56	0	24-HR	3B_FIRE	1ST	7E+06
748688.4	4035961	5.37155	0.33263	73.22	73.22	0	24-HR	3B_FIRE	1ST	7E+06
748788.4	4035961	5.23442	0.32891	72.88	72.88	0	24-HR	3B_FIRE	1ST	7E+06
748888.4	4035961	5.08091	0.32525	72.55	72.55	0	24-HR	3B_FIRE	1ST	7E+06
746388.4	4036061	5.24407	0.44181	80.93	80.93	0	24-HR	3B_FIRE	1ST	8E+06
746488.4	4036061	6.09937	0.43658	80.62	80.62	0	24-HR	3B_FIRE	1ST	9E+06
746588.4	4036061	7.5104	0.4314	80.33	80.33	0	24-HR	3B_FIRE	1ST	9E+06
746688.4	4036061	9.42462	0.42626	80	80	0	24-HR	3B_FIRE	1ST	9E+06
748388.4	4036061	7.14465	0.34812	74.1	74.1	0	24-HR	3B_FIRE	1ST	7E+06
748488.4	4036061	6.93888	0.3441	73.73	73.73	0	24-HR	3B_FIRE	1ST	7E+06
748588.4	4036061	6.74032	0.34014	73.37	73.37	0	24-HR	3B_FIRE	1ST	7E+06
748688.4	4036061	6.53545	0.33624	73.02	73.02	0	24-HR	3B_FIRE	1ST	7E+06
748788.4	4036061	6.3286	0.33242	72.7	72.7	0	24-HR	3B_FIRE	1ST	7E+06
748888.4	4036061	6.10491	0.32865	72.36	72.36	0	24-HR	3B_FIRE	1ST	7E+06
746388.4	4036161	5.93717	0.44522	80.96	80.96	0	24-HR	3B_FIRE	1ST	8E+06
746488.4	4036161	6.83857	0.4402	80.65	80.65	0	24-HR	3B_FIRE	1ST	9E+06

746588.4	4036161	8.64058	0.43521	80.35	80.35	0	24-HR	3B_FIRE	1ST	9E+06
746688.4	4036161	11.2618	0.43024	80.04	80.04	0	24-HR	3B_FIRE	1ST	9E+06
748388.4	4036161	7.09974	0.35254	73.96	73.96	0	24-HR	3B_FIRE	1ST	7E+06
748488.4	4036161	6.99554	0.34845	73.59	73.59	0	24-HR	3B_FIRE	1ST	7E+06
748588.4	4036161	6.8674	0.34442	73.2	73.2	0	24-HR	3B_FIRE	1ST	7E+06
748688.4	4036161	6.71727	0.34045	72.86	72.86	0	24-HR	3B_FIRE	1ST	7E+06
748788.4	4036161	6.54747	0.33655	72.55	72.55	0	24-HR	3B_FIRE	1ST	7E+06
748888.4	4036161	6.35131	0.3327	72.22	72.22	0	24-HR	3B_FIRE	1ST	7E+06
746388.4	4036261	6.60307	0.44701	80.95	80.95	0	24-HR	3B_FIRE	1ST	1E+07
746488.4	4036261	7.52801	0.44233	80.65	80.65	0	24-HR	3B_FIRE	1ST	1E+07
746588.4	4036261	9.64652	0.43765	80.36	80.36	0	24-HR	3B_FIRE	1ST	8E+06
746688.4	4036261	14.91417	0.43299	80.13	80.13	0	24-HR	3B_FIRE	1ST	1E+07
748388.4	4036261	5.10252	0.35709	73.83	73.83	0	24-HR	3B_FIRE	1ST	7E+06
748488.4	4036261	5.29178	0.35299	73.46	73.46	0	24-HR	3B_FIRE	1ST	7E+06
748588.4	4036261	5.4144	0.34893	73.04	73.04	0	24-HR	3B_FIRE	1ST	7E+06
748688.4	4036261	5.47922	0.34493	72.68	72.68	0	24-HR	3B_FIRE	1ST	7E+06
748788.4	4036261	5.49165	0.34099	72.37	72.37	0	24-HR	3B_FIRE	1ST	7E+06
748888.4	4036261	5.45268	0.3371	72.04	72.04	0	24-HR	3B_FIRE	1ST	7E+06
745988.4	4036361	5.1552	0.46305	82.1	82.1	0	24-HR	3B_FIRE	1ST	9E+06
746088.4	4036361	5.61102	0.45904	81.82	81.82	0	24-HR	3B_FIRE	1ST	9E+06
746188.4	4036361	6.0379	0.45496	81.55	81.55	0	24-HR	3B_FIRE	1ST	9E+06
746288.4	4036361	7.23325	0.45083	81.26	81.26	0	24-HR	3B_FIRE	1ST	1E+07
746388.4	4036361	8.45128	0.44666	80.98	80.98	0	24-HR	3B_FIRE	1ST	1E+07
746488.4	4036361	10.25619	0.44244	80.67	80.67	0	24-HR	3B_FIRE	1ST	8E+06
746588.4	4036361	13.47426	0.43819	80.38	80.38	0	24-HR	3B_FIRE	1ST	1E+07
748388.4	4036361	3.22472	0.36138	73.66	73.66	0	24-HR	3B_FIRE	1ST	8E+06
748488.4	4036361	3.07818	0.35734	73.3	73.3	0	24-HR	3B_FIRE	1ST	8E+06
748588.4	4036361	3.17812	0.35332	72.89	72.89	0	24-HR	3B_FIRE	1ST	7E+06
748688.4	4036361	3.43416	0.34935	72.56	72.56	0	24-HR	3B_FIRE	1ST	7E+06
748788.4	4036361	3.62662	0.34542	72.21	72.21	0	24-HR	3B_FIRE	1ST	7E+06
748888.4	4036361	3.7632	0.34154	71.88	71.88	0	24-HR	3B_FIRE	1ST	7E+06
748988.4	4036361	3.8635	0.3377	71.53	71.53	0	24-HR	3B_FIRE	1ST	7E+06
749088.4	4036361	3.93293	0.3339	71.17	71.17	0	24-HR	3B_FIRE	1ST	7E+06
749188.4	4036361	3.99915	0.3302	71.18	71.18	0	24-HR	3B_FIRE	1ST	7E+06
749288.4	4036361	4.0299	0.32651	70.98	70.98	0	24-HR	3B_FIRE	1ST	7E+06
749388.4	4036361	4.04061	0.32286	70.76	70.76	0	24-HR	3B_FIRE	1ST	7E+06
749488.4	4036361	4.03615	0.31926	70.55	70.55	0	24-HR	3B_FIRE	1ST	7E+06
749588.4	4036361	4.01804	0.3157	70.33	70.33	0	24-HR	3B_FIRE	1ST	7E+06
749688.4	4036361	3.98918	0.31219	70.11	70.11	0	24-HR	3B_FIRE	1ST	7E+06
749788.4	4036361	3.95154	0.30873	69.89	69.89	0	24-HR	3B_FIRE	1ST	7E+06
749888.4	4036361	3.90679	0.30531	69.67	69.67	0	24-HR	3B_FIRE	1ST	7E+06
749988.4	4036361	3.86064	0.30195	69.54	69.54	0	24-HR	3B_FIRE	1ST	7E+06
750088.4	4036361	3.81155	0.29864	69.45	69.45	0	24-HR	3B_FIRE	1ST	7E+06
750188.4	4036361	3.76036	0.29538	69.4	69.4	0	24-HR	3B_FIRE	1ST	7E+06
745988.4	4036461	5.39068	0.45742	82.11	82.11	0	24-HR	3B_FIRE	1ST	1E+07
746088.4	4036461	6.24044	0.45412	81.82	81.82	0	24-HR	3B_FIRE	1ST	1E+07
746188.4	4036461	6.95867	0.45073	81.54	81.54	0	24-HR	3B_FIRE	1ST	1E+07
746288.4	4036461	7.62105	0.44725	81.27	81.27	0	24-HR	3B_FIRE	1ST	1E+07
746388.4	4036461	9.78823	0.44369	80.99	80.99	0	24-HR	3B_FIRE	1ST	1E+07
746488.4	4036461	11.19915	0.44005	80.7	80.7	0	24-HR	3B_FIRE	1ST	8E+06
746588.4	4036461	14.45998	0.43635	80.4	80.4	0	24-HR	3B_FIRE	1ST	7E+06
748388.4	4036461	3.01348	0.36503	73.47	73.47	0	24-HR	3B_FIRE	1ST	8E+06
748488.4	4036461	2.88729	0.3611	73.13	73.13	0	24-HR	3B_FIRE	1ST	8E+06
748588.4	4036461	2.74281	0.3572	72.76	72.76	0	24-HR	3B_FIRE	1ST	8E+06
748688.4	4036461	2.57688	0.35333	72.42	72.42	0	24-HR	3B_FIRE	1ST	8E+06
748788.4	4036461	2.41565	0.34948	72.04	72.04	0	24-HR	3B_FIRE	1ST	1E+07
748888.4	4036461	2.45753	0.34566	71.69	71.69	0	24-HR	3B_FIRE	1ST	1E+07
748988.4	4036461	2.47296	0.34187	71.35	71.35	0	24-HR	3B_FIRE	1ST	1E+07
749088.4	4036461	2.48908	0.33813	71.06	71.06	0	24-HR	3B_FIRE	1ST	7E+06
749188.4	4036461	2.54463	0.33446	70.99	70.99	0	24-HR	3B_FIRE	1ST	7E+06
749288.4	4036461	2.66307	0.3308	70.79	70.79	0	24-HR	3B_FIRE	1ST	7E+06
749388.4	4036461	2.76172	0.32717	70.58	70.58	0	24-HR	3B_FIRE	1ST	7E+06
749488.4	4036461	2.84211	0.32358	70.36	70.36	0	24-HR	3B_FIRE	1ST	7E+06
749588.4	4036461	2.90625	0.32002	70.14	70.14	0	24-HR	3B_FIRE	1ST	7E+06
749688.4	4036461	2.95618	0.31651	69.93	69.93	0	24-HR	3B_FIRE	1ST	7E+06
749788.4	4036461	2.99232	0.31303	69.7	69.7	0	24-HR	3B_FIRE	1ST	7E+06
749888.4	4036461	3.01771	0.30959	69.49	69.49	0	24-HR	3B_FIRE	1ST	7E+06

749988.4	4036461	3.03484	0.3062	69.33	69.33	0	24-HR	3B_FIRE	1ST	7E+06
750088.4	4036461	3.04597	0.30287	69.25	69.25	0	24-HR	3B_FIRE	1ST	7E+06
750188.4	4036461	3.04955	0.29957	69.18	69.18	0	24-HR	3B_FIRE	1ST	7E+06
745988.4	4036561	5.74057	0.44844	82.13	82.13	0	24-HR	3B_FIRE	1ST	1E+07
746088.4	4036561	6.06446	0.44595	81.83	81.83	0	24-HR	3B_FIRE	1ST	1E+07
746188.4	4036561	7.46378	0.44335	81.58	81.58	0	24-HR	3B_FIRE	1ST	1E+07
746288.4	4036561	9.08239	0.44061	81.28	81.28	0	24-HR	3B_FIRE	1ST	8E+06
746388.4	4036561	10.19585	0.43776	81	81	0	24-HR	3B_FIRE	1ST	1E+07
746488.4	4036561	13.41969	0.43481	80.7	80.7	0	24-HR	3B_FIRE	1ST	1E+07
746588.4	4036561	17.86107	0.43177	80.41	80.41	0	24-HR	3B_FIRE	1ST	1E+07
748388.4	4036561	2.71131	0.36764	73.33	73.33	0	24-HR	3B_FIRE	1ST	1E+07
748488.4	4036561	2.58075	0.36392	72.98	72.98	0	24-HR	3B_FIRE	1ST	8E+06
748588.4	4036561	2.57801	0.3602	72.6	72.6	0	24-HR	3B_FIRE	1ST	8E+06
748688.4	4036561	2.52406	0.35649	72.25	72.25	0	24-HR	3B_FIRE	1ST	8E+06
748788.4	4036561	2.44554	0.35279	71.88	71.88	0	24-HR	3B_FIRE	1ST	8E+06
748888.4	4036561	2.35222	0.34911	71.56	71.56	0	24-HR	3B_FIRE	1ST	8E+06
748988.4	4036561	2.24829	0.34546	71.23	71.23	0	24-HR	3B_FIRE	1ST	8E+06
749088.4	4036561	2.13863	0.34182	70.9	70.9	0	24-HR	3B_FIRE	1ST	8E+06
749188.4	4036561	2.09182	0.33824	70.81	70.81	0	24-HR	3B_FIRE	1ST	7E+06
749288.4	4036561	2.14645	0.33466	70.58	70.58	0	24-HR	3B_FIRE	1ST	7E+06
749388.4	4036561	2.18498	0.33111	70.38	70.38	0	24-HR	3B_FIRE	1ST	7E+06
749488.4	4036561	2.2086	0.32758	70.17	70.17	0	24-HR	3B_FIRE	1ST	7E+06
749588.4	4036561	2.21933	0.32408	69.94	69.94	0	24-HR	3B_FIRE	1ST	7E+06
749688.4	4036561	2.22074	0.32061	69.74	69.74	0	24-HR	3B_FIRE	1ST	7E+06
749788.4	4036561	2.21291	0.31717	69.51	69.51	0	24-HR	3B_FIRE	1ST	7E+06
749888.4	4036561	2.19887	0.31376	69.3	69.3	0	24-HR	3B_FIRE	1ST	7E+06
749988.4	4036561	2.18019	0.31039	69.12	69.12	0	24-HR	3B_FIRE	1ST	7E+06
750088.4	4036561	2.18876	0.30706	69.04	69.04	0	24-HR	3B_FIRE	1ST	7E+06
750188.4	4036561	2.23626	0.30377	68.98	68.98	0	24-HR	3B_FIRE	1ST	7E+06
750288.4	4036561	2.27588	0.30052	68.92	68.92	0	24-HR	3B_FIRE	1ST	7E+06
752388.4	4036561	2.1339	0.24044	66.45	66.45	0	24-HR	3B_FIRE	1ST	7E+06
752488.4	4036561	2.10942	0.23798	66.36	66.36	0	24-HR	3B_FIRE	1ST	7E+06
752588.4	4036561	2.08478	0.23557	66.28	66.28	0	24-HR	3B_FIRE	1ST	7E+06
752688.4	4036561	2.06085	0.23319	66.26	66.26	0	24-HR	3B_FIRE	1ST	7E+06
752788.4	4036561	2.03557	0.23085	66.17	66.17	0	24-HR	3B_FIRE	1ST	7E+06
752888.4	4036561	2.0139	0.22856	66.32	66.32	0	24-HR	3B_FIRE	1ST	7E+06
752988.4	4036561	1.98882	0.22629	66.26	66.26	0	24-HR	3B_FIRE	1ST	7E+06
753088.4	4036561	1.96372	0.22405	66.2	66.2	0	24-HR	3B_FIRE	1ST	7E+06
753188.4	4036561	1.93835	0.22184	66.12	66.12	0	24-HR	3B_FIRE	1ST	7E+06
753288.4	4036561	1.91363	0.21966	66.08	66.08	0	24-HR	3B_FIRE	1ST	7E+06
753388.4	4036561	1.88845	0.21752	66	66	0	24-HR	3B_FIRE	1ST	7E+06
753488.4	4036561	1.86355	0.21541	65.93	65.93	0	24-HR	3B_FIRE	1ST	7E+06
753588.4	4036561	1.83882	0.21333	65.86	65.86	0	24-HR	3B_FIRE	1ST	7E+06
753688.4	4036561	1.81403	0.21127	65.77	65.77	0	24-HR	3B_FIRE	1ST	7E+06
753788.4	4036561	1.7896	0.20926	65.69	65.69	0	24-HR	3B_FIRE	1ST	7E+06
753888.4	4036561	1.76456	0.20726	65.54	65.54	0	24-HR	3B_FIRE	1ST	7E+06
753988.4	4036561	1.74088	0.2053	65.48	65.48	0	24-HR	3B_FIRE	1ST	7E+06
754088.4	4036561	1.71722	0.20337	65.4	65.4	0	24-HR	3B_FIRE	1ST	7E+06
754188.4	4036561	1.69374	0.20147	65.31	65.31	0	24-HR	3B_FIRE	1ST	7E+06
754288.4	4036561	1.67011	0.1996	65.18	65.18	0	24-HR	3B_FIRE	1ST	7E+06
754388.4	4036561	1.64755	0.19776	65.12	65.12	0	24-HR	3B_FIRE	1ST	7E+06
754488.4	4036561	1.62498	0.19594	65.03	65.03	0	24-HR	3B_FIRE	1ST	7E+06
754588.4	4036561	1.60242	0.19415	64.91	64.91	0	24-HR	3B_FIRE	1ST	7E+06
754688.4	4036561	1.58028	0.19238	64.8	64.8	0	24-HR	3B_FIRE	1ST	7E+06
754788.4	4036561	1.55858	0.19065	64.7	64.7	0	24-HR	3B_FIRE	1ST	7E+06
754888.4	4036561	1.53813	0.18895	64.7	64.7	0	24-HR	3B_FIRE	1ST	7E+06
754988.4	4036561	1.51715	0.18727	64.61	64.61	0	24-HR	3B_FIRE	1ST	7E+06
755088.4	4036561	1.49666	0.18561	64.54	64.54	0	24-HR	3B_FIRE	1ST	7E+06
755188.4	4036561	1.47667	0.18398	64.49	64.49	0	24-HR	3B_FIRE	1ST	7E+06
755288.4	4036561	1.45672	0.18238	64.41	64.41	0	24-HR	3B_FIRE	1ST	7E+06
748388.4	4036661	2.56613	0.36887	73.19	73.19	0	24-HR	3B_FIRE	1ST	1E+07
748488.4	4036661	2.61701	0.36543	72.84	72.84	0	24-HR	3B_FIRE	1ST	1E+07
748588.4	4036661	2.56113	0.36196	72.47	72.47	0	24-HR	3B_FIRE	1ST	1E+07
748688.4	4036661	2.4309	0.35849	72.08	72.08	0	24-HR	3B_FIRE	1ST	1E+07
748788.4	4036661	2.25722	0.35502	71.71	71.71	0	24-HR	3B_FIRE	1ST	1E+07
748888.4	4036661	2.15611	0.35155	71.39	71.39	0	24-HR	3B_FIRE	1ST	8E+06
748988.4	4036661	2.13072	0.34808	71.03	71.03	0	24-HR	3B_FIRE	1ST	8E+06

749088.4	4036661	2.08936	0.34462	70.72	70.72	0	24-HR	3B_FIRE	1ST	8E+06
749188.4	4036661	2.0386	0.3412	70.59	70.59	0	24-HR	3B_FIRE	1ST	8E+06
749288.4	4036661	1.9759	0.33777	70.37	70.37	0	24-HR	3B_FIRE	1ST	8E+06
749388.4	4036661	1.90645	0.33436	70.17	70.17	0	24-HR	3B_FIRE	1ST	8E+06
749488.4	4036661	1.83198	0.33095	69.96	69.96	0	24-HR	3B_FIRE	1ST	8E+06
749588.4	4036661	1.88093	0.32757	69.74	69.74	0	24-HR	3B_FIRE	1ST	7E+06
749688.4	4036661	1.92269	0.32419	69.52	69.52	0	24-HR	3B_FIRE	1ST	7E+06
749788.4	4036661	1.9503	0.32083	69.21	69.21	0	24-HR	3B_FIRE	1ST	7E+06
749888.4	4036661	1.97048	0.3175	69.02	69.02	0	24-HR	3B_FIRE	1ST	7E+06
749988.4	4036661	1.98453	0.31421	68.95	68.95	0	24-HR	3B_FIRE	1ST	7E+06
750088.4	4036661	1.99051	0.31095	68.87	68.87	0	24-HR	3B_FIRE	1ST	7E+06
750188.4	4036661	1.98984	0.30771	68.79	68.79	0	24-HR	3B_FIRE	1ST	7E+06
750288.4	4036661	1.9838	0.30449	68.72	68.72	0	24-HR	3B_FIRE	1ST	7E+06
752388.4	4036661	1.85259	0.24398	66.29	66.29	0	24-HR	3B_FIRE	1ST	7E+06
752488.4	4036661	1.8421	0.24147	66.21	66.21	0	24-HR	3B_FIRE	1ST	7E+06
752588.4	4036661	1.83032	0.23899	66.11	66.11	0	24-HR	3B_FIRE	1ST	7E+06
752688.4	4036661	1.81882	0.23655	66.09	66.09	0	24-HR	3B_FIRE	1ST	7E+06
752788.4	4036661	1.80564	0.23414	66.01	66.01	0	24-HR	3B_FIRE	1ST	7E+06
752888.4	4036661	1.79411	0.23179	66.1	66.1	0	24-HR	3B_FIRE	1ST	7E+06
752988.4	4036661	1.7797	0.22944	66.03	66.03	0	24-HR	3B_FIRE	1ST	7E+06
753088.4	4036661	1.76489	0.22714	65.97	65.97	0	24-HR	3B_FIRE	1ST	7E+06
753188.4	4036661	1.74947	0.22486	65.9	65.9	0	24-HR	3B_FIRE	1ST	7E+06
753288.4	4036661	1.73415	0.22262	65.87	65.87	0	24-HR	3B_FIRE	1ST	7E+06
753388.4	4036661	1.71797	0.2204	65.8	65.8	0	24-HR	3B_FIRE	1ST	7E+06
753488.4	4036661	1.70161	0.21822	65.74	65.74	0	24-HR	3B_FIRE	1ST	7E+06
753588.4	4036661	1.68441	0.21607	65.63	65.63	0	24-HR	3B_FIRE	1ST	7E+06
753688.4	4036661	1.66762	0.21395	65.57	65.57	0	24-HR	3B_FIRE	1ST	7E+06
753788.4	4036661	1.65032	0.21186	65.48	65.48	0	24-HR	3B_FIRE	1ST	7E+06
753888.4	4036661	1.63269	0.2098	65.37	65.37	0	24-HR	3B_FIRE	1ST	7E+06
753988.4	4036661	1.61554	0.20777	65.31	65.31	0	24-HR	3B_FIRE	1ST	7E+06
754088.4	4036661	1.59811	0.20577	65.23	65.23	0	24-HR	3B_FIRE	1ST	7E+06
754188.4	4036661	1.58045	0.20379	65.13	65.13	0	24-HR	3B_FIRE	1ST	7E+06
754288.4	4036661	1.5629	0.20185	65.04	65.04	0	24-HR	3B_FIRE	1ST	7E+06
754388.4	4036661	1.54577	0.19994	64.99	64.99	0	24-HR	3B_FIRE	1ST	7E+06
754488.4	4036661	1.5281	0.19805	64.88	64.88	0	24-HR	3B_FIRE	1ST	7E+06
754588.4	4036661	1.51059	0.19619	64.78	64.78	0	24-HR	3B_FIRE	1ST	7E+06
754688.4	4036661	1.49299	0.19436	64.66	64.66	0	24-HR	3B_FIRE	1ST	7E+06
754788.4	4036661	1.47586	0.19256	64.58	64.58	0	24-HR	3B_FIRE	1ST	7E+06
754888.4	4036661	1.45919	0.19079	64.54	64.54	0	24-HR	3B_FIRE	1ST	7E+06
754988.4	4036661	1.44254	0.18904	64.49	64.49	0	24-HR	3B_FIRE	1ST	7E+06
755088.4	4036661	1.42566	0.18732	64.4	64.4	0	24-HR	3B_FIRE	1ST	7E+06
755188.4	4036661	1.40935	0.18562	64.36	64.36	0	24-HR	3B_FIRE	1ST	7E+06
755288.4	4036661	1.393	0.18395	64.3	64.3	0	24-HR	3B_FIRE	1ST	7E+06
745988.4	4036761	6.98319	0.42029	82.47	82.47	0	24-HR	3B_FIRE	1ST	8E+06
746088.4	4036761	7.80645	0.41958	82.09	82.09	0	24-HR	3B_FIRE	1ST	9E+06
746188.4	4036761	8.39112	0.41869	81.69	81.69	0	24-HR	3B_FIRE	1ST	1E+07
746288.4	4036761	10.65867	0.41762	81.26	81.26	0	24-HR	3B_FIRE	1ST	1E+07
746388.4	4036761	12.03313	0.41639	80.84	80.84	0	24-HR	3B_FIRE	1ST	1E+07
746488.4	4036761	10.38764	0.415	80.43	80.43	0	24-HR	3B_FIRE	1ST	1E+07
746588.4	4036761	9.21551	0.41347	80.02	80.02	0	24-HR	3B_FIRE	1ST	8E+06
749888.4	4036761	1.66048	0.32061	69.1	69.1	0	24-HR	3B_FIRE	1ST	7E+06
749988.4	4036761	1.70211	0.31741	68.81	68.81	0	24-HR	3B_FIRE	1ST	7E+06
750088.4	4036761	1.73703	0.31425	68.66	68.66	0	24-HR	3B_FIRE	1ST	7E+06
750188.4	4036761	1.76467	0.31111	68.58	68.58	0	24-HR	3B_FIRE	1ST	7E+06
750288.4	4036761	1.78446	0.30798	68.5	68.5	0	24-HR	3B_FIRE	1ST	7E+06
752388.4	4036761	1.53719	0.24774	66.14	66.14	0	24-HR	3B_FIRE	1ST	7E+06
752488.4	4036761	1.5391	0.24518	66.04	66.04	0	24-HR	3B_FIRE	1ST	7E+06
752588.4	4036761	1.53961	0.24266	65.94	65.94	0	24-HR	3B_FIRE	1ST	7E+06
752688.4	4036761	1.53991	0.24018	65.93	65.93	0	24-HR	3B_FIRE	1ST	7E+06
752788.4	4036761	1.53815	0.23773	65.85	65.85	0	24-HR	3B_FIRE	1ST	7E+06
752888.4	4036761	1.53623	0.23531	65.85	65.85	0	24-HR	3B_FIRE	1ST	7E+06
752988.4	4036761	1.53303	0.23292	65.83	65.83	0	24-HR	3B_FIRE	1ST	7E+06
753088.4	4036761	1.52842	0.23056	65.77	65.77	0	24-HR	3B_FIRE	1ST	7E+06
753188.4	4036761	1.52294	0.22823	65.71	65.71	0	24-HR	3B_FIRE	1ST	7E+06
753288.4	4036761	1.51678	0.22593	65.66	65.66	0	24-HR	3B_FIRE	1ST	7E+06
753388.4	4036761	1.50958	0.22366	65.58	65.58	0	24-HR	3B_FIRE	1ST	7E+06
753488.4	4036761	1.50194	0.22142	65.52	65.52	0	24-HR	3B_FIRE	1ST	7E+06

753588.4	4036761	1.49328	0.2192	65.42	65.42	0	24-HR	3B_FIRE	1ST	7E+06
753688.4	4036761	1.48441	0.21702	65.35	65.35	0	24-HR	3B_FIRE	1ST	7E+06
753788.4	4036761	1.47495	0.21487	65.27	65.27	0	24-HR	3B_FIRE	1ST	7E+06
753888.4	4036761	1.46536	0.21275	65.22	65.22	0	24-HR	3B_FIRE	1ST	7E+06
753988.4	4036761	1.45518	0.21066	65.15	65.15	0	24-HR	3B_FIRE	1ST	7E+06
754088.4	4036761	1.44445	0.20859	65.06	65.06	0	24-HR	3B_FIRE	1ST	7E+06
754188.4	4036761	1.43352	0.20656	64.98	64.98	0	24-HR	3B_FIRE	1ST	7E+06
754288.4	4036761	1.42222	0.20455	64.89	64.89	0	24-HR	3B_FIRE	1ST	7E+06
754388.4	4036761	1.41087	0.20257	64.82	64.82	0	24-HR	3B_FIRE	1ST	7E+06
754488.4	4036761	1.39931	0.20062	64.75	64.75	0	24-HR	3B_FIRE	1ST	7E+06
754588.4	4036761	1.38722	0.19869	64.64	64.64	0	24-HR	3B_FIRE	1ST	7E+06
754688.4	4036761	1.37499	0.1968	64.53	64.53	0	24-HR	3B_FIRE	1ST	7E+06
754788.4	4036761	1.36281	0.19493	64.44	64.44	0	24-HR	3B_FIRE	1ST	7E+06
754888.4	4036761	1.35094	0.19309	64.4	64.4	0	24-HR	3B_FIRE	1ST	7E+06
754988.4	4036761	1.33873	0.19128	64.33	64.33	0	24-HR	3B_FIRE	1ST	7E+06
755088.4	4036761	1.32645	0.18949	64.26	64.26	0	24-HR	3B_FIRE	1ST	7E+06
755188.4	4036761	1.31428	0.18773	64.21	64.21	0	24-HR	3B_FIRE	1ST	7E+06
755288.4	4036761	1.30183	0.18599	64.13	64.13	0	24-HR	3B_FIRE	1ST	7E+06
745988.4	4036861	7.03757	0.40136	82.43	82.43	0	24-HR	3B_FIRE	1ST	9E+06
746088.4	4036861	7.3926	0.40156	82.03	82.03	0	24-HR	3B_FIRE	1ST	1E+07
746188.4	4036861	9.33251	0.40157	81.61	81.61	0	24-HR	3B_FIRE	1ST	1E+07
746288.4	4036861	10.09949	0.40139	81.2	81.2	0	24-HR	3B_FIRE	1ST	1E+07
746388.4	4036861	8.84448	0.40103	80.78	80.78	0	24-HR	3B_FIRE	1ST	1E+07
746488.4	4036861	7.84154	0.40049	80.37	80.37	0	24-HR	3B_FIRE	1ST	7E+06
746588.4	4036861	8.82944	0.39979	79.97	79.97	0	24-HR	3B_FIRE	1ST	9E+06
747488.4	4036861	1.49484	0.38707	76.49	76.49	0	24-HR	3B_FIRE	1ST	1E+07
747588.4	4036861	1.46491	0.38506	76.13	76.13	0	24-HR	3B_FIRE	1ST	1E+07
747688.4	4036861	1.91572	0.38297	75.8	75.8	0	24-HR	3B_FIRE	1ST	9E+06
747788.4	4036861	1.9757	0.38079	75.49	75.49	0	24-HR	3B_FIRE	1ST	9E+06
747888.4	4036861	1.96264	0.37852	75.12	75.12	0	24-HR	3B_FIRE	1ST	8E+06
747988.4	4036861	2.00013	0.37616	74.77	74.77	0	24-HR	3B_FIRE	1ST	8E+06
748088.4	4036861	1.96572	0.37374	74.45	74.45	0	24-HR	3B_FIRE	1ST	8E+06
748188.4	4036861	2.29801	0.37126	74.14	74.14	0	24-HR	3B_FIRE	1ST	7E+06
749988.4	4036861	1.531	0.31967	68.53	68.53	0	24-HR	3B_FIRE	1ST	8E+06
750088.4	4036861	1.49735	0.31669	68.44	68.44	0	24-HR	3B_FIRE	1ST	8E+06
750188.4	4036861	1.46998	0.3137	68.34	68.34	0	24-HR	3B_FIRE	1ST	7E+06
750288.4	4036861	1.5146	0.31072	68.22	68.22	0	24-HR	3B_FIRE	1ST	7E+06
752388.4	4036861	1.43844	0.25154	65.94	65.94	0	24-HR	3B_FIRE	1ST	7E+06
752488.4	4036861	1.41725	0.24897	65.86	65.86	0	24-HR	3B_FIRE	1ST	7E+06
752588.4	4036861	1.39577	0.24643	65.76	65.76	0	24-HR	3B_FIRE	1ST	7E+06
752688.4	4036861	1.37564	0.24393	65.77	65.77	0	24-HR	3B_FIRE	1ST	7E+06
752788.4	4036861	1.35415	0.24144	65.66	65.66	0	24-HR	3B_FIRE	1ST	7E+06
752888.4	4036861	1.33407	0.239	65.66	65.66	0	24-HR	3B_FIRE	1ST	7E+06
752988.4	4036861	1.31391	0.23658	65.64	65.64	0	24-HR	3B_FIRE	1ST	7E+06
753088.4	4036861	1.2934	0.23418	65.57	65.57	0	24-HR	3B_FIRE	1ST	7E+06
753188.4	4036861	1.27763	0.23181	65.51	65.51	0	24-HR	3B_FIRE	1ST	7E+06
753288.4	4036861	1.28007	0.22947	65.48	65.48	0	24-HR	3B_FIRE	1ST	7E+06
753388.4	4036861	1.28119	0.22716	65.41	65.41	0	24-HR	3B_FIRE	1ST	7E+06
753488.4	4036861	1.28126	0.22487	65.32	65.32	0	24-HR	3B_FIRE	1ST	7E+06
753588.4	4036861	1.28051	0.22261	65.23	65.23	0	24-HR	3B_FIRE	1ST	7E+06
753688.4	4036861	1.27935	0.22039	65.18	65.18	0	24-HR	3B_FIRE	1ST	7E+06
753788.4	4036861	1.27731	0.21818	65.11	65.11	0	24-HR	3B_FIRE	1ST	7E+06
753888.4	4036861	1.27478	0.21601	65.06	65.06	0	24-HR	3B_FIRE	1ST	7E+06
753988.4	4036861	1.27137	0.21387	64.98	64.98	0	24-HR	3B_FIRE	1ST	7E+06
754088.4	4036861	1.26731	0.21175	64.89	64.89	0	24-HR	3B_FIRE	1ST	7E+06
754188.4	4036861	1.26298	0.20966	64.83	64.83	0	24-HR	3B_FIRE	1ST	7E+06
754288.4	4036861	1.25775	0.20759	64.72	64.72	0	24-HR	3B_FIRE	1ST	7E+06
754388.4	4036861	1.25256	0.20556	64.67	64.67	0	24-HR	3B_FIRE	1ST	7E+06
754488.4	4036861	1.24664	0.20355	64.58	64.58	0	24-HR	3B_FIRE	1ST	7E+06
754588.4	4036861	1.24034	0.20157	64.49	64.49	0	24-HR	3B_FIRE	1ST	7E+06
754688.4	4036861	1.23354	0.19961	64.38	64.38	0	24-HR	3B_FIRE	1ST	7E+06
754788.4	4036861	1.22674	0.19768	64.31	64.31	0	24-HR	3B_FIRE	1ST	7E+06
754888.4	4036861	1.21972	0.19578	64.25	64.25	0	24-HR	3B_FIRE	1ST	7E+06
754988.4	4036861	1.21258	0.19391	64.21	64.21	0	24-HR	3B_FIRE	1ST	7E+06
755088.4	4036861	1.2049	0.19206	64.13	64.13	0	24-HR	3B_FIRE	1ST	7E+06
755188.4	4036861	1.19714	0.19024	64.07	64.07	0	24-HR	3B_FIRE	1ST	7E+06
755288.4	4036861	1.18884	0.18844	63.96	63.96	0	24-HR	3B_FIRE	1ST	7E+06

746388.4	4036961	6.83545	0.38283	80.7	80.7	0	24-HR	3B_FIRE	1ST	7E+06
746488.4	4036961	6.89092	0.38314	80.3	80.3	0	24-HR	3B_FIRE	1ST	9E+06
746588.4	4036961	8.20708	0.38327	79.91	79.91	0	24-HR	3B_FIRE	1ST	9E+06
747488.4	4036961	1.70513	0.37727	76.31	76.31	0	24-HR	3B_FIRE	1ST	1E+07
747588.4	4036961	1.25825	0.37594	75.99	75.99	0	24-HR	3B_FIRE	1ST	1E+07
747688.4	4036961	1.5234	0.37449	75.7	75.7	0	24-HR	3B_FIRE	1ST	9E+06
747788.4	4036961	1.92097	0.37294	75.4	75.4	0	24-HR	3B_FIRE	1ST	9E+06
747888.4	4036961	1.88722	0.37125	75	75	0	24-HR	3B_FIRE	1ST	9E+06
747988.4	4036961	1.85045	0.36949	74.68	74.68	0	24-HR	3B_FIRE	1ST	8E+06
748088.4	4036961	1.87527	0.36764	74.4	74.4	0	24-HR	3B_FIRE	1ST	8E+06
748188.4	4036961	1.86042	0.3657	74.08	74.08	0	24-HR	3B_FIRE	1ST	1E+07
749988.4	4036961	1.47095	0.32081	68.42	68.42	0	24-HR	3B_FIRE	1ST	7E+06
750088.4	4036961	1.42192	0.31805	68.33	68.33	0	24-HR	3B_FIRE	1ST	8E+06
750188.4	4036961	1.40799	0.31527	68.23	68.23	0	24-HR	3B_FIRE	1ST	8E+06
750288.4	4036961	1.38867	0.31249	68.1	68.1	0	24-HR	3B_FIRE	1ST	8E+06
752388.4	4036961	1.40893	0.25521	65.76	65.76	0	24-HR	3B_FIRE	1ST	7E+06
752488.4	4036961	1.39224	0.25266	65.69	65.69	0	24-HR	3B_FIRE	1ST	7E+06
752588.4	4036961	1.37474	0.25013	65.6	65.6	0	24-HR	3B_FIRE	1ST	7E+06
752688.4	4036961	1.35703	0.24762	65.53	65.53	0	24-HR	3B_FIRE	1ST	7E+06
752788.4	4036961	1.33839	0.24513	65.41	65.41	0	24-HR	3B_FIRE	1ST	7E+06
754888.4	4036961	1.0744	0.1988	64.22	64.22	0	24-HR	3B_FIRE	1ST	7E+06
754988.4	4036961	1.0711	0.19687	64.06	64.06	0	24-HR	3B_FIRE	1ST	7E+06
755088.4	4036961	1.06636	0.19493	63.73	63.73	0	24-HR	3B_FIRE	1ST	7E+06
755188.4	4036961	1.06188	0.19304	63.49	63.49	0	24-HR	3B_FIRE	1ST	7E+06
755288.4	4036961	1.05673	0.19116	63.19	63.19	0	24-HR	3B_FIRE	1ST	7E+06
746388.4	4037061	5.94329	0.36878	80.63	80.63	0	24-HR	3B_FIRE	1ST	7E+06
746488.4	4037061	6.85016	0.36334	80.24	80.24	0	24-HR	3B_FIRE	1ST	9E+06
746588.4	4037061	7.69296	0.36421	79.84	79.84	0	24-HR	3B_FIRE	1ST	1E+07
747488.4	4037061	1.87291	0.36494	76.14	76.14	0	24-HR	3B_FIRE	1ST	8E+06
747588.4	4037061	1.48576	0.36429	75.85	75.85	0	24-HR	3B_FIRE	1ST	1E+07
747688.4	4037061	1.24115	0.36351	75.56	75.56	0	24-HR	3B_FIRE	1ST	1E+07
747788.4	4037061	1.61669	0.36261	75.27	75.27	0	24-HR	3B_FIRE	1ST	9E+06
747888.4	4037061	1.87099	0.36157	74.92	74.92	0	24-HR	3B_FIRE	1ST	9E+06
747988.4	4037061	1.78561	0.36042	74.56	74.56	0	24-HR	3B_FIRE	1ST	9E+06
748088.4	4037061	1.74126	0.35917	74.28	74.28	0	24-HR	3B_FIRE	1ST	8E+06
748188.4	4037061	1.75352	0.3578	73.92	73.92	0	24-HR	3B_FIRE	1ST	8E+06
749988.4	4037061	1.54859	0.32058	68.33	68.33	0	24-HR	3B_FIRE	1ST	7E+06
750088.4	4037061	1.47995	0.31809	68.2	68.2	0	24-HR	3B_FIRE	1ST	7E+06
750188.4	4037061	1.42348	0.31558	68.09	68.09	0	24-HR	3B_FIRE	1ST	1E+07
750288.4	4037061	1.3825	0.31305	67.97	67.97	0	24-HR	3B_FIRE	1ST	1E+07
752388.4	4037061	1.35774	0.25859	65.61	65.61	0	24-HR	3B_FIRE	1ST	7E+06
752488.4	4037061	1.34741	0.25608	65.53	65.53	0	24-HR	3B_FIRE	1ST	7E+06
752588.4	4037061	1.33614	0.25359	65.47	65.47	0	24-HR	3B_FIRE	1ST	7E+06
752688.4	4037061	1.32348	0.25111	65.38	65.38	0	24-HR	3B_FIRE	1ST	7E+06
752788.4	4037061	1.30972	0.24865	65.27	65.27	0	24-HR	3B_FIRE	1ST	7E+06
754888.4	4037061	0.97718	0.202	63.89	63.89	0	24-HR	3B_FIRE	1ST	7E+06
754988.4	4037061	0.96241	0.20003	63.81	63.81	0	24-HR	3B_FIRE	1ST	7E+06
755088.4	4037061	0.94819	0.19809	63.77	63.77	0	24-HR	3B_FIRE	1ST	7E+06
755188.4	4037061	0.93404	0.19617	63.7	63.7	0	24-HR	3B_FIRE	1ST	7E+06
755288.4	4037061	0.92383	0.19428	63.63	63.63	0	24-HR	3B_FIRE	1ST	7E+06
746388.4	4037161	5.63996	0.37704	80.59	80.59	0	24-HR	3B_FIRE	1ST	9E+06
746488.4	4037161	6.23235	0.37157	80.19	80.19	0	24-HR	3B_FIRE	1ST	9E+06
746588.4	4037161	7.15693	0.36616	79.78	79.78	0	24-HR	3B_FIRE	1ST	1E+07
747488.4	4037161	1.99137	0.35023	75.97	75.97	0	24-HR	3B_FIRE	1ST	9E+06
747588.4	4037161	1.60693	0.35026	75.67	75.67	0	24-HR	3B_FIRE	1ST	1E+07
747688.4	4037161	1.17498	0.35016	75.37	75.37	0	24-HR	3B_FIRE	1ST	1E+07
747788.4	4037161	1.21774	0.34991	75.07	75.07	0	24-HR	3B_FIRE	1ST	1E+07
747888.4	4037161	1.64038	0.34952	74.72	74.72	0	24-HR	3B_FIRE	1ST	9E+06
747988.4	4037161	1.79137	0.34901	74.4	74.4	0	24-HR	3B_FIRE	1ST	9E+06
748088.4	4037161	1.67552	0.34837	74.04	74.04	0	24-HR	3B_FIRE	1ST	9E+06
748188.4	4037161	1.6314	0.34761	73.68	73.68	0	24-HR	3B_FIRE	1ST	8E+06
749988.4	4037161	1.61872	0.31882	68.2	68.2	0	24-HR	3B_FIRE	1ST	7E+06
750088.4	4037161	1.55463	0.31666	68.08	68.08	0	24-HR	3B_FIRE	1ST	7E+06
750188.4	4037161	1.48912	0.31446	67.98	67.98	0	24-HR	3B_FIRE	1ST	7E+06
750288.4	4037161	1.42432	0.31223	67.86	67.86	0	24-HR	3B_FIRE	1ST	7E+06
752388.4	4037161	1.27892	0.26148	65.46	65.46	0	24-HR	3B_FIRE	1ST	7E+06
752488.4	4037161	1.27687	0.25905	65.39	65.39	0	24-HR	3B_FIRE	1ST	7E+06

752588.4	4037161	1.27272	0.25663	65.29	65.29	0	24-HR	3B_FIRE	1ST	7E+06
752688.4	4037161	1.2671	0.25421	65.2	65.2	0	24-HR	3B_FIRE	1ST	7E+06
752788.4	4037161	1.25983	0.25181	65.09	65.09	0	24-HR	3B_FIRE	1ST	7E+06
754888.4	4037161	0.98001	0.20534	63.75	63.75	0	24-HR	3B_FIRE	1ST	7E+06
754988.4	4037161	0.96572	0.20334	63.7	63.7	0	24-HR	3B_FIRE	1ST	7E+06
755088.4	4037161	0.95154	0.20137	63.64	63.64	0	24-HR	3B_FIRE	1ST	7E+06
755188.4	4037161	0.9375	0.19942	63.57	63.57	0	24-HR	3B_FIRE	1ST	7E+06
755288.4	4037161	0.92368	0.19749	63.5	63.5	0	24-HR	3B_FIRE	1ST	7E+06
746388.4	4037261	5.42062	0.38505	80.54	80.54	0	24-HR	3B_FIRE	1ST	9E+06
746488.4	4037261	6.23993	0.37959	80.13	80.13	0	24-HR	3B_FIRE	1ST	1E+07
746588.4	4037261	6.27259	0.37419	79.73	79.73	0	24-HR	3B_FIRE	1ST	1E+07
747488.4	4037261	2.07159	0.33342	75.8	75.8	0	24-HR	3B_FIRE	1ST	9E+06
747588.4	4037261	1.59194	0.33411	75.48	75.48	0	24-HR	3B_FIRE	1ST	1E+07
747688.4	4037261	1.37515	0.33466	75.21	75.21	0	24-HR	3B_FIRE	1ST	1E+07
747788.4	4037261	1.04689	0.33506	74.9	74.9	0	24-HR	3B_FIRE	1ST	1E+07
747888.4	4037261	1.30417	0.33531	74.55	74.55	0	24-HR	3B_FIRE	1ST	9E+06
747988.4	4037261	1.62071	0.33542	74.17	74.17	0	24-HR	3B_FIRE	1ST	9E+06
748088.4	4037261	1.69629	0.3354	73.81	73.81	0	24-HR	3B_FIRE	1ST	9E+06
748188.4	4037261	1.56662	0.33526	73.5	73.5	0	24-HR	3B_FIRE	1ST	9E+06
749988.4	4037261	1.63629	0.3154	68.06	68.06	0	24-HR	3B_FIRE	1ST	7E+06
750088.4	4037261	1.59465	0.31361	67.95	67.95	0	24-HR	3B_FIRE	1ST	7E+06
750188.4	4037261	1.54433	0.31177	67.85	67.85	0	24-HR	3B_FIRE	1ST	7E+06
750288.4	4037261	1.48824	0.30988	67.73	67.73	0	24-HR	3B_FIRE	1ST	7E+06
752388.4	4037261	1.17151	0.26371	65.3	65.3	0	24-HR	3B_FIRE	1ST	7E+06
752488.4	4037261	1.1781	0.26139	65.2	65.2	0	24-HR	3B_FIRE	1ST	7E+06
752588.4	4037261	1.1826	0.25908	65.11	65.11	0	24-HR	3B_FIRE	1ST	7E+06
752688.4	4037261	1.18518	0.25677	65.03	65.03	0	24-HR	3B_FIRE	1ST	7E+06
752788.4	4037261	1.18558	0.25445	64.92	64.92	0	24-HR	3B_FIRE	1ST	7E+06
754888.4	4037261	0.98089	0.20867	63.64	63.64	0	24-HR	3B_FIRE	1ST	7E+06
754988.4	4037261	0.96729	0.20667	63.57	63.57	0	24-HR	3B_FIRE	1ST	7E+06
755088.4	4037261	0.95382	0.20468	63.51	63.51	0	24-HR	3B_FIRE	1ST	7E+06
755188.4	4037261	0.94037	0.20272	63.44	63.44	0	24-HR	3B_FIRE	1ST	7E+06
755288.4	4037261	0.92689	0.20077	63.35	63.35	0	24-HR	3B_FIRE	1ST	7E+06
746388.4	4037361	5.20083	0.39256	80.48	80.48	0	24-HR	3B_FIRE	1ST	1E+07
746488.4	4037361	5.84868	0.38719	80.08	80.08	0	24-HR	3B_FIRE	1ST	1E+07
746588.4	4037361	5.32102	0.38185	79.7	79.7	0	24-HR	3B_FIRE	1ST	1E+07
747488.4	4037361	2.05355	0.33597	75.7	75.7	0	24-HR	3B_FIRE	1ST	9E+06
747588.4	4037361	1.68852	0.33117	75.34	75.34	0	24-HR	3B_FIRE	1ST	9E+06
747688.4	4037361	1.46613	0.32644	75.03	75.03	0	24-HR	3B_FIRE	1ST	1E+07
747788.4	4037361	1.10703	0.32179	74.72	74.72	0	24-HR	3B_FIRE	1ST	1E+07
747888.4	4037361	1.00926	0.31917	74.36	74.36	0	24-HR	3B_FIRE	1ST	1E+07
747988.4	4037361	1.34459	0.31989	73.98	73.98	0	24-HR	3B_FIRE	1ST	9E+06
748088.4	4037361	1.57394	0.32047	73.6	73.6	0	24-HR	3B_FIRE	1ST	9E+06
748188.4	4037361	1.59896	0.32092	73.27	73.27	0	24-HR	3B_FIRE	1ST	9E+06
749888.4	4037361	1.72632	0.31163	68.3	68.3	0	24-HR	3B_FIRE	1ST	9E+06
749988.4	4037361	1.66497	0.31027	67.95	67.95	0	24-HR	3B_FIRE	1ST	9E+06
750088.4	4037361	1.59927	0.30888	67.84	67.84	0	24-HR	3B_FIRE	1ST	9E+06
750188.4	4037361	1.54708	0.30743	67.74	67.74	0	24-HR	3B_FIRE	1ST	7E+06
750288.4	4037361	1.51391	0.30593	67.64	67.64	0	24-HR	3B_FIRE	1ST	7E+06
752388.4	4037361	1.0403	0.26514	65.17	65.17	0	24-HR	3B_FIRE	1ST	7E+06
752488.4	4037361	1.05507	0.26296	65.03	65.03	0	24-HR	3B_FIRE	1ST	7E+06
752588.4	4037361	1.06806	0.26079	64.95	64.95	0	24-HR	3B_FIRE	1ST	7E+06
752688.4	4037361	1.07863	0.25861	64.85	64.85	0	24-HR	3B_FIRE	1ST	7E+06
752788.4	4037361	1.08727	0.25643	64.77	64.77	0	24-HR	3B_FIRE	1ST	7E+06
754888.4	4037361	0.97609	0.21189	63.52	63.52	0	24-HR	3B_FIRE	1ST	7E+06
754988.4	4037361	0.96402	0.20989	63.45	63.45	0	24-HR	3B_FIRE	1ST	7E+06
755088.4	4037361	0.95178	0.20791	63.37	63.37	0	24-HR	3B_FIRE	1ST	7E+06
755188.4	4037361	0.93941	0.20594	63.28	63.28	0	24-HR	3B_FIRE	1ST	7E+06
755288.4	4037361	0.92686	0.20399	63.17	63.17	0	24-HR	3B_FIRE	1ST	7E+06
746388.4	4037461	5.16615	0.39937	80.5	80.5	0	24-HR	3B_FIRE	1ST	1E+07
746488.4	4037461	5.23544	0.39415	80.15	80.15	0	24-HR	3B_FIRE	1ST	1E+07
746588.4	4037461	4.44793	0.38893	79.71	79.71	0	24-HR	3B_FIRE	1ST	1E+07
747488.4	4037461	1.98171	0.34344	75.6	75.6	0	24-HR	3B_FIRE	1ST	1E+07
747588.4	4037461	1.80021	0.33862	75.16	75.16	0	24-HR	3B_FIRE	1ST	9E+06
747688.4	4037461	1.45737	0.33386	74.78	74.78	0	24-HR	3B_FIRE	1ST	1E+07
747788.4	4037461	1.25463	0.32916	74.46	74.46	0	24-HR	3B_FIRE	1ST	1E+07
747888.4	4037461	0.90131	0.32451	74.1	74.1	0	24-HR	3B_FIRE	1ST	1E+07

747988.4	4037461	1.04054	0.31993	73.73	73.73	0	24-HR	3B_FIRE	1ST	9E+06
748088.4	4037461	1.35064	0.31541	73.38	73.38	0	24-HR	3B_FIRE	1ST	9E+06
748188.4	4037461	1.5125	0.31096	73.05	73.05	0	24-HR	3B_FIRE	1ST	9E+06
749888.4	4037461	1.72521	0.30434	68.18	68.18	0	24-HR	3B_FIRE	1ST	9E+06
749988.4	4037461	1.69257	0.30341	67.83	67.83	0	24-HR	3B_FIRE	1ST	9E+06
750088.4	4037461	1.65388	0.30246	67.73	67.73	0	24-HR	3B_FIRE	1ST	9E+06
750188.4	4037461	1.60562	0.30142	67.63	67.63	0	24-HR	3B_FIRE	1ST	9E+06
750288.4	4037461	1.54886	0.30032	67.51	67.51	0	24-HR	3B_FIRE	1ST	9E+06
752388.4	4037461	0.94899	0.26562	65.03	65.03	0	24-HR	3B_FIRE	1ST	1E+07
752488.4	4037461	0.94271	0.26363	64.91	64.91	0	24-HR	3B_FIRE	1ST	1E+07
752588.4	4037461	0.93573	0.26163	64.81	64.81	0	24-HR	3B_FIRE	1ST	1E+07
752688.4	4037461	0.95319	0.25962	64.72	64.72	0	24-HR	3B_FIRE	1ST	7E+06
752788.4	4037461	0.96905	0.2576	64.64	64.64	0	24-HR	3B_FIRE	1ST	7E+06
754888.4	4037461	0.96221	0.21487	63.37	63.37	0	24-HR	3B_FIRE	1ST	7E+06
754988.4	4037461	0.95229	0.2129	63.28	63.28	0	24-HR	3B_FIRE	1ST	7E+06
755088.4	4037461	0.94235	0.21095	63.23	63.23	0	24-HR	3B_FIRE	1ST	7E+06
755188.4	4037461	0.93195	0.209	63.15	63.15	0	24-HR	3B_FIRE	1ST	7E+06
755288.4	4037461	0.92127	0.20707	63.06	63.06	0	24-HR	3B_FIRE	1ST	7E+06
746388.4	4037561	4.87506	0.40527	80.28	80.28	0	24-HR	3B_FIRE	1ST	1E+07
746488.4	4037561	4.56861	0.40025	79.87	79.87	0	24-HR	3B_FIRE	1ST	1E+07
746588.4	4037561	3.71776	0.39522	79.5	79.5	0	24-HR	3B_FIRE	1ST	1E+07
747488.4	4037561	1.9374	0.35062	75.37	75.37	0	24-HR	3B_FIRE	1ST	1E+07
747588.4	4037561	1.84064	0.34583	75.02	75.02	0	24-HR	3B_FIRE	1ST	9E+06
747688.4	4037561	1.41229	0.34108	74.66	74.66	0	24-HR	3B_FIRE	1ST	9E+06
747788.4	4037561	1.32608	0.33637	74.28	74.28	0	24-HR	3B_FIRE	1ST	1E+07
747888.4	4037561	1.02434	0.33172	73.9	73.9	0	24-HR	3B_FIRE	1ST	1E+07
747988.4	4037561	0.9126	0.32712	73.53	73.53	0	24-HR	3B_FIRE	1ST	1E+07
748088.4	4037561	1.08772	0.32256	73.16	73.16	0	24-HR	3B_FIRE	1ST	9E+06
748188.4	4037561	1.33559	0.31808	72.89	72.89	0	24-HR	3B_FIRE	1ST	9E+06
749888.4	4037561	1.66552	0.29537	68.15	68.15	0	24-HR	3B_FIRE	1ST	9E+06
749988.4	4037561	1.66011	0.29489	67.76	67.76	0	24-HR	3B_FIRE	1ST	9E+06
750088.4	4037561	1.64652	0.29437	67.63	67.63	0	24-HR	3B_FIRE	1ST	9E+06
750188.4	4037561	1.62219	0.29376	67.51	67.51	0	24-HR	3B_FIRE	1ST	9E+06
750288.4	4037561	1.58889	0.29308	67.41	67.41	0	24-HR	3B_FIRE	1ST	9E+06
752388.4	4037561	0.93823	0.26505	64.88	64.88	0	24-HR	3B_FIRE	1ST	1E+07
752488.4	4037561	0.93449	0.26327	64.78	64.78	0	24-HR	3B_FIRE	1ST	1E+07
752588.4	4037561	0.92966	0.26148	64.69	64.69	0	24-HR	3B_FIRE	1ST	1E+07
752688.4	4037561	0.92364	0.25966	64.58	64.58	0	24-HR	3B_FIRE	1ST	1E+07
752788.4	4037561	0.91701	0.25783	64.51	64.51	0	24-HR	3B_FIRE	1ST	1E+07
754888.4	4037561	0.93696	0.2175	63.22	63.22	0	24-HR	3B_FIRE	1ST	7E+06
754988.4	4037561	0.93015	0.21558	63.15	63.15	0	24-HR	3B_FIRE	1ST	7E+06
755088.4	4037561	0.92283	0.21368	63.08	63.08	0	24-HR	3B_FIRE	1ST	7E+06
755188.4	4037561	0.91507	0.21178	63.01	63.01	0	24-HR	3B_FIRE	1ST	7E+06
755288.4	4037561	0.90684	0.20989	62.93	62.93	0	24-HR	3B_FIRE	1ST	7E+06
746388.4	4037661	4.43762	0.41011	80.15	80.15	0	24-HR	3B_FIRE	1ST	1E+07
746488.4	4037661	3.92625	0.40535	79.77	79.77	0	24-HR	3B_FIRE	1ST	1E+07
746588.4	4037661	3.34162	0.40058	79.46	79.46	0	24-HR	3B_FIRE	1ST	9E+06
747488.4	4037661	1.87703	0.35735	75.26	75.26	0	24-HR	3B_FIRE	1ST	1E+07
747588.4	4037661	1.8191	0.35263	74.91	74.91	0	24-HR	3B_FIRE	1ST	9E+06
747688.4	4037661	1.53133	0.34794	74.53	74.53	0	24-HR	3B_FIRE	1ST	9E+06
747788.4	4037661	1.32763	0.34328	74.16	74.16	0	24-HR	3B_FIRE	1ST	1E+07
747888.4	4037661	1.14155	0.33866	73.8	73.8	0	24-HR	3B_FIRE	1ST	1E+07
747988.4	4037661	0.84655	0.33407	73.43	73.43	0	24-HR	3B_FIRE	1ST	1E+07
748088.4	4037661	0.93373	0.32953	73.08	73.08	0	24-HR	3B_FIRE	1ST	1E+07
748188.4	4037661	1.11337	0.32504	72.8	72.8	0	24-HR	3B_FIRE	1ST	9E+06
749888.4	4037661	1.54887	0.28479	67.82	67.82	0	24-HR	3B_FIRE	1ST	9E+06
749988.4	4037661	1.57618	0.28478	67.59	67.59	0	24-HR	3B_FIRE	1ST	9E+06
750088.4	4037661	1.58852	0.2847	67.47	67.47	0	24-HR	3B_FIRE	1ST	9E+06
750188.4	4037661	1.58782	0.28453	67.38	67.38	0	24-HR	3B_FIRE	1ST	9E+06
750288.4	4037661	1.57672	0.28428	67.32	67.32	0	24-HR	3B_FIRE	1ST	9E+06
752388.4	4037661	0.9212	0.26333	64.73	64.73	0	24-HR	3B_FIRE	1ST	1E+07
752488.4	4037661	0.92067	0.2618	64.63	64.63	0	24-HR	3B_FIRE	1ST	1E+07
752588.4	4037661	0.91889	0.26024	64.56	64.56	0	24-HR	3B_FIRE	1ST	1E+07
752688.4	4037661	0.91568	0.25866	64.48	64.48	0	24-HR	3B_FIRE	1ST	1E+07
752788.4	4037661	0.91096	0.25704	64.36	64.36	0	24-HR	3B_FIRE	1ST	1E+07
754888.4	4037661	0.89892	0.21967	63.07	63.07	0	24-HR	3B_FIRE	1ST	7E+06
754988.4	4037661	0.89566	0.21783	63.01	63.01	0	24-HR	3B_FIRE	1ST	7E+06

755088.4	4037661	0.89165	0.21599	62.94	62.94	0	24-HR	3B_FIRE	1ST	7E+06
755188.4	4037661	0.88707	0.21416	62.88	62.88	0	24-HR	3B_FIRE	1ST	7E+06
755288.4	4037661	0.88191	0.21233	62.82	62.82	0	24-HR	3B_FIRE	1ST	7E+06
746388.4	4037761	3.94687	0.41373	80.02	80.02	0	24-HR	3B_FIRE	1ST	1E+07
746488.4	4037761	3.35674	0.40931	79.64	79.64	0	24-HR	3B_FIRE	1ST	1E+07
746588.4	4037761	3.31182	0.40483	79.25	79.25	0	24-HR	3B_FIRE	1ST	9E+06
746688.4	4037761	3.23668	0.40031	78.78	78.78	0	24-HR	3B_FIRE	1ST	9E+06
746788.4	4037761	2.48941	0.39576	78.39	78.39	0	24-HR	3B_FIRE	1ST	1E+07
746888.4	4037761	2.5085	0.39118	77.98	77.98	0	24-HR	3B_FIRE	1ST	1E+07
746988.4	4037761	2.12766	0.38659	77.6	77.6	0	24-HR	3B_FIRE	1ST	1E+07
747488.4	4037761	1.81253	0.36346	75.14	75.14	0	24-HR	3B_FIRE	1ST	1E+07
747588.4	4037761	1.74856	0.35886	74.77	74.77	0	24-HR	3B_FIRE	1ST	9E+06
747688.4	4037761	1.60156	0.35427	74.41	74.41	0	24-HR	3B_FIRE	1ST	9E+06
747788.4	4037761	1.27359	0.3497	74.03	74.03	0	24-HR	3B_FIRE	1ST	1E+07
747888.4	4037761	1.20079	0.34516	73.65	73.65	0	24-HR	3B_FIRE	1ST	1E+07
747988.4	4037761	0.94593	0.34064	73.32	73.32	0	24-HR	3B_FIRE	1ST	1E+07
748088.4	4037761	0.86035	0.33616	72.97	72.97	0	24-HR	3B_FIRE	1ST	1E+07
748188.4	4037761	0.9333	0.33171	72.73	72.73	0	24-HR	3B_FIRE	1ST	1E+07
749888.4	4037761	1.39127	0.27284	67.71	67.71	0	24-HR	3B_FIRE	1ST	9E+06
749988.4	4037761	1.44943	0.27326	67.48	67.48	0	24-HR	3B_FIRE	1ST	9E+06
750088.4	4037761	1.49004	0.2736	67.39	67.39	0	24-HR	3B_FIRE	1ST	9E+06
750188.4	4037761	1.51255	0.27385	67.24	67.24	0	24-HR	3B_FIRE	1ST	9E+06
750288.4	4037761	1.52284	0.27402	67.19	67.19	0	24-HR	3B_FIRE	1ST	9E+06
752388.4	4037761	0.93551	0.26041	64.56	64.56	0	24-HR	3B_FIRE	1ST	1E+07
752488.4	4037761	0.91551	0.25915	64.48	64.48	0	24-HR	3B_FIRE	1ST	1E+07
752588.4	4037761	0.90083	0.25786	64.42	64.42	0	24-HR	3B_FIRE	1ST	1E+07
752688.4	4037761	0.90113	0.25653	64.37	64.37	0	24-HR	3B_FIRE	1ST	1E+07
752788.4	4037761	0.89979	0.25516	64.3	64.3	0	24-HR	3B_FIRE	1ST	1E+07
754888.4	4037761	0.84823	0.22127	62.95	62.95	0	24-HR	3B_FIRE	1ST	7E+06
754988.4	4037761	0.84847	0.21953	62.85	62.85	0	24-HR	3B_FIRE	1ST	7E+06
755088.4	4037761	0.84831	0.21779	62.82	62.82	0	24-HR	3B_FIRE	1ST	7E+06
755188.4	4037761	0.84713	0.21604	62.75	62.75	0	24-HR	3B_FIRE	1ST	7E+06
755288.4	4037761	0.84521	0.2143	62.68	62.68	0	24-HR	3B_FIRE	1ST	7E+06
746388.4	4037861	3.46283	0.41603	79.89	79.89	0	24-HR	3B_FIRE	1ST	1E+07
746488.4	4037861	2.8707	0.41199	79.52	79.52	0	24-HR	3B_FIRE	1ST	1E+07
746588.4	4037861	3.19804	0.40788	79.33	79.33	0	24-HR	3B_FIRE	1ST	9E+06
746688.4	4037861	2.9618	0.40368	78.58	78.58	0	24-HR	3B_FIRE	1ST	9E+06
746788.4	4037861	2.44929	0.39945	78.19	78.19	0	24-HR	3B_FIRE	1ST	1E+07
746888.4	4037861	2.36814	0.39517	77.8	77.8	0	24-HR	3B_FIRE	1ST	1E+07
746988.4	4037861	2.00064	0.39084	77.41	77.41	0	24-HR	3B_FIRE	1ST	1E+07
747088.4	4037861	1.81271	0.38649	77	77	0	24-HR	3B_FIRE	1ST	1E+07
747188.4	4037861	2.04075	0.3821	76.59	76.59	0	24-HR	3B_FIRE	1ST	1E+07
747288.4	4037861	1.99752	0.37769	76.16	76.16	0	24-HR	3B_FIRE	1ST	1E+07
747388.4	4037861	1.83912	0.37327	75.74	75.74	0	24-HR	3B_FIRE	1ST	1E+07
747488.4	4037861	1.73748	0.36882	75	75	0	24-HR	3B_FIRE	1ST	1E+07
747588.4	4037861	1.68849	0.36438	74.64	74.64	0	24-HR	3B_FIRE	1ST	1E+07
747688.4	4037861	1.62344	0.35995	74.28	74.28	0	24-HR	3B_FIRE	1ST	9E+06
747788.4	4037861	1.2941	0.35552	73.91	73.91	0	24-HR	3B_FIRE	1ST	9E+06
747888.4	4037861	1.2073	0.35109	73.54	73.54	0	24-HR	3B_FIRE	1ST	1E+07
747988.4	4037861	1.03955	0.34669	73.21	73.21	0	24-HR	3B_FIRE	1ST	1E+07
748088.4	4037861	0.81047	0.34229	72.87	72.87	0	24-HR	3B_FIRE	1ST	8E+06
748188.4	4037861	0.88603	0.33793	72.65	72.65	0	24-HR	3B_FIRE	1ST	1E+07
749888.4	4037861	1.20583	0.26911	67.64	67.64	0	24-HR	3B_FIRE	1ST	8E+06
749988.4	4037861	1.28663	0.26549	67.52	67.52	0	24-HR	3B_FIRE	1ST	9E+06
750088.4	4037861	1.35351	0.26192	67.34	67.34	0	24-HR	3B_FIRE	1ST	9E+06
750188.4	4037861	1.40129	0.26189	67.13	67.13	0	24-HR	3B_FIRE	1ST	9E+06
750288.4	4037861	1.43363	0.26245	67.01	67.01	0	24-HR	3B_FIRE	1ST	9E+06
752388.4	4037861	0.9262	0.25629	64.49	64.49	0	24-HR	3B_FIRE	1ST	1E+07
752488.4	4037861	0.9163	0.25531	64.39	64.39	0	24-HR	3B_FIRE	1ST	1E+07
752588.4	4037861	0.90341	0.25429	64.3	64.3	0	24-HR	3B_FIRE	1ST	1E+07
752688.4	4037861	0.88804	0.25324	64.24	64.24	0	24-HR	3B_FIRE	1ST	1E+07
752788.4	4037861	0.88	0.25213	64.12	64.12	0	24-HR	3B_FIRE	1ST	1E+07
754888.4	4037861	0.7856	0.22222	62.77	62.77	0	24-HR	3B_FIRE	1ST	7E+06
754988.4	4037861	0.78979	0.2206	62.71	62.71	0	24-HR	3B_FIRE	1ST	7E+06
755088.4	4037861	0.79303	0.21897	62.64	62.64	0	24-HR	3B_FIRE	1ST	7E+06
755188.4	4037861	0.79556	0.21734	62.6	62.6	0	24-HR	3B_FIRE	1ST	7E+06
755288.4	4037861	0.79738	0.2157	62.58	62.58	0	24-HR	3B_FIRE	1ST	7E+06

746388.4	4037961	3.01741	0.41691	79.78	79.78	0	24-HR	3B_FIRE	1ST	1E+07
746488.4	4037961	2.85939	0.41329	79.38	79.38	0	24-HR	3B_FIRE	1ST	9E+06
746588.4	4037961	3.03524	0.40961	79.43	79.43	0	24-HR	3B_FIRE	1ST	9E+06
746688.4	4037961	2.68443	0.40578	78.34	78.34	0	24-HR	3B_FIRE	1ST	9E+06
746788.4	4037961	2.38719	0.40191	78	78	0	24-HR	3B_FIRE	1ST	1E+07
746888.4	4037961	2.22952	0.39797	77.6	77.6	0	24-HR	3B_FIRE	1ST	1E+07
746988.4	4037961	1.88235	0.39398	77.19	77.19	0	24-HR	3B_FIRE	1ST	1E+07
747088.4	4037961	1.73062	0.38992	76.76	76.76	0	24-HR	3B_FIRE	1ST	1E+07
747188.4	4037961	1.98371	0.38582	76.35	76.35	0	24-HR	3B_FIRE	1ST	1E+07
747288.4	4037961	1.94605	0.38168	75.89	75.89	0	24-HR	3B_FIRE	1ST	1E+07
747388.4	4037961	1.78466	0.37751	75.46	75.46	0	24-HR	3B_FIRE	1ST	1E+07
747488.4	4037961	1.66693	0.37329	74.83	74.83	0	24-HR	3B_FIRE	1ST	1E+07
747588.4	4037961	1.63042	0.36907	74.49	74.49	0	24-HR	3B_FIRE	1ST	1E+07
747688.4	4037961	1.6038	0.36484	74.15	74.15	0	24-HR	3B_FIRE	1ST	9E+06
747788.4	4037961	1.37557	0.36059	73.82	73.82	0	24-HR	3B_FIRE	1ST	9E+06
747888.4	4037961	1.17063	0.35633	73.46	73.46	0	24-HR	3B_FIRE	1ST	1E+07
747988.4	4037961	1.09022	0.35207	73.1	73.1	0	24-HR	3B_FIRE	1ST	1E+07
748088.4	4037961	0.87169	0.34782	72.75	72.75	0	24-HR	3B_FIRE	1ST	1E+07
748188.4	4037961	0.80657	0.34358	72.55	72.55	0	24-HR	3B_FIRE	1ST	1E+07
749888.4	4037961	1.13285	0.27523	67.53	67.53	0	24-HR	3B_FIRE	1ST	1E+07
749988.4	4037961	1.16034	0.27157	67.39	67.39	0	24-HR	3B_FIRE	1ST	8E+06
750088.4	4037961	1.18386	0.26795	67.18	67.18	0	24-HR	3B_FIRE	1ST	9E+06
750188.4	4037961	1.25549	0.26437	66.94	66.94	0	24-HR	3B_FIRE	1ST	9E+06
750288.4	4037961	1.31212	0.26085	66.83	66.83	0	24-HR	3B_FIRE	1ST	9E+06
752388.4	4037961	0.88627	0.25095	64.36	64.36	0	24-HR	3B_FIRE	1ST	7E+06
752488.4	4037961	0.88658	0.25028	64.28	64.28	0	24-HR	3B_FIRE	1ST	1E+07
752588.4	4037961	0.88368	0.24955	64.17	64.17	0	24-HR	3B_FIRE	1ST	1E+07
752688.4	4037961	0.87799	0.24877	64.12	64.12	0	24-HR	3B_FIRE	1ST	1E+07
752788.4	4037961	0.86871	0.24794	63.99	63.99	0	24-HR	3B_FIRE	1ST	1E+07
754888.4	4037961	0.73583	0.22243	62.64	62.64	0	24-HR	3B_FIRE	1ST	1E+07
754988.4	4037961	0.72564	0.22095	62.55	62.55	0	24-HR	3B_FIRE	1ST	1E+07
755088.4	4037961	0.72828	0.21946	62.51	62.51	0	24-HR	3B_FIRE	1ST	7E+06
755188.4	4037961	0.73406	0.21796	62.45	62.45	0	24-HR	3B_FIRE	1ST	7E+06
755288.4	4037961	0.73918	0.21645	62.43	62.43	0	24-HR	3B_FIRE	1ST	7E+06
747888.4	4038061	1.15384	0.36076	73.39	73.39	0	24-HR	3B_FIRE	1ST	7E+06
747988.4	4038061	1.10066	0.35669	73.04	73.04	0	24-HR	3B_FIRE	1ST	1E+07
748088.4	4038061	0.94932	0.35262	72.71	72.71	0	24-HR	3B_FIRE	1ST	1E+07
748188.4	4038061	0.77667	0.34854	72.48	72.48	0	24-HR	3B_FIRE	1ST	8E+06
749888.4	4038061	1.22258	0.28124	67.53	67.53	0	24-HR	3B_FIRE	1ST	1E+07
749988.4	4038061	1.13892	0.27756	67.37	67.37	0	24-HR	3B_FIRE	1ST	1E+07
750088.4	4038061	1.10884	0.27391	67.11	67.11	0	24-HR	3B_FIRE	1ST	8E+06
750188.4	4038061	1.1362	0.27031	66.89	66.89	0	24-HR	3B_FIRE	1ST	8E+06
750288.4	4038061	1.16248	0.26675	66.66	66.66	0	24-HR	3B_FIRE	1ST	9E+06
750388.4	4038061	1.22421	0.26323	66.51	66.51	0	24-HR	3B_FIRE	1ST	9E+06
750488.4	4038061	1.27164	0.25977	66.41	66.41	0	24-HR	3B_FIRE	1ST	9E+06
750588.4	4038061	1.3048	0.25635	66.28	66.28	0	24-HR	3B_FIRE	1ST	9E+06
750688.4	4038061	1.32517	0.25297	66.09	66.09	0	24-HR	3B_FIRE	1ST	9E+06
750788.4	4038061	1.33602	0.24964	65.92	65.92	0	24-HR	3B_FIRE	1ST	9E+06
750888.4	4038061	1.33924	0.24636	65.76	65.76	0	24-HR	3B_FIRE	1ST	9E+06
750988.4	4038061	1.33601	0.24312	65.58	65.58	0	24-HR	3B_FIRE	1ST	9E+06
751088.4	4038061	1.32818	0.24329	65.44	65.44	0	24-HR	3B_FIRE	1ST	9E+06
751188.4	4038061	1.31625	0.24381	65.33	65.33	0	24-HR	3B_FIRE	1ST	9E+06
751288.4	4038061	1.29981	0.24425	65.19	65.19	0	24-HR	3B_FIRE	1ST	9E+06
751388.4	4038061	1.2796	0.24462	65.07	65.07	0	24-HR	3B_FIRE	1ST	9E+06
752388.4	4038061	0.91398	0.24444	64.22	64.22	0	24-HR	3B_FIRE	1ST	9E+06
752488.4	4038061	0.88571	0.24407	64.15	64.15	0	24-HR	3B_FIRE	1ST	7E+06
752588.4	4038061	0.85799	0.24364	64.04	64.04	0	24-HR	3B_FIRE	1ST	7E+06
752688.4	4038061	0.84128	0.24317	64	64	0	24-HR	3B_FIRE	1ST	1E+07
754788.4	4038061	0.75165	0.2231	62.35	62.35	0	24-HR	3B_FIRE	1ST	1E+07
754888.4	4038061	0.74346	0.22184	62.49	62.49	0	24-HR	3B_FIRE	1ST	1E+07
754988.4	4038061	0.73406	0.22053	62.45	62.45	0	24-HR	3B_FIRE	1ST	1E+07
755088.4	4038061	0.72439	0.21919	62.38	62.38	0	24-HR	3B_FIRE	1ST	1E+07
755188.4	4038061	0.71465	0.21784	62.31	62.31	0	24-HR	3B_FIRE	1ST	1E+07
755288.4	4038061	0.70504	0.21648	62.27	62.27	0	24-HR	3B_FIRE	1ST	1E+07
747888.4	4038161	1.22975	0.36427	73.32	73.32	0	24-HR	3B_FIRE	1ST	7E+06
747988.4	4038161	1.0765	0.36044	73	73	0	24-HR	3B_FIRE	1ST	1E+07
748088.4	4038161	0.99369	0.35659	72.65	72.65	0	24-HR	3B_FIRE	1ST	1E+07

748188.4	4038161	0.80595	0.35271	72.43	72.43	0	24-HR	3B_FIRE	1ST	1E+07
749888.4	4038161	1.24437	0.28702	67.45	67.45	0	24-HR	3B_FIRE	1ST	1E+07
749988.4	4038161	1.20169	0.28335	67.28	67.28	0	24-HR	3B_FIRE	1ST	1E+07
750088.4	4038161	1.13345	0.2797	67.05	67.05	0	24-HR	3B_FIRE	1ST	1E+07
750188.4	4038161	1.0531	0.2761	66.81	66.81	0	24-HR	3B_FIRE	1ST	8E+06
750288.4	4038161	1.09379	0.27253	66.58	66.58	0	24-HR	3B_FIRE	1ST	8E+06
750388.4	4038161	1.10401	0.26899	66.34	66.34	0	24-HR	3B_FIRE	1ST	8E+06
750488.4	4038161	1.13847	0.2655	66.16	66.16	0	24-HR	3B_FIRE	1ST	9E+06
750588.4	4038161	1.19121	0.26206	66.05	66.05	0	24-HR	3B_FIRE	1ST	9E+06
750688.4	4038161	1.23038	0.25865	65.91	65.91	0	24-HR	3B_FIRE	1ST	9E+06
750788.4	4038161	1.25712	0.25528	65.73	65.73	0	24-HR	3B_FIRE	1ST	9E+06
750888.4	4038161	1.27377	0.25195	65.55	65.55	0	24-HR	3B_FIRE	1ST	9E+06
750988.4	4038161	1.28288	0.24867	65.42	65.42	0	24-HR	3B_FIRE	1ST	9E+06
751088.4	4038161	1.28529	0.24543	65.27	65.27	0	24-HR	3B_FIRE	1ST	9E+06
751188.4	4038161	1.283	0.24224	65.16	65.16	0	24-HR	3B_FIRE	1ST	9E+06
751288.4	4038161	1.27606	0.23909	65.02	65.02	0	24-HR	3B_FIRE	1ST	9E+06
751388.4	4038161	1.26554	0.23598	64.9	64.9	0	24-HR	3B_FIRE	1ST	9E+06
751488.4	4038161	1.2523	0.23448	64.86	64.86	0	24-HR	3B_FIRE	1ST	9E+06
751588.4	4038161	1.23412	0.23501	64.69	64.69	0	24-HR	3B_FIRE	1ST	9E+06
751688.4	4038161	1.21358	0.23548	64.63	64.63	0	24-HR	3B_FIRE	1ST	9E+06
751788.4	4038161	1.18976	0.23589	64.59	64.59	0	24-HR	3B_FIRE	1ST	9E+06
751888.4	4038161	1.16219	0.23622	64.51	64.51	0	24-HR	3B_FIRE	1ST	9E+06
751988.4	4038161	1.13104	0.23647	64.38	64.38	0	24-HR	3B_FIRE	1ST	9E+06
752088.4	4038161	1.09749	0.23666	64.29	64.29	0	24-HR	3B_FIRE	1ST	9E+06
752188.4	4038161	1.06209	0.23679	64.26	64.26	0	24-HR	3B_FIRE	1ST	9E+06
752288.4	4038161	1.02452	0.23685	64.2	64.2	0	24-HR	3B_FIRE	1ST	9E+06
752388.4	4038161	0.98539	0.23685	64.12	64.12	0	24-HR	3B_FIRE	1ST	9E+06
752488.4	4038161	0.94517	0.23678	64.01	64.01	0	24-HR	3B_FIRE	1ST	9E+06
752588.4	4038161	0.90467	0.23664	63.91	63.91	0	24-HR	3B_FIRE	1ST	9E+06
752688.4	4038161	0.86474	0.23646	63.88	63.88	0	24-HR	3B_FIRE	1ST	9E+06
754788.4	4038161	0.75707	0.2215	62.33	62.33	0	24-HR	3B_FIRE	1ST	1E+07
754888.4	4038161	0.74913	0.22041	62.35	62.35	0	24-HR	3B_FIRE	1ST	1E+07
754988.4	4038161	0.74044	0.21927	62.29	62.29	0	24-HR	3B_FIRE	1ST	1E+07
755088.4	4038161	0.73155	0.21812	62.23	62.23	0	24-HR	3B_FIRE	1ST	1E+07
755188.4	4038161	0.72237	0.21693	62.15	62.15	0	24-HR	3B_FIRE	1ST	1E+07
755288.4	4038161	0.71335	0.21573	62.12	62.12	0	24-HR	3B_FIRE	1ST	1E+07
747888.4	4038261	1.27624	0.36679	73.27	73.27	0	24-HR	3B_FIRE	1ST	7E+06
747988.4	4038261	1.10223	0.36323	72.93	72.93	0	24-HR	3B_FIRE	1ST	7E+06
748088.4	4038261	1.00574	0.35963	72.57	72.57	0	24-HR	3B_FIRE	1ST	1E+07
748188.4	4038261	0.87033	0.356	72.33	72.33	0	24-HR	3B_FIRE	1ST	1E+07
749888.4	4038261	1.21917	0.29249	67.42	67.42	0	24-HR	3B_FIRE	1ST	1E+07
749988.4	4038261	1.20711	0.28885	67.18	67.18	0	24-HR	3B_FIRE	1ST	1E+07
750088.4	4038261	1.17505	0.28524	66.97	66.97	0	24-HR	3B_FIRE	1ST	1E+07
750188.4	4038261	1.12051	0.28165	66.72	66.72	0	24-HR	3B_FIRE	1ST	1E+07
750288.4	4038261	1.04548	0.2781	66.51	66.51	0	24-HR	3B_FIRE	1ST	1E+07
750388.4	4038261	1.0462	0.27457	66.21	66.21	0	24-HR	3B_FIRE	1ST	8E+06
750488.4	4038261	1.06937	0.27108	65.97	65.97	0	24-HR	3B_FIRE	1ST	8E+06
750588.4	4038261	1.06762	0.26763	65.84	65.84	0	24-HR	3B_FIRE	1ST	8E+06
750688.4	4038261	1.11338	0.26421	65.74	65.74	0	24-HR	3B_FIRE	1ST	9E+06
750788.4	4038261	1.15717	0.26083	65.55	65.55	0	24-HR	3B_FIRE	1ST	9E+06
750888.4	4038261	1.18981	0.25748	65.4	65.4	0	24-HR	3B_FIRE	1ST	9E+06
750988.4	4038261	1.21257	0.25417	65.28	65.28	0	24-HR	3B_FIRE	1ST	9E+06
751088.4	4038261	1.22636	0.2509	65.12	65.12	0	24-HR	3B_FIRE	1ST	9E+06
751188.4	4038261	1.23367	0.24767	64.99	64.99	0	24-HR	3B_FIRE	1ST	9E+06
751288.4	4038261	1.23547	0.24449	64.85	64.85	0	24-HR	3B_FIRE	1ST	9E+06
751388.4	4038261	1.23295	0.24134	64.71	64.71	0	24-HR	3B_FIRE	1ST	9E+06
751488.4	4038261	1.22828	0.23824	64.71	64.71	0	24-HR	3B_FIRE	1ST	9E+06
751588.4	4038261	1.21843	0.23517	64.53	64.53	0	24-HR	3B_FIRE	1ST	9E+06
751688.4	4038261	1.20701	0.23215	64.5	64.5	0	24-HR	3B_FIRE	1ST	9E+06
751788.4	4038261	1.19234	0.22917	64.46	64.46	0	24-HR	3B_FIRE	1ST	9E+06
751888.4	4038261	1.17402	0.22624	64.37	64.37	0	24-HR	3B_FIRE	1ST	9E+06
751988.4	4038261	1.15208	0.22668	64.23	64.23	0	24-HR	3B_FIRE	1ST	9E+06
752088.4	4038261	1.128	0.22717	64.19	64.19	0	24-HR	3B_FIRE	1ST	9E+06
752188.4	4038261	1.1008	0.2276	64.13	64.13	0	24-HR	3B_FIRE	1ST	9E+06
752288.4	4038261	1.07093	0.22796	64.07	64.07	0	24-HR	3B_FIRE	1ST	9E+06
752388.4	4038261	1.03864	0.22825	64	64	0	24-HR	3B_FIRE	1ST	9E+06
752488.4	4038261	1.0041	0.22847	63.89	63.89	0	24-HR	3B_FIRE	1ST	9E+06

752588.4	4038261	0.96816	0.22863	63.79	63.79	0	24-HR	3B_FIRE	1ST	9E+06
752688.4	4038261	0.93176	0.22874	63.77	63.77	0	24-HR	3B_FIRE	1ST	9E+06
754788.4	4038261	0.75876	0.21902	62.28	62.28	0	24-HR	3B_FIRE	1ST	1E+07
754888.4	4038261	0.75162	0.21811	62.22	62.22	0	24-HR	3B_FIRE	1ST	1E+07
754988.4	4038261	0.74405	0.21716	62.15	62.15	0	24-HR	3B_FIRE	1ST	1E+07
755088.4	4038261	0.73638	0.2162	62.12	62.12	0	24-HR	3B_FIRE	1ST	1E+07
755188.4	4038261	0.72819	0.2152	62.05	62.05	0	24-HR	3B_FIRE	1ST	1E+07
755288.4	4038261	0.71971	0.21417	61.97	61.97	0	24-HR	3B_FIRE	1ST	1E+07
747888.4	4038361	1.29826	0.36824	73.07	73.07	0	24-HR	3B_FIRE	1ST	7E+06
747988.4	4038361	1.16613	0.36499	72.73	72.73	0	24-HR	3B_FIRE	1ST	7E+06
748088.4	4038361	0.98931	0.36169	72.46	72.46	0	24-HR	3B_FIRE	1ST	1E+07
748188.4	4038361	0.90897	0.35833	72.25	72.25	0	24-HR	3B_FIRE	1ST	1E+07
749888.4	4038361	1.16841	0.29757	67.4	67.4	0	24-HR	3B_FIRE	1ST	1E+07
749988.4	4038361	1.17453	0.29399	67.08	67.08	0	24-HR	3B_FIRE	1ST	1E+07
750088.4	4038361	1.16838	0.29043	66.87	66.87	0	24-HR	3B_FIRE	1ST	1E+07
750188.4	4038361	1.14465	0.28689	66.62	66.62	0	24-HR	3B_FIRE	1ST	1E+07
750288.4	4038361	1.10214	0.28338	66.4	66.4	0	24-HR	3B_FIRE	1ST	1E+07
750388.4	4038361	1.03934	0.27988	66.09	66.09	0	24-HR	3B_FIRE	1ST	1E+07
750488.4	4038361	0.996	0.27642	65.89	65.89	0	24-HR	3B_FIRE	1ST	8E+06
750588.4	4038361	1.03079	0.27298	65.67	65.67	0	24-HR	3B_FIRE	1ST	8E+06
750688.4	4038361	1.04096	0.26958	65.53	65.53	0	24-HR	3B_FIRE	1ST	8E+06
750788.4	4038361	1.03761	0.2662	65.38	65.38	0	24-HR	3B_FIRE	1ST	9E+06
750888.4	4038361	1.08623	0.26286	65.25	65.25	0	24-HR	3B_FIRE	1ST	9E+06
750988.4	4038361	1.12379	0.25954	65.11	65.11	0	24-HR	3B_FIRE	1ST	9E+06
751088.4	4038361	1.15124	0.25626	64.97	64.97	0	24-HR	3B_FIRE	1ST	9E+06
751188.4	4038361	1.16993	0.25302	64.83	64.83	0	24-HR	3B_FIRE	1ST	9E+06
751288.4	4038361	1.18142	0.24981	64.69	64.69	0	24-HR	3B_FIRE	1ST	9E+06
751388.4	4038361	1.18688	0.24664	64.52	64.52	0	24-HR	3B_FIRE	1ST	9E+06
751488.4	4038361	1.18957	0.24351	64.52	64.52	0	24-HR	3B_FIRE	1ST	9E+06
751588.4	4038361	1.18747	0.24041	64.41	64.41	0	24-HR	3B_FIRE	1ST	9E+06
751688.4	4038361	1.18298	0.23735	64.37	64.37	0	24-HR	3B_FIRE	1ST	9E+06
751788.4	4038361	1.17556	0.23434	64.32	64.32	0	24-HR	3B_FIRE	1ST	9E+06
751888.4	4038361	1.16519	0.23136	64.25	64.25	0	24-HR	3B_FIRE	1ST	9E+06
751988.4	4038361	1.15131	0.22841	64.1	64.1	0	24-HR	3B_FIRE	1ST	9E+06
752088.4	4038361	1.13564	0.22551	64.06	64.06	0	24-HR	3B_FIRE	1ST	9E+06
752188.4	4038361	1.11691	0.22265	64	64	0	24-HR	3B_FIRE	1ST	9E+06
752288.4	4038361	1.09525	0.21983	63.93	63.93	0	24-HR	3B_FIRE	1ST	9E+06
752388.4	4038361	1.07086	0.21877	63.86	63.86	0	24-HR	3B_FIRE	1ST	9E+06
752488.4	4038361	1.04369	0.21927	63.76	63.76	0	24-HR	3B_FIRE	1ST	9E+06
752588.4	4038361	1.01442	0.21972	63.68	63.68	0	24-HR	3B_FIRE	1ST	9E+06
752688.4	4038361	0.98367	0.22011	63.66	63.66	0	24-HR	3B_FIRE	1ST	9E+06
754788.4	4038361	0.75605	0.21564	62.24	62.24	0	24-HR	3B_FIRE	1ST	1E+07
754888.4	4038361	0.7499	0.21492	62.08	62.08	0	24-HR	3B_FIRE	1ST	1E+07
754988.4	4038361	0.74391	0.21419	62.03	62.03	0	24-HR	3B_FIRE	1ST	1E+07
755088.4	4038361	0.73741	0.21342	61.97	61.97	0	24-HR	3B_FIRE	1ST	1E+07
755188.4	4038361	0.7307	0.21262	61.94	61.94	0	24-HR	3B_FIRE	1ST	1E+07
755288.4	4038361	0.72328	0.21178	61.85	61.85	0	24-HR	3B_FIRE	1ST	1E+07
747888.4	4038461	1.30747	0.36858	73.04	73.04	0	24-HR	3B_FIRE	1ST	7E+06
747988.4	4038461	1.21466	0.36568	72.68	72.68	0	24-HR	3B_FIRE	1ST	7E+06
748088.4	4038461	1.03779	0.36269	72.3	72.3	0	24-HR	3B_FIRE	1ST	7E+06
748188.4	4038461	0.92092	0.35965	72.06	72.06	0	24-HR	3B_FIRE	1ST	1E+07
749888.4	4038461	1.1066	0.30216	67.23	67.23	0	24-HR	3B_FIRE	1ST	1E+07
749988.4	4038461	1.12643	0.29868	67.27	68.93	0	24-HR	3B_FIRE	1ST	1E+07
750088.4	4038461	1.13328	0.2952	66.89	66.89	0	24-HR	3B_FIRE	1ST	1E+07
750188.4	4038461	1.12965	0.29174	66.56	66.56	0	24-HR	3B_FIRE	1ST	1E+07
750288.4	4038461	1.11246	0.28829	66.28	66.28	0	24-HR	3B_FIRE	1ST	1E+07
750388.4	4038461	1.07819	0.28485	65.94	65.94	0	24-HR	3B_FIRE	1ST	1E+07
750488.4	4038461	1.02752	0.28143	65.68	65.68	0	24-HR	3B_FIRE	1ST	1E+07
750588.4	4038461	0.95969	0.27803	65.34	65.34	0	24-HR	3B_FIRE	1ST	1E+07
750688.4	4038461	0.9875	0.27467	65.27	65.27	0	24-HR	3B_FIRE	1ST	8E+06
750788.4	4038461	1.00933	0.27132	65.2	65.2	0	24-HR	3B_FIRE	1ST	8E+06
750888.4	4038461	1.00689	0.26799	64.92	64.92	0	24-HR	3B_FIRE	1ST	8E+06
750988.4	4038461	1.01645	0.2647	64.86	64.86	0	24-HR	3B_FIRE	1ST	9E+06
751088.4	4038461	1.05813	0.26144	64.73	64.73	0	24-HR	3B_FIRE	1ST	9E+06
751188.4	4038461	1.09065	0.2582	64.66	64.66	0	24-HR	3B_FIRE	1ST	9E+06
751288.4	4038461	1.11318	0.25499	64.47	64.47	0	24-HR	3B_FIRE	1ST	9E+06
751388.4	4038461	1.12951	0.25181	64.41	64.41	0	24-HR	3B_FIRE	1ST	9E+06

751888.4	4038461	1.14113	0.23644	64.12	64.12	0	24-HR	3B_FIRE	1ST	9E+06
751988.4	4038461	1.1337	0.23346	63.97	63.97	0	24-HR	3B_FIRE	1ST	9E+06
752088.4	4038461	1.12489	0.23053	63.93	63.93	0	24-HR	3B_FIRE	1ST	9E+06
752188.4	4038461	1.11343	0.22763	63.87	63.87	0	24-HR	3B_FIRE	1ST	9E+06
752288.4	4038461	1.09952	0.22477	63.82	63.82	0	24-HR	3B_FIRE	1ST	9E+06
752388.4	4038461	1.08266	0.22194	63.73	63.73	0	24-HR	3B_FIRE	1ST	9E+06
752488.4	4038461	1.06311	0.21915	63.63	63.63	0	24-HR	3B_FIRE	1ST	9E+06
752588.4	4038461	1.04135	0.2164	63.57	63.57	0	24-HR	3B_FIRE	1ST	9E+06
752688.4	4038461	1.01726	0.21369	63.52	63.52	0	24-HR	3B_FIRE	1ST	9E+06
754788.4	4038461	0.74771	0.21137	62.11	62.11	0	24-HR	3B_FIRE	1ST	1E+07
754888.4	4038461	0.74335	0.21087	61.94	61.94	0	24-HR	3B_FIRE	1ST	1E+07
754988.4	4038461	0.73921	0.21035	61.91	61.91	0	24-HR	3B_FIRE	1ST	1E+07
755088.4	4038461	0.73427	0.20979	61.84	61.84	0	24-HR	3B_FIRE	1ST	1E+07
755188.4	4038461	0.72905	0.2092	61.81	61.81	0	24-HR	3B_FIRE	1ST	1E+07
755288.4	4038461	0.72308	0.20856	61.73	61.73	0	24-HR	3B_FIRE	1ST	1E+07
747888.4	4038561	1.30558	0.36778	73.14	73.14	0	24-HR	3B_FIRE	1ST	7E+06
747988.4	4038561	1.24704	0.36524	72.68	72.68	0	24-HR	3B_FIRE	1ST	7E+06
748088.4	4038561	1.10415	0.36262	72.33	72.33	0	24-HR	3B_FIRE	1ST	7E+06
748188.4	4038561	0.91178	0.35991	72.03	72.03	0	24-HR	3B_FIRE	1ST	1E+07
749888.4	4038561	1.09564	0.30619	67.11	67.11	0	24-HR	3B_FIRE	1ST	9E+06
749988.4	4038561	1.06575	0.30283	66.93	66.93	0	24-HR	3B_FIRE	1ST	1E+07
750088.4	4038561	1.08199	0.29947	66.73	66.73	0	24-HR	3B_FIRE	1ST	1E+07
750188.4	4038561	1.09062	0.29611	66.43	66.43	0	24-HR	3B_FIRE	1ST	1E+07
750288.4	4038561	1.09	0.29275	66.11	66.11	0	24-HR	3B_FIRE	1ST	1E+07
750388.4	4038561	1.07783	0.28939	65.8	65.8	0	24-HR	3B_FIRE	1ST	1E+07
750488.4	4038561	1.05224	0.28605	65.54	65.54	0	24-HR	3B_FIRE	1ST	1E+07
750588.4	4038561	1.01215	0.28273	65.36	65.36	0	24-HR	3B_FIRE	1ST	1E+07
750688.4	4038561	0.95672	0.27942	65.18	65.18	0	24-HR	3B_FIRE	1ST	1E+07
750788.4	4038561	0.94415	0.27613	65.14	65.14	0	24-HR	3B_FIRE	1ST	8E+06
750888.4	4038561	0.97388	0.27285	64.88	64.88	0	24-HR	3B_FIRE	1ST	8E+06
750988.4	4038561	0.9838	0.26959	64.81	64.81	0	24-HR	3B_FIRE	1ST	8E+06
751088.4	4038561	0.9736	0.26636	64.64	64.64	0	24-HR	3B_FIRE	1ST	8E+06
751188.4	4038561	0.99616	0.26315	64.57	64.57	0	24-HR	3B_FIRE	1ST	9E+06
751288.4	4038561	1.03175	0.25996	64.42	64.42	0	24-HR	3B_FIRE	1ST	9E+06
751388.4	4038561	1.05951	0.2568	64.36	64.36	0	24-HR	3B_FIRE	1ST	9E+06
752788.4	4038561	1.01277	0.21573	63.31	63.31	0	24-HR	3B_FIRE	1ST	9E+06
752888.4	4038561	0.99025	0.21305	63.15	63.15	0	24-HR	3B_FIRE	1ST	9E+06
752988.4	4038561	0.96617	0.21041	63.06	63.06	0	24-HR	3B_FIRE	1ST	9E+06
753088.4	4038561	0.9403	0.2078	62.98	62.98	0	24-HR	3B_FIRE	1ST	9E+06
753188.4	4038561	0.91271	0.20522	62.88	62.88	0	24-HR	3B_FIRE	1ST	9E+06
753288.4	4038561	0.88378	0.20459	62.77	62.77	0	24-HR	3B_FIRE	1ST	9E+06
753388.4	4038561	0.8539	0.20506	62.66	62.66	0	24-HR	3B_FIRE	1ST	9E+06
753488.4	4038561	0.8235	0.20547	62.57	62.57	0	24-HR	3B_FIRE	1ST	9E+06
753588.4	4038561	0.79287	0.20584	62.5	62.5	0	24-HR	3B_FIRE	1ST	9E+06
753688.4	4038561	0.76182	0.20613	62.36	62.36	0	24-HR	3B_FIRE	1ST	9E+06
753788.4	4038561	0.73141	0.20639	62.3	62.3	0	24-HR	3B_FIRE	1ST	9E+06
753888.4	4038561	0.70792	0.2066	62.28	62.28	0	24-HR	3B_FIRE	1ST	1E+07
753988.4	4038561	0.71461	0.20675	62.2	62.2	0	24-HR	3B_FIRE	1ST	1E+07
754088.4	4038561	0.72072	0.20686	62.21	62.21	0	24-HR	3B_FIRE	1ST	1E+07
754188.4	4038561	0.7257	0.20692	62.21	62.21	0	24-HR	3B_FIRE	1ST	1E+07
754288.4	4038561	0.72943	0.20693	62.17	62.17	0	24-HR	3B_FIRE	1ST	1E+07
754388.4	4038561	0.73221	0.20689	62.14	62.14	0	24-HR	3B_FIRE	1ST	1E+07
754488.4	4038561	0.73386	0.2068	62.08	62.08	0	24-HR	3B_FIRE	1ST	1E+07
754588.4	4038561	0.73454	0.20666	62.01	62.01	0	24-HR	3B_FIRE	1ST	1E+07
754688.4	4038561	0.7346	0.20648	61.98	61.98	0	24-HR	3B_FIRE	1ST	1E+07
754788.4	4038561	0.7343	0.20627	62.03	62.03	0	24-HR	3B_FIRE	1ST	1E+07
754888.4	4038561	0.73197	0.20599	61.86	61.86	0	24-HR	3B_FIRE	1ST	1E+07
754988.4	4038561	0.72951	0.20568	61.79	61.79	0	24-HR	3B_FIRE	1ST	1E+07
755088.4	4038561	0.72633	0.20532	61.71	61.71	0	24-HR	3B_FIRE	1ST	1E+07
755188.4	4038561	0.72266	0.20494	61.65	61.65	0	24-HR	3B_FIRE	1ST	1E+07
755288.4	4038561	0.71842	0.20451	61.59	61.59	0	24-HR	3B_FIRE	1ST	1E+07
747888.4	4038661	1.28211	0.36581	72.86	72.86	0	24-HR	3B_FIRE	1ST	7E+06
747988.4	4038661	1.26064	0.36367	72.54	72.54	0	24-HR	3B_FIRE	1ST	7E+06
748088.4	4038661	1.15381	0.36142	72.31	72.31	0	24-HR	3B_FIRE	1ST	7E+06
748188.4	4038661	0.98124	0.35908	72.03	72.03	0	24-HR	3B_FIRE	1ST	7E+06
749888.4	4038661	1.1614	0.30961	67.03	67.03	0	24-HR	3B_FIRE	1ST	9E+06
749988.4	4038661	1.07735	0.3064	66.81	66.81	0	24-HR	3B_FIRE	1ST	9E+06

750088.4	4038661	1.02727	0.30317	66.62	66.62	0	24-HR	3B_FIRE	1ST	1E+07
750188.4	4038661	1.04158	0.29994	66.31	66.31	0	24-HR	3B_FIRE	1ST	1E+07
750288.4	4038661	1.05037	0.2967	65.99	65.99	0	24-HR	3B_FIRE	1ST	1E+07
750388.4	4038661	1.05173	0.29345	65.67	65.67	0	24-HR	3B_FIRE	1ST	1E+07
750488.4	4038661	1.0443	0.29021	65.43	65.43	0	24-HR	3B_FIRE	1ST	1E+07
750588.4	4038661	1.02539	0.28698	65.22	65.22	0	24-HR	3B_FIRE	1ST	1E+07
750688.4	4038661	0.99406	0.28375	65.11	65.11	0	24-HR	3B_FIRE	1ST	1E+07
750788.4	4038661	0.94855	0.28054	64.98	64.98	0	24-HR	3B_FIRE	1ST	1E+07
750888.4	4038661	0.8971	0.27733	64.8	64.8	0	24-HR	3B_FIRE	1ST	8E+06
750988.4	4038661	0.93588	0.27413	64.62	64.62	0	24-HR	3B_FIRE	1ST	8E+06
751088.4	4038661	0.9551	0.27095	64.54	64.54	0	24-HR	3B_FIRE	1ST	8E+06
751188.4	4038661	0.95509	0.26779	64.44	64.44	0	24-HR	3B_FIRE	1ST	8E+06
751288.4	4038661	0.93875	0.26464	64.35	64.35	0	24-HR	3B_FIRE	1ST	8E+06
751388.4	4038661	0.97449	0.26152	64.23	64.23	0	24-HR	3B_FIRE	1ST	9E+06
752788.4	4038661	1.01783	0.22042	63.17	63.17	0	24-HR	3B_FIRE	1ST	9E+06
752888.4	4038661	1.00204	0.21771	63.05	63.05	0	24-HR	3B_FIRE	1ST	9E+06
752988.4	4038661	0.98429	0.21503	62.96	62.96	0	24-HR	3B_FIRE	1ST	9E+06
753088.4	4038661	0.96413	0.21239	62.83	62.83	0	24-HR	3B_FIRE	1ST	9E+06
753188.4	4038661	0.94214	0.20977	62.72	62.72	0	24-HR	3B_FIRE	1ST	9E+06
753288.4	4038661	0.91868	0.2072	62.66	62.66	0	24-HR	3B_FIRE	1ST	9E+06
753388.4	4038661	0.8932	0.20465	62.53	62.53	0	24-HR	3B_FIRE	1ST	9E+06
753488.4	4038661	0.86662	0.20214	62.43	62.43	0	24-HR	3B_FIRE	1ST	9E+06
753588.4	4038661	0.83907	0.19967	62.34	62.34	0	24-HR	3B_FIRE	1ST	9E+06
753688.4	4038661	0.81044	0.19775	62.19	62.19	0	24-HR	3B_FIRE	1ST	9E+06
753788.4	4038661	0.78182	0.19824	62.12	62.12	0	24-HR	3B_FIRE	1ST	9E+06
753888.4	4038661	0.75321	0.19867	62.09	62.09	0	24-HR	3B_FIRE	1ST	9E+06
753988.4	4038661	0.72458	0.19906	62.05	62.05	0	24-HR	3B_FIRE	1ST	9E+06
754088.4	4038661	0.69641	0.1994	62.05	62.05	0	24-HR	3B_FIRE	1ST	9E+06
754188.4	4038661	0.69245	0.19968	62.01	62.01	0	24-HR	3B_FIRE	1ST	1E+07
754288.4	4038661	0.69871	0.19991	62	62	0	24-HR	3B_FIRE	1ST	1E+07
754388.4	4038661	0.70379	0.2001	61.96	61.96	0	24-HR	3B_FIRE	1ST	1E+07
754488.4	4038661	0.70767	0.20023	61.88	61.88	0	24-HR	3B_FIRE	1ST	1E+07
754588.4	4038661	0.71082	0.20031	61.84	61.84	0	24-HR	3B_FIRE	1ST	1E+07
754688.4	4038661	0.71278	0.20035	61.75	61.75	0	24-HR	3B_FIRE	1ST	1E+07
754788.4	4038661	0.71342	0.20033	61.58	61.58	0	24-HR	3B_FIRE	1ST	1E+07
754888.4	4038661	0.71457	0.20029	61.65	61.65	0	24-HR	3B_FIRE	1ST	1E+07
754988.4	4038661	0.71437	0.2002	61.62	61.62	0	24-HR	3B_FIRE	1ST	1E+07
755088.4	4038661	0.71338	0.20007	61.58	61.58	0	24-HR	3B_FIRE	1ST	1E+07
755188.4	4038661	0.71163	0.19989	61.53	61.53	0	24-HR	3B_FIRE	1ST	1E+07
755288.4	4038661	0.70918	0.19967	61.47	61.47	0	24-HR	3B_FIRE	1ST	1E+07
747888.4	4038761	1.25682	0.36268	72.86	72.86	0	24-HR	3B_FIRE	1ST	7E+06
747988.4	4038761	1.26493	0.36095	72.56	72.56	0	24-HR	3B_FIRE	1ST	7E+06
748088.4	4038761	1.18975	0.35911	72.34	72.34	0	24-HR	3B_FIRE	1ST	7E+06
748188.4	4038761	1.04594	0.35715	72.14	72.14	0	24-HR	3B_FIRE	1ST	7E+06
749888.4	4038761	1.18702	0.31235	66.89	66.89	0	24-HR	3B_FIRE	1ST	9E+06
749988.4	4038761	1.13627	0.30931	66.69	66.69	0	24-HR	3B_FIRE	1ST	9E+06
750088.4	4038761	1.05827	0.30625	66.49	66.49	0	24-HR	3B_FIRE	1ST	9E+06
750188.4	4038761	0.98993	0.30317	66.19	66.19	0	24-HR	3B_FIRE	1ST	1E+07
750288.4	4038761	1.00334	0.30007	65.86	65.86	0	24-HR	3B_FIRE	1ST	1E+07
750388.4	4038761	1.01209	0.29696	65.53	65.53	0	24-HR	3B_FIRE	1ST	1E+07
750488.4	4038761	1.01526	0.29384	65.26	65.26	0	24-HR	3B_FIRE	1ST	1E+07
750588.4	4038761	1.01124	0.29073	65.07	65.07	0	24-HR	3B_FIRE	1ST	1E+07
750688.4	4038761	0.99801	0.28761	64.95	64.95	0	24-HR	3B_FIRE	1ST	1E+07
750788.4	4038761	0.97306	0.28449	64.81	64.81	0	24-HR	3B_FIRE	1ST	1E+07
750888.4	4038761	0.93563	0.28138	64.67	64.67	0	24-HR	3B_FIRE	1ST	1E+07
750988.4	4038761	0.88756	0.27827	64.51	64.51	0	24-HR	3B_FIRE	1ST	7E+06
751088.4	4038761	0.89611	0.27516	64.42	64.42	0	24-HR	3B_FIRE	1ST	8E+06
751188.4	4038761	0.92357	0.27207	64.33	64.33	0	24-HR	3B_FIRE	1ST	8E+06
751288.4	4038761	0.93213	0.26898	64.19	64.19	0	24-HR	3B_FIRE	1ST	8E+06
751388.4	4038761	0.92405	0.26591	64.05	64.05	0	24-HR	3B_FIRE	1ST	8E+06
752788.4	4038761	1.00907	0.22503	63.05	63.05	0	24-HR	3B_FIRE	1ST	9E+06
752888.4	4038761	0.99902	0.22231	62.95	62.95	0	24-HR	3B_FIRE	1ST	9E+06
752988.4	4038761	0.98701	0.21961	62.85	62.85	0	24-HR	3B_FIRE	1ST	9E+06
753088.4	4038761	0.97291	0.21694	62.74	62.74	0	24-HR	3B_FIRE	1ST	9E+06
753188.4	4038761	0.95664	0.2143	62.61	62.61	0	24-HR	3B_FIRE	1ST	9E+06
753288.4	4038761	0.93873	0.21169	62.53	62.53	0	24-HR	3B_FIRE	1ST	9E+06
753388.4	4038761	0.9188	0.20912	62.43	62.43	0	24-HR	3B_FIRE	1ST	9E+06

753488.4	4038761	0.89714	0.20657	62.33	62.33	0	24-HR	3B_FIRE	1ST	9E+06
753588.4	4038761	0.87369	0.20406	62.19	62.19	0	24-HR	3B_FIRE	1ST	9E+06
753688.4	4038761	0.84896	0.20157	62.05	62.05	0	24-HR	3B_FIRE	1ST	9E+06
753788.4	4038761	0.82351	0.19913	61.97	61.97	0	24-HR	3B_FIRE	1ST	9E+06
753888.4	4038761	0.79759	0.19671	61.95	61.95	0	24-HR	3B_FIRE	1ST	9E+06
753988.4	4038761	0.77108	0.19434	61.93	61.93	0	24-HR	3B_FIRE	1ST	9E+06
754088.4	4038761	0.74424	0.19199	61.91	61.91	0	24-HR	3B_FIRE	1ST	9E+06
754188.4	4038761	0.7172	0.19177	61.87	61.87	0	24-HR	3B_FIRE	1ST	9E+06
754288.4	4038761	0.69057	0.19223	61.89	61.89	0	24-HR	3B_FIRE	1ST	9E+06
754388.4	4038761	0.67084	0.19262	61.83	61.83	0	24-HR	3B_FIRE	1ST	1E+07
754488.4	4038761	0.67699	0.19297	61.76	61.76	0	24-HR	3B_FIRE	1ST	1E+07
754588.4	4038761	0.68223	0.19326	61.7	61.7	0	24-HR	3B_FIRE	1ST	1E+07
754688.4	4038761	0.68666	0.19352	61.66	61.66	0	24-HR	3B_FIRE	1ST	1E+07
754788.4	4038761	0.68971	0.19371	61.53	61.53	0	24-HR	3B_FIRE	1ST	1E+07
754888.4	4038761	0.69274	0.19389	61.56	61.56	0	24-HR	3B_FIRE	1ST	1E+07
754988.4	4038761	0.69467	0.19401	61.54	61.54	0	24-HR	3B_FIRE	1ST	1E+07
755088.4	4038761	0.6957	0.19408	61.5	61.5	0	24-HR	3B_FIRE	1ST	1E+07
755188.4	4038761	0.69596	0.19411	61.46	61.46	0	24-HR	3B_FIRE	1ST	1E+07
755288.4	4038761	0.69545	0.1941	61.41	61.41	0	24-HR	3B_FIRE	1ST	1E+07
747888.4	4038861	1.22413	0.35841	72.84	72.84	0	24-HR	3B_FIRE	1ST	7E+06
747988.4	4038861	1.25916	0.35711	72.62	72.62	0	24-HR	3B_FIRE	1ST	7E+06
748088.4	4038861	1.21675	0.35568	72.57	72.57	0	24-HR	3B_FIRE	1ST	7E+06
748188.4	4038861	1.09545	0.35412	72.14	72.14	0	24-HR	3B_FIRE	1ST	7E+06
749888.4	4038861	1.15845	0.31436	66.51	66.51	0	24-HR	3B_FIRE	1ST	9E+06
749988.4	4038861	1.15525	0.31152	66.38	66.38	0	24-HR	3B_FIRE	1ST	9E+06
750088.4	4038861	1.10968	0.30864	66.23	66.23	0	24-HR	3B_FIRE	1ST	9E+06
750188.4	4038861	1.03705	0.30574	66.01	66.01	0	24-HR	3B_FIRE	1ST	9E+06
750288.4	4038861	0.9547	0.30281	65.74	65.74	0	24-HR	3B_FIRE	1ST	1E+07
750388.4	4038861	0.96752	0.29986	65.42	65.42	0	24-HR	3B_FIRE	1ST	1E+07
750488.4	4038861	0.97653	0.2969	65.13	65.13	0	24-HR	3B_FIRE	1ST	1E+07
750588.4	4038861	0.98121	0.29392	64.94	64.94	0	24-HR	3B_FIRE	1ST	1E+07
750688.4	4038861	0.9793	0.29093	64.75	64.75	0	24-HR	3B_FIRE	1ST	1E+07
750788.4	4038861	0.96944	0.28793	64.59	64.59	0	24-HR	3B_FIRE	1ST	1E+07
750888.4	4038861	0.95018	0.28493	64.48	64.48	0	24-HR	3B_FIRE	1ST	1E+07
750988.4	4038861	0.91993	0.28193	64.37	64.37	0	24-HR	3B_FIRE	1ST	1E+07
751088.4	4038861	0.87813	0.27893	64.24	64.24	0	24-HR	3B_FIRE	1ST	1E+07
751188.4	4038861	0.85759	0.27592	64.13	64.13	0	24-HR	3B_FIRE	1ST	7E+06
751288.4	4038861	0.8887	0.27292	64.04	64.04	0	24-HR	3B_FIRE	1ST	8E+06
751388.4	4038861	0.9054	0.26993	63.9	63.9	0	24-HR	3B_FIRE	1ST	8E+06
752788.4	4038861	0.99018	0.22951	62.93	62.93	0	24-HR	3B_FIRE	1ST	9E+06
752888.4	4038861	0.98444	0.22678	62.83	62.83	0	24-HR	3B_FIRE	1ST	9E+06
752988.4	4038861	0.97714	0.22407	62.73	62.73	0	24-HR	3B_FIRE	1ST	9E+06
753088.4	4038861	0.9681	0.22139	62.62	62.62	0	24-HR	3B_FIRE	1ST	9E+06
753188.4	4038861	0.95715	0.21874	62.49	62.49	0	24-HR	3B_FIRE	1ST	9E+06
753288.4	4038861	0.94475	0.21612	62.42	62.42	0	24-HR	3B_FIRE	1ST	9E+06
753388.4	4038861	0.93019	0.21352	62.31	62.31	0	24-HR	3B_FIRE	1ST	9E+06
753488.4	4038861	0.91383	0.21096	62.21	62.21	0	24-HR	3B_FIRE	1ST	9E+06
753588.4	4038861	0.89544	0.20842	62.07	62.07	0	24-HR	3B_FIRE	1ST	9E+06
753688.4	4038861	0.87528	0.20591	61.91	61.91	0	24-HR	3B_FIRE	1ST	9E+06
753788.4	4038861	0.85417	0.20343	61.84	61.84	0	24-HR	3B_FIRE	1ST	9E+06
753888.4	4038861	0.83197	0.20099	61.81	61.81	0	24-HR	3B_FIRE	1ST	9E+06
753988.4	4038861	0.80866	0.19857	61.78	61.78	0	24-HR	3B_FIRE	1ST	9E+06
754088.4	4038861	0.78452	0.19619	61.76	61.76	0	24-HR	3B_FIRE	1ST	9E+06
754188.4	4038861	0.75974	0.19383	61.74	61.74	0	24-HR	3B_FIRE	1ST	9E+06
754288.4	4038861	0.73477	0.19151	61.77	61.77	0	24-HR	3B_FIRE	1ST	9E+06
754388.4	4038861	0.70901	0.18922	61.68	61.68	0	24-HR	3B_FIRE	1ST	9E+06
754488.4	4038861	0.68378	0.18696	61.7	61.7	0	24-HR	3B_FIRE	1ST	9E+06
754588.4	4038861	0.65822	0.1856	61.61	61.61	0	24-HR	3B_FIRE	1ST	9E+06
754688.4	4038861	0.65612	0.18606	61.59	61.59	0	24-HR	3B_FIRE	1ST	1E+07
754788.4	4038861	0.66124	0.18645	61.46	61.46	0	24-HR	3B_FIRE	1ST	1E+07
754888.4	4038861	0.6663	0.18683	61.49	61.49	0	24-HR	3B_FIRE	1ST	1E+07
754988.4	4038861	0.67021	0.18715	61.46	61.46	0	24-HR	3B_FIRE	1ST	1E+07
755088.4	4038861	0.67334	0.18742	61.44	61.44	0	24-HR	3B_FIRE	1ST	1E+07
755188.4	4038861	0.67552	0.18765	61.39	61.39	0	24-HR	3B_FIRE	1ST	1E+07
755288.4	4038861	0.67699	0.18784	61.35	61.35	0	24-HR	3B_FIRE	1ST	1E+07
747888.4	4038961	1.18996	0.35304	72.98	72.98	0	24-HR	3B_FIRE	1ST	7E+06
747988.4	4038961	1.24667	0.35216	72.78	72.78	0	24-HR	3B_FIRE	1ST	7E+06

748088.4	4038961	1.22183	0.35114	72.35	72.35	0	24-HR	3B_FIRE	1ST	7E+06
748188.4	4038961	1.1269	0.34999	71.87	71.87	0	24-HR	3B_FIRE	1ST	7E+06
749888.4	4038961	1.08114	0.31561	66.3	66.3	0	24-HR	3B_FIRE	1ST	9E+06
749988.4	4038961	1.12763	0.31298	66.11	66.11	0	24-HR	3B_FIRE	1ST	9E+06
750088.4	4038961	1.12525	0.31032	65.95	65.95	0	24-HR	3B_FIRE	1ST	9E+06
750188.4	4038961	1.08247	0.30761	65.69	65.69	0	24-HR	3B_FIRE	1ST	9E+06
750288.4	4038961	1.01534	0.30488	65.49	65.49	0	24-HR	3B_FIRE	1ST	9E+06
750388.4	4038961	0.93767	0.30211	65.31	65.31	0	24-HR	3B_FIRE	1ST	9E+06
750488.4	4038961	0.93491	0.29932	65.1	65.1	0	24-HR	3B_FIRE	1ST	1E+07
750588.4	4038961	0.94425	0.29651	64.88	64.88	0	24-HR	3B_FIRE	1ST	1E+07
750688.4	4038961	0.9485	0.29367	64.59	64.59	0	24-HR	3B_FIRE	1ST	1E+07
750788.4	4038961	0.94868	0.29082	64.47	64.47	0	24-HR	3B_FIRE	1ST	1E+07
750888.4	4038961	0.94158	0.28795	64.3	64.3	0	24-HR	3B_FIRE	1ST	1E+07
750988.4	4038961	0.92701	0.28508	64.23	64.23	0	24-HR	3B_FIRE	1ST	1E+07
751088.4	4038961	0.90293	0.2822	64.17	64.17	0	24-HR	3B_FIRE	1ST	1E+07
751188.4	4038961	0.86786	0.2793	64.02	64.02	0	24-HR	3B_FIRE	1ST	1E+07
751288.4	4038961	0.85033	0.27641	63.87	63.87	0	24-HR	3B_FIRE	1ST	7E+06
751388.4	4038961	0.85194	0.27351	63.75	63.75	0	24-HR	3B_FIRE	1ST	8E+06
752788.4	4038961	0.96475	0.2338	62.81	62.81	0	24-HR	3B_FIRE	1ST	9E+06
752888.4	4038961	0.96213	0.23108	62.71	62.71	0	24-HR	3B_FIRE	1ST	9E+06
752988.4	4038961	0.9583	0.22839	62.61	62.61	0	24-HR	3B_FIRE	1ST	9E+06
753088.4	4038961	0.95305	0.22571	62.49	62.49	0	24-HR	3B_FIRE	1ST	9E+06
753188.4	4038961	0.94635	0.22306	62.36	62.36	0	24-HR	3B_FIRE	1ST	9E+06
753288.4	4038961	0.9384	0.22043	62.27	62.27	0	24-HR	3B_FIRE	1ST	9E+06
753388.4	4038961	0.9287	0.21783	62.16	62.16	0	24-HR	3B_FIRE	1ST	9E+06
753488.4	4038961	0.91729	0.21525	62.05	62.05	0	24-HR	3B_FIRE	1ST	9E+06
753588.4	4038961	0.90401	0.2127	61.92	61.92	0	24-HR	3B_FIRE	1ST	9E+06
753688.4	4038961	0.88899	0.21018	61.79	61.79	0	24-HR	3B_FIRE	1ST	9E+06
753788.4	4038961	0.87264	0.20768	61.72	61.72	0	24-HR	3B_FIRE	1ST	9E+06
753888.4	4038961	0.85475	0.20521	61.66	61.66	0	24-HR	3B_FIRE	1ST	9E+06
753988.4	4038961	0.83551	0.20278	61.62	61.62	0	24-HR	3B_FIRE	1ST	9E+06
754088.4	4038961	0.81502	0.20037	61.59	61.59	0	24-HR	3B_FIRE	1ST	9E+06
754188.4	4038961	0.79358	0.19798	61.59	61.59	0	24-HR	3B_FIRE	1ST	9E+06
754288.4	4038961	0.77126	0.19563	61.6	61.6	0	24-HR	3B_FIRE	1ST	9E+06
754388.4	4038961	0.74818	0.19331	61.6	61.6	0	24-HR	3B_FIRE	1ST	9E+06
754488.4	4038961	0.72473	0.19102	61.63	61.63	0	24-HR	3B_FIRE	1ST	9E+06
754588.4	4038961	0.70013	0.18875	61.48	61.48	0	24-HR	3B_FIRE	1ST	9E+06
754688.4	4038961	0.67609	0.18651	61.47	61.47	0	24-HR	3B_FIRE	1ST	9E+06
754788.4	4038961	0.65169	0.1843	61.36	61.36	0	24-HR	3B_FIRE	1ST	9E+06
754888.4	4038961	0.6357	0.18212	61.41	61.41	0	24-HR	3B_FIRE	1ST	1E+07
754988.4	4038961	0.64161	0.17998	61.4	61.4	0	24-HR	3B_FIRE	1ST	1E+07
755088.4	4038961	0.64675	0.18018	61.4	61.4	0	24-HR	3B_FIRE	1ST	1E+07
755188.4	4038961	0.65089	0.1806	61.36	61.36	0	24-HR	3B_FIRE	1ST	1E+07
755288.4	4038961	0.65409	0.18097	61.29	61.29	0	24-HR	3B_FIRE	1ST	1E+07
747788.4	4039061	1.23097	0.34689	73.27	73.27	0	24-HR	3B_FIRE	1ST	8E+06
747888.4	4039061	1.14628	0.34659	72.85	72.85	0	24-HR	3B_FIRE	1ST	7E+06
747988.4	4039061	1.21713	0.34614	72.5	72.5	0	24-HR	3B_FIRE	1ST	7E+06
748088.4	4039061	1.21636	0.34555	72.1	72.1	0	24-HR	3B_FIRE	1ST	7E+06
748188.4	4039061	1.15154	0.34482	71.85	71.85	0	24-HR	3B_FIRE	1ST	7E+06
749888.4	4039061	0.96279	0.31606	66.12	66.12	0	24-HR	3B_FIRE	1ST	9E+06
749988.4	4039061	1.05428	0.31368	65.94	65.94	0	24-HR	3B_FIRE	1ST	9E+06
750088.4	4039061	1.09835	0.31124	65.77	65.77	0	24-HR	3B_FIRE	1ST	9E+06
750188.4	4039061	1.09677	0.30876	65.59	65.59	0	24-HR	3B_FIRE	1ST	9E+06
750288.4	4039061	1.05801	0.30624	65.36	65.36	0	24-HR	3B_FIRE	1ST	9E+06
750388.4	4039061	0.99528	0.30367	65.13	65.13	0	24-HR	3B_FIRE	1ST	9E+06
750488.4	4039061	0.92201	0.30107	64.95	64.95	0	24-HR	3B_FIRE	1ST	9E+06
750588.4	4039061	0.9037	0.29844	64.72	64.72	0	24-HR	3B_FIRE	1ST	1E+07
750688.4	4039061	0.91246	0.29578	64.47	64.47	0	24-HR	3B_FIRE	1ST	1E+07
750788.4	4039061	0.91847	0.2931	64.37	64.37	0	24-HR	3B_FIRE	1ST	1E+07
750888.4	4039061	0.91909	0.29039	64.18	64.18	0	24-HR	3B_FIRE	1ST	1E+07
750988.4	4039061	0.91454	0.28766	64.06	64.06	0	24-HR	3B_FIRE	1ST	1E+07
751088.4	4039061	0.90356	0.28492	64.01	64.01	0	24-HR	3B_FIRE	1ST	1E+07
751188.4	4039061	0.88394	0.28216	63.91	63.91	0	24-HR	3B_FIRE	1ST	1E+07
751288.4	4039061	0.85475	0.27939	63.75	63.75	0	24-HR	3B_FIRE	1ST	1E+07
751388.4	4039061	0.84065	0.27661	63.65	63.65	0	24-HR	3B_FIRE	1ST	7E+06
752788.4	4039061	0.93518	0.23786	62.69	62.69	0	24-HR	3B_FIRE	1ST	9E+06
752888.4	4039061	0.93506	0.23517	62.59	62.59	0	24-HR	3B_FIRE	1ST	9E+06

752988.4	4039061	0.93377	0.2325	62.49	62.49	0	24-HR	3B_FIRE	1ST	9E+06
753088.4	4039061	0.93148	0.22984	62.4	62.4	0	24-HR	3B_FIRE	1ST	9E+06
753188.4	4039061	0.92773	0.2272	62.25	62.25	0	24-HR	3B_FIRE	1ST	9E+06
747788.4	4039161	1.22471	0.33899	72.86	72.86	0	24-HR	3B_FIRE	1ST	8E+06
747888.4	4039161	1.159	0.33913	72.51	72.51	0	24-HR	3B_FIRE	1ST	8E+06
747988.4	4039161	1.18192	0.33911	72.18	72.18	0	24-HR	3B_FIRE	1ST	7E+06
748088.4	4039161	1.20196	0.33894	71.81	71.81	0	24-HR	3B_FIRE	1ST	7E+06
748188.4	4039161	1.15797	0.33863	71.43	71.43	0	24-HR	3B_FIRE	1ST	7E+06
749888.4	4039161	0.85291	0.31569	65.94	65.94	0	24-HR	3B_FIRE	1ST	8E+06
749988.4	4039161	0.9427	0.31357	65.78	65.78	0	24-HR	3B_FIRE	1ST	9E+06
750088.4	4039161	1.0289	0.31139	65.66	65.66	0	24-HR	3B_FIRE	1ST	9E+06
750188.4	4039161	1.06997	0.30915	65.44	65.44	0	24-HR	3B_FIRE	1ST	9E+06
750288.4	4039161	1.06886	0.30685	65.22	65.22	0	24-HR	3B_FIRE	1ST	9E+06
750388.4	4039161	1.03355	0.30451	65	65	0	24-HR	3B_FIRE	1ST	9E+06
750488.4	4039161	0.97551	0.30212	64.8	64.8	0	24-HR	3B_FIRE	1ST	9E+06
750588.4	4039161	0.90634	0.29969	64.61	64.61	0	24-HR	3B_FIRE	1ST	9E+06
750688.4	4039161	0.87445	0.29723	64.36	64.36	0	24-HR	3B_FIRE	1ST	1E+07
750788.4	4039161	0.88372	0.29473	64.22	64.22	0	24-HR	3B_FIRE	1ST	1E+07
750888.4	4039161	0.88942	0.2922	64.08	64.08	0	24-HR	3B_FIRE	1ST	1E+07
750988.4	4039161	0.8911	0.28964	63.94	63.94	0	24-HR	3B_FIRE	1ST	1E+07
751088.4	4039161	0.88836	0.28706	63.85	63.85	0	24-HR	3B_FIRE	1ST	1E+07
751188.4	4039161	0.88006	0.28445	63.8	63.8	0	24-HR	3B_FIRE	1ST	1E+07
751288.4	4039161	0.8642	0.28183	63.68	63.68	0	24-HR	3B_FIRE	1ST	1E+07
751388.4	4039161	0.84048	0.27918	63.58	63.58	0	24-HR	3B_FIRE	1ST	1E+07
752788.4	4039161	0.90224	0.24164	62.57	62.57	0	24-HR	3B_FIRE	1ST	9E+06
752888.4	4039161	0.90496	0.23899	62.5	62.5	0	24-HR	3B_FIRE	1ST	9E+06
752988.4	4039161	0.90594	0.23636	62.4	62.4	0	24-HR	3B_FIRE	1ST	9E+06
753088.4	4039161	0.90547	0.23374	62.26	62.26	0	24-HR	3B_FIRE	1ST	9E+06
753188.4	4039161	0.90421	0.23113	62.15	62.15	0	24-HR	3B_FIRE	1ST	9E+06
747788.4	4039261	1.21986	0.33019	72.68	72.68	0	24-HR	3B_FIRE	1ST	8E+06
747888.4	4039261	1.17274	0.33074	72.33	72.33	0	24-HR	3B_FIRE	1ST	8E+06
747988.4	4039261	1.146	0.33115	72	72	0	24-HR	3B_FIRE	1ST	7E+06
748088.4	4039261	1.18342	0.33139	71.64	71.64	0	24-HR	3B_FIRE	1ST	7E+06
748188.4	4039261	1.16027	0.33149	71.26	71.26	0	24-HR	3B_FIRE	1ST	7E+06
749888.4	4039261	0.84335	0.3145	65.81	65.81	0	24-HR	3B_FIRE	1ST	8E+06
749988.4	4039261	0.83088	0.31265	65.69	65.69	0	24-HR	3B_FIRE	1ST	8E+06
750088.4	4039261	0.92431	0.31074	65.6	65.6	0	24-HR	3B_FIRE	1ST	9E+06
750188.4	4039261	1.00365	0.30875	65.34	65.34	0	24-HR	3B_FIRE	1ST	9E+06
750288.4	4039261	1.0428	0.30671	65.15	65.15	0	24-HR	3B_FIRE	1ST	9E+06
750388.4	4039261	1.04239	0.3046	64.92	64.92	0	24-HR	3B_FIRE	1ST	9E+06
750488.4	4039261	1.01029	0.30245	64.72	64.72	0	24-HR	3B_FIRE	1ST	9E+06
750588.4	4039261	0.95544	0.30024	64.43	64.43	0	24-HR	3B_FIRE	1ST	9E+06
750688.4	4039261	0.89079	0.29799	64.3	64.3	0	24-HR	3B_FIRE	1ST	9E+06
750788.4	4039261	0.84773	0.29569	64.12	64.12	0	24-HR	3B_FIRE	1ST	1E+07
750888.4	4039261	0.85678	0.29335	64	64	0	24-HR	3B_FIRE	1ST	1E+07
750988.4	4039261	0.86225	0.29098	63.84	63.84	0	24-HR	3B_FIRE	1ST	1E+07
751088.4	4039261	0.86434	0.28858	63.7	63.7	0	24-HR	3B_FIRE	1ST	1E+07
751188.4	4039261	0.86289	0.28614	63.63	63.63	0	24-HR	3B_FIRE	1ST	1E+07
751288.4	4039261	0.85652	0.28368	63.56	63.56	0	24-HR	3B_FIRE	1ST	1E+07
751388.4	4039261	0.84419	0.2812	63.49	63.49	0	24-HR	3B_FIRE	1ST	1E+07
752788.4	4039261	0.86532	0.2451	62.46	62.46	0	24-HR	3B_FIRE	1ST	9E+06
752888.4	4039261	0.87155	0.24251	62.4	62.4	0	24-HR	3B_FIRE	1ST	9E+06
752988.4	4039261	0.87528	0.23993	62.3	62.3	0	24-HR	3B_FIRE	1ST	9E+06
753088.4	4039261	0.87706	0.23736	62.16	62.16	0	24-HR	3B_FIRE	1ST	9E+06
753188.4	4039261	0.87761	0.2348	62.03	62.03	0	24-HR	3B_FIRE	1ST	9E+06
747788.4	4039361	1.2115	0.32055	72.49	72.49	0	24-HR	3B_FIRE	1ST	8E+06
747888.4	4039361	1.18098	0.32151	72.15	72.15	0	24-HR	3B_FIRE	1ST	8E+06
747988.4	4039361	1.10697	0.32232	71.79	71.79	0	24-HR	3B_FIRE	1ST	7E+06
748088.4	4039361	1.15906	0.32297	71.44	71.44	0	24-HR	3B_FIRE	1ST	7E+06
748188.4	4039361	1.15455	0.32347	71.07	71.07	0	24-HR	3B_FIRE	1ST	7E+06
749888.4	4039361	0.83069	0.31249	65.76	65.76	0	24-HR	3B_FIRE	1ST	8E+06
749988.4	4039361	0.8202	0.31092	65.47	65.47	0	24-HR	3B_FIRE	1ST	8E+06
750088.4	4039361	0.80828	0.30928	65.29	65.29	0	24-HR	3B_FIRE	1ST	8E+06
750188.4	4039361	0.90319	0.30756	65.13	65.13	0	24-HR	3B_FIRE	1ST	9E+06
750288.4	4039361	0.9782	0.30578	64.94	64.94	0	24-HR	3B_FIRE	1ST	9E+06
750388.4	4039361	1.01506	0.30393	64.73	64.73	0	24-HR	3B_FIRE	1ST	9E+06
750488.4	4039361	1.01649	0.30202	64.61	64.61	0	24-HR	3B_FIRE	1ST	9E+06

750588.4	4039361	0.98702	0.30005	64.4	64.4	0	24-HR	3B_FIRE	1ST	9E+06
750688.4	4039361	0.93649	0.29803	64.17	64.17	0	24-HR	3B_FIRE	1ST	9E+06
750788.4	4039361	0.87555	0.29595	64.04	64.04	0	24-HR	3B_FIRE	1ST	9E+06
750888.4	4039361	0.82238	0.29383	63.87	63.87	0	24-HR	3B_FIRE	1ST	1E+07
750988.4	4039361	0.83089	0.29166	63.72	63.72	0	24-HR	3B_FIRE	1ST	1E+07
751088.4	4039361	0.83665	0.28945	63.62	63.62	0	24-HR	3B_FIRE	1ST	1E+07
751188.4	4039361	0.83946	0.28721	63.55	63.55	0	24-HR	3B_FIRE	1ST	1E+07
751288.4	4039361	0.83908	0.28493	63.52	63.52	0	24-HR	3B_FIRE	1ST	1E+07
751388.4	4039361	0.83437	0.28262	63.46	63.46	0	24-HR	3B_FIRE	1ST	1E+07
752788.4	4039361	0.82344	0.24821	62.44	62.44	0	24-HR	3B_FIRE	1ST	9E+06
752888.4	4039361	0.83407	0.24569	62.35	62.35	0	24-HR	3B_FIRE	1ST	9E+06
752988.4	4039361	0.84155	0.24318	62.25	62.25	0	24-HR	3B_FIRE	1ST	9E+06
753088.4	4039361	0.8463	0.24067	62.11	62.11	0	24-HR	3B_FIRE	1ST	9E+06
753188.4	4039361	0.84901	0.23816	61.95	61.95	0	24-HR	3B_FIRE	1ST	9E+06
747788.4	4039461	1.20119	0.31017	72.33	72.33	0	24-HR	3B_FIRE	1ST	8E+06
747888.4	4039461	1.18488	0.31152	71.99	71.99	0	24-HR	3B_FIRE	1ST	8E+06
747988.4	4039461	1.10346	0.31271	71.62	71.62	0	24-HR	3B_FIRE	1ST	8E+06
748088.4	4039461	1.13103	0.31375	71.26	71.26	0	24-HR	3B_FIRE	1ST	7E+06
748188.4	4039461	1.14286	0.31464	70.9	70.9	0	24-HR	3B_FIRE	1ST	7E+06
749888.4	4039461	0.81168	0.30964	65.63	65.63	0	24-HR	3B_FIRE	1ST	8E+06
749988.4	4039461	0.80738	0.30837	65.34	65.34	0	24-HR	3B_FIRE	1ST	8E+06
750088.4	4039461	0.79806	0.30702	65.16	65.16	0	24-HR	3B_FIRE	1ST	8E+06
750188.4	4039461	0.78701	0.30559	64.96	64.96	0	24-HR	3B_FIRE	1ST	8E+06
750288.4	4039461	0.88334	0.30408	64.76	64.76	0	24-HR	3B_FIRE	1ST	9E+06
750388.4	4039461	0.95347	0.3025	64.54	64.54	0	24-HR	3B_FIRE	1ST	9E+06
750488.4	4039461	0.98919	0.30085	64.41	64.41	0	24-HR	3B_FIRE	1ST	9E+06
750588.4	4039461	0.99071	0.29913	64.24	64.24	0	24-HR	3B_FIRE	1ST	9E+06
750688.4	4039461	0.96431	0.29735	64.09	64.09	0	24-HR	3B_FIRE	1ST	9E+06
750788.4	4039461	0.91785	0.29551	63.93	63.93	0	24-HR	3B_FIRE	1ST	9E+06
750888.4	4039461	0.86018	0.29361	63.77	63.77	0	24-HR	3B_FIRE	1ST	9E+06
750988.4	4039461	0.7991	0.29166	63.6	63.6	0	24-HR	3B_FIRE	1ST	9E+06
751088.4	4039461	0.80693	0.28966	63.52	63.52	0	24-HR	3B_FIRE	1ST	1E+07
751188.4	4039461	0.81272	0.28762	63.45	63.45	0	24-HR	3B_FIRE	1ST	1E+07
751288.4	4039461	0.81549	0.28554	63.36	63.36	0	24-HR	3B_FIRE	1ST	1E+07
751388.4	4039461	0.81558	0.28341	63.32	63.32	0	24-HR	3B_FIRE	1ST	1E+07
752788.4	4039461	0.77382	0.25091	62.29	62.29	0	24-HR	3B_FIRE	1ST	9E+06
752888.4	4039461	0.78991	0.24848	62.17	62.17	0	24-HR	3B_FIRE	1ST	9E+06
752988.4	4039461	0.80225	0.24606	62.07	62.07	0	24-HR	3B_FIRE	1ST	9E+06
753088.4	4039461	0.81135	0.24362	61.98	61.98	0	24-HR	3B_FIRE	1ST	9E+06
753188.4	4039461	0.81761	0.24119	61.87	61.87	0	24-HR	3B_FIRE	1ST	9E+06
747788.4	4039561	1.18886	0.29917	72.17	72.17	0	24-HR	3B_FIRE	1ST	8E+06
747888.4	4039561	1.18435	0.30088	71.81	71.81	0	24-HR	3B_FIRE	1ST	8E+06
747988.4	4039561	1.1194	0.30243	71.43	71.43	0	24-HR	3B_FIRE	1ST	8E+06
748088.4	4039561	1.0998	0.30383	71.07	71.07	0	24-HR	3B_FIRE	1ST	7E+06
748188.4	4039561	1.12579	0.30509	70.72	70.72	0	24-HR	3B_FIRE	1ST	7E+06
749888.4	4039561	0.79851	0.306	65.5	65.5	0	24-HR	3B_FIRE	1ST	1E+07
749988.4	4039561	0.79008	0.30503	65.22	65.22	0	24-HR	3B_FIRE	1ST	8E+06
750088.4	4039561	0.78539	0.30397	65	65	0	24-HR	3B_FIRE	1ST	8E+06
750188.4	4039561	0.77642	0.30283	64.82	64.82	0	24-HR	3B_FIRE	1ST	8E+06
750288.4	4039561	0.76849	0.30161	64.63	64.63	0	24-HR	3B_FIRE	1ST	9E+06
750388.4	4039561	0.8639	0.3003	64.4	64.4	0	24-HR	3B_FIRE	1ST	9E+06
750488.4	4039561	0.93057	0.29892	64.26	64.26	0	24-HR	3B_FIRE	1ST	9E+06
750588.4	4039561	0.9642	0.29746	64.1	64.1	0	24-HR	3B_FIRE	1ST	9E+06
750688.4	4039561	0.96651	0.29593	63.96	63.96	0	24-HR	3B_FIRE	1ST	9E+06
750788.4	4039561	0.94243	0.29434	63.82	63.82	0	24-HR	3B_FIRE	1ST	9E+06
750888.4	4039561	0.89906	0.29268	63.65	63.65	0	24-HR	3B_FIRE	1ST	9E+06
750988.4	4039561	0.8452	0.29097	63.55	63.55	0	24-HR	3B_FIRE	1ST	9E+06
751088.4	4039561	0.7876	0.2892	63.47	63.47	0	24-HR	3B_FIRE	1ST	9E+06
751188.4	4039561	0.78467	0.28737	63.39	63.39	0	24-HR	3B_FIRE	1ST	1E+07
751288.4	4039561	0.79016	0.2855	63.3	63.3	0	24-HR	3B_FIRE	1ST	1E+07
751388.4	4039561	0.79302	0.28357	63.22	63.22	0	24-HR	3B_FIRE	1ST	1E+07
752788.4	4039561	0.73379	0.25319	62.15	62.15	0	24-HR	3B_FIRE	1ST	8E+06
752888.4	4039561	0.73912	0.25086	62.04	62.04	0	24-HR	3B_FIRE	1ST	9E+06
752988.4	4039561	0.75706	0.24853	61.93	61.93	0	24-HR	3B_FIRE	1ST	9E+06
753088.4	4039561	0.7712	0.2462	61.84	61.84	0	24-HR	3B_FIRE	1ST	9E+06
753188.4	4039561	0.78177	0.24385	61.73	61.73	0	24-HR	3B_FIRE	1ST	9E+06
746288.4	4039661	1.50654	0.36885	78.26	78.26	0	24-HR	3B_FIRE	1ST	9E+06

746388.4	4039661	1.52609	0.36395	77.94	77.94	0	24-HR	3B_FIRE	1ST	9E+06
746488.4	4039661	1.47036	0.3588	77.6	77.6	0	24-HR	3B_FIRE	1ST	9E+06
746588.4	4039661	1.50779	0.35336	76.99	76.99	0	24-HR	3B_FIRE	1ST	1E+07
746688.4	4039661	1.71824	0.3477	76.31	76.31	0	24-HR	3B_FIRE	1ST	1E+07
746788.4	4039661	1.70327	0.3419	75.79	75.79	0	24-HR	3B_FIRE	1ST	1E+07
746888.4	4039661	1.4966	0.33595	75.28	75.28	0	24-HR	3B_FIRE	1ST	1E+07
746988.4	4039661	1.2328	0.32988	74.83	74.83	0	24-HR	3B_FIRE	1ST	1E+07
747088.4	4039661	1.14727	0.3237	74.36	74.36	0	24-HR	3B_FIRE	1ST	1E+07
747188.4	4039661	1.23923	0.31745	74.01	74.01	0	24-HR	3B_FIRE	1ST	1E+07
747288.4	4039661	1.26368	0.31114	73.68	73.68	0	24-HR	3B_FIRE	1ST	1E+07
747388.4	4039661	1.23376	0.3048	73.41	73.41	0	24-HR	3B_FIRE	1ST	1E+07
747488.4	4039661	1.15733	0.29842	73.07	73.07	0	24-HR	3B_FIRE	1ST	1E+07
747588.4	4039661	1.10221	0.29204	72.72	72.72	0	24-HR	3B_FIRE	1ST	7E+06
747688.4	4039661	1.13014	0.28567	72.34	72.34	0	24-HR	3B_FIRE	1ST	8E+06
747788.4	4039661	1.17499	0.28764	72.01	72.01	0	24-HR	3B_FIRE	1ST	8E+06
747888.4	4039661	1.18062	0.28968	71.64	71.64	0	24-HR	3B_FIRE	1ST	8E+06
747988.4	4039661	1.13113	0.29156	71.28	71.28	0	24-HR	3B_FIRE	1ST	8E+06
748088.4	4039661	1.06672	0.2933	70.9	70.9	0	24-HR	3B_FIRE	1ST	7E+06
748188.4	4039661	1.1049	0.2949	70.56	70.56	0	24-HR	3B_FIRE	1ST	7E+06
749888.4	4039661	0.83268	0.30157	65.37	65.37	0	24-HR	3B_FIRE	1ST	1E+07
749988.4	4039661	0.77089	0.30091	65.08	65.08	0	24-HR	3B_FIRE	1ST	1E+07
750088.4	4039661	0.76918	0.30016	64.85	64.85	0	24-HR	3B_FIRE	1ST	8E+06
750188.4	4039661	0.76414	0.29931	64.67	64.67	0	24-HR	3B_FIRE	1ST	8E+06
750288.4	4039661	0.75554	0.29837	64.48	64.48	0	24-HR	3B_FIRE	1ST	8E+06
750388.4	4039661	0.75508	0.29735	64.27	64.27	0	24-HR	3B_FIRE	1ST	9E+06
750488.4	4039661	0.84549	0.29624	64.12	64.12	0	24-HR	3B_FIRE	1ST	9E+06
750588.4	4039661	0.90785	0.29505	63.93	63.93	0	24-HR	3B_FIRE	1ST	9E+06
750688.4	4039661	0.94044	0.29379	63.84	63.84	0	24-HR	3B_FIRE	1ST	9E+06
750788.4	4039661	0.94353	0.29246	63.74	63.74	0	24-HR	3B_FIRE	1ST	9E+06
750888.4	4039661	0.92145	0.29105	63.6	63.6	0	24-HR	3B_FIRE	1ST	9E+06
750988.4	4039661	0.88148	0.28958	63.49	63.49	0	24-HR	3B_FIRE	1ST	9E+06
751088.4	4039661	0.83098	0.28804	63.43	63.43	0	24-HR	3B_FIRE	1ST	9E+06
751188.4	4039661	0.77594	0.28645	63.33	63.33	0	24-HR	3B_FIRE	1ST	9E+06
751288.4	4039661	0.76336	0.28479	63.23	63.23	0	24-HR	3B_FIRE	1ST	1E+07
751388.4	4039661	0.76864	0.28308	63.13	63.13	0	24-HR	3B_FIRE	1ST	1E+07
752788.4	4039661	0.74367	0.25501	62.03	62.03	0	24-HR	3B_FIRE	1ST	8E+06
752888.4	4039661	0.72873	0.2528	61.92	61.92	0	24-HR	3B_FIRE	1ST	8E+06
752988.4	4039661	0.70733	0.25059	61.81	61.81	0	24-HR	3B_FIRE	1ST	8E+06
753088.4	4039661	0.72472	0.24835	61.69	61.69	0	24-HR	3B_FIRE	1ST	9E+06
753188.4	4039661	0.74053	0.24611	61.6	61.6	0	24-HR	3B_FIRE	1ST	9E+06
746288.4	4039761	1.47517	0.3704	77.99	77.99	0	24-HR	3B_FIRE	1ST	9E+06
746388.4	4039761	1.47707	0.36629	77.67	77.67	0	24-HR	3B_FIRE	1ST	9E+06
746488.4	4039761	1.41513	0.3619	77.34	77.34	0	24-HR	3B_FIRE	1ST	9E+06
746588.4	4039761	1.51929	0.35717	76.7	76.7	0	24-HR	3B_FIRE	1ST	1E+07
746688.4	4039761	1.70097	0.35223	76.13	76.13	0	24-HR	3B_FIRE	1ST	1E+07
746788.4	4039761	1.66325	0.34709	75.62	75.62	0	24-HR	3B_FIRE	1ST	1E+07
746888.4	4039761	1.45166	0.34175	75.12	75.12	0	24-HR	3B_FIRE	1ST	1E+07
746988.4	4039761	1.19484	0.33623	74.65	74.65	0	24-HR	3B_FIRE	1ST	1E+07
747088.4	4039761	1.11907	0.33057	74.2	74.2	0	24-HR	3B_FIRE	1ST	1E+07
747188.4	4039761	1.2061	0.32479	73.85	73.85	0	24-HR	3B_FIRE	1ST	1E+07
747288.4	4039761	1.23018	0.31889	73.5	73.5	0	24-HR	3B_FIRE	1ST	1E+07
747388.4	4039761	1.20438	0.31292	73.23	73.23	0	24-HR	3B_FIRE	1ST	1E+07
747488.4	4039761	1.13472	0.30686	72.89	72.89	0	24-HR	3B_FIRE	1ST	1E+07
747588.4	4039761	1.08393	0.30075	72.53	72.53	0	24-HR	3B_FIRE	1ST	1E+07
747688.4	4039761	1.11235	0.29461	72.18	72.18	0	24-HR	3B_FIRE	1ST	8E+06
747788.4	4039761	1.15982	0.2885	71.84	71.84	0	24-HR	3B_FIRE	1ST	8E+06
747888.4	4039761	1.1739	0.28237	71.46	71.46	0	24-HR	3B_FIRE	1ST	8E+06
747988.4	4039761	1.13797	0.28022	71.1	71.1	0	24-HR	3B_FIRE	1ST	8E+06
748088.4	4039761	1.04631	0.28227	70.69	70.69	0	24-HR	3B_FIRE	1ST	8E+06
748188.4	4039761	1.08134	0.28418	70.44	70.44	0	24-HR	3B_FIRE	1ST	7E+06
749888.4	4039761	0.84459	0.2964	65.24	65.24	0	24-HR	3B_FIRE	1ST	1E+07
749988.4	4039761	0.80873	0.29605	64.95	64.95	0	24-HR	3B_FIRE	1ST	1E+07
750088.4	4039761	0.74794	0.29559	64.72	64.72	0	24-HR	3B_FIRE	1ST	8E+06
750188.4	4039761	0.74902	0.29504	64.52	64.52	0	24-HR	3B_FIRE	1ST	8E+06
750288.4	4039761	0.74356	0.2944	64.34	64.34	0	24-HR	3B_FIRE	1ST	8E+06
750388.4	4039761	0.73518	0.29366	64.11	64.11	0	24-HR	3B_FIRE	1ST	8E+06
750488.4	4039761	0.74214	0.29284	63.98	63.98	0	24-HR	3B_FIRE	1ST	9E+06

750588.4	4039761	0.82709	0.29193	63.8	63.8	0	24-HR	3B_FIRE	1ST	9E+06
750688.4	4039761	0.8863	0.29093	63.66	63.66	0	24-HR	3B_FIRE	1ST	9E+06
750788.4	4039761	0.91749	0.28986	63.59	63.59	0	24-HR	3B_FIRE	1ST	9E+06
750888.4	4039761	0.92092	0.28871	63.49	63.49	0	24-HR	3B_FIRE	1ST	9E+06
750988.4	4039761	0.90126	0.28749	63.42	63.42	0	24-HR	3B_FIRE	1ST	9E+06
751088.4	4039761	0.86443	0.2862	63.37	63.37	0	24-HR	3B_FIRE	1ST	9E+06
751188.4	4039761	0.81637	0.28484	63.25	63.25	0	24-HR	3B_FIRE	1ST	9E+06
751288.4	4039761	0.76423	0.28342	63.19	63.19	0	24-HR	3B_FIRE	1ST	9E+06
751388.4	4039761	0.74312	0.28194	63.07	63.07	0	24-HR	3B_FIRE	1ST	1E+07
752788.4	4039761	0.73438	0.25635	61.93	61.93	0	24-HR	3B_FIRE	1ST	8E+06
752888.4	4039761	0.73197	0.25428	61.82	61.82	0	24-HR	3B_FIRE	1ST	8E+06
752988.4	4039761	0.7215	0.25218	61.7	61.7	0	24-HR	3B_FIRE	1ST	8E+06
753088.4	4039761	0.70419	0.25007	61.58	61.58	0	24-HR	3B_FIRE	1ST	8E+06
753188.4	4039761	0.69261	0.24794	61.39	61.39	0	24-HR	3B_FIRE	1ST	9E+06
746588.4	4039861	1.5263	0.35916	76.43	76.43	0	24-HR	3B_FIRE	1ST	1E+07
746688.4	4039861	1.67888	0.35496	75.91	75.91	0	24-HR	3B_FIRE	1ST	1E+07
746788.4	4039861	1.6212	0.35052	75.41	75.41	0	24-HR	3B_FIRE	1ST	1E+07
746888.4	4039861	1.40683	0.34586	74.93	74.93	0	24-HR	3B_FIRE	1ST	1E+07
746988.4	4039861	1.15765	0.34098	74.45	74.45	0	24-HR	3B_FIRE	1ST	1E+07
747088.4	4039861	1.09143	0.33591	74.02	74.02	0	24-HR	3B_FIRE	1ST	1E+07
747188.4	4039861	1.17418	0.33069	73.69	73.69	0	24-HR	3B_FIRE	1ST	1E+07
747288.4	4039861	1.19853	0.32531	73.36	73.36	0	24-HR	3B_FIRE	1ST	1E+07
747388.4	4039861	1.17566	0.31979	73.05	73.05	0	24-HR	3B_FIRE	1ST	1E+07
747488.4	4039861	1.11245	0.31415	72.72	72.72	0	24-HR	3B_FIRE	1ST	1E+07
747588.4	4039861	1.06631	0.30841	72.36	72.36	0	24-HR	3B_FIRE	1ST	1E+07
747688.4	4039861	1.09463	0.30259	72.01	72.01	0	24-HR	3B_FIRE	1ST	8E+06
747788.4	4039861	1.14389	0.2968	71.67	71.67	0	24-HR	3B_FIRE	1ST	8E+06
747888.4	4039861	1.16489	0.29083	71.28	71.28	0	24-HR	3B_FIRE	1ST	8E+06
747988.4	4039861	1.14064	0.28482	70.9	70.9	0	24-HR	3B_FIRE	1ST	8E+06
748088.4	4039861	1.0645	0.27882	70.55	70.55	0	24-HR	3B_FIRE	1ST	8E+06
749888.4	4039861	0.83481	0.29052	65.11	65.11	0	24-HR	3B_FIRE	1ST	1E+07
749988.4	4039861	0.82618	0.29048	64.84	64.84	0	24-HR	3B_FIRE	1ST	1E+07
750088.4	4039861	0.78441	0.29032	64.58	64.58	0	24-HR	3B_FIRE	1ST	1E+07
750188.4	4039861	0.7296	0.29007	64.37	64.37	0	24-HR	3B_FIRE	1ST	8E+06
750288.4	4039861	0.72948	0.28972	64.21	64.21	0	24-HR	3B_FIRE	1ST	8E+06
750388.4	4039861	0.72359	0.28927	64	64	0	24-HR	3B_FIRE	1ST	8E+06
750488.4	4039861	0.71618	0.28873	63.83	63.83	0	24-HR	3B_FIRE	1ST	8E+06
750588.4	4039861	0.72896	0.28809	63.66	63.66	0	24-HR	3B_FIRE	1ST	9E+06
750688.4	4039861	0.80953	0.28737	63.54	63.54	0	24-HR	3B_FIRE	1ST	9E+06
750788.4	4039861	0.86603	0.28657	63.47	63.47	0	24-HR	3B_FIRE	1ST	9E+06
750888.4	4039861	0.89558	0.28569	63.38	63.38	0	24-HR	3B_FIRE	1ST	9E+06
750988.4	4039861	0.89988	0.28472	63.35	63.35	0	24-HR	3B_FIRE	1ST	9E+06
751088.4	4039861	0.88201	0.28368	63.3	63.3	0	24-HR	3B_FIRE	1ST	9E+06
751188.4	4039861	0.84731	0.28257	63.21	63.21	0	24-HR	3B_FIRE	1ST	9E+06
751288.4	4039861	0.80233	0.28139	63.14	63.14	0	24-HR	3B_FIRE	1ST	9E+06
751388.4	4039861	0.75249	0.28014	63.05	63.05	0	24-HR	3B_FIRE	1ST	9E+06
752788.4	4039861	0.70554	0.25719	61.83	61.83	0	24-HR	3B_FIRE	1ST	8E+06
752888.4	4039861	0.71628	0.25526	61.72	61.72	0	24-HR	3B_FIRE	1ST	8E+06
752988.4	4039861	0.71803	0.25331	61.56	61.56	0	24-HR	3B_FIRE	1ST	8E+06
753088.4	4039861	0.71192	0.25133	61.43	61.43	0	24-HR	3B_FIRE	1ST	8E+06
753188.4	4039861	0.69856	0.24932	61.27	61.27	0	24-HR	3B_FIRE	1ST	8E+06
749888.4	4039961	0.8328	0.28399	64.88	64.88	0	24-HR	3B_FIRE	1ST	9E+06
749988.4	4039961	0.82282	0.28424	64.69	64.69	0	24-HR	3B_FIRE	1ST	1E+07
750088.4	4039961	0.80632	0.28438	64.44	64.44	0	24-HR	3B_FIRE	1ST	1E+07
750188.4	4039961	0.75995	0.28442	64.25	64.25	0	24-HR	3B_FIRE	1ST	1E+07
750288.4	4039961	0.71185	0.28436	64.08	64.08	0	24-HR	3B_FIRE	1ST	8E+06
750388.4	4039961	0.71011	0.2842	63.85	63.85	0	24-HR	3B_FIRE	1ST	8E+06
750488.4	4039961	0.70443	0.28394	63.68	63.68	0	24-HR	3B_FIRE	1ST	8E+06
750588.4	4039961	0.69777	0.28358	63.54	63.54	0	24-HR	3B_FIRE	1ST	8E+06
750688.4	4039961	0.71651	0.28314	63.44	63.44	0	24-HR	3B_FIRE	1ST	9E+06
750788.4	4039961	0.79308	0.28261	63.38	63.38	0	24-HR	3B_FIRE	1ST	9E+06
750888.4	4039961	0.84648	0.28199	63.3	63.3	0	24-HR	3B_FIRE	1ST	9E+06
750988.4	4039961	0.87523	0.28129	63.28	63.28	0	24-HR	3B_FIRE	1ST	9E+06
751088.4	4039961	0.87975	0.2805	63.25	63.25	0	24-HR	3B_FIRE	1ST	9E+06
751188.4	4039961	0.86296	0.27964	63.15	63.15	0	24-HR	3B_FIRE	1ST	9E+06
751288.4	4039961	0.83084	0.27871	63.1	63.1	0	24-HR	3B_FIRE	1ST	9E+06
751388.4	4039961	0.79353	0.27772	63.75	64.22	0	24-HR	3B_FIRE	1ST	9E+06

752788.4	4039961	0.68156	0.25752	61.72	61.72	0	24-HR	3B_FIRE	1ST	7E+06
752888.4	4039961	0.68205	0.25574	61.59	61.59	0	24-HR	3B_FIRE	1ST	8E+06
752988.4	4039961	0.69655	0.25394	61.47	61.47	0	24-HR	3B_FIRE	1ST	8E+06
753088.4	4039961	0.70266	0.2521	61.35	61.35	0	24-HR	3B_FIRE	1ST	8E+06
753188.4	4039961	0.70006	0.25024	61.09	61.09	0	24-HR	3B_FIRE	1ST	8E+06
746288.4	4040061	1.3635	0.36451	77.31	77.31	0	24-HR	3B_FIRE	1ST	9E+06
746388.4	4040061	1.33879	0.36259	77	77	0	24-HR	3B_FIRE	1ST	9E+06
746488.4	4040061	1.26957	0.3604	76.62	76.62	0	24-HR	3B_FIRE	1ST	1E+07
752788.4	4040061	0.68536	0.25732	61.62	61.62	0	24-HR	3B_FIRE	1ST	7E+06
752888.4	4040061	0.67415	0.25571	61.53	61.53	0	24-HR	3B_FIRE	1ST	7E+06
752988.4	4040061	0.65833	0.25407	61.44	61.44	0	24-HR	3B_FIRE	1ST	8E+06
753088.4	4040061	0.67561	0.25238	61.2	61.2	0	24-HR	3B_FIRE	1ST	8E+06
753188.4	4040061	0.68507	0.25067	61	61	0	24-HR	3B_FIRE	1ST	8E+06
746288.4	4040161	1.3239	0.35972	77.01	77.01	0	24-HR	3B_FIRE	1ST	9E+06
746388.4	4040161	1.29314	0.35836	76.68	76.68	0	24-HR	3B_FIRE	1ST	9E+06
746488.4	4040161	1.28767	0.35677	76.27	76.27	0	24-HR	3B_FIRE	1ST	1E+07
751488.4	4040161	0.796	0.27033	62.49	62.49	0	24-HR	3B_FIRE	1ST	9E+06
751588.4	4040161	0.75853	0.26965	62.45	62.45	0	24-HR	3B_FIRE	1ST	9E+06
751688.4	4040161	0.71572	0.26891	62.36	62.36	0	24-HR	3B_FIRE	1ST	9E+06
751788.4	4040161	0.67194	0.26809	62.3	62.3	0	24-HR	3B_FIRE	1ST	9E+06
751888.4	4040161	0.67578	0.26721	62.23	62.23	0	24-HR	3B_FIRE	1ST	1E+07
751988.4	4040161	0.67839	0.26626	62.15	62.15	0	24-HR	3B_FIRE	1ST	1E+07
752088.4	4040161	0.6791	0.26525	62.08	62.08	0	24-HR	3B_FIRE	1ST	1E+07
752188.4	4040161	0.67816	0.26417	62	62	0	24-HR	3B_FIRE	1ST	1E+07
752288.4	4040161	0.67593	0.26304	61.95	61.95	0	24-HR	3B_FIRE	1ST	1E+07
752388.4	4040161	0.67242	0.26186	61.95	61.95	0	24-HR	3B_FIRE	1ST	1E+07
752488.4	4040161	0.66702	0.26062	61.94	61.94	0	24-HR	3B_FIRE	1ST	1E+07
752588.4	4040161	0.66714	0.25933	61.95	61.95	0	24-HR	3B_FIRE	1ST	7E+06
752688.4	4040161	0.67593	0.25798	61.86	61.86	0	24-HR	3B_FIRE	1ST	7E+06
752788.4	4040161	0.67755	0.25659	61.56	61.56	0	24-HR	3B_FIRE	1ST	7E+06
752888.4	4040161	0.67394	0.25515	61.37	61.37	0	24-HR	3B_FIRE	1ST	7E+06
752988.4	4040161	0.66492	0.25368	61.19	61.19	0	24-HR	3B_FIRE	1ST	7E+06
753088.4	4040161	0.65103	0.25216	61.03	61.03	0	24-HR	3B_FIRE	1ST	7E+06
753188.4	4040161	0.65348	0.25061	60.86	60.86	0	24-HR	3B_FIRE	1ST	8E+06
746288.4	4040261	1.28415	0.35401	76.68	76.68	0	24-HR	3B_FIRE	1ST	9E+06
746388.4	4040261	1.24933	0.3531	76.37	76.37	0	24-HR	3B_FIRE	1ST	9E+06
746488.4	4040261	1.30366	0.352	76	76	0	24-HR	3B_FIRE	1ST	1E+07
751488.4	4040261	0.80593	0.26628	62.33	62.33	0	24-HR	3B_FIRE	1ST	9E+06
751588.4	4040261	0.77971	0.26585	62.27	62.27	0	24-HR	3B_FIRE	1ST	9E+06
751688.4	4040261	0.74425	0.26534	62.21	62.21	0	24-HR	3B_FIRE	1ST	9E+06
751788.4	4040261	0.70363	0.26476	62.13	62.13	0	24-HR	3B_FIRE	1ST	9E+06
751888.4	4040261	0.6616	0.2641	62.05	62.05	0	24-HR	3B_FIRE	1ST	9E+06
751988.4	4040261	0.65938	0.26337	61.97	61.97	0	24-HR	3B_FIRE	1ST	1E+07
752088.4	4040261	0.66214	0.26258	61.92	61.92	0	24-HR	3B_FIRE	1ST	1E+07
752188.4	4040261	0.66266	0.26172	61.81	61.81	0	24-HR	3B_FIRE	1ST	1E+07
752288.4	4040261	0.6623	0.2608	61.84	61.84	0	24-HR	3B_FIRE	1ST	1E+07
752388.4	4040261	0.66048	0.25982	61.84	61.84	0	24-HR	3B_FIRE	1ST	1E+07
752488.4	4040261	0.65725	0.25878	61.82	61.82	0	24-HR	3B_FIRE	1ST	1E+07
752588.4	4040261	0.65254	0.25769	61.81	61.81	0	24-HR	3B_FIRE	1ST	1E+07
752688.4	4040261	0.64847	0.25653	61.64	61.64	0	24-HR	3B_FIRE	1ST	7E+06
752788.4	4040261	0.65834	0.25533	61.42	61.42	0	24-HR	3B_FIRE	1ST	7E+06
752888.4	4040261	0.66302	0.25408	61.3	61.3	0	24-HR	3B_FIRE	1ST	7E+06
752988.4	4040261	0.66175	0.25278	61.11	61.11	0	24-HR	3B_FIRE	1ST	7E+06
753088.4	4040261	0.65526	0.25143	60.94	60.94	0	24-HR	3B_FIRE	1ST	7E+06
753188.4	4040261	0.6442	0.25005	60.84	60.84	0	24-HR	3B_FIRE	1ST	7E+06
746288.4	4040361	1.24556	0.34771	76.37	76.37	0	24-HR	3B_FIRE	1ST	9E+06
746388.4	4040361	1.20696	0.3471	76.05	76.05	0	24-HR	3B_FIRE	1ST	9E+06
751488.4	4040361	0.80004	0.26168	62.19	62.19	0	24-HR	3B_FIRE	1ST	9E+06
751588.4	4040361	0.78836	0.26149	62.12	62.12	0	24-HR	3B_FIRE	1ST	9E+06
751688.4	4040361	0.76364	0.26121	62.03	62.03	0	24-HR	3B_FIRE	1ST	9E+06
751788.4	4040361	0.73013	0.26086	61.96	61.96	0	24-HR	3B_FIRE	1ST	9E+06
751888.4	4040361	0.69143	0.26043	61.86	61.86	0	24-HR	3B_FIRE	1ST	9E+06
751988.4	4040361	0.65131	0.25993	61.8	61.8	0	24-HR	3B_FIRE	1ST	9E+06
752088.4	4040361	0.64364	0.25935	61.69	61.69	0	24-HR	3B_FIRE	1ST	1E+07
752188.4	4040361	0.64641	0.25871	61.64	61.64	0	24-HR	3B_FIRE	1ST	1E+07
752288.4	4040361	0.64777	0.25801	61.71	61.71	0	24-HR	3B_FIRE	1ST	1E+07
752388.4	4040361	0.64734	0.25723	61.72	61.72	0	24-HR	3B_FIRE	1ST	1E+07

752488.4	4040361	0.64535	0.2564	61.66	61.66	0	24-HR	3B_FIRE	1ST	1E+07
752588.4	4040361	0.64272	0.25551	61.71	61.71	0	24-HR	3B_FIRE	1ST	1E+07
752688.4	4040361	0.63763	0.25455	61.5	61.5	0	24-HR	3B_FIRE	1ST	1E+07
752788.4	4040361	0.63078	0.25354	61.25	61.25	0	24-HR	3B_FIRE	1ST	1E+07
752888.4	4040361	0.64171	0.25247	61.19	61.19	0	24-HR	3B_FIRE	1ST	7E+06
752988.4	4040361	0.64791	0.25136	61	61	0	24-HR	3B_FIRE	1ST	7E+06
753088.4	4040361	0.64872	0.25019	60.8	60.8	0	24-HR	3B_FIRE	1ST	7E+06
753188.4	4040361	0.64473	0.24898	60.67	60.67	0	24-HR	3B_FIRE	1ST	7E+06
746288.4	4040461	1.20791	0.34113	76.06	76.06	0	24-HR	3B_FIRE	1ST	9E+06
746388.4	4040461	1.16659	0.34069	75.75	75.75	0	24-HR	3B_FIRE	1ST	9E+06
751488.4	4040461	0.77696	0.25655	62.02	62.02	0	24-HR	3B_FIRE	1ST	9E+06
751588.4	4040461	0.78179	0.25659	61.95	61.95	0	24-HR	3B_FIRE	1ST	9E+06
751688.4	4040461	0.77095	0.25655	61.86	61.86	0	24-HR	3B_FIRE	1ST	9E+06
751788.4	4040461	0.74806	0.25642	61.81	61.81	0	24-HR	3B_FIRE	1ST	9E+06
751888.4	4040461	0.71637	0.25622	61.73	61.73	0	24-HR	3B_FIRE	1ST	9E+06
751988.4	4040461	0.67947	0.25594	61.61	61.61	0	24-HR	3B_FIRE	1ST	9E+06
752088.4	4040461	0.64109	0.25559	61.55	61.55	0	24-HR	3B_FIRE	1ST	9E+06
752188.4	4040461	0.62917	0.25517	61.54	61.54	0	24-HR	3B_FIRE	1ST	1E+07
752288.4	4040461	0.63238	0.25468	61.58	61.58	0	24-HR	3B_FIRE	1ST	1E+07
752388.4	4040461	0.63352	0.25412	61.6	61.6	0	24-HR	3B_FIRE	1ST	1E+07
752488.4	4040461	0.63301	0.25349	61.59	61.59	0	24-HR	3B_FIRE	1ST	1E+07
752588.4	4040461	0.6315	0.2528	61.62	61.62	0	24-HR	3B_FIRE	1ST	1E+07
752688.4	4040461	0.62777	0.25204	61.38	61.38	0	24-HR	3B_FIRE	1ST	1E+07
752788.4	4040461	0.62291	0.25123	61.12	61.12	0	24-HR	3B_FIRE	1ST	1E+07
752888.4	4040461	0.6176	0.25036	61.06	61.06	0	24-HR	3B_FIRE	1ST	1E+07
752988.4	4040461	0.62443	0.24943	60.84	60.84	0	24-HR	3B_FIRE	1ST	7E+06
753088.4	4040461	0.63245	0.24845	60.68	60.68	0	24-HR	3B_FIRE	1ST	7E+06
753188.4	4040461	0.63539	0.24741	60.52	60.52	0	24-HR	3B_FIRE	1ST	7E+06
746288.4	4040561	1.17132	0.33454	75.75	75.75	0	24-HR	3B_FIRE	1ST	9E+06
746388.4	4040561	1.12797	0.33415	75.46	75.46	0	24-HR	3B_FIRE	1ST	9E+06
751488.4	4040561	0.73752	0.25093	61.84	61.84	0	24-HR	3B_FIRE	1ST	9E+06
751588.4	4040561	0.75922	0.2512	61.78	61.78	0	24-HR	3B_FIRE	1ST	9E+06
751688.4	4040561	0.76397	0.25138	61.69	61.69	0	24-HR	3B_FIRE	1ST	9E+06
751788.4	4040561	0.75408	0.25148	61.61	61.61	0	24-HR	3B_FIRE	1ST	9E+06
751888.4	4040561	0.73248	0.2515	61.53	61.53	0	24-HR	3B_FIRE	1ST	9E+06
751988.4	4040561	0.70245	0.25145	61.43	61.43	0	24-HR	3B_FIRE	1ST	9E+06
752088.4	4040561	0.66787	0.25131	61.4	61.4	0	24-HR	3B_FIRE	1ST	9E+06
752188.4	4040561	0.63125	0.25111	61.36	61.36	0	24-HR	3B_FIRE	1ST	9E+06
752288.4	4040561	0.61558	0.25083	61.45	61.45	0	24-HR	3B_FIRE	1ST	1E+07
752388.4	4040561	0.61883	0.25048	61.49	61.49	0	24-HR	3B_FIRE	1ST	1E+07
752488.4	4040561	0.61982	0.25006	61.47	61.47	0	24-HR	3B_FIRE	1ST	1E+07
752588.4	4040561	0.61932	0.24958	61.46	61.46	0	24-HR	3B_FIRE	1ST	1E+07
752688.4	4040561	0.61686	0.24902	61.26	61.26	0	24-HR	3B_FIRE	1ST	1E+07
752788.4	4040561	0.61336	0.24841	61.03	61.03	0	24-HR	3B_FIRE	1ST	1E+07
752888.4	4040561	0.6093	0.24773	60.88	60.88	0	24-HR	3B_FIRE	1ST	1E+07
752988.4	4040561	0.60412	0.24699	60.72	60.72	0	24-HR	3B_FIRE	1ST	1E+07
753088.4	4040561	0.60752	0.2462	60.56	60.56	0	24-HR	3B_FIRE	1ST	7E+06
753188.4	4040561	0.6172	0.24535	60.44	60.44	0	24-HR	3B_FIRE	1ST	7E+06
746288.4	4040661	1.13868	0.32822	75.61	75.61	0	24-HR	3B_FIRE	1ST	9E+06
746388.4	4040661	1.0948	0.32776	75.29	75.29	0	24-HR	3B_FIRE	1ST	1E+07
746488.4	4040661	1.33045	0.32735	74.91	74.91	0	24-HR	3B_FIRE	1ST	1E+07
751388.4	4040661	0.63203	0.24429	61.87	61.87	0	24-HR	3B_FIRE	1ST	9E+06
751488.4	4040661	0.68417	0.24486	61.69	61.69	0	24-HR	3B_FIRE	1ST	9E+06
751588.4	4040661	0.72131	0.24535	61.61	61.61	0	24-HR	3B_FIRE	1ST	9E+06
751688.4	4040661	0.74198	0.24575	61.53	61.53	0	24-HR	3B_FIRE	1ST	9E+06
751788.4	4040661	0.74677	0.24607	61.44	61.44	0	24-HR	3B_FIRE	1ST	9E+06
751888.4	4040661	0.73763	0.24631	61.35	61.35	0	24-HR	3B_FIRE	1ST	9E+06
751988.4	4040661	0.71756	0.24647	61.3	61.3	0	24-HR	3B_FIRE	1ST	9E+06
752088.4	4040661	0.68952	0.24656	61.26	61.26	0	24-HR	3B_FIRE	1ST	9E+06
746288.4	4040761	1.10939	0.32232	75.62	75.62	0	24-HR	3B_FIRE	1ST	9E+06
746388.4	4040761	1.11861	0.32174	75.35	75.35	0	24-HR	3B_FIRE	1ST	1E+07
746488.4	4040761	1.33953	0.32124	75.08	75.08	0	24-HR	3B_FIRE	1ST	1E+07
751388.4	4040761	0.61818	0.2376	61.68	61.68	0	24-HR	3B_FIRE	1ST	9E+06
751488.4	4040761	0.61996	0.23839	61.52	61.52	0	24-HR	3B_FIRE	1ST	9E+06
751588.4	4040761	0.66998	0.23908	61.42	61.42	0	24-HR	3B_FIRE	1ST	9E+06
751688.4	4040761	0.70541	0.2397	61.35	61.35	0	24-HR	3B_FIRE	1ST	9E+06
751788.4	4040761	0.72529	0.24023	61.28	61.28	0	24-HR	3B_FIRE	1ST	9E+06

751888.4	4040761	0.73009	0.24068	61.19	61.19	0	24-HR	3B_FIRE	1ST	9E+06
751988.4	4040761	0.72211	0.24105	61.17	61.17	0	24-HR	3B_FIRE	1ST	9E+06
752088.4	4040761	0.70345	0.24135	61.15	61.15	0	24-HR	3B_FIRE	1ST	9E+06
746288.4	4040861	1.07782	0.31688	75.43	75.43	0	24-HR	3B_FIRE	1ST	9E+06
746388.4	4040861	1.13455	0.31612	75.16	75.16	0	24-HR	3B_FIRE	1ST	1E+07
746488.4	4040861	1.33757	0.31547	74.9	74.9	0	24-HR	3B_FIRE	1ST	1E+07
751388.4	4040861	0.61023	0.23057	61.55	61.55	0	24-HR	3B_FIRE	1ST	9E+06
751488.4	4040861	0.60878	0.23155	61.38	61.38	0	24-HR	3B_FIRE	1ST	9E+06
751588.4	4040861	0.60876	0.23245	61.29	61.29	0	24-HR	3B_FIRE	1ST	9E+06
751688.4	4040861	0.6565	0.23326	61.21	61.21	0	24-HR	3B_FIRE	1ST	9E+06
751788.4	4040861	0.69024	0.234	61.13	61.13	0	24-HR	3B_FIRE	1ST	9E+06
751888.4	4040861	0.70925	0.23465	61.05	61.05	0	24-HR	3B_FIRE	1ST	9E+06
751988.4	4040861	0.7144	0.23522	61.02	61.02	0	24-HR	3B_FIRE	1ST	9E+06
752088.4	4040861	0.70667	0.23572	60.93	60.93	0	24-HR	3B_FIRE	1ST	9E+06
746288.4	4040961	1.04728	0.31194	75.24	75.24	0	24-HR	3B_FIRE	1ST	9E+06
746388.4	4040961	1.14779	0.31102	74.98	74.98	0	24-HR	3B_FIRE	1ST	1E+07
746488.4	4040961	1.33312	0.31018	74.72	74.72	0	24-HR	3B_FIRE	1ST	1E+07
751388.4	4040961	0.59855	0.22323	61.21	61.21	0	24-HR	3B_FIRE	1ST	9E+06
751488.4	4040961	0.60078	0.22439	61.12	61.12	0	24-HR	3B_FIRE	1ST	9E+06
751588.4	4040961	0.59946	0.22548	61.08	61.08	0	24-HR	3B_FIRE	1ST	9E+06
751688.4	4040961	0.59773	0.22649	61.05	61.05	0	24-HR	3B_FIRE	1ST	9E+06
751788.4	4040961	0.64337	0.22741	61	61	0	24-HR	3B_FIRE	1ST	9E+06
751888.4	4040961	0.6759	0.22826	60.98	60.98	0	24-HR	3B_FIRE	1ST	9E+06
751988.4	4040961	0.69467	0.22903	60.99	60.99	0	24-HR	3B_FIRE	1ST	9E+06
752088.4	4040961	0.69985	0.22972	60.97	60.97	0	24-HR	3B_FIRE	1ST	9E+06
746288.4	4041061	1.0179	0.30745	75.06	75.06	0	24-HR	3B_FIRE	1ST	9E+06
746388.4	4041061	1.15849	0.3064	74.81	74.81	0	24-HR	3B_FIRE	1ST	1E+07
746488.4	4041061	1.32686	0.30541	74.56	74.56	0	24-HR	3B_FIRE	1ST	1E+07
751388.4	4041061	0.58531	0.21564	61.08	61.08	0	24-HR	3B_FIRE	1ST	9E+06
751488.4	4041061	0.59082	0.21698	61	61	0	24-HR	3B_FIRE	1ST	9E+06
751588.4	4041061	0.5927	0.21824	60.97	60.97	0	24-HR	3B_FIRE	1ST	9E+06
751688.4	4041061	0.59107	0.21942	60.96	60.96	0	24-HR	3B_FIRE	1ST	9E+06
751788.4	4041061	0.58739	0.22053	60.91	60.91	0	24-HR	3B_FIRE	1ST	9E+06
751888.4	4041061	0.63116	0.22156	60.9	60.9	0	24-HR	3B_FIRE	1ST	9E+06
751988.4	4041061	0.66225	0.22251	60.88	60.88	0	24-HR	3B_FIRE	1ST	9E+06
752088.4	4041061	0.68018	0.22338	60.87	60.87	0	24-HR	3B_FIRE	1ST	9E+06
746288.4	4041161	0.9895	0.30327	74.88	74.88	0	24-HR	3B_FIRE	1ST	9E+06
746388.4	4041161	1.16641	0.30217	74.63	74.63	0	24-HR	3B_FIRE	1ST	1E+07
746488.4	4041161	1.32642	0.30113	74.77	74.77	0	24-HR	3B_FIRE	1ST	1E+07
746588.4	4041161	1.35317	0.29998	73.78	73.78	0	24-HR	3B_FIRE	1ST	1E+07
746688.4	4041161	1.28327	0.29901	73.62	73.62	0	24-HR	3B_FIRE	1ST	1E+07
751388.4	4041161	0.56981	0.20786	60.97	60.97	0	24-HR	3B_FIRE	1ST	9E+06
751488.4	4041161	0.57856	0.20935	60.92	60.92	0	24-HR	3B_FIRE	1ST	9E+06
751588.4	4041161	0.58354	0.21077	60.89	60.89	0	24-HR	3B_FIRE	1ST	9E+06
751688.4	4041161	0.58479	0.21212	60.85	60.85	0	24-HR	3B_FIRE	1ST	9E+06
751788.4	4041161	0.58266	0.21339	60.82	60.82	0	24-HR	3B_FIRE	1ST	9E+06
751888.4	4041161	0.57749	0.21458	60.8	60.8	0	24-HR	3B_FIRE	1ST	9E+06
751988.4	4041161	0.6192	0.2157	60.79	60.79	0	24-HR	3B_FIRE	1ST	9E+06
752088.4	4041161	0.649	0.21675	60.78	60.78	0	24-HR	3B_FIRE	1ST	9E+06
752188.4	4041161	0.66672	0.21772	60.86	60.86	0	24-HR	3B_FIRE	1ST	9E+06
752288.4	4041161	0.67166	0.21862	60.81	60.81	0	24-HR	3B_FIRE	1ST	9E+06
752388.4	4041161	0.66519	0.21944	60.64	60.64	0	24-HR	3B_FIRE	1ST	9E+06
752488.4	4041161	0.65007	0.22019	60.51	60.51	0	24-HR	3B_FIRE	1ST	9E+06
752588.4	4041161	0.62845	0.22087	60.41	60.41	0	24-HR	3B_FIRE	1ST	9E+06
752688.4	4041161	0.60228	0.22147	60.28	60.28	0	24-HR	3B_FIRE	1ST	9E+06
752788.4	4041161	0.57356	0.22201	60.1	60.1	0	24-HR	3B_FIRE	1ST	9E+06
752888.4	4041161	0.54466	0.22247	60.02	60.02	0	24-HR	3B_FIRE	1ST	9E+06
752988.4	4041161	0.54469	0.22287	59.94	59.94	0	24-HR	3B_FIRE	1ST	1E+07
753088.4	4041161	0.54571	0.2232	59.78	59.78	0	24-HR	3B_FIRE	1ST	1E+07
753188.4	4041161	0.54528	0.22346	59.69	59.69	0	24-HR	3B_FIRE	1ST	1E+07
753288.4	4041161	0.54373	0.22366	59.64	59.64	0	24-HR	3B_FIRE	1ST	1E+07
753388.4	4041161	0.54164	0.22379	59.69	59.69	0	24-HR	3B_FIRE	1ST	1E+07
753488.4	4041161	0.53867	0.22387	59.65	59.65	0	24-HR	3B_FIRE	1ST	1E+07
753588.4	4041161	0.53526	0.22387	59.6	59.6	0	24-HR	3B_FIRE	1ST	1E+07
753688.4	4041161	0.53153	0.22382	59.57	59.57	0	24-HR	3B_FIRE	1ST	1E+07
753788.4	4041161	0.52795	0.22371	59.54	59.54	0	24-HR	3B_FIRE	1ST	7E+06
753888.4	4041161	0.53999	0.22354	59.45	59.45	0	24-HR	3B_FIRE	1ST	7E+06

753988.4	4041161	0.54889	0.22331	59.44	59.44	0	24-HR	3B_FIRE	1ST	7E+06
746288.4	4041261	0.96229	0.29922	74.72	74.72	0	24-HR	3B_FIRE	1ST	9E+06
746388.4	4041261	1.17208	0.29817	74.46	74.46	0	24-HR	3B_FIRE	1ST	1E+07
746488.4	4041261	1.31315	0.2971	74.47	74.47	0	24-HR	3B_FIRE	1ST	1E+07
746588.4	4041261	1.33123	0.29593	73.71	73.71	0	24-HR	3B_FIRE	1ST	1E+07
746688.4	4041261	1.25052	0.29483	73.41	73.41	0	24-HR	3B_FIRE	1ST	1E+07
751388.4	4041261	0.5522	0.2132	60.86	60.86	0	24-HR	3B_FIRE	1ST	9E+06
751488.4	4041261	0.56386	0.20939	60.81	60.81	0	24-HR	3B_FIRE	1ST	9E+06
751588.4	4041261	0.57183	0.20559	60.78	60.78	0	24-HR	3B_FIRE	1ST	9E+06
751688.4	4041261	0.57615	0.20461	60.76	60.76	0	24-HR	3B_FIRE	1ST	9E+06
751788.4	4041261	0.57687	0.20604	60.72	60.72	0	24-HR	3B_FIRE	1ST	9E+06
751888.4	4041261	0.57441	0.20738	60.7	60.7	0	24-HR	3B_FIRE	1ST	9E+06
751988.4	4041261	0.56902	0.20866	60.68	60.68	0	24-HR	3B_FIRE	1ST	9E+06
752088.4	4041261	0.6075	0.20987	60.67	60.67	0	24-HR	3B_FIRE	1ST	9E+06
752188.4	4041261	0.63653	0.211	60.76	60.76	0	24-HR	3B_FIRE	1ST	9E+06
752288.4	4041261	0.6527	0.21206	60.67	60.67	0	24-HR	3B_FIRE	1ST	9E+06
752388.4	4041261	0.65723	0.21305	60.55	60.55	0	24-HR	3B_FIRE	1ST	9E+06
752488.4	4041261	0.65136	0.21397	60.4	60.4	0	24-HR	3B_FIRE	1ST	9E+06
752588.4	4041261	0.63727	0.21481	60.3	60.3	0	24-HR	3B_FIRE	1ST	9E+06
752688.4	4041261	0.61669	0.21559	60.18	60.18	0	24-HR	3B_FIRE	1ST	9E+06
752788.4	4041261	0.59122	0.21629	59.93	59.93	0	24-HR	3B_FIRE	1ST	9E+06
752888.4	4041261	0.56409	0.21693	59.83	59.83	0	24-HR	3B_FIRE	1ST	9E+06
752988.4	4041261	0.53632	0.2175	59.75	59.75	0	24-HR	3B_FIRE	1ST	9E+06
753088.4	4041261	0.53375	0.218	59.62	59.62	0	24-HR	3B_FIRE	1ST	1E+07
753188.4	4041261	0.53513	0.21843	59.52	59.52	0	24-HR	3B_FIRE	1ST	1E+07
753288.4	4041261	0.53501	0.2188	59.49	59.49	0	24-HR	3B_FIRE	1ST	1E+07
753388.4	4041261	0.53378	0.21911	59.52	59.52	0	24-HR	3B_FIRE	1ST	1E+07
753488.4	4041261	0.53156	0.21935	59.52	59.52	0	24-HR	3B_FIRE	1ST	1E+07
753588.4	4041261	0.52875	0.21953	59.52	59.52	0	24-HR	3B_FIRE	1ST	1E+07
753688.4	4041261	0.52549	0.21965	59.5	59.5	0	24-HR	3B_FIRE	1ST	1E+07
753788.4	4041261	0.5219	0.2197	59.48	59.48	0	24-HR	3B_FIRE	1ST	1E+07
753888.4	4041261	0.51769	0.2197	59.39	59.39	0	24-HR	3B_FIRE	1ST	1E+07
753988.4	4041261	0.52653	0.21964	59.37	59.37	0	24-HR	3B_FIRE	1ST	7E+06
746288.4	4041361	0.97847	0.29506	74.53	74.53	0	24-HR	3B_FIRE	1ST	1E+07
746388.4	4041361	1.17765	0.29422	74.41	74.41	0	24-HR	3B_FIRE	1ST	1E+07
746488.4	4041361	1.30003	0.29324	74.25	74.25	0	24-HR	3B_FIRE	1ST	1E+07
746588.4	4041361	1.30777	0.29211	73.6	73.6	0	24-HR	3B_FIRE	1ST	1E+07
746688.4	4041361	1.21882	0.29098	73.23	73.23	0	24-HR	3B_FIRE	1ST	1E+07
751388.4	4041361	0.5666	0.21812	60.77	60.77	0	24-HR	3B_FIRE	1ST	1E+07
751488.4	4041361	0.54722	0.21445	60.73	60.73	0	24-HR	3B_FIRE	1ST	9E+06
751588.4	4041361	0.55793	0.21076	60.68	60.68	0	24-HR	3B_FIRE	1ST	9E+06
751688.4	4041361	0.5651	0.20706	60.65	60.65	0	24-HR	3B_FIRE	1ST	9E+06
751788.4	4041361	0.56882	0.20337	60.64	60.64	0	24-HR	3B_FIRE	1ST	9E+06
751888.4	4041361	0.56909	0.20001	60.61	60.61	0	24-HR	3B_FIRE	1ST	9E+06
751988.4	4041361	0.56629	0.20143	60.59	60.59	0	24-HR	3B_FIRE	1ST	9E+06
752088.4	4041361	0.56079	0.20278	60.59	60.59	0	24-HR	3B_FIRE	1ST	9E+06
752188.4	4041361	0.59672	0.20406	60.68	60.68	0	24-HR	3B_FIRE	1ST	9E+06
752288.4	4041361	0.62345	0.20527	60.55	60.55	0	24-HR	3B_FIRE	1ST	9E+06
752388.4	4041361	0.63881	0.20641	60.42	60.42	0	24-HR	3B_FIRE	1ST	9E+06
752488.4	4041361	0.64339	0.20749	60.32	60.32	0	24-HR	3B_FIRE	1ST	9E+06
752588.4	4041361	0.63807	0.20849	60.19	60.19	0	24-HR	3B_FIRE	1ST	9E+06
752688.4	4041361	0.62471	0.20943	60.07	60.07	0	24-HR	3B_FIRE	1ST	9E+06
752788.4	4041361	0.60449	0.21029	59.8	59.8	0	24-HR	3B_FIRE	1ST	9E+06
752888.4	4041361	0.58068	0.21109	59.65	59.65	0	24-HR	3B_FIRE	1ST	9E+06
752988.4	4041361	0.55461	0.21182	59.52	59.52	0	24-HR	3B_FIRE	1ST	9E+06
753088.4	4041361	0.52781	0.21249	59.41	59.41	0	24-HR	3B_FIRE	1ST	9E+06
753188.4	4041361	0.52347	0.21309	59.38	59.38	0	24-HR	3B_FIRE	1ST	1E+07
753288.4	4041361	0.52526	0.21362	59.36	59.36	0	24-HR	3B_FIRE	1ST	1E+07
753388.4	4041361	0.52538	0.21409	59.37	59.37	0	24-HR	3B_FIRE	1ST	1E+07
753488.4	4041361	0.52404	0.2145	59.34	59.34	0	24-HR	3B_FIRE	1ST	1E+07
753588.4	4041361	0.52176	0.21484	59.31	59.31	0	24-HR	3B_FIRE	1ST	1E+07
753688.4	4041361	0.51913	0.21513	59.36	59.36	0	24-HR	3B_FIRE	1ST	1E+07
753788.4	4041361	0.51583	0.21535	59.32	59.32	0	24-HR	3B_FIRE	1ST	1E+07
753888.4	4041361	0.51218	0.21551	59.25	59.25	0	24-HR	3B_FIRE	1ST	1E+07
753988.4	4041361	0.50843	0.21561	59.25	59.25	0	24-HR	3B_FIRE	1ST	1E+07
746288.4	4041461	0.99323	0.29057	74.38	74.38	0	24-HR	3B_FIRE	1ST	1E+07
746388.4	4041461	1.17672	0.29004	74.12	74.12	0	24-HR	3B_FIRE	1ST	1E+07

746488.4	4041461	1.28572	0.28931	74.04	74.04	0	24-HR	3B_FIRE	1ST	1E+07
746588.4	4041461	1.28788	0.28838	73.7	73.7	0	24-HR	3B_FIRE	1ST	1E+07
746688.4	4041461	1.18903	0.28731	73.13	73.13	0	24-HR	3B_FIRE	1ST	1E+07
751388.4	4041461	0.59365	0.2225	60.65	60.65	0	24-HR	3B_FIRE	1ST	1E+07
751488.4	4041461	0.54847	0.21901	60.62	60.62	0	24-HR	3B_FIRE	1ST	1E+07
751588.4	4041461	0.54203	0.21548	60.58	60.58	0	24-HR	3B_FIRE	1ST	9E+06
751688.4	4041461	0.55197	0.21192	60.56	60.56	0	24-HR	3B_FIRE	1ST	9E+06
751788.4	4041461	0.55835	0.20834	60.52	60.52	0	24-HR	3B_FIRE	1ST	9E+06
751888.4	4041461	0.56146	0.20476	60.51	60.51	0	24-HR	3B_FIRE	1ST	9E+06
751988.4	4041461	0.56133	0.20116	60.49	60.49	0	24-HR	3B_FIRE	1ST	9E+06
752088.4	4041461	0.55835	0.19757	60.5	60.5	0	24-HR	3B_FIRE	1ST	9E+06
752188.4	4041461	0.55288	0.19695	60.55	60.55	0	24-HR	3B_FIRE	1ST	9E+06
752288.4	4041461	0.58517	0.1983	60.47	60.47	0	24-HR	3B_FIRE	1ST	9E+06
752388.4	4041461	0.61071	0.19958	60.33	60.33	0	24-HR	3B_FIRE	1ST	9E+06
752488.4	4041461	0.62553	0.2008	60.21	60.21	0	24-HR	3B_FIRE	1ST	9E+06
752588.4	4041461	0.62987	0.20195	60.07	60.07	0	24-HR	3B_FIRE	1ST	9E+06
752688.4	4041461	0.6252	0.20303	59.99	59.99	0	24-HR	3B_FIRE	1ST	9E+06
752788.4	4041461	0.61181	0.20405	59.7	59.7	0	24-HR	3B_FIRE	1ST	9E+06
752888.4	4041461	0.59287	0.20499	59.48	59.48	0	24-HR	3B_FIRE	1ST	9E+06
752988.4	4041461	0.5701	0.20588	59.31	59.31	0	24-HR	3B_FIRE	1ST	9E+06
753088.4	4041461	0.5452	0.2067	59.19	59.19	0	24-HR	3B_FIRE	1ST	9E+06
753188.4	4041461	0.51957	0.20745	59.11	59.11	0	24-HR	3B_FIRE	1ST	9E+06
753288.4	4041461	0.51368	0.20815	59.18	59.18	0	24-HR	3B_FIRE	1ST	1E+07
753388.4	4041461	0.5158	0.20878	59.22	59.22	0	24-HR	3B_FIRE	1ST	1E+07
753488.4	4041461	0.51608	0.20934	59.24	59.24	0	24-HR	3B_FIRE	1ST	1E+07
753588.4	4041461	0.51489	0.20985	59.23	59.23	0	24-HR	3B_FIRE	1ST	1E+07
753688.4	4041461	0.51291	0.21029	59.28	59.28	0	24-HR	3B_FIRE	1ST	1E+07
753788.4	4041461	0.51029	0.21067	59.33	59.33	0	24-HR	3B_FIRE	1ST	1E+07
753888.4	4041461	0.50686	0.21098	59.24	59.24	0	24-HR	3B_FIRE	1ST	1E+07
753988.4	4041461	0.50332	0.21124	59.19	59.19	0	24-HR	3B_FIRE	1ST	1E+07
746288.4	4041561	1.0014	0.28547	73.93	73.93	0	24-HR	3B_FIRE	1ST	1E+07
746388.4	4041561	1.17077	0.28541	73.65	73.65	0	24-HR	3B_FIRE	1ST	1E+07
746488.4	4041561	1.2619	0.28504	73.39	73.39	0	24-HR	3B_FIRE	1ST	1E+07
746588.4	4041561	1.2544	0.28442	73.11	73.11	0	24-HR	3B_FIRE	1ST	1E+07
746688.4	4041561	1.15624	0.2836	72.83	72.83	0	24-HR	3B_FIRE	1ST	1E+07
746788.4	4041561	1.00105	0.28262	72.55	72.55	0	24-HR	3B_FIRE	1ST	1E+07
746888.4	4041561	0.87974	0.28155	72.29	72.29	0	24-HR	3B_FIRE	1ST	7E+06
746988.4	4041561	0.76714	0.28049	71.8	71.8	0	24-HR	3B_FIRE	1ST	7E+06
747088.4	4041561	0.75942	0.27942	71.38	71.38	0	24-HR	3B_FIRE	1ST	8E+06
747188.4	4041561	0.78592	0.27838	70.98	70.98	0	24-HR	3B_FIRE	1ST	8E+06
747288.4	4041561	0.8001	0.27737	70.51	70.51	0	24-HR	3B_FIRE	1ST	8E+06
747388.4	4041561	0.8091	0.27644	70.13	70.13	0	24-HR	3B_FIRE	1ST	8E+06
747488.4	4041561	0.81806	0.27559	69.73	69.73	0	24-HR	3B_FIRE	1ST	8E+06
747588.4	4041561	0.83282	0.27484	69.39	69.39	0	24-HR	3B_FIRE	1ST	8E+06
747688.4	4041561	0.8561	0.27419	69.11	69.11	0	24-HR	3B_FIRE	1ST	8E+06
747788.4	4041561	0.88718	0.27363	68.84	68.84	0	24-HR	3B_FIRE	1ST	8E+06
747888.4	4041561	0.92272	0.27317	68.55	68.55	0	24-HR	3B_FIRE	1ST	8E+06
747988.4	4041561	0.95802	0.2728	68.29	68.29	0	24-HR	3B_FIRE	1ST	8E+06
748088.4	4041561	0.98612	0.27251	68.02	68.02	0	24-HR	3B_FIRE	1ST	8E+06
751388.4	4041561	0.61258	0.22626	60.58	60.58	0	24-HR	3B_FIRE	1ST	1E+07
751488.4	4041561	0.57664	0.22299	60.53	60.53	0	24-HR	3B_FIRE	1ST	1E+07
751588.4	4041561	0.53084	0.21966	60.5	60.5	0	24-HR	3B_FIRE	1ST	1E+07
751688.4	4041561	0.53692	0.21629	60.48	60.48	0	24-HR	3B_FIRE	1ST	9E+06
751788.4	4041561	0.54594	0.21287	60.44	60.44	0	24-HR	3B_FIRE	1ST	9E+06
751888.4	4041561	0.55171	0.20942	60.42	60.42	0	24-HR	3B_FIRE	1ST	9E+06
751988.4	4041561	0.55422	0.20595	60.4	60.4	0	24-HR	3B_FIRE	1ST	9E+06
752088.4	4041561	0.55376	0.20247	60.4	60.4	0	24-HR	3B_FIRE	1ST	9E+06
752188.4	4041561	0.55075	0.19898	60.47	60.47	0	24-HR	3B_FIRE	1ST	9E+06
752288.4	4041561	0.54466	0.19548	60.41	60.41	0	24-HR	3B_FIRE	1ST	9E+06
752388.4	4041561	0.57406	0.19259	60.29	60.29	0	24-HR	3B_FIRE	1ST	9E+06
752488.4	4041561	0.59854	0.19393	60.15	60.15	0	24-HR	3B_FIRE	1ST	9E+06
752588.4	4041561	0.61266	0.19522	60	60	0	24-HR	3B_FIRE	1ST	9E+06
752688.4	4041561	0.61713	0.19644	59.9	59.9	0	24-HR	3B_FIRE	1ST	9E+06
752788.4	4041561	0.61204	0.19759	59.65	59.65	0	24-HR	3B_FIRE	1ST	9E+06
752888.4	4041561	0.59955	0.19868	59.39	59.39	0	24-HR	3B_FIRE	1ST	9E+06
752988.4	4041561	0.58148	0.19971	59.15	59.15	0	24-HR	3B_FIRE	1ST	9E+06
753088.4	4041561	0.55998	0.20067	59.03	59.03	0	24-HR	3B_FIRE	1ST	9E+06

753188.4	4041561	0.53645	0.20158	58.99	58.99	0	24-HR	3B_FIRE	1ST	9E+06
753288.4	4041561	0.51231	0.20242	59.05	59.05	0	24-HR	3B_FIRE	1ST	9E+06
753388.4	4041561	0.50449	0.2032	59.07	59.07	0	24-HR	3B_FIRE	1ST	1E+07
753488.4	4041561	0.50673	0.20391	59.1	59.1	0	24-HR	3B_FIRE	1ST	1E+07
753588.4	4041561	0.50712	0.20457	59.11	59.11	0	24-HR	3B_FIRE	1ST	1E+07
753688.4	4041561	0.50618	0.20516	59.15	59.15	0	24-HR	3B_FIRE	1ST	1E+07
753788.4	4041561	0.50428	0.20569	59.21	59.21	0	24-HR	3B_FIRE	1ST	1E+07
753888.4	4041561	0.50138	0.20616	59.16	59.16	0	24-HR	3B_FIRE	1ST	1E+07
753988.4	4041561	0.498	0.20657	59.08	59.08	0	24-HR	3B_FIRE	1ST	1E+07
746288.4	4041661	1.01234	0.27961	73.8	73.8	0	24-HR	3B_FIRE	1ST	1E+07
746388.4	4041661	1.16903	0.28016	73.52	73.52	0	24-HR	3B_FIRE	1ST	1E+07
746488.4	4041661	1.24704	0.28031	73.26	73.26	0	24-HR	3B_FIRE	1ST	1E+07
746588.4	4041661	1.2296	0.28012	72.98	72.98	0	24-HR	3B_FIRE	1ST	1E+07
746688.4	4041661	1.12667	0.27965	72.68	72.68	0	24-HR	3B_FIRE	1ST	1E+07
746788.4	4041661	0.97294	0.27894	72.43	72.43	0	24-HR	3B_FIRE	1ST	1E+07
746888.4	4041661	0.86274	0.2781	72.15	72.15	0	24-HR	3B_FIRE	1ST	7E+06
746988.4	4041661	0.75321	0.27715	71.65	71.65	0	24-HR	3B_FIRE	1ST	7E+06
747088.4	4041661	0.74925	0.27613	71.23	71.23	0	24-HR	3B_FIRE	1ST	8E+06
747188.4	4041661	0.7756	0.27507	70.82	70.82	0	24-HR	3B_FIRE	1ST	8E+06
747288.4	4041661	0.79047	0.27401	70.38	70.38	0	24-HR	3B_FIRE	1ST	8E+06
747388.4	4041661	0.79955	0.27297	69.96	69.96	0	24-HR	3B_FIRE	1ST	8E+06
747488.4	4041661	0.80837	0.27198	69.53	69.53	0	24-HR	3B_FIRE	1ST	8E+06
747588.4	4041661	0.82287	0.27108	69.21	69.21	0	24-HR	3B_FIRE	1ST	8E+06
747688.4	4041661	0.84491	0.27025	68.91	68.91	0	24-HR	3B_FIRE	1ST	8E+06
747788.4	4041661	0.87462	0.26953	68.64	68.64	0	24-HR	3B_FIRE	1ST	8E+06
747888.4	4041661	0.90924	0.2689	68.38	68.38	0	24-HR	3B_FIRE	1ST	8E+06
747988.4	4041661	0.94431	0.26836	68.15	68.15	0	24-HR	3B_FIRE	1ST	8E+06
748088.4	4041661	0.97289	0.26792	67.86	67.86	0	24-HR	3B_FIRE	1ST	8E+06
748188.4	4041661	0.98941	0.26756	67.58	67.58	0	24-HR	3B_FIRE	1ST	8E+06
748288.4	4041661	0.98845	0.26728	67.32	67.32	0	24-HR	3B_FIRE	1ST	8E+06
748388.4	4041661	0.96579	0.26706	67.04	67.04	0	24-HR	3B_FIRE	1ST	8E+06
748488.4	4041661	0.92032	0.26689	66.76	66.76	0	24-HR	3B_FIRE	1ST	8E+06
751388.4	4041661	0.62277	0.22935	60.52	60.52	0	24-HR	3B_FIRE	1ST	1E+07
751488.4	4041661	0.59709	0.22632	60.45	60.45	0	24-HR	3B_FIRE	1ST	1E+07
751588.4	4041661	0.55978	0.22323	60.41	60.41	0	24-HR	3B_FIRE	1ST	1E+07
751688.4	4041661	0.52009	0.22008	60.39	60.39	0	24-HR	3B_FIRE	1ST	9E+06
751788.4	4041661	0.53154	0.21686	60.34	60.34	0	24-HR	3B_FIRE	1ST	9E+06
751888.4	4041661	0.53978	0.21359	60.3	60.3	0	24-HR	3B_FIRE	1ST	9E+06
751988.4	4041661	0.54498	0.21028	60.3	60.3	0	24-HR	3B_FIRE	1ST	9E+06
752088.4	4041661	0.54702	0.20694	60.29	60.29	0	24-HR	3B_FIRE	1ST	9E+06
752188.4	4041661	0.5463	0.20358	60.32	60.32	0	24-HR	3B_FIRE	1ST	9E+06
752288.4	4041661	0.54266	0.2002	60.3	60.3	0	24-HR	3B_FIRE	1ST	9E+06
752388.4	4041661	0.53623	0.19679	60.19	60.19	0	24-HR	3B_FIRE	1ST	9E+06
752488.4	4041661	0.56308	0.19338	60.07	60.07	0	24-HR	3B_FIRE	1ST	9E+06
752588.4	4041661	0.58635	0.18996	59.89	59.89	0	24-HR	3B_FIRE	1ST	9E+06
752688.4	4041661	0.60031	0.18969	59.82	59.82	0	24-HR	3B_FIRE	1ST	9E+06
752788.4	4041661	0.60376	0.19097	59.51	59.51	0	24-HR	3B_FIRE	1ST	9E+06
752888.4	4041661	0.59928	0.19219	59.31	59.31	0	24-HR	3B_FIRE	1ST	9E+06
752988.4	4041661	0.58765	0.19335	59.09	59.09	0	24-HR	3B_FIRE	1ST	9E+06
753088.4	4041661	0.57061	0.19444	58.88	58.88	0	24-HR	3B_FIRE	1ST	9E+06
753188.4	4041661	0.5505	0.19548	58.86	58.86	0	24-HR	3B_FIRE	1ST	9E+06
753288.4	4041661	0.52822	0.19646	58.89	58.89	0	24-HR	3B_FIRE	1ST	9E+06
753388.4	4041661	0.50488	0.19738	58.92	58.92	0	24-HR	3B_FIRE	1ST	9E+06
753488.4	4041661	0.4956	0.19824	58.96	58.96	0	24-HR	3B_FIRE	1ST	1E+07
753588.4	4041661	0.498	0.19903	58.99	58.99	0	24-HR	3B_FIRE	1ST	1E+07
753688.4	4041661	0.49858	0.19977	59.02	59.02	0	24-HR	3B_FIRE	1ST	1E+07
753788.4	4041661	0.49781	0.20045	59.08	59.08	0	24-HR	3B_FIRE	1ST	1E+07
753888.4	4041661	0.49582	0.20107	59.09	59.09	0	24-HR	3B_FIRE	1ST	1E+07
753988.4	4041661	0.49308	0.20162	59.08	59.08	0	24-HR	3B_FIRE	1ST	1E+07
746288.4	4041761	1.02147	0.2728	73.68	73.68	0	24-HR	3B_FIRE	1ST	1E+07
746388.4	4041761	1.16575	0.27406	73.4	73.4	0	24-HR	3B_FIRE	1ST	1E+07
746488.4	4041761	1.23082	0.27485	73.11	73.11	0	24-HR	3B_FIRE	1ST	1E+07
746588.4	4041761	1.2045	0.27522	72.84	72.84	0	24-HR	3B_FIRE	1ST	1E+07
746688.4	4041761	1.09829	0.27523	72.57	72.57	0	24-HR	3B_FIRE	1ST	1E+07
746788.4	4041761	0.94541	0.27492	72.29	72.29	0	24-HR	3B_FIRE	1ST	1E+07
746888.4	4041761	0.84623	0.27443	72.01	72.01	0	24-HR	3B_FIRE	1ST	7E+06
746988.4	4041761	0.73977	0.27372	71.51	71.51	0	24-HR	3B_FIRE	1ST	7E+06

747088.4	4041761	0.73922	0.27286	71.07	71.07	0	24-HR	3B_FIRE	1ST	8E+06
747188.4	4041761	0.76529	0.27189	70.64	70.64	0	24-HR	3B_FIRE	1ST	8E+06
747288.4	4041761	0.78078	0.27086	70.23	70.23	0	24-HR	3B_FIRE	1ST	8E+06
747388.4	4041761	0.7904	0.2698	69.82	69.82	0	24-HR	3B_FIRE	1ST	8E+06
747488.4	4041761	0.79965	0.26875	69.42	69.42	0	24-HR	3B_FIRE	1ST	8E+06
747588.4	4041761	0.81405	0.26774	69.13	69.13	0	24-HR	3B_FIRE	1ST	8E+06
747688.4	4041761	0.83515	0.26678	68.83	68.83	0	24-HR	3B_FIRE	1ST	8E+06
747788.4	4041761	0.86328	0.26589	68.53	68.53	0	24-HR	3B_FIRE	1ST	8E+06
747888.4	4041761	0.89669	0.26509	68.27	68.27	0	24-HR	3B_FIRE	1ST	8E+06
747988.4	4041761	0.9308	0.26438	68.01	68.01	0	24-HR	3B_FIRE	1ST	8E+06
748088.4	4041761	0.96002	0.26376	67.74	67.74	0	24-HR	3B_FIRE	1ST	8E+06
748188.4	4041761	0.97844	0.26324	67.46	67.46	0	24-HR	3B_FIRE	1ST	8E+06
748288.4	4041761	0.98097	0.26282	67.2	67.2	0	24-HR	3B_FIRE	1ST	8E+06
748388.4	4041761	0.96323	0.26247	66.92	66.92	0	24-HR	3B_FIRE	1ST	8E+06
748488.4	4041761	0.92376	0.2622	66.65	66.65	0	24-HR	3B_FIRE	1ST	8E+06
753588.4	4041761	0.48774	0.19329	59.11	59.11	0	24-HR	3B_FIRE	1ST	1E+07
753688.4	4041761	0.49039	0.19416	59.17	59.17	0	24-HR	3B_FIRE	1ST	1E+07
753788.4	4041761	0.49124	0.19498	59.24	59.24	0	24-HR	3B_FIRE	1ST	1E+07
753888.4	4041761	0.49031	0.19573	59.21	59.21	0	24-HR	3B_FIRE	1ST	1E+07
753988.4	4041761	0.48811	0.19643	59.12	59.12	0	24-HR	3B_FIRE	1ST	1E+07
746288.4	4041861	1.0286	0.27294	73.55	73.55	0	24-HR	3B_FIRE	1ST	1E+07
746388.4	4041861	1.16058	0.26697	73.26	73.26	0	24-HR	3B_FIRE	1ST	1E+07
746488.4	4041861	1.21445	0.26849	73	73	0	24-HR	3B_FIRE	1ST	1E+07
746588.4	4041861	1.17952	0.26953	72.71	72.71	0	24-HR	3B_FIRE	1ST	1E+07
746688.4	4041861	1.07	0.27014	72.43	72.43	0	24-HR	3B_FIRE	1ST	1E+07
746788.4	4041861	0.91941	0.2704	72.15	72.15	0	24-HR	3B_FIRE	1ST	7E+06
746888.4	4041861	0.83028	0.27035	71.88	71.88	0	24-HR	3B_FIRE	1ST	7E+06
746988.4	4041861	0.72651	0.26999	71.35	71.35	0	24-HR	3B_FIRE	1ST	7E+06
747088.4	4041861	0.72955	0.26941	70.93	70.93	0	24-HR	3B_FIRE	1ST	8E+06
747188.4	4041861	0.7556	0.26866	70.51	70.51	0	24-HR	3B_FIRE	1ST	8E+06
747288.4	4041861	0.77116	0.26776	70.07	70.07	0	24-HR	3B_FIRE	1ST	8E+06
747388.4	4041861	0.78108	0.26678	69.65	69.65	0	24-HR	3B_FIRE	1ST	8E+06
747488.4	4041861	0.7913	0.26575	69.34	69.34	0	24-HR	3B_FIRE	1ST	8E+06
747588.4	4041861	0.80516	0.2647	69.03	69.03	0	24-HR	3B_FIRE	1ST	8E+06
747688.4	4041861	0.82567	0.26366	68.76	68.76	0	24-HR	3B_FIRE	1ST	8E+06
747788.4	4041861	0.8523	0.26266	68.43	68.43	0	24-HR	3B_FIRE	1ST	8E+06
747888.4	4041861	0.8845	0.26172	68.17	68.17	0	24-HR	3B_FIRE	1ST	8E+06
747988.4	4041861	0.91768	0.26085	67.89	67.89	0	24-HR	3B_FIRE	1ST	8E+06
748088.4	4041861	0.94713	0.26006	67.62	67.62	0	24-HR	3B_FIRE	1ST	8E+06
748188.4	4041861	0.9672	0.25937	67.35	67.35	0	24-HR	3B_FIRE	1ST	8E+06
748288.4	4041861	0.97268	0.25878	67.08	67.08	0	24-HR	3B_FIRE	1ST	8E+06
748388.4	4041861	0.95942	0.25827	66.8	66.8	0	24-HR	3B_FIRE	1ST	8E+06
748488.4	4041861	0.92529	0.25785	66.51	66.51	0	24-HR	3B_FIRE	1ST	8E+06
753488.4	4041861	0.51259	0.1863	58.82	58.82	0	24-HR	3B_FIRE	1ST	9E+06
753588.4	4041861	0.49198	0.18736	59.14	59.14	0	24-HR	3B_FIRE	1ST	9E+06
753688.4	4041861	0.47968	0.18836	59.11	59.11	0	24-HR	3B_FIRE	1ST	1E+07
753788.4	4041861	0.48295	0.1893	59.33	59.33	0	24-HR	3B_FIRE	1ST	1E+07
753888.4	4041861	0.48364	0.19018	59.29	59.29	0	24-HR	3B_FIRE	1ST	1E+07
753988.4	4041861	0.48403	0.19102	59.67	59.67	0	24-HR	3B_FIRE	1ST	1E+07
748188.4	4041961	0.95547	0.25594	67.22	67.22	0	24-HR	3B_FIRE	1ST	8E+06
748288.4	4041961	0.96351	0.25518	66.94	66.94	0	24-HR	3B_FIRE	1ST	8E+06
748388.4	4041961	0.9543	0.2545	66.66	66.66	0	24-HR	3B_FIRE	1ST	8E+06
748488.4	4041961	0.92559	0.25392	66.4	66.4	0	24-HR	3B_FIRE	1ST	8E+06
753488.4	4041961	0.52489	0.18011	58.82	58.82	0	24-HR	3B_FIRE	1ST	9E+06
753588.4	4041961	0.50606	0.18128	59.09	59.09	0	24-HR	3B_FIRE	1ST	9E+06
753688.4	4041961	0.48517	0.18239	59.12	59.12	0	24-HR	3B_FIRE	1ST	9E+06
753788.4	4041961	0.47205	0.18345	59.18	59.18	0	24-HR	3B_FIRE	1ST	1E+07
753888.4	4041961	0.47505	0.18446	59.25	59.25	0	24-HR	3B_FIRE	1ST	1E+07
753988.4	4041961	0.47616	0.1854	59.3	59.3	0	24-HR	3B_FIRE	1ST	1E+07
748188.4	4042061	0.94343	0.25291	67.08	67.08	0	24-HR	3B_FIRE	1ST	8E+06
748288.4	4042061	0.95378	0.252	66.8	66.8	0	24-HR	3B_FIRE	1ST	8E+06
748388.4	4042061	0.94831	0.25117	66.53	66.53	0	24-HR	3B_FIRE	1ST	8E+06
748488.4	4042061	0.92436	0.25042	66.27	66.27	0	24-HR	3B_FIRE	1ST	8E+06
753488.4	4042061	0.53364	0.17901	58.86	58.86	0	24-HR	3B_FIRE	1ST	9E+06
753588.4	4042061	0.51757	0.17599	59.05	59.05	0	24-HR	3B_FIRE	1ST	9E+06
753688.4	4042061	0.49869	0.1763	59.1	59.1	0	24-HR	3B_FIRE	1ST	9E+06
753788.4	4042061	0.47866	0.17747	59.16	59.16	0	24-HR	3B_FIRE	1ST	9E+06

753888.4	4042061	0.46458	0.17858	59.23	59.23	0	24-HR	3B_FIRE	1ST	1E+07
753988.4	4042061	0.46769	0.17964	59.28	59.28	0	24-HR	3B_FIRE	1ST	1E+07
748188.4	4042161	0.93116	0.2502	66.93	66.93	0	24-HR	3B_FIRE	1ST	8E+06
748288.4	4042161	0.94378	0.2492	66.68	66.68	0	24-HR	3B_FIRE	1ST	8E+06
748388.4	4042161	0.94147	0.24824	66.4	66.4	0	24-HR	3B_FIRE	1ST	8E+06
748488.4	4042161	0.92198	0.24735	66.15	66.15	0	24-HR	3B_FIRE	1ST	8E+06
753488.4	4042161	0.53766	0.18312	58.88	58.88	0	24-HR	3B_FIRE	1ST	9E+06
753588.4	4042161	0.52544	0.18017	59	59	0	24-HR	3B_FIRE	1ST	9E+06
753688.4	4042161	0.5096	0.17721	59.07	59.07	0	24-HR	3B_FIRE	1ST	9E+06
753788.4	4042161	0.4915	0.17425	59.13	59.13	0	24-HR	3B_FIRE	1ST	9E+06
753888.4	4042161	0.47227	0.17259	59.21	59.21	0	24-HR	3B_FIRE	1ST	9E+06
753988.4	4042161	0.45728	0.17375	59.27	59.27	0	24-HR	3B_FIRE	1ST	1E+07
748188.4	4042261	0.9192	0.24768	66.82	66.82	0	24-HR	3B_FIRE	1ST	8E+06
748288.4	4042261	0.9333	0.24665	66.55	66.55	0	24-HR	3B_FIRE	1ST	8E+06
748388.4	4042261	0.93407	0.24562	66.29	66.29	0	24-HR	3B_FIRE	1ST	8E+06
748488.4	4042261	0.91842	0.24463	66.02	66.02	0	24-HR	3B_FIRE	1ST	8E+06
753488.4	4042261	0.53619	0.18688	58.88	58.88	0	24-HR	3B_FIRE	1ST	9E+06
753588.4	4042261	0.52896	0.18404	58.99	58.99	0	24-HR	3B_FIRE	1ST	9E+06
753688.4	4042261	0.51706	0.18117	59.05	59.05	0	24-HR	3B_FIRE	1ST	9E+06
753788.4	4042261	0.50182	0.17829	59.1	59.1	0	24-HR	3B_FIRE	1ST	9E+06
753888.4	4042261	0.48449	0.17541	59.18	59.18	0	24-HR	3B_FIRE	1ST	9E+06
753988.4	4042261	0.46588	0.17252	59.24	59.24	0	24-HR	3B_FIRE	1ST	9E+06
748188.4	4042361	0.90664	0.24521	66.65	66.65	0	24-HR	3B_FIRE	1ST	8E+06
748288.4	4042361	0.92197	0.24422	66.36	66.36	0	24-HR	3B_FIRE	1ST	8E+06
748388.4	4042361	0.92532	0.24321	66.1	66.1	0	24-HR	3B_FIRE	1ST	8E+06
748488.4	4042361	0.91378	0.24218	65.88	65.88	0	24-HR	3B_FIRE	1ST	8E+06
753488.4	4042361	0.52852	0.19022	58.8	58.8	0	24-HR	3B_FIRE	1ST	9E+06
753588.4	4042361	0.52716	0.18752	58.95	58.95	0	24-HR	3B_FIRE	1ST	9E+06
753688.4	4042361	0.52011	0.18478	59.01	59.01	0	24-HR	3B_FIRE	1ST	9E+06
753788.4	4042361	0.5088	0.18201	59.08	59.08	0	24-HR	3B_FIRE	1ST	9E+06
753888.4	4042361	0.49419	0.17922	59.13	59.13	0	24-HR	3B_FIRE	1ST	9E+06
753988.4	4042361	0.47742	0.17642	59.18	59.18	0	24-HR	3B_FIRE	1ST	9E+06
748188.4	4042461	0.89421	0.24262	66.49	66.49	0	24-HR	3B_FIRE	1ST	8E+06
748288.4	4042461	0.91088	0.24179	66.22	66.22	0	24-HR	3B_FIRE	1ST	8E+06
748388.4	4042461	0.91666	0.24086	65.98	65.98	0	24-HR	3B_FIRE	1ST	8E+06
748488.4	4042461	0.90861	0.23987	65.78	65.78	0	24-HR	3B_FIRE	1ST	8E+06
753488.4	4042461	0.51484	0.1931	58.73	58.73	0	24-HR	3B_FIRE	1ST	9E+06
753588.4	4042461	0.51974	0.19058	58.92	58.92	0	24-HR	3B_FIRE	1ST	9E+06
753688.4	4042461	0.51823	0.18799	58.99	58.99	0	24-HR	3B_FIRE	1ST	9E+06
753788.4	4042461	0.51151	0.18536	59.04	59.04	0	24-HR	3B_FIRE	1ST	9E+06
753888.4	4042461	0.50067	0.1827	59.1	59.1	0	24-HR	3B_FIRE	1ST	9E+06
753988.4	4042461	0.48663	0.18001	59.14	59.14	0	24-HR	3B_FIRE	1ST	9E+06
748188.4	4042561	0.88157	0.23976	66.3	66.3	0	24-HR	3B_FIRE	1ST	8E+06
748288.4	4042561	0.89946	0.23917	66.06	66.06	0	24-HR	3B_FIRE	1ST	8E+06
748388.4	4042561	0.90713	0.23842	65.81	65.81	0	24-HR	3B_FIRE	1ST	8E+06
748488.4	4042561	0.90199	0.23756	65.6	65.6	0	24-HR	3B_FIRE	1ST	8E+06
753488.4	4042561	0.49524	0.19549	58.64	58.64	0	24-HR	3B_FIRE	1ST	9E+06
753588.4	4042561	0.50624	0.19315	58.81	58.81	0	24-HR	3B_FIRE	1ST	9E+06
753688.4	4042561	0.51068	0.19074	58.9	58.9	0	24-HR	3B_FIRE	1ST	9E+06
753788.4	4042561	0.50953	0.18828	59.03	59.03	0	24-HR	3B_FIRE	1ST	9E+06
753888.4	4042561	0.50311	0.18577	59.07	59.07	0	24-HR	3B_FIRE	1ST	9E+06
753988.4	4042561	0.49275	0.18322	59.13	59.13	0	24-HR	3B_FIRE	1ST	9E+06
748188.4	4042661	0.86906	0.23646	66.11	66.11	0	24-HR	3B_FIRE	1ST	8E+06
748288.4	4042661	0.88754	0.2362	65.85	65.85	0	24-HR	3B_FIRE	1ST	8E+06
748388.4	4042661	0.89683	0.23573	65.59	65.59	0	24-HR	3B_FIRE	1ST	8E+06
748488.4	4042661	0.89433	0.23509	65.37	65.37	0	24-HR	3B_FIRE	1ST	8E+06
753488.4	4042661	0.46992	0.19733	58.43	58.43	0	24-HR	3B_FIRE	1ST	9E+06
753588.4	4042661	0.48637	0.19518	58.48	58.48	0	24-HR	3B_FIRE	1ST	9E+06
753688.4	4042661	0.49654	0.19296	58.52	58.52	0	24-HR	3B_FIRE	1ST	9E+06
753788.4	4042661	0.50067	0.19068	58.55	58.55	0	24-HR	3B_FIRE	1ST	9E+06
753888.4	4042661	0.49941	0.18834	58.61	58.61	0	24-HR	3B_FIRE	1ST	9E+06
753988.4	4042661	0.49319	0.18595	58.61	58.61	0	24-HR	3B_FIRE	1ST	9E+06
748188.4	4042761	0.85622	0.23257	65.86	65.86	0	24-HR	3B_FIRE	1ST	8E+06
748288.4	4042761	0.87527	0.23274	65.6	65.6	0	24-HR	3B_FIRE	1ST	8E+06
748388.4	4042761	0.88588	0.23263	65.32	65.32	0	24-HR	3B_FIRE	1ST	8E+06
748488.4	4042761	0.88582	0.23231	65.1	65.1	0	24-HR	3B_FIRE	1ST	8E+06
753488.4	4042761	0.45466	0.19865	58.37	58.37	0	24-HR	3B_FIRE	1ST	9E+06

753588.4	4042761	0.46243	0.19672	58.44	58.44	0	24-HR	3B_FIRE	1ST	9E+06
753688.4	4042761	0.47828	0.19471	58.48	58.48	0	24-HR	3B_FIRE	1ST	9E+06
753788.4	4042761	0.48809	0.19263	58.51	58.51	0	24-HR	3B_FIRE	1ST	9E+06
753888.4	4042761	0.49223	0.19049	58.57	58.57	0	24-HR	3B_FIRE	1ST	9E+06
753988.4	4042761	0.49092	0.18828	58.58	58.58	0	24-HR	3B_FIRE	1ST	9E+06
748188.4	4042861	0.8442	0.228	65.69	65.69	0	24-HR	3B_FIRE	1ST	8E+06
748288.4	4042861	0.86336	0.22866	65.39	65.39	0	24-HR	3B_FIRE	1ST	8E+06
748388.4	4042861	0.87572	0.22901	65.17	65.17	0	24-HR	3B_FIRE	1ST	8E+06
748488.4	4042861	0.8778	0.22907	64.95	64.95	0	24-HR	3B_FIRE	1ST	8E+06
753488.4	4042861	0.455	0.19941	58.34	58.34	0	24-HR	3B_FIRE	1ST	9E+06
753588.4	4042861	0.44861	0.19771	58.39	58.39	0	24-HR	3B_FIRE	1ST	9E+06
753688.4	4042861	0.45499	0.19593	58.41	58.41	0	24-HR	3B_FIRE	1ST	9E+06
753788.4	4042861	0.47035	0.19407	58.47	58.47	0	24-HR	3B_FIRE	1ST	9E+06
753888.4	4042861	0.47995	0.19214	58.53	58.53	0	24-HR	3B_FIRE	1ST	9E+06
753988.4	4042861	0.48386	0.19013	58.55	58.55	0	24-HR	3B_FIRE	1ST	9E+06
748188.4	4042961	0.83204	0.22728	65.48	65.48	0	24-HR	3B_FIRE	1ST	8E+06
748288.4	4042961	0.8519	0.22387	65.23	65.23	0	24-HR	3B_FIRE	1ST	8E+06
748388.4	4042961	0.86499	0.22472	64.97	64.97	0	24-HR	3B_FIRE	1ST	8E+06
748488.4	4042961	0.8693	0.22526	64.79	64.79	0	24-HR	3B_FIRE	1ST	8E+06
753488.4	4042961	0.45395	0.19961	58.27	58.27	0	24-HR	3B_FIRE	1ST	9E+06
753588.4	4042961	0.44892	0.19815	58.32	58.32	0	24-HR	3B_FIRE	1ST	9E+06
753688.4	4042961	0.4424	0.19659	58.33	58.33	0	24-HR	3B_FIRE	1ST	9E+06
753788.4	4042961	0.44782	0.19497	58.41	58.41	0	24-HR	3B_FIRE	1ST	9E+06
753888.4	4042961	0.46262	0.19325	58.46	58.46	0	24-HR	3B_FIRE	1ST	9E+06
753988.4	4042961	0.47172	0.19146	58.46	58.46	0	24-HR	3B_FIRE	1ST	9E+06
748188.4	4043061	0.82038	0.23658	65.31	65.31	0	24-HR	3B_FIRE	1ST	8E+06
748288.4	4043061	0.84049	0.22918	65.07	65.07	0	24-HR	3B_FIRE	1ST	8E+06
748388.4	4043061	0.85433	0.2216	64.79	64.79	0	24-HR	3B_FIRE	1ST	8E+06
748488.4	4043061	0.86047	0.22076	64.63	64.63	0	24-HR	3B_FIRE	1ST	8E+06
753488.4	4043061	0.45174	0.19927	58.24	58.24	0	24-HR	3B_FIRE	1ST	9E+06
753588.4	4043061	0.44808	0.19805	58.27	58.27	0	24-HR	3B_FIRE	1ST	9E+06
753688.4	4043061	0.44294	0.19673	58.3	58.3	0	24-HR	3B_FIRE	1ST	9E+06
753788.4	4043061	0.43658	0.19533	58.36	58.36	0	24-HR	3B_FIRE	1ST	9E+06
753888.4	4043061	0.44072	0.19384	58.38	58.38	0	24-HR	3B_FIRE	1ST	9E+06
753988.4	4043061	0.4549	0.19227	58.39	58.39	0	24-HR	3B_FIRE	1ST	9E+06
748188.4	4043161	0.80895	0.24482	65.15	65.15	0	24-HR	3B_FIRE	1ST	8E+06
748288.4	4043161	0.82912	0.238	64.91	64.91	0	24-HR	3B_FIRE	1ST	8E+06
748388.4	4043161	0.8438	0.23089	64.65	64.65	0	24-HR	3B_FIRE	1ST	8E+06
748488.4	4043161	0.85165	0.22356	64.53	64.53	0	24-HR	3B_FIRE	1ST	8E+06
753488.4	4043161	0.44817	0.19842	58.18	58.18	0	24-HR	3B_FIRE	1ST	9E+06
753588.4	4043161	0.44603	0.19743	58.23	58.23	0	24-HR	3B_FIRE	1ST	9E+06
753688.4	4043161	0.4422	0.19634	58.24	58.24	0	24-HR	3B_FIRE	1ST	9E+06
753788.4	4043161	0.43705	0.19517	58.28	58.28	0	24-HR	3B_FIRE	1ST	9E+06
753888.4	4043161	0.43062	0.19391	58.31	58.31	0	24-HR	3B_FIRE	1ST	9E+06
753988.4	4043161	0.43373	0.19256	58.33	58.33	0	24-HR	3B_FIRE	1ST	9E+06
748188.4	4043261	0.79743	0.2518	64.96	64.96	0	24-HR	3B_FIRE	1ST	8E+06
748288.4	4043261	0.81718	0.2457	64.67	64.67	0	24-HR	3B_FIRE	1ST	8E+06
748388.4	4043261	0.83245	0.23921	64.42	64.42	0	24-HR	3B_FIRE	1ST	8E+06
748488.4	4043261	0.84055	0.23239	64.17	64.17	0	24-HR	3B_FIRE	1ST	8E+06
753488.4	4043261	0.44335	0.19709	58.12	58.12	0	24-HR	3B_FIRE	1ST	9E+06
753588.4	4043261	0.44265	0.19632	58.16	58.16	0	24-HR	3B_FIRE	1ST	9E+06
753688.4	4043261	0.44027	0.19545	58.18	58.18	0	24-HR	3B_FIRE	1ST	9E+06
753788.4	4043261	0.43648	0.19451	58.23	58.23	0	24-HR	3B_FIRE	1ST	9E+06
753888.4	4043261	0.43127	0.19347	58.26	58.26	0	24-HR	3B_FIRE	1ST	9E+06
753988.4	4043261	0.42485	0.19235	58.29	58.29	0	24-HR	3B_FIRE	1ST	9E+06
748188.4	4043361	0.78644	0.25733	64.81	64.81	0	24-HR	3B_FIRE	1ST	8E+06
748288.4	4043361	0.80607	0.25208	64.52	64.52	0	24-HR	3B_FIRE	1ST	8E+06
748388.4	4043361	0.82166	0.24635	64.26	64.26	0	24-HR	3B_FIRE	1ST	8E+06
748488.4	4043361	0.83087	0.2402	64.02	64.02	0	24-HR	3B_FIRE	1ST	8E+06
752688.4	4043361	0.49303	0.19742	58.09	58.09	0	24-HR	3B_FIRE	1ST	1E+07
752788.4	4043361	0.47703	0.19736	58.1	58.1	0	24-HR	3B_FIRE	1ST	1E+07
752888.4	4043361	0.45428	0.19726	58.08	58.08	0	24-HR	3B_FIRE	1ST	1E+07
752988.4	4043361	0.42609	0.19709	58.05	58.05	0	24-HR	3B_FIRE	1ST	1E+07
753088.4	4043361	0.41693	0.19688	58.03	58.03	0	24-HR	3B_FIRE	1ST	9E+06
753188.4	4043361	0.42465	0.19659	58.01	58.01	0	24-HR	3B_FIRE	1ST	9E+06
753488.4	4043361	0.43739	0.19534	58.08	58.08	0	24-HR	3B_FIRE	1ST	9E+06
753588.4	4043361	0.43819	0.19477	58.13	58.13	0	24-HR	3B_FIRE	1ST	9E+06

753688.4	4043361	0.43723	0.19411	58.15	58.15	0	24-HR	3B_FIRE	1ST	9E+06
753788.4	4043361	0.43484	0.19338	58.21	58.21	0	24-HR	3B_FIRE	1ST	9E+06
753888.4	4043361	0.43076	0.19255	58.19	58.19	0	24-HR	3B_FIRE	1ST	9E+06
753988.4	4043361	0.42564	0.19165	58.26	58.26	0	24-HR	3B_FIRE	1ST	9E+06
748188.4	4043461	0.7757	0.26126	64.66	64.66	0	24-HR	3B_FIRE	1ST	8E+06
748288.4	4043461	0.79494	0.25698	64.34	64.34	0	24-HR	3B_FIRE	1ST	8E+06
748388.4	4043461	0.81102	0.25213	64.11	64.11	0	24-HR	3B_FIRE	1ST	8E+06
748488.4	4043461	0.82125	0.24677	63.89	63.89	0	24-HR	3B_FIRE	1ST	8E+06
752688.4	4043461	0.49357	0.19426	57.93	57.93	0	24-HR	3B_FIRE	1ST	1E+07
752788.4	4043461	0.48348	0.19428	57.92	57.92	0	24-HR	3B_FIRE	1ST	1E+07
752888.4	4043461	0.46599	0.19426	57.85	57.85	0	24-HR	3B_FIRE	1ST	1E+07
752988.4	4043461	0.44234	0.1942	57.78	57.78	0	24-HR	3B_FIRE	1ST	1E+07
753088.4	4043461	0.41392	0.19411	57.77	57.77	0	24-HR	3B_FIRE	1ST	1E+07
753188.4	4043461	0.41273	0.19396	57.74	57.74	0	24-HR	3B_FIRE	1ST	9E+06
753288.4	4043461	0.42006	0.19376	57.75	57.75	0	24-HR	3B_FIRE	1ST	9E+06
753388.4	4043461	0.42556	0.1935	57.73	57.73	0	24-HR	3B_FIRE	1ST	9E+06
753488.4	4043461	0.42954	0.19318	57.79	57.79	0	24-HR	3B_FIRE	1ST	9E+06
753588.4	4043461	0.43174	0.19279	57.83	57.83	0	24-HR	3B_FIRE	1ST	9E+06
753688.4	4043461	0.43215	0.19232	57.83	57.83	0	24-HR	3B_FIRE	1ST	9E+06
753788.4	4043461	0.43113	0.19178	57.89	57.89	0	24-HR	3B_FIRE	1ST	9E+06
753888.4	4043461	0.42847	0.19116	57.9	57.9	0	24-HR	3B_FIRE	1ST	9E+06
753988.4	4043461	0.42444	0.19046	57.92	57.92	0	24-HR	3B_FIRE	1ST	9E+06
748188.4	4043561	0.76506	0.2635	64.49	64.49	0	24-HR	3B_FIRE	1ST	8E+06
748288.4	4043561	0.78427	0.26027	64.2	64.2	0	24-HR	3B_FIRE	1ST	8E+06
748388.4	4043561	0.8006	0.2564	63.98	63.98	0	24-HR	3B_FIRE	1ST	8E+06
748488.4	4043561	0.8115	0.25195	63.75	63.75	0	24-HR	3B_FIRE	1ST	8E+06
752688.4	4043561	0.48975	0.19108	57.84	57.84	0	24-HR	3B_FIRE	1ST	1E+07
752788.4	4043561	0.48559	0.19113	57.81	57.81	0	24-HR	3B_FIRE	1ST	1E+07
752888.4	4043561	0.47395	0.19117	57.79	57.79	0	24-HR	3B_FIRE	1ST	1E+07
752988.4	4043561	0.45544	0.19119	57.74	57.74	0	24-HR	3B_FIRE	1ST	1E+07
753088.4	4043561	0.43118	0.19118	57.68	57.68	0	24-HR	3B_FIRE	1ST	1E+07
753188.4	4043561	0.40227	0.19112	57.58	57.58	0	24-HR	3B_FIRE	1ST	1E+07
753288.4	4043561	0.40897	0.19105	57.61	57.61	0	24-HR	3B_FIRE	1ST	9E+06
753388.4	4043561	0.41574	0.19092	57.58	57.58	0	24-HR	3B_FIRE	1ST	9E+06
753488.4	4043561	0.42142	0.19076	57.76	57.76	0	24-HR	3B_FIRE	1ST	9E+06
753588.4	4043561	0.42486	0.19051	57.75	57.75	0	24-HR	3B_FIRE	1ST	9E+06
753688.4	4043561	0.42674	0.19021	57.78	57.78	0	24-HR	3B_FIRE	1ST	9E+06
753788.4	4043561	0.42713	0.18985	57.85	57.85	0	24-HR	3B_FIRE	1ST	9E+06
753888.4	4043561	0.42589	0.18941	57.89	57.89	0	24-HR	3B_FIRE	1ST	9E+06
753988.4	4043561	0.42326	0.1889	57.95	57.95	0	24-HR	3B_FIRE	1ST	9E+06
748188.4	4043661	0.75466	0.264	64.32	64.32	0	24-HR	3B_FIRE	1ST	8E+06
748288.4	4043661	0.77365	0.26187	64.04	64.04	0	24-HR	3B_FIRE	1ST	8E+06
748388.4	4043661	0.79009	0.25906	63.82	63.82	0	24-HR	3B_FIRE	1ST	8E+06
748488.4	4043661	0.80167	0.2556	63.6	63.6	0	24-HR	3B_FIRE	1ST	8E+06
752688.4	4043661	0.48172	0.18793	57.79	57.79	0	24-HR	3B_FIRE	1ST	1E+07
752788.4	4043661	0.48332	0.18798	57.73	57.73	0	24-HR	3B_FIRE	1ST	1E+07
752888.4	4043661	0.47744	0.18804	57.71	57.71	0	24-HR	3B_FIRE	1ST	1E+07
752988.4	4043661	0.46439	0.1881	57.68	57.68	0	24-HR	3B_FIRE	1ST	1E+07
753088.4	4043661	0.44483	0.18814	57.6	57.6	0	24-HR	3B_FIRE	1ST	1E+07
753188.4	4043661	0.41974	0.18815	57.44	57.44	0	24-HR	3B_FIRE	1ST	1E+07
753288.4	4043661	0.39708	0.18816	57.46	57.46	0	24-HR	3B_FIRE	1ST	9E+06
753388.4	4043661	0.40518	0.18813	57.48	57.48	0	24-HR	3B_FIRE	1ST	9E+06
753488.4	4043661	0.41229	0.18809	57.72	57.72	0	24-HR	3B_FIRE	1ST	9E+06
753588.4	4043661	0.41719	0.18798	57.76	57.76	0	24-HR	3B_FIRE	1ST	9E+06
753688.4	4043661	0.42043	0.18782	57.79	57.79	0	24-HR	3B_FIRE	1ST	9E+06
753788.4	4043661	0.42206	0.1876	57.82	57.82	0	24-HR	3B_FIRE	1ST	9E+06
753888.4	4043661	0.42221	0.18732	57.88	57.88	0	24-HR	3B_FIRE	1ST	9E+06
753988.4	4043661	0.42078	0.18698	57.91	57.91	0	24-HR	3B_FIRE	1ST	9E+06
748188.4	4043761	0.7445	0.26275	64.15	64.15	0	24-HR	3B_FIRE	1ST	8E+06
748288.4	4043761	0.76324	0.26175	63.88	63.88	0	24-HR	3B_FIRE	1ST	8E+06
748388.4	4043761	0.7797	0.26004	63.66	63.66	0	24-HR	3B_FIRE	1ST	8E+06
748488.4	4043761	0.79184	0.25764	63.45	63.45	0	24-HR	3B_FIRE	1ST	8E+06
752688.4	4043761	0.46951	0.18489	57.68	57.68	0	24-HR	3B_FIRE	1ST	1E+07
752788.4	4043761	0.47692	0.18492	57.69	57.69	0	24-HR	3B_FIRE	1ST	1E+07
752888.4	4043761	0.47662	0.18496	57.64	57.64	0	24-HR	3B_FIRE	1ST	1E+07
752988.4	4043761	0.46899	0.18502	57.58	57.58	0	24-HR	3B_FIRE	1ST	1E+07
753088.4	4043761	0.4545	0.18507	57.49	57.49	0	24-HR	3B_FIRE	1ST	1E+07

753188.4	4043761	0.43419	0.18513	57.43	57.43	0	24-HR	3B_FIRE	1ST	1E+07
753288.4	4043761	0.40909	0.18518	57.41	57.41	0	24-HR	3B_FIRE	1ST	1E+07
753388.4	4043761	0.39391	0.18522	57.4	57.4	0	24-HR	3B_FIRE	1ST	9E+06
753488.4	4043761	0.40231	0.18526	57.69	57.69	0	24-HR	3B_FIRE	1ST	9E+06
753588.4	4043761	0.40851	0.18525	57.75	57.75	0	24-HR	3B_FIRE	1ST	9E+06
753688.4	4043761	0.41299	0.18519	57.76	57.76	0	24-HR	3B_FIRE	1ST	9E+06
753788.4	4043761	0.41595	0.1851	57.8	57.8	0	24-HR	3B_FIRE	1ST	9E+06
753888.4	4043761	0.41741	0.18495	57.86	57.86	0	24-HR	3B_FIRE	1ST	9E+06
753988.4	4043761	0.41719	0.18475	57.86	57.86	0	24-HR	3B_FIRE	1ST	9E+06
748188.4	4043861	0.73468	0.2598	64	64	0	24-HR	3B_FIRE	1ST	8E+06
748288.4	4043861	0.75296	0.25993	63.71	63.71	0	24-HR	3B_FIRE	1ST	8E+06
748388.4	4043861	0.76938	0.25934	63.49	63.49	0	24-HR	3B_FIRE	1ST	8E+06
748488.4	4043861	0.7821	0.25803	63.31	63.31	0	24-HR	3B_FIRE	1ST	8E+06
752688.4	4043861	0.47706	0.18203	57.64	57.64	0	24-HR	3B_FIRE	1ST	9E+06
752788.4	4043861	0.4665	0.18199	57.63	57.63	0	24-HR	3B_FIRE	1ST	1E+07
752888.4	4043861	0.47173	0.18199	57.6	57.6	0	24-HR	3B_FIRE	1ST	1E+07
752988.4	4043861	0.46959	0.18201	57.54	57.54	0	24-HR	3B_FIRE	1ST	1E+07
748088.4	4043961	0.70649	0.25329	64.13	64.13	0	24-HR	3B_FIRE	1ST	8E+06
748188.4	4043961	0.72479	0.25524	63.8	63.8	0	24-HR	3B_FIRE	1ST	8E+06
748288.4	4043961	0.74277	0.25647	63.52	63.52	0	24-HR	3B_FIRE	1ST	8E+06
748388.4	4043961	0.75928	0.25697	63.33	63.33	0	24-HR	3B_FIRE	1ST	8E+06
748488.4	4043961	0.77235	0.25675	63.16	63.16	0	24-HR	3B_FIRE	1ST	8E+06
752688.4	4043961	0.48508	0.17938	57.55	57.55	0	24-HR	3B_FIRE	1ST	9E+06
752788.4	4043961	0.4648	0.17926	57.55	57.55	0	24-HR	3B_FIRE	1ST	9E+06
752888.4	4043961	0.4628	0.17918	57.52	57.52	0	24-HR	3B_FIRE	1ST	1E+07
752988.4	4043961	0.46588	0.17914	57.43	57.43	0	24-HR	3B_FIRE	1ST	1E+07
748088.4	4044061	0.69706	0.24625	63.88	63.88	0	24-HR	3B_FIRE	1ST	8E+06
748188.4	4044061	0.71496	0.2492	63.57	63.57	0	24-HR	3B_FIRE	1ST	8E+06
748288.4	4044061	0.73261	0.25145	63.3	63.3	0	24-HR	3B_FIRE	1ST	8E+06
748388.4	4044061	0.7482	0.25301	62.98	62.98	0	24-HR	3B_FIRE	1ST	8E+06
748488.4	4044061	0.76148	0.25386	62.81	62.81	0	24-HR	3B_FIRE	1ST	8E+06
752688.4	4044061	0.48951	0.17699	57.53	57.53	0	24-HR	3B_FIRE	1ST	9E+06
752788.4	4044061	0.47427	0.17677	57.52	57.52	0	24-HR	3B_FIRE	1ST	9E+06
752888.4	4044061	0.45246	0.17659	57.47	57.47	0	24-HR	3B_FIRE	1ST	9E+06
752988.4	4044061	0.45874	0.17647	57.44	57.44	0	24-HR	3B_FIRE	1ST	1E+07
748088.4	4044161	0.68802	0.23799	63.66	63.66	0	24-HR	3B_FIRE	1ST	8E+06
748188.4	4044161	0.7057	0.24184	63.4	63.4	0	24-HR	3B_FIRE	1ST	8E+06
748288.4	4044161	0.72284	0.24504	63.11	63.11	0	24-HR	3B_FIRE	1ST	8E+06
748388.4	4044161	0.73822	0.24759	62.78	62.78	0	24-HR	3B_FIRE	1ST	8E+06
748488.4	4044161	0.75163	0.24946	62.61	62.61	0	24-HR	3B_FIRE	1ST	8E+06
752688.4	4044161	0.49082	0.1749	57.7	57.7	0	24-HR	3B_FIRE	1ST	9E+06
752788.4	4044161	0.48085	0.17456	57.71	57.71	0	24-HR	3B_FIRE	1ST	9E+06
752888.4	4044161	0.46365	0.17427	57.62	57.62	0	24-HR	3B_FIRE	1ST	9E+06
752988.4	4044161	0.44825	0.17404	57.51	57.51	0	24-HR	3B_FIRE	1ST	1E+07
748088.4	4044261	0.67942	0.22872	63.48	63.48	0	24-HR	3B_FIRE	1ST	8E+06
748188.4	4044261	0.69659	0.23335	63.22	63.22	0	24-HR	3B_FIRE	1ST	8E+06
748288.4	4044261	0.71306	0.23739	62.88	62.88	0	24-HR	3B_FIRE	1ST	8E+06
748388.4	4044261	0.72824	0.24083	62.55	62.55	0	24-HR	3B_FIRE	1ST	8E+06
748488.4	4044261	0.74201	0.24365	62.43	62.43	0	24-HR	3B_FIRE	1ST	8E+06
752688.4	4044261	0.48752	0.17307	57.61	57.61	0	24-HR	3B_FIRE	1ST	9E+06
752788.4	4044261	0.48259	0.1726	57.56	57.56	0	24-HR	3B_FIRE	1ST	9E+06
752888.4	4044261	0.4702	0.17219	57.42	57.42	0	24-HR	3B_FIRE	1ST	9E+06
752988.4	4044261	0.45169	0.17185	57.37	57.37	0	24-HR	3B_FIRE	1ST	9E+06
748088.4	4044361	0.67091	0.221	63.28	63.28	0	24-HR	3B_FIRE	1ST	8E+06
748188.4	4044361	0.68733	0.22392	62.97	62.97	0	24-HR	3B_FIRE	1ST	8E+06
748288.4	4044361	0.7035	0.2287	62.65	62.65	0	24-HR	3B_FIRE	1ST	8E+06
748388.4	4044361	0.71873	0.23293	62.37	62.37	0	24-HR	3B_FIRE	1ST	8E+06
748488.4	4044361	0.73229	0.23659	62.21	62.21	0	24-HR	3B_FIRE	1ST	8E+06
752688.4	4044361	0.48098	0.17152	57.59	57.59	0	24-HR	3B_FIRE	1ST	9E+06
752788.4	4044361	0.48123	0.17093	57.55	57.55	0	24-HR	3B_FIRE	1ST	9E+06
752888.4	4044361	0.47397	0.1704	57.44	57.44	0	24-HR	3B_FIRE	1ST	9E+06
752988.4	4044361	0.45995	0.16994	57.33	57.33	0	24-HR	3B_FIRE	1ST	9E+06
748088.4	4044461	0.66244	0.22079	63.05	63.05	0	24-HR	3B_FIRE	1ST	8E+06
748188.4	4044461	0.67843	0.21943	62.75	62.75	0	24-HR	3B_FIRE	1ST	8E+06
748288.4	4044461	0.69432	0.21915	62.45	62.45	0	24-HR	3B_FIRE	1ST	8E+06
748388.4	4044461	0.70913	0.22406	62.14	62.14	0	24-HR	3B_FIRE	1ST	8E+06
748488.4	4044461	0.72292	0.22846	62.03	62.03	0	24-HR	3B_FIRE	1ST	8E+06

752688.4	4044461	0.47105	0.17022	57.52	57.52	0	24-HR	3B_FIRE	1ST	9E+06
752788.4	4044461	0.47625	0.16953	57.49	57.49	0	24-HR	3B_FIRE	1ST	9E+06
752888.4	4044461	0.47405	0.16889	57.4	57.4	0	24-HR	3B_FIRE	1ST	9E+06
752988.4	4044461	0.46484	0.1683	57.29	57.29	0	24-HR	3B_FIRE	1ST	9E+06
748088.4	4044561	0.65437	0.21981	62.86	62.86	0	24-HR	3B_FIRE	1ST	8E+06
748188.4	4044561	0.66975	0.219	62.53	62.53	0	24-HR	3B_FIRE	1ST	8E+06
748288.4	4044561	0.68518	0.21782	62.22	62.22	0	24-HR	3B_FIRE	1ST	8E+06
748388.4	4044561	0.69983	0.21625	61.93	61.93	0	24-HR	3B_FIRE	1ST	8E+06
748488.4	4044561	0.70921	0.21942	60.97	61.91	0	24-HR	3B_FIRE	1ST	8E+06
752688.4	4044561	0.45825	0.16914	57.46	57.46	0	24-HR	3B_FIRE	1ST	9E+06
752788.4	4044561	0.468	0.16835	57.41	57.41	0	24-HR	3B_FIRE	1ST	9E+06
752888.4	4044561	0.47046	0.16761	57.27	57.27	0	24-HR	3B_FIRE	1ST	9E+06
752988.4	4044561	0.46611	0.16692	57.17	57.17	0	24-HR	3B_FIRE	1ST	9E+06
748088.4	4044661	0.64628	0.21811	62.63	62.63	0	24-HR	3B_FIRE	1ST	8E+06
748188.4	4044661	0.66137	0.21783	62.33	62.33	0	24-HR	3B_FIRE	1ST	8E+06
748288.4	4044661	0.6765	0.21718	62.04	62.04	0	24-HR	3B_FIRE	1ST	8E+06
748388.4	4044661	0.69082	0.21616	61.74	61.74	0	24-HR	3B_FIRE	1ST	8E+06
748488.4	4044661	0.70255	0.21476	61.26	61.7	0	24-HR	3B_FIRE	1ST	8E+06
752688.4	4044661	0.44304	0.16822	57.44	57.44	0	24-HR	3B_FIRE	1ST	9E+06
752788.4	4044661	0.45691	0.16737	57.36	57.36	0	24-HR	3B_FIRE	1ST	9E+06
752888.4	4044661	0.46392	0.16655	57.21	57.21	0	24-HR	3B_FIRE	1ST	9E+06
752988.4	4044661	0.46442	0.16578	57.15	57.15	0	24-HR	3B_FIRE	1ST	9E+06
748088.4	4044761	0.63829	0.21577	62.38	62.38	0	24-HR	3B_FIRE	1ST	8E+06
748188.4	4044761	0.65308	0.21598	62.11	62.11	0	24-HR	3B_FIRE	1ST	8E+06
748288.4	4044761	0.66797	0.21583	61.85	61.85	0	24-HR	3B_FIRE	1ST	8E+06
748388.4	4044761	0.68219	0.21532	61.59	61.59	0	24-HR	3B_FIRE	1ST	8E+06
748488.4	4044761	0.69511	0.21446	61.37	61.37	0	24-HR	3B_FIRE	1ST	8E+06
752688.4	4044761	0.42559	0.16741	57.39	57.39	0	24-HR	3B_FIRE	1ST	9E+06
752788.4	4044761	0.44319	0.16653	57.3	57.3	0	24-HR	3B_FIRE	1ST	9E+06
752888.4	4044761	0.45438	0.16566	57.13	57.13	0	24-HR	3B_FIRE	1ST	9E+06
752988.4	4044761	0.45942	0.16483	57.08	57.08	0	24-HR	3B_FIRE	1ST	9E+06
748088.4	4044861	0.63117	0.21287	62.28	62.28	0	24-HR	3B_FIRE	1ST	8E+06
748188.4	4044861	0.64547	0.21352	61.99	61.99	0	24-HR	3B_FIRE	1ST	8E+06
748288.4	4044861	0.66006	0.21383	61.75	61.75	0	24-HR	3B_FIRE	1ST	8E+06
748388.4	4044861	0.67408	0.21381	61.51	61.51	0	24-HR	3B_FIRE	1ST	8E+06
750188.4	4044861	0.47375	0.22748	57.78	57.78	0	24-HR	3B_FIRE	1ST	7E+06
752688.4	4044861	0.40638	0.16664	57.34	57.34	0	24-HR	3B_FIRE	1ST	9E+06
752788.4	4044861	0.42731	0.16577	57.27	57.27	0	24-HR	3B_FIRE	1ST	9E+06
752888.4	4044861	0.44247	0.16489	57.14	57.14	0	24-HR	3B_FIRE	1ST	9E+06
752988.4	4044861	0.45146	0.16402	57	57	0	24-HR	3B_FIRE	1ST	9E+06
748088.4	4044961	0.62335	0.20949	61.99	61.99	0	24-HR	3B_FIRE	1ST	8E+06
748188.4	4044961	0.63733	0.21053	61.72	61.72	0	24-HR	3B_FIRE	1ST	8E+06
748288.4	4044961	0.65214	0.21126	61.61	61.61	0	24-HR	3B_FIRE	1ST	8E+06
748388.4	4044961	0.66671	0.21169	61.55	61.55	0	24-HR	3B_FIRE	1ST	8E+06
750188.4	4044961	0.4722	0.2278	57.75	57.75	0	24-HR	3B_FIRE	1ST	7E+06
750288.4	4044961	0.45926	0.22613	57.73	57.73	0	24-HR	3B_FIRE	1ST	7E+06
750388.4	4044961	0.44422	0.22397	57.71	57.71	0	24-HR	3B_FIRE	1ST	7E+06
750488.4	4044961	0.42685	0.22135	57.66	57.66	0	24-HR	3B_FIRE	1ST	7E+06
750588.4	4044961	0.40722	0.21828	57.65	57.65	0	24-HR	3B_FIRE	1ST	7E+06
750688.4	4044961	0.38467	0.21481	57.44	57.44	0	24-HR	3B_FIRE	1ST	7E+06
750788.4	4044961	0.36015	0.21097	57.35	57.35	0	24-HR	3B_FIRE	1ST	7E+06
750888.4	4044961	0.33363	0.2068	57.27	57.27	0	24-HR	3B_FIRE	1ST	7E+06
750988.4	4044961	0.30585	0.20233	57.35	57.35	0	24-HR	3B_FIRE	1ST	7E+06
751088.4	4044961	0.27958	0.1976	57.29	57.29	0	24-HR	3B_FIRE	1ST	9E+06
751188.4	4044961	0.29075	0.19266	57.33	57.33	0	24-HR	3B_FIRE	1ST	9E+06
751288.4	4044961	0.30505	0.18752	57.28	57.28	0	24-HR	3B_FIRE	1ST	1E+07
751388.4	4044961	0.32067	0.18225	57.28	57.28	0	24-HR	3B_FIRE	1ST	1E+07
751488.4	4044961	0.33482	0.17686	57.34	57.34	0	24-HR	3B_FIRE	1ST	1E+07
751588.4	4044961	0.34693	0.17139	57.3	57.3	0	24-HR	3B_FIRE	1ST	1E+07
751688.4	4044961	0.35694	0.16885	57.24	57.24	0	24-HR	3B_FIRE	1ST	1E+07
751788.4	4044961	0.36582	0.16924	57.65	57.65	0	24-HR	3B_FIRE	1ST	1E+07
751888.4	4044961	0.37079	0.16939	57.35	57.35	0	24-HR	3B_FIRE	1ST	1E+07
751988.4	4044961	0.37375	0.16938	57.19	57.19	0	24-HR	3B_FIRE	1ST	1E+07
752088.4	4044961	0.37466	0.16921	57.14	57.14	0	24-HR	3B_FIRE	1ST	1E+07
752188.4	4044961	0.3736	0.16891	57.21	57.21	0	24-HR	3B_FIRE	1ST	1E+07
752288.4	4044961	0.37052	0.16849	57.32	57.32	0	24-HR	3B_FIRE	1ST	1E+07
752388.4	4044961	0.36531	0.16795	57.36	57.36	0	24-HR	3B_FIRE	1ST	1E+07

752488.4	4044961	0.35804	0.16731	57.27	57.27	0	24-HR	3B_FIRE	1ST	1E+07
752588.4	4044961	0.35819	0.1666	57.4	57.4	0	24-HR	3B_FIRE	1ST	9E+06
752688.4	4044961	0.38617	0.16584	57.42	57.42	0	24-HR	3B_FIRE	1ST	9E+06
752788.4	4044961	0.40976	0.16501	57.31	57.31	0	24-HR	3B_FIRE	1ST	9E+06
752888.4	4044961	0.42816	0.16416	57.13	57.13	0	24-HR	3B_FIRE	1ST	9E+06
752988.4	4044961	0.44112	0.16329	57.02	57.02	0	24-HR	3B_FIRE	1ST	9E+06
748088.4	4045061	0.61624	0.2057	61.82	61.82	0	24-HR	3B_FIRE	1ST	8E+06
748188.4	4045061	0.6301	0.20708	61.61	61.61	0	24-HR	3B_FIRE	1ST	8E+06
748288.4	4045061	0.64475	0.2082	61.55	61.55	0	24-HR	3B_FIRE	1ST	8E+06
748388.4	4045061	0.65944	0.20902	61.58	61.58	0	24-HR	3B_FIRE	1ST	8E+06
750188.4	4045061	0.4701	0.22688	57.65	57.65	0	24-HR	3B_FIRE	1ST	7E+06
750288.4	4045061	0.45819	0.22602	57.64	57.64	0	24-HR	3B_FIRE	1ST	7E+06
750388.4	4045061	0.44415	0.22464	57.58	57.58	0	24-HR	3B_FIRE	1ST	7E+06
750488.4	4045061	0.42823	0.22278	57.59	57.59	0	24-HR	3B_FIRE	1ST	7E+06
750588.4	4045061	0.40996	0.22045	57.57	57.57	0	24-HR	3B_FIRE	1ST	7E+06
750688.4	4045061	0.38891	0.21767	57.38	57.38	0	24-HR	3B_FIRE	1ST	7E+06
750788.4	4045061	0.36565	0.21447	57.21	57.21	0	24-HR	3B_FIRE	1ST	7E+06
750888.4	4045061	0.3406	0.21091	57.16	57.16	0	24-HR	3B_FIRE	1ST	7E+06
750988.4	4045061	0.31405	0.207	57.24	57.24	0	24-HR	3B_FIRE	1ST	7E+06
751088.4	4045061	0.286	0.20277	57.22	57.22	0	24-HR	3B_FIRE	1ST	7E+06
751188.4	4045061	0.2843	0.19827	57.17	57.17	0	24-HR	3B_FIRE	1ST	9E+06
751288.4	4045061	0.29457	0.19353	57.15	57.15	0	24-HR	3B_FIRE	1ST	1E+07
751388.4	4045061	0.31057	0.18859	57.15	57.15	0	24-HR	3B_FIRE	1ST	1E+07
751488.4	4045061	0.32524	0.18348	57.19	57.19	0	24-HR	3B_FIRE	1ST	1E+07
751588.4	4045061	0.33817	0.17825	57.2	57.2	0	24-HR	3B_FIRE	1ST	1E+07
751688.4	4045061	0.34899	0.17291	57.11	57.11	0	24-HR	3B_FIRE	1ST	1E+07
751788.4	4045061	0.35764	0.16751	56.98	56.98	0	24-HR	3B_FIRE	1ST	1E+07
751888.4	4045061	0.36452	0.1668	57.04	57.04	0	24-HR	3B_FIRE	1ST	1E+07
751988.4	4045061	0.36912	0.16709	57.09	57.09	0	24-HR	3B_FIRE	1ST	1E+07
752088.4	4045061	0.37116	0.1672	57.01	57.01	0	24-HR	3B_FIRE	1ST	1E+07
752188.4	4045061	0.37155	0.16715	57.18	57.18	0	24-HR	3B_FIRE	1ST	1E+07
752288.4	4045061	0.36952	0.16694	57.23	57.23	0	24-HR	3B_FIRE	1ST	1E+07
752388.4	4045061	0.36523	0.16659	57.17	57.17	0	24-HR	3B_FIRE	1ST	1E+07
752488.4	4045061	0.3592	0.16613	57.15	57.15	0	24-HR	3B_FIRE	1ST	1E+07
752588.4	4045061	0.35161	0.16556	57.16	57.16	0	24-HR	3B_FIRE	1ST	1E+07
752688.4	4045061	0.36416	0.16491	57.19	57.19	0	24-HR	3B_FIRE	1ST	9E+06
752788.4	4045061	0.39018	0.16418	57.17	57.17	0	24-HR	3B_FIRE	1ST	9E+06
752888.4	4045061	0.41175	0.1634	57.08	57.08	0	24-HR	3B_FIRE	1ST	9E+06
752988.4	4045061	0.4286	0.16259	57.11	57.11	0	24-HR	3B_FIRE	1ST	9E+06
748088.4	4045161	0.60993	0.20159	61.8	61.8	0	24-HR	3B_FIRE	1ST	8E+06
748188.4	4045161	0.62378	0.20327	61.67	61.67	0	24-HR	3B_FIRE	1ST	8E+06
748288.4	4045161	0.63757	0.2047	61.5	61.5	0	24-HR	3B_FIRE	1ST	8E+06
748388.4	4045161	0.65175	0.20588	61.49	61.49	0	24-HR	3B_FIRE	1ST	8E+06
750188.4	4045161	0.46783	0.22474	57.59	57.59	0	24-HR	3B_FIRE	1ST	7E+06
750288.4	4045161	0.45675	0.22469	57.55	57.55	0	24-HR	3B_FIRE	1ST	7E+06
750388.4	4045161	0.44364	0.2241	57.45	57.45	0	24-HR	3B_FIRE	1ST	7E+06
750488.4	4045161	0.42883	0.22302	57.44	57.44	0	24-HR	3B_FIRE	1ST	7E+06
750588.4	4045161	0.412	0.22145	57.47	57.47	0	24-HR	3B_FIRE	1ST	7E+06
750688.4	4045161	0.39241	0.2194	57.3	57.3	0	24-HR	3B_FIRE	1ST	7E+06
750788.4	4045161	0.37056	0.2169	57.12	57.12	0	24-HR	3B_FIRE	1ST	7E+06
750888.4	4045161	0.34687	0.21399	57.06	57.06	0	24-HR	3B_FIRE	1ST	7E+06
750988.4	4045161	0.32168	0.2107	57.16	57.16	0	24-HR	3B_FIRE	1ST	7E+06
751088.4	4045161	0.29469	0.20704	57.12	57.12	0	24-HR	3B_FIRE	1ST	7E+06
751188.4	4045161	0.27709	0.20305	57.02	57.02	0	24-HR	3B_FIRE	1ST	9E+06
751288.4	4045161	0.28742	0.19878	57.03	57.03	0	24-HR	3B_FIRE	1ST	9E+06
751388.4	4045161	0.30039	0.19426	57.01	57.01	0	24-HR	3B_FIRE	1ST	1E+07
751488.4	4045161	0.31542	0.18952	57	57	0	24-HR	3B_FIRE	1ST	1E+07
751588.4	4045161	0.32909	0.18459	57.07	57.07	0	24-HR	3B_FIRE	1ST	1E+07
751688.4	4045161	0.3409	0.17952	57.08	57.08	0	24-HR	3B_FIRE	1ST	1E+07
751788.4	4045161	0.35047	0.17433	56.95	56.95	0	24-HR	3B_FIRE	1ST	1E+07
751888.4	4045161	0.35818	0.16906	56.93	56.93	0	24-HR	3B_FIRE	1ST	1E+07
751988.4	4045161	0.36388	0.16436	56.98	56.98	0	24-HR	3B_FIRE	1ST	1E+07
752088.4	4045161	0.36715	0.16477	56.93	56.93	0	24-HR	3B_FIRE	1ST	1E+07
752188.4	4045161	0.36856	0.165	57.03	57.03	0	24-HR	3B_FIRE	1ST	1E+07
752288.4	4045161	0.36767	0.16505	57.06	57.06	0	24-HR	3B_FIRE	1ST	1E+07
752388.4	4045161	0.3647	0.16494	57.07	57.07	0	24-HR	3B_FIRE	1ST	1E+07
752488.4	4045161	0.35977	0.16468	57.05	57.05	0	24-HR	3B_FIRE	1ST	1E+07

752588.4	4045161	0.35324	0.1643	57.08	57.08	0	24-HR	3B_FIRE	1ST	1E+07
752688.4	4045161	0.34509	0.16381	57.06	57.06	0	24-HR	3B_FIRE	1ST	1E+07
752788.4	4045161	0.36966	0.16322	57.09	57.09	0	24-HR	3B_FIRE	1ST	9E+06
752888.4	4045161	0.39365	0.16255	57.01	57.01	0	24-HR	3B_FIRE	1ST	9E+06
752988.4	4045161	0.41356	0.16182	57.06	57.06	0	24-HR	3B_FIRE	1ST	9E+06
748088.4	4045261	0.60399	0.19723	61.84	61.84	0	24-HR	3B_FIRE	1ST	8E+06
748188.4	4045261	0.6178	0.19916	61.78	61.78	0	24-HR	3B_FIRE	1ST	8E+06
748288.4	4045261	0.63054	0.20087	61.45	61.45	0	24-HR	3B_FIRE	1ST	8E+06
748388.4	4045261	0.64421	0.20235	61.4	61.4	0	24-HR	3B_FIRE	1ST	8E+06
750188.4	4045261	0.46536	0.22146	57.55	57.55	0	24-HR	3B_FIRE	1ST	7E+06
750288.4	4045261	0.45486	0.22217	57.42	57.42	0	24-HR	3B_FIRE	1ST	7E+06
750388.4	4045261	0.44289	0.22238	57.38	57.38	0	24-HR	3B_FIRE	1ST	7E+06
750488.4	4045261	0.42902	0.22207	57.32	57.32	0	24-HR	3B_FIRE	1ST	7E+06
750588.4	4045261	0.41337	0.22127	57.33	57.33	0	24-HR	3B_FIRE	1ST	7E+06
750688.4	4045261	0.39521	0.21997	57.19	57.19	0	24-HR	3B_FIRE	1ST	7E+06
750788.4	4045261	0.37478	0.21821	57	57	0	24-HR	3B_FIRE	1ST	7E+06
750888.4	4045261	0.35256	0.21599	56.96	56.96	0	24-HR	3B_FIRE	1ST	7E+06
750988.4	4045261	0.32852	0.21336	57.01	57.01	0	24-HR	3B_FIRE	1ST	7E+06
751088.4	4045261	0.30261	0.21033	56.99	56.99	0	24-HR	3B_FIRE	1ST	7E+06
751188.4	4045261	0.27538	0.20693	56.88	56.88	0	24-HR	3B_FIRE	1ST	7E+06
751288.4	4045261	0.28141	0.2032	56.92	56.92	0	24-HR	3B_FIRE	1ST	9E+06
751388.4	4045261	0.29025	0.19916	56.9	56.9	0	24-HR	3B_FIRE	1ST	1E+07
751488.4	4045261	0.30561	0.19485	56.87	56.87	0	24-HR	3B_FIRE	1ST	1E+07
751588.4	4045261	0.31974	0.19032	56.91	56.91	0	24-HR	3B_FIRE	1ST	1E+07
751688.4	4045261	0.33231	0.18558	56.96	56.96	0	24-HR	3B_FIRE	1ST	1E+07
751788.4	4045261	0.34287	0.18067	56.91	56.91	0	24-HR	3B_FIRE	1ST	1E+07
751888.4	4045261	0.35166	0.17564	56.95	56.95	0	24-HR	3B_FIRE	1ST	1E+07
751988.4	4045261	0.3584	0.1705	57	57	0	24-HR	3B_FIRE	1ST	1E+07
752088.4	4045261	0.36273	0.1653	56.93	56.93	0	24-HR	3B_FIRE	1ST	1E+07
752188.4	4045261	0.36496	0.16242	56.89	56.89	0	24-HR	3B_FIRE	1ST	1E+07
752288.4	4045261	0.36519	0.16276	56.9	56.9	0	24-HR	3B_FIRE	1ST	1E+07
752388.4	4045261	0.36348	0.16292	56.96	56.96	0	24-HR	3B_FIRE	1ST	1E+07
752488.4	4045261	0.35975	0.16292	56.98	56.98	0	24-HR	3B_FIRE	1ST	1E+07
752588.4	4045261	0.35426	0.16276	57.01	57.01	0	24-HR	3B_FIRE	1ST	1E+07
752688.4	4045261	0.34694	0.16246	56.93	56.93	0	24-HR	3B_FIRE	1ST	1E+07
752788.4	4045261	0.3483	0.16205	56.97	56.97	0	24-HR	3B_FIRE	1ST	9E+06
752888.4	4045261	0.37437	0.16153	56.97	56.97	0	24-HR	3B_FIRE	1ST	9E+06
752988.4	4045261	0.3966	0.16092	56.94	56.94	0	24-HR	3B_FIRE	1ST	9E+06
748088.4	4045361	0.59758	0.19268	61.74	61.74	0	24-HR	3B_FIRE	1ST	8E+06
748188.4	4045361	0.61073	0.19481	61.61	61.61	0	24-HR	3B_FIRE	1ST	8E+06
748288.4	4045361	0.6234	0.19675	61.34	61.34	0	24-HR	3B_FIRE	1ST	8E+06
748388.4	4045361	0.63621	0.19849	61.17	61.17	0	24-HR	3B_FIRE	1ST	8E+06
750188.4	4045361	0.46252	0.21709	57.46	57.46	0	24-HR	3B_FIRE	1ST	7E+06
750288.4	4045361	0.4529	0.21855	57.36	57.36	0	24-HR	3B_FIRE	1ST	7E+06
750388.4	4045361	0.44176	0.21952	57.3	57.3	0	24-HR	3B_FIRE	1ST	7E+06
750488.4	4045361	0.42923	0.21998	57.33	57.33	0	24-HR	3B_FIRE	1ST	7E+06
748088.4	4045461	0.59102	0.19062	61.54	61.54	0	24-HR	3B_FIRE	1ST	8E+06
748188.4	4045461	0.60348	0.19031	61.34	61.34	0	24-HR	3B_FIRE	1ST	8E+06
748288.4	4045461	0.61637	0.19243	61.21	61.21	0	24-HR	3B_FIRE	1ST	8E+06
748388.4	4045461	0.6288	0.19438	61.03	61.03	0	24-HR	3B_FIRE	1ST	8E+06
750188.4	4045461	0.45964	0.21176	57.4	57.4	0	24-HR	3B_FIRE	1ST	7E+06
750288.4	4045461	0.45074	0.21391	57.3	57.3	0	24-HR	3B_FIRE	1ST	7E+06
750388.4	4045461	0.44064	0.21559	57.34	57.34	0	24-HR	3B_FIRE	1ST	7E+06
750488.4	4045461	0.42858	0.21678	57.26	57.26	0	24-HR	3B_FIRE	1ST	7E+06
748088.4	4045561	0.58426	0.19123	61.35	61.35	0	24-HR	3B_FIRE	1ST	8E+06
748188.4	4045561	0.59648	0.18916	61.16	61.16	0	24-HR	3B_FIRE	1ST	8E+06
748288.4	4045561	0.609	0.18797	61.01	61.01	0	24-HR	3B_FIRE	1ST	8E+06
748388.4	4045561	0.62112	0.19009	60.82	60.82	0	24-HR	3B_FIRE	1ST	8E+06
750188.4	4045561	0.45645	0.20557	57.36	57.36	0	24-HR	3B_FIRE	1ST	7E+06
750288.4	4045561	0.44833	0.20835	57.3	57.3	0	24-HR	3B_FIRE	1ST	7E+06
750388.4	4045561	0.43873	0.21068	57.26	57.26	0	24-HR	3B_FIRE	1ST	7E+06
750488.4	4045561	0.42734	0.21256	57.13	57.13	0	24-HR	3B_FIRE	1ST	7E+06
748088.4	4045661	0.57762	0.19203	61.16	61.16	0	24-HR	3B_FIRE	1ST	8E+06
748188.4	4045661	0.58958	0.18982	60.97	60.97	0	24-HR	3B_FIRE	1ST	8E+06
748288.4	4045661	0.60161	0.18773	60.77	60.77	0	24-HR	3B_FIRE	1ST	8E+06
748388.4	4045661	0.61327	0.18577	60.53	60.53	0	24-HR	3B_FIRE	1ST	8E+06
748488.4	4045661	0.62413	0.18778	60.24	60.24	0	24-HR	3B_FIRE	1ST	8E+06

748588.4	4045661	0.63403	0.18974	59.98	59.98	0	24-HR	3B_FIRE	1ST	8E+06
748688.4	4045661	0.64252	0.19152	59.77	59.77	0	24-HR	3B_FIRE	1ST	8E+06
748788.4	4045661	0.64889	0.19312	59.59	59.59	0	24-HR	3B_FIRE	1ST	8E+06
748888.4	4045661	0.65228	0.19452	59.4	59.4	0	24-HR	3B_FIRE	1ST	8E+06
748988.4	4045661	0.65223	0.1957	59.25	59.25	0	24-HR	3B_FIRE	1ST	8E+06
749088.4	4045661	0.6476	0.19665	59.03	59.03	0	24-HR	3B_FIRE	1ST	8E+06
749188.4	4045661	0.6383	0.19736	58.85	58.85	0	24-HR	3B_FIRE	1ST	8E+06
749288.4	4045661	0.62353	0.19781	58.61	58.61	0	24-HR	3B_FIRE	1ST	8E+06
749388.4	4045661	0.60315	0.198	58.31	58.31	0	24-HR	3B_FIRE	1ST	8E+06
749488.4	4045661	0.57775	0.19793	58.08	58.08	0	24-HR	3B_FIRE	1ST	8E+06
749588.4	4045661	0.54747	0.19758	57.86	57.86	0	24-HR	3B_FIRE	1ST	8E+06
749688.4	4045661	0.51317	0.19695	57.72	57.72	0	24-HR	3B_FIRE	1ST	8E+06
749788.4	4045661	0.47545	0.19604	57.6	57.6	0	24-HR	3B_FIRE	1ST	8E+06
749888.4	4045661	0.46395	0.19485	57.53	57.53	0	24-HR	3B_FIRE	1ST	7E+06
749988.4	4045661	0.46271	0.19338	57.47	57.47	0	24-HR	3B_FIRE	1ST	7E+06
750088.4	4045661	0.45889	0.19494	57.38	57.38	0	24-HR	3B_FIRE	1ST	7E+06
750188.4	4045661	0.45309	0.19865	57.31	57.31	0	24-HR	3B_FIRE	1ST	7E+06
750288.4	4045661	0.44566	0.20199	57.27	57.27	0	24-HR	3B_FIRE	1ST	7E+06
750388.4	4045661	0.43655	0.20491	57.17	57.17	0	24-HR	3B_FIRE	1ST	7E+06
750488.4	4045661	0.42587	0.20742	57.02	57.02	0	24-HR	3B_FIRE	1ST	7E+06
748088.4	4045761	0.57118	0.19298	60.99	60.99	0	24-HR	3B_FIRE	1ST	8E+06
748188.4	4045761	0.58269	0.19065	60.75	60.75	0	24-HR	3B_FIRE	1ST	8E+06
748288.4	4045761	0.59454	0.18843	60.57	60.57	0	24-HR	3B_FIRE	1ST	8E+06
748388.4	4045761	0.6062	0.18633	60.39	60.39	0	24-HR	3B_FIRE	1ST	8E+06
748488.4	4045761	0.6167	0.18435	60.06	60.06	0	24-HR	3B_FIRE	1ST	8E+06
748588.4	4045761	0.62658	0.18551	59.82	59.82	0	24-HR	3B_FIRE	1ST	8E+06
748688.4	4045761	0.63532	0.18747	59.67	59.67	0	24-HR	3B_FIRE	1ST	8E+06
748788.4	4045761	0.6417	0.18926	59.45	59.45	0	24-HR	3B_FIRE	1ST	8E+06
748888.4	4045761	0.64539	0.19088	59.24	59.24	0	24-HR	3B_FIRE	1ST	8E+06
748988.4	4045761	0.64577	0.1923	59.05	59.05	0	24-HR	3B_FIRE	1ST	8E+06
749088.4	4045761	0.64209	0.19352	58.85	58.85	0	24-HR	3B_FIRE	1ST	8E+06
749188.4	4045761	0.63386	0.19453	58.66	58.66	0	24-HR	3B_FIRE	1ST	8E+06
749288.4	4045761	0.62058	0.1953	58.46	58.46	0	24-HR	3B_FIRE	1ST	8E+06
749388.4	4045761	0.60171	0.19583	58.16	58.16	0	24-HR	3B_FIRE	1ST	8E+06
749488.4	4045761	0.57786	0.19611	57.91	57.91	0	24-HR	3B_FIRE	1ST	8E+06
749588.4	4045761	0.54944	0.19613	57.75	57.75	0	24-HR	3B_FIRE	1ST	8E+06
749688.4	4045761	0.51665	0.19588	57.59	57.59	0	24-HR	3B_FIRE	1ST	8E+06
749788.4	4045761	0.48059	0.19536	57.53	57.53	0	24-HR	3B_FIRE	1ST	8E+06
749888.4	4045761	0.45852	0.19457	57.49	57.49	0	24-HR	3B_FIRE	1ST	7E+06
749988.4	4045761	0.45781	0.19351	57.37	57.37	0	24-HR	3B_FIRE	1ST	7E+06
750088.4	4045761	0.45451	0.19217	57.23	57.23	0	24-HR	3B_FIRE	1ST	7E+06
750188.4	4045761	0.44953	0.19114	57.23	57.23	0	24-HR	3B_FIRE	1ST	7E+06
750288.4	4045761	0.44245	0.19495	57.1	57.1	0	24-HR	3B_FIRE	1ST	7E+06
750388.4	4045761	0.43391	0.19839	56.98	56.98	0	24-HR	3B_FIRE	1ST	7E+06
750488.4	4045761	0.42406	0.20146	56.88	56.88	0	24-HR	3B_FIRE	1ST	7E+06
748088.4	4045861	0.56482	0.19405	60.81	60.81	0	24-HR	3B_FIRE	1ST	8E+06
748188.4	4045861	0.5764	0.19164	60.65	60.65	0	24-HR	3B_FIRE	1ST	8E+06
748288.4	4045861	0.58801	0.18931	60.47	60.47	0	24-HR	3B_FIRE	1ST	8E+06
748388.4	4045861	0.59904	0.18708	60.19	60.19	0	24-HR	3B_FIRE	1ST	8E+06
748488.4	4045861	0.60951	0.18496	59.9	59.9	0	24-HR	3B_FIRE	1ST	8E+06
748588.4	4045861	0.61918	0.18297	59.64	59.64	0	24-HR	3B_FIRE	1ST	8E+06
748688.4	4045861	0.62775	0.18328	59.45	59.45	0	24-HR	3B_FIRE	1ST	8E+06
748788.4	4045861	0.6343	0.18523	59.24	59.24	0	24-HR	3B_FIRE	1ST	8E+06
748888.4	4045861	0.6384	0.18703	59.05	59.05	0	24-HR	3B_FIRE	1ST	8E+06
748988.4	4045861	0.63942	0.18866	58.88	58.88	0	24-HR	3B_FIRE	1ST	8E+06
749088.4	4045861	0.63664	0.19012	58.71	58.71	0	24-HR	3B_FIRE	1ST	8E+06
749188.4	4045861	0.62964	0.19137	58.57	58.57	0	24-HR	3B_FIRE	1ST	8E+06
749288.4	4045861	0.61741	0.19242	58.32	58.32	0	24-HR	3B_FIRE	1ST	8E+06
749388.4	4045861	0.60027	0.19325	58.1	58.1	0	24-HR	3B_FIRE	1ST	8E+06
749488.4	4045861	0.5781	0.19385	57.89	57.89	0	24-HR	3B_FIRE	1ST	8E+06
749588.4	4045861	0.55126	0.19421	57.73	57.73	0	24-HR	3B_FIRE	1ST	8E+06
749688.4	4045861	0.51993	0.19431	57.54	57.54	0	24-HR	3B_FIRE	1ST	8E+06
749788.4	4045861	0.48528	0.19417	57.47	57.47	0	24-HR	3B_FIRE	1ST	8E+06
749888.4	4045861	0.45288	0.19376	57.41	57.41	0	24-HR	3B_FIRE	1ST	7E+06
749988.4	4045861	0.45272	0.19308	57.23	57.23	0	24-HR	3B_FIRE	1ST	7E+06
750088.4	4045861	0.44982	0.19214	57	57	0	24-HR	3B_FIRE	1ST	7E+06
750188.4	4045861	0.44583	0.19093	57.14	57.14	0	24-HR	3B_FIRE	1ST	7E+06

750288.4	4045861	0.43963	0.18946	57.12	57.12	0	24-HR	3B_FIRE	1ST	7E+06
750388.4	4045861	0.43143	0.19126	56.91	56.91	0	24-HR	3B_FIRE	1ST	7E+06
750488.4	4045861	0.42203	0.1948	56.74	56.74	0	24-HR	3B_FIRE	1ST	7E+06
745916	4035023	2.84841	0.62395	82.92	82.92	0	24-HR	3B_FIRE	1ST	8E+06
745966	4035023	2.89237	0.62146	82.67	82.67	0	24-HR	3B_FIRE	1ST	1E+07
746016	4035023	2.91079	0.61901	82.45	82.45	0	24-HR	3B_FIRE	1ST	1E+07
746066	4035023	2.88326	0.61652	82.18	82.18	0	24-HR	3B_FIRE	1ST	1E+07
746116	4035023	2.79987	0.61401	81.88	81.88	0	24-HR	3B_FIRE	1ST	1E+07
746166	4035023	2.75739	0.61153	81.61	81.61	0	24-HR	3B_FIRE	1ST	1E+07
746216	4035023	2.80396	0.60909	81.38	81.38	0	24-HR	3B_FIRE	1ST	1E+07
746266	4035023	2.81243	0.60666	81.15	81.15	0	24-HR	3B_FIRE	1ST	1E+07
746316	4035023	2.78418	0.60425	80.94	80.94	0	24-HR	3B_FIRE	1ST	1E+07
746366	4035023	3.31412	0.6019	80.8	80.8	0	24-HR	3B_FIRE	1ST	9E+06
745916	4035073	2.99128	0.60807	82.98	82.98	0	24-HR	3B_FIRE	1ST	8E+06
745966	4035073	2.86542	0.60617	83.15	83.15	0	24-HR	3B_FIRE	1ST	8E+06
746016	4035073	2.87509	0.60365	82.57	82.57	0	24-HR	3B_FIRE	1ST	1E+07
746066	4035073	2.89301	0.60128	82.16	82.16	0	24-HR	3B_FIRE	1ST	1E+07
746116	4035073	2.86411	0.59925	82.18	82.18	0	24-HR	3B_FIRE	1ST	1E+07
746166	4035073	2.78153	0.59632	81.04	81.04	0	24-HR	3B_FIRE	1ST	1E+07
746216	4035073	2.87919	0.59399	80.66	80.66	0	24-HR	3B_FIRE	1ST	1E+07
746266	4035073	2.92097	0.59181	80.46	80.46	0	24-HR	3B_FIRE	1ST	1E+07
746316	4035073	2.90657	0.58963	80.27	80.27	0	24-HR	3B_FIRE	1ST	1E+07
746366	4035073	2.94925	0.58728	79.85	80.9	0	24-HR	3B_FIRE	1ST	9E+06
745916	4035123	3.0647	0.59079	82.99	82.99	0	24-HR	3B_FIRE	1ST	8E+06
745966	4035123	3.01038	0.58907	83.1	83.1	0	24-HR	3B_FIRE	1ST	8E+06
746016	4035123	2.89592	0.58713	82.93	82.93	0	24-HR	3B_FIRE	1ST	8E+06
746066	4035123	2.84937	0.58471	82.15	82.15	0	24-HR	3B_FIRE	1ST	1E+07
746116	4035123	2.87267	0.58281	82.04	82.04	0	24-HR	3B_FIRE	1ST	1E+07
746166	4035123	2.79048	0.58024	81.04	81.04	0	24-HR	3B_FIRE	1ST	1E+07
746216	4035123	2.88534	0.57837	80.97	80.97	0	24-HR	3B_FIRE	1ST	1E+07
746266	4035123	2.96932	0.57648	80.87	80.87	0	24-HR	3B_FIRE	1ST	1E+07
746316	4035123	2.98728	0.57458	80.76	80.76	0	24-HR	3B_FIRE	1ST	1E+07
746366	4035123	2.95343	0.57162	79.18	81.3	0	24-HR	3B_FIRE	1ST	7E+06
745916	4035173	3.07176	0.572	82.65	82.65	0	24-HR	3B_FIRE	1ST	8E+06
745966	4035173	3.07346	0.5708	83.12	83.12	0	24-HR	3B_FIRE	1ST	8E+06
746016	4035173	3.04116	0.56898	82.8	82.8	0	24-HR	3B_FIRE	1ST	8E+06
746066	4035173	2.95572	0.5668	81.99	81.99	0	24-HR	3B_FIRE	1ST	8E+06
746116	4035173	2.80945	0.56506	81.78	81.78	0	24-HR	3B_FIRE	1ST	1E+07
746166	4035173	2.78457	0.56292	81.01	81.01	0	24-HR	3B_FIRE	1ST	1E+07
746216	4035173	2.84433	0.56105	80.62	80.62	0	24-HR	3B_FIRE	1ST	1E+07
746266	4035173	2.98319	0.55931	80.41	80.41	0	24-HR	3B_FIRE	1ST	1E+07
746316	4035173	3.04519	0.55758	80.22	80.22	0	24-HR	3B_FIRE	1ST	1E+07
746366	4035173	3.06619	0.55536	79.33	81.04	0	24-HR	3B_FIRE	1ST	7E+06
745916	4035223	2.98095	0.55234	82.6	82.6	0	24-HR	3B_FIRE	1ST	8E+06
745966	4035223	3.06027	0.55118	82.81	82.81	0	24-HR	3B_FIRE	1ST	8E+06
746016	4035223	3.11893	0.54943	82.24	82.24	0	24-HR	3B_FIRE	1ST	8E+06
746066	4035223	3.09442	0.54787	81.93	81.93	0	24-HR	3B_FIRE	1ST	8E+06
746116	4035223	2.98476	0.54633	81.65	81.65	0	24-HR	3B_FIRE	1ST	8E+06
746166	4035223	2.78407	0.54478	81.36	81.36	0	24-HR	3B_FIRE	1ST	8E+06
746216	4035223	2.73564	0.54328	81.16	81.16	0	24-HR	3B_FIRE	1ST	1E+07
746266	4035223	2.9343	0.54172	80.88	80.88	0	24-HR	3B_FIRE	1ST	1E+07
746316	4035223	3.06949	0.54012	80.56	80.56	0	24-HR	3B_FIRE	1ST	1E+07
746366	4035223	3.11439	0.53832	79.93	80.56	0	24-HR	3B_FIRE	1ST	1E+07
745916	4035273	2.82575	0.53182	82.67	82.67	0	24-HR	3B_FIRE	1ST	7E+06
745966	4035273	2.96288	0.53069	82.6	82.6	0	24-HR	3B_FIRE	1ST	7E+06
746016	4035273	3.08029	0.52923	82.06	82.06	0	24-HR	3B_FIRE	1ST	8E+06
746066	4035273	3.12695	0.5281	82.01	82.01	0	24-HR	3B_FIRE	1ST	8E+06
746116	4035273	3.10036	0.5269	81.88	81.88	0	24-HR	3B_FIRE	1ST	8E+06
746166	4035273	2.9977	0.5252	81.03	81.03	0	24-HR	3B_FIRE	1ST	8E+06
746216	4035273	2.75323	0.5239	80.77	80.77	0	24-HR	3B_FIRE	1ST	8E+06
746266	4035273	2.79261	0.52264	80.59	80.59	0	24-HR	3B_FIRE	1ST	1E+07
746316	4035273	3.01962	0.52135	80.37	80.37	0	24-HR	3B_FIRE	1ST	1E+07
746366	4035273	3.15444	0.52	80.08	80.62	0	24-HR	3B_FIRE	1ST	1E+07
745916	4035323	2.5512	0.5105	82.77	82.77	0	24-HR	3B_FIRE	1ST	8E+06
745966	4035323	2.7548	0.50958	82.64	82.64	0	24-HR	3B_FIRE	1ST	7E+06
746016	4035323	2.95199	0.50831	82.02	82.02	0	24-HR	3B_FIRE	1ST	7E+06
746066	4035323	3.03848	0.50763	82.28	82.28	0	24-HR	3B_FIRE	1ST	8E+06

746116	4035323	3.08825	0.50688	82.46	82.46	0	24-HR	3B_FIRE	1ST	8E+06
746166	4035323	3.09186	0.50525	81.35	81.35	0	24-HR	3B_FIRE	1ST	8E+06
746216	4035323	2.9428	0.50418	81.09	81.09	0	24-HR	3B_FIRE	1ST	8E+06
746266	4035323	2.69119	0.50307	80.79	80.79	0	24-HR	3B_FIRE	1ST	8E+06
746316	4035323	2.87578	0.50197	80.52	80.52	0	24-HR	3B_FIRE	1ST	1E+07
746366	4035323	3.11871	0.50092	80.33	80.68	0	24-HR	3B_FIRE	1ST	1E+07
745916	4035373	2.59425	0.4885	82.81	82.81	0	24-HR	3B_FIRE	1ST	1E+07
745966	4035373	2.54944	0.48769	82.5	82.5	0	24-HR	3B_FIRE	1ST	1E+07
746016	4035373	2.69905	0.48663	81.81	81.81	0	24-HR	3B_FIRE	1ST	8E+06
746066	4035373	2.86574	0.48643	82.48	82.48	0	24-HR	3B_FIRE	1ST	7E+06
746116	4035373	2.9898	0.48589	82.63	82.63	0	24-HR	3B_FIRE	1ST	7E+06
746166	4035373	3.06072	0.48448	81.48	81.48	0	24-HR	3B_FIRE	1ST	8E+06
746216	4035373	3.01967	0.48367	81.27	81.27	0	24-HR	3B_FIRE	1ST	8E+06
746266	4035373	2.87486	0.48286	81.08	81.08	0	24-HR	3B_FIRE	1ST	8E+06
746316	4035373	2.6177	0.48204	80.88	80.88	0	24-HR	3B_FIRE	1ST	8E+06
746366	4035373	2.96736	0.48104	80.43	80.43	0	24-HR	3B_FIRE	1ST	1E+07
745916	4035423	2.73966	0.46603	82.91	82.91	0	24-HR	3B_FIRE	1ST	1E+07
745966	4035423	2.75412	0.46533	82.39	82.39	0	24-HR	3B_FIRE	1ST	1E+07
746016	4035423	2.73162	0.46464	81.9	81.9	0	24-HR	3B_FIRE	1ST	1E+07
746066	4035423	2.63136	0.46449	82.32	82.32	0	24-HR	3B_FIRE	1ST	1E+07
746116	4035423	2.7768	0.46405	82.3	82.3	0	24-HR	3B_FIRE	1ST	7E+06
746166	4035423	2.93305	0.46292	81.18	81.18	0	24-HR	3B_FIRE	1ST	7E+06
746216	4035423	2.99297	0.46229	80.89	80.89	0	24-HR	3B_FIRE	1ST	7E+06
746266	4035423	2.94475	0.46166	80.63	80.63	0	24-HR	3B_FIRE	1ST	7E+06
746316	4035423	2.79081	0.46103	80.41	80.41	0	24-HR	3B_FIRE	1ST	8E+06
746366	4035423	2.7106	0.46074	80.76	80.76	0	24-HR	3B_FIRE	1ST	7E+06
745916	4035473	3.05933	0.44481	82.94	82.94	0	24-HR	3B_FIRE	1ST	9E+06
745966	4035473	2.92913	0.44226	81.65	81.65	0	24-HR	3B_FIRE	1ST	1E+07
746016	4035473	2.93339	0.44214	81.76	81.76	0	24-HR	3B_FIRE	1ST	1E+07
746066	4035473	2.9136	0.44187	81.64	81.64	0	24-HR	3B_FIRE	1ST	1E+07
746116	4035473	2.84724	0.44158	81.51	81.51	0	24-HR	3B_FIRE	1ST	1E+07
746166	4035473	2.7156	0.44139	81.59	81.59	0	24-HR	3B_FIRE	1ST	1E+07
746216	4035473	2.80548	0.44098	81.31	81.31	0	24-HR	3B_FIRE	1ST	7E+06
746266	4035473	2.90913	0.44056	81.04	81.04	0	24-HR	3B_FIRE	1ST	7E+06
746316	4035473	2.9003	0.4401	80.75	80.75	0	24-HR	3B_FIRE	1ST	7E+06
746366	4035473	2.79462	0.43988	80.89	80.89	0	24-HR	3B_FIRE	1ST	1E+07
746762.3	4034654	3.10666	0.63016	79.65	79.65	0	24-HR	3B_FIRE	1ST	1E+07
746812.3	4034654	2.97651	0.62674	79.32	79.32	0	24-HR	3B_FIRE	1ST	1E+07
746862.3	4034654	3.11835	0.62343	79.1	79.1	0	24-HR	3B_FIRE	1ST	1E+07
746912.3	4034654	3.11343	0.62014	78.87	78.87	0	24-HR	3B_FIRE	1ST	1E+07
746962.3	4034654	2.96091	0.61693	78.72	78.72	0	24-HR	3B_FIRE	1ST	1E+07
746762.3	4034704	3.27913	0.62852	79.45	79.45	0	24-HR	3B_FIRE	1ST	1E+07
746812.3	4034704	3.03473	0.62556	79.59	79.59	0	24-HR	3B_FIRE	1ST	1E+07
746862.3	4034704	3.21259	0.6221	79.08	79.08	0	24-HR	3B_FIRE	1ST	1E+07
746912.3	4034704	3.23169	0.61887	78.83	78.83	0	24-HR	3B_FIRE	1ST	1E+07
746962.3	4034704	3.08866	0.61575	78.69	78.69	0	24-HR	3B_FIRE	1ST	1E+07
746762.3	4034754	3.45317	0.62547	79.41	79.41	0	24-HR	3B_FIRE	1ST	1E+07
746812.3	4034754	3.18384	0.62256	79.49	79.49	0	24-HR	3B_FIRE	1ST	1E+07
746862.3	4034754	3.30672	0.61929	79.1	79.1	0	24-HR	3B_FIRE	1ST	1E+07
746912.3	4034754	3.35449	0.61609	78.76	78.76	0	24-HR	3B_FIRE	1ST	1E+07
746962.3	4034754	3.22358	0.61311	78.67	78.67	0	24-HR	3B_FIRE	1ST	1E+07
746762.3	4034804	3.62702	0.62095	79.48	79.48	0	24-HR	3B_FIRE	1ST	1E+07
746812.3	4034804	3.38006	0.61807	79.45	79.45	0	24-HR	3B_FIRE	1ST	1E+07
746862.3	4034804	3.40048	0.61487	79	79	0	24-HR	3B_FIRE	1ST	1E+07
746912.3	4034804	3.48134	0.61183	78.72	78.72	0	24-HR	3B_FIRE	1ST	1E+07
746962.3	4034804	3.3665	0.60895	78.62	78.62	0	24-HR	3B_FIRE	1ST	1E+07
746762.3	4034854	3.8005	0.61482	79.46	79.46	0	24-HR	3B_FIRE	1ST	1E+07
746812.3	4034854	3.58871	0.61192	79.24	79.24	0	24-HR	3B_FIRE	1ST	1E+07
746862.3	4034854	3.4919	0.609	78.96	78.96	0	24-HR	3B_FIRE	1ST	1E+07
746912.3	4034854	3.61192	0.60608	78.68	78.68	0	24-HR	3B_FIRE	1ST	1E+07
746962.3	4034854	3.51687	0.60333	78.58	78.58	0	24-HR	3B_FIRE	1ST	1E+07
746762.3	4034904	3.9654	0.60731	79.59	79.59	0	24-HR	3B_FIRE	1ST	1E+07
746812.3	4034904	3.79124	0.60471	79.57	79.57	0	24-HR	3B_FIRE	1ST	1E+07
746862.3	4034904	3.58017	0.60161	78.88	78.88	0	24-HR	3B_FIRE	1ST	1E+07
746912.3	4034904	3.74545	0.59888	78.65	78.65	0	24-HR	3B_FIRE	1ST	1E+07
746962.3	4034904	3.67519	0.59625	78.53	78.53	0	24-HR	3B_FIRE	1ST	1E+07
746762.3	4034954	4.12576	0.59805	79.37	79.37	0	24-HR	3B_FIRE	1ST	1E+07

	746812.3	4034954	4.01692	0.59544	79.12	79.12	0	24-HR	3B_FIRE	1ST	1E+07
	746862.3	4034954	3.6921	0.59283	78.86	78.86	0	24-HR	3B_FIRE	1ST	1E+07
	746912.3	4034954	3.88117	0.59024	78.61	78.61	0	24-HR	3B_FIRE	1ST	1E+07
	746962.3	4034954	3.84172	0.58776	78.49	78.49	0	24-HR	3B_FIRE	1ST	1E+07
SEN	746762.3	4035004	4.2594	0.58767	79.53	79.53	0	24-HR	3B_FIRE	1ST	1E+07
SEN	746812.3	4035004	4.21832	0.58544	79.56	79.56	0	24-HR	3B_FIRE	1ST	1E+07
SEN	746862.3	4035004	3.93146	0.58283	79.07	79.07	0	24-HR	3B_FIRE	1ST	1E+07
SEN	746912.3	4035004	4.01442	0.58036	78.76	78.76	0	24-HR	3B_FIRE	1ST	1E+07
	746962.3	4035004	4.01638	0.5779	78.45	78.45	0	24-HR	3B_FIRE	1ST	1E+07
	746762.3	4035054	4.36544	0.57591	79.65	79.65	0	24-HR	3B_FIRE	1ST	1E+07
	746812.3	4035054	4.42945	0.57365	79.4	79.4	0	24-HR	3B_FIRE	1ST	1E+07
	746862.3	4035054	4.18256	0.57147	79.24	79.24	0	24-HR	3B_FIRE	1ST	1E+07
	746912.3	4035054	4.14239	0.56926	79.04	79.04	0	24-HR	3B_FIRE	1ST	1E+07
	746962.3	4035054	4.19888	0.56683	78.53	78.53	0	24-HR	3B_FIRE	1ST	1E+07
	747420	4038175	1.63983	0.38189	74.89	74.89	0	24-HR	3B_FIRE	1ST	1E+07
	747470	4038175	1.56897	0.38011	74.69	74.69	0	24-HR	3B_FIRE	1ST	1E+07
	747520	4038175	1.52263	0.37831	74.55	74.55	0	24-HR	3B_FIRE	1ST	1E+07
SEN	747420	4038225	1.62013	0.38246	74.79	74.79	0	24-HR	3B_FIRE	1ST	1E+07
SEN	747470	4038225	1.55258	0.38077	74.79	74.79	0	24-HR	3B_FIRE	1ST	1E+07
SEN	747520	4038225	1.49998	0.37907	74.61	74.61	0	24-HR	3B_FIRE	1ST	1E+07
SEN	747420	4038275	1.60133	0.38273	74.69	74.69	0	24-HR	3B_FIRE	1ST	1E+07
SEN	747470	4038275	1.53293	0.38114	74.74	74.74	0	24-HR	3B_FIRE	1ST	1E+07
SEN	747520	4038275	1.47359	0.37951	74.47	74.47	0	24-HR	3B_FIRE	1ST	1E+07
	747420	4038325	1.58102	0.38269	74.52	74.52	0	24-HR	3B_FIRE	1ST	1E+07
	747470	4038325	1.50516	0.38118	74.37	74.37	0	24-HR	3B_FIRE	1ST	1E+07
	747520	4038325	1.44565	0.37966	74.2	74.2	0	24-HR	3B_FIRE	1ST	1E+07
	746279	4039819	1.45064	0.37076	77.85	77.85	0	24-HR	3B_FIRE	1ST	9E+06
	746329	4039819	1.46024	0.36899	77.75	77.75	0	24-HR	3B_FIRE	1ST	9E+06
	746379	4039819	1.45252	0.36714	77.57	77.57	0	24-HR	3B_FIRE	1ST	9E+06
SEN	746429	4039819	1.43016	0.36521	77.4	77.4	0	24-HR	3B_FIRE	1ST	9E+06
SEN	746479	4039819	1.39266	0.36322	77.22	77.22	0	24-HR	3B_FIRE	1ST	9E+06
	746529	4039819	1.35221	0.3612	77.19	77.19	0	24-HR	3B_FIRE	1ST	1E+07
SEN	746279	4039869	1.43645	0.3703	77.89	77.89	0	24-HR	3B_FIRE	1ST	9E+06
SEN	746329	4039869	1.44182	0.36872	77.74	77.74	0	24-HR	3B_FIRE	1ST	9E+06
SEN	746379	4039869	1.42898	0.36703	77.44	77.44	0	24-HR	3B_FIRE	1ST	9E+06
SEN	746429	4039869	1.40459	0.36529	77.25	77.25	0	24-HR	3B_FIRE	1ST	9E+06
SEN	746479	4039869	1.36514	0.36348	77.03	77.03	0	24-HR	3B_FIRE	1ST	9E+06
	746529	4039869	1.36699	0.36169	77.17	77.17	0	24-HR	3B_FIRE	1ST	1E+07
SEN	746279	4039919	1.41597	0.36936	77.67	77.67	0	24-HR	3B_FIRE	1ST	9E+06
SEN	746329	4039919	1.41563	0.36793	77.4	77.4	0	24-HR	3B_FIRE	1ST	9E+06
SEN	746379	4039919	1.40687	0.36649	77.36	77.36	0	24-HR	3B_FIRE	1ST	9E+06
	746429	4039919	1.37487	0.36488	76.91	76.91	0	24-HR	3B_FIRE	1ST	9E+06
	746479	4039919	1.34042	0.36332	76.93	76.93	0	24-HR	3B_FIRE	1ST	9E+06
	746529	4039919	1.37123	0.36166	76.84	76.84	0	24-HR	3B_FIRE	1ST	1E+07
	746279	4039969	1.3975	0.36803	77.55	77.55	0	24-HR	3B_FIRE	1ST	9E+06
	746329	4039969	1.39601	0.3668	77.34	77.34	0	24-HR	3B_FIRE	1ST	9E+06
	746379	4039969	1.38148	0.3655	77.13	77.13	0	24-HR	3B_FIRE	1ST	9E+06
	746429	4039969	1.35642	0.36416	77.02	77.02	0	24-HR	3B_FIRE	1ST	9E+06
	746479	4039969	1.32141	0.36278	77.05	77.05	0	24-HR	3B_FIRE	1ST	9E+06
	746529	4039969	1.37497	0.3612	76.53	76.53	0	24-HR	3B_FIRE	1ST	1E+07
	746279	4040019	1.37905	0.36635	77.44	77.44	0	24-HR	3B_FIRE	1ST	9E+06
	746329	4040019	1.37753	0.36531	77.33	77.33	0	24-HR	3B_FIRE	1ST	9E+06
	746379	4040019	1.36081	0.36417	77.09	77.09	0	24-HR	3B_FIRE	1ST	9E+06
	746429	4040019	1.3333	0.36299	76.92	76.92	0	24-HR	3B_FIRE	1ST	9E+06
	746479	4040019	1.30241	0.36184	77.16	77.16	0	24-HR	3B_FIRE	1ST	9E+06
	746529	4040019	1.38689	0.36041	76.54	76.54	0	24-HR	3B_FIRE	1ST	1E+07
	746566	4040066	1.49706	0.35845	76.55	76.55	0	24-HR	3B_FIRE	1ST	1E+07
SEN	746576	4040066	1.50911	0.35812	76.18	76.18	0	24-HR	3B_FIRE	1ST	1E+07
SEN	746586	4040066	1.52438	0.35783	75.97	75.97	0	24-HR	3B_FIRE	1ST	1E+07
SEN	746596	4040066	1.54262	0.35757	75.91	75.91	0	24-HR	3B_FIRE	1ST	1E+07
SEN	746606	4040066	1.55748	0.35729	75.8	75.8	0	24-HR	3B_FIRE	1ST	1E+07
SEN	746616	4040066	1.5705	0.35702	75.69	75.69	0	24-HR	3B_FIRE	1ST	1E+07
SEN	746566	4040076	1.49711	0.35819	76.52	76.52	0	24-HR	3B_FIRE	1ST	1E+07
SEN	746576	4040076	1.51015	0.35788	76.19	76.19	0	24-HR	3B_FIRE	1ST	1E+07
SEN	746586	4040076	1.52611	0.3576	76.01	76.01	0	24-HR	3B_FIRE	1ST	1E+07
SEN	746596	4040076	1.54346	0.35734	75.93	75.93	0	24-HR	3B_FIRE	1ST	1E+07
SEN	746606	4040076	1.5587	0.35708	75.84	75.84	0	24-HR	3B_FIRE	1ST	1E+07

SEN	746616	4040076	1.57115	0.35681	75.72	75.72	0	24-HR	3B_FIRE	1ST	1E+07
SEN	746566	4040086	1.4962	0.35791	76.46	76.46	0	24-HR	3B_FIRE	1ST	1E+07
SEN	746576	4040086	1.50836	0.3576	76.11	76.11	0	24-HR	3B_FIRE	1ST	1E+07
SEN	746586	4040086	1.52498	0.35734	75.96	75.96	0	24-HR	3B_FIRE	1ST	1E+07
SEN	746596	4040086	1.54236	0.35709	75.89	75.89	0	24-HR	3B_FIRE	1ST	1E+07
SEN	746606	4040086	1.5586	0.35684	75.84	75.84	0	24-HR	3B_FIRE	1ST	1E+07
SEN	746616	4040086	1.57078	0.35657	75.72	75.72	0	24-HR	3B_FIRE	1ST	1E+07
SEN	746566	4040096	1.49557	0.35762	76.41	76.41	0	24-HR	3B_FIRE	1ST	1E+07
SEN	746576	4040096	1.50716	0.35731	76.05	76.05	0	24-HR	3B_FIRE	1ST	1E+07
SEN	746586	4040096	1.52381	0.35706	75.91	75.91	0	24-HR	3B_FIRE	1ST	1E+07
SEN	746596	4040096	1.54028	0.35681	75.82	75.82	0	24-HR	3B_FIRE	1ST	1E+07
SEN	746606	4040096	1.55624	0.35657	75.77	75.77	0	24-HR	3B_FIRE	1ST	1E+07
SEN	746616	4040096	1.56911	0.35632	75.68	75.68	0	24-HR	3B_FIRE	1ST	1E+07
SEN	746566	4040106	1.49489	0.35731	76.36	76.36	0	24-HR	3B_FIRE	1ST	1E+07
SEN	746576	4040106	1.50685	0.35702	76.02	76.02	0	24-HR	3B_FIRE	1ST	1E+07
SEN	746586	4040106	1.52386	0.35678	75.9	75.9	0	24-HR	3B_FIRE	1ST	1E+07
SEN	746596	4040106	1.54006	0.35653	75.81	75.81	0	24-HR	3B_FIRE	1ST	1E+07
SEN	746606	4040106	1.55512	0.3563	75.74	75.74	0	24-HR	3B_FIRE	1ST	1E+07
SEN	746616	4040106	1.5674	0.35605	75.64	75.64	0	24-HR	3B_FIRE	1ST	1E+07
SEN	746566	4040116	1.49419	0.357	76.31	76.31	0	24-HR	3B_FIRE	1ST	1E+07
SEN	746576	4040116	1.50498	0.3567	75.94	75.94	0	24-HR	3B_FIRE	1ST	1E+07
SEN	746586	4040116	1.5217	0.35646	75.82	75.82	0	24-HR	3B_FIRE	1ST	1E+07
SEN	746596	4040116	1.53949	0.35624	75.79	75.79	0	24-HR	3B_FIRE	1ST	1E+07
SEN	746606	4040116	1.55554	0.35602	75.76	75.76	0	24-HR	3B_FIRE	1ST	1E+07
SEN	746616	4040116	1.56694	0.35577	75.64	75.64	0	24-HR	3B_FIRE	1ST	1E+07
SEN	746566	4040126	1.49375	0.35667	76.27	76.27	0	24-HR	3B_FIRE	1ST	1E+07
SEN	746576	4040126	1.50368	0.35637	75.88	75.88	0	24-HR	3B_FIRE	1ST	1E+07
SEN	746586	4040126	1.51951	0.35614	75.74	75.74	0	24-HR	3B_FIRE	1ST	1E+07
SEN	746596	4040126	1.53763	0.35593	75.73	75.73	0	24-HR	3B_FIRE	1ST	1E+07
SEN	746606	4040126	1.55466	0.35572	75.74	75.74	0	24-HR	3B_FIRE	1ST	1E+07
SEN	746616	4040126	1.56675	0.35549	75.65	75.65	0	24-HR	3B_FIRE	1ST	1E+07
SEN	746566	4040136	1.49419	0.35633	76.26	76.26	0	24-HR	3B_FIRE	1ST	1E+07
SEN	746576	4040136	1.5051	0.35605	75.91	75.91	0	24-HR	3B_FIRE	1ST	1E+07
SEN	746586	4040136	1.52037	0.35582	75.76	75.76	0	24-HR	3B_FIRE	1ST	1E+07
SEN	746596	4040136	1.53792	0.35561	75.74	75.74	0	24-HR	3B_FIRE	1ST	1E+07
SEN	746606	4040136	1.55344	0.35541	75.71	75.71	0	24-HR	3B_FIRE	1ST	1E+07
SEN	746616	4040136	1.56559	0.35518	75.63	75.63	0	24-HR	3B_FIRE	1ST	1E+07
SEN	746566	4040146	1.49398	0.35597	76.23	76.23	0	24-HR	3B_FIRE	1ST	1E+07
SEN	746576	4040146	1.50525	0.35571	75.9	75.9	0	24-HR	3B_FIRE	1ST	1E+07
SEN	746586	4040146	1.52058	0.35548	75.76	75.76	0	24-HR	3B_FIRE	1ST	1E+07
SEN	746596	4040146	1.53694	0.35528	75.71	75.71	0	24-HR	3B_FIRE	1ST	1E+07
SEN	746606	4040146	1.55187	0.35507	75.67	75.67	0	24-HR	3B_FIRE	1ST	1E+07
SEN	746616	4040146	1.56344	0.35485	75.58	75.58	0	24-HR	3B_FIRE	1ST	1E+07
SEN	746566	4040156	1.49253	0.3556	76.16	76.16	0	24-HR	3B_FIRE	1ST	1E+07
SEN	746576	4040156	1.50264	0.35533	75.8	75.8	0	24-HR	3B_FIRE	1ST	1E+07
SEN	746586	4040156	1.5183	0.35512	75.68	75.68	0	24-HR	3B_FIRE	1ST	1E+07
SEN	746596	4040156	1.53438	0.35492	75.63	75.63	0	24-HR	3B_FIRE	1ST	1E+07
SEN	746606	4040156	1.54903	0.35472	75.59	75.59	0	24-HR	3B_FIRE	1ST	1E+07
SEN	746616	4040156	1.56128	0.35451	75.53	75.53	0	24-HR	3B_FIRE	1ST	1E+07
SEN	746566	4040166	1.49135	0.35521	76.1	76.1	0	24-HR	3B_FIRE	1ST	1E+07
SEN	746576	4040166	1.50062	0.35495	75.72	75.72	0	24-HR	3B_FIRE	1ST	1E+07
SEN	746586	4040166	1.51601	0.35474	75.6	75.6	0	24-HR	3B_FIRE	1ST	1E+07
SEN	746596	4040166	1.53089	0.35454	75.52	75.52	0	24-HR	3B_FIRE	1ST	1E+07
SEN	746606	4040166	1.54556	0.35435	75.49	75.49	0	24-HR	3B_FIRE	1ST	1E+07
SEN	746616	4040166	1.55878	0.35416	75.47	75.47	0	24-HR	3B_FIRE	1ST	1E+07
	746559.7	4040316	1.4777	0.34834	75.86	75.86	0	24-HR	3B_FIRE	1ST	1E+07
	746569.7	4040316	1.48291	0.34814	75.42	75.42	0	24-HR	3B_FIRE	1ST	1E+07
	746579.7	4040316	1.49391	0.348	75.24	75.24	0	24-HR	3B_FIRE	1ST	1E+07
	746589.7	4040316	1.50641	0.34788	75.17	75.17	0	24-HR	3B_FIRE	1ST	1E+07
	746599.7	4040316	1.51726	0.34776	75.1	75.1	0	24-HR	3B_FIRE	1ST	1E+07
	746609.7	4040316	1.52787	0.34765	75.08	75.08	0	24-HR	3B_FIRE	1ST	1E+07
	746619.7	4040316	1.53561	0.34753	75.02	75.02	0	24-HR	3B_FIRE	1ST	1E+07
	746559.7	4040326	1.47761	0.3478	75.85	75.85	0	24-HR	3B_FIRE	1ST	1E+07
	746569.7	4040326	1.48374	0.34762	75.45	75.45	0	24-HR	3B_FIRE	1ST	1E+07
	746579.7	4040326	1.49279	0.34747	75.21	75.21	0	24-HR	3B_FIRE	1ST	1E+07
	746589.7	4040326	1.50162	0.34733	75.02	75.02	0	24-HR	3B_FIRE	1ST	1E+07
	746599.7	4040326	1.5151	0.34723	75.05	75.05	0	24-HR	3B_FIRE	1ST	1E+07

	746609.7	4040326	1.52693	0.34714	75.08	75.08	0	24-HR	3B_FIRE	1ST	1E+07
	746619.7	4040326	1.53386	0.34702	75	75	0	24-HR	3B_FIRE	1ST	1E+07
	746559.7	4040336	1.4769	0.34725	75.82	75.82	0	24-HR	3B_FIRE	1ST	1E+07
	746569.7	4040336	1.48197	0.34706	75.39	75.39	0	24-HR	3B_FIRE	1ST	1E+07
	746579.7	4040336	1.49165	0.34693	75.18	75.18	0	24-HR	3B_FIRE	1ST	1E+07
	746589.7	4040336	1.50397	0.34682	75.12	75.12	0	24-HR	3B_FIRE	1ST	1E+07
	746599.7	4040336	1.51637	0.34672	75.12	75.12	0	24-HR	3B_FIRE	1ST	1E+07
	746609.7	4040336	1.52653	0.34662	75.1	75.1	0	24-HR	3B_FIRE	1ST	1E+07
	746619.7	4040336	1.53266	0.3465	75	75	0	24-HR	3B_FIRE	1ST	1E+07
	746559.7	4040346	1.47645	0.34669	75.8	75.8	0	24-HR	3B_FIRE	1ST	1E+07
	746569.7	4040346	1.48018	0.3465	75.33	75.33	0	24-HR	3B_FIRE	1ST	1E+07
	746579.7	4040346	1.48907	0.34637	75.1	75.1	0	24-HR	3B_FIRE	1ST	1E+07
	746589.7	4040346	1.50257	0.34627	75.09	75.09	0	24-HR	3B_FIRE	1ST	1E+07
	746599.7	4040346	1.51588	0.34619	75.13	75.13	0	24-HR	3B_FIRE	1ST	1E+07
	746609.7	4040346	1.5264	0.34609	75.13	75.13	0	24-HR	3B_FIRE	1ST	1E+07
	746619.7	4040346	1.53145	0.34597	75	75	0	24-HR	3B_FIRE	1ST	1E+07
	746559.7	4040356	1.47484	0.34612	75.74	75.74	0	24-HR	3B_FIRE	1ST	1E+07
	746569.7	4040356	1.47752	0.34593	75.24	75.24	0	24-HR	3B_FIRE	1ST	1E+07
	746579.7	4040356	1.48675	0.3458	75.03	75.03	0	24-HR	3B_FIRE	1ST	1E+07
	746589.7	4040356	1.5	0.34571	75.02	75.02	0	24-HR	3B_FIRE	1ST	1E+07
	746599.7	4040356	1.51306	0.34563	75.06	75.06	0	24-HR	3B_FIRE	1ST	1E+07
	746609.7	4040356	1.52363	0.34554	75.07	75.07	0	24-HR	3B_FIRE	1ST	1E+07
	746619.7	4040356	1.52991	0.34543	74.99	74.99	0	24-HR	3B_FIRE	1ST	1E+07
	746554	4040469	1.46195	0.33941	75.64	75.64	0	24-HR	3B_FIRE	1ST	1E+07
SEN	746564	4040469	1.46714	0.33928	75.28	75.28	0	24-HR	3B_FIRE	1ST	1E+07
SEN	746574	4040469	1.47622	0.3392	75.12	75.12	0	24-HR	3B_FIRE	1ST	1E+07
SEN	746584	4040469	1.48758	0.33914	75.1	75.1	0	24-HR	3B_FIRE	1ST	1E+07
SEN	746594	4040469	1.49681	0.33908	75.06	75.06	0	24-HR	3B_FIRE	1ST	1E+07
SEN	746604	4040469	1.50444	0.33902	75.02	75.02	0	24-HR	3B_FIRE	1ST	1E+07
SEN	746614	4040469	1.5099	0.33896	74.96	74.96	0	24-HR	3B_FIRE	1ST	1E+07
SEN	746624	4040469	1.51177	0.33887	74.83	74.83	0	24-HR	3B_FIRE	1ST	1E+07
SEN	746634	4040469	1.5123	0.33879	74.71	74.71	0	24-HR	3B_FIRE	1ST	1E+07
SEN	746554	4040479	1.46014	0.33877	75.58	75.58	0	24-HR	3B_FIRE	1ST	1E+07
SEN	746564	4040479	1.46106	0.33862	75.07	75.07	0	24-HR	3B_FIRE	1ST	1E+07
SEN	746574	4040479	1.46884	0.33854	74.87	74.87	0	24-HR	3B_FIRE	1ST	1E+07
SEN	746584	4040479	1.47993	0.33848	74.85	74.85	0	24-HR	3B_FIRE	1ST	1E+07
SEN	746594	4040479	1.49001	0.33843	74.85	74.85	0	24-HR	3B_FIRE	1ST	1E+07
SEN	746604	4040479	1.50128	0.3384	74.95	74.95	0	24-HR	3B_FIRE	1ST	1E+07
SEN	746614	4040479	1.50876	0.33835	74.97	74.97	0	24-HR	3B_FIRE	1ST	1E+07
SEN	746624	4040479	1.50877	0.33826	74.78	74.78	0	24-HR	3B_FIRE	1ST	1E+07
SEN	746634	4040479	1.50912	0.33818	74.66	74.66	0	24-HR	3B_FIRE	1ST	1E+07
SEN	746554	4040489	1.45857	0.33814	75.53	75.53	0	24-HR	3B_FIRE	1ST	1E+07
SEN	746564	4040489	1.45905	0.33799	75.01	75.01	0	24-HR	3B_FIRE	1ST	1E+07
SEN	746574	4040489	1.46581	0.3379	74.78	74.78	0	24-HR	3B_FIRE	1ST	1E+07
SEN	746584	4040489	1.47505	0.33784	74.7	74.7	0	24-HR	3B_FIRE	1ST	1E+07
SEN	746594	4040489	1.48353	0.33778	74.65	74.65	0	24-HR	3B_FIRE	1ST	1E+07
SEN	746604	4040489	1.49618	0.33776	74.81	74.81	0	24-HR	3B_FIRE	1ST	1E+07
SEN	746614	4040489	1.50537	0.33773	74.9	74.9	0	24-HR	3B_FIRE	1ST	1E+07
SEN	746624	4040489	1.50632	0.33765	74.75	74.75	0	24-HR	3B_FIRE	1ST	1E+07
SEN	746634	4040489	1.50676	0.33757	74.64	74.64	0	24-HR	3B_FIRE	1ST	1E+07
SEN	746554	4040499	1.45725	0.33751	75.49	75.49	0	24-HR	3B_FIRE	1ST	1E+07
SEN	746564	4040499	1.45783	0.33736	74.98	74.98	0	24-HR	3B_FIRE	1ST	1E+07
SEN	746574	4040499	1.46465	0.33727	74.76	74.76	0	24-HR	3B_FIRE	1ST	1E+07
SEN	746584	4040499	1.47287	0.33721	74.65	74.65	0	24-HR	3B_FIRE	1ST	1E+07
SEN	746594	4040499	1.48114	0.33715	74.6	74.6	0	24-HR	3B_FIRE	1ST	1E+07
SEN	746604	4040499	1.49328	0.33713	74.75	74.75	0	24-HR	3B_FIRE	1ST	1E+07
SEN	746614	4040499	1.50225	0.3371	74.84	74.84	0	24-HR	3B_FIRE	1ST	1E+07
SEN	746624	4040499	1.50385	0.33703	74.72	74.72	0	24-HR	3B_FIRE	1ST	1E+07
SEN	746634	4040499	1.50439	0.33696	74.62	74.62	0	24-HR	3B_FIRE	1ST	1E+07
SEN	746554	4040509	1.45565	0.33687	75.44	75.44	0	24-HR	3B_FIRE	1ST	1E+07
SEN	746564	4040509	1.45631	0.33673	74.94	74.94	0	24-HR	3B_FIRE	1ST	1E+07
SEN	746574	4040509	1.46293	0.33664	74.72	74.72	0	24-HR	3B_FIRE	1ST	1E+07
SEN	746584	4040509	1.47121	0.33658	74.62	74.62	0	24-HR	3B_FIRE	1ST	1E+07
SEN	746594	4040509	1.48061	0.33653	74.62	74.62	0	24-HR	3B_FIRE	1ST	1E+07
SEN	746604	4040509	1.49118	0.33651	74.72	74.72	0	24-HR	3B_FIRE	1ST	1E+07
SEN	746614	4040509	1.49857	0.33647	74.76	74.76	0	24-HR	3B_FIRE	1ST	1E+07
SEN	746624	4040509	1.50109	0.33641	74.68	74.68	0	24-HR	3B_FIRE	1ST	1E+07

SEN	746634	4040509	1.50255	0.33635	74.62	74.62	0	24-HR	3B_FIRE	1ST	1E+07
SEN	746554	4040519	1.45428	0.33623	75.4	75.4	0	24-HR	3B_FIRE	1ST	1E+07
SEN	746564	4040519	1.45423	0.33609	74.88	74.88	0	24-HR	3B_FIRE	1ST	1E+07
SEN	746574	4040519	1.46066	0.336	74.66	74.66	0	24-HR	3B_FIRE	1ST	1E+07
SEN	746584	4040519	1.47006	0.33595	74.61	74.61	0	24-HR	3B_FIRE	1ST	1E+07
SEN	746594	4040519	1.48007	0.33591	74.64	74.64	0	24-HR	3B_FIRE	1ST	1E+07
SEN	746604	4040519	1.48907	0.33588	74.69	74.69	0	24-HR	3B_FIRE	1ST	1E+07
SEN	746614	4040519	1.49489	0.33583	74.68	74.68	0	24-HR	3B_FIRE	1ST	1E+07
SEN	746624	4040519	1.49886	0.33579	74.66	74.66	0	24-HR	3B_FIRE	1ST	1E+07
SEN	746634	4040519	1.50097	0.33573	74.63	74.63	0	24-HR	3B_FIRE	1ST	1E+07
SEN	746491	4040326	1.3186	0.34838	75.81	75.81	0	24-HR	3B_FIRE	1ST	1E+07
SEN	746501	4040326	1.34743	0.34832	75.9	75.9	0	24-HR	3B_FIRE	1ST	1E+07
SEN	746511	4040326	1.3713	0.34822	75.84	75.84	0	24-HR	3B_FIRE	1ST	1E+07
SEN	746521	4040326	1.39396	0.34812	75.78	75.78	0	24-HR	3B_FIRE	1ST	1E+07
SEN	746531	4040326	1.41617	0.34802	75.75	75.75	0	24-HR	3B_FIRE	1ST	1E+07
SEN	746541	4040326	1.43704	0.34793	75.72	75.72	0	24-HR	3B_FIRE	1ST	1E+07
SEN	746491	4040336	1.31934	0.34781	75.77	75.77	0	24-HR	3B_FIRE	1ST	1E+07
SEN	746501	4040336	1.3474	0.34774	75.84	75.84	0	24-HR	3B_FIRE	1ST	1E+07
SEN	746511	4040336	1.37234	0.34765	75.83	75.83	0	24-HR	3B_FIRE	1ST	1E+07
SEN	746521	4040336	1.39665	0.34757	75.84	75.84	0	24-HR	3B_FIRE	1ST	1E+07
SEN	746531	4040336	1.41646	0.34746	75.73	75.73	0	24-HR	3B_FIRE	1ST	1E+07
SEN	746541	4040336	1.43626	0.34736	75.67	75.67	0	24-HR	3B_FIRE	1ST	1E+07
SEN	746491	4040346	1.32029	0.34722	75.74	75.74	0	24-HR	3B_FIRE	1ST	1E+07
SEN	746501	4040346	1.34734	0.34715	75.78	75.78	0	24-HR	3B_FIRE	1ST	1E+07
SEN	746511	4040346	1.37308	0.34708	75.81	75.81	0	24-HR	3B_FIRE	1ST	1E+07
SEN	746521	4040346	1.39823	0.34701	75.86	75.86	0	24-HR	3B_FIRE	1ST	1E+07
SEN	746531	4040346	1.417	0.3469	75.72	75.72	0	24-HR	3B_FIRE	1ST	1E+07
SEN	746541	4040346	1.43491	0.34679	75.6	75.6	0	24-HR	3B_FIRE	1ST	1E+07
SEN	746491	4040356	1.32171	0.34664	75.73	75.73	0	24-HR	3B_FIRE	1ST	1E+07
SEN	746501	4040356	1.34853	0.34657	75.77	75.77	0	24-HR	3B_FIRE	1ST	1E+07
SEN	746511	4040356	1.37378	0.3465	75.79	75.79	0	24-HR	3B_FIRE	1ST	1E+07
SEN	746521	4040356	1.39896	0.34644	75.85	75.85	0	24-HR	3B_FIRE	1ST	1E+07
SEN	746531	4040356	1.41804	0.34633	75.73	75.73	0	24-HR	3B_FIRE	1ST	1E+07
SEN	746541	4040356	1.436	0.34623	75.62	75.62	0	24-HR	3B_FIRE	1ST	1E+07
SEN	746491	4040366	1.32284	0.34604	75.71	75.71	0	24-HR	3B_FIRE	1ST	1E+07
SEN	746501	4040366	1.35046	0.34599	75.79	75.79	0	24-HR	3B_FIRE	1ST	1E+07
SEN	746511	4040366	1.37471	0.34592	75.78	75.78	0	24-HR	3B_FIRE	1ST	1E+07
SEN	746521	4040366	1.39885	0.34585	75.81	75.81	0	24-HR	3B_FIRE	1ST	1E+07
SEN	746531	4040366	1.41877	0.34576	75.73	75.73	0	24-HR	3B_FIRE	1ST	1E+07
SEN	746541	4040366	1.43788	0.34567	75.67	75.67	0	24-HR	3B_FIRE	1ST	1E+07
SEN	746491	4040376	1.32369	0.34544	75.68	75.68	0	24-HR	3B_FIRE	1ST	1E+07
SEN	746501	4040376	1.35004	0.34538	75.72	75.72	0	24-HR	3B_FIRE	1ST	1E+07
SEN	746511	4040376	1.37429	0.34531	75.72	75.72	0	24-HR	3B_FIRE	1ST	1E+07
SEN	746521	4040376	1.39817	0.34525	75.75	75.75	0	24-HR	3B_FIRE	1ST	1E+07
SEN	746531	4040376	1.41704	0.34516	75.64	75.64	0	24-HR	3B_FIRE	1ST	1E+07
SEN	746541	4040376	1.4356	0.34507	75.57	75.57	0	24-HR	3B_FIRE	1ST	1E+07
SEN	746491	4040386	1.32449	0.34484	75.65	75.65	0	24-HR	3B_FIRE	1ST	1E+07
SEN	746501	4040386	1.3501	0.34478	75.67	75.67	0	24-HR	3B_FIRE	1ST	1E+07
SEN	746511	4040386	1.37436	0.34471	75.68	75.68	0	24-HR	3B_FIRE	1ST	1E+07
SEN	746521	4040386	1.39773	0.34465	75.7	75.7	0	24-HR	3B_FIRE	1ST	1E+07
SEN	746531	4040386	1.41689	0.34456	75.61	75.61	0	24-HR	3B_FIRE	1ST	1E+07
SEN	746541	4040386	1.43413	0.34447	75.5	75.5	0	24-HR	3B_FIRE	1ST	1E+07
SEN	746491	4040396	1.32526	0.34423	75.62	75.62	0	24-HR	3B_FIRE	1ST	1E+07
SEN	746501	4040396	1.34961	0.34416	75.6	75.6	0	24-HR	3B_FIRE	1ST	1E+07
SEN	746511	4040396	1.37206	0.34409	75.55	75.55	0	24-HR	3B_FIRE	1ST	1E+07
SEN	746521	4040396	1.39487	0.34403	75.56	75.56	0	24-HR	3B_FIRE	1ST	1E+07
SEN	746531	4040396	1.41591	0.34396	75.55	75.55	0	24-HR	3B_FIRE	1ST	1E+07
SEN	746541	4040396	1.43453	0.34388	75.5	75.5	0	24-HR	3B_FIRE	1ST	1E+07
SEN	746491	4040406	1.32624	0.34361	75.6	75.6	0	24-HR	3B_FIRE	1ST	1E+07
SEN	746501	4040406	1.34961	0.34354	75.55	75.55	0	24-HR	3B_FIRE	1ST	1E+07
SEN	746511	4040406	1.36846	0.34345	75.37	75.37	0	24-HR	3B_FIRE	1ST	1E+07
SEN	746521	4040406	1.38966	0.34338	75.33	75.33	0	24-HR	3B_FIRE	1ST	1E+07
SEN	746531	4040406	1.41117	0.34332	75.35	75.35	0	24-HR	3B_FIRE	1ST	1E+07
SEN	746541	4040406	1.43354	0.34328	75.45	75.45	0	24-HR	3B_FIRE	1ST	1E+07
SEN	746491	4040416	1.32744	0.343	75.59	75.59	0	24-HR	3B_FIRE	1ST	1E+07
SEN	746501	4040416	1.35135	0.34294	75.57	75.57	0	24-HR	3B_FIRE	1ST	1E+07
SEN	746511	4040416	1.36948	0.34284	75.37	75.37	0	24-HR	3B_FIRE	1ST	1E+07

SEN	746521	4040416	1.38863	0.34276	75.26	75.26	0	24-HR	3B_FIRE	1ST	1E+07
SEN	746531	4040416	1.40909	0.3427	75.25	75.25	0	24-HR	3B_FIRE	1ST	1E+07
SEN	746541	4040416	1.4328	0.34267	75.41	75.41	0	24-HR	3B_FIRE	1ST	1E+07
SEN	746491	4040426	1.3286	0.34238	75.58	75.58	0	24-HR	3B_FIRE	1ST	1E+07
SEN	746501	4040426	1.35356	0.34233	75.61	75.61	0	24-HR	3B_FIRE	1ST	1E+07
SEN	746511	4040426	1.37432	0.34226	75.52	75.52	0	24-HR	3B_FIRE	1ST	1E+07
SEN	746521	4040426	1.39435	0.34219	75.45	75.45	0	24-HR	3B_FIRE	1ST	1E+07
SEN	746531	4040426	1.4128	0.34212	75.37	75.37	0	24-HR	3B_FIRE	1ST	1E+07
SEN	746541	4040426	1.43499	0.34208	75.48	75.48	0	24-HR	3B_FIRE	1ST	1E+07
SEN	746491	4040436	1.32923	0.34175	75.55	75.55	0	24-HR	3B_FIRE	1ST	1E+07
SEN	746501	4040436	1.3537	0.34171	75.57	75.57	0	24-HR	3B_FIRE	1ST	1E+07
SEN	746511	4040436	1.37733	0.34166	75.6	75.6	0	24-HR	3B_FIRE	1ST	1E+07
SEN	746521	4040436	1.39953	0.34161	75.62	75.62	0	24-HR	3B_FIRE	1ST	1E+07
SEN	746531	4040436	1.41834	0.34154	75.56	75.56	0	24-HR	3B_FIRE	1ST	1E+07
SEN	746541	4040436	1.43768	0.34149	75.57	75.57	0	24-HR	3B_FIRE	1ST	1E+07
SEN	746491	4040446	1.32982	0.34112	75.52	75.52	0	24-HR	3B_FIRE	1ST	1E+07
SEN	746501	4040446	1.35406	0.34108	75.54	75.54	0	24-HR	3B_FIRE	1ST	1E+07
SEN	746511	4040446	1.37849	0.34104	75.61	75.61	0	24-HR	3B_FIRE	1ST	1E+07
SEN	746521	4040446	1.40178	0.341	75.68	75.68	0	24-HR	3B_FIRE	1ST	1E+07
SEN	746531	4040446	1.41827	0.34092	75.54	75.54	0	24-HR	3B_FIRE	1ST	1E+07
SEN	746541	4040446	1.43683	0.34087	75.53	75.53	0	24-HR	3B_FIRE	1ST	1E+07
SEN	746491	4040456	1.33137	0.3405	75.53	75.53	0	24-HR	3B_FIRE	1ST	1E+07
SEN	746501	4040456	1.3549	0.34045	75.53	75.53	0	24-HR	3B_FIRE	1ST	1E+07
SEN	746511	4040456	1.37832	0.34041	75.57	75.57	0	24-HR	3B_FIRE	1ST	1E+07
SEN	746521	4040456	1.40032	0.34037	75.6	75.6	0	24-HR	3B_FIRE	1ST	1E+07
SEN	746531	4040456	1.41525	0.34028	75.41	75.41	0	24-HR	3B_FIRE	1ST	1E+07
SEN	746541	4040456	1.43434	0.34023	75.43	75.43	0	24-HR	3B_FIRE	1ST	1E+07
SEN	746491	4040466	1.33314	0.33987	75.55	75.55	0	24-HR	3B_FIRE	1ST	1E+07
SEN	746501	4040466	1.35595	0.33982	75.53	75.53	0	24-HR	3B_FIRE	1ST	1E+07
SEN	746511	4040466	1.37556	0.33976	75.43	75.43	0	24-HR	3B_FIRE	1ST	1E+07
SEN	746521	4040466	1.39494	0.3397	75.37	75.37	0	24-HR	3B_FIRE	1ST	1E+07
SEN	746531	4040466	1.41222	0.33963	75.28	75.28	0	24-HR	3B_FIRE	1ST	1E+07
SEN	746541	4040466	1.4329	0.3396	75.37	75.37	0	24-HR	3B_FIRE	1ST	1E+07
SEN	746491	4040476	1.33436	0.33924	75.55	75.55	0	24-HR	3B_FIRE	1ST	1E+07
SEN	746501	4040476	1.35772	0.3392	75.56	75.56	0	24-HR	3B_FIRE	1ST	1E+07
SEN	746511	4040476	1.3756	0.33912	75.4	75.4	0	24-HR	3B_FIRE	1ST	1E+07
SEN	746521	4040476	1.39319	0.33905	75.28	75.28	0	24-HR	3B_FIRE	1ST	1E+07
SEN	746531	4040476	1.41101	0.339	75.22	75.22	0	24-HR	3B_FIRE	1ST	1E+07
SEN	746541	4040476	1.43251	0.33898	75.35	75.35	0	24-HR	3B_FIRE	1ST	1E+07
SEN	746491	4040486	1.33506	0.3386	75.53	75.53	0	24-HR	3B_FIRE	1ST	1E+07
SEN	746501	4040486	1.3582	0.33856	75.54	75.54	0	24-HR	3B_FIRE	1ST	1E+07
SEN	746511	4040486	1.37713	0.3385	75.43	75.43	0	24-HR	3B_FIRE	1ST	1E+07
SEN	746521	4040486	1.3953	0.33844	75.34	75.34	0	24-HR	3B_FIRE	1ST	1E+07
SEN	746531	4040486	1.41318	0.33838	75.29	75.29	0	24-HR	3B_FIRE	1ST	1E+07
SEN	746541	4040486	1.43288	0.33835	75.36	75.36	0	24-HR	3B_FIRE	1ST	1E+07
SEN	746491	4040496	1.33523	0.33796	75.49	75.49	0	24-HR	3B_FIRE	1ST	1E+07
SEN	746501	4040496	1.35788	0.33792	75.49	75.49	0	24-HR	3B_FIRE	1ST	1E+07
SEN	746511	4040496	1.37812	0.33787	75.44	75.44	0	24-HR	3B_FIRE	1ST	1E+07
SEN	746521	4040496	1.3971	0.33782	75.39	75.39	0	24-HR	3B_FIRE	1ST	1E+07
SEN	746531	4040496	1.41531	0.33777	75.36	75.36	0	24-HR	3B_FIRE	1ST	1E+07
SEN	746541	4040496	1.43375	0.33773	75.39	75.39	0	24-HR	3B_FIRE	1ST	1E+07
SEN	746491	4040506	1.33488	0.33731	75.43	75.43	0	24-HR	3B_FIRE	1ST	1E+07
SEN	746501	4040506	1.35629	0.33726	75.39	75.39	0	24-HR	3B_FIRE	1ST	1E+07
SEN	746511	4040506	1.37754	0.33722	75.39	75.39	0	24-HR	3B_FIRE	1ST	1E+07
SEN	746521	4040506	1.39836	0.33719	75.42	75.42	0	24-HR	3B_FIRE	1ST	1E+07
	746531	4040506	1.41557	0.33714	75.36	75.36	0	24-HR	3B_FIRE	1ST	1E+07
	746541	4040506	1.43352	0.3371	75.38	75.38	0	24-HR	3B_FIRE	1ST	1E+07
	746491	4040516	1.33449	0.33666	75.37	75.37	0	24-HR	3B_FIRE	1ST	1E+07
	746501	4040516	1.35468	0.33661	75.29	75.29	0	24-HR	3B_FIRE	1ST	1E+07
	746511	4040516	1.37669	0.33658	75.33	75.33	0	24-HR	3B_FIRE	1ST	1E+07
	746521	4040516	1.39752	0.33654	75.37	75.37	0	24-HR	3B_FIRE	1ST	1E+07
	746531	4040516	1.4145	0.33649	75.31	75.31	0	24-HR	3B_FIRE	1ST	1E+07
	746541	4040516	1.43301	0.33646	75.36	75.36	0	24-HR	3B_FIRE	1ST	1E+07
	746491	4040526	1.33457	0.33601	75.33	75.33	0	24-HR	3B_FIRE	1ST	1E+07
	746501	4040526	1.35429	0.33596	75.24	75.24	0	24-HR	3B_FIRE	1ST	1E+07
	746511	4040526	1.37631	0.33593	75.29	75.29	0	24-HR	3B_FIRE	1ST	1E+07
	746521	4040526	1.39639	0.3359	75.31	75.31	0	24-HR	3B_FIRE	1ST	1E+07

746531	4040526	1.41314	0.33585	75.25	75.25	0	24-HR	3B_FIRE	1ST	1E+07
746541	4040526	1.43219	0.33582	75.33	75.33	0	24-HR	3B_FIRE	1ST	1E+07
746491	4040536	1.33486	0.33537	75.3	75.3	0	24-HR	3B_FIRE	1ST	1E+07
746501	4040536	1.35485	0.33532	75.23	75.23	0	24-HR	3B_FIRE	1ST	1E+07
746511	4040536	1.37666	0.33529	75.28	75.28	0	24-HR	3B_FIRE	1ST	1E+07
746521	4040536	1.39601	0.33525	75.28	75.28	0	24-HR	3B_FIRE	1ST	1E+07
746531	4040536	1.41227	0.3352	75.21	75.21	0	24-HR	3B_FIRE	1ST	1E+07
746541	4040536	1.43109	0.33518	75.29	75.29	0	24-HR	3B_FIRE	1ST	1E+07
746491	4040546	1.33561	0.33472	75.29	75.29	0	24-HR	3B_FIRE	1ST	1E+07
746501	4040546	1.35613	0.33468	75.25	75.25	0	24-HR	3B_FIRE	1ST	1E+07
746511	4040546	1.37698	0.33465	75.27	75.27	0	24-HR	3B_FIRE	1ST	1E+07
746521	4040546	1.39585	0.33461	75.26	75.26	0	24-HR	3B_FIRE	1ST	1E+07
746531	4040546	1.41113	0.33456	75.16	75.16	0	24-HR	3B_FIRE	1ST	1E+07
746541	4040546	1.42997	0.33454	75.25	75.25	0	24-HR	3B_FIRE	1ST	1E+07
746491	4040556	1.33705	0.33408	75.31	75.31	0	24-HR	3B_FIRE	1ST	1E+07
746501	4040556	1.35738	0.33404	75.27	75.27	0	24-HR	3B_FIRE	1ST	1E+07
746511	4040556	1.37676	0.334	75.24	75.24	0	24-HR	3B_FIRE	1ST	1E+07
746521	4040556	1.39491	0.33396	75.21	75.21	0	24-HR	3B_FIRE	1ST	1E+07
746531	4040556	1.41047	0.33391	75.13	75.13	0	24-HR	3B_FIRE	1ST	1E+07
746541	4040556	1.43012	0.3339	75.26	75.26	0	24-HR	3B_FIRE	1ST	1E+07
746491	4040566	1.33773	0.33344	75.3	75.3	0	24-HR	3B_FIRE	1ST	1E+07
746501	4040566	1.3576	0.3334	75.25	75.25	0	24-HR	3B_FIRE	1ST	1E+07
746511	4040566	1.37601	0.33335	75.19	75.19	0	24-HR	3B_FIRE	1ST	1E+07
746521	4040566	1.39317	0.33331	75.13	75.13	0	24-HR	3B_FIRE	1ST	1E+07
746531	4040566	1.40978	0.33327	75.1	75.1	0	24-HR	3B_FIRE	1ST	1E+07
746541	4040566	1.43102	0.33327	75.3	75.3	0	24-HR	3B_FIRE	1ST	1E+07
746548	4041125	1.36421	0.30197	74.28	74.28	0	24-HR	3B_FIRE	1ST	1E+07
746573	4041125	1.36386	0.30169	73.96	73.96	0	24-HR	3B_FIRE	1ST	1E+07
746598	4041125	1.36012	0.30143	73.83	73.83	0	24-HR	3B_FIRE	1ST	1E+07
746623	4041125	1.34794	0.30118	73.65	73.65	0	24-HR	3B_FIRE	1ST	1E+07
746648	4041125	1.33155	0.30095	73.6	73.6	0	24-HR	3B_FIRE	1ST	1E+07
746673	4041125	1.30754	0.30072	73.5	73.5	0	24-HR	3B_FIRE	1ST	1E+07
746698	4041125	1.27846	0.3005	73.44	73.44	0	24-HR	3B_FIRE	1ST	1E+07
746723	4041125	1.24458	0.30028	73.4	73.4	0	24-HR	3B_FIRE	1ST	1E+07
746548	4041150	1.35793	0.30088	74.16	74.16	0	24-HR	3B_FIRE	1ST	1E+07
746573	4041150	1.35807	0.3006	73.9	73.9	0	24-HR	3B_FIRE	1ST	1E+07
746598	4041150	1.35336	0.30034	73.76	73.76	0	24-HR	3B_FIRE	1ST	1E+07
746623	4041150	1.34332	0.3001	73.71	73.71	0	24-HR	3B_FIRE	1ST	1E+07
746648	4041150	1.3255	0.29985	73.62	73.62	0	24-HR	3B_FIRE	1ST	1E+07
746673	4041150	1.30042	0.2996	73.49	73.49	0	24-HR	3B_FIRE	1ST	1E+07
746698	4041150	1.27303	0.29939	73.53	73.53	0	24-HR	3B_FIRE	1ST	1E+07
746723	4041150	1.23494	0.29914	73.29	73.29	0	24-HR	3B_FIRE	1ST	1E+07
746548	4041175	1.35311	0.29983	74.11	74.11	0	24-HR	3B_FIRE	1ST	1E+07
746573	4041175	1.35417	0.29956	73.93	73.93	0	24-HR	3B_FIRE	1ST	1E+07
746598	4041175	1.34893	0.29929	73.8	73.8	0	24-HR	3B_FIRE	1ST	1E+07
746623	4041175	1.3378	0.29903	73.73	73.73	0	24-HR	3B_FIRE	1ST	1E+07
746648	4041175	1.32047	0.29878	73.69	73.69	0	24-HR	3B_FIRE	1ST	1E+07
746673	4041175	1.29309	0.29852	73.47	73.47	0	24-HR	3B_FIRE	1ST	1E+07
746698	4041175	1.26697	0.2983	73.59	73.59	0	24-HR	3B_FIRE	1ST	1E+07
746723	4041175	1.22983	0.29805	73.41	73.41	0	24-HR	3B_FIRE	1ST	1E+07
746548	4041200	1.34909	0.29881	74.1	74.1	0	24-HR	3B_FIRE	1ST	1E+07
746573	4041200	1.34827	0.29852	73.87	73.87	0	24-HR	3B_FIRE	1ST	1E+07
746598	4041200	1.34358	0.29826	73.8	73.8	0	24-HR	3B_FIRE	1ST	1E+07
746623	4041200	1.33033	0.29798	73.66	73.66	0	24-HR	3B_FIRE	1ST	1E+07
746648	4041200	1.31103	0.29772	73.55	73.55	0	24-HR	3B_FIRE	1ST	1E+07
746673	4041200	1.28293	0.29744	73.31	73.31	0	24-HR	3B_FIRE	1ST	1E+07
746698	4041200	1.26149	0.29724	73.68	73.68	0	24-HR	3B_FIRE	1ST	1E+07
746723	4041200	1.22143	0.29696	73.36	73.36	0	24-HR	3B_FIRE	1ST	1E+07
746548	4041225	1.34519	0.29781	74.1	74.1	0	24-HR	3B_FIRE	1ST	1E+07
746573	4041225	1.34296	0.29751	73.84	73.84	0	24-HR	3B_FIRE	1ST	1E+07
746598	4041225	1.33734	0.29724	73.76	73.76	0	24-HR	3B_FIRE	1ST	1E+07
746623	4041225	1.32453	0.29697	73.67	73.67	0	24-HR	3B_FIRE	1ST	1E+07
746648	4041225	1.3043	0.29669	73.54	73.54	0	24-HR	3B_FIRE	1ST	1E+07
746673	4041225	1.27924	0.29643	73.47	73.47	0	24-HR	3B_FIRE	1ST	1E+07
746698	4041225	1.25106	0.29618	73.52	73.52	0	24-HR	3B_FIRE	1ST	1E+07
746723	4041225	1.21421	0.29592	73.37	73.37	0	24-HR	3B_FIRE	1ST	1E+07
746548	4041250	1.34143	0.29683	74.11	74.11	0	24-HR	3B_FIRE	1ST	1E+07

746573	4041250	1.3378	0.29652	73.82	73.82	0	24-HR	3B_FIRE	1ST	1E+07
746598	4041250	1.33043	0.29624	73.69	73.69	0	24-HR	3B_FIRE	1ST	1E+07
746623	4041250	1.31745	0.29596	73.62	73.62	0	24-HR	3B_FIRE	1ST	1E+07
746648	4041250	1.29777	0.29569	73.54	73.54	0	24-HR	3B_FIRE	1ST	1E+07
746673	4041250	1.27271	0.29542	73.49	73.49	0	24-HR	3B_FIRE	1ST	1E+07
746698	4041250	1.24033	0.29515	73.34	73.34	0	24-HR	3B_FIRE	1ST	1E+07
746723	4041250	1.20607	0.29489	73.33	73.33	0	24-HR	3B_FIRE	1ST	1E+07
746548	4041275	1.33633	0.29585	74.06	74.06	0	24-HR	3B_FIRE	1ST	1E+07
746573	4041275	1.33196	0.29555	73.77	73.77	0	24-HR	3B_FIRE	1ST	1E+07
746598	4041275	1.32434	0.29526	73.66	73.66	0	24-HR	3B_FIRE	1ST	1E+07
746623	4041275	1.31057	0.29498	73.58	73.58	0	24-HR	3B_FIRE	1ST	1E+07
746648	4041275	1.29041	0.2947	73.5	73.5	0	24-HR	3B_FIRE	1ST	1E+07
746673	4041275	1.26479	0.29443	73.44	73.44	0	24-HR	3B_FIRE	1ST	1E+07
746698	4041275	1.23238	0.29415	73.3	73.3	0	24-HR	3B_FIRE	1ST	1E+07
746723	4041275	1.19685	0.29388	73.23	73.23	0	24-HR	3B_FIRE	1ST	1E+07
746548	4041300	1.33054	0.29488	73.98	73.98	0	24-HR	3B_FIRE	1ST	1E+07
746573	4041300	1.32525	0.29458	73.68	73.68	0	24-HR	3B_FIRE	1ST	1E+07
746598	4041300	1.31739	0.29429	73.59	73.59	0	24-HR	3B_FIRE	1ST	1E+07
746623	4041300	1.30327	0.29401	73.52	73.52	0	24-HR	3B_FIRE	1ST	1E+07
746648	4041300	1.28286	0.29373	73.45	73.45	0	24-HR	3B_FIRE	1ST	1E+07
746673	4041300	1.25709	0.29346	73.4	73.4	0	24-HR	3B_FIRE	1ST	1E+07
746698	4041300	1.22446	0.29317	73.26	73.26	0	24-HR	3B_FIRE	1ST	1E+07
746723	4041300	1.18789	0.29289	73.14	73.14	0	24-HR	3B_FIRE	1ST	1E+07
746561.7	4041116	1.36476	0.30219	74.03	74.03	0	24-HR	3B_FIRE	1ST	1E+07
746586.7	4041116	1.36362	0.30193	73.85	73.85	0	24-HR	3B_FIRE	1ST	1E+07
746611.7	4041116	1.35607	0.30169	73.72	73.72	0	24-HR	3B_FIRE	1ST	1E+07
746561.7	4041141	1.36068	0.30111	74.03	74.03	0	24-HR	3B_FIRE	1ST	1E+07
746586.7	4041141	1.35917	0.30085	73.87	73.87	0	24-HR	3B_FIRE	1ST	1E+07
746611.7	4041141	1.35134	0.30059	73.76	73.76	0	24-HR	3B_FIRE	1ST	1E+07
746561.7	4041166	1.35436	0.30004	73.93	73.93	0	24-HR	3B_FIRE	1ST	1E+07
746586.7	4041166	1.35314	0.29978	73.82	73.82	0	24-HR	3B_FIRE	1ST	1E+07
746611.7	4041166	1.34504	0.29952	73.73	73.73	0	24-HR	3B_FIRE	1ST	1E+07
732066.5	4034603	0.12893	5.79427	179.63	182.63	0	24-HR	3B_FIRE	1ST	9E+06
732091.1	4033774	0.12069	14.23634	194.73	194.73	0	24-HR	3B_FIRE	1ST	7E+06
733692.7	4033824	0.40122	16.43626	156.54	156.54	0	24-HR	3B_FIRE	1ST	7E+06
733674	4034495	0.49692	2.62084	148.54	148.54	0	24-HR	3B_FIRE	1ST	7E+06
734110.1	4034487	0.59186	2.47725	145.97	145.97	0	24-HR	3B_FIRE	1ST	7E+06
734257.2	4034696	0.68824	2.45244	143.88	143.88	0	24-HR	3B_FIRE	1ST	7E+06
734627.9	4034704	0.74141	2.08228	142.92	142.92	0	24-HR	3B_FIRE	1ST	7E+06
735392.2	4035431	1.216	1.32059	136.71	136.71	0	24-HR	3B_FIRE	1ST	7E+06
737808.4	4035430	1.86448	0.923	123.3	123.3	0	24-HR	3B_FIRE	1ST	7E+06
738465.2	4036541	1.10265	0.97218	116.04	116.04	0	24-HR	3B_FIRE	1ST	1E+07
738750.4	4036380	1.1687	0.91633	115.54	115.54	0	24-HR	3B_FIRE	1ST	1E+07
742069.5	4036499	1.76085	0.61771	96.14	96.14	0	24-HR	3B_FIRE	1ST	9E+06
745283.7	4036599	3.71902	0.45487	85.3	85.3	0	24-HR	3B_FIRE	1ST	1E+07
746674	4036660	12.11452	0.42226	80.4	80.4	0	24-HR	3B_FIRE	1ST	8E+06
746708.1	4035860	5.63419	0.41588	80.08	80.08	0	24-HR	3B_FIRE	1ST	1E+07
747515.5	4035882	17.07627	0.37799	76.96	76.96	0	24-HR	3B_FIRE	1ST	9E+06
747536.4	4035076	4.65353	0.53809	77	77	0	24-HR	3B_FIRE	1ST	1E+07
748342.3	4035116	6.07558	0.49984	75.27	75.27	0	24-HR	3B_FIRE	1ST	7E+06
748310.9	4036726	2.57742	0.37136	73.89	73.89	0	24-HR	3B_FIRE	1ST	7E+06
749907.6	4036767	1.64836	0.32019	69.16	69.16	0	24-HR	3B_FIRE	1ST	7E+06
749812	4039992	0.87029	0.28148	65.38	65.38	0	24-HR	3B_FIRE	1ST	9E+06
751400.4	4040065	0.80825	0.27438	62.58	62.58	0	24-HR	3B_FIRE	1ST	9E+06
751462.2	4038438	1.15416	0.24837	64.8	64.8	0	24-HR	3B_FIRE	1ST	9E+06
752772.2	4038498	1.00716	0.21323	63.67	63.67	0	24-HR	3B_FIRE	1ST	9E+06
752832.1	4036888	1.34526	0.24144	65.85	65.85	0	24-HR	3B_FIRE	1ST	7E+06
754818.8	4036952	1.0913	0.19991	64.53	64.53	0	24-HR	3B_FIRE	1ST	7E+06
754771	4038559	0.73629	0.20643	62.3	62.3	0	24-HR	3B_FIRE	1ST	1E+07
752787.3	4038508	1.00599	0.21329	63.69	63.69	0	24-HR	3B_FIRE	1ST	9E+06
752734	4040110	0.68662	0.25785	62.03	62.03	0	24-HR	3B_FIRE	1ST	7E+06
751403.8	4040076	0.81525	0.27398	63.39	63.39	0	24-HR	3B_FIRE	1ST	9E+06
751355.7	4041673	0.62867	0.23065	60.59	60.59	0	24-HR	3B_FIRE	1ST	1E+07
753494.6	4041753	0.49563	0.19287	58.99	58.99	0	24-HR	3B_FIRE	1ST	9E+06
753492.6	4041790	0.50166	0.19065	58.92	58.92	0	24-HR	3B_FIRE	1ST	9E+06
753430	4043372	0.43548	0.1954	58.12	58.12	0	24-HR	3B_FIRE	1ST	9E+06
752608.6	4043340	0.50125	0.1981	58.27	58.27	0	24-HR	3B_FIRE	1ST	1E+07

752588.7	4044954	0.3602	0.16668	57.56	57.56	0	24-HR	3B_FIRE	1ST	9E+06
751182.4	4044928	0.29255	0.191	57.62	57.62	0	24-HR	3B_FIRE	1ST	9E+06
750128.3	4044863	0.48293	0.22876	58.36	58.36	0	24-HR	3B_FIRE	1ST	7E+06
750113	4045661	0.45798	0.19588	57.48	57.48	0	24-HR	3B_FIRE	1ST	7E+06
748466.7	4045588	0.62883	0.19048	60.79	60.79	0	24-HR	3B_FIRE	1ST	8E+06
748517	4043182	0.85105	0.22343	64.58	64.58	0	24-HR	3B_FIRE	1ST	8E+06
748555.6	4041575	0.87078	0.27106	66.81	66.81	0	24-HR	3B_FIRE	1ST	8E+06
748134.6	4041563	0.99562	0.27228	67.99	67.99	0	24-HR	3B_FIRE	1ST	8E+06
747727.9	4041548	0.86929	0.27449	69.05	69.05	0	24-HR	3B_FIRE	1ST	8E+06
746738.4	4041516	1.10133	0.2848	73.05	73.05	0	24-HR	3B_FIRE	1ST	1E+07
746735.9	4041121	1.22666	0.30038	73.38	73.38	0	24-HR	3B_FIRE	1ST	1E+07
746543.2	4041111	1.36314	0.30263	74.24	74.24	0	24-HR	3B_FIRE	1ST	1E+07
746547.7	4040519	1.44632	0.33627	75.46	75.46	0	24-HR	3B_FIRE	1ST	1E+07
746633.9	4040521	1.50079	0.33559	74.64	74.64	0	24-HR	3B_FIRE	1ST	1E+07
746634.9	4040467	1.51286	0.33889	74.71	74.71	0	24-HR	3B_FIRE	1ST	1E+07
746550.3	4040468	1.4547	0.33947	75.59	75.59	0	24-HR	3B_FIRE	1ST	1E+07
746553.9	4040356	1.46775	0.34619	75.86	75.86	0	24-HR	3B_FIRE	1ST	1E+07
746620.2	4040357	1.53017	0.34538	74.99	74.99	0	24-HR	3B_FIRE	1ST	1E+07
746621.1	4040315	1.53691	0.34756	75.02	75.02	0	24-HR	3B_FIRE	1ST	1E+07
746554.6	4040316	1.46886	0.3484	75.89	75.89	0	24-HR	3B_FIRE	1ST	1E+07
746560.4	4040168	1.48181	0.35524	76.19	76.19	0	24-HR	3B_FIRE	1ST	1E+07
746603.4	4040170	1.54005	0.35425	75.44	75.44	0	24-HR	3B_FIRE	1ST	1E+07
746617.4	4040170	1.55875	0.35398	75.42	75.42	0	24-HR	3B_FIRE	1ST	1E+07
746619.2	4040066	1.57444	0.35692	75.66	75.66	0	24-HR	3B_FIRE	1ST	1E+07
746619.3	4040066	1.57453	0.35694	75.66	75.66	0	24-HR	3B_FIRE	1ST	1E+07
746566.3	4040065	1.49747	0.35846	76.54	76.54	0	24-HR	3B_FIRE	1ST	1E+07
746573	4039885	1.50319	0.36008	76.91	76.91	0	24-HR	3B_FIRE	1ST	1E+07
748187.6	4039940	1.03639	0.27954	70.48	70.48	0	24-HR	3B_FIRE	1ST	7E+06
748269.9	4036790	2.65127	0.37149	73.98	73.98	0	24-HR	3B_FIRE	1ST	7E+06
747485.7	4036765	1.3474	0.39409	76.66	76.66	0	24-HR	3B_FIRE	1ST	1E+07
747441.5	4037775	1.8394	0.36645	75.7	75.7	0	24-HR	3B_FIRE	1ST	1E+07
746636.2	4037748	3.37383	0.40223	79.6	79.6	0	24-HR	3B_FIRE	1ST	9E+06
746670.7	4036745	10.95747	0.414	80.34	80.34	0	24-HR	3B_FIRE	1ST	9E+06
745738.3	4036715	4.80475	0.43011	83.77	83.77	0	24-HR	3B_FIRE	1ST	1E+07
738770	4036474	1.15519	0.92964	115.09	115.09	0	24-HR	3B_FIRE	1ST	1E+07
738439.6	4036665	1.01596	0.94836	115.62	115.62	0	24-HR	3B_FIRE	1ST	7E+06
737829.9	4035659	1.84936	0.9143	122.39	122.39	0	24-HR	3B_FIRE	1ST	7E+06
737743.7	4035513	1.86201	0.95854	123.1	123.1	0	24-HR	3B_FIRE	1ST	7E+06
737022.1	4035513	1.70655	1.16006	127.59	127.59	0	24-HR	3B_FIRE	1ST	7E+06
735339.2	4035512	1.22854	1.33344	136.22	136.22	0	24-HR	3B_FIRE	1ST	7E+06
734620.8	4034828	0.7871	2.11814	142.32	142.32	0	24-HR	3B_FIRE	1ST	7E+06
734199.1	4034811	0.726	1.732	143.41	143.41	0	24-HR	3B_FIRE	1ST	7E+06
734063.3	4034591	0.60537	2.63828	145.67	145.67	0	24-HR	3B_FIRE	1ST	7E+06
733671.4	4034584	0.52882	1.64395	147.74	147.74	0	24-HR	3B_FIRE	1ST	1E+07
733670.9	4034612	0.53921	1.38769	147.54	147.54	0	24-HR	3B_FIRE	1ST	1E+07
733666.7	4034643	0.55196	1.22039	147.22	147.22	0	24-HR	3B_FIRE	1ST	1E+07
732743.2	4034618	0.3125	15.99693	162.86	162.86	0	24-HR	3B_FIRE	1ST	1E+07
732071.5	4034437	0.12399	6.44739	183.47	183.47	0	24-HR	3B_FIRE	1ST	7E+06
732076.4	4034272	0.12462	7.63727	185.15	188	0	24-HR	3B_FIRE	1ST	7E+06
732081.3	4034106	0.12378	7.7323	191.52	191.52	0	24-HR	3B_FIRE	1ST	9E+06
732086.2	4033940	0.12101	10.93764	196.38	197.68	0	24-HR	3B_FIRE	1ST	9E+06
732269.1	4033780	0.12871	11.19638	187.04	187.04	0	24-HR	3B_FIRE	1ST	7E+06
732447	4033786	0.13275	7.48017	182.19	182.19	0	24-HR	3B_FIRE	1ST	7E+06
732625	4033791	0.13777	4.73313	177.68	177.68	0	24-HR	3B_FIRE	1ST	7E+06
732802.9	4033797	0.18367	4.31296	173.18	173.18	0	24-HR	3B_FIRE	1ST	9E+06
732980.9	4033802	0.18421	5.57315	169.83	169.83	0	24-HR	3B_FIRE	1ST	9E+06
733158.9	4033808	0.18482	7.41433	166.27	166.27	0	24-HR	3B_FIRE	1ST	9E+06
733336.8	4033813	0.18598	20.86311	163.34	163.34	0	24-HR	3B_FIRE	1ST	7E+06
733514.8	4033819	0.20628	21.05245	159.54	159.54	0	24-HR	3B_FIRE	1ST	8E+06
733688	4033992	0.3976	19.39563	154.97	154.97	0	24-HR	3B_FIRE	1ST	7E+06
733683.4	4034160	0.40566	9.03685	153.1	153.1	0	24-HR	3B_FIRE	1ST	7E+06
733678.7	4034328	0.44039	4.46728	150.74	150.74	0	24-HR	3B_FIRE	1ST	7E+06
733819.4	4034493	0.5265	2.77977	147.67	147.67	0	24-HR	3B_FIRE	1ST	7E+06
733964.8	4034490	0.55892	2.81103	146.79	146.79	0	24-HR	3B_FIRE	1ST	7E+06
734183.7	4034592	0.6432	2.61603	144.71	144.71	0	24-HR	3B_FIRE	1ST	7E+06
734442.6	4034700	0.7105	2.30772	143.5	143.5	0	24-HR	3B_FIRE	1ST	7E+06
734755.3	4034825	0.8033	2.04739	142.04	142.04	0	24-HR	3B_FIRE	1ST	7E+06

734882.7	4034946	0.88847	1.9468	140.83	140.83	0	24-HR	3B_FIRE	1ST	7E+06
735010	4035067	0.99787	1.79897	139.19	139.19	0	24-HR	3B_FIRE	1ST	7E+06
735137.4	4035189	1.08409	1.6334	138.2	138.2	0	24-HR	3B_FIRE	1ST	7E+06
735264.8	4035310	1.14849	1.46587	137.67	137.67	0	24-HR	3B_FIRE	1ST	7E+06
735578	4035431	1.26287	1.49247	135.97	135.97	0	24-HR	3B_FIRE	1ST	7E+06
735763.9	4035431	1.31509	1.57848	135.11	135.11	0	24-HR	3B_FIRE	1ST	7E+06
735949.8	4035431	1.37319	1.58426	134.1	134.1	0	24-HR	3B_FIRE	1ST	7E+06
736135.6	4035431	1.43234	1.53821	133.05	133.05	0	24-HR	3B_FIRE	1ST	7E+06
736321.5	4035431	1.48245	1.45842	132.26	132.26	0	24-HR	3B_FIRE	1ST	7E+06
736507.4	4035431	1.54265	1.35303	131.12	131.12	0	24-HR	3B_FIRE	1ST	7E+06
736693.2	4035431	1.60135	1.2708	129.94	129.94	0	24-HR	3B_FIRE	1ST	7E+06
736879.1	4035430	1.65424	1.19813	128.88	128.88	0	24-HR	3B_FIRE	1ST	7E+06
737065	4035430	1.70371	1.11684	127.85	127.85	0	24-HR	3B_FIRE	1ST	7E+06
737250.8	4035430	1.75103	1.04672	126.72	126.72	0	24-HR	3B_FIRE	1ST	7E+06
737436.7	4035430	1.79266	1.02114	125.8	125.8	0	24-HR	3B_FIRE	1ST	7E+06
737622.6	4035430	1.83235	0.97841	124.79	124.79	0	24-HR	3B_FIRE	1ST	7E+06
737902.2	4035589	1.88246	0.92753	122.18	122.18	0	24-HR	3B_FIRE	1ST	7E+06
737996.1	4035748	1.82007	0.8823	121.24	121.24	0	24-HR	3B_FIRE	1ST	7E+06
738089.9	4035906	1.66025	0.90751	120.21	120.21	0	24-HR	3B_FIRE	1ST	7E+06
738183.7	4036065	1.42695	0.97028	119.37	119.37	0	24-HR	3B_FIRE	1ST	7E+06
738277.5	4036224	1.16174	0.99924	118.73	118.73	0	24-HR	3B_FIRE	1ST	7E+06
738371.4	4036382	1.13942	0.99668	117.31	117.31	0	24-HR	3B_FIRE	1ST	1E+07
738607.8	4036461	1.15896	0.95913	116.48	116.48	0	24-HR	3B_FIRE	1ST	1E+07
738945.6	4036387	1.17613	0.86624	114.16	114.16	0	24-HR	3B_FIRE	1ST	1E+07
739140.9	4036394	1.17942	0.81267	112.76	112.76	0	24-HR	3B_FIRE	1ST	1E+07
739336.1	4036401	1.18058	0.75757	111.43	111.43	0	24-HR	3B_FIRE	1ST	1E+07
739531.4	4036408	1.17367	0.70241	109.79	109.79	0	24-HR	3B_FIRE	1ST	1E+07
739726.6	4036415	1.17112	0.68179	108.42	108.42	0	24-HR	3B_FIRE	1ST	1E+07
739921.8	4036422	1.1716	0.69057	107.27	107.27	0	24-HR	3B_FIRE	1ST	1E+07
740117.1	4036429	1.20578	0.69547	106.31	106.31	0	24-HR	3B_FIRE	1ST	8E+06
740312.3	4036436	1.25488	0.69704	104.8	104.8	0	24-HR	3B_FIRE	1ST	8E+06
740507.5	4036443	1.30045	0.69574	103.85	103.85	0	24-HR	3B_FIRE	1ST	8E+06
740702.8	4036450	1.34415	0.69189	103.28	103.28	0	24-HR	3B_FIRE	1ST	8E+06
740898	4036457	1.39228	0.68573	102.45	104.06	0	24-HR	3B_FIRE	1ST	8E+06
741093.3	4036464	1.4358	0.67772	102.24	102.24	0	24-HR	3B_FIRE	1ST	8E+06
741288.5	4036471	1.48719	0.66799	101.41	101.41	0	24-HR	3B_FIRE	1ST	8E+06
741483.7	4036478	1.54449	0.65696	100.9	100.9	0	24-HR	3B_FIRE	1ST	7E+06
741679	4036485	1.6003	0.64479	100.15	100.15	0	24-HR	3B_FIRE	1ST	7E+06
741874.2	4036492	1.65413	0.63166	98.71	100.73	0	24-HR	3B_FIRE	1ST	8E+06
742258.5	4036505	1.89252	0.60398	95.72	95.72	0	24-HR	3B_FIRE	1ST	9E+06
742447.6	4036511	2.03651	0.58988	95.02	95.02	0	24-HR	3B_FIRE	1ST	9E+06
742636.7	4036517	2.19394	0.57552	93.83	93.83	0	24-HR	3B_FIRE	1ST	9E+06
742825.8	4036523	2.35163	0.56116	93.21	93.21	0	24-HR	3B_FIRE	1ST	9E+06
743014.8	4036529	2.51282	0.54682	92.62	92.62	0	24-HR	3B_FIRE	1ST	9E+06
743203.9	4036534	2.67453	0.53257	91.96	91.96	0	24-HR	3B_FIRE	1ST	9E+06
743393	4036540	2.83053	0.5185	91.28	91.28	0	24-HR	3B_FIRE	1ST	9E+06
743582	4036546	2.96542	0.50476	91.34	91.34	0	24-HR	3B_FIRE	1ST	9E+06
743771.1	4036552	3.08185	0.4912	90.74	90.74	0	24-HR	3B_FIRE	1ST	9E+06
743960.2	4036558	3.16058	0.47804	90.04	90.04	0	24-HR	3B_FIRE	1ST	9E+06
744149.3	4036564	3.18327	0.46489	89.37	89.37	0	24-HR	3B_FIRE	1ST	9E+06
744338.3	4036570	3.13091	0.46032	88.68	88.68	0	24-HR	3B_FIRE	1ST	9E+06
744527.4	4036575	2.98273	0.46071	88.06	88.06	0	24-HR	3B_FIRE	1ST	1E+07
744716.5	4036581	3.3562	0.46026	87.43	87.43	0	24-HR	3B_FIRE	1ST	1E+07
744905.5	4036587	3.68554	0.4591	86.72	86.72	0	24-HR	3B_FIRE	1ST	1E+07
745094.6	4036593	3.85454	0.4573	86.1	86.1	0	24-HR	3B_FIRE	1ST	1E+07
745482.3	4036608	3.69396	0.45134	84.63	84.63	0	24-HR	3B_FIRE	1ST	9E+06
745680.9	4036616	4.35226	0.44739	84.08	84.08	0	24-HR	3B_FIRE	1ST	1E+07
745879.5	4036625	5.14727	0.44286	82.88	82.88	0	24-HR	3B_FIRE	1ST	1E+07
746078.1	4036634	6.98199	0.43805	81.9	81.9	0	24-HR	3B_FIRE	1ST	8E+06
746276.7	4036643	9.15773	0.43304	81.36	81.36	0	24-HR	3B_FIRE	1ST	9E+06
746475.4	4036651	14.58521	0.42774	80.79	80.79	0	24-HR	3B_FIRE	1ST	1E+07
746680.8	4036500	20.49693	0.43164	80.13	80.13	0	24-HR	3B_FIRE	1ST	1E+07
746687.6	4036340	18.23582	0.43394	80.12	80.12	0	24-HR	3B_FIRE	1ST	1E+07
746694.4	4036180	10.28063	0.43062	80.13	80.13	0	24-HR	3B_FIRE	1ST	9E+06
746701.3	4036020	5.88077	0.4238	80.11	80.11	0	24-HR	3B_FIRE	1ST	9E+06
746869.6	4035865	7.14124	0.40775	78.73	78.73	0	24-HR	3B_FIRE	1ST	7E+06
747031.1	4035869	10.07517	0.39999	78.15	78.15	0	24-HR	3B_FIRE	1ST	1E+07

747192.5	4035874	32.87553	0.39242	77.53	77.53	0	24-HR	3B_FIRE	1ST	1E+07
747354	4035878	28.59271	0.38509	77.12	77.12	0	24-HR	3B_FIRE	1ST	7E+06
747519.7	4035721	13.81757	0.3726	76.73	76.73	0	24-HR	3B_FIRE	1ST	7E+06
747523.9	4035560	10.0768	0.39694	76.72	76.72	0	24-HR	3B_FIRE	1ST	9E+06
747528	4035399	7.34242	0.45106	76.67	76.67	0	24-HR	3B_FIRE	1ST	1E+07
747532.2	4035237	5.96565	0.49914	76.79	76.79	0	24-HR	3B_FIRE	1ST	8E+06
747697.6	4035084	4.65076	0.53006	76.61	76.61	0	24-HR	3B_FIRE	1ST	8E+06
747858.8	4035092	5.10035	0.52224	76.26	76.26	0	24-HR	3B_FIRE	1ST	9E+06
748019.9	4035100	4.83562	0.51452	75.81	75.81	0	24-HR	3B_FIRE	1ST	1E+07
748181.1	4035108	5.76592	0.50711	75.56	75.56	0	24-HR	3B_FIRE	1ST	7E+06
748338.8	4035295	5.31473	0.46192	74.92	74.92	0	24-HR	3B_FIRE	1ST	8E+06
748335.3	4035474	5.99397	0.41458	74.88	74.88	0	24-HR	3B_FIRE	1ST	7E+06
748331.8	4035653	5.1884	0.36086	74.58	74.58	0	24-HR	3B_FIRE	1ST	1E+07
748328.4	4035832	5.98638	0.34257	74.39	74.39	0	24-HR	3B_FIRE	1ST	7E+06
748324.9	4036011	6.67601	0.34865	74.5	74.5	0	24-HR	3B_FIRE	1ST	7E+06
748321.4	4036189	6.71058	0.35665	74.28	74.28	0	24-HR	3B_FIRE	1ST	7E+06
748317.9	4036368	3.25946	0.36459	74.04	74.04	0	24-HR	3B_FIRE	1ST	8E+06
748314.4	4036547	2.78218	0.37018	73.74	73.74	0	24-HR	3B_FIRE	1ST	1E+07
748510.5	4036731	2.3998	0.36488	73	73	0	24-HR	3B_FIRE	1ST	1E+07
748710.1	4036736	2.45198	0.3584	72.2	72.2	0	24-HR	3B_FIRE	1ST	1E+07
748909.7	4036742	2.25477	0.35192	71.5	71.5	0	24-HR	3B_FIRE	1ST	1E+07
749109.2	4036747	1.9695	0.34548	70.89	70.89	0	24-HR	3B_FIRE	1ST	7E+06
749308.8	4036752	1.85359	0.33904	70.17	70.17	0	24-HR	3B_FIRE	1ST	8E+06
749508.4	4036757	1.7837	0.33267	69.64	69.64	0	24-HR	3B_FIRE	1ST	8E+06
749708	4036762	1.6931	0.32638	69.28	69.28	0	24-HR	3B_FIRE	1ST	8E+06
749901.9	4036957	1.52479	0.3232	68.64	68.64	0	24-HR	3B_FIRE	1ST	7E+06
749896.3	4037147	1.66845	0.32118	68.48	68.48	0	24-HR	3B_FIRE	1ST	7E+06
749890.7	4037337	1.71406	0.31309	68.3	68.3	0	24-HR	3B_FIRE	1ST	9E+06
749885.1	4037526	1.69119	0.29866	68.11	68.11	0	24-HR	3B_FIRE	1ST	9E+06
749879.5	4037716	1.463	0.27834	67.84	67.84	0	24-HR	3B_FIRE	1ST	9E+06
749873.8	4037906	1.16698	0.27241	67.65	67.65	0	24-HR	3B_FIRE	1ST	8E+06
749868.2	4038095	1.24764	0.28402	67.54	67.54	0	24-HR	3B_FIRE	1ST	1E+07
749862.6	4038285	1.2075	0.29471	67.48	67.48	0	24-HR	3B_FIRE	1ST	1E+07
749857	4038475	1.09258	0.30385	67.38	67.38	0	24-HR	3B_FIRE	1ST	1E+07
749851.3	4038664	1.1885	0.31091	67.16	67.16	0	24-HR	3B_FIRE	1ST	9E+06
749845.7	4038854	1.15276	0.31547	66.87	66.87	0	24-HR	3B_FIRE	1ST	9E+06
749840.1	4039044	0.93062	0.3172	66.47	66.47	0	24-HR	3B_FIRE	1ST	9E+06
749834.5	4039233	0.85532	0.31593	66.21	66.21	0	24-HR	3B_FIRE	1ST	8E+06
749828.9	4039423	0.82039	0.31159	65.98	65.98	0	24-HR	3B_FIRE	1ST	8E+06
749823.2	4039613	0.85182	0.30426	65.74	65.74	0	24-HR	3B_FIRE	1ST	1E+07
749817.6	4039802	0.83939	0.29412	65.5	65.5	0	24-HR	3B_FIRE	1ST	1E+07
750010.5	4040001	0.81862	0.28161	64.72	64.72	0	24-HR	3B_FIRE	1ST	1E+07
750209.1	4040010	0.76521	0.28141	64.25	64.25	0	24-HR	3B_FIRE	1ST	1E+07
750407.6	4040019	0.70147	0.28091	63.87	63.87	0	24-HR	3B_FIRE	1ST	8E+06
750606.2	4040028	0.69024	0.28013	63.64	63.64	0	24-HR	3B_FIRE	1ST	8E+06
750804.7	4040038	0.73921	0.27906	63.37	63.37	0	24-HR	3B_FIRE	1ST	9E+06
751003.3	4040047	0.84187	0.27774	63.31	63.31	0	24-HR	3B_FIRE	1ST	9E+06
751201.8	4040056	0.85967	0.27618	63.14	63.14	0	24-HR	3B_FIRE	1ST	9E+06
751407.3	4039884	0.7517	0.2794	62.98	62.98	0	24-HR	3B_FIRE	1ST	9E+06
751414.1	4039703	0.75939	0.28225	63.12	63.12	0	24-HR	3B_FIRE	1ST	1E+07
751421	4039523	0.80215	0.28293	63.27	63.27	0	24-HR	3B_FIRE	1ST	1E+07
751427.9	4039342	0.83359	0.28146	63.49	63.49	0	24-HR	3B_FIRE	1ST	1E+07
751434.8	4039161	0.83295	0.27797	63.57	63.57	0	24-HR	3B_FIRE	1ST	7E+06
751441.6	4038980	0.85569	0.27263	63.77	63.77	0	24-HR	3B_FIRE	1ST	8E+06
751448.5	4038800	0.91491	0.26571	63.97	63.97	0	24-HR	3B_FIRE	1ST	8E+06
751455.4	4038619	1.03076	0.2575	64.3	64.3	0	24-HR	3B_FIRE	1ST	9E+06
751649.4	4038447	1.15269	0.24298	64.3	64.3	0	24-HR	3B_FIRE	1ST	9E+06
751836.5	4038455	1.14533	0.23773	64.16	64.16	0	24-HR	3B_FIRE	1ST	9E+06
752023.7	4038464	1.13003	0.23259	63.94	63.94	0	24-HR	3B_FIRE	1ST	9E+06
752210.8	4038473	1.10928	0.22757	63.85	63.85	0	24-HR	3B_FIRE	1ST	9E+06
752397.9	4038481	1.08089	0.22267	63.66	63.66	0	24-HR	3B_FIRE	1ST	9E+06
752585.1	4038490	1.04644	0.21789	63.56	63.56	0	24-HR	3B_FIRE	1ST	9E+06
752778.9	4038319	0.93306	0.22398	63.68	63.68	0	24-HR	3B_FIRE	1ST	9E+06
752785.5	4038140	0.82659	0.23761	63.81	63.81	0	24-HR	3B_FIRE	1ST	7E+06
752792.2	4037962	0.86845	0.24787	64.02	64.02	0	24-HR	3B_FIRE	1ST	1E+07
752798.8	4037783	0.89536	0.25444	64.17	64.17	0	24-HR	3B_FIRE	1ST	1E+07
752805.5	4037604	0.91432	0.25733	64.49	64.49	0	24-HR	3B_FIRE	1ST	1E+07

752812.1	4037425	1.01613	0.25679	64.68	64.68	0	24-HR	3B_FIRE	1ST	7E+06
752818.8	4037246	1.19758	0.25341	64.93	64.93	0	24-HR	3B_FIRE	1ST	7E+06
752825.5	4037067	1.30123	0.24796	65.15	65.15	0	24-HR	3B_FIRE	1ST	7E+06
753030.8	4036895	1.30275	0.23682	65.55	65.55	0	24-HR	3B_FIRE	1ST	7E+06
753229.4	4036901	1.26265	0.23231	65.37	65.37	0	24-HR	3B_FIRE	1ST	7E+06
753428.1	4036907	1.22409	0.22792	65.23	65.23	0	24-HR	3B_FIRE	1ST	7E+06
753626.8	4036914	1.18656	0.22362	65.07	65.07	0	24-HR	3B_FIRE	1ST	7E+06
753825.5	4036920	1.15563	0.21944	65.02	65.02	0	24-HR	3B_FIRE	1ST	7E+06
754024.1	4036926	1.1439	0.21533	64.82	64.82	0	24-HR	3B_FIRE	1ST	7E+06
754222.8	4036933	1.13107	0.21132	64.62	64.62	0	24-HR	3B_FIRE	1ST	7E+06
754421.5	4036939	1.11799	0.20741	64.51	64.51	0	24-HR	3B_FIRE	1ST	7E+06
754620.1	4036946	1.10422	0.2036	64.41	64.41	0	24-HR	3B_FIRE	1ST	7E+06
754813.5	4037130	0.98773	0.20578	63.5	63.81	0	24-HR	3B_FIRE	1ST	7E+06
754808.2	4037309	0.98653	0.21181	63.19	63.19	0	24-HR	3B_FIRE	1ST	7E+06
754802.9	4037488	0.96108	0.21724	62.98	62.98	0	24-HR	3B_FIRE	1ST	7E+06
754797.6	4037666	0.89617	0.22139	62.76	63.01	0	24-HR	3B_FIRE	1ST	7E+06
754792.3	4037845	0.7894	0.22362	62.44	62.44	0	24-HR	3B_FIRE	1ST	7E+06
754787	4038023	0.7487	0.22348	62.29	62.29	0	24-HR	3B_FIRE	1ST	1E+07
754781.6	4038202	0.75751	0.22062	62.1	62.1	0	24-HR	3B_FIRE	1ST	1E+07
754776.3	4038381	0.75412	0.2149	62.01	62.01	0	24-HR	3B_FIRE	1ST	1E+07
754572.7	4038554	0.73611	0.20708	62.07	62.07	0	24-HR	3B_FIRE	1ST	1E+07
754374.3	4038549	0.73492	0.20765	62.17	62.17	0	24-HR	3B_FIRE	1ST	1E+07
754175.9	4038544	0.73051	0.20808	62.28	62.28	0	24-HR	3B_FIRE	1ST	1E+07
753977.5	4038539	0.72314	0.20837	62.5	62.5	0	24-HR	3B_FIRE	1ST	1E+07
753779.1	4038534	0.72005	0.20849	62.48	62.48	0	24-HR	3B_FIRE	1ST	9E+06
753580.8	4038528	0.77869	0.20846	62.63	62.63	0	24-HR	3B_FIRE	1ST	9E+06
753382.4	4038523	0.83817	0.20827	62.77	62.77	0	24-HR	3B_FIRE	1ST	9E+06
753184	4038518	0.89691	0.20791	62.95	62.95	0	24-HR	3B_FIRE	1ST	9E+06
752985.6	4038513	0.95261	0.20827	63.13	63.13	0	24-HR	3B_FIRE	1ST	9E+06
752781.3	4038686	1.01797	0.22179	63.18	63.18	0	24-HR	3B_FIRE	1ST	9E+06
752775.4	4038864	0.99038	0.23001	62.98	62.98	0	24-HR	3B_FIRE	1ST	9E+06
752769.5	4039042	0.9413	0.23763	62.78	62.78	0	24-HR	3B_FIRE	1ST	9E+06
752763.6	4039220	0.88009	0.24439	62.62	62.62	0	24-HR	3B_FIRE	1ST	9E+06
752757.7	4039398	0.80138	0.25003	62.45	62.45	0	24-HR	3B_FIRE	1ST	9E+06
752751.8	4039576	0.74414	0.25434	62.23	62.23	0	24-HR	3B_FIRE	1ST	8E+06
752745.9	4039754	0.735	0.25716	62.09	62.09	0	24-HR	3B_FIRE	1ST	8E+06
752740	4039932	0.68742	0.25835	61.9	61.9	0	24-HR	3B_FIRE	1ST	7E+06
752544	4040105	0.67794	0.26063	61.98	61.98	0	24-HR	3B_FIRE	1ST	7E+06
752354	4040100	0.68044	0.26327	62.01	62.01	0	24-HR	3B_FIRE	1ST	1E+07
752164	4040096	0.68835	0.26577	62.13	62.13	0	24-HR	3B_FIRE	1ST	1E+07
751973.9	4040091	0.69105	0.2681	62.31	62.31	0	24-HR	3B_FIRE	1ST	1E+07
751783.9	4040086	0.6872	0.27025	62.42	62.42	0	24-HR	3B_FIRE	1ST	1E+07
751593.9	4040081	0.73225	0.27221	62.56	62.56	0	24-HR	3B_FIRE	1ST	9E+06
751397.8	4040276	0.81693	0.26591	62.5	62.5	0	24-HR	3B_FIRE	1ST	9E+06
751391.8	4040476	0.74879	0.2556	62.17	62.17	0	24-HR	3B_FIRE	1ST	9E+06
751385.8	4040675	0.62306	0.24333	61.83	61.83	0	24-HR	3B_FIRE	1ST	9E+06
751379.8	4040875	0.60861	0.22946	61.51	61.51	0	24-HR	3B_FIRE	1ST	9E+06
751373.8	4041074	0.58221	0.21437	61.1	61.1	0	24-HR	3B_FIRE	1ST	9E+06
751367.7	4041274	0.54832	0.21467	60.85	60.85	0	24-HR	3B_FIRE	1ST	1E+07
751361.7	4041474	0.60658	0.22394	60.65	60.65	0	24-HR	3B_FIRE	1ST	1E+07
751550.2	4041681	0.58022	0.22506	60.55	60.55	0	24-HR	3B_FIRE	1ST	1E+07
751744.6	4041688	0.5228	0.21924	60.43	60.43	0	24-HR	3B_FIRE	1ST	9E+06
751939	4041695	0.53896	0.21327	60.32	60.32	0	24-HR	3B_FIRE	1ST	9E+06
752133.5	4041702	0.5444	0.2072	60.33	60.33	0	24-HR	3B_FIRE	1ST	9E+06
752327.9	4041710	0.53945	0.20104	60.28	60.28	0	24-HR	3B_FIRE	1ST	9E+06
752522.4	4041717	0.55084	0.19484	60.02	60.02	0	24-HR	3B_FIRE	1ST	9E+06
752716.8	4041724	0.58842	0.18863	59.61	59.61	0	24-HR	3B_FIRE	1ST	9E+06
752911.3	4041731	0.59369	0.1878	59.22	59.22	0	24-HR	3B_FIRE	1ST	9E+06
753105.7	4041739	0.57323	0.18968	58.9	58.9	0	24-HR	3B_FIRE	1ST	9E+06
753300.1	4041746	0.53748	0.19137	58.84	58.84	0	24-HR	3B_FIRE	1ST	9E+06
753484.7	4041988	0.52798	0.17837	58.74	58.74	0	24-HR	3B_FIRE	1ST	9E+06
753476.9	4042186	0.53805	0.1844	58.67	58.67	0	24-HR	3B_FIRE	1ST	9E+06
753469.1	4042383	0.52455	0.1914	58.57	58.57	0	24-HR	3B_FIRE	1ST	9E+06
753461.3	4042581	0.4858	0.19652	58.48	58.48	0	24-HR	3B_FIRE	1ST	9E+06
753453.5	4042779	0.45707	0.19947	58.33	58.33	0	24-HR	3B_FIRE	1ST	9E+06
753445.6	4042977	0.45545	0.20018	58.3	58.3	0	24-HR	3B_FIRE	1ST	9E+06
753437.8	4043174	0.448	0.19872	58.17	58.17	0	24-HR	3B_FIRE	1ST	9E+06

753265.7	4043366	0.42883	0.1962	57.98	57.98	0	24-HR	3B_FIRE	1ST	9E+06
753101.5	4043360	0.41818	0.19687	58.03	58.03	0	24-HR	3B_FIRE	1ST	9E+06
752937.2	4043353	0.44003	0.1974	58.12	58.12	0	24-HR	3B_FIRE	1ST	1E+07
752772.9	4043347	0.47919	0.19781	58.22	58.22	0	24-HR	3B_FIRE	1ST	1E+07
752606.4	4043520	0.49122	0.19233	57.86	57.86	0	24-HR	3B_FIRE	1ST	1E+07
752604.2	4043699	0.47932	0.18673	57.81	57.81	0	24-HR	3B_FIRE	1ST	9E+06
752602	4043878	0.49472	0.18163	57.67	57.67	0	24-HR	3B_FIRE	1ST	9E+06
752599.8	4044058	0.49732	0.17732	57.63	57.63	0	24-HR	3B_FIRE	1ST	9E+06
752597.6	4044237	0.48761	0.17394	57.66	57.66	0	24-HR	3B_FIRE	1ST	9E+06
752595.3	4044416	0.46661	0.17143	57.62	57.62	0	24-HR	3B_FIRE	1ST	9E+06
752593.1	4044595	0.43672	0.16962	57.59	57.59	0	24-HR	3B_FIRE	1ST	9E+06
752590.9	4044775	0.40024	0.16816	57.51	57.51	0	24-HR	3B_FIRE	1ST	9E+06
752412.9	4044951	0.36384	0.16792	57.45	57.45	0	24-HR	3B_FIRE	1ST	1E+07
752237.1	4044948	0.37271	0.16892	57.36	57.36	0	24-HR	3B_FIRE	1ST	1E+07
752061.3	4044944	0.3754	0.16959	57.26	57.26	0	24-HR	3B_FIRE	1ST	1E+07
751885.5	4044941	0.37188	0.16985	57.43	57.43	0	24-HR	3B_FIRE	1ST	1E+07
751709.7	4044938	0.36309	0.16966	58.38	58.38	0	24-HR	3B_FIRE	1ST	1E+07
751533.9	4044935	0.34455	0.17257	58.1	58.1	0	24-HR	3B_FIRE	1ST	1E+07
751358.1	4044931	0.32013	0.18193	57.85	57.85	0	24-HR	3B_FIRE	1ST	1E+07
751006.7	4044917	0.29714	0.19916	57.59	57.59	0	24-HR	3B_FIRE	1ST	7E+06
750831	4044906	0.34609	0.20678	57.67	57.67	0	24-HR	3B_FIRE	1ST	7E+06
750655.3	4044895	0.38987	0.21369	57.67	57.67	0	24-HR	3B_FIRE	1ST	7E+06
750479.7	4044884	0.42731	0.21976	57.79	57.79	0	24-HR	3B_FIRE	1ST	7E+06
750304	4044874	0.45742	0.22482	57.78	57.78	0	24-HR	3B_FIRE	1ST	7E+06
750124.5	4045062	0.47832	0.22715	58.18	58.18	0	24-HR	3B_FIRE	1ST	7E+06
750120.7	4045262	0.47216	0.22064	57.87	57.87	0	24-HR	3B_FIRE	1ST	7E+06
750116.8	4045461	0.4655	0.2099	57.67	57.67	0	24-HR	3B_FIRE	1ST	7E+06
749930.1	4045653	0.4642	0.19425	57.52	57.52	0	24-HR	3B_FIRE	1ST	7E+06
749747.2	4045645	0.49069	0.19653	57.69	57.69	0	24-HR	3B_FIRE	1ST	8E+06
749564.2	4045637	0.55488	0.19799	57.97	57.97	0	24-HR	3B_FIRE	1ST	8E+06
749381.3	4045628	0.60524	0.19861	58.39	58.39	0	24-HR	3B_FIRE	1ST	8E+06
749198.4	4045620	0.63899	0.19843	58.96	58.96	0	24-HR	3B_FIRE	1ST	8E+06
749015.5	4045612	0.65457	0.19747	59.32	59.32	0	24-HR	3B_FIRE	1ST	8E+06
748832.6	4045604	0.6552	0.19578	59.68	59.68	0	24-HR	3B_FIRE	1ST	8E+06
748649.6	4045596	0.64488	0.19343	60.08	60.08	0	24-HR	3B_FIRE	1ST	8E+06
748470.6	4045403	0.64354	0.19813	61.1	61.1	0	24-HR	3B_FIRE	1ST	8E+06
748474.4	4045218	0.65839	0.20486	61.35	61.35	0	24-HR	3B_FIRE	1ST	8E+06
748478.3	4045033	0.67287	0.21019	61.4	61.4	0	24-HR	3B_FIRE	1ST	8E+06
748482.2	4044848	0.68815	0.21365	61.51	61.51	0	24-HR	3B_FIRE	1ST	8E+06
748486.1	4044663	0.7007	0.2148	60.98	61.7	0	24-HR	3B_FIRE	1ST	8E+06
748489.9	4044478	0.72172	0.22706	62.03	62.03	0	24-HR	3B_FIRE	1ST	8E+06
748493.8	4044293	0.74009	0.24168	62.45	62.45	0	24-HR	3B_FIRE	1ST	8E+06
748497.7	4044107	0.75877	0.25208	62.85	62.85	0	24-HR	3B_FIRE	1ST	8E+06
748501.6	4043922	0.77864	0.25731	63.39	63.39	0	24-HR	3B_FIRE	1ST	8E+06
748505.4	4043737	0.79697	0.25681	63.66	63.66	0	24-HR	3B_FIRE	1ST	8E+06
748509.3	4043552	0.81533	0.25057	63.95	63.95	0	24-HR	3B_FIRE	1ST	8E+06
748513.2	4043367	0.8329	0.23911	64.18	64.18	0	24-HR	3B_FIRE	1ST	8E+06
748521.3	4043004	0.86543	0.22361	64.74	64.74	0	24-HR	3B_FIRE	1ST	8E+06
748525.6	4042825	0.87889	0.23021	65.03	65.03	0	24-HR	3B_FIRE	1ST	8E+06
748529.9	4042646	0.89061	0.23514	65.37	65.37	0	24-HR	3B_FIRE	1ST	8E+06
748534.2	4042468	0.89951	0.23925	65.7	65.7	0	24-HR	3B_FIRE	1ST	8E+06
748538.5	4042289	0.90356	0.24342	65.87	65.87	0	24-HR	3B_FIRE	1ST	8E+06
748542.7	4042111	0.90373	0.24843	66.09	66.09	0	24-HR	3B_FIRE	1ST	8E+06
748547	4041932	0.8988	0.25474	66.31	66.31	0	24-HR	3B_FIRE	1ST	8E+06
748551.3	4041753	0.88764	0.26241	66.5	66.5	0	24-HR	3B_FIRE	1ST	8E+06
748415.3	4041571	0.95594	0.27141	67.12	67.12	0	24-HR	3B_FIRE	1ST	8E+06
748274.9	4041567	0.99645	0.2718	67.46	67.46	0	24-HR	3B_FIRE	1ST	8E+06
747999.1	4041558	0.96142	0.27288	68.23	68.23	0	24-HR	3B_FIRE	1ST	8E+06
747863.5	4041553	0.9142	0.27361	68.59	68.59	0	24-HR	3B_FIRE	1ST	8E+06
747530	4041542	0.82466	0.27601	69.57	69.57	0	24-HR	3B_FIRE	1ST	8E+06
747332.1	4041535	0.80802	0.27789	70.5	70.5	0	24-HR	3B_FIRE	1ST	8E+06
747134.2	4041529	0.77686	0.28004	71.27	71.27	0	24-HR	3B_FIRE	1ST	8E+06
746936.3	4041522	0.83481	0.28237	72.27	72.27	0	24-HR	3B_FIRE	1ST	7E+06
746737.2	4041318	1.16236	0.29205	73.19	73.19	0	24-HR	3B_FIRE	1ST	1E+07
746544.7	4040913	1.41296	0.31234	75.31	75.31	0	24-HR	3B_FIRE	1ST	1E+07
746546.2	4040716	1.43958	0.32382	75.61	75.61	0	24-HR	3B_FIRE	1ST	1E+07
746752.4	4039891	1.65126	0.35276	75.46	75.46	0	24-HR	3B_FIRE	1ST	1E+07

746931.8	4039897	1.28165	0.34497	74.71	74.71	0	24-HR	3B_FIRE	1ST	1E+07
747111.2	4039904	1.10505	0.33661	73.94	73.94	0	24-HR	3B_FIRE	1ST	1E+07
747290.6	4039910	1.18406	0.3278	73.32	73.32	0	24-HR	3B_FIRE	1ST	1E+07
747470	4039916	1.11204	0.31857	72.57	72.57	0	24-HR	3B_FIRE	1ST	1E+07
747649.4	4039922	1.06097	0.30908	71.94	71.94	0	24-HR	3B_FIRE	1ST	8E+06
747828.8	4039928	1.14588	0.29942	71.33	71.33	0	24-HR	3B_FIRE	1ST	8E+06
748008.2	4039934	1.13384	0.28949	70.83	70.83	0	24-HR	3B_FIRE	1ST	8E+06
748192.8	4039743	1.08699	0.2862	70.46	70.46	0	24-HR	3B_FIRE	1ST	7E+06
748197.9	4039546	1.12925	0.30663	70.77	70.77	0	24-HR	3B_FIRE	1ST	7E+06
748203.1	4039349	1.15021	0.32449	71.05	71.05	0	24-HR	3B_FIRE	1ST	7E+06
748208.2	4039152	1.14063	0.3391	71.33	71.33	0	24-HR	3B_FIRE	1ST	7E+06
748213.3	4038956	1.09232	0.34992	71.75	71.75	0	24-HR	3B_FIRE	1ST	7E+06
748218.5	4038759	0.98698	0.35659	71.82	71.82	0	24-HR	3B_FIRE	1ST	7E+06
748223.6	4038562	0.89296	0.35893	71.84	71.84	0	24-HR	3B_FIRE	1ST	1E+07
748228.8	4038365	0.84974	0.35704	71.96	71.96	0	24-HR	3B_FIRE	1ST	1E+07
748233.9	4038168	0.76358	0.35122	72.34	72.34	0	24-HR	3B_FIRE	1ST	8E+06
748239.1	4037971	0.8531	0.342	72.45	72.45	0	24-HR	3B_FIRE	1ST	1E+07
748244.2	4037774	0.99532	0.33013	72.62	72.62	0	24-HR	3B_FIRE	1ST	9E+06
748249.4	4037578	1.39672	0.31656	72.78	72.78	0	24-HR	3B_FIRE	1ST	9E+06
748254.5	4037381	1.53139	0.31815	73.05	73.05	0	24-HR	3B_FIRE	1ST	9E+06
748259.6	4037184	1.61903	0.34443	73.42	73.42	0	24-HR	3B_FIRE	1ST	8E+06
748264.8	4036987	1.87214	0.36241	73.77	73.77	0	24-HR	3B_FIRE	1ST	1E+07
748073.9	4036784	2.45011	0.37727	74.51	74.51	0	24-HR	3B_FIRE	1ST	7E+06
747877.8	4036777	2.10693	0.383	75.2	75.2	0	24-HR	3B_FIRE	1ST	8E+06
747681.8	4036771	2.01558	0.38861	75.91	75.91	0	24-HR	3B_FIRE	1ST	9E+06
747478.3	4036933	1.70035	0.3804	76.44	76.44	0	24-HR	3B_FIRE	1ST	1E+07
747471	4037101	2.04151	0.35929	76.2	76.2	0	24-HR	3B_FIRE	1ST	8E+06
747463.6	4037270	2.12592	0.33162	76.03	76.03	0	24-HR	3B_FIRE	1ST	9E+06
747456.3	4037438	2.05134	0.34335	75.94	75.94	0	24-HR	3B_FIRE	1ST	1E+07
747448.9	4037607	1.94558	0.35569	75.87	75.87	0	24-HR	3B_FIRE	1ST	1E+07
747280.5	4037770	2.04671	0.37357	76.4	76.4	0	24-HR	3B_FIRE	1ST	1E+07
747119.4	4037764	1.9224	0.38072	77.08	77.08	0	24-HR	3B_FIRE	1ST	1E+07
746958.3	4037759	2.10938	0.38789	77.71	77.71	0	24-HR	3B_FIRE	1ST	1E+07
746797.3	4037754	2.52045	0.39505	78.36	78.36	0	24-HR	3B_FIRE	1ST	1E+07
746641.9	4037581	3.59322	0.39377	79.88	79.88	0	24-HR	3B_FIRE	1ST	9E+06
746647.7	4037414	4.12617	0.38262	79.87	79.87	0	24-HR	3B_FIRE	1ST	1E+07
746653.4	4037247	5.67166	0.36964	79.91	79.91	0	24-HR	3B_FIRE	1ST	1E+07
746659.2	4037080	7.63034	0.36113	80.09	80.09	0	24-HR	3B_FIRE	1ST	1E+07
746664.9	4036912	9.11047	0.39139	80.18	80.18	0	24-HR	3B_FIRE	1ST	1E+07
746484.2	4036739	11.56505	0.4178	80.45	80.45	0	24-HR	3B_FIRE	1ST	1E+07
746297.7	4036733	10.51248	0.42145	81.24	81.24	0	24-HR	3B_FIRE	1ST	1E+07
746111.3	4036727	7.94712	0.42472	82	82	0	24-HR	3B_FIRE	1ST	9E+06
745924.8	4036721	6.21396	0.42759	82.72	82.72	0	24-HR	3B_FIRE	1ST	8E+06
745539.2	4036708	4.34027	0.43227	84.62	84.62	0	24-HR	3B_FIRE	1ST	1E+07
745340.1	4036701	3.44211	0.43383	85.41	85.41	0	24-HR	3B_FIRE	1ST	1E+07
745141	4036694	3.13953	0.43468	85.93	85.93	0	24-HR	3B_FIRE	1ST	1E+07
744941.9	4036687	3.55867	0.43491	86.75	86.75	0	24-HR	3B_FIRE	1ST	1E+07
744742.8	4036680	3.63165	0.43481	87.37	87.37	0	24-HR	3B_FIRE	1ST	1E+07
744543.7	4036673	3.4483	0.44764	88.01	88.01	0	24-HR	3B_FIRE	1ST	1E+07
744344.6	4036666	3.12927	0.46081	88.63	88.63	0	24-HR	3B_FIRE	1ST	1E+07
744145.6	4036660	2.77595	0.47427	88.98	88.98	0	24-HR	3B_FIRE	1ST	1E+07
743946.5	4036653	2.70819	0.48803	89.44	89.44	0	24-HR	3B_FIRE	1ST	9E+06
743747.4	4036646	2.77467	0.50173	89.97	89.97	0	24-HR	3B_FIRE	1ST	9E+06
743548.3	4036639	2.77722	0.51578	90.5	90.5	0	24-HR	3B_FIRE	1ST	9E+06
743349.2	4036632	2.72425	0.5301	91.66	91.66	0	24-HR	3B_FIRE	1ST	9E+06
743150.1	4036625	2.63878	0.54449	92.47	92.47	0	24-HR	3B_FIRE	1ST	9E+06
742951	4036618	2.52955	0.55889	93.09	93.09	0	24-HR	3B_FIRE	1ST	9E+06
742751.9	4036611	2.40365	0.57322	93.75	93.75	0	24-HR	3B_FIRE	1ST	9E+06
742552.8	4036604	2.26615	0.5874	94.71	94.71	0	24-HR	3B_FIRE	1ST	9E+06
742353.7	4036598	2.12706	0.60122	95.42	95.42	0	24-HR	3B_FIRE	1ST	9E+06
742154.6	4036591	1.98885	0.61455	96.09	96.09	0	24-HR	3B_FIRE	1ST	9E+06
741955.5	4036584	1.85106	0.62725	97.12	99.62	0	24-HR	3B_FIRE	1ST	9E+06
741756.4	4036577	1.70401	0.63929	99.73	99.73	0	24-HR	3B_FIRE	1ST	9E+06
741557.3	4036570	1.58294	0.64995	100.23	100.23	0	24-HR	3B_FIRE	1ST	9E+06
741358.3	4036563	1.54153	0.65927	100.71	100.71	0	24-HR	3B_FIRE	1ST	7E+06
741159.2	4036556	1.50169	0.66702	101.54	101.54	0	24-HR	3B_FIRE	1ST	7E+06
740960.1	4036549	1.45628	0.67276	101.59	101.59	0	24-HR	3B_FIRE	1ST	7E+06

740761	4036542	1.40867	0.67637	102.44	102.44	0	24-HR	3B_FIRE	1ST	7E+06
740561.9	4036536	1.3585	0.67742	103.21	103.21	0	24-HR	3B_FIRE	1ST	7E+06
740362.8	4036529	1.30668	0.67559	104.04	104.04	0	24-HR	3B_FIRE	1ST	7E+06
740163.7	4036522	1.25292	0.67065	105.58	105.58	0	24-HR	3B_FIRE	1ST	7E+06
739964.6	4036515	1.19856	0.66221	106.9	106.9	0	24-HR	3B_FIRE	1ST	7E+06
739765.5	4036508	1.14491	0.68447	107.89	107.89	0	24-HR	3B_FIRE	1ST	7E+06
739566.4	4036501	1.11772	0.73707	109.25	109.25	0	24-HR	3B_FIRE	1ST	1E+07
739367.3	4036494	1.13216	0.78968	110.75	110.75	0	24-HR	3B_FIRE	1ST	1E+07
739168.2	4036487	1.14611	0.84057	112.32	112.32	0	24-HR	3B_FIRE	1ST	1E+07
738969.1	4036480	1.15413	0.88781	113.79	113.79	0	24-HR	3B_FIRE	1ST	1E+07
738604.8	4036569	1.08035	0.95416	115	115	0	24-HR	3B_FIRE	1ST	1E+07
738338	4036497	1.12389	0.99121	117.01	117.01	0	24-HR	3B_FIRE	1ST	1E+07
738236.4	4036329	1.11135	1.01996	118.58	118.58	0	24-HR	3B_FIRE	1ST	1E+07
738134.7	4036162	1.25855	1.02227	119.34	119.34	0	24-HR	3B_FIRE	1ST	7E+06
738033.1	4035994	1.52904	0.989	120.33	120.33	0	24-HR	3B_FIRE	1ST	7E+06
737931.5	4035826	1.73866	0.92326	121.37	121.37	0	24-HR	3B_FIRE	1ST	7E+06
737563.3	4035513	1.83138	0.98776	124.73	124.73	0	24-HR	3B_FIRE	1ST	7E+06
737382.9	4035513	1.79262	1.01682	125.63	125.63	0	24-HR	3B_FIRE	1ST	7E+06
737202.5	4035513	1.75133	1.08969	126.58	126.58	0	24-HR	3B_FIRE	1ST	7E+06
736835.1	4035513	1.65406	1.22397	128.79	128.79	0	24-HR	3B_FIRE	1ST	7E+06
736648.1	4035513	1.60139	1.33125	129.82	129.82	0	24-HR	3B_FIRE	1ST	7E+06
736461.1	4035513	1.54525	1.42239	130.9	130.9	0	24-HR	3B_FIRE	1ST	7E+06
736274.1	4035513	1.4844	1.49065	132.07	132.07	0	24-HR	3B_FIRE	1ST	7E+06
736087.1	4035513	1.43239	1.52669	132.91	132.91	0	24-HR	3B_FIRE	1ST	7E+06
735900.2	4035512	1.37079	1.51702	134.03	134.03	0	24-HR	3B_FIRE	1ST	7E+06
735713.2	4035512	1.31436	1.43534	134.99	134.99	0	24-HR	3B_FIRE	1ST	7E+06
735526.2	4035512	1.26933	1.26127	135.65	135.65	0	24-HR	3B_FIRE	1ST	7E+06
735195.5	4035375	1.15459	1.40665	137.68	137.68	0	24-HR	3B_FIRE	1ST	7E+06
735051.8	4035239	1.08727	1.51159	138.35	138.35	0	24-HR	3B_FIRE	1ST	7E+06
734908.2	4035102	0.97501	1.72091	139.93	139.93	0	24-HR	3B_FIRE	1ST	7E+06
734764.5	4034965	0.87099	1.93279	141.28	141.28	0	24-HR	3B_FIRE	1ST	7E+06
734480.3	4034822	0.7625	2.21149	142.78	142.78	0	24-HR	3B_FIRE	1ST	7E+06
734339.7	4034817	0.74779	2.06814	142.99	142.99	0	24-HR	3B_FIRE	1ST	7E+06
734131.2	4034701	0.63479	2.16922	145.3	145.3	0	24-HR	3B_FIRE	1ST	7E+06
733867.3	4034587	0.56476	2.26988	146.7	146.7	0	24-HR	3B_FIRE	1ST	7E+06
733482	4034638	0.52838	2.7081	148.71	148.71	0	24-HR	3B_FIRE	1ST	1E+07
733297.3	4034633	0.4818	3.75303	151.74	151.74	0	24-HR	3B_FIRE	1ST	1E+07
733112.6	4034628	0.42141	8.46679	155.63	155.63	0	24-HR	3B_FIRE	1ST	1E+07
732927.9	4034623	0.36972	12.46703	158.99	158.99	0	24-HR	3B_FIRE	1ST	1E+07
732574	4034614	0.27925	10.23959	165.26	165.26	0	24-HR	3B_FIRE	1ST	1E+07
732404.9	4034610	0.24448	8.33692	167.93	167.93	0	24-HR	3B_FIRE	1ST	1E+07
732235.7	4034607	0.18124	5.90761	173.36	173.36	0	24-HR	3B_FIRE	1ST	1E+07

CONCUNIT ug/m^3
DEPUNIT g/m^2