DOCKETED

Docket Number:	13-AFC-01
Project Title:	Alamitos Energy Center
TN #:	212799
Document Title:	SCAQMD Public Records Request Data 8-15-16
Description:	Compilation of data obtained through SCAQMD's Public Records Request process since May 2016.
Filer:	Patty Paul
Organization:	CH2M
Submitter Role:	Applicant Consultant
Submission Date:	8/15/2016 4:23:39 PM
Docketed Date:	8/15/2016

Alamitos Energy Center Supplemental Application for Certification (13-AFC-01)

Correspondence with SCAQMD Regarding Cumulative Source Assessment

May 7, 2016 through August 15, 2016

Trend Offset Printing Services, Inc.
(Facility ID 53729)

Belts, Heather/SJC

From: Jacob Allen <jallen2@aqmd.gov>
Sent: Thursday, July 28, 2016 8:25 AM
To: Dunavent, Andrew/SDO
Cc: OB PR Support NA Docs
Subject: Public Records Request #85107, [EXTERNAL]
Attachments: - PR - PR Supporting Docs - 7/28/2016 - 85107 - - - COMPLETION LETTER - ANDREW DUNAVENT.pdf; - PR - PR Review Docs - 7/28/2016 - 85107 - - 579885 APPL - F7155C5A1D97664AA170825E94AD3CF4.TIF - - ANDREW DUNAVENT.pdf; - PR - PR Review Docs - 7/28/2016 - 85107 - - 567815 APPL - 24A72AA67ED1D548A9F3280B58F46926.TIF - - ANDREW DUNAVENT.pdf; - PR - PR Review Docs - 7/28/2016 - 85107 - - - TREND OFFSET PRINTING SERVICES_FAC ID 53729_FACILITY PERMIT.PDF - - ANDREW DUNAVENT.pdf

Follow Up Flag: Follow up
Flag Status: Flagged

Attached are records for your request. There was a 13 page section removed from APPL 567815 because it was marked confidential. These pages consisted of a RFP proposal for a drying system that was marked confidential by the manufacturer Megtec. I have provided all of the non confidential portions of your requested records. You have two options available to you if you would like to receive these confidential pages. The first option is for you to contact the requested facility and have them send us an authorization letter created on their letterhead. This letter should say something along the lines of "We authorize the release of all records to CH2M HILL." The second option is to go through our internal confidentiality process. This consists of our department contacting the facility and allowing them to review all records that are being provided. This process usually takes around 6 months to complete. Please let me know if you are interested in pursuing either of these confidentiality options

Jacob Allen
Public Records, SCAQMD
(909) 396-2282

South Coast AQMD

Information Management
Public Records Unit

Direct Dial (909) 396-3700
Fax:(909) 396-3330

COMPLETION LETTER

July 28, 2016

ANDREW DUNAVENT
CH2M HILL
402W. BROADWAY # SUITE 1450
SAN DIEGO, CA 92101

Ref.: CONTROL NO. 85107
Received 3/1/2016

Re: APPL'S, P/O'S & S/T RPTS FOR TREND OFFSET PRINTING SERVICES, INC., FAC ID #53729, AT 3722-82 CATALINA STREET, LOS ALAMITOS, CA 90720, APPL #'S 579885 & 567815.

After a thorough search of this agency's records, the following records were found:
APPL'S & P/O'S FOR TREND OFFSET PRINTING SERVICES, INC., FAC ID #53729, AT 3722-82 CATALINA STREET, LOS ALAMITOS, CA 90720, APPL #'S 579885 & 567815.

The following records were not found:
S/T RPTS

YOUR REQUESTED RECORDS WERE PROVIDED ELECTRONICALLY ON 07/28/2016

If you have any questions, please do not hesitate to contact me, Tuesday through Friday, **8:00 a.m**. to **4:30 p.m.**

Sincerely,

JACOB ALLEN x2282
For Colleen Paine
Public Records Coordinator

:ja

South Coast Air Quality Management District
21865 Copley Drive, Diamond Bar, CA 91765-4178

Title Page	
Facility ID:	053729
Revision #:	40
Date:	January 01, 2016

FACILITY PERMIT TO OPERATE

TREND OFFSET PRINTING SERVICES, INC
3722-82 CATALINA ST
LOS ALAMITOS, CA 90720

NOTICE

IN ACCORDANCE WITH RULE 206, THIS PERMIT TO OPERATE OR A COPY THEREOF MUST BE KEPT AT THE LOCATION FOR WHICH IT IS ISSUED.

THIS PERMIT DOES NOT AUTHORIZE THE EMISSION OF AIR CONTAMINANTS IN EXCESS OF THOSE ALLOWED BY DIVISION 26 OF THE HEALTH AND SAFETY CODE OF THE STATE OF CALIFORNIA OR THE RULES OF THE SOUTH COAST AIR QUALITY MANAGEMENT DISTRICT. THIS PERMIT SHALL NOT BE CONSTRUED AS PERMISSION TO VIOLATE EXISTING LAWS, ORDINANCES, REGULATIONS OR STATUTES OF ANY OTHER FEDERAL, STATE OR LOCAL GOVERNMENTAL AGENCIES.

Barry R. Wallerstein, D. Env.
EXECUTIVE OFFICER

By
for Mohsen Nazemi, P.E.
Deputy Executive Officer
Engineering & Compliance

South Coast Air Quality Management District
21865 Copley Drive, Diamond Bar, CA 91765-4178

Table of Content
Facility ID 053729
Revision #: 40
Date: January 01, 2016

FACILITY PERMIT TO OPERATE
TREND OFFSET PRINTING SERVICES, INC

TABLE OF CONTENTS

Section	Description	Revision #	Date Issued
A	Facility Information	5	07/06/2010
B	RECLAIM Annual Emission Allocation	21	01/01/2016
C	Facility Plot Plan	TO BE DEVELOPED	
D	Facility Description and Equipment Specific Conditions	20	12/05/2014
E	Administrative Conditions	4	07/06/2010
F	RECLAIM Monitoring and Source Testing Requirements	3	07/06/2010
G	Recordkeeping and Reporting Requirements for RECLAIM Sources	3	07/06/2010
H	Permit To Construct and Temporary Permit to Operate	15	12/05/2014
I	Compliance Plans & Schedules	3	07/06/2010
J	Air Toxics	2	07/06/2010
K	Title V Administration	4	05/02/2013
Appendix			
A	NOx and SOx Emitting Equipment Exempt From Written Permit Pursuant to Rule 219	3	07/06/2010
B	Rule Emission Limits	4	05/02/2013

FACILITY PERMIT TO OPERATE
TREND OFFSET PRINTING SERVICES, INC

SECTION A: FACILITY INFORMATION

LEGAL OWNER &/OR OPERATOR:	TREND OFFSET PRINTING SERVICES, INC
LEGAL OPERATOR (if different than owner):	
EQUIPMENT LOCATION:	3722-382 CATALINA ST LOS ALAMITOS, CA 90720-2475
MAILING ADDRESS:	3791 CATALINA ST LOS ALAMITOS, CA 90720
RESPONSIBLE OFFICIAL:	STEVE FURLONG
TITLE:	GENERAL MANAGER
TELEPHONE NUMBER:	(562) 598-2446
CONTACT PERSON:	STEVE FURLONG
TITLE:	GENERAL MANAGER
TELEPHONE NUMBER:	(562) 598-2446
TITLE V PERMIT ISSUED:	July 06, 2010
TITLE V PERMIT EXPIRATION DATE:	July 05, 2015

TITLE V	RECLAIM	
YES	NOx:	YES
	SOx:	NO
	CYCLE:	1
	ZONE:	COASTAL

South Coast Air Quality Management District
21865 Copley Drive, Diamond Bar, CA 91765-4178

FACILITY PERMIT TO OPERATE
TREND OFFSET PRINTING SERVICES, INC

SECTION B: RECLAIM ANNUAL EMISSION ALLOCATION

The annual allocation of NOx RECLAIM Trading Credits (RTCs) for this facility is calculated pursuant to Rule 2002. Total NOx emission shall not exceed such annual allocations unless the operator obtains RTCs corresponding to the facility's increased emissions in compliance with Rules 2005 and 2007.

The level of Starting Allocation plus Non-Tradable Credits used to determine compliance with Rule 2005(c)(4) and applicability of Rule 2005(e) - Trading Zone Restrictions is listed on the last page of this Section.

The following table lists the annual allocations that were issued to this facility and the amounts of RTCs held by this facility on the day of printing this Section.

RECLAIM POLLUTANT ANNUAL ALLOCATION (POUNDS)

Year Begin (month/year)	Year End	Zone	NOx RTC Initially Allocated	NOx RTC [1] Holding as of 01/01/2016 (pounds)	Non-Tradable [2] Non-Usable RTCs (pounds)
7/2013	6/2014	Coastal	0	0	0
1/2014	12/2014	Coastal	1801	1390	0
7/2014	6/2015	Coastal	0	5368	0
1/2015	12/2015	Coastal	1801	4896	0
7/2015	6/2016	Coastal	0	3100	0
1/2016	12/2016	Coastal	1801	-476	0
7/2016	6/2017	Coastal	0	3100	0
1/2017	12/2017	Coastal	1801	1396	0
7/2017	6/2018	Coastal	0	3100	0
1/2018	12/2018	Coastal	1801	1396	0
7/2018	6/2019	Coastal	0	3100	0
1/2019	12/2019	Coastal	1801	1396	0
7/2019	6/2020	Coastal	0	3100	0
1/2020	12/2020	Coastal	1801	1396	0
7/2020	6/2021	Coastal	0	3100	0
1/2021	12/2021	Coastal	1801	1396	0
7/2021	6/2022	Coastal	0	3100	0

Footnotes:

1. This number may change due to pending trades, emissions reported under Quarterly Certification of Emissions Report (QCER) and Annual Permit Emission Program (APEP) Report required pursuant to Rule 2004, or deductions made pursuant to Rule 2010(b). The most recent total RTC information can be obtained from the District's RTC Listing.

2 The use of such credits is subject to restrictions set forth in paragraph (f)(1) of Rule 2002.

FACILITY PERMIT TO OPERATE
TREND OFFSET PRINTING SERVICES, INC

SECTION B: RECLAIM ANNUAL EMISSION ALLOCATION

The annual allocation of NOx RECLAIM Trading Credits (RTCs) for this facility is calculated pursuant to Rule 2002. Total NOx emission shall not exceed such annual allocations unless the operator obtains RTCs corresponding to the facility's increased emissions in compliance with Rules 2005 and 2007.

The level of Starting Allocation plus Non-Tradable Credits used to determine compliance with Rule 2005(c)(4) and applicability of Rule 2005(e) - Trading Zone Restrictions is listed on the last page of this Section.

The following table lists the annual allocations that were issued to this facility and the amounts of RTCs held by this facility on the day of printing this Section.

RECLAIM POLLUTANT ANNUAL ALLOCATION (POUNDS)

Year Begin (month/year)	Year End (month/year)	Zone	NOx RTC Initially Allocated	NOx RTC [1] Holding as of 01/01/2016 (pounds)	Non-Tradable [2] Non-Usable RTCs (pounds)
1/2022	12/2022	Coastal	1801	1396	0
7/2022	6/2023	Coastal	0	3100	0
1/2023	12/2023	Coastal	1801	1396	0
7/2023	6/2024	Coastal	0	3100	0
1/2024	12/2024	Coastal	1801	1396	0
7/2024	6/2025	Coastal	0	3100	0
1/2025	12/2025	Coastal	1801	1396	0
7/2025	6/2026	Coastal	0	3100	0
1/2026	12/2026	Coastal	1801	1396	0
7/2026	6/2027	Coastal	0	3100	0
1/2027	12/2027	Coastal	1801	1396	0
7/2027	6/2028	Coastal	0	3100	0
1/2028	12/2028	Coastal	1801	1396	0
7/2028	6/2029	Coastal	0	3100	0
1/2029	12/2029	Coastal	1801	1396	0
7/2029	6/2030	Coastal	0	3100	0
1/2030	12/2030	Coastal	1801	1396	0

Footnotes:

1. This number may change due to pending trades, emissions reported under Quarterly Certification of Emissions Report (QCER) and Annual Permit Emission Program (APEP) Report required pursuant to Rule 2004, or deductions made pursuant to Rule 2010(b). The most recent total RTC information can be obtained from the District's RTC Listing.

2. The use of such credits is subject to restrictions set forth in paragraph (f)(1) of Rule 2002.

FACILITY PERMIT TO OPERATE
TREND OFFSET PRINTING SERVICES, INC

SECTION B: RECLAIM ANNUAL EMISSION ALLOCATION

The annual allocation of NOx RECLAIM Trading Credits (RTCs) for this facility is calculated pursuant to Rule 2002. Total NOx emission shall not exceed such annual allocations unless the operator obtains RTCs corresponding to the facility's increased emissions in compliance with Rules 2005 and 2007.

The level of Starting Allocation plus Non-Tradable Credits used to determine compliance with Rule 2005(c)(4) and applicability of Rule 2005(e) - Trading Zone Restrictions is listed on the last page of this Section.

The following table lists the annual allocations that were issued to this facility and the amounts of RTCs held by this facility on the day of printing this Section.

RECLAIM POLLUTANT ANNUAL ALLOCATION (POUNDS)

Year Begin (month/year)	End	Zone	NOx RTC Initially Allocated	NOx RTC [1] Holding as of 01/01/2016 (pounds)	Non-Tradable [2] Non-Usable RTCs (pounds)
7/2030	6/2031	Coastal	0	3100	0
1/2031	12/2031	Coastal	1801	1396	0

Footnotes:

1. This number may change due to pending trades, emissions reported under Quarterly Certification of Emissions Report (QCER) and Annual Permit Emission Program (APEP) Report required pursuant to Rule 2004, or deductions made pursuant to Rule 2010(b). The most recent total RTC information can be obtained from the District's RTC Listing.

2. The use of such credits is subject to restrictions set forth in paragraph (f)(1) of Rule 2002.

FACILITY PERMIT TO OPERATE
TREND OFFSET PRINTING SERVICES, INC

SECTION B: RECLAIM ANNUAL EMISSION ALLOCATION

The annual allocation of RECLAIM Trading Credits (RTCs) for this facility is calculated pursuant to Rule 2002. If the facility submits a permit application to increase in an annual allocation to a level greater than the facility's starting Allocation plus Non-Tradable credits as listed below, the application will be evaluated for compliance with Rule 2005 (c)(4). Rule 2005 (e) - Trading Zone Restrictions applies if an annual allocation is increased to a level greater than the facility's Starting Allocation plus Non-Tradable Credits:

Year Begin (month/year)	Year End (month/year)	Zone	NOx RTC Starting Allocation (pounds)	Non-Tradable Credits(NTC) (pounds)
1/1994	12/1994	Coastal	8891	0

FACILITY PERMIT TO OPERATE
TREND OFFSET PRINTING SERVICES, INC

SECTION C: FACILITY PLOT PLAN

(TO BE DEVELOPED)

FACILITY PERMIT TO OPERATE
TREND OFFSET PRINTING SERVICES, INC

SECTION D: FACILITY DESCRIPTION AND EQUIPMENT SPECIFIC CONDITIONS

The operator shall comply with the terms and conditions set forth below:

Equipment	ID No.	Connected To	RECLAIM Source Type/ Monitoring Unit	Emissions * And Requirements	Conditions
Process 1: Lithographic Printing Systems					P42.1
PRINTING PRESS, LITHOGRAPHIC, HARRIS, MODEL NO. M-110, FOUR COLOR, 26.5 INCH WIDTH A/N: 553727	D19			**VOC**: (9) **[RULE 1130, 10-8-1999; RULE 1171, 2-1-2008;** *RULE 1171, 5-1-2009*]	B163.1, B163.4, H23.3, K67.1
DRYER, TEC, SERIES 80, NATURAL GAS, ONE ZONE, WITH LOW NOX BURNER, 1.5 MMBTU/HR A/N: 553727	D20	C59 C69	NOX: PROCESS UNIT**	**CO**: 2000 PPMV NATURAL GAS (5) **[RULE 407, 4-2-1982]**; **NOX**: 30 PPMV NATURAL GAS (4) **[RULE 2005, 6-3-2011]**; **NOX**: 130 LBS/MMSCF NATURAL GAS (1) **[RULE 2012, 5-6-2005]**; **PM**: (9) **[RULE 404, 2-7-1986]**; **PM**: 0.1 GRAINS/SCF NATURAL GAS (5) **[RULE 409, 8-7-1981]**	E133.1
PRINTING PRESS, LITHOGRAPHIC, HARRIS, MODEL NO. M-110, FOUR COLOR, 26.5 INCH WIDTH A/N: 553729	D67			**VOC**: (9) **[RULE 1130, 10-8-1999; RULE 1171, 2-1-2008;** *RULE 1171, 5-1-2009*]	B163.1, B163.4, H23.3, K67.1
DRYER, TEC, SERIES 80, NATURAL GAS, ONE ZONE, WITH LOW NOX BURNER, 1.5 MMBTU/HR A/N: 553729	D68	C59 C69	NOX: PROCESS UNIT**	**CO**: 2000 PPMV NATURAL GAS (5) **[RULE 407, 4-2-1982]**; **NOX**: 30 PPMV NATURAL GAS (4) **[RULE 2005, 6-3-2011]**; **NOX**: 130 LBS/MMSCF NATURAL GAS (1) **[RULE 2012, 5-6-2005]**; **PM**: (9) **[RULE 404, 2-7-1986]**; **PM**: 0.1 GRAINS/SCF NATURAL GAS (5) **[RULE 409, 8-7-1981]**	E133.1
PRINTING PRESS, LITHOGRAPHIC, GOSS, MODEL NO. M-500, FOUR COLOR, 28 INCH WIDTH A/N: 553712	D72			**VOC**: (9) **[RULE 1130, 10-8-1999; RULE 1171, 2-1-2008;** *RULE 1171, 5-1-2009*]	B163.1, B163.4, H23.3, K67.1

* (1) (1A) (1B) Denotes RECLAIM emission factor
(2) (2A) (2B) Denotes RECLAIM emission rate
(3) Denotes RECLAIM concentration limit
(4) Denotes BACT emission limit
(5) (5A) (5B) Denotes command and control emission limit
(6) Denotes air toxic control rule limit
(7) Denotes NSR applicability limit
(8) (8A) (8B) Denotes 40 CFR limit (e.g. NSPS, NESHAPS, etc.)
(9) See App B for Emission Limits
(10) See section J for NESHAP/MACT requirements

** Refer to section F and G of this permit to determine the monitoring, recordkeeping and reporting requirements for this device

FACILITY PERMIT TO OPERATE
TREND OFFSET PRINTING SERVICES, INC

SECTION D: FACILITY DESCRIPTION AND EQUIPMENT SPECIFIC CONDITIONS

The operator shall comply with the terms and conditions set forth below:

Equipment	ID No.	Connected To	RECLAIM Source Type/ Monitoring Unit	Emissions * And Requirements	Conditions
Process 1: Lithographic Printing Systems					P42.1
DRYER, GOSS, MODEL ECOWEB PLUS 89-1020, NATURAL GAS, TWO ZONES, EACH 1 MMBTU/HR, WITH LOW NOX BURNER, 2 MMBTU/HR A/N: 553712	D73	C59 C69	NOX: PROCESS UNIT**	**CO**: 2000 PPMV NATURAL GAS (5) **[RULE 407, 4-2-1982]**; **NOX**: 30 PPMV NATURAL GAS (4) **[RULE 2005, 6-3-2011]**; **NOX**: 130 LBS/MMSCF NATURAL GAS (1) **[RULE 2012, 5-6-2005]**; **PM**: (9) **[RULE 404, 2-7-1986]**; **PM**: 0.1 GRAINS/SCF NATURAL GAS (5) **[RULE 409, 8-7-1981]**	E133.1
PRINTING PRESS, LITHOGRAPHIC, HEIDELBERG HARRIS, MODEL NO. M600, EIGHT COLOR, 38 INCH WIDTH A/N: 553722	D6			**VOC**: (9) **[RULE 1130, 10-8-1999; RULE 1171, 2-1-2008;** *RULE 1171, 5-1-2009***]**	B163.1, B163.4, H23.3, K67.1
DRYER, TEC, NATURAL GAS, TWO ZONES, EACH WITH TWO BURNERS, 9.76 MMBTU/HR A/N: 553722	D7	C59 C69	NOX: PROCESS UNIT**	**CO**: 2000 PPMV NATURAL GAS (5) **[RULE 407, 4-2-1982]**; **NOX**: 130 LBS/MMSCF NATURAL GAS (1) **[RULE 2012, 5-6-2005]**; **PM**: (9) **[RULE 404, 2-7-1986]**; **PM**: 0.1 GRAINS/SCF NATURAL GAS (5) **[RULE 409, 8-7-1981]**	E133.1
PRINTING PRESS, LITHOGRAPHIC, HEIDELBERG, MODEL NO. V-30, TWELVE COLOR, 36 INCH WIDTH, AIR DRY A/N: 553716	D37			**VOC**: (9) **[RULE 1130, 10-8-1999; RULE 1171, 2-1-2008;** *RULE 1171, 5-1-2009***]**	B163.1, B163.4, H23.3, K67.1
PRINTING PRESS, LITHOGRAPHIC, HEIDELBERG, MODEL NO. V-30, TWELVE COLOR, 36 INCH WIDTH, AIR DRY A/N: 553714	D38			**VOC**: (9) **[RULE 1130, 10-8-1999; RULE 1171, 2-1-2008;** *RULE 1171, 5-1-2009***]**	B163.1, B163.4, H23.3, K67.1

* (1) (1A) (1B) Denotes RECLAIM emission factor
(2) (2A) (2B) Denotes RECLAIM emission rate
(3) Denotes RECLAIM concentration limit
(4) Denotes BACT emission limit
(5) (5A) (5B) Denotes command and control emission limit
(6) Denotes air toxic control rule limit
(7) Denotes NSR applicability limit
(8) (8A) (8B) Denotes 40 CFR limit (e.g. NSPS, NESHAPS, etc.)
(9) See App B for Emission Limits
(10) See section J for NESHAP/MACT requirements

** Refer to section F and G of this permit to determine the monitoring, recordkeeping and reporting requirements for this device

FACILITY PERMIT TO OPERATE
TREND OFFSET PRINTING SERVICES, INC

SECTION D: FACILITY DESCRIPTION AND EQUIPMENT SPECIFIC CONDITIONS

The operator shall comply with the terms and conditions set forth below:

Equipment	ID No.	Connected To	RECLAIM Source Type/ Monitoring Unit	Emissions* And Requirements	Conditions
Process 1: Lithographic Printing Systems					P42.1
PRINTING PRESS, LITHOGRAPHIC, HEIDELBERG-HARRIS, MODEL NO. M-600, DUAL WEB-FED OFFSET, FOUR COLOR PLUS UV COATER, 38 INCH WIDTH A/N: 553723	D39			**VOC**: (9) **[RULE 1130, 10-8-1999; RULE 1171, 2-1-2008;** *RULE 1171, 5-1-2009***]**	B163.1, B163.4, H23.3, K67.1
DRYER, MODEL NO. TEC-CP-311, NATURAL GAS, 2.567 MMBTU/HR A/N: 553723	D40	C59 C69	NOX: PROCESS UNIT**	**CO**: 2000 PPMV NATURAL GAS (5) **[RULE 407, 4-2-1982]**; **NOX**: 130 LBS/MMSCF *NATURAL GAS (1)* **[RULE 2012, 5-6-2005]**; **PM**: (9) **[RULE 404, 2-7-1986]**; **PM**: 0.1 GRAINS/SCF NATURAL GAS (5) **[RULE 409, 8-7-1981]**	E133.1
DRYER, MODEL NO. TEC-CP-311, NATURAL GAS, 2.567 MMBTU/HR A/N: 553723	D41	C59 C69	NOX: PROCESS UNIT**	**CO**: 2000 PPMV NATURAL GAS (5) **[RULE 407, 4-2-1982]**; **NOX**: 130 LBS/MMSCF NATURAL GAS (1) **[RULE 2012, 5-6-2005]**; **PM**: (9) **[RULE 404, 2-7-1986]**; **PM**: 0.1 GRAINS/SCF NATURAL GAS (5) **[RULE 409, 8-7-1981]**	E133.1
PRINTING PRESS, LITHOGRAPHIC, HEIDELBERG-HARRIS, MODEL NO. M-655, WEB-FED OFFSET, EIGHT COLOR, 38 INCH WIDTH, WITH AUTOMATIC BLANKET WASH SYSTEM A/N: 553721	D53			**VOC**: (9) **[RULE 1130, 10-8-1999; RULE 1171, 2-1-2008;** *RULE 1171, 5-1-2009***]**	B163.1, B163.4, H23.3, K67.1

* (1) (1A) (1B) Denotes RECLAIM emission factor
(2) (2A) (2B) Denotes RECLAIM emission rate
(3) Denotes RECLAIM concentration limit
(4) Denotes BACT emission limit
(5) (5A) (5B) Denotes command and control emission limit
(6) Denotes air toxic control rule limit
(7) Denotes NSR applicability limit
(8) (8A) (8B) Denotes 40 CFR limit (e.g. NSPS, NESHAPS, etc.)
(9) See App B for Emission Limits
(10) See section J for NESHAP/MACT requirements

** Refer to section F and G of this permit to determine the monitoring, recordkeeping and reporting requirements for this device

FACILITY PERMIT TO OPERATE
TREND OFFSET PRINTING SERVICES, INC

SECTION D: FACILITY DESCRIPTION AND EQUIPMENT SPECIFIC CONDITIONS

The operator shall comply with the terms and conditions set forth below:

Equipment	ID No.	Connected To	RECLAIM Source Type/ Monitoring Unit	Emissions * And Requirements	Conditions
Process 1: Lithographic Printing Systems					P42.1
DRYER, HEIDELBERG CONTIWEB, MODEL ECOWEB PLUS 106-1020, NATURAL GAS, WITH LOW NOX BURNER, 2.4 MMBTU/HR A/N: 553721	D56	C59 C69	NOX: PROCESS UNIT**	**CO**: 2000 PPMV NATURAL GAS (5) **[RULE 407, 4-2-1982]**; **NOX**: 30 PPMV NATURAL GAS (4) **[RULE 2005, 6-3-2011]**; **NOX**: 130 LBS/MMSCF NATURAL GAS (1) **[RULE 2012, 5-6-2005]**; **PM**: (9) **[RULE 404, 2-7-1986]**; **PM**: 0.1 GRAINS/SCF NATURAL GAS (5) **[RULE 409, 8-7-1981]**	E133.1
PRINTING PRESS, LITHOGRAPHIC, HEIDELBERG-HARRIS, MODEL NO. M-655, WEB-FED OFFSET, EIGHT COLOR, 38 INCH WIDTH, WITH AUTOMATIC BLANKET WASH SYSTEM A/N: 553720	D65			**VOC**: (9) **[RULE 1130, 10-8-1999; RULE 1171, 2-1-2008;** *RULE 1171, 5-1-2009*]	B163.1, B163.4, H23.3, K67.1
DRYER, HEIDELBERG CONTIWEB, MODEL ECOWEB PLUS 106-1020, NATURAL GAS, WITH LOW NOX BURNER, 2.4 MMBTU/HR A/N: 553720	D57	C59 C69	NOX: PROCESS UNIT**	**CO**: 2000 PPMV NATURAL GAS (5) **[RULE 407, 4-2-1982]**; **NOX**: 30 PPMV NATURAL GAS (4) **[RULE 2005, 6-3-2011]**; **NOX**: 130 LBS/MMSCF NATURAL GAS (1) **[RULE 2012, 5-6-2005]**; **PM**: (9) **[RULE 404, 2-7-1986]**; **PM**: 0.1 GRAINS/SCF NATURAL GAS (5) **[RULE 409, 8-7-1981]**	E133.1
PRINTING PRESS, LITHOGRAPHIC, HEIDELBERG-HARRIS, MODEL NO. V-30, 16- COLOR, 36 INCH WEB WIDTH, EIGHT WEBS A/N: 553713	D58			**VOC**: (9) **[RULE 1130, 10-8-1999; RULE 1171, 2-1-2008;** *RULE 1171, 5-1-2009*]	B163.1, B163.4, H23.3, K67.1

* (1) (1A) (1B) Denotes RECLAIM emission factor
(2) (2A) (2B) Denotes RECLAIM emission rate
(3) Denotes RECLAIM concentration limit
(4) Denotes BACT emission limit
(5) (5A) (5B) Denotes command and control emission limit
(6) Denotes air toxic control rule limit
(7) Denotes NSR applicability limit
(8) (8A) (8B) Denotes 40 CFR limit (e.g. NSPS, NESHAPS, etc.)
(9) See App B for Emission Limits
(10) See section J for NESHAP/MACT requirements

** Refer to section F and G of this permit to determine the monitoring, recordkeeping and reporting requirements for this device.

FACILITY PERMIT TO OPERATE
TREND OFFSET PRINTING SERVICES, INC

SECTION D: FACILITY DESCRIPTION AND EQUIPMENT SPECIFIC CONDITIONS

The operator shall comply with the terms and conditions set forth below:

Equipment	ID No.	Connected To	RECLAIM Source Type/ Monitoring Unit	Emissions* And Requirements	Conditions
Process 1: Lithographic Printing Systems					P42.1
PRINTING PRESS, LITHOGRAPHIC, HEIDELBERG-HARRIS, MODEL SUNDAY 2000, WEB-FED OFFSET, IGHT COLOR, 57 INCH WIDTH, WITH AUTOMATIC BLANKET WASH SYSTEM A/N: 553718	D60			**VOC**: (9) **[RULE 1130, 10-8-1999; RULE 1171, 2-1-2008;** *RULE 1171, 5-1-2009*]	B163.1, B163.4, H23.3, K67.1
DRYER, HEIDELBERG CONTIWEB BV, MODEL ECOCOOL/W 130-1460, NATURAL GAS, WITH LOW NOX BURNER, 4.9 MMBTU/HR A/N: 553718	D61	C59 C69	NOX: PROCESS UNIT**	**CO**: 2000 PPMV NATURAL GAS (5) **[RULE 407, 4-2-1982]**; **NOX**: 30 PPMV NATURAL GAS (4) **[RULE 2005, 6-3-2011]**; **NOX**: 130 LBS/MMSCF NATURAL GAS (1) **[RULE 2012, 5-6-2005]**; **PM**: (9) **[RULE 404, 2-7-1986]**; **PM**: 0.1 GRAINS/SCF NATURAL GAS (5) **[RULE 409, 8-7-1981]**	E133.1
PRINTING PRESS, LITHOGRAPHIC, HEIDELBERG-HARRIS, MODEL JNDAY 2000, WEB-FED OFFSET, EIGHT COLOR, 57 INCH WIDTH, WITH AUTOMATIC BLANKET WASH SYSTEM A/N: 553717	D66			**VOC**: (9) **[RULE 1130, 10-8-1999; RULE 1171, 2-1-2008;** *RULE 1171, 5-1-2009*]	B163.1, B163.4, H23.3, K67.1
DRYER, HEIDELBERG CONTIWEB BV, MODEL ECOCOOL/W 130-1460, NATURAL GAS, WITH LOW NOX BURNER, 4.9 MMBTU/HR A/N: 553717	D62	C59 C69	NOX: PROCESS UNIT**	**CO**: 2000 PPMV NATURAL GAS (5) **[RULE 407, 4-2-1982]**; **NOX**: 30 PPMV NATURAL GAS (4) **[RULE 2005, 6-3-2011]**; **NOX**: 130 LBS/MMSCF NATURAL GAS (1) **[RULE 2012, 5-6-2005]**; **PM**: (9) **[RULE 404, 2-7-1986]**; **PM**: 0.1 GRAINS/SCF NATURAL GAS (5) **[RULE 409, 8-7-1981]**	E133.1

* (1) (1A) (1B) Denotes RECLAIM emission factor
(2) (2A) (2B) Denotes RECLAIM emission rate
(3) Denotes RECLAIM concentration limit
(4) Denotes BACT emission limit
(5) (5A) (5B) Denotes command and control emission limit
(6) Denotes air toxic control rule limit
(7) Denotes NSR applicability limit
(8) (8A) (8B) Denotes 40 CFR limit (e.g. NSPS, NESHAPS, etc.)
(9) See App B for Emission Limits
(10) See section J for NESHAP/MACT requirements

** *Refer to section F and G of this permit to determine the monitoring, recordkeeping and reporting requirements for this device.*

FACILITY PERMIT TO OPERATE
TREND OFFSET PRINTING SERVICES, INC

SECTION D: FACILITY DESCRIPTION AND EQUIPMENT SPECIFIC CONDITIONS

The operator shall comply with the terms and conditions set forth below:

Equipment	ID No.	Connected To	RECLAIM Source Type/ Monitoring Unit	Emissions * And Requirements	Conditions
Process 1: Lithographic Printing Systems					P42.1
PRINTING PRESS, LITHOGRAPHIC, HEIDELBERG-HARRIS, M-8L, S/N OJ9798, SIX COLOR STATIONS, 26.5 INCH WIDTH A/N: 553719	D75			**VOC**: (9) **[RULE 1130, 10-8-1999; RULE 1171, 2-1-2008;** *RULE 1171, 5-1-2009*]	B163.1, B163.4, H23.3, K67.1
DRYER, MEGTEC, ATLAS 2700, S/N DT 98169-984819, NATURAL GAS, WITH TWO 1.5-MMBTU/HR BURNERS, MAXON, CYCLOMAX, WITH LOW NOX BURNER, 3 MMBTU/HR A/N: 553719	D76	C59 C69	NOX: PROCESS UNIT**	**CO**: 2000 PPMV NATURAL GAS (5) **[RULE 407, 4-2-1982]**; **NOX**: 30 PPMV NATURAL GAS (4) **[RULE 2005, 6-3-2011]**; **NOX**: 130 LBS/MMSCF NATURAL GAS (1) **[RULE 2012, 5-6-2005]**; **PM**: (9) **[RULE 404, 2-7-1986]**; **PM**: 0.1 GRAINS/SCF NATURAL GAS (5) **[RULE 409, 8-7-1981]**	D182.6, E133.1, I297.2
PRINTING PRESS, LITHOGRAPHIC, GOSS, MODEL C-700, FOUR COLOR STATIONS, 66 INCH WIDTH A/N: 547745	D81			**VOC**: (9) **[RULE 1130, 10-8-1999; RULE 1171, 2-1-2008;** *RULE 1171, 5-1-2009*]	B163.1, B163.4, H23.3, K67.1
DRYER, MEGTEC, COANDA PLUS, NATURAL GAS, WITH TWO 5.655-MMBTU/HR BURNERS, MAXON, MODEL LE EB-65, WITH LOW NOX BURNER, 11.31 MMBTU/HR A/N: 547745	D82	C59 C69	NOX: LARGE SOURCE**	**CO**: 2000 PPMV NATURAL GAS (5) **[RULE 407, 4-2-1982]**; **NOX**: 30 PPMV NATURAL GAS (3) **[RULE 2012, 5-6-2005]**; **NOX**: 30 PPMV NATURAL GAS (4) **[RULE 2005, 6-3-2011]**; **PM**: (9) **[RULE 404, 2-7-1986]**; **PM**: 0.1 GRAINS/SCF NATURAL GAS (5) **[RULE 409, 8-7-1981]**	D182.9, E133.1, I297.3
PRINTING PRESS, LITHOGRAPHIC, GOSS, MODEL C-700, FOUR COLOR STATIONS, 66 INCH WIDTH A/N: 547748	D83			**VOC**: (9) **[RULE 1130, 10-8-1999; RULE 1171, 2-1-2008;** *RULE 1171, 5-1-2009*]	B163.1, B163.4, H23.3, K67.1

* (1) (1A) (1B) Denotes RECLAIM emission factor
(2) (2A) (2B) Denotes RECLAIM emission rate
(3) Denotes RECLAIM concentration limit
(4) Denotes BACT emission limit
(5) (5A) (5B) Denotes command and control emission limit
(6) Denotes air toxic control rule limit
(7) Denotes NSR applicability limit
(8) (8A) (8B) Denotes 40 CFR limit (e.g. NSPS, NESHAPS, etc.)
(9) See App B for Emission Limits
(10) See section J for NESHAP/MACT requirements

** Refer to section F and G of this permit to determine the monitoring, recordkeeping and reporting requirements for this device

FACILITY PERMIT TO OPERATE
TREND OFFSET PRINTING SERVICES, INC

SECTION D: FACILITY DESCRIPTION AND EQUIPMENT SPECIFIC CONDITIONS

The operator shall comply with the terms and conditions set forth below:

Equipment	ID No.	Connected To	RECLAIM Source Type/ Monitoring Unit	Emissions * And Requirements	Conditions
Process 1: Lithographic Printing Systems					P42.1
DRYER, MEGTEC, COANDA PLUS, NATURAL GAS, WITH TWO 5.655-MMBTU/HR BURNERS, TAXON, MODEL EL EB-65, WITH LOW NOX BURNER, 11.31 MMBTU/HR A/N: 547748	D84	C59 C69	NOX: LARGE SOURCE**	**CO**: 2000 PPMV NATURAL GAS (5) **[RULE 407, 4-2-1982]**; **NOX**: 30 PPMV NATURAL GAS (2) **[RULE 2012, 5-6-2005]**; **NOX**: 30 PPMV NATURAL GAS (4) **[RULE 2005, 6-3-2011]**; **PM**: (9) **[RULE 404, 2-7-1986]**; **PM**: 0.1 GRAINS/SCF NATURAL GAS (5) **[RULE 409, 8-7-1981]**	D182.9, E133.1, I297.3
Process 2: Air Pollution Control Systems					
AFTERBURNER, HOT ROCK, ADVANTAGE ENERGY GROUP, MODEL PREMIER 22.5 RTO, ONE 150 H.P. EXHAUST BLOWER, NATURAL GAS, ONE 10 H.P. COMB. AIR FAN, TWO HEAT EXCHANGERS AND ONE ABSORPTION CHILLER, 6.4 MMBTU/HR /N:	C59	D7 D20 D40 D41 D56 D57 D61 D62 D68 D73 D76 D82 D84	NOX: PROCESS UNIT**	**CO**: 2000 PPMV NATURAL GAS (5) **[RULE 407, 4-2-1982]**; **NOX**: 130 LBS/MMSCF NATURAL GAS (1) **[RULE 2012, 5-6-2005]**; **PM**: (9) **[RULE 404, 2-7-1986]**; **PM**: 0.1 GRAINS/SCF (5) **[RULE 409, 8-7-1981]**	A72.1, D182.4, D182.8, E193.2, E193.5
AFTERBURNER, HOT ROCK, ADWEST, RETOX 25.0 RTO95, MAXON KINEMAX 6G BURNER, ONE 100-HP EXHAUST BLOWER, NATURAL GAS, ONE 10-HP COMBUSTION BLOWER, AND ONE 3-MMBTU/HR NATURAL GAS INJECTION SYSTEM, 7.225 MMBTU/HR A/N:	C69	D7 D20 D40 D41 D56 D57 D61 D62 D68 D73 D76 D82 D84	NOX: PROCESS UNIT**	**CO**: 2000 PPMV NATURAL GAS (5) **[RULE 407, 4-2-1982]**; **NOX**: 130 LBS/MMSCF NATURAL GAS (1) **[RULE 2012, 5-6-2005]**; **PM**: (9) **[RULE 404, 2-7-1986]**; **PM**: 0.1 GRAINS/SCF (5) **[RULE 407, 4-2-1982]**	A72.1, C1.1, D182.4, D182.8, E193.2, E193.5
Process 3: Solvent Recovery					

* (1) (1A) (1B) Denotes RECLAIM emission factor
(2) (2A) (2B) Denotes RECLAIM emission rate
(3) Denotes RECLAIM concentration limit
(4) Denotes BACT emission limit
(5) (5A) (5B) Denotes command and control emission limit
(6) Denotes air toxic control rule limit
(7) Denotes NSR applicability limit
(8) (8A) (8B) Denotes 40 CFR limit (e.g. NSPS, NESHAPS, etc.)
(9) See App B for Emission Limits
(10) See section J for NESHAP/MACT requirements

** Refer to section F and G of this permit to determine the monitoring, recordkeeping and reporting requirements for this device

FACILITY PERMIT TO OPERATE
TREND OFFSET PRINTING SERVICES, INC

SECTION D: FACILITY DESCRIPTION AND EQUIPMENT SPECIFIC CONDITIONS

The operator shall comply with the terms and conditions set forth below:

Equipment	ID No.	Connected To	RECLAIM Source Type/ Monitoring Unit	Emissions * And Requirements	Conditions
Process 3: Solvent Recovery					
CENTRIFUGE, BLANKET-WASH SOLVENT RECOVERY A/N: 556159	D63				H23.4
Process 4: Rule 219-Exempt Equipment Subject to Source Specific Rule(s)					
RULE 219 EXEMPT EQUIPMENT, COATING EQUIPMENT, PORTABLE, ARCHITECTURAL COATINGS	E22			**VOC**: (9) **[RULE 1113, 7-13-2007;** *RULE 1113, 9-6-2013;* **RULE 1171, 2-1-2008;** *RULE 1171, 5-1-2009*]	K67.2
RULE 219 EXEMPT EQUIPMENT, EXEMPT HAND WIPING OPERATIONS	E23			**VOC**: (9) **[RULE 1171, 2-1-2008;** *RULE 1171, 5-1-2009*]	H23.3
RULE 219 EXEMPT EQUIPMENT, CLEANING EQUIPMENT, SMALL, UNHEATED, NON-CONVEYORIZED	E24			**VOC**: (9) **[RULE 1171, 2-1-2008;** *RULE 1171, 5-1-2009*]	H23.1
RULE 219 EXEMPT EQUIPMENT, AIR CONDITIONING UNITS	E25				H23.2
RULE 219 EXEMPT EQUIPMENT, PRINTING EQUIPMENT, INKJET PRINTER	E64			**VOC**: (9) **[RULE 1171, 2-1-2008;** *RULE 1171, 5-1-2009*]	H23.3, H23.4

* (1) (1A) (1B) Denotes RECLAIM emission factor
(2) (2A) (2B) Denotes RECLAIM emission rate
(3) Denotes RECLAIM concentration limit
(4) Denotes BACT emission limit
(5) (5A) (5B) Denotes command and control emission limit
(6) Denotes air toxic control rule limit
(7) Denotes NSR applicability limit
(8) (8A) (8B) Denotes 40 CFR limit (e.g. NSPS, NESHAPS, etc.)
(9) See App B for Emission Limits
(10) See section J for NESHAP/MACT requirements

** Refer to section F and G of this permit to determine the monitoring, recordkeeping and reporting requirements for this device.

FACILITY PERMIT TO OPERATE
TREND OFFSET PRINTING SERVICES, INC

SECTION D: DEVICE ID INDEX

The following sub-section provides an index to the devices that make up the facility description sorted by device ID.

FACILITY PERMIT TO OPERATE
TREND OFFSET PRINTING SERVICES, INC

SECTION D: DEVICE ID INDEX

Device Index For Section D			
Device ID	**Section D Page No.**	**Process**	**System**
D6	2	1	0
D7	2	1	0
D19	1	1	0
D20	1	1	0
E22	8	4	0
E23	8	4	0
E24	8	4	0
E25	8	4	0
D37	2	1	0
D38	2	1	0
D39	3	1	0
D40	3	1	0
D41	3	1	0
D53	3	1	0
D56	4	1	0
D57	4	1	0
D58	4	1	0
C59	7	2	0
D60	5	1	0
D61	5	1	0
D62	5	1	0
D63	8	3	0
E64	8	4	0
D65	4	1	0
D66	5	1	0
D67	1	1	0
D68	1	1	0
C69	7	2	0
D72	1	1	0
D73	2	1	0
D75	6	1	0
D76	6	1	0
D81	6	1	0
D82	6	1	0
D83	6	1	0

FACILITY PERMIT TO OPERATE
TREND OFFSET PRINTING SERVICES, INC

SECTION D: DEVICE ID INDEX

Device Index For Section D			
Device ID	**Section D Page No.**	**Process**	**System**
D84	7	1	0

FACILITY PERMIT TO OPERATE
TREND OFFSET PRINTING SERVICES, INC

SECTION D: FACILITY DESCRIPTION AND EQUIPMENT SPECIFIC CONDITIONS

The operator shall comply with the terms and conditions set forth below:

FACILITY CONDITIONS

F2.1 The operator shall limit emissions from this facility as follows:

CONTAMINANT	EMISSIONS LIMIT
VOC	Less than or equal to 14,390 LBS IN ANY ONE MONTH

To ensure compliance with the monthly Volatile Organic Compound(VOC) emission limit(s) of this condition, the operator shall comply with the following recordkeeping requirements:

(1) The operator shall comply with Rule 109 (Recordkeeping for Volatile Organic Compound Emissions).

(2) Within 14 calendar days after the end of each month, the operator shall total and record VOC emissions for the month from all equipment and operations covered by the monthly emission limit(s). The record shall include any procedures used to account for control device efficiencies and/or waste disposal. It shall be signed and certified for accuracy by the highest ranking individual responsible for compliance with District rules.

(3) The operator shall maintain a single list which includes only the name and address of each person from whom the facility acquired VOC-containing material regulated by the District that was used or stored at the facility during the preceding 12 months.

(4) The operator shall retain all purchase invoices for all VOC-containing material used or stored at the facility, and all waste manifests for all waste VOC-containing material removed from the facility, for five years.

For the purpose of this condition, the VOC emission limit shall be applicable to all VOC-emitting equipment and operations that are required to have written permits or are exempt from written permits pursuant to Rule 219.

FACILITY PERMIT TO OPERATE
TREND OFFSET PRINTING SERVICES, INC

SECTION D: FACILITY DESCRIPTION AND EQUIPMENT SPECIFIC CONDITIONS

The operator shall comply with the terms and conditions set forth below:

[**RULE 109, 5-2-2003; RULE 1303(b)(2)-Offset, 5-10-1996;** RULE 1303(b)(2)-Offset, 12-6-2002]

F9.1 Except for open abrasive blasting operations, the operator shall not discharge into the atmosphere from any single source of emissions whatsoever any air contaminant for a period or periods aggregating more than three minutes in any one hour which is:

(a) As dark or darker in shade as that designated No.1 on the Ringelmann Chart, as published by the United States Bureau of Mines; or

(b) Of such opacity as to obscure an observer's view to a degree equal to or greater than does smoke described in subparagraph (a) of this condition.

[**RULE 401, 3-2-1984;** RULE 401, 11-9-2001]

PROCESS CONDITIONS

P42.1 The operator shall not use in this process any graphic art materials containing any toxic air contaminants (TAC) identified in Rule 1401, Table 1, with a effective date of September 10, 2010 or earlier, except for the following TACs and with the following limits:

CAS No.	Chemical Name	lbs in any one calendar month
75-09-2	Methylene Chloride	175
100-41-4	Ethyl Benzene	22
50-00-0	Formaldehyde	1.2
91-20-3	Naphthalene	1.1
1310-73-2	Sodium Hydroxide	235
1336-36-3	Polychlorinated Biphenyls (PCBs)	0.001

FACILITY PERMIT TO OPERATE
TREND OFFSET PRINTING SERVICES, INC

SECTION D: FACILITY DESCRIPTION AND EQUIPMENT SPECIFIC CONDITIONS

The operator shall comply with the terms and conditions set forth below:

100-42-5	Styrene	NA
79-10-7	Acrylic Acid	NA
7664-41-7	Ammonia	NA
107-21-1	Ethylene Glycol	NA
111-76-2	Ethylene Glycol Butyl Ether	NA
1330-20-7	Xylenes	NA
67-63-0	Isopropyl Alcohol	NA
7440-50-8	Copper and Copper Compounds	NA
7664-38-2	Phosphoric Acid	NA
108-88-3	Toluene	NA
108-05-4	Vinyl Acetate	NA

The above limits for methylene chloride, ethyl benzene, formaldehyde, and sodium hydroxide shall be based on the total usage

The above limit for naphthalene and PCBs shall be based on total emissions

[RULE 1401, 9-10-2010]

[Processes subject to this condition : 1]

DEVICE CONDITIONS

A. Emission Limits

A72.1 The operator shall maintain this equipment to achieve a minimum overall control efficiency of 95 percent for VOC during the normal operation of the equipment it vents.

[RULE 1303(a)(1)-BACT, 5-10-1996; RULE 1303(a)(1)-BACT, 12-6-2002]

FACILITY PERMIT TO OPERATE
TREND OFFSET PRINTING SERVICES, INC

SECTION D: FACILITY DESCRIPTION AND EQUIPMENT SPECIFIC CONDITIONS

The operator shall comply with the terms and conditions set forth below:

[Devices subject to this condition : C59, C69]

B. Material/Fuel Type Limits

B163.1 The operator shall not use fountain solution containing the following:

more than 8 percent by volume of volatile organic compounds (VOC) as applied.

[RULE 1303(a)(1)-BACT, 5-10-1996; RULE 1303(a)(1)-BACT, 12-6-2002]

[Devices subject to this condition : D6, D19, D37, D38, D39, D53, D58, D60, D65, D66, D67, D72, D75, D81, D83]

B163.4 The operator shall not use equipment clean-up solvent containing the following:

more than 10 mm Hg VOC composite partial pressure.

[RULE 1303(a)(1)-BACT, 5-10-1996; RULE 1303(a)(1)-BACT, 12-6-2002]

[Devices subject to this condition : D6, D19, D37, D38, D39, D53, D58, D60, D65, D66, D67, D72, D75, D81, D83]

C. Throughput or Operating Parameter Limits

C1.1 The operator shall limit the natural gas fuel usage to no more than 7690 cubic feet in any one day.

FACILITY PERMIT TO OPERATE
TREND OFFSET PRINTING SERVICES, INC

SECTION D: FACILITY DESCRIPTION AND EQUIPMENT SPECIFIC CONDITIONS

The operator shall comply with the terms and conditions set forth below:

To comply with this condition, the operator shall install and maintain a(n) non-resettable totalizing fuel flow meter to accurately indicate the fuel usage in the natural gas fired startup burner.

The natural gas usage being monitored shall be recorded at the end of each day. A hard copy of the daily natural gas usage log shall be maintained as part of the facility operating records.

[**RULE 1303(a)(1)-BACT, 5-10-1996;** RULE 1303(a)(1)-BACT, 12-6-2002]

[Devices subject to this condition : C69]

D. Monitoring/Testing Requirements

D182.4 The operator shall test this equipment in accordance with the following specifications:

FACILITY PERMIT TO OPERATE
TREND OFFSET PRINTING SERVICES, INC

SECTION D: FACILITY DESCRIPTION AND EQUIPMENT SPECIFIC CONDITIONS

The operator shall comply with the terms and conditions set forth below:

A. The test shall be conducted at least once every five years.

B.The test shall be conducted no later than May 8, 2014 unless otherwise approved in writing by the District.

C.The test shall be conducted to determine the voc emissions using an approved district method to demonstrate compliance with all applicable permit condition(s), rules and regulations.

D.The source test shall be conducted while the oxidizer is operating at a temperature of not less than the minimum operating temperature specified in this permit. If the operating temperature during the source test is greater than the minimum operating temperature specified in this permit, the minimum operating temperature specified in this permit may be increased to reflect the operating temperature during the source test.

E.The operator shall comply with administrative conditions nos. 9, 10, and 11 of section E of this facility permit.

F.The operator shall submit two complete copies of the source test report specified in condition no. 10 of section e of this facility permit to the district engineering and compliance division.

G. The engineering copy of the report shall be sent to: South Coast Air Quality Management District, Coating, Printing and Aerospace Operations, attn: Air Qaulity and Compliance Supervisor, 21865 Copley Drive, Diamond Bar, CA 91765.

H. The compliance copy of the report shall be sent to: South Coast Air Quality Management District, P.O. Box 4941, Diamond Bar, CA 91765.

[RULE 1130, 10-8-1999; RULE 3004(a)(4)-Periodic Monitoring, 12-12-1997]

[Devices subject to this condition : C59, C69]

FACILITY PERMIT TO OPERATE
TREND OFFSET PRINTING SERVICES, INC

SECTION D: FACILITY DESCRIPTION AND EQUIPMENT SPECIFIC CONDITIONS

The operator shall comply with the terms and conditions set forth below:

D182.6 The operator shall test this equipment in accordance with the following specifications:

FACILITY PERMIT TO OPERATE
TREND OFFSET PRINTING SERVICES, INC

SECTION D: FACILITY DESCRIPTION AND EQUIPMENT SPECIFIC CONDITIONS

The operator shall comply with the terms and conditions set forth below:

A. A source test protocol shall be submitted to the District no later than 60 days after the initial start-up of this equipment unless otherwise approved in writing by the District. The test protocol shall be approved in writing by the District before the test commences.

B. The test protocol shall include the proposed operating conditions of the equipment during the test, the identity of the testing laboratory, a statement from the testing laboratory certifying that it meets the criteria in District Rule 304(k), and a description of the sampling and analytical procedures to be used.

C. The source tests shall consist of, but may not be limited to, testing the exhaust of the dryer during normal operating conditions for (1) Oxides of nitrogen in ppmv and lb/hr, (2) Carbon monoxide in ppmv and lb/hr, (3) Oxygen content, (4) Moisture content, (5) flow rate, (6) temperature, (7) natural gas usage.

D. NOx and CO Emission determination shall be averaged over a period of at least 15 and no more than 60 consecutive minutes, and at least 15 minutes after unit start-up.

E. A written notice of the source tests shall be submitted to the District at least 14 days prior to the source testing date so that an observer from the District may be present.

F. Two complete copies of the source test report shall be submitted to the District within 45 days after source testing date unless otherwise approved in writing by the District. The source test report shall include, but may not be limited to, all testing data required by this condition.

G. A testing laboratory certified by the California Air Resources Board in the required test methods for the criteria pollutants to be measured, and in compliance with District Rule 304 (no conflict of interest) shall conduct the test.

H. Sampling facilities shall comply with the District guidelines for construction of sampling and testing facilities, pursuant to Rule 217.

I. The results of all tests (including preliminary tests) that are conducted on this

FACILITY PERMIT TO OPERATE
TREND OFFSET PRINTING SERVICES, INC

SECTION D: FACILITY DESCRIPTION AND EQUIPMENT SPECIFIC CONDITIONS

The operator shall comply with the terms and conditions set forth below:

equipment for informational purposes shall be submitted to the District within 45 days after the testing date unless otherwise approved in writing by the District.

[RULE 2005, 6-3-2011]

[Devices subject to this condition : D76]

D182.8 The operator shall test this equipment in accordance with the following specifications:

FACILITY PERMIT TO OPERATE
TREND OFFSET PRINTING SERVICES, INC

SECTION D: FACILITY DESCRIPTION AND EQUIPMENT SPECIFIC CONDITIONS

The operator shall comply with the terms and conditions set forth below:

The source tests shall be conducted no later than 120 days after the issuance of the permit for Devices *D81, D82, D83 and D84*, unless otherwise approved in writing by the District.

A testing laboratory certified by the California Air Resources Board in the required test methods for criteria pollutant to be measured, and in compliance with District Rule 304 (no conflict of interest) shall conduct the tests.

Sampling facilities shall comply with the District guidelines for construction of sampling and testing facilities, pursuant to Rule 217.

A source test protocol shall be submitted to the District no later than 30 days from the permit issuance date and shall be approved in writing by the District before the test commences unless otherwise approved in writing by the District.

The test protocol shall include the completed District Forms ST-1 and ST-2 specifying the proposed operating conditions of the equipment during the test, the identity of the testing laboratory, a statement from the testing laboratory certifying it meets the criteria in District Rule 304(k), and a description of the sampling and analytical procedures to be used.

The source tests shall consist of, but may not be limited to, testing at the inlet and the exhaust of the oxidizer for: (1) Volatile organic compound (VOC) in ppmv and lbs/hr, (2) Oxides of nitrogen in ppmv and lbs/hr (oxidizer exhaust only), (3) Carbon monoxide in ppmv and lbs/hr (oxidizer exhaust only), (4) VOC destruction efficiency, (5) VOC collection efficiency, (6) Usage of all VOC-containing materials (coatings, inks, solvents, etc.) during the test, (7) Oxygen content, (8) Moisture content,

(9) flow rate, and (10) temperature

The source tests shall be conducted while the oxidizer is operating at a temperature of not less than the minimum operating temperature specified in this permit. If the operating temperature during the source test is greater than the minimum operating temperature specified in this permit, the minimum operating temperature specified in

FACILITY PERMIT TO OPERATE
TREND OFFSET PRINTING SERVICES, INC

SECTION D: FACILITY DESCRIPTION AND EQUIPMENT SPECIFIC CONDITIONS

The operator shall comply with the terms and conditions set forth below:

this permit may be increased to reflect the operating temperature during the source test.

The operating temperature in the combustion chamber shall be recorded during the entire testing period and included in the source test report.

The C59 oxidizer shall be source tested during normal operation when all printing lines served by the C59 oxidizer are in operation and while the C69 oxidizer is not in operation.

The C69 oxidizer shall be source tested during normal operation when all printing lines served by the C69 oxidizer are in operation and while the C59 oxidizer is not in operation.

A written notice of the source tests shall be submitted to the District (addressed to South Coast Air Quality Management District, P.O. Box 4941, Diamond Bar, CA 91765) at least 14 days prior to the source testing date so that an observer from the District may be present.

Two complete copies of the source test report shall be submitted to the District (addressed to South Coast Air Quality Management District, P.O. Box 4941, Diamond Bar, CA 91765) within 45 days after the source testing date. The source test report shall include by may not be limited to, all testing data required by this condition, and results of all tests (including preliminary tests) that are conducted on this equipment for informational purposes.

[**RULE 1303(a)(1)-BACT, 5-10-1996;** RULE 1303(a)(1)-BACT, 12-6-2002]

[Devices subject to this condition : C59, C69]

D182.9 The operator shall test this equipment in accordance with the following specifications:

FACILITY PERMIT TO OPERATE
TREND OFFSET PRINTING SERVICES, INC

SECTION D: FACILITY DESCRIPTION AND EQUIPMENT SPECIFIC CONDITIONS

The operator shall comply with the terms and conditions set forth below:

The test shall be conducted within 180 days of the permit issuance date.

A. A source test protocol shall be submitted to the District no later than 60 days after the issuance of the permit for this equipment unless otherwise approved in writing by the District. The test protocol shall be approved in writing by the District before the test commences.

B. The test protocol shall include the proposed operating conditions of the equipment during the test, the identity of the testing laboratory, a statement from the testing laboratory certifying that it meets the criteria in District Rule 304(k), and a description of the sampling and analytical procedures to be used.

C. The source tests shall consist of, but may not be limited to, testing the exhaust of the dryer during normal operating conditions for (1) Oxides of nitrogen in ppmv and lb/hr, (2) Carbon monoxide in ppmv and lb/hr, (3) Oxygen content, (4) Moisture content, (5) flow rate, (6) temperature, (7) natural gas usage.

D. NOx and CO Emission determination shall be averaged over a period of at least 15 and no more than 60 consecutive minutes, and at least 15 minutes after unit start-up.

E. A written notice of the source tests shall be submitted to the District at least 14 days prior to the source testing date so that an observer from the District may be present.

F. Two complete copies of the source test report shall be submitted to the District within 45 days after source testing date unless otherwise approved in writing by the District. The source test report shall include, but may not be limited to, all testing data required by this condition.

G. A testing laboratory certified by the California Air Resources Board in the required test methods for the criteria pollutants to be measured, and in compliance with District Rule 304 (no conflict of interest) shall conduct the test.

H. Sampling facilities shall comply with the District guidelines for construction of sampling and testing facilities, pursuant to Rule 217.

FACILITY PERMIT TO OPERATE
TREND OFFSET PRINTING SERVICES, INC

SECTION D: FACILITY DESCRIPTION AND EQUIPMENT SPECIFIC CONDITIONS

The operator shall comply with the terms and conditions set forth below:

I. The results of all tests (including preliminary tests) that are conducted on this equipment for informational purposes shall be submitted to the District within 45 days after the testing date unless otherwise approved in writing by the District.

[RULE 2005, 6-3-2011]

[Devices subject to this condition : D82, D84]

E. Equipment Operation/Construction Requirements

E133.1 The operator shall maintain an interlock that automatically controls the damper between the afterburner and printing equipment.

[RULE 1303(a)(1)-BACT, 5-10-1996; RULE 1303(a)(1)-BACT, 12-6-2002]

[Devices subject to this condition : D7, D20, D40, D41, D56, D57, D61, D62, D68, D73, D76, D82, D84]

E193.2 The operator shall upon completion of construction, operate and maintain this equipment according to the following requirements:

FACILITY PERMIT TO OPERATE
TREND OFFSET PRINTING SERVICES, INC

SECTION D: FACILITY DESCRIPTION AND EQUIPMENT SPECIFIC CONDITIONS

The operator shall comply with the terms and conditions set forth below:

The combustion chamber temperature shall be maintained at a minimum of 1,500 degrees Fahrenheit whenever the equipment it serves is in operation.

The operator shall operate and maintain a temperature measuring and recording system to continuously measure and record the combustion chamber temperature pursuant to the operation and maintenance requirements specified in 40 CFR Part 64.7. Such a system shall have an accuracy within 1% of the temperature being monitored and shall be inspected, maintained, and calibrated on an annual basis in accordance with the manufacturer's specifications.

For the purpose of this condition, a deviation shall be defined as when the combustion chamber temperature of less than 1,500 degrees Fahrenheit occurs during the normal operation of the equipment it serves. The operator shall review the records of the combustion chamber temperature on a daily basis to determine if a deviation occurs or shall install an alarm system to alert the operator when a deviation occurs.

Whenever a deviation occurs, the operator shall inspect this equipment to identify the cause of such a deviation, take immediate corrective actions to maintain the combustion chamber temperature at or above 1,500 degrees Fahrenheit, and keep records of the duration and cause (including unknown cause, if applicable) of the deviation and the corrective actions taken.

All deviations shall be reported to the AQMD pursuant to the requirements specified in 40 CFR Part 64.9 and Condition Nos. 22 and 23 in Section K of this permit. The monitoring report shall include the total operating time of this equipment and the total accumulated duration of all deviations for each semi-annual reporting period specified in Condition No. 23 in Section K of this permit.

The operator shall submit an application with an Quality Improvement Plan (QIP) in accordance with 40 CFR Part 64.8 to the AQMD if an accumulation of deviations exceeds 5 percent duration of this equipment's total operating time for any semi-annual reporting period specified in Condition No. 23 in Section K of this permit. The required QIP shall be submitted to the AQMD within 90 calendar days after the due date for the semi-annual monitoring report.

FACILITY PERMIT TO OPERATE
TREND OFFSET PRINTING SERVICES, INC

SECTION D: FACILITY DESCRIPTION AND EQUIPMENT SPECIFIC CONDITIONS

The operator shall comply *with the terms and conditions set forth below:*

The operator shall inspect and maintain all components of this equipment on an annual basis in accordance with the manufacturer's specifications.

The operator shall keep adequate records in a format that is acceptable to the AQMD to demonstrate compliance with all applicable requirements specified in this condition and 40 CFR Part 64.9 for a minimum of five years.

[RULE 1303(a)(1)-BACT, 5-10-1996; RULE 1303(a)(1)-BACT, 12-6-2002; **RULE 3004(a)(4)-Periodic Monitoring, 12-12-1997; 40CFR Part 64, 10-22-1997]**

[Devices subject to this condition : C59, C69]

E193.5 The operator shall operate and maintain this equipment according to the following requirements:

FACILITY PERMIT TO OPERATE
TREND OFFSET PRINTING SERVICES, INC

SECTION D: FACILITY DESCRIPTION AND EQUIPMENT SPECIFIC CONDITIONS

The operator shall comply with the terms and conditions set forth below:

The combined process stream vented to this air pollution control system shall not exceed 25,000 cfm at any one time.

The operator shall use the following flow rates in computing the combined process stream vented to the air pollution control system:

3,750 cfm for Device D7, M600- 8

1,100 cfm for Device D20, M-110-4

1,100 cfm for Device D68, M-110-4

956 cfm for Device D40, M600-4

956 cfm for Device D41, M600-4

2,596 cfm for Device D56, M655

2,596 cfm for Device D57, M655

4,417 cfm for Device D61, Sunday 2000

4,417 cfm for Device D62, Sunday 2000

2,150 cfm for Device D73, M-500

1,300 cfm for Device D76, M8L

2,156 cfm for Device D78, M600-B24

2,156 cfm for Device D80, M600-B24

8,100 cfm for Device D82, C-700

8,100 cfm for Device D84, C-700

FACILITY PERMIT TO OPERATE
TREND OFFSET PRINTING SERVICES, INC

SECTION D: FACILITY DESCRIPTION AND EQUIPMENT SPECIFIC CONDITIONS

The operator shall comply with the terms and conditions set forth below:

The operator shall keep adequate records for this equipment to show compliance with this condition. All records shall be prepared in a format which is acceptable to the district, shall be retained on the premises for at least five years, and shall be made available upon request of the executive officer or his representative.

[RULE 1303(a)(1)-BACT, 5-10-1996; RULE 1303(a)(1)-BACT, 12-6-2002]

[Devices subject to this condition : C59, C69]

H. Applicable Rules

H23.1 This equipment is subject to the applicable requirements of the following rules or regulations:

Contaminant	Rule	Rule/Subpart
VOC	District Rule	1122

[RULE 1122, 10-1-2004; RULE 1122, 5-1-2009]

[Devices subject to this condition : E24]

H23.2 This equipment is subject to the applicable requirements of the following rules or regulations:

Contaminant	Rule	Rule/Subpart
Refrigerants	District Rule	1415
Refrigerants	40CFR82, SUBPART	F

[RULE 1415, 12-3-2010; **40CFR 82 Subpart F, 5-14-1993**]

FACILITY PERMIT TO OPERATE
TREND OFFSET PRINTING SERVICES, INC

SECTION D: FACILITY DESCRIPTION AND EQUIPMENT SPECIFIC CONDITIONS

The operator shall comply with the terms and conditions set forth below:

[Devices subject to this condition : E25]

H23.3 This equipment is subject to the applicable requirements of the following rules or regulations:

Contaminant	Rule	Rule/Subpart
VOC	District Rule	109

[RULE 109, 5-2-2003]

[Devices subject to this condition : D6, D19, E23, D37, D38, D39, D53, D58, D60, E64, D65, D66, D67, D72, D75, D81, D83]

H23.4 This equipment is subject to the applicable requirements of the following rules or regulations:

Contaminant	Rule	Rule/Subpart
VOC	District Rule	442

[RULE 442, 12-15-2000]

[Devices subject to this condition : D63, E64]

I. Administrative

FACILITY PERMIT TO OPERATE
TREND OFFSET PRINTING SERVICES, INC

SECTION D: FACILITY DESCRIPTION AND EQUIPMENT SPECIFIC CONDITIONS

The operator shall comply with the terms and conditions set forth below:

I297.2 This equipment shall not be operated unless the facility holds 954 pounds of NOx RTCs in its allocation account to offset the annual emissions increase for the first year of operation. RTCs held to satisfy this condition may be transferred only after one year from the initial start of operation. If the hold amount is partially satisfied by holding RTCs that expire midway through the hold period, those RTCs may be transferred upon their respective expiration dates. This hold amount is in addition to any other amount of RTCs required to be held under other condition(s) stated in this permit.

In lieu of holding RTCs for the entire duration specified above, RTCs held for the purpose of demonstrating compliance with this condition may be transferred as specified below, provided quarterly emissions do not exceed the corresponding quarterly limit listed in the table below. The amount available for transfer shall be as specified in Rule 2005(f)(3). Such amount may be transferred only after the end of the subject quarter. If the first day of operation does not coincide with the first day of a calendar quarter, the emission limit for that calendar quarter shall be prorated based on the number of days remaining in the calendar quarter as of the first day of operation and the amount available for transfer after that calendar quarter shall be the prorated emission limit minus the actual emissions reportable for that calendar quarter pursuant to RECLAIM Monitoring, Recordkeeping, and Reporting protocols (MRR) and the emission limit for the portion of the first year of operation falling in the fifth calendar quarter shall be prorated based on the number of days of the first year of operation occurring in that calendar quarter and the amount available for transfer after that calendar quarter shall be the prorated emission limit minus the actual emissions reportable for the portion of the first year of operation occurring in that calendar quarter pursuant to RECLAIM MRR. If the quarterly certified emissions for any quarter (or portion of a quarter occurring within the first year of operation) exceed the corresponding quarterly emission limit or prorated quarterly emission limit, as applicable, the facility may only sell RTCs held pursuant to Rule 2005(f) after the first calendar quarter ending at least one year after operation commences.

Calendar Quarter	Emission Limit (Pounds of NOx RTCs)
July 1 through September 30	239
October 1 through December 31	239

FACILITY PERMIT TO OPERATE
TREND OFFSET PRINTING SERVICES, INC

SECTION D: FACILITY DESCRIPTION AND EQUIPMENT SPECIFIC CONDITIONS

The operator shall comply with the terms and conditions set forth below:

January 1 through March 31	239
April 1 through June 30	237

[RULE 2005, 6-3-2011]

[Devices subject to this condition : D76]

I297.3 This equipment shall not be operated unless the facility holds 1650 pounds of NOx RTCs in its allocation account to offset the annual emissions increase for the first year of operation. RTCs held to satisfy this condition may be transferred only after one year from the initial start of operation. If the hold amount is partially satisfied by holding RTCs that expire midway through the hold period, those RTCs may be transferred upon their respective expiration dates. This hold amount is in addition to any other amount of RTCs required to be held under other condition(s) stated in this permit.

FACILITY PERMIT TO OPERATE
TREND OFFSET PRINTING SERVICES, INC

SECTION D: FACILITY DESCRIPTION AND EQUIPMENT SPECIFIC CONDITIONS

The operator shall comply with the terms and conditions set forth below:

In lieu of holding RTCs for the entire duration specified above, RTCs held for the purpose of demonstrating compliance with this condition may be transferred as specified below, provided quarterly emissions do not exceed the corresponding quarterly limit listed in the table below. The amount available for transfer shall be as specified in Rule 2005(f)(3). Such amount may be transferred only after the end of the subject quarter. If the first day of operation does not coincide with the first day of a calendar quarter, the emission limit for that calendar quarter shall be prorated based on the number of days remaining in the calendar quarter as of the first day of operation and the amount available for transfer after that calendar quarter shall be the prorated emission limit minus the actual emissions reportable for that calendar quarter pursuant to RECLAIM Monitoring, Recordkeeping, and Reporting protocols (MRR) and the emission limit for the portion of the first year of operation falling in the fifth calendar quarter shall be prorated based on the number of days of the first year of operation occurring in that calendar quarter and the amount available for transfer after that calendar quarter shall be the prorated emission limit minus the actual emissions reportable for the portion of the first year of operation occurring in that calendar quarter pursuant to RECLAIM MRR. If the quarterly certified emissions for any quarter (or portion of a quarter occurring within the first year of operation) exceed the corresponding quarterly emission limit or prorated quarterly emission limit, as applicable, the facility may only sell RTCs held pursuant to Rule 2005(f) after the first calendar quarter ending at least one year after operation commences.

Calendar Quarter	Emission Limit (Pounds of NOx RTCs)
July 1 through September 30	412
October 1 through December 31	412
January 1 through March 31	413
April 1 through June 30	413

[RULE 2005, 6-3-2011]

[Devices subject to this condition : D82, D84]

FACILITY PERMIT TO OPERATE
TREND OFFSET PRINTING SERVICES, INC

SECTION D: FACILITY DESCRIPTION AND EQUIPMENT SPECIFIC CONDITIONS

The operator shall comply with the terms and conditions set forth below:

K. Record Keeping/Reporting

K67.1 The operator shall keep records, in a manner approved by the District, for the following parameter(s) or item(s):

current Material Safety Data Sheets (MSDS) for all coatings and solvents used.

ink absorption factor as specified by current SCAQMD guidelines.

daily usage of inks, fountain solution including water, roller wash, blanket wash and any other materials containing volatile organic compound (VOC).

density of inks, in pounds/gallon and percentage by weight of lithographic oils in ink.

VOC content of fountain solution, wash materials and any other materials, in pounds/gallon.

monthly VOC emissions for each coating and solvent used in this equipment.

[RULE 109, 5-2-2003; RULE 1130, 10-8-1999; RULE 1303(b)(2)-Offset, 5-10-1996; RULE 1303(b)(2)-Offset, 12-6-2002]

[Devices subject to this condition : D6, D19, D37, D38, D39, D53, D58, D60, D65, D66, D67, D72, D75, D81, D83]

K67.2 The operator shall keep records, in a manner approved by the District, for the following parameter(s) or item(s):

FACILITY PERMIT TO OPERATE
TREND OFFSET PRINTING SERVICES, INC

SECTION D: FACILITY DESCRIPTION AND EQUIPMENT SPECIFIC CONDITIONS

The operator shall comply with the terms and conditions set forth below:

For architectural applications where no thinners, reducers, or other VOC containing materials are added, maintain semi-annual records for all coating consisting of (a) coating type, (b) VOC content as supplied in grams per liter (g/l) of materials for low-solids coatings, (c) VOC content as supplied in g/l of coating, less water and exempt solvent, for other coatings.

For architectural applications where thinners, reducers, or other VOC containing materials are added, maintain daily records for each coating consisting of (a) coating type, (b) VOC content as applied in grams per liter (g/l) of materials used for low-solids coatings, (c) VOC content as applied in g/l of coating, less water and exempt solvent, for other coatings.

[RULE 3004(a)(4)-Periodic Monitoring, 12-12-1997]

[Devices subject to this condition : E22]

FACILITY PERMIT TO OPERATE
TREND OFFSET PRINTING SERVICES, INC

SECTION E: ADMINISTRATIVE CONDITIONS

The operating conditions in this section shall apply to all permitted equipment at this facility unless superseded by condition(s) listed elsewhere in this permit.

1. The permit shall remain effective unless this permit is suspended, revoked, modified, reissued, denied, or it is expired for nonpayment of permit processing or annual operating fees. [201, 203, 209, 301]
   a. The permit must be renewed annually by paying annual operating fees, and the permit shall expire if annual operating fees are not paid pursuant to requirements of Rule 301(d). [301(d)]
   b. The Permit to Construct listed in Section H shall expire one year from the Permit to Construct issuance date, unless a Permit to Construct extension has been granted by the Executive Officer or unless the equipment has been constructed and the operator has notified the Executive Officer prior to the operation of the equipment, in which case the Permit to Construct serves as a temporary Permit to Operate. [202, 205]
   c. The Title V permit shall expire as specified under Section K of the Title V permit. The permit expiration date of the Title V facility permit does not supercede the requirements of Rule 205. [205, 3004]
2. The operator shall maintain all equipment in such a manner that ensures proper operation of the equipment. [204]
3. This permit does not authorize the emissions of air contaminants in excess of those allowed by Division 26 of the Health and Safety Code of the State of California or the Rules and Regulations of the AQMD. This permit cannot be considered as permission to violate existing laws, ordinances, regulations, or statutes of other governmental agencies. [204]
4. The operator shall not use equipment identified in this facility permit as being connected to air pollution control equipment unless they are so vented to the identified air pollution control equipment which is in full use and which has been included in this permit. [204]

FACILITY PERMIT TO OPERATE
TREND OFFSET PRINTING SERVICES, INC

SECTION E: ADMINISTRATIVE CONDITIONS

5. The operator shall not use any equipment having air pollution control device(s) incorporated within the equipment unless the air pollution control device is in full operation. [204]

6. The operator shall maintain records to demonstrate compliance with rules or permit conditions that limit equipment operating parameters, or the type or quantity of material processed. These records shall be made available to AQMD personnel upon request and be maintained for at least: [204]

   a. Three years for a facility not subject to Title V; or

   b. Five years for a facility subject to Title V.

7. The operator shall maintain and operate all equipment to ensure compliance with all emission limits as specified in this facility permit. Compliance with emission limits shall be determined according to the following specifications, unless otherwise specified by AQMD rules or permit conditions: [204]

   a. For internal combustion engines and gas turbines, measured concentrations shall be corrected to 15 percent stack-gas oxygen content on a dry basis and be averaged over a period of 15 consecutive minutes; [1110.2, 1134, 204]

   b. For other combustion devices, measured concentrations shall be corrected to 3 percent stack-gas oxygen content on a dry basis and be averaged over a period of 15 consecutive minutes; [1146, 1146.1, 204]

   c. For a large NOx source, compliance with a RECLAIM concentration limit shall be measured over a continuous 60 minutes for that source; [2012]

   d. For non-combustion sources, compliance with emission limits shall be determined and averaged over a period of 60 minutes; [204]

SECTION E: ADMINISTRATIVE CONDITIONS

e. For the purpose of determining compliance with Rule 407, carbon monoxide (CO) shall be measured on a dry basis and be averaged over 15 consecutive minutes, and sulfur compounds which would exist as liquid or gas at standard conditions shall be calculated as sulfur dioxide (SO2) and be averaged over 15 consecutive minutes; [407]

f. For the purpose of determining compliance with Rule 409, combustion contaminant emission measurements shall be corrected to 12 percent of carbon dioxide (CO2) at standard conditions and averaged over 15 consecutive minutes. [409]

g. For the purpose of determining compliance with Rule 475, combustion contaminant emission measurements shall be corrected to 3 percent of oxygen (O2) at standard conditions and averaged over 15 consecutive minutes or any other averaging time specified by the Executive Officer. [475]

8. All equipment operating under the RECLAIM program shall comply concurrently with all provisions of AQMD Rules and Regulations, except those listed in Table 1 of Rule 2001 for NOx RECLAIM sources and Table 2 of Rule 2001 for SOx RECLAIM sources. Those provisions listed in Tables 1 or 2 shall not apply to NOx or SOx emissions after the date the facility has demonstrated compliance with all monitoring and reporting requirements of Rules 2011 or 2012, as applicable. Provisions of the listed AQMD rules in Tables 1 or 2 which have initial implementation dates in 1994 shall not apply to a RECLAIM NOx or SOx source, respectively. [2001]

9. The operator shall, when a source test is required by AQMD, provide a source test protocol to AQMD no later than 60 days before the proposed test date. The test shall not commence until the protocol is approved by AQMD. The test protocol shall contain the following information: [204, 304]

a. Brief description of the equipment tested.

SECTION E: ADMINISTRATIVE CONDITIONS

b. Brief process description, including maximum and normal operating temperatures, pressures, through-put, etc.

c. Operating conditions under which the test will be performed.

d. Method of measuring operating parameters, such as fuel rate and process weight. Process schematic diagram showing the ports and sampling locations, including the dimensions of the ducts/stacks at the sampling locations, and distances of flow disturbances, (e,g. elbows, tees, fans, dampers) from the sampling locations (upstream and downstream).

e. Brief description of sampling and analytical methods used to measure each pollutant, temperature, flow rates, and moisture.

f. Description of calibration and quality assurance procedures.

g. Determination that the testing laboratory qualifies as an "independent testing laboratory" under Rule 304 (no conflict of interest).

10. The operator shall submit a report no later than 60 days after conducting a source test, unless otherwise required by AQMD Rules or equipment-specific conditions. The report shall contain the following information: [204]

a. The results of the source test.

b. Brief description of the equipment tested.

c. Operating conditions under which test will be performed.

d. Method of measuring operating parameters, such as fuel rate and process weight. Process schematic diagram showing the ports and sampling locations, including the dimensions of the ducts/stacks at the sampling locations, and distances of flow disturbances, (e.g. elbows, tees, fans, dampers) from the sampling locations (upstream and downstream).

e. Field and laboratory data forms, strip charts and analyses.

SECTION E: ADMINISTRATIVE CONDITIONS

f. Calculations for volumetric flow rates, emission rates, control efficiency, and overall control efficiency.

11. The operator shall, when a source test is required, provide and maintain facilities for sampling and testing. These facilities shall comply with the requirements of AQMD Source Test Method 1.1 and 1.2. [217]

12. Whenever required to submit a written report, notification or other submittal to the Executive Officer, AQMD, or the District, the operator shall mail or deliver the material to: Deputy Executive Officer, Engineering and Compliance, AQMD, 21865 E. Copley Drive, Diamond Bar, CA 91765-4182. [204]

FACILITY PERMIT TO OPERATE
TREND OFFSET PRINTING SERVICES, INC

SECTION F: RECLAIM MONITORING AND SOURCE TESTING REQUIREMENTS

The Facility shall comply with all applicable monitoring and source testing requirements in Regulation XX. These requirements may include but are not limited to the following:

I. NOx Monitoring Conditions

A. The Operator of a NOx Major Source, as defined in Rule 2012, shall, as applicable:

Not Applicable

B. The Operator of a NOx large Source, as defined in Rule 2012, shall, as applicable:

Not Applicable

C. The Operator of a NOx Process Unit, as defined in Rule 2012, shall, as applicable:

1. Install, maintain, and operate a totalizing fuel meter or any device approved by the Executive Officer to measure quarterly fuel usage or other applicable variables specified in Rule 2012, Table 2012-1, and Rule 2012, Appendix A, Table 4-A. The sharing of totalizing fuel meters may be allowed by the Executive Officer if the fuel meter serves process units which have the same emission factor or emission rate. The sharing of totalizing meter shall not be allowed for process units which are required to comply with an annual heat input limit. [2012]

II. NOx Source Testing and Tune-up conditions

1. The operator shall conduct all required NOx source testing in compliance with an AQMD-approved source test protocol. [2012]

FACILITY PERMIT TO OPERATE
TREND OFFSET PRINTING SERVICES, INC

SECTION F: RECLAIM MONITORING AND SOURCE TESTING REQUIREMENTS

2. The operator shall, as applicable, conduct source tests for every large NOx source no later than December 31, 1996 and every 3 years thereafter. The source test shall include the determination of NOx concentration and a relative accuracy audit of the exhaust stack flow determination (e.g. in-stack flow monitor or fuel flow monitor based F-factor calculation). Such source test results shall be submitted per the schedule described by APEP. In lieu of submitting the first source test report, the facility permit holder may submit the results of a source test not more than 3 years old which meets the requirements when conducted. [2012]

3. All NOx large sources and NOx process units shall be tuned-up in accordance with the schedule specified in Rule 2012, Appendix A, Chapter 5, Table 5-B. [2012]

FACILITY PERMIT TO OPERATE
TREND OFFSET PRINTING SERVICES, INC

SECTION G: RECORDKEEPING AND REPORTING REQUIREMENTS FOR RECLAIM SOURCES

The Facility shall comply with all applicable reporting and recordkeeping requirements in Regulation XX. These requirements may include but are not limited to the following:

I. Recordkeeping Requirements for all RECLAIM Sources

1. The operator shall maintain all monitoring data required to be measured or reported pursuant to Rule 2011 and Rule 2012, whichever is applicable. All records shall be made available to AQMD staff upon request and be maintained for at least:
   a. Three years after each APEP report is submitted to AQMD for a facility not subject to Title V, unless a different time period is required in Rule 2011 or Rule 2012 [2011 & 2012]; or
   b. Five years after each APEP report is submitted to AQMD for a facility subject to Title V. [3004(a)(4)(E)]
   c. Notwithstanding the above, all data gathered or computed for intervals of less than 15 minutes shall only be maintained a minimum of 48 hours. [2011 & 2012]
2. The operator shall store on site and make available to the Executive Officer upon request: records used to determine emissions, maintenance records, sources test reports, relative accuracy test audit reports, relative accuracy audit reports and fuel meter calibration records. [2011 & 2012]

II. Reporting Requirements for all RECLAIM Sources

1. The operator shall submit a quarterly certification of emissions including the facility's total NOx or SOx emissions, whichever is applicable, for the quarter within 30 days after the end of the first three quarters and 60 days after the end of the fourth quarter of a compliance year. [2011 & 2012]

NOx Reporting Requirements

A. The Operator of a NOx Major Source, as defined in Rule 2012, shall, as applicable:

Not Applicable

FACILITY PERMIT TO OPERATE
TREND OFFSET PRINTING SERVICES, INC

SECTION G: RECORDKEEPING AND REPORTING REQUIREMENTS FOR RECLAIM SOURCES

B. The Operator of a NOx Large Source, as defined in Rule 2012, shall:

Not Applicable

C. The Operator of a NOx Process Unit, as defined in Rule 2012, shall:

1. Electronically report the calculated quarterly NOx emissions for each NOx process unit. The Operator shall comply with this requirement within 12 months of the date of entry to the RECLAIM Program. [2012]

FACILITY PERMIT TO OPERATE
TREND OFFSET PRINTING SERVICES, INC

SECTION H: PERMIT TO CONSTRUCT AND TEMPORARY PERMIT TO OPERATE

The operator shall comply with the terms and conditions set forth below:

Equipment	ID No.	Connected To	RECLAIM Source Type/ Monitoring Unit	Emissions* And Requirements	Conditions
Process 1: Lithographic Printing Systems					P42.1
PRINTING PRESS, LITHOGRAPHIC, HEIDELBERG-HARRIS, M600-B24, FOUR COLOR STATIONS, 38 INCH WIDTH A/N: 553726 Permit to Construct Issued: 12/05/14	D77			**VOC**: (9) **[RULE 1130, 10-8-1999; RULE 1171, 2-1-2008;** *RULE 1171, 5-1-2009*]	B163.1, B163.4, H23.3, K67.1
DRYER, MEGTEC, 2-P-350-40, NATURAL GAS, WITH TWO 2.44-MMBTU/HR BURNERS, MAXON, OVENPAK LE, WITH LOW NOX BURNER, 4.88 MMBTU/HR A/N: 553726 Permit to Construct Issued: 12/05/14	D78	C59 C69	NOX: PROCESS UNIT**	**CO**: 2000 PPMV NATURAL GAS (5) **[RULE 407, 4-2-1982]**; **NOX**: 30 PPMV NATURAL GAS (4) **[RULE 2005, 6-3-2011]**; **NOX**: 130 LBS/MMSCF NATURAL GAS (1) **[RULE 2012, 5-6-2005]**; **PM**: (9) **[RULE 404, 2-7-1986]**; **PM**: 0.1 GRAINS/SCF NATURAL GAS (5) **[RULE 409, 8-7-1981]**	D182.6, E133.1, I297.1
PRINTING PRESS, LITHOGRAPHIC, HEIDELBERG-HARRIS, M600-B24, FOUR COLOR STATIONS, 38 INCH WIDTH A/N: 553724 Permit to Construct Issued: 12/05/14	D79			**VOC**: (9) **[RULE 1130, 10-8-1999; RULE 1171, 2-1-2008;** *RULE 1171, 5-1-2009*]	B163.1, B163.4, H23.3, K67.1
DRYER, MEGTEC, 2-P-350-40, NATURAL GAS, WITH TWO 2.44-MMBTU/HR BURNERS, MAXON, OVENPAK LE, WITH LOW NOX BURNER, 4.88 MMBTU/HR A/N: 553724 Permit to Construct Issued: 12/05/14	D80	C59 C69	NOX: PROCESS UNIT**	**CO**: 2000 PPMV NATURAL GAS (5) **[RULE 407, 4-2-1982]**; **NOX**: 30 PPMV NATURAL GAS (4) **[RULE 2005, 6-3-2011]**; **NOX**: 130 LBS/MMSCF NATURAL GAS (1) **[RULE 2012, 5-6-2005]**; **PM**: (9) **[RULE 404, 2-7-1986]**; **PM**: 0.1 GRAINS/SCF NATURAL GAS (5) **[RULE 409, 8-7-1981]**	D182.6, E133.1, I297.1

* (1) (1A) (1B) Denotes RECLAIM emission factor
(2) (2A) (2B) Denotes RECLAIM emission rate
(3) Denotes RECLAIM concentration limit
(4) Denotes BACT emission limit
(5) (5A) (5B) Denotes command and control emission limit
(6) Denotes air toxic control rule limit
(7) Denotes NSR applicability limit
(8) (8A) (8B) Denotes 40 CFR limit (e.g. NSPS, NESHAPS, etc.)
(9) See App B for Emission Limits
(10) See section J for NESHAP/MACT requirements

** Refer to section F and G of this permit to determine the monitoring, recordkeeping and reporting requirements for this device.

FACILITY PERMIT TO OPERATE
TREND OFFSET PRINTING SERVICES, INC

SECTION H: PERMIT TO CONSTRUCT AND TEMPORARY PERMIT TO OPERATE

The operator shall comply with the terms and conditions set forth below:

Equipment	ID No.	Connected To	RECLAIM Source Type/ Monitoring Unit	Emissions* And Requirements	Conditions
Process 2: Air Pollution Control Systems					
AFTERBURNER, HOT ROCK, ADVANTAGE ENERGY GROUP, MODEL PREMIER 22.5 RTO, ONE 150 H.P. EXHAUST BLOWER, NATURAL GAS, ONE 10 H.P. COMB. AIR FAN, TWO HEAT EXCHANGERS AND ONE ABSORPTION CHILLER, 6.4 MMBTU/HR A/N: 547749 Permit to Construct Issued: 12/05/14	C59	D7 D20 D40 D41 D56 D57 D61 D62 D73 D76 D78 D80 D82 D84	NOX: PROCESS UNIT**	**CO**: 2000 PPMV NATURAL GAS (5) **[RULE 407, 4-2-1982]**; **NOX**: 130 LBS/MMSCF NATURAL GAS (1) **[RULE 2012, 5-6-2005]**; **PM**: (9) **[RULE 404, 2-7-1986]**; **PM**: 0.1 GRAINS/SCF (5) **[RULE 409, 8-7-1981]**	A72.1, D182.4, D182.7, E193.2, E193.5
AFTERBURNER, HOT ROCK, ADWEST, RETOX 25.0 RTO95, MAXON KINEMAX 6G BURNER, ONE 100-HP EXHAUST BLOWER, NATURAL GAS, ONE 10-HP COMBUSTION BLOWER, AND ONE 3-MMBTU/HR NATURAL GAS INJECTION SYSTEM, 7.225 MMBTU/HR A/N: 547744 Permit to Construct Issued: 12/05/14	C69	D7 D20 D40 D41 D56 D57 D61 D62 D73 D76 D78 D80 D82 D84	NOX: PROCESS UNIT**	**CO**: 2000 PPMV NATURAL GAS (5) **[RULE 407, 4-2-1982]**; **NOX**: 130 LBS/MMSCF NATURAL GAS (1) **[RULE 2012, 5-6-2005]**; **PM**: (9) **[RULE 404, 2-7-1986]**; **PM**: 0.1 GRAINS/SCF (5) **[RULE 407, 4-2-1982]**	A72.1, D182.4, D182.7, E193.2, E193.5

* (1) (1A) (1B) Denotes RECLAIM emission factor
(2) (2A) (2B) Denotes RECLAIM emission rate
(3) Denotes RECLAIM concentration limit
(4) Denotes BACT emission limit
(5) (5A) (5B) Denotes command and control emission limit
(6) Denotes air toxic control rule limit
(7) Denotes NSR applicability limit
(8) (8A) (8B) Denotes 40 CFR limit (e.g. NSPS, NESHAPS, etc.)
(9) See App B for Emission Limits
(10) See section J for NESHAP/MACT requirements

** Refer to section F and G of this permit to determine the monitoring, recordkeeping and reporting requirements for this device.

FACILITY PERMIT TO OPERATE
TREND OFFSET PRINTING SERVICES, INC

SECTION H: DEVICE ID INDEX

The following sub-section provides an index to the devices that make up the facility description sorted by device ID.

FACILITY PERMIT TO OPERATE
TREND OFFSET PRINTING SERVICES, INC

SECTION H: DEVICE ID INDEX

Device Index For Section H			
Device ID	**Section H Page No.**	**Process**	**System**
C59	2	2	0
C69	2	2	0
D77	1	1	0
D78	1	1	0
D79	1	1	0
D80	1	1	0

FACILITY PERMIT TO OPERATE
TREND OFFSET PRINTING SERVICES, INC

SECTION H: PERMIT TO CONSTRUCT AND TEMPORARY PERMIT TO OPERATE

The operator shall comply with the terms and conditions set forth below:

FACILITY CONDITIONS

F2.1 The operator shall limit emissions from this facility as follows:

CONTAMINANT	EMISSIONS LIMIT
VOC	Less than or equal to 14,390 LBS IN ANY ONE MONTH

To ensure compliance with the monthly Volatile Organic Compound(VOC) emission limit(s) of this condition, the operator shall comply with the following recordkeeping requirements:

(1) The operator shall comply with Rule 109 (Recordkeeping for Volatile Organic Compound Emissions).

(2) Within 14 calendar days after the end of each month, the operator shall total and record VOC emissions for the month from all equipment and operations covered by the monthly emission limit(s). The record shall include any procedures used to account for control device efficiencies and/or waste disposal. It shall be signed and certified for accuracy by the highest ranking individual responsible for compliance with District rules.

(3) The operator shall maintain a single list which includes only the name and address of each person from whom the facility acquired VOC-containing material regulated by the District that was used or stored at the facility during the preceding 12 months.

(4) The operator shall retain all purchase invoices for all VOC-containing material used or stored at the facility, and all waste manifests for all waste VOC-containing material removed from the facility, for five years.

For the purpose of this condition, the VOC emission limit shall be applicable to all VOC-emitting equipment and operations that are required to have written permits or are exempt from written permits pursuant to Rule 219.

FACILITY PERMIT TO OPERATE
TREND OFFSET PRINTING SERVICES, INC

SECTION H: PERMIT TO CONSTRUCT AND TEMPORARY PERMIT TO OPERATE

The operator shall comply with the terms and conditions set forth below:

[**RULE 109, 5-2-2003; RULE 1303(b)(2)-Offset, 5-10-1996;** RULE 1303(b)(2)-Offset, 12-6-2002]

F9.1 Except for open abrasive blasting operations, the operator shall not discharge into the atmosphere from any single source of emissions whatsoever any air contaminant for a period or periods aggregating more than three minutes in any one hour which is:

(a) As dark or darker in shade as that designated No.1 on the Ringelmann Chart, as published by the United States Bureau of Mines; or

(b) Of such opacity as to obscure an observer's view to a degree equal to or greater than does smoke described in subparagraph (a) of this condition.

[**RULE 401, 3-2-1984;** RULE 401, 11-9-2001]

PROCESS CONDITIONS

P42.1 The operator shall not use in this process any graphic art materials containing any toxic air contaminants (TAC) identified in Rule 1401, Table 1, with a effective date of September 10, 2010 or earlier, except for the following TACs and with the following limits:

CAS No.	Chemical Name	lbs in any one calendar month
75-09-2	Methylene Chloride	175
100-41-4	Ethyl Benzene	22
50-00-0	Formaldehyde	1.2
91-20-3	Naphthalene	1.1
1310-73-2	Sodium Hydroxide	235
1336-36-3	Polychlorinated Biphenyls (PCBs)	0.001
100-42-5	Styrene	NA
79-10-7	Acrylic Acid	NA

FACILITY PERMIT TO OPERATE
TREND OFFSET PRINTING SERVICES, INC

SECTION H: PERMIT TO CONSTRUCT AND TEMPORARY PERMIT TO OPERATE

The operator shall comply with the terms and conditions set forth below:

7664-41-7	Ammonia	NA
107-21-1	Ethylene Glycol	NA
111-76-2	Ethylene Glycol Butyl Ether	NA
1330-20-7	Xylenes	NA
67-63-0	Isopropyl Alcohol	NA
7440-50-8	Copper and Copper Compounds	NA
7664-38-2	Phosphoric Acid	NA
108-88-3	Toluene	NA
108-05-4	Vinyl Acetate	NA

The above limits for methylene chloride, ethyl benzene, formaldehyde, and sodium hydroxide shall be based on the total usage

The above limit for naphthalene and PCBs shall be based on total emissions

[RULE 1401, 9-10-2010]

[Processes subject to this condition : 1]

DEVICE CONDITIONS

A. Emission Limits

A72.1 The operator shall maintain this equipment to achieve a minimum overall control efficiency of 95 percent for VOC during the normal operation of the equipment it vents.

[RULE 1303(a)(1)-BACT, 5-10-1996; RULE 1303(a)(1)-BACT, 12-6-2002]

[Devices subject to this condition : C59, C69]

B. Material/Fuel Type Limits

FACILITY PERMIT TO OPERATE
TREND OFFSET PRINTING SERVICES, INC

SECTION H: PERMIT TO CONSTRUCT AND TEMPORARY PERMIT TO OPERATE

The operator shall comply with the terms and conditions set forth below:

B163.1 The operator shall not use fountain solution containing the following:

more than 8 percent by volume of volatile organic compounds (VOC) as applied.

[**RULE 1303(a)(1)-BACT, 5-10-1996;** RULE 1303(a)(1)-BACT, 12-6-2002]

[Devices subject to this condition : D77, D79]

B163.4 The operator shall not use equipment clean-up solvent containing the following:

more than 10 mm Hg VOC composite partial pressure.

[**RULE 1303(a)(1)-BACT, 5-10-1996;** RULE 1303(a)(1)-BACT, 12-6-2002]

[Devices subject to this condition : D77, D79]

D. Monitoring/Testing Requirements

D182.4 The operator shall test this equipment in accordance with the following specifications:

FACILITY PERMIT TO OPERATE
TREND OFFSET PRINTING SERVICES, INC

SECTION H: PERMIT TO CONSTRUCT AND TEMPORARY PERMIT TO OPERATE

The operator shall comply with the terms and conditions set forth below:

A. The test shall be conducted at least once every five years.

B.The test shall be conducted no later than May 8, 2014 unless otherwise approved in writing by the District.

C.The test shall be conducted to determine the voc emissions using an approved district method to demonstrate compliance with all applicable permit condition(s), rules and regulations.

D.The source test shall be conducted while the oxidizer is operating at a temperature of not less than the minimum operating temperature specified in this permit. If the operating temperature during the source test is greater than the minimum operating temperature specified in this permit, the minimum operating temperature specified in this permit may be increased to reflect the operating temperature during the source test.

E.The operator shall comply with administrative conditions nos. 9, 10, and 11 of section E of this facility permit.

F.The operator shall submit two complete copies of the source test report specified in condition no. 10 of section e of this facility permit to the district engineering and compliance division.

G. The engineering copy of the report shall be sent to: South Coast Air Quality Management District, Coating, Printing and Aerospace Operations, attn: Air Qaulity and Compliance Supervisor, 21865 Copley Drive, Diamond Bar, CA 91765.

H. The compliance copy of the report shall be sent to: South Coast Air Quality Management District, P.O. Box 4941, Diamond Bar, CA 91765.

[RULE 1130, 10-8-1999; RULE 3004(a)(4)-Periodic Monitoring, 12-12-1997]

[Devices subject to this condition : C59, C69]

D182.6 The operator shall test this equipment in accordance with the following specifications:

FACILITY PERMIT TO OPERATE
TREND OFFSET PRINTING SERVICES, INC

SECTION H: PERMIT TO CONSTRUCT AND TEMPORARY PERMIT TO OPERATE

The operator shall comply with the terms and conditions set forth below:

A. A source test protocol shall be submitted to the District no later than 60 days after the initial start-up of this equipment unless otherwise approved in writing by the District. The test protocol shall be approved in writing by the District before the test commences.

B. The test protocol shall include the proposed operating conditions of the equipment during the test, the identity of the testing laboratory, a statement from the testing laboratory certifying that it meets the criteria in District Rule 304(k), and a description of the sampling and analytical procedures to be used.

C. The source tests shall consist of, but may not be limited to, testing the exhaust of the dryer during normal operating conditions for (1) Oxides of nitrogen in ppmv and lb/hr, (2) Carbon monoxide in ppmv and lb/hr, (3) Oxygen content, (4) Moisture content, (5) flow rate, (6) temperature, (7) natural gas usage.

D. NOx and CO Emission determination shall be averaged over a period of at least 15 and no more than 60 consecutive minutes, and at least 15 minutes after unit start-up.

E. A written notice of the source tests shall be submitted to the District at least 14 days prior to the source testing date so that an observer from the District may be present.

F. Two complete copies of the source test report shall be submitted to the District within 45 days after source testing date unless otherwise approved in writing by the District. The source test report shall include, but may not be limited to, all testing data required by this condition.

G. A testing laboratory certified by the California Air Resources Board in the required test methods for the criteria pollutants to be measured, and in compliance with District Rule 304 (no conflict of interest) shall conduct the test.

H. Sampling facilities shall comply with the District guidelines for construction of sampling and testing facilities, pursuant to Rule 217.

I. The results of all tests (including preliminary tests) that are conducted on this

FACILITY PERMIT TO OPERATE
TREND OFFSET PRINTING SERVICES, INC

SECTION H: PERMIT TO CONSTRUCT AND TEMPORARY PERMIT TO OPERATE

The operator shall comply with the terms and conditions set forth below:

equipment for informational purposes shall be submitted to the District within 45 days after the testing date unless otherwise approved in writing by the District.

[RULE 2005, 6-3-2011]

[Devices subject to this condition : D78, D80]

D182.7 The operator shall test this equipment in accordance with the following specifications:

FACILITY PERMIT TO OPERATE
TREND OFFSET PRINTING SERVICES, INC

SECTION H: PERMIT TO CONSTRUCT AND TEMPORARY PERMIT TO OPERATE

The operator shall comply with the terms and conditions set forth below:

The source tests shall be conducted no later than 120 days after the installation of D77, D78, D79 and D80, unless otherwise approved in writing by the District.

A testing laboratory certified by the California Air Resources Board in the required test methods for criteria pollutant to be measured, and in compliance with District Rule 304 (no conflict of interest) shall conduct the tests.

Sampling facilities shall comply with the District guidelines for construction of sampling and testing facilities, pursuant to Rule 217.

A source test protocol shall be submitted to the District no later than 30 days from the permit issuance date and shall be approved in writing by the District before the test commences unless otherwise approved in writing by the District.

The test protocol shall include the completed District Forms ST-1 and ST-2 specifying the proposed operating conditions of the equipment during the test, the identity of the testing laboratory, a statement from the testing laboratory certifying it meets the criteria in District Rule 304(k), and a description of the sampling and analytical procedures to be used.

The source tests shall consist of, but may not be limited to, testing at the inlet and the exhaust of the oxidizer for: (1) Volatile organic compound (VOC) in ppmv and lbs/hr, (2) Oxides of nitrogen in ppmv and lbs/hr (oxidizer exhaust only), (3) Carbon monoxide in ppmv and lbs/hr (oxidizer exhaust only), (4) VOC destruction efficiency, (5) VOC collection efficiency, (6) Usage of all VOC-containing materials (coatings, inks, solvents, etc.) during the test, (7) Oxygen content, (8) Moisture content,

(9) flow rate, and (10) temperature

The source tests shall be conducted while the oxidizer is operating at a temperature of not less than the minimum operating temperature specified in this permit. If the operating temperature during the source test is greater than the minimum operating temperature specified in this permit, the minimum operating temperature specified in this permit may be increased to reflect the operating temperature during the source test.

FACILITY PERMIT TO OPERATE
TREND OFFSET PRINTING SERVICES, INC

SECTION H: PERMIT TO CONSTRUCT AND TEMPORARY PERMIT TO OPERATE

The operator shall comply with the terms and conditions set forth below:

The operating temperature in the combustion chamber shall be recorded during the entire testing period and included in the source test report.

The C59 oxidizer shall be source tested during normal operation when all printing lines served by the C59 oxidizer are in operation and while the C69 oxidizer is not in operation.

The C69 oxidizer shall be source tested during normal operation when all printing lines served by the C69 oxidizer are in operation and while the C59 oxidizer is not in operation.

A written notice of the source tests shall be submitted to the District (addressed to South Coast Air Quality Management District, P.O. Box 4941, Diamond Bar, CA 91765) at least 14 days prior to the source testing date so that an observer from the District may be present.

Two complete copies of the source test report shall be submitted to the District (addressed to South Coast Air Quality Management District, P.O. Box 4941, Diamond Bar, CA 91765) within 45 days after the source testing date. The source test report shall include by may not be limited to, all testing data required by this condition, and results of all tests (including preliminary tests) that are conducted on this equipment for informational purposes.

[**RULE 1303(a)(1)-BACT, 5-10-1996;** RULE 1303(a)(1)-BACT, 12-6-2002]

[Devices subject to this condition : C59, C69]

E. Equipment Operation/Construction Requirements

E133.1 The operator shall maintain an interlock that automatically controls the damper between the afterburner and printing equipment.

[**RULE 1303(a)(1)-BACT, 5-10-1996;** RULE 1303(a)(1)-BACT, 12-6-2002]

[Devices subject to this condition : D78, D80]

FACILITY PERMIT TO OPERATE
TREND OFFSET PRINTING SERVICES, INC

SECTION H: PERMIT TO CONSTRUCT AND TEMPORARY PERMIT TO OPERATE

The operator shall comply with the terms and conditions set forth below:

E193.2 The *operator shall* upon completion of construction, operate and maintain this equipment according to the following requirements:

FACILITY PERMIT TO OPERATE
TREND OFFSET PRINTING SERVICES, INC

SECTION H: PERMIT TO CONSTRUCT AND TEMPORARY PERMIT TO OPERATE

The operator shall comply with the terms and conditions set forth below:

The combustion chamber temperature shall be maintained at a minimum of 1,500 degrees Fahrenheit whenever the equipment it serves is in operation.

The operator shall operate and maintain a temperature measuring and recording system to continuously measure and record the combustion chamber temperature pursuant to the operation and maintenance requirements specified in 40 CFR Part 64.7. Such a system shall have an accuracy within 1% of the temperature being monitored and shall be inspected, maintained, and calibrated on an annual basis in accordance with the manufacturer's specifications.

For the purpose of this condition, a deviation shall be defined as when the combustion chamber temperature of less than 1,500 degrees Fahrenheit occurs during the normal operation of the equipment it serves. The operator shall review the records of the combustion chamber temperature on a daily basis to determine if a deviation occurs or shall install an alarm system to alert the operator when a deviation occurs.

Whenever a deviation occurs, the operator shall inspect this equipment to identify the cause of such a deviation, take immediate corrective actions to maintain the combustion chamber temperature at or above 1,500 degrees Fahrenheit, and keep records of the duration and cause (including unknown cause, if applicable) of the deviation and the corrective actions taken.

All deviations shall be reported to the AQMD pursuant to the requirements specified in 40 CFR Part 64.9 and Condition Nos. 22 and 23 in Section K of this permit. The monitoring report shall include the total operating time of this equipment and the total accumulated duration of all deviations for each semi-annual reporting period specified in Condition No. 23 in Section K of this permit.

The operator shall submit an application with an Quality Improvement Plan (QIP) in accordance with 40 CFR Part 64.8 to the AQMD if an accumulation of deviations exceeds 5 percent duration of this equipment's total operating time for any semi-annual reporting period specified in Condition No. 23 in Section K of this permit. The required QIP shall be submitted to the AQMD within 90 calendar days after the due date for the semi-annual monitoring report.

FACILITY PERMIT TO OPERATE
TREND OFFSET PRINTING SERVICES, INC

SECTION H: PERMIT TO CONSTRUCT AND TEMPORARY PERMIT TO OPERATE

The operator shall comply with the terms and conditions set forth below:

The operator shall inspect and maintain all components of this equipment on an annual basis in accordance with the manufacturer's specifications.

The operator shall keep adequate records in a format that is acceptable to the AQMD to demonstrate compliance with all applicable requirements specified in this condition and 40 CFR Part 64.9 for a minimum of five years.

[RULE 1303(a)(1)-BACT, 5-10-1996; RULE 1303(a)(1)-BACT, 12-6-2002; **RULE 3004(a)(4)-Periodic Monitoring, 12-12-1997; 40CFR Part 64, 10-22-1997]**

[Devices subject to this condition : C59, C69]

E193.5 The operator shall operate and maintain this equipment according to the following requirements:

FACILITY PERMIT TO OPERATE
TREND OFFSET PRINTING SERVICES, INC

SECTION H: PERMIT TO CONSTRUCT AND TEMPORARY PERMIT TO OPERATE

The operator shall comply with the terms and conditions set forth below:

The combined process stream vented to this air pollution control system shall not exceed 25,000 cfm at any one time.

The operator shall use the following flow rates in computing the combined process stream vented to the air pollution control system:

3,750 cfm for Device D7, M600- 8

1,100 cfm for Device D20, M-110-4

1,100 cfm for Device D68, M-110-4

956 cfm for Device D40, M600-4

956 cfm for Device D41, M600-4

2,596 cfm for Device D56, M655

2,596 cfm for Device D57, M655

4,417 cfm for Device D61, Sunday 2000

4,417 cfm for Device D62, Sunday 2000

2,150 cfm for Device D73, M-500

1,300 cfm for Device D76, M8L

2,156 cfm for Device D78, M600-B24

2,156 cfm for Device D80, M600-B24

8,100 cfm for Device D82, C-700

8,100 cfm for Device D84, C-700

FACILITY PERMIT TO OPERATE
TREND OFFSET PRINTING SERVICES, INC

SECTION H: PERMIT TO CONSTRUCT AND TEMPORARY PERMIT TO OPERATE

The operator shall comply with the terms and conditions set forth below:

The operator shall keep adequate records for this equipment to show compliance with this condition. All records shall be prepared in a format which is acceptable to the district, shall be retained on the premises for at least five years, and shall be made available upon request of the executive officer or his representative.

[RULE 1303(a)(1)-BACT, 5-10-1996; RULE 1303(a)(1)-BACT, 12-6-2002]

[Devices subject to this condition : C59, C69]

H. Applicable Rules

H23.3 This equipment is subject to the applicable requirements of the following rules or regulations:

Contaminant	Rule	Rule/Subpart
VOC	District Rule	109

[RULE 109, 5-2-2003]

[Devices subject to this condition : D77, D79]

I. Administrative

I297.1 This equipment shall not be operated unless the facility holds 1551 pounds of NOx RTCs in its allocation account to offset the annual emissions increase for the first year of operation. RTCs held to satisfy this condition may be transferred only after one year from the initial start of operation. If the hold amount is partially satisfied by holding RTCs that expire midway through the hold period, those RTCs may be transferred upon their respective expiration dates. This hold amount is in addition to any other amount of RTCs required to be held under other condition(s) stated in this permit.

FACILITY PERMIT TO OPERATE
TREND OFFSET PRINTING SERVICES, INC

SECTION H: PERMIT TO CONSTRUCT AND TEMPORARY PERMIT TO OPERATE

The operator shall comply with the terms and conditions set forth below:

In lieu of holding RTCs for the entire duration specified above, RTCs held for the purpose of demonstrating compliance with this condition may be transferred as specified below, provided quarterly emissions do not exceed the corresponding quarterly limit listed in the table below. The amount available for transfer shall be as specified in Rule 2005(f)(3). Such amount may be transferred only after the end of the subject quarter. If the first day of operation does not coincide with the first day of a calendar quarter, the emission limit for that calendar quarter shall be prorated based on the number of days remaining in the calendar quarter as of the first day of operation and the amount available for transfer after that calendar quarter shall be the prorated emission limit minus the actual emissions reportable for that calendar quarter pursuant to RECLAIM Monitoring, Recordkeeping, and Reporting protocols (MRR) and the emission limit for the portion of the first year of operation falling in the fifth calendar quarter shall be prorated based on the number of days of the first year of operation occurring in that calendar quarter and the amount available for transfer after that calendar quarter shall be the prorated emission limit minus the actual emissions reportable for the portion of the first year of operation occurring in that calendar quarter pursuant to RECLAIM MRR. If the quarterly certified emissions for any quarter (or portion of a quarter occurring within the first year of operation) exceed the corresponding quarterly emission limit or prorated quarterly emission limit, as applicable, the facility may only sell RTCs held pursuant to Rule 2005(f) after the first calendar quarter ending at least one year after operation commences.

Calendar Quarter	Emission Limit (Pounds of NOx RTCs)
July 1 through September 30	388
October 1 through December 31	388
January 1 through March 31	388
April 1 through June 30	387

[RULE 2005, 6-3-2011]

[Devices subject to this condition : D78, D80]

K. Record Keeping/Reporting

FACILITY PERMIT TO OPERATE
TREND OFFSET PRINTING SERVICES, INC

SECTION H: PERMIT TO CONSTRUCT AND TEMPORARY PERMIT TO OPERATE

The operator shall comply with the terms and conditions set forth below:

K67.1 The operator shall keep records, in a manner approved by the District, for the following parameter(s) or item(s):

current Material Safety Data Sheets (MSDS) for all coatings and solvents used.

ink absorption factor as specified by current SCAQMD guidelines.

daily usage of inks, fountain solution including water, roller wash, blanket wash and any other materials containing volatile organic compound (VOC).

density of inks, in pounds/gallon and percentage by weight of lithographic oils in ink.

VOC content of fountain solution, wash materials and any other materials, in pounds/gallon.

monthly VOC emissions for each coating and solvent used in this equipment.

[RULE 109, 5-2-2003; RULE 1130, 10-8-1999; RULE 1303(b)(2)-Offset, 5-10-1996; RULE 1303(b)(2)-Offset, 12-6-2002]

[Devices subject to this condition : D77, D79]

FACILITY PERMIT TO OPERATE
TREND OFFSET PRINTING SERVICES, INC

SECTION I: PLANS AND SCHEDULES

This section lists all plans approved by AQMD for the purposes of meeting the requirements of applicable AQMD rules.

NONE

NOTE: This section does not list compliance schedules pursuant to the requirements of Regulation XXX - Title V Permits; Rule 3004(a)(10)(C). For equipment subject to a variance, order for abatement, or alternative operating condition granted pursuant to Rule 518.2, equipment specific conditions are added to the equipment in Section D or H of the permit.

FACILITY PERMIT TO OPERATE
TREND OFFSET PRINTING SERVICES, INC

SECTION J: AIR TOXICS

NOT APPLICABLE

FACILITY PERMIT TO OPERATE
TREND OFFSET PRINTING SERVICES, INC

SECTION K: TITLE V Administration

GENERAL PROVISIONS

1. This permit may be revised, revoked, reopened and reissued, or terminated for cause, or for failure to comply with regulatory requirements, permit terms, or conditions. [3004(a)(7)(C)]

2. This permit does not convey any property rights of any sort or any exclusive privilege. [3004(a)(7)(E)]

Permit Renewal and Expiration

3. (A) Except for solid waste incineration facilities subject to standards under section 129(e) of the Clean Air Act, this permit shall expire five years from the date that this Title V permit is issued. The operator's right to operate under this permit terminates at midnight on this date, unless the facility is protected by an application shield in accordance with Rule 3002(b), due to the filing of a timely and complete application for a Title V permit renewal, consistent with Rule 3003. [3004(a)(2), 3004(f)]

   (B) A Title V permit for a solid waste incineration facility combusting municipal waste subject to standards under Section 129(e) of the Clean Air Act shall expire 12 years from the date of issuance unless such permit has been renewed pursuant to this regulation. These permits shall be reviewed by the Executive Officer at least every five years from the date of issuance. [3004(f)(2)]

4. To renew this permit, the operator shall submit to the Executive Officer an application for renewal at least 180 days, but not more than 545 days, prior to the expiration date of this permit. [3003(a)(6)]

Duty to Provide Information

5. The applicant for, or holder of, a Title V permit shall furnish, pursuant to Rule 3002(d) and (e), timely information and records to the Executive Officer or designee within a reasonable time as specified in writing by the Executive Officer or designee. [3004(a)(7)(F)]

Payment of Fees

6. The operator shall pay all required fees specified in Regulation III - Fees. [3004(a)(7)(G)]

FACILITY PERMIT TO OPERATE
TREND OFFSET PRINTING SERVICES, INC

SECTION K: TITLE V Administration

Reopening for Cause

7. The Executive Officer will reopen and revise this permit if any of the following circumstances occur:

   (A) Additional regulatory requirements become applicable with a remaining permit term of three or more years. Reopening is not required if the effective date of the requirement is later than the expiration date of this permit, unless the permit or any of its terms and conditions has been extended pursuant to paragraph (f)(4) of Rule 3004.

   (B) The Executive Officer or EPA Administrator determines that this permit contains a material mistake or that inaccurate statements were made in establishing the emissions standards or other terms or conditions of this permit.

   (C) The Executive Officer or EPA Administrator determines that the permit must be revised or revoked to assure compliance with the applicable requirements. [3005(g)(1)]

COMPLIANCE PROVISIONS

8. The operator shall comply with all regulatory requirements, and all permit terms and conditions, except:

   (A) As provided for by the emergency provisions of condition no. 17 or condition no. 18, or

   (B) As provided by an alternative operating condition granted pursuant to a federally approved (SIP-approved) Rule 518.2.

   Any non-compliance with any federally enforceable permit condition constitutes a violation of the Federal Clean Air Act and is grounds for enforcement action; for permit termination, revocation and reissuance, or revision; or denial of a permit renewal application. Non-compliance may also be grounds for civil or criminal penalties under the California State Health and Safety Code. [3004(a)(7)(A)]

FACILITY PERMIT TO OPERATE
TREND OFFSET PRINTING SERVICES, INC

SECTION K: TITLE V Administration

9. The operator shall allow the Executive Officer or authorized representative, upon presentation of appropriate credentials to:

   (A) Enter the operator's premises where emission-related activities are conducted, or records are kept under the conditions of this permit;

   (B) Have access to and copy, at reasonable times, any records that must be kept under the conditions of the permit;

   (C) Inspect at reasonable times, any facilities, equipment (including monitoring and air pollution control equipment), practices, or operations regulated or required under the permit; and

   (D) Sample or monitor at reasonable times, substances or parameters for the purpose of assuring compliance with the facility permit or regulatory requirements. [3004(a)(10)(B)]

10. All terms and conditions in this permit, including any provisions designed to limit a facility's potential to emit, are enforceable by the EPA Administrator and citizens under the federal Clean Air Act, unless the term or condition is designated as not federally enforceable. Each day during any portion of which a violation occurs is a separate offense. [3004(g)]

11. A challenge to any permit condition or requirement raised by EPA, the operator, or any other person, shall not invalidate or otherwise affect the remaining portions of this permit. [3007(b)]

12. The filing of any application for a permit revision, revocation, or termination, or a notification of planned changes or anticipated non-compliance does not stay any permit condition. [3004(a)(7)(D)]

13. It shall not be a defense for a person in an enforcement action, including those listed in Rule 3002(c)(2), that it would have been necessary to halt or reduce the permitted activity in order to maintain compliance with the conditions of this permit, except as provided for in "Emergency Provisions" of this section. [3004(a)(7)(H)]

FACILITY PERMIT TO OPERATE
TREND OFFSET PRINTING SERVICES, INC

SECTION K: TITLE V Administration

14. The operator shall not build, erect, install, or use any equipment, the use of which, without resulting in a reduction in the total release of air contaminants to atmosphere, reduces or conceals an emission which would otherwise constitute a violation of Chapter 3 (commencing with Section 41700) of Part 4, of Division 26 of the California Health and Safety Code or of AQMD rules. This rule shall not apply to cases in which the only violation involved is of Section 41700 of the California Health and Safety Code, or Rule 402 of AQMD Rules. [408]

15. Nothing in this permit or in any permit shield can alter or affect:

    (A) Under Section 303 of the federal Clean Air Act, the provisions for emergency orders;

    (B) The liability of the operator for any violation of applicable requirements prior to or at the time of permit issuance;

    (C) The applicable requirements of the Acid Rain Program, Regulation XXXI;

    (D) The ability of EPA to obtain information from the operator pursuant to Section 114 of the federal Clean Air Act;

    (E) The applicability of state or local requirements that are not "applicable requirements", as defined in Rule 3000, at the time of permit issuance but which do apply to the facility, such as toxics requirements unique to the State; and

    (F) The applicability of regulatory requirements with compliance dates after the permit issuance date. [3004(c)(3)]

16. For any portable equipment that requires an AQMD or state permit or registration, excluding a) portable engines, b) military tactical support equipment and c) AQMD-permitted portable equipment that are not a major source, are not located at the facility for more than 12 consecutive months after commencing operation, and whose operation does not conflict with the terms or conditions of this Title V permit: 1) the facility operator shall keep a copy of the AQMD or state permit or registration; 2) the equipment operator shall comply with the conditions on the permit or registration and all other regulatory requirements; and 3) the facility operator shall treat the permit or registration as a part of its Title V permit, subject to recordkeeping, reporting and certification requirements. [3004(a)(1)]

FACILITY PERMIT TO OPERATE
TREND OFFSET PRINTING SERVICES, INC

SECTION K: TITLE V Administration

EMERGENCY PROVISIONS

17. An emergency[1] constitutes an affirmative defense to an action brought for noncompliance with a technology-based emission limit only if:

    (A) Properly signed, contemporaneous operating records or other credible evidence demonstrate that:

        (1) An emergency occurred and the operator can identify the cause(s) of the emergency;

        (2) The facility was operated properly (i.e. operated and maintained in accordance with the manufacturer's specifications, and in compliance with all regulatory requirements or a compliance plan), before the emergency occurred;

        (3) The operator took all reasonable steps to minimize levels of emissions that exceeded emissions standard, or other requirements in the permit; and,

        (4) The operator submitted a written notice of the emergency to the AQMD within two working days of the time when the emissions limitations were exceeded due to the emergency. The notice shall contain a description of the emergency, any steps taken to mitigate emissions, and corrective actions taken; and

    (B) The operator complies with the breakdown provisions of Rule 430 – Breakdown Provisions, or subdivision (i) of Rule 2004 – Requirements, whichever is applicable. [3002(g), 430, 2004(i)]

18. The operator is excused from complying with any regulatory requirement that is suspended by the Executive Officer during a state of emergency or state of war emergency, in accordance with Rule 118 - Emergencies. [118]

---

1 "Emergency" means any situation arising from sudden and reasonably unforeseeable events beyond the control of the operator, including acts of God, which: (A) requires immediate corrective action to restore normal operation; and (B) causes the facility to exceed a technology-based emission limitation under the permit, due to unavoidable increases in emissions attributable to the emergency; and (C) is not caused by improperly designed equipment, lack of preventative maintenance, careless or improper operation, or operator error.

FACILITY PERMIT TO OPERATE
TREND OFFSET PRINTING SERVICES, INC

SECTION K: TITLE V Administration

RECORDKEEPING PROVISIONS

19. In addition to any other recordkeeping requirements specified elsewhere in this permit, the operator shall keep records of required monitoring information, where applicable, that include:

    (A) The date, place as defined in the Title V permit, and time of sampling or measurements;

    (B) The date(s) analyses were performed;

    (C) The company or entity that performed the analyses;

    (D) The analytical techniques or methods used;

    (E) The results of such analyses; and

    (F) The operating conditions as existing at the time of sampling or measurement. [3004(a)(4)(B)]

20. The operator shall maintain records pursuant to Rule 109 and any applicable material safety data sheet (MSDS) for any equipment claimed to be exempt from a written permit by Rule 219 based on the information in those records. [219(t)]

21. The operator shall keep all records of monitoring data required by this permit or by regulatory requirements for a period of at least five years from the date of the monitoring sample, measurement, report, or application. [3004(a)(4)(E)]

REPORTING PROVISIONS

22. The operator shall comply with the following requirements for prompt reporting of deviations:

    (A) Breakdowns shall be reported as required by Rule 430 – Breakdown Provisions or subdivision (i) of Rule 2004 - Requirements, whichever is applicable.

FACILITY PERMIT TO OPERATE
TREND OFFSET PRINTING SERVICES, INC

SECTION K: TITLE V Administration

(B) Other deviations from permit or applicable rule emission limitations, equipment operating conditions, or work practice standards, determined by observation or by any monitoring or testing required by the permit or applicable rules that result in emissions greater than those allowed by the permit or applicable rules shall be reported within 72 hours (unless a shorter reporting period is specified in an applicable State or Federal Regulation) of discovery of the deviation by contacting AQMD enforcement personnel assigned to this facility or otherwise calling (800) CUT-SMOG.

(C) A written report of such deviations reported pursuant to (B), and any corrective actions or preventative measures taken, shall be submitted to AQMD, in an AQMD approved format, within 14 days of discovery of the deviation.

(D) All other deviations shall be reported with the monitoring report required by condition no. 23. [3004(a)(5)]

23. Unless more frequent reporting of monitoring results are specified in other permit conditions or in regulatory requirements, the operator shall submit reports of any required monitoring to the AQMD at least twice per year. The report shall include a) a statement whether all monitoring required by the permit was conducted; and b) identification of all instances of deviations from permit or regulatory requirements. A report for the first six calendar months of the year is due by August 31 and a report for the last six calendar months of the year is due by February 28. [3004(a)(4)(F)]

24. The operator shall submit to the Executive Officer and to the Environmental Protection Agency (EPA), an annual compliance certification. For RECLAIM facilities, the certification is due when the Annual Permit Emissions Program (APEP) report is due and shall cover the same reporting period. For other facilities, the certification is due on March 1 for the previous calendar year. The certification need not include the period preceding the date the initial Title V permit was issued. Each compliance certification shall include:

(A) Identification of each permit term or condition that is the basis of the certification;

(B) The compliance status during the reporting period;

(C) Whether compliance was continuous or intermittent;

(D) The method(s) used to determine compliance over the reporting period and currently, and

(E) Any other facts specifically required by the Executive Officer to determine compliance.

The EPA copy of the certification shall be sent to: Director of the Air Division Attn: Air-3 USEPA, Region IX 75 Hawthorne St. San Francisco, CA 94105 [3004(a)(10)(E)]

25. All records, reports, and documents required to be submitted by a Title V operator to AQMD or EPA shall contain a certification of accuracy consistent with Rule 3003(c)(7) by a responsible official (as defined in Rule 3000). [3004(a)(12)]

PERIODIC MONITORING

26. All periodic monitoring required by this permit pursuant to Rule 3004(a)(4)(c) is based on the requirements and justifications in the AQMD document "Periodic Monitoring Guidelines for Title V Facilities" or in case-by-case determinations documented in the TitleV application file. [3004(a)(4)]

FACILITY PERMIT TO OPERATE
TREND OFFSET PRINTING SERVICES, INC

SECTION K: TITLE V Administration

FACILITY RULES

This facility is subject to the following rules and regulations

With the exception of Rule 402, 473, 477, 1118 and Rules 1401 through 1420, the following rules that are designated as non-federally enforceable are pending EPA approval as part of the state implementation plan. Upon the effective date of that approval, the approved rule(s) will become federally enforceable, and any earlier versions of those rules will no longer be federally enforceable.

RULE SOURCE	Adopted/Amended Date	FEDERAL Enforceability
RULE 109	5-2-2003	Federally enforceable
RULE 1113	6-3-2011	Non federally enforceable
RULE 1113	7-13-2007	Federally enforceable
RULE 1122	10-1-2004	Federally enforceable
RULE 1122	5-1-2009	Non federally enforceable
RULE 1130	10-8-1999	Federally enforceable
RULE 1171	2-1-2008	Federally enforceable
RULE 1171	5-1-2009	Non federally enforceable
RULE 118	12-7-1995	Non federally enforceable
RULE 1303(a)(1)-BACT	12-6-2002	Non federally enforceable
RULE 1303(a)(1)-BACT	5-10-1996	Federally enforceable
RULE 1303(b)(2)-Offset	12-6-2002	Non federally enforceable
RULE 1303(b)(2)-Offset	5-10-1996	Federally enforceable
RULE 1401	3-4-2005	Non federally enforceable
RULE 1401	9-10-2010	Non federally enforceable
RULE 1415	12-3-2010	Non federally enforceable
RULE 2005	6-3-2011	Federally enforceable
RULE 2012	5-6-2005	Federally enforceable
RULE 204	10-8-1993	Federally enforceable
RULE 217	1-5-1990	Federally enforceable
RULE 219	6-1-2007	Non federally enforceable
RULE 219	9-4-1981	Federally enforceable

FACILITY PERMIT TO OPERATE
TREND OFFSET PRINTING SERVICES, INC

SECTION K: TITLE V Administration

RULE SOURCE	Adopted/Amended Date	FEDERAL Enforceability
RULE 3003	11-14-1997	Federally enforceable
RULE 3003	3-16-2001	Non federally enforceable
RULE 3004	12-12-1997	Federally enforceable
RULE 3004(a)(4)-Periodic Monitoring	12-12-1997	Federally enforceable
RULE 3005	11-14-1997	Federally enforceable
RULE 3005	3-16-2001	Non federally enforceable
RULE 3007	10-8-1993	Federally enforceable
RULE 304	5-2-2008	Non federally enforceable
RULE 401	11-9-2001	Non federally enforceable
RULE 401	3-2-1984	Federally enforceable
RULE 402	5-7-1976	Non federally enforceable
RULE 403	12-11-1998	Federally enforceable
RULE 404	2-7-1986	Federally enforceable
RULE 407	4-2-1982	Federally enforceable
RULE 408	5-7-1976	Federally enforceable
RULE 409	8-7-1981	Federally enforceable
RULE 430	7-12-1996	Non federally enforceable
RULE 442	12-15-2000	Federally enforceable
RULE 480	10-7-1977	Federally enforceable
RULE 701	6-13-1997	Federally enforceable
40CFR 82 Subpart F	5-14-1993	Federally enforceable
40CFR Part 64	10-22-1997	Federally enforceable

FACILITY PERMIT TO OPERATE
TREND OFFSET PRINTING SERVICES, INC

APPENDIX A: NOX AND SOX EMITTING EQUIPMENT EXEMPT FROM WRITTEN PERMIT PURSUANT TO RULE 219

NONE

FACILITY PERMIT TO OPERATE
TREND OFFSET PRINTING SERVICES. INC

APPENDIX B: RULE EMISSION LIMITS
[RULE 1113 06-03-2011]

(1) Except as provided in paragraphs (c)(3), (c)(4), and designated coatings averaged under (c)(6) of Rule 1113, no person shall supply, sell, offer for sale, market, manufacture, blend, repackage, apply, store at a worksite, or solicit the application of any architectural coating within the District:

(A) That is listed in the Table of Standards 1 and contains VOC (excluding any colorant added to tint bases) in excess of the corresponding VOC limit specified in the table, after the effective date specified; or

(B) That is not listed in the Table of Standards 1, and contains VOC (excluding any colorant added to tint bases) in excess of 250 grams of VOC per liter of coating (2.08 pounds per gallon), less water, less exempt compounds, until January 1, 2014, at which time the limit drops to 50 grams of VOC per liter of coating, less water, less exempt compounds (0.42 pounds per gallon).

(2) No person within the District shall add colorant at the point of sale that is listed in the Table of Standards 2 and contains VOC in excess of the corresponding VOC limit specified in the Table of Standards 2, after the effective date specified.

FACILITY PERMIT TO OPERATE
TREND OFFSET PRINTING SERVICES, INC

~~APPENDIX B: RULE EMISSION LIMITS~~

[RULE 1113 06-03-2011]

TABLE OF STANDARDS 1
VOC LIMITS

Grams of VOC Per Liter of Coating,
Less Water and Less Exempt Compounds

COATING CATEGORY	Ceiling Limit[1]	Current Limit	Effective Date		
			7/1/08	1/1/12	1/1/14
Bond Breakers		350			
Clear Wood Finishes		275			
Varnish	350	275			
Sanding Sealers	350	275			
Lacquer		275			
Concrete-Curing Compounds		100			
Concrete-Curing Compounds For Roadways and Bridges[3]		350			
Concrete Surface Retarder		250			50
Driveway Sealer		100		50	
Dry-Fog Coatings		150			50
Faux Finishing Coatings					
Clear Topcoat		350		200	
Decorative Coatings		350			100
Glazes		350			
Japan		350			
Trowel Applied Coatings		350		150	50
Fire-Proofing Coatings		350			150
Flats	250	50	50		
Floor Coatings	100	50			
Form Release Compound		250			100
Graphic Arts (Sign) Coatings		500			150
Industrial Maintenance (IM) Coatings	420	100			
High Temperature IM Coatings		420			
Non-Sacrificial Anti-Graffiti Coatings		100			
Zinc-Rich IM Primers	340	100			
Magnesite Cement Coatings		450			
Mastic Coatings		300			100
Metallic Pigmented Coatings	500	500			150
Multi-Color Coatings		250			
Nonflat Coatings	150	50			
Pre-Treatment Wash Primers		420			
Primers, Sealers, and Undercoaters	200	100			
Reactive Penetrating Sealers		350			
Recycled Coatings		250			
Roof Coatings	250	50			
Roof Coatings, Aluminum		100			

FACILITY PERMIT TO OPERATE
TREND OFFSET PRINTING SERVICES, INC

APPENDIX B: RULE EMISSION LIMITS
[RULE 1113 06-03-2011]

Roof Primers, Bituminous	350	350			
Rust Preventative Coatings	400	100			
Stone Consolidant		450			
Sacrificial Anti-Graffiti Coatings		100		50	
Shellac					
Clear		730			
Pigmented		550			
Specialty Primers	350	100			
Stains		100			

FACILITY PERMIT TO OPERATE
TREND OFFSET PRINTING SERVICES, INC

~~APPENDIX B: RULE EMISSION LIMITS~~
[RULE 1113 06-03-2011]

COATING CATEGORY	Ceiling Limit[1]	Current Limit[2]	Effective Date		
			7/1/08	1/1/12	1/1/14
Stains, Interior	250	250			
Swimming Pool Coatings					
Repair		340			
Other		340			
Traffic Coatings		100			
Waterproofing Sealers	250	100			
Waterproofing Concrete/Masonry Sealers	400	100			
Wood Preservatives		350			

1. The specified ceiling limits are applicable to products sold under the Averaging Compliance Option.
2. The specified limits remain in effect unless revised limits are listed in subsequent columns in the Table of Standards.
3. Does not include compounds used for curbs and gutters, sidewalks, islands, driveways and other miscellaneous concrete areas.

TABLE OF STANDARDS 1 (cont.)
VOC LIMITS

Grams of VOC Per Liter of Material

COATING	Limit
Low-Solids Coating	120

TABLE OF STANDARDS 2
VOC LIMITS FOR COLORANTS

Grams of VOC Per Liter of Colorant
Less Water and Less Exempt Compounds

COLORANT	Limit[4]
Architectural Coatings, excluding IM Coatings	50
Solvent-Based IM	600
Waterborne IM	50

4. Effective January 1, 2014.

FACILITY PERMIT TO OPERATE
TREND OFFSET PRINTING SERVICES, INC

APPENDIX B: RULE EMISSION LIMITS
[RULE 1113 07-13-2007]

(1) Except as provided in paragraphs (c)(2), (c)(3), (c)(4), and specified coatings averaged under (c)(6), no person shall supply, sell, offer for sale, manufacture, blend, or repackage any architectural coating for use in the District which, at the time of sale or manufacture, contains more than 250 grams of VOC per liter of coating (2.08 pounds per gallon), less water, less exempt compounds, and less any colorant added to tint bases, and no person shall apply or solicit the application of any architectural coating within the District that exceeds 250 grams of VOC per liter of coating as calculated in this paragraph.

(2) Except as provided in paragraphs (c)(3), (c)(4), and designated coatings averaged under (c)(6), no person shall supply, sell, offer for sale, manufacture, blend, or repackage, for use within the District, any architectural coating listed in the Table of Standards which contains VOC (excluding any colorant added to tint bases) in excess of the corresponding VOC limit specified in the table, after the effective date specified, and no person shall apply or solicit the application of any architectural coating within the District that exceeds the VOC limit as specified in this paragraph. No person shall apply or solicit the application within the District of any industrial maintenance coatings, except anti-graffiti coatings, for residential use or for use in areas such as office space and meeting rooms of industrial, commercial or institutional facilities not exposed to such extreme environmental conditions described in the definition of industrial maintenance coatings; or of any rust-preventative coating for industrial use, unless such a rust preventative coating complies with the Industrial Maintenance Coating VOC limit specified in the Table of Standards.

FACILITY PERMIT TO OPERATE
TREND OFFSET PRINTING SERVICES, INC

APPENDIX B: RULE EMISSION LIMITS

[RULE 1113 07-13-2007]

TABLE OF STANDARDS
VOC LIMITS

Grams of VOC Per Liter of Coating,
Less Water and Less Exempt Compounds

COATING CATEGORY	Ceiling Limit	Current Limit	Effective Date					
			1/1/03	1/1/04	1/1/05	7/1/06	7/1/07	7/1/08
Bond Breakers	350							
Clear Wood Finishes	350					275		
Varnish	350					275		
Sanding Sealers	350					275		
Lacquer	680	550			275			
Clear Brushing Lacquer	680				275			
Concrete-Curing Compounds	350						100	
Concrete-Curing Compounds For Roadways and Bridges**	350							
Dry-Fog Coatings	400						150	
Fire-Proofing Exterior Coatings	450	350						
Fire-Retardant Coatings***								
Clear	650							
Pigmented	350							
Flats	250	100						50
Floor Coatings	420		100			50		
Graphic Arts (Sign) Coatings	500							
Industrial Maintenance (IM) Coatings	420			250		100		
High Temperature IM Coatings			420					
Zinc-Rich IM Primers	420		340			100		
Japans/Faux Finishing Coatings	700	350						
Magnesite Cement Coatings	600	450						
Mastic Coatings	300							
Metallic Pigmented Coatings	500							
Multi-Color Coatings	420	250						
Nonflat Coatings	250		150			50		

FACILITY PERMIT TO OPERATE
TREND OFFSET PRINTING SERVICES, INC

APPENDIX B: RULE EMISSION LIMITS
[RULE 1113 07-13-2007]

COATING CATEGORY	Ceiling Limit*	Current Limit	Effective Date					
			7/1/03	1/1/04	1/1/05	7/1/06	7/1/07	7/1/08
Nonflat High Gloss	250		150				50	
Pigmented Lacquer	680	550			275			
Pre-Treatment Wash Primers	780		420					
Primers, Sealers, and Undercoaters	350		200			100		
Quick-Dry Enamels	400		250			150	50	
Quick-Dry Primers, Sealers, and Undercoaters	350		200			100		
Recycled Coatings			250					
Roof Coatings	300		250		50			
Roof Coatings, Aluminum	500				100			
Roof Primers, Bituminous	350		350					
Rust Preventative Coatings	420		400			100		
Shellac								
Clear	730							
Pigmented	550							
Specialty Primers	350					250	100	
Stains	350		250				100	
Stains, Interior	250							
Swimming Pool Coatings								
Repair	650		340					
Other	340							
Traffic Coatings	250	150					100	
Waterproofing Sealers	400		250			100		
Waterproofing Concrete/Masonry Sealers	400					100		
Wood Preservatives								
Below-Ground	350							
Other	350							

* The specified limits remain in effect unless revised limits are listed in subsequent columns in the Table of Standards.

** Does not include compounds used for curbs and gutters, sidewalks, islands, driveways and other miscellaneous concrete areas.

*** The Fire-Retardant Coating category will be eliminated on January 1, 2007 and subsumed by the coating category for which they are formulated.

FACILITY PERMIT TO OPERATE
TREND OFFSET PRINTING SERVICES, INC

APPENDIX B: RULE EMISSION LIMITS

[RULE 1113 07-13-2007]

TABLE OF STANDARDS (cont.)
VOC LIMITS

Grams of VOC Per Liter of Material

COATING	Limit
Low-Solids Coating	120

FACILITY PERMIT TO OPERATE
TREND OFFSET PRINTING SERVICES, INC

APPENDIX B: RULE EMISSION LIMITS
[RULE 1130 10-08-1999]

(Amended October 8, 1999)

RULE 1130. GRAPHIC ARTS

Except as otherwise provided in Rule 1130

(1) VOC Content of Graphic Arts Materials

The operator shall not apply any graphic arts material, including any VOC-containing materials added to the original graphic arts materials, which contains a total VOC in excess of the limits specified below:

GRAPHIC ARTS MATERIAL	VOC LIMIT Grams per Liter of Coating (or Ink or Adhesive), Less Water and Less Exempt Compounds	
	(October 8, 1999)	Effective January 1, 2000
Lithographic Ink	300	300
Letterpress Ink	300	300
Gravure Ink	300	300
Flexographic Ink Non-Porous Substrate	300	300
Flexographic Ink Porous Substrate	300	225
Flexographic Fluorescent Ink	300	300
Coating	300	300
Adhesive	300	150

~~APPENDIX B: RULE EMISSION LIMITS~~
[RULE 1130 10-08-1999]

(2) VOC Content of Fountain Solution

Through December 31, 1999, the operator shall not apply in any graphic arts operation any fountain solution, including any VOC-containing materials added to the original fountain solution, which contains a total VOC in excess of 100 grams per liter of material. Effective January 1, 2000, the VOC content of fountain solution, including any VOC containing material added to the original fountain solution as applied, shall be:

(A) no greater than 80 grams per liter of material, or

(B) no greater than 100 grams per liter of material, if a refrigerated chiller is used.

FACILITY PERMIT TO OPERATE
TREND OFFSET PRINTING SERVICES, INC

APPENDIX B: RULE EMISSION LIMITS
[RULE 1171 02-01-2008]

(1) Solvent Requirements

A person shall not use a solvent to perform solvent cleaning operations unless the solvent complies with the applicable requirements set forth below:

	CURRENT LIMITS*	EFFECTIVE 1/1/2008*	EFFECTIVE 1/1/2009
SOLVENT CLEANING ACTIVITY	VOC g/l (lb/gal)	VOC g/l (lb/gal)	VOC g/l (lb/gal)
(A) Product Cleaning During Manufacturing Process Or Surface Preparation For Coating, Adhesive, Or Ink Application			
(i) General	25 (0.21)		
(ii) Electrical Apparatus Components & Electronic Components	100 (0.83)		
(iii) Medical Devices & Pharmaceuticals	800 (6.7)		
(B) Repair and Maintenance Cleaning			
(i) General	25 (0.21)		
(ii) Electrical Apparatus Components & Electronic Components	100 (0.83)		

FACILITY PERMIT TO OPERATE
TREND OFFSET PRINTING SERVICES, INC

APPENDIX B: RULE EMISSION LIMITS
[RULE 1171 02-01-2008]

	CURRENT LIMITS*	EFFECTIVE 1/1/2008*	EFFECTIVE 1/1/2009
SOLVENT CLEANING ACTIVITY (cont.)	**VOC g/l (lb/gal)**	**VOC g/l (lb/gal)**	**VOC g/l (lb/gal)**
(iii) Medical Devices & Pharmaceuticals			
(A) Tools, Equipment, & Machinery	800 (6.7)		
(B) General Work Surfaces	600 (5.0)		
(C) Cleaning of Coatings or Adhesives Application Equipment	25 (0.21)		
(D) Cleaning of Ink Application Equipment			
(i) General	25 (0.21)		
(ii) Flexographic Printing	25 (0.21)		
(iii) Gravure Printing			
(A) Publication	100 (0.83)		
(B) Packaging	25 (0.21)		
(iv) Lithographic (Offset) or Letter Press Printing			
(A) Roller Wash, Blanket Wash, & On-Press Components			
(I) Newsprint	100 (0.83)		

FACILITY PERMIT TO OPERATE
TREND OFFSET PRINTING SERVICES, INC

APPENDIX B: RULE EMISSION LIMITS
[RULE 1171 02-01-2008]

	CURRENT LIMITS*	EFFECTIVE 1/1/2008*	EFFECTIVE 1/1/2009
SOLVENT CLEANING ACTIVITY (cont.)	VOC g/l (lb/gal)	VOC g/l (lb/gal)	VOC g/l (lb/gal)
(II) Other Substrates	500 (4.2)	100 (0.83)	
(B) Removable Press Components	25 (0.21)		
(v) Screen Printing	500 (4.2)	100 (0.83)	
(vi) Ultraviolet Ink/ Electron Beam Ink Application Equipment (except screen printing)	650 (5.4)	650 (5.4)	100 (0.83)
(vii) Specialty Flexographic Printing	100 (0.83)		
(E) Cleaning of Polyester Resin Application Equipment	25 (0.21)		

* The specified limits remain in effect unless revised limits are listed in subsequent columns.

FACILITY PERMIT TO OPERATE
TREND OFFSET PRINTING SERVICES, INC

~~APPENDIX B: RULE EMISSION LIMITS~~
[RULE 1171 05-01-2009]

(1) Solvent Requirements

A person shall not use a solvent to perform solvent cleaning operations unless the solvent complies with the applicable requirements set forth below:

SOLVENT CLEANING ACTIVITY	CURRENT LIMITS* VOC g/l (lb/gal)	EFFECTIVE 1/1/2010 VOC g/l (lb/gal)
(A) Product Cleaning During Manufacturing Process Or Surface Preparation For Coating, Adhesive, Or Ink Application		
(i) General	25 (0.21)	
(ii) Electrical Apparatus Components & Electronic Components	100 (0.83)	
(iii) Medical Devices & Pharmaceuticals	800 (6.7)	
(B) Repair and Maintenance Cleaning		
(i) General	25 (0.21)	
(ii) Electrical Apparatus Components & Electronic Components	100 (0.83)	

FACILITY PERMIT TO OPERATE
TREND OFFSET PRINTING SERVICES, INC

APPENDIX B: RULE EMISSION LIMITS
[RULE 1171 05-01-2009]

	CURRENT LIMITS*	EFFECTIVE 1/1/2010
SOLVENT CLEANING ACTIVITY (cont.)	**VOC g/l (lb/gal)**	**VOC g/l (lb/gal)**
(iii) Medical Devices & Pharmaceuticals		
(A) Tools, Equipment, & Machinery	800 (6.7)	
(B) General Work Surfaces	600 (5.0)	
(C) Cleaning of Coatings or Adhesives Application Equipment	25 (0.21)	
(D) Cleaning of Ink Application Equipment		
(i) General	25 (0.21)	
(ii) Flexographic Printing	25 (0.21)	
(iii) Gravure Printing		
(A) Publication	100 (0.83)	
(B) Packaging	25 (0.21)	
(iv) Lithographic (Offset) or Letter Press Printing		
(A) Roller Wash, Blanket Wash, & On-Press Components	100 (0.83)	

FACILITY PERMIT TO OPERATE
TREND OFFSET PRINTING SERVICES, INC

~~APPENDIX B: RULE EMISSION LIMITS~~
[RULE 1171 05-01-2009]

	CURRENT LIMITS*	EFFECTIVE 1/1/2010
SOLVENT CLEANING ACTIVITY (cont.)	**VOC g/l (lb/gal)**	**VOC g/l (lb/gal)**
(B) Removable Press Components	25 (0.21)	
(v) Screen Printing	100 (0.83)	
(vi) Ultraviolet Ink/ Electron Beam Ink Application Equipment (except screen printing)	650 (5.4)	100 (0.83)
(vii) Specialty Flexographic Printing	100 (0.83)	
(E) Cleaning of Polyester Resin Application Equipment	25 (0.21)	

* The specified limits remain in effect unless revised limits are listed in subsequent columns.

FACILITY PERMIT TO OPERATE
TREND OFFSET PRINTING SERVICES, INC

APPENDIX B: RULE EMISSION LIMITS
[RULE 404 02-07-1986]

The operator shall not discharge into the atmosphere from this equipment, particulate matter in excess of the concentration at standard conditions, shown in Table 404(a). Where the volume discharged is between figures listed in the Table, the exact concentration permitted to be discharged shall be determined by linear interpolation.

For the purposes of this rule, emissions shall be averaged over one complete cycle of operation or one hour, whichever is the lesser time period.

TABLE 404(a)

Volume Discharged Calculated as Dry Gas At Standard Conditions		Maximum Concentration of Particulate Matter"Allowed in Discharged Gas Calculated as Dry Gas at Standard Conditions		Volume Discharged Calculated as Dry Gas At Standard Conditions		Maximum Concentration of Particulate Matter Allowed in Discharged Gas Calculated as Dry Gas at Standard Conditions	
Cubic meters Per Minute	Cubic feet Per Minute	Milligrams per Cubic Meter	Grains per Cubic Foot	Cubic meters Per Minute	Cubic feet Per Minute	Milligrams per Cubic Meter	Grains per Cubic Foot
25 or less	883 or less	450	0.196	900	31780	118	0.0515
30	1059	420	.183	1000	35310	113	.0493
35	1236	397	.173	1100	38850	109	.0476
40	1413	377	.165	1200	42380	106	.0463
45	1589	361	.158	1300	45910	102	.0445

FACILITY PERMIT TO OPERATE
TREND OFFSET PRINTING SERVICES, INC

~~APPENDIX B: RULE EMISSION LIMITS~~
[RULE 404 02-07-1986]

Volume Discharged Calculated as Dry Gas At Standard Conditions		Maximum Concentration of Particulate Matter"Allowed in Discharged Gas Calculated as Dry Gas at Standard Conditions		Volume Discharged Calculated as Dry Gas At Standard Conditions		Maximum Concentration of Particulate Matter Allowed in Discharged Gas Calculated as Dry Gas at Standard Conditions	
Cubic meters Per Minute	Cubic feet Per Minute	Milligrams per Cubic Meter	Grains per Cubic Foot	Cubic meters Per Minute	Cubic feet Per Minute	Milligrams per Cubic Meter	Grains per Cubic Foot
50	1766	347	.152	1400	49440	100	.0437
60	2119	324	.141	1500	52970	97	.0424
70	2472	306	.134	1750	61800	92	.0402
80	2825	291	.127	2000	70630	87	.0380
90	3178	279	.122	2250	79460	83	.0362
100	3531	267	.117	2500	88290	80	.0349
125	4414	246	.107	3000	105900	75	.0327
150	5297	230	.100	4000	141300	67	.0293
175	6180	217	.0947	5000	176600	62	.0271
200	7063	206	.0900	6000	211900	58	.0253
250	8829	190	.0830	8000	282500	52	.0227
300	10590	177	.0773	10000	353100	48	.0210
350	12360	167	.0730	15000	529700	41	.0179
400	14130	159	.0694	20000	706300	37	.0162
450	15890	152	.0664	25000	882900	34	.0148

FACILITY PERMIT TO OPERATE
TREND OFFSET PRINTING SERVICES, INC

APPENDIX B: RULE EMISSION LIMITS
[RULE 404 02-07-1986]

Volume Discharged Calculated as Dry Gas At Standard Conditions		Maximum Concentration of Particulate Matter"Allowed in Discharged Gas Calculated as Dry Gas at Standard Conditions		Volume Discharged Calculated as Dry Gas At Standard Conditions		Maximum Concentration of Particulate Matter Allowed in Discharged Gas Calculated as Dry Gas at Standard Conditions	
Cubic meters Per Minute	Cubic feet Per Minute	Milligrams per Cubic Meter	Grains per Cubic Foot	Cubic meters Per Minute	Cubic feet Per Minute	Milligrams per Cubic Meter	Grains per Cubic Foot
500	17660	146	.0637	30000	1059000	32	.0140
600	21190	137	.0598	40000	1413000	28	.0122
700	24720	129	.0563	50000	1766000	26	.0114
800	28250	123	.0537	70000 or more	2472000 or more	23	.0100

South Coast Air Quality Management District

Form 400-A

Application Form for Permit or Plan Approval

List only one piece of equipment or process per form.

Mail To:
SCAQMD
P.O. Box 4944
Diamond Bar, CA 91765-0944

Tel: (909) 396-3385
www.aqmd.gov

Section A - Operator Information

1. Facility Name (Business Name of Operator to Appear on the Permit): Trend Offset Printing Services, Inc.

2. Valid AQMD Facility ID (Available On Permit Or Invoice Issued By AQMD): 053729

3. Owner's Business Name (If different from Business Name of Operator):

Section B - Equipment Location Address

4. Equipment Location Is: (●) Fixed Location ( ) Various Location
(For equipment operated at various locations, provide address of initial site.)

10811 Bloomfield Street
Street Address

Los Alamitos , CA 90720
City Zip

Tom Gentsch — Environmental Manager
Contact Name — Title

(562) 794-2325 — Ext. — (562) 799-0076
Phone # — Fax #

E-Mail: tgentsch@trendoffset.com

Section C - Permit Mailing Address

5. Permit and Correspondence Information:
☐ Check here if same as equipment location address

3791 Catalina Street
Address

Los Alamitos , CA 90720
City State Zip

Tom Gentsch — Environmental Manager
Contact Name — Title

(562) 794-2325 — Ext. — (562) 799-0076
Phone # — Fax #

E-Mail: tgentsch@trendoffset.com

Section D - Application Type

6. The Facility Is: ( ) Not In RECLAIM or Title V ( ) In RECLAIM ( ) In Title V (●) In RECLAIM & Title V Programs

7. Reason for Submitting Application (Select only ONE):

7a. New Equipment or Process Application:
(●) New Construction (Permit to Construct) (10)
( ) Equipment On-Site But Not Constructed or Operational
( ) Equipment Operating Without A Permit *
( ) Compliance Plan
( ) Registration/Certification
( ) Streamlined Standard Permit

7b. Facility Permits:
( ) Title V Application or Amendment (Refer to Title V Matrix)
( ) RECLAIM Facility Permit Amendment

7c. Equipment or Process with an Existing/Previous Application or Permit:
( ) Administrative Change
( ) Alteration/Modification
( ) Alteration/Modification without Prior Approval *
( ) Change of Condition
( ) Change of Condition without Prior Approval *
( ) Change of Location
( ) Change of Location without Prior Approval *
( ) Equipment Operating with an Expired/Inactive Permit *

Existing or Previous Permit/Application
If you checked any of the items in 7c., you MUST provide an existing Permit or Application Number:

* A Higher Permit Processing Fee and additional Annual Operating Fees (up to 3 full years) may apply (Rule 301(c)(1)(D)(i)).

8a. Estimated Start Date of Construction (mm/dd/yyyy):	8b. Estimated End Date of Construction (mm/dd/yyyy):	8c. Estimated Start Date of Operation (mm/dd/yyyy):

9. Description of Equipment or Reason for Compliance Plan (list applicable rule):
RTO, Adwest Technologies, model 13.0RTO95, natural gas fired, with one 3,757,000 BTU/hr Maxon Kinedizer LE low-NOx burner

10. For Identical equipment, how many additional applications are being submitted with this application? (Form 400-A required for each equipment / process)

11. Are you a Small Business as per AQMD's Rule 102 definition? (10 employees or less and total gross receipts are $500,000 or less OR a not-for-profit training center) (●) No ( ) Yes

12. Has a Notice of Violation (NOV) or a Notice to Comply (NC) been issued for this equipment? (●) No ( ) Yes
If Yes, provide NOV/NC#:

Section E - Facility Business Information

13. What type of business is being conducted at this equipment location? Printing operations

14. What is your business primary NAICS Code? (North American Industrial Classification System) 323110

15. Are there other facilities in the SCAQMD jurisdiction operated by the same operator? (●) No ( ) Yes

16. Are there any schools (K-12) within 1000 feet of the facility property line? ( ) No (●) Yes

Section F - Authorization/Signature

I hereby certify that all information contained herein and information submitted with this application are true and correct.

17. Signature of Responsible Official:

18. Title of Responsible Official: General Manager

19. I wish to review the permit prior to issuance. (This may cause a delay in the application process.) ( ) No ( ) Yes

20. Print Name: Steve Furlong

21. Date: 8/14/14

22. Do you claim confidentiality of data? (If Yes, see instructions.) ( ) No ( ) Yes

23. Check List: ☐ Authorized Signature/Date ☐ Form 400-CEQA ☐ Supplemental Form(s) (ie., Form 400-E-xx) ☐ Fees Enclosed

AQMD USE ONLY	APPLICATION TRACKING #	CHECK #	AMOUNT RECEIVED	PAYMENT TRACKING #	VALIDATION
	567815	522106	$ 10,649.50	CT118108	08/21/14

DATE	APP REJ	DATE	APP REJ	CLASS I III	BASIC CONTROL	EQUIPMENT CATEGORY CODE	TEAM	ENGINEER	REASON/ACTION TAKEN
							B		

© South Coast Air Quality Management District, Form 400-A (2012.07)

* Contiguous Property - See email

14 [illegible] 21 P4:0[illegible]

S.C.A.U.M.D.
PERMIT P[illegible]SSING

1ZE1834E0290829240

Integrated Environmental Solutions

JE

Environment
Air & Water Quality
Auditing
Fire & Building Code
Permitting
Phase I/II Assessment
Project Management
Remedial Design
Risk Assessment
Waste Management

Health & Safety
Auditing
Food Safety
Industrial Hygiene
Job Safety Analysis
M
Training

Web-based Solutions
Quality ISO 9001
Environment ISO 14001
EHS Management
Battery Management
Waste Tracking

Daren E. Jorgensen
President

Vice Presidents
Br A. Armbruster
Pe. J. Stein

Managers
Caitlin O'Connor
Kimberly P. Holden
Shaun M. Nieves
Brianne N. Wilkerson
Amy J. Bakchis

P: +1.909.483.3300
F: +1.909.646.9854
http://www.jecsi.net

VIA SECOND DAY

Mr. Rick Lee
South Coast Air Quality Management District
21865 East Copley Drive
Diamond Bar, California 91765

10 September 2014

Re: Trend Offset Printing Services, Inc. (Facility ID: 053729); Additional Fee for Application for Permit to Operate without Prior Permit to Construct.

Dear Rick:

Enclosed is a check in the amount of $4,369.93 for payment of the higher fee associated with the applications for permit to operate without a prior permit to construct. Please convert the existing applications on file with the district under AN 567814 and 567815 for one lithographic printing press, model ~~M600~~ C550 25, and one RTO, from Class I applications to Class III applications.

Please return a receipt for the amount of $4,369.93 to JE Compliance Services, Inc. in order to verify receipt of the information.

Please call me or Bruce with any questions or comments.

Sincerely,

Eduardo Jimenez
Associate III

Bruce A. Armbruster
Vice President

enclosures, S:\clients.wdx\TREN\214788\00383746.DOC

17 341.02 (total)
− 12 971 08 (DG d)
4 369 94 additional

TREND OFFSET PRINTING
SERVICES, INCORPORATED
3791 CATALINA STREET - LOS ALAMITOS
CALIFORNIA 90720
(562) 598-2446 . (714) 826-2360

CHECK DATE: **09/05/14** CHECK NO.: **522504**
VENDOR NUMBER: **3125**

INVOICE DATE	INVOICE NUMBER	PO CONTROL NO.	GROSS AMOUNT	DISCOUNT AMOUNT	NET AMOUNT
09/05/14	C550PERMIT	NEWPRESS	4,369.93	0.00	4,369.93

567813
567814
567815
567816

TREND OFFSET PRINTING
SERVICES, INCORPORATED
3791 CATALINA STREET - LOS ALAMITOS
CALIFORNIA 90720

DETACH AND RETAIN THIS STATEMENT.
THE ATTACHED CHECK IS IN PAYMENT
OF ITEMS DESCRIBED ABOVE

$4,369.93

WARNING! DO NOT ACCEPT THIS CHECK UNLESS YOU CAN SEE A TRUE WATERMARK WHEN HOLDING THE CHECK TO THE LIGHT AND PINK LOCK AND KEY ICONS THAT FADE WHEN WARMED

TREND OFFSET PRINTING
SERVICES, INCORPORATED
3791 CATALINA STREET - LOS ALAMITOS
CALIFORNIA 90720
(562) 598-2446 . (714) 826-2360

City National Bank
Irvine, CA

CHECK NO. **522504** 16-1606 / 1220

CHECK DATE **09/05/14**

DOLLARS **$4,369.93**

VOID AFTER 6 MONTHS
TREND OFFSET PRINTING
SERVICES, INCORPORATED
Two Signatures Required for Amount Over $50,000.00

PAY Four Thousand Three Hundred Sixty-Nine and 93/100 Dollars

TO THE ORDER OF
South Coast AQMD
PO Box 4943
Diamond Bar CA 91765-0943

Todd F. Nelson
AUTHORIZED SIGNATURE

TRENDOFFSET.COM

⑈522504⑈ ⑆122016066⑆113⑈046411

Rick Lee

From: Rick Lee
Sent: Tuesday, September 02, 2014 4:58 PM
To: Tom Gentsch (tgentsch@trendoffset.com)
Cc: Hamed Mandilawi; Armbruster, Bruce; 'Eduardo Jimenez'
Subject: Trend Offset (ID No. 53729)--Adding New Afterburner, pending A/N 567815, Request for Additional Forms and Information
Attachments: trend offset.pdf

Hi Tom,

Trend Offset has recently filed A/N 567815, proposing to add a new afterburner, Adwest Coanda Plus 1-CP-391-60. This application is not completed and cannot be accepted as is. Please provide the following additional information:

1. Form 400-E-2a and Form 400-PS were not filled out completely (see attached, submitted forms with yellow highlights of those areas with missing information).
2. Drawing(s), showing
    a) all ducting network layout, connecting the new press to the new oxidizer
    b) equipment location layout inside/outside main building(s)
    c) Dimensions of main building(s) and adjacent building(s), including width, length, and height.
3. Combustion chamber dimensions, including width, length, and height.

Please provide the above requested information by next Tuesday, 9-9-14 so that the application can be deemed complete and accepted. Otherwise, the application will be rejected and returned to Trend Offset.

Thanks for your help,

Rick Lee
Air Quality Engineer

Coating, Printing, Plating, Military & Entertainment Operations
(909) 396-2629 Work
(909) 396-3350 Fax
rlee@aqmd.gov
21865 Copley Drive
Diamond Bar, CA 91765-4178

South Coast Air Quality Management District

Form 400-PS

Plot Plan And Stack Information Form

This form must be accompanied by a completed Application for a Permit to Construct/Operate - Form 400A and Form 400-CEQA.

Mail To:
SCAQMD
P.O. Box 4944
Diamond Bar, CA 91765-0944
Tel: (909) 396-3385
www.aqmd.gov

Section A - Operator Information

Facility Name (Business Name of Operator To Appears On The Permit): Trend Offset Printing Services, Inc.

Valid AQMD Facility ID (Available On Permit Or Invoice Issued By AQMD): 053729

Address where the equipment will be operated (for equipment which will be moved to various location in AQMD's jurisdiction, please list the initial location site): 3701 Catalina Street, Los Alamitos, CA 90720

(•) Fixed Location ( ) Various Locations

Section B - Location Data

Plot Plan

Please attach a site map for the project with distances and scales. Identify and locate the proposed equipment on the map. A copy of the appropriate Thomas Brothers page, a web-based map, or a sketch that shows the major streets and location of the equipment is acceptable.

Location of Schools Nearby

Is the facility located within a 1/4 mile radius (1,320 feet) of the outer boundary of a school? (•) Yes ( ) No

If yes, please provide name(s) of school(s) below:

School Name: Los Alamitos Elementary School
School Address: 10862 Bloomfield Street, Los Alamitos, CA 90720
Distance from stack or equipment vent to the outer boundary of the school: 892 feet

School Name:
School Address:
Distance from stack or equipment vent to the outer boundary of the school: feet

CA Health & Safety Code 42301.9: "School" means any public or private school used for purposes of the education of more than 12 children in kindergarten or any of grades 1 to 12, inclusive, but does not include any private school in which education is primarily conducted in private homes.

Population Density

(•) Urban ( ) Rural (<50% of land within 3 km radius accounted for by urban land use categories, i.e., multi-family dwelling or industrial.)

Zoning Classification

(•) Mixed Use Residential Commercial Zone (M-U) ( ) Service and Professional Zone (C-S) ( ) Medium Commercial (C-3)
( ) Heavy Commercial (C-4) ( ) Commercial Manufacturing (C-M)

Section C - Emission Release Parameters - Stacks, Vents

Stack Data

Stack Height: feet (above ground level) What is the height of the closest building nearest the stack? feet
Stack Inside Diameter: inches Stack Flow: acfm Stack Temperature: °F
Rain Cap Present: ( ) Yes ( ) No Stack Orientation: ( ) Vertical ( ) Horizontal

If the stack height is less than 2.5 times the closest building height (H), please provide information on any building within 5xH distance from the stack (attach additional sheet if necessary):

Building #/Name:
Building Height: feet (above ground level)
Building Width: feet
Building Length: feet

Building #/Name:
Building Height: feet (above ground level)
Building Width: feet
Building Length: feet

Receptor Distance From Equipment Stack or Roof Vents/Openings

Distance to nearest residence: feet Distance to nearest business: feet

Building Information

Are the emissions released from vents and/or openings from a building? ( ) Yes ( ) No

If yes, please provide:

Building #/Name:
Building Height: feet (above ground level)
Building Width: feet
Building Length: feet

© South Coast Air Quality Management District, Form 400-PS (2011.03)

South Coast Air Quality Management District

Form 400-PS

Plot Plan And Stack Information Form

This form must be accompanied by a completed Application for a Permit to Construct/Operate - Form 400A and Form 400-CEQA.

Section D - Authorization/Signature			
I hereby certify that all information contained herein and information submitted with this application is true and correct.			
Signature of Preparer:	Title of Preparer: Associate III	Preparer's Phone #: 909-477-7132 Preparer's Email: ejimenez@jecsi.com	
Contact Person: Eduardo Jimenez Contact's Email:	Contact's Phone#: Contact's Fax#:		Date Signed: 8-19-14

THIS IS A PUBLIC DOCUMENT

Pursuant to the California Public Records Act, your permit application and any supplemental documentation are public records and may be disclosed to a third party. If you wish to claim certain limited information as exempt from disclosure because it qualifies as a trade secret, as defined in the District's Guidelines for Implementing the California Public Records Act, you must make such claim at the time of submittal to the District.

Check here if you claim that this form or its attachments contain confidential trade secret information. ☐

South Coast Air Quality Management District

Form 400-E-2a
Gaseous Emission Control Form
Afterburner/Oxidizer

This form must be accompanied by a completed Application for a Permit to Construct/Operate - Forms 400-A, Form 400-CEQA, and Form 400-PS.

Mail To:
SCAQMD
P.O. Box 4944
Diamond Bar, CA 91765-0944
Tel: (909) 396-3385
www.aqmd.gov

Section A - Operator Information

Facility Name (Business Name of Operator That Appears On Permit): Trend Offset Printing Services, Inc.

Valid AQMD Facility ID (Available On Permit Or Invoice Issued By AQMD): 053729

Address where the equipment will be operated (for equipment which will be moved to various location in AQMD's jurisdiction, please list the initial location site): 3701 Catalina Street, Los Alamitos, CA 90720

(●) Fixed Location ( ) Various Locations

Section B - Equipment Description

Equipment

Manufacturer: Adwest

Model No.: Coanda Plus 1-CP-391-60

Type

( ) Catalytic Oxidizer
( ) Thermal (direct fired) Oxidizer
( ) Recuperative Oxidizer w/ Heat Exchanger (Catalytic)
( ) Recuperative Oxidizer w/ Heat Exchanger (Thermal)
(●) Regenerative Thermal Oxidizer (RTO) - Number of Chambers: _____

Is a concentrator for VOC part of the design? ( ) No ( ) Yes If Yes, also complete 400-E-2b.

For Regenerative Oxidizer, choose type of media:
( ) Ceramic Saddles ( ) Monolith ( ) Other _____

For Recuperative Oxidizer, choose type of heat exchanger:
( ) Shell and Tube ( ) Plate ( ) Other _____

For Catalytic Oxidizer

Catalyst Manufacturer: _____

Type of Catalyst: ( ) Low Temperature Catalyst ( ) Commercial Noble Metal ( ) Other _____

Estimated Catalyst Life: _____ years Catalyst Cleaning Frequency: _____ months

Method of Cleaning: _____

Does the process emit any of the following potential catalyst masking agent or deactivators? ( ) No ( ) Yes
If Yes, check the type(s):

☐ Halogens ☐ Heavy Metals ☐ Silicones ☐ Sulfur Compounds ☐ Particulate Matter
☐ PCBTF ☐ Phosphorous Compounds ☐ Other _____

Type of Burners and Fuel

☒ Natural Gas Fired — Rating: 3,757,000 BTU/hr

No. of Burners: _____ — Rating: _____ BTU/hr per burner

☐ Other: _____ — Rating: _____ BTU/hr

Manufacturer: Maxon Kinedizer Model: LE 4"

Manufacturer's Emission Guarantee for Burners:

NOx: 30 ppm @ 3.00 %O_2 CO: _____ ppm @ _____ %O_2

Combustion Air Blower: Flow Rate: _____ SCFM Horsepower: _____ HP

Design Criteria

Retention time at normal operating temperature: _____ secs @ _____ °F

Combustion Chamber Volume: _____ cubic feet (ft^3) Design Gas Flow: _____ SCFM

Pre-Treatment Device

Is a pre-treatment device present? ( ) Yes ( ) No

If Yes, indicate type:

☐ Cyclone ☐ Precooler ☐ Preheater ☐ Knock-Out Chamber ☐ Baghouse
☐ Inline Filters (Pressure drop of clean filters: _____ in. H_2O) ☐ Other: _____

Dimensions of pre-treatment device:

W _____ in. x L _____ in. x H _____ in. or Diameter _____ in. x H _____ in.

© South Coast Air Quality Management District, Form 400-E-2a (2009.04)

South Coast Air Quality Management District

Form 400-E-2a
Gaseous Emission Control Form
Afterburner/Oxidizer

This form must be accompanied by a completed Application for a Permit to Construct/Operate - Forms 400-A, Form 400-CEQA, and Form 400-PS.

Section B - Equipment Description (cont.)

Auxiliary Fuel Data (e.g. gas injection, duct burner)

Auxiliary fuel available? ○ No ○ Yes If Yes, indicate type: _____

Fuel Usage: ○ Cubic Feet Per Hour (ft³/hr) ○ Gallons/Hour (gal/hr)

Maximum	Minimum	Average

Exhaust Blower

Rating: _____ HP Flow Capacity: _____ SCFM Draft: ○ Forced ○ Induced

Section C - Process Stream Characteristics

Brief Description of Process

Please attach a process flow diagram and engineering drawing of the process and the control system configuration. In the space provided, indicate what equipment is vented to the control equipment.

Emission Data

Air Contaminant	Concentration (ppmv)	Destruction Efficiency (%)

Instrumentation

Describe instrumentation for measuring temperature, pressure drop and other operating parameter (attach description, if necessary):

Bakeout or Burnout Process

Is bakeout a feature of the process? ○ Yes ○ No

Operating Conditions

	Maximum	Minimum	Average
Operating Temperature (°F):			
Exit Gas Temperature (°F):			

Operating Schedule

Normal: 24 hours/day 7 days/week 52 weeks/yr

Maximum: 24 hours/day 7 days/week 52 weeks/yr

Section D - Authorization/Signature

I hereby certify that all information contained herein and information submitted with this application is true and correct.

Preparer Info

Signature: _____ Date: 8-19-14

Name: Eduardo Jimenez

Title: Associate III Company Name: JECSI

Phone #: 909-477-7132 Fax #:

Email: ejimenez@jecsi.com

Contact Info

Name: _____

Title: _____ Company Name: _____

Phone #: _____ Fax #: _____

Email: _____

THIS IS A PUBLIC DOCUMENT

Pursuant to the California Public Records Act, your permit application and any supplemental documentation are public records and may be disclosed to a third party. If you wish to claim certain limited information as exempt from disclosure because it qualifies as a trade secret, as defined in the District's Guidelines for Implementing the California Public Records Act, you must make such claim at the time of submittal to the District.

Check here if you claim that this form or its attachments contain confidential trade secret information. ☐

© South Coast Air Quality Management District, Form 400-E-2a (2009.04)

South Coast Air Quality Management District

Form 400-CEQA
California Environmental Quality Act (CEQA) Applicability

Mail To:
SCAQMD
P.O. Box 4944
Diamond Bar, CA 91765-0944

Tel: (909) 396-3385
www.aqmd.gov

The SCAQMD is required by state law, the California Environmental Quality Act (CEQA), to review discretionary permit project applications for potential air quality and other environmental impacts. This form is a screening tool to assist the SCAQMD in clarifying whether or not the project[1] has the potential to generate significant adverse environmental impacts that might require preparation of a CEQA document [CEQA Guidelines §15060(a)].[2] Refer to the attached instructions for guidance in completing this form.[3] For each Form 400-A application, also complete and submit one Form 400-CEQA. If submitting multiple Form 400-A applications for the same project at the same time, only one 400-CEQA form is necessary for the entire project. If you need assistance completing this form, contact Permit Services at (909) 396-3385 or (909) 396-2668.

Section A - Facility Information

1. Facility Name (Business Name of Operator To Appear On The Permit): Trend Offset Printing Services, Inc.

2. Valid AQMD Facility ID (Available On Permit Or Invoice Issued By AQMD): 053729

3. Project Description:

Permit to construct One Lithographic Printing Press and Regenerative Twin-bed Thermal Oxidizer

Section B - Review For Exemption From Further CEQA Action

Check "Yes" or "No" as applicable

	Yes	No	Is this application for:
1.	○	◉	**A CEQA and/or NEPA document previously or currently prepared that specifically evaluates this project?** If yes, attach a copy of the signed Notice of Determination to this form.
2.	○	◉	**A request for a change of permittee only (without equipment modifications)?**
3.	○	◉	**A functionally identical permit unit replacement with no increase in rating or emissions?**
4.	○	◉	**A change of daily VOC permit limit to a monthly VOC permit limit?**
5.	○	◉	**Equipment damaged as a result of a disaster during state of emergency?**
6.	○	◉	**A Title V (i.e., Regulation XXX) permit renewal (without equipment modifications)?**
7.	○	◉	**A Title V administrative permit revision?**
8.	○	◉	**The conversion of an existing permit into an initial Title V permit?**

If "Yes" is checked for any question in Section B, your application does not require additional evaluation for CEQA applicability. Skip to Section D - Signatures on page 2 and sign and date this form.

Section C - Review of Impacts Which May Trigger CEQA

Complete Parts I-VI by checking "Yes" or "No" as applicable. To avoid delays in processing your application(s), explain all "Yes" responses on a separate sheet and attach it to this form.

	Yes	No	Part I - General
1.	○	◉	**Has this project generated any known public controversy regarding potential adverse impacts that may be generated by the project?** Controversy may be construed as concerns raised by local groups at public meetings; adverse media attention such as negative articles in newspapers or other periodical publications, local news programs, environmental justice issues, etc.
2.	○	◉	**Is this project part of a larger project?** If yes, attach a separate sheet to briefly describe the larger project.
			Part II - Air Quality
3.	○	◉	**Will there be any demolition, excavating, and/or grading construction activities that encompass an area exceeding 20,000 square feet?**
4.	○	◉	**Does this project include the open outdoor storage of dry bulk solid materials that could generate dust?** If Yes, include a plot plan with the application package.

[1] A "project" means the whole of an action which has a potential for resulting in physical change to the environment, including construction activities, clearing or grading of land, improvements to existing structures, and activities or equipment involving the issuance of a permit. For example, a project might include installation of a new, or modification of an existing internal combustion engine, dry-cleaning facility, boiler, gas turbine, spray coating booth, solvent cleaning tank, etc.

[2] To download the CEQA guidelines, visit http://ceres.ca.gov/env_law/state.html.

[3] To download this form and the instructions, visit http://www.aqmd.gov/ceqa or http://www.aqmd.gov/permit

© South Coast Air Quality Management District, Form 400-CEQA (2009.04)

Section C - Review of Impacts Which May Trigger CEQA (cont.)			
	Yes	No	Part II - Air Quality (cont.)
5.	○	◉	**Would this project result in noticeable off-site odors from activities that may not be subject to SCAQMD permit requirements?** For example, compost materials or other types of greenwaste (i.e., lawn clippings, tree trimmings, etc.) have the potential to generate odor complaints subject to Rule 402 -- Nuisance.
6.	○	◉	**Does this project cause an increase of emissions from marine vessels, trains and/or airplanes?**
7.	○	◉	**Will the proposed project increase the QUANTITY of hazardous materials stored aboveground onsite or transported by mobile vehicle to or from the site by greater than or equal to the amounts associated with each compound on the attached Table 1?[4]**
			Part III – Water Resources
8.	○	◉	**Will the project increase demand for water at the facility by more than 5,000,000 gallons per day?** The following examples identify some, but not all, types of projects that may result in a "yes" answer to this question: 1) projects that generate steam; 2) projects that use water as part of the air pollution control equipment; 3) projects that require water as part of the production process; 4) projects that require new or expansion of existing sewage treatment facilities; 5) projects where water demand exceeds the capacity of the local water purveyor to supply sufficient water for the project; and 6) projects that require new or expansion of existing water supply facilities.
9.	○	◉	**Will the project require construction of new water conveyance infrastructure?** Examples of such projects are when water demands exceed the capacity of the local water purveyor to supply sufficient water for the project, or require new or modified sewage treatment facilities such that the project requires new water lines, sewage lines, sewage hook-ups, etc.
			Part IV – Transportation/Circulation
10.			**Will the project result in (Check all that apply):**
	○	◉	**a. the need for more than 350 new employees?**
	○	◉	**b. an increase in heavy-duty transport truck traffic to and/or from the facility by more than 350 truck round-trips per day?**
	○	◉	**c. increase customer traffic by more than 700 visits per day?**
			Part V – Noise
11.	○	◉	**Will the project include equipment that will generate noise GREATER THAN 90 decibels (dB) at the property line?**
			Part VI – Public Services
12.			**Will the project create a permanent need for new or additional public services in any of the following areas** (Check all that apply):
	○	◉	**a. Solid waste disposal?** Check "No" if the projected potential amount of wastes generated by the project is less than five tons per day.
	○	◉	**b. Hazardous waste disposal?** Check "No" if the projected potential amount of hazardous wastes generated by the project is less than 42 cubic yards per day (or equivalent in pounds).

"REMINDER: *For each "Yes" response in Section C, attach all pertinent information including but not limited to estimated quantities, volumes, weights, etc."*

Section D - Signatures

I HEREBY CERTIFY THAT ALL INFORMATION CONTAINED HEREIN AND INFORMATION SUBMITTED WITH THIS APPLICATION IS TRUE AND CORRECT TO THE BEST OF MY KNOWLEDGE. I UNDERSTAND THAT THIS FORM IS A SCREENING TOOL AND THAT THE SCAQMD RESERVES THE RIGHT TO CONSIDER OTHER PERTINENT INFORMATION IN DETERMINING CEQA APPLICABILITY.

1. Signature of Responsible Official of Firm:		2. Title of Responsible Official of Firm:
		General Manager
3. Print Name of Responsible Official of Firm:		4. Date Signed:
Steve Furlong		8/14/14
5. Phone # of Responsible Official of Firm:	6. Fax # of Responsible Official of Firm:	7. Email of Responsible Official of Firm:
(562) 598-2446	(562) 430-2373	
8. Signature of Preparer, (If prepared by person other than responsible official of firm):		9. Title of Preparer:
10. Print Name of Preparer:		11. Date Signed:
12. Phone # of Preparer:	13. Fax # of Preparer:	14. Email of Preparer:

THIS CONCLUDES FORM 400-CEQA. INCLUDE THIS FORM AND ANY ATTACHMENTS WITH FORM 400-A.

[4] Table 1 – Regulated Substances List and Threshold Quantities for Accidental Release Prevention can be found in the Instructions for Form 400-CEQA.

Martha Rivera

From: Tom Gentsch [tgentsch@trendoffset.com]
Sent: Tuesday, August 26, 2014 1:55 PM
To: Martha Rivera
Cc: Armbruster, Bruce; Eduardo Jimenez
Subject: Addresses associated with equipment.

Ref Facility ID 053729

10811 Bloomfield St, Los Alamitos CA
M660 Heatset Press
C700-1 Heatset Press
C700-2 Heatset Press
M655 Heatset Press
V30 Long Cutoff Open Web Press
V30 Short Cutoff Open Web Press
Sunday Heatset Press.
New Press C550 Heatset Press
New and existing thermal oxidizers

3801 Catalina St, Los Alamitos CA
M608 Heatset Press
M500 HeatsetPress
M-110/8 Heatset Press
M100 Heatset Press
M604 Heatset Press

Contiguous

Mailing address 3791 Catalina St. Los Alamitos Ca 90720

tgentsch@trendoffset.com
Environmental Health/Safety Manager
(562) 794-2325 cell

JE Compliance Services, Inc.

Application for Permit to Construct Lithographic Printing Press and APCD

Trend Offset Printing Services, Inc.

August 2014

Prepared For:

Trend Offset Printing Services, Inc.
3791 Catalina Street
Los Alamitos, California

214788

Table of Contents

Introduction 1
Facility Information 1
Equipment Description 1
History and Permit Background 1
Process Description 2
Data and Emission Factors 2
Emissions from the Combustion of Natural Gas 2
Emissions from the Use of Heat-set Lithographic Inks 3
Typical Daily VOC Emissions Due to the Use of Inks 4
Typical Daily VOC Emissions Due to the Use of Fountain Solutions 4
Typical Daily VOC Emissions Due to the Use of Blanket Wash Solutions 4
Typical Daily VOC Emissions Due to the Use of Adhesives 4
Typical Daily VOC Emissions Due to the Use of Cleaner 5
Total Typical Daily VOC Emissions from the Printing Press 5
Typical Monthly VOC Emissions 5
Typical Annual VOC Emissions 5
Rules Evaluation 6
Compliance with Regulation II 6
Compliance with Regulation IV 6
Compliance with Regulation IX and X 6
Compliance with Regulation XI 7
Compliance with Regulation XIII and Best Available Control Technology (BACT) 7
Compliance with Regulation XIV 8
Calculation of Maximum Hourly Emissions of TACs from Combustion 9
Calculation of Maximum Hourly Emissions of TACs from Printing Operations 9
Calculation of Maximum Annual TAC Emissions from Combustion and Printing Operations 10
Calculation of PSI 11
Calculation of ASI 12
Compliance with Regulation XX 12

Tables

Table 1 – Summary of Maximum Potential to Emit from Dryer 3
Table 2 – Summary of Maximum Potential to Emit from RTO 3
Table 3 – Summary of Maximum Hourly TAC Emissions from Combustion 9
Table 4 – Calculation of Hourly TAC Emissions from Printing Operations 10
Table 5 – Calculation of Annual TAC Emissions 11
Table 6 – Screening Emission Level Evaluation 12
Table 7 – Maximum Hourly Emissions from the Dryer ..... Appendix D
Table 8 – Maximum Hourly Emissions from the RTO ..... Appendix D
Table 9 – Maximum Daily Emissions from the Dryer ..... Appendix D
Table 10 – Maximum Daily Emissions from the RTO ..... Appendix D
Table 11 – Maximum Annual Potential to Emit from the Dryer ..... Appendix D
Table 12 – Maximum Annual Potential to Emit from the RTO ..... Appendix D

Figures

Figure 1—Area Map ..... Appendix B
Figure 2—Site Map ..... Appendix B

Appendices

Appendix A – SCAQMD Forms
Appendix B – Facility Maps
Appendix C – Manufacturer's Specifications
Appendix D – Combustion Emission Calculations
Appendix E – Typical Safety Data Sheets

Introduction

This Application for Permit to Construct Lithographic Printing Press and APCD ("application") has been completed at the request and direction of Trend Offset Printing Services, Inc. ("Trend") located at 3791 Catalina Street in Los Alamitos, California ("facility"). Maps showing the facility and site are located in **Appendix B**. Trend is proposing to install one Goss model C-550, web offset lithographic printing press and one Regenerative Twin-Bed Thermal Oxidizer in conjunction with existing operations. The proposed C-550 press will be vented to the new oxidizer and will be operated in accordance with existing facility-wide emission limits. No changes to the configuration or operating conditions for the existing printing presses and existing air pollution control devices, devices C59 and C69 (AN 534014 and AN 534015, respectively) are proposed at this time.

Facility Information

Applicant Name: Trend Offset Printing Services, Inc.

Facility ID Number: 53729

Mailing Address: 3791 Catalina Street, Los Alamitos, CA 92335

Equipment Address: 10811 Bloomfield Street, Los Alamitos, California

Equipment Description

1. Lithographic, Heat-set, Printing System consisting of the following:
    a. Lithographic printing press, Goss model C-550, heat-set, 4-unit web-fed, 50 inch web width and 21 inch cut-off length.
    b. Dryer, MegTec Systems, Inc. model Coanda Plus 1-CP-391-60, direct natural gas-fired, equipped with two Maxon Ovenpak LE EB-40 low-NOx burners, with a maximum heat input rating of 4,000,000 BTU per hour each.

2. Regenerative Thermal Oxidizer, Adwest Technologies, Inc., model 13.0RTO95, natural gas-fired, equipped with one Maxon Kinedizer LE 4" low-NOx burner with a maximum heat input rating of 3,757,000 BTU per hour.

History and Permit Background

Trend is a Title V and RECLAIM facility that prints magazines, pamphlets, and other paper products on a contract basis. The facility is located in zone one as defined by Rule 2005. Operations at the facility include lithographic heatset/offset printing, paper trimming, and binding. Trend currently operates ten heat-set and three cold-set presses. The existing Title V permit limits facility-wide emissions of volatile organic compounds (VOC) from permitted operations to 10,890 pounds per month. The facility has previously proposed an increase in the existing monthly facility-wide VOC emissions limit of 10,890 with the purchase of 140 pounds of VOC ERCs, resulting in a new monthly facility-wide VOC emissions limit of 15,090 pounds per month. Under this application Trend is proposing to install one Goss C-550

lithographic printing system and one regenerative twin-bed thermal oxidizer (RTO). The facility typically operates twenty-four hours per day, seven days per week, fifty-two weeks per year.

Process Description

Trend is proposing to install one heat-set lithographic printing system and one RTO. Paper roll stock may be directed through either one of the existing printing presses or through the proposed lithographic printing press for the application of heat-set lithographic inks. Following the application of the lithographic ink on the roll stock, the roll stock will be directed through the respective associated dryer in order to dry the heat-set inks. The heated air generated by the operation of the burners heats the web and cures the printing ink on the surface of the web. Atmospheric emissions of VOC generated during the operation of the associated dryer are vented to air pollution control equipment. After the printing process, the printing roll stock is cut to a desired size, assembled, and prepared for shipment off-site.

The proposed printing press system described in this application is expected to be constructed in place of the V30-3/Big 30 (D58) in the central press room of Trend's facility located at 10811 Bloomfield Avenue. The proposed Goss C-550 lithographic press will be vented to the proposed RTO.

Data and Emission Factors Replacing D58

Emissions from the Combustion of Natural Gas

Emissions of criteria pollutants including oxides of nitrogen (NOx), oxides of sulfur (SOx), carbon monoxide (CO), VOC, and particulate matter (PM) may result from the combustion of natural gas during the operation of the natural gas-fired burners associated with the Coanda Plus dryer and the natural gas-fired start-up burner associated with the proposed RTO.

The Coanda Plus dryer associated with each Goss C-550 is equipped with two natural gas-fired burners, each with maximum heat input ratings of 4,000,000 BTU per hour. The proposed RTO will be retrofitted with a low-NOx burner with a maximum heat input rating of 3,757,000 BTU per hour. **Appendix C** contains the available supporting documentation for specifications of the Goss C-550 press, Coanda Plus dryer and associated burners, and RTO and associated start-up burner.

Emissions of criteria pollutants resulting from the combustion of natural gas due to the operation of the Coanda Plus dryer and RTO start-up burner are based on South Coast Air Quality Management (SCAQMD) emission factors, and the maximum potential volume of natural gas used by the burners are calculated based on the maximum heat rating of each of the burners. The proposed burners associated with the Coanda Plus dryers and RTO start-up burners are not expected to exceed 30 ppm of NOx. A summary of maximum emissions of criteria pollutants from the Coanda Plus dryer associated with the recently acquired Goss C-550 lithographic printing presses is contained in **Table 1.** A summary of emissions calculations based on maximum operating conditions for the proposed RTO start-up burner is contained in **Table 2.** Complete emission calculations from the combustion of natural gas are contained in **Appendix D.**

Table 1 – Summary of Maximum Potential to Emit from Dryer

Pollutant	Emission Factor, lb/dscf	Volume of Natural Gas Combusted, dscf/hr	Maximum Operating Load	Maximum Hourly Emissions, lbs/hr	Maximum Daily Emissions, lbs/day	Maximum Annual Potential to Emit, lbs/yr
NOx	0.00003828	7,619.05	1.0	0.2917	7.00	2,555.03
SOx	0.00000060	7,619.05	1.0	0.0046	0.11	40.03
CO	0.00003500	7,619.05	1.0	0.2667	6.40	2,336.03
PM	0.00000750	7,619.05	1.0	0.0571	1.37	500.55
VOC	0.00000700	7,619.05	1.0	0.0533	1.28	467.17

Table 2 – Summary of Maximum Potential to Emit from RTO

Pollutant	Emission Factor, lb/dscf	Volume of Natural Gas Combusted, dscf/hr	Maximum Operating Load	Maximum Hourly Emissions, lbs/hr	Maximum Daily Emissions, lbs/day	Maximum Annual Potential to Emit, lbs/yr
NOx	0.00003828	3,578.10	1.0	0.1370	3.29	1,199.94
SOx	0.00000060	3,578.10	1.0	0.0022	0.05	18.83
CO	0.00003500	3,578.10	1.0	0.1252	3.01	1,097.01
PM	0.00000750	3,578.10	1.0	0.0268	0.64	235.12
VOC	0.00000700	3,578.10	1.0	0.0251	0.60	219.44

Emissions from the Use of Heat-set Lithographic Inks

The operation of each Goss C-550 lithographic printing press may result in atmospheric emissions of VOC from the use of lithographic inks, blanket washes, fountain solutions, and miscellaneous solvents. The materials proposed for use in the Goss C-550 lithographic printing press are similar to materials currently in use at the facility, and actual materials use and throughput will vary based on production demands. Copies of Safety Data Sheets for typical materials proposed for use in each C-550 press are contained in **Appendix E.**

The Goss C-550 lithographic printing press is equipped with an automatic blanket wash system to clean the printing blankets. The automatic blanket wash system sprays the blanket wash across the blankets to remove residual ink from the printing process. The automatic blanket wash system is an enclosed system; therefore, emissions of VOC resulting from the operation of the automatic blanket wash system will be captured and directed to an air pollution control device. Please note, some materials may not be used in any given day while others may be used at the maximum potential. As described subsequently in the rule evaluation section of this application, the facility has previously proposed an increase in the existing monthly facility-wide VOC emissions limit of 10,890 with the purchase of 140 pounds of VOC ERCs, which will be surrendered upon approval of this application. This would result in a new monthly facility-wide VOC emissions limit of 15,090 pounds per month.

Typical Daily VOC Emissions Due to the Use of Inks

$$TDE_1 = QP(1-R)(1-C)$$

where,
TDE_1 = typical daily VOC emissions from the use of inks, (lbs/day).
Q = typical daily quantity of the lithographic ink used in proposed printing press, (lbs/day).
P = typical weight proportion of VOC in the lithographic ink, (lb/lb).
R = ink retention factor, for heatset inks, (Volatile Organic Compounds Emission Calculation Methodology for Lithographic Printing Operations, SCAQMD, June 2001), (0.20 lb/lb).
C = overall control efficiency of the air pollution control device, (0.95 lbs/lbs).

$$TDE_1 = (2{,}500 \text{ lbs/day})(0.30 \text{ lb/lb})(1-0.20)(1-0.95) = 29.79 \text{ lbs/day}$$

Typical Daily VOC Emissions Due to the Use of Fountain Solutions

$$TDE_2 = Q_2P_2(1-KC)$$

where,
TDE_2 = typical daily VOC emissions from the fountain solutions, (lbs/day).
Q_2 = typical daily throughout of fountain solutions applied in the printing press, (lbs/day).
P_2 = typical VOC content of fountain solutions, (lb/lb).
K = solvent carry over factor, 0.7 lbs/lbs for fountain solutions for devices with heat set dryer (Volatile Organic Compounds Emission Calculation Methodology for Lithographic Printing Operations, SCAQMD, June 2001).
C = overall control efficiency of the air pollution control device, (0.95 lbs/lbs).

$$TDE_2 = (350 \text{ lbs/day})(0.19 \text{ lb/lb})(1-0.70*0.95) = 22.51 \text{ lbs/day}$$

Typical Daily VOC Emissions Due to the Use of Blanket Wash Solutions

$$TDE_3 = Q_3P_3(1-KC)$$

where,
TDE_3 = typical daily VOC emissions from the blanket wash solutions, (lbs/day).
Q_3 = typical daily throughout of blanket wash solutions applied in the printing press, (lbs/day).
P_3 = typical VOC content of blanket wash solutions, (lb/lb).
K = solvent carry over factor, 0.4 lbs/lbs for blanket wash on the automatic wash operations for devices with heat set dryer (Volatile Organic Compounds Emission Calculation Methodology for Lithographic Printing Operations, SCAQMD, June 2001).
C = overall control efficiency of the air pollution control device, (0.95 lbs/lbs).

$$TDE_3 = (55 \text{ lbs/day})(0.11 \text{ lb/lb})(1-0.40*0.95) = 3.91 \text{ lbs/day}$$

Typical Daily VOC Emissions Due to the Use of Adhesives

$$TDE_4 = Q_4P_4$$

where,

TDE_4 = typical daily VOC emissions from the adhesives, (lbs/day).
Q_4 = typical daily throughout of adhesives applied in the printing press, (15 lbs/day).
P_4 = typical VOC content of adhesives, (0.09 lb/lb).

$$TDE_4 = (15 \text{ lbs/day})(0.09 \text{lb/lb}) = 1.35 \text{ lbs/day}$$

Typical Daily VOC Emissions Due to the Use of Cleaner

$$TDE_5 = Q_5 P_5$$

where,
TDE_5 = typical daily VOC emissions from the cleaners, (lbs/day).
Q_5 = typical daily throughout of cleaner applied in the printing press, (1.5 lbs/day).
P_5 = typical VOC content of cleaner, (0.52 lb/lb).

$$TDE_5 = (1.5 \text{ lbs/day})(0.52 \text{ lb/lb}) = 0.78 \text{ lbs/day}$$

Total Typical Daily VOC Emissions from the Printing Press

$$TDE_T = TDE_1 + TDE_2 + TDE_3 + TDE_4 + TDE_5$$

where,
TDE_T = typical daily VOC emissions from the printing press, (lbs/day).
TDE_1 = typical daily VOC emissions from the use of inks, (29.79 lbs/day).
TDE_2 = typical daily VOC emissions from the fountain solutions, (22.51 lbs/day).
TDE_3 = typical daily VOC emissions from the blanket wash solutions, (3.91 lbs/day).
TDE_4 = typical daily VOC emissions from the adhesives, (1.35 lbs/day).
TDE_5 = typical daily VOC emissions from the cleaners, (0.78 lbs/day).

TDE_T = (29.79 lbs/day)+(22.51 lbs/day)+(3.91 lbs/day)+(1.35 lbs/day)+(0.78 lbs/day)= 58.34 lbs/day

Typical Monthly VOC Emissions

$$TME = TDE_T (m)$$

where,
TME = typical monthly VOC emissions from the printing press, (lbs/month).
TDE_T = typical daily VOC emissions from the printing press, (58.34 lbs/day).
m = typical operating days per month, (30 days/month).

$$TME = (58.34 \text{ lbs/day})(30 \text{ days/month}) = 1{,}750.29 \text{ lbs/month}$$

Typical Annual VOC Emissions

$$TAE = TDE_T (y)$$

where,
TAE = typical annual VOC emissions from the printing press, (lbs/yr).

TDE_T = typical daily VOC emissions from the printing press, (1,750.29 lbs/day).
y = typical operating days per year, (365 days/yr).

TAE = (1,750.29 lbs/day)(365 days/yr) = 21,244.60 lbs/yr

Rules Evaluation

Compliance with Regulation II

Regulation II establishes permit requirements and identifies information required of applicants seeking a permit from the district. Rule 212 identifies policies regarding public notification.

Rule 212(c)(1) requires a public notice for new or modified permit units that may emit air contaminants located within 1,000 feet from the outer boundary of a school. The facility is proposing to locate the C-550 press and associated Coanda Plus dryer described in this application in 10811 Bloomfield Avenue as depicted in **Appendix B, Figure 2**. Though the actual location of the press may not be within 1,000 feet of a school, the regenerative thermal oxidizer is located approximately 892 feet from Los Alamitos Elementary school. As a result, public notice will be required per Rule212(c).

Compliance with Regulation IV

Regulation IV contains prohibitions on emissions as mandated by the South Coast Air Quality Management District. Rule 401 regulates visible emissions. The facility is not expected to discharge visible emissions into the atmosphere exceeding the designated shade number one on the Ringelmann Chart or to obscure an observers view to a degree equal to or greater than the designated shade.

Rule 402 prohibits the discharge of materials which cause injury, detriment, nuisance or annoyance to any considerable number of persons or to the public. The facility does not expect to discharge air contaminants in such quantities as to cause a nuisance or injury to the public.

The facility will operate the equipment identified in this application according to manufacturer's specifications, and the equipment is expected to comply with provisions of Rule 404 for particulate matter emissions concentrations, Rule 405 for solid PM emissions, and Rule 407 for gaseous air contaminants.

Rule 409 stipulates that combustion contaminants must not be discharged to the atmosphere at a rate exceeding 0.1 grains per cubic foot averaged over fifteen consecutive minutes. The facility expects to use natural gas as fuel in the proposed systems in order to comply with Rule 409.

Rule 474 concerns the emissions of NO_2 from any fuel burning equipment. Trend is in the RECLAIM program. As a result, per rule 2001(j), the lithographic printing equipment and RTO described in this application are exempt from other provisions of district rules concerning NOx emissions.

Compliance with Regulation IX and X

Regulation IX and Regulation X list standards of performance for new stationary sources and national emission standards for hazardous air pollutants, respectively. The operation of the Goss C-550, Coanda

Plus dryer and RTO described in this application are not identified in Regulation IX or Regulation X; therefore, the operation of the lithographic printing press system and RTO proposed in this application is not subject to the requirements of Regulations IX and X.

Compliance with Regulation XI

Regulation XI establishes source specific standards. Rule 1130 lists standards performance to reduce emissions of VOCs from graphic arts operations. The printing operations in the proposed C-550 printing press will use inks, fountain solutions, and blanket washes (see **Appendix E** for copies of SDSs for the proposed materials). Per Rule 1130(c)(1) and Rule 1130(c)(2), inks, fountain solutions, and additives used during lithographic printing operations must not exceed the VOC content limits listed in Table I and Table II. Fountain solutions, as applied, and any VOC containing materials added to the original fountain solution used in the proposed printing operations appear to comply with the VOC content limits set forth in Table II. Usage of inks, fountain solutions, and blanket washes in the press will be similar to those used in the existing permitted presses at the facility. As a result, the operation of the proposed printing press and dryer will apparently comply with the requirements of Rule 1130.

Rule 1130(c)(5) states that lithographic printing operations can comply with materials VOC limitations by reducing VOC emissions from an emissions collection system by 95%, by weight, and demonstrate that the emission collection system collects at least 90%, by weight, of the VOC emissions generated by the sources of emissions. The RTO reportedly has an overall efficiency to reduce the VOC emissions from the use of graphic arts materials to a level equal to or lower than that which would have been achieved through compliance with the listed VOC content limits; therefore, the proposed RTO apparently complies with Rule 1130.

Rule 1147 applies to combustion equipment with NOx emissions that require a SCAQMD permit and not specifically required to comply with a NOx emissions limit by other Regulation XI rules; however, Trend is in the RECLAIM program. As a result, per rule 2001(j), the Goss C-550, associated Coanda Plus dryer, and RTO are exempt from Rule 1147 and other provisions of district rules concerning NOx emissions.

The solvent cleaning operations performed in the C-550 printing press will use blanket wash solution to remove ink from removable and non-removable press components. The blanket wash solution will apparently comply with the applicable VOC content requirements contained in rule 1171(c)(1)(D)(iv)(A) and 1171 (c)(1)(D)(iv)(B). Storage and disposal of VOC containing materials and solvents will be conducted in a manner that complies with the provisions of rule 1171.

Compliance with Regulation XIII and Best Available Control Technology (BACT)

Regulation XIII contains new source standards of performance for any relocated, new, or modified source which results in an emissions increase of any non-attainment air contaminant, ozone depleting compound, or ammonia. The operation of the proposed lithographic printing press system and RTO may result in emissions of criteria pollutants including NOx, CO, SOx, VOC, and PM10. As a result, the operation of the proposed lithographic printing press system and RTO are subject to New Source Review under Regulation XIII. Since Trend is in the RECLAIM program, NOx New Source Review is addressed under Regulation XX.

Pursuant to Appendix A of rule 1303, a detailed air quality modeling analysis is required if emissions of NOx, CO, and PM10 generated by the proposed equipment exceeds quantities listed in Table A-1. The

operation of lithographic printing press system and RTO will not result in atmospheric emissions of NOx, CO, and PM10 in excess of the allowable limits listed in Table A-1; therefore, the application is exempt from modeling requirements pursuant to 1303(b)(1).

The lithographic printing press system and RTO must also comply with Best Available Control Technology (BACT) guidelines for criteria pollutants and Lowest Achievable Emissions Rate (LAER) for a major polluting facility. BACT/LAER is required if stationary equipment is installed or modified in such a way as to cause an increase in emissions of criteria pollutants. LAER for major sources is the most stringent emission limitation or control technology which has been achieved in practice or is contained in any SIP approved by USEPA for such category or class of source. Per current BACT guidelines for heat-set, lithographic printing press operations, the use of low VOC fountain solutions (less than or equal eight percent by volume of VOC), low vapor pressure (less than or equal to ten mmHg VOC composite partial pressure) or low VOC (less than or equal 100 g/l) blanket and roller washes, and oil-based or UV-curable inks must be used. In addition, the facility must maintain compliance with Rules 1130 and 1171 and vent the dryer to an afterburner with a retention time greater than or equal to 0.3 seconds at a temperature of 1400 Fahrenheit with an overall efficiency of 95 percent or greater. Trend expects to comply with the BACT guidelines through the use of Rule 1130 and 1171 compliant solutions. In addition, the proposed C-550 press and associated Coanda Plus dryers will be vented to the proposed RTO as described in this application.

BACT is required if stationary equipment is installed or modified in such a way to cause an increase in emissions of criteria pollutants. Current BACT requirements for the burners associated with dryers and proposed RTO specify emissions limits of NOx to 30 ppmv at 3% O_2, and the use of natural gas for NOx, SOx, and PM10. The burners associated with the RTO and Coanda Plus dryer are not expected to exceed 30 ppm at 3% O_2 for NOx.

Though the facility potential to emit CO, SOx, and PM10 is expected to increase with the installation of the proposed printing presses and associated dryers, the total facility emissions of CO, SOx, and PM10 are expected to be less than the amounts listed in Table A in Rule 1304. As a result, offsets for CO, SOx, and PM10 are not expected to be required pursuant to rule 1304(d)(2)(B). Applicable offset requirements for NOx are discussed in compliance with Regulation XX.

As previously mentioned, Trend Offset has previously purchased a total of 140 pounds of VOC emission reduction credits in order to increase the monthly facility-wide VOC limit from 10,890 pounds per month (ANs 545935, 545936, 545937, 545938, 545940, 545941, and 545942). Pending approval, the facility will surrender such ERCs to the district to increase the existing facility-wide VOC emissions limit.

Compliance with Regulation XIV

Regulation XIV lists standards of performance for new sources of toxic and carcinogenic air contaminants (TAC). Atmospheric emissions of substances identified as toxic and carcinogenic air contaminants in Rule 1401 may result from the combustion of natural gas-fired start up burners. The operation of the Coanda Plus dryer and RTO may result in emissions of acetaldehyde, acrolein, ammonia, benzene, ethyl benzene, formaldehyde, hexane, naphthalene, total PAHs (excluding naphthalene), toluene, and xylene from the combustion of natural gas. The operation of the C-550 printing press may result in emissions of acrylic acid, ammonia, copper, ethyl benzene, ethylene glycol, ethylene glycol monobutyl ether, formaldehyde, glycol ether, isopropyl alcohol, methylene chloride,

naphthalene, phosphoric acid, sodium hydroxide, styrene, toluene, vinyl acetate, xylene and zinc from the use of inks, blanket washes, fountain solutions, and miscellaneous solvents.

Calculation of Maximum Hourly Emissions of TACs from Combustion

Maximum hourly TAC emissions from combustion are calculated using the following equation:

$$Q_{hr\text{-}n} = Q_1F + Q_2F$$

where,
$Q_{hr\text{-}n}$ = maximum hourly emissions of individual listed TACs, (lbs/hr).
Q_1= maximum combined quantity of natural gas combusted from dryer, (7,619.05 dcsf/hr).
Q_2 = maximum combined quantity of natural gas combusted from RTO, (3,578.10 dcsf/hr).
F = SCAQMD emission factor for each listed TAC.

Table 3 – Summary of Maximum Hourly TAC Emissions from Combustion

Pollutant	Emissions Factor, lbs/mmcf	Hourly emissions of listed TAC, lb/hr
Acetaldehyde	0.0043	4.81E-05
Acrolein	0.0027	3.02E-05
Benzene	0.0080	8.96E-05
Ethyl benzene	0.0095	1.06E-04
Formaldehyde	0.0170	1.90E-04
Hexane	0.0063	7.05E-05
Naphthalene	0.0003	3.36E-06
PAHs (excluding Naphthalene)	0.0001	1.12E-06
Propylene	0.7310	8.19E-03
Toluene	0.0366	4.10E-04
Xylene	0.0272	3.05E-04

Calculation of Maximum Hourly Emissions of TACs from Printing Operations

Maximum hourly TAC emissions from printing operations are calculated using the following equation:

$$THE = QP(1-R)(1-K)(1-C)/h$$

where,
Q = typical quantity of the lithographic material used per press, (lbs/day).
P = typical proportion of pollutant in the lithographic material, (lb/lb).
R = ink retention factor, 0.20 lb/lb for heatset inks (Volatile Organic Compounds Emission Calculation Methodology for Lithographic Printing Operations, SCAQMD, June 2001).
K = solvent carry over factor, 0.4 lb/lb for blanket wash on the automatic wash operations, 0.7 lb/lb for fountain solutions for devices with heat set dryer (Volatile Organic Compounds Emission Calculation Methodology for Lithographic Printing Operations, SCAQMD, June 2001).
C = overall control efficiency of the air pollution control device, (0.95 lb/lb).
h = typical operating hours per day, (24 hrs/day).

Table 4 – Calculation of Hourly TAC Emissions from Printing Operations

Materials	Pollutant	Maximum daily throughput, Q (lbs/day)	Maximum proportion of pollutant, P (lbs/lb)	Retention factor, 1-R	Carry over factor, C	Overall control efficiency, 1-D	Hours per day, h	Maximum Hourly Emissions, MHE (lbs/hr)
Heatset Ink	Acrylic acid	2,500	0.0002	0.8	1	0.05	24	0.02
	Ammonia	2,500	0.0019	0.8	1	0.05	24	0.19
	Copper	2,500	0.25	0.8	1	0.05	24	25.00
	Glycol ether	2,500	0.0032	0.8	1	0.05	24	0.32
	Naphthalene	2,500	0.00021	0.8	1	0.05	24	0.02
	Styrene	2,500	0.0002	0.8	1	0.05	24	0.02
	Zinc	2,500	0.025	0.8	1	0.05	24	2.50
Blanket Wash	Ethylene glycol monobutylether	55	0.1	NA	0.40	0.05	24	0.25
	Xylene	55	0.025	NA	0.40	0.05	24	0.06
Fountain Solution	Ethylene glycol	350	0.15	NA	0.7	0.05	24	0.08
	Ethylene glycol monobutylether	350	0.15	NA	0.7	0.05	24	0.08
	Sodium hydroxide	350	0.05	NA	0.7	0.05	24	0.03
Adhesive	Formaldehyde	15	0.0001	NA	NA	NA	24	6.25E-05
	Toluene	15	0.002	NA	NA	NA	24	1.25E-03
	Vinyl Acetate	15	0.004	NA	NA	NA	24	2.50E-03
Cleaner	Ethyl benzene	1.5	0.1	NA	NA	NA	24	6.25E-03
	Isopropyl alcohol	1.5	0.2	NA	NA	NA	24	0.01
	Phosphoric Acid	1.5	0.05	NA	NA	NA	25	3.00E-03
	Methylene chloride	1.5	0.8	NA	NA	NA	24	0.05
	Xylene	1.5	0.3	NA	NA	NA	24	0.02

Calculation of Maximum Annual TAC Emissions from Combustion and Printing Operations

Maximum annual TAC emissions from combustion and printing operations are calculated using the following equation:

$$Q_{yr\text{-}n} = (Q_{hr\text{-}n})hyk_S^{-1}$$

where,
$Q_{yr\text{-}n}$ = maximum annual emissions of individual listed TACs, (ton/yr).
$Q_{hr\text{-}n}$ = maximum hourly emissions of individual listed TACs, (lbs/hr).
h = maximum hours of operation per day, (24 hrs/day).
y = maximum operating days per year, (365 days/yr).
k_S = conversion factor, 2,000 lbs/ton.

Table 5 – Calculation of Annual TAC Emissions

Pollutant	Hourly emissions of listed TAC from combustion, lb/hr	Hourly emissions of listed TAC from printing operations, lb/hr	Total Hourly emissions of listed TAC, lb/hr	Annual emissions of listed TAC, lb/yr	Annual Emissions of listed TAC, ton/yr
Acetaldehyde	4.81E-05	NA	4.81E-05	0.42	2.11E-04
Acrolein	3.02E-05	NA	3.02E-05	0.26	1.32E-04
Acrylic acid	NA	0.02	0.02	175.20	0.09
Ammonia	NA	0.19	0.19	1,664.40	0.83
Copper	NA	25.00	25	219,000	109.50
Benzene	8.96E-05	NA	8.96E-05	0.78	3.92E-04
Ethyl benzene	1.06E-04	6.25E-03	6.36E-03	55.68	0.03
Ethylene glycol	NA	0.08	0.08	670.69	0.34
Ethylene glycol monobutyl ether	NA	0.32	0.32	2,838.79	1.42
Formaldehyde	1.90E-04	6.25E-05	2.53E-04	2.21	1.11E-03
Glycol ether	NA	0.32	0.32	2,803.20	1.40
Hexane	7.05E-05	NA	7.05E-05	0.62	3.09E-04
Isopropyl alcohol	NA	0.01	0.01	109.50	0.05
Methylene chloride	NA	0.05	0.05	438.00	0.22
Naphthalene	3.36E-06	0.02	0.02	183.99	0.09
PAHs	1.12E-06	NA	1.12E-06	0.01	4.90E-06
Phosphoric Acid	NA	3.00E-03	3.00E-03	26.28	0.01
Propylene	8.19E-03	NA	8.19E-03	71.70	0.04
Sodium hydroxide	NA	0.03	0.03	223.56	0.11
Styrene	NA	0.02	0.02	175.20	0.09
Toluene	4.10E-04	1.25E-03	1.66E-03	14.54	7.27E-03
Vinyl Acetate	NA	2.50E-03	2.50E-03	21.90	0.01
Xylene	3.05E-04	0.08	0.08	708.94	0.35
Zinc	NA	2.50	2.50	21,900	10.95

A Tier 1 screening evaluation was completed and the Pollutant Screening Index (PSI) was determined for the calculated TACs. As shown in the following calculations, the emissions of TACs from the proposed printing operations are not expected to exceed the limits listed in Rule 1401 since the respective acute and cancer/chronic Application Screening Index (ASI) is below 1.0; therefore, the printing press system identified in this application appears to comply with Regulation XIV.

Calculation of PSI

$$PSI = Q_n/PSL$$

where,

PSI = pollutant screening index for acute or cancer/chronic TACs (unitless).

Q_n = maximum hourly emissions (acute TACs) or annual emissions (cancer/chronic TACs, (lb/hr or lb/yr).

PSL = hourly or annual pollutant screening level of each TAC as listed in Table 1-A in the Risk Assessment Procedures associated with rule 1401 (lb/hr or lb/yr).

Calculation of ASI

$$ASI_n = \sum PSI_n$$

where,
ASI_n = Application Screening Index (for either acute or cancer/chronic evaluation).
PSI_n = Pollutant Screening Index for acute or cancer/chronic TACs (unitless).

Table 6 – Screening Emission Level Evaluation

Pollutant	Typical Projected Emissions (lbs/hr)	Typical Projected Emissions (lbs/yr)	25 meter acute screening level (lbs/hr)	25 meter can/chronic screening level (lbs/yr)	Acute PSI	Cancer/ Chronic PSI
Acrylic acid	2.00E-02	8.76E-02	3.00E+00	NA	6.67E-03	NA
Ammonia	1.90E-01	8.32E-01	1.60E+00	6.61E+03	1.19E-01	1.26E-04
Copper	2.50E+01	1.10E+02	5.00E-02	NA	NA	NA
Ethyl Benzene	6.25E-03	2.74E-02	NA	1.31E+01	NA	2.09E-03
Ethylene glycol	7.66E-02	3.35E-01	NA	1.32E+04	NA	2.54E-05
Ethylene glycol monobutylether	3.24E-01	1.42E+00	7.00E+00	NA	4.63E-02	NA
Formaldehyde	6.25E-05	2.74E-04	2.75E-02	5.44E+00	2.27E-03	5.03E-05
Glycol ether	3.20E-01	1.40	NA	NA	NA	NA
Isopropyl alcohol	1.25E-02	5.48E-02	1.60E+00	2.31E+05	7.81E-03	2.37E-07
Methylene chloride	5.00E-02	2.19E-01	7.00E+00	3.26E+01	7.14E-03	6.72E-03
Naphthalene	2.10E-02	0.09	NA	9.51E-01	NA	9.67E-02
Phosphoric Acid	3.00E-03	0.01	NA	2.31E+02	NA	5.69E-05
Sodium hydroxide	2.55E-02	1.12E-01	4.00E-03	NA	NA	NA
Styrene	2.00E-02	0.09	1.05E+01	2.98E+04	1.90E-03	2.94E-06
Toluene	1.25E-03	5.48E-03	1.85E+01	9.92E+03	6.76E-05	5.52E-07
Vinyl Acetate	2.50E-03	1.10E-02	NA	6.61E+03	NA	1.66E-06
Xylene	8.06E-02	3.53E-01	1.10E+01	2.31E+04	7.33E-03	1.53E-05
Zinc	2.50E+00	10.95	NA	NA	NA	NA
				Total ASI	**1.98E-01**	**1.06E-01**

Compliance with Regulation XX

Regulation XX contains standards for new source review of RECLAIM facilities. Rule 2005 states that a new emission source located at a RECLAIM facility must comply with Appendix A of the Rule for NOx emissions. NOx emissions from combustion are expected to be less than the limits of Table A-1 in Appendix A of Rule 2005; therefore, air quality modeling is not required for the addition of the proposed units to the facility. Trend's NOx RECLAIM Trading Credit account contains a sufficient quantity of NOx RTC to reconcile expected NOx emissions resulting from the operation of the RTO and Coanda Plus dryer associated with the C-550 press or sufficient credits will be purchased as necessary.

Appendices

[redacted]

2003 Goss C3651 (4) Unit (1) Web Offset Press

21" (533mm) cutoff x 50" (1270mm) Width

(1) Enkel CAT Splicer P-1951 16-0026TRH

(1)Enkel Shuffless Infeed Model # DFWPC integrated web guide

(4) Goss C3501 Printing Units, 21" cutoff x 50" Width (inking system is not included)

(1) Contiweb Chill Stand

(1) WPC OCR Register system

(1) WPC Silicone Applicator

(1) WPC Web Guide

(1) Angle bar/ribbon deck. C700 ribbon deck 1 in 4 out.

(1) All drive line connections, guarding, couplings, drop down Klep clutch

(1) Engineering package consisting of General Arrangement Drawings, floor pad outline, utility requirements and Drawing for placement, electrical documentation and programming Documentation

(1) Low pressure Blower

(1) Semi Auto Plate Bender

(2) Hantscho 45A Folders

Exhibit A: Equipment

(1) Regenerative Twin-Bed Thermal Oxidizer, serial number 2583-13.0RTO95-2356 with AWS Energy Advantage Model CP101 and Control Panel located at Walker Brothers Movers, 3839 E Coronado St., Anaheim, CA 92807

(50 feet) Used ducting and stands located at Color Ad's warehouse

[redacted]

Color Ad, Inc. (Seller)

Daryl Oldenkamp, President

Trend Offset Printing Services, Inc. (Buyer)

Tom Balutis, President

ADWEST
TECHNOLOGIES, INC.
A CECO Environmental Company

July 14, 2014

Ed Senella 562-794-2464 ESenella@trendoffset.com

Trend Offest Printing
3791 Catalina Street
Los Alamitos, CA 90720

Subject: DRE Guarantee

Mr Senella,

Adwest will make the following performance guarantee for the used RTO purchased by Trend Offset Printing. The equipment will reduce the concentration of hydrocarbons measured at the discharge of the stack of the equipment as compared to the concentration of hydrocarbons measured at the inlet of equipment by an average of 95% or down to 25 ppm as C_1 in the stack. The equipment must be operated within design limit of 1500°F minimum.

The unit is designed for 95% thermal efficiency.

Sincerely,

Dave James

1175 N. VAN HORNE WAY, ANAHEIM CA 92806-2506
TEL: (714) 632-9801- FAX: (714) 632-9268
www.adwestusa.com

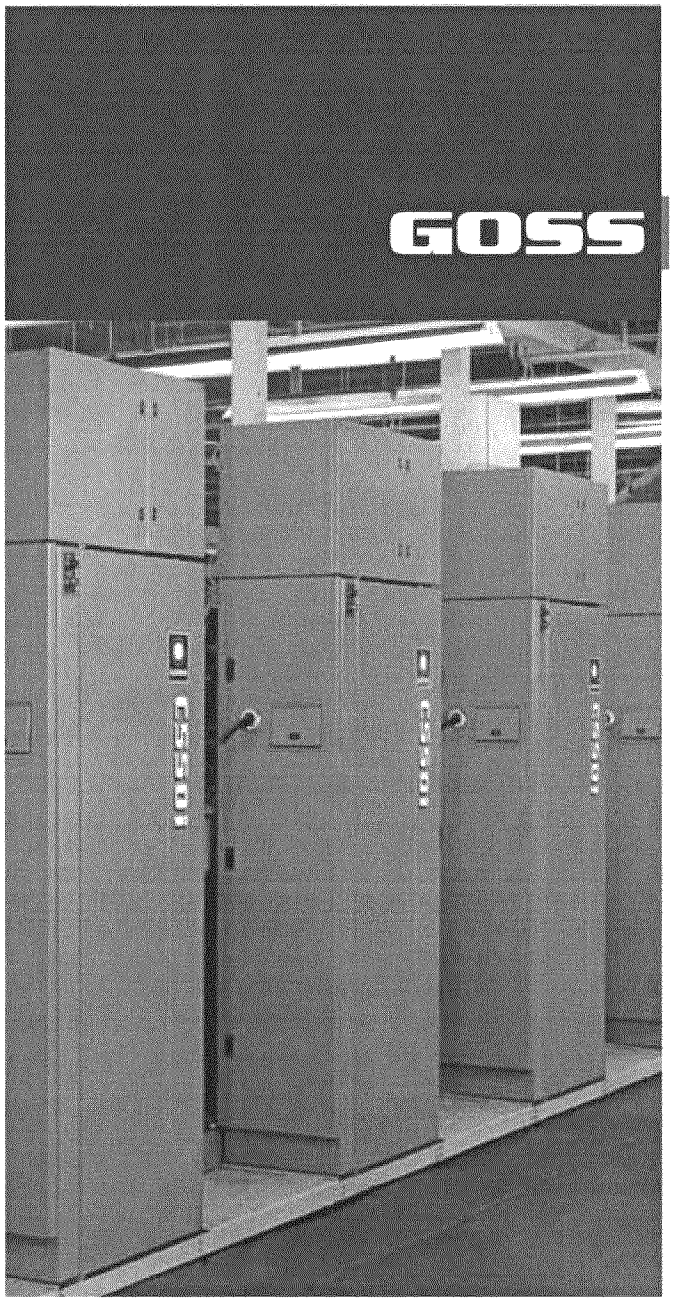

GOSS C500

Delivering high productivity, efficient makereadies and superior print quality, the Goss C500™ system is the market leading small-format horizontal web insert press in North America. These systems are designed for around-the-clock reliability at up to 65,000 impressions per hour and provide distinct competitive advantages for printers of national and local advertising inserts.

Features

- Printing speeds up to 65,000 impressions per hour
- Flexible page count tabloid and broadsheet
- Durable unit construction; base weight 20,000 lbs.
- 2:1 Cylinder configuration with plate cocking
- 3 Form inking
- 12-Roll continuous inker with micrometric transfer
- Choice of spiral brush or spray dampening system
- Solid stainless steel plate and blanket cylinders
- 2 1/8" / 54 mm stainless steel cylinder bearers
- High speed quarter folder
- Choice of auxiliary equipment
- Segmented undershot ink fountain with RIP presetting
- PLC controls
- High-net productivity
- Goss DigiRail™ digital inking option

	C540 / C548 / C550	C500E
Cut-off length	21"	19.5"
Web width	40" / 48" / 50"	46"
Maximum output	65,000 iph / 1,895 fpm	65,000 iph / 1,760 fpm
Folder	C5 & C700	C5 & C700
Maximum ribbon width	36"	36"
Minimum ribbon width	8.5"	8.5"

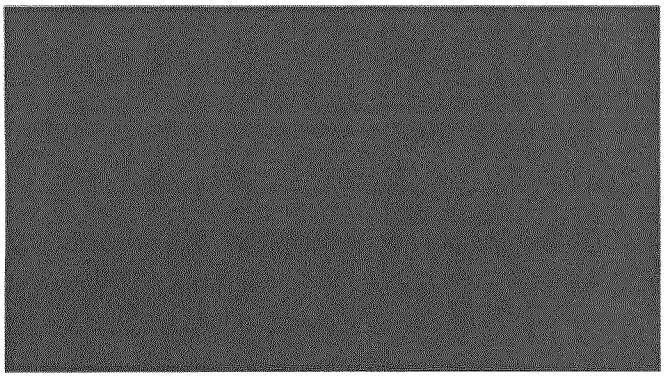

Email: info@gossinternational.com
Web: www.gossinternational.com

All trademarks identified are trademarks of Goss International Corporation
Published by Goss International Corporation

Rev9.4/08

KINEDIZER® LE (oxidizer)

High capacity low NOx gas burners

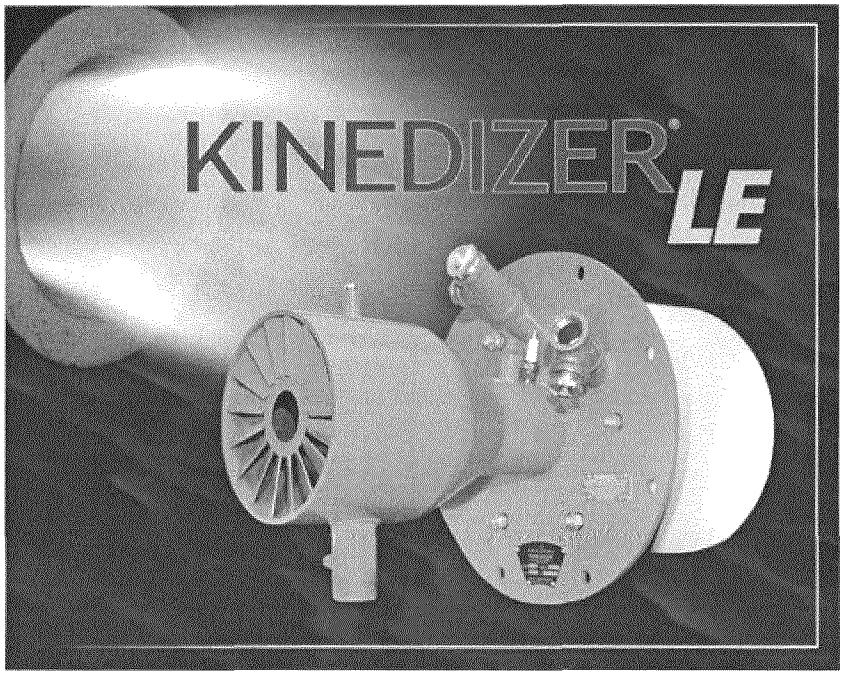

- Field proven low emissions. State-of-the-art low NOx firing - adjustable for application flexibility
- Lower NOx and less excess air than standard KINEDIZER® burners
- Rugged design for oxidizers, process heaters, kilns, furnaces, dryers, waste incineration and other high temperature applications
- Available in a wide range of capacities, each with turndown as high as 20:1
- Burns natural gas, propane or other fuel gases
- Provides excellent stirring and mixing with its medium velocity exhaust
- Accepts preheated and vitiated combustion air

Maxon reserves the right to alter specifications and data without prior notice.
© 2013 Copyright Maxon Corporation. All rights reserved.

MAXON
A Honeywell Company

Product description

The KINEDIZER® LE burner is a nozzle-mix, medium-velocity design. Using advanced mixing technology, the burner produces low emissions with very little excess air. Ruggedly built with a reinforced refractory block and steel burner body and nozzle, it burns natural gas, propane or other gaseous fuels. Combustion air is supplied with an external blower. Accurate air and fuel modulation can be accomplished by the MAXON MICRO-RATIO® valve or SMARTLINK® technology.

Combustion air can range from 21% down to 17% O_2 if preheated and from ambient temperature up to 660°F (max. 800°F) on request. Maximum chamber temperature is 2000°F .

Turndown up to 20:1.

Contact MAXON for correct application details.

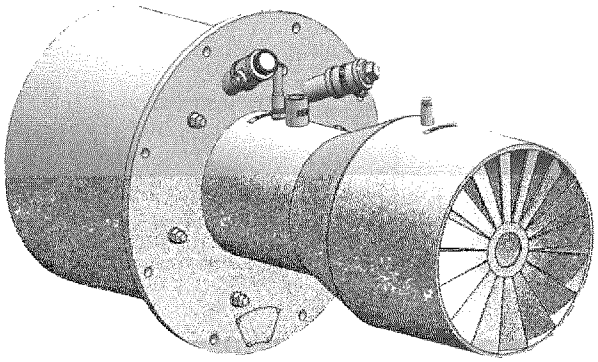

View of KINEDIZER® LE burner

Available KINEDIZER® LE sizes

Typical burner data

Fuel: natural gas at 60°F with 1000 Btu/ft^3 (st) HHV - sg = 0.6 [1]
Combustion air: 60°F - 21% O_2 - 50% humidity - sg = 1.0 [1]
Stated pressures are indicative. Actual pressures are a function of air humidity, altitude, type of fuel and gas quality.

KINEDIZER® LE size		1-1/2"	3"	4"	6"	8"	10"	12"	14"	16"
Maximum capacity @ n=1.3	MBtu/h	0.54	2.4	4.6	9.8	15.8	24.3	34	55	75
Air flow at maximum capacity	scfm	110	500	950	2030	3280	5050	7070	11400	15600
Advised pilot capacity	MBtu]/h	0.1	0.2	0.2	0.3	0.5	1.0	1.0	1.0	1.0
Combustion air pressure @ inlet [2] [3]	"wc	28	32	32	32	32	32	32	32	30
Natural gas inlet pressure differential	"wc	55	52	42	64	40	75	76	120	220

[1] sg (specific gravity) = relative density to air (density air = 0.0763 lb/ft^3 (st))
[2] Combustion air pressure required at full capacity, relative to process. Add 5% safety margin + piping & control valve pressure drops for blower sizing.
[3] At minimum capacity 0.1" wc absolute minimum air pressure

Maxon reserves the right to alter specifications and data without prior notice.
© 2013 Copyright Maxon Corporation. All rights reserved.

Applications

KINEDIZER® LE burners may be applied to a variety of applications for low to ultra-low emissions. The rugged design of the KINEDIZER® LE burner is ideal for oxidizers and incinerators, process heaters, kilns, furnaces, and other high temperature applications.

In low temperature air heating applications (less than 1400°F), a user-supplied discharge sleeve is needed. Contact MAXON for recommended discharge sleeve size and installation instructions.

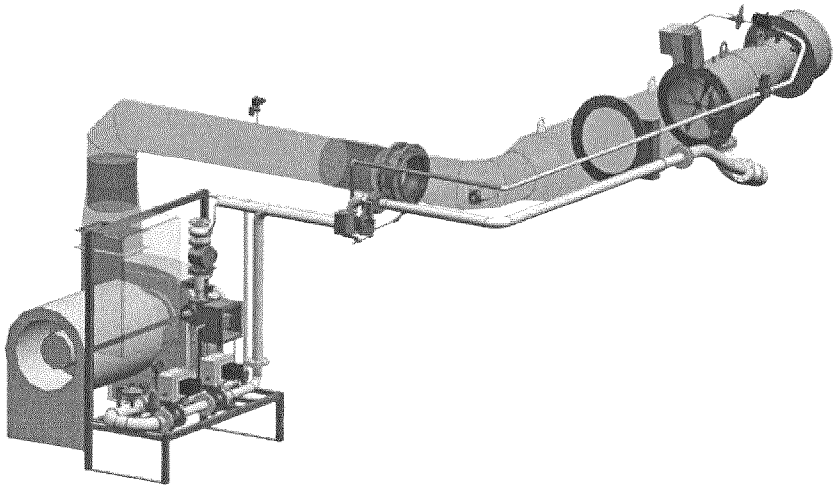

KINEDIZER® LE burner with pipe train, control panel and combustion air blower

Maxon reserves the right to alter specifications and data without prior notice.
© 2013 Copyright Maxon Corporation. All rights reserved.

Dimensions and weights

1) Optional air inlet flange
2) 1/4" NPT gas test connection
3) Main gas inlet
4) Standard block or block with sleeve option

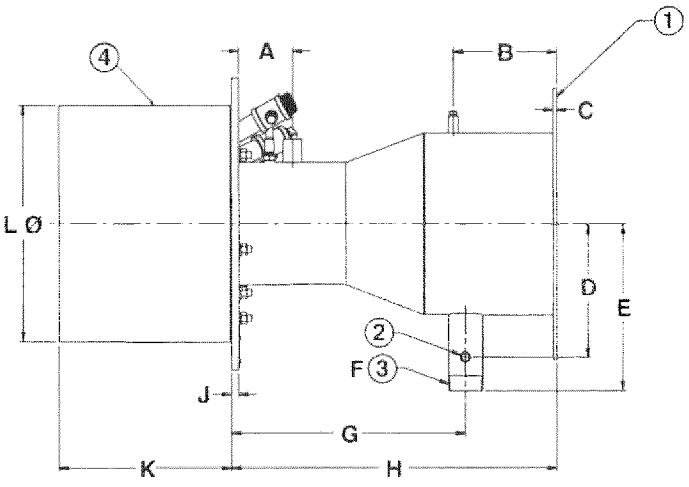

Dimensions in inches unless stated otherwise

Burner size	A	B	C	D	E	F Ø NPT	G	H	J	K	L Ø	Weight lbs
1-1/2"	2.0	1.97	0.25	3.6	4.6	1/2"	5.7	7.86	0.25	9.5	8.6	66
3"	2.99	3.12	0.25	4.69	6.25	1-1/4"	6.94	10.06	0.375	9.5	10.4	100
4"	2.31	3.84	0.25	5.94	7.5	1-1/2"	11.24	15.09	0.375	9.5	12.9	165
6"	3.3	5.0	0.25	7.81	9.38	1-1/2"	14.76	19.75	0.5	12.1	14.6	265
8"	3.81	7.2	0.25	9.35	11.69	2"	16.42	22.79	0.5	12.1	16.6	331
10"	3.81	7.2	0.25	11.97	14.31	2"	23.86	29.71	0.5	12.1	18.7	662
12"	3.81	7.0	0.25	12.66	15.25	3" [1]	31.38	42.50	0.5	12.1	21.0	550
14"	3.81	11.12	0.25	13.66	16.25	3" [1]	37.08	48.21	0.5	12.0	23.9	950
16"	3.81	11.12	0.25	16.66	19.25	3" [1]	46.08	57.25	0.5	15.2	26.75	1030

[1] 3" ANSI raised face 150# slip on flange connection

Typical emissions

The KINEDIZER® LE burner is capable of low NOx when given excess air, typically 20-30% at high fire.

The same burner, when adjusted for on-ratio operation, will give low CO and high thermal efficiency. With flue gas recirculation, the emissions and efficiency can be further improved.

Read "Specifications of KINEDIZER® LE burners" for more detailed information on KINEDIZER® LE burners.

Maxon reserves the right to alter specifications and data without prior notice.
© 2013 Copyright Maxon Corporation. All rights reserved.

OVENPAK® LE Burners (Oven)

Low emissions, high performance natural gas burners



- Burns any clean fuel gas
- Operates on low gas supply pressures
- Provides clean combustion with low NOx and CO levels
- Compact burner design provides quick and easy installation
- Balanced pressure design for easy commissioning and adjustment
- Visible ignition action speeds commissioning and maintenance
- High turndown for exceptional process control

Maxon reserves the right to alter specifications and data without prior notice.
© 2013 Copyright Maxon Corporation. All rights reserved.

MAXON
A Honeywell Company

Product description

OVENPAK® LE burners are nozzle-mixing gas burners for many industrial, direct-fired applications where clean combustion and high turndown are required. The burners are simple and versatile for use on a variety of heating applications. The gas flows through the nozzle, then along the inside of the burner cone where combustion air is rapidly mixed with the fuel. This produces a very wide turndown range and a highly stable flame under a variety of operating conditions.

Fuel and air pressures for the burner are balanced (always equal). This unique design provides simple operation and adjustment throughout the operational range of the burner. The balanced pressure feature also makes the OVENPAK® LE Burner resistant to firing chamber pressure fluctuations.

The OVENPAK® LE burner is available in several versions. Packaged burners contain integral combustion air blower and linked air and fuel control valves to maintain the gas-air ratio over the full operating range. EB versions include an internal air control valve designed to be connected to an external fuel control valve. The EB version may also be ordered with no control valves.

The OVENPAK® LE burner includes a combustion air blower with non-sparking paddle wheel-type impeller, pilot, spark ignitor, stainless steel discharge sleeve, mixing cone, and provision for a flame sensor.

1) Air control valve
2) High precision connecting linkage
3) Fuel control valve
4) Access cover to tuning screw
5) Tuning screw

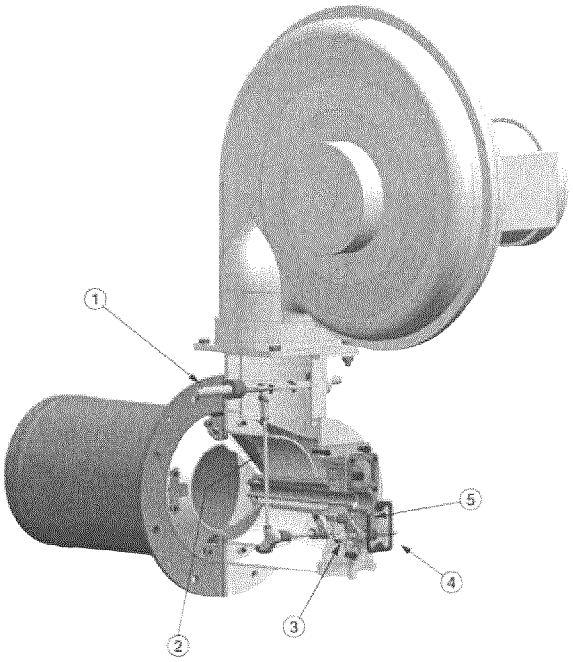

Maxon reserves the right to alter specifications and data without prior notice
© 2013 Copyright Maxon Corporation. All rights reserved.

Available OVENPAK® LE sizes

Typical burner data
Fuel: natural gas at 60°F with 1000 Btu/ft³ HHV - sg = 0.6 [1]
Combustion air: 60°F - 21% O_2 - 50% rel. humidity - sg = 1.0 [1]
Stated pressures are indicative. Actual pressures are a function of air humidity, altitude, type of fuel, and gas quality.

		13 / 15 OP-LE	25 OP-LE	30 / 35 OP-LE	40 / 45 OP-LE	OP-LE EB40	OP-LE EB65
Maximum capacity [2]	(MBtu/h)	1.6	2.5	3.5	4.5	4.0	6.5
Minimum capacity [3]	(Btu/h)	32,000	50,000	70,000	90,000	40,000	65,000
Maximum turndown [4]		50:1	50:1	50:1	50:1	100:1	100:1

[1] sg (specific gravity) = relative density to air (density air =0.0763 lb/ft³(st))
[2] Capacity displayed assumes blower operation on 60Hz electrical supply. Gross output will be reduced by 17% if operated on 50Hz.
[3] Minimum capacity may be affected by fuel and application parameters.
[4] Turndown noted requires proper selection of gas regulators and proper sizing of fuel supply train.

Typical applications

OVENPAK® LE burner applications may include:

- air heating in ovens and dryers
- paint finishing lines
- paper machines
- textile machines
- food baking ovens
- coffee roasters
- grain dryers
- other air heaters

Maxon reserves the right to alter specifications and data without prior notice.
© 2013 Copyright Maxon Corporation. All rights reserved.

Dimensions and weights

1) Air pressure switch connection
2) Pilot gas inlet
3) Gas inlet
4) Blower
5) Flame sensor connection

Packaged models

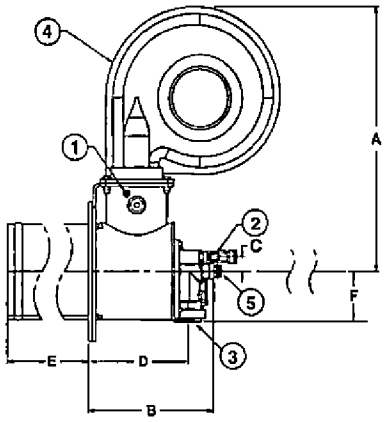

EB models

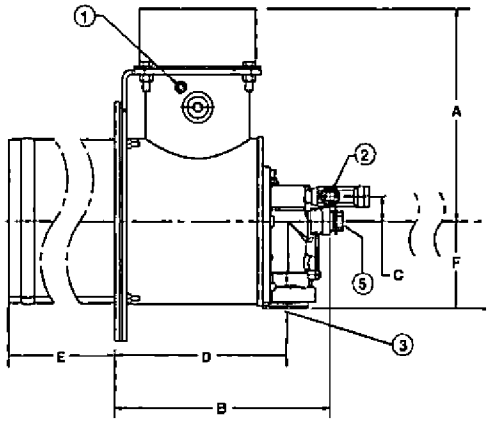

Dimensions in inches unless stated otherwise									
Burner Model	A	B	C	D	E Standard	E Short	E Refractory lined	F	Weight lbs
13	22.87	11.10	1.25	8.94	12.0	4.6	7.875	4.39	101
15	26.70	11.10	1.25	8.94			7.875	4.39	101
25	26.70	11.10	1.25	8.94			7.875	4.39	101
30	27.65	12.59	1.38	10.08	16.0	8.75	7.875	5.44	180
35	27.86	12.59	1.38	10.08			7.875	5.44	180
40	27.86	12.59	1.38	10.08			7.875	5.44	180
45	29.06	12.59	1.38	10.08			7.875	5.44	180
EB40	10.69	11.10	1.25	8.94	12.0	4.6	7.875	4.39	45
EB65	11.62	12.59	1.38	10.08	16.0	8.75	7.875	5.44	65

Typical emissions

OVENPAK® LE Burners produce low levels of NOx and CO over a wide range of operation without sacrificing turndown or operational flexibility. Burner emissions can be controlled by adjusting the regulator at high fire position, and by adjusting the ratio tuning screw at lower firing position.

The OVENPAK® LE utilizes advanced mix combustion to effectively suppress the formation of prompt NOx. CO emissions are held at low levels through effective ratio control with minimal excess air.

Exact emissions performance may vary in your application. Contact MAXON for information on installation-specific estimates and guaranteed values. No guarantee of emissions is intended or implied without specific, written guarantee from MAXON.

Read "Specifications of OVENPAK® LE burners" for more detailed information on OVENPAK® LE burners.

Maxon reserves the right to alter specifications and data without prior notice.
© 2013 Copyright Maxon Corporation. All rights reserved.

Specifications of OVENPAK® LE burners

OVENPAK® LE 13 burner

Typical burner data Fuel: natural gas at 60°F with 1000 Btu/ft³ HHV - sg = 0.6 [1] Combustion air: 60°F - 21% O_2 - 50% rel. humidity - sg = 1.0 [1] Stated pressures are indicative. Actual pressures are a function of air humidity, altitude, type of fuel, and gas quality.		
Maximum capacity [2]	Btu/h	1,350,000
Minimum capacity [3]		27,000
Maximum turndown		50:1
High fire gas pressure differential [4]	"wc	6
Combustion air pressure differential		6
Fan motorpower	hp	0.5
Pilot capacity [5]	Btu/h	27,000
Approximate inlet gas pressure required	"wc	7.6

[1] sg (specific gravity) = relative density to air (density air =0.0763 lb/ft³(st))
[2] Capacity displayed assumes blower operation on 60Hz electrical supply. Gross output will be reduced by 17% if operated on 50Hz. Fuel and air pressures should be reduced by 30% while motorpower will reduce 40% with 50Hz operation.
[3] Minimum capacity may be affected by fuel and application parameters.
[4] Gas pressure displayed for natural gas or propane. Propane pressures shown require use of optional propane nozzle.
[5] Pilot gas pressure at adjustable gas orifice should be 4-8" wc .

OVENPAK® LE 15 burner

Typical burner data Fuel: natural gas at 60°F with 1000 Btu/ft³ HHV - sg = 0.6 [1] Combustion air: 60°F - 21% O_2 - 50% rel. humidity - sg = 1.0 [1] Stated pressures are indicative. Actual pressures are a function of air humidity, altitude, type of fuel, and gas quality.		
Maximum capacity [2]	Btu/h	1,600,000
Minimum capacity [3]		32,000
Maximum turndown		50:1
High fire gas pressure differential [4]	"wc	8.5
Combustion air pressure differential		8.5
Fan motorpower	hp	1.5
Pilot capacity [5]	Btu/h	32,000
Approximate inlet gas pressure required	"wc	10.6

[1] sg (specific gravity) = relative density to air (density air =0.0763 lb/ft³(st))
[2] Capacity displayed assumes blower operation on 60Hz electrical supply. Gross output will be reduced by 17% if operated on 50Hz. Fuel and air pressures should be reduced by 30% while motorpower will reduce 40% with 50Hz operation.
[3] Minimum capacity may be affected by fuel and application parameters.
[4] Gas pressure displayed for natural gas or propane. Propane pressures shown require use of optional propane nozzle.
[5] Pilot gas pressure at adjustable gas orifice should be 4-8" wc .

Maxon reserves the right to alter specifications and data without prior notice.
© 2013 Copyright Maxon Corporation. All rights reserved.

OVENPAK® LE 25 burner

Typical burner data Fuel: natural gas at 60°F with 1000 Btu/ft³ HHV - sg = 0.6 [1] Combustion air: 60°F - 21% O_2 - 50% rel. humidity - sg = 1.0 [1] Stated pressures are indicative. Actual pressures are a function of air humidity, altitude, type of fuel, and gas quality.		
Maximum capacity [2]	Btu/h	2,500,000
Minimum capacity [3]		50,000
Maximum turndown		50:1
High fire gas pressure differential [4]	"wc	8.4
Combustion air pressure differential		8.4
Fan motorpower	hp	2
Pilot capacity [5]	Btu/h	50,000
Approximate inlet gas pressure required	"wc	14.0

[1] sg (specific gravity) = relative density to air (density air =0.0763 lb/ft³(st))
[2] Capacity displayed assumes blower operation on 60Hz electrical supply. Gross output will be reduced by 17% if operated on 50Hz. Fuel and air pressures should be reduced by 30% while motorpower will reduce 40% with 50Hz operation.
[3] Minimum capacity may be affected by fuel and application parameters.
[4] Gas pressure displayed for natural gas or propane. Propane pressures shown require use of optional propane nozzle.
[5] Pilot gas pressure at adjustable gas orifice should be 4-8" wc .

OVENPAK® LE 30 burner

Typical burner data Fuel: natural gas at 60°F with 1000 Btu/ft³ HHV - sg = 0.6 [1] Combustion air: 60°F - 21% O_2 - 50% rel. humidity - sg = 1.0 [1] Stated pressures are indicative. Actual pressures are a function of air humidity, altitude, type of fuel, and gas quality.		
Maximum capacity [2]	Btu/h	3,150,000
Minimum capacity [3]		63,000
Maximum turndown		50:1
High fire gas pressure differential [4]	"wc	8.8
Combustion air pressure differential		8.8
Fan motorpower	hp	3
Pilot capacity [5]	Btu/h	63,000
Approximate inlet gas pressure required	"wc	10.4

[1] sg (specific gravity) = relative density to air (density air =0.0763 lb/ft³(st))
[2] Capacity displayed assumes blower operation on 60Hz electrical supply. Gross output will be reduced by 17% if operated on 50Hz. Fuel and air pressures should be reduced by 30% while motorpower will reduce 40% with 50Hz operation.
[3] Minimum capacity may be affected by fuel and application parameters.
[4] Gas pressure displayed for natural gas or propane. Propane pressures shown require use of optional propane nozzle.
[5] Pilot gas pressure at adjustable gas orifice should be 4-8" wc .

Maxon reserves the right to alter specifications and data without prior notice.
© 2013 Copyright Maxon Corporation. All rights reserved.

OVENPAK® LE 35 burner

Typical burner data Fuel: natural gas at 60°F with 1000 Btu/ft³ HHV - sg = 0.6 [1] Combustion air: 60°F - 21% O_2 - 50% rel. humidity - sg = 1.0 [1] Stated pressures are indicative. Actual pressures are a function of air humidity, altitude, type of fuel, and gas quality.		
Maximum capacity [2]	Btu/h	3,500,000
Minimum capacity [3]		70,000
Maximum turndown		50:1
High fire gas pressure differential [4]	"wc	10.5
Combustion air pressure differential		10.5
Fan motorpower	hp	3
Pilot capacity [5]	Btu/h	70,000
Approximate inlet gas pressure required	"wc	13.0

[1] sg (specific gravity) = relative density to air (density air =0.0763 lb/ft³(st))
[2] Capacity displayed assumes blower operation on 60Hz electrical supply. Gross output will be reduced by 17% if operated on 50Hz. Fuel and air pressures should be reduced by 30% while motorpower will reduce 40% with 50Hz operation.
[3] Minimum capacity may be affected by fuel and application parameters.
[4] Gas pressure displayed for natural gas or propane. Propane pressures shown require use of optional propane nozzle.
[5] Pilot gas pressure at adjustable gas orifice should be 4-8" wc .

OVENPAK® LE 40 burner

Typical burner data Fuel: natural gas at 60°F with 1000 Btu/ft³ HHV - sg = 0.6 [1] Combustion air: 60°F - 21% O_2 - 50% rel. humidity - sg = 1.0 [1] Stated pressures are indicative. Actual pressures are a function of air humidity, altitude, type of fuel, and gas quality.		
Maximum capacity [2]	Btu/h	4,000,000
Minimum capacity [3]		80,000
Maximum turndown		50:1
High fire gas pressure differential [4]	"wc	7
Combustion air pressure differential		7
Fan motorpower	hp	3
Pilot capacity [5]	Btu/h	80,000
Approximate inlet gas pressure required	"wc	10.0

[1] sg (specific gravity) = relative density to air (density air =0.0763 lb/ft³(st))
[2] Capacity displayed assumes blower operation on 60Hz electrical supply. Gross output will be reduced by 17% if operated on 50Hz. Fuel and air pressures should be reduced by 30% while motorpower will reduce 40% with 50Hz operation.
[3] Minimum capacity may be affected by fuel and application parameters.
[4] Gas pressure displayed for natural gas or propane. Propane pressures shown require use of optional propane nozzle.
[5] Pilot gas pressure at adjustable gas orifice should be 4-8" wc .

Maxon reserves the right to alter specifications and data without prior notice.
© 2013 Copyright Maxon Corporation. All rights reserved.

OVENPAK® LE 45 burner

Typical burner data Fuel: natural gas at 60°F with 1000 Btu/ft³ HHV - sg = 0.6 [1] Combustion air: 60°F - 21% O_2 - 50% rel. humidity - sg = 1.0 [1] Stated pressures are indicative. Actual pressures are a function of air humidity, altitude, type of fuel, and gas quality.		
Maximum capacity [2]	Btu/h	4,480,000
Minimum capacity [3]		90,000
Maximum turndown		50:1
High fire gas pressure differential [4]	"wc	9.2
Combustion air pressure differential		9.2
Fan motorpower	hp	5
Pilot capacity [5]	Btu/h	90,000
Approximate inlet gas pressure required	"wc	15.0

[1] sg (specific gravity) = relative density to air (density air = 0.0763 lb/ft³(st))
[2] Capacity displayed assumes blower operation on 60Hz electrical supply. Gross output will be reduced by 17% if operated on 50Hz. Fuel and air pressures should be reduced by 30% while motorpower will reduce 40% with 50Hz operation.
[3] Minimum capacity may be affected by fuel and application parameters.
[4] Gas pressure displayed for natural gas or propane. Propane pressures shown require use of optional propane nozzle.
[5] Pilot gas pressure at adjustable gas orifice should be 4-8" wc .

OVENPAK® LE EB40 and EB65 burners

Typical burner data Fuel: natural gas at 60°F with 1000 Btu/ft³ HHV - sg = 0.6 [1] Combustion air: 60°F - 21% O_2 - 50% rel. humidity - sg = 1.0 [1] Stated pressures are indicative. Actual pressures are a function of air humidity, altitude, type of fuel, and gas quality.			
		EB40	EB65
Chamber pressure	"wc	-0.5	-0.5
Maximum capacity	Btu/h	4,000,000	6,500,000
Minimum capacity [2]		40,000	40,000
Maximum turndown		100:1	100:1
High fire gas pressure differential [3]	"wc	22.5	19.5
Combustion air pressure differential [6]		22.5	19.5
Combustion air volume [4]	cfm	950	1,545
Pilot capacity [5]	Btu/h	65,000	65,000
nlet air pressure differential [7]	"wc	27.0	21.0
Approximate inlet gas pressure required [8]	"wc	38	27

[1] sg (specific gravity) = relative density to air (density air =0.0763 lb/ft³(st))
[2] Minimum capacity may be affected by fuel and application parameters.
[3] Gas pressure displayed for natural gas or propane. Propane pressures shown require use of optional propane nozzle.
[4] Combustion air defined as standard temperature and pressure.
[5] Pilot gas pressure at adjustable gas orifice should be 4-8" wc .
[6] Combustion air differential pressure to be measured between burner test connection and combustion chamber
[7] Inlet combustion air differential pressure to be measured between burner inlet and combustion chamber
[8] For EB versions, valid only for the case where the burner has internal controls

Maxon reserves the right to alter specifications and data without prior notice.
© 2013 Copyright Maxon Corporation. All rights reserved.

Materials of construction

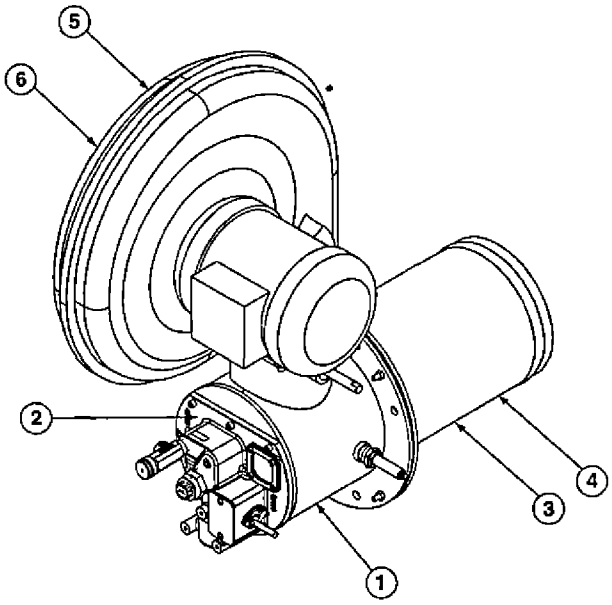

Item number	Burner part	Material
1	Housing	1010 steel (1.1121)
2	Back plate	Cast iron
3	Mixing cone (inside discharge sleeve)	310 Stainless steel (1.4841)
4	Nozzle (inside discharge sleeve)	Cast iron
5	Impeller (inside fan case)	Aluminum
6	Fan case	Aluminum / steel

Maxon reserves the right to alter specifications and data without prior notice.
© 2013 Copyright Maxon Corporation. All rights reserved.

Selection criteria

OVENPAK® LE burner versions

The OVENPAK® LE burner is a nozzle mixing burner for use on a wide variety of industrial applications. The burner utilizes advanced, rapid mixing to produce low levels of NOx and CO while maintaining high turndown and operational flexibility.

The OVENPAK® LE burner is available in several versions. Packaged burners contain an integral combustion air blower and internally linked control valves to maintain the gas-air ratio over the full operating range. EB burners are equipped with an air inlet adapter and are designed for remote blower applications. EB versions include independent internal fuel and air valves designed to be connected externally to a parallel positioning fuel air ratio control system. The EB version may also be ordered with no internal fuel and air valves.

The OVENPAK® LE burner includes a combustion air blower with non-sparking paddle wheel-type impeller, pilot, spark ignitor, stainless steel discharge sleeve, mixing cone and provision for a flame safeguard sensor.

OVENPAK® LE burners feature a unique balanced pressure design with equal fuel pressures and air pressures. This feature provides easy set-up and verification. In addition, balanced supply pressures provide resistance to fluctuations or upsets in the firing chamber pressure. During upsets, the burner's ratio will be maintained for stability and emissions control.

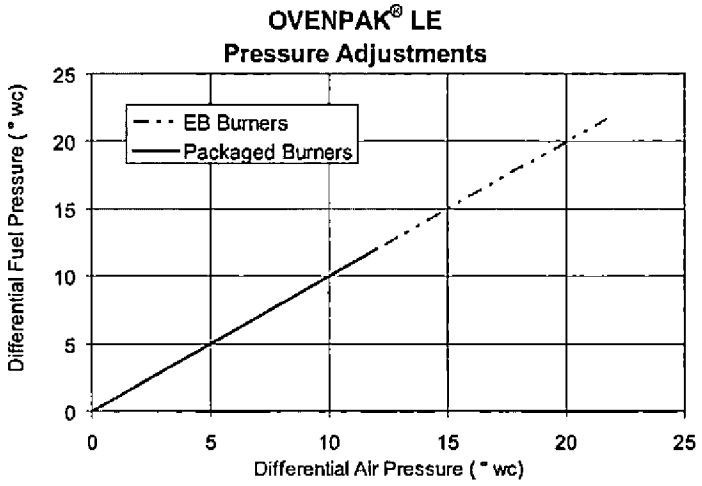

Blower orientation

Blower should be positioned only with the motor parallel to the burner-oven flange. Altering blower position is not recommended as turndown and emissions will be affected. See illustrations under heading "Dimensions and weights" for proper orientation.

Pipe train

For proper air-to-fuel ratio, do not exceed 4" wc pressure drop between the burner inlet and the regulator. Higher pressure drops will impact turndown and emissions.

Application details

OVENPAK® LE burners can be used in all direct fired air heating applications. It combines flexibility and stability with high turndown and low NOx/CO emissions. It can be used in all air heating applications that require low NOx firing and allow excess combustion air. Consult installation instructions under "Burner mounting" for mounting and insulating requirements.

OVENPAK® LE burners can be fired into tubes up to 8500 Btu/h/in^2 of tube cross sectional area. The OVENPAK® LE may also be used for indirect applications up to 1500° F.

Maxon reserves the right to alter specifications and data without prior notice.
© 2013 Copyright Maxon Corporation. All rights reserved.

Maximum capacities

All OVENPAK® LE burners can be fired at higher than maximum capacities if sufficient combustion air and fuel gas is provided to the burner. EB burners may be overfired up to 15% over cataloged capacities with an adequate combustion air blower. Burner emissions will be affected by overfiring. Fuel pressure will increase in kind to maintain balance pressure design on EB burners.

Process back pressure

Standard packaged OVENPAK® LE burners with integrated fan can accept static chamber pressures between -5" wc and +5" wc. The unique balanced pressure design provides resistance to unstable application pressures. During system upsets, the burner's output capacity will be impacted but the air-fuel ratio and stability will be maintained. The capacity of packaged burners will be affected by chamber pressure.

EB burners with external valves retain the balanced pressure design at the burner nozzles. Process pressures for EB burners should be limited to +5 psi to -5 psi. Care should be taken when selecting external air and fuel valves to closely match the pressure drops at full flow.

Process temperature

The construction of the burner allows operation in all applications with process temperatures from ambient up to 1000° F.

Piloting & ignition

All OVENPAK® LE burners are equipped with a self-piloted design. Pilots shall be used only for ignition of the main flame (interrupted). Use of a standing (continuous) pilot will reduce burner turndown and negatively impact emissions. Use minimally 5000 V/200 VA ignition transformers for sparking of the spark ignitor. Optional ignition equipment for hazardous locations is available as well as high energy ignitors for direct ignition.

Start the burner at low fire settings only. Direct spark ignition of standard OVENPAK® LE burners is possible. Ignitor should spark to the cone only. Arc should be easily visible through the observation window for verification of ignition and maintenance.

Locate one pilot gas valve as close as possible to the pilot burner gas inlet to have fast ignition of the pilot burner.

Ratio control

Burner should be modulated between low and high fire position settings only. Overtraveling can damage internal linkage. Low and high fire stops are intended as visual indicators only. They should not be used as the low or as the high fire hard stops.

Packaged burners with internal linkage should have no more than 4" wc pressure drop in the fuel train from the regulator to burner inlet.

OVENPAK® LE burners may operate with excess air levels of 5-40%. Best NOx emissions will be produced with 35-40% excess air. CO emissions will be influenced by ratio and a variety of other factors. See "Expected emissions" for more information.

Typical ignition sequence

- Pre-purge of burner and installation, according to the applicable codes and the installation's requirements.
- Combustion air control valve shall be in the minimum position to allow minimum combustion air flow to the burner.
- Pre-ignition (typically 2 seconds sparking in air).
- Open pilot gas and continue to spark the ignitor (typically 5 seconds).
- Stop sparking, continue to power the pilot gas valves and start flame check. Trip burner if no flame from here on.
- Check pilot flame stability (typical 5 seconds to prove stable pilot).
- Open main gas valves and allow enough time to have main gas in the burner (typical 5 seconds + time required to have main gas in the burner).
- Close the pilot gas valves.
- Release to modulation (allow modulation of the burner).

Above sequence shall be completed to include all required safety checks during the start-up of the burner (process & burner safeties).

Maxon reserves the right to alter specifications and data without prior notice.
© 2013 Copyright Maxon Corporation. All rights reserved.

Flame supervision

OVENPAK® LE flames shall be supervised by flame scanners or flame rods allowing verification of both pilot flame and main flame. (It is not possible to distinguish main and pilot flame.)

Scanners are mounted on the burner back plate and look through the fuel nozzle.

Pay attention to possible pick-up of strange flames (if any in the furnace).

Flame development

The OVENPAK® LE creates stout, thoroughly mixed flames with short lengths. Burner flames remain consistent across most burner sizes.

Dimensions in inches unless stated otherwise		
Burner size	Flame diameter	Flame length [1]
13	9	20
15		
25		
30	11	24
35		
40		
45		
EB40	9	20
EB65	11	24

[1] Flame length indicated is measured from the end of the discharge sleeve.

Maxon reserves the right to alter specifications and data without prior notice.
© 2013 Copyright Maxon Corporation. All rights reserved.

Cross velocities

Cross velocities up to 3000 ft/min can be allowed over the OVENPAK® LE flame. Contact MAXON for assistance for cross velocity over the flame in excess of 3000 ft/min, or for processes with high moisture content.

Combustion air control & piping

OVENPAK® LE EB burners require combustion air control valves with high turndown (to guarantee correct air flow at minimum capacity). Air control valves shall be properly sized. Typically, the air control valve diameter shall be smaller than the burner air inlet. Combustion air piping to the burner shall be done in such a way that the air flow to the burner will not disturb the flame. One diameter straight pipe length is recommended at the blower air inlet. Location of air control valves directly on the burner inlet is not possible.

Packaged burners and fans will be shipped disassembled. Blower orientation other than depicted under "Dimensions and weights" is not recommended.

Fuels

Standard OVENPAK® LE burners are designed for low NOx firing of natural gas only. Optional versions are available to fire propane/LPG. When firing propane, butane or other alternate fuels, higher NOx will be produced. Contact MAXON for expected influence on emissions.

Expected emissions

Packaged burner emissions can be controlled by adjusting the regulator at high fire position, and by adjusting the tuning screw at lower firing position. The fine tuning screw is located below the metal access plate under the viewport at the backplate of each burner. This screw is only intended to allow fine tuning of the NOx and CO production at midfire. No more than 2 turns of the screw should be utilized in either direction. EB burners do not include an internal air and gas linkage or a tuning screw.

Typical NOx for OVENPAK® LE burners firing natural gas with 40% excess air is approximately 1/2 to 1/3 the NOx of conventional burners.

CO highly depends on the installation's lay-out and can be reduced if sufficient dwell time after the flame is allowed. CO can generally be controlled below most known standards and regulatory requirements. Consult MAXON for correct application information.

Exact emissions performance may vary in your application. Contact MAXON for information on installation-specific estimates and guaranteed values. No guarantee of emissions is intended or implied without specific, written guarantee from MAXON.

Discharge sleeves

Discharge sleeve should be selected based on the process conditions. Several materials and length configurations are available.

Discharge sleeves	Discharge sleeve material	Application conditions
Standard	309 / 310 SS (1.4828 / 1.4841)	<700° F direct fired
High temperature sleeve (optional)	330 SS (1.4333)	700° F-1000° F direct fired
Short sleeve (optional)	310 SS (1.4841)	<1000° F indirect fired
Refractory lined sleeve (optional)	310 SS (1.4841) & castable refractory	up to 1500°F indirect fired

Maxon reserves the right to alter specifications and data without prior notice.
© 2013 Copyright Maxon Corporation. All rights reserved.

Dimensions and weights

OVENPAK® LE packaged burner sizes 13 - 25

1) Air test port 1/4" NPT
2) Gas test port 1/4" NPT
3) Flame rod or flame scanner (optional)
4) Spark ignitor
5) Spark ignitor removal
6) Air inlet test port 1/4" NPT
7) Pilot gas inlet 3/8" NPT
8) Gas inlet
9) Removal of optional flame rod
10) Tuning screw

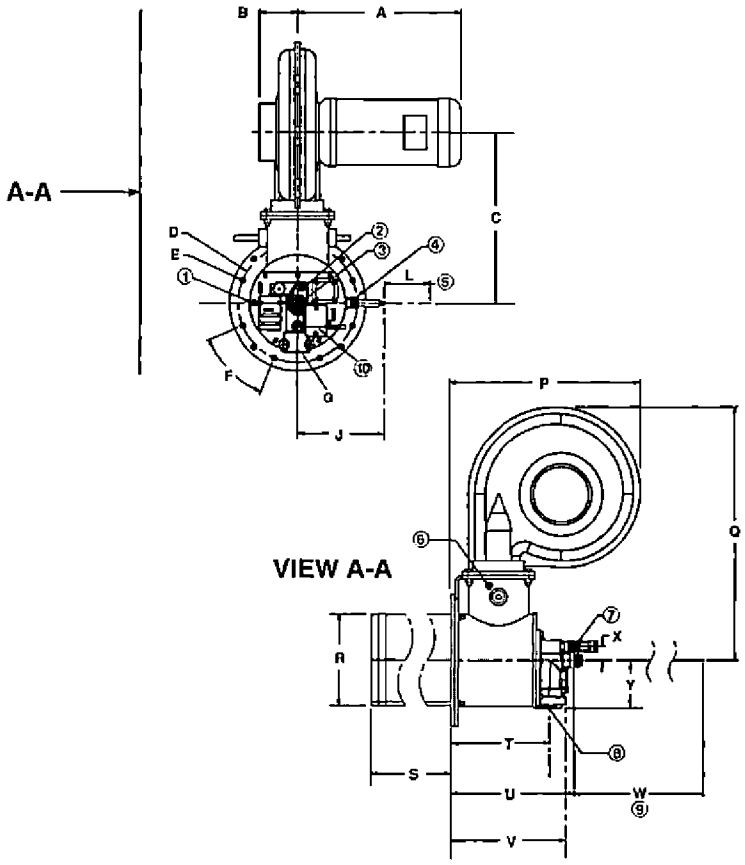

Dimensions in inches unless stated otherwise										
Model	A	B	C	D	E	F	G	J	L	P
13	14.38	3.38	15.00	10.5	0.475	45°	1-1/4" NPT	7.65	4.0	17.01
15	14.1	3.38	16.56	10.5	0.475	45°	1-1/4" NPT	7.65	4.0	20.67
25	12.50	3.63	16.56	10.5	0.475	45°	1-1/4" NPT	7.65	4.0	20.67

Dimensions in inches unless stated otherwise												
Model	Q	R	S Std.	S Short	S Ref. lined	T	U	V	W	X	Y	Weight lbs
13	22.87	8.30	12.0	4.63	7.875	8.94	11.10	10.34	18.5	1.250	4.39	101
15	26.70	8.30				8.94	11.10	10.34	18.5	1.250	4.39	
25	26.70	8.30				8.94	11.10	10.34	18.5	1.250	4.39	

Maxon reserves the right to alter specifications and data without prior notice.
© 2013 Copyright Maxon Corporation. All rights reserved.

OVENPAK® LE packaged burner sizes 30 - 45

1) Air test port 1/4" NPT
2) Gas test port 1/4" NPT
3) Flame rod or flame scanner (optional)
4) Spark ignitor
5) Spark ignitor removal
6) Air inlet test port 1/8" NPT
7) Pilot gas inlet 3/8" NPT
8) Gas inlet
9) Removal of optional flame rod
10) Tuning screw

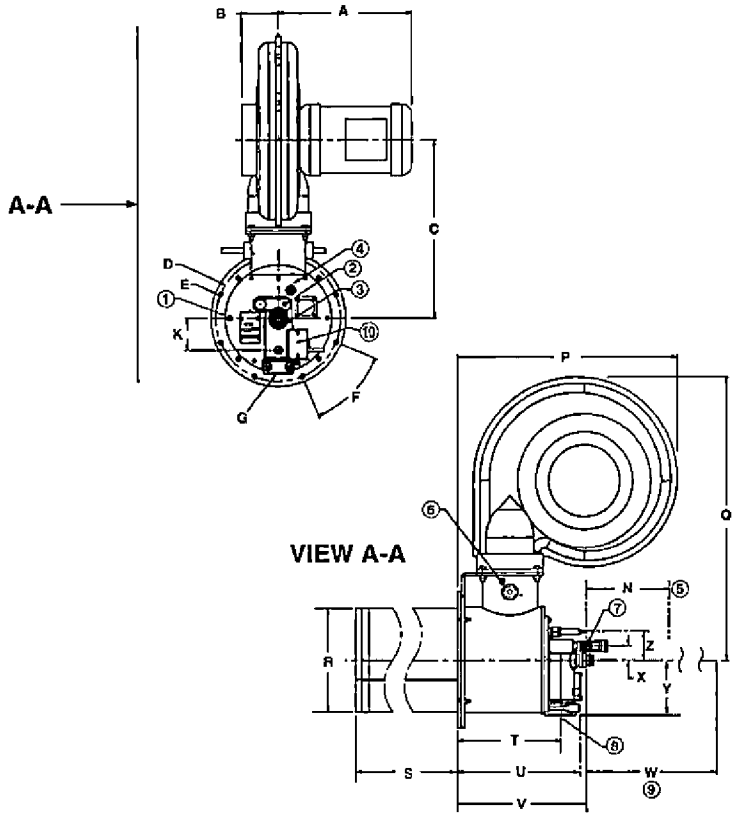

Dimensions in inches unless stated otherwise										
Model	A	B	C	D	E	F	G	P	Q	R
30	13.13	3.63	17.50	12.312	0.475	45°	2" NPT	21.51	27.64	10.24
35	14.63	3.75	17.75	12.312	0.475	45°	2" NPT	21.51	27.86	10.24
40	14.63	3.75	17.75	12.312	0.475	45°	2" NPT	21.51	27.86	10.24
45	16.00	4.25	18.69	12.312	0.475	45°	2" NPT	23.42	29.06	10.24

Dimensions in inches unless stated otherwise											
Model	S Std.	S Short	S Ref. lined	T	U	V	W	X	Y	Z	Weight lbs
30	16.0	8.75	7.875	10.08	11.90	12.59	24.5	1.38	5.44	2.75	180
35				10.08	11.90	12.59	24.5	1.38	5.44	2.75	
40				10.08	11.90	12.59	24.5	1.38	5.44	2.75	
45				10.08	11.90	12.59	24.5	1.38	5.44	2.75	

Maxon reserves the right to alter specifications and data without prior notice.
© 2013 Copyright Maxon Corporation. All rights reserved.

OVENPAK® LE burner size EB40

1) Air test port 1/4" NPT
2) Gas test port 1/4" NPT
3) Flame rod or flame scanner (optional)
4) Spark ignitor
5) Spark ignitor removal
6) Air inlet test port 1/8" NPT
7) Pilot gas inlet 3/8" NPT
8) Gas inlet
9) Removal of optional flame rod

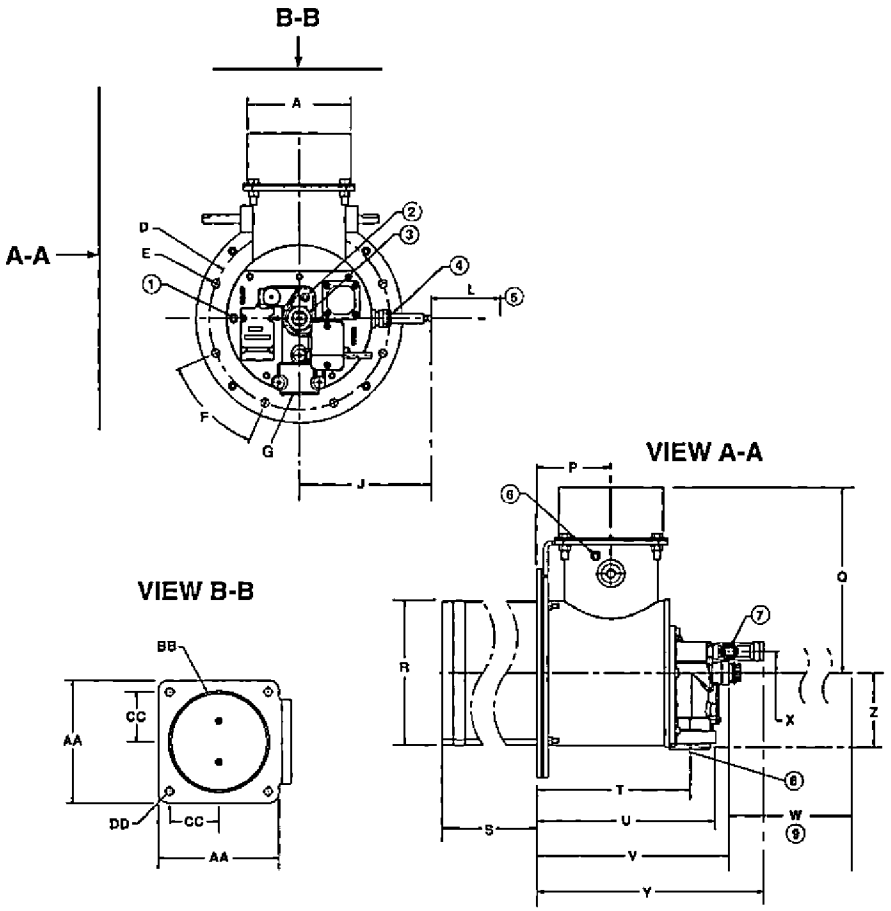

Dimensions in inches unless stated otherwise													
Model	A	D	E	F	G	J	L	P	Q	R	S Std.	S Short	S Ref. lined
EB40	6.0	10.50	0.475	45°	1-1/4" NPT	2.375	4.0	4.0	10.89	8.36	12.0	4.63	7.875

Dimensions in inches unless stated otherwise												
Model	T	U	V	W	X	Y	Z	AA	BB	CC	DD	Weight lbs
EB40	8.94	10.34	11.10	18.5	1.25	13.13	4.39	6.50	5.18	2.65	0.438	45

Maxon reserves the right to alter specifications and data without prior notice.
© 2013 Copyright Maxon Corporation. All rights reserved.

OVENPAK® LE burner size EB65

1) Air test port 1/4" NPT
2) Gas test port 1/4" NPT
3) Flame rod or flame scanner (optional)
4) Spark ignitor
5) Spark ignitor removal
6) Air inlet test port 1/4" NPT
7) Pilot gas inlet 3/8" NPT
8) Gas inlet
9) Removal of optional flame rod
10) Tuning screw

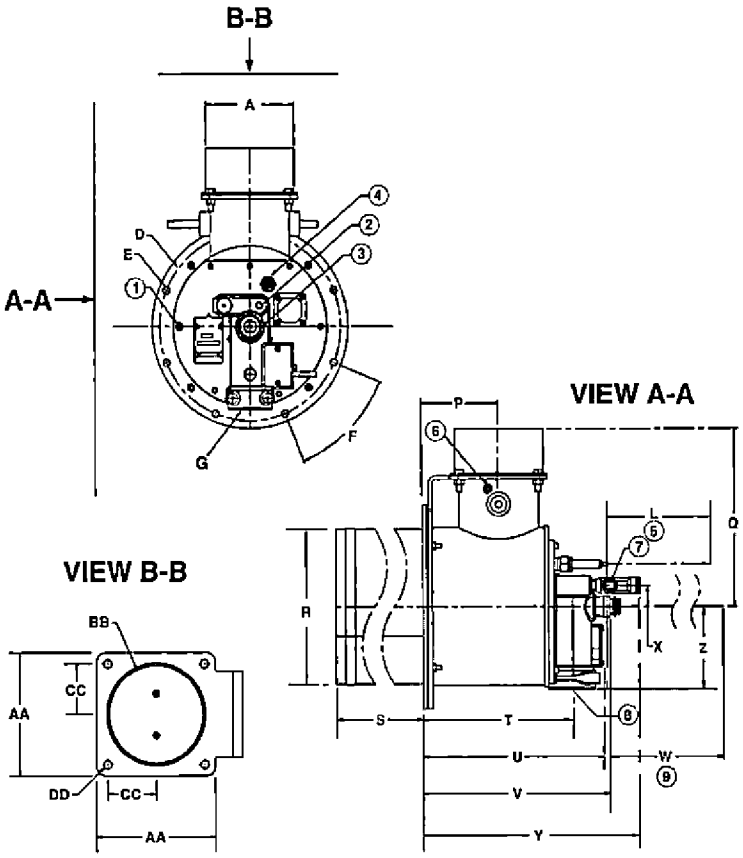

Dimensions in inches unless stated otherwise													
Model	A	D	E	F	G	H	L	P	Q	R	S Std.	S Short	S Ref. lined
EB65	6.0	12.31	0.475	45°	2" NPT	2.375	7.0	5.11	11.62	10.24	16.0	8.75	7.875

Dimensions in inches unless stated otherwise												
Model	T	U	V	W	X	Y	Z	AA	BB	CC	DD	Weight lbs
EB65	10.08	11.90	12.59	24.5	1.38	14.62	5.44	6.50	5.18	2.65	0.438	65

Maxon reserves the right to alter specifications and data without prior notice.
© 2013 Copyright Maxon Corporation. All rights reserved.

Accessory dimensions

Spark ignitors

13-25, EB40

1) Set spark ignitor flush with outside of mixing cone
2) Spark ignitor

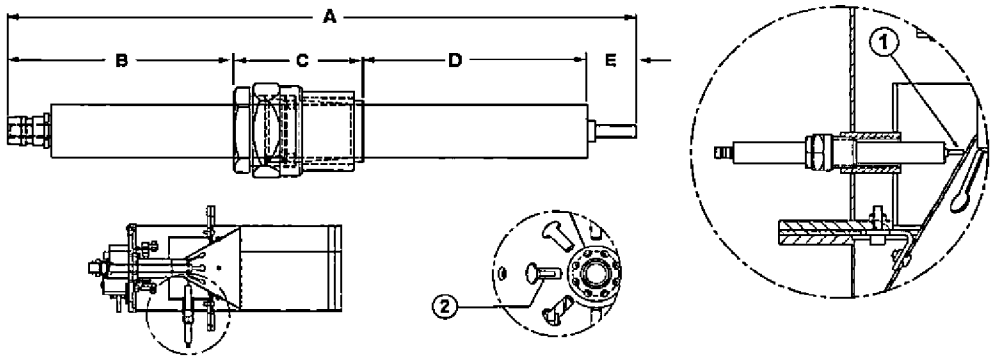

30-45, EB65

1) Set spark ignitor electrode 1/8"-3/16" from side of slot in mixing cone
2) Spark ignitor to be located within mixing cone slot, and at least 1/8" from edge of slot

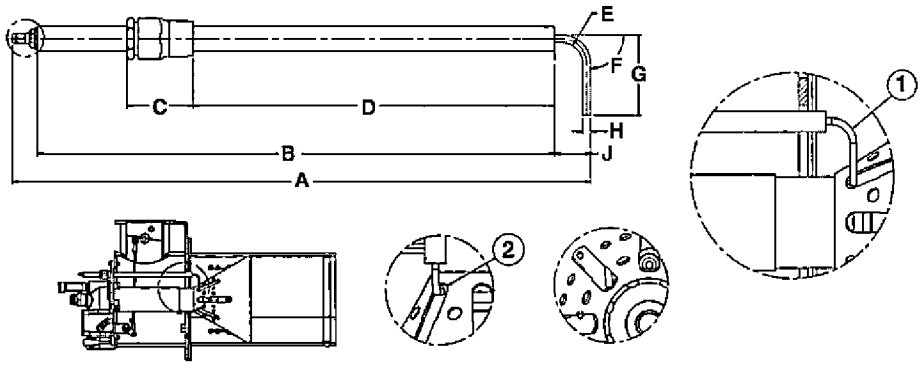

Dimensions in inches unless stated otherwise									
Burner model	A	B	C	D	E	F	G	H	J
13-25, EB40	6.47	1.22	1.34	2.94	.50	-	-	-	-
30-45, EB65	13.42	12.0	1.53	8.4	.50	90°	1.841	0.182	0.841

Maxon reserves the right to alter specifications and data without prior notice.
© 2013 Copyright Maxon Corporation. All rights reserved.

Flame rods

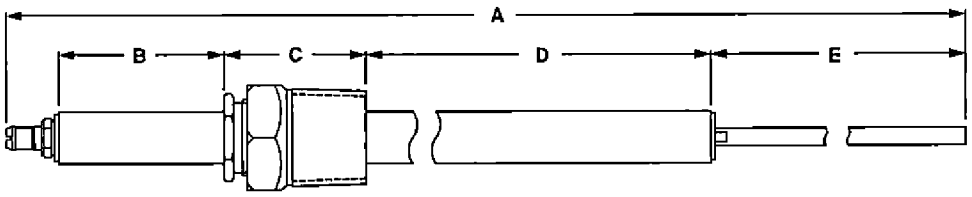

Dimensions in inches unless stated otherwise					
Burner model	A	B	C	D	E
13 - 25, EB40	21.33	1.67	1.53	8.55	9.0
30 - 45, EB65	26.46	2.6	1.53	12.75	9.0

Filter-silencer

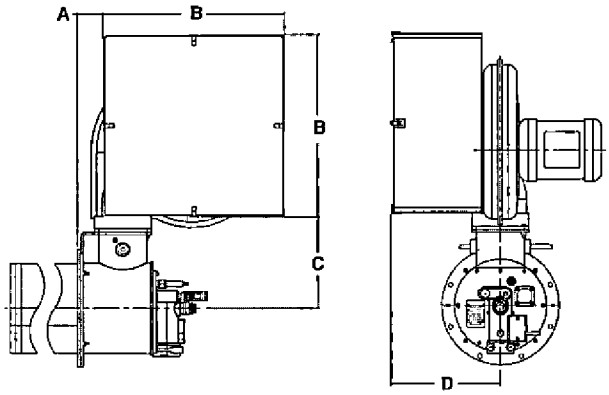

Size	dB(A)*	dB(A)* with silencer
13	85.7	81
15	86.1	82
25	87.2	84
30	89.3	82
35	89.5	82
40	89.5	82
45	88	83

* dB(A) measured at 39" to burner center

Dimensions in inches unless stated otherwise				
Burner model	A	B	C	D
13	1.18	20.44	8.59	13.92
15	2.09	20.44	9.34	12.38
25	2.09	20.44	9.34	12.38
30	2.92	20.44	10.28	12.38
35	2.17	24.44	9.40	12.67
40	2.17	24.44	9.40	12.67
45	2.95	24.44	10.59	13.57

Maxon reserves the right to alter specifications and data without prior notice.
© 2013 Copyright Maxon Corporation. All rights reserved.

Typical hi/lo position switches

1) Lo position switch
2) Hi position switch

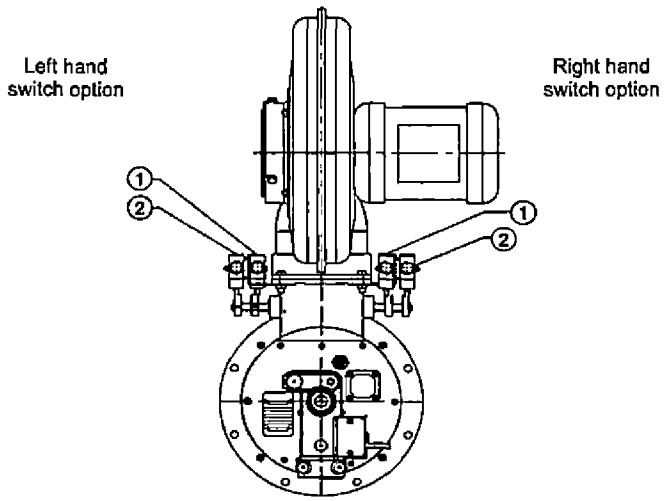

Honeywell Modutrol

1) Control motor

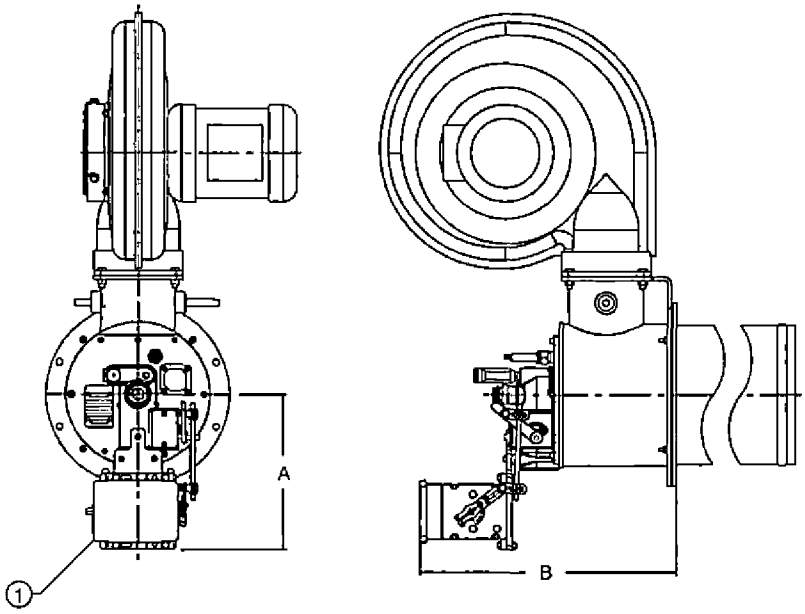

Dimensions in inches unless stated otherwise		
Burner model	A	B
13-25	10.26	17.00
30-45 (shown)	11.26	18.55

Maxon reserves the right to alter specifications and data without prior notice.
© 2013 Copyright Maxon Corporation. All rights reserved.

Refractory lined discharge sleeve

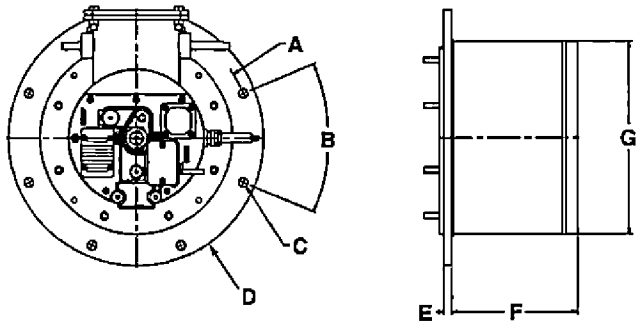

Dimensions in inches unless stated otherwise							
Burner size	A Ø	B	C Ø	D Ø	E	F	G Ø
13-25 OP-LE 40 EB OP-LE	14.5	45°	0.562	15.937	0.50	7.875	12.03
30-45 OP-LE 65 EB OP-LE	16.531	45°	0.562	18.0	0.50	7.875	14.13

Note: Install refractory-lined sleeve so that metal sleeve is fully covered with insulation.

Maxon reserves the right to alter specifications and data without prior notice.
© 2013 Copyright Maxon Corporation. All rights reserved.

MAXON SMARTLINK® MRV

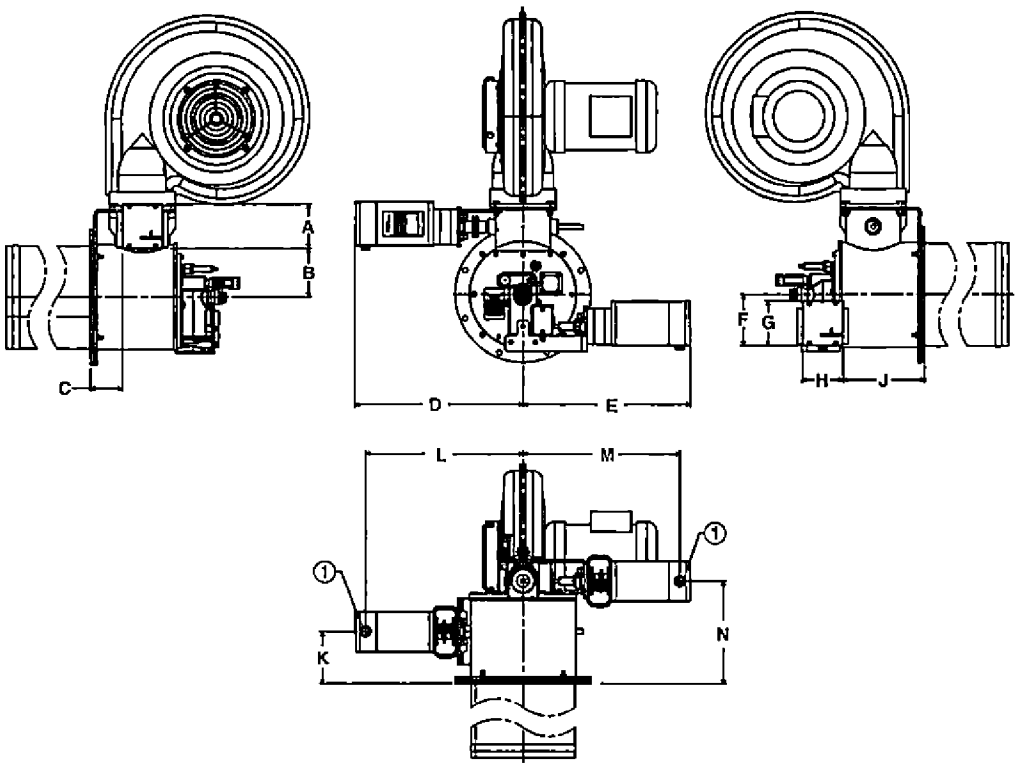

1) 1/1" - 14 NPT

Dimensions in inches unless stated otherwise													
Burner model	A	B	C	D	E	F	G	H	J	K	L	M	N
13-25	4.38	3.86	2.28	16.57	16.42	4.38	4.0	4.0	6.94	4.28	15.53	15.38	8.94
30-45 (shown)	4.38	4.8	3.11	16.57	16.42	5.0	4.38	4.0	8.08	5.11	15.53	15.38	10.08

Maxon reserves the right to alter specifications and data without prior notice.
© 2013 Copyright Maxon Corporation. All rights reserved.

Intelligent Model Numbers

A coded model number is provided on the nameplate of all OVENPAK® LE Burners to provide a simple method to identify the configuration of the product. This model number ensures accuracy in identifying your product, ordering replacement parts or communicating capabilities.

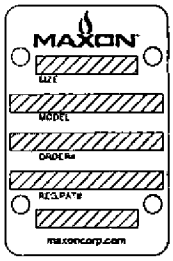

OVENPAK® LE model number														
Series	Model	Size	Pilot	Flame Detection	Fuel	Mixing Cone	Discharge Sleeve		Oven Wall Gasket	Blower Voltage (or Control Valves)	CB&L		Position Switch	Filter/Silencer (Pkgd. only)
S	OPLE	1	S	U	N	S	S		N	1	A		A	N

SERIES
S if special - blank if not

MODEL
OPLE - Model ID

SIZE
1 - OPLE 13
2 - OPLE 15
3 - OPLE 25
4 - OPLE 30
5 - OPLE 35
6 - OPLE 40
7 - OPLE 45
A - EB40
B - EB65

PILOT
D - Direct spark
S - Standard pilot

FLAME DETECTION
R - Flame rod
U - Provision for UV scanner

FUEL
N - Natural gas
P - Propane

MIXING CONE
S - Standard

DISCHARGE SLEEVE
C - Short sleeve 310SS
H - High temperature sleeve 330SS
R - Refractory lined sleeve 310SS
S - Standard sleeve 310SS

OVEN WALL GASKET
N - No
Y - Yes

BLOWER VOLTAGE - packaged units only
1 - 230/460/3/60 Right motor position std.
2 - 575/3/60 Right motor position std.
3 - 115/1/60 Right motor position std.
4 - 230/460/3/60 Left motor position
5 - 575/3/60 Left motor position
6 - 115/1/60 Left motor position

CONTROL VALVES - EB only
E - External control valves
I - Internal control valves
(no internal linkage)

CB&L
A - No CB&L
B - SMARTLINK CV
C - SMARTLINK MRV
D - Honeywell Mod CB&L only
E - CB&L w/Honeywell Mod Motor
F - CB&L w/Honeywell WP Mod Motor
H - Honeywell R7999 ControLinks

CB&L - EB40 and EB65 only:
A - No CB&L
B - SMARTLINK MRV
D - Honeywell R7999 ControLinks

POSITION SWITCH
A - No position switch
B - Omron low position switch
C - Omron hi/lo position switch
D - T'mechanique low position switch
E - T'mechanique WP hi/lo pos switch

FILTER/SILENCER
(packaged burners only)
N - No filter or silencer
S - Filter/silencer assembly

Maxon reserves the right to alter specifications and data without prior notice.
© 2013 Copyright Maxon Corporation. All rights reserved.

Installation and operating instructions for OVENPAK® LE burners

Application requirements

View port

A view port to observe burner flame is helpful to inspect flame aspect. Locate the view port downstream of the flame, looking back to the burner block. Make sure the complete flame can be evaluated.

Required ancillary equipment

Ensure that all ancillary equipment for safe operation and correct performance of the OVENPAK® LE burner is installed, as described in the applicable local codes and/or process-related instructions. An accurate control of the air/gas ratio is essential for optimal performance of the burner.

Support burner air and gas piping

The OVENPAK® LE burner shall not be used as support for the piping to the burner. Gas and air piping shall be supported in such a way that no additional loads will be created on the burner.

Burner mounting flange loads

Check burner weight and reinforce burner mounting flange or combustion chamber/furnace back wall if necessary to take complete burner weight.

Installation instructions

Storage of OVENPAK® LE burners

OVENPAK® LE burners shall be stored dry (inside).

Handling of OVENPAK® LE burners

OVENPAK® LE burners are shipped as complete units. Packaged burners may be shipped with blowers removed. Handle burners with care during unpacking, transport, lifting and installation. Use proper equipment. Any impact on the burner could result in damage.

Flange the burner to the installation

Bolt the burner to the installation's burner mounting flange. Use proper gasketing. Tighten the flange bolting with correct torque. Retighten all bolts after first firing and regularly after commissioning.

Maxon reserves the right to alter specifications and data without prior notice.
© 2013 Copyright Maxon Corporation. All rights reserved.

Filter assembly

Filters and blowers are shipped loose and require assembly prior to burner installation. See the sketches below for proper filter assembly instructions.

Packaged burner size OP-LE 13

1) Filter element
2) Filter screen
3) Fasteners supplied with filter assembly
4) Filter housing
5) Inlet guard supplied with blower
6) Fasteners supplied with filter assembly
7) Filter adapter
8) Fasteners supplied with blower
9) Blower

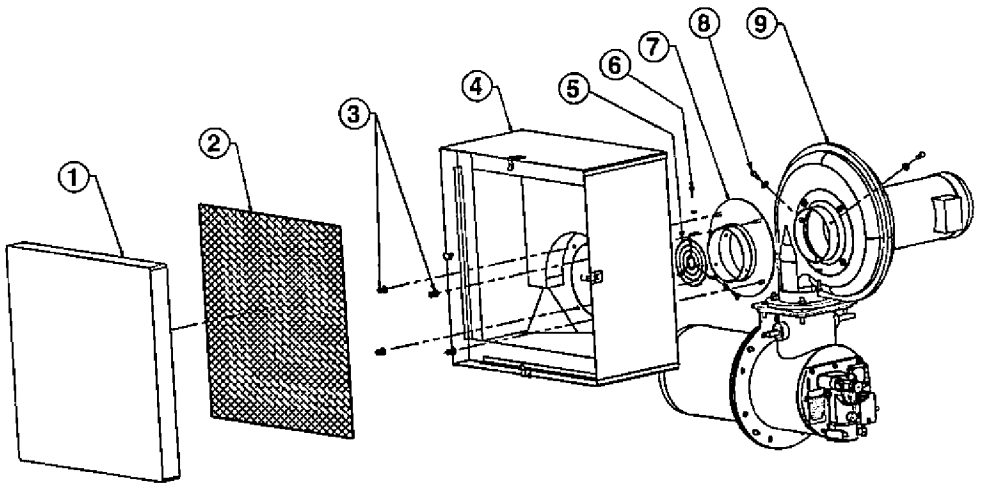

Packaged burner sizes OP-LE 15, 25 & 30

1) Filter element
2) Filter screen
3) Inlet guard and fasteners supplied with blower
4) Filter housing
5) Blower

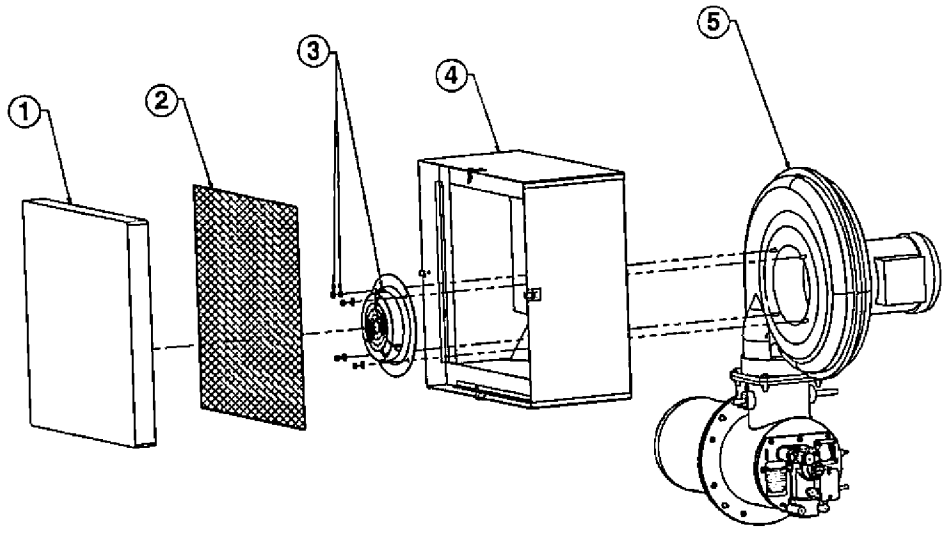

Maxon reserves the right to alter specifications and data without prior notice.
© 2013 Copyright Maxon Corporation. All rights reserved.

Packaged burner sizes OP-LE 35 & 40

1) Filter element
2) Filter screen
3) Fasteners supplied with filter assembly
4) Filter housing
5) Inlet guard supplied with blower
6) Fasteners supplied with filter assembly
7) Filter adapter
8) Blower
9) Fasteners supplied with blower

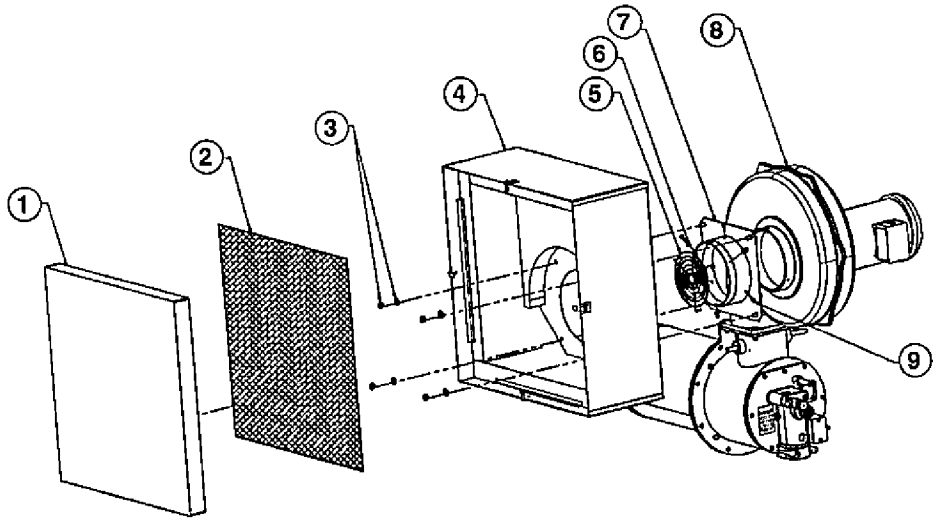

Packaged burner size OP-LE 45

1) Filter element
2) Filter screen
3) Nuts supplied with blower
4) Filter housing
5) Blower

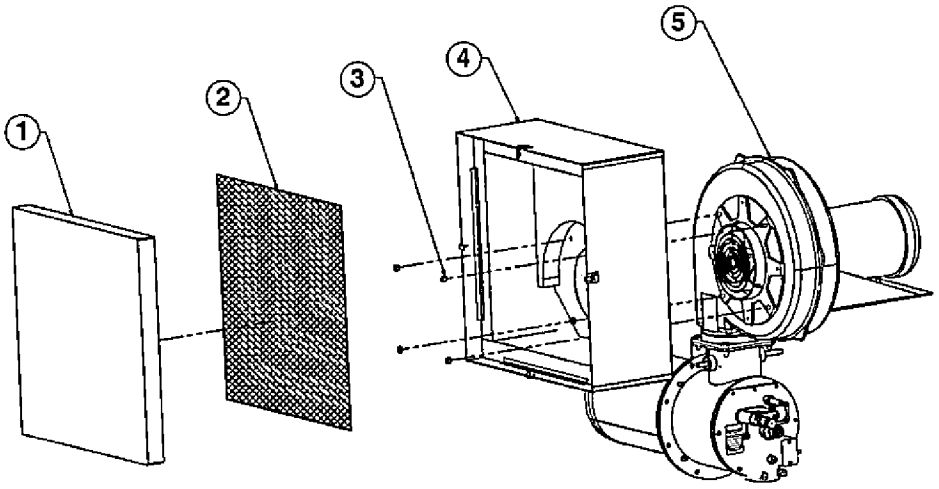

Maxon reserves the right to alter specifications and data without prior notice.
© 2013 Copyright Maxon Corporation. All rights reserved.

Burner mounting

1) Heater shell
2) Insulated wall (6" maximum depth)
3) Cut opening 1" larger than sleeve diameter
4) This area may be packed with insulation up to 2" in depth
5) Burner flange
6) Gasket supplied with burner
7) Discharge sleeve-flange
8) Optional gasket
9) Heater wall

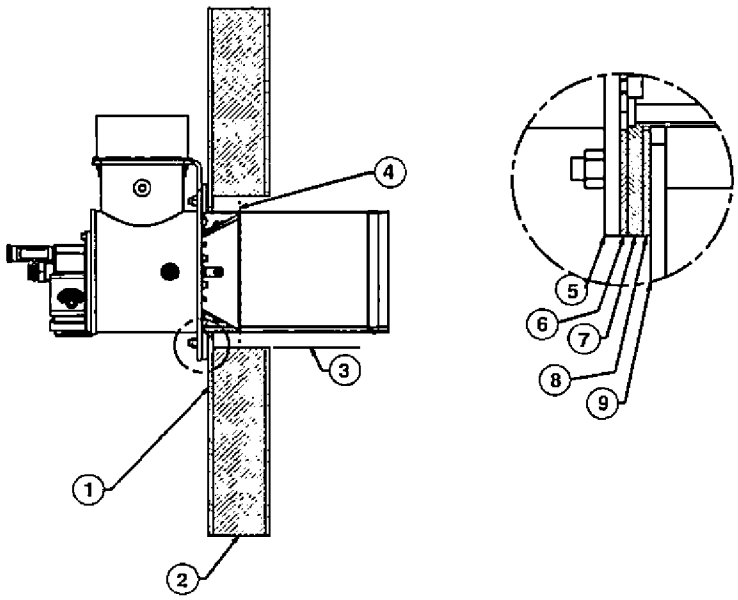

1) Ensure heater shell can support burner weight. If not, add a stiffening plate or support burner weight by other means.
2) Mounting studs (by others)

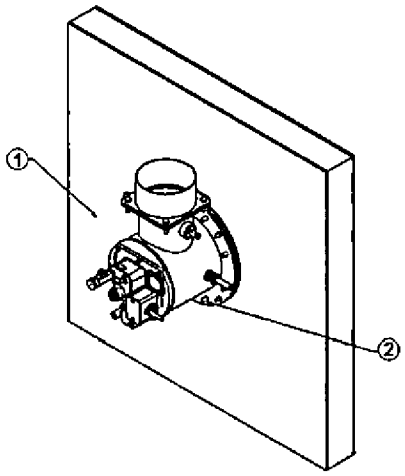

Maxon reserves the right to alter specifications and data without prior notice.
© 2013 Copyright Maxon Corporation. All rights reserved.

MAXON
A Honeywell Company

Start-up instructions for OVENPAK® LE burners

Instructions provided by the company or individual responsible for the manufacture and/or overall installation of a complete system incorporating MAXON burners take precedence over the installation and operating instructions provided by MAXON. If any of the instructions provided by MAXON are in conflict with local codes or regulations, please contact MAXON before initial start-up of equipment.



Read the combustion system manual carefully before initiating the start-up and adjustment procedure. Verify that all of the equipment associated with and necessary to the safe operation of the burner system has been installed correctly, that all pre-commissioning checks have been carried out successfully and that all safety related aspects of the installation are properly addressed.

Initial adjustment and light-off should be undertaken only by a trained commissioning engineer.

Checks during and after start-up

During and after start-up, check the integrity of the system. Check all bolted connections after first firing (first time on temperature) and retighten if necessary.

Pilot ignition

Before ignition of the pilot, adjust the combustion air to the minimum burner air flow. Pilot will not ignite if too high an air flow exists. Set pilot gas flow to the correct value before pilot ignition attempt.

Main burner ignition

Set correct gas flow for burner minimum capacity before attempt of main burner ignition.
After ignition of main burner, allow some time on minimum capacity to allow the burner parts to heat up slowly.

Adjust air/gas ratio, set maximum capacity

Once the main flame is ignited, adjust air/gas ratio of the burner to have the required combustion quality and slowly increase capacity. Do not increase capacity too fast to avoid damage to burner parts or furnace due to excessive temperature gradient.
For OVENPAK® LE, adjust fuel pressures to be always equal to combustion air pressures.

Initial adjustments of burner prior to light off (EB OP-LE)

- With the burner not lit and the combustion air fan running, force the system to a purge (or high fire) condition.
- With the system at a purge condition, adjust the combustion air until the required differential combustion air is achieved for high fire.
- Force the system to a light off condition, and adjust the minimum position to the required differential combustion air condition.

Adjustments after burner is lit (EB OP-LE)

- Connect a manometer to the combustion air test connection, and differentially to the gas test connection on the burner.
- Adjust the gas on each index until each index is a reading of zero all the way to high fire.

Maxon reserves the right to alter specifications and data without prior notice.
© 2013 Copyright Maxon Corporation. All rights reserved.

Maintenance & inspection instructions

Safety requirements

Regular inspection, testing and recalibration of combustion equipment according to the installation manual is an integral part of its safety. Inspection activities and frequencies shall be carried out as specified in the installation manual.

Visual inspections

Regular visual inspection of all connections (air and gas piping to the burner, bolting of the burner to the furnace) and burner flame size and aspect are essential.

Spare parts

Keep local stock of spark ignitor. It is not recommended to keep local stock of other burner parts.
Consult installation manual for burner spare parts and system accessories.

Maxon reserves the right to alter specifications and data without prior notice.
© 2013 Copyright Maxon Corporation. All rights reserved.

MEGTEC Systems, Inc.
830 Prosper Road
P.O. Box 5030
De Pere, WI 54115-5030

920/336-5715

New Dryers for oven (not oxidizer)

June 13, 2014

Mr. Ed Senella
Trend Offset
3801 Cataline Street
Los Alamitos, CA 90720
Email: esenella@trendoffset.com

OPLE = Oven-Pak LE

RE: Low Nox Burner on COANDA PLUS Drying System
MEGTEC System Project #10025976, Serial #CP1052

Dear Mr. Senella:

The drying system that you have purchased from MEGTEC Systems will be equipped with Maxon OPLE Low NOx Oven-pak burners to meet the NOx requirements of the SCAQMD. Maxon Corp. reports 30ppm NOx or less at 3% oxygen for the emissions of this burner. } Oven

MEGTEC Systems has experience with these burners in the SCAQMD jurisdiction in meeting the 30ppm requirement when measured per the established testing protocol while in printing production.

If you have any additional questions, please feel free to contact us at your convenience.

Thank you.

Sincerely,

Jerry W. Packer
Production Engineering Leader
Engineered Products Group
MEGTEC Systems, Inc.

New RTO

Eduardo Jimenez

From: Tom Gentsch [tgentsch@trendoffset.com]
Sent: Thursday, June 12, 2014 1:13 PM
To: Nicole La Face; Eduardo Jimenez; Bruce Armbruster
Subject: Fwd: Burner Info
Attachments: MAXON KINEDIZER LE.pdf

Follow Up Flag: Follow up
Flag Status: Flagged

Please see attached for RTO burner information from Adwest Technologies.

---------- Forwarded message ----------
From: **Ed Senella** <esenella@trendoffset.com>
Date: Thu, Jun 12, 2014 at 1:05 PM
Subject: Fwd: Burner Info
To: Tom Gentsch <tgentsch@trendoffset.com>

---------- Forwarded message ----------
From: **Dave James** <djames@cecoenviro.com>
Date: Fri, Jun 6, 2014 at 3:57 PM
Subject: Burner Info
To: Ed Senella <ESenella@trendoffset.com>

Ed,

Here is the cut sheet for the burner. It is a Kinedizer LE 4".

The firing rate will be 3,757,000 Btu/Hr.

Nox – 30 ppm @ 3% O2

} Oxidizer

Dave

ADWEST TECHNOLOGIES, INC.
A CECO Environmental Company

South Coast Air Quality Management District

Form 400-A

Application Form for Permit or Plan Approval

List only one piece of equipment or process per form.

South Coast AQMD

2

Mail To:
SCAQMD
P.O. Box 4944
Diamond Bar, CA 91765-0944
Tel: (909) 396-3385
www.aqmd.gov

*Contiguous w/ 372282 Catalina

Section A - Operator Information

1. Facility Name (Business Name of Operator to Appear on the Permit): Trend Offset Printing Services, Inc.

2. Valid AQMD Facility ID (Available On Permit Or Invoice Issued By AQMD): 053729

3. Owner's Business Name (If different from Business Name of Operator):

Section B - Equipment Location Address

4. Equipment Location Is: (●) Fixed Location ( ) Various Location
(For equipment operated at various locations, provide address of initial site.)

10811 Bloomfield Street
Street Address

Los Alamitos, CA 90720
City Zip

Pete Russell — EHS Coordinator
Contact Name Title

(562) 794-2312 — (562) 799-0076
Phone # Ext. Fax #

E-Mail: prussell@trendoffset.com

Section C - Permit Mailing Address

5. Permit and Correspondence Information:
☐ Check here if same as equipment location address

3791 Catalina Street
Address

Los Alamitos, CA 90720
City State Zip

Pete Russell — EHS Coordinator
Contact Name Title

(562) 794-2312 — (562) 799-0076
Phone # Ext. Fax #

E-Mail: prussell@trendoffset.com

Section D - Application Type

6. The Facility Is: ( ) Not In RECLAIM or Title V ( ) In RECLAIM ( ) In Title V (●) In RECLAIM & Title V Programs

7. Reason for Submitting Application (Select only ONE):

7a. New Equipment or Process Application:

- ( ) New Construction (Permit to Construct)
- ( ) Equipment On-Site But Not Constructed or Operational
- ( ) Equipment Operating Without A Permit *
- ( ) Compliance Plan
- ( ) Registration/Certification
- ( ) Streamlined Standard Permit

7b. Facility Permits:

- ( ) Title V Application or Amendment (Refer to Title V Matrix)
- ( ) RECLAIM Facility Permit Amendment

7c. Equipment or Process with an Existing/Previous Application or Permit:

- ( ) Administrative Change
- (●) Alteration/Modification 50
- ( ) Alteration/Modification without Prior Approval *
- ( ) Change of Condition
- ( ) Change of Condition without Prior Approval *
- ( ) Change of Location
- ( ) Change of Location without Prior Approval *
- ( ) Equipment Operating with an Expired/Inactive Permit *

Existing or Previous Permit/Application
If you checked any of the items in 7c., you MUST provide an existing Permit or Application Number: 507815

* A Higher Permit Processing Fee and additional Annual Operating Fees (up to 3 full years) may apply (Rule 301(c)(1)(D)(i)).

8a. Estimated Start Date of Construction (mm/dd/yyyy):

8b. Estimated End Date of Construction (mm/dd/yyyy):

8c. Estimated Start Date of Operation (mm/dd/yyyy):

9. Description of Equipment or Reason for Compliance Plan (list applicable rule): Modification to existing RTO-3 to vent new digital printing press

10. For Identical equipment, how many additional applications are being submitted with this application? (Form 400-A required for each equipment / process)

11. Are you a Small Business as per AQMD's Rule 102 definition? (10 employees or less and total gross receipts are $500,000 or less OR a not-for-profit training center) (●) No ( ) Yes

12. Has a Notice of Violation (NOV) or a Notice to Comply (NC) been issued for this equipment? ( ) No (●) Yes
If Yes, provide NOV/NC#: P56329

Section E - Facility Business Information

13. What type of business is being conducted at this equipment location? Printing operations

14. What is your business primary NAICS Code? (North American Industrial Classification System) 323110

15. Are there other facilities in the SCAQMD jurisdiction operated by the same operator? (●) No ( ) Yes

16. Are there any schools (K-12) within 1000 feet of the facility property line? ( ) No (●) Yes

Section F - Authorization/Signature

I hereby certify that all information contained herein and information submitted with this application are true and correct.

17. Signature of Responsible Official: J. Bryant

18. Title of Responsible Official: CTO

19. I wish to review the permit prior to issuance. (This may cause a delay in the application process.) (●) No ( ) Yes

20. Print Name: John Bryant

21. Date: November 5, 2015

22. Do you claim confidentiality of data? (If Yes, see instructions.) (●) No ( ) Yes

23. Check List: ☐ Authorized Signature/Date ☐ Form 400-CEQA ☐ Supplemental Form(s) (ie., Form 400-E-xx) ☐ Fees Enclosed

AQMD USE ONLY	APPLICATION TRACKING #	CHECK #	AMOUNT RECEIVED	PAYMENT TRACKING #	VALIDATION
	579885 11/24/15	530392	7287.58	G125295	11/18/15

DATE	APP REJ	DATE	APP REJ	CLASS I III	BASIC CONTROL	EQUIPMENT CATEGORY CODE	TEAM	ENGINEER	REASON/ACTION TAKEN
						PCAT 05	B		

© South Coast Air Quality Management District, Form 400-A (2014.07)

1/2

15 NOV 18 P1:29

JE Compliance Services, Inc.

UPS Tracking #: 1Z E18 346 03 9827 6732

Environment
Air & Water Quality
Auditing
Fire & Building Code
Permitting
Phase I/II Assessment
Project Management
Remedial Design
Risk Assessment
Waste Management

Health & Safety
Food Safety
Industrial Hygiene
Job Safety Analysis
Mold
Training

Web Solutions
EHS Management
Quality ISO 9001
Environment ISO 14001
Battery Management
Waste Tracking
VOC Tracking

Karen E. Jorgensen
President

Vice Presidents
Bruce A. Armbruster
Peter G. Stein
Caitlin O'Connor

P: +1.909.483.3300
F: +1.909.646.9854
http://www.jecsi.net

VIA NEXT DAY

Mr. Rick Lee
South Coast Air Quality Management District
21865 Copley Drive
Diamond Bar, CA 91765

16 November 2015

Re: Trend Offset Printing Services Inc. (Facility ID 53729); Remaining Forms and Fees for Digital Printing Press (AN 579075).

Dear Rick,

Enclosed are two forms 400-A, one form 400-E-2a, one Form 500-A2, one form 500-C1, and one attachment to form 500-C1 for the Title V/RECLAIM permit revision and the modification to RTO-3 required for the Application for Permit to Construct Digital Printing Press (AN 579075) previously submitted on behalf of Trend Offset Printing Services (Facility ID 53729) located at 3791 Catalina Street in Los Alamitos, California.

Additionally enclosed is a check, made payable to South Coast Air Quality Management District in the amount of $7,287.58 for the remaining fees for the Application for Permit to Construct Digital Printing Press.

Please return a receipt in the amount of $7,287.58 to JE Compliance Services, Inc. in order to verify receipt of the information.

Please contact me or Bruce with any questions or comments.

Sincerely

Eduardo Jimenez
Associate III

Bruce A. Armbruster
Vice President

Enclosures, 221428, Cover Letter to District for Remaining Forms and Fees for Digital Printing Press TREN 221428.docx

South Coast Air Quality Management District

Form 400-E-2a
Gaseous Emission Control Form
Afterburner/Oxidizer

This form must be accompanied by a completed Application for a Permit to Construct/Operate - Forms 400-A, Form 400-CEQA, and Form 400-PS.

Mail To:
SCAQMD
P.O. Box 4944
Diamond Bar, CA 91765-0944

Tel: (909) 396-3385
www.aqmd.gov

Section A - Operator Information

Facility Name (Business Name of Operator That Appears On Permit): Trend Offset Printing Services, Inc.

Valid AQMD Facility ID (Available On Permit Or Invoice Issued By AQMD): 053729

Address where the equipment will be operated (for equipment which will be moved to various location in AQMD's jurisdiction, please list the initial location site): 10811 Bloomfield Street, Los Alamitos, California 90720 (•) Fixed Location ( ) Various Locations

Section B - Equipment Description

Equipment

Manufacturer: Adwest

Model No.: 13.0 RTO-95

Type

( ) Catalytic Oxidizer
( ) Thermal (direct fired) Oxidizer
( ) Recuperative Oxidizer w/ Heat Exchanger (Catalytic)
( ) Recuperative Oxidizer w/ Heat Exchanger (Thermal)
(•) Regenerative Thermal Oxidizer (RTO) - Number of Chambers: 2

Is a concentrator for VOC part of the design? (•) No ( ) Yes If Yes, also complete 400-E-2b.

For Regenerative Oxidizer, choose type of media:
(•) Ceramic Saddles ( ) Monolith
( ) Other

For Recuperative Oxidizer, choose type of heat exchanger:
( ) Shell and Tube ( ) Plate
( ) Other

For Catalytic Oxidizer

Catalyst Manufacturer:

Type of Catalyst: ( ) Low Temperature Catalyst ( ) Commercial Noble Metal ( ) Other

Estimated Catalyst Life: _____ years Catalyst Cleaning Frequency: _____ months

Method of Cleaning:

Does the process emit any of the following potential catalyst masking agent or deactivators? ( ) No ( ) Yes
If Yes, check the type(s):

[ ] Halogens [ ] Heavy Metals [ ] Silicones [ ] Sulfur Compounds [ ] Particulate Matter
[ ] PCBTF [ ] Phosphorous Compounds [ ] Other

Type of Burners and Fuel

[X] Natural Gas Fired — Rating: 3,757,000 BTU/hr

No. of Burners: 1 — Rating: 3,757,000 BTU/hr per burner

[ ] Other: _____ — Rating: _____ BTU/hr

Manufacturer: Maxon Kinedizer Model: LE 4"

Manufacturer's Emission Guarantee for Burners:

NOx: 30 ppm @ 3.00 $\%O_2$ CO: 400 ppm @ 3.00 $\%O_2$

Combustion Air Blower: Flow Rate: 813 SCFM Horsepower: 7.5 HP

Design Criteria

Retention time at normal operating temperature: 0.97 secs @ 1500 °F

Combustion Chamber Volume: 786.24 cubic feet (ft^3) Design Gas Flow: 13000 SCFM

Pre-Treatment Device

Is a pre-treatment device present? ( ) Yes (•) No

If Yes, indicate type:

[ ] Cyclone [ ] Precooler [ ] Preheater [ ] Knock-Out Chamber [ ] Baghouse
[ ] Inline Filters (Pressure drop of clean filters: _____ in. H_2O) [ ] Other:

Dimensions of pre-treatment device:

W _____ in. x L _____ in. x H _____ in. or Diameter _____ in. x H _____ in.

© South Coast Air Quality Management District, Form 400-E-2a (2009.04)

South Coast Air Quality Management District

Form 400-E-2a
Gaseous Emission Control Form
Afterburner/Oxidizer

This form must be accompanied by a completed Application for a Permit to Construct/Operate - Forms 400-A, Form 400-CEQA, and Form 400-PS.

Section B - Equipment Description (cont.)

Auxiliary Fuel Data (e.g. gas injection, duct burner)

Auxiliary fuel available? ○ No ○ Yes If Yes, indicate type: _____

Fuel Usage: ○ Cubic Feet Per Hour (ft^3/hr) Maximum Minimum Average

○ Gallons/Hour (gal/hr)

Exhaust Blower

Rating: 100 HP Flow Capacity: 950 SCFM Draft: ○ Forced ○ Induced

Section C - Process Stream Characteristics

Brief Description of Process

Please attach a process flow diagram and engineering drawing of the process and the control system configuration. In the space provided, indicate what equipment is vented to the control equipment.

Equipment venting devices: existing C-550 press and proposed ImageStream 3500 press.

Emission Data

Air Contaminant	Concentration (ppmv)	Destruction Efficiency (%)
VOC	25	95.00

Instrumentation

Describe instrumentation for measuring temperature, pressure drop and other operating parameter (attach description, if necessary):

Bakeout or Burnout Process

Is bakeout a feature of the process? ○ Yes ○ No

Operating Conditions

	Maximum	Minimum	Average
Operating Temperature (°F):		1500.00	
Exit Gas Temperature (°F):			

Operating Schedule

Normal: 24 hours/day 7 days/week 52 weeks/yr

Maximum: 24 hours/day 7 days/week 52 weeks/yr

Section D - Authorization/Signature

I hereby certify that all information contained herein and information submitted with this application is true and correct.

Preparer Info

Signature: [signature] Date: 11/13/15

Name: Taylor Briglio

Title: Consultant Company Name: JECSI

Phone #: 909.483.3300 Fax #: 909.646.9854

Email: tbriglio@jecsi.com

Contact Info

Name: Taylor Briglio

Title: Consultant Company Name: JECSI

Phone #: 909.483.3300 Fax #: 909.646.9854

Email: tbriglio@jecsi.com

THIS IS A PUBLIC DOCUMENT

Pursuant to the California Public Records Act, your permit application and any supplemental documentation are public records and may be disclosed to a third party. If you wish to claim certain limited information as exempt from disclosure because it qualifies as a trade secret, as defined in the District's Guidelines for Implementing the California Public Records Act, you must make such claim at the time of submittal to the District.

Check here if you claim that this form or its attachments contain confidential trade secret information. ☐

© South Coast Air Quality Management District, Form 400-E-2a (2009.04)

South Coast Air Quality Management District

Form 400-PS

Plot Plan And Stack Information Form

This form must be accompanied by a completed Application for a Permit to Construct/Operate - Form 400A and Form 400-CEQA.

for control equipment C87 RTO

Mail To:
SCAQMD
P.O. Box 4944
Diamond Bar, CA 91765-0944
Tel: (909) 396-3385
www.aqmd.gov

Section A - Operator Information

Facility Name (Business Name of Operator To Appears On The Permit): Trend Offset Printing Services, Inc.

Valid AQMD Facility ID (Available On Permit Or Invoice Issued By AQMD): 053729

Address where the equipment will be operated (for equipment which will be moved to various location in AQMD's jurisdiction, please list the initial location site): 10811 Bloomfield Street, Los Alamitos, California 90270

(●) **Fixed Location** ( ) **Various Locations**

Section B - Location Data

Plot Plan

Please attach a site map for the project with distances and scales. Identify and locate the proposed equipment on the map. A copy of the appropriate Thomas Brothers page, a web-based map, or a sketch that shows the major streets and location of the equipment is acceptable.

Location of Schools Nearby

Is the facility located within a 1/4 mile radius (1,320 feet) of the outer boundary of a school? (●) Yes ( ) No

If yes, please provide name(s) of school(s) below:

School Name: Los Alamitos Elementary School
School Address: 10862 Bloomfield Street, Los Alamitos, CA 90720
Distance from stack or equipment vent to the outer boundary of the school: 892 feet

School Name:
School Address:
Distance from stack or equipment vent to the outer boundary of the school: feet

CA Health & Safety Code 42301.9: "School" means any public or private school used for purposes of the education of more than 12 children in kindergarten or any of grades 1 to 12, inclusive, but does not include any private school in which education is primarily conducted in private homes.

Population Density

(●) Urban ( ) Rural (<50% of land within 3 km radius accounted for by urban land use categories, i.e., multi-family dwelling or industrial.)

Zoning Classification

(●) **Mixed Use Residential Commercial Zone (M-U)** ( ) **Service and Professional Zone (C-S)** ( ) **Medium Commercial (C-3)**
( ) **Heavy Commercial (C-4)** ( ) **Commercial Manufacturing (C-M)**

Section C - Emission Release Parameters - Stacks, Vents

Stack Data

Stack Height: 28.50 feet (above ground level) **What is the height of the closest building nearest the stack?** 45 feet
Stack Inside Diameter: 32.00 inches **Stack Flow:** 13,000 acfm **Stack Temperature:** 1,500 °F
Rain Cap Present: ( ) Yes (●) No **Stack Orientation:** (●) Vertical ( ) Horizontal

If the stack height is less than 2.5 times the closest building height (H), please provide information on any building within 5xH distance from the stack (attach additional sheet if necessary):

Building #/Name: 10811 Bloomfield
Building Height: 35 feet (above ground level)
Building Width: 200 feet
Building Length: 600 feet

Building #/Name:
Building Height: feet (above ground level)
Building Width: feet
Building Length: feet

Receptor Distance From Equipment Stack or Roof Vents/Openings

Distance to nearest residence: 575 feet **Distance to nearest business:** feet

Building Information

Are the emissions released from vents and/or openings from a building? ( ) Yes (●) No

If yes, please provide:

Building #/Name:
Building Height: feet (above ground level)
Building Width: feet
Building Length: feet

© South Coast Air Quality Management District, Form 400-PS (2011.03)

South Coast Air Quality Management District

Form 400-PS

Plot Plan And Stack Information Form

This form must be accompanied by a completed Application for a Permit to Construct/Operate - Form 400A and Form 400-CEQA.

Section D - Authorization/Signature

I hereby certify that all information contained herein and information submittfgfed with this application is true and correct.

Signature of Preparer:	Title of Preparer:	Preparer's Phone #: 909.483.5300
Tyler Briglio	Consultant	Preparer's Email: tbriglio@jecsi.com

Contact Person: Tayler Briglio	Contact's Phone#: 909.483.5300	Date Signed: 10/21/15
Contact's Email: tbriglio@jecsi.com	Contact's Fax#: 909.646.9854	

THIS IS A PUBLIC DOCUMENT

Pursuant to the California Public Records Act, your permit application and any supplemental documentation are public records and may be disclosed to a third party. If you wish to claim certain limited information as exempt from disclosure because it qualifies as a trade secret, as defined in the District's Guidelines for Implementing the California Public Records Act, you must make such claim at the time of submittal to the District.

Check here if you claim that this form or its attachments contain confidential trade secret information. ☐

Signal Hill Petroleum, Inc. (Facility ID 101977)

Belts, Heather/SJC

From: Belts, Heather/SJC
Sent: Monday, August 15, 2016 1:38 PM
To: Belts, Heather/SJC
Subject: FW: Public Records Request #85106, [EXTERNAL]
Attachments: - PR - PR Supporting Docs - 8/4/2016 - 85106 - - - COMPLETION LETTER - ANDREW DUNAVENT.pdf; - PR - PR Review Docs - 8/4/2016 - 85106 - - FACILITY PERMIT - 2415857E3694EF4F9CDDAEE0163919D7.TIF - - ANDREW DUNAVENT.pdf; - PR - PR Review Docs - 1/23/2015 - 85106 - - 560810 APPL FILE - - - ANDREW DUNAVENT.pdf

From: Jacob Allen [mailto:jallen2@aqmd.gov]
Sent: Thursday, August 04, 2016 8:03 AM
To: Dunavent, Andrew/SDO <Andrew.Dunavent@ch2m.com>
Cc: OB PR Support NA Docs <ob_pr_support_na_docs@aqmd.gov>
Subject: Public Records Request #85106, [EXTERNAL]

Attached are records for your request and a completion letter

Jacob Allen
Public Records, SCAQMD
(909) 396-2282

South Coast AQMD

Information Management
Public Records Unit

Direct Dial (909) 396-3700
Fax:(909) 396-3330

COMPLETION LETTER

August 04, 2016

ANDREW DUNAVENT
CH2M HILL
402W. BROADWAY # SUITE 1450
SAN DIEGO, CA 92101

Ref.: CONTROL NO. 85106
Received 3/1/2016

Re: APPL'S, P/O'S & S/T RPTS FOR SIGNAL HILL PETROLEUM INC., FAC ID #101977, AT 1215 E. 29TH STREET, SIGNAL HILL, CA 90755, APPL #560810.

After a thorough search of this agency's records, the following records were found:
APPL'S & P/O'S FOR SIGNAL HILL PETROLEUM INC., FAC ID #101977, AT 1215 E. 29TH STREET, SIGNAL HILL, CA 90755, APPL #560810.

The following records were not found:
S/T RPTS

YOUR REQUESTED RECORDS WERE PROVIDED ELECTRONICALLY ON 08/04/2016

If you have any questions, please do not hesitate to contact me, Tuesday through Friday, **8:00 a.m**. to **4:30 p.m.**

Sincerely,

JACOB ALLEN x2282
For Colleen Paine
Public Records Coordinator

:ja

ROUTING RECORD

DATE	FROM	TO	ACTION
3-4-14	GI ϕ1	MV ϕ2	I
01/23/15	MV	MH	approve PC/PO ✓
1-23-15	MHOS	PS	~~Issue~~ Approved

REFERENCE TO OTHER APCD RECORDS INCLUDING VARIANCES

Lead Appl : 560808

Reclaim A/N 560811

w/ A/N's 560909

560809

FP in A/N 560811

incl. CEQA docs

APPL # 560810
I.D. # 101977

SIGNAL HILL PETROLEUM INC
1215 E 29TH ST
SIGNAL HILL
CO2 FILTRATION SYSTEM

Date: 02/27/14

South Coast Air Quality Management District

Form 400-A

Application Form for Permit or Plan Approval

List only one piece of equipment or process per form.

Mail To:
SCAQMD
P.O. Box 4944
Diamond Bar, CA 91765-0944

Tel: (909) 396-3385
www.aqmd.gov

Section A - Operator Information

1. Facility Name (Business Name of Operator to Appear on the Permit): Signal Hill Petroleum, Inc.

2. Valid AQMD Facility ID (Available On Permit Or Invoice Issued By AQMD): 101977

3. Owner's Business Name (If different from Business Name of Operator):

Section B - Equipment Location Address

4. Equipment Location Is: ○ Fixed Location ○ Various Location
(For equipment operated at various locations, provide address of initial site.)

1215 E. 29th St. (Street Address)
Signal Hill (City), CA (State) 90755 (Zip)
James Lee (Contact Name) Regulatory Specialist (Title)
(562) 595-6440 (Phone #) Ext. (562) 426-4695 (Fax #)
E-Mail: jslee@shpi.net

Section C - Permit Mailing Address

5. Permit and Correspondence Information:
☐ Check here if same as equipment location address

2633 Cherry Avenue (Address)
Signal Hill (City), CA (State) 90755 (Zip)
James Lee (Contact Name) Regulatory Specialist (Title)
(562) 595-6440 (Phone #) Ext. (562) 426-4695 (Fax #)
E-Mail: jslee@shpi.net

Section D - Application Type

6. The Facility Is: ○ Not In RECLAIM or Title V ◉ In RECLAIM ○ In Title V ○ In RECLAIM & Title V Programs

7. Reason for Submitting Application (Select only ONE):

7a. New Equipment or Process Application:

◉ New Construction (Permit to Construct) (10)
○ Equipment On-Site But Not Constructed or Operational
○ Equipment Operating Without A Permit *
○ Compliance Plan
○ Registration/Certification
○ Streamlined Standard Permit

7b. Facility Permits:

○ Title V Application or Amendment (Refer to Title V Matrix)
○ RECLAIM Facility Permit Amendment

7c. Equipment or Process with an Existing/Previous Application or Permit:

○ Administrative Change
○ Alteration/Modification
○ Alteration/Modification without Prior Approval *
○ Change of Condition
○ Change of Condition without Prior Approval *
○ Change of Location
○ Change of Location without Prior Approval *
○ Equipment Operating with an Expired/Inactive Permit *

Existing or Previous Permit/Application
If you checked any of the items in 7c., you MUST provide an existing Permit or Application Number:

* A Higher Permit Processing Fee and additional Annual Operating Fees (up to 3 full years) may apply (Rule 301(c)(1)(D)(i)).

8a. Estimated Start Date of Construction (mm/dd/yyyy): 03/31/2014
8b. Estimated End Date of Construction (mm/dd/yyyy): 06/01/2014
8c. Estimated Start Date of Operation (mm/dd/yyyy): 06/01/2014

9. Description of Equipment or Reason for Compliance Plan (list applicable rule): CO2 filtration system.

10. For Identical equipment, how many additional applications are being submitted with this application? (Form 400-A required for each equipment / process)

11. Are you a Small Business as per AQMD's Rule 102 definition? (10 employees or less and total gross receipts are $500,000 or less OR a not-for-profit training center) ◉ No ○ Yes

12. Has a Notice of Violation (NOV) or a Notice to Comply (NC) been issued for this equipment? ◉ No ○ Yes
If Yes, provide NOV/NC#:

Section E - Facility Business Information

13. What type of business is being conducted at this equipment location? Oil & Gas Production

14. What is your business primary NAICS Code? (North American Industrial Classification System) 211111

15. Are there other facilities in the SCAQMD jurisdiction operated by the same operator? ○ No ◉ Yes

16. Are there any schools (K-12) within 1000 feet of the facility property line? ◉ No ○ Yes

Section F - Authorization/Signature

I hereby certify that all information contained herein and information submitted with this application are true and correct.

17. Signature of Responsible Official: Sean McDaniel

18. Title of Responsible Official: Vice President

19. I wish to review the permit prior to issuance. (This may cause a delay in the application process.) ○ No ◉ Yes

20. Print Name: Sean McDaniel

21. Date: 2/26/14

22. Do you claim confidentiality of data? (If Yes, see instructions.) ◉ No ○ Yes

23. Check List: ☒ Authorized Signature/Date ☒ Form 400-CEQA ☐ Supplemental Form(s) (ie., Form 400-E-xx) ☒ Fees Enclosed

AQMD USE ONLY	APPLICATION TRACKING #	CHECK #	AMOUNT RECEIVED	PAYMENT TRACKING #	VALIDATION
	540810	43348	$ 18703.25	$ 5263.27	2/27/14 mr

DATE	APP REJ	DATE	APP REJ	CLASS	BASIC CONTROL	EQUIPMENT CATEGORY CODE	TEAM	ENGINEER	REASON/ACTION TAKEN
3/4/2014	APP			I	CONTROL	AC	0	MJV2	

© South Coast Air Quality Management District, Form 400-A (2012.07)

(11/4/81)

3/4

14 FEB 27 A8:25

S.C.A.Q.M.D.
PERMIT PROCESSING

SCAQMD
REVENUE & RECEIVING

'14 FEB 26 P3:29

SCAQMD PERMIT PROCESSING SYSTEM (PPS)

FEE DATA - SUMMARY SHEET

Application No : **560810**
Previous Application No:

IRS/SS No:
Previous Permit No:

Company Name : **SIGNAL HILL PETROLEUM INC**
Equipment Street: **1215 E 29TH ST , SIGNAL HILL CA 90755**
Equipment Desc : **Unspecified Equip/Process (Sch C)**

Facility ID: **101977**

Equipment Type : **CONTROL**
B-CAT NO. : **000000**
Facility Zone : **04**

C-CAT NO: **AC**
Deemed Compl. Date: **3/4/2014**

Fee Charged by: **C-CAT**
Fee Schedule: **C**
Public Notice: **NO**

Evaluation Type : **PERMIT TO CONSTRUCT/OPERATE (PC/PO)**
Disposition : **Approve PC/PO, Recommended by Engineer**
Lead Appl. No :

Small Business: ☐
Higher Fees for Failing to Obtain a Permit: ☐
Identical Permit Unit: ☐

Air quality Analysis			$0.00	Filing Fee Paid:	$0.00
E.I.R			$0.00	Permit Processing Fee Paid:	$5,263.29
Health Risk Assessment			$0.00	Permit Processing Fee Calculated*:	$3,508.86
Public Notice Preparation Fee			$0.00	Permit Processing Fee Adjustment:	$-1,754.43
Public Notice Publication Fee			$0.00		
Expedited Processing	Hours:	0.00	$1,754.43		
Source Test Review	Hours:	0.00	$0.00		
Time & Material	Hours:	0.00	$0.00		
				Total Additional Fee:	$1,754.43
				Additional Charge:	$0.00

COMMENTS:

RECOMMENDED BY: **MARIA VIBAL**
DATE: **01/23/2015**

REVIEWED BY: MCH
DATE: 1/23/15

* ADJUSTED FOR SMALL BUSINESS, IDENTICAL EQUIPMENT AND P/O NO P/C PENALTY

NSR DATA SUMMARY SHEET

Application No	560810
Application Type	10
Application status	PENDAPPRV
Previous Apps, Dev	,

Company Name	SIGNAL HILL PETROLEUM INC
Company ID	101977
Address	1215 E 29TH ST, SIGNAL HILL, CA 90755-
Reclaim	NOX
Reclaim Zone	01
Air Basin	SC
Zone	04
Title V	NO

Device ID	0 -
Estimated Completion Date	10-01-2015
Heat Input Capacity	0 *Millions BTU/Hr*
Priority Reserve	NONE - No Priority Access Requested
Recommended Disposition	31 - PERMIT TO OPERATE GRANTED
PR Expiration	12-31-9999
School within 1,000 feet	NO
Operating Weeks per year	52
Operating Days per week	7
Operating Hours	
Monday	00:00 to 24:00
Tuesday	00:00 to 24:00
Wednesday	00:00 to 24:00
Thursday	00:00 to 24:00
Friday	00:00 to 24:00
Saturday	00:00 to 24:00
Sunday	00:00 to 24:00

Emittant	BENZENE	
BACT		
Cost effectiveness	NO	
Source Type	MINOR	
Emis Increase	15,208.330000000	
Modelling	N/A	
Public Notice	N	
Controlled Emission		
Max Hourly	0.000625000	Lbs/Hr
Max Daily		Lbs/day
Uncontrolled Emission		
Max Hourly	0.000625000	Lbs/Hr
Max Daily	0.015000000	Lbs/day
Current Emission		
BACT 30 Day Avg	0.015208333	Lbs/day
Annual Emission	5.460000000	Lbs/year
District Emission		

Emittant	HEXANE	
BACT		
Cost effectiveness	NO	
Source Type	MINOR	
Emis Increase	109,986.670000000	
Modelling	N/A	
Public Notice	N	
Controlled Emission		
Max Hourly	0.004520000	Lbs/Hr
Max Daily		Lbs/day
Uncontrolled Emission		
Max Hourly	0.004520000	Lbs/Hr
Max Daily	0.108480000	Lbs/day
Current Emission		
BACT 30 Day Avg	0.109986667	Lbs/day
Annual Emission	39.486720000	Lbs/year
District Emission		

Emittant	ROG	
BACT		
Cost effectiveness	NO	
Source Type	MINOR	
Emis Increase	5.19	
Modelling	N/A	
Public Notice	N	
Controlled Emission		
Max Hourly	0.22	Lbs/Hr
Max Daily	5.28	Lbs/day
Uncontrolled Emission		
Max Hourly	0.22	Lbs/Hr
Max Daily	5.28	Lbs/day
Current Emission		
BACT 30 Day Avg	5.19	Lbs/day
Annual Emission	1,895.67	Lbs/year
District Emission		

Emittant	TOLUENE	
BACT		
Cost effectiveness	NO	
Source Type	MINOR	
Emis Increase	7,008.000000000	
Modelling	N/A	
Public Notice	N	
Controlled Emission		
Max Hourly	0.000288000	Lbs/Hr
Max Daily		Lbs/day
Uncontrolled Emission		
Max Hourly	0.000288000	Lbs/Hr
Max Daily	0.006912000	Lbs/day
Current Emission		
BACT 30 Day Avg	0.007008000	Lbs/day
Annual Emission	2.515968000	Lbs/year
District Emission		

Supervisor's Approval MKH Supervisor's Review Date 1/23/15

SOUTH COAST AIR QUALITY MANAGEMENT DISTRICT	PAGES 26	PAGE NO. 1
ENGINEERING & COMPLIANCE	APPL. NO. See below	DATE 1/26/2015
APPLICATION PROCESSING AND CALCULATIONS	PROCESSED BY M.VIBAL	CHECKED BY MK

EVALUATION REPORT FOR PERMITS TO CONSTRUCT/OPERATE (PC/PO)

APPLICANT'S NAME: Signal Hill Petroleum, Inc. (Fac. ID 101977)
Signal Hill West Unit
Gas Processing Plant

MAILING ADDRESS: 2633 Cherry Ave.
Signal Hill, CA 90755

EQUIPMENT LOCATION: 1215 E. 29th Street
Signal Hill, CA 90755

CONTACT :

Milan Steube
Environmental Consultant
Tel: (949) 309-9310

James Lee
Regulatory Specialist
Tel: (562) 426-4695

EQUIPMENT DESCRIPTION

A/N 560808 Modification (PC/PO) of an Existing Vapor Recovery System (A/N 494140)
A/N 560809 Modification (PC/PO) of an Existing Natural Gas Dehydration System (A/N 362338)
A/N 560810 Installation (PC/PO) of a new CO_2 Removal/Filtration System
A/N 560811 RECLAIM Facility Permit (FP) Amendment

Note: **Bold-faced** items are new and to be added; items with ~~strike-out~~ are to be deleted.

SECTION D: FACILITY DESCRIPTION AND EQUIPMENT SPECIFIC CONDITIONS

Equipment	ID No.	Connected to	Source Type	Emissions And Requirements	Conditions
PROCESS 2: INTERNAL COMBUSTION					
System 1: Electrical Power Generation					
Gas Turbine,Natural Gas/Field Gas Mixture, Solar, Model Taurus 60-T7301S, Simple Cycle with SoloNOx Dry Low NOx Combustion System, ~~62.68~~ **76.20** MMBtu/hr with A/N: 492565 Generator, Model T60, 5.651 MW	D115	C117	NOx: Major Source**	CO: 2000 ppmv Natural Gas/**Field Gas** (5) [RULE 407, 4-2-1982]; CO: 6 ppmv Natural Gas/**Field Gas** (4) [RULE 1303 (a)(1)-BACT, 5-10-1996]; NOx: 185 ppmv Natural Gas/**Field Gas** (8) [40CFR60 Subpart GG, 3-6-1981]; NOx: 5 ppmv Natural Gas/**Field Gas** (4) [Rule 2005, 4-9-1999; Rule 2005, 4-20-2001]; PM: 0.1 grains/scf Natural Gas/**Field Gas** (5) [RULE 409, 8-7-1981]; SOx: 150 ppmv Natural Gas/**Field Gas** (8) [40CFR60 Subpart GG, 3-6-, 1981]; VOC: 2 ppmv Natural Gas/**Field Gas** (4) [RULE 1303(a)(1)-BACT, 5-10-1996]	A63.1, A99.1, A99.2, A195.1, A195.2, A195.3, C4.1, D29.2, D82.1, D82.2, E193.1, ~~I296.1~~, K40.1

Only Device ID no. D115 will be modified to update the rating; no changes to device id nos. C117, C118 and D120 in Process 2, System 1.

Applicant requested that the term "Field Gas" be added as shown above; the FP system cannot accommodate the description so they will remain as "Natural Gas" which is actually more stringent.

Process 2, System 2 (Emergency Power Generation) – per applicant, Device ID no. D121 should be deleted. Device ID no. D121 is the only item under System 2; the entire System 2 will be deleted from the FP.

SECTION D: FACILITY DESCRIPTION AND EQUIPMENT SPECIFIC CONDITIONS

Equipment	ID No.	Connected to	Source Type	Emissions And Requirements	Conditions
PROCESS 6: FUGITIVE EMISSIONS					
~~Fugitive Emissions, Pumps~~ ~~A/N: 476468~~	~~D49~~				~~H23.1~~
~~Fugitive Emissions, Valves~~ ~~A/N: 476468~~	~~D50~~				~~H23.1~~
Fugitive Emissions, ~~Flanges~~ **Miscellaneous** A/N: 476468	D51				H23.1
Fugitive Emissions, Miscellaneous **A/N: 365074**	**D142**				**H23.1**
Fugitive Emissions, Miscellaneous **A/N: 463799**	**D143**				**H23.1**
Fugitive Emissions, ~~Compressors~~ **Miscellaneous** A/N: ~~494140~~ **560808**	D52				H23.1, **H23.2**
Fugitive Emissions, Miscellaneous **A/N: 560809**	**D144**				**H23.1, H23.2**
Fugitive Emissions Miscellaneous **A/N: 560810**	**D145**				**H23.1, H23.2**

SECTION D: FACILITY DESCRIPTION AND EQUIPMENT SPECIFIC CONDITIONS

Equipment	ID No.	Connected to	Source Type	Emissions And Requirements	Conditions
PROCESS 9: FIELD GAS PROCESSING					P4.1
System 1: Vapor Recovery System					
Vessel, V-22, Under Vacuum, Length: 17 Ft 5 In; Diameter: 6 Ft **A/N: ~~362338~~ 560808**	**D91**				
Vessel, V-24, Under Vacuum, Length: 15 Ft; Diameter: 3 Ft 6 In **A/N: ~~362338~~ 560808**	**D92**				
~~**Vessel, V-33, Under Vacuum, Length: 6 Ft; Diameter: 2 Ft**~~ ~~**A/N: 362338**~~	~~**D93**~~				
Vessel, V-01, Suction Scrubber, 1st Stage, Height: 5 Ft; Diameter: 2 Ft A/N: ~~494140~~ **560808**	D129				
Vessel, V-~~01A~~ **100**, Suction Scrubber, 1st Stage, Height: 5 Ft; Diameter: 2 Ft A/N: ~~494140~~ **560808**	D130				
Vessel, V-300, Suction Scrubber, 1st Stage, Height: 5 Ft; Diameter: 2 Ft **A/N: 560808**	**D146**				
Vessel, V-500, Suction Scrubber, 1st Stage, Height: 5 Ft; Diameter: 2 Ft **A/N: 560808**	**D147**				

SECTION D: FACILITY DESCRIPTION AND EQUIPMENT SPECIFIC CONDITIONS

Equipment	ID No.	Connected to	Source Type	Emissions And Requirements	Conditions
PROCESS 9: FIELD GAS PROCESSING					P4.1
System 1: Vapor Recovery System					
Vessel, V-02, Discharge Scrubber/Oil Separator, 1st Stage, Height: 3 Ft 6 In; Diameter: 3 Ft A/N: ~~494140~~ **560808**	D131				
Vessel, V-~~02A~~ **101**, Discharge Scrubber/Oil Separator, 1st Stage, Height: 3 Ft 6 In; Diameter: 3 Ft A/N: ~~494140~~ **560808**	D132				
Vessel, V- 303, Discharge Scrubber/Oil Separator, 1st Stage, Height: 3 Ft 6 In; Diameter: 3 Ft **A/N: 560808**	**D148**				
Vessel, V- 305, Discharge Scrubber/Oil Separator, 1st Stage, Height: 3 Ft 6 In; Diameter: 3 Ft **A/N: 560808**	**D149**				
Vessel, V-03, Blowcase, 1st Stage, Length: 1 Ft 6 In; Diameter: 6 Ft 8 In A/N: ~~494140~~ **560808**	D133				
Vessel, V-102, Blowcase, 1st Stage, Length: 1 Ft 6 In; Diameter: 6 Ft 8 In **A/N: 560808**	**D150**				
Vessel, V-302, Blowcase, 1st Stage, Length: 1 Ft 6 In; Diameter: 6 Ft 8 In **A/N: 560808**	**D151**				

SECTION D: FACILITY DESCRIPTION AND EQUIPMENT SPECIFIC CONDITIONS

Equipment	ID No.	Connected to	Source Type	Emissions And Requirements	Conditions
PROCESS 9: FIELD GAS PROCESSING					P4.1
System 1: Vapor Recovery System					
Vessel, V-602, Blowcase, 1st Stage, Length: 1 Ft 6 In; Diameter: 6 Ft 8 In **A/N: 560808**	**D152**				
Heat Exchanger, E-01A/**B**, Finned Tube, **1st Stage**, with 5 HP Fan Motor A/N: ~~494140~~ **560808**	D138				
~~Heat Exchanger, E-01B, Finned Tube, 1st Stage, with 5 HP Fan Motor~~ ~~A/N: 494140~~	~~D139~~				
Heat Exchanger, E-03A/B, Finned Tube, 1st Stage, with 5 HP Fan Motor **A/N: 560808**	**D153**				
Heat Exchanger, E-04A/B, Finned Tube, 1st Stage, with 5 HP Fan Motor **A/N: 560808**	**D154**				
Heat Exchanger, E-06A/B, Finned Tube, 1st Stage, with 5 HP Fan Motor **A/N: 560808**	**D155**				
Vessel, V-04, Suction Scrubber, 2nd Stage, Height: 5 Ft; Diameter: 1 Ft 2 In A/N: ~~494140~~ **560808**	D134				

SECTION D: FACILITY DESCRIPTION AND EQUIPMENT SPECIFIC CONDITIONS

Equipment	ID No.	Connected to	Source Type	Emissions And Requirements	Conditions
PROCESS 9: FIELD GAS PROCESSING					P4.1
System 1: Vapor Recovery System					
Vessel, V-~~04A~~ **200**, Suction Scrubber, 2nd Stage, Height: 5 Ft; Diameter: 1 Ft 2 In A/N: ~~494140~~ **560808**	D135				
Vessel, V-400, Suction Scrubber, 2nd Stage, Height: 5 Ft; Diameter: 1 Ft 2 In **A/N: 560808**	**D156**				
Vessel, V-600, Suction Scrubber, 2nd Stage, Height: 5 Ft; Diameter: 1 Ft 2 In **A/N: 560808**	**D157**				
Vessel, V-05, Discharge Scrubber/Oil Separator, 2nd Stage, Height: 3 Ft ; Diameter: 1 Ft 8 In A/N: ~~494140~~ **560808**	D136				
Vessel, V-~~05A~~ **201**, Discharge Scrubber/Oil Separator, 2nd Stage, Height: 3 Ft ; Diameter: 1 Ft 8 In A/N: ~~494140~~ **560808**	D137				
Vessel, V-304, Discharge Scrubber/Oil Separator, 2nd Stage, Height: 3 Ft ; Diameter: 1 Ft 8 In **A/N: 560808**	**D158**				

SECTION D: FACILITY DESCRIPTION AND EQUIPMENT SPECIFIC CONDITIONS

Equipment	ID No.	Connected to	Source Type	Emissions And Requirements	Conditions
PROCESS 9: FIELD GAS PROCESSING					P4.1
System 1: Vapor Recovery System					
Vessel, V-306, Discharge Scrubber/Oil Separator, 2nd Stage, Height: 3 Ft ; Diameter: 1 Ft 8 In **A/N: 560808**	**D159**				
Vessel, V-06, Blowcase, 2nd Stage, Length: 1 Ft 6 In; Diameter: 6 Ft 8 In **A/N: 560808**	**D160**				
Vessel, V-202, Blowcase, 2nd Stage, Length: 1 Ft 6 In; Diameter: 6 Ft 8 In **A/N: 560808**	**D161**				
Vessel, V-502, Blowcase, 2nd Stage, Length: 1 Ft 6 In; Diameter: 6 Ft 8 In **A/N: 560808**	**D162**				
Vessel, V-702, Blowcase, 2nd Stage, Length: 1 Ft 6 In; Diameter: 6 Ft 8 In **A/N: 560808**	**D163**				
Heat Exchanger, E-02A/B, Finned Tube, **2nd Stage**, with 5 HP Fan Motor A/N: ~~494140~~ **560808**	D140				
~~**Heat Exchanger, E-02B, Finned Tube, 2nd Stage, with 5 HP Fan Motor**~~ ~~**A/N: 494140**~~	~~**D141**~~				
Heat Exchanger, E-200/201, Finned Tube, 2nd Stage, with 5 HP Fan Motor **A/N: 560808**	**D164**				

SECTION D: FACILITY DESCRIPTION AND EQUIPMENT SPECIFIC CONDITIONS

Equipment	ID No.	Connected to	Source Type	Emissions And Requirements	Conditions
PROCESS 9: FIELD GAS PROCESSING					P4.1
System 1: Vapor Recovery System					
Heat Exchanger, E-05A/B, Finned Tube, 2nd Stage, with 5 HP Fan Motor **A/N: 560808**	**D165**				
Heat Exchanger, E-07A/B, Finned Tube, 2nd Stage, with 5 HP Fan Motor **A/N: 560808**	**D166**				
System 2: Natural Gas Dehydration					
Tank, T-30, Glycol, 375 Gals A/N: ~~362338~~ **560809**	D112				
Vessel, V-26, 20,000 Gallons Capacity, NGL Liquid, Pressure Vessel, Vented to Vapor Recovery System, Length: 35 Ft; Diameter: 10 Ft A/N: ~~362338~~ **560809**	D113				E127.1
Vessel, V-27, 20,000 Gallons Capacity, NGL Liquid, Pressure Vessel, Vented to Vapor Recovery System, Length: 35 Ft; Diameter: 10 Ft A/N: ~~362338~~ **560809**	D114				E127.1
Heat Exchanger, A-201, Gas/Gas, Shell/Tube, Length: 17 Ft 6 In; Width: 8 Ft 5 In; Height: 14 Ft **A/N: 560809**	**D167**				
Vessel, V-909, Scrubber, Height: 7 Ft; Diameter: 2 Ft 6 In **A/N: 560809**	**D168**				

SECTION D: FACILITY DESCRIPTION AND EQUIPMENT SPECIFIC CONDITIONS

Equipment	ID No.	Connected to	Source Type	Emissions And Requirements	Conditions
PROCESS 9: FIELD GAS PROCESSING					P4.1
System 2: Natural Gas Dehydration					
Heat Exchanger, E-10, Gas/Gas, Shell/Tube, Length: 11 Ft; Diameter: 1 Ft 4 In **A/N: 560809**	**D169**				
Vessel, E-20, Chiller, Shell/Tube, Length: 16 Ft; Diameter: 2 Ft **A/N: 560809**	**D170**				
Vessel, V-30, Cold Separator, Length: 10 Ft; Diameter: 2 Ft **A/N: 560809**	**D171**				
Vessel, E-20A, Surge Drum, Length: 20 Ft; Diameter: 2 Ft **A/N: 560809**	**D172**				
Vessel, V-402, Oil Still, Length: 3 Ft; Diameter: 1 Ft **A/N: 560809**	**D173**				
Pump, P-102, Oil Still/Fill, with 2 HP Motor **A/N: 560809**	**D174**				
Vessel, T-40, Stabilizer Reboiler, with Electric Heater, Length: 12 Ft 8 In; Diameter: 2 ft **A/N: 560809**	**D175**				**E57.3**
Vessel, T-40A, NGL Stabilizer Column Top, Height: 2 Ft 8 In; Diameter: 1 ft **A/N: 560809**	**D176**				**E57.3**

SECTION D: FACILITY DESCRIPTION AND EQUIPMENT SPECIFIC CONDITIONS

Equipment	ID No.	Connected to	Source Type	Emissions And Requirements	Conditions
PROCESS 9: FIELD GAS PROCESSING					P4.1
System 2: Natural Gas Dehydration					
Vessel, T-40B, NGL Stabilizer Column Bottom, Height: 13 Ft 4 In; Diameter: 1 ft **A/N: 560809**	D177				E57.3
Vessel, V-401, Bulk Oil Separator, Length: 16 Ft; Diameter: 2 Ft **A/N: 560809**	D178				
Vessel, V-403, Propane Receiver, Length: 15 Ft; Diameter: 2 Ft **A/N: 560809**	D179				
Vessel, AX-200/350, Propane Condenser/Oil Cooler, with Two 20 HP Fan Motors, Length: 24 Ft; Diameter: 8 Ft 9 In **A/N: 560809**	D180				
Vessel, V-404, Propane Flash Economizer, Length: 8 Ft; Diameter: 2 Ft **A/N: 560809**	D181				
Vessel, V-405, EG Still Column, Length: 12 Ft; Diameter: 10 In **A/N: 560809**	D182				
Vessel, V-410, EG Reboiler, with Electric Heater, Length: 8 Ft; Diameter: 2 ft **A/N: 560809**	D183				E57.3

SECTION D: FACILITY DESCRIPTION AND EQUIPMENT SPECIFIC CONDITIONS

Equipment	ID No.	Connected to	Source Type	Emissions And Requirements	Conditions
PROCESS 9: FIELD GAS PROCESSING					P4.1
System 2: Natural Gas Dehydration					
Pump, P-545A/B, EG Pumps, with 1 HP Motor **A/N: 560809**	**D184**				
Vessel, V-409, EG After-Filter, Length: 2 Ft 6 In; Diameter: 6 In **A/N: 560809**	**D185**				
Vessel, V-408, EG Charcoal Adsorber, Length: 3 Ft 4 In; Diameter: 6 In **A/N: 560809**	**D186**				
Heat Exchanger, HX-103, EG Exchanger, Plate and Frame, Length: 3 Ft; Diameter: 20 In **A/N: 560809**	**D187**				
Vessel, V-407, EG Pre-Filter, Length: 2 Ft 6 In; Diameter: 6 In **A/N: 560809**	**D188**				
Vessel, V-406, EG Flash Drum, Length: 6 Ft; Diameter: 1 Ft **A/N: 560809**	**D189**				
Heat Exchanger, Glycol Vapor Condenser, HZZ-1100, Length: 6 Ft 2 In; Width: 3 ft 10 In; Height: 8 Ft 7 In **A/N: 560809**	**D190**				
System 3: CO_2 Filtration					
Vessel, T-10, Demister, Length: 5 Ft 3 In; Diameter: 2 Ft 6 In **A/N: 560810**	**D191**				

SECTION D: FACILITY DESCRIPTION AND EQUIPMENT SPECIFIC CONDITIONS

Equipment	ID No.	Connected to	Source Type	Emissions And Requirements	Conditions
PROCESS 9: FIELD GAS PROCESSING					P4.1
System 3: CO_2 Filtration					
Filter, F-11, Coarse Coalescing, Length: 4 Ft 3 In; Diameter: 11 In **A/N: 560810**	**D192**				
Filter, F-12, Fine Coalescing, Length: 4 Ft 3 In; Diameter: 11 In **A/N: 560810**	**D193**				
Heat Exchanger, HX-14, Length: 6 Ft; Diameter: 7 In **A/N: 560810**	**D194**				
Vessel, F-16, Carbon Filter, Length: 5 Ft 7 In; Diameter: 2 Ft 6 In **A/N: 560810**	**D195**				
Filter, F-18, Particulate, Length: 4 Ft 3 In; Diameter: 11 In **A/N: 560810**	**D196**				
Vessel, MM-19, Membrane Module, Generon Model 6150-HHP-H, Length: 4 Ft 4 In; Diameter: 7 In **A/N: 560810**	**D197**				
Vessel, T-1, Buffer Tank, 200 Gallons, Height: 6 Ft; Diameter: 2 Ft 6 In **A/N: 560810**	**D198**				
Filter, F-1, Particulate, Leroi, Height: 1 Ft 3 In; Diameter: 5 In **A/N: 560810**	**D199**				

SECTION D: FACILITY DESCRIPTION AND EQUIPMENT SPECIFIC CONDITIONS

Equipment	ID No.	Connected to	Source Type	Emissions And Requirements	Conditions
PROCESS 9: FIELD GAS PROCESSING					P4.1
System 3: CO_2 Filtration					
Vessel, OS-1, Oil/Gas Separator, Leroi, Height: 4 Ft; Diameter: 1 Ft 8 In **A/N: 560810**	**D200**				
Vessel, OC/GC-1, Oil Cooler/Gas Cooler, Leroi, Length: 5 Ft 5 In; Width: 1 Ft 5 In; Height: 4 Ft 8 In **A/N: 560810**	**D201**				
Vessel, T-2, Buffer Tank, 120 Gallons, Height: 5 Ft 7 In; Diameter: 2 Ft **A/N: 560810**	**D202**				
Filter, F-2, Particulate, Leroi, Height: 1 Ft 3 In; Diameter: 5 In **A/N: 560810**	**D203**				
Vessel, OS-2, Oil/Gas Separator, Leroi, Height: 4 Ft; Diameter: 1 Ft 8 In **A/N: 560810**	**D204**				
Vessel, OC/GC-2, Oil Cooler/Gas Cooler, Leroi, Length: 4Ft 1 In; Width: 1 Ft 1 In; Height: 3 Ft 11 In **A/N: 560810**	**D205**				

(1) (1A) (1B) Denotes RECLAIM emission factor
(2) (2A) (2B) Denotes RECLAIM emission rate
(3) Denotes RECLAIM concentration limit
(4) Denotes BACT emission limit
(5) (5A) (5B) Denotes command and control emission limit
(6) Denotes air toxic control rule limit
(7) Denotes NSR applicability limit
(8) (8A) (8B) Denotes 40 CFR limit (e.g. NSPS, NESHAPS, etc.)
(9) See App B for Emission Limits (10) See section J for NESHAP/MACT requirements

Note: **Bold-faced** items are to be added; ~~crossed-over~~ items are to be deleted.

The following device id numbers are to be inactivated and deleted from the FP: D94, D95, D96, D97, D98 under Process 9, System 2. The items were given new device id numbers : D129, D133, D134, D139 and D141, resp. The items were moved to Process 9, System 1.

The following device id numbers are to be inactivated and deleted from the FP : D99, D100, D101, D102, D103, D104, D105, D106, D107, D108, D109, D110 AND D111 under Process 9, System 2. Said items were rendered out of service by the operator.

Device ID D93 will be inactivated and deleted from the FP under Process 9, System 1. The operator removed the said item from service.

PERMIT CONDITIONS

F. Facility Conditions

F 30.1

(a)(ii) – reference to Rule 3000(25)(b)(D) and (E) will be corrected to "Rule 3000(b)(28)(A) through (E)".

F2.1 **For the purpose of exemption from the requirements of Rule 1178, the total emissions reported from this facility shall not exceed the following amount:**

Pollutant	Emission Limit (Tons in any emission inventory year period)
VOC	20

a) To demonstrate compliance with the above emission limit, the facility operator shall:

1. **determine and report annual VOC emissions for the facility in accordance with all applicable permit conditions and rule requirements.**

2. **comply with the requirements of Rule 109 – Recordkeeping for Volatile Organic Compound Emissions)**

b) If the reported facility emissions exceed the above emission limit in any one emission inventory year, the facility operator shall:

1. **submit a written notification of noncompliance to the District within 30 days of discovery of the noncompliance and,**

2. **comply with the requirements of Rule 1178 in accordance with paragraph (d)(5) of the rule.**

[Rule 1178. 12-21-2001]

F67.1 **The facility operator shall comply with all terms and conditions specified below:**

Signal Hill Petroleum, Inc. shall comply with all applicable mitigation measures stipulated in the Mitigation Monitoring and Reporting Plan which is part of the SCAQMD approved Subsequent Mitigated Negative Declaration for this facility.

[CA PRC CEQA, 11-23-1970]

E. Equipment Operation/Construction Requirements

E57.3

Add new devices D175, D176, D177, D183.

H. Applicable Rules

H23.1

Add devices Du1, Du2, Du3, Du4, D52.

H23.2 **This equipment is subject to the applicable requirements of the following rules or regulations:**

Contaminant	Rule	Rule/Subpart
VOC	40 CFR Part 60	OOOO

[40 CFR60, Subpart OOOO, 08-16-2012]
[Devices subject to this condition: D52, D144, D145]

I. Administrative Conditions

Condition I296.1 will be deleted from the FP since the condition no longer applies.

BACKGROUND/PROCESS DESCRIPTION

Signal Hill Petroleum, Inc. (SHPI) is an oil and gas production facility in Signal Hill. They operate approximately 200 active oil production wells in the Long Beach and Signal Hill areas. They also operate several processing facilities to process the oil, gas and water produced from the wells. The two largest processing facilities are the Signal Hill West Unit (SHWU, AQMD ID 101977) and Signal Hill Central Unit (SHCU, AQMD ID 045086). SHWU processes produced gas from most of SHPI's wells in the area and produced gas from other well operators. SHPI has seven drill sites in the area and provides vapor recovery for 17 independent oil well operators in Signal Hill.

The Gas Processing Plant or SHWU was originally constructed in 2000 to replace an aging plant located nearby. The plant was modified in 2008 to add compression capacity at the inlet to the plant. Currently, the gas exiting the Gas Processing Plant cannot be sold to a third party due primarily to the presence of naturally occurring CO_2 in the gas. This CO_2 is not removed by the existing gas processing facility. Instead, combustion turbine (Device ID No. D115) at SHWU uses the processed gas as fuel to

generate electricity for use in SHPI's operations. A list of the permitted facilities operated by SHPI is included in the report.

Due to the various improvements being made to the gas gathering system serving the SHWU gas processing plant and to the third party facilities it serves, the volume of gas processed at the gas plant is increasing. The existing gas processing plant and the combustion turbine are currently operating near capacity. The existing gas processing plant must be modified in order to process the produced gas by removing CO_2 in order to meet specifications to sell the excess gas that cannot be used to fuel the combustion turbine. The proposed modifications will enable the field gathering system to operate at a lower pressure which will improve the gas plant's performance as a vapor recovery/control system for SHPI and third party oil wells and processing facilities in the area.

SHPI is drilling new wells that are expected to increase the volumes of the oil, gas and water processed at their existing facilities. The increased volumes of oil and water can be accommodated at their existing facilities without modifications, but not the processed gas. Currently, SHPI's existing SHWU Gas Processing Facility and the combustion turbine are operating near capacity. Modifications to the existing gas processing facility will be necessary to handle the expected increase in the gas production.

The proposed modification to the existing gas processing plant will consist of :

a. Adding compression capacity to the existing vapor recovery system (VRS) – the modified vapor recovery system will now consist of four identical trains in parallel, each train with two stages of compression. The existing VRS has two identical trains in parallel, each with two stages of compression.
b. Upgrading the propane refrigeration and glycol dehydration equipment in the existing natural gas dehydration low temperature separation (LTS) system.
c. Adding a new CO_2 filtration system.

SHPI operates under the RECLAIM (Regional Clean Air Incentives Market) program. It is exempt from the federal Title V program via condition F30.1 in the FP. SHPI is a Cycle 1 NOx RECLAIM facility.

The permit applications were filed on Feb. 26, 2014. SHPI is requesting expedited processing on the applications. The company paid the following processing fees.

Eqpt. Description	Appl. No.	B-Cat/C-Cat No.	Processing Fees	Expedited Fees	Fees Paid
Vapor Recovery System	560808	58 (sched. D)	$4,842.82	$2,421.41	$7,264.23
Natural Gas Dehydration System	560809	000515 (sched. C)	$3,508.86	$1,754.43	$5,263.29
CO_2 Filtration System	560810	AC (sched. C)	$3,508.86	$1,754.43	$5,263.29
Facility Permit Amendment, RECLAIM	560811	555010	$912.44	-	$912.44
			Total Fees Paid		$18,703.25

COMPLIANCE REVIEW

AQMD staff conducted the most recent compliance inspection on Aug. 20, 2014. Staff issued Notice to Comply C57161 directing SHPI to comply with the reporting requirements of Rule 2012 (g)(7). Other violation reports were issued to SHPI in 2013 and 2014. The inspector report and NOV/NC Report Summary are in the evaluation file. The facility is in the process of resolving the non-compliance issues referenced in some of the violation notices.

EMISSION CALCULATIONS

SHPI's consultant completed the emission calculations for the proposed project. This permitting engineer reviewed the calculations and found them to be fairly accurate. Operating hours for the equipment are 24 hrs/day, 7 days/wk, 52 wks/yr. The source of emission increases are the new fugitive components. The complete calculations for the VOC emissions from the fugitive components are in the application files. The summary is provided below:

Summary – VOC Emissions from Fugitive Components (VOC emission increases from the project)

Source	lbs/hr	lbs/day	lbs/yr	30-day avg.
Vapor Recovery	0.235	5.65	2062.87	5.65
Natural Gas Dehydration	0.304	7.29	2659.24	7.29
CO_2 Filtration	0.216	5.19	1895.67	5.19
Total	0.755	18.13	6617.78	18.13

For each application, the emissions that will be entered in the NSR database are as follows :

A/N 560808 – Vapor Recovery System (Modification)

Source	VOC, lbs/hr	VOC, lbs/day	VOC, lbs/yr	VOC, 30-day avg.
A/N 494140	0.1	2.4	873.6	2
A/N 560808	0.235	5.65	2062.87	5.65
Total (NSR entry)	0.335	8.05	2936.47	7.65

A/N 560809 – Natural Gas Dehydration (Modification)

Source	VOC, lbs/hr	VOC, lbs/day	VOC, lbs/yr	VOC, 30-day avg.
A/N 362338	0.15	3.6	1310.4	4
A/N 560809	0.304	7.29	2659.24	7.29
Total (NSR entry)	0.454	10.89	3969.64	11.29

A/N 560810 – CO2 Filtration System (New Installation)

Source	VOC, lbs/hr	VOC, lbs/day	VOC, lbs/yr	VOC, 30-day avg.
A/N 560810	0.216	5.19	1895.67	5.19
Total (NSR entry)	0.216	5.19	1895.67	5.19

The total facility emissions after the project installation are shown in the table below:

Facility Emissions (lbs/day 30-day avg.)

	VOC	NOx	SOx	CO	PM_{10}
PREMOD[a]	49.84	30	3	22	10
PROJECT	18.13	-	-	-	-
POSTMOD	67.97	30	3	22	10
THRESHOLD	22	22	22	159	22
TO OFFSET	18.13	0	0	0	0
ERC's REQ'D*	21.76	0	0	0	0

[a] The PREMOD emissions are taken from the District database.
* Amt. to offset X 1.2

Signal Hill Petroleum, Inc. must provide the amount of Emission Reduction Credits (ERC) provided in the Facility Emissions table to offset the emissions resulting from the project. SHPI filed an application to obtain VOC ERC's under A/N 571380. The following ERC Certificates were issued : AQ 013917 for 19 lbs. VOC and AQ 008879 for 3 lbs. VOC, for a total of 22 lbs.

RULES EVALUATION

RULE 212-STANDARDS FOR APPROVING PERMITS AND ISSUING PUBLIC NOTICES

Rule 212 requires that a person shall not build, erect, install, alter, or replace any equipment, the use of which may cause the issuance of air contaminants or the use of which may eliminate, reduce, or control the issuance of air contaminants without first obtaining written authorization for such construction from the Executive Officer. Rule 212(c) states that a project requires written notification if there is an emission increase for ANY criteria pollutant in excess of the daily maximums specified in Rule 212(g), if the equipment is located within 1,000 feet of the outer boundary of a school, or if the MICR is equal to or greater than one in a million ($1x10^{-6}$) during a lifetime (70 years) for facilities with more than one permitted unit, source under Regulation XX, or equipment under Regulation XXX, unless the applicant demonstrates to the satisfaction of the Executive Officer that the total facility-wide maximum individual cancer risk is below ten in a million ($10x10^{-6}$) using the risk assessment procedures and toxic air contaminants specified under Rule 1402; or, ten in a million ($10x10^{-6}$) during a lifetime (70 years) for facilities with a single permitted unit, source under Regulation XX, or equipment under Regulation XXX.

FACILITY / EQUIPMENT AND SCHOOL LOCATIONS

The facility is not located within 1,000 feet of a K-12 school; a public notice is not required for section (c)(1).

DAILY EMISSIONS

The daily emissions from this project do not exceed the daily thresholds of Rule 212(g) for any of the pollutants; therefore, a public notice is not required for section (c)(2).

Rule 212 (g) Analysis

Pollutant	CO	NOx	PM_{10}	VOC	SOx
30-day Avg. Emission Increases, lbs/day	-	-	-	18.13	-
Rule 212(g) Threshold, lbs/day	220	40	30	30	60
Triggers Public Notice?	No	No	No	No	No

MAXIMUM INDIVIDUAL CANCER RISK (MICR)

The applicant completed Rule 1401 tier 2 risk calculations for the project and the results are provided in the evaluation. The screening thresholds (please refer to the discussion under Rule 1401) are not exceeded; therefore, public notice is not required for section (c)(3).

RULE 401 - VISIBLE EMISSIONS

This rule limits visible emissions to opacity of less than 20 percent (Ringlemann No.1), as published by the United States Bureau of Mines. Compliance with this rule is expected from all combustion equipment at the facility.

RULE 402 - NUISANCE

This rule requires that a person not discharge from any source whatsoever such quantities of air contaminants or other material which cause injury, detriment, nuisance, or annoyance to any considerable number of persons or to the public, or which cause, or have a natural tendency to cause injury or damage to business or property. The facility is expected to continue to operate in compliance.

RULE 403 – FUGITIVE DUST

The purpose of Rule 403 is to reduce the amount of particulate matter entrained in the ambient air as a result of anthropogenic (man-made) fugitive dust sources by requiring actions to prevent, reduce or mitigate fugitive dust emissions. The provisions of the rule apply to any activity or man-made condition capable of generating fugitive dust. SHPI will implement the Best Available Control Measures that are required in the rule which apply to all construction activity sources. The measures shall be implemented during the gas plant upgrade construction and continued operation of the equipment. SHPI is expected to comply with the requirements of this regulation.

RULE 407 – LIQUID AND GASEOUS AIR CONTAMINANTS

This rule limits CO emissions to 2,000 ppmvd and SO_2 emissions to 500 ppmvd, averaged over 15 minutes. The proposed project does not involve the release of CO and SO_2 air contaminants. A detailed analysis of the rule is not required.

RULE 409 – COMBUSTION CONTAMINANTS

This rule restricts the discharge of contaminants from the combustion of fuel to 0.1 grain per cubic foot of gas, calculated to 12% CO_2, averaged over 15 minutes. The proposed project does not involve the release of combustion contaminants. A detailed analysis of the rule is not necessary.

RULE 431.1-SULFUR CONTENT OF GASEOUS FUELS

The purpose of this rule is to reduce sulfur oxides (SOx) emissions from the burning of gaseous fuels in stationary equipment requiring a permit to operate by the South Coast Air Quality Management District (District). The rule limits the H_2S content of gaseous fuel to be less than 40 ppmv. The proposed project does not involve the installation of combustion equipment. A detailed analysis of Rule 431.1 is not required.

RULE 463 – STORAGE OF ORGANIC LIQUIDS

This rule imposes tank roof requirements on oil production sites that produce more than 30 bpd and have storage tanks with a capacity of 472 barrels or greater. SHPI is expected to comply with the requirements of this rule.

RULE 466 – PUMPS AND COMPRESSORS

This rule is applicable to pumps and compressors that handle reactive organic compounds. The facility is subject to Rule 1173 and is exempt from the requirements of this rule per Rule 1173(l)(3).

RULE 466.1 – VALVES AND FLANGES

This rule is applicable to valves and flanges in reactive organic compound service. The facility is subject to Rule 1173 and is exempt from the requirements of this rule per Rule 1173(l)(3).

RULE 467 – PRESSURE RELIEF DEVICES

This rule is applicable to pressure relief devices that handle reactive organic compounds. The facility is subject to Rule 1173 and is exempt from the requirements of this rule per Rule 1173(l)(3).

RULE 1148.1 – OIL AND GAS PRODUCTION WELLS

The purpose of this rule is to reduce emissions of volatile organic compounds from the wellheads, the well cellars and the handling of produced gas at oil and gas production facilities.

Rule 1148.1(d)(6) - Effective January 1, 2006, the operator of an oil and gas production facility shall not allow natural gas or produced gas to be vented into the atmosphere. The emissions of produced gas shall be collected and controlled using one of the following:

(A) A system handling gas for fuel, sale, or underground injection; or
(B) A device, approved by the Executive Officer, with a VOC vapor removal efficiency demonstrated to be at least 95% by weight per test method of paragraph (g)(2) or by demonstrating an outlet VOC concentration of 50 ppm according to the test method in paragraph (g)(1). If the control device uses supplemental natural gas to control VOC, it shall be equipped with a device that automatically shuts off the flow of natural gas in the event of a flame-out or pilot failure

SHPI operates a gas gathering system for their facilities and independent oil operators. It has a natural gas processing facility which is the subject of the modification application. SHPI complies with the requirements of the rule.

RULE 1173 – CONTROL OF VOLATILE ORGANIC COMPOUND LEAKS AND RELEASES AT PETROLEUM FACILITIES AND CHEMICAL PLANTS

This rule is applicable to components at refineries, chemical plants, oil and gas production fields, natural gas processing plants, and pipeline transfer stations. The requirements of this rule apply to this facility. SHPI maintains a Rule 1173 Inspection and Monitoring Plan to meet all requirements of this rule. Continued compliance with the inspection and maintenance requirements of sections (e) to (g) is expected from the facility.

RULE 1176 – VOC EMISSIONS FROM WASTEWATER SYSTEMS

This rule applies to wastewater systems and associated control equipment at oil production fields. Requirements include covers on wastewater separators and quarterly monitoring of separators, closed vent systems and drain system components. SHPI currently complies with the requirements of this rule. There are no significant changes to SHPI's wastewater system that are proposed with the project. Continued compliance is expected with this rule.

REGULATION XIII – NEW SOURCE REVIEW

RULE 1303(a) – Best Available Control technology (BACT)

The Executive Officer shall deny the Permit to Construct for any new source which results in an emission increase of any non-attainment air contaminant, any ozone depleting compound, or ammonia unless the applicant can demonstrate that BACT is employed for the new source.

BACT means the most stringent emission limitation or control technique which: (1) has been achieved in practice; or (2) is contained in any State Implementation Plan approved by the US EPA; or (3) is any other emission limitation or control technique approved by the Executive Officer and cost effective as compared to measures listed in the Air Quality Management Plan. The source of emission increases for the project is VOC emissions from the fugitive components.

BACT is required for any increase in emissions that exceeds 1.0 lb/day on a maximum daily basis. As discussed in the Emission Calculation Section of this evaluation, there will be an increase of 18.13 lbs/day in fugitive VOC emissions from the proposed project. The use of bellow-sealed valves and compliance with Rule 1173 are BACT for fugitive components. As per Sr. Engr. John Yee, the BACT/LAER requirements for valves as VOC fugitive sources apply for major sources only (i. e. > 10 tons VOC emissions/yr). SHPI is not classified as a VOC major source. The requirement is not applicable. SHPI, however, will install the latest available technology for fugitive component sources at oilfield production facilities. Compliance is expected.

RULE 1303(b)(1) – MODELING

According to Rule 1303 Appendix A, modeling for VOC is not required.

RULE 1303(b)(2) – OFFSETS

1303(b)(2) – Emission Offsets. As discussed under the Emission Calculations section, SHPI must provide offsets for the VOC emission increases from the project. The project requires 22 lbs. of VOC ERCs. SHPI obtained the following ERC certificates to comply with the offset requirements of this rule :

Pollutant	Req'd Offsets, lbs/day	ERC Certificate No.	Amount, lbs/day
VOC	22	AQ008879	3
		AQ013917	19

Compliance is expected with the requirements of this subsection.

RULE 1401 – NEW SOURCE REVIEW OF TOXIC AIR CONTAMINANTS

This rule is applicable to applications deemed complete on or after June 1, 1990 and it imposes specific limits for maximum individual cancer risk (MICR), cancer burden, and non-cancer acute and chronic hazard indices from new permit units, relocations, or modifications to existing permit units which emit toxic air contaminants (TAC) listed in Table I of Rule 1401. The rule establishes allowable risks for permit units requiring new permit pursuant to Rules 201 or 203. SHPI conducted a Tier 3 Health Risk Assessment (HRA) for this project installation with the results provided below:

HRA Calculations Summary

Source	MICR, Residential	MICR, Commercial	HIA	HIC
Vapor Recovery	6.05×10^{-9}	8.03×10^{-9}	8.07×10^{-5}	2.79×10^{-5}
Natural Gas Dehydration	6.07×10^{-9}	1.02×10^{-8}	6.32×10^{-5}	3.53×10^{-5}
CO_2 Filtration System	4.91×10^{-9}	7.34×10^{-9}	6.32×10^{-5}	3.53×10^{-5}
Total for the Project	1.70×10^{-8}	2.56×10^{-8}		

Both the residential and commercial MICR's are less than 1×10^{-6} for each system. None of the acute or chronic hazard indices exceeds 1.0. Compliance with Rule 1401 is expected from the proposed installation project.

RULE 1401.1 – REQUIREMENT FOR NEW AND RELOCATED FACILITIES NEAR SCHOOLS

The purpose of this rule is to provide additional health protection to children at schools or schools under construction from new or relocated facilities emitting toxic air contaminants. SHPI does not qualify as a new facility since it has equipment that were put in operation at this location prior to Nov. 4, 2005. The requirements of this rule do not apply.

REGULATION XVII – PREVENTION OF SIGNIFICANT DETERIORATION (PSD)

Per Rule 1701(b) applicability guidelines, PSD is applicable to attainment air contaminants of CO, NO_2 and SO_2. This facility however, is not an existing major stationary source or a new or modified existing source where the increase is at least 250 tons of attainment air contaminants per year. A detailed PSD analysis is not required for this project.

REGULATION XX – REGIONAL CLEAN AIR INCENTIVES MARKET (RECLAIM)

SHPI is operating under the Regional Clean Air Incentives Market (RECLAIM) program and is complying with all applicable NOx RECLAIM rules. SHPI is a NOx RECLAIM Cycle 1 facility. It is subject to Reg XX.

Rule 2005(c) – Requirements for Existing RECLAIM facilities

This subdivision requires BACT, modeling and proof of sufficient RECLAIM Trading Credits (RTC) for an application for a Facility Permit amendment that results in any increase in NOx and SOx emissions. According to 2005(d), "An increase in emissions occurs if a source's maximum hourly

potential to emit immediately prior to the proposed modification is less than the source's post-modification maximum hourly potential to emit. SHPI is a NOx RECLAIM facility and the proposed modification of the gas plant facility will not result in an increase in the maximum hourly potential to emit NOx. The project will result in an increase in the VOC emissions only. A detailed analysis of Rule 2005(c) is not required.

Rule 2005(g) – Additional Federal Requirements for Major Stationary Sources
This subdivision lists additional requirements for application for a Facility Permit or an Amendment to a Facility Permit for a new, relocated or modified major stationary source, as defined in the Clean Air Act, 42, U.S.C. Section 7511a(e). Section 7511a(e)(2) defines modification as any change at a major stationary source which results in any increase in emissions. The proposed modification project will not result in an increase in the NOx emissions; therefore this subdivision does not apply.

Rule 2012 - Requirements for Monitoring, Reporting, and Recordkeeping for Oxides of Nitrogen (NOx) Emissions
This rule establishes the monitoring, reporting and recordkeeping (MRR) requirements for NOx emissions under the RECLAIM program. The affected equipment are not NOx sources. A detailed analysis of Rule 2012 is not required for this project.

REGULATION XXX – TITLE V PERMITS
SHPI is not under the under Title V, the federal operating permit program since it does not meet the criteria for a major stationary source of air pollution as defined in AQMD Rule 3001. SHPI has a facility permit condition which limits the NOx and VOC facility emissions so as to keep them below the Title V threshold. The requirements of this regulation do not apply.

CEQA – California Environmental Quality Act
SHPI is required to prepare a Subsequent Mitigated Negative Declaration (SMND) for the project. The draft SMND was submitted to the AQMD on Aug. 6, 2014 and approved on Feb. 18, 2015.

FEDERAL REGULATIONS

40 CFR60 Subpart OOOO – Standards of Performance for Crude Oil and Natural gas Production, Transmission and Distribution
The affected facilities to which this subpart applies are gas wells, centrifugal and reciprocating compressors, pneumatic controllers, storage vessels, equipment leaks and sweetening units that commence construction, modification, or reconstruction after August 23, 2011. For the proposed modification project, this federal requirement applies to the sweetening units and fugitive equipment components at the natural gas processing plant.

Sweetening units producing acid gas that is not released to the atmosphere are not subject to the emission limits or the additional recordkeeping and reporting requirements in the final rule. The acid gas removed by the sweetening unit (CO_2 filtration system) at SHPI will be combined with the fuel gas consumed in the existing combustion turbine (device id no. D115) and is not released to the atmosphere. A detailed analysis of 40 CFR60 Subpart OOOO is not required for the CO_2 filtration system.

The compressors and fugitive equipment components are subject to the following sections of 40 CFR60 Subpart OOOO:

§60.5400 – VOC standards; compliance with the provisions of §§60.486a and 60.487a of this part except as provided in §§60.5401, 60.5421, and 60.5422 of this part is required.
§60.5401 – Exceptions to the VOC standards
§60.5402 – Alternative emission limitations
§60.5421 – Additional recordkeeping requirements
§60.5422 – Additional reporting requirements

The detailed analysis of compliance with the referenced subsections is discussed in the application submittal. Compliance is expected from SHPI of this federal regulation.

40 CFR63 Subpart HH – National Emission Standards for Hazardous Air Pollutants from Oil and Gas Production Facilities

SHPI does not qualify as a major source of hazardous air pollutants (HAPs) as defined in the regulation. For an area source of HAP, the affected source consists only of triethylene glycol (TEG) dehydration units located at a single facility. The dehydrations systems at the SHPI facility do not use TEG. SHPI is not an area source of HAP subject to the requirements of this regulation.

CONCLUSIONS AND RECOMMENDATIONS:

The proposed modification of the existing Vapor Recovery and Natural Gas Dehydration Systems and installation of a new CO_2 Removal/Filtration System comply with all applicable Rules and Regulations of the South Coast Air Quality Management District. Permits to Construct/ Operate are recommended. The changes will be incorporated in section D of the RECLAIM Facility Permit. Refer to the Sample Facility Permit attached.

SOUTH COAST AIR QUALITY MANAGEMENT DISTRICT

ENGINEERING AND COMPLIANCE

M E M O R A N D U M

Date: January 23, 2015

To: Application File

From: Maria Vibal

Subject: Distribution of VOC ERCs – Signal Hill Petroleum Inc. (FID 101977)
Gas Plant Upgrade Project

Signal Hill Petroleum, Inc. (SHPI) filed the following permit applications to upgrade their existing gas plant in Signal Hill :

A/N 560808 Modification of an Existing Vapor Recovery System (A/N 494140)
A/N 560809 Modification of an Existing Natural Gas Dehydration System (A/N 362338)
A/N 560810 Installation of a new CO_2 Removal/Filtration System
A/N 560811 RECLAIM Facility Permit (FP) Amendment

The permit evaluation shows that the project requires 22 lbs of Volatile Organic Compounds (VOCs) to offset the following VOC emission increases:

Source	App. No.	Emission Increases 30-day avg., lbs/day	Emission Increases X 1.2
Vapor Recovery	560808	5.65	7
Natural Gas Dehydration	560809	7.29	9
CO_2 Filtration	560810	5.19	6
RECLAIM FP	560811	-	-
Total		18.13	22

SHPI provided the required VOC ERCs as shown by the following certificates that were issued to them by AQMD:

Pollutant	ERC Certificate No.	Amount, lbs/day
VOC	AQ008879	3
	AQ013917	19

The ERCs were used accordingly to process the permit applications referenced above.

Application No.	VOC Offsets Reqd lbs/day	VOC ERCs provided lbs	VOC ERCs remaining lbs
560809	9	9 (AQ 013917)	10 (AQ 013926) 3 (AQ 008879)
560808	7	7 (AQ 013926)	3 (AQ 013928) 3 (AQ 008879)
560810	6	6 (AQ 013928 & AQ 008879)	none
560811	-	-	-

South Coast Air Quality Management District
21865 Copley Drive, Diamond Bar, CA 91765-4178

FACILITY PERMIT TO OPERATE

SIGNAL HILL PETROLEUM INC
1215 E 29TH ST
SIGNAL HILL, CA 90755

NOTICE

IN ACCORDANCE WITH RULE 206, THIS PERMIT TO OPERATE OR A COPY THEREOF MUST BE KEPT AT THE LOCATION FOR WHICH IT IS ISSUED.

THIS PERMIT DOES NOT AUTHORIZE THE EMISSION OF AIR CONTAMINANTS IN EXCESS OF THOSE ALLOWED BY DIVISION 26 OF THE HEALTH AND SAFETY CODE OF THE STATE OF CALIFORNIA OR THE RULES OF THE SOUTH COAST AIR QUALITY MANAGEMENT DISTRICT. THIS PERMIT SHALL NOT BE CONSTRUED AS PERMISSION TO VIOLATE EXISTING LAWS, ORDINANCES, REGULATIONS OR STATUTES OF ANY OTHER FEDERAL, STATE OR LOCAL GOVERNMENTAL AGENCIES.

Barry R. Wallerstein, D. Env.
EXECUTIVE OFFICER

By
Mohsen Nazemi, P.E.
Deputy Executive Officer
Engineering & Compliance

South Coast Air Quality Management District
21865 Copley Drive, Diamond Bar, CA 91765-4178

FACILITY PERMIT TO OPERATE
SIGNAL HILL PETROLEUM INC

TABLE OF CONTENTS

Section	Description	Revision #	Date Issued
A	Facility Information	9	01/01/2006
B	RECLAIM Annual Emission Allocation	22	01/01/2016
C	Facility Plot Plan	TO BE DEVELOPED	
D	Facility Description and Equipment Specific Conditions	17	02/18/2015
E	Administrative Conditions	11	01/01/2006
F	RECLAIM Monitoring and Source Testing Requirements	9	01/01/2006
G	Recordkeeping and Reporting Requirements for RECLAIM Sources	10	01/01/2006
H	Permit To Construct and Temporary Permit to Operate	16	02/09/2007
I	Compliance Plans & Schedules	7	01/01/2006
J	Air Toxics	7	01/01/2006
Appendix			
A	NOx and SOx Emitting Equipment Exempt From Written Permit Pursuant to Rule 219	7	01/01/2006
B	Rule Emission Limits	7	01/01/2006

FACILITY PERMIT TO OPERATE
SIGNAL HILL PETROLEUM INC

SECTION A: FACILITY INFORMATION

LEGAL OWNER &/OR OPERATOR:	SIGNAL HILL PETROLEUM INC
LEGAL OPERATOR (if different than owner):	
EQUIPMENT LOCATION:	1215 E 29TH ST SIGNAL HILL, CA 90755
MAILING ADDRESS:	2633 CHERRY AVE SIGNAL HILL, CA 90755
RESPONSIBLE OFFICIAL:	CRAIG C BARTO
TITLE:	PRESIDENT
TELEPHONE NUMBER:	(562) 595-6440
CONTACT PERSON:	DAVID SLATER
TITLE:	VICE PRESIDENT
TELEPHONE NUMBER:	(562) 595-6440

TITLE V	RECLAIM	
NO	NOx:	YES
	SOx:	NO
	CYCLE:	1
	ZONE:	COASTAL

FACILITY PERMIT TO OPERATE
SIGNAL HILL PETROLEUM INC

SECTION B: RECLAIM ANNUAL EMISSION ALLOCATION

The annual allocation of NOx RECLAIM Trading Credits (RTCs) for this facility is calculated pursuant to Rule 2002. Total NOx emission shall not exceed such annual allocations unless the operator obtains RTCs corresponding to the facility's increased emissions in compliance with Rules 2005 and 2007.

The level of Starting Allocation plus Non-Tradable Credits used to determine compliance with Rule 2005(c)(4) and applicability of Rule 2005(e) - Trading Zone Restrictions is listed on the last page of this Section.

The following table lists the annual allocations that were issued to this facility and the amounts of RTCs held by this facility on the day of printing this Section.

RECLAIM POLLUTANT ANNUAL ALLOCATION (POUNDS)

Year Begin (month/year)	Year End (month/year)	Zone	NOx RTC Initially Allocated	NOx RTC [1] Holding as of 01/01/2016 (pounds)	Non-Tradable [2] Non-Usable RTCs (pounds)
7/2013	6/2014	Coastal	0	0	0
1/2014	12/2014	Coastal	37466	0	0
7/2014	6/2015	Coastal	0	3017	0
1/2015	12/2015	Coastal	37466	9495	0
7/2015	6/2016	Coastal	0	2509	0
1/2016	12/2016	Coastal	37466	6495	0
7/2016	6/2017	Coastal	0	2509	0
1/2017	12/2017	Coastal	37466	6495	0
7/2017	6/2018	Coastal	0	2509	0
1/2018	12/2018	Coastal	37466	6495	0
7/2018	6/2019	Coastal	0	2509	0
1/2019	12/2019	Coastal	37466	6495	0
7/2019	6/2020	Coastal	0	2509	0
1/2020	12/2020	Coastal	37466	6495	0
7/2020	6/2021	Coastal	0	2509	0
1/2021	12/2021	Coastal	37466	6495	0
7/2021	6/2022	Coastal	0	2509	0

Footnotes:

1. This number may change due to pending trades, emissions reported under Quarterly Certification of Emissions Report (QCER) and Annual Permit Emission Program (APEP) Report required pursuant to Rule 2004, or deductions made pursuant to Rule 2010(b). The most recent total RTC information can be obtained from the District's RTC Listing.

2. The use of such credits is subject to restrictions set forth in paragraph (f)(1) of Rule 2002.

FACILITY PERMIT TO OPERATE
SIGNAL HILL PETROLEUM INC

SECTION B: RECLAIM ANNUAL EMISSION ALLOCATION

The annual allocation of NOx RECLAIM Trading Credits (RTCs) for this facility is calculated pursuant to Rule 2002. Total NOx emission shall not exceed such annual allocations unless the operator obtains RTCs corresponding to the facility's increased emissions in compliance with Rules 2005 and 2007.

The level of Starting Allocation plus Non-Tradable Credits used to determine compliance with Rule 2005(c)(4) and applicability of Rule 2005(e) - Trading Zone Restrictions is listed on the last page of this Section.

The following table lists the annual allocations that were issued to this facility and the amounts of RTCs held by this facility on the day of printing this Section.

RECLAIM POLLUTANT ANNUAL ALLOCATION (POUNDS)

Year Begin (month/year)	Year End (month/year)	Zone	NOx RTC Initially Allocated	NOx RTC [1] Holding as of 01/01/2016 (pounds)	Non-Tradable [2] Non-Usable RTCs (pounds)
1/2022	12/2022	Coastal	37466	6495	0
7/2022	6/2023	Coastal	0	2509	0
1/2023	12/2023	Coastal	37466	6495	0
7/2023	6/2024	Coastal	0	2509	0
1/2024	12/2024	Coastal	37466	6495	0
7/2024	6/2025	Coastal	0	2509	0
1/2025	12/2025	Coastal	37466	6495	0
7/2025	6/2026	Coastal	0	2509	0
1/2026	12/2026	Coastal	37466	6495	0
7/2026	6/2027	Coastal	0	2509	0
1/2027	12/2027	Coastal	37466	6495	0
7/2027	6/2028	Coastal	0	2509	0
1/2028	12/2028	Coastal	37466	6495	0
7/2028	6/2029	Coastal	0	2509	0
1/2029	12/2029	Coastal	37466	6495	0
7/2029	6/2030	Coastal	0	2509	0
1/2030	12/2030	Coastal	37466	6495	0

Footnotes:

1. This number may change due to pending trades, emissions reported under Quarterly Certification of Emissions Report (QCER) and Annual Permit Emission Program (APEP) Report required pursuant to Rule 2004, or deductions made pursuant to Rule 2010(b). The most recent total RTC information can be obtained from the District's RTC Listing.

2. The use of such credits is subject to restrictions set forth in paragraph (f)(1) of Rule 2002.

FACILITY PERMIT TO OPERATE
SIGNAL HILL PETROLEUM INC

SECTION B: RECLAIM ANNUAL EMISSION ALLOCATION

The annual allocation of NOx RECLAIM Trading Credits (RTCs) for this facility is calculated pursuant to Rule 2002. Total NOx emission shall not exceed such annual allocations unless the operator obtains RTCs corresponding to the facility's increased emissions in compliance with Rules 2005 and 2007.

The level of Starting Allocation plus Non-Tradable Credits used to determine compliance with Rule 2005(c)(4) and applicability of Rule 2005(e) - Trading Zone Restrictions is listed on the last page of this Section.

The following table lists the annual allocations that were issued to this facility and the amounts of RTCs held by this facility on the day of printing this Section.

RECLAIM POLLUTANT ANNUAL ALLOCATION (POUNDS)

Year Begin (month/year)	Year End (month/year)	Zone	NOx RTC Initially Allocated	NOx RTC [1] Holding as of 01/01/2016 (pounds)	Non-Tradable [2] Non-Usable RTCs (pounds)
7/2030	6/2031	Coastal	0	2509	0
1/2031	12/2031	Coastal	37466	6495	0

Footnotes:

1. This number may change due to pending trades, emissions reported under Quarterly Certification of Emissions Report (QCER) and Annual Permit Emission Program (APEP) Report required pursuant to Rule 2004, or deductions made pursuant to Rule 2010(b). The most recent total RTC information can be obtained from the District's RTC Listing.

2. The use of such credits is subject to restrictions set forth in paragraph (f)(1) of Rule 2002.

FACILITY PERMIT TO OPERATE
SIGNAL HILL PETROLEUM INC

SECTION B: RECLAIM ANNUAL EMISSION ALLOCATION

The annual allocation of RECLAIM Trading Credits (RTCs) for this facility is calculated pursuant to Rule 2002. If the facility submits a permit application to increase in an annual allocation to a level greater than the facility's starting Allocation plus Non-Tradable credits as listed below, the application will be evaluated for compliance with Rule 2005 (c)(4). Rule 2005 (e) - Trading Zone Restrictions applies if an annual allocation is increased to a level greater than the facility's Starting Allocation plus Non-Tradable Credits:

Year Begin (month/year)	Year End (month/year)	Zone	NOx RTC Starting Allocation (pounds)	Non-Tradable Credits(NTC) (pounds)
1/1994	12/1994	Coastal	657278	132132

FACILITY PERMIT TO OPERATE
SIGNAL HILL PETROLEUM INC

SECTION C: FACILITY PLOT PLAN

(TO BE DEVELOPED)

FACILITY PERMIT TO OPERATE
SIGNAL HILL PETROLEUM INC

SECTION D: FACILITY DESCRIPTION AND EQUIPMENT SPECIFIC CONDITIONS

The operator shall comply with the terms and conditions set forth below:

Equipment	ID No.	Connected To	RECLAIM Source Type/ Monitoring Unit	Emissions * And Requirements	Conditions
Process 2: INTERNAL COMBUSTION					
System 1: Electrical Power Generation					
GAS TURBINE, NATURAL GAS/FIELD GAS MIXTURE, SOLAR, MODEL TAURUS 60-T7301S, SIMPLE CYCLE WITH SOLONOX DRY LOW NOX COMBUSTION SYSTEM, 76.2 MMBTU/HR WITH A/N: 492565 GENERATOR, MODEL T60, 5.651 MW	D115	C117	NOX: MAJOR SOURCE**	**CO**: 6 PPMV NATURAL GAS (4) **[RULE 1303(a)(1)-BACT, 5-10-1996]**; **CO**: 2000 PPMV NATURAL GAS (5) **[RULE 407, 4-2-1982]**; **NOX**: 5 PPMV NATURAL GAS (4) **[RULE 2005, 4-9-1999; RULE 2005, 4-20-2001]**; **NOX**: 185 PPMV NATURAL GAS (8) **[40CFR 60 Subpart GG, 3-6-1981]**; **PM**: 0.1 GRAINS/SCF NATURAL GAS (5) **[RULE 409, 8-7-1981]**; **SOX**: 150 PPMV NATURAL GAS (8) **[40CFR 60 Subpart GG, 3-6-1981]**; **VOC**: 2 PPMV NATURAL GAS (4) **[RULE 1303(a)(1)-BACT, 5-10-1996]**	A63.1, A99.1, A99.2, A195.1, A195.2, A195.3, C4.1, D29.2, D82.1, D82.2, E193.1, K40.1
CO OXIDATION CATALYST, BASF, CAMET, CATCO, 28 CUBIC FEET OF CATALYST VOLUME A/N: 463796	C117	D115 C118			
SELECTIVE CATALYTIC REDUCTION, BASF, NOXCAT ZNX, HIGH TEMPERATURE ZEOLITE CATALYST, 400 CU.FT.; WIDTH: 16 FT ; HEIGHT: 12 FT ; LENGTH: 34 FT WITH A/N: 463796 AMMONIA INJECTION	C118	C117		**NH3**: 5 PPMV (4) **[RULE 1303(a)(1)-BACT, 5-10-1996]**	A195.4, D12.1, D12.2, D12.3, D29.3, D232.1, E179.1, E179.2

* (1) (1A) (1B) Denotes RECLAIM emission factor (2) (2A) (2B) Denotes RECLAIM emission rate
(3) Denotes RECLAIM concentration limit (4) Denotes BACT emission limit
(5) (5A) (5B) Denotes command and control emission limit (6) Denotes air toxic control rule limit
(7) Denotes NSR applicability limit (8) (8A) (8B) Denotes 40 CFR limit (e.g. NSPS, NESHAPS, etc.)
(9) See App B for Emission Limits (10) See section J for NESHAP/MACT requirements

** Refer to section F and G of this permit to determine the monitoring, recordkeeping and reporting requirements for this device.

FACILITY PERMIT TO OPERATE
SIGNAL HILL PETROLEUM INC

SECTION D: FACILITY DESCRIPTION AND EQUIPMENT SPECIFIC CONDITIONS

The operator shall comply with the terms and conditions set forth below:

Equipment	ID No.	Connected To	RECLAIM Source Type/ Monitoring Unit	Emissions * And Requirements	Conditions
Process 2: INTERNAL COMBUSTION					
STACK, HEIGHT: 45 FT ; DIAMETER: 3 FT 10 IN A/N: 492565	D120				
Process 4: BULK LOADING TERMINAL					
System 2: Natural Gas Liquid Loading					
BULK MATERIAL LOADING STATION, TRUCK LOADING, NATURAL GAS LIQUID, BOTTOM LOADING HOSE, DIA. 2-INCH X LENGTH 10 FEET A/N: 365074	D123				B59.1, C1.4
BULK MATERIAL LOADING STATION, TRUCK LOADING, NATURAL GAS LIQUID, BOTTOM LOADING HOSE, DIA. 2-INCH X LENGTH 10 FEET A/N: 365074	D124				B59.1, C1.4
VAPOR RETURN LINE, FOR NGL LOADING, DIA. 1 INCH X LENGTH 10 FEET A/N: 365074	D125				E57.4
VAPOR RETURN LINE, FOR NGL LOADING, DIA. 1 INCH X LENGTH 10 FEET A/N: 365074	D126				E57.4
Process 6: FUGITIVE EMISSIONS					
FUGITIVE EMISSIONS, MISCELLANEOUS A/N: 476478	D51				H23.1
FUGITIVE EMISSIONS, MISCELLANEOUS A/N: 365074	D142				H23.1

* (1) (1A) (1B) Denotes RECLAIM emission factor
(2) (2A) (2B) Denotes RECLAIM emission rate
(3) Denotes RECLAIM concentration limit
(4) Denotes BACT emission limit
(5) (5A) (5B) Denotes command and control emission limit
(6) Denotes air toxic control rule limit
(7) Denotes NSR applicability limit
(8) (8A) (8B) Denotes 40 CFR limit (e.g. NSPS, NESHAPS, etc.)
(9) See App B for Emission Limits
(10) See section J for NESHAP/MACT requirements

** Refer to section F and G of this permit to determine the monitoring, recordkeeping and reporting requirements for this device.

FACILITY PERMIT TO OPERATE
SIGNAL HILL PETROLEUM INC

SECTION D: FACILITY DESCRIPTION AND EQUIPMENT SPECIFIC CONDITIONS

The operator shall comply with the terms and conditions set forth below:

Equipment	ID No.	Connected To	RECLAIM Source Type/ Monitoring Unit	Emissions * And Requirements	Conditions
Process 6: FUGITIVE EMISSIONS					
FUGITIVE EMISSIONS, MISCELLANEOUS A/N: 463799	D143				H23.1
FUGITIVE EMISSIONS, MISCELLANEOUS A/N: 560808	D52				H23.1, H23.2
FUGITIVE EMISSIONS, MISCELLANEOUS A/N: 560809	D144				H23.1, H23.2
FUGITIVE EMISSIONS, MISCELLANEOUS A/N: 560810	D145				H23.1, H23.2
Process 7: WASTE WATER HANDLING					
STORAGE TANK, FIXED ROOF, T-4, PRODUCED WATER, VENTED TO VAPOR RECOVERY SYSTEM, 3580 BBL; DIAMETER: 38 FT 8 IN; HEIGHT: 16 FT A/N: 463799	D53				E57.2, E127.1
STORAGE TANK, FIXED ROOF, T-5 (SURGE TANK), PRODUCED WATER, VENTED TO VAPOR RECOVERY SYSTEM, 3580 BBL; DIAMETER: 38 FT 8 IN; HEIGHT: 16 FT A/N: 463799	D54				E57.2, E127.1
STORAGE TANK, FIXED ROOF, T-6 (SURGE TANK), CLEAN WATER, VENTED TO VAPOR RECOVERY SYSTEM, 3580 BBL; DIAMETER: 38 FT 8 IN; HEIGHT: 16 FT A/N: 463799	D55				E57.2, E127.1

* (1) (1A) (1B) Denotes RECLAIM emission factor
(2) (2A) (2B) Denotes RECLAIM emission rate
(3) Denotes RECLAIM concentration limit
(4) Denotes BACT emission limit
(5) (5A) (5B) Denotes command and control emission limit
(6) Denotes air toxic control rule limit
(7) Denotes NSR applicability limit
(8) (8A) (8B) Denotes 40 CFR limit (e.g. NSPS, NESHAPS, etc.)
(9) See App B for Emission Limits
(10) See section J for NESHAP/MACT requirements

** Refer to section F and G of this permit to determine the monitoring, recordkeeping and reporting requirements for this device.

FACILITY PERMIT TO OPERATE
SIGNAL HILL PETROLEUM INC

SECTION D: FACILITY DESCRIPTION AND EQUIPMENT SPECIFIC CONDITIONS

The operator shall comply with the terms and conditions set forth below:

Equipment	ID No.	Connected To	RECLAIM Source Type/ Monitoring Unit	Emissions * And Requirements	Conditions
Process 7: WASTE WATER HANDLING					
STORAGE TANK, FIXED ROOF, T-7 (SURGE TANK), PRODUCED WATER, VENTED TO VAPOR RECOVERY SYSTEM, 10000 BBL; DIAMETER: 55 FT ; HEIGHT: 24 FT A/N: 463799	D56				E57.2, E127.1
STORAGE TANK, FIXED ROOF, T-10 (SURGE TANK), PRODUCED WATER, VENTED TO VAPOR RECOVERY SYSTEM, 2000 BBL; DIAMETER: 30 FT ; HEIGHT: 16 FT A/N: 463799	D127				E57.2, E127.1
VESSEL, B-1 (SEPARATION BASIN), COVERED, VENTED TO VAPOR RECOVERY SYSTEM, WIDTH: 24 FT ; HEIGHT: 10 FT ; LENGTH: 80 FT A/N: 463799	D128				E57.2, E127.1
FLOATATION UNIT, D-1A, VENTED TO VAPOR RECOVERY SYSYTEM A/N: 463799	D89				E127.1
FLOATATION UNIT, D-1B, VENTED TO VAPOR RECOVERY SYSYTEM A/N: 463799	D90				E127.1
Process 8: CRUDE OIL PRODUCTION					
VESSEL, V-2A, FREE WATER KNOCKOUT, VENTED TO THE VAPOR RECOVERY SYSTEM, LENGTH: 50 FT ; DIAMETER: 10 FT A/N: 476478	D82				

* (1) (1A) (1B) Denotes RECLAIM emission factor (2) (2A) (2B) Denotes RECLAIM emission rate
(3) Denotes RECLAIM concentration limit (4) Denotes BACT emission limit
(5) (5A) (5B) Denotes command and control emission limit (6) Denotes air toxic control rule limit
(7) Denotes NSR applicability limit (8) (8A) (8B) Denotes 40 CFR limit (e.g. NSPS, NESHAPS, etc.)
(9) See App B for Emission Limits (10) See section J for NESHAP/MACT requirements

** Refer to section F and G of this permit to determine the monitoring, recordkeeping and reporting requirements for this device.

FACILITY PERMIT TO OPERATE
SIGNAL HILL PETROLEUM INC

SECTION D: FACILITY DESCRIPTION AND EQUIPMENT SPECIFIC CONDITIONS

The operator shall comply with the terms and conditions set forth below:

Equipment	ID No.	Connected To	RECLAIM Source Type/ Monitoring Unit	Emissions * And Requirements	Conditions
Process 8: CRUDE OIL PRODUCTION					
VESSEL, V-2B, FREE WATER KNOCKOUT, VENTED TO THE VAPOR RECOVERY SYSTEM, LENGTH: 50 FT ; DIAMETER: 10 FT A/N: 476478	D83				
VESSEL, COALESCER, V-3A, ELECTROSTATIC TREATER, VENTED TO THE VAPOR RECOVERY SYSTEM, LENGTH: 50 FT ; DIAMETER: 10 FT A/N: 476478	D84				
VESSEL, COALESCER, V-3B, ELECTROSTATIC TREATER, VENTED TO THE VAPOR RECOVERY SYSTEM, LENGTH: 50 FT ; DIAMETER: 10 FT A/N: 476478	D85				
STORAGE TANK, FIXED ROOF, T-1, CRUDE OIL, VENTED TO THE VAPOR RECOVERY SYSTEM, 2000 BBL; DIAMETER: 30 FT ; HEIGHT: 16 FT A/N: 476478	D86				E57.2, E127.1
STORAGE TANK, FIXED ROOF, T-2, CRUDE OIL, VENTED TO THE VAPOR RECOVERY SYSTEM, 2000 BBL; DIAMETER: 30 FT ; HEIGHT: 16 FT A/N: 476478	D87				E57.2, E127.1

* (1) (1A) (1B) Denotes RECLAIM emission factor
(2) (2A) (2B) Denotes RECLAIM emission rate
(3) Denotes RECLAIM concentration limit
(4) Denotes BACT emission limit
(5) (5A) (5B) Denotes command and control emission limit
(6) Denotes air toxic control rule limit
(7) Denotes NSR applicability limit
(8) (8A) (8B) Denotes 40 CFR limit (e.g. NSPS, NESHAPS, etc.)
(9) See App B for Emission Limits
(10) See section J for NESHAP/MACT requirements

** Refer to section F and G of this permit to determine the monitoring, recordkeeping and reporting requirements for this device.

FACILITY PERMIT TO OPERATE
SIGNAL HILL PETROLEUM INC

SECTION D: FACILITY DESCRIPTION AND EQUIPMENT SPECIFIC CONDITIONS

The operator shall comply with the terms and conditions set forth below:

Equipment	ID No.	Connected To	RECLAIM Source Type/ Monitoring Unit	Emissions * And Requirements	Conditions
Process 8: CRUDE OIL PRODUCTION					
STORAGE TANK, FIXED ROOF, T-3, CRUDE OIL, VENTED TO THE VAPOR RECOVERY SYSTEM, 2000 BBL; DIAMETER: 30 FT ; HEIGHT: 16 FT A/N: 476478	D88				E57.2, E127.1
Process 9: Field Gas Processing					P4.1
System 1: Vapor Recovery System					
VESSEL, V-22, UNDER VACUUM, LENGTH: 17 FT 5 IN; DIAMETER: 6 FT A/N: 560808	D91				
VESSEL, V-24, UNDER VACUUM, LENGTH: 15 FT ; DIAMETER: 3 FT 6 IN A/N: 560808	D92				
VESSEL, V-01, SUCTION SCRUBBER, 1ST STAGE, HEIGHT: 5 FT ; DIAMETER: 2 FT A/N: 560808	D129				
VESSEL, V-100, SUCTION SCRUBBER, 1ST STAGE, HEIGHT: 5 FT ; DIAMETER: 2 FT A/N: 560808	D130				
VESSEL, V-300, SUCTION SCRUBBER, 1ST STAGE, HEIGHT: 5 FT ; DIAMETER: 2 FT A/N: 560808	D146				
VESSEL, V-500, SUCTION SCRUBBER, 1ST STAGE, HEIGHT: 5 FT ; DIAMETER: 2 FT A/N: 560808	D147				

* (1) (1A) (1B) Denotes RECLAIM emission factor
(2) (2A) (2B) Denotes RECLAIM emission rate
(3) Denotes RECLAIM concentration limit
(4) Denotes BACT emission limit
(5) (5A) (5B) Denotes command and control emission limit
(6) Denotes air toxic control rule limit
(7) Denotes NSR applicability limit
(8) (8A) (8B) Denotes 40 CFR limit (e.g. NSPS, NESHAPS, etc.)
(9) See App B for Emission Limits
(10) See section J for NESHAP/MACT requirements

** Refer to section F and G of this permit to determine the monitoring, recordkeeping and reporting requirements for this device.

FACILITY PERMIT TO OPERATE
SIGNAL HILL PETROLEUM INC

SECTION D: FACILITY DESCRIPTION AND EQUIPMENT SPECIFIC CONDITIONS

The operator shall comply with the terms and conditions set forth below:

Equipment	ID No.	Connected To	RECLAIM Source Type/ Monitoring Unit	Emissions * And Requirements	Conditions
Process 9: Field Gas Processing					P4.1
VESSEL, V-02, DISCHARGE SCRUBBER/OIL SEPARATOR, 1ST STAGE, HEIGHT: 3 FT 6 IN; DIAMETER: 3 FT A/N: 560808	D131				
VESSEL, V-101, DISCHARGE SCRUBBER/OIL SEPARATOR, 1ST STAGE, HEIGHT: 3 FT 6 IN; DIAMETER: 3 FT A/N: 560808	D132				
VESSEL, V-303, DISCHARGE SCRUBBER/OIL SEPARATOR, 1ST STAGE, HEIGHT: 3 FT 6 IN; DIAMETER: 3 FT A/N: 560808	D148				
VESSEL, V-305, DISCHARGE SCRUBBER/OIL SEPARATOR, 1ST STAGE, HEIGHT: 3 FT 6 IN; DIAMETER: 3 FT A/N: 560808	D149				
VESSEL, V-03, BLOWCASE, 1ST STAGE, LENGTH: 1 FT 6 IN; DIAMETER: 6 FT 8 IN A/N: 560808	D133				
VESSEL, V-102, BLOWCASE, 1ST STAGE, LENGTH: 1 FT 6 IN; DIAMETER: 6 FT 8 IN A/N: 560808	D150				
VESSEL, V-302, BLOWCASE, 1ST STAGE, LENGTH: 1 FT 6 IN; DIAMETER: 6 FT 8 IN A/N: 560808	D151				

* (1) (1A) (1B) Denotes RECLAIM emission factor
(2) (2A) (2B) Denotes RECLAIM emission rate
(3) Denotes RECLAIM concentration limit
(4) Denotes BACT emission limit
(5) (5A) (5B) Denotes command and control emission limit
(6) Denotes air toxic control rule limit
(7) Denotes NSR applicability limit
(8) (8A) (8B) Denotes 40 CFR limit (e.g. NSPS, NESHAPS, etc.)
(9) See App B for Emission Limits
(10) See section J for NESHAP/MACT requirements

** Refer to section F and G of this permit to determine the monitoring, recordkeeping and reporting requirements for this device.

FACILITY PERMIT TO OPERATE
SIGNAL HILL PETROLEUM INC

SECTION D: FACILITY DESCRIPTION AND EQUIPMENT SPECIFIC CONDITIONS

The operator shall comply with the terms and conditions set forth below:

Equipment	ID No.	Connected To	RECLAIM Source Type/ Monitoring Unit	Emissions * And Requirements	Conditions
Process 9: Field Gas Processing					P4.1
VESSEL, V-602, BLOWCASE, 1ST STAGE, LENGTH: 1 FT 6 IN; DIAMETER: 6 FT 8 IN A/N: 560808	D152				
HEAT EXCHANGER, E-01A/B, FINNED TUBE, 1ST STAGE, WITH 5 HP FAN MOTOR A/N: 560808	D138				
HEAT EXCHANGER, E-03A/B, FINNED TUBE, 1ST STAGE, WITH 5 HP FAN MOTOR A/N: 560808	D153				
HEAT EXCHANGER, E-04A/B, FINNED TUBE, 1ST STAGE, WITH 5 HP FAN MOTOR A/N: 560808	D154				
HEAT EXCHANGER, E-06A/B, FINNED TUBE, 1ST STAGE, WITH 5 HP FAN MOTOR A/N: 560808	D155				
VESSEL, V-04, SUCTION SCRUBBER, 2ND STAGE, HEIGHT: 5 FT ; DIAMETER: 1 FT 2 IN A/N: 560808	D134				
VESSEL, V-200, SUCTION SCRUBBER, 2ND STAGE, HEIGHT: 5 FT ; DIAMETER: 1 FT 2 IN A/N: 560808	D135				
VESSEL, V-400, SUCTION SCRUBBER, 2ND STAGE, HEIGHT: 5 FT ; DIAMETER: 1 FT 2 IN A/N: 560808	D156				

* (1) (1A) (1B) Denotes RECLAIM emission factor
(2) (2A) (2B) Denotes RECLAIM emission rate
(3) Denotes RECLAIM concentration limit
(4) Denotes BACT emission limit
(5) (5A) (5B) Denotes command and control emission limit
(6) Denotes air toxic control rule limit
(7) Denotes NSR applicability limit
(8) (8A) (8B) Denotes 40 CFR limit (e.g. NSPS, NESHAPS, etc.)
(9) See App B for Emission Limits
(10) See section J for NESHAP/MACT requirements

** Refer to section F and G of this permit to determine the monitoring, recordkeeping and reporting requirements for this device.

FACILITY PERMIT TO OPERATE
SIGNAL HILL PETROLEUM INC

SECTION D: FACILITY DESCRIPTION AND EQUIPMENT SPECIFIC CONDITIONS

The operator shall comply with the terms and conditions set forth below:

Equipment	ID No.	Connected To	RECLAIM Source Type/ Monitoring Unit	Emissions * And Requirements	Conditions
Process 9: Field Gas Processing					P4.1
VESSEL, V-600, SUCTION SCRUBBER, 2ND STAGE, HEIGHT: 5 FT ; DIAMETER: 1 FT 2 IN A/N: 560808	D157				
VESSEL, V-05, DISCHARGE SCRUBBER/OIL SEPARATOR, 2ND STAGE, HEIGHT: 3 FT ; DIAMETER: 1 FT 8 IN A/N: 560808	D136				
VESSEL, V-201, DISCHARGE SCRUBBER/OIL SEPARATOR, 2ND STAGE, HEIGHT: 3 FT ; DIAMETER: 1 FT 8 IN A/N: 560808	D137				
VESSEL, V-304, DISCHARGE SCRUBBER/OIL SEPARATOR, 2ND STAGE, HEIGHT: 3 FT ; DIAMETER: 1 FT 8 IN A/N: 560808	D158				
VESSEL, V-306, DISCHARGE SCRUBBER/OIL SEPARATOR, 2ND STAGE, HEIGHT: 3 FT ; DIAMETER: 1 FT 8 IN A/N: 560808	D159				
VESSEL, V-06, BLOWCASE, 2ND STAGE, LENGTH: 1 FT 6 IN; DIAMETER: 6 FT 8 IN A/N: 560808	D160				
VESSEL, V-202, BLOWCASE, 2ND STAGE, LENGTH: 1 FT 6 IN; DIAMETER: 6 FT 8 IN A/N: 560808	D161				

* (1) (1A) (1B) Denotes RECLAIM emission factor
(2) (2A) (2B) Denotes RECLAIM emission rate
(3) Denotes RECLAIM concentration limit
(4) Denotes BACT emission limit
(5) (5A) (5B) Denotes command and control emission limit
(6) Denotes air toxic control rule limit
(7) Denotes NSR applicability limit
(8) (8A) (8B) Denotes 40 CFR limit (e.g. NSPS, NESHAPS, etc.)
(9) See App B for Emission Limits
(10) See section J for NESHAP/MACT requirements

** Refer to section F and G of this permit to determine the monitoring, recordkeeping and reporting requirements for this device.

FACILITY PERMIT TO OPERATE
SIGNAL HILL PETROLEUM INC

SECTION D: FACILITY DESCRIPTION AND EQUIPMENT SPECIFIC CONDITIONS

The operator shall comply with the terms and conditions set forth below:

Equipment	ID No.	Connected To	RECLAIM Source Type/ Monitoring Unit	Emissions * And Requirements	Conditions
Process 9: Field Gas Processing					P4.1
VESSEL, V-502, BLOWCASE, 2ND STAGE, LENGTH: 1 FT 6 IN; DIAMETER: 6 FT 8 IN A/N: 560808	D162				
VESSEL, V-702, BLOWCASE, 2ND STAGE, LENGTH: 1 FT 6 IN; DIAMETER: 6 FT 8 IN A/N: 560808	D163				
HEAT EXCHANGER, E-02A/B, FINNED TUBE, 2ND STAGE, WITH 5 HP FAN MOTOR A/N: 560808	D140				
HEAT EXCHANGER, E-200/201, FINNED TUBE, 2ND STAGE, WITH 5 HP FAN MOTOR A/N: 560808	D164				
HEAT EXCHANGER, E-05A/B, FINNED TUBE, 2ND STAGE, WITH 5 HP FAN MOTOR A/N: 560808	D165				
HEAT EXCHANGER, E-07A/B, FINNED TUBE, 2ND STAGE, WITH 5 HP FAN MOTOR A/N: 560808	D166				
System 2: Natural Gas Dehydration					
TANK, T-30, GLYCOL, 375 GALS A/N: 560809	D112				
VESSEL, V-26, 20,000 GALLONS CAPACITY, NGL LIQUID, PRESSURE VESSEL, VENTED TO VAPOR RECOVERY SYSTEM, LENGTH: 35 FT ; DIAMETER: 10 FT A/N: 560809	D113				E127.1

* (1) (1A) (1B) Denotes RECLAIM emission factor
(2) (2A) (2B) Denotes RECLAIM emission rate
(3) Denotes RECLAIM concentration limit
(4) Denotes BACT emission limit
(5) (5A) (5B) Denotes command and control emission limit
(6) Denotes air toxic control rule limit
(7) Denotes NSR applicability limit
(8) (8A) (8B) Denotes 40 CFR limit (e.g. NSPS, NESHAPS, etc.)
(9) See App B for Emission Limits
(10) See section J for NESHAP/MACT requirements

** Refer to section F and G of this permit to determine the monitoring, recordkeeping and reporting requirements for this device.

FACILITY PERMIT TO OPERATE
SIGNAL HILL PETROLEUM INC

SECTION D: FACILITY DESCRIPTION AND EQUIPMENT SPECIFIC CONDITIONS

The operator shall comply with the terms and conditions set forth below:

Equipment	ID No.	Connected To	RECLAIM Source Type/ Monitoring Unit	Emissions * And Requirements	Conditions
Process 9: Field Gas Processing					P4.1
VESSEL, V-27, 20,000 GALLONS CAPACITY, NGL LIQUID, PRESSURE VESSEL, VENTED TO VAPOR RECOVERY SYSTEM, LENGTH: 35 FT ; DIAMETER: 10 FT A/N: 560809	D114				E127.1
HEAT EXCHANGER, A-201, GAS/GAS, SHELL/TUBE, LENGTH: 17 FT 6 IN; WIDTH: 8 FT 5 IN; HEIGHT: 14 FT A/N: 560809	D167				
VESSEL, V-909, SCRUBBER, HEIGHT: 7 FT ; DIAMETER: 2 FT 6 IN A/N: 560809	D168				
HEAT EXCHANGER, E-10, GAS/GAS, SHELL/TUBE, LENGTH: 11 FT; DIAMETER: 1 FT 4 IN A/N: 560809	D169				
VESSEL, E-20, CHILLER, SHELL/TUBE, LENGTH: 16 FT ; DIAMETER: 2 FT A/N: 560809	D170				
VESSEL, V-30, COLD SEPARATOR, LENGTH: 10 FT ; DIAMETER: 2 FT A/N: 560809	D171				
VESSEL, E-20A, SURGE DRUM, LENGTH: 20 FT ; DIAMETER: 2 FT A/N: 560809	D172				
VESSEL, V-402, OIL STILL, LENGTH: 3 FT ; DIAMETER: 1 FT A/N: 560809	D173				

* (1) (1A) (1B) Denotes RECLAIM emission factor
(2) (2A) (2B) Denotes RECLAIM emission rate
(3) Denotes RECLAIM concentration limit
(4) Denotes BACT emission limit
(5) (5A) (5B) Denotes command and control emission limit
(6) Denotes air toxic control rule limit
(7) Denotes NSR applicability limit
(8) (8A) (8B) Denotes 40 CFR limit (e.g. NSPS, NESHAPS, etc.)
(9) See App B for Emission Limits
(10) See section J for NESHAP/MACT requirements

** Refer to section F and G of this permit to determine the monitoring, recordkeeping and reporting requirements for this device.

FACILITY PERMIT TO OPERATE
SIGNAL HILL PETROLEUM INC

SECTION D: FACILITY DESCRIPTION AND EQUIPMENT SPECIFIC CONDITIONS

The operator shall comply with the terms and conditions set forth below:

Equipment	ID No.	Connected To	RECLAIM Source Type/ Monitoring Unit	Emissions * And Requirements	Conditions
Process 9: Field Gas Processing					P4.1
PUMP, P-102, OIL STILL/FILL, WITH 2 HP MOTOR A/N: 560809	D174				
VESSEL, T-40, STABILIZER REBOILER, WITH ELECTRIC HEATER, LENGTH: 12 FT 8 IN; DIAMETER: 2 FT A/N: 560809	D175				E57.3
VESSEL, T-40A, NGL STABILIZER COLUMN TOP, HEIGHT: 2 FT 8 IN; DIAMETER: 1 FT A/N: 560809	D176				E57.3
VESSEL, T-40B, NGL STABILIZER COLUMN BOTTOM, HEIGHT: 13 FT 4 IN; DIAMETER: 1 FT A/N: 560809	D177				E57.3
VESSEL, V-401, BULK OIL SEPARATOR, LENGTH: 16 FT ; DIAMETER: 2 FT A/N: 560809	D178				
VESSEL, V-403, PROPANE RECEIVER, LENGTH: 15 FT ; DIAMETER: 2 FT A/N: 560809	D179				
VESSEL, AX-200/350, PROPANE CONDENSER/OIL COOLER, WITH TWO 20 HP FAN MOTORS, LENGTH: 24 FT ; DIAMETER: 8 FT 9 IN A/N: 560809	D180				
VESSEL, V-404, PROPANE FLASH ECONOMIZER, LENGTH: 8 FT ; DIAMETER: 2 FT A/N: 560809	D181				

* (1) (1A) (1B) Denotes RECLAIM emission factor
(2) (2A) (2B) Denotes RECLAIM emission rate
(3) Denotes RECLAIM concentration limit
(4) Denotes BACT emission limit
(5) (5A) (5B) Denotes command and control emission limit
(6) Denotes air toxic control rule limit
(7) Denotes NSR applicability limit
(8) (8A) (8B) Denotes 40 CFR limit (e.g. NSPS, NESHAPS, etc.)
(9) See App B for Emission Limits
(10) See section J for NESHAP/MACT requirements

** Refer to section F and G of this permit to determine the monitoring, recordkeeping and reporting requirements for this device.

FACILITY PERMIT TO OPERATE
SIGNAL HILL PETROLEUM INC

SECTION D: FACILITY DESCRIPTION AND EQUIPMENT SPECIFIC CONDITIONS

The operator shall comply with the terms and conditions set forth below:

Equipment	ID No.	Connected To	RECLAIM Source Type/ Monitoring Unit	Emissions * And Requirements	Conditions
Process 9: Field Gas Processing					P4.1
VESSEL, V-405, EG STILL COLUMN, LENGTH: 12 FT ; DIAMETER: 10 IN A/N: 560809	D182				
VESSEL, V-410, EG REBOILER, WITH ELECTRIC HEATER, LENGTH: 8 FT ; DIAMETER: 2 FT A/N: 560809	D183				E57.3
PUMP, P-545 A/B, EG PUMPS, WITH 1 HP MOTOR A/N: 560809	D184				
VESSEL, V-409, EG AFTER-FILTER, LENGTH: 2 FT 6 IN; DIAMETER: 6 IN A/N: 560809	D185				
VESSEL, V-408, EG CHARCOAL ADSORBER, LENGTH: 3 FT 4 IN; DIAMETER: 6 IN A/N: 560809	D186				
HEAT EXCHANGER, HX-103, EG EXCHANGER, PLATE AND FRAME, LENGTH: 3 FT; DIAMETER: 20 IN A/N: 560809	D187				
VESSEL, V-407, EG PRE-FILTER, LENGTH: 2 FT 6 IN; DIAMETER: 6 IN A/N: 560809	D188				
VESSEL, V-406, EG FLASH DRUM, LENGTH: 6 FT ; DIAMETER: 1 FT A/N: 560809	D189				

* (1) (1A) (1B) Denotes RECLAIM emission factor
(2) (2A) (2B) Denotes RECLAIM emission rate
(3) Denotes RECLAIM concentration limit
(4) Denotes BACT emission limit
(5) (5A) (5B) Denotes command and control emission limit
(6) Denotes air toxic control rule limit
(7) Denotes NSR applicability limit
(8) (8A) (8B) Denotes 40 CFR limit (e.g. NSPS, NESHAPS, etc.)
(9) See App B for Emission Limits
(10) See section J for NESHAP/MACT requirements

** Refer to section F and G of this permit to determine the monitoring, recordkeeping and reporting requirements for this device.

FACILITY PERMIT TO OPERATE
SIGNAL HILL PETROLEUM INC

SECTION D: FACILITY DESCRIPTION AND EQUIPMENT SPECIFIC CONDITIONS

The operator shall comply with the terms and conditions set forth below:

Equipment	ID No.	Connected To	RECLAIM Source Type/ Monitoring Unit	Emissions * And Requirements	Conditions
Process 9: Field Gas Processing					P4.1
HEAT EXCHANGER, GLYCOL VAPOR CONDENSER, HZZ-1100, LENGTH: 6 FT 2 IN; WIDTH: 3 FT 10 IN; HEIGHT: 8 FT 7 IN A/N: 560809	D190				
System 3: CO2 FILTRATION					
VESSEL, T-10, DEMISTER, LENGTH: 5 FT 3 IN; DIAMETER: 2 FT 6 IN A/N: 560810	D191				
FILTER, F-11, COARSE COALESCING, LENGTH: 4 FT 3 IN; DIAMETER: 11 IN A/N: 560810	D192				
FILTER, F-12, FINE COALESCING, LENGTH: 4 FT 3 IN; DIAMETER: 11 IN A/N: 560810	D193				
HEAT EXCHANGER, HX-14, LENGTH: 6 FT; DIAMETER: 7 IN A/N: 560810	D194				
VESSEL, F-16, CARBON FILTER, LENGTH: 5 FT 7 IN; DIAMETER: 2 FT 6 IN A/N: 560810	D195				
FILTER, F-18, PARTICULATE, LENGTH: 4 FT 3 IN; DIAMETER: 11 IN A/N: 560810	D196				
VESSEL, MM-19, MEMBRANE MODULE, GENERON MODEL 6150-HHP-H, LENGTH: 4 FT 4 IN; DIAMETER: 7 IN A/N: 560810	D197				

* (1) (1A) (1B) Denotes RECLAIM emission factor
(2) (2A) (2B) Denotes RECLAIM emission rate
(3) Denotes RECLAIM concentration limit
(4) Denotes BACT emission limit
(5) (5A) (5B) Denotes command and control emission limit
(6) Denotes air toxic control rule limit
(7) Denotes NSR applicability limit
(8) (8A) (8B) Denotes 40 CFR limit (e.g. NSPS, NESHAPS, etc.)
(9) See App B for Emission Limits
(10) See section J for NESHAP/MACT requirements

** Refer to section F and G of this permit to determine the monitoring, recordkeeping and reporting requirements for this device.

FACILITY PERMIT TO OPERATE
SIGNAL HILL PETROLEUM INC

SECTION D: FACILITY DESCRIPTION AND EQUIPMENT SPECIFIC CONDITIONS

The operator shall comply with the terms and conditions set forth below:

Equipment	ID No.	Connected To	RECLAIM Source Type/ Monitoring Unit	Emissions * And Requirements	Conditions
Process 9: Field Gas Processing					P4.1
VESSEL, T-1, BUFFER TANK, 200 GALLONS, HEIGHT: 6 FT ; DIAMETER: 2 FT 6 IN A/N: 560810	D198				
FILTER, F-1, PARTICULATE, LEROI, HEIGHT: 1 FT 3 IN; DIAMETER: 5 IN A/N: 560810	D199				
VESSEL, OS-1, OIL/GAS SEPARATOR, LEROI, HEIGHT: 4 FT ; DIAMETER: 1 FT 8 IN A/N: 560810	D200				
VESSEL, OC/GC-1, OIL COOLER/GAS COOLER, LEROI, WIDTH: 1 FT 5 IN; HEIGHT: 4 FT 8 IN; LENGTH: 5 FT 5 IN A/N: 560810	D201				
VESSEL, T-2, BUFFER TANK, 120 GALLONS, HEIGHT: 5 FT 7 IN; DIAMETER: 2 FT A/N: 560810	D202				
FILTER, F-2, PARTICULATE, LEROI, HEIGHT: 1 FT 3 IN; DIAMETER: 5 IN A/N: 560810	D203				
VESSEL, OS-2, OIL/GAS SEPARATOR, LEROI, HEIGHT: 4 FT ; DIAMETER: 1 FT 8 IN A/N: 560810	D204				
VESSEL, OC/GC-2, OIL COOLER/GAS COOLER, LEROI, WIDTH: 1 FT 1 IN; HEIGHT: 3 FT 11 IN; LENGTH: 4 FT 1 IN A/N: 560810	D205				

* (1) (1A) (1B) Denotes RECLAIM emission factor
(2) (2A) (2B) Denotes RECLAIM emission rate
(3) Denotes RECLAIM concentration limit
(4) Denotes BACT emission limit
(5) (5A) (5B) Denotes command and control emission limit
(6) Denotes air toxic control rule limit
(7) Denotes NSR applicability limit
(8) (8A) (8B) Denotes 40 CFR limit (e.g. NSPS, NESHAPS, etc.)
(9) See App B for Emission Limits
(10) See section J for NESHAP/MACT requirements

** Refer to section F and G of this permit to determine the monitoring, recordkeeping and reporting requirements for this device.

FACILITY PERMIT TO OPERATE
SIGNAL HILL PETROLEUM INC

SECTION D: DEVICE ID INDEX

The following sub-section provides an index to the devices that make up the facility description sorted by device ID.

FACILITY PERMIT TO OPERATE
SIGNAL HILL PETROLEUM INC

SECTION D: DEVICE ID INDEX

Device Index For Section D			
Device ID	**Section D Page No.**	**Process**	**System**
D51	2	6	0
D52	3	6	0
D53	3	7	0
D54	3	7	0
D55	3	7	0
D56	4	7	0
D82	4	8	0
D83	5	8	0
D84	5	8	0
D85	5	8	0
D86	5	8	0
D87	5	8	0
D88	6	8	0
D89	4	7	0
D90	4	7	0
D91	6	9	1
D92	6	9	1
D112	10	9	2
D113	10	9	2
D114	11	9	2
D115	1	2	1
C117	1	2	1
C118	1	2	1
D120	2	2	1
D123	2	4	2
D124	2	4	2
D125	2	4	2
D126	2	4	2
D127	4	7	0
D128	4	7	0
D129	6	9	1
D130	6	9	1
D131	7	9	1
D132	7	9	1
D133	7	9	1

FACILITY PERMIT TO OPERATE
SIGNAL HILL PETROLEUM INC

SECTION D: DEVICE ID INDEX

Device Index For Section D			
Device ID	**Section D Page No.**	**Process**	**System**
D134	8	9	1
D135	8	9	1
D136	9	9	1
D137	9	9	1
D138	8	9	1
D140	10	9	1
D142	2	6	0
D143	3	6	0
D144	3	6	0
D145	3	6	0
D146	6	9	1
D147	6	9	1
D148	7	9	1
D149	7	9	1
D150	7	9	1
D151	7	9	1
D152	8	9	1
D153	8	9	1
D154	8	9	1
D155	8	9	1
D156	8	9	1
D157	9	9	1
D158	9	9	1
D159	9	9	1
D160	9	9	1
D161	9	9	1
D162	10	9	1
D163	10	9	1
D164	10	9	1
D165	10	9	1
D166	10	9	1
D167	11	9	2
D168	11	9	2
D169	11	9	2
D170	11	9	2

FACILITY PERMIT TO OPERATE
SIGNAL HILL PETROLEUM INC

SECTION D: DEVICE ID INDEX

Device Index For Section D			
Device ID	**Section D Page No.**	**Process**	**System**
D171	11	9	2
D172	11	9	2
D173	11	9	2
D174	12	9	2
D175	12	9	2
D176	12	9	2
D177	12	9	2
D178	12	9	2
D179	12	9	2
D180	12	9	2
D181	12	9	2
D182	13	9	2
D183	13	9	2
D184	13	9	2
D185	13	9	2
D186	13	9	2
D187	13	9	2
D188	13	9	2
D189	13	9	2
D190	14	9	2
D191	14	9	3
D192	14	9	3
D193	14	9	3
D194	14	9	3
D195	14	9	3
D196	14	9	3
D197	14	9	3
D198	15	9	3
D199	15	9	3
D200	15	9	3
D201	15	9	3
D202	15	9	3
D203	15	9	3
D204	15	9	3
D205	15	9	3

FACILITY PERMIT TO OPERATE
SIGNAL HILL PETROLEUM INC

SECTION D: FACILITY DESCRIPTION AND EQUIPMENT SPECIFIC CONDITIONS

The operator shall comply with the terms and conditions set forth below:

FACILITY CONDITIONS

F2.1 The operator shall limit emissions from this facility as follows:

CONTAMINANT	EMISSIONS LIMIT
VOC	Less than or equal to 20 TONS IN ANY ONE YEAR

a) To demonstrate compliance with the above emission limit, the facility operator shall:

1. determine and report annual VOC emissions for the facility in accordance with all applicable permit conditions and rule requirements.

2. comply with the requirements of Rule 109 - Recordkeeping for Volatile Organic Compound Emissions.

b) If the reported facility emissions exceed the above emission limit in any one emission inventory year, the facility operator shall :

1. submit a written notification of noncompliance to the District within 30 days of discovery of the noncompliance, and

2. comply with the requirements of Rule 1178 in accordance with paragraph (d)(5) of the rule.

[RULE 1178, 12-21-2001]

F14.1 The operator shall not purchase diesel fuel containing sulfur compounds in excess of 15 ppm by weight as supplied by the supplier.

This condition shall become effective on or after June 1, 2004.

FACILITY PERMIT TO OPERATE
SIGNAL HILL PETROLEUM INC

SECTION D: FACILITY DESCRIPTION AND EQUIPMENT SPECIFIC CONDITIONS

The operator shall comply with the terms and conditions set forth below:

[RULE 431.2, 9-15-2000]

F30.1 For the purpose of exemption from Title V requirements, the total emissions from this facility shall not equal or exceed the following specified amounts:

Pollutant	Emission Limit (Tons in any 12 consecutive calendar-month period)
NOx	10
VOC	10

FACILITY PERMIT TO OPERATE
SIGNAL HILL PETROLEUM INC

SECTION D: FACILITY DESCRIPTION AND EQUIPMENT SPECIFIC CONDITIONS

The operator shall comply with the terms and conditions set forth below:

a). If the total facility emissions for any of the specified pollutant amounts are in exceedance in any 12 consecutive calendar-month period, or if the facility operator fails to comply with the following requirements, the Facility Permit holder shall submit a Title V Permit application package and obtain a Title V permit pursuant to the requirements specified in Rule 3003. To ensure compliance with the emission limit(s) of this condition, the facility operator shall:

i). determine emissions according to the requirements of Rule 2011 for SOx emissions and Rule 2012 for NOx emissions, as applicable;

ii). in addition to complying with all applicable monitoring, recordkeeping and reporting requirements of Regulation XX, monitor and record on a monthly basis the total facility emissions, excluding emissions identified in Rule 3000(b)(28)(A) through (E), for each 12 consecutive month period, and

iii). for any 12 consecutive month period in which emissions do not comply with an emission limit in this condition, submit to AQMD within 15 days a report of noncompliance and the total subject emissions from the facility for the preceding 12 consecutive calendar-month period.

b). For the purpose of determining compliance with the emission limit(s), the total emissions from this facility shall be equal to the emissions recorded each month by the facility, including any corrections as allowed by Rule 2004, and including any corrections resulting from an AQMD audit of this facility.

The provisions of this condition are the sole method of determining compliance with the facility emission limit(s) of this condition.

1. Comply with Rule 109 (Recordkeeping for Volatile Organic Compound Emissions).

2. Within 14 calendar days after the end of each calendar month, total and record VOC emissions for the calendar month and for the previous 12 calendar month period from all equipment and operations that are required to have written permits or are exempt from written permits pursuant to Rule 219. The record shall include any

FACILITY PERMIT TO OPERATE
SIGNAL HILL PETROLEUM INC

SECTION D: FACILITY DESCRIPTION AND EQUIPMENT SPECIFIC CONDITIONS

The operator shall comply with the terms and conditions set forth below:

procedures used to account for control device efficiencies and/or waste disposal. It shall be signed and certified for accuracy by the highest ranking individual responsible for compliance with District rules.

3. Maintain a single list which includes only the name and address of each person from whom the facility acquired VOC-containing material regulated by the District that was used or stored at the facility during the preceding 12 months.

4. Retain all purchase invoices for all VOC-containing material used or stored at the facility, and all waste manifests for all waste VOC-containing material removed from the facility.

5. By July 1 of each year, total and record VOC emissions from the facility for the emission inventory year.

[**RULE 1303(b)(2)-Offset, 5-10-1996;** RULE 1303(b)(2)-Offset, 12-6-2002]

F67.1 The facility operator shall comply with all terms and conditions specified below.

Signal Hill Petroleum, Inc. shall comply with all applicable mitigation measures stipulated in the Mitigation Monitoring and Reporting Plan which is part of the SCAQMD approved Subsequent Mitigated Negative Declaration for this facility.

[CA PRC CEQA, 11-23-1970]

PROCESS CONDITIONS

P4.1 The following condition(s) shall apply to all affected devices listed under Section D of this process for fugitive emissions of volatile organic compounds (VOC):

FACILITY PERMIT TO OPERATE
SIGNAL HILL PETROLEUM INC

SECTION D: FACILITY DESCRIPTION AND EQUIPMENT SPECIFIC CONDITIONS

The operator shall comply with the terms and conditions set forth below:

All new components in VOC service, a leak greater than 1000 ppm but less than 10,000 ppm measured as methane above background as measured using EPA Method 21, shall be repaired within 14 days of detection. Components shall be defined as any valve, fitting, pump, compressor, pressure relief device, diaphragm, hatch, sight-glass, and meter, which are not exempted by Rule 1173.

All accessible components shall be leak inspected quarterly and inaccessible components inspected annually. The inspection frequency for accessible components, except pumps & compressors, may change from quarterly to annually, provided conditions (e)(5)(A) and (e)(5)(B) of Rule 1173 are met.

The operator shall keep records of the quarterly inspection (and annually where applicable), subsequent repair, and reinspection, in a manner approved by the District."

[**RULE 1173, 5-13-1994;** RULE 1173, 12-6-2002]

[Processes subject to this condition : 9]

DEVICE CONDITIONS

A. Emission Limits

A63.1 The operator shall limit emissions from this equipment as follows:

CONTAMINANT	EMISSIONS LIMIT
CO	Less than or equal to 660 LBS IN ANY ONE MONTH
PM10	Less than or equal to 298 LBS IN ANY ONE MONTH
VOC	Less than or equal to 125 LBS IN ANY ONE MONTH
SOX	Less than or equal to 87 LBS IN ANY ONE MONTH

FACILITY PERMIT TO OPERATE
SIGNAL HILL PETROLEUM INC

SECTION D: FACILITY DESCRIPTION AND EQUIPMENT SPECIFIC CONDITIONS

The operator shall comply with the terms and conditions set forth below:

For the purposes of this condition, the limit(s) shall be based on the total combined emissions from the turbine (device D115).

The operator shall calculate the emission limit(s) , after the CO CEMS certification, based on the readings from the certified CO CEMS. In the event CO CEMS is not operating, the emissions shall be calculated in accordance with the approved CEMS plan

The operator shall calculate the emission limit(s) of PM10, VOC and SOx by using the monthly fuel usage data and the following emission factors:- PM10: 6.11 lbs/mmscf, VOC: 2.62 lbs/mmscf and SOx: 0.75 lbs/mmscf

The operator shall calculate the fuel gas volume using this formula: SCFH at 60 deg. F = (fuel gas meter reading in lbs/hr) x (379 dscf/lb-mole)/(21.2 lb/lb-mole (fuel gas MW))

[**RULE 1303(b)(2)-Offset, 5-10-1996;** RULE 1303(b)(2)-Offset, 12-6-2002]

[Devices subject to this condition : D115]

A99.1 The 5 PPM NOX emission limit(s) shall not apply during turbine start-up and shutdowns. Start-up shall not exceed 3 hours; however, NOx emission limit of 5 ppm shall be established in the first hour of start-up. Written records of start-ups and shutdowns shall be kept and made available to AQMD.

[**RULE 2005, 4-9-1999; RULE 2005, 4-20-2001**]

[Devices subject to this condition : D115]

A99.2 The 6 PPM CO emission limit(s) shall not apply during turbine start-up and shutdowns. Start-up shall not exceed 3 hours. Written records of start-ups and shutdowns shall be kept and made available to AQMD.

FACILITY PERMIT TO OPERATE
SIGNAL HILL PETROLEUM INC

SECTION D: FACILITY DESCRIPTION AND EQUIPMENT SPECIFIC CONDITIONS

The operator shall comply with the terms and conditions set forth below:

[**RULE 1303(b)(2)-Offset, 5-10-1996;** RULE 1303(b)(2)-Offset, 12-6-2002]

[Devices subject to this condition : D115]

A195.1 The 5 PPMV NOX emission limit(s) is averaged over 60 minutes at 15 percent oxygen, dry basis.

[**RULE 2005, 4-9-1999; RULE 2005, 4-20-2001**]

[Devices subject to this condition : D115]

A195.2 The 6 PPMV CO emission limit(s) is averaged over 3 hours at 15 percent oxygen, dry basis.

[**RULE 1303(a)(1)-BACT, 5-10-1996;** RULE 1303(a)(1)-BACT, 12-6-2002]

[Devices subject to this condition : D115]

A195.3 The 2 PPMV VOC emission limit(s) is averaged over 60 minutes at 15 percent oxygen, dry basis.

[**RULE 1303(a)(1)-BACT, 5-10-1996;** RULE 1303(a)(1)-BACT, 12-6-2002]

[Devices subject to this condition : D115]

A195.4 The 5 PPMV NH3 emission limit(s) is averaged over 60 minutes at 15 percent oxygen dry basis.

[**RULE 1303(a)(1)-BACT, 5-10-1996;** RULE 1303(a)(1)-BACT, 12-6-2002]

[Devices subject to this condition : C118]

FACILITY PERMIT TO OPERATE
SIGNAL HILL PETROLEUM INC

SECTION D: FACILITY DESCRIPTION AND EQUIPMENT SPECIFIC CONDITIONS

The operator shall comply with the terms and conditions set forth below:

B. Material/Fuel Type Limits

B59.1 The operator shall only use the following material(s) in this device :

Natural Gas Liquids

[**RULE 1303(a)(1)-BACT, 5-10-1996;** RULE 1303(a)(1)-BACT, 12-6-2002; **RULE 1303(b)(2)-Offset, 5-10-1996;** RULE 1303(b)(2)-Offset, 12-6-2002; **RULE 462, 5-14-1999**]

[Devices subject to this condition : D123, D124]

C. Throughput or Operating Parameter Limits

C1.4 The operator shall limit the loading rate to no more than 7000 gallon(s) per day.

For the purpose of this condition, loading rate in gallons per day shall be defined as 30-day average rate.

The operator shall maintain records to demonstrate compliance with this condition. Records shall be kept for at least 2 years and made available upon AQMD request.

The operator shall use the totalizing flow meter to monitor the volume of the NGL liquid loaded during tank truck loading operation.

[**RULE 1303(b)(2)-Offset, 5-10-1996;** RULE 1303(b)(2)-Offset, 12-6-2002]

[Devices subject to this condition : D123, D124]

FACILITY PERMIT TO OPERATE
SIGNAL HILL PETROLEUM INC

SECTION D: FACILITY DESCRIPTION AND EQUIPMENT SPECIFIC CONDITIONS

The operator shall comply with the terms and conditions set forth below:

C4.1 The operator shall limit the load to no less than 3.50 MW.

For the purpose of this condition, load shall be defined as turbine's normal operation at the maximum achievable load. Normal operation shall not include start-up, shutdown and maintenance periods.

[**RULE 1303(a)(1)-BACT, 5-10-1996;** RULE 1303(a)(1)-BACT, 12-6-2002; **RULE 2005, 4-20-2001; RULE 2005, 5-6-2005**]

[Devices subject to this condition : D115]

D. Monitoring/Testing Requirements

D12.1 The operator shall install and maintain a(n) flow meter to accurately indicate the flow rate of the the total hourly throughput of injected ammonia (NH3).

The operator shall also install and maintain a device to continuously record the parameter being measured.

The measuring device or gauge shall be accurate to within plus or minus 5 percent. It shall be calibrated once every 12 months.

[**RULE 1303(a)(1)-BACT, 5-10-1996;** RULE 1303(a)(1)-BACT, 12-6-2002; **RULE 2005, 4-9-1999; RULE 2005, 4-20-2001**]

[Devices subject to this condition : C118]

D12.2 The operator shall install and maintain a(n) temperature gauge to accurately indicate the temperature in the exhaust at the inlet to the SCR reactor.

FACILITY PERMIT TO OPERATE
SIGNAL HILL PETROLEUM INC

SECTION D: FACILITY DESCRIPTION AND EQUIPMENT SPECIFIC CONDITIONS

The operator shall comply with the terms and conditions set forth below:

The operator shall also install and maintain a device to continuously record the parameter being measured.

The measuring device or gauge shall be accurate to within plus or minus 5 percent. It shall be calibrated once every 12 months.

[**RULE 1303(a)(1)-BACT, 5-10-1996;** RULE 1303(a)(1)-BACT, 12-6-2002; **RULE 2005, 4-9-1999; RULE 2005, 4-20-2001**]

[Devices subject to this condition : C118]

D12.3 The operator shall install and maintain a(n) pressure gauge to accurately indicate the differential pressure across the SCR catalyst bed in inches of water column.

The operator shall also install and maintain a device to continuously record the parameter being measured.

The measuring device or gauge shall be accurate to within plus or minus 5 percent. It shall be calibrated once every 12 months.

[**RULE 1303(a)(1)-BACT, 5-10-1996;** RULE 1303(a)(1)-BACT, 12-6-2002; **RULE 2005, 4-9-1999; RULE 2005, 4-20-2001**]

[Devices subject to this condition : C118]

D29.2 The operator shall conduct source test(s) for the pollutant(s) identified below.

Pollutant(s) to be tested	Required Test Method(s)	Averaging Time	Test Location
PM emissions	Approved District method	District-approved averaging time	Outlet of the SCR serving this equipment
VOC	Approved District method	1 hour	Outlet of the SCR serving this equipment

FACILITY PERMIT TO OPERATE
SIGNAL HILL PETROLEUM INC

SECTION D: FACILITY DESCRIPTION AND EQUIPMENT SPECIFIC CONDITIONS

The operator shall comply with the terms and conditions set forth below:

SOX emissions	Approved District method	District-approved averaging time	Fuel Sample

The test shall be conducted at least once every three years.

The test shall be conducted and the results submitted to the District within 60 days after the test date. The AQMD shall be notified of the date and time of the test at least 10 days prior to the test.

The test shall be conducted to demonstrate compliance with the Rule 1303 concentration and/or monthly emission limits.

The test shall be conducted for compliance verification of the VOC 2.0 ppmv BACT limit. For natural gas fired turbines only, this shall be demonstrated by the following test methods:

a) stack gas samples are extracted into Summa canisters, maintaining a final canister pressure between 400-500 mm Hg absolute, b) pressurization of Summa canisters is done with zero gas analyzed/certified to containing less than 0.05 ppmv total hydrocarbons as carbon, and c) analysis of Summa canisters is per EPA Method TO-12 (with pre-concentration) and the temperature of the Summa canisters when extracting for analysis is not be below 70 dedegrees F.

Because level was set using data derived from various source test methods, this alternate method provides a fair comparison and represents the best sampling and analysis technique for this purpse at this time. The test results must be reported with two significant digits

The test shall be conducted when the gas turbine is operating at 100 percent of maximum heat input.

[**RULE 1303(a)(1)-BACT, 5-10-1996;** RULE 1303(a)(1)-BACT, 12-6-2002; **RULE 1303(b)(2)-Offset, 5-10-1996;** RULE 1303(b)(2)-Offset, 12-6-2002]

FACILITY PERMIT TO OPERATE
SIGNAL HILL PETROLEUM INC

SECTION D: FACILITY DESCRIPTION AND EQUIPMENT SPECIFIC CONDITIONS

The operator shall comply with the terms and conditions set forth below:

[Devices subject to this condition : D115]

D29.3 The operator shall conduct source test(s) for the pollutant(s) identified below.

Pollutant(s) to be tested	Required Test Method(s)	Averaging Time	Test Location
NH3 emissions	District method 207.1 and 5.3 or EPA method 17	1 hour	Outlet of the SCR serving this equipment

The test shall be conducted and the results submitted to the District within 60 days after the test date. The AQMD shall be notified of the date and time of the test at least 10 days prior to the test.

The test shall be conducted to demonstrate compliance with the Rule 1303 concentration limit.

The test shall be conducted at least quarterly during the first twelve months of operation and at least annually thereafter. The NOx concentration, as determined by the certified CEMS, shall be simultaneously recorded during the ammonia slip test. If the CEMS is inoperable or not yet certified, a test shall be conducted to determine the NOx emissions using District Method 100.1 measured over a 60-minute averaging period.

[**RULE 1303(a)(1)-BACT, 5-10-1996;** RULE 1303(a)(1)-BACT, 12-6-2002; **RULE 2005, 4-9-1999; RULE 2005, 4-20-2001**]

[Devices subject to this condition : C118]

D82.1 The operator shall install and maintain a CEMS to measure the following parameters:

FACILITY PERMIT TO OPERATE
SIGNAL HILL PETROLEUM INC

SECTION D: FACILITY DESCRIPTION AND EQUIPMENT SPECIFIC CONDITIONS

The operator shall comply with the terms and conditions set forth below:

CO concentration in ppmv

Concentrations shall be corrected to 15 percent oxygen on a dry basis.

The CEMS will convert the actual CO concentrations to mass emission rates (lbs/hr) and record the hourly emission rates on a continuous basis.

The CEMS shall be installed and operated in accordance with an approved AQMD Rule 218 CEMS plan application. The operator shall not install the CEMS prior to receiving initial approval from AQMD

The CEMS shall be installed and operated to measure CO concentration over a 15-minute averaging time period

The CEMS shall be installed and operating no later than 90 days after initial start-up of the turbine

[**RULE 1303(a)(1)-BACT, 5-10-1996;** RULE 1303(a)(1)-BACT, 12-6-2002; **RULE 1303(b)(2)-Offset, 5-10-1996;** RULE 1303(b)(2)-Offset, 12-6-2002; **RULE 218, 8-7-1981; RULE 218, 5-14-1999**]

[Devices subject to this condition : D115]

D82.2 The operator shall install and maintain a CEMS to measure the following parameters:

FACILITY PERMIT TO OPERATE
SIGNAL HILL PETROLEUM INC

SECTION D: FACILITY DESCRIPTION AND EQUIPMENT SPECIFIC CONDITIONS

The operator shall comply with the terms and conditions set forth below:

NOX concentration in ppmv

Concentrations shall be corrected to 15 percent oxygen on a dry basis.

The CEMS shall be installed and operating no later than 12 months after initial start-up of the turbine and shall comply with the requirements of Rule 2012. During the interim period between the initial start-up and the provisional certification date of the CEMS, the operator shall comply with the monitoring requirements of Rule 2012 (h)(2) and Rule 2012 (h)(3). Within two weeks of the turbine start-up date, the operator shall provide written notification to the District of the exact date of start-up

The CEMS shall be installed and operated to measure NOx concentration over a 15-minute averaging time period

[RULE 2012, 5-11-2001; RULE 2012, 12-5-2003]

[Devices subject to this condition : D115]

D232.1 The operator shall install and maintain a continuous emission monitoring device to accurately indicate the ammonia concentration at the the SCR outlet, and alert the operator (via audible or visible signal/alarm) whenever concentrations are near, or at, or in in excess of the permitted ammonia limit of 5 ppmv, corrected to 15 percent oxygen. It shall continuously monitor, compute, and record the following parameters:.

FACILITY PERMIT TO OPERATE
SIGNAL HILL PETROLEUM INC

SECTION D: FACILITY DESCRIPTION AND EQUIPMENT SPECIFIC CONDITIONS

The operator shall comply with the terms and conditions set forth below:

Ammonia concentration, uncorrected in ppmv.

Oxygen concentration in percent.

Ammonia concentration in ppmv, corrected to 15% oxygen.

Date, time, extent (in time) of all excursions above 5 ppmv, corrected to 15% oxygen.

The continuous emission monitoring device described above shall be operated and maintained according to a Quality Assurance Plan (QAP) approved by the Executive Officer. The QAP must address contingencies for monitored ammonia concentrations near, at, or above the permitted compliance limit, and remedial actions to reduce ammonia levels once an exceedance has occurred.

The continuous emission monitoring device may not be used for compliance determination or emission information determination without corroborative data using an approved reference method for the determination of ammonia.

The continuous emission monitoring device shall be installed and operating no later than 90 days after initial start-up of the turbine

[**RULE 1303(a)(1)-BACT, 5-10-1996;** RULE 1303(a)(1)-BACT, 12-6-2002; **RULE 2005, 4-9-1999; RULE 2005, 4-20-2001**]

[Devices subject to this condition : C118]

E. Equipment Operation/Construction Requirements

E57.2 The operator shall vent this equipment to vapor recovery system whenever it stores organic liquid having a vapor pressure of 1.5 psia or greater under actual storing conditions.

FACILITY PERMIT TO OPERATE
SIGNAL HILL PETROLEUM INC

SECTION D: FACILITY DESCRIPTION AND EQUIPMENT SPECIFIC CONDITIONS

The operator shall comply with the terms and conditions set forth below:

[**RULE 1303(a)(1)-BACT, 5-10-1996;** RULE 1303(a)(1)-BACT, 12-6-2002]

[Devices subject to this condition : D53, D54, D55, D56, D86, D87, D88, D127, D128]

E57.3 The operator shall vent this equipment to vapor recovery system whenever this equipment is in operation.

[**RULE 1303(a)(1)-BACT, 5-10-1996;** RULE 1303(a)(1)-BACT, 12-6-2002]

[Devices subject to this condition : D175, D176, D177, D183]

E57.4 The operator shall vent this equipment to facility's vapor recovery system whenever this equipment is in operation.

[**RULE 1303(b)(2)-Offset, 5-10-1996;** RULE 1303(b)(2)-Offset, 12-6-2002; **RULE 462, 5-14-1999**]

[Devices subject to this condition : D125, D126]

E127.1 The operator shall keep gauge/sample hatches closed except during actual gauging/sampling operations.

[**RULE 463, 3-11-1994**]

[Devices subject to this condition : D53, D54, D55, D56, D86, D87, D88, D89, D90, D113, D114, D127, D128]

E179.1 For the purpose of the following condition number(s), continuously record shall be defined as recording at least once every hour and shall be calculated based upon the average of the continuous monitoring for that hour.

FACILITY PERMIT TO OPERATE
SIGNAL HILL PETROLEUM INC

SECTION D: FACILITY DESCRIPTION AND EQUIPMENT SPECIFIC CONDITIONS

The operator shall comply with the terms and conditions set forth below:

Condition Number D 12- 1

Condition Number D 12- 2

[**RULE 1303(a)(1)-BACT, 5-10-1996;** RULE 1303(a)(1)-BACT, 12-6-2002; **RULE 2005, 4-9-1999; RULE 2005, 4-20-2001**]

[Devices subject to this condition : C118]

E179.2 For the purpose of the following condition number(s), continuously record shall be defined as recording at least once every hour and shall be calculated based upon the average of the continuous monitoring for that month.

Condition Number D 12- 3

[**RULE 1303(a)(1)-BACT, 5-10-1996;** RULE 1303(a)(1)-BACT, 12-6-2002; **RULE 2005, 4-9-1999; RULE 2005, 4-20-2001**]

[Devices subject to this condition : C118]

E193.1 The operator shall operate and maintain this equipment according to the following specifications:

The operator shall limit the storage and delivery of the anhydrous ammonia to a maximum of 450 pounds in any given day

[**RULE 1303(a)(1)-BACT, 5-10-1996;** RULE 1303(a)(1)-BACT, 12-6-2002]

[Devices subject to this condition : D115]

H. Applicable Rules

FACILITY PERMIT TO OPERATE
SIGNAL HILL PETROLEUM INC

SECTION D: FACILITY DESCRIPTION AND EQUIPMENT SPECIFIC CONDITIONS

The operator shall comply with the terms and conditions set forth below:

H23.1 This equipment is subject to the applicable requirements of the following rules or regulations:

Contaminant	Rule	Rule/Subpart
VOC	District Rule	1173

[**RULE 1173, 5-13-1994;** RULE 1173, 12-6-2002]

[Devices subject to this condition : D51, D52, D142, D143, D144, D145]

H23.2 This equipment is subject to the applicable requirements of the following rules or regulations:

Contaminant	Rule	Rule/Subpart
VOC	40CFR60, SUBPART	OOOO

[**40CFR 60 Subpart OOOO, 8-16-2012**]

[Devices subject to this condition : D52, D144, D145]

K. Record Keeping/Reporting

K40.1 The operator shall provide to the District a source test report in accordance with the following specifications:

FACILITY PERMIT TO OPERATE
SIGNAL HILL PETROLEUM INC

SECTION D: FACILITY DESCRIPTION AND EQUIPMENT SPECIFIC CONDITIONS

The operator shall comply with the terms and conditions set forth below:

Source test results shall be submitted to the District no later than 60 days after the source test was conducted.

Emission data shall be expressed in terms of concentration (ppmv) corrected to 15 percent oxygen (dry basis), mass rate (lbs/hr), and lbs/MM Cubic Feet. In addition, solid PM emissions, if required to be tested, shall also be reported in terms of grains per DSCF.

All exhaust flow rate shall be expressed in terms of dry standard cubic feet per minute (DSCFM) and dry actual cubic feet per minute (DACFM).

All moisture concentration shall be expressed in terms of percent corrected to 15 percent oxygen.

Source test results shall also include the oxygen levels in the exhaust, fuel flow rate (CFH), the flue gas temperature, and the generator power output (MW) under which the test was conducted.

All moisture concentration shall be expressed in terms of percent corrected to 15 percent oxygen.

[**RULE 1303(a)(1)-BACT, 5-10-1996;** RULE 1303(a)(1)-BACT, 12-6-2002; **RULE 1303(b)(2)-Offset, 5-10-1996;** RULE 1303(b)(2)-Offset, 12-6-2002; **RULE 2005, 4-9-1999; RULE 2005, 4-20-2001**]

[Devices subject to this condition : D115]

FACILITY PERMIT TO OPERATE
SIGNAL HILL PETROLEUM INC

SECTION E: ADMINISTRATIVE CONDITIONS

The operating conditions in this section shall apply to all permitted equipment at this facility unless superseded by condition(s) listed elsewhere in this permit.

1. The permit shall remain effective unless this permit is suspended, revoked, modified, reissued, denied, or it is expired for nonpayment of permit processing or annual operating fees. [201, 203, 209, 301]
   a. The permit must be renewed annually by paying annual operating fees, and the permit shall expire if annual operating fees are not paid pursuant to requirements of Rule 301(d). [301(d)]
   b. The Permit to Construct listed in Section H shall expire one year from the Permit to Construct issuance date, unless a Permit to Construct extension has been granted by the Executive Officer or unless the equipment has been constructed and the operator has notified the Executive Officer prior to the operation of the equipment, in which case the Permit to Construct serves as a temporary Permit to Operate. [202, 205]
   c. The Title V permit shall expire as specified under Section K of the Title V permit. The permit expiration date of the Title V facility permit does not supercede the requirements of Rule 205. [205, 3004]
2. The operator shall maintain all equipment in such a manner that ensures proper operation of the equipment. [204]
3. This permit does not authorize the emissions of air contaminants in excess of those allowed by Division 26 of the Health and Safety Code of the State of California or the Rules and Regulations of the SCAQMD. This permit cannot be considered as permission to violate existing laws, ordinances, regulations, or statutes of other governmental agencies. [204]
4. The operator shall not use equipment identified in this facility permit as being connected to air pollution control equipment unless they are so vented to the identified air pollution control equipment which is in full use and which has been included in this permit. [204]

FACILITY PERMIT TO OPERATE
SIGNAL HILL PETROLEUM INC

SECTION E: ADMINISTRATIVE CONDITIONS

5. The operator shall not use any equipment having air pollution control device(s) incorporated within the equipment unless the air pollution control device is in full operation. [204]

6. The operator shall maintain records to demonstrate compliance with rules or permit conditions that limit equipment operating parameters, or the type or quantity of material processed. These records shall be made available to SCAQMD personnel upon request and be maintained for at least: [204]

   a. Three years for a facility not subject to Title V; or

   b. Five years for a facility subject to Title V.

7. The operator shall maintain and operate all equipment to ensure compliance with all emission limits as specified in this facility permit. Compliance with emission limits shall be determined according to the following specifications, unless otherwise specified by SCAQMD rules or permit conditions: [204]

   a. For internal combustion engines and gas turbines, measured concentrations shall be corrected to 15 percent stack-gas oxygen content on a dry basis and be averaged over a period of 15 consecutive minutes; [1110.2, 1134, 204]

   b. For other combustion devices, measured concentrations shall be corrected to 3 percent stack-gas oxygen content on a dry basis and be averaged over a period of 15 consecutive minutes; [1146, 1146.1, 204]

   c. For a large NOx source, compliance with a RECLAIM concentration limit shall be measured over a continuous 60 minutes for that source; [2012]

   d. For non-combustion sources, compliance with emission limits shall be determined and averaged over a period of 60 minutes; [204]

FACILITY PERMIT TO OPERATE
SIGNAL HILL PETROLEUM INC

SECTION E: ADMINISTRATIVE CONDITIONS

e. For the purpose of determining compliance with Rule 407, carbon monoxide (CO) shall be measured on a dry basis and be averaged over 15 consecutive minutes, and sulfur compounds which would exist as liquid or gas at standard conditions shall be calculated as sulfur dioxide (SO2) and be averaged over 15 consecutive minutes; [407]

f. For the purpose of determining compliance with Rule 409, combustion contaminant emission measurements shall be corrected to 12 percent of carbon dioxide (CO2) at standard conditions and averaged over 15 consecutive minutes. [409]

g. For the purpose of determining compliance with Rule 475, combustion contaminant emission measurements shall be corrected to 3 percent of oxygen (O2) at standard conditions and averaged over 15 consecutive minutes or any other averaging time specified by the Executive Officer. [475]

8. All equipment operating under the RECLAIM program shall comply concurrently with all SCAQMD Rules and Regulations, except those listed in Table 1 of Rule 2001 for NOx RECLAIM sources and Table 2 of Rule 2001 for SOx RECLAIM sources. Those provisions listed in Tables 1 or 2 shall not apply to NOx or SOx emissions after the date the facility has demonstrated compliance with all monitoring and reporting requirements of Rules 2011 or 2012, as applicable. Provisions of the listed SCAQMD rules in Tables 1 or 2 which have initial implementation dates in 1994 shall not apply to a RECLAIM NOx or SOx source, respectively. [2001]

9. The operator shall, when a source test is required by SCAQMD, provide a source test protocol to SCAQMD no later than 60 days before the proposed test date. The test shall not commence until the protocol is approved by SCAQMD. The test protocol shall contain the following information: [204, 304]

a. Brief description of the equipment tested.

FACILITY PERMIT TO OPERATE
SIGNAL HILL PETROLEUM INC

SECTION E: ADMINISTRATIVE CONDITIONS

b. Brief process description, including maximum and normal operating temperatures, pressures, through-put, etc.

c. Operating conditions under which the test will be performed.

d. Method of measuring operating parameters, such as fuel rate and process weight. Process schematic diagram showing the ports and sampling locations, including the dimensions of the ducts/stacks at the sampling locations, and distances of flow disturbances, (e,g. elbows, tees, fans, dampers) from the sampling locations (upstream and downstream).

e. Brief description of sampling and analytical methods used to measure each pollutant, temperature, flow rates, and moisture.

f. Description of calibration and quality assurance procedures.

g. Determination that the testing laboratory qualifies as an "independent testing laboratory" under Rule 304 (no conflict of interest).

10. The operator shall submit a report no later than 60 days after conducting a source test, unless otherwise required by SCAQMD Rules or equipment-specific conditions. The report shall contain the following information: [204]

a. The results of the source test.

b. Brief description of the equipment tested.

c. Operating conditions under which test will be performed.

d. Method of measuring operating parameters, such as fuel rate and process weight. Process schematic diagram showing the ports and sampling locations, including the dimensions of the ducts/stacks at the sampling locations, and distances of flow disturbances, (e.g. elbows, tees, fans, dampers) from the sampling locations (upstream and downstream).

e. Field and laboratory data forms, strip charts and analyses.

FACILITY PERMIT TO OPERATE
SIGNAL HILL PETROLEUM INC

SECTION E: ADMINISTRATIVE CONDITIONS

f. Calculations for volumetric flow rates, emission rates, control efficiency, and overall control efficiency.

11. The operator shall, when a source test is required, provide and maintain facilities for sampling and testing. These facilities shall comply with the requirements of SCAQMD Source Test Method 1.1 and 1.2. [217]

12. Whenever required to submit a written report, notification or other submittal to the Executive Officer, SCAQMD, or the District, the operator shall mail or deliver the material to: Deputy Executive Officer, Engineering and Compliance, SCAQMD, 21865 Copley Drive, Diamond Bar, CA 91765-4178. [204]

FACILITY PERMIT TO OPERATE
SIGNAL HILL PETROLEUM INC

SECTION F: RECLAIM MONITORING AND SOURCE TESTING REQUIREMENTS

The Facility shall comply with all applicable monitoring and source testing requirements in Regulation XX. These requirements may include but are not limited to the following:

I. NOx Monitoring Conditions

A. The Operator of a NOx Major Source, as defined in Rule 2012, shall, as applicable:

1. Install, maintain, and operate an SCAQMD certified direct or time-shared monitoring device or an approved alternative monitoring device for each major NOx source to continuously measure the concentration of NOx emissions and all other applicable variables specified in Rule 2012, Table 2012-1 and Rule 2012, Appendix A, Table 2-A to determine the NOx emissions rate from each source. The time-sharing of CEMS among NOx sources may be allowed by the Executive Officer in accordance with the requirements for time sharing specified in Appendix A. [2012]

2. Install, maintain, and operate a totalizing fuel meter approved by the Executive Officer for each major source. [2012]

3. If the facility is operating existing CEMS and fuel meters, continue to follow recording and reporting procedures required by SCAQMD Rules and Regulations in effect prior to October 15, 1993 until the CEMS is certified pursuant to Rule 2012. [2012]

4. Use valid data collected by an SCAQMD certified or provisionally certified CEMS in proper operation that meets all the requirements of Appendix A of Rule 2012, unless final certification of the CEMS is denied, to determine mass emissions for all purposes, including, but not limited to, determining: [2012]
   a. compliance with the annual Allocation;
   b. excess emissions;
   c. the amount of penalties; and
   d. fees.

FACILITY PERMIT TO OPERATE
SIGNAL HILL PETROLEUM INC

SECTION F: RECLAIM MONITORING AND SOURCE TESTING REQUIREMENTS

5. Follow missing data procedures as specified in Rule 2012 Appendix A whenever valid data is not available or collected to determine mass emissions for all purposes, including, but not limited to, determining: [2012]
   a. compliance with the annual Allocation;
   b. excess emissions;
   c. the amount of penalties; and
   d. fees.

B. The Operator of a NOx Large Source, as defined in Rule 2012, shall, as applicable:

Not Applicable

C. The Operator of a NOx Process Unit, as defined in Rule 2012, shall, as applicable:

Not Applicable

II. NOx Source Testing and Tune-up conditions

1. The operator shall conduct all required NOx source testing in compliance with an SCAQMD-approved source test protocol. [2012]

2. The operator shall, as applicable, conduct source tests for every large NOx source no later than December 31, 1996 and every 3 years thereafter. The source test shall include the determination of NOx concentration and a relative accuracy audit of the exhaust stack flow determination (e.g. in-stack flow monitor or fuel flow monitor based F-factor calculation). Such source test results shall be submitted per the schedule described by APEP. In lieu of submitting the first source test report, the facility permit holder may submit the results of a source test not more than 3 years old which meets the requirements when conducted. [2012]

FACILITY PERMIT TO OPERATE
SIGNAL HILL PETROLEUM INC

SECTION F: RECLAIM MONITORING AND SOURCE TESTING REQUIREMENTS

3. All NOx large sources and NOx process units shall be tuned-up in accordance with the schedule specified in Rule 2012, Appendix A, Chapter 5, Table 5-B. [2012]

FACILITY PERMIT TO OPERATE
SIGNAL HILL PETROLEUM INC

SECTION G: RECORDKEEPING AND REPORTING REQUIREMENTS FOR RECLAIM SOURCES

The Facility shall comply with all applicable reporting and recordkeeping requirements in Regulation XX. These requirements may include but are not limited to the following:

I. Recordkeeping Requirements for all RECLAIM Sources

1. The operator shall maintain all monitoring data required to be measured or reported pursuant to Rule 2011 and Rule 2012, whichever is applicable. All records shall be made available to SCAQMD staff upon request and be maintained for at least:
    a. Three years after each APEP report is submitted to SCAQMD for a facility not subject to Title V, unless a different time period is required in Rule 2011 or Rule 2012 [2011 & 2012]; or
    b. Five years after each APEP report is submitted to SCAQMD for a facility subject to Title V. [3004(a)(4)(E)]
    c. Notwithstanding the above, all data gathered or computed for intervals of less than 15 minutes shall only be maintained a minimum of 48 hours. [2011 & 2012]
2. The operator shall store on site and make available to the Executive Officer upon request: records used to determine emissions, maintenance records, sources test reports, relative accuracy test audit reports, relative accuracy audit reports and fuel meter calibration records. [2011 & 2012]

II. Reporting Requirements for all RECLAIM Sources

1. The opearator shall submit a quarterly certification of emissions including the total facility NOx or SOx emissions, whichever is applicable, for the quarter within 30 days after the end of the first three quarters and 60 days after the end of the fourth quarter of a compliance year. [2004]

NOx Reporting Requirements

A. The Operator of a NOx Major Source, as defined in Rule 2012, shall, as applicable:

FACILITY PERMIT TO OPERATE
SIGNAL HILL PETROLEUM INC

SECTION G: RECORDKEEPING AND REPORTING REQUIREMENTS FOR RECLAIM SOURCES

1. No later than 12 months after entry into the RECLAIM program or after the initial operation of a new major source, whichever is later, install, maintain, and operate a reporting device to electronically report everyday to the SCAQMD central station for each major NOx source, the total daily mass emissions of NOx and daily status codes. Such data shall be transmitted by 5:00 p.m. of the following day. If the facility experiences a power, computer, or other system failure that prevents the submittal of the daily report, the Facility Permit holder shall be granted 24 hours extension to submit the report. [2012]

2. Calculate NOx emissions pursuant to missing data procedures set forth in Appendix A, Chapter 2 of Rule 2012 if the Facility Permit holder fails to meet the deadline for submitting the daily report. Notwithstanding the preceding condition, in no more than three non-consecutive occurrences per compliance year the reporting deadline extension following a system failure that precludes the Facility Permit holder from timely reporting shall be 96 rather than 24 hours provided that the raw data as obtained by the direct monitoring device is stored at the facility. [2012]

3. Submit an electronic report within 15 days following the end of each month totaling NOX emissions from all major NOx sources during the month. [2012]

4. For those facilities with existing CEMS and fuel meters as of October 15, 1993, continue to follow recording and reporting procedures required by SCAQMD Rules and Regulations in effect until the CEMS is certified pursuant to Rule 2011 and/or Rule 2012, as applicable. [2012]

B. The Operator of a NOx Large Source, as defined in Rule 2012, shall:

Not Applicable

C. The Operator of a NOx Process Unit, as defined in Rule 2012, shall:

FACILITY PERMIT TO OPERATE
SIGNAL HILL PETROLEUM INC

SECTION G: RECORDKEEPING AND REPORTING REQUIREMENTS FOR RECLAIM SOURCES

Not Applicable

FACILITY PERMIT TO OPERATE
SIGNAL HILL PETROLEUM INC

SECTION H: PERMIT TO CONSTRUCT AND TEMPORARY PERMIT TO OPERATE

NONE

FACILITY PERMIT TO OPERATE
SIGNAL HILL PETROLEUM INC

SECTION I: PLANS AND SCHEDULES

This section lists all plans approved by AQMD for the purposes of meeting the requirements of applicable AQMD rules.

NONE

NOTE: This section does not list compliance schedules pursuant to the requirements of Regulation XXX - Title V Permits; Rule 3004(a)(10)(C). For equipment subject to a variance, order for abatement, or alternative operating condition granted pursuant to Rule 518.2, equipment specific conditions are added to the equipment in Section D or H of the permit.

FACILITY PERMIT TO OPERATE
SIGNAL HILL PETROLEUM INC

SECTION J: AIR TOXICS

NOT APPLICABLE

FACILITY PERMIT TO OPERATE
SIGNAL HILL PETROLEUM INC

APPENDIX A: NOX AND SOX EMITTING EQUIPMENT EXEMPT FROM WRITTEN PERMIT PURSUANT TO RULE 219

1. HEATER WATER NATURAL GAS
2. INTERNAL COMBUSTION ENGINE

FACILITY PERMIT TO OPERATE
SIGNAL HILL PETROLEUM INC

APPENDIX B: RULE EMISSION LIMITS

NOT APPLICABLE

DCOR, LLC (Facility ID 143740)

Belts, Heather/SJC

From: lramos1@aqmd.gov
Sent: Wednesday, July 27, 2016 9:15 AM
To: Dunavent, Andrew/SDO
Cc: ob_pr_support_docs@aqmd.gov
Subject: Public records request #85113 , Ch2m hill [EXTERNAL]

Follow Up Flag: Follow up
Flag Status: Flagged

Dear Andrew Dunavent,

Please use either link below to access your records. The links contain identical information, but one may work better for you. You can use the following browsers to view the items on the link:

Internet Explorer 9, 10, 11
Firefox ESR 31, 38 (Please Note: Firefox ESR is a different product than regular Firefox)
Firefox 38
Safari 5.1.10+, 6.0.5+, 6.2.0+, 7.1.0+, 8.0.0+, 9.0.0+
Chrome 46

Html Link:

https://onbase-pub.aqmd.gov/sAppNet/FolderPop/FolderPop.aspx?KT275_0_0_0=85113&FT=111&clienttype=html&chksum=2d37fcb4dfd613c13ff9bac9fd41260b669c4e0c2c115ce34f1fa87dbe95d188

ActiveX Link:

https://onbase-pub.aqmd.gov/sAppNet/FolderPop/FolderPop.aspx?KT275_0_0_0=85113&FT=111&clienttype=activex&chksum=e7bf6634be5780761969d659db7ac0be2e57b50c1362c2b6155cc96522e60fee

Comments on Records Provided:

I HAVE ATTACHED THE AVAILABLE REQUESTED INFORMATION FOR THIS REQUEST.

Here is a link to download Firefox ESR:

https://www.mozilla.org/en-US/firefox/organizations/all/

Regards,

Lisa Ramos

Public Records
909-396-3700

Information Management
Public Records Unit

Direct Dial (909) 396-3700
Fax:(909) 396-3330

COMPLETION LETTER

July 27, 2016

ANDREW DUNAVENT
CH2M HILL
402W. BROADWAY # SUITE 1450
SAN DIEGO, CA 92101

Ref.: CONTROL NO. 85113
Received 3/1/2016

Re: APPL'S, P/O'S & S/T RPTS FOR DCOR LLC, FAC ID #143740, AT OFFSHORE PLATFORM ESTHER, SEAL BEACH, CA 90740, APPL #'S 561638, 561639, 561640, 518222, 518223 & 518224.

After a thorough search of this agency's records, the following records were found:
APPL'S, P/O'S & S/T RPTS FOR DCOR LLC, FAC ID #143740, AT OFFSHORE PLATFORM ESTHER, SEAL BEACH, CA 90740, APPL #'S 561638, 561639, 561640, 518222, 518223 & 518224.

YOUR REQUESTED RECORDS WERE PROVIDED ELECTRONICALLY ON 07/27/2016

If you have any questions, please do not hesitate to contact me, Tuesday through Friday, **8:00 a.m**. to **4:30 p.m.**

Sincerely,

LISA RAMOS x3211
For Colleen Paine
Public Records Coordinator

:lr

Cancelled

ROUTING RECORD

DATE	FROM	TO	ACTION
3-28-14	GE ϕ1	BG ϕ1	E
4-18-16	BGϕ1	JJ07	Cancel
4-20-16	JJ07	PS	Cancelled

REFERENCE TO OTHER APCD RECORDS INCLUDING VARIANCES

See Master file A/N 561638

CEB800

APPL # 561638
I.D. # 143740

DCOR LLC
OFFSHORE PLATFORM ESTHER
SEAL BEACH
GAS FLARE

Date: 03/04/14

South Coast Air Quality Management District

Form 400-A

Application Form for Permit or Plan Approval

List only one piece of equipment or process per form.

Mail To:
SCAQMD
P.O. Box 4944
Diamond Bar, CA 91765-0944
Tel: (909) 396-3385
www.aqmd.gov

Section A - Operator Information

1. Facility Name (Business Name of Operator to Appear on the Permit): DCOR, LLC

2. Valid AQMD Facility ID (Available On Permit Or Invoice Issued By AQMD): 143740

3. Owner's Business Name (If different from Business Name of Operator): same

Section B - Equipment Location Address

4. Equipment Location Is: (•) Fixed Location ( ) Various Location
(For equipment operated at various locations, provide address of initial site.)

Offshore Platform Esther, State Parcel 3095.1
Street Address
Seal Beach , CA 92806
City Zip
Christine White Environmental Advisor
Contact Name Title
(805) 535-2074 Ext. (805) 535-2075
Phone # Fax #
E-Mail: cwhite@dcorllc.com

Section C - Permit Mailing Address

5. Permit and Correspondence Information:
[ ] Check here if same as equipment location address

290 Maple Court, Suite 290
Address
Ventura , CA 93003
City State Zip
Christine White Environmental Advisor
Contact Name Title
(805) 535-2074 Ext. (805) 535-2075
Phone # Fax #
E-Mail: cwhite@dcorllc.com

Section D - Application Type

6. The Facility Is: ( ) Not In RECLAIM or Title V (•) In RECLAIM ( ) In Title V ( ) In RECLAIM & Title V Programs

7. Reason for Submitting Application (Select only ONE):

7a. New Equipment or Process Application:
(•) New Construction (Permit to Construct) 10
( ) Equipment On-Site But Not Constructed or Operational
( ) Equipment Operating Without A Permit *
( ) Compliance Plan
( ) Registration/Certification
( ) Streamlined Standard Permit

7b. Facility Permits:
( ) Title V Application or Amendment (Refer to Title V Matrix)
( ) RECLAIM Facility Permit Amendment

7c. Equipment or Process with an Existing/Previous Application or Permit:
( ) Administrative Change
( ) Alteration/Modification
( ) Alteration/Modification without Prior Approval *
( ) Change of Condition
( ) Change of Condition without Prior Approval *
( ) Change of Location
( ) Change of Location without Prior Approval *
( ) Equipment Operating with an Expired/Inactive Permit *

Existing or Previous Permit/Application
If you checked any of the items in 7c., you MUST provide an existing Permit or Application Number: _____

* A Higher Permit Processing Fee and additional Annual Operating Fees (up to 3 full years) may apply (Rule 301(c)(1)(D)(i)).

8a. Estimated Start Date of Construction (mm/dd/yyyy): 08/01/2014
8b. Estimated End Date of Construction (mm/dd/yyyy): 09/01/2014
8c. Estimated Start Date of Operation (mm/dd/yyyy): 09/01/2014

9. Description of Equipment or Reason for Compliance Plan (list applicable rule):
GAS FLARE, GROUND, FLARE INDUSTRIES, MODEL CEB 800-CA, 39 MMBTU/HR

10. For identical equipment, how many additional applications are being submitted with this application? (Form 400-A required for each equipment / process): 0

11. Are you a Small Business as per AQMD's Rule 102 definition? (10 employees or less and total gross receipts are $500,000 or less OR a not-for-profit training center) (•) No ( ) Yes

12. Has a Notice of Violation (NOV) or a Notice to Comply (NC) been issued for this equipment? (•) No ( ) Yes
If Yes, provide NOV/NC#: _____

Section E - Facility Business Information

13. What type of business is being conducted at this equipment location? Crude Oil & Gas Production

14. What is your business primary NAICS Code? (North American Industrial Classification System): 211111

15. Are there other facilities in the SCAQMD jurisdiction operated by the same operator? ( ) No (•) Yes

16. Are there any schools (K-12) within 1000 feet of the facility property line? (•) No ( ) Yes

Section F - Authorization/Signature

I hereby certify that all information contained herein and information submitted with this application are true and correct.

17. Signature of Responsible Official: Christine White

18. Title of Responsible Official: Environmental Advisor

19. I wish to review the permit prior to issuance. (This may cause a delay in the application process.) ( ) No (•) Yes

20. Print Name: Christine White

21. Date: 2/24/14

22. Do you claim confidentiality of data? (If Yes, see instructions.) (•) No ( ) Yes

23. Check List: [X] Authorized Signature/Date [X] Form 400-CEQA [ ] Supplemental Form(s) (ie., Form 400-E-xx) [X] Fees Enclosed

AQMD USE ONLY	APPLICATION TRACKING #	CHECK #	AMOUNT RECEIVED	PAYMENT TRACKING #	VALIDATION
	561639	1196	$ 11,439.02	114667	3-4-14 MR

DATE	APP REJ	DATE	APP REJ	CLASS I III	BASIC CONTROL	EQUIPMENT CATEGORY CODE	TEAM	ENGINEER	REASON/ACTION TAKEN
							D		

© South Coast Air Quality Management District, Form 400-A (2012.07)

1134 11,439.02

2-4

14 MAR -4 P6:28

S.C.A.Q.M.D.
PERMIT PROCESSING

SCAQMD PERMIT PROCESSING SYSTEM (PPS)

FEE DATA - SUMMARY SHEET

Application No : **561639** IRS/SS No:

Previous Application No: Previous Permit No:

Company Name : **DCOR LLC** Facility ID: **143740**

Equipment Street: **OFFSHORE PLATFORM ESTHER PRC 3095 1, SEAL BEACH CA 90740**

Equipment Desc : **FLARE, OTHER**

42

Equipment Type : **CONTROL** Fee Charged by: **C-CAT**

B-CAT NO. : **000000** C-CAT NO: **08** Fee Schedule: **C**

Facility Zone : **18** Deemed Compl. Date: **4/3/2014** Public Notice: **NO**

Evaluation Type : **PERMIT TO CONSTRUCT (PC)** Small Business: ☐

Disposition : **Cancel PC - Don't Refund Fee, Recommended by Engineer** Higher Fees for Failing to Obtain a Permit: ☐

Lead Appl. No : Identical Permit Unit: ☐

Air quality Analysis			$0.00	Filing Fee Paid:	$0.00
E.I.R			$0.00	Permit Processing Fee Paid:	$3,508.86
Health Risk Assessment			$0.00	Permit Processing Fee Calculated*:	$3,508.86
Public Notice Preparation Fee			$0.00		
Public Notice Publication Fee			$0.00	Permit Processing Fee Adjustment:	$0.00
Expedited Processing	Hours:	0.00	$0.00		
Source Test Review	Hours:	0.00	$0.00		
Time & Material	Hours:	0.00	$0.00		
				Total Additional Fee:	$0.00
				Additional Charge:	$0.00

COMMENTS:

RECOMMENDED BY: **JASON TAYLOR** DATE: **04/20/2016**

REVIEWED BY: J.T. DATE: 4/20/2016

* ADJUSTED FOR SMALL BUSINESS, IDENTICAL EQUIPMENT AND P/O NO P/C PENALTY

NSR DATA SUMMARY SHEET

Application No	561639
Application Type	10
Application status	PENDAPPRV
Previous Apps, Dev	,

Company Name	DCOR LLC
Company ID	143740
Address	OFFSHORE PLATFORM ESTHER , PRC 3095 1 SEAL BEACH, CA 90740-
Reclaim	NOX
Reclaim Zone	01
Air Basin	SC
Zone	18
Title V	NO

Device ID	0 -
Estimated Completion Date	09-01-2014
Heat Input Capacity	0 Millions BTU/Hr
Priority Reserve	NONE - No Priority Access Requested
Recommended Disposition	52 - APPLICATION CANCELLED, KEEP ALL FEES
PR Expiration	12-31-9999
School within 1,000 feet	NO
Operating Weeks per year	1
Operating Days per week	1
Operating Hours	
Monday	08:00 to 18:00
Tuesday	00:00 to 00:00
Wednesday	00:00 to 00:00
Thursday	00:00 to 00:00
Friday	00:00 to 00:00
Saturday	00:00 to 00:00
Sunday	00:00 to 00:00

Emittant	CO	
BACT		
Cost effectiveness	NO	
Source Type	MINOR	
Emis Increase	0	
Modelling	N/A	
Public Notice	N	
Controlled Emission		
Max Hourly	0.00	Lbs/Hr
Max Daily	0.00	Lbs/day
Uncontrolled Emission		
Max Hourly	0.00	Lbs/Hr
Max Daily	0.00	Lbs/day
Current Emission		
BACT 30 Day Avg	0.00	Lbs/day
Annual Emission	0.00	Lbs/year
District Emission		

Supervisor's Approval JT

Supervisor's Review Date 4/20/2016

SOUTH COAST AIR QUALITY MANAGEMENT DISTRICT

ENGINEERING AND COMPLIANCE

M E M O R A N D U M

DATE: **April 14, 2016**

TO: **File**

FROM: **Bill Gobrial**

SUBJECT: **DCOR LLC, ID #143740 application numbers 561638, 561639, 561640, and 561641.**

The applicant submitted the subject 4 application on March 4, 2014. A/N 561638, 39 and 561640 were submitted for a new construction of three gas flares at their Esther Platform located in the state water approximately 1.5 miles offshore of Seal Beach Pier. A/N 561641 for RECLAIM revision. During the permit to construct evaluation, mid-August 2014, California Environmental Quality Act staff at the District was contacted by *Cynthia Herzog, Senior Environmental Scientist,* California State Lands Commission, and was determined that the District will serve as the lead agency for the proposed project and be responsible for preparation and approval of the environmental document, which was determined by the District CEQA staff to be an Initial Study/Mitigated Negative Declaration (IS/MND). Mid December 2014, the draft document was submitted to the District CEQA staff. The document has not yet been approved by the District staff.

Recently, I received a letter from DCOR LLC, stating that the proposed three flair project on platform Esther will not be going forward and requesting a cancellation of application numbers 561638, 639, 640, and 561641. Therefore, a cancellation of the subject applications is recommended.

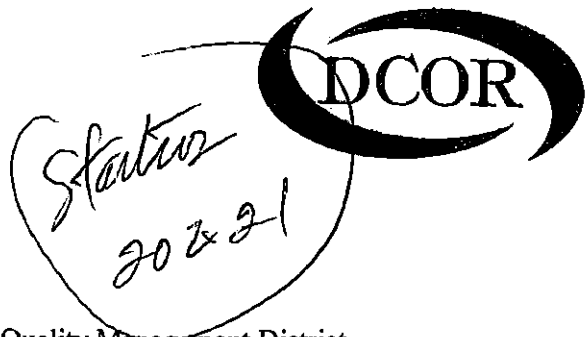

Status 2021

* Please cancel!
BG | D

April 6, 2016

Permit Services
South Coast Air Quality Management District
P.O. Box 4944
Diamond Bar, CA 91765-0944

Re: Permit Application Cancellation Request
Proposed Three (3) Enclosed Flare System
Application Nos. 561638, 561639, 561640, and 561641
DCOR, LLC - Platform Esther (Facility ID# 143740)
Offshore State Lease PRC 3095.1, Seal Beach

Dear Permit Services:

DCOR, LLC requests that Permit Application Nos. 561638, 561639, 569640, and 569641 be canceled. The applications were received by SCAQMD on March 4, 2014 and deemed complete on April 3, 2014. The proposed Three (3) Enclosed Flare System project on Platform Esther will not be going forward.

If you require any additional information, please contact me at (805) 535-2074.

Sincerely,

Christine White

Christine White
Environmental Advisor

Cc: Atul Kandhari (SCAQMD)
Barbara Radlein (SCAQMD)
Mike Shaffer (Shaffer Environmental Consulting)

Cancelled

ROUTING RECORD

DATE	FROM	TO	ACTION
3-28-16	GI01	BG01	I
4-15-16	BG01	JT07	Can Ce
4-20-16	JT67	PS	Cancelled

REFERENCE TO OTHER APCD RECORDS INCLUDING VARIANCES

See Master File A/N 561638

Standby
FEF 90

APPL # 561640
I.D. # 143740

DCOR LLC
OFFSHORE PLATFORM ESTHER
SEAL BEACH
GAS FLARE

Date: 03/04/14

South Coast Air Quality Management District

Form 400-A

Application Form for Permit or Plan Approval

List only one piece of equipment or process per form.

Mail To:
SCAQMD
P.O. Box 4944
Diamond Bar, CA 91765-0944

Tel: (909) 396-3385
www.aqmd.gov

Section A - Operator Information

1. Facility Name (Business Name of Operator to Appear on the Permit): DCOR, LLC

2. Valid AQMD Facility ID (Available On Permit Or Invoice Issued By AQMD): 143740

3. Owner's Business Name (If different from Business Name of Operator): same

Section B - Equipment Location Address

4. Equipment Location Is: (•) Fixed Location ( ) Various Location
(For equipment operated at various locations, provide address of initial site.)

Offshore Platform Esther, State Parcel 3095.1
Street Address

Seal Beach, CA 92806
City Zip

Christine White — Environmental Advisor
Contact Name Title

(805) 535-2074 Ext. (805) 535-2075
Phone # Fax #

E-Mail: cwhite@dcorllc.com

Section C - Permit Mailing Address

5. Permit and Correspondence Information:
[ ] Check here if same as equipment location address

290 Maple Court, Suite 290
Address

Ventura, CA 93003
City State Zip

Christine White — Environmental Advisor
Contact Name Title

(805) 535-2074 Ext. (805) 535-2075
Phone # Fax #

E-Mail: cwhite@dcorllc.com

Section D - Application Type

6. The Facility Is: ( ) Not In RECLAIM or Title V (•) In RECLAIM ( ) In Title V ( ) In RECLAIM & Title V Programs

7. Reason for Submitting Application (Select only ONE):

7a. New Equipment or Process Application:
(•) New Construction (Permit to Construct) (10)
( ) Equipment On-Site But Not Constructed or Operational
( ) Equipment Operating Without A Permit *
( ) Compliance Plan
( ) Registration/Certification
( ) Streamlined Standard Permit

7b. Facility Permits:
( ) Title V Application or Amendment (Refer to Title V Matrix)
( ) RECLAIM Facility Permit Amendment

7c. Equipment or Process with an Existing/Previous Application or Permit:
( ) Administrative Change
( ) Alteration/Modification
( ) Alteration/Modification without Prior Approval *
( ) Change of Condition
( ) Change of Condition without Prior Approval *
( ) Change of Location
( ) Change of Location without Prior Approval *
( ) Equipment Operating with an Expired/Inactive Permit *

Existing or Previous Permit/Application
If you checked any of the items in 7c., you MUST provide an existing Permit or Application Number:

* A Higher Permit Processing Fee and additional Annual Operating Fees (up to 3 full years) may apply (Rule 301(c)(1)(D)(i)).

8a. Estimated Start Date of Construction (mm/dd/yyyy): 08/01/2014

8b. Estimated End Date of Construction (mm/dd/yyyy): 09/01/2014

8c. Estimated Start Date of Operation (mm/dd/yyyy): 09/01/2014

9. Description of Equipment or Reason for Compliance Plan (list applicable rule):
GAS FLARE (EMERGENCY/STANDBY), GROUND, FLARE INDUSTRIES, MODEL FEF-102, 51 MMBTU/HR

10. For Identical equipment, how many additional applications are being submitted with this application? (Form 400-A required for each equipment / process): 0

11. Are you a Small Business as per AQMD's Rule 102 definition? (10 employees or less and total gross receipts are $500,000 or less OR a not-for-profit training center) (•) No ( ) Yes

12. Has a Notice of Violation (NOV) or a Notice to Comply (NC) been issued for this equipment? (•) No ( ) Yes
If Yes, provide NOV/NC#:

Section E - Facility Business Information

13. What type of business is being conducted at this equipment location? Crude Oil & Gas Production

14. What is your business primary NAICS Code? (North American Industrial Classification System) 211111

15. Are there other facilities in the SCAQMD jurisdiction operated by the same operator? ( ) No (•) Yes

16. Are there any schools (K-12) within 1000 feet of the facility property line? (•) No ( ) Yes

Section F - Authorization/Signature

I hereby certify that all information contained herein and information submitted with this application are true and correct.

17. Signature of Responsible Official: Christine White

18. Title of Responsible Official: Environmental Advisor

19. I wish to review the permit prior to issuance. (This may cause a delay in the application process.) ( ) No (•) Yes

20. Print Name: Christine White

21. Date: 2/24/14

22. Do you claim confidentiality of data? (If Yes, see instructions.) (•) No ( ) Yes

23. Check List: [X] Authorized Signature/Date [X] Form 400-CEQA [ ] Supplemental Form(s) (ie., Form 400-E-xx) [X] Fees Enclosed

AQMD USE ONLY	APPLICATION TRACKING #	CHECK #	AMOUNT RECEIVED	PAYMENT TRACKING #	VALIDATION
	561640	1196	$ 11439.02	114667	3-4-14

DATE	APP REJ	DATE	APP REJ	CLASS I III	BASIC CONTROL	EQUIPMENT CATEGORY CODE	TEAM	ENGINEER	REASON ACTION TAKEN
							0		

© South Coast Air Quality Management District, Form 400-A (2012.07)

1734 11,439.02

39.4

14 MAR -4 P6:28

S.C.A.Q.M.D.
PERMIT PROCESSING

SCAQMD PERMIT PROCESSING SYSTEM (PPS)

FEE DATA - SUMMARY SHEET

Application No : 561640 IRS/SS No:

Previous Application No: Previous Permit No:

Company Name : DCOR LLC Facility ID: 143740

Equipment Street: OFFSHORE PLATFORM ESTHER PRC 3095 1, SEAL BEACH CA 90740

Equipment Desc : FLARE, OTHER

52

Equipment Type : CONTROL Fee Charged by: C-CAT

B-CAT NO. : 000000 C-CAT NO: 08 Fee Schedule: C

Facility Zone : 18 Deemed Compl. Date: 4/3/2014 Public Notice: NO

Evaluation Type : PERMIT TO CONSTRUCT (PC) Small Business: ☐

Disposition : Cancel PC - Don't Refund Fee, Recommended by Engineer Higher Fees for Failing to Obtain a Permit: ☐

Lead Appl. No : Identical Permit Unit: ☐

Air quality Analysis			$0.00	Filing Fee Paid:	$0.00
E.I.R			$0.00	Permit Processing Fee Paid:	$3,508.86
Health Risk Assessment			$0.00	Permit Processing Fee Calculated*:	$3,508.86
Public Notice Preparation Fee			$0.00	Permit Processing Fee Adjustment:	$0.00
Public Notice Publication Fee			$0.00		
Expedited Processing	Hours:	0.00	$0.00		
Source Test Review	Hours:	0.00	$0.00		
Time & Material	Hours:	0.00	$0.00		
				Total Additional Fee:	$0.00
				Additional Charge:	$0.00

COMMENTS:

RECOMMENDED BY: JASON TAYLOR DATE: 04/20/2016

REVIEWED BY: DATE: 4/20/2016

* ADJUSTED FOR SMALL BUSINESS, IDENTICAL EQUIPMENT AND P/O NO P/C PENALTY

NSR DATA SUMMARY SHEET

Application No	561640
Application Type	10
Application status	PENDAPPRV
Previous Apps, Dev	,

Company Name	DCOR LLC
Company ID	143740
Address	OFFSHORE PLATFORM ESTHER , PRC 3095 1 SEAL BEACH, CA 90740-
Reclaim	NOX
Reclaim Zone	01
Air Basin	SC
Zone	18
Title V	NO

Device ID	0 -
Estimated Completion Date	09-01-2014
Heat Input Capacity	0 Millions BTU/Hr
Priority Reserve	NONE - No Priority Access Requested
Recommended Disposition	52 - APPLICATION CANCELLED, KEEP ALL FEES
PR Expiration	12-31-9999
School within 1,000 feet	NO
Operating Weeks per year	1
Operating Days per week	1
Operating Hours	
Monday	08:00 to 18:00
Tuesday	00:00 to 00:00
Wednesday	00:00 to 00:00
Thursday	00:00 to 00:00
Friday	00:00 to 00:00
Saturday	00:00 to 00:00
Sunday	00:00 to 00:00

Emittant	CO	
BACT		
Cost effectiveness	NO	
Source Type	MINOR	
Emis Increase	0	
Modelling	N/A	
Public Notice	N	
Controlled Emission		
Max Hourly	0.00	Lbs/Hr
Max Daily	0.00	Lbs/day
Uncontrolled Emission		
Max Hourly	0.00	Lbs/Hr
Max Daily	0.00	Lbs/day
Current Emission		
BACT 30 Day Avg	0.00	Lbs/day
Annual Emission	0.00	Lbs/year
District Emission		

Supervisor's Approval 9.7. Supervisor's Review Date 4/20/2016

SOUTH COAST AIR QUALITY MANAGEMENT DISTRICT

ENGINEERING AND COMPLIANCE

M E M O R A N D U M

DATE: **April 14, 2016**

TO: **File**

FROM: **Bill Gobrial**

SUBJECT: **DCOR LLC, ID #143740 application numbers 561638, 561639, 561640, and 561641.**

The applicant submitted the subject 4 application on March 4, 2014. A/N 561638, 39 and 561640 were submitted for a new construction of three gas flares at their Esther Platform located in the state water approximately 1.5 miles offshore of Seal Beach Pier. A/N 561641 for RECLAIM revision. During the permit to construct evaluation, mid-August 2014, California Environmental Quality Act staff at the District was contacted by *Cynthia Herzog, Senior Environmental Scientist,* California State Lands Commission, and was determined that the District will serve as the lead agency for the proposed project and be responsible for preparation and approval of the environmental document, which was determined by the District CEQA staff to be an Initial Study/Mitigated Negative Declaration (IS/MND). Mid December 2014, the draft document was submitted to the District CEQA staff. The document has not yet been approved by the District staff.

Recently, I received a letter from DCOR LLC, stating that the proposed three flair project on platform Esther will not be going forward and requesting a cancellation of application numbers 561638, 639, 640, and 561641. Therefore, a cancellation of the subject applications is recommended.

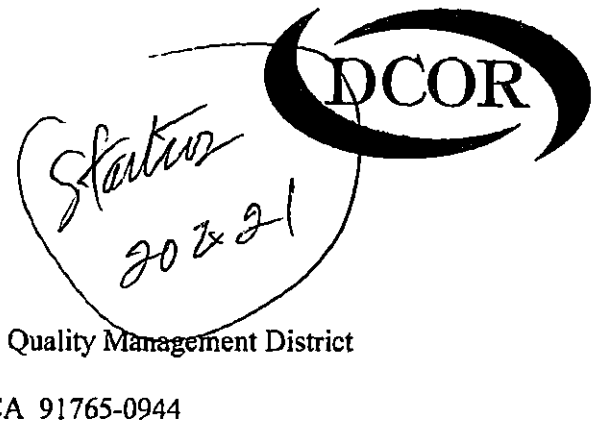

Status 2021

* Please cancel!
BG | D

April 6, 2016

Permit Services
South Coast Air Quality Management District
P.O. Box 4944
Diamond Bar, CA 91765-0944

Re: Permit Application Cancellation Request
Proposed Three (3) Enclosed Flare System
Application Nos. 561638, 561639, 561640, and 561641
DCOR, LLC - Platform Esther (Facility ID# 143740)
Offshore State Lease PRC 3095.1, Seal Beach

Dear Permit Services:

DCOR, LLC requests that Permit Application Nos. 561638, 561639, 569640, and 569641 be canceled. The applications were received by SCAQMD on March 4, 2014 and deemed complete on April 3, 2014. The proposed Three (3) Enclosed Flare System project on Platform Esther will not be going forward.

If you require any additional information, please contact me at (805) 535-2074.

Sincerely,

Christine White

Christine White
Environmental Advisor

Cc: Atul Kandhari (SCAQMD)
Barbara Radlein (SCAQMD)
Mike Shaffer (Shaffer Environmental Consulting)

D31

ROUTING RECORD

DATE	FROM	TO	ACTION
	~~[illegible]~~	~~[illegible]~~	~~[illegible]~~ (de-cert.)
~~[illegible]~~	~~RC~~	~~J~~	~~Tr~~
~~JUN 0 2 2010~~	~~ABS~~	~~BDO~~	~~III~~
JAN 28 2011	RGC	HS	C/C
8/4/2011	ABOI	RC	P/O RECOMM.
AUG 5 2011	RGC	P/S	614588

REFERENCE TO OTHER APCD RECORDS INCLUDING VARIANCES

RECORDS

APPL # 518222
I.D. # 143740

DCOR LLC
OFFSHORE PLATFORM ESTHER
SEAL BEACH
CRUDE OIL & GAS

Date: 01/20/11

South Coast Air Quality Management District

Form 400-A

Application For Permit To Construct and Permit To Operate

Mail Application To:
P.O. Box 4944
Diamond Bar, CA 91765

Tel: (909) 396-3385
www.aqmd.gov

Section A: Operator Information

1. Business Name of Operator To Appear On The Permit:
DCOR LLC

2. Valid AQMD Facility ID (Available on Permit or Invoice Issued by AQMD): 143740

3. Owner's Business Name (only if different from Business Name of Operator):

Section B: Equipment Location

4. Equipment Location Address:
For equipment operated at various locations in AQMD's jurisdiction, provide address of initial site

Offshore Platform Esther, State Parcel 3095.1
Street Address

Seal Beach — CA, — Zip Code
City

County: ○ Los Angeles ◉ Orange ○ San Bernardino ○ Riverside

Contact Name: Christine White

Contact Title: Environmental Advisor Phone: (805) 535-2074

Fax: (805) 535-2075 E-Mail: cwhite@dcorllc.com

Section C: Permit Mailing Address

5. Permit and Correspondence Information:
☐ Check here if same as equipment location address

290 Maple Court, Suite 290
Street Address

Ventura — CA — 93003
City — State — Zip Code

Contact Name: Christine White

Contact Title: Environmental Advisor Phone: (805) 535-2074

Fax: (805) 535-2075 E-Mail: cwhite@dcorllc.com

Section D: Application Type

The facility is in ◉ RECLAIM ○ Title V ○ RECLAIM & Title V Program (please check if applicable)

6. Reason for Submitting Application (Select only ONE):

- ○ New Construction (Permit to Construct)
- ○ Permitted Equipment Altered/ Modified Without Permit Approval*
- ○ Equipment Operating Without A Permit or Expired Permit*
- ○ Proposed Alteration/Modification to Permitted Equipment
- ○ Administrative Change
- ○ Change of Condition For Permit To Operate
- ○ Equipment On-Site But Not Constructed or Operational
- ◉ Change of Condition For Permit To Construct
- ○ Title V Application (Initial, Revisions, Modifications, etc.)
- ○ Change of Location—Moving to New Site
- ○ Compliance Plan
- ○ Facility Permit Amendment
- ○ Registration/Certification
- ○ Streamlined Standard Permit

Existing Or Previous Permit/Application Number:
(If you checked any of the items in this column, you MUST provide a existing Permit/ Application Number)
466415

* A Higher Permit Processing Fee applies to those items with an asterisk (Rule 301 (c) (1) (D)

7. Estimated Start Date of Operation/Construction (MM/DD/YYYY): 01/01/2011

8. Description of Equipment:
Modify existing Permit Condition I296.1 (Section H) to allow a quarterly NSR NOX RTC limit per Rule 2005(f)(3) in lieu of the current annual limit.

9. Is this equipment portable AND will it be operated at different locations within AQMD's jurisdiction? ◉ No ○ Yes

10. For Identical equipment, how many additional applications are being submitted with this application? (Form 400-A required for each) 1

11. Are you a Small Business as per AQMD's Rule 102 definition? (10 employees or less and total gross receipts are $500,000 or less, or a not-for-profit training center?) ◉ No ○ Yes

12. Has a Notice of Violation (NOV) or a Notice To Comply (NC) been issued for this equipment?
◉ No ○ Yes If yes, provide NOV/NC #:

Section E: Facility Business Information

13. What type of business is being conducted at this equipment location?
Crude oil and gas production

14. What is your businesses primary NAICS Code (North American Industrial Classification System)? 211111

15. Are there other facilities in the SCAQMD jurisdiction operated by the same operator? ○ No ◉ Yes

16. Are there any schools (K-12) within a 1000-ft. radius of the equipment physical location? ◉ No ○ Yes

Section F: Authorization/Signature

I hereby certify that all information contained herein and information submitted with this application is true and correct.

17. Signature of Responsible Official:
Christine White

18. Title:
Environmental Advisor

19. Print Name:
Christine White

20. Date:
1/19/11

Check List

- ☐ Form(s) signed and dated by authorized official
- ☐ Supplemental Equipment Form (400-E-XX or 400-E-GEN)
- ☐ CEQA Form (400-CEQA) attached
- ☐ Payment for permit processing fee attached

Your application will be rejected if any of the above items are missing.

AQMD USE ONLY	APPLICATION/TRACKING #	TYPE B C D	EQUIPMENT CATEGORY CODE:	FEE SCHEDULE:	VALIDATION
	518292		053720	$	1/20/11 AW

ENG. DATE	R	ENG. DATE	A	R	CLASS	ASSIGNMENT	CHECK/MONEY ORDER	AMOUNT	Tracking #
A 1/29/11					I II III IV	UnR D Engineer	# 33272	$ 2926.03	

© South Coast Air Quality Management District, Form 400-A (2006.02)

C17 92261

2 of 4

S.C.A.Q.M.D.
ENGINEERING

'11 JAN 20 P2:56

SCAQ PERMIT PROCESSING SYSTEM (PPS)

FEE DATA - SUMMARY SHEET

Application No :	518222	IRS/SS No:	
Previous Application No:	466415	Previous Permit No:	

Company Name :	DCOR LLC			Facility ID:	143740
Equipment Street:	OFFSHORE PLATFORM ESTHER PRC 3095 1, SEAL BEACH CA 90740				
Equipment Desc :	GAS TURBINE-DIG. GAS/LDF <300 KW				
Equipment Type :	BASIC			Fee Charged by:	B-CAT
B-CAT NO. :	053720	C-CAT NO:	00	Fee Schedule:	B
Facility Zone :	18	Deemed Compl. Date:	2/19/2011	Public Notice:	NO

31

Evaluation Type :	CHANGE OF CONDITIONS, (PO)			Small Business:	☐
Disposition :	Approve PO, Recommended by Engineer			Higher Fees for Failing to Obtain a Permit:	☐
Lead Appl. No :	518222			Identical Permit Unit:	☒

Air quality Analysis			$0.00	Filing Fee Paid:	$0.00
E.I.R			$0.00	Permit Processing Fee Paid:	$1,037.65
Health Risk Assessment			$0.00	Permit Processing Fee Calculated*:	$1,037.65
Significant Project			$0.00	Permit Processing Fee Adjustment:	$0.00
Expedited Processing	Hours:	0.00	$0.00		
Source Test Review	Hours:	0.00	$0.00		
Time & Material	Hours:	0.00	$0.00		
				Total Additional Fee:	$0.00
				Additional Charge:	$0.00

COMMENTS:

RECOMMENDED BY: HAMILTON A STODDARD DATE: 07/29/2011

REVIEWED BY: _____ DATE: AUG 5 2011

* ADJUSTED FOR SMALL BUSINESS, IDENTICAL EQUIPMENT AND P/O NO P/C PENALTY

FACILITY PERMIT TO OPERATE
DCOR LLC

SECTION A: FACILITY INFORMATION

LEGAL OWNER &/OR OPERATOR:	DCOR LLC
LEGAL OPERATOR (if different than owner):	
EQUIPMENT LOCATION:	OFFSHORE PLATFORM ESTHER PRC 3095 1 SEAL BEACH, CA 90740
MAILING ADDRESS:	290 MAPLE CT STE 290 VENTURA, CA 93009
RESPONSIBLE OFFICIAL:	MIKE FINCH
TITLE:	VICE PRESIDENT
TELEPHONE NUMBER:	(805) 535-2073
CONTACT PERSON:	CHRISTINE WHITE
TITLE:	AIR COMPLIANCE COORDIANTOR
TELEPHONE NUMBER:	(805) 535-2074

TITLE V	RECLAIM	
NO	NOx:	YES
	SOx:	NO
	CYCLE:	2
	ZONE:	COASTAL

FACILITY PERMIT TO OPERATE
DCOR LLC

SECTION D: FACILITY DESCRIPTION AND EQUIPMENT SPECIFIC CONDITIONS

The operator shall comply with the terms and conditions set forth below:

Equipment	ID No.	Connected To	RECLAIM Source Type/ Monitoring Unit	Emissions * And Requirements	Conditions
Process 1: Internal Combustion					
INTERNAL COMBUSTION ENGINE, EMERGENCY FIRE, DIESEL FUEL, CATERPILLAR, MODEL CAT3406BDITA, SIX CYLINDERS, FOUR CYCLE, WITH AFTERCOOLER, TURBOCHARGER, 460 BHP A/N: 441318	D1		NOX: PROCESS UNIT**	**NOX**: 469 LBS/1000 GAL DIESEL (1)	C1.1, D12.1, K67.1
INTERNAL COMBUSTION ENGINE, PORTABLE, DIESEL FUEL, JOHN DEERE, MODEL 6135HF485, 6 CYLINDERS, DRIVING THE CRANE ON RAILS, WITH TURBOCHARGER, 450 BHP A/N:	D35		NOX: LARGE SOURCE**	CO: 0.61 GRAM/BHP-HR DIESEL (5) [RULE 1110.2, 2-1-2008; RULE 1703(a)(3) PSD Analysis, 10-7-1988]; **NOX**: 340 PPMV DIESEL (3) [RULE 1110.2, 2-1-2008; RULE 1703(a)(3) PSD Analysis, 10-7-1988; **RULE 2005, 5-6-2005; RULE 2012, 5-6-2005]; PM10**: 0.087 GRAM/BHP-HR DIESEL (4) **[40CFR 89 Subpart B, 7-1-2000]**; **ROG**: 2.54 GRAM/BHP-HR DIESEL (5) [RULE 1110.2, 2-1-2008; **40CFR 89 Subpart B, 7-1-2000]**	C1.2, D12.1, E193.1, I296.2
Process 2: Crude/Gas/Water Separation > 400 BOPD					
VESSEL, SEPARATOR, V-1, TEST, CRUDE OIL, 35 BBL, LENGTH: 16 FT ; DIAMETER: 4 FT A/N: 441316	D3	D16			E127.1
VESSEL, SEPARATOR, V-2, TEST, CRUDE OIL, 35 BBL, LENGTH: 16 FT ; DIAMETER: 4 FT A/N: 441316	D4	D16			E127.1

* (1) (1A) (1B) Denotes RECLAIM emission factor
(2) (2A) (2B) Denotes RECLAIM emission rate
(3) Denotes RECLAIM concentration limit
(4) Denotes BACT emission limit
(5) (5A) (5B) Denotes command and control emission limit
(6) Denotes air toxic control rule limit
(7) Denotes NSR applicability limit
(8) (8A) (8B) Denotes 40 CFR limit (e.g. NSPS, NESHAPS, etc.)
(9) See App B for Emission Limits
(10) See section J for NESHAP/MACT requirements

** Refer to section F and G of this permit to determine the monitoring, recordkeeping and reporting requirements for this device.

FACILITY PERMIT TO OPERATE
DCOR LLC

SECTION D: FACILITY DESCRIPTION AND EQUIPMENT SPECIFIC CONDITIONS

The operator shall comply with the terms and conditions set forth below:

Equipment	ID No.	Connected To	RECLAIM Source Type/ Monitoring Unit	Emissions* And Requirements	Conditions
Process 2: Crude/Gas/Water Separation > 400 BOPD					
VESSEL, SEPARATOR, V-5, GROSS, CRUDE OIL, 460 BBL, LENGTH: 30 FT ; DIAMETER: 10 FT 6 IN A/N: 441316	D5	D16			E127.1
VESSEL, SEPARATOR, V-6, GROSS, CRUDE OIL, 460 BBL, LENGTH: 30 FT ; DIAMETER: 10 FT 6 IN A/N: 441316	D6	D16			E127.1
VESSEL, SEPARATOR, V-7, GROSS, CRUDE OIL, 460 BBL, LENGTH: 30 FT ; DIAMETER: 10 FT 6 IN A/N: 441316	D7	D16			E127.1
TANK, T-7, CRUDE OIL, SUMP TANK, 140 BBL; WIDTH: 10 FT ; HEIGHT: 7 FT ; LENGTH: 10 FT A/N: 441316	D8	D16			E127.1
SCRUBBER, V-9, RELIEF VENT A/N: 441316	D9				
VESSEL, V-301, SURGE, 250 BBL, CRUDE OIL A/N: 441316	D10				
Process 3: Waste Water Treating					
VESSEL, V-201, SURGE SEPARATOR, WASTE WATER, 120 BBL, HEIGHT: 10 FT ; DIAMETER: 9 FT A/N: 441311	D11	D16			E127.1
VESSEL, V-203, OIL SUMP, CRUDE OIL, 20 BBL, HEIGHT: 8 FT ; DIAMETER: 4 FT A/N: 441311	D12	D16			E127.1

* (1) (1A) (1B) Denotes RECLAIM emission factor
(2) (2A) (2B) Denotes RECLAIM emission rate
(3) Denotes RECLAIM concentration limit
(4) Denotes BACT emission limit
(5) (5A) (5B) Denotes command and control emission limit
(6) Denotes air toxic control rule limit
(7) Denotes NSR applicability limit
(8) (8A) (8B) Denotes 40 CFR limit (e.g. NSPS, NESHAPS, etc.)
(9) *See App B for Emission Limits*
(10) See section J for NESHAP/MACT requirements

** Refer to section F and G of this permit to determine the monitoring, recordkeeping and reporting requirements for this device.

FACILITY PERMIT TO OPERATE
DCOR LLC

SECTION D: FACILITY DESCRIPTION AND EQUIPMENT SPECIFIC CONDITIONS

The operator shall comply with the terms and conditions set forth below:

Equipment	ID No.	Connected To	RECLAIM Source Type/ Monitoring Unit	Emissions * And Requirements	Conditions
Process 3: Waste Water Treating					
VESSEL, V-202, WASTE WATER, 50 BBL, HEIGHT: 7 FT ; DIAMETER: 7 FT A/N: 441311	D13	D16			E127.1
VESSEL, V-205, CONE BOTTOM, WASTE WATER, 170 BBL, HEIGHT: 5 FT 3 IN; DIAMETER: 12 FT A/N: 441311	D14	D16			E127.1
VESSEL, V-206, INJECTION SURGE, WASTE WATER, 45 BBL, HEIGHT: 12 FT ; DIAMETER: 6 FT A/N: 441311	D15	D16			E127.1
FILTER, V-204, US FILTER, WALNUT SHELLS, 60 BBL, FIXED ROOF, HEIGHT: 9 FT ; DIAMETER: 7 FT A/N: 441311	D24				E127.1
Process 4: Vapor Recovery					
COMPRESSOR, M-5, WITH 125 HP ELECTRIC MOTOR A/N: 441315	D16	D3 D4 D5 D6 D7 D8 D11 D12 D13 D14 D15 D26 D27 D28			H23.1
Process 5: Fugitives					
FUGITIVE EMISSIONS, VALVES A/N: 441316	D17				H23.1
FUGITIVE EMISSIONS, PUMPS A/N: 441316	D18				H23.1
FUGITIVE EMISSIONS, PRV A/N: 441316	D19				H23.1
FUGITIVE EMISSIONS, FLANGES A/N: 441316	D20				H23.1
FUGITIVE EMISSIONS, FITTINGS A/N: 441316	D21				H23.1

* (1) (1A) (1B) Denotes RECLAIM emission factor
(2) (2A) (2B) Denotes RECLAIM emission rate
(3) Denotes RECLAIM concentration limit
(4) Denotes BACT emission limit
(5) (5A) (5B) Denotes command and control emission limit
(6) Denotes air toxic control rule limit
(7) Denotes NSR applicability limit
(8) (8A) (8B) Denotes 40 CFR limit (e.g. NSPS, NESHAPS, etc.)
(9) See App B for Emission Limits
(10) See section J for NESHAP/MACT requirements

** Refer to section F and G of this permit to determine the monitoring, recordkeeping and reporting requirements for this device.

FACILITY PERMIT TO OPERATE
DCOR LLC

SECTION D: FACILITY DESCRIPTION AND EQUIPMENT SPECIFIC CONDITIONS

The operator shall comply with the terms and conditions set forth below:

Equipment	ID No.	Connected To	RECLAIM Source Type/ Monitoring Unit	Emissions * And Requirements	Conditions
Process 5: Fugitives					
FUGITIVE EMISSIONS, DRAINS A/N: 441316	D22				H23.1
Process 6: Natural Gas Dehydration					
VESSEL, E-401, CHILLER/EVAPORATOR, DIAMETER: 1 FT 2.4 IN A/N: 441320	D25				
SCRUBBER, V-402, INLET, PRV VENTED TO VAPOR RECOVERY SYSTEM, DIAMETER: 1 FT 2.4 IN A/N: 441320	D26	D16			
VESSEL, V-403, LOW TEMPERATURE SEPARATOR, PRV VENTED TO VAPOR RECOVERY SYSTEM, DIAMETER: 1 FT 2.4 IN A/N: 441320	D27	D16			
VESSEL, V-404, FILTER SEPARATOR, PRV VENTED TO VAPOR RECOVERY SYSTEM, DIAMETER: 1 FT 1 IN A/N: 441320	D28	D16			
Process 7: Odorant Dispensing					
TANK, ODORANT STOARAGE, V-500, 20 GALLONS A/N: 441313	D29				H23.2
ODORANT DISPENSING EQUIPMENT A/N: 441313	D30				H23.2
Process 8: POWER GENERATION					

* (1) (1A) (1B) Denotes RECLAIM emission factor
(2) (2A) (2B) Denotes RECLAIM emission rate
(3) Denotes RECLAIM concentration limit
(4) Denotes BACT emission limit
(5) (5A) (5B) Denotes command and control emission limit
(6) Denotes air toxic control rule limit
(7) Denotes NSR applicability limit
(8) (8A) (8B) Denotes *40 CFR limit (e.g. NSPS, NESHAPS, etc.)*
(9) See App B for Emission Limits
(10) See section J for NESHAP/MACT requirements

** Refer to section F and G of this permit to determine the monitoring, recordkeeping and reporting requirements for this device.

FACILITY PERMIT TO OPERATE
DCOR LLC

SECTION D: FACILITY DESCRIPTION AND EQUIPMENT SPECIFIC CONDITIONS

The operator shall comply with the terms and conditions set forth below:

Equipment	ID No.	Connected To	RECLAIM Source Type/ Monitoring Unit	Emissions * And Requirements	Conditions
Process 8: POWER GENERATION					
GAS TURBINE, UNIT #1, FIELD GAS, INGERSOLL RAND, MODEL ML250, COMBINED CYCLE WITH HEAT RECOVERY, 3.27 MMBTU/HR A/N:	D31		NOX: PROCESS UNIT**	**CO**: 319 PPMV FIELD GAS (4) **[RULE 1303(a)(1)-BACT, 5-10-1996;** *RULE 1303(a)(1) -BACT, 12-6-2002*]; **CO**: 2000 PPMV (5) **[RULE 407, 4-2-1982]**; **NOX**: 16 PPMV FIELD GAS (4) **[RULE 2005, 5-6-2005]**; **VOC**: 84 PPMV FIELD GAS (4) **[RULE 1303(a)(1)-BACT, 5-10-1996;** *RULE 1303(a)(1)-BACT, 12-6-2002*]	A63.1, A63.2, A99.1, A99.2, A99.3, I296.1
GAS TURBINE, UNIT #2, FIELD GAS, INGERSOLL RAND, MODEL ML250, COMBINED CYCLE WITH HEAT RECOVERY, 3.27 MMBTU/HR A/N:	D33		NOX: PROCESS UNIT**	**CO**: 319 PPMV FIELD GAS (4) **[RULE 1303(a)(1)-BACT, 5-10-1996;** *RULE 1303(a)(1) -BACT, 12-6-2002*]; **CO**: 2000 PPMV (5) **[RULE 407, 4-2-1982]**; **NOX**: 16 PPMV FIELD GAS (4) **[RULE 2005, 5-6-2005]**; **VOC**: 84 PPMV FIELD GAS (4) **[RULE 1303(a)(1)-BACT, 5-10-1996;** *RULE 1303(a)(1)-BACT, 12-6-2002*]	A63.1, A63.2, A99.1, A99.2, A99.3, I296.1

* (1) (1A) (1B) Denotes RECLAIM emission factor (2) (2A) (2B) Denotes RECLAIM emission rate
(3) Denotes RECLAIM concentration limit (4) Denotes BACT emission limit
(5) (5A) (5B) Denotes command and control emission limit (6) Denotes air toxic control rule limit
(7) Denotes NSR applicability limit (8) (8A) (8B) Denotes 40 CFR limit (e.g. NSPS, NESHAPS, etc.)
(9) See App B for Emission Limits (10) See section J for NESHAP/MACT requirements

** Refer to section F and G of this permit to determine the monitoring, recordkeeping and reporting requirements for this device.

FACILITY PERMIT TO OPERATE
DCOR LLC

SECTION D: DEVICE ID INDEX

The following sub-section provides an index to the devices that make up the facility description sorted by device ID.

FACILITY PERMIT TO OPERATE
DCOR LLC

SECTION D: DEVICE ID INDEX

Device Index For Section D			
Device ID	**Section D Page No.**	**Process**	**System**
D1	1	1	0
D3	1	2	0
D4	1	2	0
D5	2	2	0
D6	2	2	0
D7	2	2	0
D8	2	2	0
D9	2	2	0
D10	2	2	0
D11	2	3	0
D12	2	3	0
D13	3	3	0
D14	3	3	0
D15	3	3	0
D16	3	4	0
D17	3	5	0
D18	3	5	0
D19	3	5	0
D20	3	5	0
D21	3	5	0
D22	4	5	0
D24	3	3	0
D25	4	6	0
D26	4	6	0
D27	4	6	0
D28	4	6	0
D29	4	7	0
D30	4	7	0
D31	5	8	0
D33	5	8	0
D35	1	1	0

FACILITY PERMIT TO OPERATE
DCOR LLC

SECTION D: FACILITY DESCRIPTION AND EQUIPMENT SPECIFIC CONDITIONS

The operator shall comply with the terms and conditions set forth below:

FACILITY CONDITIONS

F2.1 The operator shall limit emissions from this facility as follows:

CONTAMINANT	EMISSIONS LIMIT
Sulfur compounds	Less than or equal to 5 LBS PER DAY

For the purpose of this condition, the sulfur compound emission limit shall be verified through monthly gas analysis of sulfur content using District Method 307-91. The operator shall calculate the daily sulfur emissions by multiplying the results of the monthly gas analysis in ppm as H2S by 0.0899 and by the fuel use in MMSCF/day. The operator shall keep records of the monthly gas analysis and daily records of the fuel gas usage for a minimum of five years.

[RULE 431.1, 6-12-1998]

F14.1 The operator shall not use diesel fuel containing sulfur compounds in excess of 15 ppm by weight as supplied by the supplier.

[RULE 431.2, 5-4-1990; RULE 431.2, 9-15-2000]

SYSTEM CONDITIONS

S15.1 The vent gases from all affected devices of this process/system shall be vented as follows:

All emergency vent gases shall be vented to the vapor recovery compressor.

[Systems subject to this condition : Process 6, System 0]

FACILITY PERMIT TO OPERATE
DCOR LLC

SECTION D: FACILITY DESCRIPTION AND EQUIPMENT SPECIFIC CONDITIONS

The operator shall comply with the terms and conditions set forth below:

DEVICE CONDITIONS

A. Emission Limits

A63.1 The operator shall limit emissions from this equipment as follows:

CONTAMINANT	EMISSIONS LIMIT
CO	Less than or equal to 1116 LBS IN ANY ONE MONTH
PM10	Less than or equal to 16.1 LBS IN ANY ONE MONTH
VOC	Less than or equal to 167.4 LBS IN ANY ONE MONTH
SOX	Less than or equal to 13.3 LBS IN ANY ONE MONTH

The operator shall calculate the emission limit(s) by using the following emission factors: CO =0.56 lbs/kscf, VOC = 0.084 lbs/kscf, PM10= 0.008 lbs/kscf, and SOx = 0.0067 lbs/kscf.

[**RULE 1303(b)(2)-Offset, 5-10-1996**; RULE 1303(b)(2)-Offset, 12-6-2002]

[Devices subject to this condition : D31, D33]

A63.2 The operator shall limit emissions from this equipment as follows:

CONTAMINANT	EMISSIONS LIMIT
CO	Less than or equal to 13140 LBS IN ANY ONE YEAR
PM10	Less than or equal to 193 LBS IN ANY ONE YEAR
VOC	Less than or equal to 1971 LBS IN ANY ONE YEAR
SOX	Less than or equal to 158 LBS IN ANY ONE YEAR

FACILITY PERMIT TO OPERATE
DCOR LLC

SECTION D: FACILITY DESCRIPTION AND EQUIPMENT SPECIFIC CONDITIONS

The operator shall comply with the terms and conditions set forth below:

The operator shall calculate the emission limit(s) by using the following emission factors: CO =0.56 lbs/kscf, VOC = 0.084 lbs/kscf, PM10= 0.008 lbs/kscf, and SOx = 0.0067 lbs/kscf.

For the purpose of this condition, the yearly emission limit shall be defined as a period of twelve (12) consecutive months determined on a rolling basis with a new 12 month period beginning on the first day of each calendar month.

[**RULE 1303(b)(2)-Offset, 5-10-1996;** RULE 1303(b)(2)-Offset, 12-6-2002]

[Devices subject to this condition : D31, D33]

A99.1 The 16 PPM NOX emission limit(s) shall only apply at 15% excess oxygen, dry, and based on 60-minute average time.

[**RULE 1303(a)(1)-BACT, 5-10-1996;** RULE 1303(a)(1)-BACT, 12-6-2002]

[Devices subject to this condition : D31, D33]

A99.2 The 319 PPM CO emission limit(s) shall only apply at 15% excess oxygen, dry, and based on 60-minute average time.

[**RULE 1303(a)(1)-BACT, 5-10-1996;** RULE 1303(a)(1)-BACT, 12-6-2002]

[Devices subject to this condition : D31, D33]

A99.3 The 84 PPM ROG emission limit(s) shall only apply at 15% excess oxygen, dry, and based on 60-minute average time.

[**RULE 1303(a)(1)-BACT, 5-10-1996;** RULE 1303(a)(1)-BACT, 12-6-2002]

FACILITY PERMIT TO OPERATE
DCOR LLC

SECTION D: FACILITY DESCRIPTION AND EQUIPMENT SPECIFIC CONDITIONS

The operator shall comply with the terms and conditions set forth below:

[Devices subject to this condition : D31, D33]

C. Throughput or Operating Parameter Limits

C1.1 The operator shall limit the operating time to no more than 199 hour(s) in any one year.

[RULE 1304(a)-Modeling and Offset Exemption, 6-14-1996; RULE 1304(c)-Offset Exemption, 6-14-1996]

[Devices subject to this condition : D1]

C1.2 The operator shall limit the operating time to no more than 4000 hour(s) in any one year.

[RULE 2012, 5-6-2005]

[Devices subject to this condition : D35]

D. Monitoring/Testing Requirements

D12.1 The operator shall install and maintain a(n) non-resettable elapsed time meter to accurately indicate the elapsed operating time of the engine.

[RULE 2012, 5-6-2005]

[Devices subject to this condition : D1, D35]

E. Equipment Operation/Construction Requirements

FACILITY PERMIT TO OPERATE
DCOR LLC

SECTION D: FACILITY DESCRIPTION AND EQUIPMENT SPECIFIC CONDITIONS

The operator shall comply with the terms and conditions set forth below:

E127.1 The operator shall keep gauge/sample hatches closed except during actual gauging/sampling operations.

[RULE 1148.1, 3-5-2004; **RULE 1173, 5-13-1994;** RULE 1173, 12-6-2002]

[Devices subject to this condition : D3, D4, D5, D6, D7, D8, D11, D12, D13, D14, D15, D24]

E193.1 The operator shall upon completion of construction, operate and maintain this equipment according to the following requirements:

The operator shall conduct a source test once every three years in accordance with Rule 2012 requirements.

The operator shall perform an engine tune-up twice in any one year.

The equipment shall not be operated until the operator stops operation and surrenders the permit of Device D2 of Section D. The operator shall notify AQMD prior to first operation of this device.

[RULE 2012, 5-6-2005]

[Devices subject to this condition : D35]

H. Applicable Rules

H23.1 This equipment is subject to the applicable requirements of the following rules or regulations:

Contaminant	Rule	Rule/Subpart
ROG	District Rule	1173

FACILITY PERMIT TO OPERATE
DCOR LLC

SECTION D: FACILITY DESCRIPTION AND EQUIPMENT SPECIFIC CONDITIONS

The operator shall comply with the terms and conditions set forth below:

[RULE 1148.1, 3-5-2004; **RULE 1173, 5-13-1994;** RULE 1173, 12-6-2002]

[Devices subject to this condition : D16, D17, D18, D19, D20, D21, D22]

H23.2 This equipment is subject to the applicable requirements of the following rules or regulations:

Contaminant	Rule	Rule/Subpart
ROG	District Rule	1173
H2S	District Rule	431.1

[**RULE 1173, 5-13-1994;** RULE 1173, 12-6-2002]

[Devices subject to this condition : D29, D30]

I. Administrative

I296.1 This equipment shall not be operated unless the operator demonstrates to the Executive Officer that the facility holds sufficient RTCs to offset the annual emissions increase for the first 12 months of operation. In addition, this equipment shall not be operated unless the operator demonstrates to the Executive Officer that, at the commencement of each compliance year after the start of operation, the facility holds sufficient RTCs in an amount equal to the annual emissions increase.

FACILITY PERMIT TO OPERATE
DCOR LLC

SECTION D: FACILITY DESCRIPTION AND EQUIPMENT SPECIFIC CONDITIONS

The operator shall comply with the terms and conditions set forth below:

For the purposes of this condition, the annual emission increase is 1095 lbs. of NOx

RTCs held for the purpose of demonstrating compliance with this condition either at the commencement of initial operation or of a compliance year may be sold only after 12 months of start of initial operation or after the fourth quarter of the applicable compliance year, respectively.

In lieu of holding RTCs for the entire duration specified above, RTCs held for the purpose of demonstrating compliance with this condition may be sold as specified below, provided quarterly emission does not exceed the corresponding quarterly limit listed in the table below. The amount available for sale shall be the quarterly emission limit listed minus the actual emission reportable pursuant to RECLAIM Monitoring, Recordkeeping, and Reporting protocols. Such amount may be sold only after the end of the subject quarter. If the quarterly certified emissions for any quarter exceed the corresponding quarterly emission limit, the facility may only sell RTCs acquired pursuant to Rule 2005(f) for that compliance year after the fourth quarter of that compliance year. This early sale option shall permanently be unavailable in the event that quarterly emissions exceeded the corresponding quarterly limits for a total of 3 times in any five consecutive years.

Calendar Quarter	Emission Limit (lbs.)
January 1 through March 31	274
April 1 through June 30	274
July 1 through September 30	274
October 1 through December 31	274

[RULE 2005, 5-6-2005]

[Devices subject to this condition : D31, D33]

FACILITY PERMIT TO OPERATE
DCOR LLC

SECTION D: FACILITY DESCRIPTION AND EQUIPMENT SPECIFIC CONDITIONS

The operator shall comply with the terms and conditions set forth below:

I296.2 This equipment shall not be operated unless the operator demonstrates to the Executive Officer that the facility holds sufficient RTCs to offset the annual emissions increase for the first 12 months of operation. In addition, this equipment shall not be operated unless the operator demonstrates to the Executive Officer that, at the commencement of each compliance year after the start of operation, the facility holds sufficient RTCs in an amount equal to the annual emissions increase.

For the purposes of this condition, the annual emission increase is 10120 lbs. of NOx

RTCs held for the purpose of demonstrating compliance with this condition either at the commencement of initial operation or of a compliance year may be sold only after 12 months of start of initial operation or after the fourth quarter of the applicable compliance year, respectively.

In lieu of holding RTCs for the entire duration specified above, RTCs held for the purpose of demonstrating compliance with this condition may be sold as specified below, provided quarterly emission does not exceed the corresponding quarterly limit listed in the table below. The amount available for sale shall be the quarterly emission limit listed minus the actual emission reportable pursuant to RECLAIM Monitoring, Recordkeeping, and Reporting protocols. Such amount may be sold only after the end of the subject quarter. If the quarterly certified emissions for any quarter exceed the corresponding quarterly emission limit, the facility may only sell RTCs acquired pursuant to Rule 2005(f) for that compliance year after the fourth quarter of that compliance year. This early sale option shall permanently be unavailable in the event that quarterly emissions exceeded the corresponding quarterly limits for a total of 3 times in any five consecutive years.

Calendar Quarter	Emission Limit (lbs.)
January 1 through March 31	2530
April 1 through June 30	2530
July 1 through September 30	2530
October 1 through December 31	2530

FACILITY PERMIT TO OPERATE
DCOR LLC

SECTION D: FACILITY DESCRIPTION AND EQUIPMENT SPECIFIC CONDITIONS

The operator shall comply with the terms and conditions set forth below:

[RULE 2005, 5-6-2005; RULE 2012, 5-6-2005]

[Devices subject to this condition : D35]

K. Record Keeping/Reporting

K67.1 The operator shall keep records, in a manner approved by the District, for the following parameter(s) or item(s):

date of operation, elapsed time in hours, the reason for operation

[RULE 1304(a)-Modeling and Offset Exemption, 6-14-1996; RULE 1304(c)-Offset Exemption, 6-14-1996]

[Devices subject to this condition : D1]

FACILITY PERMIT TO OPERATE
DCOR LLC

SECTION H: PERMIT TO CONSTRUCT AND TEMPORARY PERMIT TO OPERATE

NONE

SCAQMD PERMIT PROCESSING SYSTEM (PPS)

AEIS DATA SHEET

Company Name : DCOR LLC

Facility ID : 143740

Equipment Address : OFFSHORE PLATFORM ESTHER PRC 3095 1

SEAL BEACH CA 90740

Application Number : 518222

Equipment B-Cat : 053720

Estimated Completion Date : 08/04/11

Equipment C-Cat :

Equipment Type : Basic

Equipment Description : GAS TURBINE-DIG. GAS/LDF <300 KW

	Emissions	
Emittants	R1 LB/HR	R2 LB/HR
CO	1.50	1.50
NOX	0.13	0.13
PM10	0.02	0.02
ROG	0.23	0.23
SOX	0.02	0.02

Applicable Rules

1401	09/10/2010	New Source Review of Toxic Air Contaminants
2000	05/06/2005	General (RECLAIM)
3000	11/05/2010	General (Title V)
401	11/09/2001	Visible Emissions
402	05/07/1976	Nuisance
407	04/02/1982	Liquid and Gaseous Air Contaminants
409	08/07/1981	Combustion Contaminants
431.1	06/12/1998	Sulfur Content of Gaseous Fuels

	Mon	Tue	Wed	Thu	Fri	Sat	Sun
Daily Start Times :	00:00	00:00	00:00	00:00	00:00	00:00	00:00
Daily Stop Times :	24:00	24:00	24:00	24:00	24:00	24:00	24:00

User's Initials : HS01 Date: 08/04/11 Supervisor's Name : _____ Review Date : / /

PERMIT TO OPERATE

COMPANY NAME AND ADDRESS:

DOS CUADRAS OFFSHORE RESOURCES (DCOR), LLC
290 Maple Court, Suite 290
Ventura, CA 93009

EQUIPMENT LOCATION:

DOS CUADRAS OFFSHORE RESOURCES (DCOR), LLC
Offshore Platform Esther Prc 3095 1
Seal Beach, CA 90740
ID 143740

BACKGROUND:

Dos Cuadras Offshore Resources (DCOR), LLC operates Platform Esther, which is located in the state waters of San Pedro Bay, approximately 1.5 miles offshore of Seal Beach Pier.

The facility produces approximately 800 bbls of oil per day which is separated from the water and gas on site. The crude oil and water produced is pumped via pipeline to an onshore Chevron facility in Seal Beach.

In addition to other equipment on the platform, DCOR operates **two micro turbines, referred to in the facility permit as: Gas Turbine unit #1, D31; and Gas Turbine unit #2, D33.** DCOR also operates a portable internal combustion, D35.

We received 3 applications requesting a change of condition regarding conditions **I296.1 (D31, D33)** and I296.2 (D35). Basically, this condition stipulates that "....equipment shall not be operated unless the operator demonstrates to the Executive Officer that the facility holds sufficient RTCs to offset the prorated *annual* emissions increase for the first compliance year..."

In the case above, DCOR proposes to modify the conditions to allow *quarterly* NSR NOX RTC limit in lieu of the current *annual* limit.

DCOR has also requested that the D31 and D33 devices be moved to section D of the facility permit and change the Responsible Official information in Section A.

The applications submitted for this project are described in the table below:

Table -1 Equipment and Description

Application	Description	Device
518222	**Ingersoll Rand Micro Gas turbine**	**D31**
518223	**Ingersoll Rand Micro Gas turbine**	**D33**
518224	John Deere Diesel Portable ICE	D35
518221	Reclaim permit Amendment	

A source test conducted by AIR_X Testing on January 14, 2009 on the micro turbines resulted in the following:

A/N 466415, D31, Micro turbine #1

	NOx	CO	VOC
S/T, 1/14/09	10 ppmv	203 ppmv	26.1 ppmv
BACT limit	16 ppmv	319 ppmv	84 ppmv
Compliance?	Yes	Yes	Yes

A/N 466416, D33, Microturbine #2

	NOx	CO	VOC
S/T, 1/14/09	12.2 ppmv	211 ppmv	66.8 ppmv
BACT limit	16 ppmv	319 ppmv	84 ppmv
Compliance?	Yes	Yes	Yes

These devices will be moved over to Section D of the facility permit since the emissions were in compliance.

EMISSIONS:

The evaluation of the above applications does not require emissions calculation. The emissions from each micro turbine (gas turbine) were calculated (in A/N's 466415, 466416) and entered in the NSR. The source test values were in compliance with the calculated emissions, as far as ppm and lbs/hr are concerned. However, there are several instances where the emissions were calculated erroneously.

Table 2-Criteria Emissions

Pollutants	lbs/hr	lbs/day	lbs/yr	30 day average
NOx	0.125	3.12	1095	3
ROG	0.225	5.4	1971	5
CO	1.5	36	13140	36
PM10	0.022	0.52	193	0.52(**1**)[1] ~~0~~
SOx	0.018	0.43	158	0.43(0)

1. The PM10 30-day average should be corrected to **1**(0.52 lbs/day).

RULES EVALUATION:

The Rules referred to in A/N 466415 and A/N 466416 are also applicable for the new change of condition applications, A/N 518222 (D31) and A/N 518223 (D33), except for Rule 2005(f)(3).

RULE 2005: NEW SOURCE REVIEW FOR RECLAIM
Section (f)(3) of this rule allows an applicant to request a condition to request a condition to hold sufficient RTCs on a quarterly basis rather than an annual basis.

RECOMMENDATION

This application is expected to comply with all the applicable District Rules and Regulations. A permit to Operate is recommended and amend the RECLAIM facility permit by the following:

1. *Remove* the conditions K40.1 and D29.1 which reference a source test requirement for D31 and D33. The source test was performed on January 14, 2009 where the results were in compliance with the BACT limit.

2. *Modify* condition I296.1 to allow a *quarterly* NSR NOX RTC limit per Rule 2005(f)(3) in lieu of current *annual* limit, as the applicant also requested .

Table 2- NOx RTC amounts

Device No.	Description	Annual NSR Increase (lbs)	Quarterly NSR Increase (lbs)
D31	**Gas (micro)Turbine #1, 3.27 MMBtu/hr**	**1,095**	**273.5**
D33	**Gas (micro)Turbine #2, 3.27 MMBtu/hr**	**1,095**	**273.5**
D35	Diesel Internal combustion engine,450 hp	10,120	2,530

I296.1

~~This equipment shall not be operated unless the operator demonstrates to the Executive Officer that the facility holds sufficient RTCs to offset the prorated annual emissions increase for the first compliance year of operation. In addition, this equipment shall not~~

~~be operated unless the operator demonstrates to the Executive Officer that, at the commencement of each compliance year after the first compliance year of operation, the facility holds sufficient RTCs in an amount equal to the annual emissions increase.~~

~~To comply with this condition, the operator shall hold a minimum NOx RTCs of 1,095 lbs for each compliance year. In accordance with Rule 2005(f), unused RTCs may be sold only during the reconciliation period for the fourth quarter of the applicable compliance year inclusive of the 1st compliance year.~~

This equipment shall not be operated unless the operator demonstrates to the Executive Officer that the facility holds sufficient RTCs to offset the annual emissions increase for the first 12 months of operation. In addition, this equipment shall not be operated unless the operator demonstrates to the Executive Officer that, at the commencement of each compliance year after the start of operation, the facility holds sufficient RTCs in an amount equal to the annual emission increase.

For the purposes of this condition, the annual emission increase is 1095 lbs. of NOx.

RTCs held for the purpose of demonstrating compliance with this condition either at the commencement of initial operation or of a compliance year may be sold only after 12 months of start of initial operation or after the fourth quarter of the applicable year, respectively.

In lieu of holding RTCs for the entire duration specified above, RTCs held for the purpose of demonstrating compliance with this condition may be sold as specified below, provided quarterly emission does not exceed the corresponding quarterly limit listed in the table below. The amount available for sale shall be the quarterly emission limit listed minus the actual emission reportable pursuant to RECLAIM Monitoring, Recordkeeping, and Reporting protocols. Such amount may be sold only after the end of the subject quarter. If the quarterly certified emissions for any quarter exceed the corresponding quarterly emission limit, the facility may only sell RTCs acquired pursuant to Rule 2005(f) for that compliance year after the fourth quarter of that compliance year. This early sale option shall permanently be unavailable in the event that quarterly emissions exceeded the corresponding quarterly limits for a total of 3 in any five consecutive years.

Calendar Quarter	Emissions Limit (lbs.)
January 1 through March 31	274
April 1 through June 30	274
July 1 through September 30	274
October 1 through December 31	274

[RULE 2005, RULE 2012]

[Devices subject to this condition: D31, D33]

as illustrated in the RECLAIM Trading Zones Map. A facility in Zone 1 may only obtain RTCs from Zone 1. A facility in Zone 2 may obtain RTCs from either Zone 1 or 2, or both.

(f) Offsets

The Facility Permit for a new or modified facility shall require compliance with this subdivision, if applicable.

(1) Any facility which was required to provide offsets pursuant to paragraphs (b)(2), or subparagraph (c)(4)(B) or any new facility required to provide offsets pursuant to paragraph (c)(2) shall, at the commencement of each compliance year, hold RTCs in an amount equal to the amount of such required offsets. The Facility Permit holder may reduce the amount of offsets required pursuant to this subdivision by accepting a permit condition limiting emissions which shall serve in lieu of the starting Allocation plus non-tradable credits for purposes of paragraph (c)(4).

(2) Unused RTCs acquired to comply with this subdivision or with paragraphs (b)(2), (c)(2), or subparagraph (c)(4)(B) may be sold only during the reconciliation period for the fourth quarter of the applicable compliance year.

(3) In lieu of compliance with paragraph (f)(2), the Facility Permit holder may accept a permit condition limiting quarterly emissions from the facility. A facility with quarterly emission limits may sell, at any time after the end of that quarter and prior to the end of the reconciliation period for that compliance year, unused RTCs acquired pursuant to this subdivision at the amount not to exceed the difference between the permitted emission limit for that quarter and the emissions during that quarter as reported to the District in the Quarterly Emission Certification. Any facility with quarterly certified emissions exceeding the quarterly emission limit for any quarter may sell RTCs only during the reconciliation period for the fourth quarter of the applicable compliance year. If there are a total of three exceedances in any five consecutive compliance years, the facility shall permanently comply with paragraph (f)(2) in lieu of (f)(3).

The same as 466416

	APPL_	D	EMI_I	A	MEAS	EMI_	EMI_AMT_	EMI_	APRO	APROV_D
1	466415	0	CO	26	AV30	36	04-02-2007	lchen	johny	06-01-2007
2	466415	0	CO	26	R1	1.5	04-02-2007	lchen	johny	06-01-2007
3	466415	0	CO	26	R1DY	36	04-02-2007	lchen	johny	06-01-2007
4	466415	0	CO	26	R1HR	1.5	04-02-2007	lchen	johny	06-01-2007
5	466415	0	CO	26	R2	1.5	04-02-2007	lchen	johny	06-01-2007
6	466415	0	CO	26	R2DY	36	04-02-2007	lchen	johny	06-01-2007
7	466415	0	CO	26	R2HR	1.5	04-02-2007	lchen	johny	06-01-2007
8	466415	0	CO	26	RACT	36	04-02-2007	lchen	johny	06-01-2007
9	466415	0	CO	26	YRLY	13140	04-02-2007	lchen	johny	06-01-2007
10	466415	0	NOX	26	AV30	3	04-02-2007	lchen	johny	06-01-2007
11	466415	0	NOX	26	R1DY	3.12	04-02-2007	lchen	johny	06-01-2007
12	466415	0	NOX	26	R1HR	.13	04-02-2007	lchen	johny	06-01-2007
13	466415	0	NOX	26	R2DY	3.12	04-02-2007	lchen	johny	06-01-2007
14	466415	0	NOX	26	R2HR	.13	04-02-2007	lchen	johny	06-01-2007
15	466415	0	NOX	26	RACT	3	04-02-2007	lchen	johny	06-01-2007
16	466415	0	NOX	26	YRLY	1095	04-02-2007	lchen	johny	06-01-2007
17	466415	0	PM10	26	AV30	0	04-02-2007	lchen	johny	06-01-2007
18	466415	0	PM10	26	R1DY	.48	04-02-2007	lchen	johny	06-01-2007
19	466415	0	PM10	26	R1HR	.02	04-02-2007	lchen	johny	06-01-2007
20	466415	0	PM10	26	R2DY	.48	04-02-2007	lchen	johny	06-01-2007
21	466415	0	PM10	26	R2HR	.02	04-02-2007	lchen	johny	06-01-2007
22	466415	0	PM10	26	RACT	1	04-02-2007	lchen	johny	06-01-2007
23	466415	0	PM10	26	YRLY	193	04-02-2007	lchen	johny	06-01-2007
24	466415	0	ROG	26	AV30	5	04-02-2007	lchen	johny	06-01-2007
25	466415	0	ROG	26	R1DY	5.52	04-02-2007	lchen	johny	06-01-2007
26	466415	0	ROG	26	R1HR	.23	04-02-2007	lchen	johny	06-01-2007
27	466415	0	ROG	26	R2DY	5.52	04-02-2007	lchen	johny	06-01-2007
28	466415	0	ROG	26	R2HR	.23	04-02-2007	lchen	johny	06-01-2007
29	466415	0	ROG	26	RACT	5	04-02-2007	lchen	johny	06-01-2007
30	466415	0	ROG	26	YRLY	1971	04-02-2007	lchen	johny	06-01-2007
31	466415	0	SOX	26	AV30	0	04-02-2007	lchen	johny	06-01-2007
32	466415	0	SOX	26	R1DY	.48	04-02-2007	lchen	johny	06-01-2007
33	466415	0	SOX	26	R1HR	.02	04-02-2007	lchen	johny	06-01-2007
34	466415	0	SOX	26	R2DY	.48	04-02-2007	lchen	johny	06-01-2007
35	466415	0	SOX	26	R2HR	.02	04-02-2007	lchen	johny	06-01-2007
36	466415	0	SOX	26	RACT	0	04-02-2007	lchen	johny	06-01-2007
37	466415	0	SOX	26	YRLY	158	04-02-2007	lchen	johny	06-01-2007

PM10 alternately:

6.6×10^{-5} lb / MMBtu $\times$ 3.27 MMBtu / hr = 0.022 lb/hr

= 0.52 lb/day

189.1 lb/yr

30 day = .52 → (1)

	APPL_STATUS_DESC
1	APPLICATION CHANGED FROM CLASS I - III
2	APPLICATION CHANGED FROM CLASS I - III
3	APPLICATION CHANGED FROM CLASS I - III
4	APPLICATION CHANGED FROM CLASS I - III
5	APPLICATION CHANGED FROM CLASS I - III
6	APPLICATION CHANGED FROM CLASS I - III
7	APPLICATION CHANGED FROM CLASS I - III
8	APPLICATION CHANGED FROM CLASS I - III
9	APPLICATION CHANGED FROM CLASS I - III
10	APPLICATION CHANGED FROM CLASS I - III
11	APPLICATION CHANGED FROM CLASS I - III
12	APPLICATION CHANGED FROM CLASS I - III
13	APPLICATION CHANGED FROM CLASS I - III
14	APPLICATION CHANGED FROM CLASS I - III
15	APPLICATION CHANGED FROM CLASS I - III
16	APPLICATION CHANGED FROM CLASS I - III
17	APPLICATION CHANGED FROM CLASS I - III
18	APPLICATION CHANGED FROM CLASS I - III
19	APPLICATION CHANGED FROM CLASS I - III
20	APPLICATION CHANGED FROM CLASS I - III
21	APPLICATION CHANGED FROM CLASS I - III
22	APPLICATION CHANGED FROM CLASS I - III
23	APPLICATION CHANGED FROM CLASS I - III
24	APPLICATION CHANGED FROM CLASS I - III
25	APPLICATION CHANGED FROM CLASS I - III
26	APPLICATION CHANGED FROM CLASS I - III
27	APPLICATION CHANGED FROM CLASS I - III
28	APPLICATION CHANGED FROM CLASS I - III
29	APPLICATION CHANGED FROM CLASS I - III
30	APPLICATION CHANGED FROM CLASS I - III
31	APPLICATION CHANGED FROM CLASS I - III
32	APPLICATION CHANGED FROM CLASS I - III
33	APPLICATION CHANGED FROM CLASS I - III
34	APPLICATION CHANGED FROM CLASS I - III
35	APPLICATION CHANGED FROM CLASS I - III
36	APPLICATION CHANGED FROM CLASS I - III
37	APPLICATION CHANGED FROM CLASS I - III

DCOR
290 Maple Court, Suite 290
Ventura, CA 93003
(805) 535-2000
(805) 535-2100 FAX

March 16, 2011

Mr. Hamilton Stoddard
South Coast Air Quality Management District
21865 Copley Dr.
Diamond Bar, CA 91765-4178

Subject: Additional Permit Application Fee Required
Platform Esther, Facility ID 143740
Applications #518224 & #518222

Dear Mr. Stoddard:

Please find enclosed a check for $529.62, the balance owed on air permit applications A/N #518224 and A/N 518222 for Facility ID 143740 (Platform Esther). Additional e-mail communication on this matter is attached for your information.

If you have any questions, please contact me at 805-535-2074 or cwhite@dcorllc.com.

Sincerely,

Christine White

Christine White
Environmental Advisor

Attachments (2)

DCOR, LLC

034786

SOUTH COAST AQMD	VENDOR SOU001		CHECK DATE 02/22/11	
INVOICE NUMBER	INVOICE DATE		DISCOUNT TAKEN	AMOUNT PAID
21611	02/16/11	38811 A/N 518224 / A/N 518222	$0.00	$529.62
		Total:	$0.00	$529.62

THE FACE OF THIS DOCUMENT HAS A COLORED BACKGROUND ON WHITE PAPER

DCOR, LLC
Operating Account
PO Box 3401
Ventura, CA 93006
apayable@dcorllc.com

Bank of Texas, N.A.
Dallas, TX

CHECK NO. 0034786

32-1432
1110

DATE 02/22/11

AMOUNT **********$529.62

**********529 Dollars and 62 Cents

Void After 90 Days

PAY TO THE ORDER OF
SOUTH COAST AQMD
P.O. BOX 4944
DIAMOND BAR CA 91765-0944

Alan Templeton

THE BACK OF THIS DOCUMENT CONTAINS AN ARTIFICIAL WATERMARK—HOLD AT AN ANGLE TO VIEW

Christine White

From: Mike Shaffer [shafferenv@pacbell.net]
Sent: Thursday, February 10, 2011 10:17 AM
To: Hamilton Stoddard
Cc: Christine White
Subject: Re: Additional fee

Hamilton,

I will request for DCOR to send in the additional $529.62. The reason for the my error/confusion was because the May 2010 revision to Rule 301 added "Gas Turbines (Microturbines Only)" to the fee table as Schedule A, but didn't specify that it was only applicable to small microturbines that fall into the Rule 219 exempt category (<2.95 MMBTU/hr) and request SCAQMD permits when CARB's DG program does not cover them. I found this out just the other day from Mohan Balagopalan, after the applications had been submitted. Sorry for the inconvenience.

Mike Shaffer
Shaffer Environmental Consulting
80 N. Crocker Avenue
Ventura, CA 93004-3845
(805) 659-1744 office
(805) 207-1945 cell
(805) 435-1634 fax
shafferenv@pacbell.net

—— Original Message ——
From: Hamilton Stoddard
To: Shaffer, Mike
Sent: Thursday, February 10, 2011 9:44 AM
Subject: Additional fee

Mike,
As you know I am in the process of prescreening several applications that are essentially requesting a change in conditions I 296.1 and I 296.2 to allow a quarterly NSR NOX RTC limit per Rule 2005(f)(3) in lieu of the current annual limit.

Well the 2 applications for the ice gas turbines, referred to as gas microturbines, needed additional fee because they are considered schedule B and not schedule A, as you indicated they were in the submitted applications. The previous applications (A/N 466416 and A/N 466415) were accepted as schedule B equipment.

Here is the breakdown;

ICE, D35, previous A/N 489830 (P/O G2940), application A/N 518224)	fee is $1037.65 (new
Gas Turbine (Microturbine), previous A/N 466415 application A/N 518222)	**fee is $1037.65 (new**
Gas Turbine (Microturbine), previous A/N 466416 application A/N 518223)	**fee is $518.83 (new**
Reclaim facility permit amendment	fee is $861.52

The total is $3455.65 and you submitted $2926.03 for a difference of $529.62.
Can you send the additional $529.62 to AQMD and refer the amount to applications A/N 518224 and A/N 518222, ID 143740?

Hamilton Stoddard

From: Hamilton Stoddard
Sent: Thursday, February 10, 2011 9:45 AM
To: 'Mike Shaffer'
Subject: Additional fee

Mike,
As you know I am in the process of prescreening several applications that are essentially requesting a change in conditions I 296.1 and I 296.2 to allow a quarterly NSR NOX RTC limit per Rule 2005(f)(3) in lieu of the current annual limit.

Well the 2 applications for the ice gas turbines, referred to as gas microturbines, needed additional fee because they are considered schedule B and not schedule A, as you indicated they were in the submitted applications. The previous applications (A/N 466416 and A/N 466415) were accepted as schedule B equipment.

Here is the breakdown;

ICE, D35, previous A/N 489830 (P/O G2940),	fee is $1037.65 (new application A/N 518224)
as Turbine (Microturbine), previous A/N 466415	**fee is $1037.65 (new application A/N 518222)**
Gas Turbine (Microturbine), previous A/N 466416	**fee is $518.83 (new application A/N 518223)**
Reclaim facility permit amendment	fee is $861.52

The total is $3455.65 and you submitted $2926.03 for a difference of $529.62.
Can you send the additional $529.62 to AQMD and refer the amount to applications A/N 518224 and A/N 518222, ID 143740?

Thanks,
Hamilton.

'amilton Stoddard
Air Quality Engineer II
SCAQMD
909-396-2482

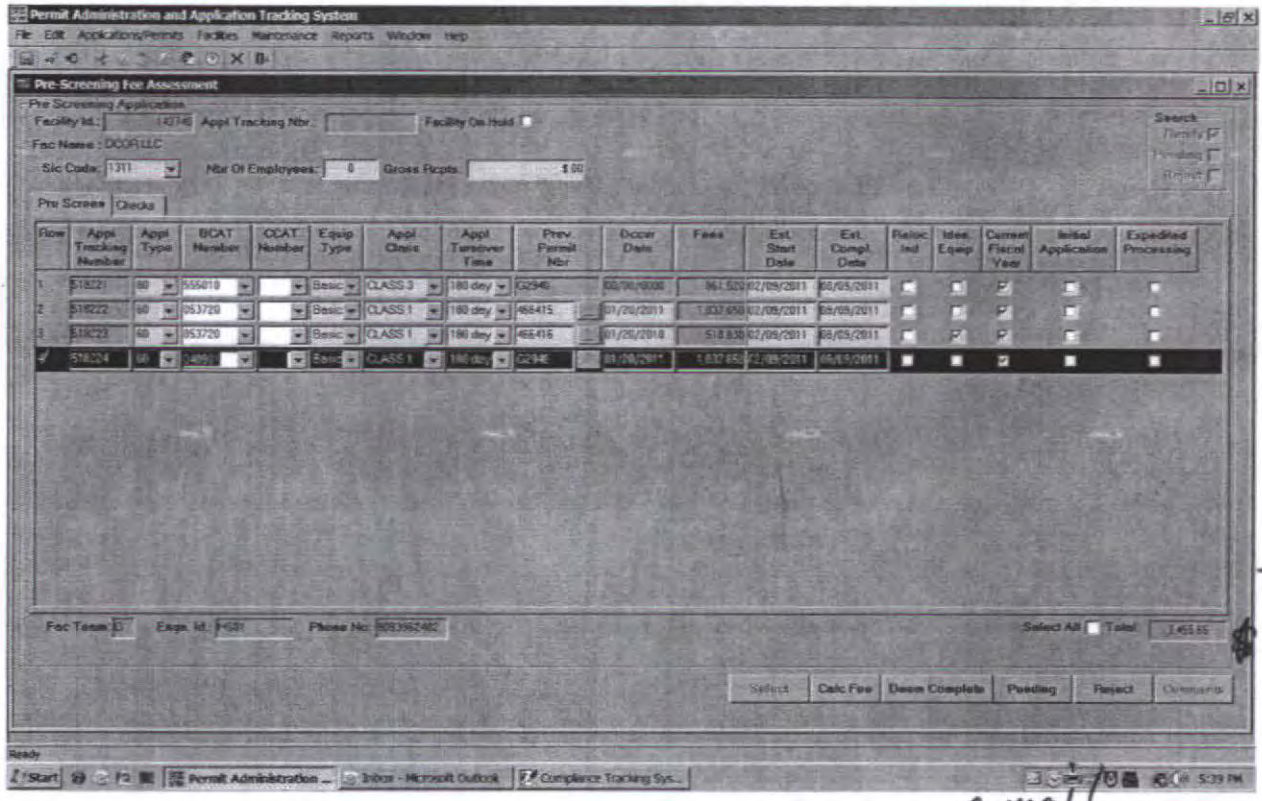

TOTAL: $3,455.65

2/9/2011: PROBLEM I Need to talk/e-mail to M. Shaffer about additional fee.

PVP considered 2 and 3 as ~~class~~ Schedule A

($684.57 and 50% = $342.29)

Rusbeck they should be Schedule B

($1037.65 and 50% = $518.83)

Additional required $3455.65

$- \$2926.03$

$\$529.62$

Hamilton Stoddard

From: Mike Shaffer [shafferenv@pacbell.net]
Sent: Thursday, February 10, 2011 10:17 AM
To: Hamilton Stoddard
Cc: White, Christine
Subject: Re: Additional fee

Hamilton,

I will request for DCOR to send in the additional $529.62. The reason for the my error/confusion was because the May 2010 revision to Rule 301 added "Gas Turbines (Microturbines Only)" to the fee table as Schedule A, but didn't specify that it was only applicable to small microturbines that fall into the Rule 219 exempt category (<2.95 MMBTU/hr) and request SCAQMD permits when CARB's DG program does not cover them. I found this out just the other day from Mohan Balagopalan, after the applications had been submitted. Sorry for the inconvenience.

Mike Shaffer
Shaffer Environmental Consulting
80 N. Crocker Avenue
Ventura, CA 93004-3845
(805) 659-1744 office
(805) 207-1945 cell
(805) 435-1634 fax
shafferenv@pacbell.net

----- Original Message -----
From: Hamilton Stoddard
To: Shaffer, Mike
Sent: Thursday, February 10, 2011 9:44 AM
Subject: Additional fee

Mike,
As you know I am in the process of prescreening several applications that are essentially requesting a change in conditions I 296.1 and I 296.2 to allow a quarterly NSR NOX RTC limit per Rule 2005(f)(3) in lieu of the current annual limit.

Well the 2 applications for the ice gas turbines, referred to as gas microturbines, needed additional fee because they are considered schedule B and not schedule A, as you indicated they were in the submitted applications. The previous applications (A/N 466416 and A/N 466415) were accepted as schedule B equipment.

Here is the breakdown;

ICE, D35, previous A/N 489830 (P/O G2940),	fee is $1037.65 (new application A/N 518224)
Gas Turbine (Microturbine), previous A/N 466415	**fee is $1037.65 (new application A/N 518222)**
Gas Turbine (Microturbine), previous A/N 466416	**fee is $518.83 (new application A/N 518223)**
Reclaim facility permit amendment	fee is $861.52

The total is $3455.65 and you submitted $2926.03 for a difference of $529.62.
Can you send the additional $529.62 to AQMD and refer the amount to applications A/N 518224 and A/N 518222, ID 143740?

Thanks,
Hamilton.

January 19, 2011

Permit Services
South Coast Air Quality Management District
P.O. Box 4944
Diamond Bar, CA 91765-0944

Re: Application to Request Quarterly NO_X RTC Limit per Rule 2005(f)(3) and Miscellaneous Other Revisions
DCOR, LLC - Platform Esther (Facility ID# 143740)
Offshore State Lease PRC 3095.1, Seal Beach

Dear Permit Services:

This change of condition application is being submitted to request modifications to the facility permit for our Dos Cuadras Offshore Resources, LLC's (DCOR) Platform Esther facility located in the Pacific Ocean offshore of the City of Seal Beach (143740). The requested changes include: 1) Modify Permit Conditions I296.1 and I296.2; 2) Move Devices D31 and D33 from Section H to Section D and add NO_X emission factor reference to both; and 3) Change the Responsible Official information in Section A.

As required for a permit application to be deemed complete, included in this application package are the required Forms 400-A, Form 400-CEQA, and payment to cover the appropriate permit processing fees.

GENERAL AND FACILITY INFORMATION:

Business Name:	DCOR, LLC
SCAQMD Facility ID:	143740
Nature of Business:	Crude Oil and Gas Production (SIC 1311; NAICS 211111)
Equipment Location:	Offshore State Lease PRC 3095.1 Seal Beach, CA
Business/Equipment Contact Person:	Christine White Environmental Advisor 290 Maple Court, Suite 290 Ventura, CA 93003 (805) 535-2074 office (805) 535-2075 fax E-mail: cwhite@dcorllc.com
Permit Application Contact Person:	Mike Shaffer President/Principal Engineer Shaffer Environmental Consulting 80 N. Crocker Avenue Ventura, CA 93004-3845 (805) 659-1744 office (805) 207-1945 mobile (805) 435-1634 fax E-mail: shafferenv@pacbell.net
Operating Schedule (proposed):	24 hours/day, 7 days/week, 52 weeks/year
Construction Start Date (est.):	Not Applicable

PROJECT LOCATION:

Platform Esther is located in the state waters of San Pedro Bay approximately 1.5 miles offshore of Seal Beach Pier. The facility is one of two DCOR oil and gas production platforms located in the state waters in San Pedro Bay (DCOR's third platform, Edith, is located in federal waters). The facility produces roughly 800 bbls of oil per day which is separated from the water and gas onsite, and the crude and water is pumped via pipeline to an onshore facility (Chevron, Seal Beach). The majority of produced gas is combusted in two 250 KW gas turbines that produce electricity and hot water for the facility, with excess gas piped to an onshore facility (Breitburn, Seal Beach). The platform was constructed in 1990 (began producing in May 1991) after Esther Island was destroyed in a storm in February 1983. The facility was previously owned and operated by PXP, Nuevo/Torch, and Unocal.



PROJECT DESCRIPTION:

DCOR proposes to modify the existing facility permit to incorporate the following three (3) changes:

1. Limit quarterly NO_X emissions in Permit Conditions I296.1 and I296.2 thus allowing excess RTCs to be sold/transferred at the end of each quarter pursuant to Rule 2005(f)(3);

2. Move Devices D31 & D33 (gas microturbines) from Section H to Section D, and add NO_X emission factor reference to both to be consistent with Permit Condition I296.1; and

3. Change the Responsible Official information in Section A.

1. Modify Permit Conditions I296.1 and I296.2

DCOR proposes to modify Permit Conditions I296.1 (Section H) and I296.2 (Section D) to allow a quarterly NSR NO_X RTC limit per Rule 2005(f)(3) in lieu of the current annual limit. The change would allow greater flexibility for DCOR in managing NO_X RTC holdings, especially since the devices applicable to these permit conditions emit far less than the PTE/annual limits.

DCOR assumes that SCAQMD has standard permit wording for the proposed condition (similar to I296 and R2005(f)(3)), so below is some example wording for the modified permit condition:

I296.1 This equipment shall not be operated unless the operator demonstrates to the Executive Officer that, at the commencement of each quarter, the facility holds sufficient RTCs in an amount equal to the quarterly emissions increase.

To comply with this condition, the operator shall hold a minimum NO_X RTCs of 274 lbs for each compliance quarter (each device). In accordance with Rule 2005(f)(3), unused RTCs may be sold only during the reconciliation period for the applicable compliance quarter.

[RULE 2005, 5-6-2005; RULE 2012, 5-6-2005]

[Devices subject to this condition: D31, D33]

I296.2 This equipment shall not be operated unless the operator demonstrates to the Executive Officer that, at the commencement of each quarter, the facility holds sufficient RTCs in an amount equal to the quarterly emissions increase.

To comply with this condition, the operator shall hold a minimum NO_X RTCs of 2,530 lbs for each compliance quarter. In accordance with Rule 2005(f)(3), unused RTCs may be sold only during the reconciliation period for the applicable compliance quarter.

[RULE 2005, 5-6-2005; RULE 2012, 5-6-2005]

[Devices subject to this condition: D35]

The NO_X RTC amounts listed in the example conditions above were generated as follows:

Device No.	Description	Annual NSR Increase (lbs)	Quarterly NSR Increase (lbs)
D31	Gas Turbine, 250KW	1,095	273.75
D33	Gas Turbine, 250KW	1,095	273.75
D35	Diesel ICE, 450HP	10,120	2,530

2. Move Devices D31 & D33 from Section H to Section D and Add NO_X Emission Factor Reference

DCOR's two (2) 250 kW gas microturbines (Devices D31 & D33) have been constructed, operational, and initial source testing was completed pursuant to Condition D29.1 on January 14, 2009. The source test report was forwarded to Li Chen in February 2009. Please move these devices to Section D during the next facility permit revision.

In addition, DCOR proposes to add references to the "Emissions and Requirements" column of the facility permit for Devices D31 and D33 to include the NO_X emission factor (46.64 lbs/mmscf) that was used by SCAQMD Engineering to calculate Rule 2005 NSR amounts referenced in Permit Condition I296.1. The PTE emission rates used in the applications for these two (2) devices were generated based on maximum NO_X emission rate (0.5 lb/MW-hr) and maximum fuel consumption and power ratings (2,680 scf/hr @ 250 kW). [i.e., 46.64 lbs/mmscf = (0.5 lb/MW-hr)*(0.25 MW)/(0.00268 mmscf/hr)]. SCAQMD Engineering used the 46.64 lb/mmscf emission factor to generate the Rule 2005 NSR amounts listed in Permit Condition I296.1 (see table on previous page). DCOR believes the 46.64 lb/mmscf emission factor should be used to report NO_X emissions pursuant to RECLAIM in order to be consistent with the Rule 2005 NSR NO_X limits identified in Permit Condition I296.1. The existing 16 ppmv NO_X concentration limit calculated by SCAQMD Engineering and identified in the "Emissions and Requirements" column for each device should remain for compliance screening and source testing purposes.

Please note that DCOR is simply requesting for the PTE emission factor used in the District's permit evaluation to be referenced in the facility permit for use in reporting of RECLAIM NO_X emissions. DCOR does not request for the existing 16 ppmv NO_X concentration limit to be changed or the emission factor reference (46.64 lb/mmscf) to replace the concentration limit in the permit.

3. Change the Responsible Official Information in Section A

As a result of personnel changes at DCOR, please change the Responsible Official in Section A to the following:

RESPONSIBLE OFFICIAL:	TINA WIEGMAN
TITLE:	ES&RC MANAGER
TELEPHONE NUMBER:	(805) 535-2073

RULES EVALUATION:

A brief review of applicable SCAQMD rules and regulations follows:

A. Regulation II: Permits

This application submittal package and completed Forms 400-A and 400-CEQA should satisfy the permit application requirements of Regulation II.

Rule 212 - Standards for Approving Permits: The application is requesting simple permit condition modifications which do not result in any emission increases/decreases. Therefore, public notification is not required for this request.

B. Regulation III: Fees

Rule 301 - Permitting and Associated Fees: The attached check for $2,926.03 should appropriately cover the permit processing fees per Rule 301. The table below summarizes the permit processing fees.

Equipment Description	Schedule	Processing Fee
IC Engine, Non-Emergency <500 hp (D35; A/N 489830; change of condition)	B	$1,037.65
Gas Turbine (Microturbine); 0.25MW (D31; A/N 466415; change of condition)	A	$684.57

Gas Turbine (Microturbine); 0.25MW (D33; A/N 466416; change of condition)	A (50%-identical)	$342.29	
RECLAIM Facility Permit Amendment		$861.52	✓
	Total	**$2,926.03**	

C. Regulation IV: Prohibitions
No SCAQMD prohibitive rules are applicable to this permit condition modification request.

D. Regulation IX and X: NSPS and NESHAP Standards
No federal NSPS requirements or NESHAP/MACT standards apply to the proposed permit condition modification request.

E. Regulation XI: Source Specific Standards
No SCAQMD Regulation XI rules are applicable to this permit condition modification request.

F. Regulation XIII: New Source Review (NSR)
New source review requirements of Regulation XIII are not triggered since the proposed permit condition modification requests do not result in an emission increase or change in monitoring.

G. Regulation XIV: Toxic Air Contaminants
Rule 1401 - New Source Review for Toxic Air Contaminants: Similar to Regulation XIII, NSR requirements for air toxics are not triggered since the proposed permit condition modification requests do not result in an emission increase or change in monitoring.

H. Regulation XVII: Prevention of Significant Deterioration (PSD)
PSD requirements of Regulation XVII are not triggered since the proposed permit condition modification requests do not result in an emission increase or change in monitoring of any PSD pollutants.

I. Regulation XX: RECLAIM
The facility is an existing NO_x RECLAIM facility, but the proposed permit condition modification requests will not affect the facility's RECLAIM status. DCOR will continue to comply with the RECLAIM program requirements pursuant to Regulation XX.

J. Regulation XXX: Title V Federal Operating Permits
The facility is not a major source/Title V facility. The proposed permit condition modification requests will not affect the facility's major source/Title V status pursuant to Regulation XXX.

If you have any questions or comments, please contact me at (805) 535-2074, or our consultant Mike Shaffer of Shaffer Environmental Consulting at (805) 659-1744.

Sincerely,

Christine White
Environmental Advisor

Attachments: SCAQMD Forms [400-A (4), 400-CEQA (1)]
Enclosures: Check for $2,926.03 (payable to SCAQMD)

South Coast Air Quality Management District

Form 400-CEQA

California Environmental Quality Act (CEQA) Applicability

Mail Application To:
P.O. Box 4944
Diamond Bar, CA 91765

Tel: (909) 396-3385

www.aqmd.gov

The SCAQMD is required by state law, the California Environmental Quality Act (CEQA), to review discretionary permit project applications for potential air quality and other environmental impacts. This form is a screening tool to assist the SCAQMD in clarifying whether or not the project[1] has the potential to generate significant adverse environmental impacts that might require preparation of a CEQA document [CEQA Guidelines §15060(a)].[2] Refer to the attached instructions for guidance in completing this form.[3] For each Form 400-A application, also complete and submit one Form 400-CEQA. If submitting multiple Form 400-A applications for the same project at the same time, only one 400-CEQA form is necessary for the entire project. If you need assistance completing this form, contact Lori Inga at (909) 396-3109.

FACILITY INFORMATION

Business Name of Operator to Appear on the Permit:	Facility ID (6-Digit):
DCOR LLC	143740

Project Description:

Request change of permit condition pursuant to Rule 2005(f)(3) to limit quarterly NOX emissions thus allowing excess RTCs to be sold/transferred at the end of each quarter.

REVIEW FOR EXEMPTION FROM FURTHER CEQA ACTION

Check "Yes" or "No" as applicable

	Yes	No	Is this application for:
A.	○	◉	**A CEQA and/or NEPA document previously or currently prepared that specifically evaluates this project?** If yes, a permit cannot be issued until a Final CEQA document and Notice of Determination is submitted.
B.	○	◉	**A request for a change of permittee only (without equipment modifications)?**
C.	○	◉	**Equipment certification or equipment registration** (qualifies for Rule 222)?
D.	○	◉	**A functionally identical permit unit replacement with no increase in rating or emissions?**
E.	○	◉	**A change of daily VOC permit limit to a monthly VOC permit limit?**
F.	○	◉	**Equipment damaged as a result of a disaster during state of emergency?**
G.	○	◉	**A Title V** (i.e., Regulation XXX) **permit renewal (without equipment modifications)?**
H.	○	◉	**A Title V administrative permit revision?**
I.	○	◉	**The conversion of an existing permit into an initial Title V permit?**

If **"Yes"** is checked for any question above, your application does not require additional evaluation for CEQA applicability. Skip to page 2, "SIGNATURES" and sign and date this form.

REVIEW OF IMPACTS WHICH MAY TRIGGER CEQA

Complete Sections I-VI by checking "Yes" or "No" as applicable. To avoid delays in processing your application(s), explain all "Yes" responses on a separate sheet and attach it to this form.

	Yes	No	Section I – General
1.	○	◉	**Has this project generated any known public controversy regarding potential adverse impacts that may be generated by the project?** Controversy may be construed as concerns raised by local groups at public meetings; adverse media attention such as negative articles in newspapers or other periodical publications, local news programs, environmental justice issues, etc.
2.	○	◉	**Is this project part of a larger project?**
			Section II – Air Quality
3.	○	◉	**Will there be any demolition, excavating, and/or grading construction activities that encompass an area exceeding 20,000 square feet?**
4.	○	◉	**Does this project include the open outdoor storage of dry bulk solid materials that could generate dust?** If Yes, include a plot plan with the application package.

[1] A "project" means the whole of an action which has a potential for resulting in physical change to the environment, including construction activities, clearing or grading of land, improvements to existing structures, and activities or equipment involving the issuance of a permit. For example, a project might include installation of a new, or modification of an existing internal combustion engine, dry-cleaning facility, boiler, gas turbine, spray coating booth, solvent cleaning tank, etc.

[2] To download the CEQA guidelines, visit http://ceres.ca.gov/env_law/state.html.

[3] To download this form and the instructions, visit http://www.aqmd.gov/ceqa or http://www.aqmd.gov/permit

© South Coast Air Quality Management District, Form 400-CEQA (2006.02)

	Yes	No	
5.	○	◉	**Would this project result in noticeable off-site odors from activities that may not be subject to SCAQMD permit requirements?** For example, compost materials or other types of greenwaste (i.e., lawn clippings, tree trimmings, etc.) have the potential to generate odor complaints subject to Rule 402 – Nuisance.
6.	○	◉	**Does this project cause an increase of emissions from marine vessels, trains and/or airplanes?**
7.	○	◉	**Will the proposed project increase the QUANTITY of hazardous materials stored aboveground onsite or transported by mobile vehicle to or from the site by greater than or equal to the amounts associated with each compound on the attached Table 1?[4]**
			Section III – Water Resources
8.	○	◉	**Will the project increase demand for water at the facility by more than 5,000,000 gallons per day?** The following examples identify some, but not all, types of projects that may result in a "yes" answer to this question: 1) projects that generate steam; 2) projects that use water as part of the air pollution control equipment; 3) projects that require water as part of the production process; 4) projects that require new or expansion of existing sewage treatment facilities; 5) projects where water demand exceeds the capacity of the local water purveyor to supply sufficient water for the project; and 6) projects that require new or expansion of existing water supply facilities.
9.	○	◉	**Will the project require construction of new water conveyance infrastructure?** Examples of such projects are when water demands exceed the capacity of the local water purveyor to supply sufficient water for the project, or require new or modified sewage treatment facilities such that the project requires new water lines, sewage lines, sewage hook-ups, etc.
			Section IV – Transportation/Circulation
10.			**Will the project result in** (Check all that apply):
	○	◉	**a. the need for more than 350 new employees?**
	○	◉	**b. an increase in heavy-duty transport truck traffic to and/or from the facility by more than 350 truck round-trips per day?**
	○	◉	**c. increase customer traffic by more than 700 visits per day?**
			Section V – Noise
11.	○	◉	**Will the project include equipment that will generate noise GREATER THAN 90 decibels (dB) at the property line?**
			Section VI – Public Services
12.			**Will the project create a permanent need for new or additional public services in any of the following areas** (Check all that apply):
	○	◉	**a. Solid waste disposal?** Check "No" if the projected potential amount of wastes generated by the project is less than five tons per day.
	○	◉	**b. Hazardous waste disposal?** Check "No" if the projected potential amount of hazardous wastes generated by the project is less than 42 cubic yards per day (or equivalent in pounds).

"REMINDER: For each "Yes" checked in the sections above, attach all pertinent information including but not limited to estimated quantities, volumes, weights, etc."

SIGNATURES

I HEREBY CERTIFY THAT ALL INFORMATION CONTAINED HEREIN AND INFORMATION SUBMITTED WITH THIS APPLICATION IS TRUE AND CORRECT TO THE BEST OF MY KNOWLEDGE. I UNDERSTAND THAT THIS FORM IS A SCREENING TOOL AND THAT THE SCAQMD RESERVES THE RIGHT TO CONSIDER OTHER PERTINENT INFORMATION IN DETERMINING CEQA APPLICABILITY.

SIGNATURE OF RESPONSIBLE OFFICIAL OF FIRM:	TITLE OF RESPONSIBLE OFFICIAL OF FIRM:	
Christine White	Environmental Advisor	
TYPE OR PRINT NAME OF RESPONSIBLE OFFICIAL OF FIRM:	**RESPONSIBLE OFFICIAL'S TELEPHONE NUMBER:**	**DATE Signed:**
Christine White	(805) 535-2074	1/19/11
SIGNATURE OF PREPARER, IF PREPARED BY PERSON OTHER THAN RESPONSIBLE OFFICIAL OF FIRM:	**TITLE OF PREPARER:**	
TYPE OR PRINT NAME OF PREPARER:	**PREPARER'S TELEPHONE NUMBER:**	**DATE Signed:**

THIS CONCLUDES FORM 400-CEQA. INCLUDE THIS FORM AND THE ATTACHMENTS WITH FORM 400-A.

[4] Table 1 – Regulated Substances List and Threshold Quantities for Accidental Release Prevention can be found in the Instructions for Form 400-CEQA.

D33

ROUTING RECORD

DATE	FROM	TO	ACTION
	~~L~~	~~J~~	~~transfer~~ (de-cert.)
3/22/10	~~RCP~~	J	TV
~~JUN 0 2 2010~~	~~RCC~~	~~RSO~~	ill
JAN 28 2011	RGC	HS	c/c
8/4/2011	HSO	RC	P/O Recomm.
AUG 4 2011	RGC	P/S	G14507

REFERENCE TO OTHER APCD RECORDS INCLUDING VARIANCES

RECORDS

APPL # 518223
I.D. # 143740

DCOR LLC
OFFSHORE PLATFORM ESTHER
SEAL BEACH
CRUDE OIL & GAS

Date: 01/20/11

South Coast Air Quality Management District

Form 400-A

Application For Permit To Construct and Permit To Operate

Mail Application To:
P.O. Box 4944
Diamond Bar, CA 91765

Tel: (909) 396-3385
www.aqmd.gov

Section A: Operator Information

1. Business Name of Operator To Appear On The Permit:
DCOR LLC

2. Valid AQMD Facility ID (Available on Permit or Invoice issued by AQMD): 143740

3. Owner's Business Name (only if different from Business Name of Operator):

Section B: Equipment Location

4. Equipment Location Address:
For equipment operated at various locations in AQMD's jurisdiction, provide address of initial site

Offshore Platform Esther, State Parcel 3095.1
Street Address

Seal Beach — CA, — —
City — State — Zip Code

County: ○ Los Angeles ◉ Orange ○ San Bernardino ○ Riverside

Contact Name: Christine White

Contact Title: Environmental Advisor — Phone: (805) 535-2074

Fax: (805) 535-2075 — E-Mail: cwhite@dcorllc.com

Section C: Permit Mailing Address

5. Permit and Correspondence Information:
☐ Check here if same as equipment location address

290 Maple Court, Suite 290
Street Address

Ventura — CA — 93003
City — State — Zip Code

Contact Name: Christine White

Contact Title: Environmental Advisor — Phone: (805) 535-2074

Fax: (805) 535-2075 — E-Mail: cwhite@dcorllc.com

Section D: Application Type

The facility is in ◉ RECLAIM ○ Title V ○ RECLAIM & Title V Program (please check if applicable)

6. Reason for Submitting Application (Select only ONE):

- ○ New Construction (Permit to Construct)
- ○ Permitted Equipment Altered/ Modified Without Permit Approval*
- ○ Equipment Operating Without A Permit or Expired Permit*
- ○ Proposed Alteration/Modification to Permitted Equipment
- ○ Administrative Change
- ○ Change of Condition For Permit To Operate
- ○ Equipment On-Site But Not Constructed or Operational
- ◉ Change of Condition For Permit To Construct
- ○ Title V Application (Initial, Revisions, Modifications, etc.)
- ○ Change of Location—Moving to New Site
- ○ Compliance Plan
- ○ Facility Permit Amendment
- ○ Registration/Certification
- ○ Streamlined Standard Permit

Existing Or Previous Permit/Application Number:
(If you checked any of the items in this column, you MUST provide a existing Permit/ Application Number)
466416

* A Higher Permit Processing Fee applies to those items with an asterisk (Rule 301 (c) (1) (D)

7. Estimated Start Date of Operation/Construction (MM/DD/YYYY): 01/01/2011

8. Description of Equipment:
Modify existing Permit Condition I296.1 (Section H) to allow a quarterly NSR NOX RTC limit per Rule 2005(f)(3) in lieu of the current annual limit.

9. Is this equipment portable AND will it be operated at different locations within AQMD's jurisdiction? ◉ No ○ Yes

10. For identical equipment, how many additional applications are being submitted with this application? (Form 400-A required for each) 1

11. Are you a Small Business as per AQMD's Rule 102 definition? (10 employees or less and total gross receipts are $500,000 or less, or a not-for-profit training center?) ◉ No ○ Yes

12. Has a Notice of Violation (NOV) or a Notice To Comply (NC) been issued for this equipment?
◉ No ○ Yes If yes, provide NOV/NC #:

Section E: Facility Business Information

13. What type of business is being conducted at this equipment location?
Crude oil and gas production

14. What is your businesses primary NAICS Code (North American Industrial Classification System)? 211111

15. Are there other facilities in the SCAQMD jurisdiction operated by the same operator? ○ No ◉ Yes

16. Are there any schools (K-12) within a 1000-ft. radius of the equipment physical location? ◉ No ○ Yes

Section F: Authorization/Signature

I hereby certify that all information contained herein and information submitted with this application is true and correct.

17. Signature of Responsible Official: Christine White

18. Title: Environmental Advisor

19. Print Name: Christine White

20. Date: 1/19/11

Check List

- ☐ Form(s) signed and dated by authorized official
- ☐ Supplemental Equipment Form (400-E-XX or 400-E-GEN)
- ☐ CEQA Form (400-CEQA) attached
- ☐ Payment for permit processing fee attached

Your application will be rejected if any of the above items are missing.

AQMD USE ONLY	APPLICATION/TRACKING #	TYPE	EQUIPMENT CATEGORY CODE:	FEE SCHEDULE:	VALIDATION
	518223	B C D	053720 .11	$	1/20/11 AW

ENG. DATE	ENG. DATE	CLASS	ASSIGNMENT	CHECK/MONEY ORDER	AMOUNT	Tracking #
A R 1/20/11	A R	I II III IV	Unit 0 Engineer	# 33272	$ 292.03	

© South Coast Air Quality Management District, Form 400-A (2006.02)

CT 92261

3 8 4

S.C.A.Q.M.D.
ENGINEERING

'11 JAN 20 P2:57

SCAQMD PERMIT PROCESSING SYSTEM (PPS)

FEE DATA - SUMMARY SHEET

31

Application No :	518223	IRS/SS No:	
Previous Application No:	466416	Previous Permit No:	

Company Name :	DCOR LLC	Facility ID:	143740
Equipment Street:	OFFSHORE PLATFORM ESTHER PRC 3095 1, SEAL BEACH CA 90740		
Equipment Desc :	GAS TURBINE-DIG. GAS/LDF <300 KW		

Equipment Type :	BASIC			Fee Charged by:	B-CAT
B-CAT NO. :	053720	C-CAT NO:	00	Fee Schedule:	B
Facility Zone :	18	Deemed Compl. Date:	2/19/2011	Public Notice:	NO

Evaluation Type :	CHANGE OF CONDITIONS, (PO)	Small Business:	☐
Disposition :	Approve PO, Recommended by Engineer	Higher Fees for Failing to Obtain a Permit:	☐
Lead Appl. No :	518222	Identical Permit Unit:	☒

Air quality Analysis			$0.00	Filing Fee Paid:	$0.00
E.I.R			$0.00	Permit Processing Fee Paid:	$518.83
Health Risk Assessment			$0.00	Permit Processing Fee Calculated*:	$518.83
Significant Project			$0.00	Permit Processing Fee Adjustment:	$0.00
Expedited Processing	Hours:	0.00	$0.00		
Source Test Review	Hours:	0.00	$0.00		
Time & Material	Hours:	0.00	$0.00		
				Total Additional Fee:	$0.00
				Additional Charge:	$0.00

COMMENTS:

RECOMMENDED BY: HAMILTON A STODDARD DATE: 07/29/2011

REVIEWED BY: _____ DATE: AUG 5 2011

* ADJUSTED FOR SMALL BUSINESS, IDENTICAL EQUIPMENT AND P/O NO P/C PENALTY

FACILITY PERMIT TO OPERATE
DCOR LLC

SECTION A: FACILITY INFORMATION

LEGAL OWNER &/OR OPERATOR:	DCOR LLC
LEGAL OPERATOR (if different than owner):	
EQUIPMENT LOCATION:	OFFSHORE PLATFORM ESTHER PRC 3095 1 SEAL BEACH, CA 90740
MAILING ADDRESS:	290 MAPLE CT STE 290 VENTURA, CA 93009
RESPONSIBLE OFFICIAL:	MIKE FINCH
TITLE:	VICE PRESIDENT
TELEPHONE NUMBER:	(805) 535-2073
CONTACT PERSON:	CHRISTINE WHITE
TITLE:	AIR COMPLIANCE COORDIANTOR
TELEPHONE NUMBER:	(805) 535-2074

TITLE V	RECLAIM	
NO	NOx:	YES
	SOx:	NO
	CYCLE:	2
	ZONE:	COASTAL

FACILITY PERMIT TO OPERATE
DCOR LLC

SECTION D: FACILITY DESCRIPTION AND EQUIPMENT SPECIFIC CONDITIONS

The operator shall comply with the terms and conditions set forth below:

Equipment	ID No.	Connected To	RECLAIM Source Type/ Monitoring Unit	Emissions * And Requirements	Conditions
Process 1: Internal Combustion					
INTERNAL COMBUSTION ENGINE, EMERGENCY FIRE, DIESEL FUEL, CATERPILLAR, MODEL CAT3406BDITA, SIX CYLINDERS, FOUR CYCLE, WITH AFTERCOOLER, TURBOCHARGER, 460 BHP A/N: 441318	D1		NOX: PROCESS UNIT**	NOX: 469 LBS/1000 GAL DIESEL (1)	C1.1, D12.1, K67.1
INTERNAL COMBUSTION ENGINE, PORTABLE, DIESEL FUEL, JOHN DEERE, MODEL 6135HF485, 6 CYLINDERS, DRIVING THE CRANE ON RAILS, WITH TURBOCHARGER, 450 BHP A/N:	D35		NOX: LARGE SOURCE**	CO: 0.61 GRAM/BHP-HR DIESEL (5) [RULE 1110.2, 2-1-2008; RULE 1703(a)(3) PSD Analysis, 10-7-1988]; NOX: 340 PPMV DIESEL (3) [RULE 1110.2, 2-1-2008; RULE 1703(a)(3) PSD Analysis, 10-7-1988; **RULE 2005, 5-6-2005; RULE 2012, 5-6-2005**]; PM10: 0.087 GRAM/BHP-HR DIESEL (4) **[40CFR 89 Subpart B, 7-1-2000]**; ROG: 2.54 GRAM/BHP-HR DIESEL (5) [RULE 1110.2, 2-1-2008; **40CFR 89 Subpart B, 7-1-2000**]	C1.2, D12.1, E193.1, I296.2
Process 2: Crude/Gas/Water Separation > 400 BOPD					
VESSEL, SEPARATOR, V-1, TEST, CRUDE OIL, 35 BBL, LENGTH: 16 FT ; DIAMETER: 4 FT A/N: 441316	D3	D16			E127.1
VESSEL, SEPARATOR, V-2, TEST, CRUDE OIL, 35 BBL, LENGTH: 16 FT ; DIAMETER: 4 FT A/N: 441316	D4	D16			E127.1

* (1) (1A) (1B) Denotes RECLAIM emission factor
(2) (2A) (2B) Denotes RECLAIM emission rate
(3) Denotes RECLAIM concentration limit
(4) Denotes BACT emission limit
(5) (5A) (5B) Denotes command and control emission limit
(6) Denotes air toxic control rule limit
(7) Denotes NSR applicability limit
(8) (8A) (8B) Denotes 40 CFR limit (e.g. NSPS, NESHAPS, etc.)
(9) See App B for Emission Limits
(10) See section J for NESHAP/MACT requirements

** Refer to section F and G of this permit to determine the monitoring, recordkeeping and reporting requirements for this device.

FACILITY PERMIT TO OPERATE
DCOR LLC

SECTION D: FACILITY DESCRIPTION AND EQUIPMENT SPECIFIC CONDITIONS

The operator shall comply with the terms and conditions set forth below:

Equipment	ID No.	Connected To	RECLAIM Source Type/ Monitoring Unit	Emissions * And Requirements	Conditions
Process 2: Crude/Gas/Water Separation > 400 BOPD					
VESSEL, SEPARATOR, V-5, GROSS, CRUDE OIL, 460 BBL, LENGTH: 30 FT ; DIAMETER: 10 FT 6 IN A/N: 441316	D5	D16			E127.1
VESSEL, SEPARATOR, V-6, GROSS, CRUDE OIL, 460 BBL, LENGTH: 30 FT ; DIAMETER: 10 FT 6 IN A/N: 441316	D6	D16			E127.1
VESSEL, SEPARATOR, V-7, GROSS, CRUDE OIL, 460 BBL, LENGTH: 30 FT ; DIAMETER: 10 FT 6 IN A/N: 441316	D7	D16			E127.1
TANK, T-7, CRUDE OIL, SUMP TANK, 140 BBL; WIDTH: 10 FT ; HEIGHT: 7 FT ; LENGTH: 10 FT A/N: 441316	D8	D16			E127.1
SCRUBBER, V-9, RELIEF VENT A/N: 441316	D9				
VESSEL, V-301, SURGE, 250 BBL, CRUDE OIL A/N: 441316	D10				
Process 3: Waste Water Treating					
VESSEL, V-201, SURGE SEPARATOR, WASTE WATER, 120 BBL, HEIGHT: 10 FT ; DIAMETER: 9 FT A/N: 441311	D11	D16			E127.1
VESSEL, V-203, OIL SUMP, CRUDE OIL, 20 BBL, HEIGHT: 8 FT ; DIAMETER: 4 FT A/N: 441311	D12	D16			E127.1

* (1) (1A) (1B) Denotes RECLAIM emission factor
(2) (2A) (2B) Denotes RECLAIM emission rate
(3) Denotes RECLAIM concentration limit
(4) Denotes BACT emission limit
(5) (5A) (5B) Denotes command and control emission limit
(6) Denotes air toxic control rule limit
(7) Denotes NSR applicability limit
(8) (8A) (8B) Denotes 40 CFR limit (e.g. NSPS, NESHAPS, etc.)
(9) See App B for Emission Limits
(10) See section J for NESHAP/MACT requirements

** Refer to section F and G of this permit to determine the monitoring, recordkeeping and reporting requirements for this device.

FACILITY PERMIT TO OPERATE
DCOR LLC

SECTION D: FACILITY DESCRIPTION AND EQUIPMENT SPECIFIC CONDITIONS

The operator shall comply with the terms and conditions set forth below:

Equipment	ID No.	Connected To	RECLAIM Source Type/ Monitoring Unit	Emissions * And Requirements	Conditions
Process 3: Waste Water Treating					
VESSEL, V-202, WASTE WATER, 50 BBL, HEIGHT: 7 FT ; DIAMETER: 7 FT A/N: 441311	D13	D16			E127.1
VESSEL, V-205, CONE BOTTOM, WASTE WATER, 170 BBL, HEIGHT: 5 FT 3 IN, DIAMETER: 12 FT A/N: 441311	D14	D16			E127.1
VESSEL, V-206, INJECTION SURGE, WASTE WATER, 45 BBL, HEIGHT: 12 FT ; DIAMETER: 6 FT A/N: 441311	D15	D16			E127.1
FILTER, V-204, US FILTER, WALNUT SHELLS, 60 BBL, FIXED ROOF, HEIGHT: 9 FT ; DIAMETER: 7 FT A/N: 441311	D24				E127.1
Process 4: Vapor Recovery					
COMPRESSOR, M-5, WITH 125 HP ELECTRIC MOTOR A/N: 441315	D16	D3 D4 D5 D6 D7 D8 D11 D12 D13 D14 D15 D26 D27 D28			H23.1
Process 5: Fugitives					
FUGITIVE EMISSIONS, VALVES A/N: 441316	D17				H23.1
FUGITIVE EMISSIONS, PUMPS A/N: 441316	D18				H23.1
FUGITIVE EMISSIONS, PRV A/N: 441316	D19				H23.1
FUGITIVE EMISSIONS, FLANGES A/N: 441316	D20				H23.1
FUGITIVE EMISSIONS, FITTINGS A/N: 441316	D21				H23.1

* (1) (1A) (1B) Denotes RECLAIM emission factor
(2) (2A) (2B) Denotes RECLAIM emission rate
(3) Denotes RECLAIM concentration limit
(4) Denotes BACT emission limit
(5) (5A) (5B) Denotes command and control emission limit
(6) Denotes air toxic control rule limit
(7) Denotes NSR applicability limit
(8) (8A) (8B) Denotes 40 CFR limit (e.g. NSPS, NESHAPS, etc.)
(9) See App B for Emission Limits
(10) See section J for NESHAP/MACT requirements

** Refer to section F and G of this permit to determine the monitoring, recordkeeping and reporting requirements for this device.

FACILITY PERMIT TO OPERATE
DCOR LLC

SECTION D: FACILITY DESCRIPTION AND EQUIPMENT SPECIFIC CONDITIONS

The operator shall comply with the terms and conditions set forth below:

Equipment	ID No.	Connected To	RECLAIM Source Type/ Monitoring Unit	Emissions * And Requirements	Conditions
Process 5: Fugitives					
FUGITIVE EMISSIONS, DRAINS A/N: 441316	D22				H23.1
Process 6: Natural Gas Dehydration					
VESSEL, E-401, CHILLER/EVAPORATOR, DIAMETER: 1 FT 2.4 IN A/N: 441320	D25				
SCRUBBER, V-402, INLET, PRV VENTED TO VAPOR RECOVERY SYSTEM, DIAMETER: 1 FT 2.4 IN A/N: 441320	D26	D16			
VESSEL, V-403, LOW TEMPERATURE SEPARATOR, PRV VENTED TO VAPOR RECOVERY SYSTEM, DIAMETER: 1 FT 2.4 IN A/N: 441320	D27	D16			
VESSEL, V-404, FILTER SEPARATOR, PRV VENTED TO VAPOR RECOVERY SYSTEM, DIAMETER: 1 FT 1 IN A/N: 441320	D28	D16			
Process 7: Odorant Dispensing					
TANK, ODORANT STOARAGE, V-500, 20 GALLONS A/N: 441313	D29				H23.2
ODORANT DISPENSING EQUIPMENT A/N: 441313	D30				H23.2
Process 8: POWER GENERATION					

* (1) (1A) (1B) Denotes RECLAIM emission factor
(2) (2A) (2B) Denotes RECLAIM emission rate
(3) Denotes RECLAIM concentration limit
(4) Denotes BACT emission limit
(5) (5A) (5B) Denotes command and control emission limit
(6) Denotes air toxic control rule limit
(7) Denotes NSR applicability limit
(8) (8A) (8B) Denotes 40 CFR limit (e.g. NSPS, NESHAPS, etc.)
(9) See App B for Emission Limits
(10) See section J for NESHAP/MACT requirements

** Refer to section F and G of this permit to determine the monitoring, recordkeeping and reporting requirements for this device.

FACILITY PERMIT TO OPERATE
DCOR LLC

SECTION D: FACILITY DESCRIPTION AND EQUIPMENT SPECIFIC CONDITIONS

The operator shall comply with the terms and conditions set forth below:

Equipment	ID No.	Connected To	RECLAIM Source Type/ Monitoring Unit	Emissions * And Requirements	Conditions
Process 8: POWER GENERATION					
GAS TURBINE, UNIT #1, FIELD GAS, INGERSOLL RAND, MODEL ML250, COMBINED CYCLE WITH HEAT RECOVERY, 3.27 MMBTU/HR A/N:	D31		NOX: PROCESS UNIT**	**CO**: 319 PPMV FIELD GAS (4) **[RULE 1303(a)(1)-BACT, 5-10-1996;** *RULE 1303(a)(1) -BACT, 12-6-2002*]; **CO**: 2000 PPMV (5) **[RULE 407, 4-2-1982]**; **NOX**: 16 PPMV FIELD GAS (4) **[RULE 2005, 5-6-2005]**; **VOC**: 84 PPMV FIELD GAS (4) **[RULE 1303(a)(1)-BACT, 5-10-1996;** *RULE 1303(a)(1)-BACT, 12-6-2002*]	A63.1, A63.2, A99.1, A99.2, A99.3, I296.1
GAS TURBINE, UNIT #2, FIELD GAS, INGERSOLL RAND, MODEL ML250, COMBINED CYCLE WITH HEAT RECOVERY, 3.27 MMBTU/HR A/N:	D33		NOX: PROCESS UNIT**	**CO**: 319 PPMV FIELD GAS (4) **[RULE 1303(a)(1)-BACT, 5-10-1996;** *RULE 1303(a)(1) -BACT, 12-6-2002*]; **CO**: 2000 PPMV (5) **[RULE 407, 4-2-1982]**; **NOX**: 16 PPMV FIELD GAS (4) **[RULE 2005, 5-6-2005]**; **VOC**: 84 PPMV FIELD GAS (4) **[RULE 1303(a)(1)-BACT, 5-10-1996;** *RULE 1303(a)(1)-BACT, 12-6-2002*]	A63.1, A63.2, A99.1, A99.2, A99.3, I296.1

* (1) (1A) (1B) Denotes RECLAIM emission factor (2) (2A) (2B) Denotes RECLAIM emission rate
(3) Denotes RECLAIM concentration limit (4) Denotes BACT emission limit
(5) (5A) (5B) Denotes command and control emission limit (6) Denotes air toxic control rule limit
(7) Denotes NSR applicability limit (8) (8A) (8B) Denotes 40 CFR limit (e.g. NSPS, NESHAPS, etc.)
(9) See App B for Emission Limits (10) See section J for NESHAP/MACT requirements

** Refer to section F and G of this permit to determine the monitoring, recordkeeping and reporting requirements for this device.

FACILITY PERMIT TO OPERATE
DCOR LLC

SECTION D: DEVICE ID INDEX

The following sub-section provides an index to the devices that make up the facility description sorted by device ID.

FACILITY PERMIT TO OPERATE
DCOR LLC

SECTION D: DEVICE ID INDEX

Device Index For Section D			
Device ID	**Section D Page No.**	**Process**	**System**
D1	1	1	0
D3	1	2	0
D4	1	2	0
D5	2	2	0
D6	2	2	0
D7	2	2	0
D8	2	2	0
D9	2	2	0
D10	2	2	0
D11	2	3	0
D12	2	3	0
D13	3	3	0
D14	3	3	0
D15	3	3	0
D16	3	4	0
D17	3	5	0
D18	3	5	0
D19	3	5	0
D20	3	5	0
D21	3	5	0
D22	4	5	0
D24	3	3	0
D25	4	6	0
D26	4	6	0
D27	4	6	0
D28	4	6	0
D29	4	7	0
D30	4	7	0
D31	5	8	0
D33	5	8	0
D35	1	1	0

FACILITY PERMIT TO OPERATE
DCOR LLC

SECTION D: FACILITY DESCRIPTION AND EQUIPMENT SPECIFIC CONDITIONS

The operator shall comply with the terms and conditions set forth below:

FACILITY CONDITIONS

F2.1 The operator shall limit emissions from this facility as follows:

CONTAMINANT	EMISSIONS LIMIT
Sulfur compounds	Less than or equal to 5 LBS PER DAY

For the purpose of this condition, the sulfur compound emission limit shall be verified through monthly gas analysis of sulfur content using District Method 307-91. The operator shall calculate the daily sulfur emissions by multiplying the results of the monthly gas analysis in ppm as H2S by 0.0899 and by the fuel use in MMSCF/day. The operator shall keep records of the monthly gas analysis and daily records of the fuel gas usage for a minimum of five years.

[RULE 431.1, 6-12-1998]

F14.1 The operator shall not use diesel fuel containing sulfur compounds in excess of 15 ppm by weight as supplied by the supplier.

[RULE 431.2, 5-4-1990; RULE 431.2, 9-15-2000]

SYSTEM CONDITIONS

S15.1 The vent gases from all affected devices of this process/system shall be vented as follows:

All emergency vent gases shall be vented to the vapor recovery compressor.

[Systems subject to this condition : Process 6, System 0]

FACILITY PERMIT TO OPERATE
DCOR LLC

SECTION D: FACILITY DESCRIPTION AND EQUIPMENT SPECIFIC CONDITIONS

The operator shall comply with the terms and conditions set forth below:

DEVICE CONDITIONS

A. Emission Limits

A63.1 The operator shall limit emissions from this equipment as follows:

CONTAMINANT	EMISSIONS LIMIT
CO	Less than or equal to 1116 LBS IN ANY ONE MONTH
PM10	Less than or equal to 16.1 LBS IN ANY ONE MONTH
VOC	Less than or equal to 167.4 LBS IN ANY ONE MONTH
SOX	Less than or equal to 13.3 LBS IN ANY ONE MONTH

The operator shall calculate the emission limit(s) by using the following emission factors: CO =0.56 lbs/kscf, VOC = 0.084 lbs/kscf, PM10= 0.008 lbs/kscf, and SOx = 0.0067 lbs/kscf.

[RULE 1303(b)(2)-Offset, 5-10-1996; RULE 1303(b)(2)-Offset, 12-6-2002]

[Devices subject to this condition : D31, D33]

A63.2 The operator shall limit emissions from this equipment as follows:

CONTAMINANT	EMISSIONS LIMIT
CO	Less than or equal to 13140 LBS IN ANY ONE YEAR
PM10	Less than or equal to 193 LBS IN ANY ONE YEAR
VOC	Less than or equal to 1971 LBS IN ANY ONE YEAR
SOX	Less than or equal to 158 LBS IN ANY ONE YEAR

FACILITY PERMIT TO OPERATE
DCOR LLC

SECTION D: FACILITY DESCRIPTION AND EQUIPMENT SPECIFIC CONDITIONS

The operator shall comply with the terms and conditions set forth below:

The operator shall calculate the emission limit(s) by using the following emission factors: CO =0.56 lbs/kscf, VOC = 0.084 lbs/kscf, PM10= 0.008 lbs/kscf, and SOx = 0.0067 lbs/kscf.

For the purpose of this condition, the yearly emission limit shall be defined as a period of twelve (12) consecutive months determined on a rolling basis with a new 12 month period beginning on the first day of each calendar month.

[**RULE 1303(b)(2)-Offset, 5-10-1996;** RULE 1303(b)(2)-Offset, 12-6-2002]

[Devices subject to this condition : D31, D33]

A99.1 The 16 PPM NOX emission limit(s) shall only apply at 15% excess oxygen, dry, and based on 60-minute average time.

[**RULE 1303(a)(1)-BACT, 5-10-1996;** RULE 1303(a)(1)-BACT, 12-6-2002]

[Devices subject to this condition : D31, D33]

A99.2 The 319 PPM CO emission limit(s) shall only apply at 15% excess oxygen, dry, and based on 60-minute average time.

[**RULE 1303(a)(1)-BACT, 5-10-1996;** RULE 1303(a)(1)-BACT, 12-6-2002]

[Devices subject to this condition : D31, D33]

A99.3 The 84 PPM ROG emission limit(s) shall only apply at 15% excess oxygen, dry, and based on 60-minute average time.

[**RULE 1303(a)(1)-BACT, 5-10-1996;** RULE 1303(a)(1)-BACT, 12-6-2002]

FACILITY PERMIT TO OPERATE
DCOR LLC

SECTION D: FACILITY DESCRIPTION AND EQUIPMENT SPECIFIC CONDITIONS

The operator shall comply with the terms and conditions set forth below:

[Devices subject to this condition : D31, D33]

C. Throughput or Operating Parameter Limits

C1.1 The operator shall limit the operating time to no more than 199 hour(s) in any one year.

[RULE 1304(a)-Modeling and Offset Exemption, 6-14-1996; RULE 1304(c)-Offset Exemption, 6-14-1996]

[Devices subject to this condition : D1]

C1.2 The operator shall limit the operating time to no more than 4000 hour(s) in any one year.

[RULE 2012, 5-6-2005]

[Devices subject to this condition : D35]

D. Monitoring/Testing Requirements

D12.1 The operator shall install and maintain a(n) non-resettable elapsed time meter to accurately indicate the elapsed operating time of the engine.

[RULE 2012, 5-6-2005]

[Devices subject to this condition : D1, D35]

E. Equipment Operation/Construction Requirements

FACILITY PERMIT TO OPERATE
DCOR LLC

SECTION D: FACILITY DESCRIPTION AND EQUIPMENT SPECIFIC CONDITIONS

The operator shall comply with the terms and conditions set forth below:

E127.1 The operator shall keep gauge/sample hatches closed except during actual gauging/sampling operations.

[RULE 1148.1, 3-5-2004; **RULE 1173, 5-13-1994;** RULE 1173, 12-6-2002]

[Devices subject to this condition : D3, D4, D5, D6, D7, D8, D11, D12, D13, D14, D15, D24]

E193.1 The operator shall upon completion of construction, operate and maintain this equipment according to the following requirements:

The operator shall conduct a source test once every three years in accordance with Rule 2012 requirements.

The operator shall perform an engine tune-up twice in any one year.

The equipment shall not be operated until the operator stops operation and surrenders the permit of Device D2 of Section D. The operator shall notify AQMD prior to first operation of this device.

[RULE 2012, 5-6-2005]

[Devices subject to this condition : D35]

H. Applicable Rules

H23.1 This equipment is subject to the applicable requirements of the following rules or regulations:

Contaminant	Rule	Rule/Subpart
ROG	District Rule	1173

FACILITY PERMIT TO OPERATE
DCOR LLC

SECTION D: FACILITY DESCRIPTION AND EQUIPMENT SPECIFIC CONDITIONS

The operator shall comply with the terms and conditions set forth below:

[RULE 1148.1, 3-5-2004; **RULE 1173, 5-13-1994;** RULE 1173, 12-6-2002]

[Devices subject to this condition : D16, D17, D18, D19, D20, D21, D22]

H23.2 This equipment is subject to the applicable requirements of the following rules or regulations:

Contaminant	Rule	Rule/Subpart
ROG	District Rule	1173
H2S	District Rule	431.1

[**RULE 1173, 5-13-1994;** RULE 1173, 12-6-2002]

[Devices subject to this condition : D29, D30]

I. Administrative

I296.1 This equipment shall not be operated unless the operator demonstrates to the Executive Officer that the facility holds sufficient RTCs to offset the annual emissions increase for the first 12 months of operation. In addition, this equipment shall not be operated unless the operator demonstrates to the Executive Officer that, at the commencement of each compliance year after the start of operation, the facility holds sufficient RTCs in an amount equal to the annual emissions increase.

FACILITY PERMIT TO OPERATE
DCOR LLC

SECTION D: FACILITY DESCRIPTION AND EQUIPMENT SPECIFIC CONDITIONS

The operator shall comply with the terms and conditions set forth below:

For the purposes of this condition, the annual emission increase is 1095 lbs. of NOx

RTCs held for the purpose of demonstrating compliance with this condition either at the commencement of initial operation or of a compliance year may be sold only after 12 months of start of initial operation or after the fourth quarter of the applicable compliance year, respectively.

In lieu of holding RTCs for the entire duration specified above, RTCs held for the purpose of demonstrating compliance with this condition may be sold as specified below, provided quarterly emission does not exceed the corresponding quarterly limit listed in the table below. The amount available for sale shall be the quarterly emission limit listed minus the actual emission reportable pursuant to RECLAIM Monitoring, Recordkeeping, and Reporting protocols. Such amount may be sold only after the end of the subject quarter. If the quarterly certified emissions for any quarter exceed the corresponding quarterly emission limit, the facility may only sell RTCs acquired pursuant to Rule 2005(f) for that compliance year after the fourth quarter of that compliance year. This early sale option shall permanently be unavailable in the event that quarterly emissions exceeded the corresponding quarterly limits for a total of 3 times in any five consecutive years.

Calendar Quarter	Emission Limit (lbs.)
January 1 through March 31	274
April 1 through June 30	274
July 1 through September 30	274
October 1 through December 31	274

[RULE 2005, 5-6-2005]

[Devices subject to this condition : D31, D33]

FACILITY PERMIT TO OPERATE
DCOR LLC

SECTION D: FACILITY DESCRIPTION AND EQUIPMENT SPECIFIC CONDITIONS

The operator shall comply with the terms and conditions set forth below:

I296.2 This equipment shall not be operated unless the operator demonstrates to the Executive Officer that the facility holds sufficient RTCs to offset the annual emissions increase for the first 12 months of operation. In addition, this equipment shall not be operated unless the operator demonstrates to the Executive Officer that, at the commencement of each compliance year after the start of operation, the facility holds sufficient RTCs in an amount equal to the annual emissions increase.

For the purposes of this condition, the annual emission increase is 10120 lbs. of NOx.

RTCs held for the purpose of demonstrating compliance with this condition either at the commencement of initial operation or of a compliance year may be sold only after 12 months of start of initial operation or after the fourth quarter of the applicable compliance year, respectively.

In lieu of holding RTCs for the entire duration specified above, RTCs held for the purpose of demonstrating compliance with this condition may be sold as specified below, provided quarterly emission does not exceed the corresponding quarterly limit listed in the table below. The amount available for sale shall be the quarterly emission limit listed minus the actual emission reportable pursuant to RECLAIM Monitoring, Recordkeeping, and Reporting protocols. Such amount may be sold only after the end of the subject quarter. If the quarterly certified emissions for any quarter exceed the corresponding quarterly emission limit, the facility may only sell RTCs acquired pursuant to Rule 2005(f) for that compliance year after the fourth quarter of that compliance year. This early sale option shall permanently be unavailable in the event that quarterly emissions exceeded the corresponding quarterly limits for a total of 3 times in any five consecutive years.

Calendar Quarter	Emission Limit (lbs.)
January 1 through March 31	2530
April 1 through June 30	2530
July 1 through September 30	2530
October 1 through December 31	2530

FACILITY PERMIT TO OPERATE
DCOR LLC

SECTION D: FACILITY DESCRIPTION AND EQUIPMENT SPECIFIC CONDITIONS

The operator shall comply with the terms and conditions set forth below:

[RULE 2005, 5-6-2005; RULE 2012, 5-6-2005]

[Devices subject to this condition : D35]

K. Record Keeping/Reporting

K67.1 The operator shall keep records, in a manner approved by the District, for the following parameter(s) or item(s):

date of operation, elapsed time in hours, the reason for operation

[RULE 1304(a)-Modeling and Offset Exemption, 6-14-1996; RULE 1304(c)-Offset Exemption, 6-14-1996]

[Devices subject to this condition : D1]

FACILITY PERMIT TO OPERATE
DCOR LLC

SECTION H: PERMIT TO CONSTRUCT AND TEMPORARY PERMIT TO OPERATE

NONE

N S R D A T A S U M M A R Y S H E E T

Application No:	518223
Application Type:	Change of Conditions
Application Status:	PENDAPPRV
Previous Apps,Dev,Permit #:	466416, 0 - ,, NONE

Company Name:	DCOR LLC
Company ID:	143740
Address:	OFFSHORE PLATFORM ESTHER, PRC 3095 1,SEAL
RECLAIM:	NOX
RECLAIM Zone:	01
Air Basin:	SC
Zone:	18
Title V:	NO

evice ID:	0 -
Estimated Completion Date:	09-23-2011
Heat Input Capacity:	0 Million BTU/hr
Priority Reserve:	NONE - No Priority Access Requested
Recommended Disposition:	31 - PERMIT TO OPERATE GRANTED
PR Expiration:	
School Within 1000 Feet:	NO
Operating Weeks Per Year:	52
Operating Days Per Week:	7
Monday Operating Hours:	00:00 to 24:00
Tuesday Operating Hours:	00:00 to 24:00
Wednesday Operating Hours:	00:00 to 24:00
Thursday Operating Hours:	00:00 to 24:00
Friday Operating Hours:	00:00 to 24:00
Saturday Operating Hours:	00:00 to 24:00
Sunday Operating Hours:	00:00 to 24:00

Emittant:	CO
BACT:	
Cost Effectiveness:	NO
Source Type:	MINOR
Emis Increase:	0
Modeling:	N/A
Public Notice:	N/A
CONTROLLED EMISSION	
Max Hourly:	1.5 lbs/hr
Max Daily:	36 lbs/day
UNCONTROLLED EMISSION	
Max Hourly:	1.5 lbs/hr
Max Daily:	36 lbs/day
CURRENT EMISSION	
BACT 30 days Avg:	36 lbs/day
Annual Emission:	13140 lbs/yr
District Exemption:	None

Emittant:	NOX
BACT:	
Cost Effectiveness:	NO
Source Type:	MINOR
Emis Increase:	0
Modeling:	N/A
Public Notice:	N/A
CONTROLLED EMISSION	
Max Hourly:	0.125 lbs/hr
Max Daily:	3.12 lbs/day
UNCONTROLLED EMISSION	
Max Hourly:	0.125 lbs/hr
Max Daily:	3.12 lbs/day
CURRENT EMISSION	
BACT 30 days Avg:	3 lbs/day
Annual Emission:	10950 lbs/yr
District Exemption:	None

Emittant:	PM10
BACT:	
Cost Effectiveness:	NO
Source Type:	MINOR
Emis Increase:	0
Modeling:	N/A
Public Notice:	N/A
CONTROLLED EMISSION	
Max Hourly:	0.022 lbs/hr
Max Daily:	0.52 lbs/day
UNCONTROLLED EMISSION	
Max Hourly:	0.022 lbs/hr
Max Daily:	0.52 lbs/day
CURRENT EMISSION	
BACT 30 days Avg:	1 lbs/day
Annual Emission:	193 lbs/yr
District Exemption:	None

Emittant:	ROG
BACT:	
Cost Effectiveness:	NO
Source Type:	MINOR
Emis Increase:	0
Modeling:	N/A
Public Notice:	N/A
CONTROLLED EMISSION	
Max Hourly:	0.225 lbs/hr
Max Daily:	5.4 lbs/day
UNCONTROLLED EMISSION	
Max Hourly:	0.225 lbs/hr
Max Daily:	5.4 lbs/day
CURRENT EMISSION	
BACT 30 days Avg:	5 lbs/day
Annual Emission:	1971 lbs/yr
District Exemption:	None

Emittant:	SOX
BACT:	
Cost Effectiveness:	NO
Source Type:	MINOR
Emis Increase:	0
Modeling:	N/A
Public Notice:	N/A
CONTROLLED EMISSION	
Max Hourly:	0.018 lbs/hr
Max Daily:	0.43 lbs/day
UNCONTROLLED EMISSION	
Max Hourly:	0.018 lbs/hr
Max Daily:	0.43 lbs/day
CURRENT EMISSION	
BACT 30 days Avg:	0 lbs/day
Annual Emission:	158 lbs/yr
District Exemption:	None

SUPERVISOR'S APPROVAL: _____ SUPERVISOR'S REVIEW DATE: _____

Processed By: hamiltos 8/3/2011 4:12:56 PM

SCAQMD PERMIT PROCESSING SYSTEM (PPS)

AEIS DATA SHEET

Company Name : DCOR LLC

Facility ID : 143740

Equipment Address : OFFSHORE PLATFORM ESTHER PRC 3095 1
SEAL BEACH CA 90740

Application Number : 518223

Equipment B-Cat : 053720

Estimated Completion Date : 08/03/11

Equipment C-Cat :

Equipment Type : Basic

Equipment Description : GAS TURBINE-DIG. GAS/LDF <300 KW

	Emissions	
Emittants	**R1 LB/HR**	**R2 LB/HR**
CO	1.50	1.50
NOX	0.13	0.13
PM10	0.02	0.02
ROG	0.23	0.23
SOX	0.02	0.02

Applicable Rules

1401	09/10/2010	New Source Review of Toxic Air Contaminants
2000	05/06/2005	General (RECLAIM)
3000	11/05/2010	General (Title V)
401	11/09/2001	Visible Emissions
402	05/07/1976	Nuisance
407	04/02/1982	Liquid and Gaseous Air Contaminants
409	08/07/1981	Combustion Contaminants
431.1	06/12/1998	Sulfur Content of Gaseous Fuels

	Mon	Tue	Wed	Thu	Fri	Sat	Sun
Daily Start Times :	00:00	00:00	00:00	00:00	00:00	00:00	00:00
Daily Stop Times :	24:00	24:00	24:00	24:00	24:00	24:00	24:00

User's Initials : HS01 Date: 08/03/11 Supervisor's Name : _____ Review Date : __/__/__

SOUTH COAST AIR QUALITY MANAGEMENT DISTRICT	PAGES	PAGE
	6	1
ENGNEERING AND COMPLIANCE	APPL. NO.	DATE
	518222&518223	7/26/2011
APPLICATION PROCESSING AND CALCULATIONS	PROCESSED BY	CHECKED BY
	HS	

PERMIT TO OPERATE

COMPANY NAME AND ADDRESS:

DOS CUADRAS OFFSHORE RESOURCES (DCOR), LLC
290 Maple Court, Suite 290
Ventura, CA 93009

EQUIPMENT LOCATION:

DOS CUADRAS OFFSHORE RESOURCES (DCOR), LLC
Offshore Platform Esther Prc 3095 1
Seal Beach, CA 90740
ID 143740

BACKGROUND:

Dos Cuadras Offshore Resources (DCOR), LLC operates Platform Esther, which is located in the state waters of San Pedro Bay, approximately 1.5 miles offshore of Seal Beach Pier.

The facility produces approximately 800 bbls of oil per day which is separated from the water and gas on site. The crude oil and water produced is pumped via pipeline to an onshore Chevron facility in Seal Beach.

In addition to other equipment on the platform, DCOR operates **two micro turbines, referred to in the facility permit as: Gas Turbine unit #1, D31; and Gas Turbine unit #2, D33.** DCOR also operates a portable internal combustion, D35..

We received 3 applications requesting a change of condition regarding conditions **I296.1 (D31, D33)** and I296.2 (D35). Basically, this condition stipulates that "....equipment shall not be operated unless the operator demonstrates to the Executive Officer that the facility holds sufficient RTCs to offset the prorated *annual* emissions increase for the first compliance year..."

In the case above, DCOR proposes to modify the conditions to allow *quarterly* NSR NOX RTC limit in lieu of the current *annual* limit.

DCOR has also requested that the D31 and D33 devices be moved to section D of the facility permit and change the Responsible Official information in Section A.

The applications submitted for this project are described in the table below:

Table -1 Equipment and Description

Application	Description	Device
518222	**Ingersoll Rand Micro Gas turbine**	**D31**
518223	**Ingersoll Rand Micro Gas turbine**	**D33**
518224	John Deere Diesel Portable ICE	D35
518221	Reclaim permit Amendment	

A source test conducted by AIR_X Testing on January 14, 2009 on the micro turbines resulted in the following:

A/N 466415, D31, Micro turbine #1

	NOx	CO	VOC
S/T, 1/14/09	10 ppmv	203 ppmv	26.1 ppmv
BACT limit	16 ppmv	319 ppmv	84 ppmv
Compliance?	Yes	Yes	Yes

A/N 466416, D33, Microturbine #2

	NOx	CO	VOC
S/T, 1/14/09	12.2 ppmv	211 ppmv	66.8 ppmv
BACT limit	16 ppmv	319 ppmv	84 ppmv
Compliance?	Yes	Yes	Yes

These devices will be moved over to Section D of the facility permit since the emissions were in compliance.

EMISSIONS:

The evaluation of the above applications does not require emissions calculation. The emissions from each micro turbine (gas turbine) were calculated (in A/N's 466415, 466416) and entered in the NSR. The source test values were in compliance with the calculated emissions, as far as ppm and lbs/hr are concerned. However, there are several instances where the emissions were calculated erroneously.

Table 2-Criteria Emissions

Pollutants	lbs/hr	lbs/day	lbs/yr	30 day average
NOx	0.125	3.12	1095	3
ROG	0.225	5.4	1971	5
CO	1.5	36	13140	36
PM10	0.022	0.52	193	0.52(1)[1] ~~0~~
SOx	0.018	0.43	158	0.43(0)

1. The PM10 30-day average should be corrected to 1(0.52 lbs/day).

RULES EVALUATION:

The Rules referred to in A/N 466415 and A/N 466416 are also applicable for the new change of condition applications, A/N 518222 (D31) and A/N 518223 (D33), except for Rule 2005(f)(3).

RULE 2005: NEW SOURCE REVIEW FOR RECLAIM
Section (f)(3) of this rule allows an applicant to request a condition to request a condition to hold sufficient RTCs on a quarterly basis rather than an annual basis.

RECOMMENDATION

This application is expected to comply with all the applicable District Rules and Regulations. A permit to Operate is recommended and amend the RECLAIM facility permit by the following:

1. *Remove* the conditions K40.1 and D29.1 which reference a source test requirement for D31 and D33. The source test was performed on January 14, 2009 where the results were in compliance with the BACT limit.

2. *Modify* condition I296.1 to allow a *quarterly* NSR NOX RTC limit per Rule 2005(f)(3) in lieu of current *annual* limit, as the applicant also requested.

Table 2- NOx RTC amounts

Device No.	Description	Annual NSR Increase (lbs)	Quarterly NSR Increase (lbs)
D31	**Gas (micro)Turbine #1, 3.27 MMBtu/hr**	**1,095**	**273.5**
D33	**Gas (micro)Turbine #2, 3.27 MMBtu/hr**	**1,095**	**273.5**
D35	Diesel Internal combustion engine,450 hp	10,120	2,530

I296.1

~~This equipment shall not be operated unless the operator demonstrates to the Executive Officer that the facility holds sufficient RTCs to offset the prorated annual emissions increase for the first compliance year of operation. In addition, this equipment shall not~~

~~be operated unless the operator demonstrates to the Executive Officer that, at the commencement of each compliance year after the first compliance year of operation, the facility holds sufficient RTCs in an amount equal to the annual emissions increase.~~

~~To comply with this condition, the operator shall hold a minimum NOx RTCs of 1,095 lbs for each compliance year. In accordance with Rule 2005(f), unused RTCs may be sold only during the reconciliation period for the fourth quarter of the applicable compliance year inclusive of the 1st compliance year.~~

This equipment shall not be operated unless the operator demonstrates to the Executive Officer that the facility holds sufficient RTCs to offset the annual emissions increase for the first 12 months of operation. In addition, this equipment shall not be operated unless the operator demonstrates to the Executive Officer that, at the commencement of each compliance year after the start of operation, the facility holds sufficient RTCs in an amount equal to the annual emission increase.

For the purposes of this condition, the annual emission increase is 1095 lbs. of NOx.

RTCs held for the purpose of demonstrating compliance with this condition either at the commencement of initial operation or of a compliance year may be sold only after 12 months of start of initial operation or after the fourth quarter of the applicable year, respectively.

In lieu of holding RTCs for the entire duration specified above, RTCs held for the purpose of demonstrating compliance with this condition may be sold as specified below, provided quarterly emission does not exceed the corresponding quarterly limit listed in the table below. The amount available for sale shall be the quarterly emission limit listed minus the actual emission reportable pursuant to RECLAIM Monitoring, Recordkeeping, and Reporting protocols. Such amount may be sold only after the end of the subject quarter. If the quarterly certified emissions for any quarter exceed the corresponding quarterly emission limit, the facility may only sell RTCs acquired pursuant to Rule 2005(f) for that compliance year after the fourth quarter of that compliance year. This early sale option shall permanently be unavailable in the event that quarterly emissions exceeded the corresponding quarterly limits for a total of 3 in any five consecutive years.

Calendar Quarter	Emissions Limit (lbs.)
January 1 through March 31	274
April 1 through June 30	274
July 1 through September 30	274
October 1 through December 31	274

[RULE 2005, RULE 2012]

[Devices subject to this condition: D31, D33]

PREVIEW TRANSACTIONS FROM WORKSPACE
Fac. 143740 Appl. 518223 Dev. 0 Type 60 Disp. 31

	A	B	C	D	E	F	G
1	518223	0	143740	CO	INSTALL	36	Current emission from FacID#143740, Appl#518223, Dev#0
2	518223	0	143740	CO	EXMTTHRES	-36	Transferring emission offsets from previous A/N 466416
3	466416	0	143740	CO	INSTALL	-36	Reversing Transaction of PO emissions from FacID# 143740, A/N 466416
4	466416	0	143740	CO	EXMTTHRES	36	Reversing Transaction of emission offsets from FacID# 143740, A/N 466416
5	518223	0	143740	NOX	INSTALL	3	Current emission from FacID#143740, Appl#518223, Dev#0
6	518223	0	143740	NOX	RTC	-3	Transferring emission offsets from previous A/N 466416
7	466416	0	143740	NOX	INSTALL	-3	Reversing Transaction of PO emissions from FacID# 143740, A/N 466416
8	466416	0	143740	NOX	RTC	3	Reversing Transaction of emission offsets from FacID# 143740, A/N 466416
9	518223	0	143740	PM10	INSTALL	1	Current emission from FacID#143740, Appl#518223, Dev#0
10	518223	0	143740	ROG	INSTALL	5	Current emission from FacID#143740, Appl#518223, Dev#0
11	518223	0	143740	ROG	EXMTTHRES	-5	Transferring emission offsets from previous A/N 466416
12	466416	0	143740	ROG	INSTALL	-5	Reversing Transaction of PO emissions from FacID# 143740, A/N 466416
13	466416	0	143740	ROG	EXMTTHRES	5	Reversing Transaction of emission offsets from FacID# 143740, A/N 466416
14	518223	0	143740	SOX	INSTALL	0	Current emission from FacID#143740, Appl#518223, Dev#0

	H	I	J
1			
2			0
3			0
4			0
5			
6			0
7			0
8			0
9			
10			
11			0
12			0
13			0
14			

as illustrated in the RECLAIM Trading Zones Map. A facility in Zone 1 may only obtain RTCs from Zone 1. A facility in Zone 2 may obtain RTCs from either Zone 1 or 2, or both.

(f) Offsets

The Facility Permit for a new or modified facility shall require compliance with this subdivision, if applicable.

(1) Any facility which was required to provide offsets pursuant to paragraphs (b)(2), or subparagraph (c)(4)(B) or any new facility required to provide offsets pursuant to paragraph (c)(2) shall, at the commencement of each compliance year, hold RTCs in an amount equal to the amount of such required offsets. The Facility Permit holder may reduce the amount of offsets required pursuant to this subdivision by accepting a permit condition limiting emissions which shall serve in lieu of the starting Allocation plus non-tradable credits for purposes of paragraph (c)(4).

(2) Unused RTCs acquired to comply with this subdivision or with paragraphs (b)(2), (c)(2), or subparagraph (c)(4)(B) may be sold only during the reconciliation period for the fourth quarter of the applicable compliance year.

(3) In lieu of compliance with paragraph (f)(2), the Facility Permit holder may accept a permit condition limiting quarterly emissions from the facility. A facility with quarterly emission limits may sell, at any time after the end of that quarter and prior to the end of the reconciliation period for that compliance year, unused RTCs acquired pursuant to this subdivision at the amount not to exceed the difference between the permitted emission limit for that quarter and the emissions during that quarter as reported to the District in the Quarterly Emission Certification. Any facility with quarterly certified emissions exceeding the quarterly emission limit for any quarter may sell RTCs only during the reconciliation period for the fourth quarter of the applicable compliance year. If there are a total of three exceedances in any five consecutive compliance years, the facility shall permanently comply with paragraph (f)(2) in lieu of (f)(3).

DCOR
290 Maple Court, Suite 290
Ventura, CA 93003
(805) 535-2000
(805) 535-2100 FAX

March 16, 2011

Mr. Hamilton Stoddard
South Coast Air Quality Management District
21865 Copley Dr.
Diamond Bar, CA 91765-4178

Subject: Additional Permit Application Fee Required
Platform Esther, Facility ID 143740
Applications #518224 & #518222

Dear Mr. Stoddard:

Please find enclosed a check for $529.62, the balance owed on air permit applications A/N #518224 and A/N 518222 for Facility ID 143740 (Platform Esther). Additional e-mail communication on this matter is attached for your information.

If you have any questions, please contact me at 805-535-2074 or cwhite@dcorllc.com.

Sincerely,

Christine White

Christine White
Environmental Advisor

Attachments (2)

DCOR, LLC 034786

SOUTH COAST AQMD	VENDOR SOU001		CHECK DATE 02/22/11	
INVOICE NUMBER	INVOICE DATE		DISCOUNT TAKEN	AMOUNT PAID
21611	02/16/11	38811 A/N 518224 / A/N 518222	$0.00	$529.62
		Total:	$0.00	$529.62

THE FACE OF THIS DOCUMENT HAS A COLORED BACKGROUND ON WHITE PAPER

DCOR, LLC
Operating Account
PO Box 3401
Ventura, CA 93006
apayable@dcorllc.com

Bank of Texas, N.A.
Dallas, TX

CHECK NO. 0034786

32-1432
1110

DATE 02/22/11

AMOUNT *********$529.62

**********529 Dollars and 62 Cents

Void After 90 Days

PAY TO THE ORDER OF
SOUTH COAST AQMD
P.O. BOX 4944
DIAMOND BAR CA 91765-0944

Alan Templeton

THE BACK OF THIS DOCUMENT CONTAINS AN ARTIFICIAL WATERMARK—HOLD AT AN ANGLE TO VIEW

Hamilton Stoddard

From: Hamilton Stoddard
Sent: Thursday, February 10, 2011 9:45 AM
To: 'Mike Shaffer'
Subject: Additional fee

Mike,
As you know I am in the process of prescreening several applications that are essentially requesting a change in conditions I 296.1 and I 296.2 to allow a quarterly NSR NOX RTC limit per Rule 2005(f)(3) in lieu of the current annual limit.

Well the 2 applications for the ice gas turbines, referred to as gas microturbines, needed additional fee because they are considered schedule B and not schedule A, as you indicated they were in the submitted applications. The previous applications (A/N 466416 and A/N 466415) were accepted as schedule B equipment.

Here is the breakdown;

'CE, D35, previous A/N 489830 (P/O G2940),	fee is $1037.65 (new application A/N 518224)
as Turbine (Microturbine), previous A/N 466415	**fee is $1037.65 (new application A/N 518222)**
Gas Turbine (Microturbine), previous A/N 466416	**fee is $518.83 (new application A/N 518223)**
Reclaim facility permit amendment	fee is $861.52

The total is $3455.65 and you submitted $2926.03 for a difference of $529.62.
Can you send the additional $529.62 to AQMD and refer the amount to applications A/N 518224 and A/N 518222, ID 143740?

Thanks,
Hamilton.

'amilton Stoddard
Air Quality Engineer II
SCAQMD
909-396-2482

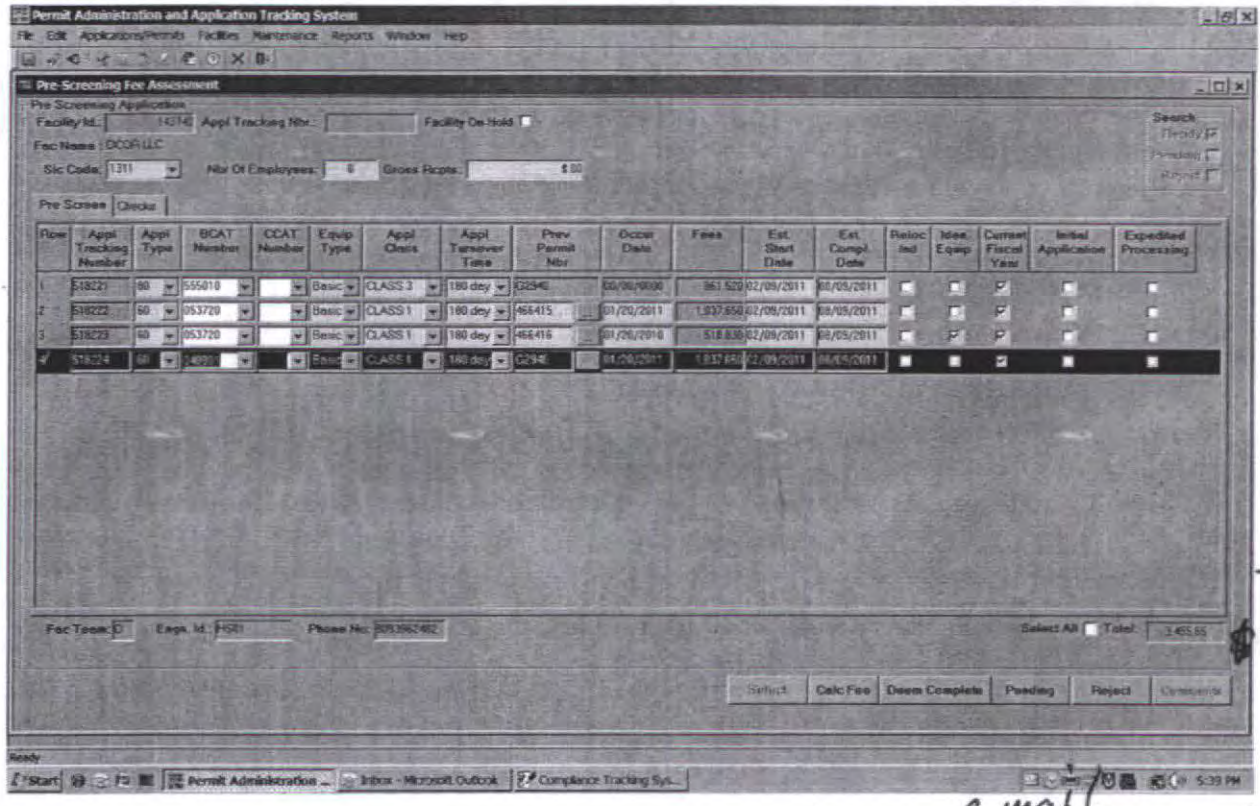

TOTAL: $3,455.65

2/9/2011: PROBLEM I need to talk/e-mail to M. Shaffer about additional fee.

P&P considered 2 and 3 as ~~class~~ Schedule A
($684.57 and 50% = $342.29)

Rusbeck they should be Schedule B
($1037.65 and 50% = $518.83)

Additional required $3455.65
− $2926.03
$529.62

Christine White

From: Mike Shaffer [shafferenv@pacbell.net]
Sent: Thursday, February 10, 2011 10:17 AM
To: Hamilton Stoddard
Cc: Christine White
Subject: Re: Additional fee

Hamilton,

I will request for DCOR to send in the additional $529.62. The reason for the my error/confusion was because the May 2010 revision to Rule 301 added "Gas Turbines (Microturbines Only)" to the fee table as Schedule A, but didn't specify that it was only applicable to small microturbines that fall into the Rule 219 exempt category (<2.95 MMBTU/hr) and request SCAQMD permits when CARB's DG program does not cover them. I found this out just the other day from Mohan Balagopalan, after the applications had been submitted. Sorry for the inconvenience.

Mike Shaffer
Shaffer Environmental Consulting
80 N. Crocker Avenue
Ventura, CA 93004-3845
(805) 659-1744 office
(805) 207-1945 cell
(805) 435-1634 fax
shafferenv@pacbell.net

> —— Original Message ——
> **From:** Hamilton Stoddard
> **To:** Shaffer, Mike
> **Sent:** Thursday, February 10, 2011 9:44 AM
> **Subject:** Additional fee
>
> Mike,
> As you know I am in the process of prescreening several applications that are essentially requesting a change in conditions I 296.1 and I 296.2 to allow a quarterly NSR NOX RTC limit per Rule 2005(f)(3) in lieu of the current annual limit.
>
> Well the 2 applications for the ice gas turbines, referred to as gas microturbines, needed additional fee because they are considered schedule B and not schedule A, as you indicated they were in the submitted applications. The previous applications (A/N 466416 and A/N 466415) were accepted as schedule B equipment.
>
> Here is the breakdown;
> ICE, D35, previous A/N 489830 (P/O G2940), fee is $1037.65 (new application A/N 518224)
> **Gas Turbine (Microturbine), previous A/N 466415 fee is $1037.65 (new application A/N 518222)**
> **Gas Turbine (Microturbine), previous A/N 466416 fee is $518.83 (new application A/N 518223)**
> Reclaim facility permit amendment fee is $861.52
>
> The total is $3455.65 and you submitted $2926.03 for a difference of $529.62.
> Can you send the additional $529.62 to AQMD and refer the amount to applications A/N 518224 and A/N 518222, ID 143740?

Hamilton Stoddard

From: Mike Shaffer [shafferenv@pacbell.net]
Sent: Thursday, February 10, 2011 10:17 AM
To: Hamilton Stoddard
Cc: White, Christine
Subject: Re: Additional fee

Hamilton,

I will request for DCOR to send in the additional $529.62. The reason for the my error/confusion was because the May 2010 revision to Rule 301 added "Gas Turbines (Microturbines Only)" to the fee table as Schedule A, but didn't specify that it was only applicable to small microturbines that fall into the Rule 219 exempt category (<2.95 MMBTU/hr) and request SCAQMD permits when CARB's DG program does not cover them. I found this out just the other day from Mohan Balagopalan, after the applications had been submitted. Sorry for the inconvenience.

Mike Shaffer
Shaffer Environmental Consulting
80 N. Crocker Avenue
Ventura, CA 93004-3845
(805) 659-1744 office
(805) 207-1945 cell
(805) 435-1634 fax
shafferenv@pacbell.net

----- Original Message -----
From: Hamilton Stoddard
To: Shaffer, Mike
Sent: Thursday, February 10, 2011 9:44 AM
Subject: Additional fee

Mike,
As you know I am in the process of prescreening several applications that are essentially requesting a change in conditions I 296.1 and I 296.2 to allow a quarterly NSR NOX RTC limit per Rule 2005(f)(3) in lieu of the current annual limit.

Well the 2 applications for the ice gas turbines, referred to as gas microturbines, needed additional fee because they are considered schedule B and not schedule A, as you indicated they were in the submitted applications. The previous applications (A/N 466416 and A/N 466415) were accepted as schedule B equipment.

Here is the breakdown;
ICE, D35, previous A/N 489830 (P/O G2940), fee is $1037.65 (new application A/N 518224)
Gas Turbine (Microturbine), previous A/N 466415 fee is $1037.65 (new application A/N 518222)
Gas Turbine (Microturbine), previous A/N 466416 fee is $518.83 (new application A/N 518223)
Reclaim facility permit amendment fee is $861.52

The total is $3455.65 and you submitted $2926.03 for a difference of $529.62.
Can you send the additional $529.62 to AQMD and refer the amount to applications A/N 518224 and A/N 518222, ID 143740?

Thanks,
Hamilton.

The same as 466416

	APPL	D	EMI_I	A	MEAS	EMI_	EMI_AMT_	EMI_	APRO	APROV_D
1	466415	0	CO	26	AV30	36	04-02-2007	lchen	johny	06-01-2007
2	466415	0	CO	26	R1	1.5	04-02-2007	lchen	johny	06-01-2007
3	466415	0	CO	26	R1DY	36	04-02-2007	lchen	johny	06-01-2007
4	466415	0	CO	26	R1HR	1.5	04-02-2007	lchen	johny	06-01-2007
5	466415	0	CO	26	R2	1.5	04-02-2007	lchen	johny	06-01-2007
6	466415	0	CO	26	R2DY	36	04-02-2007	lchen	johny	06-01-2007
7	466415	0	CO	26	R2HR	1.5	04-02-2007	lchen	johny	06-01-2007
8	466415	0	CO	26	RACT	36	04-02-2007	lchen	johny	06-01-2007
9	466415	0	CO	26	YRLY	13140	04-02-2007	lchen	johny	06-01-2007
10	466415	0	NOX	26	AV30	3	04-02-2007	lchen	johny	06-01-2007
11	466415	0	NOX	26	R1DY	3.12	04-02-2007	lchen	johny	06-01-2007
12	466415	0	NOX	26	R1HR	.13	04-02-2007	lchen	johny	06-01-2007
13	466415	0	NOX	26	R2DY	3.12	04-02-2007	lchen	johny	06-01-2007
14	466415	0	NOX	26	R2HR	.13	04-02-2007	lchen	johny	06-01-2007
15	466415	0	NOX	26	RACT	3	04-02-2007	lchen	johny	06-01-2007
16	466415	0	NOX	26	YRLY	1095	04-02-2007	lchen	johny	06-01-2007
17	466415	0	PM10	26	AV30	0	04-02-2007	lchen	johny	06-01-2007
18	466415	0	PM10	26	R1DY	.48	04-02-2007	lchen	johny	06-01-2007
19	466415	0	PM10	26	R1HR	.02	04-02-2007	lchen	johny	06-01-2007
20	466415	0	PM10	26	R2DY	.48	04-02-2007	lchen	johny	06-01-2007
21	466415	0	PM10	26	R2HR	.02	04-02-2007	lchen	johny	06-01-2007
22	466415	0	PM10	26	RACT	1	04-02-2007	lchen	johny	06-01-2007
23	466415	0	PM10	26	YRLY	193	04-02-2007	lchen	johny	06-01-2007
24	466415	0	ROG	26	AV30	5	04-02-2007	lchen	johny	06-01-2007
25	466415	0	ROG	26	R1DY	5.52	04-02-2007	lchen	johny	06-01-2007
26	466415	0	ROG	26	R1HR	.23	04-02-2007	lchen	johny	06-01-2007
27	466415	0	ROG	26	R2DY	5.52	04-02-2007	lchen	johny	06-01-2007
28	466415	0	ROG	26	R2HR	.23	04-02-2007	lchen	johny	06-01-2007
29	466415	0	ROG	26	RACT	5	04-02-2007	lchen	johny	06-01-2007
30	466415	0	ROG	26	YRLY	1971	04-02-2007	lchen	johny	06-01-2007
31	466415	0	SOX	26	AV30	0	04-02-2007	lchen	johny	06-01-2007
32	466415	0	SOX	26	R1DY	.48	04-02-2007	lchen	johny	06-01-2007
33	466415	0	SOX	26	R1HR	.02	04-02-2007	lchen	johny	06-01-2007
34	466415	0	SOX	26	R2DY	.48	04-02-2007	lchen	johny	06-01-2007
35	466415	0	SOX	26	R2HR	.02	04-02-2007	lchen	johny	06-01-2007
36	466415	0	SOX	26	RACT	0	04-02-2007	lchen	johny	06-01-2007
37	466415	0	SOX	26	YRLY	158	04-02-2007	lchen	johny	06-01-2007

PM10 alternately:

6.6×10^{-5} lb/MMBtu × 3.27 MMBtu/hr = 0.022 lb/hr

= 0.52 lb/day

189.1 lb/yr

30 day = .52 → (1)

January 19, 2011

Permit Services
South Coast Air Quality Management District
P.O. Box 4944
Diamond Bar, CA 91765-0944

Re: Application to Request Quarterly NO_X RTC Limit per Rule 2005(f)(3) and Miscellaneous Other Revisions
DCOR, LLC - Platform Esther (Facility ID# 143740)
Offshore State Lease PRC 3095.1, Seal Beach

Dear Permit Services:

This change of condition application is being submitted to request modifications to the facility permit for our Dos Cuadras Offshore Resources, LLC's (DCOR) Platform Esther facility located in the Pacific Ocean offshore of the City of Seal Beach (143740). The requested changes include: 1) Modify Permit Conditions I296.1 and I296.2; 2) Move Devices D31 and D33 from Section H to Section D and add NO_X emission factor reference to both; and 3) Change the Responsible Official information in Section A.

As required for a permit application to be deemed complete, included in this application package are the required Forms 400-A, Form 400-CEQA, and payment to cover the appropriate permit processing fees.

GENERAL AND FACILITY INFORMATION:

Business Name:	DCOR, LLC
SCAQMD Facility ID:	143740
Nature of Business:	Crude Oil and Gas Production (SIC 1311; NAICS 211111)
Equipment Location:	Offshore State Lease PRC 3095.1 Seal Beach, CA
Business/Equipment Contact Person:	Christine White Environmental Advisor 290 Maple Court, Suite 290 Ventura, CA 93003 (805) 535-2074 office (805) 535-2075 fax E-mail: cwhite@dcorllc.com
Permit Application Contact Person:	Mike Shaffer President/Principal Engineer Shaffer Environmental Consulting 80 N. Crocker Avenue Ventura, CA 93004-3845 (805) 659-1744 office (805) 207-1945 mobile (805) 435-1634 fax E-mail: shafferenv@pacbell.net
Operating Schedule (proposed):	24 hours/day, 7 days/week, 52 weeks/year
Construction Start Date (est.):	Not Applicable

PROJECT LOCATION:

Platform Esther is located in the state waters of San Pedro Bay approximately 1.5 miles offshore of Seal Beach Pier. The facility is one of two DCOR oil and gas production platforms located in the state waters in San Pedro Bay (DCOR's third platform, Edith, is located in federal waters). The facility produces roughly 800 bbls of oil per day which is separated from the water and gas onsite, and the crude and water is pumped via pipeline to an onshore facility (Chevron, Seal Beach). The majority of produced gas is combusted in two 250 KW gas turbines that produce electricity and hot water for the facility, with excess gas piped to an onshore facility (Breitburn, Seal Beach). The platform was constructed in 1990 (began producing in May 1991) after Esther Island was destroyed in a storm in February 1983. The facility was previously owned and operated by PXP, Nuevo/Torch, and Unocal.



PROJECT DESCRIPTION:

DCOR proposes to modify the existing facility permit to incorporate the following three (3) changes:

1. Limit quarterly NO_X emissions in Permit Conditions I296.1 and I296.2 thus allowing excess RTCs to be sold/transferred at the end of each quarter pursuant to Rule 2005(f)(3);

2. Move Devices D31 & D33 (gas microturbines) from Section H to Section D, and add NO_X emission factor reference to both to be consistent with Permit Condition I296.1; and

3. Change the Responsible Official information in Section A.

1. Modify Permit Conditions I296.1 and I296.2

DCOR proposes to modify Permit Conditions I296.1 (Section H) and I296.2 (Section D) to allow a quarterly NSR NO_X RTC limit per Rule 2005(f)(3) in lieu of the current annual limit. The change would allow greater flexibility for DCOR in managing NO_X RTC holdings, especially since the devices applicable to these permit conditions emit far less than the PTE/annual limits.

DCOR assumes that SCAQMD has standard permit wording for the proposed condition (similar to I296 and R2005(f)(3)), so below is some example wording for the modified permit condition:

I296.1 This equipment shall not be operated unless the operator demonstrates to the Executive Officer that, at the commencement of each quarter, the facility holds sufficient RTCs in an amount equal to the quarterly emissions increase.

To comply with this condition, the operator shall hold a minimum NO_X RTCs of 274 lbs for each compliance quarter (each device). In accordance with Rule 2005(f)(3), unused RTCs may be sold only during the reconciliation period for the applicable compliance quarter.

[RULE 2005, 5-6-2005; RULE 2012, 5-6-2005]

[Devices subject to this condition: D31, D33]

I296.2 This equipment shall not be operated unless the operator demonstrates to the Executive Officer that, at the commencement of each quarter, the facility holds sufficient RTCs in an amount equal to the quarterly emissions increase.

To comply with this condition, the operator shall hold a minimum NO_X RTCs of 2,530 lbs for each compliance quarter. In accordance with Rule 2005(f)(3), unused RTCs may be sold only during the reconciliation period for the applicable compliance quarter.

[RULE 2005, 5-6-2005; RULE 2012, 5-6-2005]

[Devices subject to this condition: D35]

The NO_X RTC amounts listed in the example conditions above were generated as follows:

Device No.	Description	Annual NSR Increase (lbs)	Quarterly NSR Increase (lbs)
D31	Gas Turbine, 250KW	1,095	273.75
D33	Gas Turbine, 250KW	1,095	273.75
D35	Diesel ICE, 450HP	10,120	2,530

2. Move Devices D31 & D33 from Section H to Section D and Add NO_X Emission Factor Reference

DCOR's two (2) 250 kW gas microturbines (Devices D31 & D33) have been constructed, operational, and initial source testing was completed pursuant to Condition D29.1 on January 14, 2009. The source test report was forwarded to Li Chen in February 2009. Please move these devices to Section D during the next facility permit revision.

In addition, DCOR proposes to add references to the "Emissions and Requirements" column of the facility permit for Devices D31 and D33 to include the NO_X emission factor (46.64 lbs/mmscf) that was used by SCAQMD Engineering to calculate Rule 2005 NSR amounts referenced in Permit Condition I296.1. The PTE emission rates used in the applications for these two (2) devices were generated based on maximum NO_X emission rate (0.5 lb/MW-hr) and maximum fuel consumption and power ratings (2,680 scf/hr @ 250 kW). [i.e., 46.64 lbs/mmscf = (0.5 lb/MW-hr)*(0.25 MW)/(0.00268 mmscf/hr)]. SCAQMD Engineering used the 46.64 lb/mmscf emission factor to generate the Rule 2005 NSR amounts listed in Permit Condition I296.1 (see table on previous page). DCOR believes the 46.64 lb/mmscf emission factor should be used to report NO_X emissions pursuant to RECLAIM in order to be consistent with the Rule 2005 NSR NO_X limits identified in Permit Condition I296.1. The existing 16 ppmv NO_X concentration limit calculated by SCAQMD Engineering and identified in the "Emissions and Requirements" column for each device should remain for compliance screening and source testing purposes.

Please note that DCOR is simply requesting for the PTE emission factor used in the District's permit evaluation to be referenced in the facility permit for use in reporting of RECLAIM NO_X emissions. DCOR does not request for the existing 16 ppmv NO_X concentration limit to be changed or the emission factor reference (46.64 lb/mmscf) to replace the concentration limit in the permit.

3. Change the Responsible Official Information in Section A

As a result of personnel changes at DCOR, please change the Responsible Official in Section A to the following:

RESPONSIBLE OFFICIAL:	TINA WIEGMAN
TITLE:	ES&RC MANAGER
TELEPHONE NUMBER:	(805) 535-2073

RULES EVALUATION:

A brief review of applicable SCAQMD rules and regulations follows:

A. Regulation II: Permits

This application submittal package and completed Forms 400-A and 400-CEQA should satisfy the permit application requirements of Regulation II.

Rule 212 - Standards for Approving Permits: The application is requesting simple permit condition modifications which do not result in any emission increases/decreases. Therefore, public notification is not required for this request.

B. Regulation III: Fees

Rule 301 - Permitting and Associated Fees: The attached check for $2,926.03 should appropriately cover the permit processing fees per Rule 301. The table below summarizes the permit processing fees.

Equipment Description	Schedule	Processing Fee
IC Engine, Non-Emergency <500 hp (D35; A/N 489830; change of condition)	B	$1,037.65
Gas Turbine (Microturbine); 0.25MW (D31; A/N 466415; change of condition)	A	$684.57

Gas Turbine (Microturbine); 0.25MW (D33; A/N 466416; change of condition)	A (50%-identical)	$342.29
RECLAIM Facility Permit Amendment		$861.52
	Total	**$2,926.03**

C. Regulation IV: Prohibitions
No SCAQMD prohibitive rules are applicable to this permit condition modification request.

D. Regulation IX and X: NSPS and NESHAP Standards
No federal NSPS requirements or NESHAP/MACT standards apply to the proposed permit condition modification request.

E. Regulation XI: Source Specific Standards
No SCAQMD Regulation XI rules are applicable to this permit condition modification request.

F. Regulation XIII: New Source Review (NSR)
New source review requirements of Regulation XIII are not triggered since the proposed permit condition modification requests do not result in an emission increase or change in monitoring.

G. Regulation XIV: Toxic Air Contaminants
Rule 1401 - New Source Review for Toxic Air Contaminants: Similar to Regulation XIII, NSR requirements for air toxics are not triggered since the proposed permit condition modification requests do not result in an emission increase or change in monitoring.

H. Regulation XVII: Prevention of Significant Deterioration (PSD)
PSD requirements of Regulation XVII are not triggered since the proposed permit condition modification requests do not result in an emission increase or change in monitoring of any PSD pollutants.

I. Regulation XX: RECLAIM
The facility is an existing NO_x RECLAIM facility, but the proposed permit condition modification requests will not affect the facility's RECLAIM status. DCOR will continue to comply with the RECLAIM program requirements pursuant to Regulation XX.

J. Regulation XXX: Title V Federal Operating Permits
The facility is not a major source/Title V facility. The proposed permit condition modification requests will not affect the facility's major source/Title V status pursuant to Regulation XXX.

If you have any questions or comments, please contact me at (805) 535-2074, or our consultant Mike Shaffer of Shaffer Environmental Consulting at (805) 659-1744.

Sincerely,

Christine White
Environmental Advisor

Attachments: SCAQMD Forms [400-A (4), 400-CEQA (1)]
Enclosures: Check for $2,926.03 (payable to SCAQMD)

South Coast Air Quality Management District

Form 400-CEQA

California Environmental Quality Act (CEQA) Applicability

Mail Application To:
P.O. Box 4944
Diamond Bar, CA 91765
Tel (909) 396-3385
www.aqmd.gov

The SCAQMD is required by state law, the California Environmental Quality Act (CEQA), to review discretionary permit project applications for potential air quality and other environmental impacts. This form is a screening tool to assist the SCAQMD in clarifying whether or not the project[1] has the potential to generate significant adverse environmental impacts that might require preparation of a CEQA document [CEQA Guidelines §15060(a)].[2] Refer to the attached instructions for guidance in completing this form.[3] For each Form 400-A application, also complete and submit one Form 400-CEQA. If submitting multiple Form 400-A applications for the same project at the same time, only one 400-CEQA form is necessary for the entire project. If you need assistance completing this form, contact Lori Inga at (909) 396-3109.

FACILITY INFORMATION

Business Name of Operator to Appear on the Permit:	Facility ID (6-Digit):
DCOR LLC	143740

Project Description:

Request change of permit condition pursuant to Rule 2005(f)(3) to limit quarterly NOX emissions thus allowing excess RTCs to be sold/transferred at the end of each quarter.

REVIEW FOR EXEMPTION FROM FURTHER CEQA ACTION

Check "Yes" or "No" as applicable

	Yes	No	Is this application for:
A.	○	◉	A CEQA and/or NEPA document previously or currently prepared that specifically evaluates this project? If yes, a permit cannot be issued until a Final CEQA document and Notice of Determination is submitted.
B.	○	◉	A request for a change of permittee only (without equipment modifications)?
C.	○	◉	Equipment certification or equipment registration (qualifies for Rule 222)?
D.	○	◉	A functionally identical permit unit replacement with no increase in rating or emissions?
E.	○	◉	A change of daily VOC permit limit to a monthly VOC permit limit?
F.	○	◉	Equipment damaged as a result of a disaster during state of emergency?
G.	○	◉	A Title V (i.e., Regulation XXX) permit renewal (without equipment modifications)?
H.	○	◉	A Title V administrative permit revision?
I.	○	◉	The conversion of an existing permit into an initial Title V permit?

If "Yes" is checked for any question above, your application does not require additional evaluation for CEQA applicability. Skip to page 2, "SIGNATURES" and sign and date this form.

REVIEW OF IMPACTS WHICH MAY TRIGGER CEQA

Complete Sections I-VI by checking "Yes" or "No" as applicable. To avoid delays in processing your application(s), explain all "Yes" responses on a separate sheet and attach it to this form.

	Yes	No	Section I – General
1.	○	◉	Has this project generated any known public controversy regarding potential adverse impacts that may be generated by the project? Controversy may be construed as concerns raised by local groups at public meetings; adverse media attention such as negative articles in newspapers or other periodical publications, local news programs, environmental justice issues, etc.
2.	○	◉	Is this project part of a larger project?
			Section II – Air Quality
3.	○	◉	Will there be any demolition, excavating, and/or grading construction activities that encompass an area exceeding 20,000 square feet?
4.	○	◉	Does this project include the open outdoor storage of dry bulk solid materials that could generate dust? If Yes, include a plot plan with the application package.

[1] A "project" means the whole of an action which has a potential for resulting in physical change to the environment, including construction activities, clearing or grading of land, improvements to existing structures, and activities or equipment involving the issuance of a permit. For example, a project might include installation of a new, or modification of an existing internal combustion engine, dry-cleaning facility, boiler, gas turbine, spray coating booth, solvent cleaning tank, etc.
[2] To download the CEQA guidelines, visit http://ceres.ca.gov/env_law/state.html.
[3] To download this form and the instructions, visit http://www.aqmd.gov/ceqa or http://www.aqmd.gov/permit

© South Coast Air Quality Management District, Form 400-CEQA (2006.02)

	Yes	No	
5.	○	◉	**Would this project result in noticeable off-site odors from activities that may not be subject to SCAQMD permit requirements?** For example, compost materials or other types of greenwaste (i.e., lawn clippings, tree trimmings, etc.) have the potential to generate odor complaints subject to Rule 402 – Nuisance.
6.	○	◉	**Does this project cause an increase of emissions from marine vessels, trains and/or airplanes?**
7.	○	◉	**Will the proposed project increase the QUANTITY of hazardous materials stored aboveground onsite or transported by mobile vehicle to or from the site by greater than or equal to the amounts associated with each compound on the attached Table 1?***
			Section III – Water Resources
8.	○	◉	**Will the project increase demand for water at the facility by more than 5,000,000 gallons per day?** The following examples identify some, but not all, types of projects that may result in a "yes" answer to this question: 1) projects that generate steam; 2) projects that use water as part of the air pollution control equipment; 3) projects that require water as part of the production process; 4) projects that require new or expansion of existing sewage treatment facilities; 5) projects where water demand exceeds the capacity of the local water purveyor to supply sufficient water for the project; and 6) projects that require new or expansion of existing water supply facilities.
9.	○	◉	**Will the project require construction of new water conveyance infrastructure?** Examples of such projects are when water demands exceed the capacity of the local water purveyor to supply sufficient water for the project, or require new or modified sewage treatment facilities such that the project requires new water lines, sewage lines, sewage hook-ups, etc.
			Section IV – Transportation/Circulation
10.			**Will the project result in** (Check all that apply):
	○	◉	**a. the need for more than 350 new employees?**
	○	◉	**b. an increase in heavy-duty transport truck traffic to and/or from the facility by more than 350 truck round-trips per day?**
	○	◉	**c. increase customer traffic by more than 700 visits per day?**
			Section V – Noise
11.	○	◉	**Will the project include equipment that will generate noise GREATER THAN 90 decibels (dB) at the property line?**
			Section VI – Public Services
12.			**Will the project create a permanent need for new or additional public services in any of the following areas** (Check all that apply):
	○	◉	**a. Solid waste disposal?** Check "No" if the projected potential amount of wastes generated by the project is less than five tons per day.
	○	◉	**b. Hazardous waste disposal?** Check "No" if the projected potential amount of hazardous wastes generated by the project is less than 42 cubic yards per day (or equivalent in pounds).

"REMINDER: For each "Yes" checked in the sections above, attach all pertinent information including but not limited to estimated quantities, volumes, weights, etc."

SIGNATURES

I HEREBY CERTIFY THAT ALL INFORMATION CONTAINED HEREIN AND INFORMATION SUBMITTED WITH THIS APPLICATION IS TRUE AND CORRECT TO THE BEST OF MY KNOWLEDGE. I UNDERSTAND THAT THIS FORM IS A SCREENING TOOL AND THAT THE SCAQMD RESERVES THE RIGHT TO CONSIDER OTHER PERTINENT INFORMATION IN DETERMINING CEQA APPLICABILITY.

SIGNATURE OF RESPONSIBLE OFFICIAL OF FIRM:	TITLE OF RESPONSIBLE OFFICIAL OF FIRM:	
Christine White	Environmental Advisor	
TYPE OR PRINT NAME OF RESPONSIBLE OFFICIAL OF FIRM: Christine White	**RESPONSIBLE OFFICIAL'S TELEPHONE NUMBER:** (805) 535-2074	**DATE Signed:** 1/19/11
SIGNATURE OF PREPARER, IF PREPARED BY PERSON OTHER THAN RESPONSIBLE OFFICIAL OF FIRM:	**TITLE OF PREPARER:**	
TYPE OR PRINT NAME OF PREPARER:	**PREPARER'S TELEPHONE NUMBER:**	**DATE Signed:**

THIS CONCLUDES FORM 400-CEQA. INCLUDE THIS FORM AND THE ATTACHMENTS WITH FORM 400-A.

* Table 1 – Regulated Substances List and Threshold Quantities for Accidental Release Prevention can be found in the Instructions for Form 400-CEQA.

D35

ROUTING RECORD

DATE	FROM	TO	ACTION
~~SEP 14 2010~~	~~AQ~~	~~HS~~	~~III~~
~~SEP 14 2010~~	~~AQ~~	~~EC~~	~~Transfer~~
~~JAN 28 2011~~	KBC	HS	C/C
~~8/4/2011~~	KBC	QC	No recomm.
~~AUG 5~~ 2011	KBC	P/S	GR4509

REFERENCE TO OTHER APCD RECORDS INCLUDING VARIANCES

RECORDS

APPL # 518224
I.D. # 143740

DCOR LLC
OFFSHORE PLATFORM ESTHER
SEAL BEACH
CRUDE OIL & GAS

Date: 01/20/11

South Coast Air Quality Management District

Form 400-A
Application For Permit To Construct and Permit To Operate

Mail Application To:
P.O. Box 4944
Diamond Bar, CA 91765

Tel: (909) 396-3385
www.aqmd.gov

Section A: Operator Information

1. Business Name of Operator To Appear On The Permit:
DCOR LLC

2. Valid AQMD Facility ID (Available on Permit or Invoice issued by AQMD): 143740

3. Owner's Business Name (only if different from Business Name of Operator):

Section B: Equipment Location

4. Equipment Location Address:
For equipment operated at various locations in AQMD's jurisdiction, provide address of initial site

Offshore Platform Esther, State Parcel 3095.1
Street Address

Seal Beach — CA, — _
City — State — Zip Code

County: ○ Los Angeles ◉ Orange ○ San Bernardino ○ Riverside

Contact Name: Christine White

Contact Title: Environmental Advisor — Phone: (805) 535-2074

Fax: (805) 535-2075 — E-Mail: cwhite@dcorllc.com

Section C: Permit Mailing Address

5. Permit and Correspondence Information:
☐ Check here if same as equipment location address

290 Maple Court, Suite 290
Street Address

Ventura — CA — 93003
City — State — Zip Code

Contact Name: Christine White

Contact Title: Environmental Advisor — Phone: (805) 535-2074

Fax: (805) 535-2075 — E-Mail: cwhite@dcorllc.com

Section D: Application Type

The facility is in ◉ RECLAIM ○ Title V ○ RECLAIM & Title V Program (please check if applicable)

6. Reason for Submitting Application (Select only ONE):

- ○ New Construction (Permit to Construct)
- ○ Permitted Equipment Altered/ Modified Without Permit Approval*
- ○ Equipment Operating Without A Permit or Expired Permit*
- ○ Proposed Alteration/Modification to Permitted Equipment
- ○ Administrative Change
- ◉ Change of Condition For Permit To Operate
- ○ Equipment On-Site But Not Constructed or Operational
- ○ Change of Condition For Permit To Construct
- ○ Title V Application (Initial, Revisions, Modifications, etc.)
- ○ Change of Location—Moving to New Site
- ○ Compliance Plan
- ○ Facility Permit Amendment
- ○ Registration/Certification
- ○ Streamlined Standard Permit

Existing Or Previous Permit/Application Number:
(If you checked any of the items in this column, you MUST provide a existing Permit/ Application Number)
489830

* A Higher Permit Processing Fee applies to those items with an asterisk (Rule 301 (c) (1) (D)

7. Estimated Start Date of Operation/Construction (MM/DD/YYYY): 01/01/2011

8. Description of Equipment:
Modify existing Permit Condition I296.2 (Section D) to allow a quarterly NSR NOX RTC limit per Rule 2005(f)(3) in lieu of the current annual limit.

9. Is this equipment portable AND will it be operated at different locations within AQMD's jurisdiction? ◉ No ○ Yes

10. For identical equipment, how many additional applications are being submitted with this application? (Form 400-A required for each) 0

11. Are you a Small Business as per AQMD's Rule 102 definition? (10 employees or less and total gross receipts are $500,000 or less, or a not-for-profit training center?) ◉ No ○ Yes

12. Has a Notice of Violation (NOV) or a Notice To Comply (NC) been issued for this equipment?
◉ No ○ Yes If yes, provide NOV/NC #:

Section E: Facility Business Information

13. What type of business is being conducted at this equipment location?
Crude oil and gas production

14. What is your businesses primary NAICS Code (North American Industrial Classification System)? 211111

15. Are there other facilities in the SCAQMD jurisdiction operated by the same operator? ○ No ◉ Yes

16. Are there any schools (K-12) within a 1000-ft. radius of the equipment physical location? ◉ No ○ Yes

Section F: Authorization/Signature

I hereby certify that all information contained herein and information submitted with this application is true and correct.

17. Signature of Responsible Official: Christine White

18. Title: Environmental Advisor

19. Print Name: Christine White

20. Date: 1-19-11

Check List
- ☐ Form(s) signed and dated by authorized official
- ☐ Supplemental Equipment Form (400-E-XX or 400-E-GEN)
- ☐ CEQA Form (400-CEQA) attached
- ☐ Payment for permit processing fee attached

Your application will be rejected if any of the above items are missing.

AQMD USE ONLY	APPLICATION/TRACKING #	TYPE B C D	EQUIPMENT CATEGORY CODE:	FEE SCHEDULE: $	VALIDATION
	518224		040901		1/20/11

ENG. A R DATE	ENG. A R DATE	CLASS I II IV	ASSIGNMENT Unit Engineer	CHECK/MONEY ORDER #	AMOUNT $	Tracking #
4/29	HSO		0	33272	2926.03	

© South Coast Air Quality Management District, Form 400-A (2006.02)

CT 92261

4 of 4

S.C.A.G.M.D.
ENGINEERING

'11 JAN 20 P2:57

SCAQMD PERMIT PROCESSING SYSTEM (PPS)

FEE DATA - SUMMARY SHEET

Application No :	518224	IRS/SS No:	
Previous Application No:	489830	Previous Permit No:	G2940

Company Name :	DCOR LLC	Facility ID:	143740
Equipment Street:	OFFSHORE PLATFORM ESTHER PRC 3095 1, SEAL BEACH CA 90740		
Equipment Desc :	I C E (50-500 HP) N-EM STAT DIESEL		

Equipment Type :	BASIC			Fee Charged by:	B-CAT
B-CAT NO. :	040901	C-CAT NO:	00	Fee Schedule:	B
Facility Zone :	18	Deemed Compl. Date:	2/19/2011	Public Notice:	NO

Evaluation Type :	CHANGE OF CONDITIONS, (PO)	Small Business:	☐
Disposition :	Approve PO, Recommended by Engineer	Higher Fees for Failing to Obtain a Permit:	☐
Lead Appl. No :		Identical Permit Unit:	☐

Air quality Analysis			$0.00	Filing Fee Paid:	$0.00
E.I.R			$0.00	Permit Processing Fee Paid:	$1,037.65
Health Risk Assessment			$0.00	Permit Processing Fee Calculated*:	$1,037.65
Significant Project			$0.00	Permit Processing Fee Adjustment:	$0.00
Expedited Processing	Hours:	0.00	$0.00		
Source Test Review	Hours:	0.00	$0.00		
Time & Material	Hours:	0.00	$0.00		
				Total Additional Fee:	$0.00
				Additional Charge:	$0.00

COMMENTS:

RECOMMENDED BY: HAMILTON A STODDARD DATE: 07/31/2015 AUG 5 2011

REVIEWED BY: _____ DATE: _____

* ADJUSTED FOR SMALL BUSINESS, IDENTICAL EQUIPMENT AND P/O NO P/C PENALTY

FACILITY PERMIT TO OPERATE
DCOR LLC

SECTION A: FACILITY INFORMATION

LEGAL OWNER &/OR OPERATOR:	DCOR LLC
LEGAL OPERATOR (if different than owner):	
EQUIPMENT LOCATION:	OFFSHORE PLATFORM ESTHER PRC 3095 1 SEAL BEACH, CA 90740
MAILING ADDRESS:	290 MAPLE CT STE 290 VENTURA, CA 93009
RESPONSIBLE OFFICIAL:	MIKE FINCH
TITLE:	VICE PRESIDENT
TELEPHONE NUMBER:	(805) 535-2073
CONTACT PERSON:	CHRISTINE WHITE
TITLE:	AIR COMPLIANCE COORDIANTOR
TELEPHONE NUMBER:	(805) 535-2074

TITLE V	RECLAIM	
NO	NOx:	YES
	SOx:	NO
	CYCLE:	2
	ZONE:	COASTAL

FACILITY PERMIT TO OPERATE
DCOR LLC

SECTION D: FACILITY DESCRIPTION AND EQUIPMENT SPECIFIC CONDITIONS

The operator shall comply with the terms and conditions set forth below:

Equipment	ID No.	Connected To	RECLAIM Source Type/ Monitoring Unit	Emissions * And Requirements	Conditions
Process 1: Internal Combustion					
INTERNAL COMBUSTION ENGINE, EMERGENCY FIRE, DIESEL FUEL, CATERPILLAR, MODEL CAT3406BDITA, SIX CYLINDERS, FOUR CYCLE, WITH AFTERCOOLER, TURBOCHARGER, 460 BHP A/N: 441318	D1		NOX: PROCESS UNIT**	NOX: 469 LBS/1000 GAL DIESEL (1)	C1.1, D12.1, K67.1
INTERNAL COMBUSTION ENGINE, PORTABLE, DIESEL FUEL, JOHN DEERE, MODEL 6135HF485, 6 CYLINDERS, DRIVING THE CRANE ON RAILS, WITH TURBOCHARGER, 450 BHP A/N:	D35		NOX: LARGE SOURCE**	CO: 0.61 GRAM/BHP-HR DIESEL (5) [RULE 1110.2, 2-1-2008; RULE 1703(a)(3) PSD Analysis, 10-7-1988]; NOX: 340 PPMV DIESEL (3) [RULE 1110.2, 2-1-2008; RULE 1703(a)(3) PSD Analysis, 10-7-1988; RULE 2005, 5-6-2005; RULE 2012, 5-6-2005]; PM10: 0.087 GRAM/BHP-HR DIESEL (4) [40CFR 89 Subpart B, 7-1-2000]; ROG: 2.54 GRAM/BHP-HR DIESEL (5) [RULE 1110.2, 2-1-2008; 40CFR 89 Subpart B, 7-1-2000]	C1.2, D12.1, E193.1, I296.2
Process 2: Crude/Gas/Water Separation > 400 BOPD					
VESSEL, SEPARATOR, V-1, TEST, CRUDE OIL, 35 BBL, LENGTH: 16 FT ; DIAMETER: 4 FT A/N: 441316	D3	D16			E127.1
VESSEL, SEPARATOR, V-2, TEST, CRUDE OIL, 35 BBL, LENGTH: 16 FT ; DIAMETER: 4 FT A/N: 441316	D4	D16			E127.1

* (1) (1A) (1B) Denotes RECLAIM emission factor
(2) (2A) (2B) Denotes RECLAIM emission rate
(3) Denotes RECLAIM concentration limit
(4) Denotes BACT emission limit
(5) (5A) (5B) Denotes command and control emission limit
(6) Denotes air toxic control rule limit
(7) Denotes NSR applicability limit
(8) (8A) (8B) Denotes 40 CFR limit (e.g. NSPS, NESHAPS, etc.)
(9) See App B for Emission Limits
(10) See section J for NESHAP/MACT requirements

** Refer to section F and G of this permit to determine the monitoring, recordkeeping and reporting requirements for this device.

FACILITY PERMIT TO OPERATE
DCOR LLC

SECTION D: FACILITY DESCRIPTION AND EQUIPMENT SPECIFIC CONDITIONS

The operator shall comply with the terms and conditions set forth below:

Equipment	ID No.	Connected To	RECLAIM Source Type/ Monitoring Unit	Emissions * And Requirements	Conditions
Process 2: Crude/Gas/Water Separation > 400 BOPD					
VESSEL, SEPARATOR, V-5, GROSS, CRUDE OIL, 460 BBL, LENGTH: 30 FT ; DIAMETER: 10 FT 6 IN A/N: 441316	D5	D16			E127.1
VESSEL, SEPARATOR, V-6, GROSS, CRUDE OIL, 460 BBL, LENGTH: 30 FT ; DIAMETER: 10 FT 6 IN A/N: 441316	D6	D16			E127.1
VESSEL, SEPARATOR, V-7, GROSS, CRUDE OIL, 460 BBL, LENGTH: 30 FT ; DIAMETER: 10 FT 6 IN A/N: 441316	D7	D16			E127.1
TANK, T-7, CRUDE OIL, SUMP TANK, 140 BBL; WIDTH: 10 FT ; HEIGHT: 7 FT ; LENGTH: 10 FT A/N: 441316	D8	D16			E127.1
SCRUBBER, V-9, RELIEF VENT A/N: 441316	D9				
VESSEL, V-301, SURGE, 250 BBL, CRUDE OIL A/N: 441316	D10				
Process 3: Waste Water Treating					
VESSEL, V-201, SURGE SEPARATOR, WASTE WATER, 120 BBL, HEIGHT: 10 FT ; DIAMETER: 9 FT A/N: 441311	D11	D16			E127.1
VESSEL, V-203, OIL SUMP, CRUDE OIL, 20 BBL, HEIGHT: 8 FT ; DIAMETER: 4 FT A/N: 441311	D12	D16			E127.1

* (1) (1A) (1B) Denotes RECLAIM emission factor
(2) (2A) (2B) Denotes RECLAIM emission rate
(3) Denotes RECLAIM concentration limit
(4) Denotes BACT emission limit
(5) (5A) (5B) Denotes command and control emission limit
(6) Denotes air toxic control rule limit
(7) Denotes NSR applicability limit
(8) (8A) (8B) Denotes 40 CFR limit (e.g. NSPS, NESHAPS, etc.)
(9) See App B for Emission Limits
(10) See section J for NESHAP/MACT requirements

** Refer to section F and G of this permit to determine the monitoring, recordkeeping and reporting requirements for this device.

FACILITY PERMIT TO OPERATE
DCOR LLC

SECTION D: FACILITY DESCRIPTION AND EQUIPMENT SPECIFIC CONDITIONS

The operator shall comply with the terms and conditions set forth below:

Equipment	ID No.	Connected To	RECLAIM Source Type/ Monitoring Unit	Emissions * And Requirements	Conditions
Process 3: Waste Water Treating					
VESSEL, V-202, WASTE WATER, 50 BBL, HEIGHT: 7 FT ; DIAMETER: 7 FT A/N: 441311	D13	D16.			E127.1
VESSEL, V-205, CONE BOTTOM, WASTE WATER, 170 BBL, HEIGHT: 5 FT 3 IN; DIAMETER: 12 FT A/N: 441311	D14	D16			E127.1
VESSEL, V-206, INJECTION SURGE, WASTE WATER, 45 BBL, HEIGHT: 12 FT ; DIAMETER: 6 FT A/N: 441311	D15	D16			E127.1
FILTER, V-204, US FILTER, WALNUT SHELLS, 60 BBL, FIXED ROOF, HEIGHT: 9 FT ; DIAMETER: 7 FT A/N: 441311	D24				E127.1
Process 4: Vapor Recovery					
COMPRESSOR, M-5, WITH 125 HP ELECTRIC MOTOR A/N: 441315	D16	D3 D4 D5 D6 D7 D8 D11 D12 D13 D14 D15 D26 D27 D28			H23.1
Process 5: Fugitives					
FUGITIVE EMISSIONS, VALVES A/N: 441316	D17				H23.1
FUGITIVE EMISSIONS, PUMPS A/N: 441316	D18				H23.1
FUGITIVE EMISSIONS, PRV A/N: 441316	D19				H23.1
FUGITIVE EMISSIONS, FLANGES A/N: 441316	D20				H23.1
FUGITIVE EMISSIONS, FITTINGS A/N: 441316	D21				H23.1

* (1) (1A) (1B) Denotes RECLAIM emission factor
(2) (2A) (2B) Denotes RECLAIM emission rate
(3) Denotes RECLAIM concentration limit
(4) Denotes BACT emission limit
(5) (5A) (5B) Denotes command and control emission limit
(6) Denotes air toxic control rule limit
(7) Denotes NSR applicability limit
(8) (8A) (8B) Denotes 40 CFR limit (e.g. NSPS, NESHAPS, etc.)
(9) See App B for Emission Limits
(10) See section J for NESHAP/MACT requirements

** Refer to section F and G of this permit to determine the monitoring, recordkeeping and reporting requirements for this device.

FACILITY PERMIT TO OPERATE
DCOR LLC

SECTION D: FACILITY DESCRIPTION AND EQUIPMENT SPECIFIC CONDITIONS

The operator shall comply with the terms and conditions set forth below:

Equipment	ID No.	Connected To	RECLAIM Source Type/ Monitoring Unit	Emissions* And Requirements	Conditions
Process 5: Fugitives					
FUGITIVE EMISSIONS, DRAINS A/N: 441316	D22				H23.1
Process 6: Natural Gas Dehydration					
VESSEL, E-401, CHILLER/EVAPORATOR, DIAMETER: 1 FT 2.4 IN A/N: 441320	D25				
SCRUBBER, V-402, INLET, PRV VENTED TO VAPOR RECOVERY SYSTEM, DIAMETER: 1 FT 2.4 IN A/N: 441320	D26	D16			
VESSEL, V-403, LOW TEMPERATURE SEPARATOR, PRV VENTED TO VAPOR RECOVERY SYSTEM, DIAMETER: 1 FT 2.4 IN A/N: 441320	D27	D16			
VESSEL, V-404, FILTER SEPARATOR, PRV VENTED TO VAPOR RECOVERY SYSTEM, DIAMETER: 1 FT 1 IN A/N: 441320	D28	D16			
Process 7: Odorant Dispensing					
TANK, ODORANT STOARAGE, V-500, 20 GALLONS A/N: 441313	D29				H23.2
ODORANT DISPENSING EQUIPMENT A/N: 441313	D30				H23.2
Process 8: POWER GENERATION					

* (1) (1A) (1B) Denotes RECLAIM emission factor
(2) (2A) (2B) Denotes RECLAIM emission rate
(3) Denotes RECLAIM concentration limit
(4) Denotes BACT emission limit
(5) (5A) (5B) Denotes command and control emission limit
(6) Denotes air toxic control rule limit
(7) Denotes NSR applicability limit
(8) (8A) (8B) Denotes 40 CFR limit (e.g. NSPS, NESHAPS, etc.)
(9) See App B for Emission Limits
(10) See section J for NESHAP/MACT requirements

** Refer to section F and G of this permit to determine the monitoring, recordkeeping and reporting requirements for this device.

FACILITY PERMIT TO OPERATE
DCOR LLC

SECTION D: FACILITY DESCRIPTION AND EQUIPMENT SPECIFIC CONDITIONS

The operator shall comply with the terms and conditions set forth below:

Equipment	ID No.	Connected To	RECLAIM Source Type/ Monitoring Unit	Emissions * And Requirements	Conditions
Process 8: POWER GENERATION					
GAS TURBINE, UNIT #1, FIELD GAS, INGERSOLL RAND, MODEL ML250, COMBINED CYCLE WITH HEAT RECOVERY, 3.27 MMBTU/HR A/N:	D31		NOX: PROCESS UNIT**	**CO**: 319 PPMV FIELD GAS (4) **[RULE 1303(a)(1)-BACT, 5-10-1996;** *RULE 1303(a)(1) -BACT, 12-6-2002*]; **CO**: 2000 PPMV (5) **[RULE 407, 4-2-1982]**; **NOX**: 16 PPMV FIELD GAS (4) **[RULE 2005, 5-6-2005]**; VOC: 84 PPMV FIELD GAS (4) **[RULE 1303(a)(1)-BACT, 5-10-1996;** *RULE 1303(a)(1)-BACT, 12-6-2002*]	A63.1, A63.2, A99.1, A99.2, A99.3, I296.1
GAS TURBINE, UNIT #2, FIELD GAS, INGERSOLL RAND, MODEL ML250, COMBINED CYCLE WITH HEAT RECOVERY, 3.27 MMBTU/HR A/N:	D33		NOX: PROCESS UNIT**	**CO**: 319 PPMV FIELD GAS (4) **[RULE 1303(a)(1)-BACT, 5-10-1996;** *RULE 1303(a)(1) -BACT, 12-6-2002*]; **CO**: 2000 PPMV (5) **[RULE 407, 4-2-1982]**; **NOX**: 16 PPMV FIELD GAS (4) **[RULE 2005, 5-6-2005]**; VOC: 84 PPMV FIELD GAS (4) **[RULE 1303(a)(1)-BACT, 5-10-1996;** *RULE 1303(a)(1)-BACT, 12-6-2002*]	A63.1, A63.2, A99.1, A99.2, A99.3, I296.1

* (1) (1A) (1B) Denotes RECLAIM emission factor (2) (2A) (2B) Denotes RECLAIM emission rate
(3) Denotes RECLAIM concentration limit (4) Denotes BACT emission limit
(5) (5A) (5B) Denotes command and control emission limit (6) Denotes air toxic control rule limit
(7) Denotes NSR applicability limit (8) (8A) (8B) Denotes 40 CFR limit (e.g. NSPS, NESHAPS, etc.)
(9) See App B for Emission Limits (10) See section J for NESHAP/MACT requirements

** Refer to section F and G of this permit to determine the monitoring, recordkeeping and reporting requirements for this device.

FACILITY PERMIT TO OPERATE
DCOR LLC

SECTION D: DEVICE ID INDEX

The following sub-section provides an index to the devices that make up the facility description sorted by device ID.

FACILITY PERMIT TO OPERATE
DCOR LLC

SECTION D: DEVICE ID INDEX

Device Index For Section D			
Device ID	**Section D Page No.**	**Process**	**System**
D1	1	1	0
D3	1	2	0
D4	1	2	0
D5	2	2	0
D6	2	2	0
D7	2	2	0
D8	2	2	0
D9	2	2	0
D10	2	2	0
D11	2	3	0
D12	2	3	0
D13	3	3	0
D14	3	3	0
D15	3	3	0
D16	3	4	0
D17	3	5	0
D18	3	5	0
D19	3	5	0
D20	3	5	0
D21	3	5	0
D22	4	5	0
D24	3	3	0
D25	4	6	0
D26	4	6	0
D27	4	6	0
D28	4	6	0
D29	4	7	0
D30	4	7	0
D31	5	8	0
D33	5	8	0
D35	1	1	0

FACILITY PERMIT TO OPERATE
DCOR LLC

SECTION D: FACILITY DESCRIPTION AND EQUIPMENT SPECIFIC CONDITIONS

The operator shall comply with the terms and conditions set forth below:

FACILITY CONDITIONS

F2.1 The operator shall limit emissions from this facility as follows:

CONTAMINANT	EMISSIONS LIMIT
Sulfur compounds	Less than or equal to 5 LBS PER DAY

For the purpose of this condition, the sulfur compound emission limit shall be verified through monthly gas analysis of sulfur content using District Method 307-91. The operator shall calculate the daily sulfur emissions by multiplying the results of the monthly gas analysis in ppm as H2S by 0.0899 and by the fuel use in MMSCF/day. The operator shall keep records of the monthly gas analysis and daily records of the fuel gas usage for a minimum of five years.

[RULE 431.1, 6-12-1998]

F14.1 The operator shall not use diesel fuel containing sulfur compounds in excess of 15 ppm by weight as supplied by the supplier.

[RULE 431.2, 5-4-1990; RULE 431.2, 9-15-2000]

SYSTEM CONDITIONS

S15.1 The vent gases from all affected devices of this process/system shall be vented as follows:

All emergency vent gases shall be vented to the vapor recovery compressor.

[Systems subject to this condition : Process 6, System 0]

FACILITY PERMIT TO OPERATE
DCOR LLC

SECTION D: FACILITY DESCRIPTION AND EQUIPMENT SPECIFIC CONDITIONS

The operator shall comply with the terms and conditions set forth below:

DEVICE CONDITIONS

A. Emission Limits

A63.1 The operator shall limit emissions from this equipment as follows:

CONTAMINANT	EMISSIONS LIMIT
CO	Less than or equal to 1116 LBS IN ANY ONE MONTH
PM10	Less than or equal to 16.1 LBS IN ANY ONE MONTH
VOC	Less than or equal to 167.4 LBS IN ANY ONE MONTH
SOX	Less than or equal to 13.3 LBS IN ANY ONE MONTH

The operator shall calculate the emission limit(s) by using the following emission factors: CO =0.56 lbs/kscf, VOC = 0.084 lbs/kscf, PM10= 0.008 lbs/kscf, and SOx = 0.0067 lbs/kscf.

[RULE 1303(b)(2)-Offset, 5-10-1996; RULE 1303(b)(2)-Offset, 12-6-2002]

[Devices subject to this condition : D31, D33]

A63.2 The operator shall limit emissions from this equipment as follows:

CONTAMINANT	EMISSIONS LIMIT
CO	Less than or equal to 13140 LBS IN ANY ONE YEAR
PM10	Less than or equal to 193 LBS IN ANY ONE YEAR
VOC	Less than or equal to 1971 LBS IN ANY ONE YEAR
SOX	Less than or equal to 158 LBS IN ANY ONE YEAR

FACILITY PERMIT TO OPERATE
DCOR LLC

SECTION D: FACILITY DESCRIPTION AND EQUIPMENT SPECIFIC CONDITIONS

The operator shall comply with the terms and conditions set forth below:

The operator shall calculate the emission limit(s) by using the following emission factors: CO =0.56 lbs/kscf, VOC = 0.084 lbs/kscf, PM10= 0.008 lbs/kscf, and SOx = 0.0067 lbs/kscf.

For the purpose of this condition, the yearly emission limit shall be defined as a period of twelve (12) consecutive months determined on a rolling basis with a new 12 month period beginning on the first day of each calendar month.

[**RULE 1303(b)(2)-Offset, 5-10-1996;** RULE 1303(b)(2)-Offset, 12-6-2002]

[Devices subject to this condition : D31, D33]

A99.1 The 16 PPM NOX emission limit(s) shall only apply at 15% excess oxygen, dry, and based on 60-minute average time.

[**RULE 1303(a)(1)-BACT, 5-10-1996;** RULE 1303(a)(1)-BACT, 12-6-2002]

[Devices subject to this condition : D31, D33]

A99.2 The 319 PPM CO emission limit(s) shall only apply at 15% excess oxygen, dry, and based on 60-minute average time.

[**RULE 1303(a)(1)-BACT, 5-10-1996;** RULE 1303(a)(1)-BACT, 12-6-2002]

[Devices subject to this condition : D31, D33]

A99.3 The 84 PPM ROG emission limit(s) shall only apply at 15% excess oxygen, dry, and based on 60-minute average time.

[**RULE 1303(a)(1)-BACT, 5-10-1996;** RULE 1303(a)(1)-BACT, 12-6-2002]

FACILITY PERMIT TO OPERATE
DCOR LLC

SECTION D: FACILITY DESCRIPTION AND EQUIPMENT SPECIFIC CONDITIONS

The operator shall comply with the terms and conditions set forth below:

[Devices subject to this condition : D31, D33]

C. Throughput or Operating Parameter Limits

C1.1 The operator shall limit the operating time to no more than 199 hour(s) in any one year.

[RULE 1304(a)-Modeling and Offset Exemption, 6-14-1996; RULE 1304(c)-Offset Exemption, 6-14-1996]

[Devices subject to this condition : D1]

C1.2 The operator shall limit the operating time to no more than 4000 hour(s) in any one year.

[RULE 2012, 5-6-2005]

[Devices subject to this condition : D35]

D. Monitoring/Testing Requirements

D12.1 The operator shall install and maintain a(n) non-resettable elapsed time meter to accurately indicate the elapsed operating time of the engine.

[RULE 2012, 5-6-2005]

[Devices subject to this condition : D1, D35]

E. Equipment Operation/Construction Requirements

FACILITY PERMIT TO OPERATE
DCOR LLC

SECTION D: FACILITY DESCRIPTION AND EQUIPMENT SPECIFIC CONDITIONS

The operator shall comply with the terms and conditions set forth below:

E127.1 The operator shall keep gauge/sample hatches closed except during actual gauging/sampling operations.

[RULE 1148.1, 3-5-2004; **RULE 1173, 5-13-1994;** RULE 1173, 12-6-2002]

[Devices subject to this condition : D3, D4, D5, D6, D7, D8, D11, D12, D13, D14, D15, D24]

E193.1 The operator shall upon completion of construction, operate and maintain this equipment according to the following requirements:

The operator shall conduct a source test once every three years in accordance with Rule 2012 requirements.

The operator shall perform an engine tune-up twice in any one year.

The equipment shall not be operated until the operator stops operation and surrenders the permit of Device D2 of Section D. The operator shall notify AQMD prior to first operation of this device.

[RULE 2012, 5-6-2005]

[Devices subject to this condition : D35]

H. Applicable Rules

H23.1 This equipment is subject to the applicable requirements of the following rules or regulations:

Contaminant	Rule	Rule/Subpart
ROG	District Rule	1173

FACILITY PERMIT TO OPERATE
DCOR LLC

SECTION D: FACILITY DESCRIPTION AND EQUIPMENT SPECIFIC CONDITIONS

The operator shall comply with the terms and conditions set forth below:

[RULE 1148.1, 3-5-2004; **RULE 1173, 5-13-1994;** RULE 1173, 12-6-2002]

[Devices subject to this condition : D16, D17, D18, D19, D20, D21, D22]

H23.2 This equipment is subject to the applicable requirements of the following rules or regulations:

Contaminant	Rule	Rule/Subpart
ROG	District Rule	1173
H2S	District Rule	431.1

[RULE 1173, 5-13-1994; RULE 1173, 12-6-2002]

[Devices subject to this condition : D29, D30]

I. Administrative

I296.1 This equipment shall not be operated unless the operator demonstrates to the Executive Officer that the facility holds sufficient RTCs to offset the annual emissions increase for the first 12 months of operation. In addition, this equipment shall not be operated unless the operator demonstrates to the Executive Officer that, at the commencement of each compliance year after the start of operation, the facility holds sufficient RTCs in an amount equal to the annual emissions increase.

FACILITY PERMIT TO OPERATE
DCOR LLC

SECTION D: FACILITY DESCRIPTION AND EQUIPMENT SPECIFIC CONDITIONS

The operator shall comply with the terms and conditions set forth below:

For the purposes of this condition, the annual emission increase is 1095 lbs. of NOx

RTCs held for the purpose of demonstrating compliance with this condition either at the commencement of initial operation or of a compliance year may be sold only after 12 months of start of initial operation or after the fourth quarter of the applicable compliance year, respectively.

In lieu of holding RTCs for the entire duration specified above, RTCs held for the purpose of demonstrating compliance with this condition may be sold as specified below, provided quarterly emission does not exceed the corresponding quarterly limit listed in the table below. The amount available for sale shall be the quarterly emission limit listed minus the actual emission reportable pursuant to RECLAIM Monitoring, Recordkeeping, and Reporting protocols. Such amount may be sold only after the end of the subject quarter. If the quarterly certified emissions for any quarter exceed the corresponding quarterly emission limit, the facility may only sell RTCs acquired pursuant to Rule 2005(f) for that compliance year after the fourth quarter of that compliance year. This early sale option shall permanently be unavailable in the event that quarterly emissions exceeded the corresponding quarterly limits for a total of 3 times in any five consecutive years.

Calendar Quarter	Emission Limit (lbs.)
January 1 through March 31	274
April 1 through June 30	274
July 1 through September 30	274
October 1 through December 31	274

[RULE 2005, 5-6-2005]

[Devices subject to this condition : D31, D33]

FACILITY PERMIT TO OPERATE
DCOR LLC

SECTION D: FACILITY DESCRIPTION AND EQUIPMENT SPECIFIC CONDITIONS

The operator shall comply with the terms and conditions set forth below:

1296.2 This equipment shall not be operated unless the operator demonstrates to the Executive Officer that the facility holds sufficient RTCs to offset the annual emissions increase for the first 12 months of operation. In addition, this equipment shall not be operated unless the operator demonstrates to the Executive Officer that, at the commencement of each compliance year after the start of operation, the facility holds sufficient RTCs in an amount equal to the annual emissions increase.

For the purposes of this condition, the annual emission increase is 10120 lbs. of NOx

RTCs held for the purpose of demonstrating compliance with this condition either at the commencement of initial operation or of a compliance year may be sold only after 12 months of start of initial operation or after the fourth quarter of the applicable compliance year, respectively.

In lieu of holding RTCs for the entire duration specified above, RTCs held for the purpose of demonstrating compliance with this condition may be sold as specified below, provided quarterly emission does not exceed the corresponding quarterly limit listed in the table below. The amount available for sale shall be the quarterly emission limit listed minus the actual emission reportable pursuant to RECLAIM Monitoring, Recordkeeping, and Reporting protocols. Such amount may be sold only after the end of the subject quarter. If the quarterly certified emissions for any quarter exceed the corresponding quarterly emission limit, the facility may only sell RTCs acquired pursuant to Rule 2005(f) for that compliance year after the fourth quarter of that compliance year. This early sale option shall permanently be unavailable in the event that quarterly emissions exceeded the corresponding quarterly limits for a total of 3 times in any five consecutive years.

Calendar Quarter	Emission Limit (lbs.)
January 1 through March 31	2530
April 1 through June 30	2530
July 1 through September 30	2530
October 1 through December 31	2530

FACILITY PERMIT TO OPERATE
DCOR LLC

SECTION D: FACILITY DESCRIPTION AND EQUIPMENT SPECIFIC CONDITIONS

The operator shall comply with the terms and conditions set forth below:

[RULE 2005, 5-6-2005; RULE 2012, 5-6-2005]

[Devices subject to this condition : D35]

K. Record Keeping/Reporting

K67.1 The operator shall keep records, in a manner approved by the District, for the following parameter(s) or item(s):

date of operation, elapsed time in hours, the reason for operation

[RULE 1304(a)-Modeling and Offset Exemption, 6-14-1996; RULE 1304(c)-Offset Exemption, 6-14-1996]

[Devices subject to this condition : D1]

FACILITY PERMIT TO OPERATE
DCOR LLC

SECTION H: PERMIT TO CONSTRUCT AND TEMPORARY PERMIT TO OPERATE

NONE

N S R D A T A S U M M A R Y S H E E T

Application No:	518224
Application Type:	Change of Conditions
Application Status:	PENDAPPRV
Previous Apps,Dev,Permit #:	489830, 0 - ,, NONE

Company Name:	DCOR LLC
Company ID:	143740
Address:	OFFSHORE PLATFORM ESTHER, PRC 3095 1,SEAL
RECLAIM:	NOX
RECLAIM Zone:	01
Air Basin:	SC
Zone:	18
Title V:	NO

,evice ID:	0 -
Estimated Completion Date:	09-23-2011
Heat Input Capacity:	0 Million BTU/hr
Priority Reserve:	NONE - No Priority Access Requested
Recommended Disposition:	31 - PERMIT TO OPERATE GRANTED
PR Expiration:	
School Within 1000 Feet:	NO
Operating Weeks Per Year:	24
Operating Days Per Week:	3
Monday Operating Hours:	00:00 to 24:00
Tuesday Operating Hours:	00:00 to 24:00
Wednesday Operating Hours:	00:00 to 24:00
Thursday Operating Hours:	00:00 to 00:00
Friday Operating Hours:	00:00 to 00:00
Saturday Operating Hours:	00:00 to 00:00
Sunday Operating Hours:	00:00 to 00:00

Emittant:	CO
BACT:	
Cost Effectiveness:	NO
Source Type:	MINOR
Emis Increase:	0
Modeling:	N/A
Public Notice:	N/A
CONTROLLED EMISSION	
Max Hourly:	0.61 lbs/hr
Max Daily:	14.6 lbs/day
UNCONTROLLED EMISSION	
Max Hourly:	0.61 lbs/hr
Max Daily:	14.6 lbs/day
CURRENT EMISSION	
BACT 30 days Avg:	7 lbs/day
Annual Emission:	2440 lbs/yr
District Exemption:	None

Emittant:	NOX
BACT:	
Cost Effectiveness:	NO
Source Type:	MINOR
Emis Increase:	0
Modeling:	N/A
Public Notice:	N/A
CONTROLLED EMISSION	
Max Hourly:	2.53 lbs/hr
Max Daily:	60.72 lbs/day
UNCONTROLLED EMISSION	
Max Hourly:	2.53 lbs/hr
Max Daily:	60.72 lbs/day
CURRENT EMISSION	
BACT 30 days Avg:	28 lbs/day
Annual Emission:	10120 lbs/yr
District Exemption:	None

Emittant:	PM10
BACT:	
Cost Effectiveness:	NO
Source Type:	MINOR
Emis Increase:	0
Modeling:	N/A
Public Notice:	N/A
CONTROLLED EMISSION	
Max Hourly:	0.09 lbs/hr
Max Daily:	2.07 lbs/day
UNCONTROLLED EMISSION	
Max Hourly:	0.09 lbs/hr
Max Daily:	2.07 lbs/day
CURRENT EMISSION	
BACT 30 days Avg:	1 lbs/day
Annual Emission:	354.2 lbs/yr
District Exemption:	None

Emittant:	ROG
BACT:	
Cost Effectiveness:	NO
Source Type:	MINOR
Emis Increase:	0
Modeling:	N/A
Public Notice:	N/A
CONTROLLED EMISSION	
Max Hourly:	0.18 lbs/hr
Max Daily:	4.32 lbs/day
UNCONTROLLED EMISSION	
Max Hourly:	0.18 lbs/hr
Max Daily:	4.32 lbs/day
CURRENT EMISSION	
BACT 30 days Avg:	2 lbs/day
Annual Emission:	720 lbs/yr
District Exemption:	None

Emittant:	SOX
BACT:	
Cost Effectiveness:	NO
Source Type:	MINOR
Emis Increase:	0
Modeling:	N/A
Public Notice:	N/A
CONTROLLED EMISSION	
Max Hourly:	0.0049 lbs/hr
Max Daily:	0.12 lbs/day
UNCONTROLLED EMISSION	
Max Hourly:	0.0049 lbs/hr
Max Daily:	0.12 lbs/day
CURRENT EMISSION	
BACT 30 days Avg:	0 lbs/day
Annual Emission:	19.6 lbs/yr
District Exemption:	None

SUPERVISOR'S APPROVAL: _____ SUPERVISOR'S REVIEW DATE: _____

Processed By: hamiltos 8/3/2011 4:28:13 PM

SCAQMD PERMIT PROCESSING SYSTEM (PPS)

AEIS DATA SHEET

Company Name : DCOR LLC

Facility ID : 143740

Equipment Address : OFFSHORE PLATFORM ESTHER PRC 3095 1

SEAL BEACH CA 90740

Application Number : 518224

Equipment B-Cat : 040901

Estimated Completion Date : 08/03/11

Equipment C-Cat :

Equipment Type : Basic

Equipment Description : I C E (50-500 HP) N-EM STAT DIESEL

	Emissions	
Emittants	**R1 LB/HR**	**R2 LB/HR**
CO	0.61	0.61
NOX	2.53	2.53
PM10	0.09	0.09
ROG	0.18	0.18

Applicable Rules

1110.2	07/09/2010	Emissions from Gaseous-and Liquid-fueled Engines
1401	09/10/2010	New Source Review of Toxic Air Contaminants
1470	06/01/2007	Requirements for Stationary Diesel-Fueled Internal Combustion and Other
2000	05/06/2005	General (RECLAIM)
3000	11/05/2010	General (Title V)
401	11/09/2001	Visible Emissions
402	05/07/1976	Nuisance
404	02/07/1986	Particulate Matter - Concentration
407	04/02/1982	Liquid and Gaseous Air Contaminants
431.2	09/15/2000	Sulfur Content of Liquid Fuels

	Mon	Tue	Wed	Thu	Fri	Sat	Sun
Daily Start Times :	00:00	00:00	00:00	00:00	00:00	00:00	00:00
Daily Stop Times :	24:00	24:00	24:00	00:00	00:00	00:00	00:00

User's Initials : HS01 Date: 08/03/11 Supervisor's Name : _____ Review Date : / /

SOUTH COAST AIR QUALITY MANAGEMENT DISTRICT	PAGES	PAGE
	5	1
ENGNEERING AND COMPLIANCE	APPL. NO.	DATE
	518224	7/26/2011
APPLICATION PROCESSING AND CALCULATIONS	PROCESSED BY	CHECKED BY
	HS	

PERMIT TO OPERATE

COMPANY NAME AND ADDRESS:

DOS CUADRAS OFFSHORE RESOURCES (DCOR), LLC
290 Maple Court, Suite 290
Ventura, CA 93009

EQUIPMENT LOCATION:

DOS CUADRAS OFFSHORE RESOURCES (DCOR), LLC
Offshore Platform Esther Prc 3095 1
Seal Beach, CA 90740
ID 143740

BACKGROUND:

Dos Cuadras Offshore Resources (DCOR), LLC operates Platform Esther, which is located in the state waters of San Pedro Bay, approximately 1.5 miles offshore of Seal Beach Pier.

The facility produces approximately 800 bbls of oil per day which is separated from the water and gas on site. The crude oil and water produced is pumped via pipeline to an onshore Chevron facility in Seal Beach.

In addition to other equipment on the platform, DCOR operates two micro turbines, referred to in the facility permit as: Gas Turbine unit #1, D31; and Gas Turbine unit #2, D33. **DCOR also operates a portable internal combustion, D35.**

We received 3 applications requesting a change of condition regarding conditions I296.1 (D31, D33) and **I296.2 (D35)**. Basically, this condition stipulates that "....equipment shall not be operated unless the operator demonstrates to the Executive Officer that the facility holds sufficient RTCs to offset the prorated *annual* emissions increase for the first compliance year..."

In the case above, DCOR proposes to modify the conditions to allow *quarterly* NSR NOX RTC limit in lieu of the current *annual* limit.

DCOR has also requested that the D31 and D33 devices be moved to section D of the facility permit and change the Responsible Official information in Section A.

The applications submitted for this project are described in the table below:

Table -1 Equipment and Description

Application	Description	Device
518222	Ingersoll Rand Micro Gas turbine	D31
518223	Ingersoll Rand Micro Gas turbine	D33
518224	**John Deere Diesel Portable ICE**	**D35**
518221	Reclaim permit Amendment	

EMISSIONS:

The evaluation of the above applications does not require emissions calculation. The previous emissions are as follows:

Pollutants	lb/hr	lb/day	lb/yr	30 day aver.
NOx	2.53	60.72	10120	28.1(**28**)[1] ~~60.72(61)~~
CO	0.61	14.6	2440 ~~4440.8~~	6.7(**7**)[1] ~~14.6(15)~~
ROG	0.18	4.32	720 ~~1572.48~~	2.0(**2**)[1] ~~4.32(4)~~
PM10	0.09	2.07	345.2 ~~655.2~~	0.96(**1**)[1] ~~2.1(2)~~
SOx	0.0049 ~~0.18~~	0.12 ~~3.6~~	19.6 ~~1310.4~~	0.05(**0**)[2] 4

1. The NSR listed all the 30-day averages incorrectly. This will be corrected, showing the 30-day average as a previous emission.
   Example calculation (NOx) = (2.53 lbs/hr x 4000 hrs/12 months)/30 days/month = 28.1 ==→ 28 [applicant requested 4000 hrs/yr instead of the previous 2190 hrs/yr in A/N 489830]
2. An emission factor equating 15 ppm sulfur content (Rule 431.1) is 0.0049 gm/Bhp-hr. The emissions will be corrected in the NSR.
   Example calculation (SOx) = (0.0049 gm/Bhp-hr x 450 hp)/453.593 gm/lb = 0.0049 lbs/hr

RULES EVALUATION:

The Rules referred to in the RECLAIM facility permit regarding D35 (A/N 489830) will remain the same, except Rule 2005(f)(3).

RULE 2005: NEW SOURCE REVIEW FOR RECLAIM
Section (f)(3) of this rule allows an applicant to request a condition to request a condition to hold sufficient RTCs on a quarterly basis rather than an annual basis.

RECOMMENDATION

This application is expected to comply with all the applicable District Rules and Regulations. A permit to Operate is recommended and amend the RECLAIM facility permit by the following:

1. *Modify* condition I296.2 to allow a *quarterly* NSR NOX RTC limit per Rule 2005(f)(3) in lieu of current *annual* limit, as the applicant also requested .

Table 2- NOx RTC amounts

Device No.	Description	Annual NSR Increase (lbs)	Quarterly NSR Increase (lbs)
D31	Gas (micro)Turbine #1, 3.27 MMBtu/hr	1,095	273.5
D33	Gas (micro)Turbine #2, 3.27 MMBtu/hr	1,095	273.5
D35	**Diesel Internal Combustion Engine,450 hp**	**10,120**	**2,530**

I296.2

~~This equipment shall not be operated unless the operator demonstrates to the Executive Officer that the facility holds sufficient RTCs to offset the prorated annual emissions increase for the first compliance year of operation. In addition, this equipment shall not be operated unless the operator demonstrates to the Executive Officer that, at the commencement of each compliance year after the first compliance year of operation, the facility holds sufficient RTCs in an amount equal to the annual emissions increase.~~

> ~~To comply with this condition, the operator shall hold a minimum NOx RTCs of 10,120 lbs for each compliance year. In accordance with Rule 2005(f), unused RTCs may be sold only during the reconciliation period for the fourth quarter of the applicable compliance year inclusive of the 1st compliance year.~~

This equipment shall not be operated unless the operator demonstrates to the Executive Officer that the facility holds sufficient RTCs to offset the annual emissions increase for the first 12 months of operation. In addition, this equipment shall not be operated unless the operator demonstrates to the Executive Officer that, at the commencement of each compliance year after the start of operation, the facility holds sufficient RTCs in an amount equal to the annual emission increase.

> For the purposes of this condition, the annual emission increase is 10,120 lbs. of NOx.

RTCs held for the purpose of demonstrating compliance with this condition either at the commencement of initial operation or of a compliance year may be sold only after 12 months of start of initial operation or after the fourth quarter of the applicable year, respectively.

In lieu of holding RTCs for the entire duration specified above, RTCs held for the purpose of demonstrating compliance with this condition may be sold as specified below, provided quarterly emission does not exceed the corresponding quarterly limit listed in the table below. The amount available for sale shall be the quarterly emission limit listed minus the actual emission reportable pursuant to RECLAIM Monitoring, Recordkeeping, and Reporting protocols. Such amount may be sold only after the end of the subject quarter. If the quarterly certified emissions for any quarter exceed the corresponding quarterly emission limit, the facility may only sell RTCs acquired pursuant to Rule 2005(f) for that compliance year after the fourth quarter of that compliance year. This early sale option shall permanently be unavailable in the event that quarterly emissions exceeded the corresponding quarterly limits for a total of 3 in any five consecutive years.

Calendar Quarter	Emissions Limit (lbs.)
January 1 through March 31	2530
April 1 through June 30	2530
July 1 through September 30	2530
October 1 through December 31	2530

[RULE 2005, RULE 2012]

[Devices subject to this condition: D35]

	A	B	C	D	E	F	G	H	I
1	518224	0	143740	CO	INSTALL	7	Current emission from FacID#143740, Appl#518224, Dev#0		
2	489830	0	143740	CO	INSTALL	-15	Reversing Transaction of PO emissions from FacID# 143740, A/N 489830		
3	518224	0	143740	NOX	INSTALL	28	Current emission from FacID#143740, Appl#518224, Dev#0		
4	489830	0	143740	NOX	INSTALL	-61	Reversing Transaction of PO emissions from FacID# 143740, A/N 489830		
5	518224	0	143740	PM10	INSTALL	1	Current emission from FacID#143740, Appl#518224, Dev#0		
6	489830	0	143740	PM10	INSTALL	-2	Reversing Transaction of PO emissions from FacID# 143740, A/N 489830		
7	518224	0	143740	ROG	INSTALL	2	Current emission from FacID#143740, Appl#518224, Dev#0		
8	489830	0	143740	ROG	INSTALL	-4	Reversing Transaction of PO emissions from FacID# 143740, A/N 489830		
9	518224	0	143740	SOX	INSTALL	0	Current emission from FacID#143740, Appl#518224, Dev#0		
10	489830	0	143740	SOX	INSTALL	-4	Reversing Transaction of PO emissions from FacID# 143740, A/N 489830		

	J
1	
2	0
3	
4	0
5	
6	0
7	
8	0
9	
10	0

as illustrated in the RECLAIM Trading Zones Map. A facility in Zone 1 may only obtain RTCs from Zone 1. A facility in Zone 2 may obtain RTCs from either Zone 1 or 2, or both.

(f) Offsets

The Facility Permit for a new or modified facility shall require compliance with this subdivision, if applicable.

(1) Any facility which was required to provide offsets pursuant to paragraphs (b)(2), or subparagraph (c)(4)(B) or any new facility required to provide offsets pursuant to paragraph (c)(2) shall, at the commencement of each compliance year, hold RTCs in an amount equal to the amount of such required offsets. The Facility Permit holder may reduce the amount of offsets required pursuant to this subdivision by accepting a permit condition limiting emissions which shall serve in lieu of the starting Allocation plus non-tradable credits for purposes of paragraph (c)(4).

(2) Unused RTCs acquired to comply with this subdivision or with paragraphs (b)(2), (c)(2), or subparagraph (c)(4)(B) may be sold only during the reconciliation period for the fourth quarter of the applicable compliance year.

(3) In lieu of compliance with paragraph (f)(2), the Facility Permit holder may accept a permit condition limiting quarterly emissions from the facility. A facility with quarterly emission limits may sell, at any time after the end of that quarter and prior to the end of the reconciliation period for that compliance year, unused RTCs acquired pursuant to this subdivision at the amount not to exceed the difference between the permitted emission limit for that quarter and the emissions during that quarter as reported to the District in the Quarterly Emission Certification. Any facility with quarterly certified emissions exceeding the quarterly emission limit for any quarter may sell RTCs only during the reconciliation period for the fourth quarter of the applicable compliance year. If there are a total of three exceedances in any five consecutive compliance years, the facility shall permanently comply with paragraph (f)(2) in lieu of (f)(3).

Hamilton Stoddard

From: Hamilton Stoddard
Sent: Thursday, February 10, 2011 9:45 AM
To: 'Mike Shaffer'
Subject: Additional fee

Mike,
As you know I am in the process of prescreening several applications that are essentially requesting a change in conditions I 296.1 and I 296.2 to allow a quarterly NSR NOX RTC limit per Rule 2005(f)(3) in lieu of the current annual limit.

Well the 2 applications for the ice gas turbines, referred to as gas microturbines, needed additional fee because they are considered schedule B and not schedule A, as you indicated they were in the submitted applications. The previous applications (A/N 466416 and A/N 466415) were accepted as schedule B equipment.

Here is the breakdown;

'CE, D35, previous A/N 489830 (P/O G2940),	fee is $1037.65 (new application A/N 518224)
.as Turbine (Microturbine), previous A/N 466415	**fee is $1037.65 (new application A/N 518222)**
Gas Turbine (Microturbine), previous A/N 466416	**fee is $518.83 (new application A/N 518223)**
Reclaim facility permit amendment	fee is $861.52

The total is $3455.65 and you submitted $2926.03 for a difference of $529.62.
Can you send the additional $529.62 to AQMD and refer the amount to applications A/N 518224 and A/N 518222, ID 143740?

Thanks,
Hamilton.

'amilton Stoddard
Air Quality Engineer II
SCAQMD
909-396-2482

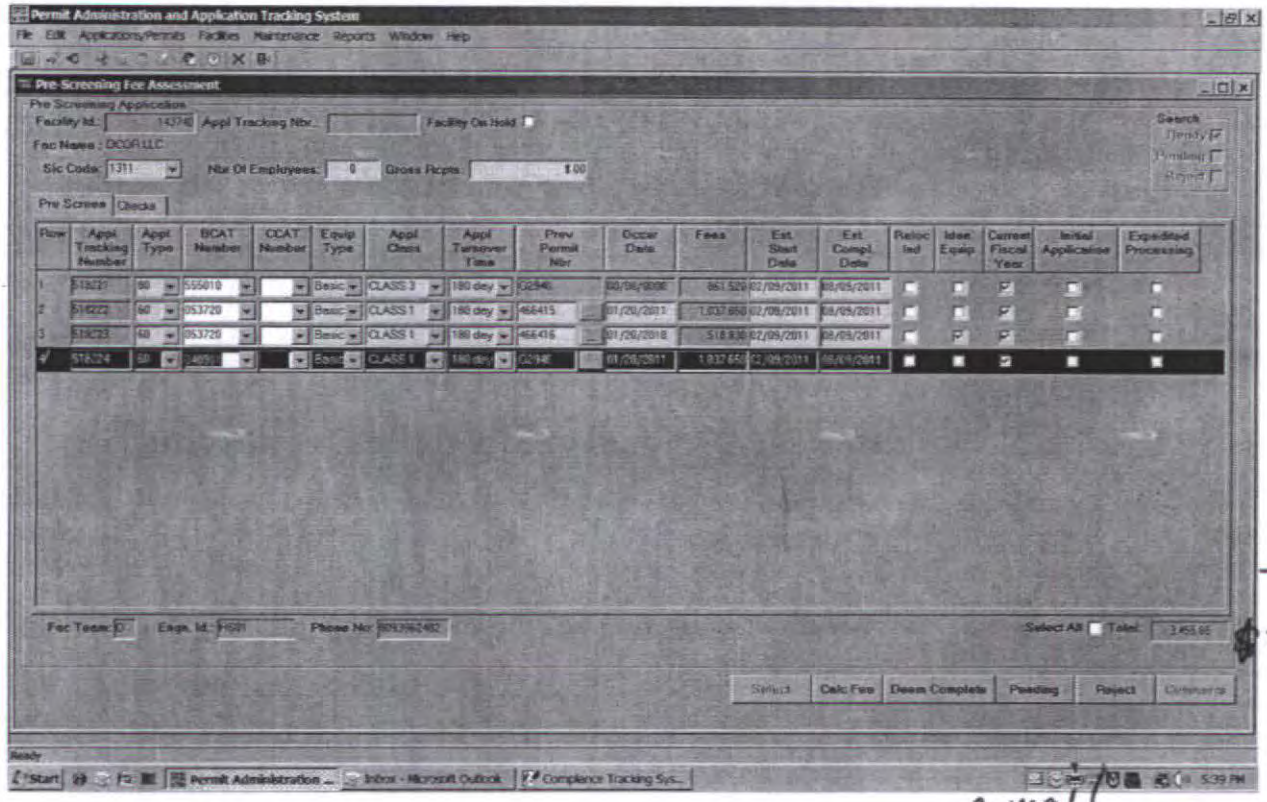

TOTAL: $3,455.65

2/9/2011: PROBLEM I Need to talk/e-mail to M. Shaffer about additional fee.

PKP considered 2 and 3 as ~~class~~ schedule A

($684.57 and 50% = $342.29)

Rushcreek they should be schedule B

($1037.65 and 50% = $518.83)

Additional required $3455.65

$- \$2926.03$

$\$529.62$

DCOR
290 Maple Court, Suite 290
Ventura, CA 93003
(805) 535-2000
(805) 535-2100 FAX

March 16, 2011

Mr. Hamilton Stoddard
South Coast Air Quality Management District
21865 Copley Dr.
Diamond Bar, CA 91765-4178

Subject: Additional Permit Application Fee Required
Platform Esther, Facility ID 143740
Applications #518224 & #518222

Dear Mr. Stoddard:

Please find enclosed a check for $529.62, the balance owed on air permit applications A/N #518224 and A/N 518222 for Facility ID 143740 (Platform Esther). Additional e-mail communication on this matter is attached for your information.

If you have any questions, please contact me at 805-535-2074 or cwhite@dcorllc.com.

Sincerely,

Christine White

Christine White
Environmental Advisor

Attachments (2)

DCOR, LLC 034786

SOUTH COAST AQMD	VENDOR SOU001		CHECK DATE 02/22/11	
INVOICE NUMBER	INVOICE DATE		DISCOUNT TAKEN	AMOUNT PAID
21611	02/16/11	38811 A/N 518224 / A/N 518222	$0.00	$529.62
		Total:	$0.00	$529.62

THE FACE OF THIS DOCUMENT HAS A COLORED BACKGROUND ON WHITE PAPER

DCOR, LLC
Operating Account
PO Box 3401
Ventura, CA 93006
apayable@dcorllc.com

Bank of Texas, N.A.
Dallas, TX

CHECK NO. 0034786

32-1432
1110

DATE 02/22/11

AMOUNT *********$529.62

**********529 Dollars and 62 Cents

Void After 90 Days

PAY TO THE ORDER OF
SOUTH COAST AQMD
P.O. BOX 4944
DIAMOND BAR CA 91765-0944

Alan Templeton

THE BACK OF THIS DOCUMENT CONTAINS AN ARTIFICIAL WATERMARK—HOLD AT AN ANGLE TO VIEW

Christine White

From: Mike Shaffer [shafferenv@pacbell.net]
Sent: Thursday, February 10, 2011 10:17 AM
To: Hamilton Stoddard
Cc: Christine White
Subject: Re: Additional fee

Hamilton,

I will request for DCOR to send in the additional $529.62. The reason for the my error/confusion was because the May 2010 revision to Rule 301 added "Gas Turbines (Microturbines Only)" to the fee table as Schedule A, but didn't specify that it was only applicable to small microturbines that fall into the Rule 219 exempt category (<2.95 MMBTU/hr) and request SCAQMD permits when CARB's DG program does not cover them. I found this out just the other day from Mohan Balagopalan, after the applications had been submitted. Sorry for the inconvenience.

Mike Shaffer
Shaffer Environmental Consulting
80 N. Crocker Avenue
Ventura, CA 93004-3845
(805) 659-1744 office
(805) 207-1945 cell
(805) 435-1634 fax
shafferenv@pacbell.net

---- Original Message ----
From: Hamilton Stoddard
To: Shaffer, Mike
Sent: Thursday, February 10, 2011 9:44 AM
Subject: Additional fee

Mike,
As you know I am in the process of prescreening several applications that are essentially requesting a change in conditions I 296.1 and I 296.2 to allow a quarterly NSR NOX RTC limit per Rule 2005(f)(3) in lieu of the current annual limit.

Well the 2 applications for the ice gas turbines, referred to as gas microturbines, needed additional fee because they are considered schedule B and not schedule A, as you indicated they were in the submitted applications. The previous applications (A/N 466416 and A/N 466415) were accepted as schedule B equipment.

Here is the breakdown;

ICE, D35, previous A/N 489830 (P/O G2940), application A/N 518224)	fee is $1037.65 (new
Gas Turbine (Microturbine), previous A/N 466415 application A/N 518222)	**fee is $1037.65 (new**
Gas Turbine (Microturbine), previous A/N 466416 application A/N 518223)	**fee is $518.83 (new**
Reclaim facility permit amendment	fee is $861.52

The total is $3455.65 and you submitted $2926.03 for a difference of $529.62.
Can you send the additional $529.62 to AQMD and refer the amount to applications A/N 518224 and A/N 518222, ID 143740?

	APPL_	[	EMI	A	MEAS	EMI_A	EMI_AMT_E	EMI_	APR	APROV_D
1	489830	0	CO	31	AV30	15	04-02-2009	lchen	johny	05-21-2009
2	489830	0	CO	31	R1	.01	05-21-2009	lchen	johny	05-21-2009
3	489830	0	CO	31	R1DY	15	04-02-2009	lchen	johny	05-21-2009
4	489830	0	CO	31	R1HR	.61	04-02-2009	lchen	johny	05-21-2009
5	489830	0	CO	31	R2	.01	05-21-2009	lchen	johny	05-21-2009
6	489830	0	CO	31	R2DY	15	04-02-2009	lchen	johny	05-21-2009
7	489830	0	CO	31	R2HR	.61	04-02-2009	lchen	johny	05-21-2009
8	489830	0	CO	31	RACT	15	04-02-2009	lchen	johny	05-21-2009
9	489830	0	CO	31	YRLY	4440.8	04-02-2009	lchen	johny	05-21-2009
10	489830	0	NOX	31	AV30	61	04-02-2009	lchen	johny	05-21-2009
11	489830	0	NOX	31	R1	.01	05-21-2009	lchen	johny	05-21-2009
12	489830	0	NOX	31	R1DY	60.72	04-02-2009	lchen	johny	05-21-2009
13	489830	0	NOX	31	R1HR	2.53	04-02-2009	lchen	johny	05-21-2009
14	489830	0	NOX	31	R2	.01	05-21-2009	lchen	johny	05-21-2009
15	489830	0	NOX	31	R2DY	60.72	04-02-2009	lchen	johny	05-21-2009
16	489830	0	NOX	31	R2HR	2.53	04-02-2009	lchen	johny	05-21-2009
17	489830	0	NOX	31	RACT	61	04-02-2009	lchen	johny	05-21-2009
18	489830	0	NOX	31	YRLY	10120	04-02-2009	lchen	johny	05-21-2009
19	489830	0	PM1031		AV30	2	04-02-2009	lchen	johny	05-21-2009
20	489830	0	PM1031		R1	.01	05-21-2009	lchen	johny	05-21-2009
21	489830	0	PM1031		R1DY	1.8	04-02-2009	lchen	johny	05-21-2009
22	489830	0	PM1031		R1HR	.09	04-02-2009	lchen	johny	05-21-2009
23	489830	0	PM1031		R2	.01	05-21-2009	lchen	johny	05-21-2009
24	489830	0	PM1031		R2DY	1.8	04-02-2009	lchen	johny	05-21-2009
25	489830	0	PM1031		R2HR	.09	04-02-2009	lchen	johny	05-21-2009
26	489830	0	PM1031		RACT	2	04-02-2009	lchen	johny	05-21-2009
27	489830	0	PM1031		YRLY	655.2	04-02-2009	lchen	johny	05-21-2009
28	489830	0	ROG	31	AV30	4	04-02-2009	lchen	johny	05-21-2009
29	489830	0	ROG	31	R1	.01	05-21-2009	lchen	johny	05-21-2009
30	489830	0	ROG	31	R1DY	4.32	04-02-2009	lchen	johny	05-21-2009
31	489830	0	ROG	31	R1HR	.18	04-02-2009	lchen	johny	05-21-2009
32	489830	0	ROG	31	R2	.01	05-21-2009	lchen	johny	05-21-2009
33	489830	0	ROG	31	R2DY	4.32	04-02-2009	lchen	johny	05-21-2009
34	489830	0	ROG	31	R2HR	.18	04-02-2009	lchen	johny	05-21-2009
35	489830	0	ROG	31	RACT	4	04-02-2009	lchen	johny	05-21-2009
36	489830	0	ROG	31	YRLY	1572.48	04-02-2009	lchen	johny	05-21-2009
37	489830	0	SOX	31	AV30	4	04-02-2009	lchen	johny	05-21-2009
38	489830	0	SOX	31	R1	.01	05-21-2009	lchen	johny	05-21-2009
39	489830	0	SOX	31	R1DY	3.6	04-02-2009	lchen	johny	05-21-2009
40	489830	0	SOX	31	R1HR	.18	04-02-2009	lchen	johny	05-21-2009
41	489830	0	SOX	31	R2	.01	05-21-2009	lchen	johny	05-21-2009
42	489830	0	SOX	31	R2DY	3.6	04-02-2009	lchen	johny	05-21-2009
43	489830	0	SOX	31	R2HR	.18	04-02-2009	lchen	johny	05-21-2009
44	489830	0	SOX	31	RACT	4	04-02-2009	lchen	johny	05-21-2009
45	489830	0	SOX	31	YRLY	1310.4	04-02-2009	lchen	johny	05-21-2009

	APPL_STATUS_DESC
1	PERMIT TO OPERATE GRANTED
2	PERMIT TO OPERATE GRANTED
3	PERMIT TO OPERATE GRANTED
4	PERMIT TO OPERATE GRANTED
5	PERMIT TO OPERATE GRANTED
6	PERMIT TO OPERATE GRANTED
7	PERMIT TO OPERATE GRANTED
8	PERMIT TO OPERATE GRANTED
9	PERMIT TO OPERATE GRANTED
10	PERMIT TO OPERATE GRANTED
11	PERMIT TO OPERATE GRANTED
12	PERMIT TO OPERATE GRANTED
13	PERMIT TO OPERATE GRANTED
14	PERMIT TO OPERATE GRANTED
15	PERMIT TO OPERATE GRANTED
16	PERMIT TO OPERATE GRANTED
17	PERMIT TO OPERATE GRANTED
18	PERMIT TO OPERATE GRANTED
19	PERMIT TO OPERATE GRANTED
20	PERMIT TO OPERATE GRANTED
21	PERMIT TO OPERATE GRANTED
22	PERMIT TO OPERATE GRANTED
23	PERMIT TO OPERATE GRANTED
24	PERMIT TO OPERATE GRANTED
25	PERMIT TO OPERATE GRANTED
26	PERMIT TO OPERATE GRANTED
27	PERMIT TO OPERATE GRANTED
28	PERMIT TO OPERATE GRANTED
29	PERMIT TO OPERATE GRANTED
30	PERMIT TO OPERATE GRANTED
31	PERMIT TO OPERATE GRANTED
32	PERMIT TO OPERATE GRANTED
33	PERMIT TO OPERATE GRANTED
34	PERMIT TO OPERATE GRANTED
35	PERMIT TO OPERATE GRANTED
36	PERMIT TO OPERATE GRANTED
37	PERMIT TO OPERATE GRANTED
38	PERMIT TO OPERATE GRANTED
39	PERMIT TO OPERATE GRANTED
40	PERMIT TO OPERATE GRANTED
41	PERMIT TO OPERATE GRANTED
42	PERMIT TO OPERATE GRANTED
43	PERMIT TO OPERATE GRANTED
44	PERMIT TO OPERATE GRANTED
45	PERMIT TO OPERATE GRANTED

Hamilton Stoddard

From: Mike Shaffer [shafferenv@pacbell.net]
Sent: Thursday, February 10, 2011 10:17 AM
To: Hamilton Stoddard
Cc: White, Christine
Subject: Re: Additional fee

Hamilton,

I will request for DCOR to send in the additional $529.62. The reason for the my error/confusion was because the May 2010 revision to Rule 301 added "Gas Turbines (Microturbines Only)" to the fee table as Schedule A, but didn't specify that it was only applicable to small microturbines that fall into the Rule 219 exempt category (<2.95 MMBTU/hr) and request SCAQMD permits when CARB's DG program does not cover them. I found this out just the other day from Mohan Balagopalan, after the applications had been submitted. Sorry for the inconvenience.

Mike Shaffer
Shaffer Environmental Consulting
80 N. Crocker Avenue
Ventura, CA 93004-3845
(805) 659-1744 office
(805) 207-1945 cell
(805) 435-1634 fax
shafferenv@pacbell.net

----- Original Message -----
From: Hamilton Stoddard
To: Shaffer, Mike
Sent: Thursday, February 10, 2011 9:44 AM
Subject: *Additional fee*

Mike,
As you know I am in the process of prescreening several applications that are essentially requesting a change in conditions I 296.1 and I 296.2 to allow a quarterly NSR NOX RTC limit per Rule 2005(f)(3) in lieu of the current annual limit.

Well the 2 applications for the ice gas turbines, referred to as gas microturbines, needed additional fee because they are considered schedule B and not schedule A, as you indicated they were in the submitted applications. The previous applications (A/N 466416 and A/N 466415) were accepted as schedule B equipment.

Here is the breakdown;
ICE, D35, previous A/N 489830 (P/O G2940), fee is $1037.65 (new application A/N 518224)
Gas Turbine (Microturbine), previous A/N 466415 fee is $1037.65 (new application A/N 518222)
Gas Turbine (Microturbine), previous A/N 466416 fee is $518.83 (new application A/N 518223)
Reclaim facility permit amendment fee is $861.52

The total is $3455.65 and you submitted $2926.03 for a difference of $529.62.
Can you send the additional $529.62 to AQMD and refer the amount to applications A/N 518224 and A/N 518222, ID 143740?

Thanks,
Hamilton.

SOUTH COAST AIR QUALITY MANAGEMENT DISTRICT *ENGINEERING DIVISION* APPLICATION PROCESSING AND CALCULATIONS	PAGES	PAGE
	10	1
	APPL NO	DATE
	489830	5/15/2009
	PROCESSED BY	CHECKED BY
	LI CHEN	

PERMIT TO OPERATE

COMPANY NAME AND ADDRESS

DCOR, LLC
290 Maple Court, Suite 290
Ventura, CA 93003
SCAQMD ID # 143740

Contact Christine White, Air Quality Specialist

EQUIPMENT LOCATION

Offshore Platform Esther, PRC 3095
Seal Beach, CA

EQUIPMENT DESCRIPTION

Section D of the facility Permit Permit to Operate

Equipment	ID No	Connected To	RECLAIM Source Type/ Monitoring Unit	Emissions and Requirements	Conditions
PROCESS 1 INTERNAL COMBUSTION					
INTERNAL COMBUSTION ENGINE, DIESEL FUEL, ~~CATERPILLAR~~ JOHN DEERE, MODEL ~~3408DIT~~ 6135HF485, SIX CYLINDERS, ~~FOUR CYCLE~~, LEAN BURN, PORTABLE, DRIVING THE CRANE ON RAILS, ~~TURBOCHARGER~~, TURBOCHARGED, ~~425~~ 450 BHP A/N ~~467167~~ 489830	D2		NOx ~~PROCESS UNIT~~ LARGE SOURCE	NOx 340 PPMV (3) DIESEL, [RULE 1110.2, 1701, 2005-BACT, 2012], ~~NOx 469 LBS/1000 GAL DIESEL~~ ~~CO 2000 PPMV (5),~~ CO 134 PPMV (5) [RULE 1110.2, DIESEL, RULE 1701-BACT] ROG ~~250~~ 70 PPMV (5) [RULE 1110.2, DIESEL, 40CFR Part	C1.2, D12.1, ~~D12.2, D135.1,~~ E193.1, I296.1

Equipment	ID No	Connected To	RECLAIM Source Type/ Monitoring Unit	Emissions and Requirements	Conditions
				89], PM 0.087 G/BHP-HR DIESEL [40CFR PART 89]	

BACKGROUND

DCOR is an oil and gas production facility that operates an offshore platform off Seal Beach, Platform Esther The platform is equipped with a crane engine which is powered by a diesel fueled internal combustion engine The IC engine is listed as device D2 in the facility permit It is a 425 HP, Tier 0 diesel engine The facility participates in the RECLAIM NOx program In the past the facility elected to limit the diesel engine to 2,190 annual operating hours so that the device is classified as a process unit in accordance with RECLAIM rules

DCOR submits this application in October 2008 for the purpose of upgrading the diesel engine with a new one The facility proposes to install a new 450 HP turbocharged John Deere diesel engine, slightly bigger than the existing 425 HP engine The facility wants to increase the annual operating schedule from 2,190 to 4,000 hours. The new engine would be classified as a RECLAIM large source One of the reasons for the proposed upgrade is to prepare for the more stringent Rule 1110 2 VOC and CO emission limit requirements due to become effective on July 1, 2011 The new diesel engine is a CARB certified engine that meets the EPA's Tier III emission requirements

The application was received on October 14, 2008 along with an application for facility permit revision and a check of $3,921 08 The following table shows the applications and fees details The applications were deemed complete on October 17, 2008

Application	Purpose	Fee	Rule 301(t) Fee
489830	Installation of a new crane engine and removal of the old crane engine (D2)	$2051 52	$1025 76
489831	Facility permit revision	$843 80	
Total Fees		$3,921 08	

DCOR is a RECLAIM NOx facility, but not a Title V facility

DISCUSSION

The crane is a "gantry" type that is mounted on two parallel tracks The crane engine is an integral part of the crane and is attached to the crane The crane and the engine will traverse on the tracks to move around the platform It is unlikely that the crane will be stay in the same footprint for more than 12 consecutive months Therefore, the crane engine should be considered not as a stationary source but as a non-road portable engine

If SO_x ef = 0.00049 gm/Bhp-hr
.00049 gm/Bhp-hr x 450 hp = 453.5939 gm/hr
450 hp. = .00049 lb/hr.

EMISSIONS

1 Emissions from the new engine

The applicant provided emission factors that are guaranteed by the manufacturer

	NOx	VOC	PM10	SOx	CO
Emission Factor (g/bhp-hr)	2 54	0 182	0 087	0 18	0 610
Emissions (lb/hr)	2 53	0 18	0 09	0 18	0 61
Monthly Avg (lb/day)	61	(4.32) 4	2	4	15

For RECLAIM purposes the annual NOx emissions are

2 53 * 4,000 = 10,120 lbs/year

For compliance purposes the mass emission limits in gram/bhp-hr are to be replaced with equivalent ppm limits To make this conversion some engine performance parameters such as the excess O_2 level and the water vapor content of the exhaust are needed The applicant was not able to obtain these data from the manufacturer It provided the following information

Stack O2 = 13-16%
Stack moisture = 1-3%

It is then agreed that the ppm levels are calculated from these data Once the crane engine is installed and source tests generate actual stack O_2 and moisture data the District will revise the ppm limit accordingly The following calculations determine the ppm levels

Given

P = 450 horsepower
Stack Flow = 2278 ACFM
Stack Temp = 747 F
Stack O2= 13-16%, assuming average O_2 of 14 5%
Stack Moisture = 1-3%, assuming average moisture of 2%

Now

Standard Temperature = 60 F = 288 7 K
Stack Temperature = 747 F = 670 4 K
Stack Flow = 2278 * 288 7 / 670 4 = 991 SCFM
Stack Flow, dry = 991 * (1- 2%) = 961 4 SCFM
Stack flow, dry, 15%O_2 = 961 4 SCFM * (20 9-14 5)/(20 9-15) = 1,042 8 SCFM

$$NOx, ppm = 2\ 53 lb/hr * \frac{1 lb-mole}{46 lb} * \frac{385 scf}{lb-mole} \frac{hr}{60 \text{ min}} \frac{1}{1042\ 8 scfm} = 340 ppm$$

$$VOC, ppm = 0\ 182 lb/hr * \frac{1 lb-mole}{16 lb} * \frac{385 scf}{lb-mole} \frac{hr}{60 \text{ min}} \frac{1}{1042\ 8 scfm} = 70 ppm$$

$$CO, ppm = 0\ 61 lb/hr * \frac{1 lb-mole}{28 lb} * \frac{385 scf}{lb-mole} \frac{hr}{60 \text{ min}} \frac{1}{1042\ 8 scfm} = 134 ppm$$

2 Emissions from the existing engine

The following is the table of criteria pollutants emissions, as determined in the previous application 467167

	NOx	VOC	PM10	SOx	CO
Hourly (lbs/hr)	11 0	0 74	0 77	0 16	2 3
Daily (lbs/day)	264	20	18	4	55

The annual NOx emissions are 24,090 lbs/year

3 Emissions (PTE) increase

Based on the above calculations the next table demonstrates that there will be no anticipated emissions increases

	NOx	VOC	PM10	SOx	CO
Post-Modification PTE (lbs/day)	61	4	2	4	15
Pre-Modifications PTE (lbs/day)	264	20	18	4	55
Emission Increases (lbs/day)	-203	-16	-16	0	-40

4 Toxic Air Contaminant Emissions of the new engine

Toxic emissions are calculated based on fuel usage and emission factors published by Ventura County APCD The fuel flow rate is 24 86 gallons per hour As diesel particulates are now considered toxic air contaminant PM10 are assumed as all diesel particulates and are included in the calculations

Name	Emission Factor (lbs/kgal)	Emission Rate (lbs/hr)	Annual Emissions (lbs/year)
Acetaldehyde	0 7833	1 95E-02	7 79E+01
Acrolein	0 0339	8 43E-04	3 37E+00
Benzene	0 1863	4 63E-03	1 85E+01
Ethyl Benzene	0 0109	2 71E-04	1 08E+00
Formaldehyde	1 7261	4 29E-02	1 72E+02
Hexane	0 0269	6 69E-04	2 67E+00
Naphthalene	0 0197	4 90E-04	1 96E+00
PAHs	0 0362	9 00E-04	3 60E+00
Propylene	0 4670	1 16E-02	4 64E+01
Toluene	0 1054	2 62E-03	1 05E+01
Xylenes	0 0424	1 05E-03	4 22E+00
Hydrogen Chloride	0 1863	4 63E-03	1 85E+01
Diesel Particulates (PM)		0 77	3 60E+01
		Annual Total	7 20E+02

Including the diesel particulates the total annual emissions of all toxic air contaminants are 720 lbs

5 Toxic Air Contaminant Emissions of the existing engine

Toxic emissions are calculated based on fuel usage and emission factors published by Ventura County APCD The fuel flow rate is 22 6 gallons per hour For the purpose of comparison the diesel particulates emissions are included

Name	Emission Factor (lbs/kgal)	Emission Rate (lbs/hr)	Annual Emissions (lbs/year)
Acetaldehyde	0 7833	1 77E-02	7 08E+01
Acrolein	0 0339	7 66E-04	3 06E+00
Benzene	0 1863	4 21E-03	1 68E+01
Ethyl Benzene	0 0109	2 46E-04	9 85E-01
Formaldehyde	1 7261	3 90E-02	1 56E+02
Hexane	0 0269	6 08E-04	2 43E+00
Naphthalene	0 0197	4 45E-04	1 78E+00
PAHs	0 0362	8 18E-04	3 27E+00
Propylene	0 4670	1 06E-02	4 22E+01
Toluene	0 1054	2 38E-03	9 53E+00
Xylenes	0 0424	9 58E-04	3 83E+00
Hydrogen Chloride	0 1863	4 21E-03	1 68E+01
Diesel Particulates (PM)		0 77	1 86E+03
		Annual Total	2 19E+03

The total annual emissions of all toxic air contaminants including the diesel particulates are 2190 lbs

RULE EVALUATION

California Environmental Quality Act (CEQA)
The applicant submitted the AQMD 400-CEQA form, and indicated on the form that the project does not have any impacts that will trigger the CEQA review requirements

Rule 212 – Standards for Approving Permits
There will be no emission increases based on a comparison of the previous and post modification 30-day averaged emissions Public notice is not required

Rule 401 – Visible Emissions
Visible emissions are not expected if the equipment is operating properly

Rule 402 – Nuisance
Nuisance complaints are not expected

Rule 404 – Particulate Matter – Concentration

This rule limits a maximum concentration of particular matter in the discharged gas The IC engine has a PM emission rate of 0 087 lb/hr and an exhaust flow rate of 2,278 ft^3/min The PM concentration is

$$PM = 0\ 087 \frac{lb}{hr} * \frac{7000 gr}{lb} * \frac{hr}{60 \min} * \frac{1}{2278 dscfm} = 0\ 0044 gr/dscf$$

This rate is much less than the 0 086 gr/dscf threshold allowed in Table 404(a) Compliance is expected

Rule 407 – Liquid and Gaseous Air Contaminants

This rule does not apply to either IC engine or portable equipment The 2000 ppm CO limit does not apply

Rule 431 2 – Sulfur Contents of Liquid Fuels

This rule requires the facility to use diesel fuel with sulfur content not greater than 15 ppm by weight DCOR will use only the low-sulfur CARB diesel fuel for this engine Compliance is expected A facility condition F14 1 is in place to enforce the diesel fuel requirement

Rule 1110 2 – Emissions from Gaseous and Liquid-fueled Engines

This rule applies to stationary or portable engines that are over 50 BHP This rule aims to reduce NOx, CO and VOC emissions from IC engines Since DCOR is a NOx RECLAIM facility the provisions related to NOx emissions are superseded by RECLAIM rules This rule is only applicable to CO and VOC emissions

As the engine is classified as a portable non-road engine it is exempted from the emission limits of this rule However, it is subject to requirements of the Subchapter 7 5 Airborne Toxic Control Measures for diesel particulate matter in Chapter 1, Division 3, Title 17 of the California Code of Regulations The requirements are to meet the current EPA Tier 3 emission limits The proposed new engine is a CARB certified EPA Tier 3 engine The next table demonstrates compliance of emission limits

	NMHC+NOx (g/bhp-hr)	CO (g/bhp-hr)	PM (g/bhp-hr)
Tier III Emission Standards	3 0	2 6	0 15
Engine Family Certification Levels	2 5	0 45	0 07
Engine Specific Performance Data	2 73	0 61	0 087

In addition, the engine shall meet the requirements of recordkeeping

Regulation XIII – New Source Review
In accordance with the classification as a non-road portable engine it is exempted from this regulation

Rule 1401 – New Source Review for toxic air contaminants
This rule applies to new or modified sources that cause increases of toxic air contaminants Including the diesel particulates the total emissions of toxic air contaminants are 720 lbs per year for the new engine, and 2,190 lbs for the existing engine This is a decrease of toxic air contaminants, which is primary due to the reduction in PM emissions This is a new source with a "contemporaneous risk reduction" under Rule 1401(g)(2)(A) Thus, this rule does not apply

Excluding the diesel particulates emissions this is a slight increase of toxic air contaminants from 328 lbs to 360 lbs To access the potential effects the applicant performed a Tier III Rule 1401 Risk Analysis to estimate the risk The results are

MICR = 0 41 in a million
Maximum Hazardous Indices, Acute = 0 0008
Maximum Hazardous Indices, Chronic = 0 0004

Compliance is demonstrated

Rule 1470 – Requirement for Stationary Diesel-Fueled IC Engines
As the engine is not a stationary source it is exempted from this rule

Regulation XVII – Prevention of Significant Deterioration
The South Coast Air Basin (SCAB) is in attainment for CO, NOx and SO_2 emissions Therefore, a PSD analysis for these pollutants must be conducted if there are significant emission increases PSD analysis for PM10 and VOC are not required since the SCAB is not in attainment for these pollutants

BACT is required per Rule 1701(b) BACT for a non-road portable engine is consistent with the requirements of 40 CFR Part 89, and consistent with the EPA ACTM requirements This engine is a CARB certified Tier 3 engine Compliance is expected

For this project there are no emission increases PSD analysis of Rule 1703 is not required

Regulation XX – RECLAIM
DCOR has proposed to change the annual operating hours from 2,190 to 4,000 Therefore, the device is now a RECLAIM Large Source All the emission monitoring and record keeping provisions of this regulation for large sources will apply to this device DCOR will install a fuel meter, and use source test verified emission factors to report NOx emissions

In accordance with RECLAIM rules on large sources the engine shall have a concentration limit to report NOx emissions The NOx emission factor provided by the manufacturer is 2 54 g/bhp-hr and is equivalent to 340 ppm The facility shall use this emission factor to report NOx emissions The concentration limit needs to be verified through source test once every three years

The facility is required to conduct a source test once every three years, and to perform engine turn-ups twice every one year The requirement is provided in the permit as a new condition, E193 1

RECOMMENDATION

Grant the proposed engine replacement and issue a permit to operate

CONDITIONS

C1 2 The operator shall limit the operating time to no more than ~~2,190~~ 4,000 hours in any one year

~~The purpose of this condition is to ensure that this equipment qualifies as a process unit~~

[Rule 2012, ~~Rule 1303 - Offset~~]

[Devices subject to this condition D2]

D12 1 The operator shall install and maintain a non-resettable tamper-proof elapsed time meter to accurately indicate the elapsed operating time of the engine

[Device subject to this condition D1, D2]

~~D12 2 The operator shall install and maintain a non-resettable totalizing fuel meter to accurately indicate the fuel usage of the engine The fuel usage data shall be used in conjunction with an emission factor of 469 lbs/1000 gallons to calculate NOx emissions for purposes of RECLAIM reporting~~

[Devices subject to this condition D2]

~~D135 1 The operator shall inspect, adjust, and certify the ignition or fuel injection timing of this engine a minimum of once every 3 years of operation Inspections, adjustments, and certifications shall be performed by a qualified mechanic and performed in accordance with the engine manufacturer's specifications and procedures~~

~~[Devices subject to this condition D2]~~

E193 1 The operator shall upon completion of construction, operate and maintain this equipment according to the following requirements

The operator shall conduct a source test once every three years in accordance with Rule 2012 requirements

The operator shall perform an engine tune-up twice in any one year

[Rule 2012]

[Devices subject to this condition D2]

I296 1 This equipment shall not be operated unless the operator demonstrates to the Executive Officer that the facility holds sufficient RTCs to offset the prorated annual emissions increase for the first compliance year of operation In addition, this equipment shall not be operated unless the operator demonstrates to the Executive Officer that, at the commencement of each compliance year after the first compliance year of operation, the facility holds sufficient RTCs in an amount equal to the annual emissions increase

To comply with this condition, the operator shall hold a minimum NOx RTCs of 10,120 lbs for each compliance year In accordance with Rule 2005(f), unused RTC's may be sold only during the reconciliation period for the fourth quarter of the applicable compliance year inclusive of the 1st compliance year

[Rule 2005]

[Devices subject to this condition D2]

NSR DATA SUMMARY SHEET

Application No 489830
Application Type Permit to Construct
Application Status PENDAPPRV
Previous Apps Dev,Permit # 467167 0 - NONE

Company Name DCOR LLC
Company ID 143740
Address OFFSHORE PLATFORM ESTHER PRC 3095 1 SEAL
RECLAIM NOX
RECLAIM Zone 01
Basin SC
Zone 18
Title V NO

Device ID 0 -
Estimated Completion Date 11-18-2008
Heat Input Capacity 0 Million BTU/hr
Priority Reserve NONE - No Priority Access Requested
Recommended Disposition 25 - PERMIT TO CONSTRUCT GRANTED
PR Expiration
School Within 1000 Feet NO
Operating Weeks Per Year 52
Operating Days Per Week ~~7~~ 3.2
Monday Operating Hours 00 00 to 24 00
Tuesday Operating Hours 00 00 to 24 00
Wednesday Operating Hours 00 00 to 24 00
Thursday Operating Hours 00 00 to 24 00
Friday Operating Hours 00 00 to 24 00
Saturday Operating Hours 00 00 to 24 00
Sunday Operating Hours 00 00 to 24 00

$$\frac{24\text{ hrs}}{\text{day}} \times \frac{7\text{ day}}{\text{week}} \times \frac{52\text{ wks}}{\text{yr}} = 8736\text{ hrs/yr}$$

Should be:

$$\frac{4000\text{ lb}}{\text{hr}} = 166.7$$

$$\frac{166.7}{\frac{24\text{ hrs}}{\text{day}}}$$

24 hrs/day
3.2 day/wks
4000 hr/yr
23.8 weeks/yr
166.7 days/yr.

0.61 lb/hr x 24 hrs/day = 14.64 lb/day

0.61 lb/hr x 4000 hrs/yr = 2440 lb/yr

30 day av = 0.61 lb/hr x 4000 hrs/12 months = 6.8 / 30 day month

Emittant CO
BACT
Cost Effectiveness NO
Source Type MINOR
Emis Increase -40
Modeling N/A
Public Notice N/A
CONTROLLED EMISSION
Max Hourly 0 61 lbs/hr ✓
Max Daily 15 lbs/day ✓
UNCONTROLLED EMISSION
Max Hourly 0 61 lbs/hr ✓
Max Daily 15 lbs/day ✓
CURRENT EMISSION
BACT 30 days Avg 15 lbs/day ✗
Annual Emission 4440 8 lbs/yr ✗
District Exemption None

2.53 x 24 = 60.72 lb/day (ok)

2.53 x 4000 = 10120.0 lb/yr (ok)

30 day av = 2.53 x 4000 / 360 = 28.1

Emittant NOX
BACT
Cost Effectiveness NO
Source Type MINOR
Emis Increase -202 44
Modeling N/A
Public Notice N/A
CONTROLLED EMISSION
Max Hourly 2 53 lbs/hr ✓
Max Daily 60 72 lbs/day ✓
UNCONTROLLED EMISSION
Max Hourly 2 53 lbs/hr ✓
Max Daily 60 72 lbs/day ✓
CURRENT EMISSION
BACT 30 days Avg 61 56 lbs/day ✗
Annual Emission 10120 lbs/yr ✓
District Exemption None

(.087 x 450 lb) / 453.593 gm/lb = 0.0863 = 0.09

0.0863 x 24 = 2.07 lb/day

0.0863 lb/hr x 4000 hrs/yr = 345.2 lb/yr

30 day = .0863 x 4000 / 360 = 0.96 → 1

Emittant PM10
BACT
Cost Effectiveness NO
Source Type MINOR
Emis Increase -16
Modeling N/A
Public Notice N/A
CONTROLLED EMISSION
Max Hourly 0 09 lbs/hr ok
Max Daily 1 8 lbs/day ✗ (20 hrs/day ??)
UNCONTROLLED EMISSION
Max Hourly 0 09 lbs/hr ok
Max Daily 1 8 lbs/day ✗
CURRENT EMISSION
BACT 30 days Avg 2 lbs/day ✗
Annual Emission 655 2 lbs/yr ✗
District Exemption None

.18 X 24 = 4.32 lb/day

• 18 X 4000 = 720 lbs/yr

30 day = $\frac{0.18 \times 4000}{360}$ = 2

Emittant ROG
BACT
Cost Effectiveness NO
Source Type MINOR
Emis Increase 0
Modeling N/A
Public Notice N/A
CONTROLLED EMISSION
Max Hourly 0 18 lbs/hr ✓
Max Daily 4 32 lbs/day ✓
UNCONTROLLED EMISSION
Max Hourly 0 18 lbs/hr ✓
Max Daily 4 32 lbs/day ✓
CURRENT EMISSION
BACT 30 days Avg 4 lbs/day X
Annual Emission 1572 48 lbs/yr X
District Exemption None

.18 X 24 = 4.32 lb/day

.18 X 4000 = 720

30 day avg = $\frac{.18 \times 4000}{360}$ = 2

Emittant SOX
BACT
Cost Effectiveness NO
Source Type MINOR
Emis Increase 0
Modeling N/A
Public Notice N/A
CONTROLLED EMISSION
Max Hourly 0 18 lbs/hr ✓
Max Daily 3 6 lbs/day X
UNCONTROLLED EMISSION
Max Hourly 0 18 lbs/hr ✓
Max Daily 3 6 lbs/day X
CURRENT EMISSION
BACT 30 days Avg 4 lbs/day X
Annual Emission 1310 4 lbs/yr X
District Exempton None

Alternatively (SO_x #) = 0.0049 gm/Bhp-hr)

.0049 lb/hr x 24 = 0.12 lb/d.

.0049 X 4000 = 19.6 lb/yr

30 day = $\frac{.0049 \times 4000}{360}$ = 0.05

SUPERVISOR S APPROVAL _____ SUPERVISOR'S REVIEW DATE _____

Processed By lchen 4/2/2009 4 10 47 PM

January 19, 2011

Permit Services
South Coast Air Quality Management District
P.O. Box 4944
Diamond Bar, CA 91765-0944

Re: Application to Request Quarterly NO_X RTC Limit per Rule 2005(f)(3) and Miscellaneous Other Revisions
DCOR, LLC - Platform Esther (Facility ID# 143740)
Offshore State Lease PRC 3095.1, Seal Beach

Dear Permit Services:

This change of condition application is being submitted to request modifications to the facility permit for our Dos Cuadras Offshore Resources, LLC's (DCOR) Platform Esther facility located in the Pacific Ocean offshore of the City of Seal Beach (143740). The requested changes include: 1) Modify Permit Conditions I296.1 and I296.2; 2) Move Devices D31 and D33 from Section H to Section D and add NO_X emission factor reference to both; and 3) Change the Responsible Official information in Section A.

As required for a permit application to be deemed complete, included in this application package are the required Forms 400-A, Form 400-CEQA, and payment to cover the appropriate permit processing fees.

GENERAL AND FACILITY INFORMATION:

Business Name:	DCOR, LLC
SCAQMD Facility ID:	143740
Nature of Business:	Crude Oil and Gas Production (SIC 1311; NAICS 211111)
Equipment Location:	Offshore State Lease PRC 3095.1 Seal Beach, CA
Business/Equipment Contact Person:	Christine White Environmental Advisor 290 Maple Court, Suite 290 Ventura, CA 93003 (805) 535-2074 office (805) 535-2075 fax E-mail: cwhite@dcorllc.com
Permit Application Contact Person:	Mike Shaffer President/Principal Engineer Shaffer Environmental Consulting 80 N. Crocker Avenue Ventura, CA 93004-3845 (805) 659-1744 office (805) 207-1945 mobile (805) 435-1634 fax E-mail: shafferenv@pacbell.net
Operating Schedule (proposed):	24 hours/day, 7 days/week, 52 weeks/year
Construction Start Date (est.):	Not Applicable

PROJECT LOCATION:

Platform Esther is located in the state waters of San Pedro Bay approximately 1.5 miles offshore of Seal Beach Pier. The facility is one of two DCOR oil and gas production platforms located in the state waters in San Pedro Bay (DCOR's third platform, Edith, is located in federal waters). The facility produces roughly 800 bbls of oil per day which is separated from the water and gas onsite, and the crude and water is pumped via pipeline to an onshore facility (Chevron, Seal Beach). The majority of produced gas is combusted in two 250 KW gas turbines that produce electricity and hot water for the facility, with excess gas piped to an onshore facility (Breitburn, Seal Beach). The platform was constructed in 1990 (began producing in May 1991) after Esther Island was destroyed in a storm in February 1983. The facility was previously owned and operated by PXP, Nuevo/Torch, and Unocal.



PROJECT DESCRIPTION:

DCOR proposes to modify the existing facility permit to incorporate the following three (3) changes:

1. Limit quarterly NO_X emissions in Permit Conditions I296.1 and I296.2 thus allowing excess RTCs to be sold/transferred at the end of each quarter pursuant to Rule 2005(f)(3);

2. Move Devices D31 & D33 (gas microturbines) from Section H to Section D, and add NO_X emission factor reference to both to be consistent with Permit Condition I296.1; and

3. Change the Responsible Official information in Section A.

1. Modify Permit Conditions I296.1 and I296.2

DCOR proposes to modify Permit Conditions I296.1 (Section H) and I296.2 (Section D) to allow a quarterly NSR NO_X RTC limit per Rule 2005(f)(3) in lieu of the current annual limit. The change would allow greater flexibility for DCOR in managing NO_X RTC holdings, especially since the devices applicable to these permit conditions emit far less than the PTE/annual limits.

DCOR assumes that SCAQMD has standard permit wording for the proposed condition (similar to I296 and R2005(f)(3)), so below is some example wording for the modified permit condition:

I296.1 This equipment shall not be operated unless the operator demonstrates to the Executive Officer that, at the commencement of each quarter, the facility holds sufficient RTCs in an amount equal to the quarterly emissions increase.

To comply with this condition, the operator shall hold a minimum NO_X RTCs of 274 lbs for each compliance quarter (each device). In accordance with Rule 2005(f)(3), unused RTCs may be sold only during the reconciliation period for the applicable compliance quarter.

[RULE 2005, 5-6-2005; RULE 2012, 5-6-2005]

[Devices subject to this condition: D31, D33]

I296.2 This equipment shall not be operated unless the operator demonstrates to the Executive Officer that, at the commencement of each quarter, the facility holds sufficient RTCs in an amount equal to the quarterly emissions increase.

To comply with this condition, the operator shall hold a minimum NO_X RTCs of 2,530 lbs for each compliance quarter. In accordance with Rule 2005(f)(3), unused RTCs may be sold only during the reconciliation period for the applicable compliance quarter.

[RULE 2005, 5-6-2005; RULE 2012, 5-6-2005]

[Devices subject to this condition: D35]

The NO_X RTC amounts listed in the example conditions above were generated as follows:

Device No.	Description	Annual NSR Increase (lbs)	Quarterly NSR Increase (lbs)
D31	Gas Turbine, 250KW	1,095	273.75
D33	Gas Turbine, 250KW	1,095	273.75
D35	Diesel ICE, 450HP	10,120	2,530

2. Move Devices D31 & D33 from Section H to Section D and Add NO_X Emission Factor Reference

DCOR's two (2) 250 kW gas microturbines (Devices D31 & D33) have been constructed, operational, and initial source testing was completed pursuant to Condition D29.1 on January 14, 2009. The source test report was forwarded to Li Chen in February 2009. Please move these devices to Section D during the next facility permit revision.

In addition, DCOR proposes to add references to the "Emissions and Requirements" column of the facility permit for Devices D31 and D33 to include the NO_X emission factor (46.64 lbs/mmscf) that was used by SCAQMD Engineering to calculate Rule 2005 NSR amounts referenced in Permit Condition I296.1. The PTE emission rates used in the applications for these two (2) devices were generated based on maximum NO_X emission rate (0.5 lb/MW-hr) and maximum fuel consumption and power ratings (2,680 scf/hr @ 250 kW). [i.e., 46.64 lbs/mmscf = (0.5 lb/MW-hr)*(0.25 MW)/(0.00268 mmscf/hr)]. SCAQMD Engineering used the 46.64 lb/mmscf emission factor to generate the Rule 2005 NSR amounts listed in Permit Condition I296.1 (see table on previous page). DCOR believes the 46.64 lb/mmscf emission factor should be used to report NO_X emissions pursuant to RECLAIM in order to be consistent with the Rule 2005 NSR NO_X limits identified in Permit Condition I296.1. The existing 16 ppmv NO_X concentration limit calculated by SCAQMD Engineering and identified in the "Emissions and Requirements" column for each device should remain for compliance screening and source testing purposes.

Please note that DCOR is simply requesting for the PTE emission factor used in the District's permit evaluation to be referenced in the facility permit for use in reporting of RECLAIM NO_X emissions. DCOR does not request for the existing 16 ppmv NO_X concentration limit to be changed or the emission factor reference (46.64 lb/mmscf) to replace the concentration limit in the permit.

3. Change the Responsible Official Information in Section A

As a result of personnel changes at DCOR, please change the Responsible Official in Section A to the following:

RESPONSIBLE OFFICIAL:	TINA WIEGMAN
TITLE:	ES&RC MANAGER
TELEPHONE NUMBER:	(805) 535-2073

RULES EVALUATION:
A brief review of applicable SCAQMD rules and regulations follows:

A. Regulation II: Permits
This application submittal package and completed Forms 400-A and 400-CEQA should satisfy the permit application requirements of Regulation II.

Rule 212 - Standards for Approving Permits: The application is requesting simple permit condition modifications which do not result in any emission increases/decreases. Therefore, public notification is not required for this request.

B. Regulation III: Fees
Rule 301 - Permitting and Associated Fees: The attached check for $2,926.03 should appropriately cover the permit processing fees per Rule 301. The table below summarizes the permit processing fees.

Equipment Description	Schedule	Processing Fee
IC Engine, Non-Emergency <500 hp (D35; A/N 489830; change of condition)	B	$1,037.65
Gas Turbine (Microturbine); 0.25MW (D31; A/N 466415; change of condition)	A	$684.57

Gas Turbine (Microturbine); 0.25MW (D33; A/N 466416; change of condition)	A (50%-identical)	$342.29
RECLAIM Facility Permit Amendment		$861.52
	Total	**$2,926.03**

C. Regulation IV: Prohibitions
No SCAQMD prohibitive rules are applicable to this permit condition modification request.

D. Regulation IX and X: NSPS and NESHAP Standards
No federal NSPS requirements or NESHAP/MACT standards apply to the proposed permit condition modification request.

E. Regulation XI: Source Specific Standards
No SCAQMD Regulation XI rules are applicable to this permit condition modification request.

F. Regulation XIII: New Source Review (NSR)
New source review requirements of Regulation XIII are not triggered since the proposed permit condition modification requests do not result in an emission increase or change in monitoring.

G. Regulation XIV: Toxic Air Contaminants
Rule 1401 - New Source Review for Toxic Air Contaminants: Similar to Regulation XIII, NSR requirements for air toxics are not triggered since the proposed permit condition modification requests do not result in an emission increase or change in monitoring.

H. Regulation XVII: Prevention of Significant Deterioration (PSD)
PSD requirements of Regulation XVII are not triggered since the proposed permit condition modification requests do not result in an emission increase or change in monitoring of any PSD pollutants.

I. Regulation XX: RECLAIM
The facility is an existing NO_x RECLAIM facility, but the proposed permit condition modification requests will not affect the facility's RECLAIM status. DCOR will continue to comply with the RECLAIM program requirements pursuant to Regulation XX.

J. Regulation XXX: Title V Federal Operating Permits
The facility is not a major source/Title V facility. The proposed permit condition modification requests will not affect the facility's major source/Title V status pursuant to Regulation XXX.

If you have any questions or comments, please contact me at (805) 535-2074, or our consultant Mike Shaffer of Shaffer Environmental Consulting at (805) 659-1744.

Sincerely,

Christine White
Environmental Advisor

Attachments: SCAQMD Forms [400-A (4), 400-CEQA (1)]
Enclosures: Check for $2,926.03 (payable to SCAQMD)

South Coast Air Quality Management District

Form 400-CEQA

California Environmental Quality Act (CEQA) Applicability

Mail Application To:
P.O. Box 4944
Diamond Bar, CA 91765

Tel: (909) 396-3385

www.aqmd.gov

The SCAQMD is required by state law, the California Environmental Quality Act (CEQA), to review discretionary permit project applications for potential air quality and other environmental impacts. This form is a screening tool to assist the SCAQMD in clarifying whether or not the project[1] has the potential to generate significant adverse environmental impacts that might require preparation of a CEQA document [CEQA Guidelines §15060(a)].[2] Refer to the attached instructions for guidance in completing this form.[3] For each Form 400-A application, also complete and submit one Form 400-CEQA. If submitting multiple Form 400-A applications for the same project at the same time, only one 400-CEQA form is necessary for the entire project. If you need assistance completing this form, contact Lori Inga at (909) 396-3109.

FACILITY INFORMATION

Business Name of Operator to Appear on the Permit:	Facility ID (6-Digit):
DCOR LLC	143740

Project Description:

Request change of permit condition pursuant to Rule 2005(f)(3) to limit quarterly NOX emissions thus allowing excess RTCs to be sold/transferred at the end of each quarter.

REVIEW FOR EXEMPTION FROM FURTHER CEQA ACTION

Check "Yes" or "No" as applicable

	Yes	No	Is this application for:
A.	○	◉	**A CEQA and/or NEPA document previously or currently prepared that specifically evaluates this project?** If yes, a permit cannot be issued until a Final CEQA document and Notice of Determination is submitted.
B.	○	◉	**A request for a change of permittee only (without equipment modifications)?**
C.	○	◉	**Equipment certification or equipment registration** (qualifies for Rule 222)**?**
D.	○	◉	**A functionally identical permit unit replacement with no increase in rating or emissions?**
E.	○	◉	**A change of daily VOC permit limit to a monthly VOC permit limit?**
F.	○	◉	**Equipment damaged as a result of a disaster during state of emergency?**
G.	○	◉	**A Title V** (i.e., Regulation XXX) **permit renewal (without equipment modifications)?**
H.	○	◉	**A Title V administrative permit revision?**
I.	○	◉	**The conversion of an existing permit into an Initial Title V permit?**

If **"Yes"** is checked for any question above, your application does not require additional evaluation for CEQA applicability. Skip to page 2, "SIGNATURES" and sign and date this form.

REVIEW OF IMPACTS WHICH MAY TRIGGER CEQA

Complete Sections I-VI by checking "Yes" or "No" as applicable. To avoid delays in processing your application(s), explain all "Yes" responses on a separate sheet and attach it to this form.

	Yes	No	Section I – General
1.	○	◉	**Has this project generated any known public controversy regarding potential adverse impacts that may be generated by the project?** Controversy may be construed as concerns raised by local groups at public meetings; adverse media attention such as negative articles in newspapers or other periodical publications, local news programs, environmental justice issues, etc.
2.	○	◉	**Is this project part of a larger project?**
			Section II – Air Quality
3.	○	◉	**Will there be any demolition, excavating, and/or grading construction activities that encompass an area exceeding 20,000 square feet?**
4.	○	◉	**Does this project include the open outdoor storage of dry bulk solid materials that could generate dust?** If Yes, include a plot plan with the application package.

[1] A "project" means the whole of an action which has a potential for resulting in physical change to the environment, including construction activities, clearing or grading of land, improvements to existing structures, and activities or equipment involving the issuance of a permit. For example, a project might include installation of a new, or modification of an existing internal combustion engine, dry-cleaning facility, boiler, gas turbine, spray coating booth, solvent cleaning tank, etc.

[2] To download the CEQA guidelines, visit http://ceres.ca.gov/env_law/state.html.

[3] To download this form and the Instructions, visit http://www.aqmd.gov/ceqa or http://www.aqmd.gov/permit

© South Coast Air Quality Management District, Form 400-CEQA (2006.02)

	Yes	No	
5.	○	◉	**Would this project result in noticeable off-site odors from activities that may not be subject to SCAQMD permit requirements?** For example, compost materials or other types of greenwaste (i.e., lawn clippings, tree trimmings, etc.) have the potential to generate odor complaints subject to Rule 402 – Nuisance.
6.	○	◉	**Does this project cause an increase of emissions from marine vessels, trains and/or airplanes?**
7.	○	◉	**Will the proposed project increase the QUANTITY of hazardous materials stored aboveground onsite or transported by mobile vehicle to or from the site by greater than or equal to the amounts associated with each compound on the attached Table 1?[4]**
			Section III – Water Resources
8.	○	◉	**Will the project increase demand for water at the facility by more than 5,000,000 gallons per day?** The following examples identify some, but not all, types of projects that may result in a "yes" answer to this question: 1) projects that generate steam; 2) projects that use water as part of the air pollution control equipment; 3) projects that require water as part of the production process; 4) projects that require new or expansion of existing sewage treatment facilities; 5) projects where water demand exceeds the capacity of the local water purveyor to supply sufficient water for the project; and 6) projects that require new or expansion of existing water supply facilities.
9.	○	◉	**Will the project require construction of new water conveyance infrastructure?** Examples of such projects are when water demands exceed the capacity of the local water purveyor to supply sufficient water for the project, or require new or modified sewage treatment facilities such that the project requires new water lines, sewage lines, sewage hook-ups, etc.
			Section IV – Transportation/Circulation
10.			**Will the project result in** (Check all that apply):
	○	◉	**a. the need for more than 350 new employees?**
	○	◉	**b. an increase in heavy-duty transport truck traffic to and/or from the facility by more than 350 truck round-trips per day?**
	○	◉	**c. increase customer traffic by more than 700 visits per day?**
			Section V – Noise
11.	○	◉	**Will the project include equipment that will generate noise GREATER THAN 90 decibels (dB) at the property line?**
			Section VI – Public Services
12.			**Will the project create a permanent need for new or additional public services in any of the following areas** (Check all that apply):
	○	◉	**a. Solid waste disposal?** Check "No" if the projected potential amount of wastes generated by the project is less than five tons per day.
	○	◉	**b. Hazardous waste disposal?** Check "No" if the projected potential amount of hazardous wastes generated by the project is less than 42 cubic yards per day (or equivalent in pounds).

"REMINDER: *For each "Yes" checked in the sections above, attach all pertinent information including but not limited to estimated quantities, volumes, weights, etc.*"

SIGNATURES

I HEREBY CERTIFY THAT ALL INFORMATION CONTAINED HEREIN AND INFORMATION SUBMITTED WITH THIS APPLICATION IS TRUE AND CORRECT TO THE BEST OF MY KNOWLEDGE. I UNDERSTAND THAT THIS FORM IS A SCREENING TOOL AND THAT THE SCAQMD RESERVES THE RIGHT TO CONSIDER OTHER PERTINENT INFORMATION IN DETERMINING CEQA APPLICABILITY.

SIGNATURE OF RESPONSIBLE OFFICIAL OF FIRM:	TITLE OF RESPONSIBLE OFFICIAL OF FIRM:	
Christine White	Environmental Advisor	
TYPE OR PRINT NAME OF RESPONSIBLE OFFICIAL OF FIRM:	**RESPONSIBLE OFFICIAL'S TELEPHONE NUMBER:**	**DATE Signed:**
Christine White	(805) 535-2074	1/19/11
SIGNATURE OF PREPARER, IF PREPARED BY PERSON OTHER THAN RESPONSIBLE OFFICIAL OF FIRM:	**TITLE OF PREPARER:**	
TYPE OR PRINT NAME OF PREPARER:	**PREPARER'S TELEPHONE NUMBER:**	**DATE Signed:**

THIS CONCLUDES FORM 400-CEQA. INCLUDE THIS FORM AND THE ATTACHMENTS WITH FORM 400-A.

[4] Table 1 – Regulated Substances List and Threshold Quantities for Accidental Release Prevention can be found in the Instructions for Form 400-CEQA.

DCOR
ple Court, Suite 290
tura, CA 93003

CERTIFIED MAIL

7008 3230 0001 6942 0702

UNITED STATES POSTAGE
PITNEY BOWES
02 1P $ 006.32⁰
0002663921 JAN 19 2011
MAILED FROM ZIP CODE 93003

Permit Services
South Coast AQMD
P.O. Box 4944
Diamond Bar, CA 91765-0944

Cancelled

ROUTING RECORD

DATE	FROM	TO	ACTION
3-28-14	GIØ1	BGØ1	I
4-8-14	BGØ1	F16	Accept
4-15-16	BGØ1	J707	Cancel
4-20-16	J707	RS	Cancelled

REFERENCE TO OTHER APCD RECORDS INCLUDING VARIANCES

This is the Master File

RECLAIM Facility

CEB 350

Clean Enclosed Burner

APPL # 561638
I.D. # 143740

DCOR LLC
OFFSHORE PLATFORM ESTHER
SEAL BEACH
GAS FLARE

Date: 03/04/14

South Coast Air Quality Management District

Form 400-A

Application Form for Permit or Plan Approval

List only one piece of equipment or process per form.

Mail To:
SCAQMD
P.O. Box 4944
Diamond Bar, CA 91765-0944

Tel: (909) 396-3385
www.aqmd.gov

Section A - Operator Information

1. Facility Name (Business Name of Operator to Appear on the Permit): DCOR, LLC

2. Valid AQMD Facility ID (Available On Permit Or Invoice Issued By AQMD): 143740

3. Owner's Business Name (If different from Business Name of Operator): same

Section B - Equipment Location Address

4. Equipment Location Is: (•) Fixed Location ( ) Various Location
(For equipment operated at various locations, provide address of initial site.)

Offshore Platform Esther, State Parcel 3095.1
Street Address

Seal Beach , CA 92806
City Zip

Christine White — Environmental Advisor
Contact Name Title

(805) 535-2074 Ext. (805) 535-2075
Phone # Fax #

E-Mail: cwhite@dcorllc.com

Section C - Permit Mailing Address

5. Permit and Correspondence Information:
☐ Check here if same as equipment location address

290 Maple Court, Suite 290
Address

Ventura , CA 93003
City State Zip

Christine White — Environmental Advisor
Contact Name Title

(805) 535-2074 Ext. (805) 535-2075
Phone # Fax #

E-Mail: cwhite@dcorllc.com

Section D - Application Type

6. The Facility Is: ( ) Not In RECLAIM or Title V (•) In RECLAIM ( ) In Title V ( ) In RECLAIM & Title V Programs

7. Reason for Submitting Application (Select only ONE):

7a. New Equipment or Process Application:
(•) New Construction (Permit to Construct) (10)
( ) Equipment On-Site But Not Constructed or Operational
( ) Equipment Operating Without A Permit *
( ) Compliance Plan
( ) Registration/Certification
( ) Streamlined Standard Permit

7b. Facility Permits:
( ) Title V Application or Amendment (Refer to Title V Matrix)
( ) RECLAIM Facility Permit Amendment

7c. Equipment or Process with an Existing/Previous Application or Permit:
( ) Administrative Change
( ) Alteration/Modification
( ) Alteration/Modification without Prior Approval *
( ) Change of Condition
( ) Change of Condition without Prior Approval *
( ) Change of Location
( ) Change of Location without Prior Approval *
( ) Equipment Operating with an Expired/Inactive Permit *

Existing or Previous Permit/Application
If you checked any of the items in 7c., you MUST provide an existing Permit or Application Number:

* A Higher Permit Processing Fee and additional Annual Operating Fees (up to 3 full years) may apply (Rule 301(c)(1)(D)(i)).

8a. Estimated Start Date of Construction (mm/dd/yyyy):	8b. Estimated End Date of Construction (mm/dd/yyyy):	8c. Estimated Start Date of Operation (mm/dd/yyyy):
08/01/2014	09/01/2014	09/01/2014

9. Description of Equipment or Reason for Compliance Plan (list applicable rule):
GAS FLARE, GROUND, FLARE INDUSTRIES, MODEL CEB 350, 12.0 MMBTU/HR

10. For Identical equipment, how many additional applications are being submitted with this application? (Form 400-A required for each equipment / process): 0

11. Are you a Small Business as per AQMD's Rule 102 definition? (10 employees or less and total gross receipts are $500,000 or less OR a not-for-profit training center) (•) No ( ) Yes

12. Has a Notice of Violation (NOV) or a Notice to Comply (NC) been issued for this equipment? (•) No ( ) Yes
If Yes, provide NOV/NC#:

Section E - Facility Business Information

13. What type of business is being conducted at this equipment location? Crude Oil & Gas Production

14. What is your business primary NAICS Code? (North American Industrial Classification System) 211111

15. Are there other facilities in the SCAQMD jurisdiction operated by the same operator? ( ) No (•) Yes

16. Are there any schools (K-12) within 1000 feet of the facility property line? (•) No ( ) Yes

Section F - Authorization/Signature

I hereby certify that all information contained herein and information submitted with this application are true and correct.

17. Signature of Responsible Official: Christine White

18. Title of Responsible Official: Environmental Advisor

19. I wish to review the permit prior to issuance. (This may cause a delay in the application process.) ( ) No (•) Yes

20. Print Name: Christine White

21. Date: 2/24/14

22. Do you claim confidentiality of data? (If Yes, see instructions.) (•) No ( ) Yes

23. Check List: ☒ Authorized Signature/Date ☒ Form 400-CEQA ☐ Supplemental Form(s) (ie., Form 400-E-xx) ☒ Fees Enclosed

AQMD USE ONLY	APPLICATION TRACKING #	CHECK #	AMOUNT RECEIVED	PAYMENT TRACKING #	VALIDATION
	561638	1496	$ 11,439.02	114667	3-4-14 MK

DATE	APP REJ	DATE	APP REJ	CLASS I III	BASIC CONTROL	EQUIPMENT CATEGORY CODE	ITEM	ENGINEER	REASON ACTION TAKEN
							0		

© South Coast Air Quality Management District, Form 400-A (2012.07)

1734 11,439.02

1 of 4

14 MAR -4 P6:29

S.C.A.Q.M.D.
PERMIT PROCESSING

Cust needs
to replace
check - (exp.)
s/w Clusters
3-18-14

TOK

SCAQMD PERMIT PROCESSING SYSTEM (PPS)

FEE DATA - SUMMARY SHEET

52

Application No :	561638	IRS/SS No:	
Previous Application No:		Previous Permit No:	

Company Name :	DCOR LLC	Facility ID:	143740
Equipment Street:	OFFSHORE PLATFORM ESTHER PRC 3095 1, SEAL BEACH CA 90740		
Equipment Desc :	FLARE, OTHER		

Equipment Type :	CONTROL			Fee Charged by:	C-CAT
B-CAT NO. :	000000	C-CAT NO:	08	Fee Schedule:	C
Facility Zone :	18	Deemed Compl. Date:	4/3/2014	Public Notice:	NO

Evaluation Type :	PERMIT TO CONSTRUCT (PC)	Small Business:	☐
Disposition :	Cancel PC - Don't Refund Fee, Recommended by Engineer	Higher Fees for Failing to Obtain a Permit:	☐
Lead Appl. No :		Identical Permit Unit:	☐

Air quality Analysis			$0.00	Filing Fee Paid:	$0.00
E.I.R			$0.00	Permit Processing Fee Paid:	$3,508.86
Health Risk Assessment			$0.00	Permit Processing Fee Calculated*:	$3,508.86
Public Notice Preparation Fee			$0.00		
Public Notice Publication Fee			$0.00	Permit Processing Fee Adjustment:	$0.00
Expedited Processing	Hours:	0.00	$0.00		
Source Test Review	Hours:	0.00	$0.00		
Time & Material	Hours:	0.00	$0.00		
				Total Additional Fee:	$0.00
				Additional Charge:	$0.00

COMMENTS:

RECOMMENDED BY: JASON TAYLOR DATE: 04/20/2016

REVIEWED BY: J.T. DATE: 4/20/2016

* ADJUSTED FOR SMALL BUSINESS, IDENTICAL EQUIPMENT AND P/O NO P/C PENALTY

NSR DATA SUMMARY SHEET

Application No	561638
Application Type	10
Application status	PENDAPPRV
Previous Apps, Dev	,

Company Name	DCOR LLC
Company ID	143740
Address	OFFSHORE PLATFORM ESTHER , PRC 3095 1 SEAL BEACH, CA 90740-
Reclaim	NOX
Reclaim Zone	01
Air Basin	SC
Zone	18
Title V	NO

Device ID	0 -
Estimated Completion Date	09-01-2014
Heat Input Capacity	0 Millions BTU/Hr
Priority Reserve	NONE - No Priority Access Requested
Recommended Disposition	52 - APPLICATION CANCELLED, KEEP ALL FEES
PR Expiration	12-31-9999
School within 1,000 feet	NO
Operating Weeks per year	1
Operating Days per week	1
Operating Hours	
Monday	08:00 to 09:00
Tuesday	00:00 to 00:00
Wednesday	00:00 to 00:00
Thursday	00:00 to 00:00
Friday	00:00 to 00:00
Saturday	00:00 to 00:00
Sunday	00:00 to 00:00

Emittant	CO	
BACT		
Cost effectiveness	NO	
Source Type	MINOR	
Emis Increase	0	
Modelling	N/A	
Public Notice	N	
Controlled Emission		
Max Hourly	0.00	Lbs/Hr
Max Daily	0.00	Lbs/day
Uncontrolled Emission		
Max Hourly	0.00	Lbs/Hr
Max Daily	0.00	Lbs/day
Current Emission		
BACT 30 Day Avg	0.00	Lbs/day
Annual Emission	0.00	Lbs/year
District Emission		

Supervisor's Approval 

Supervisor's Review Date 4/20/2016

Processed By jtaylor

SOUTH COAST AIR QUALITY MANAGEMENT DISTRICT

ENGINEERING AND COMPLIANCE

M E M O R A N D U M

DATE: **April 14, 2016**

TO: **File**

FROM: **Bill Gobrial**

SUBJECT: **DCOR LLC, ID #143740 application numbers 561638, 561639, 561640, and 561641.**

The applicant submitted the subject 4 application on March 4, 2014. A/N 561638, 39 and 561640 were submitted for a new construction of three gas flares at their Esther Platform located in the state water approximately 1.5 miles offshore of Seal Beach Pier. A/N 561641 for RECLAIM revision. During the permit to construct evaluation, mid-August 2014, California Environmental Quality Act staff at the District was contacted by *Cynthia Herzog, Senior Environmental Scientist,* California State Lands Commission, and was determined that the District will serve as the lead agency for the proposed project and be responsible for preparation and approval of the environmental document, which was determined by the District CEQA staff to be an Initial Study/Mitigated Negative Declaration (IS/MND). Mid December 2014, the draft document was submitted to the District CEQA staff. The document has not yet been approved by the District staff.
Recently, I received a letter from DCOR LLC, stating that the proposed three flair project on platform Esther will not be going forward and requesting a cancellation of application numbers 561638, 639, 640, and 561641. Therefore, a cancellation of the subject applications is recommended.

DCOR

Status 2021

April 6, 2016

Permit Services
South Coast Air Quality Management District
P.O. Box 4944
Diamond Bar, CA 91765-0944

* Please cancel! BG | D

Re: Permit Application Cancellation Request
Proposed Three (3) Enclosed Flare System
Application Nos. 561638, 561639, 561640, and 561641
DCOR, LLC - Platform Esther (Facility ID# 143740)
Offshore State Lease PRC 3095.1, Seal Beach

Dear Permit Services:

DCOR, LLC requests that Permit Application Nos. 561638, 561639, 569640, and 569641 be canceled. The applications were received by SCAQMD on March 4, 2014 and deemed complete on April 3, 2014. The proposed Three (3) Enclosed Flare System project on Platform Esther will not be going forward.

If you require any additional information, please contact me at (805) 535-2074.

Sincerely,

Christine White

Christine White
Environmental Advisor

Cc: Atul Kandhari (SCAQMD)
Barbara Radlein (SCAQMD)
Mike Shaffer (Shaffer Environmental Consulting)

Nabil Gobrial

From: Mike Shaffer [shafferenv@pacbell.net]
Sent: Thursday, February 12, 2015 3:25 PM
To: Nabil Gobrial
Subject: Fw: RECLAIM NOx RTCs - Esther Flare
Attachments: RTC Transaction Confirmation Letter Esther Purchase April 2, 2014.pdf

Bill,

See below for the NOx RTC purchase information. The e-mail is from April 2014, so the credits are in DCOR's allocation account now. I only have one of the 5,000-lb trade confirmation receipts (attached).

Mike

----- Original Message -----
From: Christine White
To: Mike Shaffer
Sent: Thursday, February 12, 2015 12:54 PM
Subject: RECLAIM NOx RTCs - Esther Flare

10,000 lbs RECLAIM NOx RTCs purchased for Esther Flare.

From: Christine White
Sent: Monday, April 07, 2014 11:14 AM
To: 'Mike Shaffer'
Subject: FYI - RECLAIM NOx RTCs - Esther Flare

FYI – DCOR just purchased 10,000 lbs of RECLAIM NOx RTCs (Cycle 2, continuous stream) with first year expiring June 2015. These will be deposited in the Esther facility bank.

5,000 lbs @ $52 per pound and 5,000 lbs @ $60 per pound for a total of $560,000 plus commission and fees (ouch!) That's a lot of money!!

You should see these credits in the Esther facility bank in the near future.

Christine

-- IMPORTANT INFORMATION: This e-mail, including all attachments, constitutes an electronic communication within the meaning of the "Electronic Communications Privacy Act, 18 USC 2510" and may not be shown, printed or read by anyone other than the intended recipient(s). This message is confidential and may be legally privileged. If you are not an intended recipient or if you have received this message in error, you are hereby notified that any dissemination, distribution or reproduction of this e-mail is strictly prohibited. If you have received this e-mail in error, please immediately notify us by reply e-mail or telephone at 805-535-2000, then promptly and permanently delete this message. --

SOUTH COAST AIR QUALITY MANAGEMENT DISTRICT

RTC Transfer Confirmation

SCAQMD RECLAIM ADMINISTRATION
P.O. BOX 4830, DIAMOND BAR, CA 91765-0830

BUYER ID:143740

This letter is to confirm that the South Coast Air Quality Management District (AQMD) has received RTC trading information to comply with Rule 2007-Trading Requirements. The following summarizes your company information and the registration information that you and your trading partner specified in Form 2007-2. The transactions have been recorded and the RTC Listing was updated.

Registration No: 12396

Recording Date: 4/2/14
Pollutant: NOX

	TRANSFER FROM:	TRANSFER TO:
Company Name:	EDGINGTON OIL COMPANY	DCOR LLC
Facility ID:	800264	143740
Signing Representative:	Glenn Clausen	Christine White
Mailing Address:	14700 DOWNEY AVE PARAMOUNT, CA 90723-	290 MAPLE CT STE 290 VENTURA, CA 93009-

Terms of RTC Transferred			Original Zone	Quantity (lb/yr)	Use Code	Generation Code	Account Source	Origin of Credits
Cycle	From Compliance Year (*)	To Compliance Year (*)						
2	6/30/2015	6/30/All Years After	COASTAL	5,000	01	03	A	REGXX

(*) RTC Expiration Date

TOTAL VALUE OF THIS INFINITE-YEAR BLOCK TRADE IS $260,000.00

Approved By: Jill Whynot
(Signature)
JILL WHYNOT
ASSISTANT DEPUTY EXECUTIVE OFFICER
Engineering & Compliance

Code Description:
Use Code (01): Increase RTC Allocation account balance to satisfy annual compliance
Generation Code (03): Production Decrease
Account Source (A): Allocation

Nabil Gobrial

From: Mike Shaffer [shafferenv@pacbell.net]
Sent: Friday, February 13, 2015 12:45 PM
To: Nabil Gobrial
Cc: White, Christine
Subject: Re: DCOR Platform Esther Flare Project (ID# 143740)

Bill,

I know you're out of the office today and will return on Tuesday, but after thinking about our discussions yesterday and the last message I left you around 5pm, I had some additional ideas that I'd like to share with you.

1. Since all of the calculations presented in the CEQA documents reflect a 5.0 MMSCF/year throughput limit for the standby/emergency FEF-90 flare **IN ADDITION TO** the 219.0 MMSCF/year limit for the CEB units (350 and 800-CA combined), why don't we stay with that same assumption for the permitting. Therefore the permitting documents would match the CEQA documents, and not require an overhaul to the CEQA documents and the additional time required for the CEQA group to re-review the revised calculations and documentation. DCOR is in a time crunch since it is anticipated that Breitburn will no longer accept their gas in just a few short months, thus requiring a shutdown of the platform.

2. You mentioned the possibility of a monthly limit being placed on the flares, but we didn't discuss if it would propose a limit of 18.25 MMSCF/mo (219.0 MMSCF divided by 12 months) or 18.00 MMSCF/mo (600 MSCFD x 30 days). If you were thinking it would be the latter then I brought up the issue of 31 day months, and the annual total would be only 216.0 MMSCF/year (600 MSCFD x 30 days/mo x 12 mos). How about going with a rolling 12 consecutive month annual limit of 219.0 MMSCF/year like I have seen in other permits to alleviate this issue while still maintaining a 600 MSCFD limit (average) and a monthly recordkeeping requirement. Just a thought.

Have a good weekend. Talk to you next week.

Mike Shaffer
Shaffer Environmental Consulting
80 N. Crocker Avenue
Ventura, CA 93004-3845
(805) 659-1744 office
(805) 207-1945 cell
(805) 435-1634 fax
shafferenv@pacbell.net

----- Original Message -----
From: Mike Shaffer
To: Nabil Gobrial - SCAQMD
Cc: Christine White - DCOR
Sent: Thursday, February 12, 2015 11:43 AM
Subject: Re: DCOR Platform Esther Flare Project (ID# 143740)

Bill,

DCOR would like to modify their original permit application submittal for the Platform Esther Flare Project to accept a 600 MCFD throughput limit (all 3 flares), which equates to a 219.0 MMSCF/year annual limit (600 MCFD x 365 days/year). DCOR would anticipate a permit condition being added to the permit that would be tagged to the 3 flares and limit their combined throughput to 219.0 MMSCF/year. DCOR would also anticipate each individual flare having a throughput limit except for maybe the CEB 350 since it's maximum design throughput is 92.35 MMSCF/yr, which is below the 219.0 MMSCF/yr overall limit. The CEB 800-CA would be limited to 219.0 MMSCF/yr and the FEF-90 to 5.0 MMSCF/yr (200 hours @ 600 MCFD).

Attached is a the revised calculation spreadsheet clarifying what we disscussed earlier (changes only made to "New Equipment" section of the 'PTE - Summary (600 MCFD)' tab. Please call me if you have any questions.

Mike Shaffer
Shaffer Environmental Consulting
80 N. Crocker Avenue
Ventura, CA 93004-3845
(805) 659-1744 office
(805) 207-1945 cell
(805) 435-1634 fax
shafferenv@pacbell.net

.

----- Original Message -----
From: Mike Shaffer
To: Nabil Gobrial - SCAQMD
Cc: Christine White - DCOR
Sent: Wednesday, February 11, 2015 6:16 PM
Subject: DCOR Platform Esther Flare Project (ID# 143740)

Bill,

Attached is the 600 MCFD Excel spreadsheet that I referred to in my voice message. I moved the CEQA-specific calculation sheets to the end of the workbook and colored their tabs in red. Call me in you have any questions.

Mike Shaffer
Shaffer Environmental Consulting
80 N. Crocker Avenue
Ventura, CA 93004-3845
(805) 659-1744 office
(805) 207-1945 cell
(805) 435-1634 fax
shafferenv@pacbell.net

PTE PosBal

Facility:143740

09-17-2014

	Emittant	PTE	POSBAL	Parent ID
1	CO	84.00	0.00	143740
2	NOX	58.00	0.00	143740
3	PM10	5.00	0.00	143740
4	ROG	20.00	0.00	143740
5	SOX	0.00	0.00	143740

DCOR LLC, ID 143740
Three Flares Project

CEB 350 Flare:

Based on the flare rating of 12 MMbtu/hr, the criteria pollutants are summarized below:

Emission Rate for CEB 350

Flare Rate [a]	Pollutant	EF lb/MMbtu	lb/hr [b]	lb/day [c]	lb/mo [d]	lb/yr [e]	30-day [f]	Conc. [g] PPM@3%
12 MMbtu/hr	NOx	0.0182	0.218	5.23	159.14	1910	5.3	15
	ROG	0.0042	0.050	1.2	36.5	438	1.2	10 as CH4
	PM10	0.0071	0.085	2.0	62.05	745	2.1	-
	SOx	0.0044	0.053	1.27	38.69	464.28	1.29	2.6 as SO2
	CO	0.0074	0.089	2.14	64.97	780	2.2	10 as CO

a. provided by applicant
b. Emission lb/hr = {EF (lb/MMbtu)} x (12 MMbtu/hr)
c. Emission lb/day =emission lb/hr x hrs/day
d. Emission lb/mo = emission lb/ hr x hrs/mo
e. Emission lb/yr = emission lb/hr x hrs/yr
f. 30 day Avg. lb/day = (emission lb/mo)/ (30 day/mo)
g. Conc. ppm @3%O2= (lb/MMbtu/ MW)(SMW/Fd)(17.9/20.9) x 1000000

Fugitive emissions of VOCs are calculated using component counts (valves, pumps....etc) produced gas analysis, 2 years of recent Rule 1173 leak data, and CAPCOA/ SCAQMD emission factors for oil and gas production. The PTE from the fugitive emissions calculated based on the worst-case leak rate from 2 years of leak data plus 20%.

Calculated total VOC Fugitive emissions = 0.0046 lb/hr
= 0.1093 lb/day
= 39.9 lb/year

So total VOC emissions from CEB 350 = 0.05+ 0.0046 =0.055 lb/hr
= 1.2 + 0.1093 = 1.31 lb/day ------->
= 438 + 39.9 = 477.9 lb/yr

The total criteria emissions including fugitive emissions as follow:

Pollutant	lb/day (30-day)
NOx	5.3
ROG	1.2+ 0.11(Fugitive) = 1.31
PM10	2.1
SOx	1.29
CO	2.2

CEB 800 Flare:

Based on the flare rating of 39 MMbtu/hr, the criteria pollutants are summarized below:

Emission Rate for CEB 800

Flare Rate [a]	Pollutant	EF lb/MMbtu	lb/hr [b]	lb/day [c]	lb/mo [d]	lb/yr [e]	30-day [f]	Conc. [g] PPM@3%
39 MMbtu/hr	NOx	0.0182	0.71	17	518.3	6220	17.28	15
	ROG	0.0042	0.164	3.94	119.7	1437	4	10 as CH4
	PM10	0.0071	0.277	6.65	202.2	1989	6.7	-
	SOx	0.0044	0.172	4.13	125.6	1507	4.19	2.6 as SO2
	CO	0.0074	0.289	6.94	211	2532	7	10 as CO

a. provided by applicant
b. Emission lb/hr = {EF (lb/MMbtu)} x (39 MMbtu/hr)
c. Emission lb/day =emission lb/hr x hrs/day
d. Emission lb/mo = emission lb/ hr x hrs/mo
e. Emission lb/yr = emission lb/hr x hrs/yr
f. 30 day Avg. lb/day = (emission lb/mo)/ (30 day/mo)
g. Conc. ppm @3%O2= (lb/MMbtu/ MW)(SMW/Fd)(17.9/20.9) x 1000000

Similar to the CEB 350 the fugitive emissions of VOCs are calculated using component counts (valves, pumps....etc) produced gas analysis, 2 years of recent Rule 1173 leak data, and CAPCOA/ SCAQMD emission factors for oil and gas production. The PTE from the fugitive emissions calculated based on the worst-case leak rate from 2 years of leak data plus 20%.

Calculated total VOC Fugitive emissions = 0.0041 lb/hr
= 0.0991 lb/day
= 36.16 lb/year

So total VOC emissions from CEB 800 = 0.164+ 0.0041 =0.1681 lb/hr
= 3.94 + 0.0991 = 4.04 lb/day------→
= 1437 + 36.16 = 1473.16 lb/yr

The total criteria emissions including fugitive emissions as follows:

Pollutant	lb/day (30-day)
NOx	17.28
ROG	3.94 +0.1(fugitive)= 4.04
PM10	6.7
SOx	4.19
CO	7

FEF 90 Stand-By Flare:

Based on the flare rating of 51 MMbtu/hr, the criteria pollutants are summarized below:

Emission Rate for standby FEF-90 Flare

Flare Rate [a]	Pollutant	EF lb/MMbtu	lb/hr [b]	lb/day [c]	lb/mo [d]	lb/yr [e]	30-day [f]	Conc. [g] PPM@3%
51 MMbtu/hr	NOx	0.06	3.06	73.44	51	612	1.7	50
	ROG	0.0061	0.31	7.4	5.17	62	0.17	15 as CH4
	PM10	0.0066	0.34	8.07	5.7	68	0.19	-
	SOx	0.0044***	0.224	5.4	3.7	44.8	0.123	2.6 as SO2
	CO	0.37	18.87	452.88	314.8	3778	10.5	500 as CO

a. provided by applicant
b. Emission lb/hr = {EF (lb/MMbtu)} x (51 MMbtu/hr)
c. Emission lb/day =emission lb/hr x hrs/day
d. Emission lb/mo = lb per yr/ 12 mos per yr
e. Emission lb/yr = emission lb/hr x 200 hrs/yr
f. 30 day Avg. lb/day = (emission lb/mo)/ (30 day/mo)
g. Conc. ppm @3%O2= (lb/MMbtu/ MW)(SMW/Fd)(17.9/20.9) x 1000000

The VOC fugitive emissions for the EFE 90 are calculated similar to the CEB 350 and CEB 800. The EFE flare is a standby unit and limited to 200 hours of operation. The fugitive emissions are summarized as follow:

Calculated total VOC Fugitive emissions = 0.0031 lb/hr
= 0.074 lb/day
= 0.62 lb/year

~~So total VOC emissions from EFE 90 = 0.31+ 0.0031 =0.3131 lb/hr~~

= 0.3131 lb/hr x 200 hrs/yr = 62.62 lb/yr
= (62.62 lb/yr)/ (yr/12 mo) =5.2 lb/mo
VOC emission = 0.173 lb/day 30-day average.

The total criteria emissions including fugitive emissions as follow:

Pollutant	lb/day (30-day)
NOx	1.7
ROG	0.17+0.003(fugitive) = 0.173
PM10	0.19
SOx	0.123
CO	10.5

SUMMARY OF EMISSIONS

The following table summarizes the emissions lb/day (30-day average) from each flare and the total for each contaminant:

Flare	NOx	ROG	PM10	SOx	CO
CEB 350	**5.3**	**1.3**	**2.1**	**1.29**	2.2
CEB 800	**17.3**	**4.0**	**6.7**	**4.19**	**7.0**
FEF 90, Stand-by	1.7	0.2	0.2	0.12	**10.5**
Total	24.3	5.5	9	5.6	19.7
Worst-case emissions*	**22.6**	**5.3**	**8.8**	**5.48**	**17.5**

*The standby flare will only be allowed to operate when one of the other two flares in operation. These emissions represent the worst-case emission for each contaminant.

The total MICR for the project is the addition of the MICR for the three flares and summarized as follow:

Item	Calculated	$<1.0 \times 10^{-6}$
MICR, residential	7.17×10^{-9}	Yes
MICR, commercial	2.77×10^{-9}	Yes

350 & 92.35
300 MMscf/yr

12 x 10 x 8760 HP/yr 1138

DCOR, LLC
Platform Esther (143740)
Facility Potential to Emit (PTE)/Permitted Emissions
[PTE @ 600 MCFD]

EXISTING EQUIPMENT

Device	Fuel	Maximum Fuel Usage (MMscf/yr)	NOX EF (lbs/MMscf)	VOC EF (lbs/MMscf)	PM10 EF (lbs/MMscf)	SOX EF (lbs/MMscf)	CO EF (lbs/MMscf)	NOX (lbs/yr)	VOC (lbs/yr)	PM10 (lbs/yr)	SOX (lbs/yr)	CO (lbs/yr)
Micro-Turbine 1 (D31)	Nat/Prod Gas	23.48	46.64	83.94	8.20	6.70	559.63	1,095.00	1,971.00	193.00	158.00	13,140.00
Micro-Turbine 2 (D33)	Nat/Prod Gas	23.48	46.64	83.94	8.20	6.70	559.63	1,095.00	1,971.00	193.00	158.00	13,140.00
	subtotal	*46.96*						*2,190.00*	*3,942.00*	*386.00*	*316.00*	*26,280.00*

[Note 1: Reference Permit Conditions A63.1, A63.2 & I296.1 for EFs and annual limits.]

Device	Permit Units (Device IDs)	NOX (lbs/yr)	VOC (lbs/yr)	PM10 (lbs/yr)	SOX (lbs/yr)	CO (lbs/yr)
Fugitive Components	O/G/W (D3-10); WW (D11-15, D24); VRU (D16); Fugitives (D17-22); Dehy (D25-28); Odor (D2	0.00	2,475.00	0.00	0.00	0.00

[Note 2: In 2007 during the permitting of MTs (A/Ns 518222 & 518223), an hour limit reduction was needed on old crane (D2) to stay under 4 tpy, so LI Chen must have documentation in permit files.]
[Note 3: Fugitive VOC PTE estimated based on facility-wide NSR VOC balance of 20 lbs/day obtained from SCAQMD's N. Gobrial on 10/22/14]

Device	Fuel	Maximum Fuel Usage (gallons)	NOx EF (lbs/kgal)	VOC EF (lbs/kgal)	PM10 EF (lbs/kgal)	SOx EF (lbs/kgal)	CO EF (lbs/kgal)	NOx (lbs/yr)	VOC (lbs/yr)	PM10 (lbs/yr)	SOx (lbs/yr)	CO (lbs/yr)
E Gen (49hp-R219)	Diesel	490	469.00	37.50	33.50	7.10	102.00	229.81	18.38	16.42	3.48	49.98
E Fire (460hp-D1)	Diesel	4480	469.00	37.50	33.50	7.10	102.00	2,101.12	168.00	150.08	31.81	456.96
Crane (450hp-D35)	Diesel	99440	101.36	7.26	3.47	7.10	24.34	10,079.59	722.24	345.25	706.02	2,420.69
							Existing (permitted), lbs/yr	**14,370.71**	**7,307.24**	**881.33**	**1,053.83**	**29,157.65**
							Existing (permitted), tons/yr	**7.19**	**3.65**	**0.44**	**0.53**	**14.58**

NEW EQUIPMENT

Device	Fuel	Maximum Fuel Usage (MMscf/yr)	NOX EF (lbs/MMscf)	VOC EF (lbs/MMscf)	PM10 EF (lbs/MMscf)	SOX EF (lbs/MMscf)	CO EF (lbs/MMscf)	NOX (lbs/yr)	VOC (lbs/yr)	PM10 (lbs/yr)	SOX (lbs/yr)	CO (lbs/yr)
CEB 350 Flare*	Nat/Prod Gas	92.35	20.83	4.89	5.92	5.03	8.54		39.90			
CEB 800-CA Flare*	Nat/Prod Gas	219.00	20.83	4.89	5.92	5.03	8.54	4,561.96	1,108.10	1,296.30	1,101.88	1,869.66
FEF-90 Flare*	Nat/Prod Gas	5.00	68.30	7.00	7.50	5.03	421.17	341.49	35.62	37.50	25.16	2,105.85
* Includes fugitives	*subtotal*	*316.35*						*4,903.45*	*1,183.61*	*1,333.80*	*1,127.04*	*3,975.51*
							Post-Project (permitted), lbs/yr	**19,274.16**	**8,490.85**	**2,215.12**	**2,180.87**	**33,133.16**
							Post-Project (permitted), tons/yr	**9.64**	**4.25**	**1.11**	**1.09**	**16.57**

[Note 4: Combustion emissions for CEB-350 included in CEB-800-CA since both limited to a combined limit of 219.0 MMCFY (equivalent to 600 MCFD).]
[Note 5: DCOR has purchased 2 lbs/day of VOC ERC offsets and >5,000 lbs/year of indefinte-life NOx RTCs for this project.]

490.85	lbs over 4 tpy
1.26	lbs/day (over 4 tpy excluding FEF-90)
2	lbs/day (to be offset, 1.2x)

DCOR, LLC - Platform Esther (143740)
Emission Calculations - New Flare - CEB 350

DEVICE ID	TBD		
SIC	1311		
PROCESS EQPT DESCRIPTION	FLARE, FLARE INDUSTRIES, CEB 350, 12 MMBTU/HR		
FUEL TYPE/PROCESS INFO	FIELD/PRODUCED GAS		
MAX. ANNUAL PROCESS RATE	92.35	MMCF	[Will be limited to 219 MMCFY combined usage for CEB-350 and CEB-800-CA flares]
MAX. DAILY PROCESS RATE	0.253	MMCF	[Will be limited to 0.6 MMCFD combined usage for CEB-350 and CEB-800-CA flares]
AVG. DAILY PROCESS RATE	0.150	MMCF	(projected by DCOR)

HHV= 1138.30

			check
Fuel in	175.701	scfm	175.701
Exhaust (est)	1,726.55	dscfm (0% O2 in exhaust)	
Exhaust (est)	3,032.34	dscfm (9% O2 in exhaust)	

SUBSTANCE NAME	EMISSION FACTOR (EF) REFERENCE	EF LBS/MMBtu	EF LBS/UNIT	AVG LBS/DAY	PTE LBS/HR	PTE LBS/DAY	PTE LBS/YR	30DA LBS/DAY	CONC PPM @ 3%	
NOx	Manufacturer's Guarantee (15 ppmv @ 3%O2)	0.0183	20.83	3.12	0.22	5.27	1,923.70	5.34	15.29	
VOC / RHC	Manufacturer's Guarantee (10 ppmv @ 3%O2)	0.0043	4.89	0.73	0.05	1.24	452.02	1.26	10.15	(as CH_4)
PM10	Test Results (Linn; 3/26/2013; 0.001 gr/dscf @ 3%)	0.0052	5.92	0.89	0.06	1.50	546.62	1.52	0.0036	(gr/dscf)
SOx	SCAQMD (mass balance 30 ppmv total S as H_2S)	0.0044	5.03	0.75	0.05	1.27	464.64	1.29	2.61	(as SO_2)
CO	Manufacturer's Guarantee (10 ppmv @ 3%O2)	0.0075	8.54	1.28	0.09	2.16	788.40	2.19	10.12	(as CO)

Notes:

1. SOx EF (SCAQMD mass balance conservatively assuming 30 ppmv H_2S content in the gas: (10x10E-6)/(379 dscf/lb-mole)(64 lb/lb-mole)(dscf/1138 BTU) = 0.0044201 lb/MMBTU)

SUBSTANCE NAME	EMITTENT ID	EMISSION FACTOR (EF) REFERENCE	Gas Conc. ppbv	MW lb/lb-mole	PTE lb/hr	PTE lb/day	PTE lb/yr	PTE g/sec (max)
PAHs (total including Naphthalene)	1151		ND		0.00E+00	0.00E+00	0.00000	0.00E+00
Xylenes (m-, p-, o-)	1210	Gas analysis (99.98% DRE, Warren)	234300	106.16	1.38E-04	3.32E-03	1.21214	1.74E-05
Benzene	71432	Gas analysis (99.98% DRE, Warren)	127500	78.11	2.77E-05	6.65E-04	0.24266	3.49E-06
Toluene	108883	Gas analysis (99.98% DRE, Warren)	121456	92.14	6.23E-05	1.49E-03	0.54536	7.84E-06
Propylene	115071	Gas analysis (99.98% DRE, Warren)	30000000	42.08	7.02E-03	1.69E-01	61.52002	8.85E-04
Ethyl Benzene	100414	Gas analysis (99.97% DRE, Warren)	45900	106.17	4.07E-05	9.76E-04	0.35623	5.12E-06
Hexane	110543	Gas analysis (99.98% DRE, Warren)	495000	86.18	2.37E-04	5.70E-03	2.07889	2.99E-05
Trichloroethylene	79016	Gas analysis (99.98% DRE, Warren)	1020	131.39	7.46E-07	1.79E-05	0.00653	9.39E-08

Notes:

2. HAP/toxics mass emissions calculated as follows: lb/hr = (X ppmbv/10E-9)(max. gas flow, dscf/hr)(1 lb-mole/379 dscf)(MW, lb/lb-mole)(1-DRE%/100).
3. HAP/toxics gas concentrations based on sample results from Warren & PXP-Murphy CEB Flare applications; highest value mutiplied by 1.5 (conservative estimate).

DCOR, LLC - Platform Esther (143740)
Emission Calculations - New Flare - CEB 800-CA

DEVICE ID	TBD		
SIC	1311		
PROCESS EQPT DESCRIPTION	FLARE, FLARE INDUSTRIES, CEB 800-CA, 39 MMBTU/HR		
FUEL TYPE/PROCESS INFO	FIELD/PRODUCED GAS		
MAX. ANNUAL PROCESS RATE	219.00	MMCF	[Will be limited to 219 MMCFY combined usage for CEB-350 and CEB-800-CA flares]
MAX. DAILY PROCESS RATE	0.600	MMCF	[Will be limited to 0.6 MMCFD combined usage for CEB-350 and CEB-800-CA flares]
AVG. DAILY PROCESS RATE	0.300	MMCF	(projected by DCOR)

HHV= 1138.30

			check
Fuel in	571.027	scfm	416.667
Exhaust (est)	5,611.28	dscfm (0% O2 in exhaust)	
Exhaust (est)	9,855.11	dscfm (9% O2 in exhaust)	

SUBSTANCE NAME	EMISSION FACTOR (EF) REFERENCE	EF LBS/MMBtu	EF LBS/UNIT	AVG LBS/DAY	PTE LBS/HR	PTE LBS/DAY	PTE LBS/YR	30DA LBS/DAY	CONC PPM @ 3%	
NOx	Manufacturer's Guarantee (15 ppmv @ 3%O2)	0.0183	20.83	6.25	0.52	12.50	4,561.96	12.67	15.29	
VOC / RHC	Manufacturer's Guarantee (10 ppmv @ 3%O2)	0.0043	4.89	1.47	0.12	2.94	1,071.94	2.98	10.15	(as CH_4)
PM10	Test Results (Linn; 3/26/2013; 0.001 gr/dscf @ 3%)	0.0052	5.92	1.78	0.15	3.55	1,296.30	3.60	0.0026	(gr/dscf)
SOx	SCAQMD (mass balance 30 ppmv total S as H_2S)	0.0044	5.03	1.51	0.13	3.02	1,101.88	3.06	2.61	(as SO_2)
CO	Manufacturer's Guarantee (10 ppmv @ 3%O2)	0.0075	8.54	2.56	0.21	5.12	1,869.66	5.19	10.12	(as CO)

Notes:

1. SOx EF (SCAQMD mass balance conservatively assuming 30 ppmv H_2S content in the gas: (10x10E-6)/(379 dscf/lb-mole)(64 lb/lb-mole)(dscf/1138 BTU) = 0.0044201 lb/MMBTU)

SUBSTANCE NAME	EMITTENT ID	EMISSION FACTOR (EF) REFERENCE	Gas Conc. ppbv	MW lb/lb-mole	PTE lb/hr	PTE lb/day	PTE lb/yr	PTE g/sec (max)
PAHs (total including Naphthalene)	1151		ND		0.00E+00	0.00E+00	0.00000	0.00E+00
Xylenes (m-, p-, o-)	1210	Gas analysis (99.98% DRE, Warren)	234300	106.16	3.28E-04	7.88E-03	2.87454	4.13E-05
Benzene	71432	Gas analysis (99.98% DRE, Warren)	127500	78.11	1.31E-04	3.15E-03	1.15094	1.66E-05
Toluene	108883	Gas analysis (99.98% DRE, Warren)	121456	92.14	1.48E-04	3.54E-03	1.29330	1.86E-05
Propylene	115071	Gas analysis (99.98% DRE, Warren)	30000000	42.08	1.67E-02	4.00E-01	145.89214	2.10E-03
Ethyl Benzene	100414	Gas analysis (99.97% DRE, Warren)	45900	106.17	9.64E-05	2.31E-03	0.84477	1.22E-05
Hexane	110543	Gas analysis (99.98% DRE, Warren)	495000	86.18	5.63E-04	1.35E-02	4.93000	7.09E-05
Trichloroethylene	79016	Gas analysis (99.98% DRE, Warren)	1020	131.39	1.77E-06	4.24E-05	0.01549	2.23E-07

Notes:

2. HAP/toxics mass emissions calculated as follows: lb/hr = (X ppmbv/10E-9)(max. gas flow, dscf/hr)(1 lb-mole/379 dscf)(MW, lb/lb-mole)(1-DRE%/100).
3. HAP/toxics gas concentrations based on sample results from Warren & PXP-Murphy CEB Flare applications; highest value mutiplied by 1.5 (conservative estimate).

Rule 1173 Two-Year Fugitive Component Leak History
DCOR, LLC - Platform Esther (143740)

		Leaks >10,000 ppmv							
		2012				2013			
Component	Total Counts	Q1	Q2	Q3	Q4	Q1	Q2	Q3	Q4
Valve	1115	0	1	1	2	0	0	1	4
Fitting	3440	1	0	0	0	1	1	0	0
Other	236	0	1	0	0	0	0	0	0
Pump	14	0	0	0	0	0	0	0	0
Compressor	1	1	0	0	1	0	0	0	0
PRV	17	0	0	0	0	0	0	0	0

		Leaks >10,000 ppmv								Highest Leak % 2 Years
		2012				2013				
Component	Total Counts	Q1	Q2	Q3	Q4	Q1	Q2	Q3	Q4	
Valve	1115	0.00%	0.09%	0.09%	0.18%	0.00%	0.00%	0.09%	0.36%	0.36%
Fitting	3440	0.03%	0.00%	0.00%	0.00%	0.03%	0.03%	0.00%	0.00%	0.03%
Other	236	0.00%	0.39%	0.00%	0.00%	0.00%	0.00%	0.00%	0.00%	0.39%
Pump	14	0.00%	0.00%	0.00%	0.00%	0.00%	0.00%	0.00%	0.00%	0.00%
Compressor	1	100.0%	0.00%	0.00%	100.0%	0.00%	0.00%	0.00%	0.00%	100.0%
PRV	17	0.00%	0.00%	0.00%	0.00%	0.00%	0.00%	0.00%	0.00%	0.00%

Nabil Gobrial

From: Mike Shaffer [shafferenv@pacbell.net]
Sent: Wednesday, February 11, 2015 6:17 PM
To: Nabil Gobrial
Cc: White, Christine
Subject: DCOR Platform Esther Flare Project (ID# 143740)
Attachments: Esther Flare Project Emissions-B Gobrial.xlsx

Bill,

Attached is the 600 MCFD Excel spreadsheet that I referred to in my voice message. I moved the CEQA-specific calculation sheets to the end of the workbook and colored their tabs in red. Call me in you have any questions.

Mike Shaffer
Shaffer Environmental Consulting
80 N. Crocker Avenue
Ventura, CA 93004-3845
(805) 659-1744 office
(805) 207-1945 cell
(805) 435-1634 fax
shafferenv@pacbell.net

DCOR, LLC

Platform Esther (143740)

Facility Potential to Emit (PTE)/Permitted Emissions

[PTE @ 600 MCFD]

EXISTING EQUIPMENT

Device	Fuel	Maximum Fuel Usage (MMscf/yr)	NOX EF (lbs/MMscf)	VOC EF (lbs/MMscf)	PM10 EF (lbs/MMscf)	SOX EF (lbs/MMscf)	CO EF (lbs/MMscf)	NOX (lbs/yr)	VOC (lbs/yr)	PM10 (lbs/yr)	SOX (lbs/yr)	CO (lbs/yr)
Micro-Turbine 1 (D31)	Nat/Prod Gas	23.48	46.64	83.94	8.20	6.70	559.63	1,095.00	1,971.00	193.00	158.00	13,140.00
Micro-Turbine 2 (D33)	Nat/Prod Gas	23.48	46.64	83.94	8.20	6.70	559.63	1,095.00	1,971.00	193.00	158.00	13,140.00
	subtotal	*46.96*						*2,190.00*	*3,942.00*	*386.00*	*316.00*	*26,280.00*

[Note 1: Reference Permit Conditions A63.1, A63.2 & I296.1 for EFs and annual limits.]

Device	Permit Units (Device IDs)	NOX (lbs/yr)	VOC (lbs/yr)	PM10 (lbs/yr)	SOX (lbs/yr)	CO (lbs/yr)
Fugitive Components	O/G/W (D3-10); WW (D11-15, D24); VRU (D16); Fugitives (D17-22); Dehy (D25-28); Odor (D2	0.00	2,475.00	0.00	0.00	0.00

[Note 2: In 2007 during the permitting of MTs (A/Ns 518222 & 518223), an hour limit reduction was needed on old crane (D2) to stay under 4 tpy, so Li Chen must have documentation in permit files.]

[Note 3: Fugitive VOC PTE estimated based on facility-wide NSR VOC balance of 20 lbs/day obtained from SCAQMD's N. Gobrial on 10/22/14]

Device	Fuel	Maximum Fuel Usage (gallons)	NOx EF (lbs/kgal)	VOC EF (lbs/kgal)	PM10 EF (lbs/kgal)	SOx EF (lbs/kgal)	CO EF (lbs/kgal)	NOx (lbs/yr)	VOC (lbs/yr)	PM10 (lbs/yr)	SOx (lbs/yr)	CO (lbs/yr)
E Gen (49hp-R219)	Diesel	490	469.00	37.50	33.50	7.10	102.00	229.81	18.38	16.42	3.48	49.98
E Fire (460hp-D1)	Diesel	4480	469.00	37.50	33.50	7.10	102.00	2,101.12	168.00	150.08	31.81	456.96
Crane (450hp-D35)	Diesel	99440	101.36	7.26	3.47	7.10	24.34	10,079.59	722.24	345.25	706.02	2,420.69
							Existing (permitted), lbs/yr	**14,370.71**	**7,307.24**	**881.33**	**1,053.83**	**29,157.65**
							Existing (permitted), tons/yr	**7.19**	**3.65**	**0.44**	**0.53**	**14.58**

NEW EQUIPMENT

Device	Fuel	Maximum Fuel Usage (MMscf/yr)	NOX EF (lbs/MMscf)	VOC EF (lbs/MMscf)	PM10 EF (lbs/MMscf)	SOX EF (lbs/MMscf)	CO EF (lbs/MMscf)	NOX (lbs/yr)	VOC (lbs/yr)	PM10 (lbs/yr)	SOX (lbs/yr)	CO (lbs/yr)
CEB 350 Flare*	Nat/Prod Gas	(see Notes)	20.83	4.89	5.92	5.03	8.54		39.90			
CEB 800-CA Flare*	Nat/Prod Gas	214.00	20.83	4.89	5.92	5.03	8.54	4,457.81	1,083.62	1,266.70	1,076.72	1,826.97
FEF-90 Flare*	Nat/Prod Gas	5.00	68.30	7.00	7.50	5.03	421.17	341.49	35.62	37.50	25.16	2,105.85
* includes fugitives	*subtotal*	*219.00*	*subtotal (maximum emissions with 5.0 MMscf/yr of upsets)*					*4,799.30*	*1,159.14*	*1,304.20*	*1,101.88*	*3,932.83*
							(lbs/day (365 days/yr))	*13.1*	*3.2*	*3.6*	*3.0*	*10.8*
CEB 350/800-CA Flare*	Nat/Prod Gas	219.00	20.83	4.89	5.92	5.03	8.54	4,561.96	1,147.99	1,296.30	1,101.88	1,869.66
* includes fugitives			*subtotal (maximum emissions without any upsets)*					*4,561.96*	*1,147.99*	*1,296.30*	*1,101.88*	*1,869.66*
							(lbs/day (365 days/yr))	*12.5*	*3.1*	*3.6*	*3.0*	*5.1*
							Post-Project (permitted), lbs/yr	**19,170.01**	**8,466.38**	**2,185.53**	**2,155.71**	**33,090.47**
							Post-Project (permitted), tons/yr	**9.59**	**4.23**	**1.09**	**1.08**	**16.55**

[Note 4: Combustion emissions for CEB-350 included in CEB-800-CA since both limited to a combined limit of 219.0 MMCFY (equivalent to 600 MCFD).]

[Note 5: For individual device calculations see separate spreadsheets. Max. throughput for CEB 350 is 92.35 MMCFY based on design limitations.]

[Note 6: DCOR has purchased 2 lbs/day of VOC ERC offsets and >5,000 lbs/year of indefinte-life NOx RTCs for this project.]

466.38	lbs over 4 tpy (includes FEF-90)
1.30	lbs/day (includes FEF-90)
1.38	lbs/day (excludes FEF-90 since emergency)
2	lbs/day (to be offset, 1.2x)

Nabil Gobrial

From: Mike Shaffer [shafferenv@pacbell.net]
Sent: Thursday, February 12, 2015 11:44 AM
To: Nabil Gobrial
Cc: White, Christine
Subject: Re: DCOR Platform Esther Flare Project (ID# 143740)
Attachments: Esther Flare Project Emissions-B Gobrial_R1.xlsx

Bill,

DCOR would like to modify their original permit application submittal for the Platform Esther Flare Project to accept a 600 MCFD throughput limit (all 3 flares), which equates to a 219.0 MMSCF/year annual limit (600 MCFD x 365 days/year). DCOR would anticipate a permit condition being added to the permit that would be tagged to the 3 flares and limit their combined throughput to 219.0 MMSCF/year. DCOR would also anticipate each individual flare having a throughput limit except for maybe the CEB 350 since it's maximum design throughput is 92.35 MMSCF/yr, which is below the 219.0 MMSCF/yr overall limit. The CEB 800-CA would be limited to 219.0 MMSCF/yr and the FEF-90 to 5.0 MMSCF/yr (200 hours @ 600 MCFD).

Attached is a the revised calculation spreadsheet clarifying what we disscussed earlier (changes only made to "New Equipment" section of the 'PTE - Summary (600 MCFD)' tab. Please call me if you have any questions.

Mike Shaffer
Shaffer Environmental Consulting
80 N. Crocker Avenue
Ventura, CA 93004-3845
(805) 659-1744 office
(805) 207-1945 cell
(805) 435-1634 fax
shafferenv@pacbell.net

----- Original Message -----
From: Mike Shaffer
To: Nabil Gobrial - SCAQMD
Cc: Christine White - DCOR
Sent: Wednesday, February 11, 2015 6:16 PM
Subject: DCOR Platform Esther Flare Project (ID# 143740)

Bill,

Attached is the 600 MCFD Excel spreadsheet that I referred to in my voice message. I moved the CEQA-specific calculation sheets to the end of the workbook and colored their tabs in red. Call me in you have any questions.

Mike Shaffer
Shaffer Environmental Consulting
80 N. Crocker Avenue
Ventura, CA 93004-3845
(805) 659-1744 office
(805) 207-1945 cell
(805) 435-1634 fax
shafferenv@pacbell.net

Nabil Gobrial

From: Nabil Gobrial
Sent: Tuesday, February 17, 2015 2:53 PM
To: Barbara Radlein
Cc: Gary Turner
Subject: Comments on the Administrative Draft Mitigated Negative Declaratio

DCOR LLC, ID 143740
Three Flares Project

Recently DCOR modified their original permit applications submitted early 2014 (A/N's 561638, 39, and 561640) for Esther platform Flare Project to accept a 600 thousand cubic foot per day (600 MCFD) throughput limit for all 3 flares, which equates to 219×10^6 cubic foot per year based on 365 day per year (219 MMCF/year).

As a result of this change, conditions will be imposed on the permits to limit the throughput and also, to limit the operating hours for the emergency flare to 200 hours per year.

The emissions of the criteria pollutant originally were based on the maximum throughput for each flare and now after DCOR requesting the 600 MCFD limit, the emissions were re-calculated and the company secured the required ERC for the VOC emissions and the required RTC for the NOx emissions.

On page, 2-17 of the Administrative Drat Mitigated Negative Declaration submitted on behalf of DCOR, the consultant miss calculated the capability of handling production rate for the CEB-350 and the calculated capacity should be 30 to 250 MCFD and 100 to ≈ 825 MCFD for the CEB-800. These were calculated based on the Heating value for the gas of 1138 btu/cf. The emission offset will be determined based on a monthly basis.

If a daily limit of 600 MCFD is used, the emergency Stand-by flair will be limited to 5.0 MMCF/Year (based on 200 hours/year) not 8.9 MMCFY as it was mentioned on page 27.

Condition will be imposed to limit all three flares to 219 MMCF/year and a condition limiting the Stand by flare to 200 hours per year.

The 219 MMCF/yr will be used as a basis to calculate offsets and to limit the monthly throughput of the 2 CEB process flares. The two process flares will be limited to 18.25MMCF/Month.

Em 600 M/day

NSR 360

Reclaim 365

CQCA 365

viability

Bill Gobrial, P.E.
A.Q. Engineer
SCAQMD
21865 Copley Drive,
Diamond Bar, CA 91765
(909) 396-2573

Table III-3. Project-Related Peak Daily Construction Emissions

Parameter	SCAQMD CEQA Threshold	Localized Significance Threshold[1,2]	Actual Project Impact	Comments
Demolition / Construction Emissions				
NO_x, lbs/day	100	46	44.57	10 week, 3 day project duration Lbs/day is maximum day for each pollutant
VOC, lbs/day	75	N/A	6.10	
PM_{10}, lbs/day	150	4	2.39	
$PM_{2.5}$, lbs/day	55	3	2.27	
SO_x, lbs/day	150	N/A	0.04	
CO, lbs/day	550	574	22.42	
Lead, lbs/day	3	N/A	0	

1 The Localized Significance Threshold (LST) was determined using Appendix C of the SCAQMD *Final Localized Significant Threshold Methodology* guidance document for pollutants NOx, CO, PM_{10}, and $PM_{2.5}$. The LST is conservatively based on the 1 acre (or less) project area, the distance to sensitive receptors (25 meters), and the source receptor area (SRA 4, South Coastal LA County). It should be noted that SRA 4 LSTs are more conservative than thresholds for SRA 18 (North Coastal Orange County), which is also adjacent to the project site.
2 LSTs only apply to emissions generated on-site and not emissions for hauling, material deliveries, and worker trips.
3 Construction emissions associated with the proposed project would result from the off-road equipment operated onsite (e.g., cranes and welders) as identified in Table III-2.

Operational Emissions and Analyses

Operational emissions from existing equipment presently permitted on the Platform are generated by two 250 kW microturbines (D31 and D33), one emergency fire pump (460 hp, D1), one gantry crane (450 hp, D35) and fugitive components [the existing onsite emergency generator (49 hp) is exempt]. These facilities are currently permitted to generate approximately 4,750.40 MT CO_2e per year (PTE), as shown in *Table III-6, Existing and Proposed Project PTE Emissions*; refer to *Appendix F, Final Emission Calculations and Health Risk Assessment,* for additional information. This equipment is presently operated under the existing permit and is therefore not considered to be part of the project.

To provide a baseline for evaluating the increase in emissions that will occur with the proposed project, emissions from years 2010 to 2013 were considered; refer to *Appendix F* for actual emissions generated at the Platform during operation. *Table III-4, 2010-2013 Actual Emissions (Average)* provides an overall average of the actual baseline emissions.

Additionally, *Table III-5, CEQA Project Emission Increases (Actual Average Emissions to PTE)*, provides a comparison of existing baseline conditions (PTE) and the project as proposed to show the resultant increase with the addition of the project.

The proposed CEB-350 is capable of handling production rates from 30 thousand cubic feet per day (MCFD) to 200 MCFD, and the CEB-800-CA is capable of handling production rates from 100 MCFD to 754 MCFD. Start-up, shut-down, and emergency use will be handled by the Fully Enclosed Emergency Stand-by Flare (FEF-90). The Emergency Stand-by Flare will be limited by SCAQMD to 8,961 thousand cubic feet per year (MCFY) (equivalent to 200 operating hours per year). Flaring of produced gas at the Platform Esther facility will be limited by the permit issued by SCAQMD to 600 MCFD, or 219,000 MCFY. As shown in *Table III-6, Existing and Proposed Project PTE Emissions*, a permitted maximum production of 600 MCFD for the proposed project components (gas flare systems) will not result in exceedance of any criteria

pollutants (see subtotals in lbs/day); however, potential increases in criteria pollutants (NOx and VOC) at the maximum 600 MCFD level will be offset prior to the issuance of construction permits pursuant to SCAQMD New Source Review (NSR) and NO_x Regional Clean Air Incentives Market (RECLAIM) regulations. These offsetting requirements are required for the life of the project even though the project does not exceed any of the CEQA significance thresholds for criteria pollutants. As such, operation of the project as proposed will not result in violation of an established air quality standard or contribute to an existing or projected air quality violation. As such, impacts will be less than significant.



Table III-4. 2010-2013 Actual Emissions (Average)

Device	Fuel	2010-2013 Average Actual Emissions (Reported) – Annual						2010-2013 Average Fuel Usage	
		NO_x (lbs/yr)	VOC (lbs/yr)	PM_{10} (lbs/yr)	SO_x (lbs/yr)	CO (lbs/yr)	CO_2e (tonnes/yr)		
Microturbine #1-250KW (D31)	Nat/Prod Gas	523.39	859.28	74.43	6.64	3,340.05	685.44	11.22	MMscf
Microturbine #2-250KW (D33)	Nat/Prod Gas	523.39	859.28	74.43	6.64	3,340.05	685.44	11.22	MMscf
Emergency Fire Pump (460hp-D1)	Diesel	120.81	9.66	8.63	0.81	26.28	2.64	257.60	gals
Gantry Crane (450hp-D35)	Diesel	1,356.02	278.13	248.46	36.67	756.50	73.07	7,134.78	gals
Fugitives (including wellheads)	Nat/Prod Gas		3,095.83				1,016.53		
Paints & Solvents – exempt			623.80						
Emerg. Generator (49hp) – exempt	Diesel	16.94	1.35	1.83	0.56	3.68	0.37	36.11	gals
2010-2013 Average Total (tons/yr):		**1.27**	**2.86**	**0.20**	**0.03**	**3.73**	**2,463.49****		

**CO_2e emissions in units of metric tonnes [MT=2205 lbs (1,000 kg)], all others in U.S./short tons (2,000 lbs = ton)

DRAFT

Table III-5. CEQA Project Emission Increases (Actual Average Emissions to PTE)

		Facility-Wide Project Increase (Actual to Potential) – Annual						
Existing Devices	**Fuel**	**NO_X[1] (lbs/yr)**	**VOC (lbs/yr)**	**PM_{10} (lbs/yr)**	**$PM_{2.5}$[2] (lbs/yr)**	**SO_X (lbs/yr)**	**CO (lbs/yr)**	**CO_2e(MT/yr)**
Microturbine #1-250KW (D31)	Nat/Prod Gas	571.62	1,111.72	118.57	118.57	0.09	9,799.96	748.77
Microturbine #2-250KW (D33)	Nat/Prod Gas	571.62	1,111.72	118.57	118.57	0.09	9,799.96	748.77
New (Added) Devices	**Fuel**	**NO_X[1] (lbs/yr)**	**VOC[1] (lbs/yr)**	**PM_{10} (lbs/yr)**	**$PM_{2.5}$[2] (lbs/yr)**	**SO_X (lbs/yr)**	**CO (lbs/yr)**	**CO_2e[1] (tonnes/yr)**
CEB 350 Flare (continuous)[1]	Nat/Prod Gas		39.90					6.65
CEB 800-CA Flare (continuous)[1]	Nat/Prod Gas	4,561.96	1,108.10	1,296.30	1,296.30	1,101.88	1,869.66	13,011.89
FEF-90 Flare (emergency/standby)[1]	Nat/Prod Gas	341.49	35.62	37.50	37.50	25.16	2,105.85	297.05
	Subtotal (lbs)	**6,046.68**	**3,407.05**	**1,570.94**	**1,570.94**	**1,127.22**	**23,575.42**	**14,813.12**
	Subtotal (lbs/day) [NSR (360 days/year)]	*16.80*	*9.46*	*4.36*	*4.36*	*3.13*	*64.59*	
	Subtotal (lbs/day) [CEQA (365 days/year)]	*16.57*	*9.33*	*4.30*	*4.30*	*3.09*	*64.59*	
	CEQA threshold (lbs/day)	*55*	*55*	*150*	*55*	*150*	*550*	10,000
Facility-wide Post-Project Increase (tons/yr)*		**3.02**	**1.70**	**0.79**	**0.79**	**0.56**	**11.79**	**14,813.12****

1. Includes fugitive component emissions.
2. 100% PM10 conservatively assumed $PM_{2.5}$.

[Note: Combustion emissions for CEB-350 included in CEB-800-CA since both limited to a combined limit of 219.0 MMCFY (equivalent to 600 MCFD)]

* Applicable equipment. Actual emissions are 4-year average (AER reports; 2010-2013).

**CO_2e emissions in units of metric tonnes [MT=2,205 lbs (1,000 kg)], all others in U.S./short tons (2,000 lbs = one ton).

Table III-6. Existing and Proposed Project PTE Emissions

EXISTING (Baseline – PTE)

Device	Fuel	Pre-Project Permitted Emissions/Potential to Emit (PTE) - Annual					
		NO_X (lbs/yr)	VOC (lbs/yr)	PM_{10} (lbs/yr)	SO_X (lbs/yr)	CO (lbs/yr)	CO_2e (tonnes/yr)
Microturbine #1-250KW (D31)	Nat/Prod Gas	1,095.00	1,971.00	193.00	6.73	13,140.00	1,434.20
Microturbine #2-250KW (D33)	Nat/Prod Gas	1,095.00	1,971.00	193.00	6.73	13,140.00	1,434.20
Emergency Fire Pump (460hp-D1)	Diesel	2,101.12	168.00	150.08	31.81	456.96	45.88
Gantry Crane (450hp-D35)	Diesel	10,079.59	722.24	345.25	706.02	2,420.69	1,018.42
Fugitive Components[1]	Nat/Prod Gas		2,475.00				815.68
Emerg. Generator (49hp) – exempt	Diesel	229.81	18.38	16.42	3.48	49.98	5.02
	Subtotal	**14,600.52**	**7,325.61**	**897.74**	**754.77**	**29,207.63**	**4,750.40**
Pre-project facility, permitted (tons/yr)*		**7.30**	**3.66**	**0.45**	**0.38**	**14.60**	**4,750.40****

*Includes <50hp emergency generator that is exempt from permit (Rule 219).
**CO_2e emissions in units of metric tonnes [MT=2,205 lbs (1,000 kg)], all others in U.S./short tons (2,000 lbs = one ton)
[1] [Note: Fugitive VOC PTE estimated based on facility-wide NSR VOC balance of 20 lbs/day obtained from SCAQMD's N. Gobrial on 10/22/14]

PROPOSED PROJECT (Facility Increase – PTE @ 600 MCFD)

Device	Fuel	Project Permitted Emissions/Potential to Emit (PTE) – Annual					
		NO_X (lbs/yr)	VOC (lbs/yr)	PM_{10} (lbs/yr)	SO_X (lbs/yr)	CO (lbs/yr)	CO_2e (tonnes/yr)
CEB 350 Flare (continuous)[2]	Nat/Prod Gas		39.90				6.65
CEB 800-CA Flare (continuous)[2]	Nat/Prod Gas	4,561.96	1,108.10	1,296.30	1,101.88	1,869.66	13,011.89
FEF-90 Flare (emergency/standby)[2]	Nat/Prod Gas	341.49	35.62	37.50	25.16	2,105.85	297.05
	Subtotal (lbs)	**4,903.45**	**1,183.61**	**1,333.80**	**1,127.04**	**3,975.51**	**13,315.59**
	Subtotal (lbs/day) [NSR (360 days/year)]	*13.62*	*3.29*	*3.70*	*3.13*	*11.04*	
	Subtotal (lbs/day) [CEQA (365 days/year)]	*13.43*	*3.24*	*3.65*	*3.09*	*10.89*	
Project (only), permitted (tons/yr)*		**2.45**	**0.59**	**0.67**	**0.56**	**1.99**	**13,316**
Post-project facility, permitted (tons/yr)*		**9.75**	**4.25**	**1.12**	**0.94**	**16.59**	**18,066**

* Includes <50hp emergency generator that is exempt from permit (Rule 219).
**CO_2e emissions in units of metric tonnes [MT=2,205 lbs (1,000 kg)], all others in U.S./short tons (2,000 lbs = one ton)
[Note: Combustion emissions for CEB-350 included in CEB-800-CA since both limited to a combined limit of 219.0 MMCFY (equivalent to 600 MCFD)]
[2] Includes fugitive component emissions.

Administrative Draft Mitigated Negative Declaration for:

DCOR, LLC; City of Seal Beach, California
Platform Esther Gas Flare Installation Project

SCAQMD ID 143740

South Coast Air Quality Management District

DRAFT

Executive Officer
Barry Wallerstein, D. Env.

Deputy Executive Officer, Planning Rules, and Area Sources
Elaine Chang, DrPH

Assistant Deputy Executive Officer, Planning, Rule Development, and Area Sources
Philip Fine, Ph.D,

Director of Strategies Initiatives
Susan Nakamura

Reviewed by:

Michael Krause
Program Supervisor

Barbara Radlein
Air Quality Specialist - CEQA

William Thompson
Senior Engineering Manager

Maria Vibal
Air Quality Engineer

Mohsen Nazemi, P.E.
Deputy Executive Officer

Barbara Baird
Chief Deputy Counsel

Nicholas A. Sanchez
Senior Deputy District Counsel

December 8, 2014

Prepared by:

Michael Baker
INTERNATIONAL

RBF Consulting, a company of
Michael Baker International
www.mbakerintl.com
JN 143721

SOUTH COAST AIR QUALITY MANAGEMENT DISTRICT GOVERNING BOARD

Chairman: WILLIAM A. BURKE, Ed.D.
Speaker of the Assembly Representative

Vice Chairman: DENNIS YATES
Mayor, City of Chino
Cities Representative, San Bernardino County

MEMBERS

MICHAEL D. ANTONOVICH
Supervisor, Fifth District
Los Angeles County Representative

BEN BENOIT
Councilmember, City of Wildomar
Cities Representative, Riverside County

JOHN J. BENOIT
Supervisor, Fourth District
Riverside County Representative

JOSEPH BUSCAINO
Councilmember, City of Los Angeles
Cities Representative, City of Los Angeles

MICHAEL CACCIOTTI
Councilmember, City of South Pasadena
Representing 34- city Los Angeles County Eastern Region

JOSIE GONZALES
Supervisor, Fifth District
San Bernardino County Representative

DR JOSEPH K. LYOU
Governor's Appointee

JUDITH MITCHELL
Councilmember, Rolling Hills Estates
Cities Representative, Los Angeles County, Western Region

SHAWN NELSON
Supervisor, Fourth District
Orange County Representative

DR CLARK E. PARKER, SR.
Senate Rules Committee Appointee

MIGUEL PULIDO
Mayor, City of Santa Ana
Cities Representative, Orange County

EXECUTIVE OFFICER
BARRY WALLERSTEIN, D. Env.

DRAFT

TABLE OF CONTENTS

CHAPTER 1 - PROJECT DESCRIPTION 1-1

1.1 Introduction 1-1
1.2 Agency Authority 1-2
1.3 Background 1-2
1.3.1 Prior Operations 1-2
1.3.2 SCAQMD Permitting 1-3
1.3.3 Performance Issues 1-3
1.3.4 Current Operations 1-4
1.4 Project Description 1-5
1.4.1 Project Location 1-5
1.4.2 Summary of the Proposed Project 1-5
1.4.3 New Operations 1-12
1.4.4 Mitigation Measures 1-13
1.5 Construction Schedule 1-16
1.6 Operating Scenario 1-16

CHAPTER 2 - ENVIRONMENTAL CHECKLIST 2-1

2.1 Introduction 2-1
2.2 General Information 2-1
2.3 Environmental Factors Potentially Affected 2-3
2.4 Determination 2-4
2.5 Environmental Checklist and Discussion 2-5
I. Aesthetics 2-5
II. Agriculture and Forestry Resources 2-8
III. Air Quality and Greenhouse Gas Emissions 2-10
IV. Biological Resources 2-36
V. Cultural Resources 2-40
VI. Energy 2-43
VII. Geology and Soils 2-46
VIII. Hazards and Hazardous Materials 2-52
IX. Hydrology and Water Quality 2-58
X. Land Use and Planning 2-62
XI. Mineral Resources 2-64
XII. Noise 2-66
XIII. Population and Housing 2-70
XIV. Public Services 2-72
XV. Recreation 2-75
XVI. Soild/Hazardous Waste 2-77
XVII. Transportation and Traffic 2-80
XVIII. Mandatory Findings of Significance 2-84

References

Acronyms

LIST OF EXHIBITS

Exhibit 1 Regional/Local Vicinity Map 1-17
Exhibit 2 San Pedro Bay: Oil and Gas Production Platforms 1-19
Exhibit 3 Site Photos – Existing Conditions 1-21
Exhibit 4A Key Plan 1-23
Exhibit 4B Plan View & Sections 1-25
Exhibit 4C Sections & Details 1-27
Exhibit 4D Sections & Details 1-29
Exhibit 5 Demonstration of Deck Extension Installation 1-31
Exhibit 6 Seal Beach Regional Seismic Map 1-33

LIST OF TABLES

Table 1-1. Proposed Permitting Language 1-10
Table 1-2. Summary of Mitigation Measures for the Proposed Project 1-13
Table III-1. SCAQMD Air Quality and Greenhouse Gas (GHG) Significance Thresholds 2-11
Table III-2. Project Construction Requirements 2-16
Table III-3. Project-Related Peak Daily Construction Emissions 2-17
Table III-4. 2010-2013 Actual Emissions (Average) 2-19
Table III-5. CEQA Project Emission Increases (Actual Average Emissions to PTE) 2-20
Table III-6. Existing and Proposed Project PTE Emissions 2-21
Table VII-1. Significant Historical Earthquakes in Southern California 2-48
Table XIII-1. Construction Noise Sources 2-67

LIST OF APPENDICES

Appendix A SCAQMD Permit Application (February 2014)
Appendix B Project Approval Letter from California State Lands Commission
Appendix C Current Facility Permit to Operate (Facility ID No. 143740)
Appendix D Flare Systems - Performance Specifications
Appendix E Improvement Plans
Appendix F Final Emission Calculations and Health Risk Assessment
Appendix G Seismic Overview for New Flares and Deck Extension

DRAFT

CHAPTER 1

PROJECT DESCRIPTION

DRAFT

Introduction
Agency Authority
Background
Project Description
Project Location
Construction Schedule
Operating Scenarios

THIS PAGE INTENTIONALLY LEFT BLANK

DRAFT

CHAPTER 1 - PROJECT DESCRIPTION

1.1 INTRODUCTION

Platform Esther is an existing Oil & Gas Production Facility located approximately 1.5 miles offshore from Seal Beach, California on State Oil and Gas Lease PRC 3095.1 (Parcel 16A). Initial production on the lease began in September 1965 on a man-made island. A series of winter storms in 1983 severely damaged the island, and a replacement platform was installed in 1985. The platform was acquired by a new owner in 1988 and production testing resumed in 1991, with full offshore production facilities eventually installed on the platform in 1995. The platform was purchased by DCOR, LLC (DCOR), the current owner and operator, in 2005 and is one of two oil and gas production platforms owned by DCOR located in waters under the jurisdiction of the State of California (State waters) within San Pedro Bay; refer to *Exhibit 1, Regional/Local Vicinity Map*, and *Exhibit 2, San Pedro Bay: Oil and Gas Production Platforms*.

The proposed project ("project") involves improvements on Platform Esther that will result in installation of a flare gas management system consisting of three individual flare units. The facility currently produces roughly 700 barrels of crude oil (bbls) and 9,950 barrels of water per day. The oil and water are separated onsite; crude oil is transported via pipeline onshore; the produced water is re-injected into the producing reservoir.

Platform Esther's produced gas is currently sent via pipeline to BreitBurn Gas Processing Venture's (BreitBurn) onshore facility in Seal Beach, with some gas being combusted onsite via two 250 kilowatt (kW) microturbines located on the Platform. The facility currently does not have a flare system onsite. DCOR's gas processing contract with BreitBurn expires on May 15, 2015 and is not going to be renewed by BreitBurn. As such, if there is no outlet for Platform Esther's produced gas after May 2015, oil production operations on the Platform will be required to cease. Several options to address this condition were considered by DCOR; however, installation of a flaring system was determined to be the only viable option. No other gas sales outlet is available to DCOR at this time.

The proposed three flare system will consist of two ultra-low emission process flares and one enclosed standby flare. The standby flare will be used during emergencies, power outages, and start-up/testing/maintenance of the ultra-low emission units. An extension deck will be constructed adjacent to an existing deck on the Platform in order to support the flare systems and allow for their installation. No increase in the number of staff required for operation or maintenance of the Platform Esther facilities will be required as a result of the proposed project.

An application was prepared by DCOR and submitted to the South Coast Air Quality Management District (SCAQMD) in February 2014 for purposes of obtaining a permit to allow for installation and operation of the proposed flare systems; refer to *Appendix A, SCAQMD Permit Application (February 2014)*.[1] The SCAQMD has primary approval authority over the

[1] It should be noted that at the time when the application was prepared, DCOR planned to utilize the Fully Enclosed Emergency Stand-by Flare (FEF-102) model as the emergency stand-by flare; however, since that time, DCOR has elected to use the Fully Enclosed Emergency Stand-by Flare (FEF-90) model. Data for the FEF-90 model is provided in Appendix D of this document. All analysis within the Initial Study/Mitigated Negative Declaration is based on the assumption that the FEF-90 will be used at Platform Esther.

project as currently proposed, and therefore, under §15367 of the California Environmental Quality Act (CEQA) Guidelines, the SCAQMD will serve as the "lead agency" for the proposed project. The SCAQMD shall be responsible for preparation and approval of the appropriate environmental document, which was determined by the SCAQMD to be an Initial Study/Mitigated Negative Declaration (IS/MND).

1.2 AGENCY AUTHORITY

California Public Resources Code §21000 *et seq.* requires evaluation of all environmental impacts resulting with proposed "projects" as well as the identification and implementation of feasible methods aimed at reducing, avoiding, and/or eliminating any significant adverse impacts that may result with project implementation. As defined by CEQA, the proposed modifications to the existing platform and installation of the gas flares represent the "project." To satisfy conformance requirements with CEQA, this MND has been prepared to evaluate the proposed modifications and to determine the potential impacts that such improvements may have on the existing environment.

As stated above, the SCAQMD will serve as the "lead agency" for the proposed project. The lead agency is the public agency having the principal responsibility for carrying out or approving a project that may have a significant adverse effect upon the environment (Public Resources Code §21067). Because the proposed project requires discretionary approval from the SCAQMD for modifications to the existing platform to accommodate the three new gas flares, the SCAQMD has the greatest responsibility for supervising or approving the project as a whole. Therefore, the SCAQMD is the most appropriate public agency to act as the lead agency (CEQA Guidelines §15051(b)).

As determined by the lead agency, a Mitigated Negative Declaration (MND) is the appropriate CEQA document for the project, as potential adverse environmental impacts may occur as the result of the proposed modifications to the existing Platform Esther (CEQA Guidelines §15070).

Additionally, the California State Lands Commission (CSLC) has reviewed the project as proposed and has provided a letter of consent identifying specific conditions to which DCOR will be required to adhere to in construction and operation of the project elements; refer to *Appendix B, Project Approval Letter from California State Lands Commission*. The CSLC will act as a responsible agency, per §15381 of the CEQA Guidelines.

1.3 BACKGROUND

1.3.1 PRIOR OPERATIONS

Chevron began initial production on the lease from manmade Esther Island in September 1965. A series of 1983 winter storms severely damaged the Island, and a replacement platform was installed in 1985. All but 21 existing wells were plugged at that time. Unocal acquired the platform in 1988. Platform Esther was constructed in 1990, and production testing resumed in 1991. Full offshore production facilities were eventually installed on Platform Esther in 1995. Nuevo Energy Company acquired Platform Esther in 1996, operating it until 2004 when PXP took over by merging with Nuevo. DCOR, the current owner, purchased Platform Esther in 2005 and has since been responsible for daily operations.

1.3.2 SCAQMD PERMITTING

Platform Esther currently operates under the existing Facility Permit to Operate as issued by the SCAQMD; refer to *Appendix C, Current Facility Permit to Operate (Facility ID No. 143740)*. The permit issued identifies certain conditions for operation of the equipment and limitations on emissions that can be generated. Operation of Platform Esther must demonstrate compliance with such restrictions on a quarterly and/or annual basis, as appropriate, to ensure that no violations occur and that ongoing operations continue to conform to the requirements imposed by the SCAQMD.

Additionally, several comments were presented by DCOR to the SCAQMD in a written letter following the release of the August 9, 2011 facility permit revision. These comments requested several revisions to the existing permit language and do not yet appear to have been addressed in the applicable permits for the Platform Esther facility. As such, as part of the current permit application submitted to the SCAQMD on February 24, 2014, DCOR identified similar revisions to the existing permit language that were previously requested but not made to date. These changes generally pertain to the following: 1) revise the Responsible Officer information; 2) add reference to the NO_x emission factor to the two existing 250kW microturbines (D31 and D33); and, remove specific language in Condition E193.1 (no longer applicable). The changes requested to the permit language are discussed in greater detail in *Appendix A, SCAQMD Permit Application (February 2014)*, of this Initial Study.

1.3.3 PERFORMANCE ISSUES

The proposed project involves modification of the existing facility permit to allow for installation of a flare gas management system to consist of three individual flare units. The facility currently produces roughly 700 barrels of petroleum (bbls) per day, which is separated from the water and gas onsite. The crude oil is pumped via pipeline onshore, ultimately tying into the Chevron Pipeline Company's existing 8-inch gathering line in Seal Beach. The water produced is re-injected into the producing reservoir.

As stated above, Platform Esther's produced gas is currently sent via pipeline to BreitBurn's onshore facility in the City of Seal Beach, with some gas being combusted onsite via two 250kW microturbines located on the Platform. The Platform does not currently have a flare system, which is an unusual condition for an oil and gas production platform. DCOR's gas processing contract with BreitBurn expires on May 15, 2015 and will not be renewed. As such, if there is no outlet for Platform Esther's produced gas after May 2015, oil production operations on the Platform will be required to cease. Several options to address this condition have been considered by DCOR; however, installation of a flaring system was determined to be the only viable option. No other gas sales outlet is available to DCOR at this time.

The proposed three flare system would consist of two ultra-low emission process flares and one enclosed standby flare. The two ultra-low emission process flares will allow for clean combustion of the excess (waste) gas, will not emit smoke or have a luminous flame, will be of relatively low height, and will be odorless. The standby flare will be used during emergencies, power outages, and start-up/testing/maintenance of the ultra-low emission units.

1.3.4 CURRENT OPERATIONS

As stated above, production on Platform Esther began in 1991. The facility is one of two DCOR oil and gas production platforms located in State waters (Platforms Esther and Eva) within San Pedro Bay, offshore of Seal Beach. DCOR's third platform, Platform Edith, is located in federal waters; refer to *Exhibit 2, San Pedro Bay – Oil and Gas Production Platforms,* and *Exhibit 3. Site Photos – Existing Conditions*.

Platform Esther currently supports a range of equipment to enable the oil and gas production activities including a crane engine (diesel); and emergency firewater pump (diesel); an emergency generator (exempt, <50 horsepower) (diesel); two microturbines (natural gas); and, other various production tanks and vessels. Operation of this equipment is currently covered under the existing permit issued by the SCAQMD. Platform Esther consists of two primary decks: one small sub-deck and a lower level for boat access and diving operations. The upper primary deck is referred to as the Drilling Deck which accommodates a portable drilling rig, a mobile work-over rig, a rail-mounted crane, equipment storage area, spill booms, and various drilling quarters and offices. The lower primary deck is called the production deck and is divided into several areas: well bay, production area, control room, electrical rooms, offices, and galley. The portable drilling rig and mobile work-over rig are only present on the Platform when needed. As their use is temporary, such equipment is transported to and from the Platform as necessary and used to perform specific tasks (i.e. well servicing or reworking, drilling of new wells, etc.).

The Platform currently produces approximately 700 barrels of oil per day (BOPD), 9,950 barrels of water per day (BWPD), and 450 thousand cubic feet of natural gas per day (MCFD). There are presently 18 active wells and 5 wells used for water injection in association with Platform Esther. The oil is separated from the water and gas on the Platform, and the crude oil is pumped via pipeline onshore. The pipeline ties into the Crimson Pipeline LP's 8-inch gathering line located in Seal Beach. The produced water is re-injected back into the producing reservoir.

Presently, the produced gas is combusted on Platform Esther and/or pipelined to an existing onshore facility in Seal Beach which is owned and operated by BreitBurn. Existing onsite combustion sources include two 250 kW gas turbines that produce electricity for the facility.

Currently, crew workers and supplies are transported to and from shore and the various platforms via a water-based vessel named M/V Isabel L which is owned and operated by SoCal Ship Services under charter to DCOR. "Day trippers," or those personnel requiring transport to and from the platforms and other DCOR facilities on a daily basis, can access the vessel from the Seal Beach Pier which is located on the shoreline in the City of Seal Beach. The vessel makes routine scheduled stops at each of DCOR's platforms (Esther, Eva, and Edith), ultimately landing at Terminal Island, located in the Port of Los Angeles, delivering and/or picking up personnel and supplies along the way. The vessel then turns around and follows the same path in a reverse manner, returning to Seal Beach Pier.

1.4 PROJECT DESCRIPTION

1.4.1 PROJECT LOCATION

Platform Esther is an existing oil and gas production facility operating within waters under the jurisdiction of the State of California in the Belmont Oil Field, located in southern California. The Platform is located within San Pedro Bay, which is formed by the larger waters of the Pacific Ocean; refer to Exhibit 1, Regional/Local Vicinity Map; and, *Exhibit 2, San Pedro Bay – Oil and Gas Production Platforms*. Platform Esther is located approximately 1.5 miles offshore from the Seal Beach Pier, which is located in the City of Seal Beach, California. The Platform is located on State Oil and Gas Lease PRC 3095.1 (Parcel 16A) in water having a depth of approximately 38 feet.

Additionally, Platform Esther is located in the Orange County region of the South Coast Air Basin (Basin). The Orange County region is a sub-area of the SCAQMD's area of jurisdiction.

The Platform is completely surrounded by waters of the Pacific Ocean (San Pedro Bay).Two similar operating platforms (Platform Eva and Platform Emmy) are located just to the southeast of Platform Esther; refer to Exhibit 2. The City of Seal Beach (shoreline) lies approximately 1.5 miles to the north of the Platform. The City of Seal Beach is bounded by the Cities of Long Beach to the northwest and Huntington Beach to the southeast; to the east lies the City of Westminster and to the north/northeast lay the Cities of Los Alamitos and Stanton.

1.4.2 SUMMARY OF THE PROPOSED PROJECT

As stated above, Platform Esther's produced gas is currently sent via pipeline to BreitBurn's onshore facility in Seal Beach, with some gas being combusted onsite in two 250 kW microturbines. The facility does not currently have a flare, and the contract with BreitBurn expires on May 15, 2015 and will not be renewed. If there is no outlet for Platform Esther's produced gas after May 2015, oil production operations would be required to cease. Several options have been considered (i.e., gas injection, additional microturbines, pipeline to other DCOR facilities; however, installation of a flaring system was determined to be the only viable option.

The proposed three-flare system will consist of two ultra-low emission process flares (Clean Enclosed Burners, or CEBs). These flares will consist of the CEB-350 and CEB-800-CA. One additional enclosed standby flare (FEF-90) will also be installed. All three flares will be manufactured by Flare Industries, Inc. The standby flare will be used during emergencies, power outages, and start-up/testing/maintenance of the ultra-low emission units. Product information sheets for the proposed flaring systems are included in *Appendix D, Flare Systems – Performance Specifications*, of this document. Representative improvement plans for the proposed project are included as *Exhibits 4A to 4D*; a full set of improvement plans is included as *Appendix E, Improvement Plans*. General equipment specifications for the three flare systems are as follows:

- Flare CEB 350 - Maximum thermal capacity of 12 MMBTU/hour[2] and operating range between 1800 to 2200 degrees Farenheight. The height of the flare system is 35 feet with a weight of 5,310 pounds (lbs). The expected combustion efficiency will be at 99.99% and the expected achievable emission levels will be at (i) NO_x less than 15 parts per million by volume (ppmv) at 3% oxygen; (ii) CO less than 15 ppmv at 3% oxygen; and, (iii) ROC less than 10 ppmv at 3% oxygen.
- Flare CEB 800-CA - Maximum thermal capacity of 39 MMBTU/hour and operating range between 1800 to 2200 degrees Farenheight. The flare system is 35 feet in height with a weight of 9,400 lbs. The expected combustion efficiency will be at 99.99%, and the expected achievable emission levels will be at (i) NO_x less than 15 ppmv at 3% oxygen; (ii) CO less than 15 ppmv at 3% oxygen; and, (iii) ROC less than 10 ppmv at 3% oxygen.
- Fully Enclosed Flare (FEF)-90 - Maximum firing rate of 51 MMBTU/hour and operating range between 1400 to 1700 degrees Farenheight. The height of the flare system is 45 feet with a weight of 21,700 lbs. This flare is a completely enclosed flare system in which combustion occurs inside of an insulated flare stack, in a controlled environment. This ensures that combustion radiation, noise, and flame presence are imperceptible to the outside observer.

Project Construction

It is anticipated that Project construction (including equipment testing) will occur over a 10-week period. The proposed flare systems will need to be in operation by May 2015, as expiration of the existing contract DCOR maintains with BreitBurn will expire on May 15, 2015. As such, it is anticipated that Project construction will commence in 1st quarter 2015.

The welding, electrician, and painting crews will park at the Seal Beach Pier and will be transported the 1.5 miles to and from Platform Esther via existing regularly-scheduled crew/supply vessel runs (M/V Isabel L), as described earlier. No additional vessel trips above that which presently occur with routine maintenance and daily operation of the Platform will be required in support of project construction. The existing DCOR crew/supply vessel, M/V Isabel L, is powered by three 567 horsepower Tier 2 main engines and two 40 horsepower Tier 3 auxiliary generator engines in full compliance with the California Air Resources Board (CARB) Harbor Craft Regulations, including mandated use of ultra-low sulfur diesel to power all engines.

The proposed flare system units (CEB-350, CEB-800-CA, and Emergency Stand-by Flare FEF-90) are manufactured by Flare Industries, Inc. in Austin, Texas and will be transported to Terminal Island in the Port of Los Angeles on two flatbed trucks. The flare system units will be installed on a 20-foot by 70-foot lower deck extension to be located on the northeast side of Platform Esther. The deck extension will be pre-fabricated by Global Fabricators in Shafter, California and transported to Terminal Island in the Port of Los Angeles on one flatbed truck.

[2] MBTU stands for one million British thermal units (BTUs) which can also be expressed as one decatherm (10 therms). MBTU is used as a standard unit of measurement for natural gas. One cubic foot of natural gas produces approximately 1,000 BTUs, so 1,000 cubic feet of gas is comparable to 1 MBTU. MBTU is occasionally expressed as MMBTU, which represents one thousand thousand BTUs.

Piping segments and steel supports will arrive at the Platform pre-painted and will be cut and welded in place.

From Terminal Island, the flare system units and deck extension will be transported to Platform Esther in four crew/supply vessel trips. Additional materials (pipe segments, electrical conduit and wiring, and paint) will be included in the loads for the flare system units and transported at the same time (no additional vessel trips required). The distance from Terminal Island to Platform Esther is approximately eight miles.

Once the flare units and deck extension reach Platform Esther, they will be lifted onto the Platform by the existing 450 horsepower (hp) Tier 3 crane engine (currently permitted by SCAQMD to operate 4,000 hours a year). It is anticipated that over a four-day period, seven crane lifts lasting approximately 30 minutes each will be required to transfer the loads from the crew/supply vessel to the platform; refer to *Exhibit 5, Demonstration of Deck Extension Installation*, which shows an example of how the decking materials will be transported to the Platform. Over the four-day period, it is anticipated that the following will be required: one crane lift for the CEB-350 Flare (one day); two crane lifts for the CEB-800-CA Flare (one day); two crane lifts for the FEF-90 Emergency Stand-by Flare (one day); and, two crane lifts for the deck extension (one day). As the equipment is unloaded, the crane and vessel engines will be idling for an estimated 30 minutes. The lift itself will occur within this timeframe; however, the duration of the lift will be shorter than the overall 30-minute period. Similar to current operations, it is anticipated that any time that the vessel is idling, the vessel and deck crews will use the time to perform safety checks and procedures (i.e. rigging checks), as well as to communicate pertinent information with each other. No crane lifts will be performed over subsea pipelines or power cables.

The outer edge of the proposed deck extension will be supported by vertical tubular diagonals connected at the upper deck level (+57 feet, 6 inches above mean sea level). Each of the flares will be supported at the lower (production) deck level (+35 feet, 6 inches) by a thick plate resting on the deck extension beams as well as with lateral support guides at the upper deck (Drilling Deck) level (+57 feet, 6 inches amsl). The lateral support at upper level for the flares will be of horizontal Vierendeel truss, with tubular members and Teflon surfaced slide bearings at the contact points. These slide bearings will allow the flares to expand due to temperature changes. Each of the flare stacks will be reinforced with a ring at the upper support level. Vapor barrier walls (8 feet, 8 inches in height) will be added on two sides of each of the flares adjacent to the production deck equipment.

The lower deck extension installation will require the welding of structural support beams by a five-man welding crew working five days a week for four weeks. The construction crew will use electrically-driven welding machines to perform the required welding activities.

The installation of the flare units will require both electrical hook-ups and gas piping modifications on the Platform. The electrical work will be conducted by a five-man electrical crew working five days a week for two weeks; the piping modifications will require a five-man welding crew for two weeks. The electrical work and the piping modification work will be

performed simultaneously (following completion of the four-week welding activities for the structural support beams described in the paragraph above).

Additionally, the deck extension and flare units will require touch-up painting after installation to ensure that any surface areas where welding occurred are protected from the elements over the long-term. A primer, mid-coat, and top-coat will be applied, consistent with DCOR's standard practices to ensure maximum protection in the harsh marine environment. A total of 10 gallons of paint will be applied by a four-man painting crew working three days utilizing brushes and rollers. No portable diesel-driven air compressors will be utilized. All paint utilized will have a low volatile organic compound (VOC) content and will be compliant with SCAQMD Rule 1106 (Marine Coating Operations).

Following installation, the equipment will be tested to ensure it is operating properly. The field testing will be performed by one of DCOR's Facility Engineers in combination with existing operations personnel currently working on Platform Esther. It is anticipated that testing of the equipment will occur over a five-day period. No additional trips to or from the Platform to transport equipment or the employees who will be performing the testing will be required, as such trips will occur using the existing regularly-scheduled crew/supply vessel runs (M/V Isabel L). It should be noted that DCOR's facility engineers currently visit the Platform on a regular basis and ride the crew/supply vessel out of Seal Beach Pier.

During the installation phase, DCOR will prepare a new hot/safe work permit and a Job Safety Analysis (JSA) daily. Additionally, a simultaneous operations plan will also be prepared by DCOR.

Project Operation

As stated above, Platform Esther currently supports a range of equipment to enable the oil and gas production activities including a crane engine (diesel); an emergency firewater pump (diesel); an emergency generator (exempt, <50 horsepower) (diesel); two microturbines (natural gas); and, other various production tanks and vessels. The upper primary deck is referred to as the Drilling Deck which accommodates a portable drilling rig, a mobile work-over rig, a rail-mounted crane, equipment storage area, spill booms, and various drilling quarters and offices. The lower primary deck is called the production deck and is divided into several areas: well bay, production area, control room, electrical rooms, offices, and galley.

Ongoing operation of such equipment and necessary functions will not be interrupted by the proposed improvements. These facilities and functions are considered part of the existing setting and are therefore not considered to be part of the project as proposed with consideration for the definition of a "project" under CEQA (CEQA Guidelines §15378(a)).

Flaring of gas as proposed will require multiple flare units to properly and safely handle the entire gas stream in compliance with strict air quality requirements using equipment that meets Best Available Control Technology (BACT) design requirements. All units will be fully enclosed, and no visible flame will be present. Operating specifications for the three flare systems are included in *Appendix D, Flare Systems – Performance Specifications*.

The CEB-350 is capable of handling production rates from 30 thousand cubic feet per day (MCFD) to 200 MCFD, and the CEB-800-CA is capable of handling production rates from 100 MCFD to 754 MCFD. Start-up, shut-down, and emergency use will be handled by the Fully Enclosed Emergency Stand-by Flare (FEF-90). The Emergency Stand-by Flare will be limited by SCAQMD to 8,961 thousand cubic feet per year (MCFY) (equivalent to 200 operating hours per year). Flaring of produced gas at the Platform Esther facility will be limited by the permit issued by SCAQMD to 600 MCFD, or 219,000 MCFY.

The flares will be installed on the proposed lower deck extension; refer to *Exhibit 3, Site Photos - Existing Conditions*, and *Exhibits 4A to 4D*. The top of the highest flare stack (FEF-90) will extend to 23 feet above the existing Drilling Deck. The height of the other two flare units (CEB-350 and CEB-800-CA) will extend to 13 feet above the existing Drilling Deck. Other structural elements on the Platform include the existing crane (top of mast at 65 feet above the Drilling Deck), and when present, the mobile well work-over rig (mast at 60 feet above the Drilling Deck) and the well drilling rig (mast at 120 feet above the Drilling Deck). As such, the proposed flare units will not represent new structural elements of substantial height within the existing visual setting.

Table 1-1, Proposed Permitting Language, provides sample language for inclusion in the permit to be issued by SCAQMD for the proposed facilities. *Table 1-1* gives specific equipment details and emission requirements that are anticipated to apply to the three flaring systems proposed for installation at Platform Esther as part of the project.

DRAFT

Table 1-1. Proposed Permitting Language

Equipment	ID Number	RECLAIM Source Type/ Monitoring Unity	Emissions and Requirements	Conditions
PROCESS 9: FLARE SYSTEM				
Flare, Process, 39 MMBTU/HR, Field Gas, Flare Industries, Model CEB 800-CA, Shrouded, Smokeless, with Continuous Gas Pilot. Height: 32 feet, 5 inches; Length: 4 feet, 8 inches; Width: 7 feet, 10 inches. A/N: TBD	C(TBD)	NO_x: Large Source	**CO:** 10 PPMV Field Gas (4) [Rule 1303(b)(2) – Offset]; CO: 2000 PPMV (5)[Rule 407]; **NO_x:** 0.023 LBS/MMBTU Field Gas (1) [Rule 2012]; **NO_x:** 15 PPMV Field Gas (4) [Rule 2005]; **VOC:** 10 PPMV Field Gas (4) [Rule 1303(a)(1)-BACT; Rule 1303(b)(2)- Offset]	Ref. permit conditions applied to CEB 800 installed at LINN Operating's RECLAIM facility ID#151532 (A/N 509255).
Flare, Process, 12 MMBTU/HR, Field Gas, Flare Industries, Model CEB 350, Shrouded, Smokeless, with Continuous Gas Pilot. Height: 32 feet, 5 inches; Length: 3 feet, 8 inches; Width: 3 feet, 8 inches. A/N: TBD	C(TBD)	NO_x: Large Source	Same as above.	Same as above.
Flare, Standby, 51 MMBTU/HR, Field Gas, Flare Industries, Model FEF-90, Shrouded, Smokeless, with Continuous Gas Pilot. Height: 45 feet, 0 inches; Length: x feet, x inches; Width: 7 feet, 5 inches. A/N: TBD	C(TBD)	(Exempt)	**CO:** 2000 PPMV Field Gas (5) [Rule 407]; **NO_x:** 0.06 LBS/MMBTU Field Gas (4) [Rule 1303(a)(1)-BACT]; **PM:** 0.1 Grains/SCF(5) [Rule 409]; **SO_x:** 500 PPMV Field Gas (5) [Rule 407]	Ref. permit conditions applied to John Zink standby flare installed at PXP/Freeport-McMoRan Oil & Gas's RECLAIM facility ID# 133987 (A/N 497438).

CO – Carbon monoxide; NO_x – Nitrogen oxide; SO_x – Sulfur oxide; PM – Particulate matter; VOC – Volatile organic compound; MMBTU/HR; TBD - To be determined; lbs – pounds; PPMV – Parts per million volume; FEF – Fully Enclosed Flare; RECLAIM - Regional Clean Air Incentives Market

RECLAIM Program

Platform Esther operates as a Regional Clean Air Incentives Market (RECLAIM) facility. The RECLAIM program was adopted by the SCAQMD in October of 1993 and established an emissions cap and declining balance for many larger facilities that emit nitrogen oxides (NO_x) and sulfur oxides (SO_x) within the South Coast Air Basin (SCAB). The RECLAIM program includes over 350 participants in its NO_x market and approximately 40 participants in its SO_x market. The program has the longest history and practical experience of any locally-designed and implemented air emissions cap and trade (CAT) program, allowing participating facilities to trade air pollution (emissions) while complying with established goals to achieve clean air standards.

The program allows for flexibility in determining how emissions are to be reduced and how to advance certain air pollution control technologies. NO_x and/or SO_x allocations were issued to RECLAIM facilities based on their historical activity levels and applicable emission control levels specified in the subsumed rules or in the local Air Quality Management Plan (AQMP). The RECLAIM program allows facilities the option of complying with their allocation allowance by either reducing emissions or through purchase of RECLAIM Trading Credits (RTCs) from other facilities. The annual allocation of NO_x RTCs for the Platform Esther facility is calculated pursuant to SCAQMD Rule 2002, *Allocations for Oxides of Nitrogen (NO_x) and Oxides of Sulfur (SO_x)*.Total NO_x emissions shall not exceed annual allocations identified unless an operator obtains RTCs corresponding to a facility's increased emissions in compliance with SCAQMD Rules 2005 and 2007.

The RECLAIM rules include an average current-year NO_x RTC price threshold of $15,000 per ton that, if exceeded, triggers additional evaluation, reporting to the Governing Board of the SCAQMD, and may potentially require adjustments to the program. SCAQMD staff reports the twelve-month rolling average prices of NO_x RTCs to the Stationary Source Committee (SSC) on a quarterly basis. DCOR participates in the RECLAIM Program and has purchased NOx RTCs for emission generated at Platform Esther, including those that will be emitted by the new flare system project.

It should be noted that the proposed improvements will not result in a substantial increase in local gas supplies available for public sale and consumption above current levels. The proposed project will allow for the flaring of produced gas on Platform Esther. The permit issued by the SCAQMD will ultimately limit the amount of gas that can be produced by Platform operations. The availability of such supplies will not be directly growth-inducing. Gas currently produced by Platform Esther helps to meet area demand for such resources, thereby reducing the need for imported gas supplies from distant locations; however, it is not anticipated that the availability of such resources will enable new development that would not have otherwise occurred under existing conditions (i.e. make available a new resource required to enable growth that was not previously available). Rather, future demand for the gas produced by Platform Esther will be influenced by economic conditions at the time that the gas is purchased. As such, the proposed project is not considered to result in a significant growth-inducing impact.

1.4.3 NEW OPERATIONS

Following project implementation, Platform Esther will continue to perform the same basic functions as the current facility (oil and gas production). The proposed modifications will enable DCOR to process and flare the excess gas produced; refer also to *Exhibits 4A to 4D* which show the proposed modifications at the project site.

Basic changes in existing operations that will occur after the proposed equipment is installed are as follows:

- Elimination of current contract with BreitBurn;
- Elimination of the transport of produced natural gas from Platform Esther to BreitBurn's onshore facility in Seal Beach;
- Installation of modern equipment (three natural gas flare units) incorporating clean technology to accommodate produced excess natural gas; and,
- Flaring of excess gas (not used in the two onsite microturbines) using the newly-installed flare units.

DRAFT

1.4.4 MITIGATION MEASURES

Mitigation measures to be implemented with the proposed project are identified in *Table 1-2, Summary of Mitigation Measures for the Proposed Project,* below, and are discussed in greater detail in Section 2.5, Environmental Checklist and Discussion, of this MND. Mitigation measures would be implemented to reduce project impacts to a level of less than significant.

Table 1-2. Summary of Mitigation Measures for the Proposed Project

Mitigation Measure #	Proposed Project
	GREENHOUSE GAS
MM GHG-1	**CEQA GHG Mitigation SCAQMD Facility Air Permit Conditions:** **W.W.** Operator shall monitor and record monthly fuel usage combusted in equipment subject to this condition. *[Devices subject to this condition: D31, D33, (CEB 350)*, (CEB 800-CA)*, (FEF-90)*]* **X.X.** Operator shall analyze gas combusted in equipment subject to this condition on a monthly basis by gas chromatograph per ASTM Method D 1945. *[Devices subject to this condition: D31, D33, (CEB 350)*, (CEB 800-CA)*, (FEF-90)*]* **Y.Y.** Operator shall calculate actual annual greenhouse gas (GHG) emissions no later than April 10th of each year commencing in Year 2016 (for GHG emissions occurring in Calendar Year 2015). Calculations shall follow the applicable estimation methodologies presented in California's Global Warming Solutions Act (AB 32, 2006, Title 17, California Code of Regulations, Sections 95100-95158 (17 CCR 95100-95158)). Emissions shall be presented in units of metric tons of CO_2 equivalent and operator shall submit to an ARB-accredited third-party GHG reporting verifier on or before April 10th for verification. Operator shall provide a copy of the GHG emissions report to the Executive Officer on or before April 10th or earlier as part of SCAQMD's Annual Emissions Reporting (AER) Program. Operator shall be responsible for procuring ARB-accredited third-party GHG verifier. Operator shall obtain from the verifier an ARB Verification Statement Form - Emissions Data Report and ARB Conflict of Interest/Notice of

Mitigation Measure #	Proposed Project
	Verification Services (COI/NOVS) Form. Operator shall provide these documents to the Executive Officer on or before September 1st of each year commencing in Year 2016 (for GHG emissions occurring in Calendar Year 2015). *[Devices subject to this condition: D31, D33, (CEB 350)*, (CEB 800-CA)*, (FEF-90)*]* **Z.Z.** Operator shall provide CEQA mitigation obligations for verified annual GHG emissions from equipment subject to this condition exceeding 10,000 metric tons CO_2e above the baseline calculated pursuant to Condition Y.Y. Operator shall provide documentation verifying CEQA GHG mitigation obligation purchases and/or holdings to the Executive Officer on or before September 15th of each year commencing in Year 2016 (for GHG emissions occurring in Calendar Year 2015). CEQA GHG mitigation obligations may be obtained pursuant to the following mechanisms: 1) Verified credits registered with the Climate Action Reserve or the American Carbon Registry; 2) Credits generated and verified under the CAPCOA GHG Rx program; 3) Credits generated and verified under SCAQMD Regulation XXVII. In addition, independently verified GHG credits available through other carbon registries that follow specific protocols may be eligible for offsite mitigation, subject to review and prior approval by the Executive Officer. For the purposes of this condition, the annual GHG baseline for equipment subject to this condition is 1,371 MT of CO_2e. Therefore, all verified GHG emissions above 11,371 MT in any calendar year from equipment subject to this condition shall be mitigated. Unused CEQA GHG compliance instruments from a previous year may be used to satisfy the CEQA GHG mitigation obligations. If the ARB-accredited verifier provides an adverse (un-verified) finding on the ARB Verification Statement Form - Emissions Data Report, operator shall mitigate the potential to emit (PTE) from equipment subject to this condition for that calendar year. For the purposes of this condition, the annual GHG PTE for equipment subject to this condition is 14,813 MT of CO_2e. Therefore, operator shall mitigate 4,813 MT of CO_2e for years when an adverse verification statement is received, or no statement is received. Unused CEQA GHG compliance instruments from a previous year may be used to satisfy the CEQA GHG mitigation obligations.

Mitigation Measure #	Proposed Project
	This condition shall not apply in its entirety if the California Air Resources Board lowers the cap-and-trade compliance obligation threshold to 10,000 MT of CO_2e and the facility is determined to be a covered entity under the Cap-and-Trade Regulation (Title 17, California Code of Regulations, Sections 95801-96022 (17 CCR 95801-96022)). {Note: "Covered entity" in the Cap-and-Trade Regulation (Section 95802(a)(83)) is defined as "means an entity within California that has one or more of the processes or operations and has a compliance obligation as specified in Subarticle 7 of this regulation; and that has emitted, produced, imported, manufactured, or delivered in 2009 or any subsequent year more than the applicable threshold level specified in Section 95812(a) of this rule."} *[Devices subject to this condition: D31, D33, (CEB 350)*, (CEB 800-CA)*, (FEF-90)*]* * Device ID numbers for new flares have not yet been assigned.

DRAFT

1.5 CONSTRUCTION SCHEDULE

No demolition activities are required with the proposed project. Construction will be limited to installation of the deck extension and the proposed flaring systems on existing Platform Esther, with associated transport of construction personnel and materials to and from the Platform.

Construction activities are anticipated to occur over an approximate 10-week period, following certification of the MND and issuance of the required permits. Construction is anticipated to commence in the 1st quarter of 2015; however, this date may ultimately vary, depending on the length of the approval process. Although the actual dates of the construction phase may change, it should be noted that the environmental analysis and anticipated emissions described herein in this MND will remain the same (i.e., the construction analysis is conservative, and all reported emissions will be the same or greater than actual emissions if construction is delayed).

1.6 OPERATING SCENARIO

Platform Esther is captured under the California Occupational Safety Administration (OSHA) Process Safety Management (Cal-ARP/RMP/PSM) regulations. In addition, DCOR has prepared and implements a Safety Manual, an Emergency Response Plan, and an Oil Response Plan to ensure ongoing worker safety and proper response in the event of an emergency or release of hazardous materials and/or oil on the Platform. Regulations require DCOR to operate the facilities in a prescriptive manner to prevent safety incidents and releases into the surrounding environment. DCOR is required to conduct hazard analyses, process safety and hazards assessments, mechanical integrity assessments, management of change, pre-construction review, operational training, conduct job hazards analysis (JHA), supply crane and cargo handling procedures, welding procedures, and post-project auditing. The goal of these programs and procedures is to prevent safety incidents and accidental releases to the environment that may have adverse consequences.

Installation of the proposed equipment on Platform Esther will occur in a logical sequence in order to ensure that all new equipment is operating effectively. The installation sequence will be analyzed and fine-tuned as part of the pre-construction review, and operational procedures will be reviewed prior to construction. Training will be implemented, as appropriate, subsequent to review of the operational procedures.

The new deck extension and equipment to be installed are illustrated in Exhibits 4A to 4D. Existing facility operations and maintenance activities on the Platform will not change substantially with the proposed project; however, such activities will still require review under the Cal-ARP/RMP/PSM program. Refer to *Appendix A, SCAQMD Permit Application (February 2014),* and *Appendix F, Final Emission Calculations and Health Risk Assessment,* which address construction and operational emissions for the new equipment.



Michael Baker INTERNATIONAL

Source: ESRI, 2014
143721Exhibits.indd

Platform Esther Deck Extension/Flare Installation Project

REGIONAL/LOCAL VICINITY MAP

Exhibit 1

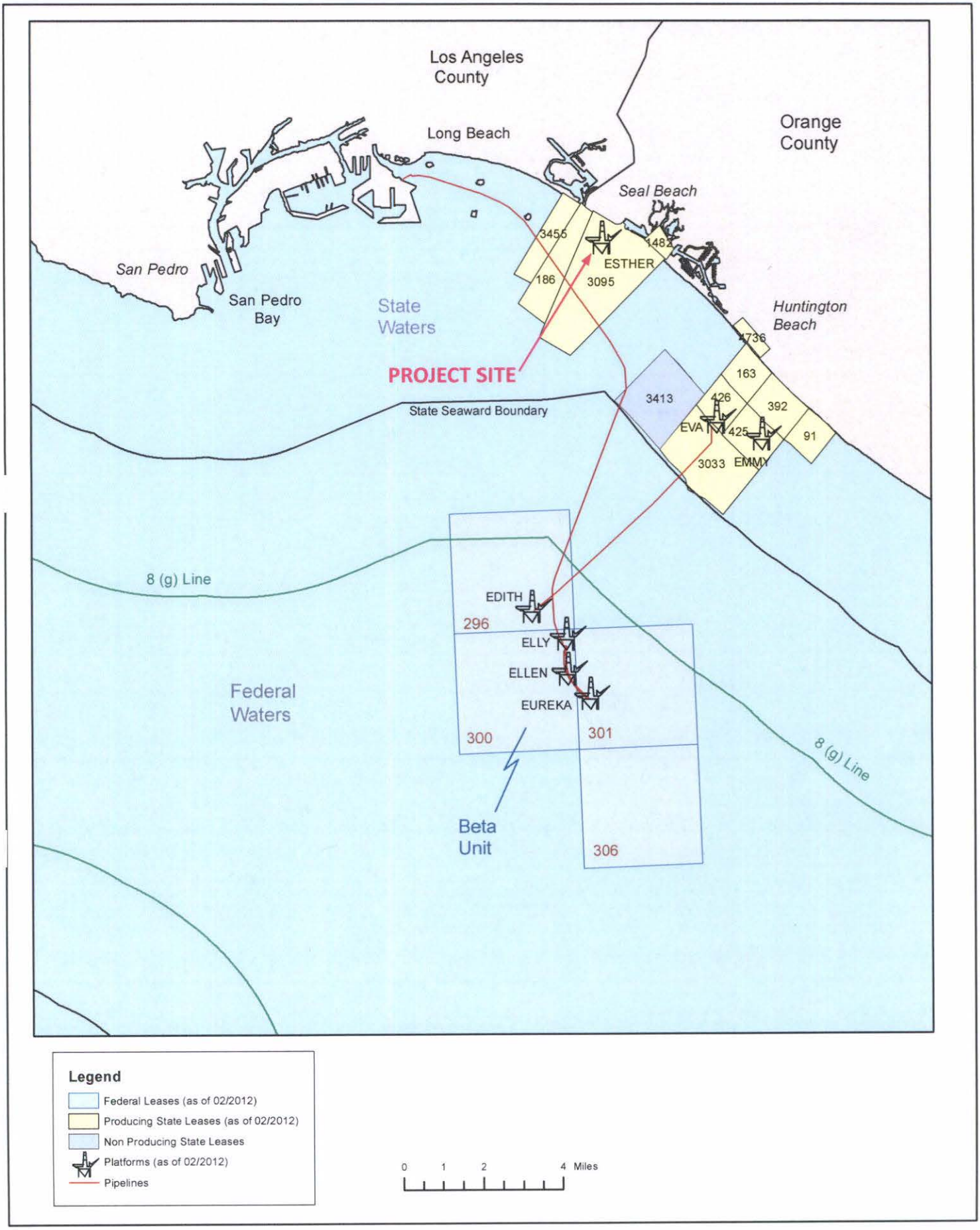

Michael Baker INTERNATIONAL

Source: Bureau of Ocean Energy Management, 02/01/2012
143721Exhibits.indd

Platform Esther Deck Extension/Flare Installation Project

SAN PEDRO BAY: OIL AND GAS PRODUCTION PLATFORMS

Exhibit 2



Photo 1: View of northeast side of Platform Esther where deck extension/gas flares are proposed.



Photo 2: View of northeast side of Platform Esther (looking west).

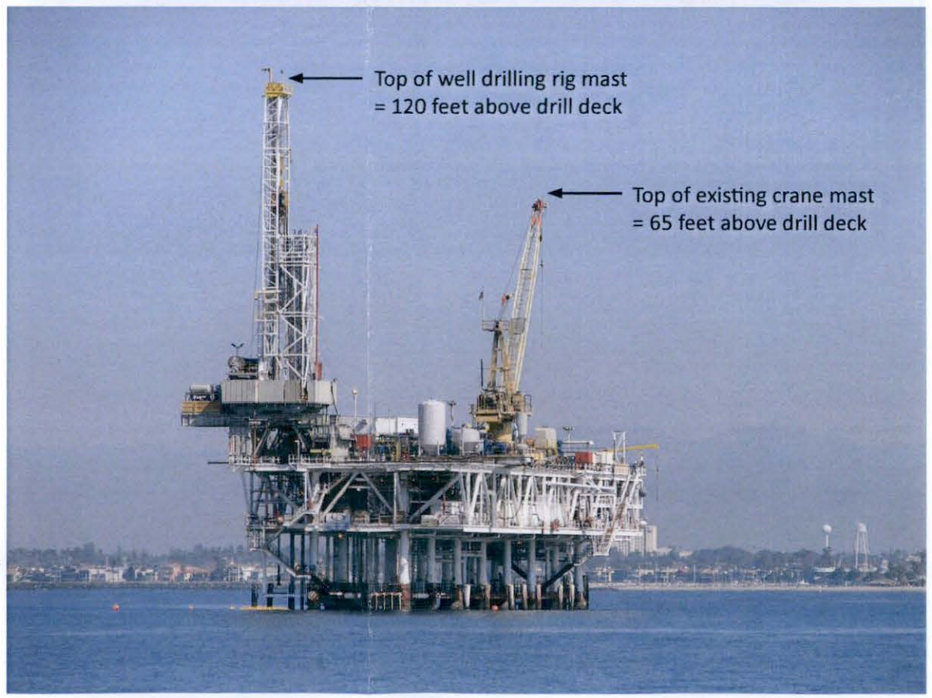

Photo 3: View of northeast side of Platform Esther (looking north).

Michael Baker
INTERNATIONAL

Source: DCOR, LLC. 2014
143721Exhibits.indd

Platform Esther Deck Extension/Flare Installation Project

SITE PHOTOS - EXISTING CONDITIONS

Exhibit 3

GENERAL NOTES

CODES
A) AISC "MANUAL OF STEEL CONSTRUCTION"
B) AISC "AISC CODE OF STANDARD PRACTICE"
C) API RP 2A 21ST EDITION – RECOMMENDED PRACTICE FOR THE PLANNING, DESIGNING AND CONSTRUCTING FIXED OFFSHORE PLATFORMS.

LOADS
A) EXTENSION OPEN AREA LIVE LOAD = 100 PSF COLUMN 6–7, 50 PSF COLUMN 7–8
B) EXTENSION OPEN AREA PIPING ALLOWANCE LOAD = 50 PSF ON INNER 10 FEET
C) MODEL FEF–90 FLARE STACK: 21,700 LBS
D) MODEL CEB–350 FLARE STACK: 5,300 LBS
E) MODEL CEB–800CA FLARE STACK: 9,400 LBS
F) SEISMIC LOADS (LOCALIZED COMPONENT DESIGN): 0.4G LATERAL, 0.2G VERTICAL
G) WIND LOADS: PER API RP 2A

GENERAL PROVISIONS
1. FABRICATION AND ERECTION OF STEEL SHAPES, PLATES, PIPES AND TUBING SHALL CONFORM TO AISC MANUAL OF STEEL CONSTRUCTION AND THE CODE OF STANDARD PRACTICE FOR STEEL BUILDING AND BRIDGES. DETAILING OF STEEL SHAPES, PLATES, PIPES AND TUBING SHALL CONFORM TO AISC STRUCTURAL DETAILING PROCEDURES.

2. ALL DIMENSIONS OF EXISTING STRUCTURES SHALL BE VERIFIED BEFORE STARTING FABRICATION. THE CONTRACTOR SHALL NOTIFY DCOR OF ANY INTERFERENCES AND CONFLICTS WITH EXISTING STEEL AND EQUIPMENT.

3. THE CONTRACTOR SHALL NOT DEVIATE FROM THESE DRAWINGS AND SPECIFICATIONS WITHOUT PRIOR AUTHORIZATION FROM DCOR AND THE ENGINEER.

4. FOR COPES, BLOCKS & CUTS, ALL RE–ENTRANT CORNERS SHALL BE SHAPED, NOTCH–FREE, TO A RADIUS OF AT LEAST 1/2". BREAK ALL SHARP CORNERS AND EDGES.

5. CONTRACTOR TO PROVIDE ALL NECESSARY TEMPORARY BRACING, SHORING, GUYING OR OTHER MEANS TO INSURE STRUCTURAL STABILITY AND TO AVOID EXCESSIVE STRESSES IN THE STRUCTURAL ELEMENTS DURING CONSTRUCTION.

SUBMITTALS
1. THE FABRICATOR SHALL SUPPLY SHOP DRAWINGS FOR APPROVAL BY DCOR AND THE ENGINEER PRIOR TO FABRICATION.

2. THE FABRICATOR SHALL SUPPLY MILL REPORTS FOR ALL STRUCTURAL MEMBERS UTILIZED.

3. THE FABRICATOR SHALL SUBMIT ALL WELDER QUALIFICATIONS, WELDING PROCEDURES, AND WELDING SEQUENCING PLAN TO DCOR AND THE ENGINEER FOR APPROVAL.

4. THE WELDING INSPECTOR SHALL SUPPLY COPIES OF ALL WELD INSPECTION REPORTS.

MATERIALS
ALL STRUCTURAL STEEL SHALL BE NEW AND CONFORM TO THE FOLLOWING ASTM SPECIFICATIONS, UNLESS NOTED OTHERWISE.

1. WIDE FLANGES: ASTM A992, FY=50 KSI
2. PLATES NOTE GR 50: ASTM A572 GRADE 50
3. RECTANGULAR TUBING: ASTM A500 GR B
4. DECK PLATE, MISC. PLATE, ANGLES, AND CHANNELS: ASTM A36 FY=36 KSI
5. STAINLESS STEEL: ASTM A240, TYPE 304L

SLIDE BEARINGS
1. SLIDE BEARINGS TO BE FLUOROGOLD BEARINGS AS MANUFACTURED BY SLIDE BEARINGS, LP IN CONROE, TX. OR APPROVED EQUAL.
2. BEARINGS TO BE SET PARALLEL FOR FULL AND EVEN CONTACT.

DOORS
1. DOORS TO BE 316 STAINLESS STEEL, 36 IN X 80 IN OPENING, MCMASTER CARR #1677A48 LEFT HAND OR #1677A55 RIGHT HAND, OR APPROVED EQUAL. HARDWARE AS SPECIFIED BY DCOR.

WELDING AND WELDING INSPECTION
1. ALL WELDING PROCEDURES, INSTALLATION SEQUENCING, WELDING MATERIALS AND WELDING INSPECTION REQUIREMENTS ARE TO BE REVIEWED AND APPROVED BY A THIRD PARTY WELDING INSPECTOR AND DCOR. THIS THIRD PARTY WELDING INSPECTOR WILL WORK DIRECTLY FOR DCOR.

2. ALL WELDING SHALL BE PERFORMED IN ACCORDANCE WITH THE REQUIREMENTS OF AWS D1.1, AND AWS D1.6 FOR STAINLESS STEEL.

3. ALL WELDERS SHALL BE QUALIFIED BY THE RELEVANT TESTS PRESCRIBED IN AWS D1.1, OR AWS D1.6 FOR STAINLESS, FOR WELDING STRUCTURAL SHAPES, PIPE AND PLATES.

4. QUALIFIED AND PRE–QUALIFIED WELDING PROCEDURES SHALL BE SUBMITTED TO AND APPROVED BY DCOR AND THE ENGINEER.

5. CARBON STEEL WELDING ELECTRODES SHALL BE LOW HYDROGEN AND HAVE A TENSILE STRENGTH OF 70 KSI.

6. ALL WELDS SHALL BE CONTINUOUS TO PREVENT CORROSION UNLESS SPECIFICALLY NOTED ON THESE DRAWINGS. ALL DECK PLATES SHALL BE WELDED TO SUPPORTING STEEL AND SEAL WELDED AT OPEN SEAMS, UNLESS NOTED OTHERWISE.

7. PRIOR TO WELDING DECK PLATE, A WELDING SEQUENCING PLAN SHALL BE DEVELOPED AND APPROVED BY DCOR TO MINIMIZE SHRINKAGE, DISTORTION AND RESIDUAL STRESSES.

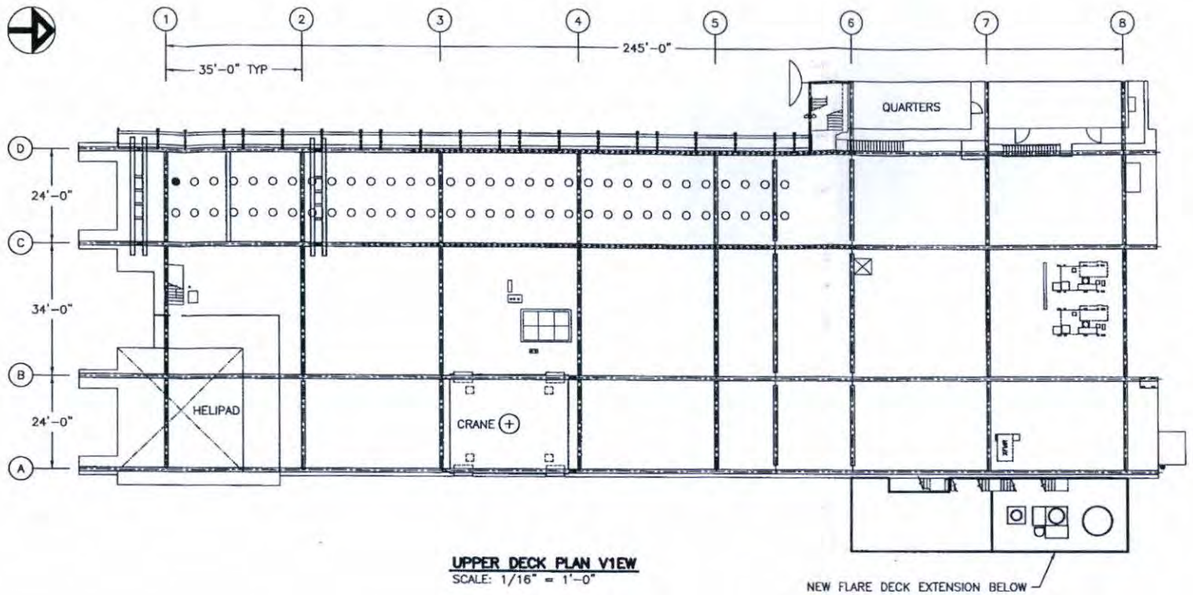

UPPER DECK PLAN VIEW
SCALE: 1/16" = 1'–0"

8. A PROGRAM FOR INSPECTION AND TESTING OF WELDS WILL BE DEVELOPED AND IMPLEMENTED PER THE REQUIREMENTS OF DCOR AND THE THIRD PARTY WELDING INSPECTOR. UNLESS SPECIFIED OTHERWISE, WELD ACCEPTANCE/REJECTION CRITERIA WILL BE IN ACCORDANCE WITH AWS D.1, STRUCTURAL WELDING CODE, SECTION 9.25.

9. ALL WELDING SHALL BE INSPECTED BY AN APPROVED THIRD PARTY AWS WELDING INSPECTOR. THIS THIRD PARTY WELDING INSPECTOR WILL WORK DIRECTLY FOR DCOR.

10. INSPECTION PROGRAM (TO BE CONFIRMED WITH WELDING INSPECTOR AND ENGINEER)
SUGGESTED TRIAL WELD INSPECTION:
A) SHOP WELDS:
100% VISUAL ALL WELDS,
50% MAGNETIC PARTICLE STRUCTURAL FILLET WELDS,
50% UT OF FULL PENETRATION WELDS.
B) FIELD WELDS:
100% VISUAL ALL WELDS,
50% MAGNETIC PARTICLE STRUCTURAL FILLET WELDS,
100% UT OF FULL PENETRATION WELDS.
C) FINAL WELD INSPECTION PLAN TO BE DEVELOPED BY THE WELD INSPECTON APPROVED BY ENGINEER AND DCOR.
D) ACCEPTANCE CRITERIA PER ASW D1.1 (LATEST EDITION)
E) AWS WELD INSPECTOR AND ENGINEER TO HAVE AUTHORITY TO INCREASE OR MODIFY THE INSPECTION PLAN AS FABRICATION PROGRESSES.

11. ALL REPAIR COSTS DUE TO WELD INSPECTION FAILURE ARE AT THE CONTRACTOR'S EXPENSE.

12. A PROGRAM FOR THE CHECKING OF CRITICAL DIMENSIONAL TOLERANCES PER THE REQUIREMENTS OF AISC WILL BE DEVELOPED AND IMPLEMENTED AT THE DIRECTION OF DCOR.

PAINTING AND GALVANIZING
1. THE FABRICATOR SHALL SUBMIT PROPOSED PAINTING SPECIFICATIONS TO DCOR FOR REVIEW AND APPROVAL. THE FABRICATOR'S PAINTING SHOP WILL BE FULLY PERMITTED TO MEET ALL RELEVANT AIR QUALITY REQUIREMENTS.

2. ALL COATINGS SHALL BE APPLIED PER THE MANUFACTURER'S RECOMMENDED PROCEDURES.

3. ALL FIELD WELDS AND DAMAGED AREAS SHALL BE PAINTED BY THE CONTRACTOR USING A COATING SYSTEM APPROPRIATE FOR THE PARENT PAINT SYSTEM AND THE CONDITIONS OF ANTICIPATED SERVICE.

PIPING
1. ALL PIPING DESIGN AND ENGINEERING BY DCOR. THOMAS & BEERS IS ONLY RESPONSIBLE FOR STRUCTURAL DESIGN.
2. ALL PIPING WILL BE FABRICATED, INSPECTED, COATED, INSTALLED AND TESTED IN ACCORDANCE WITH DCOR PIPING SPECIFICATION GS 43.0, REVISION 4.
3. ALL PIPING WILL CONFORM ANSI B31.3 CHEMICAL PLANT AND PETROLEUM REFINERY PIPING.
4. SEE DCOR SPECIFICATION GS 43 FOR DETAILS AND SPECIFIC INFORMATION ON PIPE, FITTINGS, JOINTS, VALVES BRANCH REINFORCEMENT AND DESIGN PARAMETERS.

ABBREVIATIONS

B.O.S.	BOTTOM OF STEEL	NO	NUMBER
BOT	BOTTOM	N.S.	NEAR SIDE
CLR	CLEAR	NTS	NOT TO SCALE
DIA	DIAMETER	O.C.	ON CENTER
(E)	EXISTING	OPP	OPPOSITE
E.W.	EACH WAY	PLC'S	PLACES
F.S.	FAR SIDE	SIM	SIMILAR
GSN	GENERAL STRUCTURAL NOTES	SPC'G	SPACING
HORIZ	HORIZONTAL	T.O.S.	TOP OF STEEL
MAX	MAXIMUM	TYP	TYPICAL
MIN	MINIMUM	U.N.O.	UNLESS NOTED OTHERWISE
(N)	NEW	VERT	VERTICAL
		W.P.	WORK POINT

REGISTERED PROFESSIONAL ENGINEER
RICHARD JAMES BEERS, JR.
No. C 34331
Exp. 9/2015
CIVIL
STATE OF CALIFORNIA

FOR APPROVAL
NOT FOR CONSTRUCTION

Michael Baker
INTERNATIONAL

Source: Thomas & Beers, 03/26/2014
143721Exhibits.indd

Platform Esther Deck Extension/Flare Installation Project

KEY PLAN

Exhibit 4A

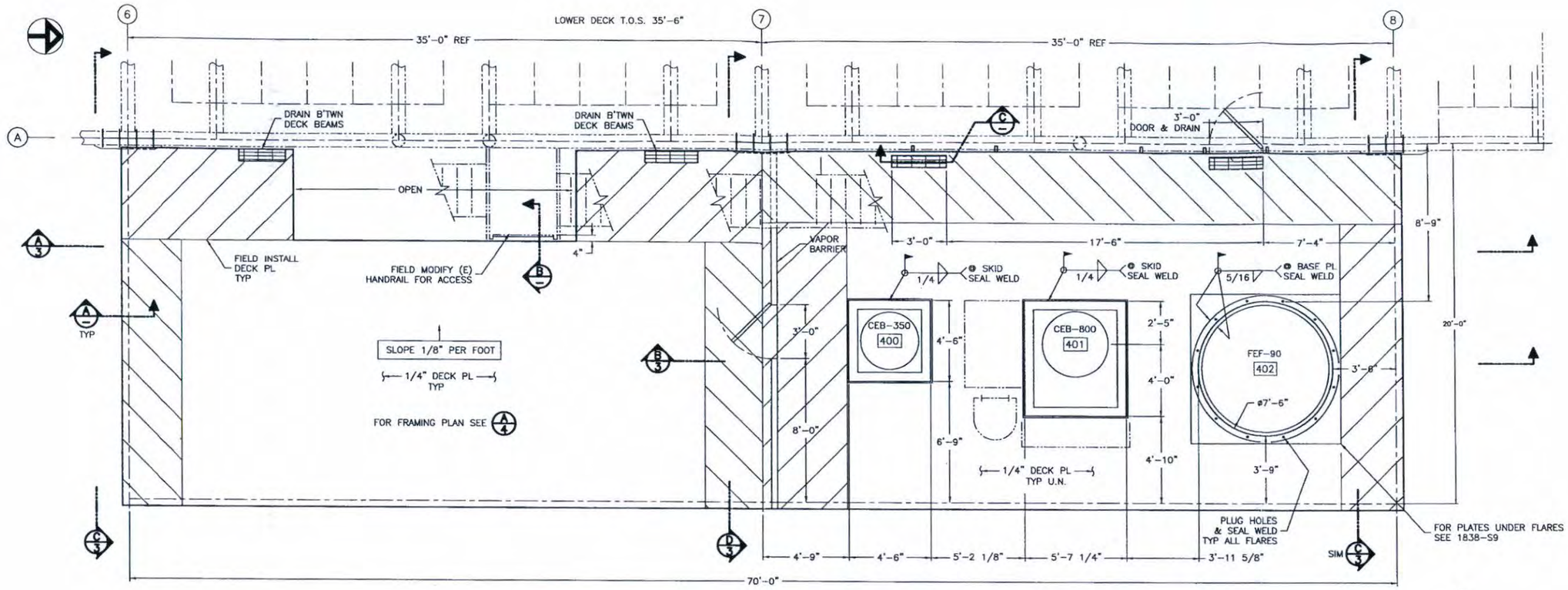

PLAN VIEW
SCALE: 3/8" = 1'-0"

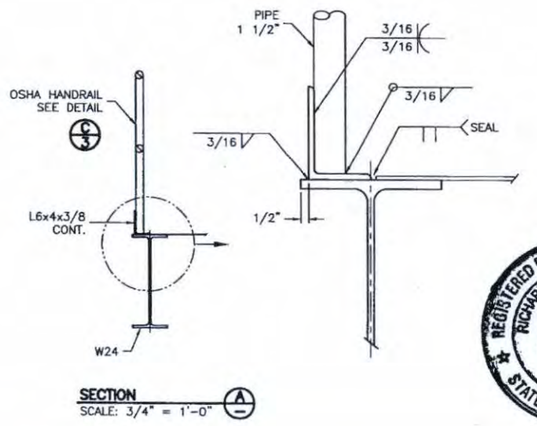

SECTION
SCALE: 3/4" = 1'-0" A/3

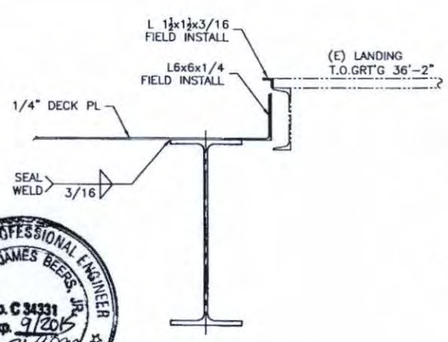

SECTION
SCALE: 1 1/2" = 1'-0" B/3

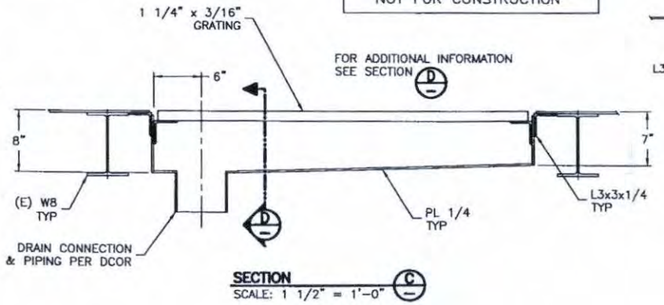

SECTION
SCALE: 1 1/2" = 1'-0" C/3

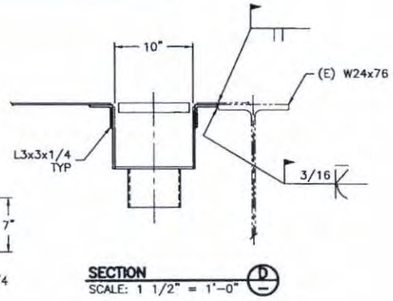

SECTION
SCALE: 1 1/2" = 1'-0" D/3

FOR APPROVAL
NOT FOR CONSTRUCTION

REGISTERED PROFESSIONAL ENGINEER
RICHARD JAMES BEERS, JR.
No. C 34331
Exp. 9/2015
CIVIL
STATE OF CALIFORNIA

Michael Baker
INTERNATIONAL

Source: Thomas & Beers, 03/26/2014
143721Exhibits.indd

Platform Esther Deck Extension/Flare Installation Project

PLAN VIEW & SECTIONS

Exhibit 4B

FOR APPROVAL
NOT FOR CONSTRUCTION

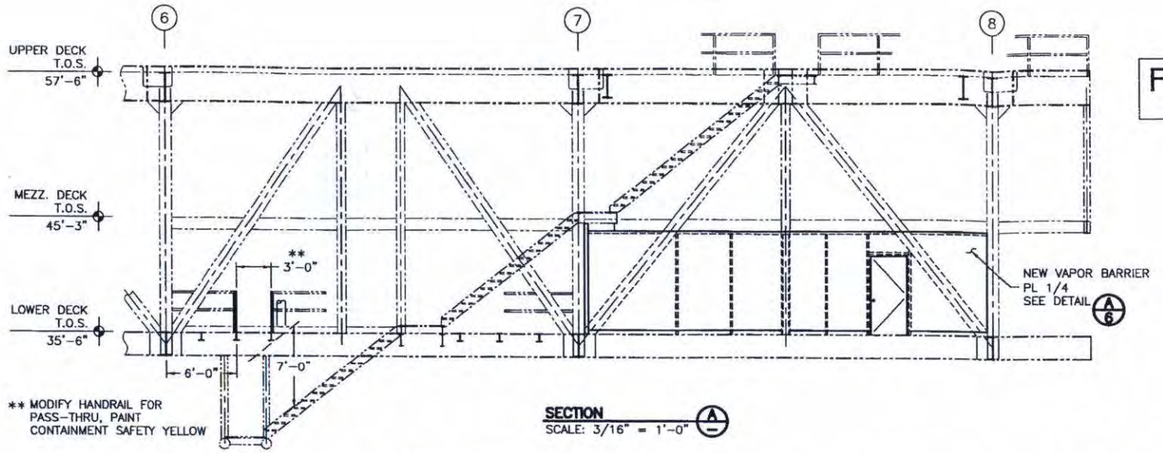

SECTION
SCALE: 3/16" = 1'-0" A

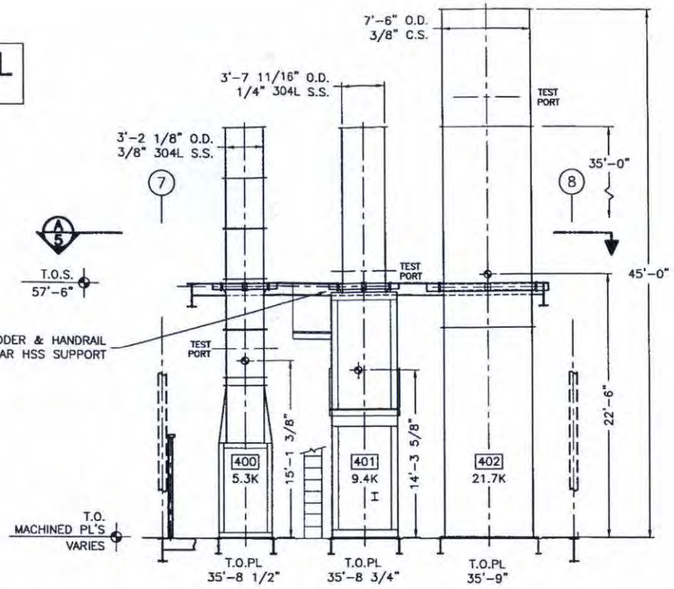

SECTION
SCALE: 3/16" = 1'-0" B

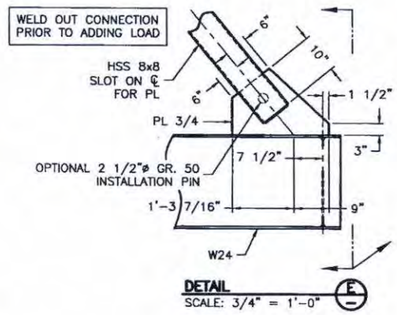

DETAIL
SCALE: 3/4" = 1'-0" E

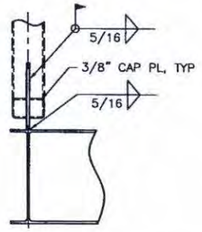

SOUTH ELEVATION
SCALE: 3/8" = 1'-0" C

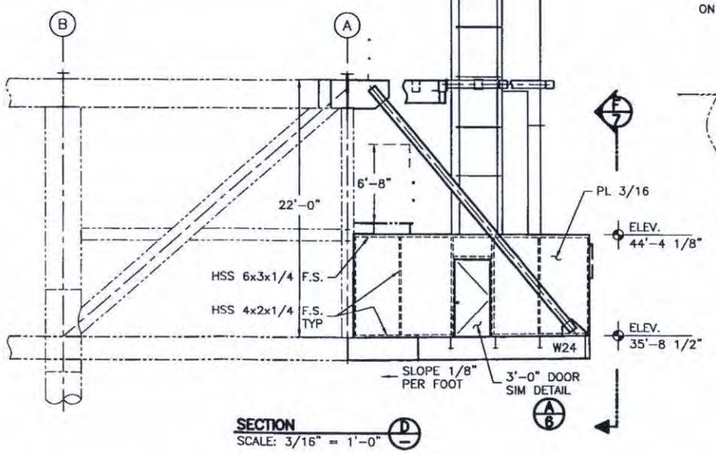

SECTION
SCALE: 3/16" = 1'-0" D

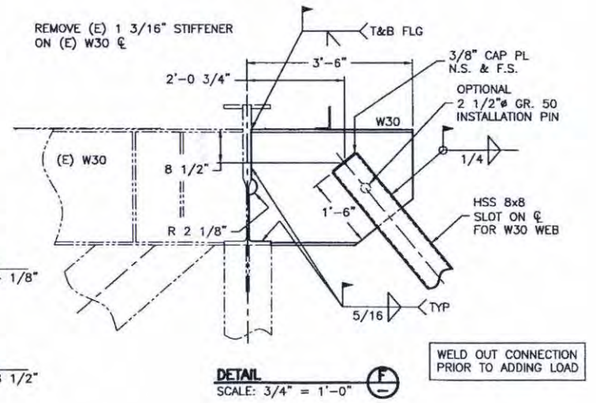

DETAIL
SCALE: 3/4" = 1'-0" F

REGISTERED PROFESSIONAL ENGINEER
RICHARD JAMES BEERS, JR.
No. C 34331
Exp. 9/2015
CIVIL
STATE OF CALIFORNIA

Michael Baker
INTERNATIONAL

Source: Thomas & Beers, 03/26/2014
143721Exhibits.indd

Platform Esther Deck Extension/Flare Installation Project

SECTIONS & DETAILS

Exhibit 4C

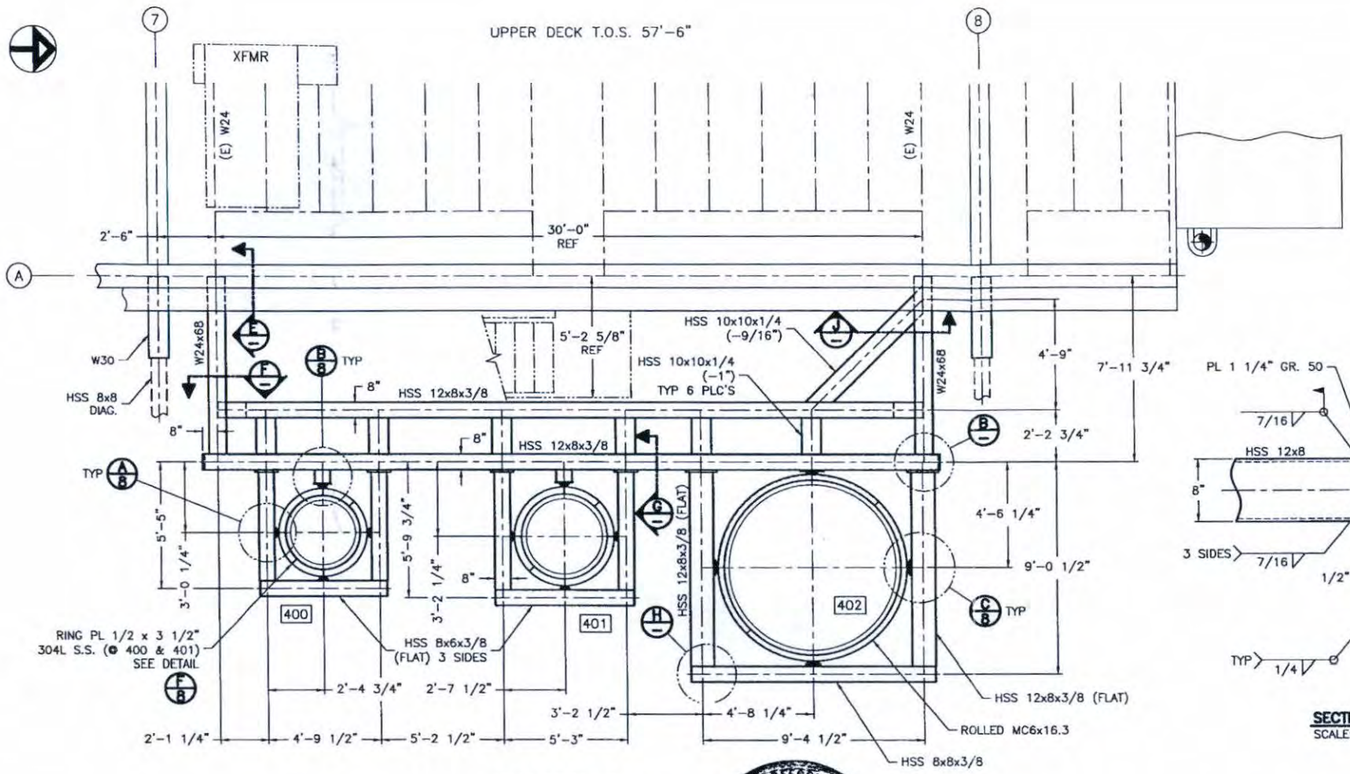

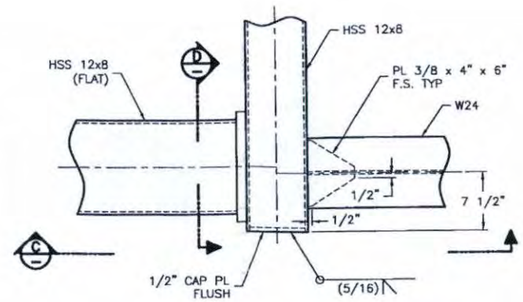

SECTION
SCALE: 1 1/2" = 1'-0" (B) (ROTATED)

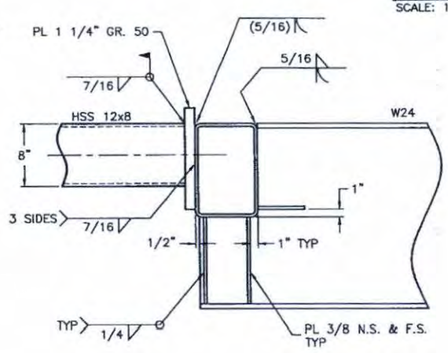

SECTION
SCALE: 1 1/2" = 1'-0" (C)

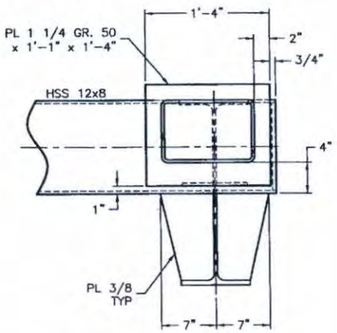

SECTION
SCALE: 1 1/2" = 1'-0" (D)

STACK RESTRAINT PLAN VIEW
SCALE: 3/8" = 1'-0" (A)

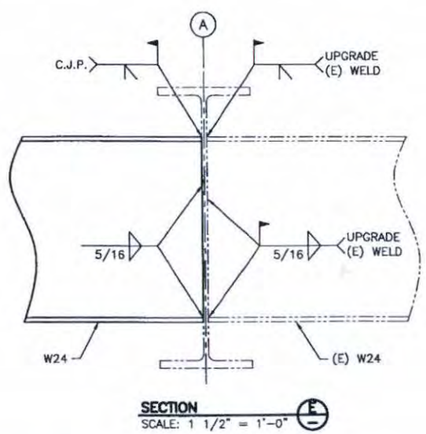

SECTION
SCALE: 1 1/2" = 1'-0" (E)

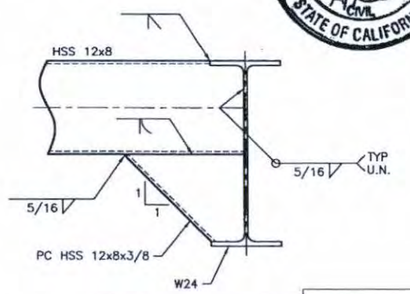

SECTION
SCALE: 1 1/2" = 1'-0" (F)

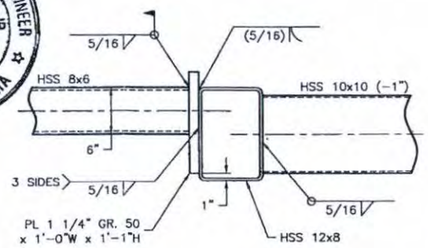

SECTION
SCALE: 1 1/2" = 1'-0" (G)

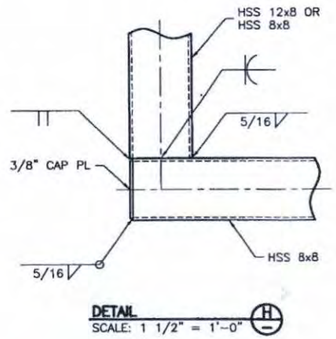

DETAIL
SCALE: 1 1/2" = 1'-0" (H)

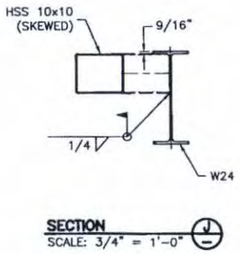

SECTION
SCALE: 3/4" = 1'-0" (J)

REGISTERED PROFESSIONAL ENGINEER
RICHARD JAMES BEERS, JR
No. C 34331
Exp. 9/2015
CIVIL
STATE OF CALIFORNIA

FOR APPROVAL
NOT FOR CONSTRUCTION

Michael Baker
INTERNATIONAL

Source: Thomas & Beers, 03/26/2014
143721Exhibits.indd

Platform Esther Deck Extension/Flare Installation Project

SECTIONS & DETAILS

Exhibit 4D





Photos 1 and 2: Demonstration of transport of a deck extension to platform via vessel for installation

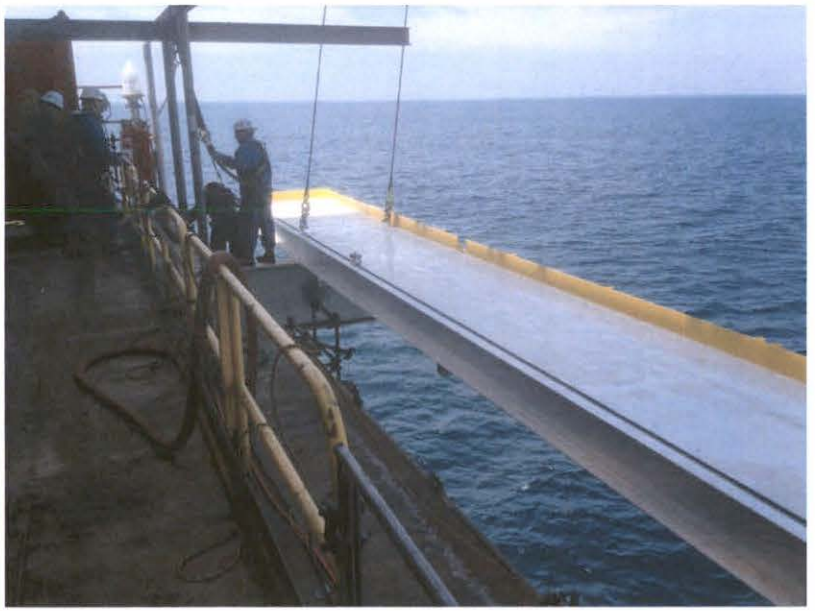

Photo 3: Demonstration of deck installation



Photo 4: Example of deck extension support structure

Michael Baker
INTERNATIONAL

Source: California Resources Corporation, October 2014
143721Exhibits.indd

Platform Esther Deck Extension/Flare Installation Project

DEMONSTRATION OF DECK EXTENSION INSTALLATION

Exhibit 5

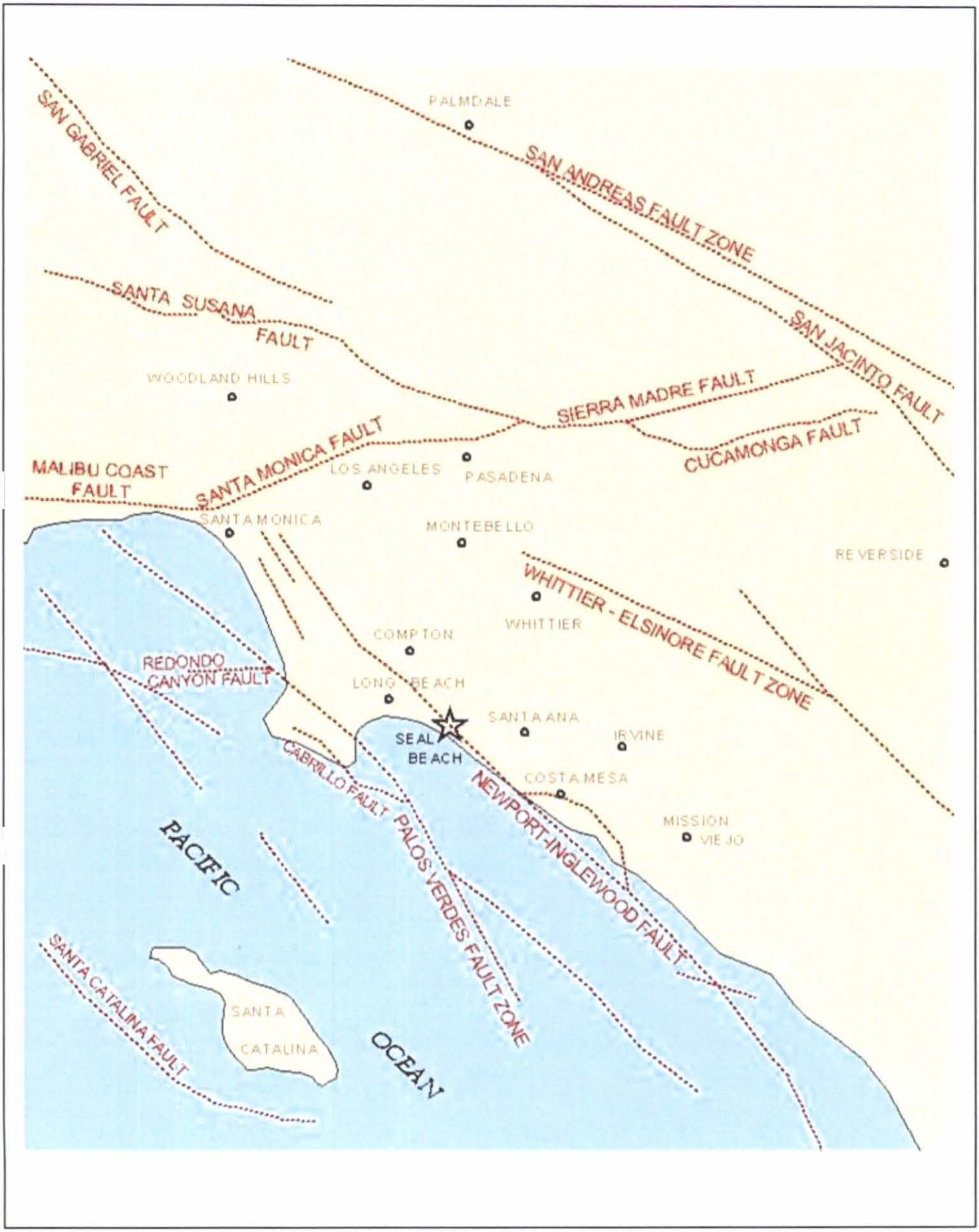

Michael Baker INTERNATIONAL

Source: City of Seal Beach General Plan, 12/03
143721Exhibits.indd

N

Not to Scale

Platform Esther Deck Extension/Flare Installation Project

SEAL BEACH REGIONAL SEISMIC MAP

Exhibit 6

CHAPTER 2
ENVIRONMENTAL CHECKLIST

Introduction
General Information
Potentially Significant Impact Areas
Determination
Environmental Checklist and Discussion
- Aesthetics
- Agriculture and Forestry Resources
- Air Quality and Greenhouse Gas Emissions
- Biological Resources
- Cultural Resources
- Energy
- Geology and Soils
- Hazards and Hazardous Materials
- Hydrology and Water Quality
- Land Use and Planning
- Mineral Resources
- Noise
- Population and Housing
- Public Services
- Recreation
- Solid/Hazardous Waste
- Transportation and Traffic
- Mandatory Findings of Significance

References
Acronyms

DRAFT

2.1 INTRODUCTION

The environmental checklist provides a standard evaluation tool to identify a project's adverse environmental impacts. This checklist identifies and evaluates potential adverse environmental impacts that may be created by the proposed project.

2.2 GENERAL INFORMATION

Project Title:	DCOR, LLC, Platform Esther Facility (SCAQMD Facility ID #143740), Offshore State Lease PRC 3095.1, Platform Esther Gas Flare System Installation Project
Lead Agency Name:	South Coast Air Quality Management District
Lead Agency Address:	21865 Copley Drive, Diamond Bar, CA 91765
Lead Agency Contact Person and Phone Number:	Michael Krause (909) 396-2706
Project Sponsor's Name:	DCOR, LLC
Project Sponsor's Address:	290 Maple Court, Suite 290, Ventura, CA 93003
Project Sponsor's Contact Person and Phone Number:	Christine White (805) 535-2074
General Plan Designation:	N/A
Zoning:	N/A
Description of Project:	Platform Esther's produced gas is currently sent via pipeline to the BreitBurn Gas Processing Venture's (BreitBurn) onshore facility in Seal Beach, with some gas being combusted onsite in two 250 KW microturbines. The facility does not currently have a flare, and the contract with BreitBurn expires on May 15, 2015 and will not be renewed. If there is no outlet for Platform Esther's produced gas after 2015, oil production operations would be required to cease. Several options have been considered (i.e., gas injection, additional microturbines, pipeline to other DCOR facilities), but installation of a flaring system was determined to be the only viable option. The proposed three (3) flare system would consist of two (2) ultra-low emission process flares and one (1) enclosed standby flare, all manufactured by Flare Industries, Inc. The standby flare would be used during emergencies, power outages, and start-up/testing/maintenance of the ultra-low emission units.

Surrounding Land Uses and Setting:	Platform Esther is an existing platform located in waters under the jurisdiction of the State of California. The Platform is located within the waters of San Pedro Bay, approximately 1.5 miles offshore to the southwest of Seal Beach Pier, which is located within the City of Seal Beach, California; refer to *Exhibit 2, San Pedro Bay – Oil and Gas Production Platforms*. The facility is one of two DCOR oil and gas production platforms located in the State waters in San Pedro Bay. DCOR's third platform, Platform Edith, is located in federal waters under the jurisdiction of the Federal Government Department of Interior (BSEE). The Platform is located on State Oil and Gas Lease PRC 3095.1 (Parcel 16A) in water having a depth of approximately 38 feet. The Platform is completely surrounded by waters of the Pacific Ocean (San Pedro Bay). Two other similar platforms (Eva and Emmy) are located just to the southeast of Platform Esther; refer to *Exhibit 2*. The City of Seal Beach (shoreline) lies approximately 1.5 miles to the north of the Platform. The City of Seal Beach is bounded by the Cities of Long Beach to the northwest and Huntington Beach to the southeast; to the east lies the City of Westminster and to the north/northeast lie the Cities of Los Alamitos and Stanton.
Other Public Agencies Whose Approval is Required:	California State Lands Commission (CSLC) (Responsible Agency under CEQA)

DRAFT

2.3 ENVIRONMENTAL FACTORS POTENTIALLY AFFECTED

The following environmental impact areas have been assessed to determine their potential to be affected by the proposed project. As indicated by the checklist on the following pages, environmental topics marked with an "☒" may be adversely affected by the proposed project. An explanation relative to the determination of impacts can be found following the checklist for each area.

☐ Aesthetics	☐ Geology and Soils	☐ Population and Housing
☐ Agriculture and Forestry Resources	☐ Hazards and Hazardous Materials	☐ Public Services
☒ Air Quality and Greenhouse Gas Emissions	☐ Hydrology and Water Quality	☐ Recreation
☐ Biological Resources	☐ Land Use and Planning	☐ Solid and Hazardous Waste
☐ Cultural Resources	☐ Mineral Resources	☐ Transportation and Traffic
☐ Energy	☐ Noise	☐ Mandatory Findings of Significance

DRAFT

2.4 DETERMINATION

On the basis of this initial evaluation:

☐ I find the proposed project COULD NOT have a significant effect on the environment, and that a NEGATIVE DECLARATION will be prepared.

☒ I find that although the proposed project could have a significant effect on the environment, there will not be significant effects in this case because revisions in the project have been made by or agreed to by the project proponent. A MITIGATED NEGATIVE DECLARATION will be prepared.

☐ I find that the proposed project MAY have a significant effect(s) on the environment, and an ENVIRONMENTAL IMPACT REPORT (EIR) is required.

☐ I find that the proposed project MAY have a "potentially significant impact" on the environment, but at least one effect 1) has been adequately analyzed in an earlier document pursuant to applicable legal standards, and 2) has been addressed by mitigation measures based on the earlier analysis as described on attached sheets. An ENVIRONMENTAL IMPACT REPORT is required, but it must analyze only the effects that remain to be addressed.

☐ I find that although the proposed project could have a significant effect on the environment, because all potentially significant effects (a) have been analyzed adequately in an earlier EIR or NEGATIVE DECLARATION pursuant to applicable standards, and (b) have been avoided or mitigated pursuant to that earlier EIR or NEGATIVE DECLARATION, including revisions or mitigation measures that are imposed upon the proposed project, nothing further is required.

Date: _____ **Signature:** _____

Michael Krause
Program Supervisor, CEQA
Planning, Rules, and Area Sources

Telephone: (909) 396-2706

2.5 ENVIRONMENTAL CHECKLIST AND DISCUSSION

		Potentially Significant Impact	Less Than Significant With Mitigation	Less Than Significant Impact	No Impact
I.	**AESTHETICS.** Would the project:				
a)	Have a substantial adverse effect on a scenic vista?	☐	☐	☐	☑
b)	Substantially damage scenic resources, including, but not limited to, trees, rock outcroppings, and historic buildings within a state scenic highway?	☐	☐	☐	☑
c)	Substantially degrade the existing visual character or quality of the site and its surroundings?	☐	☐	☐	☑
d)	Create a new source of substantial light or glare which would adversely affect day or nighttime views in the area?	☐	☐	☐	☑

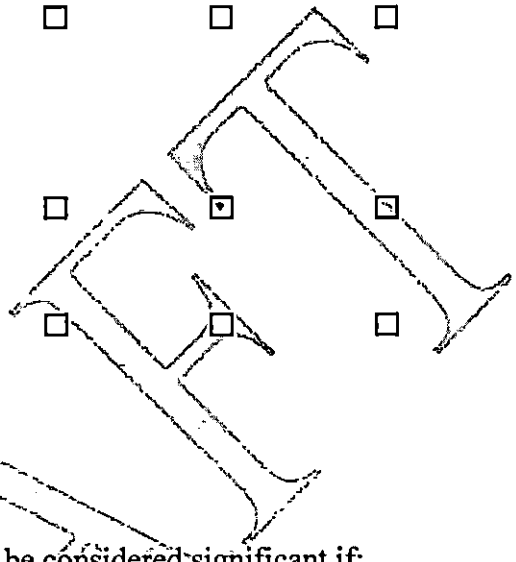

SIGNIFICANCE CRITERIA

The proposed project impacts on aesthetics will be considered significant if:

- The project will block views from a scenic highway or corridor.
- The project will adversely affect the visual continuity of the surrounding area.
- The impacts on light and glare will be considered significant if the project adds lighting which would add glare to residential areas or sensitive receptors.

DISCUSSION

I. a), b), and c). The proposed improvements will occur on the existing Platform Esther which is located approximately 1.5 miles offshore from the City of Seal Beach. The Platform is located within San Pedro Bay, and is therefore surrounded by water.

Similar oil and gas producing platforms are located within the surrounding area, including Platforms Eva and Emmy, located to the southeast of Platform Esther, as well as additional platforms located in federal waters, further to the south; however, these platforms are distanced from Platform Esther by approximately four miles or more. Chaffee Island, White Island, Freeman Island, and Grissom Island, which support oil and gas production-related operations, are located approximately 2.1, 3.6, 3.3, and 6.3 miles (respectively) to the northwest. Therefore, similar industrial, natural resource extraction-type uses are present within the existing visual setting.

The project site is not within close proximity to any scenic highways or corridors. The nearest roadway designated as a State Scenic Highway is Highway 1 (Pacific Coast Highway), which

runs northwest-southeast generally adjacent to the Pacific Ocean shoreline in the project vicinity, within the City of Seal Beach and adjacent communities. The entire length of the roadway within Orange County is designated as a State Scenic Highway by the California Department of Transportation (Caltrans). No other highways eligible for State or local scenic highway designation are within the vicinity of the project site. Additionally, the County of Orange has designated Highway 1 as an "Urbanscape Corridor," a route that traverses an urban area with a defined visual corridor that offers a view or attractive and exciting urban scene, and that has recreational value for its visual relief as a result of nature or the designed efforts of man."[1]

Although Platform Esther may be visible from Highway 1, views would be intermittent due to intervening development onshore. Further, distance from the Platform to Highway 1, combined with the angle of the Platform and location where the improvements are proposed (northeast side) would reduce the visibility of the proposed improvements from the road. No trees, rock outcroppings, or historic buildings occur onsite, and therefore, no such resources will be substantially damaged along the State Scenic Highway as a result of project implementation.

Additionally, the height of the existing crane mast on the Platform extends approximately 65 feet above the drill deck. A mobile well work-over rig is periodically transported to and from the Platform when needed for use; when present on the Platform, the maximum height of the rig is approximately 60 feet above the drill deck. A well drilling rig is also periodically transported to and from the Platform when needed; when present on the Platform, the well drilling rig mast extends to approximately 120 feet above the drill deck.

The proposed deck extension would be approximately 20 feet by 70 feet (1,400 s.f.) and would be located on the northeast side of the existing Platform, adjacent to the production deck; refer to *Exhibit 3, Site Photos – Existing Conditions*, and *Exhibits 4A to 4D*, which show the proposed improvements. The height of the proposed deck extension would be approximately 35.5 feet above sea level (amsl); the height of the upper drill deck is approximately 57.5 feet amsl. The top of the highest flare stack (FEF-90) would be 23 feet above the existing drill deck. The height of the other two flare units (CEB-350 and CEB-800CA) would be 13 feet above the drill deck. As such, in particular with consideration for the height of other structural elements that are or may be present on the existing Platform, the proposed flare systems would not represent elements of substantial height within the existing visual landscape.

Further, the proposed flare units are fully enclosed and therefore, no visible flame would be present to observers at any time. Due to the Platform's location approximately 1.5 miles offshore, and the existing ongoing operations on the Platform, installation of the gas flaring systems would not substantially change the existing visual appearance of the facilities on Platform Esther or with regard to similar oil and gas facilities on similar platforms within the surrounding area; refer also to *Exhibit 3, Site Photos - Existing Conditions*.

It is anticipated that proposed facilities will visually blend in with the existing facilities and operations onsite, and views of the new equipment will be consistent with existing views of the

[1] City of Seal Beach General Plan – Land Use Element. http://www.sealbeachca.gov/uploadedFiles/Land%20Use%20Element.pdf. Accessed October 28, 2014.

other industrial-type facilities. As such, the project is not anticipated to have a substantial effect on a scenic vista or substantially degrade the existing visual character or quality of the site and its surroundings. No significant impact will occur.

I. d) The proposed improvements will be located on the existing Platform, and nighttime lighting is presently part of the existing visual setting. The project site is located approximately 1.5 mile from the shore. As such, any additional temporary construction lighting and/or operational lighting will generally be indiscernible from the shoreline relative to existing lighting installed on the Platform. Although vessels passing by the Platform may notice additional lighting, if installed, it is anticipated that passengers on such vessels would either be familiar with the visual appearance of the Platform within the surrounding setting, or unfamiliar, and therefore, will generally not notice the addition of any new sources of light.

Any additional permanent light sources required for nighttime maintenance or operation of the new equipment will be installed in accordance with applicable safety standards which include Cal-OSHA (Title 8, California Code of Regulations (CCR) §3317). If required, such lighting will not be expected to result in any offsite glare impacts, as the project components will be located on the existing Platform where similar industrial-type facilities are presently illuminated at night for purposes of safety and to allow for nighttime operations. Further, residential uses whose occupants may be more sensitive to nighttime lighting, are not located within the vicinity of the site, and rather, are at least 1.5 miles away within the City of Seal Beach and other surrounding communities. Therefore, any additional nighttime lighting will not adversely affect such uses. Additionally, and as appropriate, any new lighting installed will generally be required to be directed inward to the interior of the Platform to limit the potential for offsite glare to occur.

As such, the project will not create a new source of substantial light or glare during construction or operation that will adversely affect day or nighttime views in the area. No significant impact will occur.

MITIGATION MEASURES

Based on the above information relative to impacts relative to aesthetic resources, no significant adverse impacts were identified, and therefore, no mitigation measures are required for the construction or operation of the proposed project.

		Potentially Significant Impact	Less Than Significant With Mitigation	Less Than Significant Impact	No Impact
II.	**AGRICULTURE AND FORESTRY RESOURCES.** Would the project:				
a)	Convert Prime Farmland, Unique Farmland, or Farmland of Statewide Importance (Farmland), as shown on the maps prepared pursuant to the Farmland mapping and Monitoring Program of the California Resources Agency, to non- agricultural use?	☐	☐	☐	☑
b)	Conflict with existing zoning for agricultural use, or a Williamson Act contract?	☐	☐	☐	☑
c)	Conflict with existing zoning for, or cause rezoning of, forest land (as defined in Public Resources Code §12220(g)), timberland (as defined by Public Resources Code §4526), or timberland zoned Timberland Production (as defined by Government Code §51104 (g))?	☐	☐	☐	☑
d)	Result in the loss of forest land or conversion of forest land to non-forest use?	☐	☐	☐	☑

SIGNIFICANCE CRITERIA

Project-related impacts on agricultural and forestry resources will be considered significant if any of the following conditions are met:

- The proposed project conflicts with existing zoning or agricultural use or Williamson Act contracts.
- The proposed project will convert prime farmland, unique farmland or farmland of statewide importance as shown on the maps prepared pursuant to the farmland mapping and monitoring program of the California Resources Agency, to non-agricultural use.
- The proposed project conflicts with existing zoning for, or causes rezoning of, forest land (as defined in Public Resources Code §12220(g)), timberland (as defined in Public Resources Code §4526), or timberland zoned Timberland Production (as defined by Government Code §51104(g)).
- The proposed project would involve changes in the existing environment, which due to their location or nature, could result in conversion of farmland to non-agricultural use or conversion of forest land to non-forest use.

DISCUSSION

II. a), b), c), and d). The project site is located approximately 1.5 miles offshore within the Pacific Ocean, specifically within San Pedro Bay. The project would involve improvements on existing Platform Esther to construct a deck extension and allow for installation of the gas flaring systems.

There are no agricultural resource resources (i.e., field crops, food crops grown for commercial purposes, etc.) or forestry resources (i.e., park forests, timber crops grown for commercial purposes, etc.) located in or near the vicinity of the site, due to its physical location. Further, the proposed project will not involve construction of any improvements or structures off of the Platform or on the mainland, where agricultural or forestry resources may occur. No agricultural resources including Williamson Act contracts are located onsite or will be impacted by project construction activities, as all improvements will occur on the Platform. The project will not convert prime farmland, unique farmland, or farmland of Statewide importance to non-farming use, or, conflict with current zoning for agriculture. The project is also consistent with existing onsite uses and will not conflict with existing zoning for, or cause rezoning of, forest land (as defined in Public Resources Code §12220(g)), timberland (as defined by Public Resources Code §4526), or timberland zoned Timberland Production (as defined by Government Code §51104(g)).

Therefore, the proposed project would not have a significant adverse impact on any agricultural resources, result in the loss of forest land or conversion of forest land to non-forest use, or conflict with a Williamson Act contract or current zoning for forest or timberlands. No significant impact will occur.

MITIGATION MEASURES

Based on the above information relative to impacts relative to agricultural and forestry resources, no significant adverse impacts were identified, and therefore, no mitigation measures are required for the construction or operation of the proposed project.

		Potentially Significant Impact	Less Than Significant With Mitigation	Less Than Significant Impact	No Impact
III.	**AIR QUALITY AND GREENHOUSE GAS EMISSIONS.** Would the project:				
a)	Conflict with or obstruct implementation of the applicable air quality plan?	☐	☐	☐	☑
b)	Violate any air quality standard or contribute to an existing or projected air quality violation?	☐	☑	☑	☐
c)	Result in a cumulatively considerable net increase of any criteria pollutant for which the project region is non-attainment under an applicable federal or state ambient air quality standard (including releasing emissions that exceed quantitative thresholds for ozone precursors)?	☐	☐	☑	☐
d)	Expose sensitive receptors to substantial pollutant concentrations?	☐	☐	☑	☐
e)	Create objectionable odors affecting a substantial number of people?	☐	☐	☑	☐
f)	Diminish an existing air quality rule or future compliance requirement resulting in a significant increase in air pollutant(s)?	☐	☐	☑	☐
g)	Generate greenhouse gas emissions, either directly or indirectly, that may have a significant impact on the environment?	☐	☑	☐	☐
h)	Conflict with an applicable plan, policy or regulation adopted for the purpose of reducing the emissions of greenhouse gases?	☐	☑	☐	☐

SIGNIFICANCE CRITERIA

To determine whether or not air quality and greenhouse gas (GHG) emission impacts from implementing the proposed project are significant, impacts will be evaluated and compared to the criteria in *Table III-1*. The proposed project will be considered to have significant adverse impacts if any one of the thresholds in *Table III-1* are equaled or exceeded.

TABLE III-1 SCAQMD Air Quality and Greenhouse Gas (GHG) Significance Thresholds

Mass Daily Thresholds[a]		
Pollutant	**Construction[b]**	**Operation[c]**
NO_x	100 lbs/day	55 lbs/day
VOC	75 lbs/day	55 lbs/day
PM_{10}	150 lbs/day	150 lbs/day
$PM_{2.5}$	55 lbs/day	55 lbs/day
SOx	150 lbs/day	150 lbs/day
CO	550 lbs/day	550 lbs/day
Lead	3 lbs/day	3 lbs/day
Toxic Air Contaminants (TACs), Odor, and GHG Thresholds		
TACs (including carcinogens and non-carcinogens)	Maximum Incremental Cancer Risk ≥ 10 in 1 million Chronic and Acute Hazard Index ≥ 1.0 (project increment) Cancer Burden ≥ 0.5 excess cancer cases (in areas ≥ 1 in 1 million)	
Odor	Project creates an odor nuisance pursuant to SCAQMD Rule 402	
GHG	10,000MT/yr CO_2eq for industrial facilities.	
Ambient Air Quality for Criteria Pollutants		
NO_2 1-hour average annual average	SCAQMD is in attainment; significant if project causes or contributes to an exceedance of any standard: 0.18 ppm (State) 0.03 ppm (State) and 0.0534 ppm (federal)	
PM_{10} 24-hour annual average	10.4 $\mu g/m^3$ (construction)[e] and 2.5 $\mu g/m^3$ (operation) 1.0 $\mu g/m^3$	
$PM_{2.5}$ 24-hour average	10.4 $\mu g/m^3$ (construction)[e] and 2.5 $\mu g/m^3$ (operation)	
SO_2 1-hour average 24-hour average	0.255 ppm (State) and 0.075 ppm (federal – 99th percentile) 0.04 ppm (state)	
Sulfate 24-hour average	25 $\mu g/m^3$ (State)	
CO 1-hour average 8-hour average	SCAQMD is in attainment; significant if project causes or contributes to an exceedance of any standard: 20 ppm (State) and 35 ppm (federal) 9.0 ppm (State/federal)	
Lead 30-day average Rolling 3-month average Quarterly average	1.5 $\mu g/m^3$ (State) 0.15$\mu g/m^3$ (federal) 1.5$\mu g/m^3$ (federal)	

a) Source: SCAQMD Air Quality Significance Thresholds, www.aqmd.gov/ceqa/handbook/signthres.pdf. April 2014.
b) Ambient air quality thresholds for criteria pollutants based on SCAQMD Rule 1303, Table A-2 unless otherwise stated.
c) Ambient air quality threshold based on SCAQMD Rule 403.
KEY: PM_{10} = particulate matter less than 10 microns in size, $\mu g/m^3$ = microgram per cubic meter; ppm = parts per million; TAC = toxic air contaminant; AHM = Acutely Hazardous Material; NO_2 = Nitrogen Oxide, CO = Carbon Monoxide, VOC = Volatile Organic Compounds, SO_x = Sulfur Oxide; SO_2 = Sulfur Dioxide. lbs/day = pounds per day; MT/yr CO_2eq = metric tons per year of CO_2 equivalents, ≥ greater than or equal to, > = greater than

DISCUSSION

III. a). The project site is located within the South Coast Air Basin (Basin), which is under the jurisdiction of the SCAQMD. The SCAQMD is the air pollution control agency primarily responsible for preparing the Air Quality Management Plan (AQMP), which is a comprehensive air pollution control program for making progress towards and attaining the State and federal ambient air quality standards. The most recent AQMP was adopted by the Governing Board of the SCAQMD on December 7, 2012. An inventory of existing emissions from industrial facilities is included in the baseline inventory in the 2012 AQMP, as well as projections of the future emissions which are based on source category growth factors provided by the Southern California Association of Government (SCAG). The 2012 AQMP also identifies emission reductions from existing sources and air pollution control measures that are necessary in order to comply with applicable State and federal ambient air quality standards. A significant impact would occur if the proposed project were not consistent with the AQMP.

The 2012 AQMP demonstrates that applicable ambient air quality standards can be achieved within the timeframes required under federal law. The proposed project must comply with applicable SCAQMD rules and regulations for new or modified sources or the necessary air quality permits to implement the project will not be issued. For example, new emission sources associated with the proposed project are required to comply with the SCAQMD's Regulation XIII - New Source Review, including Best Available Control Technology (BACT), emission offsets, and modeling requirements, as applicable. By meeting these requirements, the proposed project will be consistent with the goals and objectives of the 2012 AQMP to improve air quality in the Basin. Compliance with State and federal sulfur limits on diesel fuel, including the use of ultra-low sulfur diesel fuel as a control measure under the 2012 AQMP, is also required. As described in the following discussion, the proposed project is not expected to generate significant adverse air quality impacts. For these reasons, the proposed project is concluded to be consistent with applicable AQMPs and is not expected to diminish an existing air quality rule or a future compliance requirement.

The Growth Management Chapter (GMC) of the Regional Comprehensive Plan and Guide (RCPG) forms the basis of the land use and transportation control measure portions of the AQMP. Projects that are consistent with the projections of the employment and population forecasts identified in the GMC are considered consistent with the 2012 AQMP growth projections.

A limited number of construction workers will be required during the 10-week construction period; however, these workers will be temporary workers who will be supplied by the existing local labor pool. The number of Platform personnel that travel to and from work at the facility is not expected to change upon completion of the proposed project. No new employees will be required at the facility for operation as the result of the project. Therefore, the proposed project will also be consistent with the 2012 AQMP population and employment forecasts.

The proposed project would serve existing and intended land uses and would be consistent with the goals and policies of the 2012 AQMP. The project would not substantially affect regional

employment or job growth. Existing uses on and surrounding the project site would not be changed by the proposed project. The proposed project will not conflict with the AQMP or the other applicable plans described above. As a result, it is concluded that the proposed project is consistent with the AQMP. No significant impact will occur.

III. b). The proposed project area is located in and is part of the Basin, which currently exceeds and is in violation of the National Ambient Air Quality Standards (NAAQS) and the California Ambient Air Quality Standards (CAAQS), specifically with respect to ozone (O_3) and fine particulates ($PM_{2.5}$).

To assess the impacts of project-related construction and operational emissions, the SCAQMD has established regional significance thresholds that are shown above in *Table III-1, SCAQMD Air Quality and Greenhouse Gas (GHG) Significance Thresholds*. Construction and operational emissions from the proposed project that are below these thresholds will be considered less than significant.

To assess local air quality impacts, the SCAQMD has also established emission thresholds for one-hour average (NO_2, CO, SO_2), eight-hour average (CO), 24-hour average ($PM_{2.5}$, PM_{10}, and SO_2), and annual average (NO_2, PM_{10}, SO_2) emissions. Project emissions are compared to concentration standards (i.e., background plus incremental) for pollutants for which the Basin is in attainment (i.e., NO_2, CO) and to incremental standards (i.e., incremental increase) for pollutants for which the Basin is in non-attainment (i.e., PM_{10} and $PM_{2.5}$).

Incremental criteria emissions from fugitive components (i.e., the net increase in fugitive components) were determined in accordance with methodology prescribed by the SCAQMD for oil and gas production facilities. This methodology utilizes Rule 1173, Control of VOC Leaks and Releases from Components at Petroleum Facilities and Chemical Plants, screening data from prior calendar quarters to calculate site-specific emission factors by component category (i.e., the highest weighted average leaking / non-leaking factor in any one quarter). Additional details are included in *Appendix A, SCAQMD Permit Application (February 2014)*, of this MND.

Construction Emissions and Analyses

It is anticipated that Project construction (including equipment testing) will occur over a 10-week period. The proposed flare systems will need to be in operation by May 2015, as expiration of the existing lease DCOR maintains with BreitBurn will expire on May 15, 2015. As such, it is anticipated that Project construction will commence in 1st quarter 2015.

The welding, electrician, and painting crews will park at the Seal Beach Pier and will be transported the 1.5 miles to and from Platform Esther via existing regularly-scheduled crew/supply vessel runs (M/V Isabel L), as described earlier. No additional vessel trips above that which presently occur with routine maintenance and daily operation of the Platform will be required in support of project construction. The existing DCOR crew/supply vessel, M/V Isabel L, is powered by three 567 horsepower Tier 2 main engines and two 40 horsepower Tier 3

auxiliary generator engines in full compliance with the California Air Resources Board (CARB) Harbor Craft Regulations, including mandated use of ultra-low sulfur diesel to power all engines.

The proposed flare system units (CEB-350, CEB-800-CA, and Emergency Stand-by Flare FEF-90) are manufactured by Flare Industries, Inc. in Austin, Texas and will be transported to Terminal Island in the Port of Los Angeles on two flatbed trucks. The flare system units will be installed on a 20-foot by 70-foot lower deck extension to be located on the northeast side of Platform Esther. The deck extension will be pre-fabricated by Global Fabricators in Shafter, California and transported to Terminal Island in the Port of Los Angeles on one flatbed truck. Piping segments and steel supports will arrive at the Platform pre-painted and will be cut and welded in place.

From Terminal Island, the flare system units and deck extension will be transported to Platform Esther in four crew/supply vessel trips. Additional materials (pipe segments, electrical conduit and wiring, and paint) will be included in the loads for the flare system units and transported at the same time (no additional vessel trips required). The distance from Terminal Island to Platform Esther is approximately eight miles.

Once the flare units and deck extension reach Platform Esther, they will be lifted onto the Platform by the existing 450 horsepower (hp) Tier 3 crane engine (currently permitted by SCAQMD to operate 4,000 hours a year). It is anticipated that over a four-day period, seven crane lifts lasting approximately 30 minutes each will be required to transfer the loads from the crew/supply vessel to the platform; refer to *Exhibit 5, Demonstration of Deck Extension Installation*, which shows an example of how the decking materials would be transported to the Platform. Over the four-day period, it is anticipated that the following will be required: one crane lift for the CEB-350 Flare (one day); two crane lifts for the CEB-800-CA Flare (one day); two crane lifts for the FEF-90 Emergency Stand-by Flare (one day); and, two crane lifts for the deck extension (one day). As the equipment is unloaded, the crane and vessel engines will be idling for an estimated 30 minutes. The lift itself will occur within this timeframe; however, the duration of the lift will be shorter than the overall 30-minute period. Similar to current operations, it is anticipated that any time that the vessel is idling, the vessel and deck crews will use the time to perform safety checks and review procedures (i.e. rigging checks), as well as to communicate pertinent information with each other. No crane lifts will be performed over subsea pipelines or power cables.

The outer edge of the proposed deck extension will be supported by vertical tubular diagonals connected at the upper deck level [+57 feet, 6 inches above mean seal level (amsl)]. Each of the flares will be supported at the lower (production) deck level (+35 feet, 6 inches amsl) by a thick plate resting on the deck extension beams as well as with lateral support guides at the upper deck (Drilling Deck) level (+57 feet, 6 inches amsl). The lateral support at upper level for the flares will be of horizontal Vierendeel truss, with tubular members and Teflon surfaced slide bearings at the contact points. These slide bearings will allow the flares to expand due to temperature changes. Each of the flare stacks will be reinforced with a ring at the upper support level. Vapor barrier walls (8 feet, 8 inches in height) will be added on two sides of each of the flares adjacent to production deck equipment.

The lower deck extension installation will require the welding of structural support beams by a five-man welding crew working five days a week for four weeks. The construction crew will use electrically-driven welding machines to perform the required welding activities.

The installation of the flare units will require both electrical hook-ups and gas piping modifications on the Platform. The electrical work will be conducted by a five-man electrical crew working five days a week for two weeks; the piping modifications will require a five-man welding crew for two weeks. The electrical work and the piping modification work will be performed simultaneously (following completion of the four-week welding activities for the structural support beams described in the paragraph above).

Additionally, the deck extension and flare units will require touch-up painting after installation to ensure that any surface areas where welding occurred are protected from the elements over the long-term. A primer, mid-coat, and top-coat will be applied, consistent with DCOR's standard practices to ensure maximum protection in the harsh marine environment. A total of 10 gallons of paint will be applied by a four-man painting crew working three days utilizing brushes and rollers. No portable diesel-driven air compressors will be utilized. All paint utilized will have a low volatile organic compound (VOC) content and will be compliant with SCAQMD Rule 1106 (Marine Coating Operations).

Following installation, the equipment will be tested to ensure it is operating properly. The field testing will be performed by one of DCOR's Facility Engineers in combination with existing operations personnel currently working on Platform Esther. It is anticipated that testing of the equipment will occur over a five-day period. No additional trips to or from the Platform to transport equipment or the employees who will be performing the testing will be required, as such trips will occur using the existing regularly-scheduled crew/supply vessel runs (M/V Isabel L). It should be noted that DCOR's facility engineers currently visit the Platform on a regular basis and ride the crew/supply vessel out of Seal Beach Pier.

The proposed construction summary in *Table III-2* forms the basis for calculating emissions from construction of the proposed project. The dates of the schedule may change, but the timeline of the scheduled activities for each phase, i.e., number of days, would remain consistent. Also, the current analysis is conservative because emission factors typically decrease over time as equipment efficiency improves. Thus, if construction of the project is delayed for any reason, none of the environmental impacts conclusions in the analysis would change or worsen. For example, a conclusion of less than significant impacts from the construction phase of the project would remain less than significant even if the actual dates of the construction schedule are delayed.

Table III-2. Project Construction Requirements

Type of Activity	Length of Duration
Transport of Project Equipment to Platform Esther via DCOR Crew/Supply Vessel[1]	4 boat trips over a period of 4 days
Transfer of Project Equipment from Crew/Supply Vessel to Platform Esther via Existing Crane[1]	7 crane lifts / 30-minute duration for each crane lift
Installation of Deck Extension	5-man welding crew / 5 days per week / 4-week duration
Electrical Work[2]	5-man electrical crew / 5 days per week / 2-week duration
Gas Piping Modifications[2]	5-man electrical crew / 5 days per week / 2-week duration
Painting of Deck Extension and Flare Units	4-man crew / 3 days (brushes and rollers) / 10 gallons of paint[3]
Equipment Testing	One Facility Engineer working with existing Platform personnel / 5 days[4]

1 Project equipment would be transported to Platform Esther via crew/supply vessel (M/V Isabel L) that presently provides access to Platform Esther and other DCOR facilities in the Project area. The vessel will transport the Project components from Terminal Island, located approximately 8 miles from Platform Esther. Over 4 days: 1 crane lift for CEB 350 (1 day), 2 crane lifts for CEB -800-CA (1 day), 2 crane lifts for Emergency Stand-by Flare (1 day), and 2 crane lifts for Deck Extension (1 day).
2 Electrical work and gas piping modifications would occur simultaneously over the two-week period.
3 No portable diesel-driven air compressors will be utilized. Only brushes and rollers will be used to complete the required touch-up painting once the deck extension and flare units are installed.
4 DCOR's Facility Engineers presently visit Platform Esther on a frequent basis and ride the crew/supply vessel from Seal Beach Pier.

Peak daily construction emissions are shown in *Table III-3, Project-Related Peak Daily Construction Emissions*; refer also to *Appendix F, Final Emission Calculations and Health Risk Assessment*, of this Initial Study, which provides the equipment and conditions assumed and the outputs for construction modeling performed for the project. As shown, construction emissions for the project will be less than the SCAQMD's construction air quality significance thresholds. Thus, construction of the proposed project is expected to result in less than significant air quality impacts.

$\frac{12 \times 10^6 \text{ Btu}}{\text{HR}} \times \frac{8760 \text{ HR}}{\text{yr}} \times \frac{1 \text{ cf}}{1138 \text{ Btu}}$

92.3

$\frac{600}{24} + 2$

Table III-3. Project-Related Peak Daily Construction Emissions

Parameter	SCAQMD CEQA Threshold	Localized Significance Threshold[1, 2]	Actual Project Impact	Comments
Demolition / Construction Emissions				
NO_x, lbs/day	100	46	44.57	10 week, 3 day project duration Lbs/day is maximum day for each pollutant
VOC, lbs/day	75	N/A	6.10	
PM_{10}, lbs/day	150	4	2.39	
$PM_{2.5}$, lbs/day	55	3	2.27	
SO_x, lbs/day	150	N/A	0.04	
CO, lbs/day	550	574	22.42	
Lead, lbs/day	3	N/A	0	

1 The Localized Significance Threshold (LST) was determined using Appendix C of the SCAQMD *Final Localized Significant Threshold Methodology* guidance document for pollutants NOx, CO, PM_{10}, and $PM_{2.5}$. The LST is conservatively based on the 1 acre (or less) project area, the distance to sensitive receptors (25 meters), and the source receptor area (SRA 4, South Coastal LA County). It should be noted that SRA 4 LSTs are more conservative than thresholds for SRA 18 (North Coastal Orange County), which is also adjacent to the project site.
2 LSTs only apply to emissions generated on-site and not emissions for hauling, material deliveries, and worker trips.
3 Construction emissions associated with the proposed project would result from the off-road equipment operated onsite (e.g., cranes and welders) as identified in Table III-2.

Operational Emissions and Analyses

Operational emissions from existing equipment presently permitted on the Platform are generated by two 250 kW microturbines (D31 and D33), one emergency fire pump (460 hp, D1), one gantry crane (450 hp, D35) and fugitive components [the existing onsite emergency generator (49 hp) is exempt]. These facilities are currently permitted to generate approximately 4,750.40 MT CO_2e per year (PTE), as shown in *Table III-6, Existing and Proposed Project PTE Emissions*; refer to *Appendix F, Final Emission Calculations and Health Risk Assessment,* for additional information. This equipment is presently operated under the existing permit and is therefore not considered to be part of the project.

To provide a baseline for evaluating the increase in emissions that will occur with the proposed project, emissions from years 2010 to 2013 were considered; refer to *Appendix F* for actual emissions generated at the Platform during operation. *Table III-4. 2010-2013 Actual Emissions (Average)*, provides an overall average of the actual baseline emissions.

Additionally, *Table III-5, CEQA Project Emission Increases (Actual Average Emissions to PTE)*, provides a comparison of existing baseline conditions (PTE) and the project as proposed to show the resultant increase with the addition of the project.

The proposed CEB-350 is capable of handling production rates from 30 thousand cubic feet per day (MCFD) to 200 MCFD, and the CEB-800-CA is capable of handling production rates from 100 MCFD to 754 MCFD. Start-up, shut-down, and emergency use will be handled by the Fully Enclosed Emergency Stand-by Flare (FEF-90). The Emergency Stand-by Flare will be limited by SCAQMD to 8,961 thousand cubic feet per year (MCFY) (equivalent to 200 operating hours per year). Flaring of produced gas at the Platform Esther facility will be limited by the permit issued by SCAQMD to 600 MCFD, or 219,000 MCFY. As shown in *Table III-6, Existing and Proposed Project PTE Emissions*, a permitted maximum production of 600 MCFD for the proposed project components (gas flare systems) will not result in exceedance of any criteria

pollutants (see subtotals in lbs/day); however, potential increases in criteria pollutants (NOx and VOC) at the maximum 600 MCFD level will be offset prior to the issuance of construction permits pursuant to SCAQMD New Source Review (NSR) and NO_x Regional Clean Air Incentives Market (RECLAIM) regulations. These offsetting requirements are required for the life of the project even though the project does not exceed any of the CEQA significance thresholds for criteria pollutants. As such, operation of the project as proposed will not result in violation of an established air quality standard or contribute to an existing or projected air quality violation. As such, impacts will be less than significant.

DRAFT

Table III-4. 2010-2013 Actual Emissions (Average)

Device	Fuel	2010-2013 Average Actual Emissions (Reported) – Annual						2010-2013 Average Fuel Usage	
		NO_x (lbs/yr)	VOC (lbs/yr)	PM_{10} (lbs/yr)	SO_x (lbs/yr)	CO (lbs/yr)	CO_2e (tonnes/yr)		
Microturbine #1-250KW (D31)	Nat/Prod Gas	523.39	859.28	74.43	6.64	3,340.05	685.44	11.22	MMscf
Microturbine #2-250KW (D33)	Nat/Prod Gas	523.39	859.28	74.43	6.64	3,340.05	685.44	11.22	MMscf
Emergency Fire Pump (460hp-D1)	Diesel	120.81	9.66	8.63	0.81	26.28	2.64	257.60	gals
Gantry Crane (450hp-D35)	Diesel	1,356.02	278.13	248.46	36.67	756.50	73.07	7,134.78	gals
Fugitives (including wellheads)	Nat/Prod Gas		3,095.83				1,016.53		
Paints & Solvents – exempt			623.80						
Emerg. Generator (49hp) – exempt	Diesel	16.94	1.35	1.83	0.56	3.68	0.37	36.11	gals
2010-2013 Average Total (tons/yr):		**1.27**	**2.86**	**0.20**	**0.03**	**3.73**	**2,463.49****		

**CO_2e emissions in units of metric tonnes [MT=2205 lbs (1,000 kg)], all others in U.S./short tons (2,000 lbs = ton)

DRAFT

Table III-5. CEQA Project Emission Increases (Actual Average Emissions to PTE)

Existing Devices	Fuel	Facility-Wide Project Increase (Actual to Potential) – Annual						
		NO_X[1] (lbs/yr)	VOC (lbs/yr)	PM_{10} (lbs/yr)	$PM_{2.5}$[2] (lbs/yr)	SO_X (lbs/yr)	CO (lbs/yr)	CO_2e(MT/yr)
Microturbine #1-250KW (D31)	Nat/Prod Gas	571.62	1,111.72	118.57	118.57	0.09	9,799.96	748.77
Microturbine #2-250KW (D33)	Nat/Prod Gas	571.62	1,111.72	118.57	118.57	0.09	9,799.96	748.77
New (Added) Devices	**Fuel**	**NO_X[1] (lbs/yr)**	**VOC[1] (lbs/yr)**	**PM_{10} (lbs/yr)**	**$PM_{2.5}$[2] (lbs/yr)**	**SO_X (lbs/yr)**	**CO (lbs/yr)**	**CO_2e[1] (tonnes/yr)**
CEB 350 Flare (continuous)[1]	Nat/Prod Gas		39.90					6.65
CEB 800-CA Flare (continuous)[1]	Nat/Prod Gas	4,561.96	1,108.10	1,296.30	1,296.30	1,101.88	1,869.66	13,011.89
FEF-90 Flare (emergency/standby)[1]	Nat/Prod Gas	341.49	35.62	37.50	37.50	25.16	2,105.85	297.05
Subtotal (lbs)		**6,046.68**	**3,407.05**	**1,570.94**	**1,570.94**	**1,127.22**	**23,575.42**	**14,813.12**
Subtotal (lbs/day) [NSR (360 days/year)]		*16.80*	*9.46*	*4.36*	*4.36*	*3.13*	*64.59*	
Subtotal (lbs/day) [CEQA (365 days/year)]		*16.57*	*9.33*	*4.30*	*4.30*	*3.09*	*64.59*	
CEQA threshold (lbs/day)		*55*	*55*	*150*[2]	*55*	*150*	*550*	10,000
Facility-wide Post-Project Increase (tons/yr)*		**3.02**	**1.70**	**0.79**	**0.79**	**0.56**	**11.79**	**14,813.12****

1. Includes fugitive component emissions.
2. 100% PM10 conservatively assumed $PM_{2.5}$.

[Note: Combustion emissions for CEB-350 included in CEB-800-CA since both limited to a combined limit of 219.0 MMCFY (equivalent to 600 MCFD)]

* Applicable equipment. Actual emissions are 4-year average (AER reports; 2010-2013).

**CO_2e emissions in units of metric tonnes [MT=2,205 lbs (1,000 kg)], all others in U.S./short tons (2,000 lbs = one ton).

CEQA 365 day

Table III-6. Existing and Proposed Project PTE Emissions

EXISTING (Baseline – PTE)

Device	Fuel	Pre-Project Permitted Emissions/Potential to Emit (PTE) - Annual					
		NO_X (lbs/yr)	VOC (lbs/yr)	PM_{10} (lbs/yr)	SO_X (lbs/yr)	CO (lbs/yr)	CO_2e (tonnes/yr)
Microturbine #1-250KW (D31)	Nat/Prod Gas	1,095.00	1,971.00	193.00	6.73	13,140.00	1,434.20
Microturbine #2-250KW (D33)	Nat/Prod Gas	1,095.00	1,971.00	193.00	6.73	13,140.00	1,434.20
Emergency Fire Pump (460hp-D1)	Diesel	2,101.12	168.00	150.08	31.81	456.96	45.88
Gantry Crane (450hp-D35)	Diesel	10,079.59	722.24	345.25	706.02	2,420.69	1,018.42
Fugitive Components[1]	Nat/Prod Gas		2,475.00				815.68
Emerg. Generator (49hp) – exempt	Diesel	229.81	18.38	16.42	3.48	49.98	5.02
Subtotal		**14,600.52**	**7,325.61**	**897.74**	**754.77**	**29,207.63**	**4,750.40**
Pre-project facility, permitted (tons/yr)*		**7.30**	**3.66**	**0.45**	**0.38**	**14.60**	**4,750.40****

*Includes <50hp emergency generator that is exempt from permit (Rule 219).
**CO_2e emissions in units of metric tonnes [MT=2,205 lbs (1,000 kg)], all others in U.S./short tons (2,000 lbs = one ton)
[1] [Note: Fugitive VOC PTE estimated based on facility-wide NSR-VOC balance of 20 lbs/day obtained from SCAQMD's N. Gobrial on 10/22/14]

PROPOSED PROJECT (Facility Increase – PTE @ 600 MCFD)

Device	Fuel	Project Permitted Emissions/Potential to Emit (PTE) – Annual					
		NO_X (lbs/yr)	VOC (lbs/yr)	PM_{10} (lbs/yr)	SO_X (lbs/yr)	CO (lbs/yr)	CO_2e[1] (tonnes/yr)
CEB 350 Flare (continuous)[2]	Nat/Prod Gas		39.90				6.65
CEB 800-CA Flare (continuous)[2]	Nat/Prod Gas	4,561.96	1,108.10	1,296.30	1,101.88	1,869.66	13,011.89
FEF-90 Flare (emergency/standby)[2]	Nat/Prod Gas	341.49	35.62	37.50	25.16	2,105.85	297.05
Subtotal (lbs)		**4,903.45**	**1,183.61**	**1,333.80**	**1,127.04**	**3,975.51**	**13,315.59**
Subtotal (lbs/day) [NSR (360 days/year)]		*13.62*	*3.29*	*3.70*	*3.13*	*11.04*	
Subtotal (lbs/day) [CEQA (365 days/year)]		*13.43*	*3.24*	*3.65*	*3.09*	*10.89*	
Project (only), permitted (tons/yr)*		**2.45**	**0.59**	**0.67**	**0.56**	**1.99**	**13,316**
Post-project facility, permitted (tons/yr)*		**9.75**	**4.25**	**1.12**	**0.94**	**16.59**	**18,066**

* Includes <50hp emergency generator that is exempt from permit (Rule 219)
**CO_2e emissions in units of metric tonnes [MT=2,205 lbs (1,000 kg)], all others in U.S./short tons (2,000 lbs = one ton)
[Note: Combustion emissions for CEB-350 included in CEB-800-CA since both limited to a combined limit of 219.0 MMCFY (equivalent to 600 MCFD)]
[2] Includes fugitive component emissions.

RECLAIM Program

DCOR is an active participant in the RECLAIM Program, adopted by SCAQMD in October 1993. The program sets an emissions cap and declining balance for many of the largest facilities emitting nitrogen oxides (NO_x) and sulfur oxides (SO_x) in the South Coast Air Basin. RECLAIM includes over 350 participants in its NO_x market and about 40 participants in its SO_x market. RECLAIM has the longest history and practical experience of any locally designed and implemented air emissions cap and trade (CAT) program. RECLAIM allows participating facilities to trade air pollution while meeting clean air goals. The program was designed to provide industry with flexibility to decide how to reduce emissions and advance pollution control technologies. NO_x and/or SO_x allocations were issued to RECLAIM facilities based on their historical activity levels and applicable emission control levels specified in the subsumed rules or in the local Air Quality Management Plan. Facilities within the RECLAIM program have the option of complying with their allocation allowance by either reducing emissions or purchasing RECLAIM Trading Credits from other facilities. Facilities ranging from power producers to glass melters and facilities using industrial boilers participate in RECLAIM.[2]

The RECLAIM rules include an average current-year NO_x RTC price threshold of $15,000 per ton that, if exceeded, triggers additional evaluation, reports to the Board, and potential proposed program adjustments. Staff reports the twelve-month rolling average prices of NO_x RTCs to the Stationary Source Committee (SSC) on a quarterly basis. DCOR participates in the RECLAIM Program and has purchased NO_X RTCs for emissions generated at Platform Esther, including those that will be emitted by the new flare system project.

III. c). Significant adverse cumulative air quality impacts could occur if the proposed project resulted in a cumulatively considerable net increase of a criteria pollutant for which the Basin exceeds federal and State ambient air quality standards and has been designated as an area of non-attainment by the USEPA and/or the California Air Resources Board (CARB). The Basin is a non-attainment area for O_3 and fine particulate matter (PM_{10}[3] and $PM_{2.5}$).

"Cumulatively considerable" means that the incremental effects of a project are considerable when viewed in connection with the effects of past projects, other current projects, and probable future projects. The Basin is currently in non-attainment for O_3, PM_{10}, and $PM_{2.5}$, and related projects could exceed the applicable air quality standard or contribute to an existing or projected air quality exceedance when considered in combination with the effects of the proposed project. Therefore, this analysis assumes that individual projects that generate construction or operational emissions that exceed the SCAQMD's recommended daily thresholds for project-specific impacts would also cause a cumulatively considerable increase in emissions for those pollutants

[2] U.S. Environmental Protection Agency – Air Actions, California. http://www.epa.gov/Region09/air/reclaim/index.html. Accessed October 28, 2014.

[3] The US EPA recently proposed to find the Basin in attainment/maintenance for the federal PM_{10} standard; however, the Basin still exceeds the State PM_{10} standard.

for which the Basin is in non-attainment and, therefore, are considered to have significant adverse cumulative air quality impacts.

As discussed above, peak daily emissions associated with all phases of construction and operation of the proposed project will not generate operational or construction emission air quality impacts that exceed the SCAQMD's regional significance thresholds. Because emissions during any phase of the proposed project do not exceed the project-specific significance thresholds, they are not considered to be cumulatively considerable pursuant to CEQA Guidelines §15064(h)(1); however it should be noted that potential increases in criteria pollutants (NOx and VOC) at the maximum daily throughput level will be offset prior to the issuance of construction permits pursuant to SCAQMD NSR and NOx RECLAIM regulations. These offsetting requirements are required for the life of the project even though the project does not exceed any of the CEQA project-specific significance thresholds.

The SCAQMD guidance on addressing cumulative impacts for air quality is as follows. "As Lead Agency, the AQMD uses the same significance thresholds for project specific and cumulative impacts for all environmental topics analyzed in an Environmental Assessment or EIR." "Projects that exceed the project-specific significance thresholds are considered by the SCAQMD to be cumulatively considerable. This is the reason project-specific and cumulative significance thresholds are the same. Conversely, projects that do not exceed the project-specific thresholds are generally not considered to be cumulatively significant."[4]

This approach was upheld by the Court in *Citizens for Responsible Equitable Environmental Development v. City of Chula Vista* (2011) 197 Cal. App. 4th 327, 334. The Court determined that where it can be found that a project did not exceed the South Coast Air Quality Management District's established air quality significance thresholds, the City of Chula Vista properly concluded that the project would not cause a significant environmental effect, nor result in a cumulatively considerable increase in these pollutants. The court found this determination to be consistent with CEQA Guidelines §15064.7, stating, "The Lead Agency may rely on a threshold of significance standard to determine whether a project will cause a significant environmental effect." The court found that, "Although the project will contribute additional air pollutants to an existing nonattainment area, these increases are below the significance criteria..." "Thus, we conclude that no fair argument exists that the Project will cause a significant unavoidable cumulative contribution to an air quality impact." As in *Chula Vista*, here the District has demonstrated, when using accurate and appropriate data and assumptions, that the project will not exceed the established South Coast Air Quality Management District significance thresholds. See also, ***Rialto Citizens for Responsible Growth v. City of Rialto*** (2012) 208 Cal. App. 4th 899. Here again, the court upheld the SCAQMD's approach to utilizing the established air quality significance thresholds to determine whether the impacts of a project would be cumulatively considerable. Thus, it may be concluded that the Project will not cause a significant unavoidable cumulative contribution to an air quality impact.

[4] SCAQMD Cumulative Impacts Working Group White Paper on Potential Control Strategies to Address Cumulative Impacts From Air Pollution, August 2003, Appendix D, Cumulative Impact Analysis Requirements Pursuant to CEQA, at D-3, http://www.aqmd.gov/docs/default-source/Agendas/Environmental-Justice/cumulative-impacts-working-group/cumulative-impacts-white-paper-appendix.pdf?sfvrsn=4.

Based on the foregoing analysis, project-specific air quality impacts from implementing the proposed project would not exceed air quality significance thresholds (see *Table III-1*); therefore, based on the above discussion, cumulative impacts are not expected to be significant for air quality. Therefore, potential adverse impacts from the proposed project would not be "cumulatively considerable" as defined by CEQA Guidelines §15064(h)(1) for air quality impacts. Per CEQA Guidelines §15064(h)(4), the mere existing of significant cumulative impacts caused by other projects alone shall not constitute substantial evidence that the proposed project's incremental effects are cumulative. Impacts will be less than significant.

III. d). The proposed project is not expected to significantly increase the exposure of sensitive receptors to substantial pollutant concentrations due to the following conditions: 1) the Platform is an existing, currently operating oil and gas production facility located within San Pedro Bay; 2) the closest sensitive receptors are more than 1.5 miles away (City of Seal Beach); 3) project construction activities will be short-term (approximately 10 weeks), and resultant increases of criteria pollutants generated by construction will be less than significant; and, 4) project operational emission increases will be less than significant. Therefore, no significant adverse air quality impacts to sensitive receptors are expected to result with implementation of the proposed project.

This subsection evaluates whether or not the proposed project has the potential to expose sensitive receptors to substantial pollutant concentrations. The following are typically considered to be sensitive receptors: long-term health care facilities, rehabilitation centers, convalescent centers, retirement homes, residences, schools, playgrounds, child care centers, and athletic facilities. As indicated in Chapter 1, the area surrounding the site is highly developed with several uses. The nearest sensitive receptor to the project site is located more than 1.5 mile away in Seal Beach; refer to *Exhibit 1.Regional/Local Vicinity Map*.

Criteria Pollutant Health Impacts

Construction and operation activities have the potential to generate an increase in criteria pollutants (e.g., CO, NO_x, SO_x and PM). Localized significance thresholds (LSTs) for NO_x and CO are based on causing or exceeding health-based air quality ambient concentration standards. The PM_{10} LST for construction is based on requirements of Rule 403, which is indirectly a health-based standard, and for operation the PM_{10} LST is based on Rule 1303, which applies limits less than Rule 403 concentration limits. Therefore, the PM_{10} LST provides greater health-based protection.

The degree of a health effect depends on the level of exposure, duration of exposure, and the existing health of those exposed. For example, individuals with a deficient blood supply to the heart are the most susceptible to the adverse effects of CO exposure. Inhaled, CO has no direct toxic effect on the lungs, but instead exerts its effect on tissues by interfering with oxygen transport through competition with oxygen to combine with hemoglobin present in the blood to

form carboxyhemoglobin. Hence, conditions with an increased demand for oxygen supply can be adversely affected by exposure to CO. Individuals most at risk include patients with diseases involving heart and blood vessels, fetuses (unborn babies), and patients with chronic hypoxemia (oxygen deficiency) as seen in high altitudes.

Population-based studies suggest that an increase in acute respiratory illness, including infections and respiratory symptoms in children (not infants), is associated with long-term exposures to NO_2 at levels found in homes with gas stoves. These levels are higher than ambient levels found in southern California. Increase in resistance to air flow and airway contraction is observed after short-term exposure to NO_2 in healthy subjects. Larger decreases in lung functions are observed more in individuals with asthma and/or chronic obstructive pulmonary disease (e.g., chronic bronchitis, emphysema) than in healthy individuals, indicating a greater susceptibility of these sub-groups. More recent studies have found associations between NO_2 exposures and cardiopulmonary mortality, decreased lung function, respiratory symptoms, and emergency room asthma visits.

All asthmatics are sensitive to the effects of SO_2. Exposure of a few minutes to low levels of SO_2 can result in airway constriction in some asthmatics. Further, increased resistance to air flow, as well as reduced breathing capacity leading to severe breathing difficulties, can be observed after high acute exposure to SO_2. In contrast, healthy individuals do not exhibit similar acute responses even after exposure to higher concentrations of SO_2.

There is a consistent correlation between elevated ambient fine particulate matter levels and an increase in mortality rates, respiratory infections, and the number and severity of asthma attacks. Studies have reported an association between long term exposure to air pollution dominated by fine particles and increased mortality, reduction in life-span, and, specifically, an increased mortality from lung cancer.

Discussion of CARB's PM Mortality Quantification Methodologies

While CARB (2008) has reported that it plans to develop a method for quantifying premature deaths from specific sources affecting limited geographic areas, it has not yet developed an approved approach which could be applied to small projects such as the proposed project. As noted in *Table III-6*, the proposed project's $PM_{2.5}$ emissions will be below emission standards set by the SCAQMD.

The analysis of the proposed project demonstrates that: 1) the criteria pollutant emissions from the proposed project are still below the LSTs or do not cause or contribute to an exceedance of any ambient air quality standard; and, 2) potential adverse health impacts associated with construction or operational emissions are still expected to be less than significant because the emissions are below a level at which health effects could occur (per LST thresholds which are based upon NAAQS). Therefore, the public will not be adversely affected by adverse health effects as a result of the proposed project. Thus, health impacts associated with the construction and operational emissions from the proposed project are determined to still be less than significant.

Toxic Air Contaminants (TAC) Analysis

The proposed project has the potential to generate emissions that are carcinogenic or may have non-cancer health effects, depending on concentration levels and the duration of exposure. TAC emissions are generated from fugitive emissions from all potential leak points such as valves, flanges, and similar connector items. Numerous federal, State, and local regulatory agencies have developed lists of TACs and their risk characteristics. The risk characteristics of the TACs that may be generated by the proposed project are identified in the SCAQMD's Risk Assessment Procedures for Rules 1401 and 212, Appendix L (SCAQMD, 2005).

The health risks associated with increased TAC emissions from the proposed project were determined for each permit unit in accordance with the SCAQMD's "Risk Assessment for Rules 1401 and 212, Version 7.0, July 1, 2005." Tier 1 and 2 analyses were used to demonstrate compliance with Rule 1401 for each permit unit. TAC emissions from operations were calculated for the proposed project when it becomes operational. A summary of the associated TAC emissions (Tier 1 and 2) and detailed calculations are shown in *Appendix A, SCAQMD Permit Application (February 2014).* The TAC emissions for the project as currently proposed (with use of the FEF-90 versus the FEF-102 gas flare considered in the original application) are included in *Appendix F, Final Emission Calculations and Health Risk Assessment*, of this Initial Study. Rule 212, Standards for Approving Permits and Issuing Public Notice, requires notification of the public when the following occurs: 1) an increase in emissions of air contaminants from a new or modified permit that is located within 1,000 feet of a school; 2) an increase in emissions of air contaminants from a new or modified facility that exceeds threshold amounts stated in the rule; or, 3) an increase in emissions of toxic air contaminants from a new or modified permit unit that causes the incremental maximum individual cancer risk (MICR) to be greater than or equal to one in one million or causes the permit unit to create a potential risk of nuisance. The emissions increases associated with the project do not exceed the threshold amounts stated in the rule, and the MICR for each new or modified permit unit is less than one in one million. As the proposed project will not be located within 1,000 feet of a school (due to its location on Platform Esther), the system is expected to operate in compliance with all applicable regulatory requirements, and a risk of nuisance is not anticipated.

Rule 1401, New Source Review of Toxic Air Contaminants, rule requires the health risk associated with projects that result in increases of toxic air contaminants to meet specific requirements. Specifically, the incremental MICR for a permit unit must not exceed one in one million and the non-cancer chronic and acute hazard indices must not exceed a value of one. As stated above, health risk analyses were performed for the proposed project in accordance with the SCAQMD's "Risk Assessment Procedures for Rules 1401 and 212, Version 7.0, July I, 2005." The results of Tier 1 analyses indicate the requirements of the rule are satisfied; refer to *Appendix A, SCAQMD Permit Application (February 2014),* of this document.

Additionally, Rule 1402, Control of Toxic Air Contaminants from Existing Sources, requires facility-wide health risk assessments and risk reduction plans for facilities that exceed certain threshold levels of emissions and risk. The facility does not exceed any of these thresholds. The

proposed project will result in changes to emissions of TACs in a manner consistent with changes in criteria emissions.

A health risk assessment (HRA) was prepared to quantify the incremental cancer and non-cancer health risks from operation of the proposed project. The maximum risk impacts from operation of the proposed project are shown in *Table III-6*. Risk impacts due to operation of the proposed project are less than the SCAQMD significance thresholds for cancer risk for residential or worker receptors or for chronic or acute non-cancer hazard indices for residential or worker receptors. Thus, all health risk impacts potentially resulting with the proposed project are anticipated to be less than significant.

III. e). The proposed project is not expected to create new significant objectionable odors, either during construction or during operation. All existing stationary emissions sources that are presently on Platform Esther are subject to SCAQMD rules and regulations. These existing rules, regulations, and permit conditions will continue to apply to the proposed project, as appropriate.

Construction activities associated with the proposed project may generate detectable odors from equipment use within the vicinity of the equipment. This impact would be short-term in nature, and would not cause SCAQMD thresholds to be exceeded. No noticeable offsite effects with regard to odors are anticipated to occur. Compliance with recommended SCAQMD construction measures will ensure that potential impacts are reduced to a less than significant level.

All new components installed with the project will also be required to comply with existing SCAQMD rules and regulations, including SCAQMD Rule 402 - Prohibition of Nuisances. The SCAQMD accepts air quality complaint calls 24 hours a day. During business hours (i.e., 7:00 a.m. to 5:30 p.m., Tuesday through Friday), an attendant answers the call and directs the information accordingly. During non-business hours, an automated answering service forwards the call to a standby supervisor who takes appropriate action. If a public nuisance is expected based on the number of complaints received (i.e., Rule 402 – Prohibition of Nuisance), the SCAQMD will respond to the complaint with an immediate investigation. Rule 402 has the following requirement, "A person shall not discharge from any source whatsoever such quantities of air contaminants or other material which cause injury, detriment, nuisance or annoyance to any considerable number of persons or to the public, or which endanger the comfort, repose, health or safety of any such persons or the public, or which cause, or have a natural tendency to cause, injury or damage to business or property."

The proposed project does not include any odor-emitting equipment of any kind. The flares are designed to operate without a visible flame or the generation of any smoke/soot or odors. The flare systems have been designed and constructed in accordance with BACT requirements, which controls emissions and related odors to the maximum extent feasible. As a result, no increase in odors related to oil/gas processing operations at the facility where the proposed project site is located will occur, as compared to current conditions. Additionally, the project site is located more than 1.5 miles from any sensitive receptors (i.e. residential uses within the City

of Seal Beach). Any odors generated by operation of the Platform are therefore anticipated to not be noticeable to such receptors. For these reasons, the project will result in less than significant impacts with regard to potential odors produced during construction or operation activities.

III. f), g,) and h). The analysis of GHG impacts is different from the analysis of criteria pollutants. For criteria pollutants, significance thresholds are based on daily emissions because the attainment or non-attainment status is based on daily exceedances of applicable ambient air quality standards. Furthermore, several ambient air quality standards are based on the relatively short-term exposure effects on human health (e.g., one-hour and eight-hour). On the contrary, because the half-life of CO_2 is approximately 100 years, the effects of GHGs are longer-term and affect global climate over a relatively long time frame. Thus, the SCAQMD's current position is to evaluate GHG effects over a longer time frame than a single day.

On December 5, 2008 the SCAQMD adopted the "Draft Guidance Document – Interim CEQA Greenhouse Gas (GHG) Significance Thresholds." This draft guidance proposes a tiered approach to determining GHG significance of projects.[5] The first two tiers involve (1) exempting the project because of potential reductions of GHG emissions allowed under CEQA and (2) demonstrating that the project's GHG emissions are consistent with a local general plan. Because neither of these tiers is applicable for the proposed project, the analysis shifts to Tier 3. Tier 3 establishes a numerical threshold of 10,000 MT CO_2eq per year as the incremental increase representing significance. Projects with incremental increases below this threshold are not considered to be cumulatively considerable. The Platform Esther facility is not included in the CARB Cap and Trade program and at this time as it is below the 10,000 MT CO_2eq reporting threshold for this regulation. The next tier of the significance threshold methodology considered for this analysis is Tier 4. The significance threshold approaches in Tier 4 were not adopted by the Governing Board and possible options continue to be under investigation by staff. Tier 4 will not be considered further. Tier 5 may be applicable if GHG emissions exceed the numerical significance threshold of 10,000 MT CO_2eq per year. In this situation, offsite mitigation could be used to reduce GHG emission impacts to less than significant, but mitigation would be required for the life of the project. As additional information is compiled regarding the level of GHG emissions that constitute a significant cumulative climate change impact, SCAQMD will continue to revisit and possibly revise the level of GHG emissions considered to be significant.

To determine whether or not incremental GHG emissions from the proposed project may be significant, impacts from the proposed project may be evaluated and compared to the 10,000 metric tons of carbon dioxide equivalents per year (MT CO_2e/year) guidance threshold for industrial sources.[6]

[5] SCAQMD. 2008. Interim CEQA GHG Significance Threshold for Stationary Sources, Rules and Plans. Adopted by SCAQMD December 5, 2008.
[6] SCAQMD. 2011. SCAQMD Air Quality Significance Thresholds. Revised March 2011. Available at: http://aqmd.gov/ceqa/handbook/signthres.pdf Accessed July 21, 2014.

The natural process through which heat is retained in the troposphere is called the "greenhouse effect."[7] The greenhouse effect traps heat in the troposphere through a threefold process as follows: Short wave radiation emitted by the Sun is absorbed by the Earth; the Earth emits a portion of this energy in the form of long wave radiation; and greenhouse gases (GHG) in the upper atmosphere absorb this long wave radiation and emit this long wave radiation into space and toward the Earth. This "trapping" of the long wave (thermal) radiation emitted back toward the Earth is the underlying process of the greenhouse effect.

The most abundant GHGs are water vapor and carbon dioxide (CO_2). Many other trace gases have greater ability to absorb and re-radiate long wave radiation; however, these gases are not as plentiful. For this reason, and to gauge the potency of GHGs, scientists have established a Global Warming Potential (GWP) for each GHG based on its ability to absorb and re-radiate long wave radiation.

GHGs normally associated with the proposed project include the following:[8]

- *Water Vapor (H_2O)*. Although water vapor has not received the scrutiny of other GHGs, it is the primary contributor to the greenhouse effect. Natural processes, such as evaporation from oceans and rivers, and transpiration from plants, contribute 90 percent and 10 percent of the water vapor in our atmosphere, respectively.

  The primary human related source of water vapor comes from fuel combustion in motor vehicles; however, this is not believed to contribute a significant amount (less than one percent) to atmospheric concentrations of water vapor. The Intergovernmental Panel on Climate Change (IPCC) has not determined a GWP for water vapor.

- *Carbon Dioxide (CO_2)*. Carbon dioxide is primarily generated by fossil fuel combustion in stationary and mobile sources and is the primary greenhouse gas emitted through human activities. In 2011, CO_2 accounted for approximately 84% of all greenhouse gas emissions from human activities in the U.S. Although CO_2 emissions originate from a variety of natural sources, human-related emissions are responsible for the increase occurring in the atmosphere since the time of the industrial revolution.[9] Carbon dioxide is the most widely emitted GHG and is the reference gas (GWP of 1) for determining GWPs for other GHGs.

- *Methane (CH_4)*. Methane is emitted from biogenic sources, incomplete combustion in forest fires, landfills, manure management, and leaks in natural gas pipelines. In the United States, the top three sources of methane are landfills, natural gas systems, and enteric fermentation. Methane is the primary component of natural gas, which is used for

[7] The troposphere is the bottom layer of the atmosphere, which varies in height from the Earth's surface to 10 to 12 kilometers.

[8] All Global Warming Potentials are given as 100 year GWP. Unless noted otherwise, all Global Warming Potentials were obtained from the Intergovernmental Panel on Climate Change. Climate Change (Intergovernmental Panel on Climate Change, Climate Change, The Science of Climate Change – Contribution of Working Group I to the Second Assessment Report of the IPCC, 1996).

[9] United States Environmental Protection Agency, Climate Change – Overview of Greenhouse Gases, Updated July 31, 2013. http://epa.gov/climatechange/ghgemissions/gases/fgases.html. Accessed August 16, 2014.

space and water heating, steam production, and power generation. The GWP of methane is 21.

- *Nitrous Oxide (N_2O).* Nitrous oxide is produced by both natural and human related sources. Primary human related sources include agricultural soil management, animal manure management, sewage treatment, mobile and stationary combustion of fossil fuel, adipic acid production, and nitric acid production. The GWP of nitrous oxide is 310.
- *Hydrofluorocarbons (HFCs).* HFCs are typically used as refrigerants for both stationary refrigeration and mobile air conditioning. The use of HFCs for cooling and foam blowing is growing, as the continued phase out of chlorofluorocarbons (CFCs) and hydrochlorofluorocarbons (HCFCs) gains momentum. The GWP of HFCs range from 140 for HFC-152a to 11,700 for HFC-23.[10]
- *Perfluorocarbons (PFCs).* Perfluorocarbons are compounds consisting of carbon and fluorine. They are primarily created as a byproduct of aluminum production and semi-conductor manufacturing. Perfluorocarbons are potent GHGs with a GWP several thousand times that of carbon dioxide, depending on the specific PFC. Another area of concern regarding PFCs is their long atmospheric lifetime (up to 50,000 years).[11] The GWP of PFCs range from 6,500 to 9,200.
- *Sulfur hexafluoride (SF_6).* Sulfur hexafluoride is a colorless, odorless, nontoxic, nonflammable gas. It is most commonly used as an electrical insulator in high voltage equipment that transmits and distributes electricity. Sulfur hexafluoride is the most potent GHG that has been evaluated by the IPCC with a GWP of 23,900; however, its global warming contribution is not as high as the GWP would indicate, due to its low mixing ratio compared to carbon dioxide.

In addition to the six major GHGs discussed above (excluding water vapor), many other compounds have the potential to contribute to the greenhouse effect. Some of these substances were previously identified as stratospheric ozone (O_3) depletors. Therefore, their gradual phase out is currently in effect. The following is a listing of these compounds:

- *Hydrochlorofluorocarbons (HCFCs).* HCFCs are solvents, similar in use and chemical composition to CFCs. The main uses of HCFCs are for refrigerant products and air conditioning systems. As part of the Montreal Protocol, all developed countries that adhere to the Montreal Protocol are subject to a consumption cap and gradual phase out of HCFCs. The United States is scheduled to achieve a 100 percent reduction to the cap by 2030. The GWPs of HCFCs range from 93 for HCFC-123 to 2,000 for HCFC-142b.[12]

[10] Ibid.
[11] Ibid.
[12] United States Environmental Protection Agency, *Protection of Stratospheric Ozone: Listing of Global Warming Potential for Ozone Depleting Substances*, updated October 29, 2009. http://www.epa.gov/EPA-AIR/1996/January/Day-19/pr-372.html. Accessed August 16, 2014.

- *1,1,1 trichloroethane*. 1,1,1 trichloroethane or methyl chloroform is a solvent and degreasing agent commonly used by manufacturers. The GWP of methyl chloroform is 110 times that of carbon dioxide.[13]
- *Chlorofluorocarbons (CFCs)*. CFCs are used as refrigerants, cleaning solvents, and aerosols spray propellants. CFCs were also part of the U.S. Environmental Protection Agency's (EPA) Final Rule (57 FR 3374) for the phase out of O_3 depleting substances. Currently, CFCs have been replaced by HFCs in cooling systems and a variety of alternatives for cleaning solvents. Nevertheless, CFCs remain suspended in the atmosphere contributing to the greenhouse effect. CFCs are potent GHGs with GWPs ranging from 4,600 for CFC 11 to 14,000 for CFC 13.[14]

California has enacted several pieces of legislation that relate to GHG emissions and climate change, much of which sets aggressive goals for GHG reductions within the state. Per Senate Bill 97, the California Natural Resources Agency adopted amendments to the CEQA Guidelines, which address the specific obligations of public agencies when analyzing GHG emissions under CEQA to determine a project's effects on the environment; however, neither a threshold of significance nor any specific mitigation measures are included or provided in these CEQA Guideline amendments.

- **Assembly Bill 32 (Statewide GHG Regulation):** The California Global Warming Solutions Act of 2006, widely known as AB 32, requires the California Air Resources Board (CARB) to develop and enforce regulations for the reporting and verification of statewide GHG emissions. The heart of the bill is the requirement that statewide GHG emissions be reduced to 1990 levels by 2020.
- **California Senate Bills 1078, 107, and 2 - Renewables Portfolio Standard:** Established in 2002 under California Senate Bill 1078 and accelerated in 2006 under California Senate Bill 107, California's RPS requires retail suppliers of electric services to increase procurement from eligible renewable energy resources by at least 1 percent of their retail sales annually, until they reach 20 percent by 2010. On April 2, 2011, Governor Jerry Brown signed California Senate Bill 2 to increase California's RPS to 33 percent by 2020. This new standard also requires regulated sellers of electricity to procure 25 percent of their energy supply from certified renewable resources by 2016.
- **Low Carbon Fuel Standard:** California Executive Order S-01-07 (January 18, 2007) requires a 10 percent or greater reduction in the average carbon intensity for transportation fuels in California regulated by CARB. CARB identified the LCFS as a Discrete Early Action item under AB 32, and the final resolution (09-31) was issued on April 23, 2009.[15]

[13] Ibid.
[14] United States Environmental Protection Agency, *Class I Ozone Depleting Substances*, Updated November 7, 2014. http://www.epa.gov/ozone/science/ods/classone.html. Accessed November 10, 2014.
[15] California EPA Air Resources Board. Low Carbon Fuel Standard Program. Available at: www.arb.ca.gov/fuels/lcfs/lcfs.htm. Accessed: July 2014.

Construction GHG Emissions and Analyses

The project site is located within San Pedro Bay and no land disturbance (i.e. grading, excavation, etc.) is required, construction activities required to implement the proposed project include: use of onboard crane for equipment lifting, installation of the individual gas flares, use of welding equipment, piping modifications and electrical work, among other activities; refer also to *Table III-2*, above.

Construction emissions are generated from the combustion of fuel (primarily diesel) in off-road vehicles and other equipment required for the construction activities. In addition, some emissions will result from offsite fabrication of equipment (deck extension and gas flaring units); however, emissions associated with such activities are not included herein, as insufficient information is available to characterize these emissions. The majority of activity associated with project construction will occur at the Platform, with other activity generated via transport of the materials and personnel to and from the site; refer to *Exhibit 3, Site Photos - Existing Conditions*, and *Exhibits 4A to 4D*, which show the proposed improvement plans for the project.

Construction is expected to occur intermittently over a period of approximately 10 weeks. When construction is occurring, work is expected to typically occur ten hours per day, five days per week. The proposed construction schedule in *Table III-2* forms the basis for calculating emissions from construction of the proposed project. Additionally, the analysis presented is conservative because emission factors typically decrease over time as equipment efficiency and fuel efficiency improves. Thus, if construction of the project is delayed for any reason, none of the environmental impacts conclusions in the analysis would change or worsen. For example, a conclusion of less than significant impacts from the construction phase of the project would remain less than significant even if the actual dates of the construction schedule are delayed.

As shown in *Appendix F*, total GHG emissions from project construction would be 87.05 $MTCO_2eq$, or 2.9 MT CO_2e per year if amortized over 30 years. Construction emissions will therefore be well below the SCAQMD threshold of 10,000 MT CO_2e per year. Therefore, construction of the proposed project is expected to result in less than significant GHG impacts.

Operational GHG Emissions and Analyses

The proposed Platform modifications will result in the ability of DCOR to flare gas generated by the existing oil and gas production facilities, thereby eliminating the need to transport gas to shore for the treatment and ultimate sale to the Southern California Gas Company.

Flaring of gas as proposed will require multiple flare units to properly and safely handle the entire gas stream in compliance with strict air quality requirements using equipment that meets Best Available Control Technology (BACT) design requirements. All units will be fully enclosed, and no visible flame will be present. Operating specifications for the three flare systems are included in *Appendix D, Flare Systems – Performance Specifications*.

As stated previously, the CEB-350 is capable of handling production rates from 30 thousand cubic feet per day (MCFD) to 200 MCFD, and the CEB-800-CA is capable of handling production rates from 100 MCFD to 754 MCFD. Start-up, shut-down, and emergency use will be

handled by the Fully Enclosed Emergency Stand-by Flare (FEF-90). The Emergency Stand-by Flare will be limited by SCAQMD to 8,961 thousand cubic feet per year (MCFY) (equivalent to 200 operating hours per year). Flaring of produced gas at the Platform Esther facility will be limited by the permit issued by SCAQMD to 600 MCFD, or 219,000 MCFY.

Additionally as shown in *Table III-5, CEQA Project Emission Increases (Actual Average Emissions to Potential to Emit)* total 14,813.12 MT CO_2e, or 4,813.12 MT CO_2e over the SCAQMD threshold of 10,000 MT CO_2e. As such, impacts will be significant and mitigation is required to reduce project-related impacts to a level less than significant. Implementation of Mitigation Measure GHG-1 is proposed to assure actual project GHG impacts on an annual-basis are offset to a level less than significant. The GHG Mitigation Measure is proposed to be enforceable by conditions added to the SCAQMD Facility Air Permit.

Mitigation Measures

Based on the above information relative to greenhouse gases, significant adverse impacts were identified. To ensure that actual project-related impacts are reduced to a level less than significant, mitigation is proposed (MM GHG-1). Implementation of MM GHG-1 made enforceable by conditions added to the SCAQMD Facility Air Permit will reduce potential project impacts with regard to greenhouse gas emissions to a level less than significant.

MM GHG-1

CEQA GHG Mitigation SCAQMD Facility Air Permit Conditions:

W.W. Operator shall monitor and record monthly fuel usage combusted in equipment subject to this condition.

[Devices subject to this condition: D31, D33, (CEB 350), (CEB 800-CA)*, (FEF-90)*]*

X.X. Operator shall analyze gas combusted in equipment subject to this condition on a monthly basis by gas chromatograph per ASTM Method D 1945.

[Devices subject to this condition: D31, D33, (CEB 350), (CEB 800-CA)*, (FEF-90)*]*

Y.Y. Operator shall calculate actual annual greenhouse gas (GHG) emissions no later than April 10th of each year commencing in Year 2016 (for GHG emissions occurring in Calendar Year 2015). Calculations shall follow the applicable estimation methodologies presented in California's Global Warming Solutions Act (AB 32, 2006, Title 17, California Code of Regulations, Sections 95100-95158 (17 CCR 95100-95158)). Emissions shall be presented in units of metric tons of CO_2 equivalent and operator shall submit to an ARB-accredited third-party GHG reporting verifier on or before April 10th for verification. Operator shall provide a copy of the GHG emissions report to the Executive Officer on or before April 10th or earlier as part of SCAQMD's Annual Emissions Reporting (AER) Program.

Operator shall be responsible for procuring ARB-accredited third-party GHG verifier. Operator shall obtain from the verifier an ARB Verification Statement Form - Emissions Data Report and ARB Conflict of Interest/Notice of Verification Services (COI/NOVS) Form. Operator shall provide these documents to the Executive Officer on or before September 1st of each year commencing in Year 2016 (for GHG emissions occurring in Calendar Year 2015).

[Devices subject to this condition: D31, D33, (CEB 350), (CEB 800-CA)*, (FEF-90)*]*

Z.Z. Operator shall provide CEQA mitigation obligations for verified annual GHG emissions from equipment subject to this condition exceeding 10,000 metric tons CO_2e above the baseline calculated pursuant to Condition Y.Y. Operator shall provide documentation verifying CEQA GHG mitigation obligation purchases and/or holdings to the Executive Officer on or before September 15th of each year commencing in Year 2016 (for GHG emissions occurring in Calendar Year 2015). CEQA GHG mitigation obligations may be obtained pursuant to the following mechanisms:

1) Verified credits registered with the Climate Action Reserve or the American Carbon Registry;
2) Credits generated and verified under the CAPCOA GHG Rx program;
3) Credits generated and verified under SCAQMD Regulation XXVII.

In addition, independently verified GHG credits available through other carbon registries that follow specific protocols may be eligible for offsite mitigation, subject to review and prior approval by the Executive Officer.

For the purposes of this condition, the annual GHG baseline for equipment subject to this condition is 1,371 MT of CO_2e. Therefore, all verified GHG emissions above 11,371 MT in any calendar year from equipment subject to this condition shall be mitigated. Unused CEQA GHG compliance instruments from a previous year may be used to satisfy the CEQA GHG mitigation obligations.

If the ARB-accredited verifier provides an adverse (un-verified) finding on the ARB Verification Statement Form - Emissions Data Report, operator shall mitigate the potential to emit (PTE) from equipment subject to this condition for that calendar year. For the purposes of this condition, the annual GHG PTE for equipment subject to this condition is 14,813 MT of CO_2e. Therefore, operator shall mitigate 4,813 MT of CO_2e for years when an adverse verification statement is received, or no statement is received. Unused CEQA GHG compliance instruments from a previous year may be used to satisfy the CEQA GHG mitigation obligations.

This condition shall not apply in its entirety if the California Air Resources Board lowers the cap-and-trade compliance obligation threshold to 10,000 MT of CO_2e and the facility is determined to be a covered entity under the Cap-and-Trade Regulation (Title 17, California Code of Regulations, Sections 95801-96022 (17 CCR 95801-96022)).

{Note: "Covered entity" in the Cap-and-Trade Regulation (Section 95802(a)(83)) is defined as "means an entity within California that has one or more of the processes or operations and has a compliance obligation as specified in Subarticle 7 of this regulation; and that has emitted, produced, imported, manufactured, or delivered in 2009 or any subsequent year more than the applicable threshold level specified in Section 95812(a) of this rule."}

[Devices subject to this condition: D31, D33, (CEB 350), (CEB 800-CA)*, (FEF-90)*]*

* Device ID numbers for new flares have not yet been assigned.

DRAFT

		Potentially Significant Impact	Less Than Significant With Mitigation	Less Than Significant Impact	No Impact
IV.	**BIOLOGICAL RESOURCES.** Would the project:				
a)	Have a substantial adverse effect, either directly or through habitat modifications, on any species identified as a candidate, sensitive, or special status species in local or regional plans, policies, or regulations, or by the California Department of Fish and Game or U.S. Fish and Wildlife Service?	☐	☐	☑	☐
b)	Have a substantial adverse effect on any riparian habitat or other sensitive natural community identified in local or regional plans, policies, or regulations, or by the California Department of Fish and Game or U.S. Fish and Wildlife Service?	☐	☐	☑	☐
c)	Have a substantial adverse effect on federally protected wetlands as defined by §404 of the Clean Water Act (including, but not limited to, marsh, vernal pool, coastal, etc.) through direct removal, filling, hydrological interruption, or other means?	☐	☐	☑	☐
d)	Interfere substantially with the movement of any native resident or migratory fish or wildlife species or with established native resident or migratory wildlife corridors, or impede the use of native wildlife nursery sites?	☐	☐	☑	☐
e)	Conflicting with any local policies or ordinances protecting biological resources, such as a tree preservation policy or ordinance?	☐	☐	☑	☐
f)	Conflict with the provisions of an adopted Habitat Conservation plan, Natural Community Conservation Plan, or other approved local, regional, or state habitat conservation plan?	☐	☐	☑	☐

DRAFT

SIGNIFICANCE CRITERIA

The impacts on biological resources will be considered significant if any of the following criteria apply:

- The project results in a loss of plant communities or animal habitat considered to be rare, threatened or endangered by federal, State, or local agencies.
- The project interferes substantially with the movement of any resident or migratory wildlife species.
- The project adversely affects aquatic communities through construction or operation of the project.

DISCUSSION

IV. a), b), c), and d). The proposed Project would be located entirely within the existing boundaries of the Platform Esther Facility, which currently supports oil and gas production uses. The site is located within the San Pedro Bay, within State jurisdictional waters. Similar industrialized oil and gas production platforms are present within the immediately surrounding area; refer to *Exhibit 2, San Pedro Bay – Oil and Gas Production Platforms*.

There are no riparian habitats or other sensitive natural communities identified in local or regional plans, policies, or regulations, or by the California Department of Fish and Wildlife (CDFW) or U.S. Fish and Wildlife Service (USFWS) on the project site (Platform Esther), due to the project location. No federally-protected wetlands as defined by §404 of the Clean Water Act (CWA) or areas of natural open space are located on or in the vicinity of the site.

No candidate, sensitive, or special status species identified in local plans, policies, or regulations, or by the CDFW or the USFWS are found onsite, as the facility area supports no habitat for such species. No conflicts with local, regional, or State conservation plans are expected, due to the nature of the proposed improvements and their proposed location relative to the existing oil and gas production Platform. Therefore, no significant impacts on biological resources impacts will result with project implementation.

The proposed project would be located in a heavily-industrialized setting (Platform Esther). Additionally, the proposed project would not include the acquisition of additional land for use by DCOR or result in expansion outside of the current boundaries of the facility (Platform Esther) which further eliminates the potential for the project to adversely impact biological resources.

Based on the nature of the project, the industrial nature of the proposed and existing activities on the Platform, no specific wildlife surveys were considered necessary and none were performed. Further, the proposed project will not have an adverse effect, either directly or indirectly or through habitat modifications, on any sensitive biological species, riparian habitat, or other sensitive natural habitat since no such habitat exists on the Platform, due to the industrial nature of the use.

The proposed project will not result in the addition or elimination of any bodies of water that could be used by animals or migratory fowl. As discussed in Section IX – Hydrology and Water Quality herein, no increase in wastewater or stormwater discharge is expected. There are no significant plant or animal resources, locally designated species, natural communities, wetland habitats, or animal migration corridors that will be adversely affected by the proposed project. No rare, endangered, or threatened species are present onsite. Therefore, the proposed project would have less than significant direct and indirect adverse impacts on plant or animal species or the habitats on which they rely.

Additionally, the project will not result in an increase in the number of daily vessel trips traveling to and from the site; refer to Chapter 1 - Project Description. Although the vessel will idle temporarily during the unloading of project equipment onto the Platform for installation during the construction phase, the vessel currently does this during its existing daily operations when delivering personnel or goods to the DCOR facilities. Therefore, the presence or maneuvering of the vessel at the Platform is not anticipated to adversely impact any sensitive marine habitat or species, interfere substantially with the movement of any native resident or migratory fish or wildlife species or with established native resident or migratory wildlife corridors, or impede the use of native wildlife nursery sites. Impacts will be less than significant in this regard.

e) and f). The proposed project would be located entirely within the existing boundaries of Platform Esther, which has already been developed for oil and gas production uses. The site is located in San Pedro Bay, within the larger Pacific Ocean.

The proposed project will not conflict with local policies or ordinances protecting biological resources or local, regional, or State conservation plans. No trees are present onsite that will be affected by a local tree ordinance. The Platform lies within State waters. Land use and other planning considerations are determined by local governments. The project will not change the existing land use or any other planning requirements; refer also to Section X – Land Use and Planning. Due to the nature of the proposed improvements on the existing Platform, the project will not conflict with any adopted Habitat Conservation Plan, Natural Community Conservation Plan, or any other relevant habitat conservation plan. Further, the project will not result in the physical division in any existing community, as all proposed activities will occur on Platform Esther, which represent a heavily-industrialized setting and is not subject to an existing Habitat or Natural Community Conservation Plan. Impacts will be less than significant.

MITIGATION MEASURES

Based on the above information relative to impacts relative to biological resources, no significant adverse impacts were identified, and therefore, no mitigation measures are required for the construction or operation of the proposed Project.

DRAFT

		Potentially Significant Impact	Less Than Significant With Mitigation	Less Than Significant Impact	No Impact
V.	**CULTURAL RESOURCES.** Would the project:				
a)	Cause a substantial adverse change in the significance of a historical resource as defined in §15064.5?	☐	☐	☐	☑
b)	Cause a substantial adverse change in the significance of an archaeological resource as defined in §15064.5?	☐	☐	☐	☑
c)	Directly or indirectly destroy a unique paleontological resource, site, or feature?	☐	☐	☐	☑
d)	Disturb any human remains, including those interred outside formal cemeteries?	☐	☐	☐	☑

SIGNIFICANCE CRITERIA

Impacts to cultural resources will be considered significant if:

- The project results in the disturbance of a significant prehistoric or historic archaeological site or a property of historic or cultural significance to a community or ethnic or social group.
- Unique paleontological resources are present that could be disturbed by construction of the proposed project.
- The project would disturb human remains.

DISCUSSION

V. a) CEQA Guidelines Section 15064.5 states that resources listed in the California Register of Historical Resources or in a local register of historical resources are considered "historical resources." Additionally, CEQA Guidelines Section 15064.5(a)(3) state that "generally, a resource shall be considered by the lead agency to be *historically significant* if the resource meets the criteria for listing in the California Register of Historical Resources including the following:

- Is associated with events that have made a significant contribution to the broad patterns of California's history and cultural heritage;
- Is associated with the lives of persons important in our past;
- Embodies the distinctive characteristics of a type, period, region, or method of construction, or represents the work of an important creative individual, or possesses high artistic values;

- Has yielded or may be likely to yield information important in prehistory or history."

No structures would be demolished as part of the proposed Project. The Platform was constructed in 1990 and (began producing in May 1991) after Esther Island was destroyed in a storm in February 1983. As an industrial facility, no equipment or structures onsite are associated with California cultural heritage, associated with important persons of the past, or embody high artistic values, etc. (CEQA Guidelines §15054.5). The proposed Project will require construction activities to accommodate the new deck extension which will support the three gas flare systems; refer to Exhibits 4A to 4D and *Appendix E, Improvement Plans*, which illustrate the proposed improvements. No equipment on the Platform affected by the proposed modifications is older than 50 years of age, and no historically significant structures are present onsite. As a result, no structures of historic importance will be affected by the proposed Project, and no significant impact will occur.

V. b) Refer to Response V.a), above. The Project site is located on an existing oil and gas processing platform within San Pedro Bay. Therefore, the site does not support any archaeological resources or resources of historical significance. As such, implementing the proposed project will not adversely affect any archaeological resources. No significant impact will occur.

V. c). For the reasons discussed in items V.a). and V.b). above, no unique paleontological resources are present at the project site. No paleontological resources were identified onsite in association with improvements resulting with the 1990 construction activities. Further, all proposed improvements will occur on ("attached to") the existing Platform, and no disturbance to any lands that may have the potential to support paleontological resources will be affected. As such, project-related construction activities will not generate significant adverse impacts on paleontological resources. No significant impact will occur.

V.d). The proposed improvements will occur on the existing Platform Esther. As the existing Platform was constructed in 1990, and is surrounded by water, no known human remains or burial sites have been identified at (or below) Platform Esther during previous site disturbances or construction activities. No disturbance of any ground surface will occur with the project. As such, the proposed project is not expected to disturb any human remains. No significant impact will occur.

MITIGATION MEASURES

Based on the above information relative to impacts relative to cultural resources, no significant adverse impacts were identified, and therefore, no mitigation measures are required for the construction or operation of the proposed project.

DRAFT

		Potentially Significant Impact	Less Than Significant With Mitigation	Less Than Significant Impact	No Impact
VI.	**ENERGY.** Would the project:				
a)	Conflict with adopted energy conservation plans?	☐	☐	☐	☑
b)	Result in the need for new or substantially altered power or natural gas utility systems?	☐	☐	☑	☐
c)	Create any significant effects on local or regional energy supplies and on requirements for additional energy?	☐	☐	☑	☐
d)	Create any significant effects on peak and base period demands for electricity and other forms of energy?	☐	☐	☑	☐
e)	Comply with existing energy standards?	☐	☐	☐	☑

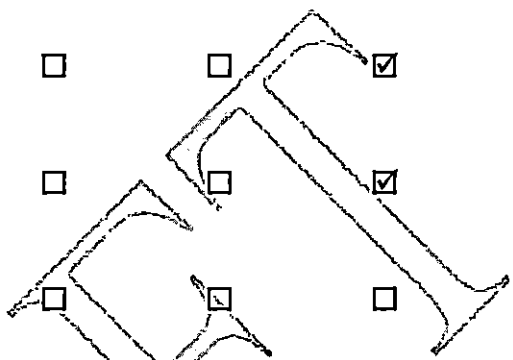

SIGNIFICANCE CRITERIA

The impacts to energy will be considered significant if any of the following criteria are met:

- The project conflicts with adopted energy conservation plans or standards.
- The project results in substantial depletion of existing energy resource supplies.
- An increase in demand for utilities impacts the current capacities of the electric and natural gas utilities; or,
- The project uses non-renewable resources in a wasteful and/or inefficient manner.

DISCUSSION

VI. a). The proposed project is not expected to conflict with any adopted energy conservation plan, as there is no such energy conservation plan that would apply. Additionally, the modifications proposed with the project are not expected to substantially increase energy demands generated by operation of Platform Esther, as explained in the following discussion. The amount of energy required to implement project construction and operation activities will not be substantial, and thus, the proposed project will not utilize non-renewable energy resources in a manner that is wasteful or inefficient. No significant impact will occur.

VI. b), c), d), and e). The proposed project will result in installation of the deck extension and the gas flare systems. The proposed equipment improvements are intended to improve efficiency of operations on the platform and to allow excess gas to be flared onsite, rather than transported back to shore via pipeline. Refer to Chapter 1 for specific details on project construction and operational characteristics.

Construction equipment will be primarily fueled by diesel fuel, and worker vehicles primarily by gasoline. Thus, there would be no need for new or substantially altered power or natural gas utility systems during construction of the proposed project.

Only a limited number of vehicle trips will be generated during the construction phase, due to the small number of workers who will travel to and from the site on a daily basis. The proposed flare system units are manufactured by Flare Industries, Inc. in Austin, Texas and will be transported to Terminal Island in the Port of Los Angeles on two flatbed trucks. The deck extension will be pre-fabricated by Global Fabricators in Shafter, California and transported to Terminal Island in the Port of Los Angeles on one flatbed truck.

Neither construction nor operation of the proposed project will result in an increase in the number of vessel trips to and from the Platform, as only a limited number of trips will be required for the transport of construction materials and personnel, and no increase in permanent personnel at the facility will be required for project operation. The vessel that currently provides transport to the Platform will continue to be used following project implementation. This vessel will provide service for the proposed project, and the existing schedule will be maintained for project-related construction and operational activities. The existing DCOR crew/supply vessel, M/V Isabel L, is powered by three 567 horsepower Tier 2 main engines and two 40 horsepower Tier 3 auxiliary generator engines in full compliance with the CARB Harbor Craft Regulations, including mandated use of ultra-low sulfur diesel to power all engines. Therefore, the project will not result in a substantial use of energy in support of project-related transportation activities.

Operation of the proposed project is not expected to increase the amount of natural gas consumption because no new equipment is being installed on the Platform that requires the use of natural gas (other than the flare systems which will get rid of excess gas generate onsite). The proposed gas flare systems will be constructed using BACT and are highly-efficient waste gas combustion sources. The three flare system will not result in a significant increase in energy use on the Platform, relative to the existing oil and gas production facilities.

Further, electricity on the Platform is currently generated by the two 250kW microturbines onsite. Operation of the microturbines is adequate to accommodate present electricity needs of operation of the Platform. The microturbines will continue to operate following project implementation, with some excess gas fueling the microturbines as needed, and as available. Following project implementation, the existing oil and gas production facilities on the Platform will continue to operate as they presently do, with no anticipated change in current energy demands.

The proposed project is not anticipated to result in a substantial increase in electricity or other energy demands, due to the nature of the proposed improvements. Demand for electricity during the construction period is not expected to increase appreciably because most of the construction equipment would generally be powered by diesel fuel. Project construction activities will require limited construction equipment and, due to onsite space limitations, small-scale equipment will be used. In addition, although construction will occur intermittently over a period of approximately ten weeks, construction activities requiring the use of electricity are relatively

limited in nature. The total diesel fuel that will be required for construction of the proposed project is considered to be minimal and does not represent a substantial volume.

As such, the project is not anticipated to result in the need for new or substantially altered power or natural gas utility systems or to create any significant effects on local or regional energy supplies or requirements for additional energy. The project will not create any significant effects on peak or base period demands for electricity or other forms or energy, nor will comply with existing energy standards. Therefore, based on the above information, less than significant adverse energy demand impacts are anticipated with implementation of the proposed project.

MITIGATION MEASURES

Based on the above information relative to impacts relative to energy, no significant adverse impacts were identified, and therefore, no mitigation measures are required for the construction or operation of the proposed project.

DRAFT

	Potentially Significant Impact	Less Than Significant With Mitigation	Less Than Significant Impact	No Impact
VII. GEOLOGY AND SOILS. Would the project:				
a) Expose people or structures to potential substantial adverse effects, including the risk of loss, injury, or death involving:	☐	☐	☑	☐
• Rupture of a known earthquake fault, as delineated on the most recent Alquist-Priolo Earthquake Fault Zoning Map issued by the State Geologist for the area or based on other substantial evidence of a known fault?	☐	☐	☑	☐
• Strong seismic ground shaking?	☐	☐	☑	☐
• Seismic–related ground failure, including liquefaction?	☐	☐	☑	☐
b) Result in substantial soil erosion or the loss of topsoil?	☐	☐	☐	☑
c) Be located on a geologic unit or soil that is unstable or that would become unstable as a result of the project, and potentially result in on- or off-site landslide, lateral spreading, subsidence, liquefaction or collapse?	☐	☐	☑	☐
d) Be located on expansive soil, as defined in Table 18-1-B of the Uniform Building Code (1994), creating substantial risks to life or property?	☐	☐	☐	☑
e) Have soils incapable of adequately supporting the use of septic tanks or alternative wastewater disposal systems where sewers are not available for the disposal of wastewater?	☐	☐	☐	☑

DRAFT

SIGNIFICANCE CRITERIA

The impacts on the geological environment will be considered significant if any of the following criteria apply:

- Topographic alterations would result in significant changes, disruptions, displacement, excavation, compaction or over covering of large amounts of soil.
- Unique geological resources (paleontological resources or unique outcrops) are present that could be disturbed by the construction of the proposed project.
- Exposure of people or structures to major geologic hazards such as earthquake surface rupture, ground shaking, liquefaction or landslides.
- Secondary seismic effects could occur which could damage facility structures, e.g., liquefaction.
- Other geological hazards exist which could adversely affect the facility, e.g., landslides, mudslides.

DISCUSSION

VII. a). Platform Esther is located in a seismically active region of southern California. Seismic events are a common occurrence in southern California, with northwesterly trending major earthquake faults dominating in the region.

The San Andreas Fault is the primary fault in the area and is thought to have a maximum credible event potential equivalent to a magnitude of 8.5 on the Richter scale. The San Andreas Fault Zone is a major structural feature and forms a boundary between the North American and Pacific tectonic plates. The San Andreas Fault is a right lateral strike-slip[16] fault moving at approximately 30 millimeters per year (mm/yr), with a northeast-southwest trend near the site area. A strike-slip fault is where two tectonic plates slide past each other. The recent earthquakes in Japan (March 2011) resulted from movement of tectonic plates in a subduction zone, where one tectonic plate is pushed under a second tectonic plate. A subduction configuration like that off the coast of Japan does not occur off the coast of southern California.

Table VII-1 identifies historic earthquakes over magnitude 4.5 in southern California, between 1915 and the present, along various faults in the region.

[16] A strike-slip fault is a fault in which the dominant sense of motion is horizontal, parallel to the strike of the fault (also known as a lateral-slip fault). Motion is commonly described as left-lateral (sinistral) or right-lateral (dextral). (USGS 2011)

Table VII-1. Significant Historical Earthquakes in Southern California

Date	Location (epicenter)	Magnitude
1915	Imperial Valley	6.3
1918	San Jacinto	~6.8
1923	North San Jacinto Fault	6.3
1925	Santa Barbara	6.3
1927	Lompoc	7.1
1933	Long Beach	6.4
1937	San Jacinto Fault	6.0
1940	Imperial Valley	6.9
1941	Santa Barbara	5.5
1941	Torrance-Gardena	4.8
1942	Fish Creek Mountains	6.6
1946	Walker Pass	6.0
1947	Manix	6.5
1948	Desert Hot Springs	6.0
1952	Kern County	7.5
1952	Bakersfield	5.8
1954	San Jacinto Fault	6.4
1966	Parkfield	6.0
1968	Borrego Mountain	6.5
1971	San Fernando (Sylmar)	6.5
1979	Imperial Valley	6.4
1980	White Wash	5.5
1986	North Palm Springs	5.6
1987	Whittier	5.9
1987	Elmore Ranch/Superstition Hills	6.2
1991	Sierra Madre	5.8
1992	Joshua Tree	6.1
1992	Landers	7.3
1992	Big Bear	6.4
1992	Mojave (Garlock)	5.7
1994	Northridge	6.7
1995	Ridgecrest	5.4
1999	Hector Mine	7.1
2002	Laguna Salada	5.7
2009	Northern Baja California	5.8
2010	Sierra El Mayor (No. Baja Calif.)	7.2

Source: SCEC, 2013.

A number of fault zones occur within the general region surrounding the project site and therefore, have the potential to result in strong ground shaking during a seismic event; refer to *Exhibit 6, Seal Beach Regional Seismic Map*. These faults largely include the Malibu-Santa Monica-Raymond Hills Fault Zone, Newport-Inglewood Fault Zone, Palos Verdes Fault Zone, San Andreas Fault Zone, Sierra Madre Fault System and the Whittier-Elsinore Fault Zone. The

majority of these faults are Alquist-Priolo Fault Zones, as identified by the Alquist-Priolo Earthquake Fault Zoning Act.[17]

Similar to many areas in southern California, the proposed project area is susceptible to strong ground shaking and ground failure during seismic events produced by local faults. Because Platform Esther is located in a seismically active region of southern California, it is conceivable that a seismic event could occur during construction or operation of the proposed project; however, this possibility exists currently, regardless of the proposed project.

No known active surface fault traces identified by the State, as delineated on the most recent Alquist-Priolo Earthquake Fault Zoning Map, are known to be present on the proposed project site. Therefore, the possibility of surface fault rupture affecting the proposed project area and/or the exposure of people or property to hazardous conditions resulting from rupture of a known earthquake fault would be considered low; however, such events may still occur.

As the project will result in construction of the deck extension and installation of the flare systems on the existing Platform Esther, no disturbance of the sea floor underlying the Platform is required (i.e. for foundations). Potential seismic hazards from the proposed project would not be higher than existing seismic hazards from the facility under current operating conditions or greater in any way than seismic hazards in most areas of the City of Seal Beach or offshore areas.

In addition, the facility is not located within a hillside area susceptible to landslides or slope instability. The probability of seismically-induced landslides affecting the proposed project area is considered to be negligible, due to the project location and the lack of topographic relief.

Impacts may occur due to risks from seismic ground shaking and/or ground failure, due to the location of the proposed project within southern California. Platform Esther is captured under the California Occupational Safety Administration (OSHA) Process Safety Management (Cal-ARP/RMP/PSM) regulations. These regulations require DCOR to operate the facility in a prescriptive manner to prevent releases to the environment. DCOR must conduct hazard analyses, process safety and hazards assessments, mechanical integrity assessments, management of change, pre-construction review, operational training, and post maintenance auditing. The goal of these programs is to prevent accidental releases to the environment that may have adverse consequences.

Seismic design requirements are generally based on determination of the appropriate seismic zone and site coefficient, which then depict foundation characteristics on a specific site. As required by the CSLC, the Platform has been designed in accordance with American Petroleum Institute (API) Recommended Practice 2A-Working Stress Design (WSD) for Planning, Designing, and Constructing Fixed Offshore Platforms to ensure that the structure can adequately resist a seismic event with minimal, if any, structural damage or collapse; refer to *Appendix G, Seismic Overview for New Flares and Deck Extension*. The project improvement plans have been prepared by a professional civil engineer licensed by the State of California, and

[17] Final Proposed Mitigated Negative Declaration for the Venoco Platform Holly Power Cable Replacement Project. California State Lands Commission. November 2012.

have been reviewed and accepted by the CSLC with regard to seismic issues. As discussed in Appendix G, the seismic review for the proposed improvements was conducted to confirm that the addition of the flare stack and deck extension would not impact the global seismic 1000-year analysis. It was determined that the total additional mass from the proposed project would be approximately 115 Kips (load includes the added deck, flare system, piping, deck plate, vapor wall, and miscellaneous loads).

The baseline loads for Platform Esther were documented in Chevron's "Structural Design Final Report" by Bechtel in 1985; refer to Appendix G for the Platform load summary. The total Bechtel topsides baseline loads cannot be exceeded by more than 10% without further investigation. The proposed flare and deck loads would be distributed between the drill deck and the production deck, with most of the mass supported at the production deck level. Comparison of the 115 Kips flare loads with the Bechtel topside loads verifies that the addition of the project loads would be relatively insignificant to the topsides mass. The project would add approximately 0.72% to 1.52% to the topsides mass, depending on the load combination basis used and would be well under the 10% additional load. Additionally, the mezzanine and north end of the production deck were de-rated to limit the structural impact of the flare system on the localized trusses and to keep the stresses within the allowable limits. As concluded by the seismic review, the proposed flare systems and deck extension would have a minimal impact on the global mass, and there are no re-assessment requirements.

Therefore, the proposed project will not alter the exposure of people or property to geological hazards such as earthquakes, landslides, mudslides, ground failure, or other natural hazards beyond existing conditions. As such, the substantial exposure of people or structures to the risk of loss, injury, or death involving the rupture of an earthquake fault, seismic ground shaking, ground failure, or landslides is not anticipated. Project-related impacts will be less than significant.

VII. b). The proposed project will be located on existing Platform Esther within San Pedro Bay and will not result in any ground disturbing activities. The Platform is surrounded by water. No onshore improvements will occur. As such, the project will not result in unstable soil conditions, or substantial changes in topography or in geologic substructures. The project will therefore not result in substantial soil erosion or the loss of topsoil. No significant impact will occur.

VII. c). Refer also to Response VII.a)., above. Liquefaction typically occurs occur in unconsolidated granular sediments that are water saturated less than 30 feet below ground surface. Seismically induced settlement or collapse can occur in soils that are loose, soft, or that are moderately dense but weakly cemented. As the proposed improvements will occur on the existing Platform within San Pedro Bay, the project will not be affected by liquefaction or seismic settlement. The Platform structure has been designed and installed to withstand

liquefaction or seismic settlement; refer also to *Appendix G, Seismic Overview for New Flares and Deck Extension*.

The proposed project itself does not involve drilling or removal of any underground products (e.g., water, crude oil, etc.) that could produce subsidence effects. Additionally, the affected area is not prone to landslides and does not have unique geologic features, as such conditions are not known to exist in the project area.

As stated above, the CSLC has reviewed and approved the engineering plans for the proposed project. Implementation of the proposed project is not be expected to change or worsen the potential for subsidence, liquefaction, etc. Impacts resulting with the project will be less than significant.

VII. d). The project improvements will occur on the existing Platform Esther within San Pedro Bay. No expansive soils will be affected by the proposed project, and no ground disturbance will occur. Therefore, no significant impact related to expansive soils will result with the project.

VII. e). Construction and/or operation of the proposed project will not generate additional wastewater above existing conditions. Wastewater generated on the Platform (i.e. from use of onsite restrooms and/or the galley) is currently treated via an existing wastewater treatment system (Marine Sanitation Device - Red Fox Unit) and discharged to the ocean consistent with the applicable NPDES permit. The proposed project will not trigger a modification to this permit and will not require installation of a septic tank or alternative wastewater disposal system. Thus, implementation of the proposed project will not adversely affect soils associated with a septic system or alternative wastewater disposal system. No significant impact will occur.

MITIGATION MEASURES

Based on the above information relative to impacts relative to geology and soils, no significant adverse impacts were identified, and therefore, no mitigation measures are required for construction or operation of the proposed project.

	Potentially Significant Impact	Less Than Significant With Mitigation	Less Than Significant Impact	No Impact
VIII. HAZARDS AND HAZARDOUS MATERIALS. Would the project:				
a) Create a significant hazard to the public or the environment through the routine transport, use, and disposal of hazardous materials?	☐	☐	☑	☐
b) Create a significant hazard to the public or the environment through reasonably foreseeable upset conditions involving the release of hazardous materials into the environment?	☐	☐	☑	☐
c) Emit hazardous emissions, or handle hazardous or acutely hazardous materials, substances, or waste within one-quarter mile of an existing or proposed school?	☐	☐	☐	☑
d) Be located on a site which is included on a list of hazardous materials sites compiled pursuant to Government Code §65962.5 and, as a result, would create a significant hazard to the public or the environment?	☐	☐	☐	☑
e) For a project located within an airport land use plan or, where such a plan has not been adopted, within two miles of a public use airport or a private airstrip, would the project result in a safety hazard for people residing or working in the project area?	☐	☐	☐	☑
f) Impair implementation of or physically interfere with an adopted emergency response plan or emergency evacuation plan?	☐	☐	☐	☑
g) Expose people or structures to a significant risk of loss, injury or death involving wildland fires, including where wildlands are adjacent to urbanized areas or where residences are intermixed with wildlands?	☐	☐	☐	☑
h) Significantly increased fire hazard in areas with flammable materials?	☐	☐	☑	☐

SIGNIFICANCE CRITERIA

The impacts associated with hazards will be considered significant if any of the following occur:

- Non-compliance with any applicable design code or regulation.
- Non-conformance to National Fire Protection Association standards.
- Non-conformance to regulations or generally accepted industry practices related to operating policy and procedures concerning the design, construction, security, leak detection, spill containment or fire protection.
- Exposure to hazardous chemicals in concentrations equal to or greater than the Emergency Response Planning Guideline (ERPG) 2 levels.

VIII. a) and b). The Project will result in the installation of three new gas flares on the proposed deck extension on Platform Esther. Limited quantities of hazardous materials will be required during the construction phase.

Equipment used by contractors in installation of the new equipment will use a variety of typical hazardous materials including lube oils, diesel fuel, sealants, welding gases, and/or paints. Any hazardous materials used currently, or expected to be used in the future, are to be stored in proper containers or vessels, are properly labeled, and are handled in accordance with all applicable regulations and safety requirements.

All hazardous materials that will be used onsite for the proposed project have been used on the site in the past. The total amount of materials is not expected to increase, and there are no new hazardous materials being introduced to the site with the proposed equipment modifications. Therefore, there is no new risk of upset and the consequences of an upset; however, if such risk were to occur, it would be similar to the consequences of an upset during current operations. Further, DCOR employs a full-time environmental engineer who oversees the proper management of hazardous material used at the facility.

DCOR also implements its Safety Manual (January 2013) which covers all work conducted at Platform Esther and provides standard safety measures. Further, DCOR implements its Emergency Response and Oil Spill Response Plans to ensure that personnel are trained on how to react in the event of a spill or release on the Platform. Operations onsite are also subject to California Health and Safety Code Fire Protection specifications and applicable Cal-OSHA requirements.

As a result, the proposed project is not anticipated to increase the potential for a significant hazard to the public or the environment through the routine transport, use, and disposal of hazardous materials, or through foreseeable upset or accident conditions involving the release of hazardous materials. With implementation of standard plans and regulations aimed at public safety, potential impacts with regard to hazards and hazardous materials will be less than significant.

VIII. c). The project site is not located within one-quarter mile of an existing or proposed school site. The proposed project will not alter or significantly increase existing hazards associated with operations on the Platform. As such, no significant offsite hazardous impacts are expected. The proposed project will not result in a safety hazard with regard to an existing or proposed school. No significant impact will occur.

VIII. d). Government Code §65962.5 refers to the "Hazardous Waste and Substances Site List," which is a list of facilities that may be subject to the Resource Conservation and Recovery Act (RCRA) corrective action program. Platform Esther is not identified on the list prepared by the Department of Toxic Substances Control (DTSC) pursuant to Government Code §65962.5. No significant impact will occur.

VIII. e). The northernmost portion of the City of Seal Beach is adjacent to the Los Alamitos Joint Forces Training Base (JFTB). The JFTB lies approximately seven miles to the northeast of the project site.

The project site is not located within an airport land use plan. The site is not located within two miles of a private use airport. Therefore, the proposed project would not be expected to result in a safety hazard for people residing or working in the area, on any airport, or on an airport land use plan. No significant impact will occur.

VIII. f). DCOR currently implements its existing Oil Spill Response Plan (OSRP), as is required by the U.S. Environmental Protection Agency (USEPA). Additionally, the facility implements the State of California Consolidated Unified Program Agency's Consolidated Contingency Plan/Hazardous Material Inventory program. These plans are maintained onsite to minimize the potential for the release of hazardous materials or harm to onsite workers and/or other members of the general public. If the equipment of the proposed project requires onsite storage of new hazardous materials, such materials will be added to the existing plans currently being implemented by DCOR. DCOR also implements its Emergency Response Plan; Safety Manual, which applies to all operations on Platform Esther, as appropriate. Additionally, DCOR provides periodic training for Platform personnel to further ensure public safety.

During construction, each day a Job Safety Analysis (JSA), hot work permit(s), and safe work permit(s) will be completed and approved by onsite supervisors and reviewed by all operations and construction personnel working on the project. A safety meeting will be held at the beginning of every work day to review the JSA, issue permits, and discuss the day's tasks and the hazards involved to ensure full awareness of potential safety issues by all affected personnel.

Crane lifts and rigging will be performed by qualified personnel and no crane lifts for this project will be performed over subsea pipelines.

As such, the proposed project is not expected to interfere with DCOR's Emergency Response Plan and will be installed and operated in compliance with all applicable plans and regulations aimed at maintaining public safety on the Platform. The proposed project will therefore not impair implementation or physically interfere with an adopted emergency response plan or evacuation plan. No significant impact to emergency response or evacuations plans will occur.

VIII. g) The proposed project will not cause an increase in the existing risk of fire hazard with regard to wildfire. Platform Esther is surrounded by water and no flammable native vegetation, brush, grass, or trees are located onsite. The site is not located within an area identified as having a high risk for wildfire. Therefore, the proposed project would not expose people or structures to wildland fires. No significant impact resulting from wildland fire hazards will occur with the proposed project.

VIII. h) Existing onsite operations on Platform Esther require the use of various hazardous materials at the facility for the oil and gas production processes. Safety risks largely consist of impacts resulting from the potential for fires or explosions. Toxic substances handled on the Platform may include regulated flammables and petroleum products (i.e. fuel oils and diesel fuel).

Thermal radiation is the heat generated by a fire, and potential safety risks that result from exposure. Any exposure to thermal radiation will result in burns, the severity of which would depend on the intensity of the fire, the duration of exposure, and the distance of an individual to the fire.

The FEF-90 is designed to include several inches of high temperature refractory lining on theinside walls of the stack to ensure radiation insulation. The FEF-90 is a completely enclosed flare system in which combustion occurs inside an insulated flare stack, in a controlled environment. Safety systems and remote start/stop and alarm contacts are standard items in this flare system. Additionally, the CEB-800-CA and CEB-350 will have no visible luminous flames and no heat radiation; refer to *Appendix F* for additional performance data.

Additionally, the Platform is equipped with a fire-fighting system that includes fire detectors in various locations throughout the Platform and an automatic fire-water deluge system that is located on the production deck. Multiple fire-fighting stations with hose reels and start/stop buttons for fire water pump activation are also located throughout the Platform. Additionally, a primary electric-operated fire-water pump and a back-up diesel-operated fire-water pump are also located on the Platform to provide fire suppression services. Platform personnel are trained

in accordance with industry standards, and onsite fire training exercises with Platform staff are routinely conducted.

The proposed improvements are not anticipated to substantially increase the need for fire protection services on the Platform. During construction, routine monitoring for potential fire hazards (i.e. flammable gases or vapors), standard written procedures, personnel training, and/or authorization of equipment used onsite will remain in place. Implementation of DCOR's standard safety measures, combined with project adherence to required local, State, and federal rules and regulations pertaining to public safety an operational requirements will reduce the potential for the project to result in an increase fire hazard with regard to hazardous materials on the Platform.

As such, significant adverse hazards and hazardous materials impacts are not expected from implementing the proposed project. Impacts will be less than significant.

DRAFT

MITIGATION MEASURES

Based on the above information relative to hazards and hazardous materials impacts, no significant adverse impacts were identified. Therefore, no mitigation measures are required for construction or operation of the proposed project.

		Potentially Significant Impact	Less Than Significant With Mitigation	Less Than Significant Impact	No Impact
IX.	**HYDROLOGY AND WATER QUALITY.** Would the project:				
a)	Violate any water quality standards, waste discharge requirements, exceed wastewater treatment requirements of the applicable Regional Water Quality Control Board, or otherwise substantially degrade water quality?	☐	☐	☐	☑
b)	Substantially deplete groundwater supplies or interfere substantially with groundwater recharge such that there would be a net deficit in aquifer volume or a lowering of the local groundwater table level (e.g. the production rate of pre-existing nearby wells would drop to a level which would not support existing land uses or planned uses for which permits have been granted)?	☐	☐	☐	☑
c)	Substantially alter the existing drainage pattern of the site or area, including through alteration of the course of a stream or river, or substantially increase the rate or amount of surface runoff in a manner that would result in substantial erosion or siltation on- or off-site or flooding on- or off-site?	☐	☐	☐	☑
d)	Create or contribute runoff water which would exceed the capacity of existing or planned storm water drainage systems or provide substantial additional sources of polluted runoff?	☐	☐	☐	☑
e)	Place housing or other structures within a 100-year flood hazard area as mapped on a federal Flood Hazard Boundary or Flood Insurance Rate Map or other flood hazard delineation map, which would impede or redirect flood flows?	☐	☐	☐	☑

DRAFT

	Potentially Significant Impact	Less Than Significant With Mitigation	Less Than Significant Impact	No Impact
f) Expose people or structures to a significant risk of loss, injury or death involving flooding, including flooding as a result of the failure of a levee or dam, or inundation by seiche, tsunami, or mudflow?	☐	☐	☑	☐
g) Require or result in the construction of new water or wastewater treatment facilities or new storm water drainage facilities, or expansion of existing facilities, the construction of which could cause significant environmental effects?	☐	☐	☐	☑
h) Have sufficient water supplies available to serve the project from existing entitlements and resources, or are new or expanded entitlements needed?	☐	☐	☐	☑
i) Result in a determination by the wastewater treatment provider which serves or may serve the project that it has adequate capacity to serve the project's projected demand in addition to the provider's existing commitments?	☐	☐	☐	☑

SIGNIFICANCE CRITERIA

Potential impacts on water resources will be considered significant if any of the following criteria apply:

WATER QUALITY:

- The project will cause degradation or depletion of ground water resources substantially affecting current or future uses.
- The project will cause the degradation of surface water substantially affecting current or future uses.
- The project will result in a violation of National Pollutant Discharge Elimination System (NPDES) permit requirements.
- The capacities of existing or proposed wastewater treatment facilities and the sanitary sewer system are not sufficient to meet the needs of the project.

- The project results in substantial increases in the area of impervious surfaces, such that interference with groundwater recharge efforts occurs.
- The project results in alterations to the course or flow of floodwaters.

WATER DEMAND:

- The existing water supply does not have the capacity to meet the increased demands of the project, or the project would use more than 262,830 gallons per day of potable water.
- The project increases demand for water by more than five million gallons per day.

DISCUSSION

IX. a), g), and i): Operations on the Platform currently generate process wastewater. Water generated in conjunction with oil and gas produced is separated onsite from the oil. The facility currently produces 700 barrels of oil per day (BOPD) and 9,950 barrels of water per day (BWPD). Produced oil and water are separated on the platform. The oil is transported via pipeline onshore and the water is re-injected back into the producing reservoir. Wastewater generated at the facility from the onsite restrooms and galley is treated in a Marine Sanitation Device (Red-Fox Unit) and discharged to the ocean under NPDES requirements. Storm water at the facility is collected onsite and commingled with produced water and is re-injected back into the producing reservoir. The new gas flare system project will not increase or affect any of the existing water handling processes at the facility. Construction and operation of the equipment associated with the proposed project will not produce industrial wastewater.

No additional water beyond existing quantities will be discharged as part of the proposed project. As such, no additional wastewater would be generated that has the potential to violate water quality standards or waste discharge requirements. Therefore, no water quality impacts will occur with the project in this regard. Wastewater generated on the Platform (i.e. from use of onsite restrooms and/or the galley) is currently treated via an existing wastewater treatment system (Marine Sanitation Device - Red Fox Unit) and discharged to the ocean consistent with the applicable National Pollutant Discharge Elimination System (NPDES) permit. The proposed project will not trigger a modification to this permit and will not require installation of an alternative wastewater disposal system. Therefore, adequate capacity is available to serve the proposed project in addition to the provider's existing commitments. No significant impact will occur.

No new additional stormwater drainage facilities will need to be constructed or the expansion of existing facilities will need to occur to handle stormwater following project implementation. All storm water is captured onsite and co-mingled with produced water and is re-injected back into the producing reservoir. Since stormwater discharge or runoff is not expected to change in either volume or water quality, no new storm drainage facilities or expansion of existing storm facilities are expected to be required. Therefore, no significant adverse impacts associated with construction of or expansion to stormwater drainage systems are expected with the proposed project.

Adherence to all applicable requirements set forth in the NPDES permit for the facility will reduce potential impacts on water quality to less than significant levels. Continued compliance with applicable federal, State, and local regulations, Code requirements, and permit provisions will also ensure that no significant impacts related to potential discharge into any surface waters or changes in water quality occur as a result of the proposed project.

Therefore, the proposed project will not result in an increase in water use or wastewater generated or discharged from the Platform or require a change in any wastewater discharge permits. Sufficient water supplies are available to serve current uses on the Platform from existing entitlements and resources, and no new or expanded entitlements will be required to serve the proposed project. No significant impact will occur.

IX. b) and h). Water is presently injected/extracted at the site into/from deeper oil bearing zones which does not directly affect shallower aquifers associated with drinking water. No new freshwater will be used in the project operations, and therefore, the project will not use or deplete groundwater supplies. No change in site operations will occur with the proposed project that will influence direction or rate of flow of groundwater. The proposed project is not expected to increase any storm water runoff. Due to the nature of the project location, the proposed improvements will not increase the potential to interfere substantially with groundwater recharge as compared to the existing setting.

Further, the project site is located within San Pedro Bay on the existing Platform Esther. Potable water is currently provided to the Platform via an existing 4-inch water line extending to the Platform from the shore (City of Seal Beach water supply). No increase in the number of permanent personnel on the Platform will occur with the project. Therefore, sufficient water supplies to serve the project are available from existing entitlements, and no new or expanded entitlements are needed. No significant impact will occur.

IX. c) and d). Platform Esther is located in San Pedro Bay, within the larger Pacific Ocean. No streams or rivers are located onsite. Any construction that may occur as a result of implementing the proposed project will therefore not alter the course of a stream or river, or substantially increase the rate or amount of surface runoff in a manner that would result in substantial erosion or siltation on- or offsite or flooding on- or offsite. Although the project will result in an increase in impervious surface area on the Platform (deck extension), the proposed improvements will not create or contribute to runoff water that will exceed the capacity of any storm drain systems, due to the location of the Platform, or provide a substantial new source of polluted runoff. As stated above, all storm water is captured onsite and co-mingled with produced water and is re-injected back into the producing reservoir. No significant impact will occur.

IX. e). The proposed project will require modifications to the existing Platform Esther to accommodate the deck extension and the flare system units. No existing residential housing or permanent residents are present onsite, and the construction of housing is not proposed with the project. Project construction or operation activities will not result in the need for additional permanent workers, so no additional housing is required. The site is locate in San Pedro Bay and is therefore not located within a 100-year flood hazard area as mapped on a federal Flood Hazard Boundary or Flood Insurance Rate Map or other flood hazard delineation map, which would impede or redirect flood flows. No significant impact with regard to flooding from the site will occur.

IX. f). Construction activities associated with the proposed project will not occur in an area that could be affected by seiche. A seiche is caused by vibration of the surface of a lake or landlocked sea that varies in period from a few minutes to several hours and which may change in intensity. The project site is located within San Pedro Bay, and will not be subject to the risk of flooding caused by seiche.

The project site is not located on a hillside or slope area, and thus, is not susceptible to mudflow. As a result, the proposed project is not expected to result in significant adverse impacts relative to mudflow.

As the site is located within San Pedro Bay, which is part of the larger Pacific Ocean, it will be subject to the effects of a tsunami, should one occur. The existing Platform has been designed to comply with API Recommended Practice 2A-WSD for Planning, Designing, and Constructing Fixed Offshore Platforms, as have the proposed project improvements, to ensure that the potential for loss or damage resulting from such an event is minimized or avoided. The existing Platform Esther production deck is located 35-feet, 6 inches amsl to ensure that the potential loss or damage from such an event is minimized or avoided. The project improvement plans (see *Exhibits 4A to 4D*) have been reviewed by a professional engineer for consistency with the requirements relative to seismic events.

As such, in the proposed project would not be affected by potential flood hazards caused by inundation by seiche or mud flow. Project conformance with the design requirements of API Recommended Practice 2A-WSD will reduce potential impacts relative to a rare tsunami event to a level of less than significant.

MITIGATION MEASURES

Based on the above information relative to hydrology and water quality impacts, no significant adverse impacts were identified. Therefore, no mitigation measures are required for construction or operation of the proposed project.

	Potentially Significant Impact	Less Than Significant With Mitigation	Less Than Significant Impact	No Impact
X. LAND USE AND PLANNING. Would the project:				
a) Physically divide an established community?	☐	☐	☐	☑
b) Conflict with any applicable land use plan, policy, or regulation of an agency with jurisdiction over the project (including, but not limited to the general plan, specific plan, local coastal program or zoning ordinance) adopted for the purpose of avoiding or mitigating an environmental effect?	☐	☐	☐	☑

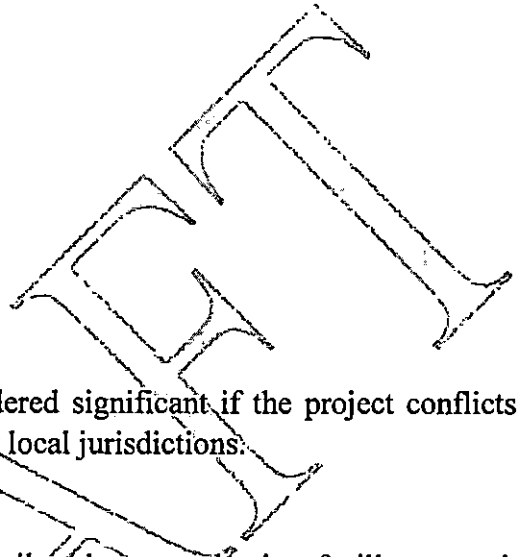

SIGNIFICANCE CRITERIA

Land use and planning impacts will be considered significant if the project conflicts with the land use and zoning designations established by local jurisdictions.

DISCUSSION

X. a) and b). Platform Esther is an existing oil and gas production facility operating within waters under the jurisdiction of the State of California in the Belmont Oil Field. The Platform is located on State Oil and Gas Lease PRC 3095.1 (Parcel 16A).

No substantial change in the current use (oil and gas production) of Platform Esther will occur with implementation of the project. Due to the nature of the project, no sensitive biological resources are located on the project site, and the proposed improvements will not affect any habitat conservation or natural community conservation plans. The Platform is surrounded by water and no lands are adjacent to the structure that would be affected by the proposed improvements. All improvements will occur on the existing Platform, and therefore, will not result in physical division of an existing community (i.e. Seal Beach). Further, no new development or alterations to existing land designations on other lands will occur as a result of the proposed project. Therefore, present or planned land uses in the region would not be affected as a result of implementing the proposed project. No significant impact with regard to land use will occur.

MITIGATION MEASURES

Based on the above information relative to land use, no significant adverse impacts were identified. Therefore, no mitigation measures are required for construction or operation of the proposed project.

DRAFT

	Potentially Significant Impact	Less Than Significant With Mitigation	Less Than Significant Impact	No Impact
XI. MINERAL RESOURCES. Would the project:				
a) Result in the loss of availability of a known mineral resource that would be of value to the region and the residents of the state?	☐	☐	☐	☑
b) Result in the loss of availability of a locally-important mineral resource recovery site delineated on a local general plan, specific plan or other land use plan?	☐	☐	☐	☑

SIGNIFICANCE CRITERIA

Project-related impacts on mineral resources will be considered significant if any of the following conditions are met:

- The project would result in the loss of availability of a known mineral resource that would be of value to the region and the residents of the state.
- The proposed project results in the loss of availability of a locally-important mineral resource recovery site delineated on a local general plan, specific plan or other land use plan.

DISCUSSION

XI. a), and b) Improvements associated with the proposed project will occur entirely on the existing Platform Esther. Platform Esther is located within the Belmont Oil Field.

The proposed project will not change the natural gas production activities currently approved and operating at the site. The only changes will be flaring of produced natural gas via the proposed flare units. Oil and gas production operations have been active on the Platform under DCOR's ownership since 2005 (and for decades prior under other ownership) and are similar to existing oil and gas production facility operations within the City of Seal Beach, City of Long Beach, and other surrounding communities.

Oil and gas extraction and processing will continue on Platform Esther (and at other area oil and gas drilling and recovery operations) with implementation of the proposed project. Continued extraction of resources from the Belmont Oil Field is not considered to represent a loss in the availability of important mineral resources in the same way that building a development project over a mineral resource such as gravel, asphalt, bauxite, or gypsum (which are commonly used for construction activities or industrial processes) would make these resources unavailable for other uses. No activities resulting with implementation of the proposed project will cause a loss of availability of a known mineral resource of value to the region and/or residents of the State of

California or locally-important mineral resource recovery site delineated on a local general plan, specific plan, or other land use plan. No other mineral resources are present at the project site, and no significant impact will occur.

MITIGATION MEASURES

Based on the above information relative to impacts on mineral resources, no significant adverse impacts were identified. Therefore, no mitigation measures are required for construction or operation of the proposed project.

DRAFT

	Potentially Significant Impact	Less Than Significant With Mitigation	Less Than Significant Impact	No Impact
XII. NOISE. Would the project result in:				
a) Exposure of persons to or generation of permanent noise levels in excess of standards established in the local general plan or noise ordinance, or applicable standards of other agencies?	☐	☐	☐	☑
b) Exposure of persons to or generation of excessive groundborne vibration or groundborne noise levels?	☐	☐	☐	☑
c) A substantial temporary or periodic increase in ambient noise levels in the project vicinity above levels existing without the project?	☐	☐	☐	☑
d) For a project located within an airport land use plan or, where such a plan has not been adopted, within two miles of a public use airport or private airstrip, would the project expose people residing or working in the project area to excessive noise levels?	☐	☐	☐	☑

SIGNIFICANCE CRITERIA

Noise impacts will be considered significant if:

- Construction noise levels exceed the local noise ordinances or, if the noise threshold is currently exceeded, project noise sources increase ambient noise levels by more than three decibels (dBA) at the site boundary. Construction noise levels will be considered significant if they exceed federal Occupational Safety and Health Administration (OSHA) noise standards for workers.
- The proposed project operational noise levels exceed any of the local noise ordinances at the site boundary or, if the noise threshold is currently exceeded, project noise sources increase ambient noise levels by more than three dBA at the site boundary.

DISCUSSION

XII. a) and c). The existing oil and gas production Platform is an industrial-type use. Similar oil and gas producing platforms are located within the surrounding area, including Platforms Eva and Emmy, located to the southeast of Platform Esther, as well as additional platforms located in federal waters, further to the south; however, these platforms are distanced from Platform Esther by approximately four miles or more. Chaffee Island, White Island, Freeman Island, and Grissom Island which support oil and gas production-related operations, are located

approximately 2.1, 3.6, 3.3, and 6.3 miles (respectively) to the northwest. No other land uses are immediately adjacent to the site.

The ambient noise environment in the proposed project area is comprised of contributions from equipment and operation of the existing onsite gas and oil production facilities and waterborne vessels that periodically pass by the site, including the routinely-scheduled vessel operated by SoCal Ship Services under charter to DCOR for the transport of personnel and supplies.

Noise would be generated from both construction and operational activities associated with the proposed project. Noise impacts from construction will occur during construction required for the proposed equipment modifications. The construction equipment associated with the proposed project may include welding machines, trucks (onshore), and/or from crane operation, among other activities. Examples of noise levels from construction equipment are presented in *Table XIII-1, Construction Noise Sources*. It should be noted that these noise levels are detected at 50 feet from the source. Such noise will be generated intermittently over the approximately 10-week construction period. Construction equipment used may or may not be operating simultaneously or on the same days.

Table XIII-1 Construction Noise Sources

Equipment	Typical Noise Levels (decibels) [1],[2]
Truck	88
Flatbed Truck	84
Cranes	83
Welding Machines	72

1. Data are modified from the City of Los Angeles, 1998. Levels are in dBA at a 50-foot reference distance. These values are based on a range of equipment and operating conditions.
2. Values are intended to reflect noise levels from equipment in good condition, with appropriate mufflers, air intake silencers, etc. In addition, these values assume averaging the sound level over all directions from the listed piece of equipment.

The closest sensitive receptor is located more than 1.5 miles away, within the City of Seal Beach; *Exhibit 1, Regional/Local Vicinity Map*. Due to distance, the noise level from construction activities is not anticipated to adversely affect any such receptors or any other land uses in the area.

Construction activities at the project site will generally be limited to the hours of 7:00 a.m. to 6:00 p.m. Monday through Friday. Because of the nature of the construction activities required, the type of equipment used, number of pieces operating simultaneously, length of operation time, and noise level generated will be varied over the length of the approximately 10-week construction period. Construction noise sources will be temporary and intermittent and will cease following construction activities.

Based on project construction requirements, combined with the distant location of the Platform and existing noise levels currently generated onsite, project construction is not expected to result in substantial increases in noise levels at the Platform.

Additionally, operation of the new equipment (three gas flare systems) installed as part of the proposed project is not expected to generate a significant increase in noise levels over existing conditions. Manufacturer's data for the flare systems identifies the units as generating a low level

of noise as a "good neighbor" policy; refer to *Appendix D, Flare Systems - Performance Specifications*. Further contributing to the reduction in noise is the distance of the facilities from any surrounding sensitive receptors, as the site is located approximately 1.5 miles from the shoreline and the City of Seal Beach.

Due to the operational nature of the proposed project elements and the distance of such improvements from any surrounding land uses, it is anticipated that little additional noise will be generated during operation of the proposed project facilities. Further, existing facilities operating on the Platform contribute to the ambient noise level. Operation of the flare systems will not produce a substantial amount of noise, and will not be a major source of discernible noise outside of the site boundary. Implementation of the proposed project will not generate substantial noise levels as compared to that which currently exists at the facility. Therefore, no discernable change to the existing noise setting or to that experienced by any surrounding sensitive receptors is anticipated to occur during operation of the proposed project. As such, project operation is not anticipated to result in a significant impact.

XII. b) Construction activities that will occur at the facility are not considered to have the potential to generate groundborne vibration effects. The Platform is located approximately 1.5 miles offshore and construction is limited to installation of the deck extension an gas flare system. No construction of foundations or pile-driving activities, or use of jackhammers or large construction equipment, are required for the new equipment on the Platform. Operation of the proposed project will not involve any new drilling or other similar activities that would have the potential to increase groundborne vibration. Additionally, the project site is surrounded by water, and no adjacent lands or land uses are present that may potentially be disturbed by any groundborne vibration effects. As such, no excessive groundborne vibration or groundborne noise levels will occur with the project. No significant impacts will occur.

XII. d) The project site is not located with an airport land use plan or within two miles of a public or private airport. The northernmost portion of the City of Seal Beach is adjacent to the Los Alamitos Joint Forces Training Base, owned and operated by the U.S. military. The JFTB lies approximately seven miles to the northeast of the project site. Further, due to the nature of the use, no permanent residences occur on the Platform; however, two nighttime production operators occupy the Platform on a daily basis. This is an existing condition and will not change with the proposed project. Therefore, the proposed project would not expose people residing or working in the area to excessive noise. No significant impact will occur.

MITIGATION MEASURES

Based on the above information relative to impacts relative to noise, no significant adverse impacts were identified, and therefore, no mitigation measures are required for the construction or operation of the proposed project.

DRAFT

	Potentially Significant Impact	Less Than Significant With Mitigation	Less Than Significant Impact	No Impact
XIII. POPULATION AND HOUSING. Would the project:				
a) Induce substantial growth in an area either directly (for example, by proposing new homes and businesses) or indirectly (e.g. through extension of roads or other infrastructure)?	☐	☐	☐	☑
b) Displace substantial numbers of people or existing housing, necessitating the construction of replacement housing elsewhere?	☐	☑	☐	☑

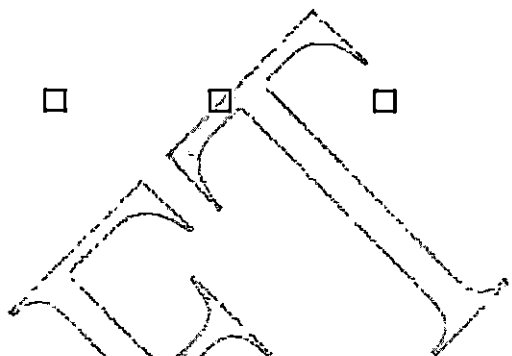

SIGNIFICANCE CRITERIA

The impacts of the proposed project on population and housing will be considered significant if the following criteria are exceeded:

- The demand for temporary or permanent housing exceeds the existing supply.
- The proposed project produces additional population, housing or employment inconsistent with adopted plans either in terms of overall amount or location.

DISCUSSION

XIII. a), and b). The proposed project will require modifications to the existing Platform Esther to accommodate the deck extension and the flare system units. The project will not involve an increase, decrease, or relocation of population as the result of construction or operation activities.

Currently, there are three daytime production operators and typically 10 to 15 day trip workers performing maintenance activities or visiting the Platform for various reasons. Two nighttime production operators also occupy the Platform on a daily basis. The production operators that work on Platform Esther return to shore when they are not on duty.

No existing permanent residential housing is present onsite, and therefore, the displacement of housing or people is not required. As construction labor needs will be limited, personnel for construction activities is expected to come from the existing labor pool in southern California. Operation of the proposed project is not expected to require any new permanent employees at the facility.

Additionally, the project will not substantially increase the availability of the gas supply, and therefore, will not be growth inducing. The proposed improvements will allow for continued operation of the oil and gas production facilities that presently occur on the Platform; however, no increase in area demand for natural gas resources is anticipated as the result of the project.

Therefore, construction and operation of the proposed project are not expected to have a significant adverse impact on population or housing, induce substantial population growth, or exceed the growth projections contained in any adopted plans. No significant impact will occur.

MITIGATION MEASURES

Based on the above information relative to impacts relative to population and housing, no significant adverse impacts were identified, and therefore, no mitigation measures are required for the construction or operation of the proposed project.

DRAFT

	Potentially Significant Impact	Less Than Significant With Mitigation	Less Than Significant Impact	No Impact
XIV. PUBLIC SERVICES. Would the proposal result in substantial adverse physical impacts associated with the provision of new or physically altered governmental facilities, need for new or physically altered government facilities, the construction of which could cause significant environmental impacts, in order to maintain acceptable service ratios, response times or other performance objectives for any of the following public services:				
a) Fire protection?	☐	☐	☑	☐
b) Police protection?	☐	☐	☐	☑
c) Schools?	☐	☐	☐	☑
d) Other public facilities?	☐	☐	☐	☑

SIGNIFICANCE CRITERIA

Impacts on public services would be considered significant if a proposed project would result in substantial adverse physical impacts associated with the provision of new or physically altered governmental facilities, or the need for new or physically altered government facilities (the construction of which could cause significant environmental impacts) in order to maintain acceptable service ratios, response times, and/or other performance objectives.

DISCUSSION

XIV. a). Platform Esther is located within the jurisdiction of the Orange County Fire Authority (OCFA). The OCFA is a regional fire service agency that serves 23 cities in Orange County and all unincorporated areas. The OCFA protects over 1,680,000 residents from its 71 fire stations located throughout Orange County. The closest fire station to the project site is Station #44, located at 718 Central Avenue in Seal Beach. Fire protection services are currently provided to the Platform and are adequate to serve the site.

Additionally, the Platform is equipped with a fire-fighting system that includes fire detectors in various locations throughout the Platform and an automatic fire-water deluge system that is located on the production deck. Multiple fire-fighting stations with hose reels and start/stop buttons for fire water pump activation are also located throughout the Platform. Additionally, a primary electric-operated fire-water pump and a back-up diesel-operated fire-water pump are also located on the Platform to provide fire suppression services. Platform personnel are trained

in accordance with industry standards, and onsite fire training exercises with Platform staff are routinely conducted.

The proposed improvements are not anticipated to substantially increase the need for fire protection services on the Platform. During construction, routine monitoring for potential fire hazards (i.e. flammable gases or vapors), standard written procedures, personnel training, and/or authorization of equipment used onsite will remain in place. Therefore, project construction activities are not anticipated to substantially increase the need for the provision of fire protection services.

The proposed project will not substantially increase the requirements or need for additional or altered fire protection services as the modifications proposed are not expected to generate significant adverse hazards, including potential risk of fires or explosion. This is largely due to the fact that the proposed project will not introduce new hazardous materials onsite that will generally require fire protection services in the event of an accidental release. The gas flaring units will be enclosed, and no visible flame will be present. Project compliance with State and local fire codes is expected to further minimize the need for additional fire protection services at the Platform. Additionally, fire-fighting and emergency response personnel and equipment will continue to be maintained and operated on the Platform, as under current conditions.

Therefore, no new fire hazards or no significant adverse effects with regard to fire protection services will occur with project implementation. The proposed project will therefore not substantially increase requirements for additional or altered fire protection services. Impacts will be less than significant.

XIV. b). The City of Seal Beach Police Department is the responding agency for law enforcement needs at Platform Esther. The Police Department maintains a Marine Safety Department for the protection of the public. The headquarters for the Department is located at 888 Ocean Avenue in Seal Beach. Response times vary based on proximity of the nearest available unit and the type of incident that occurs. In addition, the Orange County Sheriff's Department Harbor Patrol Marine Operations Bureau (Sunset Beach) is also available to provide law enforcement services for the Platform.

Due to the nature of the proposed project, no impacts to local police department services are expected to result from during construction or operation. Additionally, all proposed modifications will occur on the existing Platform, and no additional workers required for operation of the proposed facility improvements. All personnel going to and from the Platform will be employed by DCOR or will be DCOR-approved contractors who will utilize the existing transport vessel. Therefore, entry onto the Platform is highly restricted, further reinforcing a secure environment. No components of the proposed project are expected to increase the need for police protection services, as new or modified equipment and operational procedures are generally anticipated to be similar to those occurring under existing conditions with regard to law

the need for law enforcement. As such, no significant impact to police protection services will occur.

XIV. c), and d). As stated in Section XIII, Population and Housing, the proposed project will not induce population growth, as the local labor pool is expected to be adequate to accommodate any construction and/or operational activities associated with the project. The proposed project will involve modifications at the existing Platform Esther which is currently in operation. The local workforce in southern California is expected to fill the short-term construction positions required for the proposed project, and no increase in the number of permanent workers is expected at the facility as the result of project implementation. The proposed project will therefore not result in an increase in the local population that could cause adverse physical impacts or adversely affect service ratios, response times, or other public service performance objectives. Therefore, the proposed project is not expected to generate significant adverse impacts to schools, parks, libraries, or other public facilities within the Seal Beach community. As such, no significant impact to public services will occur.

MITIGATION MEASURES

Based on the above information relative to impacts on public services, no significant adverse impacts were identified. Therefore, no mitigation measures are required for the construction or operation of the proposed project.

DRAFT

	Potentially Significant Impact	Less Than Significant With Mitigation	Less Than Significant Impact	No Impact
XV. RECREATION.				
a) Would the project increase the use of existing neighborhood and regional parks or other recreational facilities such that substantial physical deterioration of the facility would occur or be accelerated?	☐	☐	☐	☑
b) Does the project include recreational facilities or require the construction or expansion of recreational facilities that might have an adverse physical effect on the environment or recreational services?	☐	☑	☐	☑

SIGNIFICANCE CRITERIA

The impacts to recreation will be considered significant if:

- The project results in an increased demand for neighborhood or regional parks or other recreational facilities.
- The project adversely effects existing recreational opportunities.

DISCUSSION

XV. a) and b). Project construction activities will require a limited number of personnel and will occur over a period of approximately 10 weeks. As indicated in Section XIV, Population and Housing, the existing labor pool in southern California is sufficient to fulfill the labor requirements for construction of the proposed project. Operation of the facilities affected by the proposed project would not require any additional permanent workers onsite following installation of the equipment on the Platform. Therefore, there would be no change in area population or population densities as the result of project implementation. As such, the project will not result in a substantial increase in the use or degradation of existing neighborhood and regional parks or other recreational facilities within the City of Seal Beach or other surrounding communities.

Due to the nature of the proposed project, the project does not include recreational facilities and will not require the construction or expansion of existing recreational facilities. No significant impact to recreational facilities will occur.

MITIGATION MEASURES

Based on the above information relative to impacts on recreational resources, no significant adverse impacts were identified. No mitigation measures are required for construction or operation of the proposed project.

DRAFT

	Potentially Significant Impact	Less Than Significant With Mitigation	Less Than Significant Impact	No Impact
XVI. SOLID/HAZARDOUS WASTE. Would the project:				
a) Be served by a landfill with sufficient permitted capacity to accommodate the project's solid waste disposal needs?	☐	☐	☑	☐
b) Comply with federal, state, and local statutes and regulations related to solid and hazardous waste?	☐	☐	☑	☐

SIGNIFICANCE CRITERIA

The proposed project impacts on solid and hazardous waste will be considered significant if the following occur:

- The generation and disposal of hazardous and non-hazardous waste exceeds the capacity of designated landfills.

DISCUSSION

XVI. a), and b). Depending on the type of solid waste produced during construction, such as any shipping or packing materials, disposal will be required at either a Class II (industrial) or Class III (municipal) landfill. Waste that may exhibit a level of contamination that is not hazardous can be disposed of at a Class II landfill. To accommodate such wastes, Class II landfills are lined in order to prevent the risk of potential groundwater contamination from waste generated by industrial-type uses and regulated by the State. Class III landfills can accommodate non-hazardous and municipal waste, which is generally waste produced by standard daily activities and is does not contain any hazardous, industrial, or radioactive wastes.

Within the jurisdiction of the SCAQMD, there are currently 32 active Class III landfills operating. The majority of these landfills are lined and can therefore accommodate both Class II and Class III wastes. In 2012, the total capacity of Class III landfills for waste disposal within the SCAQMD was estimated to be 116,796 tons per day[18].

No existing structures on Platform Esther will require demolition to allow for installation of the deck extension and/or flaring systems. As such, no increase in solid waste would occur from any such activities. Further, as the Platform is located within San Pedro Bay, and the proposed improvements will be installed adjacent to the existing onsite deck, no land disturbance (i.e. grading) or removal and disposal of soils (i.e. potentially contaminated) will be required.

The structural components needed to construct the deck extension (i.e. piping segments, steel supports, etc.) and the flaring systems themselves will be pre-fabricated; refer to *Exhibit 5.*

[18] Final Program EIR for the 2012 South Coast Air Quality Management Plan. SCAQMD, 2012.

Demonstration of Deck Extension Installation. The piping segments and steel supports will be cut and welded in place. Project construction activities will therefore generate only a limited amount of used paint cans, brushes, and/or rags generated during the painting phase.

The disposal of construction-related waste could contribute to the diminishing available landfill capacity. The minimal amount of construction waste generated by the proposed project will be transported to Terminal Island in the Port of Los Angeles. As such, less than significant impacts from project construction activities will occur with regard to solid waste treatment and disposal facilities.

Due to the nature of the facility and the limited number of employees that are present on a daily basis, routine operation and maintenance activities on Platform Esther generate only limited amounts of solid waste, primarily from administrative or office activities (e.g., waste paper). Presently, any solid waste generated by daily maintenance and/or operation activities on the Platform is stored onsite in sealed roll-off containers. On an as-needed basis, the solid waste is transported back to shore and ultimately disposed of at a licensed solid waste disposal facility (i.e. landfill) through private contract in accordance with State and federal Waste Classification and Disposal Regulations. Due to the nature of the proposed improvements and the fact that no increase in permanent personnel working on the Platform will occur with the project, operation of the proposed facilities will result in a less than significant impact with regard to solid waste.

Existing operations on the Platform do not generate or require disposal of a substantial amount of hazardous waste. All of the materials used currently, or expected to be used in the future, are stored in proper containers or vessels, are properly labeled, and are handled in accordance with all applicable regulations and safety requirements Any hazardous waste generated onsite under current operations is documented, containerized (as appropriate), and transported to an approved treatment and disposal facility, in compliance with applicable local, State, and/or federal laws pertaining to hazardous materials; refer to Section VIII, Hazards and Hazardous Materials, for additional discussion.

The construction equipment used by contractors installation of the new equipment will use a variety of typical hazardous materials that may include lube oils, diesel fuels, sealants, welding gases, and paints. Operation of the new equipment (three gas flaring units) installed with the proposed project will not use or generate substantial quantities of new hazardous materials onsite. Therefore, the project is not expected to require additional waste disposal capacity or interfere with the Platform's ability to comply with existing federal, State, and local regulations for the handling and disposal of hazardous waste handling and disposal, as applicable. Therefore, impacts relative to solid or hazardous waste with project implementation will be less than significant.

MITIGATION MEASURES

Based on the above information relative to impacts with regard to solid and hazardous waste, less than significant adverse impacts were identified. Therefore, no mitigation measures are required for the construction or operation of the proposed project.

DRAFT

	Potentially Significant Impact	Less Than Significant With Mitigation	Less Than Significant Impact	No Impact
XVII. TRANSPORTATION AND TRAFFIC. Would the project:				
a) Conflict with an applicable plan, ordinance or policy establishing measures of effectiveness for the performance of the circulation system, taking into account all modes of transportation including mass transit and non-motorized travel and relevant components of the circulation system, including but not limited to intersections, streets, highways and freeways, pedestrian and bicycle paths, and mass transit?	☐	☐	☐	☑
b) Conflict with an applicable congestion management program, including but not limited to level of service standards and travel demand measures, or other standards established by the county congestion management agency for designated roads or highways?	☐	☐	☐	☑
c) Result in a change in air traffic patterns, including either an increase in traffic levels or a change in location that results in substantial safety risks?	☐	☐	☐	☑
d) Substantially increase hazards due to a design feature (e.g. sharp curves or dangerous intersections) or incompatible uses (e.g. farm equipment)?	☐	☐	☐	☑
e) Result in inadequate emergency access?	☐	☐	☐	☑
f) Conflict with adopted policies, plans, or programs regarding public transit, bicycle, or pedestrian facilities, or otherwise decrease the performance or safety of such facilities?	☐	☐	☐	☑

SIGNIFICANCE CRITERIA

The impacts on transportation and traffic will be considered significant if any of the following criteria apply:

- Peak period levels on major arterials are disrupted to a point where level of service (LOS) is reduced to D, E or F for more than one month.
- An intersection's volume to capacity ratio increase by 0.02 (two percent) or more when the LOS is already D, E or F.
- A major roadway is closed to all through traffic, and no alternate route is available.
- The project conflicts with applicable policies, plans or programs establishing measures of effectiveness, thereby decreasing the performance or safety of any mode of transportation.
- There is an increase in traffic that is substantial in relation to the existing traffic load and capacity of the street system.
- The demand for parking facilities is substantially increased.
- Waterborne, rail car, or air traffic is substantially altered.
- Traffic hazards to motor vehicles, bicyclists or pedestrians are substantially increased.
- The need for more than 350 employees.
- An increase in heavy-duty transport truck traffic to and/or from the facility by more than 350 truck round trips per day.
- Increase customer traffic by more than 700 visits per day.

DISCUSSION

XVII. a) and b). Regional access to the area of Seal Beach potentially affected by any project-related traffic is generally provided by Highway 1 (Pacific Coast Highway) and Interstate 405 (I-405). It is estimated that implementation of the proposed improvements will result in generation of a limited number of vehicle trips per day from construction personnel traveling to and from Seal Beach Pier on a daily basis for purposes of work; refer to *Table III-2*, which identifies the anticipated number of construction workers for each stage of construction. Sufficient parking is presently available within proximity to the Pier to accommodate these workers. Construction workers are expected to arrive at the work site between 6:30 a.m. and 7:00 a.m., which would generally avoid peak hour traffic conditions, and depart between 5:30 p.m. and 6:00 p.m. Any (minor) increase in construction worker traffic in the area would be temporary and would cease following the completion of construction activities.

Currently, there are three daytime production operators and typically 10 to 15 day trip workers performing maintenance activities or visiting the Platform for various reasons. Two nighttime production operators also occupy the Platform on a daily basis. Operation and maintenance of the facilities installed as part of the proposed project will not require any new permanent

employees, and therefore, no additional commuter or maintenance trips will occur as compared to existing conditions. Thus, the project would not adversely affect existing operations at any nearby intersections or roadways, or result in conflict with any applicable congestion management plans or applicable plan, ordinance, or policy establishing measures of effectiveness for the performance of the circulation system. Therefore, no significant traffic impacts are expected during the operational phase of the proposed project.

Additionally, the project will not require an increase in the number or size of marine vessels visiting Platform Ester or result in existing access to other platforms or associated facilities along the established route. No additional vessel trips above that which presently occur with routine maintenance and daily operation of the Platform will be required in support of project construction or operation.

XVII. c). The proposed project includes modifications on the existing Platform Esther. The proposed project will not involve the delivery of materials via air, so no change or increase in air traffic is expected.

Additionally, the height of the existing crane mast on the Platform extends approximately 65 feet above the drill deck. A mobile well work-over rig is periodically transported to and from the Platform when needed for use; when present on the Platform, the maximum height of the rig is approximately 60 feet above the drill deck. A well drilling rig is also periodically transported to and from the Platform when needed; when present on the Platform, the well drilling rig mast extends to approximately 120 feet above the drill deck. The height of the upper drill deck is approximately 57.5 feet amsl. The top of the highest proposed flare stack (FEF-90) would be 23 feet above the existing drill deck. The height of the other two flare units (CEB-350 and CEB-800CA) would be 13 feet above the drill deck. As such, the project elements will be lower than other structural elements that may be present on the Platform. Therefore the project will not result in the introduction of structural elements that will interfere with air traffic patterns or public safety, as they will be below the height at which air traffic would occur.

The proposed project is not expected to result in a change to air traffic patterns such that a notification to the Federal Aviation Administration (FAA), pursuant to Advisory Circular AC 70/7460-2K, will not be required. The northernmost portion of the City of Seal Beach is adjacent to the Los Alamitos Joint Forces Training Base. The JFTB lies approximately seven miles to the northeast of the project site. Platform Esther lies outside of the normal flight patterns that occur at the JFTB. As such, no significant impact relative to air traffic patterns will occur.

XVII. d). The proposed project will not involve construction of roads or use of incompatible equipment on roads (e.g., farm equipment). Therefore, no increased hazards due to a design feature or incompatible use is expected.

XVII. e). The proposed modifications will occur on the existing Platform and will not result in the closure of any existing roadways or evacuation routes. Although a minor increase in local traffic due to equipment and workers going to and from the site will occur (refer to *Table III-2*) during construction, such effects are not expected to result in inadequate emergency access on any surface roads within the City of Seal Beach or surrounding communities. Therefore, the project would not result in inadequate access or emergency access, and no impacts would occur.

XVII. f). Refer to Response XVII.a), above. Traffic generated by project construction and operation will generally include construction workers or operations personnel traveling to and from the Seal Beach Pier for work on a daily basis, as applicable, to access the routinely operating vessel that will provide access to the Platform; refer also to Section III. Air Quality and Greenhouse Gases for a full description. The proposed project will be constructed on existing Platform Esther located in San Pedro Bay and is not expected to conflict with any adopted policies, plans, or programs supporting alternative transportation modes (e.g., bus turnouts, bicycle racks) that are implemented for the City of Seal Beach or other surrounding communities. Therefore, no significant impact would occur.

DRAFT

MITIGATION MEASURES

Based on the above information relative to impacts on traffic and transportation, no significant adverse impacts were identified. Therefore, no mitigation measures are required for the construction or operation of the proposed project.

	Potentially Significant Impact	Less Than Significant With Mitigation	Less Than Significant Impact	No Impact
XVIII. MANDATORY FINDINGS OF SIGNIFICANCE.				
a) Does the project have the potential to degrade the quality of the environment, substantially reduce the habitat of a fish or wildlife species, cause a fish or wildlife population to drop below self-sustaining levels, threaten to eliminate a plant or animal community, reduce the number or restrict the range of a rare or endangered plant or animal or eliminate important examples of the major periods of California history or prehistory?	☐	☐	☑	☐
b) Does the project have impacts that are individually limited, but cumulatively considerable? ("Cumulatively considerable" means that the incremental effects of a project are considerable when viewed in connection with the effects of past projects, the effects of other current projects, and the effects of probable future projects)	☐	☐	☑	☐
c) Does the project have environmental effects that will cause substantial adverse effects on human beings, either directly or indirectly?	☐	☐	☑	☐

DRAFT

DISCUSSION

XVIII. a). The proposed project does not have the potential to adversely affect the environment, reduce or eliminate any plant or animal species, or destroy prehistoric records of the past. The proposed project will occur in an existing industrial facility (Platform Esther) located within San Pedro Bay. Due to the nature of the existing facility as an oil and gas production platform, Platform Esther does not support any habitat or fish or wildlife species. Special status plants, animals, or natural communities are not expected to occur within close proximity to the onsite improvements, as the area where the proposed improvements will be constructed is devoid of plants and natural communities that would have the potential to support such biological resources. Project implementation will therefore not require construction activities in areas where

special status plants, animals, or natural communities important examples of the major periods of California history or prehistory exist.

All project improvements will occur on the existing Platform, and no offsite (or onshore) improvements are required or proposed. The proposed project will not extend into environmentally sensitive areas, but rather will remain within the confines of the existing, currently operating facility. Additionally, no increase in the number of vessel trips to the Platform will be required with the project that could have the potential to cause disturbance of marine life. Further, no disturbance of the sea floor is required as part of the proposed project. No resources of historic or cultural value are present onsite, and therefore, no impacts to such resources will occur with the project. For additional information, see Section IV, Biological Resources, and Section V, Cultural Resources.

As such, it is not anticipated that the proposed project will significantly adversely affect plant or animal species or their habitat. Implementation of the project will not have the potential to degrade the quality of the environment, substantially reduce the habitat of a fish or wildlife species, cause a fish or wildlife population to drop below self-sustaining levels, threaten to eliminate a plant or animal community, reduce the number or restrict the range of a rare or endangered plant or animal, or eliminate important examples of the major periods of California history or prehistory. Therefore, impacts will be less than significant.

XVIII. b). As the Lead Agency under CEQA, the SCAQMD uses the same significance thresholds for project-specific and cumulative impacts for all environmental topics analyzed." Consistent with CEQA Guidelines §15064.7, a "lead agency may rely on a threshold of significance standard to determine whether a project will cause a significant environmental effect." Further, CEQA Guidelines §15064(h)(1) requires that a "lead agency consider whether the cumulative impact is significant and whether the effects of the project are cumulatively considerable." Where a lead agency is examining a project with an incremental effect that is not cumulatively considerable, a lead agency need not consider the effect significant, but must briefly describe the basis for concluding that the incremental effect is not cumulatively considerable. As stated above, projects that exceed the project-specific significance thresholds are considered by the SCAQMD to be cumulatively considerable; projects that do not exceed the project-specific significance thresholds are not considered to be cumulatively considerable.[19] This conclusion is consistent with CEQA Guidelines §15064(h)(4), which states, "The mere existence of cumulative impacts caused by other projects alone shall not constitute substantial evidence that the proposed project's incremental effects are cumulatively considerable."

With respect to aesthetics, no cumulative impacts are expected, as all project components will be visually similar in nature to the existing industrial-type equipment located on the existing Platform Esther. Additionally, due to the limited height and scale of the proposed improvements,

[19] SCAQMD Cumulative Impacts Working Group White Paper on Potential Control Strategies to Address Cumulative Impacts From Air Pollution, August 2003, Appendix D, Cumulative Impact Analysis Requirements Pursuant to CEQA, at D-3. http://www.aqmd.gov/hb/2003/030929a.html. Accessed October 24, 2014.

as well as distance from the shoreline and any roadways where scenic views may be experienced, the project is not anticipated to result in a significant change in visual characteristics at the project site, and no cumulative aesthetic impacts are expected.

With respect to air quality, no cumulative impacts are anticipated. A substantial change in operations will not occur with the proposed improvements. Emissions resulting with implementation of the proposed project (construction and operation) will be below the SCAQMD's thresholds for all criteria air pollutants. Although the project will contribute additional air pollutants to an existing nonattainment area, these increases will be below the SCAQMD air quality significance criteria. Therefore, the proposed project will not cause a significant environmental effect, nor result in an unavoidable cumulatively considerable contribution to an air quality impact.[20]

With respect to geology, no cumulative geology impacts are expected because the structures associated with the proposed project will be constructed on existing Platform Esther in conformance with the requirements of the API Recommended Practice 2A-WSD. Therefore, no significant impacts relative to geology are on expected on the project site, and no cumulative geology impacts will occur.

With the project as proposed, emissions relative to GHG from the proposed project will exceed the SCAQMD's cumulatively considerable significance threshold for GHGs. Project impacts will be reduced through implementation of the proposed mitigation to reduce impacts to less than significant.

With respect to hazards, no cumulative hazard impacts are anticipated to result with implementation of the proposed improvements. The amount of hazardous materials generated is not expected to substantially increase, and any materials will continue to be handled according to applicable local, State, and federal regulations. Therefore, no significant increase in hazards is expected at the project site, and no cumulative hazard or hazardous materials impacts are expected.

With respect to hydrology, no cumulative impacts are expected because the proposed project does not require the use of additional water at the facility or increase the amount of runoff. The proposed project will not have any impact on either water quantity or water quality. Therefore, no significant impacts to hydrology and water quality are expected at the project site, and no cumulative hydrology and water quality impacts are expected.

With respect to noise, no cumulative impacts are expected because the proposed project will not cause a significant increase in noise during construction or operation. Construction activities will generate noise onsite, but the impacts will be reduced to below significance outside the facility's boundaries. Construction noise will be temporary, and no sensitive receptors are located within proximity to the project site. The operation of the proposed project is also not

[20] Refer also to *Citizens for Responsible Equitable Environmental Development c. City of Chula Vista* (2011) 197 Cal. App. 4th 327, 334 and *Rialto Citizens for Responsible Growth v. City of Rialto* (2102) 208 Cal. App. 4th 899 pertaining to the determination of significant impacts and whether a project is considered to be cumulatively considerable.

expected to generate significant levels of noise. Therefore, no significant impacts to noise are expected at Platform Esther, and no cumulative noise impacts are expected.

With respect to traffic, no cumulative impacts are expected because the proposed project will not cause a significant increase in vehicle trips generated during construction or operation. Construction activities will generate a limited number of trips, whereas operation will not result in any additional trips. This small number of project related construction trips will not cause a significant impact to the capacity of nearby intersections or reduction in the functioning of any roadways. Therefore, no significant direct or cumulative impacts to traffic are expected with implementation of the proposed project.

XVIII. c). The proposed project will install a new extension deck and a new three-flare system to allow for the flaring of gas generated during standard operation of the existing Platform Esther. The flare systems will be built in accordance with current BACT requirements. Additionally, the estimated increase in emissions as the result of the project has been shown to be less than significant. The potential health impacts of the TAC emission increases were evaluated in a health risk assessment (see *Appendix F*), and the results of the health risk assessment indicated that the TAC emissions in the vicinity of the project site would be less than significant. Further, the proposed project is not expected to increase the potential adverse hazard impacts associated with the operation of the facilities. Impacts with regard to hazards were determined to be less than significant. Such findings, together with the determination that less than significant impacts will occur with regard to the issue areas evaluated herein, support the conclusion that the proposed project is not expected to cause substantial adverse effects on human beings, either directly or indirectly.

DRAFT

This page intentionally left blank

DRAFT

REFERENCES

American Petroleum Institute. American Practice for Planning, Designing and Constructing Fixed Offshore Platforms - Recommended Practice for Planning, Designing and Constructing Fixed Offshore Platforms - Working Stress Design. Available at http://latorebondeng90245.tripod.com/api_rp2a.pdf. Copyright 2003. Accessed November 12, 2014.

Aqua-Calc - Conversions and Calculations. http://www.aqua-calc.com/what-is/volume/oil-barrel. Accessed October 15, 2014.

Bechtel Petroleum, Inc. Platform Esther – Structural Design Final Report. March 1985.

California State Lands Commission, 2012. Final Proposed Mitigated Negative Declaration for the Venoco Platform Holly Power Cable Replacement Project, November 2012.

California EPA Air Resources Board. Low Carbon Fuel Standard Program. Available at www.arb.ca.gov/fuels/lcfs/lcfs.htm. Accessed July 2014.

City of Seal Beach General Plan. Adopted December 2003.

County of Orange Fire Authority. http://www.ocfa.org/Menu/AboutOCFA/AboutOCFA.aspx. Accessed October 30, 2014.

DCOR,LLC. Website. http://www.dcorllc.com/. Accessed October 28, 2014.

SCAQMD, 2003. SCAQMD Cumulative Impacts Working Group White Paper on Potential Control Strategies to Address Cumulative Impacts from Air Pollution, August 2003, Appendix D, Cumulative Impact Analysis Requirements Pursuant to CEQA, http://www.aqmd.gov/hb/2003/030929a.html. Accessed October 24, 2014.

SCAQMD, 2008. Interim CEQA GHG Significance Threshold for Stationary Sources, Rules and Plans. Adopted by SCAQMD December 5, 2008.

SCAQMD, 2011. SCAQMD Air Quality Significance Thresholds. Revised March 2011. Available at: http://aqmd.gov/ceqa/handbook/signthres.pdf. Accessed July 21, 2014.

SCEC, 2013. Significant Earthquakes and Faults - Chronological Earthquake Index. http://www.data.scec.org/significant/chron-index.html. Accessed October 28, 2014.

Thomas & Beers Engineering. Platform Esther Global Mass Review with New Flares and Deck. July 1, 2014.

U.S. Environmental Protection Agency - Air Actions, California. http://www.epa.gov/Region09/air/reclaim/index.html. Accessed October 28, 2014.

United States Environmental Protection Agency, Class I Ozone Depleting Substances, Updated November 7, 2014. http://www.epa.gov/ozone/science/ods/classone.html. Accessed November 10, 2014. U.S. Environmental Protection Agency, *Climate Change – Overview of Greenhouse Gases,* Updated July 31, 2013. http://epa.gov/climatechange/ghgemissions/gases/fgases.html Accessed August 16, 2014.

U.S. Environmental Protection Agency, *Protection of Stratospheric Ozone: Listing of Global Warming Potential for Ozone Depleting Substances*, updated October 29, 2009. http://www.epa.gov/EPA-AIR/1996/January/Day-19/pr-372.html. Accessed August 16, 2014.

DRAFT

ACRONYMS

Abbreviation	Description
§	Section
AB	Assembly Bill
AER	Annual Emissions Reporting
AHM	Acutely Hazardous Material
API	American Petroleum Institute
AQMP	Air Quality Management Plan
BACT	Best Available Control Technology
Basin	South Coast Air Basin
bbl	barrel, 42 gallons
BOPD	barrels of oil per day
BreitBurn	BreitBurn Energy Partners Limited Partnership
BSEE	Bureau of Safety and Environmental Enforcement (U.S. Government – Department of the Interior)
BWPD	barrels of water per day
Cal-ARP	California Accidental Release Program
Caltrans	California Department of Transportation
CAPCOA	California Air Pollution Control Officers Association
CARB	California Air Resources Board
CAT	cap and trade
CBC	California Building Code
CCR	California Code of Regulations
CDFW	California Department of Fish and Wildlife
CEB	Clean Enclosed Burner
CEQA	California Environmental Quality Act
CFC	chlorofluorocarbon
CH_4	methane
CO	carbon monoxide
CO_2	carbon dioxide
CO_2e	carbon dioxide equivalent
COI	Conflict of Interest
CSLC	California State Lands Commission
CWA	Clean Water Act
dBA	A weighted noise level measurement in decibels
DCOR	DCOR, LLC
DTSC	Department of Toxic Substances Control
EIR	Environmental Impact Report
ERPG	Emergency Response Planning Guideline
EPA	Environmental Protection Agency
Farmland	Prime Farmland, Unique Farmland, or Farmland of Statewide Importance
FAA	Federal Aviation Administration
FEF	Fully Enclosed Flare
GHG	Greenhouse Gas
GWP	global warming potential

DRAFT

H_2O	water vapor
HCFC	hydrochlorofluorocarbon
HFC	hydrofluorocarbon
hp	horsepower
HRA	Health Risk Assessment
I-405	Interstate 405
IPCC	Intergovernmental Panel on Climate Change
IS	Initial Study
JFTB	Joint Forces Training Base
JSA	Job Safety Analysis
kW	kilowatt
lbs	pounds
LCFS	Low Carbon Fuel Standard
LOS	Level of Service
LST	Localized Significance Threshold
MCFD	thousand cubic feet of natural gas per day
MCFY	thousand cubic feet per year
mm	millimeter
MMBTU	one million British thermal units
MND	Mitigated Negative Declaration
MT	metric ton
$MTCO_2e$	metric tons of CO_2 equivalent
N_2O	nitrous oxide
NOVS	Notice of Verification Services
NOx	Nitrogen oxide
NPDES	National Pollution Discharge Elimination System
NSR	New Source Review
O_3	ozone
OCFA	Orange County Fire Authority
OSHA	Occupational Safety and Health Administration
OSRP	Oil Spill Response Plan
PFCs	perfluorocarbons
PM10	particulate matter less than 10 microns in diameter
PM2.5	particulate matter less than 2.5 microns in diameter
PM	particulate matter
ppmv	parts per million by volume
PRC	Public Resources Code
PSM	Process Safety Management
PTE	Permit to emit
RCRA	Resource Conservation and Recovery Act
RECLAIM	Regional Clean Air Incentives Market
RMP	Risk Management Program
ROC	Reactive Organic Compounds
RPS	Renewables Portfolio Standard
RTC	RECLAIM Trading Credit
SCAB	South Coast Air Basin

SCAG	Southern California Association of Governments
SCAQMD	South Coast Air Quality Management District
SCEC	Southern California Earthquake Center
SF_6	sulfur hexafluoride
SLIC	Spills, Leaks, Investigation and Cleanup
SOx	sulfur oxide
SSC	Stationary Source Committee
TAC	toxic air contaminant
TBD	to be determined
THC	total hydrocarbons
USFWS	United States Fish and Wildlife Service
USGS	United States Geologic Survey
VOC	Volatile Organic Compound
WSD	Working Stress Design

DRAFT

This page intentionally left blank

DRAFT

Atmospheric Analysis & Consulting, Inc.

CLIENT : DCOR, LLC.
PROJECT NAME : Esther Sales Gas - Monthly
AAC PROJECT NO. : 140710
REPORT DATE : 5/9/2014

On May 8, 2014, Atmospheric Analysis & Consulting, Inc. received one (1) Tedlar Bag for TRS Analysis by SCAQMD 307.91. Upon receipt, the sample was assigned a unique Laboratory ID number as follows:

Client ID	Lab No.
Sales Gas	140710-70837

SCAQMD 307.91 Analysis – Up to a 1 mL aliquot of sample is injected into the GC/SCD for analysis following SCAQMD 307.91 as specified in the SOW.

No problems were encountered during receiving, preparation, and/or analysis of this sample. The test results included in this report meet all requirements of the NELAC Standards and/or AAC SOP# AACI- SCAQMD 307.91.

I certify that this data is technically accurate, complete, and in compliance with the terms and conditions of the contract. Release of the data contained in this hardcopy data package has been authorized by the Laboratory Director or his designee, as verified by the following signature.

If you have any questions or require further explanation of data results, please contact the undersigned.

Marcus Hueppe
Laboratory Director

This report consists of 4 pages.

ACCREDITED IN ACCORDANCE WITH nelac Certificate #E87837

1534 Eastman Ave., Ste. A • Ventura, • CA 93003 www.aaclab.com • (805) 650-1642 • FAX (805) 650-1644

Atmospheric Analysis & Consulting, Inc.

LABORATORY ANALYSIS REPORT

CLIENT	**: DCOR, LLC.**	**SAMPLING DATE**	**: 05/08/2014**
PROJECT NO.	**: 140710**	**RECEIVING DATE**	**: 05/08/2014**
MATRIX	**: AIR**	**ANALYSIS DATE**	**: 05/09/2014**
UNITS	**: ppmV**	**REPORT DATE**	**: 05/09/2014**

Total Reduced Sulfur Compounds Analysis by SCAQMD 307.91

Client ID	Sales Gas
AAC ID	140710-70837
Analyte	Result
Hydrogen Sulfide	**10.1 ppmv**
Carbonyl Sulfide	< 0.050 ppmv
Sulfur Dioxide	< 0.050 ppmv
Methyl Mercaptan	**0.091 ppmv**
Ethyl Mercaptan	< 0.050 ppmv
Dimethyl Sulfide	< 0.050 ppmv
Carbon Disulfide	< 0.050 ppmv
Isopropyl Mercaptan	< 0.050 ppmv
tert-Butyl Mercaptan	< 0.050 ppmv
n-Propyl Mercaptan	< 0.050 ppmv
Methylethylsulfide	< 0.050 ppmv
sec-Butyl Mercaptan	< 0.050 ppmv
Thiophene	< 0.050 ppmv
iso-Butyl Mercaptan	**0.171 ppmv**
Diethyl Sulfide	< 0.050 ppmv
n-Butyl Mercaptan	< 0.050 ppmv
Dimethyl Disulfide	< 0.050 ppmv
2-Methylthiophene	**0.162 ppmv**
3-Methylthiophene	< 0.050 ppmv
Tetrahydrothiophene	**0.109 ppmv**
Bromothiophene	< 0.050 ppmv
Thiophenol	< 0.050 ppmv
Diethyl disulfide	**0.877 ppmv**
Total Unidentified Sulfur	**1.09 ppmv**
Total Reduced Sulfurs as H_2S	**12.6 ppmv**

All compound's concentrations expressed in terms of H_2S (TRS does not include COS and SO_2)
Sample Reporting Limit (SRL) is equal to Reporting Limit x Canister Dil. Fac. x Analysis Dil. Fac.

Marcus Hueppe
Laboratory Director

1534 Eastman Ave., Ste. A • Ventura, • CA 93003 www.aaclab.com • (805) 650-1642 • FAX (805) 650-1644

Atmospheric Analysis & Consulting, Inc.

Quality Control/Quality Assurance Report
SCAQMD 307.91

Date Analyzed: 5/9/2014
Analyst: ZG

Instrument ID: SCD#10
Calb. Date: 1/27/2014

Opening Calibration Verification Standard

	Resp. (area)	Result (ppbV)	% Rec *	% RPD ****
Initial	14844	494	98.9	NA
Duplicate	15029	501	100.1	1.2
Triplicate	15082	502	100.5	1.6

Method Blank

Analyte	Result
H2S	ND

Duplicate Analysis Sample ID 140711-70838

Analyte	Sample Result	Duplicate Result	Mean	% RPD ***
H2S	239.6	255.8	247.7	6.5

Matrix Spike & Duplicate Sample ID 140711-70838

Analyte	Sample Conc.	Spike Added	MS Result	MSD Result	MS % Rec **	MSD % Rec **	% RPD ***
H2S	24.8	250.0	256.9	249.9	93.5	91.0	2.7

Closing Calibration Verification Standard

Analyte	Std. Conc.	Result (ppbV)	% Rec **
H2S	500.0	452.0	90.4

** Must be 95-105%*
*** Must be 90-110%*
**** Must be < 10%*
***** Must be < 5% RPD from Initial result.*

Marcus Hueppe
Laboratory Director

1534 Eastman Ave., Ste. A • Ventura, • CA 93003 www.aaclab.com • (805) 650-1642 • FAX (805) 650-1644

AAC# 140710

Atmospheric Analysis & Consulting, Inc
1534 Eastman Avenue Suite A
Ventura, CA 93003
(805) 650-1642 Fax- (805) 650-1644
CHAIN OF CUSTODY RECORD

REPORT:
Fax (805) 535-2075
Company DCOR,LLC.
Address 290 Maple Court. Suite 290
Ventura CA. 93003
Phone: 805 535-2078 Contact: Jay Rao

BILL TO: Christine White
P.O. #
Company: DCOR,LLC.
Address
jrao@dcorllc.com

PROJ. NO.
PROJECT NAME: Esther Sales Gas - Monthly
SAMPLER'S SIGNATURE: JTurner
Print Name: JOHN TURNER

CONTAINER TYPES: C-Cylinder, T-Tedlar Bag

Sample NO.	Date Sampled	Time Sampled	Comp	Grab	Sample Description	Water	Soil	Sludge	Gas	Container #	Type	Analysis	SCAQMD 307.91 (Monthly)							Remarks
70837 1	5-8-14	0850		X	Sales Gas				X	1	T		X							Send report to Jay Rao
																				H_2S at 10PPMs

CHECK ONE BOX
Dispose samples
Return samples

Relinquished by :(Signnature)	Date/ time	Received by :(Signature)	Date / time	Relinquished by :(Signature)	Date / Time	Received by :(Signature)
JTurner	5-8-14 0910	[signature]	5/8/14	[signature]	5/8/14 4:30PM	[signature]
Print Name: JOHN TURNER		Print Name: JAY RAO		Print Name: JAY RAO		Print Name: Jose H
Relinquished by :(Signature)	Date/ time	Received by :(Signature)	Date/ time	Relinquished by :(Signature)	Date / Time	Received by :(Signature)
					5/8/14 1634	
Print Name:		Print Name:		Print Name:		Print Name:

48Hr		Standard	X	Other(Specify)
72Hr		24		

[illegible]

Atmospheric Analysis & Consulting, Inc.

CLIENT	: DCOR, LLC
PROJECT NAME	: Esther Sales Gas - Monthly and Quarterly
AAC PROJECT NO.	: 120935
REPORT DATE	: 10/05/2012

On October 4, 2012, Atmospheric Analysis & Consulting, Inc. received one (1) Tedlar Bag for BTU analysis by ASTM D-3588 and TRS analysis by SCAQMD 307.91. Upon receipt the sample was assigned a unique Laboratory ID number as follows:

Client ID	Lab No.
Sales Gas	120935-58799

ASTM D-3588 Analysis – Up to a 1 mL aliquot of sample is injected into the GC/FID/TCD for analysis following ASTM D-3588 as specified in the SOW.

SCAQMD 307.91 Analysis – Up to a 1 mL aliquot of sample is injected into the GC/SCD for analysis following SCAQMD 307.91 as specified in the SOW.

No problems were encountered during receiving, preparation and/or analysis of this sample. The test results included in this report meet all requirements of the NELAC Standards and/or AAC SOP# AACI-ASTM D-3588 and SCAQMD 307.91.

I certify that this data is technically accurate, complete and in compliance with the terms and conditions of the contract. The Laboratory Director or his designee, as verified by the following signature, has authorized release of the data contained in this hardcopy data package.

If you have any questions or require further explanation of data results, please contact the undersigned.

Marcus Hueppe
Laboratory Director

This report consists of 7 pages.

1534 Eastman Ave., Ste. A • Ventura, • CA 93003 www.aaclab.com • (805) 650-1642 • FAX (805) 650-1644

Atmospheric Analysis & Consulting, Inc.

Laboratory Analysis Report

CLIENT	: DCOR, LLC	SAMPLING DATE	: 10/04/2012
PROJECT NO.	: 120935	RECEIVING DATE	: 10/04/2012
MATRIX	: AIR	ANALYSIS DATE	: 10/04/2012
		REPORT DATE	: 10/05/2012

BTU and F-Factor Report

	Client ID:	Sales Gas	
	AAC ID:	120935-58799	
	Analyte	Result	Analysis Dil. Fac.
FIXED GASES	H_2	< 1.0%	1
	O_2	0.9 %	1
	N_2	3.6 %	1
	CO	< 0.1%	1
	CO_2	2.0 %	1
	CH_4	84.2 %	1
HYDROCARBONS	C_2	21,100 ppmV	1
	C_3	27,732 ppmV	1
	C_4	7,010 ppmV	1
	C_5	21,769 ppmV	1
	C_6	4,693 ppmV	1
	C_6+	10,203 ppmV	1

F Factor(dscf Exhaust/MM Btu)	8570
Total Wt.% Adjusted Sp. Gravity	0.720
FUEL GAS BTU per LBM	22100
FUEL GAS BTU per CU. FT	1140
ROC/TOC	0.083

All results have been normalized to 100% on a dry weight basis.

Sample Reporting Limit (SRL) is equal to Reporting Limit x Analysis Dil. Fac x Canister Dil. Fac (if applicable)

Marcus Hueppe
Laboratory Director

1534 Eastman Ave., Ste. A • Ventura, • CA 93003 www.aaclab.com • (805) 650-1642 • FAX (805) 650-1644

Atmospheric Analysis & Consulting, Inc.

LABORATORY ANALYSIS REPORT

CLIENT : DCOR, LLC
PROJECT NO. : 120935
MATRIX : AIR
UNITS : ppmV

SAMPLING DATE : 10/04/2012
RECEIVING DATE : 10/04/2012
ANALYSIS DATE : 10/04/2012
REPORT DATE : 10/05/2012

Total Reduced Sulfur Compounds Analysis by ASTM D-5504

Client ID	Sales Gas
AAC ID	120935-58799
Analyte	Result
Hydrogen Sulfide	7.35 ppmv
Carbonyl Sulfide	< 0.050 ppmv
Sulfur Dioxide	< 0.050 ppmv
Methyl Mercaptan	< 0.050 ppmv
Ethyl Mercaptan	< 0.050 ppmv
Dimethyl Sulfide	< 0.050 ppmv
Carbon Disulfide	< 0.050 ppmv
Isopropyl Mercaptan	< 0.050 ppmv
tert-Butyl Mercaptan	< 0.050 ppmv
n-Propyl Mercaptan	< 0.050 ppmv
Methylethylsulfide	< 0.050 ppmv
sec-Butyl Mercaptan	< 0.050 ppmv
Thiophene	0.076 ppmv
iso-Butyl Mercaptan	< 0.050 ppmv
Diethyl Sulfide	< 0.050 ppmv
n-Butyl Mercaptan	< 0.050 ppmv
Dimethyl Disulfide	< 0.050 ppmv
2-Methylthiophene	< 0.050 ppmv
3-Methylthiophene	< 0.050 ppmv
Tetrahydrothiophene	< 0.050 ppmv
Bromothiophene	< 0.050 ppmv
Thiophenol	< 0.050 ppmv
Diethyl disulfide	0.215 ppmv
Total Unidentified Sulfur	1.40 ppmv
Total Reduced Sulfurs as H_2S	9.04 ppmv

All compound's concentrations expressed in terms of H_2S (TRS does not include COS and SO_2)
Sample Reporting Limit (SRL) is equal to Reporting Limit x Canister Dil. Fac. x Analysis Dil. Fac.

Marcus Hueppe
Laboratory Director

1534 Eastman Ave., Ste. A • Ventura, • CA 93003 www.aaclab.com • (805) 650-1642 • FAX (805) 650-1644

Atmospheric Analysis & Consulting, Inc.

Quality Control/Quality Assurance Report

Date Analyzed : 10/04/2012
Analyst : DH
Units : %

Instrument ID : TCD#1
Calib Date : 04/13/2012
Reporting Limit : 0.1%

I - Opening Continuing Calibration Verification - ASTM1945/1946

AAC ID	Analyte	H_2	O_2	N_2	CO_2	CH_4	CO
CCV	Spike Conc	10.3	5.2	14.4	10.3	9.9	10.3
	Result	10.5	5.0	15.9	10.9	10.2	10.7
	% Rec *	102.6	97.4	110.0	105.9	102.9	103.1

II - Method Blank - ASTM1945/1946

AAC ID	Analyte	H_2	O_2	N_2	CO_2	CH_4	CO
MB	Concentration	ND	ND	ND	ND	ND	ND

III-Laboratory Control Spike & Duplicate - ASTM1945/1946

AAC ID	Analyte	H_2	N_2	CO_2	CH_4	CO	O_2
Lab Control Standards	Sample Conc	0.0	0.0	0.0	0.0	0.0	0.0
	Spike Conc	10.3	14.4	10.3	9.9	10.3	5.2
	LCS Result	11.0	14.8	10.2	9.4	9.9	4.7
	LCSD Result	11.0	14.9	10.3	9.5	10.0	4.7
	LCS % Rec *	107.0	102.6	99.3	94.9	95.3	89.9
	LCSD % Rec *	107.0	103.4	100.8	96.0	96.3	90.2
	% RPD ***	0.0	0.8	1.5	1.1	1.0	0.4

IV-Sample & Sample Duplicate - ASTM1945/1946

AAC ID	Analyte	H_2	O_2	N_2	CO_2	CH_4	CO
120935-58799	Sample	0.0	1.0	3.7	2.1	87.7	0.0
	Sample Dup	0.0	0.9	3.7	2.1	86.3	0.0
	Mean	0.0	0.9	3.7	2.1	87.0	0.0
	% RPD ***	0.0	3.5	0.9	3.3	1.6	0.0

V-Matrix Spike & Duplicate - ASTM1945/1946

AAC ID	Analyte	H_2	N_2	CO_2	CH_4	CO
Lab Air	Sample Conc	0.0	40.0	0.0	0.0	0.0
	Spike Conc	10.3	9.2	10.3	9.9	10.3
	MS Result	11.0	47.2	10.0	9.3	9.6
	MSD Result	10.8	46.9	9.8	9.1	9.5
	MS % Rec **	106.7	78.3	97.4	93.4	93.2
	MSD % Rec **	105.0	75.5	95.9	91.8	92.2
	% RPD ***	1.6	3.6	1.6	1.7	1.1

VI - Closing Continuing Calibration Verification - ASTM1945/1946

AAC ID	Analyte	H_2	O_2	N_2	CO_2	CH_4	CO
CCV	Spike Conc	10.3	5.2	14.4	10.3	9.9	10.3
	Result	9.9	4.6	14.3	9.9	9.1	9.5
	% Rec *	96.0	88.6	99.0	96.6	91.9	91.4

** Must be 85-115%*
*** Must be 75-125%*
**** Must be < 25%*
ND = Not Detected
<RL = less than Reporting Limit

Marcus Hueppe
Laboratory Director

1534 Eastman Ave., Ste. A • Ventura, • CA 93003 www.aaclab.com • (805) 650-1642 • FAX (805) 650-1644

Atmospheric Analysis & Consulting, Inc.

Quality Control/Quality Assurance Report

Date Analyzed : 10/04/2012
Analyst : DH
Units : ppmv

Instrument ID : FID #3
Calb Date : 07/11/11
Reporting Limit : 0.5 ppmv

I - Opening Continuing Calibration Verification - ASTM1945/1946

AAC ID	Analyte	Methane	Ethane	Propane	Butane	Pentane	Hexane
CCV	Spike Conc	104.9	99.6	97.8	95.5	95.0	95.6
	Result	102.9	97.7	96.7	94.5	93.9	100.1
	% Rec *	98.0	98.2	98.9	98.9	98.9	104.6

II - Method Blank-ASTM1945/1946

AAC ID	Analyte	Methane	Ethane	Propane	Butane	Pentane	Hexane
MB	Concentration	ND	ND	ND	ND	ND	ND

III-Laboratory Control Spike & Duplicate - ASTM1945/1946

AAC ID	Analyte	Methane	Ethane	Propane	Butane	Pentane	Hexane
Lab Control Standards	Sample Conc	0.0	0.0	0.0	0.0	0.0	0.0
	Spike Conc	104.9	99.6	97.8	95.5	95.0	95.6
	LCS Result	103.5	97.3	96.2	94.0	93.5	99.0
	LCSD Result	105.0	100.8	99.5	97.2	96.6	102.0
	LCS % Rec *	98.6	97.8	98.4	98.4	98.5	103.5
	LCSD % Rec *	100.0	101.2	101.7	101.8	101.7	106.7
	% RPD ***	1.4	3.5	3.3	3.4	3.2	3.0

IV-Sample & Sample Duplicate - ASTM1945/1946

AAC ID	Analyte	Methane	Ethane	Propane	Butane	Pentane	Hexane
120935-58799 x100	Sample	NA	21893.8	28380.5	14907.4	4839.4	1391.4
	Sample Dup	NA	21751.6	28743.2	15283.6	4928.0	1414.6
	Mean	NA	21822.7	28561.8	15095.5	4883.7	1403.0
	% RPD ***	NA	0.7	1.3	2.5	1.8	1.7

V-Matrix Spike & Duplicate- ASTM1945/1946

AAC ID	Analyte	Methane	Ethane	Propane	Butane	Pentane	Hexane
Lab Air	Sample Conc	0.0	0.0	0.0	0.0	0.0	0.0
	Spike Conc	52.5	49.8	48.9	47.8	47.5	47.8
	MS Result	53.8	50.5	50.0	48.8	48.6	51.4
	MSD Result	53.8	51.0	50.3	49.3	49.1	52.4
	MS % Rec **	102.6	101.5	102.2	102.1	102.4	107.5
	MSD % Rec **	102.6	102.4	102.8	103.2	103.4	109.5
	% RPD ***	0.0	0.9	0.6	1.1	1.0	1.8

VI - Closing Continuing Calibration Verification - ASTM1945/1946

AAC ID	Analyte	Methane	Ethane	Propane	Butane	Pentane	Hexane
CCV	Spike Conc	104.9	99.6	97.8	95.5	95.0	95.6
	Result	105.9	99.8	100.4	99.1	100.1	108.5
	% Rec *	100.9	100.2	102.7	103.8	105.5	113.5

** Must be 85-115%*
*** Must be 75-125%*
**** Must be < 25%*
ND = Not Detected
<RL = less than Reporting Limit

Marcus Hueppe
Laboratory Director

1534 Eastman Ave., Ste. A • Ventura, • CA 93003 www.aaclab.com • (805) 650-1642 • FAX (805) 650-1644

Atmospheric Analysis & Consulting, Inc.

Quality Control/Quality Assurance Report
SCAQMD 307.91

Date Analyzed: 10/04/12
Analyst: MH

Instrument ID: SCD#10
Calb. Date: 9/17/2012

Opening Calibration Verification Standard

	Resp. (area)	Result (ppbV)	% Rec *	% RPD ****
Initial	2715	246.4	98.6	NA
Duplicate	2724	247.2	98.9	0.3
Triplicate	2697	244.8	97.9	0.7

Method Blank

Analyte	Result
H2S	ND

Matrix Spike & Duplicate Sample ID 120925-58757 x500

Analyte	Sample Conc.	Spike Added	MS Result	MSD Result	MS % Rec **	MSD % Rec **	% RPD ***
H2S	245.7	250.0	464.1	472.7	93.6	95.4	1.8

Duplicate Analysis Sample ID 120925-58757

Analyte	Sample Result	Duplicate Result	Mean	% RPD ***
H2S	127285	118391	122838	7.2

Closing Calibration Verification Standard

Analyte	Std. Conc.	Result	%Recovery **
H2S	250.0	250.3	100.1

** Must be 95-105%*

*** Must be 90-110%*

**** Must be < 10%*

***** must be < 5% RPD from Initial result.*

Marcus Hueppe
Laboratory Director

1534 Eastman Ave., Ste. A • Ventura, • CA 93003 www.aaclab.com • (805) 650-1642 • FAX (805) 650-1644

AAC#120935

Atmospheric Analysis & Consulting, Inc
1534 Eastman Avenue Suite A
Ventura, CA 93003
(805) 650-1642 Fax- (805) 650-1644
CHAIN OF CUSTODY RECORD

REPORT:
Fax (805) 535-2075
Company DCOR,LLC.
Address 290 Maple Court. Suite 290
Ventura CA. 93003
Phone: 805 535-2078 Contact: Jay Rao

BILL TO: Christine White
P.O. #
Company: DCOR,LLC.
Address
jrao@dcorllc.com

PROJ. NO.
PROJECT NAME: Esther Sales Gas - Monthly & Quarterly
SAMPLER'S SIGNATURE: [signature]
Print Name: Nick Holmes

CONTAINER TYPES: C-Cylinder, T-Tedlar Bag

Sample NO.	Date Sampled	Time Sampled	Comp	Grab	Sample Description	Water	Soil	Sludge	Gas	Container #	Container Type	Analysis	SCAQMD 307.91 (Monthly)	BTU(Quarterly)						Remarks
58799 1	9/4	0415		X	Sales Gas				X	1	T		X	X						Send report to Jay Rao

Note: One sample is enough for both SCAQMD and BTU tests.

CHECK ONE BOX
Dispose samples
Return samples

Relinquished by :(Signnature)	Date/ time	Received by :(Signature)	Date / time	Relinquished by :(Signature)	Date / Time	Received by :(Signature)
N. Holmes	9/4 0430					
Print Name: [signature]		Print Name:		Print Name:		Print Name:
Relinquished by :(Signature)	Date/ time	Received by :(Signature)	Date/ time	Relinquished by :(Signature)	Date / Time	Received by :(Signature) [signature]
Print Name:		Print Name:		Print Name:	10/4/12 1150	Print Name: John Zachman

48Hr		Standard	X	Other(Specify)
72Hr		24		

FLARE INDUSTRIES'

Fully Enclosed Flare (FEF)- 90

With temperature control

The clear choice for your enclosed combustion requirements

Design Features:

- Controlled combustion environment
- Natural draft or forced designs
- Temperature controlled
- Multiple burners for staging
- No visible flame
- Low noise
- High turndown ratio
- Smokeless operation
- Fully automated controls
- High destruction efficiency
- Low NOx emissions
- Low CO emissions
- Skid mounted option
- Modular construction
- Multi-fuel pilot

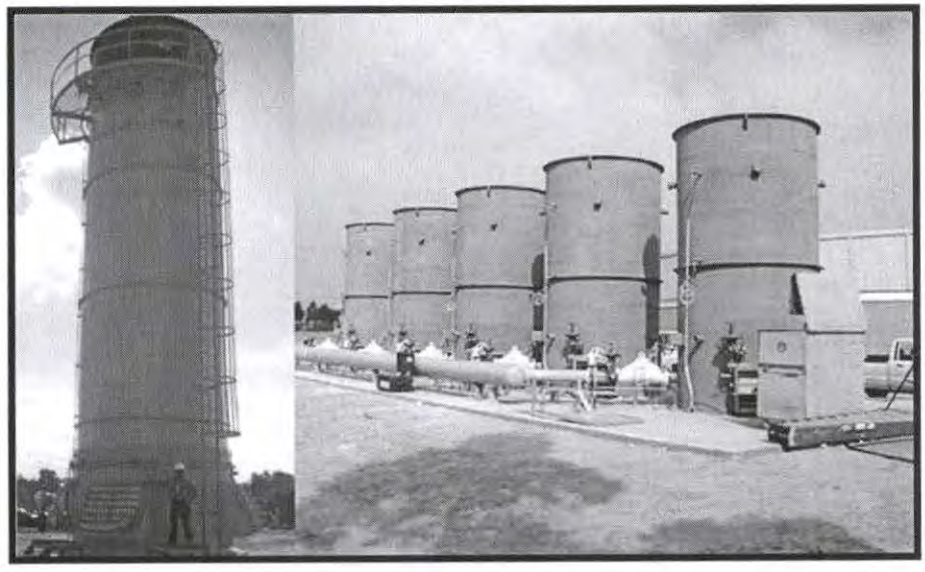

The fully enclosed flare (FEF) is a completely enclosed flare system in which combustion occurs inside an insulated flare stack, in a controlled environment. Enclosed combustion ensures that combustion radiation, noise and flame presence are imperceptible to the outside observer. The FEF consists of the following components:

Burner and Pilot – The FEF burner is the most advanced burner available in the industry today. Designed for high destruction efficiency and low emissions, this burner allows for efficient combustion in natural draft configuration. The NOx and CO emission rates meet or beat most regulatory agency requirements (i.e. SCAQMD). And our compact, fuel efficient electronic pilot provides trouble free, reliable ignition.

Enclosed stack – The flare stack , the body of the enclosed system, is built in modules to simplify shipment and installation efforts. Sizing is based on flow rate and ensures a minimum of 0.6 seconds residence time. Several inches of high temperature refractory line the inside walls of the stack to ensure radiation insulation.

Combustion air system – FEF systems are available in either natural or forced draft configurations. In the natural draft configuration, the simpler and more cost-effective option, air is controlled using opposed blade air louvers, which actuate as required to maintain combustion chamber temperature. The forced draft configuration utilizes a blower assembly to provide the necessary air. Forced draft systems are recommended in environments where high winds would cause reverse flow in a natural draft system, thereby extinguishing the flame.

Control panel – FEF controls enclosures are available in either NEMA 4X or NEMA 7 models. Safety systems, remote start/stop and alarm contacts are standard items in this fully automated control system.

SALES@FLAREINDUSTRIES.COM
WWW.FLAREINDUSTRIES.COM

FLARE INDUSTRIES'

Fully Enclosed Flare (FEF)- 90

The clear choice for your enclosed combustion requirements

Materials

Burner material:	Stainless steel
Pilot material:	Stainless steel
Stack material:	Carbon steel

Specifications

Diameter of stack:	90"
Maximum firing rate:	51 MMBTU/hr.
Process connection:	150 lbs. ANSI Flange
Turndown:	8:1 (higher available)
Operating temperature:	1400-1700°F
NOx emissions:	≤ 0.06 lbs./MMBTU
CO emissions:	≤ 0.37 lbs./MMBTU
Visible Emissions:	None
Destruction Efficiency:	≥ 98%
Combustion efficiency:	≥ 98%

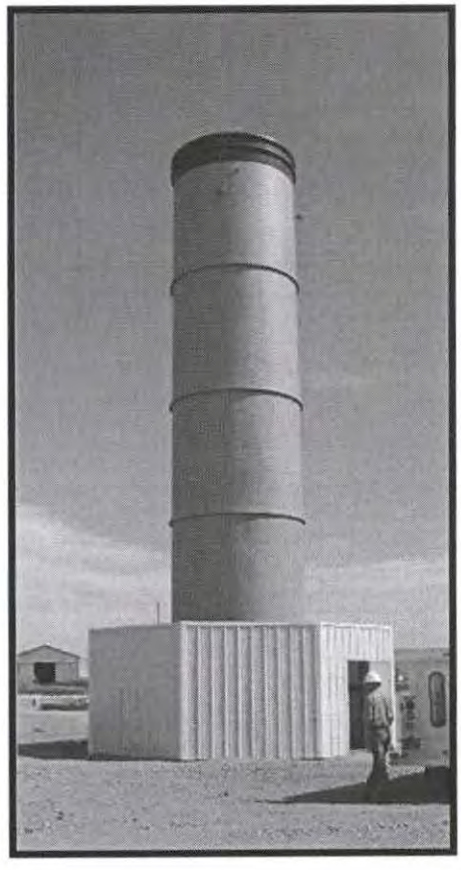

The FEF-90 is a product of:

FLARE INDUTRIES, LLC

16310 Bratton Lane
BLDG 3, Suite 350
Austin, Texas 78728
USA

T: +1 (512) 836-9473

F: +1 (512) 836-3025

SALES@FLAREINDUSTRIES.COM
WWW.FLAREINDUSTRIES.COM

Nabil Gobrial

From: Mike Shaffer [shafferenv@pacbell.net]
Sent: Monday, August 11, 2014 11:56 PM
To: Nabil Gobrial
Cc: White, Christine
Subject: Re: DCOR Platform Esther (143740) Flare Project
Attachments: FEF-90 data sheet (revised) - DCOR.pdf; Esther 431.1 analysis & BTU-Oct.pdf; Esther 431.1 analysis-May 2014.pdf; DCOR CEB-800CA Flare Emissions-R1.xlsx; DCOR FEF-90 Flare Emissions-R2.xlsx; DCOR CEB-350 Flare Emissions-R1.xlsx

Bill,

Below are responses to 7 of the 8 questions you identified during our phone conversation on Wednesday, August 8. Hopefully I can complete the response for your remaining question tomorrow (#3 below).

1. The standby flare that DCOR is proposing to install (A/N 561640) is a Flare Industries FEF-90 (90 inch stack diameter), not a FEF-102 as initially presented in the permit application. Please refer to the 2nd paragraph in the April 8 e-mail below for a discussion on this subject. An updated FEF-90 product sheet is attached.

Please reference the attached revised FEF-90 product sheet for the manufacturer's <0.06 lb/MMBTU NOx guarantee.

3. A spreadsheet is being prepared to identify the facility's PTE and address compiance with NSR in terms of offsetting.

4. The gas to be combusted in all 3 flares is the same (i.e., comes from the same source....produced gas from the platform's crude oil extraction operations). The gas is currently sent via pipeline onshore for further processing at Breitburn's gas plant in Seal Beach, with a fraction used as fuel gas in the platform's two (2) 250KW microturbines (D31 & D33). The raw gas is separated from oil/water emulsion and dehydrated on the platform (A/N 441320) prior to going in the pipeline or to the microturbines. 3/0 # ?

5. The FEF-90 flare will only be used during emergencies and process upsets (i.e., power outages or when CEB 800-CA or CEB-350 units are offline for maintenance/testing). The operation of the FEF-90 flare qualifies as a "gas flare" under the RECLAIM Rule 2012 (k) exemption. Please reference the equivalent 200 hour throughput limit being requested for this unit and noted on Pages 3, 6 and 8 of the support document (similar to other permitted standby flares).

6. 30 ppm H2S was conservatively selected for the SOx calculations (in lieu of prior applications that used 10 ppm when H2S levels were negligible) since Platform Esther's produced gas has been tested multiple times and found to be slightly elevated (5-20 ppm). Attached is the gas analysis (BTU & H2S) utilized in the calculations, and a more recent H2S sample analyzed for total sulfur using SCAQMD Method 307-91 in compliance with Rule 431.

7. As mentioned in our conversation, a molar volume (Mv) of 379 dscf/lb-mole is used for all pollutants except NOx since standard temperature is 60F for all non-RECLAIM pollutants. Mv = 385.4 dscf/lb-mole for NOx since the facility is in the NOx RECLAIM program which uses a standard temperature of 68F. The attached spreadsheets have been amended to reflect this Mv issue and to correct the 7000 grains/lb conversion error in the PM calculations.

8. The fugitive emission factors used in the calculations are from CAPCOA, but they are also identified in Method 3 of SCAQMD's AER *Guidelines for Fugitive Emissions Calculations – Petroleum Industry, June 2003.* I will scan a copy of the applicable pages from this document and forward to you tomorrow.

Mike Shaffer
Shaffer Environmental Consulting
80 N. Crocker Avenue
Ventura, CA 93004-3845
(805) 659-1744 office
(805) 207-1945 cell
(805) 435-1634 fax
shafferenv@pacbell.net

----- Original Message -----
From: Mike Shaffer
To: Nabil Gobrial - SCAQMD
Cc: Christine White - DCOR
Sent: Tuesday, April 08, 2014 11:38 AM
Subject: DCOR Platform Esther (143740) Flare Project

Bill,

Sorry I was a bit confused with your questions when you called this morning....you caught me in the middle of a project with a tight deadline (online GHG reporting...due Thursday). Please send any questions and/or infiormation requests you have regarding this project to me (and/or Christine White) via e-mail in lieu of a USPS letter. It's much quicker and less formal, and anyway, the District is already beyond the 30-day period to officially request additional information so the application has been deemed complete by default. Regardless, DCOR and SEC (Shaffer Environmental Consulting) are committed to working with you (District) to get these applications processed in a timely manner.

The project is described on Page 2-3 of the letter accompanying the applications....and please refer to the P&ID in the attachments. There will be one (1) CEB 800-CA, one (1) CEB 350, and one (1) FEF-90. As I mentioned on the phone, the initial application identified a FEF-102 (102-inch diameter enclosure), but a slight redesign has been performed for sizing the unit on the platform, so it's now a FEF-90 (90-inch diameter). The unit is identical (51 MMBTU/hr max. rating) except for the model number and enclosure dimensions (12-inch smaller diameter & 45 feet tall (not 35'-5")). A new product sheet is attached.

Attached is the gas analysis for the natural/produced gas to be flared that is referenced in the documents. The emissions are calculated similar to the CEB 350 application you just processed for Bridgemark Corp., except theat the FEF-90 utilizes a 99.0% DRE for toxics as specified by the manufacturer (not the higher DRE% identified by testing of CEB units at Warren E&P). Attached are the 3 Excel spreadsheets to assist you with the review/processing. I also just noticed that you may need to see the old 1991 Unocal AB2588 HAP speciation analyses that most of the oil & gas industry uses to quantify HAPs/toxics that are emitted via fugitive leaks. Attached is a copy of those old results. The highest recorded value across the 8 fields is used for the calculations (conservative assumption).

Hopefully that answers your initial questions. Have a good day.

Mike Shaffer
Shaffer Environmental Consulting
80 N. Crocker Avenue
Ventura, CA 93004-3845
(805) 659-1744 office
(805) 207-1945 cell
(805) 435-1634 fax
shafferenv@pacbell.net

Nabil Gobrial

From: Herzog, Cynthia@SLC [Cynthia.Herzog@slc.ca.gov]
Sent: Wednesday, August 20, 2014 11:34 AM
To: Nabil Gobrial
Subject: RE: DCOR Esther, Facility #143740

Bill - Actually, I'm assuming that the District will prepare a "Notice of Exemption (NOE)", and that one-page document will tell me what I need to know. If we could get a copy of the NOE, that would be great. I know this is a time-sensitive project and don't want to hold it up any longer than needed.

Thank you!
Cyndi

Cynthia Herzog
Senior Environmental Scientist

California State Lands Commission
Environmental Planning & Management
100 Howe Ave., Suite 100-South
Sacramento, CA 95825-8202
Cynthia.Herzog@slc.ca.gov
(916) 574-1310 work
(916) 574-1885 fax

PRIVILEGE AND CONFIDENTIALITY NOTICE

This message and its contents, together with any attachments, are intended only for the use of the individual to whom or entity to which it is addressed and may contain information that is legally privileged, confidential, and exempt from disclosure under applicable law. If you are not the intended recipient of this message, you are hereby notified that any dissemination, distribution, or copying of this communication and any attachments or other use of a transmission received in error is strictly prohibited. If you have received this transmission in error, please notify me immediately at the above telephone number or return email and delete this message, along with any attachments from your computer. Thank you.

From: Herzog, Cynthia@SLC
Sent: Tuesday, August 19, 2014 8:29 AM
To: 'Nabil Gobrial'
Subject: RE: DCOR Esther, Facility #143740

Yes, I understand that it is exempt, but there are a number of exemptions that can be used. Do you have a special department/person that routinely handles this part of your application process?

From: Nabil Gobrial [mailto:NGobrial@aqmd.gov]
Sent: Tuesday, August 19, 2014 8:25 AM
To: Herzog, Cynthia@SLC
Subject: RE: DCOR Esther, Facility #143740

Good Morning Ms. Herzog,

In response to your e-mail below, the District is using Form 400-CEQA as a screening tool to determine whether or not the project might require preparation of CEQA document. According to Form, 400-CEQA submitted by DCOR LLC, Section B indicated that the application(s) submitted for the flaring system is exempt from further CEQA action and does not

Nabil Gobrial

From: Mike Shaffer [shafferenv@pacbell.net]
Sent: Thursday, August 21, 2014 1:41 PM
To: Nabil Gobrial
Cc: White, Christine
Subject: Re: DCOR Platform Esther (143740) Flare Project
Attachments: FEF-fully-enclose-flare.pdf

Bill,

Your keen eye caught a change that Flare Industries made on the new FEF-90 spec sheet. Attached is the original spec sheet that was submitted with the application when it was an FEF-102. It states 99.5% & >99% DRE and a lower CO emissions level, but we'll go with the more conservative values on the FEF-90 sheet. I went back and changed the calculation spreadsheet to reflect 98% and also modified the R1401HRA (it automatically changes). I'd also like to point out that I did perform a Tier 1 and Tier 2 HRA for the FEF-90. The Tier 2 was not required...just performed for informational purposes.

I'll call you in a few minutes.

like Shaffer
Shaffer Environmental Consulting
80 N. Crocker Avenue
Ventura, CA 93004-3845
(805) 659-1744 office
(805) 207-1945 cell
(805) 435-1634 fax
shafferenv@pacbell.net

----- Original Message -----
From: Mike Shaffer
To: Nabil Gobrial - SCAQMD
Cc: Christine White - DCOR
Sent: Thursday, August 14, 2014 11:08 PM
Subject: Re: DCOR Platform Esther (143740) Flare Project

Bill,

Attached is the PTE/offset spreadsheet I promised for DCOR's Platform Edith. Based on my calculations, it appears that 3 lbs/day of VOC offsets would be required in the current configuration. We can discuss further after you've had a chance to review.

Mike

---- Original Message -----
From: Mike Shaffer
To: Nabil Gobrial - SCAQMD
Cc: Christine White - DCOR
Sent: Wednesday, August 13, 2014 4:42 PM
Subject: Re: DCOR Platform Esther (143740) Flare Project

Bill,

Attached are the revised emission spreadsheets (FEF-90's fugitive hours lowered to 200 & project emission totals added to the 2nd page of the fugitives tab for each spreadsheet).

PRV = pressure relief valve (and sometimes also referred to as PSV (pressure safety valve).

Mike

----- Original Message -----
From: Mike Shaffer
To: Nabil Gobrial - SCAQMD
Cc: Christine White - DCOR
Sent: Monday, August 11, 2014 11:56 PM
Subject: Re: DCOR Platform Esther (143740) Flare Project

Bill,

Below are responses to 7 of the 8 questions you identified during our phone conversation on Wednesday, August 8. Hopefully I can complete the response for your remaining question tomorrow (#3 below).

1. The standby flare that DCOR is proposing to install (A/N 561640) is a Flare Industries FEF-90 (90 inch stack diameter), not a FEF-102 as initially presented in the permit application. Please refer to the 2nd paragraph in the April 8 e-mail below for a discussion on this subject. An updated FEF-90 product sheet is attached.

2. Please reference the attached revised FEF-90 product sheet for the manufacturer's <0.06 lb/MMBTU NOx guarantee.

3. A spreadsheet is being prepared to identify the facility's PTE and address compiance with NSR in terms of offsetting.

4. The gas to be combusted in all 3 flares is the same (i.e., comes from the same source....produced gas from the platform's crude oil extraction operations). The gas is currently sent via pipeline onshore for further processing at Breitburn's gas plant in Seal Beach, with a fraction used as fuel gas in the platform's two (2) 250KW microturbines (D31 & D33). The raw gas is separated from oil/water emulsion and dehydrated on the platform (A/N 441320) prior to going in the pipeline or to the microturbines.

5. The FEF-90 flare will only be used during emergencies and process upsets (i.e., power outages or when CEB 800-CA or CEB-350 units are offline for maintenance/testing). The operation of the FEF-90 flare qualifies as a "gas flare" under the RECLAIM Rule 2012 (k) exemption. Please reference the equivalent 200 hour throughput limit being requested for this unit and noted on Pages 3, 6 and 8 of the support document (similar to other permitted standby flares).

6. 30 ppm H2S was conservatively selected for the SOx calculations (in lieu of prior applications that used 10 ppm when H2S levels were negligible) since Platform Esther's produced gas has been tested multiple times and found to be slightly elevated (5-20 ppm). Attached is the gas analysis (BTU & H2S) utilized in the calculations, and a more recent H2S sample analyzed for total sulfur using SCAQMD Method 307-91 in compliance with Rule 431.

7. As mentioned in our conversation, a molar volume (Mv) of 379 dscf/lb-mole is used for all pollutants except NOx since standard temperature is 60F for all non-RECLAIM pollutants. Mv = 385.4 dscf/lb-mole for NOx since the facility is in the NOx RECLAIM program which uses a standard temperature of 68F. The attached spreadsheets have been amended to reflect this Mv issue and to correct the 7000 grains/lb conversion error in the PM calculations.

8. The fugitive emission factors used in the calculations are from CAPCOA, but they are also identified in Method 3 of SCAQMD's AER *Guidelines for Fugitive Emissions Calculations – Petroleum Industry, June 2003.* I will scan a copy of the applicable pages from this document and forward to you tomorrow.

Mike Shaffer
Shaffer Environmental Consulting
80 N. Crocker Avenue
Ventura, CA 93004-3845
(805) 659-1744 office
(805) 207-1945 cell
(805) 435-1634 fax
shafferenv@pacbell.net

----- Original Message -----
From: Mike Shaffer
To: Nabil Gobrial - SCAQMD
Cc: Christine White - DCOR
Sent: Tuesday, April 08, 2014 11:38 AM
Subject: DCOR Platform Esther (143740) Flare Project

Bill,

Sorry I was a bit confused with your questions when you called this morning....you caught me in the middle of a project with a tight deadline (online GHG reporting...due Thursday). Please send any questions and/or infiormation requests you have regarding this project to me (and/or Christine White) via e-mail in lieu of a USPS letter. It's much quicker and less formal, and anyway, the District is already beyond the 30-day period to officially request additional information so the application has been deemed complete by default. Regardless, DCOR and SEC (Shaffer Environmental Consulting) are committed to working with you (District) to get these applications processed in a timely manner.

The project is described on Page 2-3 of the letter accompanying the applications....and please refer to the P&ID in the attachments. There will be one (1) CEB 800-CA, one (1) CEB 350, and one (1) FEF-90. As I mentioned on the phone, the initial application identified a FEF-102 (102-inch diameter enclosure), but a slight redesign has been performed for sizing the unit on the platform, so it's now a FEF-90 (90-inch diameter). The unit is identical (51 MMBTU/hr max. rating) except for the model number and enclosure dimensions (12-inch smaller diameter & 45 feet tall (not 35'-5")). A new product sheet is attached.

Attached is the gas analysis for the natural/produced gas to be flared that is referenced in the documents. The emissions are calculated similar to the CEB 350 application you just processed for Bridgemark Corp., except theat the FEF-90 utilizes a 99.0% DRE for toxics as specified by the manufacturer (not the higher DRE% identified by testing of CEB units at Warren E&P). Attached are the 3 Excel spreadsheets to assist you with the review/processing. I also just noticed that you may need to see the old 1991 Unocal AB2588 HAP speciation analyses that most of the oil & gas industry uses to quantify HAPs/toxics that are emitted via fugitive leaks. Attached is a copy of those old results. The highest recorded value across the 8 fields is used for the calculations (conservative assumption).

Hopefully that answers your initial questions. Have a good day.

Mike Shaffer
Shaffer Environmental Consulting
80 N. Crocker Avenue
Ventura, CA 93004-3845
(805) 659-1744 office
(805) 207-1945 cell
(805) 435-1634 fax
shafferenv@pacbell.net

FLARE INDUSTRIES
INNOVATIVE COMBUSTION SOLUTIONS

FULLY ENCLOSED FLARE

DESIGN FEATURES	BENEFIT
Controlled combustion environment	Increased destruction efficiency
Natural draft design	Low operating costs
No visible flame	"Good neighbor" policy
Low noise	"Good neighbor" policy
8 to 1 turndown ration	Good performance under varying operating conditions
Smokeless operation	Meets U.S. and international requirements
Fully automated controls	Reduced personnel requirements
High destruction efficiency	99.5% meets U.S. and international emissions standards
Low NOX emissions	< 0.06 lb/MMbtu (0.11 kg/MMkcal)
Low CO emissions	< 0.11 lb/MMbtu (0.2 kg/MMkcal)
Skid mounted option	Reduced installation costs
Modular construction	Reduced installation costs
Multi-fuel pilot	Operates on propane, natural gas or bio-gas

BURNER MATERIAL:	Stainless Steel
PILOT MATERIAL:	Stainless Steel
STACK MATERIAL:	Carbon Steel
PROCESS CONNECTION:	150# ANSI Flange
TURN DOWN RATIO:	8:1 (Higher Turndown Optional)
OPERATING TEMPERATURE:	1500°F
NOX EMISSIONS:	< 0.025 #'s/MMBTU's/Hr
CO EMISSIONS:	< 0.06 #'s/MMBTU's/Hr
VISIBLE EMISSIONS:	None
DESTRUCTION EFFICIENCY:	> 99.0%
COMBUSTION EFFICIENCY:	> 99.0%

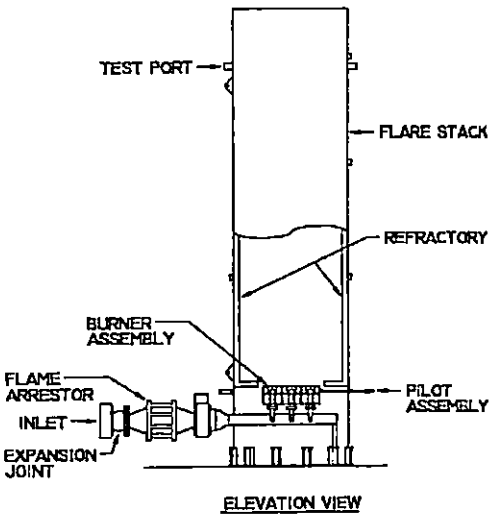

ELEVATION VIEW

SPECIFICATIONS:

MODEL	INLET SIZE IN	(MM)	MAX HEAT RELEASE MMBTU/HR	(MMKCAL/HR	FLOW RATE SCFM	(M^3/HR)	TURN DOWN RATIO	RETENTION TIME SEC. (MIN)
FEF-2	3	(76)	2.5	(0.63)	75	(127)	8 : 1	0.6
FEF-5	4	(101)	5.0	(1.26)	160	(272)	8 : 1	0.6
FEF-10	6	(152)	10.0	(2.52)	320	(543)	8 : 1	0.6
FEF-18	8	(203)	18.0	(4.54)	650	(1,104)	8 : 1	0.6
FEF-21	10	(254)	21.0	(5.3)	1,000	(1,698)	8 : 1	0.6
FEF-58	12	(305)	58.0	(14.6)	2,000	(3,396)	8 : 1	0.6
FEF-110	14	(355)	110.0	(27.7)	4,500	(7,641)	8 : 1	0.6
FEF-175	16	(406)	175.0	(44.1)	6,000	(10,200)	8 : 1	0.6

FLARE INDUSTRIES, INC. TEL: 512-836-9473 FAX: 512-836-3025 WWW.FLAREINDUSTRIES.COM

FLARE INDUSTRIES
INNOVATIVE COMBUSTION SOLUTIONS

Fully Enclosed Flare

General description

The Fully Enclosed Flare (FEF) is a completely enclosed flare system in which combustion occurs inside an insulated flare stack and in a controlled environment. Enclosed combustion ensures that all radiation, light, flame, and noise are imperceptible in sensitive areas. The FEF consists of the following components: flare burner, enclosed stack, combustion air system, control panel, and other optional items.

Burner and Pilot — The FEF Burner is the most advanced burner available in the industry today. Its design allows for high destruction efficiency and low emissions. The NOX and CO emission rates meet or exceed the requirements of most regulatory agencies (i.e., SCAQMD). This design allows for efficient combustion in either forced draft or natural draft configurations. Our compact, fuel efficient electronic pilot provides trouble-free, reliable ignition.

Enclosed Stack — The enclosed stack is built in modules to allow for ease of shipment and installation. It is insulated with 2" to 3" of high temperature refractory. The stack size is based on flow rate to ensure a minimum of 0.6 seconds residence time for reduced emissions.

Combustion Air System — The FEF can be designed to operate as either a natural draft or forced draft system. The natural draft system has the lowest operating costs and simplest design. In the natural draft system the air is controlled using a set of opposed blade air louvers that open or close as required to maintain a constant combustion chamber temperature. The forced draft system utilizes a blower assembly to provide the necessary air. This system is ideal where high winds may cause a reverse flow in a natural draft system, thereby extinguishing the flame.

Control Panel — The FEF control panel can be supplied in either a NEMA 4X or NEMA 7 enclosure. Temperature controls, safety systems, remote start / stop, and alarm contacts are standard items. A completely automated system is the design basis for our controls system.



Enclosed
Landfill Flares



Enclosed
Bio-Gas Flares

Flare Industries, Inc. sales@flareindustries.com www.flareindustries.com

Cutting edge combustion and environmental technology, experience, innovation and superior service.

Nabil Gobrial

From: Nabil Gobrial
Sent: Tuesday, February 17, 2015 2:53 PM
To: Barbara Radlein
Cc: Gary Turner
Subject: Comments on the Administrative Draft Mitigated Negative Declaratio

DCOR LLC, ID 143740
Three Flares Project

Recently DCOR modified their original permit applications submitted early 2014 (A/N's 561638, 39, and 561640) for Esther platform Flare Project to accept a 600 thousand cubic foot per day (600 MCFD) throughput limit for all 3 flares, which equates to 219x10^6 cubic foot per year based on 365 day per year (219 MMCF/year).

As a result of this change, conditions will be imposed on the permits to limit the throughput and also, to limit the operating hours for the emergency flare to 200 hours per year.

The emissions of the criteria pollutant originally were based on the maximum throughput for each flare and now after DCOR requesting the 600 MCFD limit, the emissions were re-calculated and the company secured the required ERC for the VOC emissions and the required RTC for the NOx emissions.

On page, 2-17 of the Administrative Drat Mitigated Negative Declaration submitted on behalf of DCOR, the consultant miss calculated the capability of handling production rate for the CEB-350 and the calculated capacity should be 30 to 250 MCFD and 100 to ≈ 825 MCFD for the CEB-800. These were calculated based on the Heating value for the gas of 1138 btu/cf. The emission offset will be determined based on a monthly basis.

375

If a daily limit of 600 MCFD is used, the emergency Stand-by flair will be limited to 5.0 MMCF/Year (based on 200 hours/year) not 8.9 MMCFY as it was mentioned on page 27.

Condition will be imposed to limit all three flares to 219 MMCF/year and a condition limiting the Stand by flare to 200 hours per year.

The 219 MMCF/yr will be used as a basis to calculate offsets and to limit the monthly throughput of the 2 CEB process flares. The two process flares will be limited to 18.25MMCF/Month.

Bill Gobrial, P.E.
A.Q. Engineer
SCAQMD
21865 Copley Drive,
Diamond Bar, CA 91765
(909) 396-2573

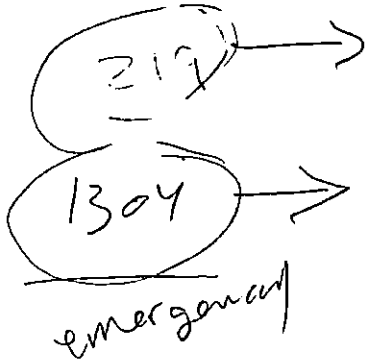

R
1303

CERTIFICATE OF PROOF
FOR REGISTERED EMISSION REDUCTION CREDIT

AQMD

The South Coast Air Quality Management District hereby registers this Emission Reduction Credit

Facility 143740
Certificate No. AQ013889
Application No. 568467

To: DCOR LLC

In the Amount of 4 Pounds/Day of Reactive Organic Gases

Type of Certificate: CHANGE OF TITLE

Date of Issue: 10/8/2014 Start Year: 0 End Year: 0

Sensitive Zone of Origin: 01 - COASTAL NSR Zone of Origin: 13

Previous Certificate No: AQ013888

Previous Owner, ID: GREY K FUND LP, ID 152647

Reduction Created At: 22116 W SOLEDAD CANYON RD
SAUGUS, CA 91350

Description of Reduction: Beginning Amount

Date Reduction Created: 12/17/1990

Original Certificate No.: AQ000039

Mohsen Nazemi, P.E.
Deputy Executive Officer
Engineering and Compliance

ORIGINAL
NOT NEGOTIABLE
Any use or transfer of ownership must be approved by the SCAQMD



DCOR, LLC
Platform Esther (143740)
GHG Emissions (PTE and Actual)

EXISTING (Baseline)

Device	Fuel	PTE (permitted) CO2e (tonnes/yr)	Actual (2013 AER) CO2e (tonnes/yr)
Microturbine #1-250KW (D31)	Nat/Prod Gas	1,434.20	545.87
Microturbine #2-250KW (D33)	Nat/Prod Gas	1,434.20	545.87
Emergency Fire Pump (460hp-D1)	Diesel	45.88	3.44
Gantry Crane (450hp-D35)	Diesel	1,018.35	37.35
Fugitive Components	Nat/Prod Gas	812.68	812.68
Emerg. Generator (49hp) - exempt	Diesel	5.02	0.49
Pre-project (tonnes/yr):*		**4,745.32**	**1,945.21**

* Metric tonnes (2000 kg = metric tonne)

PROPOSED PROJECT (Increase)

Device	Fuel	Actual (@ 450 MCFD) CO2e[1] (tonnes/yr)
CEB 350 Flare (continuous)[1]	Nat/Prod Gas	3,258.14
CEB 800-CA Flare (continuous)[1]	Nat/Prod Gas	6,508.91
FEF-90 Flare (emergency/standby)[1]	Nat/Prod Gas	0.11
		9,767.16

[1] includes fugitive component emissions

Proposed conditions (in lieu of 10K PTE limit):

X.X. Owner/operator shall calculate annual greenhouse gas emissions by April 10 of each completed calendar year. Calculations shall follow the applicable estimation methodologies presented in California's Global Warming Solutions Act (AB 32, 2006, Title 17, California Code of Regulations, Sections 95100-95158 (17 CCR 95100-95158). Emissions shall be presented in units of metric tonnes of CO2 equivalent and submitted to SCAQMD Engineering Division on or before April 10.

[Devices subject to this condition: C?? (CEB 350), C??? (CEB 800-CA), C???? (FEF-90)]

Y.Y. Owner/operator shall provide annual offsets to the District for GHG emissions exceeding 10,000 metric tonnes CO2e calculated pursuant to Condition X.X. Offsets shall be provided to the Executive Officer on or before November 1 of the calendar year following the year for which the devices resulted in an exceedance. Offsets may be obtained pursuant to Rule 2702 or other approved California compliance instruments (i.e., CCAs, CCOs, etc.).

[Devices subject to this condition: C?? (CEB 350), C??? (CEB 800-CA), C???? (FEF-90)]

DCOR, LLC

Platform Esther (143740)

Pre-Project and Post-Project Emissions (PTE @ 1075 MCFD)

800 822
300 253

EXISTING (Baseline)

Device	Fuel	Permitted Emissions/Potential to Emit (PTE) - Annual NOx (lbs/yr)	VOC (lbs/yr)	PM10 (lbs/yr)	SOx (lbs/yr)	CO (lbs/yr)
Microturbine #1-250KW (D31)	Nat/Prod Gas	1,095.00	1,971.00	193.00	158.00	13,140.00
Microturbine #2-250KW (D33)	Nat/Prod Gas	1,095.00	1,971.00	193.00	158.00	13,140.00
Emergency Fire Pump (460hp-D1)	Diesel	2,101.12	168.00	150.08	31.81	456.96
Gantry Crane (450hp-D35)	Diesel	10,079.59	722.24	345.25	706.02	2,420.69
Fugitive Components	Nat/Prod Gas		2,034.00			
Emerg. Generator (49hp) - exempt	Diesel	229.81	18.38	16.42	3.48	49.98

Actual Emissions (2013 reported) - Annual NOx (lbs/yr)	VOC (lbs/yr)	PM10 (lbs/yr)	SOx (lbs/yr)	CO (lbs/yr)
399.08	664.83	57.59	5.14	3,987.28
399.08	664.83	57.59	5.14	3,987.28
157.58	12.60	11.26	0.07	34.27
660.87	136.76	122.17	0.77	371.99
	2,149.04*			
22.53	1.80	1.61	0.01	4.90

*Actual reported fugitive components also include wellhead emissions

Pre-project, permitted (lbs/yr)*	**14,370.71**	**6,866.24**	**881.33**	**1,053.83**	**29,157.65**
Pre-project, permitted (tons/yr)*	**7.19**	**3.43**	**0.44**	**0.53**	**14.58**

1,616.61	**1,479.02**	**248.60**	**11.11**	**8,380.82**
0.81	**0.74**	**0.12**	**0.01**	**4.19**

* Does not include <50hp emergency generator that is exempt from permit (Rule 219)

PROPOSED PROJECT (Increase)

Device	Fuel	Permitted Emissions/Potential to Emit (PTE) - Annual NOx (lbs/yr)	VOC[1] (lbs/yr)	PM10 (lbs/yr)	SOx (lbs/yr)	CO (lbs/yr)
CEB 350 Flare (continuous)[1]	Nat/Prod Gas	1,923.70	491.91	193.00	158.00	788.40
CEB 800-CA Flare (continuous)[1]	Nat/Prod Gas	6,252.01	1,505.21	193.00	158.00	2,562.30
FEF-90 Flare (emergency/standby)	Nat/Prod Gas	612.00	63.34	193.00	158.00	3,774.00
[1] includes fugitive component emissions	*subtotal*	*8,787.71*	*2,060.47*	*579.00*	*474.00*	*7,124.70*

Actual Emissions (projected @ 450 MCFD[2]) - Annual NOx (lbs/yr)	VOC[1] (lbs/yr)	PM10 (lbs/yr)	SOx (lbs/yr)	CO (lbs/yr)
1,140.49	301.23	324.07	275.47	467.41
2,280.98	566.10	648.15	550.94	934.83
	0.51			
3,421.47	*867.85*	*972.22*	*826.41*	*1,402.24*

[1] includes fugitive component emissions

[2] 450 MCFD is split between 300 MCFD (CEB 800-CA) & 150 MCFD (CEB 350)

Post-project, permitted (lbs/yr)*	**23,158.42**	**8,926.71**	**1,460.33**	**1,527.83**	**36,282.35**
Post-project, permitted (tons/yr)*	**11.58**	**4.46**	**0.73**	**0.76**	**18.14**

5,038.08	**2,346.87**	**1,220.82**	**837.52**	**9,783.06**
2.52	**1.17**	**0.61**	**0.42**	**4.89**

* Does not include <50hp emergency generator that is exempt from permit (Rule 219)

NOx-lb/day	VOC-lb/day	PM2.5-lb/day	SOx-lb/day	CO-lb/day
24.08	5.65	1.59	1.30	19.52
55	55	150	150	550
		55		
43.8%	10.3%	2.9%	0.9%	3.5%

NOx-lb/day	VOC-lb/day	PM2.5-lb/day	SOx-lb/day	CO-lb/day
9.37	2.38	2.66	2.26	3.84
55	55	150	150	550
		55		
17.0%	4.3%	4.8%	1.5%	0.7%

DCOR, LLC
Platform Esther (143740)
Pre-Project and Post-Project Emissions (PTE limited to 725 MCFD)

EXISTING (Baseline)

		Permitted Emissions/Potential to Emit (PTE) - Annual				
Device	Fuel	NOx (lbs/yr)	VOC (lbs/yr)	PM10 (lbs/yr)	SOx (lbs/yr)	CO (lbs/yr)
Microturbine #1-250KW (D31)	Nat/Prod Gas	1,095.00	1,971.00	193.00	158.00	13,140.00
Microturbine #2-250KW (D33)	Nat/Prod Gas	1,095.00	1,971.00	193.00	158.00	13,140.00
Emergency Fire Pump (460hp-D1)	Diesel	2,101.12	168.00	150.08	31.81	456.96
Gantry Crane (450hp-D35)	Diesel	10,079.59	722.24	345.25	706.02	2,420.69
Fugitive Components	Nat/Prod Gas		2,034.00			
Emerg. Generator (49hp) - exempt	Diesel	229.81	18.38	16.42	3.48	49.98
Pre-project, permitted (lbs/yr)*		**14,370.71**	**6,866.24**	**881.33**	**1,053.83**	**29,157.65**
Pre-project, permitted (tons/yr)*		**7.19**	**3.43**	**0.44**	**0.53**	**14.58**

* Does not include <50hp emergency generator that is exempt from permit (Rule 219)

Actual Emissions (2013 reported) - Annual				
NOx (lbs/yr)	VOC (lbs/yr)	PM10 (lbs/yr)	SOx (lbs/yr)	CO (lbs/yr)
399.08	664.83	57.59	5.14	3,987.28
399.08	664.83	57.59	5.14	3,987.28
157.58	12.60	11.26	0.07	34.27
660.87	136.76	122.17	0.77	371.99
	2,149.04*			
22.53	1.80	1.61	0.01	4.90
1,616.61	**1,479.02**	**248.60**	**11.11**	**8,380.82**
0.81	**0.74**	**0.12**	**0.01**	**4.19**

*Actual reported fugitive components also include wellhead emissions

PROPOSED PROJECT (Increase)

		Permitted Emissions/Potential to Emit (PTE) - Annual				
Device	Fuel	NOx (lbs/yr)	VOC[1] (lbs/yr)	PM10 (lbs/yr)	SOx (lbs/yr)	CO (lbs/yr)
CEB 350 Flare (continuous)[1]	Nat/Prod Gas	1,297.38	344.75	193.00	158.00	531.71
CEB 800-CA Flare (continuous)[1]	Nat/Prod Gas	4,216.47	1,026.91	193.00	158.00	1,728.06
FEF-90 Flare (emergency/standby)	Nat/Prod Gas	412.74	42.92	193.00	158.00	2,545.26
[1] includes fugitive component emissions	***subtotal***	***5,926.59***	***1,414.58***	***579.00***	***474.00***	***4,805.03***
Post-project, permitted (lbs/yr)*		**20,297.30**	**8,280.82**	**1,460.33**	**1,527.83**	**33,962.68**
Post-project, permitted (tons/yr)*		**10.15**	**4.14**	**0.73**	**0.76**	**16.98**

* Does not include <50hp emergency generator that is exempt from permit (Rule 219)

Actual Emissions (projected @ 450 MCFD[2]) - Annual				
NOx (lbs/yr)	VOC[1] (lbs/yr)	PM10 (lbs/yr)	SOx (lbs/yr)	CO (lbs/yr)
1,140.49	301.23	324.07	275.47	467.41
2,280.98	566.10	648.15	550.94	934.83
	0.51			
3,421.47	***867.85***	***972.22***	***826.41***	***1,402.24***
5,038.08	**2,346.87**	**1,220.82**	**837.52**	**9,783.06**
2.52	**1.17**	**0.61**	**0.42**	**4.89**

[1] includes fugitive component emissions

[2] 450 MCFD is split between 300 MCFD (CEB 800-CA) & 150 MCFD (CEB 350)

NOx-lb/day	VOC-lb/day	PM2.5-lb/day	SOx-lb/day	CO-lb/day
16.24	3.88	1.59	1.30	13.16
55	55	150	150	550
		55		
29.5%	7.0%	2.9%	0.9%	2.4%

NOx-lb/day	VOC-lb/day	PM2.5-lb/day	SOx-lb/day	CO-lb/day
9.37	2.38	2.66	2.26	3.84
55	55	150	150	550
		55		
17.0%	4.3%	4.8%	1.5%	0.7%

Calif. Envi. Quality Act

DCOR, LLC / PLATFORM ESTHER FLARE PROJECT

130,000 / Micro

- Platform Esther is an Oil & Gas Production Facility located 1.5 miles offshore Seal Beach, CA.
- Constructed in 1990 and first production in 1991.
- Current Production; 750 BOPD and 400 MCFD
- Produced Gas is sent via pipeline to Breitburn JV in Seal Beach.
- Breitburn JV unwilling to extend the DCOR gas processing contract past May 30, 2015.
- No other viable gas sales outlet is available to DCOR.
- Facility does not currently have a flare which is highly unusual for an oil & gas production facility.
- Project consists of two (2) Ultra-low NOx Flares (CEB-350 and CEB-800-CA) and one (1) Emergency Stand-By Flare (FEF-90). 1050
- All units are BACT, fully enclosed, with no visible flame present.
- SCAQMD NOx RTCs and ROG ERCs have been purchased.
- No Health Risk Impacts.
- Units will be pre-fabricated and transported to platform on normally scheduled crew/supply vessel runs.
- Construction at facility consists of welding structural supports and electrical and gas piping hook-ups.
- SCAQMD Permit Applications submitted in February 2014.
- Excellent Facility Compliance Record!



Google earth

miles 3

km 4

Nabil Gobrial

From: Mike Shaffer [shafferenv@pacbell.net]
Sent: Tuesday, August 19, 2014 1:40 PM
To: Nabil Gobrial
Cc: White, Christine
Subject: Re: DCOR Platform Esther (143740) Flare Project
Attachments: Warren CEB500 source test results.pdf; 120899, 09-25-12 Murphy Turbine Fuel Gas TO15.pdf; Unocal AB2588 Fugitive TACs.pdf

Bill,

Sorry for the confusion regarding the Rule 1401/toxics calculations. Attached are 3 files in support of the calculations. As I mentioned on the phone, until additional source test data (for toxics) becomes available, the Warren test data and PXP/Freeport-McMoran TO-15 raw gas analysis will be utilized for the combustion toxics. Bridgemark (CEB 350) and Matrix Oil (CEB 800-CA) should be testing their CEB flares in the next 6 months, so addition support data/information will be available for future permit applications.

On the combustion calculation spreadsheet, please refer to the notes below the toxics table (copied below) for how the emissions were calculated.

Notes:

2. HAP/toxics mass emissions calculated as follows: lb/hr = (X ppmbv/10E-9)(max. gas flow, dscf/hr)(1 lb-mole/379 dscf)(MW,
3. HAP/toxics gas concentrations based on sample results from Warren & PXP-Murphy CEB Flare applications; highest value n

Now for the fugitive toxic emissions, Unocal's 1991 AB2588 test data has been used for many years to estimate the toxic pollutant concetrations from fugitive component leaks. Unocal tested 8 different fields during their test program and for our calculations we selected the highest average concentration out of the 8 in order to be conservative.

Please call me if you have any more questions.

Mike Shaffer
Shaffer Environmental Consulting
80 N. Crocker Avenue
Ventura, CA 93004-3845
(805) 659-1744 office
(805) 207-1945 cell
(805) 435-1634 fax
shafferenv@pacbell.net

----- Original Message -----
From: Mike Shaffer
To: Nabil Gobrial - SCAQMD
Cc: Christine White - DCOR
Sent: Thursday, August 14, 2014 11:08 PM
Subject: Re: DCOR Platform Esther (143740) Flare Project

Bill,

Attached is the PTE/offset spreadsheet I promised for DCOR's Platform Edith. Based on my calculations, it appears that 3 lbs/day of VOC offsets would be required in the current configuration. We can discuss further after you've had a chance to review.

Mike

----- Original Message -----
From: Mike Shaffer

To: Nabil Gobrial - SCAQMD
Cc: Christine White - DCOR
Sent: Wednesday, August 13, 2014 4:42 PM
Subject: Re: DCOR Platform Esther (143740) Flare Project

Bill,

Attached are the revised emission spreadsheets (FEF-90's fugitive hours lowered to 200 & project emission totals added to the 2nd page of the fugitives tab for each spreadsheet).

PRV = pressure relief valve (and sometimes also referred to as PSV (pressure safety valve).

Mike

----- Original Message -----
From: Mike Shaffer
To: Nabil Gobrial - SCAQMD
Cc: Christine White - DCOR
Sent: Monday, August 11, 2014 11:56 PM
Subject: Re: DCOR Platform Esther (143740) Flare Project

Bill,

Below are responses to 7 of the 8 questions you identified during our phone conversation on Wednesday, August 8. Hopefully I can complete the response for your remaining question tomorrow (#3 below).

1. The standby flare that DCOR is proposing to install (A/N 561640) is a Flare Industries FEF-90 (90 inch stack diameter), not a FEF-102 as initially presented in the permit application. Please refer to the 2nd paragraph in the April 8 e-mail below for a discussion on this subject. An updated FEF-90 product sheet is attached.

2. Please reference the attached revised FEF-90 product sheet for the manufacturer's <0.06 lb/MMBTU NOx guarantee.

3. A spreadsheet is being prepared to identify the facility's PTE and address compiance with NSR in terms of offsetting.

4. The gas to be combusted in all 3 flares is the same (i.e., comes from the same source....produced gas from the platform's crude oil extraction operations). The gas is currently sent via pipeline onshore for further processing at Breitburn's gas plant in Seal Beach, with a fraction used as fuel gas in the platform's two (2) 250KW microturbines (D31 & D33). The raw gas is separated from oil/water emulsion and dehydrated on the platform (A/N 441320) prior to going in the pipeline or to the microturbines.

5. The FEF-90 flare will only be used during emergencies and process upsets (i.e., power outages or when CEB 800-CA or CEB-350 units are offline for maintenance/testing). The operation of the FEF-90 flare qualifies as a "gas flare" under the RECLAIM Rule 2012 (k) exemption. Please reference the equivalent 200 hour throughput limit being requested for this unit and noted on Pages 3, 6 and 8 of the support document (similar to other permitted standby flares).

6. 30 ppm H2S was conservatively selected for the SOx calculations (in lieu of prior applications that used 10 ppm when H2S levels were negligible) since Platform Esther's produced gas has been tested multiple times and found to be slightly elevated (5-20 ppm). Attached is the gas analysis (BTU & H2S) utilized in the calculations, and a more recent H2S sample analyzed for total sulfur using SCAQMD Method 307-91 in compliance with Rule 431.

7. As mentioned in our conversation, a molar volume (Mv) of 379 dscf/lb-mole is used for all pollutants except NOx since standard temperature is 60F for all non-RECLAIM pollutants. Mv = 385.4 dscf/lb-mole for NOx since the facility is in the NOx RECLAIM program which uses a standard temperature of 68F. The attached spreadsheets have been amended to reflect this Mv issue and to correct the 7000 grains/lb conversion error in the PM calculations.

8. The fugitive emission factors used in the calculations are from CAPCOA, but they are also identified in Method 3 of SCAQMD's AER *Guidelines for Fugitive Emissions Calculations – Petroleum Industry, June 2003.* I will scan a copy of the applicable pages from this document and forward to you tomorrow.

Mike Shaffer
Shaffer Environmental Consulting
80 N. Crocker Avenue
Ventura, CA 93004-3845
(805) 659-1744 office
(805) 207-1945 cell
(805) 435-1634 fax
shafferenv@pacbell.net

----- Original Message -----
From: Mike Shaffer
To: Nabil Gobrial - SCAQMD
Cc: Christine White - DCOR
Sent: Tuesday, April 08, 2014 11:38 AM
Subject: DCOR Platform Esther (143740) Flare Project

Bill,

Sorry I was a bit confused with your questions when you called this morning....you caught me in the middle of a project with a tight deadline (online GHG reporting...due Thursday). Please send any questions and/or infiormation requests you have regarding this project to me (and/or Christine White) via e-mail in lieu of a USPS letter. It's much quicker and less formal, and anyway, the District is already beyond the 30-day period to officially request additional information so the application has been deemed complete by default. Regardless, DCOR and SEC (Shaffer Environmental Consulting) are committed to working with you (District) to get these applications processed in a timely manner.

The project is described on Page 2-3 of the letter accompanying the applications....and please refer to the P&ID in the attachments. There will be one (1) CEB 800-CA, one (1) CEB 350, and one (1) FEF-90. As I mentioned on the phone, the initial application identified a FEF-102 (102-inch diameter enclosure), but a slight redesign has been performed for sizing the unit on the platform, so it's now a FEF-90 (90-inch diameter). The unit is identical (51 MMBTU/hr max. rating) except for the model number and enclosure dimensions (12-inch smaller diameter & 45 feet tall (not 35'-5")). A new product sheet is attached.

Attached is the gas analysis for the natural/produced gas to be flared that is referenced in the documents. The emissions are calculated similar to the CEB 350 application you just processed for Bridgemark Corp., except theat the FEF-90 utilizes a 99.0% DRE for toxics as specified by the manufacturer (not the higher DRE% identified by testing of CEB units at Warren E&P). Attached are the 3 Excel spreadsheets to assist you with the review/processing. I also just noticed that you may need to see the old 1991 Unocal AB2588 HAP speciation analyses that most of the oil & gas industry uses to quantify HAPs/toxics that are emitted via fugitive leaks. Attached is a copy of those old results. The highest recorded value across the 8 fields is used for the calculations (conservative assumption).

Hopefully that answers your initial questions. Have a good day.

Mike Shaffer
Shaffer Environmental Consulting
80 N. Crocker Avenue
Ventura, CA 93004-3845
(805) 659-1744 office
(805) 207-1945 cell
(805) 435-1634 fax
shafferenv@pacbell.net


100'
65'

FLARE INDUSTRIES CEB® 350

The cleanest solution to your waste gas combustion needs



Photos of two CEB® 350 units

Capacity*	270,000 SCFD or 270 MSCFD
Maximum thermal capacity*	12 MMBTU/hr
Turndown ratio**	10:1
Footprint and height***	3'8" x 3'8" x 18'
Approximate weight	2,310 lbs.
Waste gas supply pressure	10 – 80" WC
Fan motor size	4.7 hp
Waste gas connection	3" ANSI 150 lbs. RF
Support gas connection	1" ANSI 150 lbs. RF
Ignition System	Spark or pilot ignition
Operating temperature	1,800 to 2,200°F
Ground temperature	Ambient during operation

* Capacity is based on natural gas with gross heating value of 1,069 BTU/scf

** Turndown ratio can be increased for specific projects with customized units

*** Stack height is based on minimum height that meets EPA's protocol for position of the testing ports

CEB® 350

Keep the environment clean when combusting your waste gases

- No luminous flame
- No odor
- No heat radiation
- No smoke
- Low height
- Small footprint
- Heat recovery available

Achievable emissions levels:

NOx ≤ 15 ppmv*

CO ≤ 15 ppmv*

CxHy ≤ 10 ppmv*

Combustion efficiency:

Up to 99.99% DRE over full operating range.

*** At 3% oxygen**

The CEB® 350 is a product of:

FLARE INDUTRIES, LLC

16310 Bratton Lane
BLDG 3, Suite 350
Austin, Texas 78728
USA

T: +1 (512) 836-9473

F: +1 (512) 836-3025

www.flareindustries.com

All mentioned trademarks are registered trademarks of Flare Industries, LLC.

FLARE INDUSTRIES CEB® 800 - CA

The cleanest solution to your waste gas combustion needs



Photos of CEB® 800-CA

Capacity*	875,000 SCFD or 875 MSCFD
Maximum thermal capacity*	**39 MMBTU/hr.**
Turndown ratio**	10:1
Footprint and height***	5' 10" x 6' 3" x 22' 10"
Approximate weight	5,511 lbs.
Waste gas supply pressure	10 – 80" WC
Fan motor size	40 hp
Waste gas connection	4" ANSI 150 lbs. RF
Support gas connection	2" ANSI 150 lbs. RF
Ignition System	Spark or pilot ignition
Operating temperature	1,800 to 2,200°F
Ground temperature	Ambient during operation

CEB® 800- CA

Keep the environment clean when combusting your waste gases

- **No luminous flame**
- **No odor**
- **No heat radiation**
- **No smoke**
- **Low height**
- **Small footprint**
- **Heat recovery available**

Achievable emissions levels:

NOx ≤ 15 ppmv at 3% oxygen

CO ≤ 15 ppmv at 3% oxygen

CxHy ≤ 10 ppmv at 3% oxygen

Combustion efficiency:
Up to 99.99% DRE over full operating range.

The CEB® 800-CA is a product of:

FLARE INDUTRIES, LLC

16310 Bratton Lane
BLDG 3, Suite 350
Austin, Texas 78728
USA

T: +1 (512) 836-9473

F: +1 (512) 836-3025

www.flareindustries.com

* Capacity is based on natural gas with gross heating value of 1,069 BTU/scf
** Turndown ratio can be increased for specific projects with customized units
*** Stack height is based on minimum height that meets EPA's protocol for position of the testing ports

All mentioned trademarks are registered trademarks of Flare Industries, LLC.

FLARE INDUSTRIES'

Fully Enclosed Flare (FEF)- 90

The clear choice for your enclosed combustion requirements

Design Features:

- Controlled combustion environment
- Natural draft or forced designs
- Multiple burners for staging
- No visible flame
- Low noise
- High turndown ratio
- Smokeless operation
- Fully automated controls
- High destruction efficiency
- Low NOx emissions
- Low CO emissions
- Skid mounted option
- Modular construction
- Multi-fuel pilot

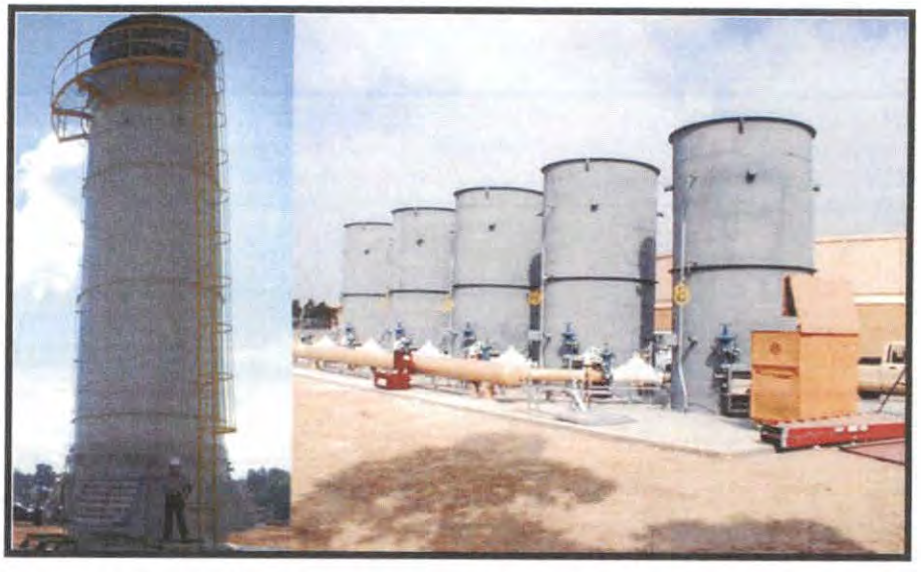

The fully enclosed flare (FEF) is a completely enclosed flare system in which combustion occurs inside an insulated flare stack, in a controlled environment. Enclosed combustion ensures that combustion radiation, noise and flame presence are imperceptible to the outside observer. The FEF consists of the following components:

Burner and Pilot – The FEF burner is the most advanced burner available in the industry today. Designed for high destruction efficiency and low emissions, this burner allows for efficient combustion in natural draft configuration. The NOx and CO emission rates meet or beat most regulatory agency requirements (i.e. SCAQMD). And our compact, fuel efficient electronic pilot provides trouble free, reliable ignition.

Enclosed stack – The flare stack , the body of the enclosed system, is built in modules to simplify shipment and installation efforts. Sizing is based on flow rate and ensures a minimum of 0.6 seconds residence time. Several inches of high temperature refractory line the inside walls of the stack to ensure radiation insulation.

Combustion air system – FEF systems are available in either natural or forced draft configurations. In the natural draft configuration, the simpler and more cost-effective option, air is controlled using opposed blade air louvers, which actuate as required to maintain combustion chamber temperature. The forced draft configuration utilizes a blower assembly to provide the necessary air. Forced draft systems are recommended in environments where high winds would cause reverse flow in a natural draft system, thereby extinguishing the flame.

Control panel – FEF controls enclosures are available in either NEMA 4X or NEMA 7 models. Safety systems, remote start/stop and alarm contacts are standard items in this fully automated control system.

SALES@FLAREINDUSTRIES.COM
WWW.FLAREINDUSTRIES.COM

FLARE INDUSTRIES'

Fully Enclosed Flare (FEF)- 90

The clear choice for your enclosed combustion requirements

Materials

Burner material:	Stainless steel
Pilot material:	Stainless steel
Stack material:	Carbon steel

Specifications

Diameter of stack:	90"
Maximum firing rate:	51 MMBTU/hr.
Process connection:	150 lbs. ANSI Flange
Turndown:	8:1 (higher available)
Operating temperature:	1400-1700°F
NOx emissions:	≤ 0.068 lbs./MMBTU
CO emissions:	≤ 0.37 lbs./MMBTU
Visible Emissions:	None
Destruction Efficiency:	≥ 98%
Combustion efficiency:	≥ 98%

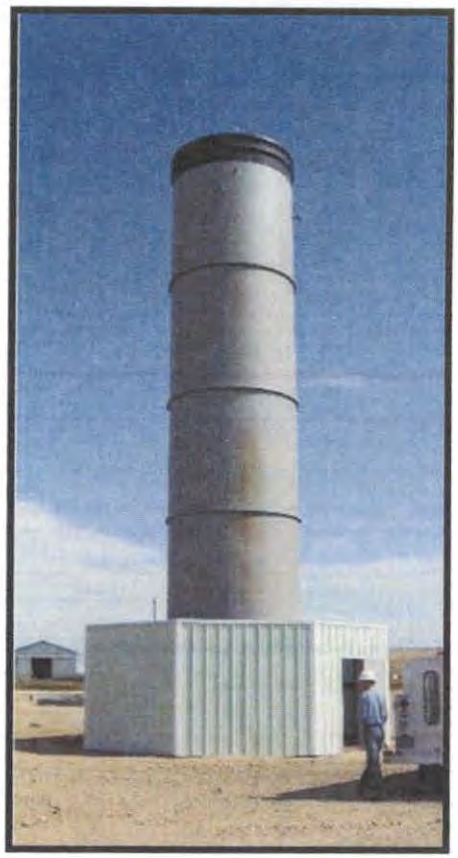

The FEF-90 is a product of:

FLARE INDUTRIES, LLC

16310 Bratton Lane
BLDG 3, Suite 350
Austin, Texas 78728
USA

T: +1 (512) 836-9473

F: +1 (512) 836-3025

SALES@FLAREINDUSTRIES.COM
WWW.FLAREINDUSTRIES.COM

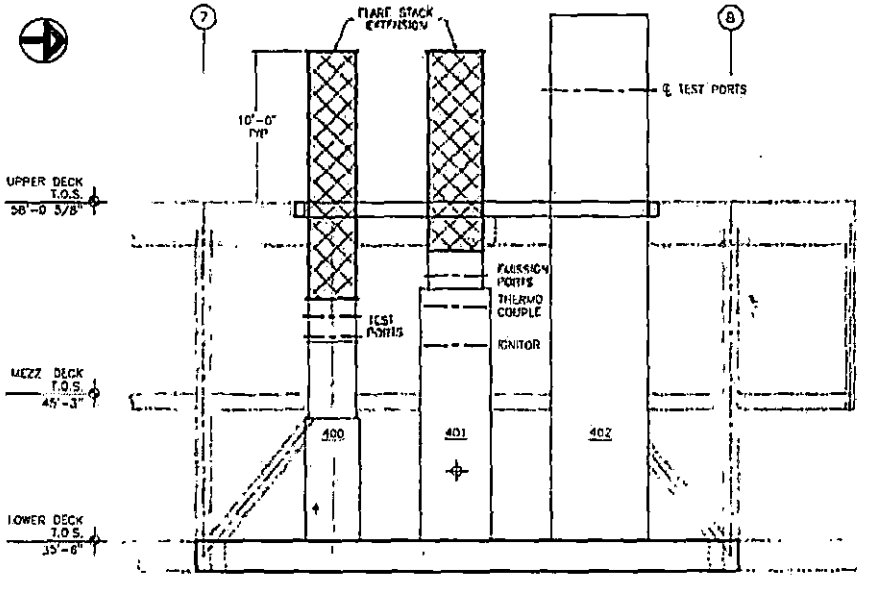

EAST ELEVATION (A)
SCALE: 1/4" = 1'-0"

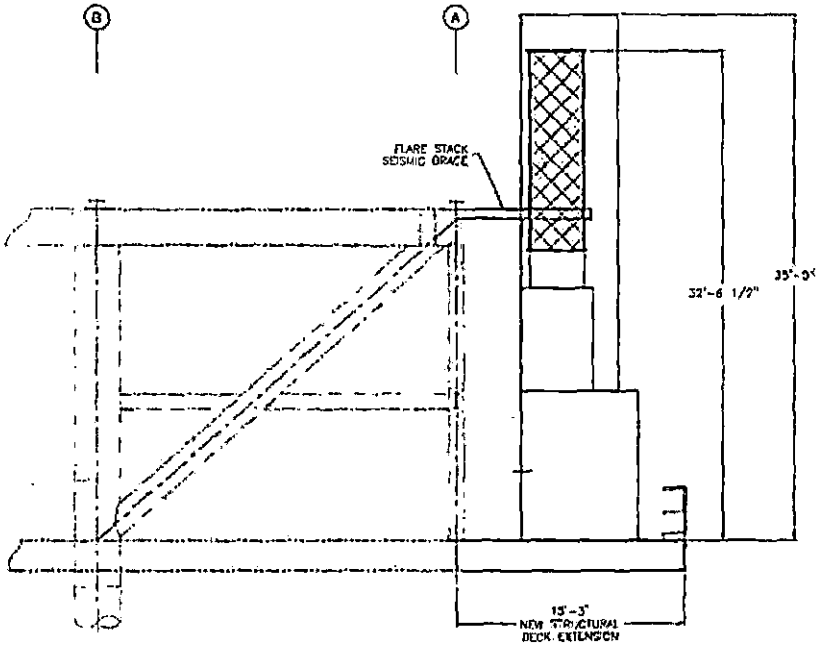

SOUTH ELEVATION (B)
SCALE: 1/4" = 1'-0"

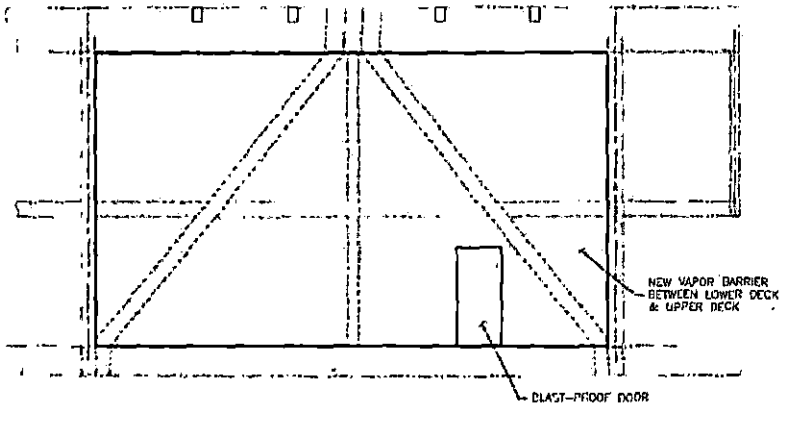

SECTION (C)
SCALE: 1/4" = 1'-0"

DRAFT - IN PROGRESS

Rev	Date	Description	Rev By	Chk By	App'd
B	6-07-13	IN PROGRESS - FOR REVIEW	RJB	RJB	RJB

DRAWN BY: RJB
CHECKED BY: RJB
APP'D: RJB
SCALE: NOTED
DATE: 5-09-13
JOB NO: 1838

THOMAS & BEERS
ENGINEERING, ANALYSIS & DESIGN
572 Fall St. Ventura, Ca. 93103

DCOR – PLATFORM ESTHER
FLARE DECK EXTENSION
ELEVATIONS & SECTIONS

Drawing No. D-1838-S3 Rev. B

South Coast Air Quality Management District

Run Date . 04/09/2014 11.22 AM

Facility Equipment List Report

Facility: 143740 DCOR LLC
Last Inspection: 10/15/2013
SIC: 1311
Inspector: KM03 KIMBERLY SHEN
Inspection Date: 10/27/2011
Location Address: OFFSHORE PLATFORM ESTHER, SEAL BEACH 90740 Sector:LH
Mailing Address: 290 MAPLE CT, VENTURA 93009
Instruction:

MR:
TS: TS-83 Ref/Energy: RECLAIM Cr
Facility Status: Active
Assignment No. 1269814
Disposition: Operating in Compliance at time of inspection

Contact: CHRISTINE WHITE (805) 5352000
Quarter: 0001 - inspect in 4th quarter, every year
On Hold: N
Facility Team: Z
Suspended: N

RECLAIM: Y TITLE V: N SIP: AIR:

Application No.	Permit No.	Permit Issue Date	Permit Status	Equipment Category		BCAT/CCAT Description	Application Date	Application Status
561638				08	CCAT	FLARE, OTHER	03/04/2014	ASSIGNED TO ENGINEER - CLASS I
561639				08	CCAT	FLARE, OTHER	03/04/2014	ASSIGNED TO ENGINEER - CLASS I
561640				08	CCAT	FLARE, OTHER	03/04/2014	ASSIGNED TO ENGINEER - CLASS I
561641				555010	BCAT	FACILITY PERMIT AMEND- RECLAIM ONLY	03/04/2014	ASSIGNED TO ENGINEER - CLASS III
530762				666416	BCAT	Rule 1415.1 Plan Notifications	12/22/2011	BANKING/ PLAN GRANTED
518221				555010	BCAT	FACILITY PERMIT AMEND- RECLAIM ONLY	01/20/2011	BANKING/ PLAN GRANTED
505908				666415	BCAT	RULE 1415 PLAN NOTIFICATIONS	01/28/2010	BANKING/ PLAN GRANTED
489831				555010	BCAT	FACILITY PERMIT AMEND- RECLAIM ONLY	10/14/2008	BANKING/ PLAN GRANTED
486556				666049	BCAT	PLAN RULE 1110.2- Inspection & Monitoring Plan	08/05/2008	BANKING/ PLAN GRANTED
476638				666415	BCAT	RULE 1415 PLAN NOTIFICATIONS	12/26/2007	BANKING/ PLAN GRANTED
466417				555010	BCAT	FACILITY PERMIT AMEND- RECLAIM ONLY	03/13/2007	BANKING/ PLAN GRANTED
466415				053720	BCAT	GAS TURBINE-DIG. GAS/LDF <300 KW	03/13/2007	APPLICATION CANCELLED, KEEP ALL FEE
466416				053720	BCAT	GAS TURBINE-DIG. GAS/LDF <300 KW	03/13/2007	APPLICATION CANCELLED, KEEP ALL FEE
462849				555010	BCAT	FACILITY PERMIT AMEND- RECLAIM ONLY	11/14/2006	APPLICATION CANCELLED, KEEP FILING I
462850				040901	BCAT	I C E (50-500 HP) N-EM STAT DIESEL	11/14/2006	APPLICATION CANCELLED, KEEP FILING I
451836				666415	BCAT	RULE 1415 PLAN NOTIFICATIONS	12/27/2005	BANKING/ PLAN GRANTED
446188				666147	BCAT	COMPLIANCE PLAN- RULE 1470-EMER ICE>3 OPERA	07/05/2005	APPLICATION CANCELLED, KEEP ALL FEE
441310				555012	BCAT	TV/RECLAIM REVISION-NOEVAL	03/02/2005	BANKING/ PLAN GRANTED
518222	G14508	08/05/2011	ACTIVE	053720	BCAT	GAS TURBINE-DIG. GAS/LDF <300 KW	01/20/2011	PERMIT TO OPERATE GRANTED
518223	G14507	08/05/2011	ACTIVE	053720	BCAT	GAS TURBINE-DIG. GAS/LDF <300 KW	01/20/2011	PERMIT TO OPERATE GRANTED
518224	G14509	08/05/2011	ACTIVE	040901	BCAT	I C E (50-500 HP) N-EM STAT DIESEL	01/20/2011	PERMIT TO OPERATE GRANTED
489830	G2940	05/21/2009	INACTIVE	040901	BCAT	I C E (50-500 HP) N-EM STAT DIESEL	10/14/2008	PERMIT TO OPERATE GRANTED
467167	F90307	06/01/2007	INACTIVE	040901	BCAT	I C E (50-500 HP) N-EM STAT DIESEL	04/17/2007	PERMIT TO OPERATE GRANTED
441311	F76171	06/21/2005	ACTIVE	294962	BCAT	Waste H2O Treating >50,000 GPD	03/02/2005	PERMIT TO OPERATE GRANTED
441315	F76167	06/21/2005	ACTIVE	58	CCAT	VAPOR RECOVERY SERVING CRUDE OIL PRODUCT	03/02/2005	PERMIT TO OPERATE GRANTED
441316	F76168	06/21/2005	ACTIVE	231809	BCAT	Crude Oil/Gas/Water Separation >=400 BPD	03/02/2005	PERMIT TO OPERATE GRANTED
441318	F76170	06/21/2005	ACTIVE	044901	BCAT	I C E (50-500 HP) EM FIRE FGHT-DIESEL	03/02/2005	PERMIT TO OPERATE GRANTED

Inspector: _____ Date: _____ Reviewed By: _____ Date: _____

South Coast Air Quality Management District

Facility Equipment List Report

Facility: 143740 DCOR LLC
Last Inspection: 10/15/2013
SIC: 1311
Inspector: KM03 KIMBERLY SHEN
Inspection Date: 10/27/2011
Location Address: OFFSHORE PLATFORM ESTHER, SEAL BEACH 90740 Sector:LH
Mailing Address: 290 MAPLE CT, VENTURA 93009
Instruction:

MR:
TS: TS-83 Ref/Energy: RECLAIM Cr
Facility Status: Active
Assignment No. 1269814
Disposition: Operating in Compliance at time of inspection

Contact: CHRISTINE WHITE (805) 5352000
Quarter: 0001 - inspect in 4th quarter, every year
On Hold: N
Facility Team: Z
Suspended: N

RECLAIM: Y TITLE V: N SIP: AIR:

Application No.	Permit No.	Permit Issue Date	Permit Status	Equipment Category		BCAT/CCAT Description	Application Date	Application Status
441320	F76165	06/21/2005	ACTIVE	000515	BCAT	NATURAL GAS DEHYDRATION	03/02/2005	PERMIT TO OPERATE GRANTED
441313	F76166	06/21/2005	INACTIVE	320101	BCAT	NATURAL GAS ODORIZING UNIT	03/02/2005	PERMIT TO OPERATE GRANTED
441317	F76169	06/21/2005	INACTIVE	040901	BCAT	I C E (50-500 HP) N-EM STAT DIESEL	03/02/2005	PERMIT TO OPERATE GRANTED

Inspector: _____ Date: _____ Reviewed By: _____ Date: _____

South Coast Air Quality Management District

Facility Equipment List Report

Facility: 143740 DCOR LLC
MR:
Contact: CHRISTINE WHITE (805) 5352000
Last Inspection: 10/15/2013
TS: TS-83 Ref/Energy: RECLAIM Cr
Quarter: 0001 - inspect in 4th quarter, every year
SIC: 1311
Facility Status: Active
On Hold: N
Suspended: N
Inspector: KM03 KIMBERLY SHEN
Assignment No. 1269814
Facility Team: Z
Inspection Date: 10/27/2011
Disposition: Operating in Compliance at time of inspection
Location Address: OFFSHORE PLATFORM ESTHER, SEAL BEACH 90740 Sector:LH
Mailing Address: 290 MAPLE CT, VENTURA 93009
Instruction:

RECLAIM: Y TITLE V: N SIP: AIR:

Application No.	Permit No.	Permit Issue Date	Permit Status	Equipment Category	BCAT/CCAT Description	Application Date	Application Status

Report: On 10/27/2011, Inspector Victor Juan and I arrived at offshore platform Esther to conduct the Cycle 2, 2010 RECLAIM audit in addition to conducting an equipment list inspection. We met with Ms. Christine White, DCOR Environmental Health and Safety coordinator and she escorted us throughout the inspection. This assignment report will cover the period from July 1, 2010 through June 30, 2011.

Platform Esther is an oil and gas production facility that produces an oil/water/gas emulsion that is separated on the platform. Crude oil and waste water is transported to shore via pipeline for further processing. Produced gas is piped onshore to Breitburn Energy Company. The facility produces approximately 590 barrels of oil per day and currently has 11 active wells. The platform also produces 399.6 MCF of gas and 5,659 bbls of water. Platform Esther has 4 RECLAIM sources:

1) D1-Process Emergency Fire pump IC Engine Caterpillar Model CAT3406BDITA (460 BHP)
2) D35-Large Source IC Engine driving a crane-John Deer Model 6135hf485 (450 bhp)-340 ppm diesel
3) 219 exempt Perkins 4.236 IC Engine Emergency Generator (40 BHP).
4) D31-Process Unit Micro turbine, Ingersoll Rand Model ML250, connected to 250 KW generator-field gas fueled (first fire 10/31/08)
5) D33-Process Unit Micro turbine, Ingersoll Rand Model ML250, connected to 250 KW generator-field gas fueled (first fire 10/31/08)

All ICEs on platform Esther are exempt from the new reporting requirements and lower emission standards for Rule 1110.2 because of the following circumstances:
D1-is an emergency ICE with a 199 hr limit as a permit condition
D35-is considered a portable unit (on skids) and R. 1110.2 only applies to stationary engines
219 ICE-engine is less than 50 bhp

During the audited period D1 operated for 9 hrs (199 hrs/yr limit) and D35 operated for 1398.2 hrs (4000 hr/yr limit) for large source. I reviewed tune-up records, operations logs and engine specifications sheets for all engines. All the engines were operating according to District rules and permit conditions. The source tests for D31 and D33 were conducted on 1/14/09 by AirX Testing and were found with passing results for CO, NOx and ROG (source test every 5 years). The source test for D35 is not due until the end of the three year period ending 06/30/2012. The facility was well under the monthly and yearly emission limits for D31 and D33 for VOC, CO, PM10 and SOx.

During the inspection, we observed that a paint contractor was onsite air blasting old paint off of the well heads. The contractor was called ICF paint and we met with Brian Visnoski, foreman. Mr. Visnoski showed us the polyurethane coating (clear coat) called Americoat/Amerishield and it was 86 g/l (below the 100 g/l limit under Rule 1113). Ms. White also showed me all the coating records for this project which began in August 2011. Ms. White was unsure when the project would be finished. We were shown two identical 49 bhp ICE engine compressors, "Sullair" brand, owned by DCOR which the contractors were using. I noted the hour readings on both engines. These engines are used at various locations throughout DCORs facilities.

All QCERs and APEP were submitted to the District within the reconciliation period. Also all electronic emissions were submitted to the District on time.

Form RTC Part 1 showed that DCOR filed a correction to Quarter 1's previously submitted emission totals. This occurred because in December 2010, while conducting the Cycle 2, 2009 for Esther, I discovered an error in which DCOR calculated the emissions for D35. DCOR used an improper emission factor for Device D35 when it became a large source. The permitted concentration limit is 340 ppm operating on diesel fuel which equates to 181 208 lbs/mgal. The facility utilized a lower emission factor of 101.36 lbs/mgal which was derived from manufacturers emission data (2.54 g/bhp-hr) of the John Deere engine. This also explains why the electronic emissions for the Large source category on Form AES shows different totals in Quarter 1.

Form RTC Part 1 showed a small correction to Quarter 2's previously submitted emission totals for 219 Exempt emissions This occurred because DCOR discovered an error in the hour

South Coast Air Quality Management District

Facility Equipment List Report

Facility: 143740 DCOR LLC
Last Inspection: 10/15/2013
SIC: 1311
Inspector: KM03 KIMBERLY SHEN
Inspection Date: 10/27/2011
Location Address: OFFSHORE PLATFORM ESTHER, SEAL BEACH 90740 Sector:LH
Mailing Address: 290 MAPLE CT, VENTURA 93009
Instruction:

MR:
TS: TS-83 Ref/Energy: RECLAIM Cri
Facility Status: Active
Assignment No. 1269814
Disposition: Operating in Compliance at time of inspection

Contact: CHRISTINE WHITE (805) 5352000
Quarter: 0001 - inspect in 4th quarter, every year
On Hold: N
Facility Team: Z
Suspended: N

RECLAIM: Y TITLE V: N SIP: AIR:

Application No.	Permit No.	Permit Issue Date	Permit Status	Equipment Category	BCAT/CCAT Description	Application Date	Application Status

meter reading data for March, 2011 for their emergency generator. The incorrect hour reading caused an over reporting of approximately 5 pounds of NOx. This explains why the electronic emissions for 219 exempt equipment on Form AES shows a different total in Quarter 2.

DCOR's reported NOx emissions (APEP) for the Cycle 2, 2010 compliance year was 2,805 lbs versus (AQMD) calculated NOx emissions of 2,806 lbs (difference due to rounding). The facility has an eligible balance of 2,806 RTCs for the 2010 compliance year (1,851 RTCs exp. 12/10, 149 RTCs exp. 06/11, 806 RTCs exp 12/11). DCOR Platform Esther is in compliance with Rule 2004(d)(1) for the Cycle 2, 2010 compliance year.

On 11/08/10, I emailed Ms.White and shared with her my preliminary audit findings.

Inspector: _____ Date: _____ Reviewed By: _____ Date: _____

South Coast
Air Quality Management District
21865 Copley Drive, Diamond Bar, CA 91765-4178
(909) 396-2000 • www.aqmd.gov

May 2, 2014

Mr. Mike Shaffer
Shaffer Environmental Consulting
80 N. Crocker Ave.,
Ventura, CA 93004.

Subject: **DECOR Application Numbers 561638, 39, and 561640**

Dear Mr. Shaffer:

Thank you for your response to my request for additional information regarding the above subject applications. The information you submitted is sufficient to deem these applications complete.

Please be advised that although these applications have sufficient information to deem them complete and begin the evaluation, more information may be required to complete the evaluation.

Thank you again for your prompt response. If you have any questions, please call me at (909) 396-2573.

Sincerely,

Bill Gobrial, P.E.
Air Quality Engineer
Operations Team

cc: Christine White, DÉCOR LLC 290 Maple Court, Suite 290, Ventura CA 93003

Nabil Gobrial

From: Mike Shaffer [shafferenv@pacbell.net]
Sent: Tuesday, April 08, 2014 11:51 AM
To: Nabil Gobrial
Cc: White, Christine
Subject: Re: DCOR Platform Esther (143740) Flare Project

Bill,

Christine just called me and explained the expired check situation, so I guess the application is officially not over 30 days old. Sorry for the confusion.

Mike

----- Original Message -----
From: Mike Shaffer
To: Nabil Gobrial - SCAQMD
Cc: Christine White - DCOR
Sent: Tuesday, April 08, 2014 11:49 AM
Subject: Re: DCOR Platform Esther (143740) Flare Project

Bill,

I just received your fax after I sent the email below (I use eFax, so faxes get sent to me via email). I believe I answered all of your questions in the letter.

I also wanted to make an early request for when you get to the stage of applying permit conditions. One of the conditions on the Bridgemark permit required hourly monitoring of fuel gas...something that seems excessive, but they (Bridgemark) will be able to comply with since they installed a TotalFlow metering system. We ask that the standard metering conditions be applied to these applications similar to what is currently found in the permit.

Thanks.

Mike

----- Original Message -----
From: Mike Shaffer
To: Nabil Gobrial - SCAQMD
Cc: Christine White - DCOR
Sent: Tuesday, April 08, 2014 11:38 AM
Subject: DCOR Platform Esther (143740) Flare Project

Bill,

Sorry I was a bit confused with your questions when you called this morning....you caught me in the middle of a project with a tight deadline (online GHG reporting...due Thursday). Please send any questions and/or infiormation requests you have regarding this project to me (and/or Christine White) via e-mail in lieu of a USPS letter. It's much quicker and less formal, and anyway, the District is already beyond the 30-day period to officially request additional information so the application has been deemed complete by default. Regardless, DCOR and SEC (Shaffer Environmental Consulting) are committed to working with you (District) to get these applications processed in a timely manner.

The project is described on Page 2-3 of the letter accompanying the applications....and please refer to the P&ID in the attachments. There will be one (1) CEB 800-CA, one (1) CEB 350, and one (1) FEF-90. As I mentioned on the phone, the initial application identified a FEF-102 (102-inch diameter enclosure), but a slight redesign has been performed for sizing the unit on the platform, so it's now a FEF-90 (90-inch diameter). The unit is identical (51 MMBTU/hr max. rating) except for the model number and enclosure dimensions (12-inch smaller diameter & 45 feet tall (not 35'-5")). A new product sheet is attached.

Attached is the gas analysis for the natural/produced gas to be flared that is referenced in the documents. The emissions are calculated similar to the CEB 350 application you just processed for Bridgemark Corp., except theat the FEF-90 utilizes a 99.0% DRE for toxics as specified by the manufacturer (not the higher DRE% identified by testing of CEB units at Warren E&P). Attached are the 3 Excel spreadsheets to assist you with the review/processing. I also just noticed that you may need to see the old 1991 Unocal AB2588 HAP speciation analyses that most of the oil & gas industry uses to quantify HAPs/toxics that are emitted via fugitive leaks. Attached is a copy of those old results. The highest recorded value across the 8 fields is used for the calculations (conservative assumption).

Hopefully that answers your initial questions. Have a good day.

Mike Shaffer
Shaffer Environmental Consulting
80 N. Crocker Avenue
Ventura, CA 93004-3845
(805) 659-1744 office
(805) 207-1945 cell
(805) 435-1634 fax
shafferenv@pacbell.net

South Coast
Air Quality Management District
21865 E. Copley Drive, Diamond Bar, CA 91765-4182
(909) 396-2000 • http://www.aqmd.gov

FACSIMILE COVER SHEET

DATE SENT:_____ PAGES (INCL. COVER) 2

TO: Mike Shaffer TEL #:_____

FR: Bill Gobrial TEL #: (909) 396-2573

RE:_____

MESSAGE: Hi Mike
Per your Request, Attached the
Copy of the Additional info. for DECOR.

PLEASE DELIVER IMMEDIATELY: YES NO

IF THERE IS ANY PROBLEM RECEIVING THIS FAX CALL 909/396-_____

(MAY94:FAX)

South Coast
Air Quality Management District
21865 Copley Drive, Diamond Bar, CA 91765-4178
(909) 396-2000 • www.aqmd.gov

April 4, 2014

Mr. Mike Shaffer
Shaffer Environmental Consulting
80 N. Crocker Ave.,
Ventura, CA 93004.

Subject: DECOR Application Numbers 561638, 39, and 561640

Dear Mr. Shaffer:

The South Coast Air Quality Management District (AQMD) has received the subject applications for a new construction of three Flares on Platform Esther located in the Pacific Ocean offshore of the city of Seal Beach I.D. 143740. These applications have been initially reviewed and found to be incomplete. The following information is required before your applications can be deemed complete:

1) Clarification for the three flaring systems manufacturer and size.
2) Provide the gas analysis report performed at the platform.
3) Provide the AB2588 test result performed by Unocal Corp. to quantify the toxic /HAP emissions.

Please submit the requested information no later than May 1, 2014 so that the evaluation of your application can be initiated. According to Rule 1309(b)(2), if these applications continue to be deemed incomplete 180 days after the date of the first submittal, the applications shall be cancelled. If you have any question, please contact me at (909) 396-2573.

Sincerely,

Bill Gobrial, P.E.
Air Quality Engineer
Operations Team

TRANSMISSION VERIFICATION REPORT

TIME : 04/08/2014 11:08
NAME : AQMD
FAX : 9093963350
TEL : 9093963350
SER.# : BROB2J353434

DATE,TIME	04/08 11:07
FAX NO./NAME	918054351634
DURATION	00:00:35
PAGE(S)	02
RESULT	OK
MODE	STANDARD ECM

February 24, 2014

Permit Services
South Coast Air Quality Management District
P.O. Box 4944
Diamond Bar, CA 91765-0944

Re: Application to Install Three (3) Enclosed Flares (Flare Industries)
DCOR, LLC - Platform Esther (Facility ID# 143740)
Offshore State Lease PRC 3095.1, Seal Beach

Dear Permit Services:

This letter application is being submitted to request a modification to our facility permit in order to install a flare gas management system consisting of three (3) flares on Platform Esther located in the Pacific Ocean offshore of the City of Seal Beach (143740). As required for a permit application to be deemed complete, included in this application package are the required Forms 400-A, 400-CEQA, equipment/process information, emission calculations, maps, and payment to cover the appropriate permit processing fees.

DCOR, LLC acquired the services of Shaffer Environmental Consulting to assist with the procurement of the SCAQMD permit. Mike Shaffer of Shaffer Environmental Consulting may be contacted if questions arise during processing of the enclosed permit applications.

GENERAL AND FACILITY INFORMATION:

Business Name:	DCOR, LLC
SCAQMD Facility ID:	143740
Nature of Business:	Crude Oil and Gas Production (SIC 1311; NAICS 211111)
Equipment Location:	Offshore State Lease PRC 3095.1 Seal Beach, CA
Business/Equipment Contact Person:	Christine White Environmental Advisor 290 Maple Court, Suite 290 Ventura, CA 93003 (805) 535-2074 office (805) 535-2075 fax E-mail: cwhite@dcorllc.com
Permit Application Contact Person:	Mike Shaffer President/Principal Engineer Shaffer Environmental Consulting 80 N. Crocker Avenue Ventura, CA 93004-3845 (805) 659-1744 office (805) 207-1945 mobile (805) 435-1634 fax E-mail: shafferenv@pacbell.net
Operating Schedule (proposed):	24 hours/day, 7 days/week, 52 weeks/year
Construction Start Date (est.):	September 1, 2014

South Coast Air Quality Management District

Form 400-CEQA
California Environmental Quality Act (CEQA) Applicability

Mail To:
SCAQMD
P.O. Box 4944
Diamond Bar, CA 91765-0944

Tel: (909) 396-3385
www.aqmd.gov

The SCAQMD is required by state law, the California Environmental Quality Act (CEQA), to review discretionary permit project applications for potential air quality and other environmental impacts. This form is a screening tool to assist the SCAQMD in clarifying whether or not the project[1] has the potential to generate significant adverse environmental impacts that might require preparation of a CEQA document [CEQA Guidelines §15060(a)].[2] Refer to the attached instructions for guidance in completing this form.[3] For each Form 400-A application, also complete and submit one Form 400-CEQA. If submitting multiple Form 400-A applications for the same project at the same time, only one 400-CEQA form is necessary for the entire project. If you need assistance completing this form, contact Permit Services at (909) 396-3385 or (909) 396-2668.

Section A - Facility Information

1. Facility Name (Business Name of Operator To Appear On The Permit): DCOR, LLC

2. Valid AQMD Facility ID (Available On Permit Or Invoice Issued By AQMD): 143740

3. Project Description:
Installation of flaring system (emergency/standby & continuous process flares) to properly dispose of produced gas from process upsets and excess gas that does not have an onshore outlet via pipeline.

Section B - Review For Exemption From Further CEQA Action

Check "Yes" or "No" as applicable

	Yes	No	Is this application for:
1.	○	◉	A CEQA and/or NEPA document previously or currently prepared that specifically evaluates this project? If yes, attach a copy of the signed Notice of Determination to this form.
2.	○	◉	A request for a change of permittee only (without equipment modifications)?
3.	○	◉	A functionally identical permit unit replacement with no increase in rating or emissions?
4.	○	◉	A change of daily VOC permit limit to a monthly VOC permit limit?
5.	○	◉	Equipment damaged as a result of a disaster during state of emergency?
6.	○	◉	A Title V (i.e., Regulation XXX) permit renewal (without equipment modifications)?
7.	○	◉	A Title V administrative permit revision?
8.	○	◉	The conversion of an existing permit into an initial Title V permit?

If "Yes" is checked for any question in Section B, your application does not require additional evaluation for CEQA applicability. Skip to Section D - Signatures on page 2 and sign and date this form.

Section C - Review of Impacts Which May Trigger CEQA

Complete Parts I-VI by checking "Yes" or "No" as applicable. To avoid delays in processing your application(s), explain all "Yes" responses on a separate sheet and attach it to this form.

	Yes	No	Part I - General
1.	○	◉	Has this project generated any known public controversy regarding potential adverse impacts that may be generated by the project? Controversy may be construed as concerns raised by local groups at public meetings; adverse media attention such as negative articles in newspapers or other periodical publications, local news programs, environmental justice issues, etc.
2.	○	◉	Is this project part of a larger project? If yes, attach a separate sheet to briefly describe the larger project.
			Part II - Air Quality
3.	○	◉	Will there be any demolition, excavating, and/or grading construction activities that encompass an area exceeding 20,000 square feet?
4.	○	◉	Does this project include the open outdoor storage of dry bulk solid materials that could generate dust? If Yes, include a plot plan with the application package.

[1] A "project" means the whole of an action which has a potential for resulting in physical change to the environment, including construction activities, clearing or grading of land, improvements to existing structures, and activities or equipment involving the issuance of a permit. For example, a project might include installation of a new, or modification of an existing internal combustion engine, dry-cleaning facility, boiler, gas turbine, spray coating booth, solvent cleaning tank, etc.

[2] To download the CEQA guidelines, visit http://ceres.ca.gov/env_law/state.html.

[3] To download this form and the instructions, visit http://www.aqmd.gov/ceqa or http://www.aqmd.gov/permit

© South Coast Air Quality Management District, Form 400-CEQA (2009.04)

Section C - Review of Impacts Which May Trigger CEQA (cont.)			
	Yes	No	Part II - Air Quality (cont.)
5.	○	◉	**Would this project result in noticeable off-site odors from activities that may not be subject to SCAQMD permit requirements?** For example, compost materials or other types of greenwaste (i.e., lawn clippings, tree trimmings, etc.) have the potential to generate odor complaints subject to Rule 402 – Nuisance.
6.	○	◉	**Does this project cause an increase of emissions from marine vessels, trains and/or airplanes?**
7.	○	◉	**Will the proposed project increase the QUANTITY of hazardous materials stored aboveground onsite or transported by mobile vehicle to or from the site by greater than or equal to the amounts associated with each compound on the attached Table 1?[4]**
			Part III – Water Resources
8.	○	◉	**Will the project increase demand for water at the facility by more than 5,000,000 gallons per day?** The following examples identify some, but not all, types of projects that may result in a "yes" answer to this question: 1) projects that generate steam; 2) projects that use water as part of the air pollution control equipment; 3) projects that require water as part of the production process; 4) projects that require new or expansion of existing sewage treatment facilities; 5) projects where water demand exceeds the capacity of the local water purveyor to supply sufficient water for the project; and 6) projects that require new or expansion of existing water supply facilities.
9.	○	◉	**Will the project require construction of new water conveyance infrastructure?** Examples of such projects are when water demands exceed the capacity of the local water purveyor to supply sufficient water for the project, or require new or modified sewage treatment facilities such that the project requires new water lines, sewage lines, sewage hook-ups, etc.
			Part IV – Transportation/Circulation
10.			**Will the project result in** (Check all that apply):
	○	◉	a. the need for more than 350 new employees?
	○	◉	b. an increase in heavy-duty transport truck traffic to and/or from the facility by more than 350 truck round-trips per day?
	○	◉	c. increase customer traffic by more than 700 visits per day?
			Part V – Noise
11.	○	◉	**Will the project include equipment that will generate noise GREATER THAN 90 decibels (dB) at the property line?**
			Part VI – Public Services
12.			**Will the project create a permanent need for new or additional public services in any of the following areas** (Check all that apply):
	○	◉	a. **Solid waste disposal?** Check "No" if the projected potential amount of wastes generated by the project is less than five tons per day.
	○	◉	b. **Hazardous waste disposal?** Check "No" if the projected potential amount of hazardous wastes generated by the project is less than 42 cubic yards per day (or equivalent in pounds).

REMINDER: *For each "Yes" response in Section C, attach all pertinent information including but not limited to estimated quantities, volumes, weights, etc.*

Section D - Signatures

I HEREBY CERTIFY THAT ALL INFORMATION CONTAINED HEREIN AND INFORMATION SUBMITTED WITH THIS APPLICATION IS TRUE AND CORRECT TO THE BEST OF MY KNOWLEDGE. I UNDERSTAND THAT THIS FORM IS A SCREENING TOOL AND THAT THE SCAQMD RESERVES THE RIGHT TO CONSIDER OTHER PERTINENT INFORMATION IN DETERMINING CEQA APPLICABILITY.

1. Signature of Responsible Official of Firm:		2. Title of Responsible Official of Firm:
Christine White		Environmental Advisor
3. Print Name of Responsible Official of Firm:		4. Date Signed:
Christine White		2/24/14
5. Phone # of Responsible Official of Firm:	6. Fax # of Responsible Official of Firm:	7. Email of Responsible Official of Firm:
(805) 535-2074	(805) 535-2075	cwhite@dcorllc.com
8. Signature of Preparer, (If prepared by person other than responsible official of firm):		9. Title of Preparer:
10. Print Name of Preparer:		11. Date Signed:
12. Phone # of Preparer:	13. Fax # of Preparer:	14. Email of Preparer:

THIS CONCLUDES FORM 400-CEQA. INCLUDE THIS FORM AND ANY ATTACHMENTS WITH FORM 400-A.

[4] Table 1 – Regulated Substances List and Threshold Quantities for Accidental Release Prevention can be found in the Instructions for Form 400-CEQA.

March 19, 2014

Deborah Rutledge
SCAQMD Permit Services
P.O. Box 4944
Diamond Bar, CA 91765

Dear Deborah,

Attached is a replacement check in the amount of $11,439.02 for the check #1196 submitted with the DCOR, LLC Air Permit Application for a new flare system on Platform Esther. The original check was listed as being void after 90 days of issuance. Thank you for notifying me of the issue and allowing DCOR to provide a replacement check.

If you have any questions, please contact me at 805-535-2074.

Sincerely,

Christine White

Christine White
Environmental Advisor
DCOR, LLC

PROJECT LOCATION:

Platform Esther is located in the state waters of San Pedro Bay approximately 1.5 miles offshore of Seal Beach Pier. The facility is one of two DCOR oil and gas production platforms located in the state waters in San Pedro Bay (DCOR's third platform, Edith, is located in federal waters). The facility produces roughly 800 bbls of oil per day which is separated from the water and gas onsite, and the crude and water is pumped via pipeline onshore and ties into Chevron Pipeline Company's 8-inch gathering line in Seal Beach. The produced gas is currently combusted on the platform and/or pipelined to an onshore facility (Breitburn, Seal Beach). The onsite combustion sources include two 250 KW gas turbines that produce electricity for the facility. The platform was constructed in 1990 (began producing in May 1991) after Esther Island was destroyed in a storm in February 1983. The facility was previously owned and operated by PXP, Nuevo/Torch, and Unocal.



PROJECT DESCRIPTION:

Platform Esther's produced gas is currently sent via pipeline to Breitburn's onshore facility in Seal Beal, with some gas being combusted onsite in two 250 KW microturbines. The facility does not currently have a flare, and the contract with Breitburn expires in 2015 and may not be renewed. If there is no outlet for Platform Esther's produced gas after 2015, oil production operations would have to cease. Several options have been considered (i.e., gas injection, additional microturbines, pipeline to other DCOR facilities, purchase of Breitburn facility), but installation of a flaring system was determined to be the preferred option. The proposed three (3) flare system would consist of two (2) ultra-low emission process flares and one (1) enclosed standby flare all manufacturerd by Flare Industries, Inc. The standby flare would be used during emergencies, power outages and start-up/testing/maintenance of the ultra-low

emission units. A preliminary piping & instrumentation (P&ID) drawing and preliminary deck drawings are attached, along with Flare Industries' product information sheets.

Example permit wording is identified below:

Equipment	ID Number	Connected To	RECLAIM Source Type/ Monitoring Unit	Emissions and Requirements	Conditions
Process 9: FLARE SYSTEM					
FLARE, PROCESS, 39 MMBTU/HR, FIELD GAS, FLARE INDUSTRIES, MODEL CEB 800-CA, SHROUDED, SMOKELESS, WITH CONTINUOUS GAS PILOT, HEIGHT: 32 FT 5 IN; LENGTH: 4 FT 8 IN; WIDTH 7 FT 10 IN A/N: TBD	C(TBD)		NOX: LARGE SOURCE**	**CO**: 10 PPMV FIELD GAS (4) [Rule 1303(a)(1) – BACT; Rule 1303(b)(2) – Offset]; **CO**: 2000 PPMV (5) [Rule 407]; **NOX**: 0.023 LBS/MMBTU FIELD GAS (1) [Rule 2012]; **NOX**: 15 PPMV FIELD GAS (4) [Rule 2005]; **VOC**: 10 PPMV FIELD GAS (4) [Rule 1303(a)(1) – BACT; Rule 1303(b)(2) – Offset]	Ref. permit conditions applied to CEB 800 installed at LINN Operating's RECLAIM facility ID# 151532 (A/N 509255)
FLARE, PROCESS, 12 MMBTU/HR, FIELD GAS, FLARE INDUSTRIES, MODEL CEB 350, SHROUDED, SMOKELESS, WITH CONTINUOUS GAS PILOT, HEIGHT: 32 FT 5 IN; LENGTH: 3 FT 8 IN; WIDTH 3 FT 8 IN A/N: TBD	C(TBD)		NOX: LARGE SOURCE**	SAME AS ABOVE	SAME AS ABOVE
FLARE, STANDBY, 51 MMBTU/HR, FIELD GAS, FLARE INDUSTRIES, MODEL FEF-102, SHROUDED, SMOKELESS, WITH CONTINUOUS GAS PILOT, HEIGHT: 35 FT 5 IN; DIAMETER: 8 FT 6 IN A/N: TBD	C(TBD)		[EXEMPT]	**CO**: 2000 PPMV FIELD GAS (5) [Rule 407]; **NOX**: 0.06 LBS/MMBTU FIELD GAS (4) [Rule 1303(a)(1) - BACT]; **PM**: (9) [Rule 404]; **PM**: 0.1 GRAINS/SCF (5) [Rule 409]; **SOX**: 500 PPMV FIELD GAS (5) [Rule 407]	Ref. permit conditions applied to John Zink standby flare installed at PXP/Freeport-McMoRan Oil & Gas's RECLAIM facility ID# 133987 (A/N 497438).

ADDITIONAL MODIFICATIONS (previously identified):
The following three (3) permit comments do not appear to have been addressed in Platform Esther's facility for several years. These comments were most recently presented to SCAQMD in a written comment letter after the release of the August 9, 2011 facility permit revision. The wording from that comment letter (attached) has been copied below with one additional modification (shown in ~~strikeout~~) due to the departure of Tina Wiegman, ES&RC Manager.

A) **Change of responsible official:** DCOR requested in the January 19, 2011 permit revision submittal for the responsible official information be changed in Section A. It appears this request has not been incorporated in this revision. The wording from the submittal is as follows:

3. Change the Responsible Official Information in Section A

As a result of personnel changes at DCOR, please change the Responsible Official in Section A to the following:

RESPONSIBLE OFFICIAL:	~~TINA WIEGMAN~~ BOB GARCIA
TITLE:	~~ES&RC MANAGER~~ VP CA Offshore Operations
TELEPHONE NUMBER:	~~(805) 535-2073~~ (805) 535-2030

B) **Add NO_X emission factor reference:** DCOR also requested in the January 19, 2011 permit revision submittal for a NO_X emission factor reference to be added to the two 250kW microturbines (D31 & D33). It appears this request has not been incorporated in this revision. The wording from the submittal is as follows:

In addition, DCOR proposes to add references to the "Emissions and Requirements" column of the facility permit for Devices D31 and D33 to include the NO_X emission factor (46.64 lbs/mmscf) that was used by SCAQMD Engineering to calculate Rule 2005 NSR amounts referenced in Permit Condition I296.1. The PTE emission rates used in the applications for these two (2) devices were generated based on maximum NO_X emission rate (0.5 lb/MW-hr) and maximum fuel consumption and power ratings (2,680 scf/hr @ 250 kW). [i.e., 46.64 lbs/mmscf = (0.5 lb/MW-hr)*(0.25 MW)/(0.00268 mmscf/hr)]. SCAQMD Engineering used the 46.64 lb/mmscf emission factor to generate the Rule 2005 NSR amounts listed in Permit Condition I296.1 (see table on previous page). DCOR believes the 46.64 lb/mmscf emission factor should be used to report NO_X emissions pursuant to RECLAIM in order to be consistent with the Rule 2005 NSR NO_X limits identified in Permit Condition I296.1. The existing 16 ppmv NO_X concentration limit calculated by SCAQMD Engineering and identified in the "Emissions and Requirements" column for each device should remain for compliance screening and source testing purposes.

C) **Remove old language in Condition E193.1:** When Li Chen issued a previous facility permit revision on January 20, 2010 (Revision 10) to replace the old crane IC engine (D2) with a new IC engine (D35), Condition E193.1 should have been modified to delete old language that was no longer applicable. The language that should be removed in Condition E193.1 is as follows:

The equipment shall not be operated until the operator stops operation and surrenders the permit of Device D2 in Section D. The operator shall notify AQMD prior to first operation of this device.

One additional modification/error that was identified was pertaining to the July 1, 2012 revision to the Table of Contents of the facility permit. The July 1, 2012 revision to the facility permit included updates to the Title Page, Table of Contents and Section B (Allocations). There was no revision to Section D (Revision #7) included in the package or addressed in the cover letter. DCOR believes the latest version of Section D should be identified in the Table of Contents as August 9, 2011 (Revision #6). If there was a July 1, 2012 (Revision #7) issued, please forward a copy at your earliest convenience.

ESTIMATED EMISSIONS:

As a result of the proposed flare project, the facility will experience an increase in emissions of criteria and toxic/HAP pollutants from combustion and fugitive component emission leaks.

Combustion emissions are calculated using the maximum heat input rating for the three (3) flares, manufacturer's guarantees, source test results (PM_{10}), mass balance methodology (SO_X), and SCAQMD default emission factors (when testing or manufacturer's data unavailable).

Fugitive emissions are calculated using estimated component counts, produced gas analysis (sales gas sample), 2 years of recent Rule 1173 leak data, and CAPCOA/SCAQMD emission factors, and the calculation methodology agreed upon by SCAQMD Engineering (per telephone call with John Yee on 2/15/06 (PTE = worst-case leak rate from 2 years of leak data plus 20%)). CAPCOA's average screening emission factors for fugitive components in gas/light liquid service at oil & gas production facilities (<10,000 ppmv I&M program leak level) were used along with component counts and gas analyses to estimate emissions of fugitive VOCs. These factors are also identified in Method 3 of SCAQMD's *Guidelines for Fugitive Emissions Calculations – Petroleum Industry, June 2003* for performing fugitive emission calculations for annual emission reporting. The CAPCOA screening emission factors provide estimates for total hydrocarbons (THC). VOC emissions are generated by factoring in the actual VOC to THC ratio of the fuel gas (from gas analyses). However, liquid component leak rates are assumed to be 100% VOC. Further evaluation was performed to quantify the toxics/HAPs losses using AB2588 test data performed by Unocal Corp. The THC totals were multiplied by the toxic/HAP weight fraction data to generate pollutant-specific toxic/HAP emissions. Please reference the attached Excel® calculation spreadsheets for additional information regarding the component counts and calculations.

The total emissions (combustion + fugitive) are summarized in the table below. The gas analysis used in the calculations (October 4, 2012, 1138.30 Btu/scf) is included at the end of the emission/HRA calculation attachment. More detailed information regarding the emission factors and calculations are identified in the attached Excel® calculation spreadsheets.

Table 1. PTE Emissions Summary (CEB 350 Ultra-Low Emission Process Flare)

Pollutant	PTE Hourly (lb/hr)	PTE Daily (lb/day)	PTE Annual (lb/yr)
NO_X	0.22	5.27	1,923.70
VOC	0.05	1.24	452.02
PM_{10}	0.06	1.50	546.62
SO_X	0.05	1.27	464.64
CO	0.09	2.16	788.40
HAPs	[see calculation shreadsheet for individual HAPs]		

Table 2. PTE Emissions Summary (CEB 800-CA Ultra-Low Emission Process Flare)

Pollutant	PTE Hourly (lb/hr)	PTE Daily (lb/day)	PTE Annual (lb/yr)
NO_X	0.71	17.13	6,252.01
VOC	0.17	4.02	1,469.05
PM_{10}	0.20	4.87	1,776.53
SO_X	0.17	4.14	1,510.09
CO	0.29	7.02	2,562.30
HAPs	[see calculation shreadsheet for individual HAPs]		

Table 3. Difference in PTE Emissions (FEF-102 Standby/Emergency Flare)

Pollutant	PTE Hourly (lb/hr)	PTE Daily (lb/day)	PTE Annual* (lb/yr)
NO_X	3.47	83.23	693.60
VOC	0.31	7.53	62.73
PM_{10}	0.34	8.06	67.21
SO_X	0.23	5.41	45.09
CO	18.87	452.88	3,774.00
HAPs (total)	[see calculation shreadsheet for individual HAPs]		

* Limited to 8.961 MMCF/year (equivalent to a maximum of 44.8 MCF/hr (1,075.3 MCF/day) for 200 hours/year).

$= 51 \times 10^6 \frac{Btu}{hr} \times \frac{cf}{1138 Btu}$

RULES EVALUATION:
A brief review of applicable SCAQMD rules and regulations follows:

A. Regulation II: Permits
This application submittal package and completed Forms 400-A and 400-CEQA should satisfy the permit application requirements of Regulation II.

Rule 212 - Standards for Approving Permits: As shown in Tables 1-3 above and in the attached Excel© calculation spreadsheets, the proposed modification results in some emission increases of criteria pollutants and toxics/HAPS, but the increases for the non-emergency/process flares will not result in an exceedance of any maximum levels specified in Rule 212(g). Therefore, the addition of these two (2) flares (CEB 350 & CEB 800-CA) are not considered "significant" projects. [Note: The emergency/stand-by flare (FEF-102) exceeds the daily maximum levels specified in Rule 212(g) for NO_X and CO, so this permit unit may need to be addressed separately pursuant to subpart (g).]. All three (3) flares will not be located within 1000 feet from the outer boundary of a school, and they do not have the potential to expose any individual to a cancer risk greater than, or equal to, one in a million (1×10^{-6}) during a lifetime (70 years) [Note: Ten in a million (10×10^{-6}) is actually the rule limit since the CEB units are ultra-low emission flares that are considered T-BACT.] Rule 1401 Maximum Individual Cancer Risk (MICR) evaluations are included in the attachments. It is also not expected that the subject equipment will cause any nuisance complaints.

B. Regulation III: Fees
Rule 301 - Permitting and Associated Fees: The attached check for $11,439.02 should appropriately cover the permit processing fees per Rule 301. The table below summarizes the permit processing fees.

Equipment Description	Schedule	Processing Fee
Flare, Other (Process , CEB 350, 12 MMBtu/hr)	C	$3,508.86
Flare, Other (Process , CEB 800 CA, 39 MMBtu/hr)	C	$3,508.86
Flare, Other (Standby , FEF-102, 51 MMBtu/hr)	C	$3,508.86
RECLAIM Facility Permit Amendment		$912.44
	Total	**$11,439.02**

C. Regulation IV: Prohibitions

Rule 401 - Visible Emissions: Visible emissions are not expected with normal operation of the new flares.

Rule 402 - Nuisance: Nuisance problems are not expected if the subject equipment is operated properly.

Rule 407 - Liquid and Gaseous Air Contaminants: DCOR is expected to comply with the requirements of Rule 407 for both SO_X and CO. The corresponding SO_X concentration in the exhaust is calculated to be 2.6 ppmv (when inlet gas contains 30 ppmv H2S) and CO is guaranteed to be <10 ppmv (both at 3% O_2) for the CEB units and projected to be 0.37 lb/MMBTU/hr for the FEF-102 unit (499 ppmv), which are well below the 500ppmv and 2000ppmv rule limits.

Rule 409 - Combustion Contaminants: DCOR is expected to comply with the requirements of Rule 409 for PM emissions for all 3 flares. The corresponding PM_{10} concentration in the exhaust is calculated to be well below the 0.1 grain/scf limit (@ 12% CO_2). In addition, source test results from a CEB 500 unit installed in Wilmington (Warren E&P) and a CEB 800 unit in Brea (Linn) showed that PM emissions are more than 2 orders of magnitude lower than the Rule 409 limit. Both of these tested units are operating on similar oilfield waste/produced gas.

Rule 431 – Sulfur Content of Gaseous Fuels: DCOR will continue to comply with the requirements of Rule 431. DCOR will follow the District's standard permit condition (F2.1) to verify compliance with (g)(8) of this rule since the facility's total sulfur compound emissions from the burning of gaseous fuels other than CPUC natural gas is well below 5 pounds/day.

Cal public utility comm

D. Regulation IX and X: NSPS and NESHAP Standards

No federal NSPS requirements apply to the proposed modifications. In addition, the fugitive NESHAP/MACT standards including 40 CFR 61 Subpart V (Equipment Leaks – Fugitive Sources), 40 CFR 63 Subpart H (Organic Hazardous Air Pollutants – Equipment Leaks), and 40 CFR 63 Subpart HH (Oil and Natural Gas Production) do not apply to this proposed project since the facility is not a hazardous air pollutant (HAP) major source.

E. Regulation XI: Source Specific Standards

Rule 1173 – Control of VOC Leaks and Releases from Components at Petroleum Facilities and Chemical Plants: DCOR will continue to comply with the requirements of this rule through their ongoing fugitive I&M program. All additional fugitive components will be properly identified and monitored on a quarterly basis.

F. Regulation XIII: New Source Review

Rule 1303 – Requirements: New source review requirements of Regulation XIII are triggered since each flare results in emission increases of criteria pollutants. BACT and the other requirements of NSR are being adhered to as follows:

BACT (Process/Continuous Flares): The Flare Industries' Clean Enclosed Burner (CEB) technology has been identified as BACT for applications involving continuous process flaring since it has been permitted and achieved-in-practice (verified via source testing) below 15 ppmv NO_X, 10 ppmv ROG, and 10 ppmv CO corrected to 3% O2. In addition, the flare has demonstrated destruction removal efficiencies greater than 99.9% for hydrocarbons and toxics (BTEX) making the technology also T-BACT. Please reference permits and source test results for CEB units installed & operating at Warren E&P and Linn facilities in Wilmington and Brea, respectively.

BACT (Standby/Emergency Flares): The proposed fully enclosed flare also manufactured by Flare Industries (FEF-102) meets the BACT requirements for standby/emergency flaring (0.068 lb/MMBTU NO_X).

Modeling (CEB process units) for ROG and SO_X emissions is not required by Rule 1303, Appendix A, and it is also not required for NO_X, CO and PM_{10} since the PTE emissions are below the maximum Table A-1 thresholds in Rule 1303.
Modeling (FEF-102 standby unit) is not required pursuant to the Rule 1304(a)(4) emergency equipment exemption (or Rule 1304(a)(5) Air Pollution Control Strategies; or 1304(a)(6) Emergencies). DCOR proposes to limit the standby/emergency flare to a fuel throughput limit equivalent to 200 hours/year (8.961 MMCF/year, equivalent to a maximum of 44.8 MCF/hr (1,075.3 MCF/day) for 200 hours) similar to the recently permitted standby/emergency flare at PXP/Freeport-McMoRan Oil & Gas's facility in Inglewood (A/N 497438).

Offsets (CEB Process units) are not required pursuant to Rule 1304(d)(2)(A) since the facility's post-modification PTE will be less than the amounts listed in Table A of the rule.
Offsets (FEF-102 standby unit) are not required pursuant to the Rule 1304(a)(4) emergency equipment exemption (or Rule 1304(a)(5) Air Pollution Control Strategies; or 1304(a)(6) Emergencies).

G. Regulation XIV: Toxic Air Contaminants
Rule 1401 - New Source Review for Toxic Air Contaminants: Similar to Regulation XIII, NSR requirements for air toxics are triggered since the proposed project results in emission increases of Rule 1401 regulated pollutants. The increases for the CEB process flares are small enough that the increases are deemed insignificant by performing a Tier 1 risk screening per SCAQMD's *Risk Assessment Procedures for Rules 1401 and 212, Version 7.0, July 1, 2005.* The FEF-102 standby/emergency flare yielded the highest Tier 1 analysis MICR at 0.5884 in a million, so for informational purposes, a Tier 2 analysis was performed. The Tier 2 analyses for the FEF-102 yielded a 0.00209 in a million MICR, maximum acute HIA of 0.00012 (eye & respiratory), and a maximum chronic HIC of 0.00000324 (respiratory). Therefore, the application complies with the requirements of Rule 1401 as summarized below:

- The cumulative increase in maximum individual cancer risk (MICR) shall not exceed: one in a million (1 x 10-6) if T-BACT is not used; or, ten in a million (10 x 10-6) if T-BACT is used;
- The cumulative cancer burden (increase in cancer cases in the population) shall not exceed 0.5; and,
- For target organ systems, neither the cumulative increase in total chronic hazard index (HIC) nor the total acute hazard index (HIA) shall exceed 1.0 for any target organ system, or an alternate hazard index level deemed to be safe.

Please reference the enclosed Tier 1 & 2 HRA analyses in the attachments.

H. Regulation XVII: Prevention of Significant Deterioration (PSD)

This is the District's regulation that sets forth the preconstruction review requirements for stationary sources in attainment areas, commonly known as Prevention of Significant Deterioration (PSD). Since the region is in attainment for SO_2, Reg. XVII applies to this project. However, effective March 3, 2003, SCAQMD's authority to implement PSD was revoked and rescinded. Therefore PSD evaluation and approval will now be determined by the EPA. The area where the facility is located is a Class II PSD area, so the project could be applicable to the PSD requirements requiring construction with BACT and not to exceed the following SO_2 PSD increments:

- Annual (AAM): 20 ug/m3 [max. predicted = 0.01 ug/m3]
- 24-hour maximum: 91 ug/m3 [0.1 ug/m3]
- 3-hr maximum: 512 ug/m3 [0.7 ug/m3]

However, the facility is not an existing major stationary source or a new or modified existing source where the increase is at least 250 tons of attainment air contaminants per year. Therefore, PSD preconstruction review requirements do not apply to this project.

I. Regulation XX: RECLAIM

The facility is an existing NO_x RECLAIM facility. The two (2) new CEB process flares will be handled as Large Sources, while the standby/emergency flare will be exempt per Rule 2012 (k) (meets "gas flare" definition). DCOR will continue to comply with the RECLAIM program requirements pursuant to Regulation XX including the addition of non-resettable fuel meters, monthly and quarterly reporting, source testing, and RTC allocation compliance.

J. Regulation XXX: Title V Federal Operating Permits

The facility is not a major source/Title V facility. The proposed changes should not affect the facility's major source/Title V status pursuant to Regulation XXX based on actual emissions, however, if a "synthetic minor" permit limit is required/recommended by the District due to the facility's potential to emit exceeding 10 tons per year of NO_X, a Form 500-E is attached to commence the permit limit process.

If you have any questions or comments, please contact me at (805) 535-2074, or our consultant Mike Shaffer of Shaffer Environmental Consulting at (805) 659-1744.

Sincerely,

Christine White

Christine White
Environmental Advisor

Attachments: SCAQMD Forms [Form 400-A (4); Form 400-CEQA (1); Form 500-E (1)]
Preliminary P&ID and Deck Plan Drawings
Flare Industries Product Information (CEB 350, CEB 800-CA, FEF-102 and CEB technology)
Emission Calculations and Rule 212/1401 Health Risk Analysis

Enclosures: Check for $11,439.02 (payable to SCAQMD)

SCAQMD Forms

[Form 400-A (4); Form 400-CEQA (1); Form 500-E (1)]

DCOR • 290 Maple Ct, Suite 290 • Ventura, California 93003 • (805) 535-2000 • (805) 535-2100 Fax

Preliminary P&ID
and
Deck Plan Drawings

DCOR • 290 Maple Ct, Suite 290 • Ventura, California 93003 • (805) 535-2000 • (805) 535-2100 Fax

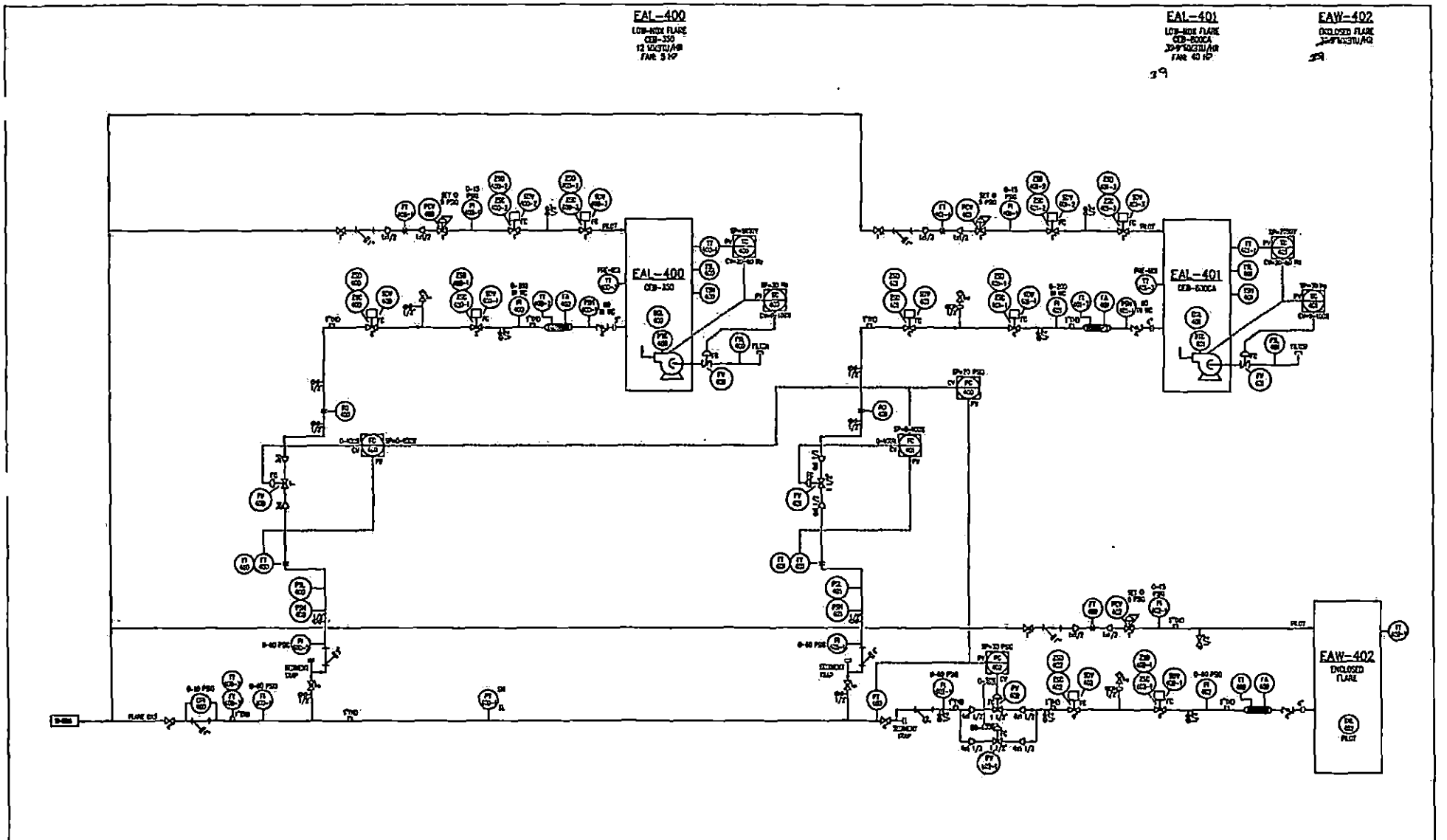

VANSON ENGINEERING CO.				DOS CUADRAS OFFSHORE RESOURCES, L.L.C.	EC	8/8/13	P & I DIAGRAM FLARE INSTALLATION PROJECT PLATFORM ESTHER SEAL BEACH, CALIFORNIA	
VANSON DWG NO. 13-7035 JOB NO. 2663 05				DCOR	HS	8/8/13		
PROCESSES UNLIMITED DWG NO. 1035-1G-04 REV. 0					HS	8/8/13	NONE	DCOR-ES-PP-D-0126	D

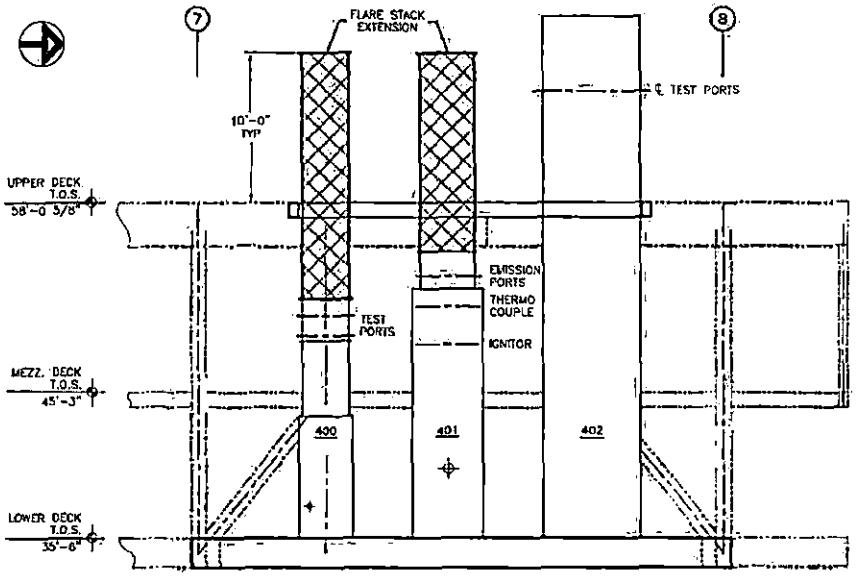

EAST ELEVATION (A)
SCALE: 1/4" = 1'-0"

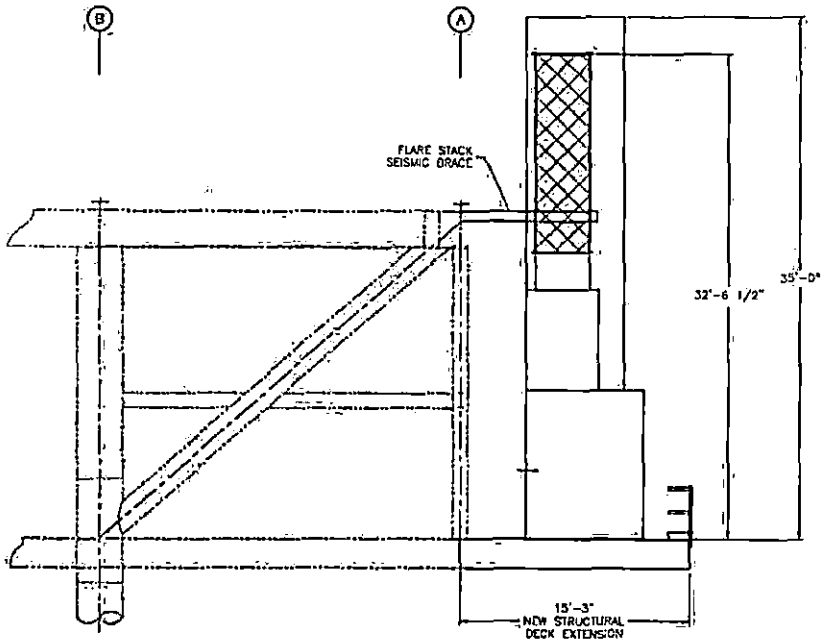

SOUTH ELEVATION (B)
SCALE: 1/4" = 1'-0"

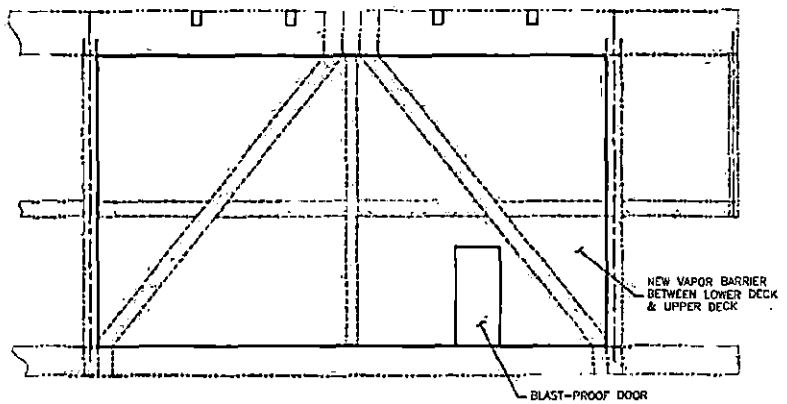

SECTION (C)
SCALE: 1/4" = 1'-0"

DRAFT - IN PROGRESS

Rev	Date	Description	Rev By	Chd By	App'd
B	8-07-13	IN PROGRESS - FOR REVIEW	RM	RJB	RJB

DRAWN BY:	RM
CHECKED BY:	RJB
APP'D:	RJB
SCALE:	NOTED
DATE:	5-09-13
JOB NO.:	1838

THOMAS & BEERS
ENGINEERING, ANALYSIS & DESIGN
572 Fall St., Ventura, Ca. 93001

DCOR – PLATFORM ESTHER
FLARE DECK EXTENSION
ELEVATIONS & SECTIONS

Drawing No.: D-1838-S3 Rev. B

Flare Industries Product Information
(CEB 350 & CEB 800-CA, FEF-102 and CEB technology)

DCOR • 290 Maple Ct, Suite 290 • Ventura, California 93003 • (805) 535-2000 • (805) 535-2100 Fax

FLARE INDUSTRIES CEB® 350

The cleanest solution to your waste gas combustion needs



Photos of two CEB® 350 units

Capacity*	270,000 SCFD or 270 MSCFD
Maximum thermal capacity*	12 MMBTU/hr
Turndown ratio**	10:1
Footprint and height***	3'8" x 3'8" x 18'
Approximate weight	2,310 lbs.
Waste gas supply pressure	10 – 80" WC
Fan motor size	4.7 hp
Waste gas connection	3" ANSI 150 lbs. RF
Support gas connection	1" ANSI 150 lbs. RF
Ignition System	Spark or pilot ignition
Operating temperature	1,800 to 2,200°F
Ground temperature	Ambient during operation

* Capacity is based on natural gas with gross heating value of 1,069 BTU/scf

** Turndown ratio can be increased for specific projects with customized units

*** Stack height is based on minimum height that meets EPA's protocol for position of the testing ports

All mentioned trademarks are registered trademarks of Flare Industries, LLC.

CEB® 350

Keep the environment clean when combusting your waste gases

- No luminous flame
- No odor
- No heat radiation
- No smoke
- Low height
- Small footprint
- Heat recovery available

Achievable emissions levels:

NOx ≤ 15 ppmv*

CO ≤ 15 ppmv*

CxHy ≤ 10 ppmv*

Combustion efficiency:

Up to 99.99% DRE over full operating range.

*** At 3% oxygen**

The CEB® 350 is a product of:

FLARE INDUTRIES, LLC

16310 Bratton Lane
BLDG 3, Suite 350
Austin, Texas 78728
USA

T: +1 (512) 836-9473

F: +1 (512) 836-3025

www.flareindustries.com

Refresh the PTE for the facility

FLARE INDUSTRIES CEB® 800 - CA

The cleanest solution to your waste gas combustion needs



Photos of CEB® 800-CA

Capacity*	875,000 SCFD or 875 MSCFD
Maximum thermal capacity*	**39 MMBTU/hr.**
Turndown ratio**	10:1
Footprint and height***	5' 10" x 6' 3" x 22' 10"
Approximate weight	5,511 lbs.
Waste gas supply pressure	10 – 80" WC
Fan motor size	40 hp
Waste gas connection	4" ANSI 150 lbs. RF
Support gas connection	2" ANSI 150 lbs. RF
Ignition System	Spark or pilot ignition
Operating temperature	1,800 to 2,200°F
Ground temperature	Ambient during operation

* Capacity is based on natural gas with gross heating value of 1,069 BTU/scf
** Turndown ratio can be increased for specific projects with customized units
*** Stack height is based on minimum height that meets EPA's protocol for position of the testing ports

All mentioned trademarks are registered trademarks of Flare Industries, LLC.

CEB® 800- CA

Keep the environment clean when combusting your waste gases

- No luminous flame
- No odor
- No heat radiation
- No smoke
- Low height
- Small footprint
- Heat recovery available

Achievable emissions levels:

NOx ≤ 15 ppmv at 3% oxygen

CO ≤ 15 ppmv at 3% oxygen

CxHy ≤ 10 ppmv at 3% oxygen

Combustion efficiency:
Up to 99.99% DRE over full operating range.

The CEB® 800-CA is a product of:

FLARE INDUTRIES, LLC

16310 Bratton Lane
BLDG 3, Suite 350
Austin, Texas 78728
USA

T: +1 (512) 836-9473

F: +1 (512) 836-3025

www.flareindustries.com

FLARE INDUSTRIES'

Fully Enclosed Flare (FEF)- 90
With temperature control

The clear choice for your enclosed combustion requirements

Design Features:

- Controlled combustion environment
- Natural draft or forced designs
- Temperature controlled
- Multiple burners for staging
- No visible flame
- Low noise
- High turndown ratio
- Smokeless operation
- Fully automated controls
- High destruction efficiency
- Low NOx emissions
- Low CO emissions
- Skid mounted option
- Modular construction
- Multi-fuel pilot

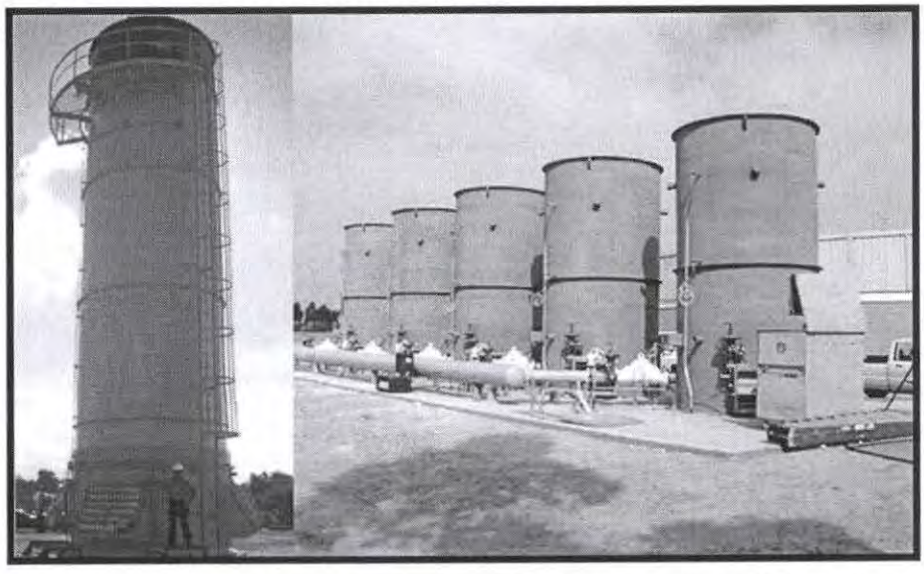

The fully enclosed flare (FEF) is a completely enclosed flare system in which combustion occurs inside an insulated flare stack, in a controlled environment. Enclosed combustion ensures that combustion radiation, noise and flame presence are imperceptible to the outside observer. The FEF consists of the following components:

Burner and Pilot – The FEF burner is the most advanced burner available in the industry today. Designed for high destruction efficiency and low emissions, this burner allows for efficient combustion in natural draft configuration. The NOx and CO emission rates meet or beat most regulatory agency requirements (i.e. SCAQMD). And our compact, fuel efficient electronic pilot provides trouble free, reliable ignition.

Enclosed stack – The flare stack , the body of the enclosed system, is built in modules to simplify shipment and installation efforts. Sizing is based on flow rate and ensures a minimum of 0.6 seconds residence time. Several inches of high temperature refractory line the inside walls of the stack to ensure radiation insulation.

Combustion air system – FEF systems are available in either natural or forced draft configurations. In the natural draft configuration, the simpler and more cost-effective option, air is controlled using opposed blade air louvers, which actuate as required to maintain combustion chamber temperature. The forced draft configuration utilizes a blower assembly to provide the necessary air. Forced draft systems are recommended in environments where high winds would cause reverse flow in a natural draft system, thereby extinguishing the flame.

Control panel – FEF controls enclosures are available in either NEMA 4X or NEMA 7 models. Safety systems, remote start/stop and alarm contacts are standard items in this fully automated control system.

SALES@FLAREINDUSTRIES.COM
WWW.FLAREINDUSTRIES.COM

FLARE INDUSTRIES'

Fully Enclosed Flare (FEF)- 90

The clear choice for your enclosed combustion requirements

Materials

Burner material:	Stainless steel
Pilot material:	Stainless steel
Stack material:	Carbon steel

Specifications

Diameter of stack:	90"
Maximum firing rate:	51 MMBTU/hr.
Process connection:	150 lbs. ANSI Flange
Turndown:	8:1 (higher available)
Operating temperature:	1400-1700°F
NOx emissions:	≤ 0.06 lbs./MMBTU
CO emissions:	≤ 0.37 lbs./MMBTU
Visible Emissions:	None
Destruction Efficiency:	≥ 98%
Combustion efficiency:	≥ 98%

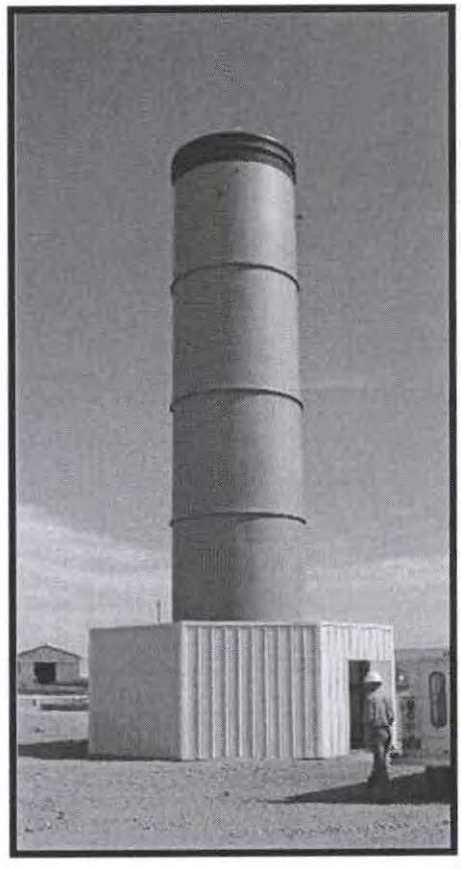

The FEF-90 is a product of:

FLARE INDUTRIES, LLC

16310 Bratton Lane
BLDG 3, Suite 350
Austin, Texas 78728
USA

T: +1 (512) 836-9473

F: +1 (512) 836-3025

SALES@FLAREINDUSTRIES.COM
WWW.FLAREINDUSTRIES.COM

EAE.90

FLARE INDUSTRIES
INNOVATIVE COMBUSTION SOLUTIONS

FLARE INDUSTRIES'
Fully Enclosed Flare (FEF)- 102

The clear choice for your enclosed combustion requirements

Design Features:

- Controlled combustion environment
- Natural draft or forced designs
- Multiple burners for staging
- No visible flame
- Low noise
- High turndown ratio
- Smokeless operation
- Fully automated controls
- High destruction efficiency
- Low NOx emissions
- Low CO emissions
- Skid mounted option
- Modular construction
- Multi-fuel pilot

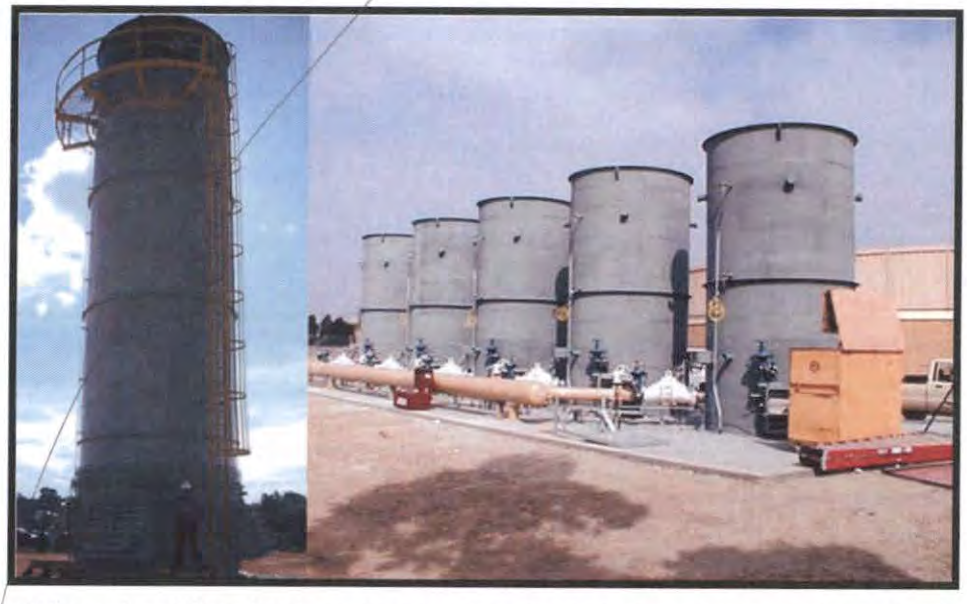

The fully enclosed flare (FEF) is a completely enclosed flare system in which combustion occurs inside an insulated flare stack, in a controlled environment. Enclosed combustion ensures that combustion radiation, noise and flame presence are imperceptible to the outside observer. The FEF consists of the following components:

Burner and Pilot – The FEF burner is the most advanced burner available in the industry today. Designed for high destruction efficiency and low emissions, this burner allows for efficient combustion in natural draft configuration. The NOx and CO emission rates meet or beat most regulatory agency requirements (i.e. SCAQMD). And our compact, fuel efficient electronic pilot provides trouble free, reliable ignition.

Enclosed stack – The flare stack , the body of the enclosed system, is built in modules to simplify shipment and installation efforts. Sizing is based on flow rate and ensures a minimum of 0.6 seconds residence time. Several inches of high temperature refractory line the inside walls of the stack to ensure radiation insulation.

Combustion air system – FEF systems are available in either natural or forced draft configurations. In the natural draft configuration, the simpler and more cost-effective option, air is controlled using opposed blade air louvers, which actuate as required to maintain combustion chamber temperature. The forced draft configuration utilizes a blower assembly to provide the necessary air. Forced draft systems are recommended in environments where high winds would cause reverse flow in a natural draft system, thereby extinguishing the flame.

Control panel – FEF controls enclosures are available in either NEMA 4X or NEMA 7 models. Safety systems, remote start/stop and alarm contacts are standard items in this fully automated control system.

SALES@FLAREINDUSTRIES.COM
WWW.FLAREINDUSTRIES.COM

changed to FEF 90

FLARE INDUSTRIES
INNOVATIVE COMBUSTION SOLUTIONS

FLARE INDUSTRIES'
Fully Enclosed Flare (FEF)- 102

The clear choice for your enclosed combustion requirements

Materials

Burner material:	Stainless steel
Pilot material:	Stainless steel
Stack material:	Carbon steel

Specifications

Diameter of stack:	102"
Maximum firing rate:	51 MMBTU/hr.
Process connection:	150 lbs. ANSI Flange
Turndown:	8:1 (higher available)
Operating temperature:	1400-1700°F
NOx emissions:	≤ 0.068 lbs./MMBTU
CO emissions:	≤ 0.37 lbs./MMBTU
Visible Emissions:	None
Destruction Efficiency:	≥ 98%
Combustion efficiency:	≥ 98%

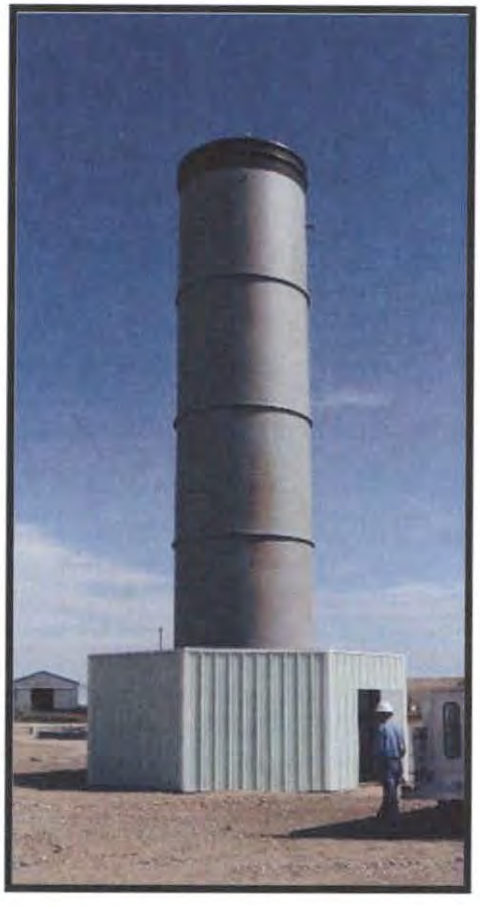

The FEF-102 is a product of:

FLARE INDUTRIES, LLC

16310 Bratton Lane
BLDG 3, Suite 350
Austin, Texas 78728
USA

T: +1 (512) 836-9473

F: +1 (512) 836-3025

SALES@FLAREINDUSTRIES.COM
WWW.FLAREINDUSTRIES.COM

FLARE
INDUSTRIES
INNOVATIVE COMBUSTION SOLUTIONS

CEB® - Vapor Treatment Systems









smart technology clean air

Introduction to Flare Industries

Flare Industries, headquartered in Austin, Texas, USA, is one of the industry leaders in combustion and pollution control technology, providing quality flare systems, thermal oxidizers, incinerators, burners, and ignition systems since 1984. Flare Industries' world-class air quality and pollution control equipment is designed by some of the most experienced engineers in the industry.

The focus of our team is to provide cutting edge combustion and environmental technology, experience , innovation, and superior service; all of which give our growing client base successful solutions and the highest level of quality and satisfaction.

With offices located all around the world and a sales and marketing network spanning the globe, our company is totally dedicated to the global marketplace and rapidly changing business environment of the 21st century. Our staff of engineers is well-versed in multiple languages, cultures, and business environments, providing our clients with superior service. Flare Industries has thousands of installed combustion systems currently eliminating industrial waste around the world.

Introduction to Clean Enclosed Burner (CEB®) Technology

In July 2012, Flare Industries acquired the Clean Enclosed Burner (CEB®) product line from N.V. Bekaert S.A. The CEB uses Bekaert's proprietary Bekinit® metal fiber for premix surface combustion. Premix surface combustion has been developed and successfully implemented by Bekaert since the mid 1980s in millions of OEM burners for domestic hot water heaters and high efficiency boilers.

The primary advantages of the CEB® products versus conventional enclosed flares or open flares are the ultra-low emissions and very high VOC destruction efficiencies (99.99%). This coupled with the compact footprint and no smoke, soot, or visible flame, make it a very attractive solution for vapor combustion requirements.

The CEB® product line ranges from units with a nominal thermal capacities of 0.34 MMBTU/hr (1 kw) to 40 MMBTU/hr (12 MW). The CEB® systems are modular and can easily be combined to cover the most demanding flow and thermal capacity requirements, ensuring cost effective operation under all process conditions. Future expansion or reduction of the installed thermal capacity is easy to realize, making sure that the CEB® installation is always configurated to the actual requirements.

Pre-mixed surface combustion is a combustion process in which the fuel (waste gas and/or support gas) and combustion air streams are thoroughly mixed into a homogeneous mixture before passing through the Bekinit® permeable medium which breaks up the flow into millions of small flow streams just before combustion takes place. The combustion process actually takes place above the permeable medium.

The CEB® utilizes a variable speed fan to provide the correct air flow to premix with the waste gas prior to combustion. The system is automatically controlled to ensure ultra-low emissions even if the waste gas flow or composition changes. The CEB® can also be fitted with an assist or support gas line for lean gas applications <160 Btu/scf (< 6MJ/Nm^3) or when the waste gas is too low in volume.



Flare Industries' CEB® offers several advantages...

All CEB® systems are capable of achieving VOC destruction efficiencies of up to 99.99 %, while generating less than 15 ppmv (0.023 Lbs/MMBTU) of NO_x and less than 10 ppm CO (0.015 Lbs/MMBTU) at 3% oxygen.

The CEB® operates without a visible flame, smoke/soot or any odors. Because of the non-luminous flame, it does not generate heat from radiation (only convection). The compact footprint, simple installation, easy maintenance and very low life cycle/operational costs make the CEB® suitable for every type of application, from continuous and discontinuous operation to emergency backup of other equipment.

CEB® systems can easily be combined to cover a wide range of flows and operating conditions. By operating the CEB® units in a modular way, you can tailor the capacity of the total system to your current needs, which reduces your operating costs while minimizing your emissions. Heat recovery modules are available for all models and can be installed afterwards.

Where you can find CEB® systems...

CEB® systems have been installed in over 75 applications around the world to date. They are found in on-shore upstream oil and gas (drilling/exploration/well testing/associated gas), midstream oil and gas (treatment/separation systems and compressor stations), gas transport pipe line operations (pressure relief/degassing), tank park- load/unload applications (tank-ship-train-truck), tank venting, tank cleaning, pipe line cleaning, (petro)chemical industry (reactor venting, reactor and pipe line cleaning, treatment of residue gases/vapors), synthetic gas production, biogas and biofuel production, wastewater treatment, landfill, mine-gas etc.

Based on our in-depth knowledge and practical experience in many applications, the CEB® systems are offered in tailored solutions to meet your vapor/waste gas treatment needs, from vapor/waste gas flow control trains (for general or zoned/classified areas) to vapor/waste gas treatment.

CEB® systems are often a sound alternative to (Regenerative) Thermal Oxidizers, Vapor Recovery Units, incinerators and traditional flares, especially when emissions (VOC, NO_x or CO) are a restriction, when the waste gas/vapor contains very low energy (6 MJ/Nm^3 or 160 BTU/scf) or when the flow rates or waste gas/vapor composition changes often.

Main advantages of the CEB® systems

Very low emissions (at 3% oxygen level in the flue gas and with Methane as reference gas)*:

- NO_x < 15 ppm or < 31.7 mg/Nm^3
- CO < 10 ppm or < 12.5 mg/Nm^3
- C_xH_y < 10 ppm or < 7.2 mg/Nm^3

- Combustion efficiency (DRE) ≥ 99.99% within the full operating range
- Standard operational temperature 2192-2282°F (1200-1250°C)
- Best acceptance of (fast) changes in vapor/gas compositions
- Best acceptance of mixed vapors/gasses, of (fast) flow volume and simultaneous flow volume and gas composition changes
- Very good lean gas processing capabilities, combustion down to 10 - 15 % methane equivalent (4 – 6 MJ/Nm^3)
- Very low support (fuel) gas consumption in case of i.e. inert gas flows (such as Nitrogen or Air)
- Very compact (footprint and height)
- High turn down ratio (> 1:10)
- Full PLC controlled and monitored stand-alone operation with remote control/monitor options
- No residence time required (short chimney/stack)
- No luminous flame, smell/odor emission and infra-red/heat radiation
- Smokeless combustion, no soot
- Low Noise Level
- Fast start-up (from cold stand-by to full operation at 1200 degree Centigrade in < 1 minute)
- Full flexibility within the thermal operational range regarding changes in flow volume and/or gas composition
- Easy and fast installation (fully assembled and tested in the factory, plug & play on site)

Achieve ultra-low emissions with our pre-mix surface technology

Characteristics of the CEB Product Portfolio

	Nominal Thermal Capacity (MW // MMBtu/hr)	Nominal waste gas flow** per hour (Nm^3/h-scfm)	Number of burner units	Standard waste gas connection (ANSI 150 Lbs RF)	Footprint and Height (mm)	Weight (kg - Lbs)	Electrical power consumption max (kWatt- HP)
CEB 10	0.1 / 0.34	9 - 5.7	1	1"	900 x 900 x 1500	350 - 768	2.0 - 2.68
CEB 50	0.5 / 1.7	45 - 27	1	2"	1100 x1100 x 3300	820 - 1800	2.0 - 2.68
CEB 100	1.0 / 3.4	90 - 53	1	2"	1100 x 1100 x 3300	850 - 1870	2.0 - 2.68
CEB 350	3.5 / 12	316 - 186	1	3"	1100 x 1100 x 4024	1050 - 2310	3.5 - 4.7
CEB 500	5.0 / 17	452 - 266	1	4"	1100 x 1100 x 4024	1130 - 2490	6.0 - 8.0
CEB 800	8.0 / 27	723 - 426	1	4"	1430 x 1953 x 5859	2750 - 6060	16.0 - 21.4
CEB 1200	12.0 / 41	1085 - 639	1	4"	1430 x 1953 x 5859	2850 - 6280	31.0 - 41.6

Inlet Waste Gas Pressure (min/max): 25-200 mbar(g) or 10-80" W.C.

*Emissions results are based on natural gas combustion with gross heating value of 1,069 Btu/scf (39.82 MJ/Nm^3)

**Waste gas flow based on natural gas combustion with gross heating value of 1,069 Btu/scf (39.82 MJ/Nm^3)

CEB® systems for loading / unloading and tank park applications

The CEB® vapor combustor is an ultra-low emission system that can achieve VOC destruction efficiencies up to 99.99%, while generating less than 15 ppmv of NO_x at 3% oxygen (<0.023 Lbs./MMBTU) and less than 10 ppmv CO (<0.015 Lbs/MMBTU)* . This makes the CEB® the ideal choice for your terminals, which are in environmentally sensitive areas where VOC or NO_x emissions are critical.

In addition, the CEB® is capable of handling a wide range of waste gases/vapors without modification, giving you a very flexible solution for your complex operation. All your waste gas/vapor streams from your tanks, trucks, railcars or vessels can be handled by the same unit.

The incredibly stable premixed, surface combustion technology allows the CEB® to operate on as little as 6MJ/Nm^3 or 160 BTU/scf without the need for support gas. If you are dealing with tanks that are blanketed with nitrogen or are handling a very lean waste gas, the CEB® technology will significantly reduce your support gas requirements and your operating costs.

The efficiency of the premix surface combustion technology allows the CEB® to be built in a very compact footprint with a short exhaust stack. Thus the CEB® is ideal for installations where space is limited. Furthermore, the low radiant footprint that is generated by the non-luminous flame generates very little radiant heat (convective heat only), which allows you to site the CEB® closer to other equipment and structures than traditional flares.



CEB 800® at tank park



3 x CEB 800®

Typical Applications

- Truck and rail car loading/unloading
- Barge and ship loading/unloading
- Storage tank transfer and breathing
- Barge and tank degassing
- Pipeline stations and maintenance

*Emissions results are based on natural gas combustion with gross heating value of 39.82 MJ/Nm^3

Solve your hydrocarbons emissions at the lowest costs

CEB® systems for petrochemical and chemical industries

Flare Industries' CEB® Technology is the perfect solution for the wide range of applications and requirements that are present in today's petrochemical facilities. With an ever increasing focus on the environment and pollution (VOCs, NO_x and CO), more and more pressure is placed on petrochemical facilities to reduce their site emission levels.

One way to achieve this, without impacting productivity, is to replace conventional candlestick and enclosed flares with the ultra low emission CEB® technology. The proprietary premix, surface combustion technology employed by the CEB® enables it to achieve VOC destruction efficiencies of up to 99.99 %, while generating the lowest emission levels available in the market and can significantly reduce your sites overall emissions.

In some regions of the world, environmental agencies are monitoring the misuse of plant emergency flares. In Texas (US), the Texas commission on Environmental Quality (TCEQ) is using infrared camera systems to detect VOC emissions from petrochemical plants. In doing this, they have discovered that many facilities are sending small amounts of process waste gas to their large, plant-wide emergency flares, which are sized for much larger volumes. The result is a staggering reduction in the flares destruction efficiency, sometimes as low as 50%. The TCEQ is now promoting the concept of using small, ultra low emission control devices for process waste gases and leaving the plant-wide emergency flare for just that, emergencies.

In addition, for storage tanks that are blanketed with nitrogen, the CEB® is the most economical choice for a control device for your tank breathing applications. This is due to the very stable combustion reaction thanks which enables the CEB to operate on very lean waste gases, and still meet its emission guarantees without the need for support gas.

The CEB® is ideal for:

- Vent gas flare
- Reactor, dryers and other process vents
- Tank loading
- Tank or pipeline degassing
- In conjunction with emergency flare to handle small volume releases

*Emissions results are based on natural gas combustion with gross heating value of 39.82 MJ/Nm^3



CEB 350® at petrochemical plant



Two CEB 4800® at chemical plant

CEB® systems for biogas and synthetic gas applications

CEB Systems have been utilized for a variety of biogas applications with great success. The benefits of the CEB systems are recognized and appreciated in the following applications.

Pipeline Purification - The CEB is ideally suited to handle the lean tail gas streams produced by the pressure-swing adsorption or membrane systems with little to no assist or support gas.

Siloxane removal systems - The ultra-low emission CEB is ideally suited for the continuously produced lean tail-gas from the siloxane removal systems.

Low caloric value biogas streams - Closed landfills generating methane gas less than 30% are able to use the CEB systems which can operated without support gas down to 15% methane equivalent, thereby saving in operational costs.



CEB 100® with waste gas compressor enclosed in weather proof box

Reduce your plant emissions and save in operating costs

Traditional biogas applications - The CEB is a great choice for traditional wastewater or landfill biogas applications due to the ultra-low emissions, fast start & stop, and unobtrusive presence.

Synthetic gas - The changing flows, compositions, and operational cycles of synthetic gas production plants are well served by a CEB system which can readily handle the variety of waste gas streams without missing a beat.

Onshore upstream and midstream oil and gas

Upstream

During well exploration and testing activities, substantial flows of (associated) gas can be liberated from the well and must be effectively controlled in order to avoid safety and environmental issues. The CEB's® ability to process fast fluctuations in flow rate and composition of the associated gas while maintaining very high destruction efficiencies up to 99.99% makes the CEB® the ideal choice for exploration and well testing applications.

In addition, the compact footprint, low profile stack, non visible flame and soot less operation can be key benefits when drilling in or near residential areas.



CEB 4500HP® at upstream well site

Midstream

With an ever increasing global demand for oil, more and more companies are expanding their exploration efforts. In many fields, the oil in the ground is mixed with water and gases, such as methane, ethane, propane and other hydrocarbons, and must be separated from these contaminants before it can be sent to refineries. The gas that is separated during this process can be used to heat the three-phase separator, to generate power in micro-turbines, or be purified to pipeline quality to be sold as natural gas.



CEB 350® at midstream location

In many cases, there is not enough gas generated by the process to justify the significant investment in micro-turbines or a purification plant. In these situations, the oil exploration company must find an economical and environmentally acceptable way of controlling these gases or risk having limitations on how much oil they can pump in a day. Currently there are seven units operating in this application in Southern California, five of which are within South Coast Air Quality Management District, the most environmentally strict location in North America.

For applications where the process gas is utilized, there may still be a requirement for a low-emission back-up system. The CEB® is an economical and environmentally acceptable technology for this application, that will provide worry-free service, allowing you to focus on your oil production.



CEB 500® at mistream location

Get the best solution for exploration and well testing operations

Heat recovery system

The heat recovery system is based on the plate heat exchanger technology, with special features to handle the very high temperature flue gases (up to 1300°C/2372°F). The overall thermal efficiency of the heat exchanger is up to 70% considering an inlet thermal fluid temperature as ambient.



Conception :

The high reliability of the heat exchanger is based on a concept that gathers the efficiency of the plates heat exchangers standard systems together with robustness of the U-tube profile.

Indeed, the plates are welded only at one extremity so it can expand without any constraint when exposed to thermal cycles and especially thermal shocks. The plate design has been made to avoid "dead zone" circulation, thus preventing the thermal fluid from boiling up.

Advantages :

- Compactness of plates configuration resulting in high exchange coefficient for reduced exchange surfaces
- Reliability
- U-plate reliability versus thermal constraints ; mechanical constraints on the welding reduced during thermal shocks



The CEB® Heat recovery module converts the combustion heat of the CEB® system into:

- Hot air
- Thermal oil
- Hot water
- Steam

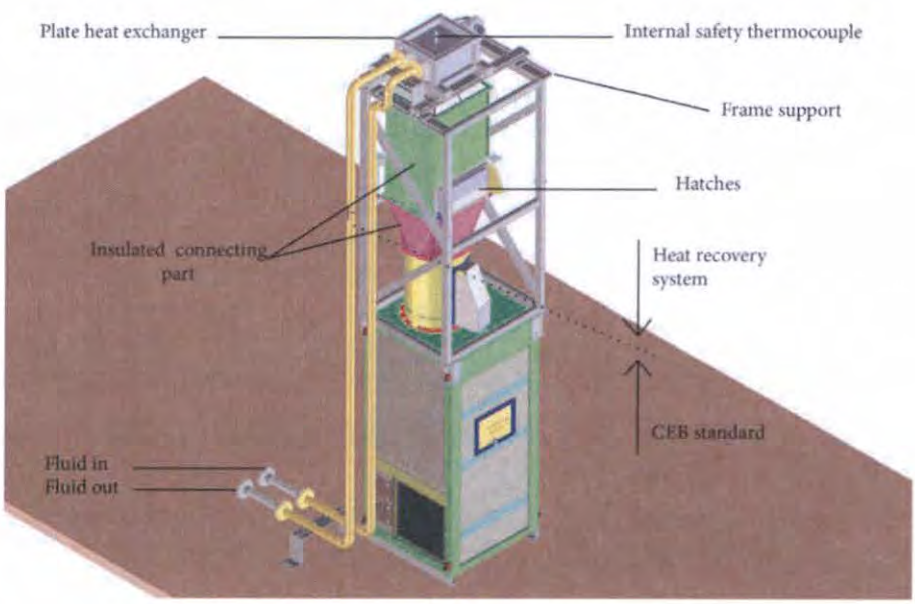

Don't waste the energy of your waste gas/vapor

FLARE INDUSTRIES

INNOVATIVE COMBUSTION SOLUTIONS

Flare Industries LLC
16310 Bratton Lane,
Building 3, Suite 350
Austin, TX 78728
USA
T + 1 512 836 9473
F + 1 512 836 3025
www.flareindustries.com

The focus of our team is to provide cutting edge combustion and environmental technology, experience, innovation, and superior service; all of which give our growing client base successful solutions and the highest level of quality and satisfaction

CEB 350 Process Flare
Emission Calculations
and
Rule 212/1401 Health Risk Analysis

DCOR • 290 Maple Ct, Suite 290 • Ventura, California 93003 • (805) 535-2000 • (805) 535-2100 Fax

DCOR, LLC - Platform Esther (143740)
Emission Calculations - New Flare - CEB 350

DEVICE ID	TBD		
SIC	1311		
PROCESS EQPT DESCRIPTION	FLARE, FLARE INDUSTRIES, CEB 350, 12 MMBTU/HR		
FUEL TYPE/PROCESS INFO	FIELD/PRODUCED GAS		
MAX. ANNUAL PROCESS RATE	92.35	MMCF	[12 MMBTU/HR x 8760 HRS/YR x 1/HHV-average (1138.3 Btu/scf)]
MAX. DAILY PROCESS RATE	0.253	MMCF	[12 MMBTU/HR x 24 HRS/DAY x 1/HHV-average (1138.3 Btu/scf)]
AVG. DAILY PROCESS RATE	0.100	MMCF	(projected by DCOR)

HHV= 1138.30

			check
Fuel in	175.701	scfm	175.701
Exhaust (est)	1,726.55	dscfm (0% O2 in exhaust)	
Exhaust (est)	3,032.34	dscfm (9% O2 in exhaust)	

SUBSTANCE NAME	EMISSION FACTOR (EF) REFERENCE	EF LBS/MMBtu	EF LBS/UNIT	AVG LBS/DAY	PTE LBS/HR	PTE LBS/DAY	PTE LBS/YR	30DA LBS/DAY	CONC PPM @ 3%	
NOx	Manufacturer's Guarantee (15 ppmv @ 3%O2)	0.0183	20.83	2.08	0.22	5.27	1,923.70	5.34	15.03	
VOC / RHC	Manufacturer's Guarantee (10 ppmv @ 3%O2)	0.0043	4.89	0.49	0.05	1.24	452.02	1.26	10.15	(as CH_4)
PM10	Test Results (Linn; 3/26/2013; 0.001 gr/dscf @ 3%)	0.0052	5.92	0.59	0.06	1.50	546.62	1.52	0.0010	(gr/dscf)
SOx	SCAQMD (mass balance 30 ppmv total S as H_2S)	0.0044	5.03	0.50	0.05	1.27	464.64	1.29	2.61	(as SO_2)
CO	Manufacturer's Guarantee (10 ppmv @ 3%O2)	0.0075	8.54	0.85	0.09	2.16	788.40	2.19	10.12	(as CO)

Notes:

1. SOx EF (SCAQMD mass balance conservatively assuming 30 ppmv H_2S content in the gas: (10x10E-6)/(379 dscf/lb-mole)(64 lb/lb-mole)(dscf/1138 BTU) = 0.0044201 lb/MMBTU)

SUBSTANCE NAME	EMITTENT ID	EMISSION FACTOR (EF) REFERENCE	Gas Conc. ppbv	MW lb/lb-mole	PTE lb/hr	PTE lb/day	PTE lb/yr	PTE g/sec (max)
PAHs (total including Naphthalene)	1151		ND		0.00E+00	0.00E+00	0.00000	0.00E+00
Xylenes (m-, p-, o-)	1210	Gas analysis (99.98% DRE, Warren)	234300	106.16	1.38E-04	3.32E-03	1.21214	1.74E-05
Benzene	71432	Gas analysis (99.98% DRE, Warren)	127500	78.11	2.77E-05	6.65E-04	0.24266	3.49E-06
Toluene	108883	Gas analysis (99.98% DRE, Warren)	121456	92.14	6.23E-05	1.49E-03	0.54536	7.84E-06
Propylene	115071	Gas analysis (99.98% DRE, Warren)	30000000	42.08	7.02E-03	1.69E-01	61.52002	8.85E-04
Ethyl Benzene	100414	Gas analysis (99.97% DRE, Warren)	45900	106.17	4.07E-05	9.76E-04	0.35623	5.12E-06
Hexane	110543	Gas analysis (99.98% DRE, Warren)	495000	86.18	2.37E-04	5.70E-03	2.07889	2.99E-05
Trichloroethylene	79016	Gas analysis (99.98% DRE, Warren)	1020	131.39	7.46E-07	1.79E-05	0.00653	9.39E-08

Notes:

2. HAP/toxics mass emissions calculated as follows: lb/hr = (X ppmbv/10E-9)(max. gas flow, dscf/hr)(1 lb-mole/379 dscf)(MW, lb/lb-mole)(1-DRE%/100).
3. HAP/toxics gas concentrations based on sample results from Warren & PXP-Murphy CEB Flare applications; highest value mutiplied by 1.5 (conservative estimate).

NOx

Reclaimed @ 68°F

DCOR, LLC - Platform Esther (14374U)

Emission Calculations - Added Fugities related to new CEB 350 Flare

Gas Service:

Component Type	Additional Equipment - Component Counts: Pre-CEB 350 Components	Post-CEB 350 Components	Total Count	Fraction (2 year history): No Leak <10,000 ppm	Leak >10,000 ppm	No Leak: Emission Factor[1] - TOC (kg/hr/source)	No Leak: Emission Factor[1] - TOC (lb/hr/source)	Leak: Emission Factor[1] - TOC (kg/hr/source)	Leak: Emission Factor[1] - TOC (lb/hr/source)	Total Emissions (lbs/hr)
Valves	669	681	12	0.9964	0.0036	3.500E-05	7.70E-05	1.386E-01	3.05E-01	**0.0140**
Pumps/pump seals	0	0	0	1.0000	0.0000	9.960E-04	2.19E-03	8.900E-02	1.96E-01	-
Others (meters, PRVs, etc.)[2]	142	142	0	0.9921	0.0079	1.470E-04	3.23E-04	1.376E-01	3.03E-01	-
Fittings/Connectors	1,238	1260	22	0.9997	0.0003	1.200E-05	2.64E-05	2.590E-02	5.70E-02	**0.0009**
Flanges	826	830	4	0.9997	0.0003	2.800E-05	6.16E-05	6.100E-02	1.34E-01	**0.0004**
Open-ended lines	0	0	0	0.9997	0.0003	2.400E-05	5.28E-05	5.490E-02	1.21E-01	-

[1] THC Emission Factor Source: SCAQMD Fugitive Guidelines/CAPCOA document, Table IV-2c (<10,000 ppmv)

[2] Max leak rate percentage based on non-PRV components.

[3] VOC fraction based on gas sample analysis of field gas.

TOC Hourly Total =	**0.0154**
TOC Daily Total (24 hours)=	**0.3695**
TOC Annual Total (8760 hours) =	**134.86**
VOC:TOC Adjustment[3] =	**0.2465**
VOC Hourly Total =	**0.0038**
VOC Daily Total (24 hours)=	**0.0911**
VOC Annual Total (8760 hours) =	**33.25**

Emission Increase per Modifications - Gas Components	
VOC Hourly Total +20% =	**0.0046**
VOC Daily Total +20% =	**0.1093**
VOC Annual Total + 20% =	**39.90**

DCOR, LLC - Platform Esther (143740)
Emission Calculations - Added Fugities related to new CEB 350 Flare

Liquid Service:

Component Type	Additional Equipment - Component Counts: Pre-CEB 350 Components	Post-CEB 350 Components	Total Count	Fraction (2 year history): No Leak <10,000 ppm	Leak >10,000 ppm	No Leak: Emission Factor[1] - TOC (kg/hr/source)	No Leak: Emission Factor[1] - TOC (lb/hr/source)	Leak: Emission Factor[1] - TOC (kg/hr/source)	Leak: Emission Factor[1] - TOC (lb/hr/source)	Total Emissions (lbs/hr)
Valves	446	446	0	0.9964	0.0036	1.900E-05	4.18E-05	7.070E-02	1.56E-01	-
Pumps/pump seals	14	14	0	1.0000	0.0000	2.650E-04	5.83E-04	8.900E-02	1.96E-01	-
Others (meters, PRVs, etc.)	94	94	0	0.9921	0.0079	1.310E-04	2.88E-04	7.100E-03	1.56E-02	-
Fittings/Connectors	826	826	0	0.9997	0.0003	1.000E-05	2.20E-05	2.340E-02	5.15E-02	-
Flanges	550	550	0	0.9997	0.0003	2.400E-05	5.28E-05	2.600E-01	5.72E-01	-
Open-ended lines	0	0	0	0.9997	0.0003	1.800E-05	3.96E-05	2.220E-02	4.88E-02	-

[1] THC Emission Factor Source: SCAQMD Fugitive Guidelines/CAPCOA document, Table IV-2c (<10,000 ppmv)

[2] Max leak rate percentage based on non-PRV components.

[3] VOC assumed to be 100% for all liquid streams.

TOC Hourly Total =	-
TOC Daily Total (24 hours)=	-
TOC Annual Total (8760 hours) =	-
VOC:TOC Adjustment[3] =	**1.00**
VOC Hourly Total =	-
VOC Daily Total (24 hours)=	-
VOC Annual Total (8760 hours) =	-

Emission Increase per Modifications - Liquid Components	
VOC Hourly Total +20% =	-
VOC Daily Total +20% =	-
VOC Annual Total + 20% =	-

Gas & Liquid Service:

Emission Increase per Modifications - Gas & Liquid Components	
VOC Hourly Total =	**0.0046**
VOC Daily Total =	**0.1093**
VOC Annual Total =	**39.90**

DCOR, LLC - Platform Esther (143740)
Emission Calculations - Added Fugities related to new CEB 350 Flare

RULE 1401 TAC Emissions - DCOR New CEB 350 Flare Fugitive Components (Gas & Liquid Components)

		Includes 20% increase				
TAC/Pollutant	EF (lb/lb)	Daily TOC (lb/day)	Annual TOC (lb/yr)	Emissions (lb/day)	Emissions (lb/yr)	Emissions (lb/hr)
Ammonia	1.2E-05	0.4434	161.83	5.3E-06	1.9E-03	2.2E-07
Benzene	2.9E-03	0.4434	161.83	1.3E-03	4.7E-01	5.4E-05
Ethyl Benzene	5.8E-04	0.4434	161.83	2.6E-04	9.4E-02	1.1E-05
Hydrogen Sulfide	1.1E-05	0.4434	161.83	4.9E-06	1.8E-03	2.0E-07
Naphthalene	5.0E-06	0.4434	161.83	2.2E-06	8.1E-04	9.2E-08
Toluene	2.6E-03	0.4434	161.83	1.2E-03	4.2E-01	4.8E-05
Xylene	1.8E-03	0.4434	161.83	8.0E-04	2.9E-01	3.3E-05

Note: HAP speciation factors from Unocal AB2588 testing results (1991). Highest results for all fields tested was selected as the speciation fraction.

Plains Exploration and Production Company
La Cienegas, Murphy Drill Site (ID# 144797)
Emission Calculations - Added Fugities related to new CEB 800 Flare

Rule 1173 Two-Year Fugitive Component Leak History
DCOR, LLC - Platform Esther (143740)

		Leaks >10,000 ppmv							
		2011				2012			
Component	Total Counts	Q1	Q2	Q3	Q4	Q1	Q2	Q3	Q4
Valve	1115	2	3	4	2	0	1	1	2
Fitting	3440	0	0	1	0	1	0	0	0
Other	236	1	1	0	1	0	1	0	0
Pump	14	0	0	0	0	0	0	0	0
Compressor	1	0	0	0	0	1	0	0	1
PRV	17	0	0	0	0	0	0	0	0

		Leaks >10,000 ppmv								Highest
	Total Counts	2011				2012				Leak %
Component	Field	Q1	Q2	Q3	Q4	Q1	Q2	Q3	Q4	2 Years
Valve	1115	0.18%	0.27%	0.36%	0.18%	0.00%	0.09%	0.09%	0.18%	0.36%
Fitting	3440	0.00%	0.00%	0.03%	0.00%	0.03%	0.00%	0.00%	0.00%	0.03%
Other	236	0.39%	0.39%	0.00%	0.39%	0.00%	0 39%	0.00%	0.00%	0.39%
Pump	14	0.00%	0.00%	0.00%	0.00%	0.00%	0.00%	0.00%	0.00%	0.00%
Compressor	1	0.00%	0.00%	0.00%	0.00%	100.0%	0.00%	0.00%	100.0%	100.0%
PRV	17	0.00%	0.00%	0.00%	0.00%	0.00%	0.00%	0.00%	0.00%	0.00%

Rule 1401 Risk Analysis
DCOR, LLC - Platform Esther (143740)
CEB 350 Flare HRA

Compliance with Rule 1401 is demonstrated by first calculating the potential Rule 1401 regulated pollutant emissions, then utilizing the Tier 1 screening approach as identified in SCAQMD's Risk Assessment Procedures for Rules 1401 and 212, Version 7.0, July 1, 2005, in conjunction with Permit Application Package "L", September 10, 2010. The Rule 1401 regulated pollutant emissions are estimated on the calculations sheet and summarized below:

Table I **CEB 350 Flare + Fugitives**

Pollutant	Yearly Emissions (lbs/year)	Hour Emissions (lbs/hour)
Ammonia	1.94E-03	2.22E-07
Benzene	7.12E-01	8.13E-05
Ethyl benzene	4.50E-01	5.14E-05
Hexane (-n)	2.08E+00	2.37E-04
Hydrogen Sulfide	1.78E-03	2.03E-07
Naphthalene	8.09E-04	9.24E-08
PAHs (total)	0.00E+00	0.00E+00
Propylene	6.15E+01	7.02E-03
Toluene	9.66E-01	1.10E-04
Trichloroethylene	6.53E-03	7.46E-07
Xylenes	1.50E+00	1.72E-04

Rule 1401 Risk Analysis
DCOR, LLC - Platform Esther (143740)
CEB 350 Flare HRA

TIER 1 - Screening Emission Levels

Now assessing the values listed in Table I with the insignificant risk screening values presented in Table 1A of SCAQMD's Rule 212/1401 document, the following individual Pollutant Screening Levels (PSIs) are calculated and total Application Screening Index (ASI) is generated. The values from Table 1A (25m) and their resulting PSI and ASI values are shown below:

Table II

Pollutant	Cancer/Chronic Insignificant Screening Level (100 meters; lb/yr)	PSI cancer/ chronic	Acute Insignificant Screening Level (100 meters; lb/hr)	PSI acute
Ammonia	51,700	3.756E-08	8.57	2.587E-08
Benzene	8.92	7.982E-02	3.96	2.052E-05
Ethyl benzene	102.0	4.413E-03	No Value	N/A
Hexane (-n)	1,810,000	1.149E-06	No Value	N/A
Hydrogen Sulfide	2,580	6.900E-07	0.11	1.814E-06
Naphthalene	2.49	3.250E-04	7.44	1.242E-08
PAHs (total)	7.69E-03	0.000E+00	No Value	N/A
Propylene	775,000	7.938E-05	No Value	N/A
Toluene	77,500	1.247E-05	99.10	1.113E-06
Trichloroethylene	127.0	5.143E-05	No Value	N/A
Xylenes	181,000	8.306E-06	58.90	2.914E-06
Total = ASI (cancer/chronic):		**8.471E-02**	**ASI (acute):**	**2.640E-05**

Since the cancer/chronic ASI is less than 1.0, a Tier 2 screening risk assessment is NOT necessary. [Note: Not required for ASI less than 10.0 for T-BACT applications, which this is.]

Gas Sample - Esther Gas (10/04/12)

Constiuent	MW	Mole %	lb/lb-mole	Wt %	Exansion Factor	Product
CO_2	44.01	2.000	0.88	4.20	1.00	0.02
N_2	28.01	3.600	1.01	4.81	1.00	0.04
O_2	32.00	0.900	0.29	1.37	1.00	0.01
H_2O	18.02	0.050	0.01	0.04	1.00	0.00
H_2S	34.08	0.000	0.00	0.00	6.65	0.00
Methane, CH_4	16.04	84.200	13.51	64.46	8.53	7.18
Ethane, C_2H_6	30.07	2.110	0.63	3.03	15.17	0.32
Propane, C_3H_8	44.10	2.773	1.22	5.84	21.82	0.61
i-Butane, i-C_4H_{10}	58.12	0.351	0.20	0.97	28.47	0.10
n-Butane, n-C_4H_{10}	58.12	0.351	0.20	0.97	28.47	0.10
i-Pentane, i-C_5H_{12}	72.15	1.088	0.79	3.75	35.11	0.38
n-Pentane, n-C_5H_{12}	72.15	1.088	0.79	3.75	35.11	0.38
n-Hexane, n-C_6H_{14}	86.18	0.469	0.40	1.93	41.76	0 20
n-Heptane, n-C_7H_{16}	100.21	1.020	1.02	4.88	48.40	0.49
n-Octane, n-C_8H_{18}	114.23	0.000	0.00	0.00	55.05	0.00
n-Nonane, n-C_9H_{20}	128.26	0.000	0.00	0.00	61.70	0.00
n-Decane, n-$C_{10}H_{22}$	142.29	0.000	0.00	0.00	68.34	0.00
Totals		100 001	20 96	**100.00**		**9.83**
Weight Fraction of Total Organics (C_1 +) in Gas:				**89.57**		
Weight Fraction of Reactive Organics (C_3 +) in Gas:				**22.08**		
ROG/TOG Fraction:				**0.2465**		
CH4/TOC Fraction:				**0.7196**		

%C	70.15
%H	20.58
%O	4.47
%N	4.81
%S	0.00
Total	100.00

Fuel Heat Value (Gross, HHV)

1. Perry's Chemical Engineers' Handbook (Table 9-13 & extrapolation, Sixth Edition)

BTU/ft3 = [(mole% methane * 1012 BTU/ft3) + (mole% ethane * 1786 BTU/ft3) + (mole% propane * 2522 BTU/ft3)
+ (mole% i-butane * 3163 BTU/ft3) + (mole% n-butane * 3261 BTU/ft3) + (mole% pentane * 4023 BTU/ft3)
+ (mole% n-hexane * 4758 BTU/ft3) + (mole% n-heptane * 5506 BTU/ft3) + (mole% n-octane * 6253 BTU/ft3)
+ (mole% hydrogen sulfide * 647 BTU/ft3)]

BTU/ft3 = 1148.33

2. Environmental Analytical Services, Inc. (gas analysis, BTU by ASTM 3588)

BTU/ft3 = [(mole% methane * 1010 BTU/ft3) + (mole% ethane * 1769 7 BTU/ft3) + (mole% propane * 2516 1 BTU/ft3)
+ (mole% i-butane * 3262.3 BTU/ft3) + (mole% n-butane * 3262 3 BTU/ft3) + (mole% i-pentane * 4000 9 BTU/ft3)
+ (mole% n-pentane * 4008.9 BTU/ft3) + (hexane+ * 4747 0 BTU/ft3) + (mole% hydrogen sulfide * 637 1 BTU/ft3)]

BTU/ft3 = 1138.30

3. Petroleum Refining Technology and Economics (Second Edition)

BTU/ft3 = [(mole% methane * 1009.7 BTU/ft3) + (mole% ethane * 1768.8 BTU/ft3) + (mole% propane * 2517.5 BTU/ft3)
+ (mole% i-butane * 3252.7 BTU/ft3) + (mole% n-butane * 3262.1 BTU/ft3) + (mole% i-pentane * 4000.3 BTU/ft3)
+ (mole% n-pentane * 4009.6 BTU/ft3) + (mole% n-hexane * 4756.2 BTU/ft3) + (mole% n-heptane * 5502.8 BTU/ft3)
+ (mole% n-octane * 6249 7 BTU/ft3) + (mole% n-nonane * 6996.5 BTU/ft3) + (mole% n-decane * 7742.1 BTU/ft3)
+ (mole% hydrogen sulfide * 637 BTU/ft3)]

BTU/ft3 = 1145.79

4. Perry's Chemical Engineers' Handbook (Tables 9-30 and 3-207, Sixth Edition)

BTU/ft3 = [(mole% methane * 1013 BTU/ft3) + (mole% ethane * 1792 BTU/ft3) + (mole% propane * 2590 BTU/ft3)
+ (mole% i-butane * 3363 BTU/ft3) + (mole% n-butane * 3370 BTU/ft3) + (mole% i-pentane * 4008 BTU/ft3)
+ (mole% n-pentane * 4016 BTU/ft3)+ (mole% n-hexane * 4762 BTU/ft3)+ (mole% n-heptane * 5506.3 BTU/ft3)
+ (mole% n-octane * 6253.2 BTU/ft3) + (mole% n-nonane * 7000.9 BTU/ft3) + (mole% n-decane * 7748.3 BTU/ft3)
+ (mole% hydrogen sulfide * 647 BTU/ft3)]

BTU/ft3 = 1152.05

AVERAGE = 1146.12 BTU/ft3 GCV (BTU/lb) = 21050 5 (assuming 384 9 dscf/lb-mol)

Dry F Factor (40 CFR, Appendix A, Method 19)

$F_d = 10^6$ [(3.64 scf/lb/%) 10^6 [(3.64 scf/lb/%)(%H) + (1.53 scf/lb/%)(%C) + (0.57 scf/lb/%)(%S) + (0.14 scf/lb/%)(%N)
- (0.46 scf/lb/%)(%O)]/GCV(BTU/lb)

F_d = 8590.6

CEB 800-CA Process Flare
Emission Calculations
and
Rule 212/1401 Health Risk Analysis

DCOR • 290 Maple Ct, Suite 290 • Ventura, California 93003 • (805) 535-2000 • (805) 535-2100 Fax

DCOR, LLC - Platform Esther (143740)
Emission Calculations - New Flare - CEB 800-CA

DEVICE ID	TBD		
SIC	1311		
PROCESS EQPT DESCRIPTION	FLARE, FLARE INDUSTRIES, CEB 800-CA, 39 MMBTU/HR		
FUEL TYPE/PROCESS INFO	FIELD/PRODUCED GAS		
MAX. ANNUAL PROCESS RATE	300.13	MMCF	[39 MMBTU/HR x 8760 HRS/YR x 1/HHV-average (1138.3 Btu/scf)]
MAX. DAILY PROCESS RATE	0.822	MMCF	[39 MMBTU/HR x 24 HRS/DAY x 1/HHV-average (1138.3 Btu/scf)]
AVG. DAILY PROCESS RATE	0.400	MMCF	(projected by DCOR)

HHV= 1138.30

			check
Fuel in	571.027	scfm	571.027
Exhaust (est)	5,611.28	dscfm (0% O2 in exhaust)	
Exhaust (est)	9,855.11	dscfm (9% O2 in exhaust)	

SUBSTANCE NAME	EMISSION FACTOR (EF) REFERENCE	EF LBS/MMBtu	EF LBS/UNIT	AVG LBS/DAY	PTE LBS/HR	PTE LBS/DAY	PTE LBS/YR	30DA LBS/DAY	CONC PPM @ 3%	
NOx	Manufacturer's Guarantee (15 ppmv @ 3%O2)	0.0183	20.83	8.33	0.71	17.13	6,252.01	17.37	15.03	
VOC / RHC	Manufacturer's Guarantee (10 ppmv @ 3%O2)	0.0043	4.89	1.96	0.17	4.02	1,469.05	4.08	10.15	(as CH_4)
PM10	Test Results (Linn; 3/26/2013; 0.001 gr/dscf @ 3%)	0.0052	5.92	2.37	0.20	4.87	1,776.53	4.93	0.0010	(gr/dscf)
SOx	SCAQMD (mass balance 30 ppmv total S as H_2S)	0.0044	5.03	2.01	0.17	4.14	1,510.09	4.19	2.61	(as SO_2)
CO	Manufacturer's Guarantee (10 ppmv @ 3%O2)	0.0075	8.54	3.41	0.29	7.02	2,562.30	7.12	10.12	(as CO)

Notes:

1. SOx EF (SCAQMD mass balance conservatively assuming 30 ppmv H_2S content in the gas: (10x10E-6)/(379 dscf/lb-mole)(64 lb/lb-mole)(dscf/1138 BTU) = 0.0044201 lb/MMBTU)

SUBSTANCE NAME	EMITTENT ID	EMISSION FACTOR (EF) REFERENCE	Gas Conc. ppbv	MW lb/lb-mole	PTE lb/hr	PTE lb/day	PTE lb/yr	PTE g/sec (max)
PAHs (total including Naphthalene)	1151		ND		0.00E+00	0.00E+00	0.00000	0.00E+00
Xylenes (m-, p-, o-)	1210	Gas analysis (99.98% DRE, Warren)	234300	106.16	4.50E-04	1.08E-02	3.93945	5.67E-05
Benzene	71432	Gas analysis (99.98% DRE, Warren)	127500	78.11	1.80E-04	4.32E-03	1.57732	2.27E-05
Toluene	108883	Gas analysis (99.98% DRE, Warren)	121456	92.14	2.02E-04	4.86E-03	1.77243	2.55E-05
Propylene	115071	Gas analysis (99.98% DRE, Warren)	30000000	42.08	2.28E-02	5.48E-01	199.94005	2.88E-03
Ethyl Benzene	100414	Gas analysis (99.97% DRE, Warren)	45900	106.17	1.32E-04	3.17E-03	1.15773	1.67E-05
Hexane	110543	Gas analysis (99.98% DRE, Warren)	495000	86.18	7.71E-04	1.85E-02	6.75639	9.72E-05
Trichloroethylene	79016	Gas analysis (99.98% DRE, Warren)	1020	131.39	2.42E-06	5.82E-05	0.02123	3.05E-07

Notes:

2. HAP/toxics mass emissions calculated as follows: lb/hr = (X ppmbv/10E-9)(max. gas flow, dscf/hr)(1 lb-mole/379 dscf)(MW, lb/lb-mole)(1-DRE%/100).
3. HAP/toxics gas concentrations based on sample results from Warren & PXP-Murphy CEB Flare applications; highest value mutiplied by 1.5 (conservative estimate).

DCOR, LLC - Platform Esther (143740)

Emission Calculations - Added Fugities related to new CEB 800 CA Flare

Gas Service:

Component Type	Additional Equipment - Component Counts: Pre-CEB 800 Components	Post-CEB 800 Components	Total Count	Fraction (2 year history): No Leak <10,000 ppm	Leak >10,000 ppm	No Leak: Emission Factor[1] - TOC (kg/hr/source)	No Leak: Emission Factor[1] - TOC (lb/hr/source)	Leak: Emission Factor[1] - TOC (kg/hr/source)	Leak: Emission Factor[1] - TOC (lb/hr/source)	Total Emissions (lbs/hr)
Valves	669	680	11	0.9964	0.0036	3.500E-05	7.70E-05	1.386E-01	3.05E-01	**0.0129**
Pumps/pump seals	0	0	0	1.0000	0.0000	9.960E-04	2.19E-03	8.900E-02	1.96E-01	-
Others (meters, PRVs, etc.)[2]	142	142	0	0.9921	0.0079	1.470E-04	3.23E-04	1.376E-01	3.03E-01	-
Fittings/Connectors	1,238	1256	18	0.9997	0.0003	1.200E-05	2.64E-05	2.590E-02	5.70E-02	**0.0008**
Flanges	826	829	3	0.9997	0.0003	2.800E-05	6.16E-05	6.100E-02	1.34E-01	**0.0003**
Open-ended lines	0	0	0	0.9997	0.0003	2.400E-05	5.28E-05	5.490E-02	1.21E-01	-

[1] THC Emission Factor Source: SCAQMD Fugitive Guidelines/CAPCOA document, Table IV-2c (<10,000 ppmv)

[2] Max leak rate percentage based on non-PRV components.

[3] VOC fraction based on gas sample analysis of field gas.

TOC Hourly Total =	**0.0140**
TOC Daily Total (24 hours)=	**0.3348**
TOC Annual Total (8760 hours) =	**122.22**
VOC:TOC Adjustment[3] =	**0.2465**
VOC Hourly Total =	**0.0034**
VOC Daily Total (24 hours)=	**0.0826**
VOC Annual Total (8760 hours) =	**30.13**

Emission Increase per Modifications - Gas Components	
VOC Hourly Total +20% =	**0.0041**
VOC Daily Total +20% =	**0.0991**
VOC Annual Total + 20% =	**36.16**

DCOR, LLC - Platform Esther (143740)

Emission Calculations - Added Fugities related to new CEB 800-CA Flare

Liquid Service:

Component Type	Additional Equipment - Component Counts: Pre-Flare Components	Post-Flare Components	Total Count	Fraction (2 year history): No Leak <10,000 ppm	Leak >10,000 ppm	No Leak: Emission Factor[1] - TOC (kg/hr/source)	No Leak: Emission Factor[1] - TOC (lb/hr/source)	Leak: Emission Factor[1] - TOC (kg/hr/source)	Leak: Emission Factor[1] - TOC (lb/hr/source)	Total Emissions (lbs/hr)
Valves	446	446	0	0.9964	0.0036	1.900E-05	4.18E-05	7.070E-02	1.56E-01	-
Pumps/pump seals	14	14	0	1.0000	0.0000	2.650E-04	5.83E-04	8.900E-02	1.96E-01	-
Others (meters, PRVs, etc.)	94	94	0	0.9921	0.0079	1.310E-04	2.88E-04	7.100E-03	1.56E-02	-
Fittings/Connectors	826	826	0	0.9997	0.0003	1.000E-05	2.20E-05	2.340E-02	5.15E-02	-
Flanges	550	550	0	0.9997	0.0003	2.400E-05	5.28E-05	2.600E-01	5.72E-01	-
Open-ended lines	0	0	0	0.9997	0.0003	1.800E-05	3.96E-05	2.220E-02	4.88E-02	-

[1] THC Emission Factor Source: SCAQMD Fugitive Guidelines/CAPCOA document, Table IV-2c (<10,000 ppmv)

[2] Max leak rate percentage based on non-PRV components.

[3] VOC assumed to be 100% for all liquid streams.

	Total Emissions (lbs/hr)
TOC Hourly Total =	-
TOC Daily Total (24 hours)=	-
TOC Annual Total (8760 hours) =	-
VOC:TOC Adjustment[3] =	**1.00**
VOC Hourly Total =	-
VOC Daily Total (24 hours)=	-
VOC Annual Total (8760 hours) =	-

Emission Increase per Modifications - Liquid Components	
VOC Hourly Total +20% =	-
VOC Daily Total +20% =	-
VOC Annual Total + 20% =	-

Gas & Liquid Service:

Emission Increase per Modifications - Gas & Liquid Components	
VOC Hourly Total =	**0.0041**
VOC Daily Total =	**0.0991**
VOC Annual Total =	**36.16**

DCOR, LLC - Platform Esther (143740)

Emission Calculations - Added Fugities related to new CEB 800-CA Flare

RULE 1401 TAC Emissions - DCOR New CEB 800-CA Flare Fugitive Components (Gas & Liquid Components)

		Includes 20% increase				
TAC/Pollutant	EF (lb/lb)	Daily TOC (lb/day)	Annual TOC (lb/yr)	Emissions (lb/day)	Emissions (lb/yr)	Emissions (lb/hr)
Ammonia	1.2E-05	0.4018	146.66	4.8E-06	1.8E-03	2.0E-07
Benzene	2.9E-03	0.4018	146.66	1.2E-03	4.3E-01	4.9E-05
Ethyl Benzene	5.8E-04	0.4018	146.66	2.3E-04	8.5E-02	9.7E-06
Hydrogen Sulfide	1.1E-05	0.4018	146.66	4.4E-06	1.6E-03	1.8E-07
Naphthalene	5.0E-06	0.4018	146.66	2.0E-06	7.3E-04	8.4E-08
Toluene	2.6E-03	0.4018	146.66	1.0E-03	3.8E-01	4.4E-05
Xylene	1.8E-03	0.4018	146.66	7.2E-04	2.6E-01	3.0E-05

Note: HAP speciation factors from Unocal AB2588 testing results (1991). Highest results for all fields tested was selected as the speciation fraction.

Plains Exploration and Production Company
La Cienegas, Murphy Drill Site (ID# 144797)
Emission Calculations - Added Fugities related to new CEB 800 Flare

Rule 1173 Two-Year Fugitive Component Leak History
DCOR, LLC - Platform Esther (143740)

		Leaks >10,000 ppmv							
		2011				2012			
Component	Total Counts	Q1	Q2	Q3	Q4	Q1	Q2	Q3	Q4
Valve	1115	2	3	4	2	0	1	1	2
Fitting	3440	0	0	1	0	1	0	0	0
Other	236	1	1	0	1	0	1	0	0
Pump	14	0	0	0	0	0	0	0	0
Compressor	1	0	0	0	0	1	0	0	1
PRV	17	0	0	0	0	0	0	0	0

		Leaks >10,000 ppmv								Highest
	Total Counts	2011				2012				Leak %
Component	Field	Q1	Q2	Q3	Q4	Q1	Q2	Q3	Q4	2 Years
Valve	1115	0.18%	0.27%	0.36%	0.18%	0.00%	0.09%	0.09%	0.18%	0.36%
Fitting	3440	0.00%	0.00%	0.03%	0.00%	0.03%	0.00%	0.00%	0.00%	0.03%
Other	236	0.39%	0.39%	0.00%	0.39%	0.00%	0.39%	0.00%	0.00%	0.39%
Pump	14	0.00%	0.00%	0.00%	0.00%	0.00%	0.00%	0.00%	0.00%	0.00%
Compressor	1	0.00%	0.00%	0.00%	0.00%	100.0%	0.00%	0.00%	100.0%	100.0%
PRV	17	0.00%	0.00%	0.00%	0.00%	0.00%	0.00%	0.00%	0.00%	0.00%

Rule 1401 Risk Analysis
DCOR, LLC - Platform Esther (143740)
CEB 800-CA Flare HRA

Compliance with Rule 1401 is demonstrated by first calculating the potential Rule 1401 regulated pollutant emissions, then utilizing the Tier 1 screening approach as identified in SCAQMD's Risk Assessment Procedures for Rules 1401 and 212, Version 7.0, July 1, 2005, in conjunction with Permit Application Package "L", September 10, 2010. The Rule 1401 regulated pollutant emissions are estimated on the calculations sheet and summarized below:

Table I **CEB 800-CA Flare + Fugitives**

Pollutant	Yearly Emissions (lbs/year)	Hour Emissions (lbs/hour)
Ammonia	1.76E-03	2.01E-07
Benzene	2.00E+00	2.29E-04
Ethyl benzene	1.24E+00	1.42E-04
Hexane (-n)	6.76E+00	7.71E-04
Hydrogen Sulfide	1.61E-03	1.84E-07
Naphthalene	7.33E-04	8.37E-08
PAHs (total)	0.00E+00	0.00E+00
Propylene	2.00E+02	2.28E-02
Toluene	2.15E+00	2.46E-04
Trichloroethylene	2.12E-02	2.42E-06
Xylenes	4.20E+00	4.80E-04

Rule 1401 Risk Analysis
DCOR, LLC - Platform Esther (143740)
CEB 800-CA Flare HRA

TIER 1 - Screening Emission Levels

Now assessing the values listed in Table I with the insignificant risk screening values presented in Table 1A of SCAQMD's Rule 212/1401 document, the following individual Pollutant Screening Levels (PSIs) are calculated and total Application Screening Index (ASI) is generated. The values from Table 1A (25m) and their resulting PSI and ASI values are shown below:

Table II

Pollutant	Cancer/Chronic Insignificant Screening Level (100 meters; lb/yr)	PSI cancer/ chronic	Acute Insignificant Screening Level (100 meters; lb/hr)	PSI acute
Ammonia	51,700	3.404E-08	8.57	2.344E-08
Benzene	8.92	2.245E-01	3.96	5.773E-05
Ethyl benzene	102.0	1.218E-02	No Value	N/A
Hexane (-n)	1,810,000	3.733E-06	No Value	N/A
Hydrogen Sulfide	2,580	6.253E-07	0.11	1.644E-06
Naphthalene	2.49	2.945E-04	7.44	1.125E-08
PAHs (total)	7.69E-03	0.000E+00	No Value	N/A
Propylene	775,000	2.580E-04	No Value	N/A
Toluene	77,500	2.779E-05	99.10	2.481E-06
Trichloroethylene	127.0	1.671E-04	No Value	N/A
Xylenes	181,000	2.322E-05	58.90	8.147E-06
Total = ASI (cancer/chronic):		**2.375E-01**	**ASI (acute):**	**7.004E-05**

Since the cancer/chronic ASI is less than 1.0, a Tier 2 screening risk assessment is NOT necessary. [Note: Not required for ASI less than 10.0 for T-BACT applications, which this is.]

FEF-102 Standby Flare
Emission Calculations
and
Rule 212/1401 Health Risk Analysis

DCOR • 290 Maple Ct, Suite 290 • Ventura, California 93003 • (805) 535-2000 • (805) 535-2100 Fax

DCOR, LLC - Platform Esther (143740)
Emission Calculations - New Flare - FEF-102

DEVICE ID	TBD		
SIC	1311		
PROCESS EQPT DESCRIPTION	STANDBY FLARE, FLARE INDUSTRIES, FEF-102, 51 MMBTU/HR		
FUEL TYPE/PROCESS INFO	FIELD/PRODUCED GAS		
MAX. ANNUAL PROCESS RATE	8 961	MMCF	[51 MMBTU/HR x 200 HRS/YR x 1/HHV-average (1138.3 Btu/scf)]
MAX. DAILY PROCESS RATE	1 075	MMCF	[51 MMBTU/HR x 24 HRS/DAY x 1/HHV-average (1138.3 Btu/scf)]
AVG. DAILY PROCESS RATE	0 000	MMCF	(projected by DCOR)

HHV= 1138.30

			check
Fuel in	746.728	scfm	746.728
Exhaust (est)	7,337 83	dscfm (0% O2 in exhaust)	
Exhaust (est)	52,882 98	dscfm (18% O2 in exhaust)	

SUBSTANCE NAME	EMISSION FACTOR (EF) REFERENCE	EF LBS/MMBtu	EF LBS/UNIT	AVG LBS/DAY	PTE LBS/HR	PTE LBS/DAY	PTE LBS/YR	30DA LBS/DAY	CONC PPM @ 3%	
NOx	Manufacturer's Guarantee (0.068 lbs/MMBTU)	0.0680	77.40	0.00	3.47	83.23	693.60	1.93	55.86	
VOC / RHC	SCAQMD Default (7.0 lbs/mmscf)	0.0061	7.00	0.00	0.31	7.53	62.73	0.17	14.52	(as CH_4)
PM10	SCAQMD Default (7.5 lbs/mmscf)	0.0066	7.50	0.00	0.34	8.06	67.21	0.19	0.0013	(gr/dscf)
SOx	SCAQMD (mass balance 30 ppmv total S as H_2S)	0.0044	5.03	0.00	0.23	5.41	45.09	0.13	2.61	(as SO_2)
CO	Manufacturer's Guarantee (0.37 lbs/MMBTU)	0.3700	421.17	0.00	18.87	452.88	3,774.00	10.48	499.30	(as CO)

Notes:

1. SOx EF (SCAQMD mass balance conservatively assuming 30 ppmv H_2S content in the gas: (10x10E-6)/(379 dscf/lb-mole)(64 lb/lb-mole)(dscf/1138 BTU) = 0.0044201 lb/MMBTU)

SUBSTANCE NAME	EMITTENT ID	EMISSION FACTOR (EF) REFERENCE	Gas Conc. ppbv	MW lb/lb-mole	PTE lb/hr	PTE lb/day	PTE lb/yr	PTE g/sec (max)
PAHs (total including Naphthalene)	1151		ND		0.00E+00	0.0000	0.0000	0.00E+00
Xylenes (m-, p-, o-)	1210	Manufacturer Statement(98.0% DRE)	234300	106.16	5.88E-02	1.4114	11.7616	7.41E-03
Benzene	71432	Manufacturer Statement(98.0% DRE)	127500	78.11	2.35E-02	0.5651	4.7092	2.97E-03
Toluene	108883	Manufacturer Statement(98.0% DRE)	121456	92.14	2.65E-02	0.6350	5.2918	3.33E-03
Propylene	115071	Manufacturer Statement(98.0% DRE)	30000000	42.08	2.98E+00	71.6329	596.9408	3.76E-01
Ethyl Benzene	100414	Manufacturer Statement(98.0% DRE)	45900	106.17	1.15E-02	0.2765	2.3044	1.45E-03
Hexane	110543	Manufacturer Statement(98.0% DRE)	495000	86.18	1.01E-01	2.4206	20.1719	1.27E-02
Trichloroethylene	79016	Manufacturer Statement(98.0% DRE)	1020	131.39	3.17E-04	0.0076	0.0634	3.99E-05

Notes:

2. HAP/toxics mass emissions calculated as follows: lb/hr = (X ppmbv/10E-9)(max. gas flow, dscf/hr)(1 lb-mole/379 dscf)(MW, lb/lb-mole)(1-DRE%/100)
3. HAP/toxics gas concentrations based on sample results from Warren & PXP-Murphy CEB Flare applications, highest value mutiplied by 1.5 (conservative estimate)

DCOR, LLC - Platform Esther (143740)
Emission Calculations - Added Fugities related to new FEF-102 Flare

Gas Service:

Component Type	Additional Equipment - Component Counts: Pre-FEF-102 Components	Post-FEF-102 Components	Total Count	Fraction (2 year history): No Leak <10,000 ppm	Leak >10,000 ppm	No Leak: Emission Factor[1] - TOC (kg/hr/source)	No Leak: Emission Factor[1] - TOC (lb/hr/source)	Leak: Emission Factor[1] - TOC (kg/hr/source)	Leak: Emission Factor[1] - TOC (lb/hr/source)	Total Emissions (lbs/hr)
Valves	669	677	8	0.9964	0.0036	3.500E-05	7.70E-05	1.386E-01	3.05E-01	**0.0094**
Pumps/pump seals	0	0	0	1.0000	0.0000	9.960E-04	2.19E-03	8.900E-02	1.96E-01	-
Others (meters, PRVs, etc.)[2]	142	142	0	0.9921	0.0079	1.470E-04	3.23E-04	1.376E-01	3.03E-01	-
Fittings/Connectors	1,238	1258	20	0.9997	0.0003	1.200E-05	2.64E-05	2.590E-02	5.70E-02	**0.0009**
Flanges	826	828	2	0.9997	0.0003	2.800E-05	6.16E-05	6.100E-02	1.34E-01	**0.0002**
Open-ended lines	0	0	0	0.9997	0.0003	2.400E-05	5.28E-05	5.490E-02	1.21E-01	-

[1] THC Emission Factor Source: SCAQMD Fugitive Guidelines/CAPCOA document, Table IV-2c (<10,000 ppmv)

[2] Max leak rate percentage based on non-PRV components.

[3] VOC fraction based on gas sample analysis of field gas

TOC Hourly Total =	**0.0104**
TOC Daily Total (24 hours)=	**0.2502**
TOC Annual Total (8760 hours) =	**91.32**
VOC:TOC Adjustment[3] =	**0.2465**
VOC Hourly Total =	**0.0026**
VOC Daily Total (24 hours)=	**0.0617**
VOC Annual Total (8760 hours) =	**22.52**

Emission Increase per Modifications - Gas Components	
VOC Hourly Total +20% =	**0.0031**
VOC Daily Total +20% =	**0.0740**
VOC Annual Total + 20% =	**27.02**

DCOR, LLC - Platform Esther (143740)
Emission Calculations - Added Fugities related to new FEF-102 Flare

Liquid Service:

Component Type	Additional Equipment - Component Counts: Pre-FEF-102 Components	Post-FEF-102 Components	Total Count	Fraction (2 year history): No Leak <10,000 ppm	Leak >10,000 ppm	No Leak: Emission Factor[1] - TOC (kg/hr/source)	No Leak: Emission Factor[1] - TOC (lb/hr/source)	Leak: Emission Factor[1] - TOC (kg/hr/source)	Leak: Emission Factor[1] - TOC (lb/hr/source)	Total Emissions (lbs/hr)
Valves	446	446	0	0.9964	0.0036	1.900E-05	4.18E-05	7.070E-02	1.56E-01	-
Pumps/pump seals	14	14	0	1.0000	0.0000	2.650E-04	5.83E-04	8.900E-02	1.96E-01	-
Others (meters, PRVs, etc.)	94	94	0	0.9921	0.0079	1.310E-04	2.88E-04	7.100E-03	1.56E-02	-
Fittings/Connectors	826	826	0	0.9997	0.0003	1.000E-05	2.20E-05	2.340E-02	5.15E-02	-
Flanges	550	550	0	0.9997	0.0003	2.400E-05	5.28E-05	2.600E-01	5.72E-01	-
Open-ended lines	0	0	0	0.9997	0.0003	1.800E-05	3.96E-05	2.220E-02	4.88E-02	-

[1] THC Emission Factor Source: SCAQMD Fugitive Guidelines/CAPCOA document, Table IV-2c (<10,000 ppmv)

[2] Max leak rate percentage based on non-PRV components.

[3] VOC assumed to be 100% for all liquid streams.

TOC Hourly Total =	-
TOC Daily Total (24 hours)=	-
TOC Annual Total (8760 hours) =	-
VOC:TOC Adjustment[3] =	**1.00**
VOC Hourly Total =	-
VOC Daily Total (24 hours)=	-
VOC Annual Total (8760 hours) =	-

Emission Increase per Modifications - Liquid Components	
VOC Hourly Total +20% =	-
VOC Daily Total +20% =	-
VOC Annual Total + 20% =	-

Gas & Liquid Service:

Emission Increase per Modifications - Gas & Liquid Components	
VOC Hourly Total =	**0.0031**
VOC Daily Total =	**0.0740**
VOC Annual Total =	**27.02**

DCOR, LLC - Platform Esther (143740)
Emission Calculations - Added Fugities related to new FEF-102 Flare

RULE 1401 TAC Emissions - DCOR New FEF-102 Flare Fugitive Components (Gas & Liquid Components)

		Includes 20% increase				
TAC/Pollutant	EF (lb/lb)	Daily TOC (lb/day)	Annual TOC (lb/yr)	Emissions (lb/day)	Emissions (lb/yr)	Emissions (lb/hr)
Ammonia	1.2E-05	0.3002	109.59	3.6E-06	1.3E-03	1.5E-07
Benzene	2.9E-03	0.3002	109 59	8.7E-04	3.2E-01	3.6E-05
Ethyl Benzene	5 8E-04	0.3002	109.59	1.7E-04	6.4E-02	7.3E-06
Hydrogen Sulfide	1.1E-05	0.3002	109.59	3.3E-06	1.2E-03	1.4E-07
Naphthalene	5.0E-06	0 3002	109 59	1.5E-06	5 5E-04	6 3E-08
Toluene	2 6E-03	0.3002	109.59	7 8E-04	2 8E-01	3 3E-05
Xylene	1.8E-03	0.3002	109.59	5.4E-04	2.0E-01	2 3E-05

Note: HAP speciation factors from Unocal AB2588 testing results (1991). Highest results for all fields tested was selected as the speciation fraction.

Plains Exploration and Production Company
La Cienegas, Murphy Drill Site (ID# 144797)
Emission Calculations - Added Fugities related to new CEB 800 Flare

Rule 1173 Two-Year Fugitive Component Leak History
DCOR, LLC - Platform Esther (143740)

		Leaks >10,000 ppmv							
		2011				2012			
Component	Total Counts	Q1	Q2	Q3	Q4	Q1	Q2	Q3	Q4
Valve	1115	2	3	4	2	0	1	1	2
Fitting	3440	0	0	1	0	1	0	0	0
Other	236	1	1	0	1	0	1	0	0
Pump	14	0	0	0	0	0	0	0	0
Compressor	1	0	0	0	0	1	0	0	1
PRV	17	0	0	0	0	0	0	0	0

		Leaks >10,000 ppmv								Highest
	Total Counts	2011				2012				Leak %
Component	Field	Q1	Q2	Q3	Q4	Q1	Q2	Q3	Q4	2 Years
Valve	1115	0.18%	0.27%	0.36%	0.18%	0.00%	0.09%	0.09%	0.18%	0.36%
Fitting	3440	0.00%	0.00%	0.03%	0.00%	0.03%	0.00%	0.00%	0.00%	0.03%
Other	236	0.39%	0.39%	0.00%	0.39%	0.00%	0.39%	0.00%	0.00%	0.39%
Pump	14	0.00%	0.00%	0.00%	0.00%	0.00%	0.00%	0.00%	0.00%	0.00%
Compressor	1	0.00%	0.00%	0.00%	0.00%	100.0%	0.00%	0.00%	100.0%	100.0%
PRV	17	0.00%	0.00%	0.00%	0.00%	0.00%	0.00%	0.00%	0.00%	0.00%

Rule 1401 Risk Analysis
DCOR, LLC - Platform Esther (143740)
FEF-102 Flare HRA

Compliance with Rule 1401 is demonstrated by first calculating the potential Rule 1401 regulated pollutant emissions, then utilizing the Tier 1 screening approach as identified in SCAQMD's Risk Assessment Procedures for Rules 1401 and 212, Version 7.0, July 1, 2005, in conjunction with Permit Application Package "L", September 10, 2010. The Rule 1401 regulated pollutant emissions are estimated on the calculations sheet and summarized below:

Table I FEF-102 Flare + Fugitives

Pollutant	Yearly Emissions (lbs/year)	Hour Emissions (lbs/hour)
Ammonia	1.32E-03	1.50E-07
Benzene	5.03E+00	2.36E-02
Ethyl benzene	2.37E+00	1.15E-02
Hexane (-n)	2.02E+01	1.01E-01
Hydrogen Sulfide	1.21E-03	1.38E-07
Naphthalene	5.48E-04	6.26E-08
PAHs (total)	0.00E+00	0.00E+00
Propylene	5.97E+02	2.98E+00
Toluene	5.58E+00	2.65E-02
Trichloroethylene	6.34E-02	3.17E-04
Xylenes	1.20E+01	5.88E-02

Rule 1401 Risk Analysis
DCOR, LLC - Platform Esther (143740)
FEF-102 Flare HRA

TIER 1 - Screening Emission Levels

Now assessing the values listed in Table I with the insignificant risk screening values presented in Table 1A of SCAQMD's Rule 212/1401 document, the following individual Pollutant Screening Levels (PSIs) are calculated and total Application Screening Index (ASI) is generated. The values from Table 1A (25m) and their resulting PSI and ASI values are shown below:

Table II

Pollutant	Cancer/Chronic Insignificant Screening Level (100 meters; lb/yr)	PSI cancer/ chronic	Acute Insignificant Screening Level (100 meters; lb/hr)	PSI acute
Ammonia	51,700	2.544E-08	8.57	1.752E-08
Benzene	8.92	5.636E-01	3.96	5.955E-03
Ethyl benzene	102.0	2.321E-02	No Value	N/A
Hexane (-n)	1,810,000	1.114E-05	No Value	N/A
Hydrogen Sulfide	2,580	4.672E-07	0.11	1.229E-06
Naphthalene	2.49	2.201E-04	7.44	8.407E-09
PAHs (total)	7.69E-03	0.000E+00	No Value	N/A
Propylene	775,000	7.702E-04	No Value	N/A
Toluene	77,500	7.196E-05	99.10	2.673E-04
Trichloroethylene	127.0	4.990E-04	No Value	N/A
Xylenes	181,000	6.607E-05	58.90	9.988E-04
Total = ASI (cancer/chronic):		**5.884E-01**	**ASI (acute):**	**7.223E-03**

Since the cancer/chronic ASI is less than 1.0, a Tier 2 screening risk assessment is not necessary (but performed for informational purposes).

Rule 1401 Risk Analysis
DCOR, LLC - Platform Esther (143740)
FEF-102 Flare HRA

TIER 2 - Screening Risk Assessment

Step 1: Maximum Individual Cancer Risk (MICR) = Cancer Potency (CP) * Dose-Inhalation (DI) * Multipathway Factor (MP)

where: DI = Cair * DBR * EVF * 10e-6
Cair = Qtons ' Qtons =

Therefore, MICR = CP * Q_{tons} * X/Q * AF_{ann} * MET * DBR * EVF * 10e-6 x MP

CP = Cancer potency value (Table 8A) [mg/kg-day-1]
Q_{tons} = Max. emission rate [tons/yr, (lbs/yr / 2000 lbs/ton)]
X/Q_{worker} = Dispersion factor - worker (Table 2A; 1000m; >49 ft) [(ug/m3)/(tons/yr)]
$X/Q_{resident}$ = Dispersion factor - resident (Table 2A; 1000m; >49 ft) [(ug/m3)/(tons/yr)]
$AF_{ann-worker}$ = Annual concentration adjustment factor (Table 2C)
$AF_{ann-resident}$ = Annual concentration adjustment factor (Table 2C; 1.0 default)
MET = Meteorological correction factor (Table 2B; Costa Mesa)
DBR_{worker} = Daily breathing rate (Table 9A; off-site worker) [(L/kg-day)]
$DBR_{resident}$ = Daily breathing rate (Table 9A; residential) [(L/kg-day)]
EVF_{worker} = Exposure value factor (Table 9B; off-site worker)
$EVF_{resident}$ = Exposure value factor (Table 9B; residential)
MP = Multi-pathway factor (Table 8A)

(1) Worker

TAC	CP	Q_{tons}	X/Q	AF_{ann}	MET	DBR	EVF	MP	MICR
Benzene	1.00E-01	2.51E-03	0.04	4.2	0.69	149	0.38	1.0	1.65E-09
Ethyl benzene	8.70E-03	1.18E-03	0.04	4.2	0.69	149	0.38	1.0	6.76E-11
Naphthalene	1.20E-01	2 74E-07	0.04	4.2	0.69	149	0.38	1.0	2.16E-13
PAHs	3.90E+00	0.00E+00	0.04	4.2	0.69	149	0.38	14.62	0.00E+00
Trichloroethene	7.00E-03	3.17E-05	0.04	4.2	0.69	149	0.38	1.00	1.46E-12
Total									**1.72E-09**

(2) Resident

TAC	CP	Q_{tons}	X/Q	AF_{ann}	MET	DBR	EVF	MP	MICR
Benzene	1.00E-01	2.51E-03	0.04	1.0	0.69	302	0.96	1.0	2.01E-09
Ethyl benzene	8 70E-03	1.18E-03	0.04	1.0	0.69	302	0.96	1.0	8.24E-11
Naphthalene	1.20E-01	2.74E-07	0.04	1.0	0.69	302	0.96	1.0	2.63E-13
PAHs	3.90E+00	0.00E+00	0.04	1.0	0 69	302	0.96	29.76	0.00E+00
Trichloroethene	7.00E-03	3.17E-05	0.04	1.0	0.69	302	0.96	1.00	1 77E-12
Total									**2.09E-09**

Step 2: Cancer Burden NOT required since the worker MICR < 1.0E-06.

Rule 1401 Risk Analysis
DCOR, LLC - Platform Esther (143740)
FEF-102 Flare HRA

Step 3: Acute Hazard Index (HIA)

$HIA = [Q_{hr} * (X/Q)_{hr}]/Acute\ REL * AF$

where:

X/Q_{worker} =	Dispersion factor-worker (Table 6, >49 ft, 1000m) =	7.20	$(ug/m^3)/(lbs/hr)$
$X/Q_{resident}$ =	Dispersion factor-residential (Table 6; >49 ft, 1000m) =	7.20	$(ug/m^3)/(lbs/hr)$
$AF_{benzene}$ =	Adjustment factor-Benzene (Table 8B; Dntown LA, 6 hours)	0.88	
Acute REL =	Acute reference exposure level (Table 8A; Ammonia) =	3,200	(ug/m^3)
Acute REL =	Acute reference exposure level (Table 8A; Benzene) =	1,300	(ug/m^3)
Acute REL =	Acute reference exposure level (Table 8A; Hydrogen Sulfide	42.0	(ug/m^3)
Acute REL =	Acute reference exposure level (Table 8A, Toluene) =	37,000	(ug/m^3)
Acute REL =	Acute reference exposure level (Table 8A; Xylenes) =	22,000	(ug/m^3)

(1) Worker

TAC	HIA						
	DEV	EYE	HEM	IMM	NS	REP	RESP
Ammonia		3.38E-10					3.38E-10
Benzene	1.15E-04		1.15E-04	1.15E-04		1.15E-04	
Hydrogen Sulfide					2 36E-08		
Toluene	5 16E-06	5.16E-06			5.16E-06	5.16E-06	5.16E-06
Xylenes		1.93E-05					1 93E-05
Total	**1.20E-04**	**2.44E-05**	**1.15E-04**	**1.15E-04**	**5.18E-06**	**1.20E-04**	**2.44E-05**

(2) Resident

TAC	HIA						
	DEV	EYE	HEM	IMM	NS	REP	RESP
Ammonia		3.38E-10					3.38E-10
Benzene	1.15E-04		1 15E-04	1.15E-04		1 15E-04	
Hydrogen Sulfide					2.36E-08		
Toluene	5.16E-06	5 16E-06			5.16E-06	5 16E-06	5 16E-06
Xylenes		1 93E-05					1 93E-05
Total	**1.20E-04**	**2.44E-05**	**1.15E-04**	**1.15E-04**	**5.18E-06**	**1.20E-04**	**2.44E-05**

Rule 1401 Risk Analysis
DCOR, LLC - Platform Esther (143740)
FEF-102 Flare HRA

Step 4: Chronic Hazard Index (HIC)

HIC = $[Q_{yr} * (X/Q)_{yr} * MET * MP]$/Chronic REL

where:

X/Q_{worker} =	Dispersion factor-worker (Table 2A; >49 ft, 1000m) =	0.04	$(ug/m^3)/(tons/yr)$
$X/Q_{resident}$ =	Dispersion factor-residential (Table 2A; >49 ft, 1000m) =	0.04	$(ug/m^3)/(tons/yr)$
MET =	Meteorological correction factor (Table 2B; Costa Mesa)	0.69	
MP =	Multi-pathway factor (Table 8A) =	1.0	
Chronic REL =	Chronic reference exposure level (Table 8A; Ammonia) =	200	(ug/m^3)
Chronic REL =	Chronic reference exposure level (Table 8A; Benzene) =	60	(ug/m^3)
Chronic REL =	Chronic reference exposure level (Table 8A; Ethyl benzene)	2,000	(ug/m^3)
Chronic REL =	Chronic reference exposure level (Table 8A; n-Hexane) =	7,000	(ug/m^3)
Chronic REL =	Chronic reference exposure level (Table 8A; H2S) =	10	(ug/m^3)
Chronic REL =	Chronic reference exposure level (Table 8A; Naphthalene) =	9.0	(ug/m^3)
Chronic REL =	Chronic reference exposure level (Table 8A; Propylene) =	3,000	(ug/m^3)
Chronic REL =	Chronic reference exposure level (Table 8A; Toluene) =	300	(ug/m^3)
Chronic REL =	Chronic reference exposure level (Table 8A; Xylenes) =	700	(ug/m^3)
Chronic REL =	Chronic reference exposure level (Table 8A; Trichloroethen	600	(ug/m^3)

(1) Worker

TAC	HIA							
	AL	DEV	END	HEM	KID	NS	RESP	EYE
Ammonia							9.07E-11	
Benzene		1.16E-06		1.16E-06		1.16E-06		
Ethylbenzene	1.63E-08	1.63E-08	1.63E-08		1.63E-08			
n-Hexane						3.98E-08		
Hydrogen Sulfide							1.66E-09	
Naphthalene							8.40E-10	
Propylene							2.75E-06	
Toluene		2.57E-07				2.57E-07	2.57E-07	
Xylenes						2.36E-07	2.36E-07	
Trichloroethene						1.46E-09		1.46E-09
Total	**1.63E-08**	**1.43E-06**	**1.63E-08**	**1.16E-06**	**1.63E-08**	**1.69E-06**	**3.24E-06**	**0.00E+00**

Rule 1401 Risk Analysis
DCOR, LLC - Platform Esther (143740)
FEF-102 Flare HRA

(2) Resident

TAC	HIA							
	AL	DEV	END	HEM	KID	NS	RESP	EYE
Ammonia							9.07E-11	
Benzene		1.16E-06		1.16E-06		1.16E-06		
Ethylbenzene	1.63E-08	1.63E-08	1.63E-08		1.63E-08			
n-Hexane						3.98E-08		
Hydrogen Sulfide							1.66E-09	
Naphthalene							8.40E-10	
Propylene							2.75E-06	
Toluene		2.57E-07				2.57E-07	2.57E-07	
Xylenes						2.36E-07	2.36E-07	
Trichloroethene						1.46E-09		1 46E-09
Total	**1.63E-08**	**1.43E-06**	**1.63E-08**	**1.16E-06**	**1.63E-08**	**1.69E-06**	**3.24E-06**	**0.00E+00**

This application passes the Rule 1401 requirements for MICR (<1 x 10^{-6}), HIA and HIC (<1.0). No further risk analysis is required.

Gas Sample - Esther Gas (10/04/12)

Constiuent	MW	Mole %	lb/lb-mole	Wt %	Exansion Factor	Product
CO_2	44.01	2.000	0.88	4.20	1.00	0.02
N_2	28.01	3.600	1.01	4.81	1.00	0.04
O_2	32.00	0.900	0.29	1.37	1.00	0.01
H_2O	18.02	0.050	0.01	0.04	1.00	0.00
H_2S	34.08	0.000	0.00	0.00	6.65	0.00
Methane, CH_4	16.04	84.200	13.51	64.46	8.53	7.18
Ethane, C_2H_6	30.07	2.110	0.63	3.03	15.17	0.32
Propane, C_3H_8	44.10	2.773	1.22	5.84	21.82	0.61
i-Butane, i-C_4H_{10}	58.12	0.351	0.20	0.97	28.47	0.10
n-Butane, n-C_4H_{10}	58.12	0.351	0.20	0.97	28.47	0.10
i-Pentane, i-C_5H_{12}	72.15	1.088	0.79	3.75	35.11	0.38
n-Pentane, n-C_5H_{12}	72.15	1.088	0.79	3.75	35.11	0.38
n-Hexane, n-C_6H_{14}	86.18	0.469	0.40	1.93	41.76	0.20
n-Heptane, n-C_7H_{16}	100.21	1.020	1.02	4.88	48.40	0.49
n-Octane, n-C_8H_{18}	114.23	0.000	0.00	0.00	55.05	0.00
n-Nonane, n-C_9H_{20}	128.26	0.000	0.00	0.00	61.70	0.00
n-Decane, n-$C_{10}H_{22}$	142.29	0.000	0.00	0.00	68.34	0.00
Totals		100.001	20.96	**100.00**		**9.83**
Weight Fraction of Total Organics (C_1 +) in Gas:				**89.57**		
Weight Fraction of Reactive Organics (C_3 +) in Gas:				**22.08**		
ROG/TOG Fraction:				**0.2465**		
CH4/TOC Fraction:				**0.7196**		

%C	70.15
%H	20.58
%O	4.47
%N	4.81
%S	0.00
Total	100.00

Fuel Heat Value (Gross, HHV)

1. Perry's Chemical Engineers' Handbook (Table 9-13 & extrapolation, Sixth Edition)

BTU/ft3 = [(mole% methane * 1012 BTU/ft3) + (mole% ethane * 1786 BTU/ft3) + (mole% propane * 2522 BTU/ft3)
+ (mole% i-butane * 3163 BTU/ft3) + (mole% n-butane * 3261 BTU/ft3) + (mole% pentane * 4023 BTU/ft3)
+ (mole% n-hexane * 4758 BTU/ft3) + (mole% n-heptane * 5506 BTU/ft3) + (mole% n-octane * 6253 BTU/ft3)
+ (mole% hydrogen sulfide * 647 BTU/ft3)]

BTU/ft3 = 1148.33

2. Environmental Analytical Services, Inc. (gas analysis, BTU by ASTM 3588)

BTU/ft3 = [(mole% methane * 1010 BTU/ft3) + (mole% ethane * 1769.7 BTU/ft3) + (mole% propane * 2516.1 BTU/ft3)
+ (mole% i-butane * 3262.3 BTU/ft3) + (mole% n-butane * 3262.3 BTU/ft3) + (mole% i-pentane * 4000.9 BTU/ft3)
+ (mole% n-pentane * 4008.9 BTU/ft3) + (hexane+ * 4747.0 BTU/ft3) + (mole% hydrogen sulfide * 637.1 BTU/ft3)]

BTU/ft3 = 1138.30

3. Petroleum Refining Technology and Economics (Second Edition)

BTU/ft3 = [(mole% methane * 1009.7 BTU/ft3) + (mole% ethane * 1768.8 BTU/ft3) + (mole% propane * 2517.5 BTU/ft3)
+ (mole% i-butane * 3252.7 BTU/ft3) + (mole% n-butane * 3262.1 BTU/ft3) + (mole% i-pentane * 4000.3 BTU/ft3)
+ (mole% n-pentane * 4009.6 BTU/ft3) + (mole% n-hexane * 4756.2 BTU/ft3) + (mole% n-heptane * 5502.8 BTU/ft3)
+ (mole% n-octane * 6249.7 BTU/ft3) + (mole% n-nonane * 6996.5 BTU/ft3) + (mole% n-decane * 7742.1 BTU/ft3)
+ (mole% hydrogen sulfide * 637 BTU/ft3)]

BTU/ft3 = 1145.79

4. Perry's Chemical Engineers' Handbook (Tables 9-30 and 3-207, Sixth Edition)

BTU/ft3 = [(mole% methane * 1013 BTU/ft3) + (mole% ethane * 1792 BTU/ft3) + (mole% propane * 2590 BTU/ft3)
+ (mole% i-butane * 3363 BTU/ft3) + (mole% n-butane * 3370 BTU/ft3) + (mole% i-pentane * 4008 BTU/ft3)
+ (mole% n-pentane * 4016 BTU/ft3)+ (mole% n-hexane * 4762 BTU/ft3)+ (mole% n-heptane * 5506.3 BTU/ft3)
+ (mole% n-octane * 6253.2 BTU/ft3) + (mole% n-nonane * 7000.9 BTU/ft3) + (mole% n-decane * 7748.3 BTU/ft3)
+ (mole% hydrogen sulfide * 647 BTU/ft3)]

BTU/ft3 = 1152.05

AVERAGE = 1146.12 BTU/ft3 GCV (BTU/lb) = 21050.5 (assuming 384.9 dscf/lb-mol)

Dry F Factor (40 CFR, Appendix A, Method 19)

$F_d = 10^6$[(3.64 scf/lb/%) 10^9[(3.64 scf/lb/%)(%H) + (1.53 scf/lb/%)(%C) + (0.57 scf/lb/%)(%S) + (0.14 scf/lb/%)(%N)
- (0.46 scf/lb/%)(%O)]/GCV(BTU/lb)

F_d = 8590.6

Gas Sample - Esther Gas (10/04/12)

Constiuent	MW	Mole %	lb/lb-mole	Wt %	Exansion Factor	Product
CO_2	44.01	2.000	0.88	4.20	1.00	0.02
N_2	28.01	3.600	1.01	4.81	1.00	0.04
O_2	32.00	0.900	0.29	1.37	1.00	0.01
H_2O	18.02	0.050	0.01	0.04	1.00	0.00
H_2S	34.08	0.000	0.00	0.00	6.65	0.00
Methane, CH_4	16.04	84.200	13.51	64.46	8.53	7.18
Ethane, C_2H_6	30.07	2.110	0.63	3.03	15.17	0.32
Propane, C_3H_8	44.10	2.773	1.22	5.84	21.82	0.61
i-Butane, i-C_4H_{10}	58.12	0.351	0.20	0.97	28.47	0.10
n-Butane, n-C_4H_{10}	58.12	0.351	0.20	0.97	28.47	0.10
i-Pentane, i-C_5H_{12}	72.15	1.088	0.79	3.75	35.11	0.38
n-Pentane, n-C_5H_{12}	72.15	1.088	0.79	3.75	35.11	0.38
n-Hexane, n-C_6H_{14}	86.18	0.469	0.40	1.93	41.76	0.20
n-Heptane, n-C_7H_{16}	100.21	1.020	1.02	4.88	48.40	0.49
n-Octane, n-C_8H_{18}	114.23	0.000	0.00	0.00	55.05	0.00
n-Nonane, n-C_9H_{20}	128.26	0.000	0.00	0.00	61.70	0.00
n-Decane, n-$C_{10}H_{22}$	142.29	0.000	0.00	0.00	68.34	0.00
Totals		100.001	20.96	**100.00**		**9.83**
Weight Fraction of Total Organics (C_1 +) in Gas.				**89.57**		
Weight Fraction of Reactive Organics (C_3 +) in Gas:				**22.08**		
ROG/TOG Fraction:				**0.2465**		
CH4/TOC Fraction:				**0.7196**		

%C	70.15
%H	20.58
%O	4.47
%N	4.81
%S	0.00
Total	100.00

Fuel Heat Value (Gross, HHV)

1. Perry's Chemical Engineers' Handbook (Table 9-13 & extrapolation, Sixth Edition)

BTU/ft3 = [(mole% methane * 1012 BTU/ft3) + (mole% ethane * 1786 BTU/ft3) + (mole% propane * 2522 BTU/ft3)
+ (mole% i-butane * 3163 BTU/ft3) + (mole% n-butane * 3261 BTU/ft3) + (mole% pentane * 4023 BTU/ft3)
+ (mole% n-hexane * 4758 BTU/ft3) + (mole% n-heptane * 5506 BTU/ft3) + (mole% n-octane * 6253 BTU/ft3)
+ (mole% hydrogen sulfide * 647 BTU/ft3)]

BTU/ft3 = 1148.33

2. Environmental Analytical Services, Inc. (gas analysis, BTU by ASTM 3588)

BTU/ft3 = [(mole% methane * 1010 BTU/ft3) + (mole% ethane * 1769 7 BTU/ft3) + (mole% propane * 2516.1 BTU/ft3)
+ (mole% i-butane * 3262.3 BTU/ft3) + (mole% n-butane * 3262 3 BTU/ft3) + (mole% i-pentane * 4000 9 BTU/ft3)
+ (mole% n-pentane * 4008.9 BTU/ft3) + (hexane+ * 4747.0 BTU/ft3) + (mole% hydrogen sulfide * 637.1 BTU/ft3)]

BTU/ft3 = 1138.30

3. Petroleum Refining Technology and Economics (Second Edition)

BTU/ft3 = [(mole% methane * 1009.7 BTU/ft3) + (mole% ethane * 1768.8 BTU/ft3) + (mole% propane * 2517.5 BTU/ft3)
+ (mole% i-butane * 3252.7 BTU/ft3) + (mole% n-butane * 3262.1 BTU/ft3) + (mole% i-pentane * 4000.3 BTU/ft3)
+ (mole% n-pentane * 4009.6 BTU/ft3) + (mole% n-hexane * 4756.2 BTU/ft3) + (mole% n-heptane * 5502.8 BTU/ft3)
+ (mole% n-octane * 6249.7 BTU/ft3) + (mole% n-nonane * 6996.5 BTU/ft3) + (mole% n-decane * 7742.1 BTU/ft3)
+ (mole% hydrogen sulfide * 637 BTU/ft3)]

BTU/ft3 = 1145.79

4. Perry's Chemical Engineers' Handbook (Tables 9-30 and 3-207, Sixth Edition)

BTU/ft3 = [(mole% methane * 1013 BTU/ft3) + (mole% ethane * 1792 BTU/ft3) + (mole% propane * 2590 BTU/ft3)
+ (mole% i-butane * 3363 BTU/ft3) + (mole% n-butane * 3370 BTU/ft3) + (mole% i-pentane * 4008 BTU/ft3)
+ (mole% n-pentane * 4016 BTU/ft3)+ (mole% n-hexane * 4762 BTU/ft3)+ (mole% n-heptane * 5506.3 BTU/ft3)
+ (mole% n-octane * 6253.2 BTU/ft3) + (mole% n-nonane * 7000 9 BTU/ft3) + (mole% n-decane * 7748.3 BTU/ft3)
+ (mole% hydrogen sulfide * 647 BTU/ft3)]

BTU/ft3 = 1152.05

AVERAGE = 1146.12 BTU/ft3 GCV (BTU/lb) = 21050.5 (assuming 384 9 dscf/lb-mol)

Dry F Factor (40 CFR, Appendix A, Method 19)

$F_d = 10^6$ [(3.64 scf/lb/%) 10^b [(3.64 scf/lb/%)(%H) + (1.53 scf/lb/%)(%C) + (0.57 scf/lb/%)(%S) + (0.14 scf/lb/%)(%N)
- (0.46 scf/lb/%)(%O)]/GCV(BTU/lb)

F_d = 8590.6

DCOR, LLC

001734

SOUTH COAST AQMD	VENDOR SOU001		CHECK DATE 03/19/14	
INVOICE NUMBER	INVOICE DATE		DISCOUNT TAKEN	AMOUNT PAID
121213	12/12/13	46959 AIR PERMIT APPLICATION FEES Total:	$0.00 $0.00	$11,439.02 $11,439.02

U.S. Postal Service™
CERTIFIED MAIL™ RECEIPT
Domestic Mail Only; No Insurance Coverage Pro 1)

For delivery information visit our website at www.usps.com®

OFFICIAL USE

Postage	$
Certified Fee	
Return Receipt Fee (Endorsement Required)	
Restricted Delivery Fee (Endorsement Required)	
Total Postage & Fees	$

5/2/14
Bill Gobrial

Postmark Here

App #s
561636, 561639, 561640

Sent To Mike Shaffer; Shaffer Environmental Consult
Street, Apt. No.; or PO Box No. 90 N. Crocker Ave
City, State, ZIP+4 Ventura CA 93004

PS Form 3800, June 2006 See Reverse for Instructions

U.S. Postal Service™
CERTIFIED MAIL™ RECEIPT
(Domestic Mail Only; No Insurance Coverage Provided)

For delivery information visit our website at www.usps.com®

OFFICIAL USE

Postage	$
Certified Fee	
Return Receipt Fee (Endorsement Required)	
Restricted Delivery Fee (Endorsement Required)	
Total Postage & Fees	$

5/2/14
Bill Gobrial
Postmark Here

App# 561638, 561639, 561640

Sent To [redacted], Christine White; DE COK
Street, Apt. No.; or PO Box No. 290 Maple Court, Suite 290
City, State, ZIP+4 Ventura, CA 93003

PS Form 3800, August 2006 See Reverse for Instructions

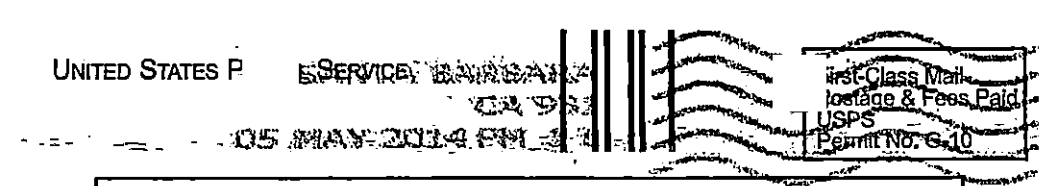

• Sender: Please print your name, address, and ZIP+4 in this box •

South Coast Air Quality Management District

21865 Copley Dr.

Diamond Bar, CA 91765

Attn: Bill Gobrial 5th floor

SENDER: COMPLETE THIS SECTION

- Complete items 1, 2, and 3. Also complete item 4 if Restricted Delivery is desired.
- Print your name and address on the reverse so that we can return the card to you.
- Attach this card to the back of the mailpiece, or on the front if space permits.

1. Article Addressed to:

Mr. Mike Shaffer
Shaffer Environimental Consulting
80 N. Crocker Ave.
Ventura, CA 93004

COMPLETE THIS SECTION ON DELIVERY

A. Signature
X ☐ Agent ☒ Addressee

B. Received by (Printed Name) Mike Shaffer
C. Date of Delivery 5/5/14

D. Is delivery address different from item 1? ☐ Yes
If YES, enter delivery address below: ☒ No

3. Service Type
☒ Certified Mail ☐ Express Mail
☐ Registered ☐ Return Receipt for Merchandise
☐ Insured Mail ☐ C.O.D.

4. Restricted Delivery? (Extra Fee) ☐ Yes

2. Article Number (Transfer from service label) 7013 1090 0001 3178 8868

PS Form 3811, February 2004 Domestic Return Receipt 102595-02-M-154

UNITED STATES POSTAL SERVICE
SANTA BARBARA CA 931 3-T
08 MAY 2014 PM

Class Mail
Postage & Fees Paid
USPS
Permit No. G-10

• Sender: Please print your name, address, and ZIP+4 in this box •

South Coast Air Quality Management District

21865 Copley Dr.

Diamond Bar, CA 91765

Attn: Bill Gobrial 5th floor

SENDER: COMPLETE THIS SECTION

- Complete items 1, 2, and 3. Also complete item 4 if Restricted Delivery is desired.
- Print your name and address on the reverse so that we can return the card to you.
- Attach this card to the back of the mailpiece, or on the front if space permits.

1. Article Addressed to:

Ms. Christine White
DÉCOR, LLC
290 Maple Court, Suite 290
Ventura, CA 93003

COMPLETE THIS SECTION ON DELIVERY

A. Signature
X Doug Ortega ☐ Agent ☐ Addressee

B. Received by (Printed Name) Doug Ortega C. Date of Delivery MAY 08 2014

D. Is delivery address different from item 1? ☐ Yes
If YES, enter delivery address below: ☐ No

3. Service Type
☑ Certified Mail ☐ Express Mail
☐ Registered ☐ Return Receipt for Merchandise
☐ Insured Mail ☐ C.O.D.

4. Restricted Delivery? (Extra Fee) ☐ Yes

2. Article Number (Transfer from service label) 7013 1090 0001 3173 3801

PS Form 3811, February 2004 Domestic Return Receipt

DCOR
290 Maple Court, Suite 290
Ventura, CA 93003

CERTIFIED MAIL™

7008 3230 0001 6942 3031

UNITED STATES POSTAGE
PITNEY BOWES
02 1P $ 007.19⁰
0001717843 MAR 19 2014
MAILED FROM ZIP CODE 93003

5

Deborah Rutledge
SCAQMD ...mit Se...es
P.O. Box 4944
Diamond Bar, CA 91765

PLACE STICKER AT TOP OF ENVELOPE TO THE RIGHT OF THE RETURN ADDRESS. FOLD AT DOTTED LINE

CERTIFIED MAIL™

7008 3230 0001 6942 3178

DCOR

290 Maple Court, Suite 290
Ventura, CA 93003

Permit Services
South Coast Air Quality
Management District
P.O. Box 4944
Diamond Bar, Ca 91765-0944

5

DCOR
Christine White
290 Maple Court, Suite 290
Ventura, CA 93003

SANTA BARBARA CA
06 APR 2016 PM

UNITED STATES POSTAL SERVICE
PITNEY BOWES
02 1P $ 000.48⁵
0000282188 APR 06 2016
MAILED FROM ZIP CODE 93003

SCAQMD-PERMIT SERVICES
PO BOX 4944
DIAMOND BAR, CA 91765

91765+)44

South Coast Air Quality Management District
21865 Copley Drive, Diamond Bar, CA 91765-4178

Title Page	
Facility ID:	143740
Revision #:	19
Date:	July 01, 2016

FACILITY PERMIT TO OPERATE

DCOR LLC
OFFSHORE PLATFORM ESTHER PRC 3095 1
SEAL BEACH, CA 90740

NOTICE

IN ACCORDANCE WITH RULE 206, THIS PERMIT TO OPERATE OR A COPY THEREOF MUST BE KEPT AT THE LOCATION FOR WHICH IT IS ISSUED.

THIS PERMIT DOES NOT AUTHORIZE THE EMISSION OF AIR CONTAMINANTS IN EXCESS OF THOSE ALLOWED BY DIVISION 26 OF THE HEALTH AND SAFETY CODE OF THE STATE OF CALIFORNIA OR THE RULES OF THE SOUTH COAST AIR QUALITY MANAGEMENT DISTRICT. THIS PERMIT SHALL NOT BE CONSTRUED AS PERMISSION TO VIOLATE EXISTING LAWS, ORDINANCES, REGULATIONS OR STATUTES OF ANY OTHER FEDERAL, STATE OR LOCAL GOVERNMENTAL AGENCIES.

Wayne Nastri
Acting Executive Officer

By
Laki Tisopulos, Ph.D., P.E.
Deputy Executive Officer
Engineering and Permitting

South Coast Air Quality Management District
21865 Copley Drive, Diamond Bar, CA 91765-4178

Table of Content
Facility ID: 143740
Revision #: 19
Date: July 01, 2016

FACILITY PERMIT TO OPERATE
DCOR LLC

TABLE OF CONTENTS

Section	Description	Revision #	Date Issued
A	Facility Information	4	01/07/2016
B	RECLAIM Annual Emission Allocation	14	07/01/2016
C	Facility Plot Plan	TO BE DEVELOPED	
D	Facility Description and Equipment Specific Conditions	8	01/07/2016
E	Administrative Conditions	3	05/22/2009
F	RECLAIM Monitoring and Source Testing Requirements	3	05/22/2009
G	Recordkeeping and Reporting Requirements for RECLAIM Sources	3	05/22/2009
H	Permit To Construct and Temporary Permit to Operate	4	08/09/2011
I	Compliance Plans & Schedules	2	07/01/2006
J	Air Toxics	0	07/01/2006
Appendix			
A	NOx and SOx Emitting Equipment Exempt From Written Permit Pursuant to Rule 219	2	07/01/2006
B	Rule Emission Limits	0	07/01/2006

FACILITY PERMIT TO OPERATE
DCOR LLC

SECTION B: RECLAIM ANNUAL EMISSION ALLOCATION

The annual allocation of NOx RECLAIM Trading Credits (RTCs) for this facility is calculated pursuant to Rule 2002. Total NOx emission shall not exceed such annual allocations unless the operator obtains RTCs corresponding to the facility's increased emissions in compliance with Rules 2005 and 2007.

The level of Starting Allocation plus Non-Tradable Credits used to determine compliance with Rule 2005(c)(4) and applicability of Rule 2005(e) - Trading Zone Restrictions is listed on the last page of this Section.

The following table lists the annual allocations that were issued to this facility and the amounts of RTCs held by this facility on the day of printing this Section.

RECLAIM POLLUTANT ANNUAL ALLOCATION (POUNDS)

Year Begin (month/year)	Year End (month/year)	Zone	NOx RTC Initially Allocated	NOx RTC [1] Holding as of 07/01/2016 (pounds)	Non-Tradable [2] Non-Usable RTCs (pounds)
7/2013	6/2014	Coastal	186	0	0
1/2014	12/2014	Coastal	0	3395	0
7/2014	6/2015	Coastal	186	3667	0
1/2015	12/2015	Coastal	0	1850	0
7/2015	6/2016	Coastal	186	2144	0
1/2016	12/2016	Coastal	0	7500	0
7/2016	6/2017	Coastal	186	7144	0
1/2017	12/2017	Coastal	0	7500	0
7/2017	6/2018	Coastal	186	7144	0
1/2018	12/2018	Coastal	0	7500	0
7/2018	6/2019	Coastal	186	7144	0
1/2019	12/2019	Coastal	0	7500	0
7/2019	6/2020	Coastal	186	7144	0
1/2020	12/2020	Coastal	0	7500	0
7/2020	6/2021	Coastal	186	7144	0
1/2021	12/2021	Coastal	0	7500	0
7/2021	6/2022	Coastal	186	7144	0

Footnotes:

1. This number may change due to pending trades, emissions reported under Quarterly Certification of Emissions Report (QCER) and Annual Permit Emission Program (APEP) Report required pursuant to Rule 2004, or deductions made pursuant to Rule 2010(b). The most recent total RTC information can be obtained from the SCAQMD's RTC Listing.

2. The use of such credits is subject to restrictions set forth in paragraph (f)(1) of Rule 2002.

FACILITY PERMIT TO OPERATE
DCOR LLC

SECTION B: RECLAIM ANNUAL EMISSION ALLOCATION

The annual allocation of NOx RECLAIM Trading Credits (RTCs) for this facility is calculated pursuant to Rule 2002. Total NOx emission shall not exceed such annual allocations unless the operator obtains RTCs corresponding to the facility's increased emissions in compliance with Rules 2005 and 2007.

The level of Starting Allocation plus Non-Tradable Credits used to determine compliance with Rule 2005(c)(4) and applicability of Rule 2005(e) - Trading Zone Restrictions is listed on the last page of this Section.

The following table lists the annual allocations that were issued to this facility and the amounts of RTCs held by this facility on the day of printing this Section.

RECLAIM POLLUTANT ANNUAL ALLOCATION (POUNDS)

Year Begin (month/year)	Year End (month/year)	Zone	NOx RTC Initially Allocated	NOx RTC [1] Holding as of 07/01/2016 (pounds)	Non-Tradable [2] Non-Usable RTCs (pounds)
1/2022	12/2022	Coastal	0	7500	0
7/2022	6/2023	Coastal	186	7144	0
1/2023	12/2023	Coastal	0	7500	0
7/2023	6/2024	Coastal	186	7144	0
1/2024	12/2024	Coastal	0	7500	0
7/2024	6/2025	Coastal	186	7144	0
1/2025	12/2025	Coastal	0	7500	0
7/2025	6/2026	Coastal	186	7144	0
1/2026	12/2026	Coastal	0	7500	0
7/2026	6/2027	Coastal	186	7144	0
1/2027	12/2027	Coastal	0	7500	0
7/2027	6/2028	Coastal	186	7144	0
1/2028	12/2028	Coastal	0	7500	0
7/2028	6/2029	Coastal	186	7144	0
1/2029	12/2029	Coastal	0	7500	0
7/2029	6/2030	Coastal	186	7144	0
1/2030	12/2030	Coastal	0	7500	0

Footnotes:

1. This number may change due to pending trades, emissions reported under Quarterly Certification of Emissions Report (QCER) and Annual Permit Emission Program (APEP) Report required pursuant to Rule 2004, or deductions made pursuant to Rule 2010(b). The most recent total RTC information can be obtained from the SCAQMD's RTC Listing.

2. The use of such credits is subject to restrictions set forth in paragraph (f)(1) of Rule 2002.

FACILITY PERMIT TO OPERATE
DCOR LLC

SECTION B: RECLAIM ANNUAL EMISSION ALLOCATION

The annual allocation of NOx RECLAIM Trading Credits (RTCs) for this facility is calculated pursuant to Rule 2002. Total NOx emission shall not exceed such annual allocations unless the operator obtains RTCs corresponding to the facility's increased emissions in compliance with Rules 2005 and 2007.

The level of Starting Allocation plus Non-Tradable Credits used to determine compliance with Rule 2005(c)(4) and applicability of Rule 2005(e) - Trading Zone Restrictions is listed on the last page of this Section.

The following table lists the annual allocations that were issued to this facility and the amounts of RTCs held by this facility on the day of printing this Section.

RECLAIM POLLUTANT ANNUAL ALLOCATION (POUNDS)

Year Begin (month/year)	Year End (month/year)	Zone	NOx RTC Initially Allocated	NOx RTC [1] Holding as of 07/01/2016 (pounds)	Non-Tradable [2] Non-Usable RTCs (pounds)
7/2030	6/2031	Coastal	186	7144	0
1/2031	12/2031	Coastal	0	7500	0

Footnotes:

1. This number may change due to pending trades, emissions reported under Quarterly Certification of Emissions Report (QCER) and Annual Permit Emission Program (APEP) Report required pursuant to Rule 2004, or deductions made pursuant to Rule 2010(b). The most recent total RTC information can be obtained from the SCAQMD's RTC Listing.

2. The use of such credits is subject to restrictions set forth in paragraph (f)(1) of Rule 2002.

FACILITY PERMIT TO OPERATE
DCOR LLC

SECTION B: RECLAIM ANNUAL EMISSION ALLOCATION

The annual allocation of RECLAIM Trading Credits (RTCs) for this facility is calculated pursuant to Rule 2002. If the facility submits a permit application to increase in an annual allocation to a level greater than the facility's starting Allocation plus Non-Tradable credits as listed below, the application will be evaluated for compliance with Rule 2005 (c)(4). Rule 2005 (e) - Trading Zone Restrictions applies if an annual allocation is increased to a level greater than the facility's Starting Allocation plus Non-Tradable Credits:

Year Begin (month/year)	Year End (month/year)	Zone	NOx RTC Starting Allocation (pounds)	Non-Tradable Credits(NTC) (pounds)
7/1994	6/1995	Coastal	469	0

FACILITY PERMIT TO OPERATE
DCOR LLC

SECTION C: FACILITY PLOT PLAN

(TO BE DEVELOPED)

FACILITY PERMIT TO OPERATE
DCOR LLC

SECTION D: FACILITY DESCRIPTION AND EQUIPMENT SPECIFIC CONDITIONS

The operator shall comply with the terms and conditions set forth below:

Equipment	ID No.	Connected To	RECLAIM Source Type/ Monitoring Unit	Emissions * And Requirements	Conditions
Process 1: Internal Combustion					
INTERNAL COMBUSTION ENGINE, EMERGENCY FIRE, DIESEL FUEL, CATERPILLAR, MODEL CAT3406BDITA, SIX CYLINDERS, FOUR CYCLE, WITH AFTERCOOLER, TURBOCHARGER, 460 BHP A/N: 441318	D1		NOX: PROCESS UNIT**	**NOX**: 469 LBS/1000 GAL DIESEL (1)	C1.1, D12.1, K67.1
INTERNAL COMBUSTION ENGINE, PORTABLE, DIESEL FUEL, JOHN DEERE, MODEL 6135HF485, 6 CYLINDERS, DRIVING THE CRANE ON RAILS, WITH TURBOCHARGER, 450 BHP A/N: 518224	D35		NOX: LARGE SOURCE**	**CO**: 0.61 GRAM/BHP-HR DIESEL (5) **[RULE 1110.2, 2-1-2008; RULE 1703(a)(3) PSD Analysis, 10-7-1988]**; **NOX**: 340 PPMV DIESEL (3) **[RULE 1110.2, 2-1-2008; RULE 1703(a)(3) PSD Analysis, 10-7-1988; RULE 2005, 5-6-2005; RULE 2012, 5-6-2005]**; **PM10**: 0.087 GRAM/BHP-HR DIESEL (4) **[40CFR 89 Subpart B, 7-1-2000]**; **ROG**: 2.54 GRAM/BHP-HR DIESEL (5) **[RULE 1110.2, 2-1-2008; 40CFR 89 Subpart B, 7-1-2000]**	C1.2, D12.1, E193.1, I296.2
Process 2: Crude/Gas/Water Separation > 400 BOPD					
VESSEL, SEPARATOR, V-1, TEST, CRUDE OIL, 35 BBL, LENGTH: 16 FT ; DIAMETER: 4 FT A/N: 441316	D3	D16			E127.1
VESSEL, SEPARATOR, V-2, TEST, CRUDE OIL, 35 BBL, LENGTH: 16 FT ; DIAMETER: 4 FT A/N: 441316	D4	D16			E127.1

* (1) (1A) (1B) Denotes RECLAIM emission factor
(2) (2A) (2B) Denotes RECLAIM emission rate
(3) Denotes RECLAIM concentration limit
(4) Denotes BACT emission limit
(5) (5A) (5B) Denotes command and control emission limit
(6) Denotes air toxic control rule limit
(7) Denotes NSR applicability limit
(8) (8A) (8B) Denotes 40 CFR limit (e.g. NSPS, NESHAPS, etc.)
(9) See App B for Emission Limits
(10) See section J for NESHAP/MACT requirements

** Refer to section F and G of this permit to determine the monitoring, recordkeeping and reporting requirements for this device.

FACILITY PERMIT TO OPERATE
DCOR LLC

SECTION D: FACILITY DESCRIPTION AND EQUIPMENT SPECIFIC CONDITIONS

The operator shall comply with the terms and conditions set forth below:

Equipment	ID No.	Connected To	RECLAIM Source Type/ Monitoring Unit	Emissions * And Requirements	Conditions
Process 2: Crude/Gas/Water Separation > 400 BOPD					
VESSEL, SEPARATOR, V-5, GROSS, CRUDE OIL, 460 BBL, LENGTH: 30 FT ; DIAMETER: 10 FT 6 IN A/N: 441316	D5	D16			E127.1
VESSEL, SEPARATOR, V-6, GROSS, CRUDE OIL, 460 BBL, LENGTH: 30 FT ; DIAMETER: 10 FT 6 IN A/N: 441316	D6	D16			E127.1
VESSEL, SEPARATOR, V-7, GROSS, CRUDE OIL, 460 BBL, LENGTH: 30 FT ; DIAMETER: 10 FT 6 IN A/N: 441316	D7	D16			E127.1
TANK, T-7, CRUDE OIL, SUMP TANK, 140 BBL; WIDTH: 10 FT ; HEIGHT: 7 FT ; LENGTH: 10 FT A/N: 441316	D8	D16			E127.1
SCRUBBER, V-9, RELIEF VENT A/N: 441316	D9				
VESSEL, V-301, SURGE, 250 BBL, CRUDE OIL A/N: 441316	D10				
Process 3: Waste Water Treating					
VESSEL, V-201, SURGE SEPARATOR, WASTE WATER, 120 BBL, HEIGHT: 10 FT ; DIAMETER: 9 FT A/N: 441311	D11	D16			E127.1
VESSEL, V-203, OIL SUMP, CRUDE OIL, 20 BBL, HEIGHT: 8 FT ; DIAMETER: 4 FT A/N: 441311	D12	D16			E127.1

* (1) (1A) (1B) Denotes RECLAIM emission factor
(2) (2A) (2B) Denotes RECLAIM emission rate
(3) Denotes RECLAIM concentration limit
(4) Denotes BACT emission limit
(5) (5A) (5B) Denotes command and control emission limit
(6) Denotes air toxic control rule limit
(7) Denotes NSR applicability limit
(8) (8A) (8B) Denotes 40 CFR limit (e.g. NSPS, NESHAPS, etc.)
(9) See App B for Emission Limits
(10) See section J for NESHAP/MACT requirements

** Refer to section F and G of this permit to determine the monitoring, recordkeeping and reporting requirements for this device.

FACILITY PERMIT TO OPERATE
DCOR LLC

SECTION D: FACILITY DESCRIPTION AND EQUIPMENT SPECIFIC CONDITIONS

The operator shall comply with the terms and conditions set forth below:

Equipment	ID No.	Connected To	RECLAIM Source Type/ Monitoring Unit	Emissions * And Requirements	Conditions
Process 3: Waste Water Treating					
VESSEL, V-202, WASTE WATER, 50 BBL, HEIGHT: 7 FT ; DIAMETER: 7 FT A/N: 441311	D13	D16			E127.1
VESSEL, V-205, CONE BOTTOM, WASTE WATER, 170 BBL, HEIGHT: 5 FT 3 IN; DIAMETER: 12 FT A/N: 441311	D14	D16			E127.1
VESSEL, V-206, INJECTION SURGE, WASTE WATER, 45 BBL, HEIGHT: 12 FT ; DIAMETER: 6 FT A/N: 441311	D15	D16			E127.1
FILTER, V-204, US FILTER, WALNUT SHELLS, 60 BBL, FIXED ROOF, HEIGHT: 9 FT ; DIAMETER: 7 FT A/N: 441311	D24				E127.1
Process 4: Vapor Recovery					
COMPRESSOR, M-5, WITH 125 HP ELECTRIC MOTOR A/N: 441315	D16	D3 D4 D5 D6 D7 D8 D11 D12 D13 D14 D15 D26 D27 D28			H23.1
Process 5: Fugitives					
FUGITIVE EMISSIONS, VALVES A/N: 441316	D17				H23.1
FUGITIVE EMISSIONS, PUMPS A/N: 441316	D18				H23.1
FUGITIVE EMISSIONS, PRV A/N: 441316	D19				H23.1
FUGITIVE EMISSIONS, FLANGES A/N: 441316	D20				H23.1
FUGITIVE EMISSIONS, FITTINGS A/N: 441316	D21				H23.1

* (1) (1A) (1B) Denotes RECLAIM emission factor
(2) (2A) (2B) Denotes RECLAIM emission rate
(3) Denotes RECLAIM concentration limit
(4) Denotes BACT emission limit
(5) (5A) (5B) Denotes command and control emission limit
(6) Denotes air toxic control rule limit
(7) Denotes NSR applicability limit
(8) (8A) (8B) Denotes 40 CFR limit (e.g. NSPS, NESHAPS, etc.)
(9) See App B for Emission Limits
(10) See section J for NESHAP/MACT requirements

** Refer to section F and G of this permit to determine the monitoring, recordkeeping and reporting requirements for this device.

FACILITY PERMIT TO OPERATE
DCOR LLC

SECTION D: FACILITY DESCRIPTION AND EQUIPMENT SPECIFIC CONDITIONS

The operator shall comply with the terms and conditions set forth below:

Equipment	ID No.	Connected To	RECLAIM Source Type/ Monitoring Unit	Emissions * And Requirements	Conditions
Process 5: Fugitives					
FUGITIVE EMISSIONS, DRAINS A/N: 441316	D22				H23.1
Process 6: Natural Gas Dehydration					
VESSEL, E-401, CHILLER/EVAPORATOR, DIAMETER: 1 FT 2.4 IN A/N: 441320	D25				
SCRUBBER, V-402, INLET, PRV VENTED TO VAPOR RECOVERY SYSTEM, DIAMETER: 1 FT 2.4 IN A/N: 441320	D26	D16			
VESSEL, V-403, LOW TEMPERATURE SEPARATOR, PRV VENTED TO VAPOR RECOVERY SYSTEM, DIAMETER: 1 FT 2.4 IN A/N: 441320	D27	D16			
VESSEL, V-404, FILTER SEPARATOR, PRV VENTED TO VAPOR RECOVERY SYSTEM, DIAMETER: 1 FT 1 IN A/N: 441320	D28	D16			
Process 8: POWER GENERATION					
GAS TURBINE, UNIT #1, FIELD GAS, INGERSOLL RAND, MODEL ML250, COMBINED CYCLE WITH HEAT RECOVERY, 3.27 MMBTU/HR A/N: 518222	D31		NOX: PROCESS UNIT**	**CO**: 319 PPMV FIELD GAS (4) **[RULE 1303(a)(1)-BACT, 5-10-1996;** *RULE 1303(a)(1) -BACT, 12-6-2002*]; **CO**: 2000 PPMV (5) **[RULE 407, 4-2-1982]**; **NOX**: 16 PPMV FIELD GAS (4) **[RULE 2005, 5-6-2005]**; **VOC**: 84 PPMV FIELD GAS (4) **[RULE 1303(a)(1)-BACT, 5-10-1996;** *RULE 1303(a)(1)-BACT, 12-6-2002*]	A63.1, A63.2, A99.1, A99.2, A99.3, I296.1

* (1) (1A) (1B) Denotes RECLAIM emission factor
(2) (2A) (2B) Denotes RECLAIM emission rate
(3) Denotes RECLAIM concentration limit
(4) Denotes BACT emission limit
(5) (5A) (5B) Denotes command and control emission limit
(6) Denotes air toxic control rule limit
(7) Denotes NSR applicability limit
(8) (8A) (8B) Denotes 40 CFR limit (e.g. NSPS, NESHAPS, etc.)
(9) See App B for Emission Limits
(10) See section J for NESHAP/MACT requirements

** Refer to section F and G of this permit to determine the monitoring, recordkeeping and reporting requirements for this device.

FACILITY PERMIT TO OPERATE
DCOR LLC

SECTION D: FACILITY DESCRIPTION AND EQUIPMENT SPECIFIC CONDITIONS

The operator shall comply with the terms and conditions set forth below:

Equipment	ID No.	Connected To	RECLAIM Source Type/ Monitoring Unit	Emissions * And Requirements	Conditions
Process 8: POWER GENERATION					
GAS TURBINE, UNIT #2, FIELD GAS, INGERSOLL RAND, MODEL ML250, COMBINED CYCLE WITH HEAT RECOVERY, 3.27 MMBTU/HR A/N: 518223	D33		NOX: PROCESS UNIT**	**CO**: 319 PPMV FIELD GAS (4) **[RULE 1303(a)(1)-BACT, 5-10-1996;** *RULE 1303(a)(1) -BACT, 12-6-2002*]; **CO**: 2000 PPMV (5) **[RULE 407, 4-2-1982]**; **NOX**: 16 PPMV FIELD GAS (4) **[RULE 2005, 5-6-2005]**; **VOC**: 84 PPMV FIELD GAS (4) **[RULE 1303(a)(1)-BACT, 5-10-1996;** *RULE 1303(a)(1)-BACT, 12-6-2002*]	A63.1, A63.2, A99.1, A99.2, A99.3, I296.1
Process 10: Gas Desulfurization					
VESSEL, CLOSED SYSTEM WITH AT LEAST 8,000 LBS OF IRON OXIDE MEDIA, HEIGHT: 20 FT ; DIAMETER: 4 FT A/N: 579443	D37				A101.1, H23.2, I326.1, K67.2

* (1) (1A) (1B) Denotes RECLAIM emission factor (2) (2A) (2B) Denotes RECLAIM emission rate
(3) Denotes RECLAIM concentration limit (4) Denotes BACT emission limit
(5) (5A) (5B) Denotes command and control emission limit (6) Denotes air toxic control rule limit
(7) Denotes NSR applicability limit (8) (8A) (8B) Denotes 40 CFR limit (e.g. NSPS, NESHAPS, etc.)
(9) See App B for Emission Limits (10) See section J for NESHAP/MACT requirements

** Refer to section F and G of this permit to determine the monitoring, recordkeeping and reporting requirements for this device.

FACILITY PERMIT TO OPERATE
DCOR LLC

SECTION D: DEVICE ID INDEX

The following sub-section provides an index to the devices that make up the facility description sorted by device ID.

FACILITY PERMIT TO OPERATE
DCOR LLC

SECTION D: DEVICE ID INDEX

Device Index For Section D			
Device ID	**Section D Page No.**	**Process**	**System**
D1	1	1	0
D3	1	2	0
D4	1	2	0
D5	2	2	0
D6	2	2	0
D7	2	2	0
D8	2	2	0
D9	2	2	0
D10	2	2	0
D11	2	3	0
D12	2	3	0
D13	3	3	0
D14	3	3	0
D15	3	3	0
D16	3	4	0
D17	3	5	0
D18	3	5	0
D19	3	5	0
D20	3	5	0
D21	3	5	0
D22	4	5	0
D24	3	3	0
D25	4	6	0
D26	4	6	0
D27	4	6	0
D28	4	6	0
D31	4	8	0
D33	5	8	0
D35	1	1	0
D37	5	10	0

FACILITY PERMIT TO OPERATE
DCOR LLC

SECTION D: FACILITY DESCRIPTION AND EQUIPMENT SPECIFIC CONDITIONS

The operator shall comply with the terms and conditions set forth below:

FACILITY CONDITIONS

F2.1 The operator shall limit emissions from this facility as follows:

CONTAMINANT	EMISSIONS LIMIT
Sulfur compounds	Less than or equal to 5 LBS PER DAY

For the purpose of this condition, the sulfur compound emission limit shall be verified through monthly gas analysis of sulfur content using District Method 307-91. The operator shall calculate the daily sulfur emissions by multiplying the results of the monthly gas analysis in ppm as H2S by 0.0899 and by the fuel use in MMSCF/day. The operator shall keep records of the monthly gas analysis and daily records of the fuel gas usage for a minimum of five years.

[RULE 431.1, 6-12-1998]

F14.1 The operator shall not use diesel fuel containing sulfur compounds in excess of 15 ppm by weight as supplied by the supplier.

[RULE 431.2, 5-4-1990; RULE 431.2, 9-15-2000]

SYSTEM CONDITIONS

S15.1 The vent gases from all affected devices of this process/system shall be vented as follows:

All emergency vent gases shall be vented to the vapor recovery compressor.

[Systems subject to this condition : Process 6, System 0]

FACILITY PERMIT TO OPERATE
DCOR LLC

SECTION D: FACILITY DESCRIPTION AND EQUIPMENT SPECIFIC CONDITIONS

The operator shall comply with the terms and conditions set forth below:

DEVICE CONDITIONS

A. Emission Limits

A63.1 The operator shall limit emissions from this equipment as follows:

CONTAMINANT	EMISSIONS LIMIT
CO	Less than or equal to 1116 LBS IN ANY ONE MONTH
PM10	Less than or equal to 16.1 LBS IN ANY ONE MONTH
VOC	Less than or equal to 167.4 LBS IN ANY ONE MONTH
SOX	Less than or equal to 13.3 LBS IN ANY ONE MONTH

The operator shall calculate the emission limit(s) by using the following emission factors: CO =0.56 lbs/kscf, VOC = 0.084 lbs/kscf, PM10= 0.008 lbs/kscf, and SOx = 0.0067 lbs/kscf.

[**RULE 1303(b)(2)-Offset, 5-10-1996;** RULE 1303(b)(2)-Offset, 12-6-2002]

[Devices subject to this condition : D31, D33]

A63.2 The operator shall limit emissions from this equipment as follows:

CONTAMINANT	EMISSIONS LIMIT
CO	Less than or equal to 13140 LBS IN ANY ONE YEAR
PM10	Less than or equal to 193 LBS IN ANY ONE YEAR
VOC	Less than or equal to 1971 LBS IN ANY ONE YEAR
SOX	Less than or equal to 158 LBS IN ANY ONE YEAR

FACILITY PERMIT TO OPERATE
DCOR LLC

SECTION D: FACILITY DESCRIPTION AND EQUIPMENT SPECIFIC CONDITIONS

The operator shall comply with the terms and conditions set forth below:

The operator shall calculate the emission limit(s) by using the following emission factors: CO =0.56 lbs/kscf, VOC = 0.084 lbs/kscf, PM10= 0.008 lbs/kscf, and SOx = 0.0067 lbs/kscf.

For the purpose of this condition, the yearly emission limit shall be defined as a period of twelve (12) consecutive months determined on a rolling basis with a new 12 month period beginning on the first day of each calendar month.

[**RULE 1303(b)(2)-Offset, 5-10-1996;** RULE 1303(b)(2)-Offset, 12-6-2002]

[Devices subject to this condition : D31, D33]

A99.1 The 16 PPM NOX emission limit(s) shall only apply at 15% excess oxygen, dry, and based on 60-minute average time.

[**RULE 1303(a)(1)-BACT, 5-10-1996;** RULE 1303(a)(1)-BACT, 12-6-2002]

[Devices subject to this condition : D31, D33]

A99.2 The 319 PPM CO emission limit(s) shall only apply at 15% excess oxygen, dry, and based on 60-minute average time.

[**RULE 1303(a)(1)-BACT, 5-10-1996;** RULE 1303(a)(1)-BACT, 12-6-2002]

[Devices subject to this condition : D31, D33]

A99.3 The 84 PPM ROG emission limit(s) shall only apply at 15% excess oxygen, dry, and based on 60-minute average time.

[**RULE 1303(a)(1)-BACT, 5-10-1996;** RULE 1303(a)(1)-BACT, 12-6-2002]

FACILITY PERMIT TO OPERATE
DCOR LLC

SECTION D: FACILITY DESCRIPTION AND EQUIPMENT SPECIFIC CONDITIONS

The operator shall comply with the terms and conditions set forth below:

[Devices subject to this condition : D31, D33]

A101.1 The operator shall take all reasonable control measures to minimize fugitive emissions from this equipment.

[Devices subject to this condition : D37]

C. Throughput or Operating Parameter Limits

C1.1 The operator shall limit the operating time to no more than 199 hour(s) in any one year.

[RULE 1304(a)-Modeling and Offset Exemption, 6-14-1996; RULE 1304(c)-Offset Exemption, 6-14-1996]

[Devices subject to this condition : D1]

C1.2 The operator shall limit the operating time to no more than 4000 hour(s) in any one year.

[RULE 2012, 5-6-2005]

[Devices subject to this condition : D35]

D. Monitoring/Testing Requirements

D12.1 The operator shall install and maintain a(n) non-resettable elapsed time meter to accurately indicate the elapsed operating time of the engine.

[RULE 2012, 5-6-2005]

FACILITY PERMIT TO OPERATE
DCOR LLC

SECTION D: FACILITY DESCRIPTION AND EQUIPMENT SPECIFIC CONDITIONS

The operator shall comply with the terms and conditions set forth below:

[Devices subject to this condition : D1, D35]

E. Equipment Operation/Construction Requirements

E127.1 The operator shall keep gauge/sample hatches closed except during actual gauging/sampling operations.

[RULE 1148.1, 3-5-2004; **RULE 1173, 5-13-1994;** RULE 1173, 12-6-2002]

[Devices subject to this condition : D3, D4, D5, D6, D7, D8, D11, D12, D13, D14, D15, D24]

E193.1 The operator shall upon completion of construction, operate and maintain this equipment according to the following requirements:

The operator shall conduct a source test once every three years in accordance with Rule 2012 requirements.

The operator shall perform an engine tune-up twice in any one year.

The equipment shall not be operated until the operator stops operation and surrenders the permit of Device D2 of Section D. The operator shall notify AQMD prior to first operation of this device.

[RULE 2012, 5-6-2005]

[Devices subject to this condition : D35]

H. Applicable Rules

H23.1 This equipment is subject to the applicable requirements of the following rules or regulations:

FACILITY PERMIT TO OPERATE
DCOR LLC

SECTION D: FACILITY DESCRIPTION AND EQUIPMENT SPECIFIC CONDITIONS

The operator shall comply with the terms and conditions set forth below:

Contaminant	Rule	Rule/Subpart
ROG	District Rule	1173

[RULE 1148.1, 3-5-2004; **RULE 1173, 5-13-1994;** RULE 1173, 12-6-2002]

[Devices subject to this condition : D16, D17, D18, D19, D20, D21, D22]

H23.2 This equipment is subject to the applicable requirements of the following rules or regulations:

Contaminant	Rule	Rule/Subpart
ROG	District Rule	1173

[**RULE 1173, 5-13-1994;** RULE 1173, 12-6-2002]

[Devices subject to this condition : D37]

I. Administrative

I296.1 This equipment shall not be operated unless the operator demonstrates to the Executive Officer that the facility holds sufficient RTCs to offset the annual emissions increase for the first 12 months of operation. In addition, this equipment shall not be operated unless the operator demonstrates to the Executive Officer that, at the commencement of each compliance year after the start of operation, the facility holds sufficient RTCs in an amount equal to the annual emissions increase.

FACILITY PERMIT TO OPERATE
DCOR LLC

SECTION D: FACILITY DESCRIPTION AND EQUIPMENT SPECIFIC CONDITIONS

The operator shall comply with the terms and conditions set forth below:

For the purposes of this condition, the annual emission increase is 1095 lbs. of NOx

RTCs held for the purpose of demonstrating compliance with this condition either at the commencement of initial operation or of a compliance year may be sold only after 12 months of start of initial operation or after the fourth quarter of the applicable compliance year, respectively.

In lieu of holding RTCs for the entire duration specified above, RTCs held for the purpose of demonstrating compliance with this condition may be sold as specified below, provided quarterly emission does not exceed the corresponding quarterly limit listed in the table below. The amount available for sale shall be the quarterly emission limit listed minus the actual emission reportable pursuant to RECLAIM Monitoring, Recordkeeping, and Reporting protocols. Such amount may be sold only after the end of the subject quarter. If the quarterly certified emissions for any quarter exceed the corresponding quarterly emission limit, the facility may only sell RTCs acquired pursuant to Rule 2005(f) for that compliance year after the fourth quarter of that compliance year. This early sale option shall permanently be unavailable in the event that quarterly emissions exceeded the corresponding quarterly limits for a total of 3 times in any five consecutive years.

Calendar Quarter	Emission Limit (lbs.)
January 1 through March 31	274
April 1 through June 30	274
July 1 through September 30	274
October 1 through December 31	274

[RULE 2005, 5-6-2005]

[Devices subject to this condition : D31, D33]

FACILITY PERMIT TO OPERATE
DCOR LLC

SECTION D: FACILITY DESCRIPTION AND EQUIPMENT SPECIFIC CONDITIONS

The operator shall comply with the terms and conditions set forth below:

I296.2 This equipment shall not be operated unless the operator demonstrates to the Executive Officer that the facility holds sufficient RTCs to offset the annual emissions increase for the first 12 months of operation. In addition, this equipment shall not be operated unless the operator demonstrates to the Executive Officer that, at the commencement of each compliance year after the start of operation, the facility holds sufficient RTCs in an amount equal to the annual emissions increase.

For the purposes of this condition, the annual emission increase is 10120 lbs. of NOx

RTCs held for the purpose of demonstrating compliance with this condition either at the commencement of initial operation or of a compliance year may be sold only after 12 months of start of initial operation or after the fourth quarter of the applicable compliance year, respectively.

In lieu of holding RTCs for the entire duration specified above, RTCs held for the purpose of demonstrating compliance with this condition may be sold as specified below, provided quarterly emission does not exceed the corresponding quarterly limit listed in the table below. The amount available for sale shall be the quarterly emission limit listed minus the actual emission reportable pursuant to RECLAIM Monitoring, Recordkeeping, and Reporting protocols. Such amount may be sold only after the end of the subject quarter. If the quarterly certified emissions for any quarter exceed the corresponding quarterly emission limit, the facility may only sell RTCs acquired pursuant to Rule 2005(f) for that compliance year after the fourth quarter of that compliance year. This early sale option shall permanently be unavailable in the event that quarterly emissions exceeded the corresponding quarterly limits for a total of 3 times in any five consecutive years.

Calendar Quarter	Emission Limit (lbs.)
January 1 through March 31	2530
April 1 through June 30	2530
July 1 through September 30	2530
October 1 through December 31	2530

FACILITY PERMIT TO OPERATE
DCOR LLC

SECTION D: FACILITY DESCRIPTION AND EQUIPMENT SPECIFIC CONDITIONS

The operator shall comply with the terms and conditions set forth below:

[RULE 2005, 5-6-2005; RULE 2012, 5-6-2005]

[Devices subject to this condition : D35]

I326.1 The operator shall comply with the requirements and conditions of the Approval to Construct/Modify issued by the U.S. EPA for this equipment.

[Devices subject to this condition : D37]

K. Record Keeping/Reporting

K67.1 The operator shall keep records, in a manner approved by the District, for the following parameter(s) or item(s):

date of operation, elapsed time in hours, the reason for operation

[RULE 1304(a)-Modeling and Offset Exemption, 6-14-1996; RULE 1304(c)-Offset Exemption, 6-14-1996]

[Devices subject to this condition : D1]

K67.2 The operator shall keep records, in a manner approved by the District, for the following parameter(s) or item(s):

Daily total gas flow to the inlet or outlet of vessel.

H2S concentration in PPMV at the outlet of this vessel measured and recorded at least once every 24 hours.

Vessel media change out records for 5 years.

Number of hours the vessel is out of service for every week.

FACILITY PERMIT TO OPERATE
DCOR LLC

SECTION D: FACILITY DESCRIPTION AND EQUIPMENT SPECIFIC CONDITIONS

The operator shall comply with the terms and conditions set forth below:

[Devices subject to this condition : D37]

FACILITY PERMIT TO OPERATE
DCOR LLC

SECTION E: ADMINISTRATIVE CONDITIONS

The operating conditions in this section shall apply to all permitted equipment at this facility unless superseded by condition(s) listed elsewhere in this permit.

1. The permit shall remain effective unless this permit is suspended, revoked, modified, reissued, denied, or it is expired for nonpayment of permit processing or annual operating fees. [201, 203, 209, 301]
   a. The permit must be renewed annually by paying annual operating fees, and the permit shall expire if annual operating fees are not paid pursuant to requirements of Rule 301(d). [301(d)]
   b. The Permit to Construct listed in Section H shall expire one year from the Permit to Construct issuance date, unless a Permit to Construct extension has been granted by the Executive Officer or unless the equipment has been constructed and the operator has notified the Executive Officer prior to the operation of the equipment, in which case the Permit to Construct serves as a temporary Permit to Operate. [202, 205]
   c. The Title V permit shall expire as specified under Section K of the Title V permit. The permit expiration date of the Title V facility permit does not supercede the requirements of Rule 205. [205, 3004]
2. The operator shall maintain all equipment in such a manner that ensures proper operation of the equipment. [204]
3. This permit does not authorize the emissions of air contaminants in excess of those allowed by Division 26 of the Health and Safety Code of the State of California or the Rules and Regulations of the SCAQMD. This permit cannot be considered as permission to violate existing laws, ordinances, regulations or statutes of other governmental agencies. [204]
4. The operator shall not use equipment identified in this facility permit as being connected to air pollution control equipment unless they are so vented to the identified air pollution control equipment which is in full use and which has been included in this permit. [204]

FACILITY PERMIT TO OPERATE
DCOR LLC

SECTION E: ADMINISTRATIVE CONDITIONS

5. The operator shall not use any equipment having air pollution control device(s) incorporated within the equipment unless the air pollution control device is in full operation.[204]

6. The operator shall maintain records to demonstrate compliance with rules or permit conditions that limit equipment operating parameters, or the type or quantity of material processed. These records shall be made available to SCAQMD personnel upon request and be maintained for at least: [204]

   a. Three years for a facility not subject to Title V; or

   b. Five years for a facility subject to Title V.

7. The operator shall maintain and operate all equipment to ensure compliance with all emission limits as specified in this facility permit. Compliance with emission limits shall be determined according to the following specifications, unless otherwise specified by SCAQMD rules or permit conditions: [204]

   a. For internal combustion engines and gas turbines, measured concentrations shall be corrected to 15 percent stack-gas oxygen content on a dry basis and be averaged over a period of 15 consecutive minutes; [1110.2, 1134, 204]

   b. For other combustion devices, measured concentrations shall be corrected to 3 percent stack-gas oxygen content on a dry basis and be averaged over a period of 15 consecutive minutes; [1146, 1146.1, 204]

   c. For a large NOx source, compliance with a RECLAIM concentration limit shall be measured over a continuous 60 minutes for that source; [2012]

   d. For non-combustion sources, compliance with emission limits shall be determined and averaged over a period of 60 minutes. [204]

FACILITY PERMIT TO OPERATE
DCOR LLC

SECTION E: ADMINISTRATIVE CONDITIONS

e. For the purpose of determining compliance with Rule 407, carbon monoxide (CO) shall be measured on a dry basis and be averaged over 15 consecutive minutes, and sulfur compound which would exist as liquid or gas at standard conditions shall be calculated as sulfur dioxide (SO2) and be averaged over 15 consecutive minutes; [407]

f. For the purpose of determining compliance with Rule 409, combustion contaminant emission measurements shall be corrected to 12 percent carbon dioxide (CO2) at standard conditions and averaged over 15 consecutive minutes. [409]

g. For the purpose of determining compliance with Rule 475, combustion contaminant emission measurements shall be corrected to 3 percent of oxygen (O2) at standard conditions and averaged over 15 consecutive minutes or any other averaging time specified by the Executive Officer. [475]

8. All equipment operating under the RECLAIM program shall comply concurrently with all SCAQMD Rules and Regulation, except those listed in Table 1 of Rule 2001 for NOx RECLAIM sources and Table 2 of Rule 2001 for SOx RECLAIM sources. Those provisions listed in Tables 1 or 2 shall not apply to NOx or SOx emissions after the date the facility has demonstrated compliance with all monitoring and reporting requirements of Rules 2011 or 2012, as applicable. Provisions of the listed SCAQMD rules in Tables 1 or 2 which have initial implementation dates in 1994 shall not apply to a RECLAIM NOx or SOx source, respectively. [2001]

9. The operator shall, when a source test is required by SCAQMD, provide a source test protocol to SCAQMD no later than 60 days before the proposed test date. The test shall not commence until the protocol is approved by SCAQMD. The test protocol shall contain the following information: [204, 304]

a. Brief description of the equipment tested.

FACILITY PERMIT TO OPERATE
DCOR LLC

SECTION E: ADMINISTRATIVE CONDITIONS

b. Brief process description, including maximum and normal operating temperatures, pressures, through-put, etc.

c. Operating conditions under which the test will be performed.

d. Method of measuring operating parameters, such as fuel rate and process weight. Process schematic diagram showing the ports and sampling locations, including the dimensions of the ducts/stacks at the sampling locations, and distances of flow disturbances, (e,g. elbows, tees, fans, dampers) from the sampling locations (upstream and downstream).

e. Brief description of sampling and analytical methods used to measure each pollutant, temperature, flow rates, and moisture.

f. Description of calibration and quality assurance procedures.

g. Determination that the testing laboratory qualifies as an "independent testing laboratory" under Rule 304 (no conflict of interest).

10. The operator shall submit a report no later than 60 days after conducting a source test, unless otherwise required by SCAQMD Rules or equipment-specific conditions. The report shall contain the following information: [204]

a. The results of the source test.

b. Brief description of the equipment tested.

c. Operating conditions under which the test will be performed.

d. Method of measuring operating parameters, such as fuel rate and process weight. Process schematic diagram showing the ports and sampling locations, including the dimensions of the ducts/stacks at the sampling locations, and distances of flow disturbances, (e,g. elbows, tees, fans, dampers) from the sampling locations (upstream and downstream).

e. Field and laboratory data forms, strip charts and analyses.

FACILITY PERMIT TO OPERATE
DCOR LLC

SECTION E: ADMINISTRATIVE CONDITIONS

f. Calculations for volumetric flow rates, emission rates, control efficiency, and overall control efficiency.

11. The operator shall, when a source test is required, provide and maintain facilities for sampling and testing. These facilities shall comply with the requirements of SCAQMD Source Test Method 1.1 and 1.2. [217]

12. Whenever required to submit a written report, notification or other submittal to the Executive Officer, SCAQMD, or the District, the operator shall mail or deliver the material to: Deputy Executive Officer, Engineering and Compliance, SCAQMD, 21865 Copley Drive, Diamond Bar, CA 91765-4178. [204]

FACILITY PERMIT TO OPERATE
DCOR LLC

SECTION F: RECLAIM MONITORING AND SOURCE TESTING REQUIREMENTS

The Facility shall comply with all applicable monitoring and source testing requirements in Regulation XX. These requirements may include but are not limited to the following:

I. NOx Monitoring Conditions

A. The Operator of a NOx Major Source, as defined in Rule 2012, shall, as applicable:

Not Applicable

B. The Operator of a NOx Large Source, as defined in Rule 2012, shall, as applicable:

1. Install, maintain, and operate a totalizing fuel meter and any device specified by the Executive Officer as necessary to determine monthly fuel usage or other applicable variables specified in Rule 2012, Appendix A, Table 3-A. The sharing of totalizing fuel meter may be allowed by the Executive Officer if the fuel meter serves large sources which have the same emission factor, concentration limit, or emission rate. The sharing of totalizing fuel meters shall not be allowed for large sources which are required to comply with an annual heat input limit. [2012]

2. Comply at all times with the specified NOx concentration limit in PPM measured over any continuous 60 minutes for that source or establish an equipment-specific emission rate that is reliable, accurate, representative of that sources emissions, and in accordance with the requirements specified in Rule 2012, Appendix A, Chapter 5. [2012]

C. The Operator of a NOx Process Unit, as defined in Rule 2012, shall, as applicable:

1. Install, maintain, and operate a totalizing fuel meter or any device approved by the Executive Officer to measure quarterly fuel usage or other applicable variables specified in Rule 2012, Table 2012-1, and Rule 2012, Appendix A, Table 4-A. The sharing of totalizing fuel meters may be allowed by the Executive Officer if the fuel meter serves process units which have the same emission factor or emission rate. The sharing of totalizing meter shall not be allowed for process units which are required to comply with an annual heat input limit. [2012]

FACILITY PERMIT TO OPERATE
DCOR LLC

SECTION F: RECLAIM MONITORING AND SOURCE TESTING REQUIREMENTS

II. NOx Source Testing and Tune-up conditions

1. The operator shall conduct all required NOx source testing in compliance with an SCAQMD-approved source test protocol. [2012]

2. The operator shall, as applicable, conduct source tests for every large NOx source no later than June 30, 1997 and every 3 years thereafter. The source test shall include the determination of NOx concentration and a relative accuracy audit of the exhaust stack flow determination (e.g. in-stack flow monitor or fuel flow monitor based F-factor calculation). Such source test results shall be submitted per the schedule described by APEP. In lieu of submitting the first source test report, the facility permit holder may submit the results of a source test not more than 3 years old which meets the requirements when conducted. [2012]

3. All NOx large sources and NOx process units shall be tuned-up in accordance with the schedule specified in Rule 2012, Appendix A, Chapter 5, Table 5-B. [2012]

FACILITY PERMIT TO OPERATE
DCOR LLC

SECTION G: RECORDKEEPING AND REPORTING REQUIREMENTS FOR RECLAIM SOURCES

The Facility shall comply with all applicable reporting and recordkeeping requirements in Regulation XX. These requirements may include but are not limited to the following:

I. Recordkeeping Requirements for all RECLAIM Sources

1. The operator shall maintain all monitoring data required to be measured or reported pursuant to Rule 2011 and Rule 2012, whichever is applicable. All records shall be made available to SCAQMD staff upon request and be maintained for at least:
    a. Three years after each APEP report is submitted to SCAQMD for a facility not subject to Title V, unless a different time period is required in Rule 2011 or Rule 2012 [2011 & 2012]; or
    b. Five years after each APEP report is submitted to SCAQMD for a facility subject to Title V. [3004(a)(4)(E)]
    c. Notwithstanding the above, all data gathered or computed for intervals of less than 15 minutes shall only be maintained a minimum of 48 hours. [2011 & 2012]
2. The operator shall store on site and make available to the Executive Officer upon request: records used to determine emissions, maintenance records, sources test reports, relative accuracy test audit reports, relative accuracy audit reports and fuel meter calibration records. [2011 & 2012]

II. Reporting Requirements for all RECLAIM Sources

1. The operator shall submit a quarterly certification of emissions including the facility's total NOx or SOx emissions, whichever is applicable, for the quarter within 30 days after the end of the first three quarters and 60 days after the end of the fourth quarter of a compliance year. [2011 & 2012]

NOx Reporting Requirements

A. The Operator of a NOx Major Source, as defined in Rule 2012, shall, as applicable:

Not Applicable

FACILITY PERMIT TO OPERATE
DCOR LLC

SECTION G: RECORDKEEPING AND REPORTING REQUIREMENTS FOR RECLAIM SOURCES

B. The Operator of a NOx Large Source, as defined in Rule 2012, shall:

1. Install, maintain and operate a modem or any reporting device approved by the Executive Officer to report, to the SCAQMD, the total monthly NOx mass emissions from each large NOx source. The Operator shall comply with this requirement within 12 months of the date of entry to the RECLAIM Program. Such data shall be reported within 15 days after the end of each calendar month. [2012]

C. The Operator of a NOx Process Unit, as defined in Rule 2012, shall:

1. Electronically report the calculated quarterly NOx emissions for each NOx process unit. The Operator shall comply with this requirement within 12 months of the date of entry to the RECLAIM Program. [2012]

FACILITY PERMIT TO OPERATE
DCOR LLC

SECTION H: PERMIT TO CONSTRUCT AND TEMPORARY PERMIT TO OPERATE

NONE

FACILITY PERMIT TO OPERATE
DCOR LLC

SECTION I: PLANS AND SCHEDULES

This section lists all plans approved by AQMD for the purposes of meeting the requirements of applicable AQMD rules specified below. The operator shall comply with all conditions specified in the approval of these plans, with the following exceptions:

a. The operator does not have to comply with NOx or SOx emission limits from rules identified in Table 1 or Table 2 of Rule 2001(j) which become effective after December 31, 1993.

b. The operator does not have to comply with NOx or SOx emission limits from rules identified in Table 1 or Table 2 of Rule 2001(j) after the facility has received final certification of all monitoring and reporting requirements specified in Section F and Section G.

Documents pertaining to the plan applications listed below are available for public review at AQMD Headquarters. Any changes to plan applications will require permit modification in accordance with Title V permit revision procedures.

List of approved plans:

Application	Rule
486556	1110.2

NOTE: This section does not list compliance schedules pursuant to the requirements of Regulation XXX - Title V Permits: Rule 3004(a)(10)(C). For equipment subject to a variance, order for abatement, or alternative operating condition granted pursuant to Rule 518.2, equipment specific conditions are added to the equipment in Section D or H of the permit.

FACILITY PERMIT TO OPERATE
DCOR LLC

SECTION J: AIR TOXICS

NOT APPLICABLE

FACILITY PERMIT TO OPERATE
DCOR LLC

APPENDIX A: NOX AND SOX EMITTING EQUIPMENT EXEMPT FROM WRITTEN PERMIT PURSUANT TO RULE 219

1. EMERGENCY ICE, DIESEL

FACILITY PERMIT TO OPERATE
DCOR LLC

APPENDIX B: RULE EMISSION LIMITS

NOT APPLICABLE