CH2M HILL
610 Anacapa Street
Santa Barbara, CA 93101
Tel 805-568-0650
Fax 714-424-2016

CH2MHILL

January 16, 2009

DOCKET
01-AFC-18C
DATE JAN 16 2009
RECD. JAN 16 2009

Mr. Ron Yasny, Compliance Project Manager
California Energy Commission
1516 Ninth Street, MS-2000
Sacramento, CA 95814-5512

Mr. Mathew Trask, Amendment Project Manager
Energy Facility Siting Division
California Energy Commission
1516 Ninth Street
Sacramento, CA 95814-5512

Subject: Data Responses Set 1 (Responses to Data Requests 1 through 11 GWF Henrietta Combined Cycle Power Plant Project (01-AFC-18C)

On behalf of the GWF Energy LLC., attached please find six hard copies and three CD copies of the GWF Henrietta Data Responses, Set 1, in response to CEC Staff's Data Requests dated December 8, 2008. As part of this submittal, we are also providing two hard copies and five CD copies of the GWF Henrietta System Impact Study (Attachments DR8-1), per CEC Data Request Number 8.

Please contact me should you have any questions.

Sincerely,

CH2M HILL

Jennifer L. Scholl

Jennifer L. Scholl
Senior Project Manager/Regulatory Specialist

Petition for License Amendment

GWF Henrietta Combined-Cycle Power Plant

System Impact Study
Submitted in Support of
GWF Henrietta Peaker Plant (01-AFC-18)

Submitted by

GWF®

With Technical Assistance by

CH2MHILL

January 2009

EY072008002SAC

System Impact Study

Generation Interconnection

GWF Energy LLC

GWF Henrietta Combined Cycle Power Plant

December 10, 2008

Table of Contents

1. Executive Summary 1
2. Project and Interconnection Information 2
3. Study Assumptions 3
4. Powerflow Study Base Cases 4
5. Study Criteria Summary 6
6. Steady State Power Flow Study and Results 7
7. Reactive Power Deficiency Analysis 9
8. Transient Stability Results 11
9. Short Circuit Study Results 12
10. Mitigation 13
11. Cost Estimates 13
12. Environmental Evaluation / Permitting 14
13. Study Updates 15

Appendices

A. Contingency Lists for Outages
B. Governor Power flow Outages
C. Steady State Power Flow Results
D. Steady State Power Flow Plots
E. Transient Stability Plots
F. Generator Machine Dynamic Data

1. Executive Summary

GWF Energy, LLC (GWF), proposes to interconnect a 25 MW Steam Turbine (Project) to the existing GWF Henrietta facility consisting of two 50 MW Combustion Turbines (CT). The interconnection point will be at the 70-kV bus at Pacific Gas & Electric Company's (PG&E) Henrietta Substation, in Kings County, California. The planned operation date for the proposed Project is May 1, 2012.

In order for the Project to proceed through the California Energy Commission's (CEC) License Amendment process a system impact study for the Project must be completed. The CEC has stated that it will accept a "third party" impact study and, therefore, GWF has requested that Navigant Consulting Inc. (NCI) perform a System Impact Study (SIS) for the Project. This SIS:

- Identifies the transmission system impacts caused solely by the addition of the proposed Project,
- Identifies the system reinforcements necessary to mitigate the adverse impacts of the proposed Project under various system conditions, and
- Provides preliminary cost estimates for the above system reinforcements.

To determine the system impacts caused by the addition of the Project, studies were performed using the following full loop base cases: 1) 2013 Summer Peak, 2) 2013 Summer Off-Peak, and 3) 2013 Spring Peak. The studies performed included:

- Steady State Power Flow
- Governor Power Flow
- Dynamic Stability Analysis
- Short Circuit Analysis
- Reactive Margin Analysis

This evaluation, which was performed using data provided by PG&E and in a manner similar to that used by PG&E in performing generation interconnection system impact studies in accordance with existing CAISO/PG&E tariff rules, concludes that the addition of the Project would cause a number of pre-existing normal and/or emergency overloads to increase. However, the addition of the Project did not result in new overloads.

The power flow analysis also indicated that the Project causes no reactive power deficiencies. Dynamic Stability Study and Reactive Margin Study results indicated that the transmission system's performance, relative to the applicable reliability guidelines, would not be impacted by the GWF Project following selected disturbances.

The preliminary cost estimate of the Interconnection Facilities[1] to interconnect the Project is approximately **$1.1 million**, exclusive of ITCC[2].

2. Project and Interconnection Information

As discussed above the Project will be located at the existing GWF Henrietta site located directly adjacent to PG&E's Henrietta Substation. Figure 2-1 provides a map of the Project area and of the transmission facilities in the proximity of the Project.

The Project will be an addition of a steam turbine generator, along with the steam turbine's associated generator step-up transformer (GSU), to the existing two combustion turbine generators which will establish a combined cycle power plant. Specific information regarding the Project Expansion configuration is as follows:

- Steam turbine generator - 27 MW (gross)
- Auxiliary load – 2.0 MW
- Total maximum net output of 25 MW
- STG step-up transformer – Rated at 13.8/70-kV and 35 MVA.

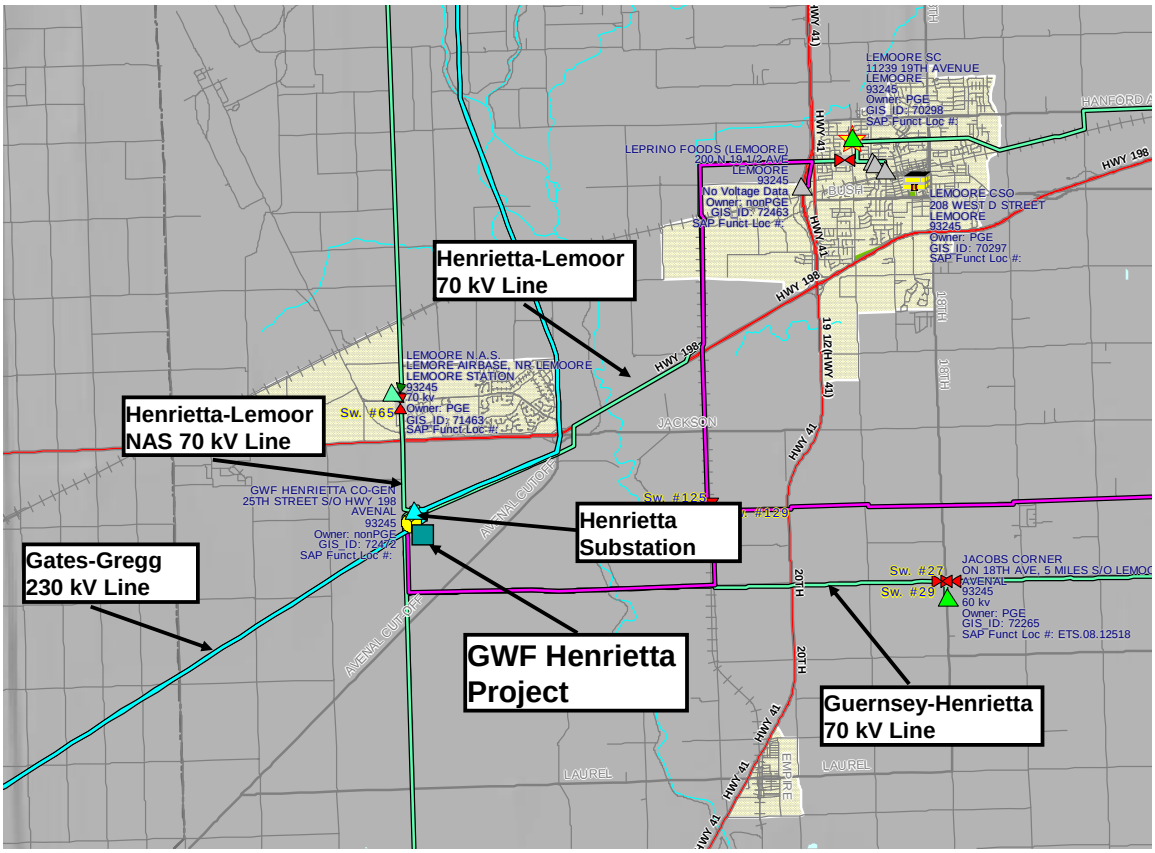

[1] The transmission facilities necessary to physically and electrically interconnect the Project to the CAISO Controlled Grid.

[2] Income Tax Component of Contribution.

Figure 2-1: Project Location Map

Figure 2-2 is a conceptual one-line diagram for the Project and the related interconnection facilities.

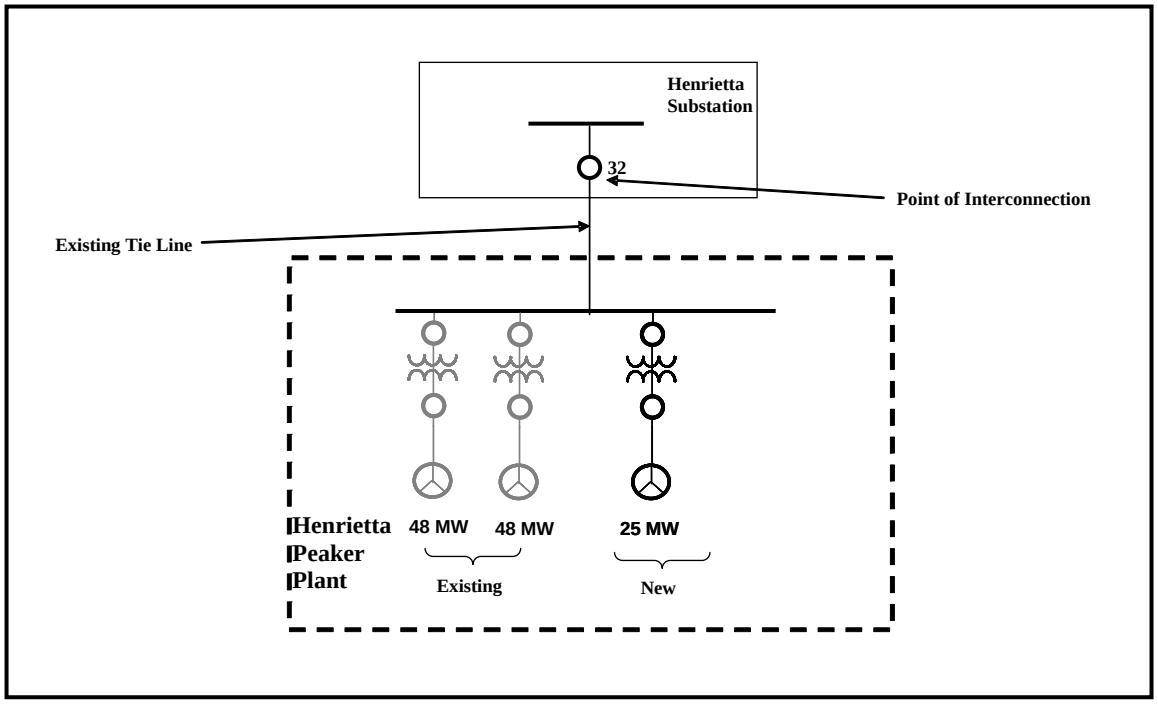

Figure 2-2: Conceptual One-Line Diagram

3. Study Assumptions

NCI conducted this SIS using the following assumptions:

1. The Project will be a steam turbine generator rated for 27 MW. The maximum total gross output from the Project is 27 MW with an expected total plant load of 2.0 MW. Therefore, the maximum net output to the grid will be 25 MW.
2. The expected commercial operation date is May 2012.
3. The step-up transformer for the STG, will be a three-phase, 13.8/70-kV delta/wye grounded transformer, rated at 35 MVA @ 65 degree C rise with an impedance of 9% @ 35 MVA base.

4. The generator will tie in to the existing GWF Henrietta substation.
5. The planned generating facilities in PG&E's Greater Fresno service area whose schedules are concurrent with or precede the Project's schedule will be modeled on-line.

4. Powerflow Study Base Cases

Six power flow base cases (three pre-Project and three post-Project) were used to evaluate the transmission system impacts of the Project. While it is impossible to study all combinations of system load and generation levels during all seasons and at all times of the day, these base cases will represent extreme loading and generation conditions for the study area. However, there is no guarantee that:

- The Project can operate at maximum rated output 24 hours a day, year round, without system impacts, or
- The Project will not cause system impacts during the times and seasons not studied in this SIS.

The power flow analysis was performed using the following WECC full-loop base cases (all in General Electric Power Flow format). These base cases were provided by PG&E:

- A 2013 Summer Peak Base Case which was developed from PG&E's 2007 base case series and has a 1-in-10 year extreme weather load level for the Greater Fresno Area.
- A 2013 Spring Peak Base Case which was developed to evaluate potential transmission congestion with typical Spring season load conditions and very high hydro-generation levels (as is typical during the Spring season).
- A 2013 Summer Off-Peak Base Case which was developed to evaluate potential transmission congestion during off-peak system conditions. The load in the Greater Fresno area was modeled at 50% of the summer peak load level and two units at Helms PGP (620 MW total) were assumed in pumping mode.

Table 4-1 summarizes information regarding critical path flows and northern California area loads and generation for each of the above cases.

According to the IFS study plan the above base cases modeled all approved CAISO transmission reliability projects that will be operational by 2013. They also modeled the proposed queued generation projects that are ahead of the Project in the CAISO queue. However, some generation projects that are electrically far from the proposed Project were either turned off or modeled with reduced generation to balance the loads and resources in the power flow model. The major queued generation projects in the southern portion of the PG&E system modeled in the above base cases are summarized in Table 4-2.

Table 4-1: Key Base Case Parameters

	Powerflow Case		
	Summer Peak	Spring Peak	Summer Off-Peak
Critical Path Flows (North-to-South, MW)			
Path 15 (Los Banos - Midway)	(1,968)	(966)	(5,000)
Path 26 (Midway-Vincent)	3,945	2,889	(591)
Path 65 (PDCI)	2,500	3,091	(1,846)
Path 66 (COI)	4,742	4,501	(3,647)
Northern California Data (MW)			
Area Loads	28,155	22,833	14,029
Area Losses	1,244	1,012	721
Area Generation	28,518	22,170	18,651

The base cases and the most recent CAISO generation interconnection queue (dated July 25, 2008) were reviewed by NCI to determine if the base cases contained projects with lower numbered queue positions than the Project which may have withdrawn from the CAISO generation interconnection queue since the cases were prepared. All Queued generation modeled in the base cases remain in the queue and are summarized in Table 4-2 below.

Table 4-2: Modeling of Queued Projects in Henrietta SIS

Queue Position	Interconnection Point	Capacity (MW)
9	Morro Bay 230-kV bus	1,200
16	Lompoc area 115-kV lines	120
42	McCall 115-kV bus	300
52	Panoche 230-kV bus	401
54	Panoche 115-kV bus	120
60	Kern Oil 115-kV bus	94
128	McCall 230-kV bus	565
152	Mesa-Divide #1 and #2 115-kV lines	105
166	Morro Bay-Midway 230-kV line	210
194	230-kV lines near Carrizo Plains sub.	190
196	Borden 230-kV bus	508
238	Temblor-San Luis Obispo 115-kV line	45
239	Morro Bay-Midway 230-kV line	250
242	Morro Bay-Midway 230-kV line	390

Queue Position	Interconnection Point	Capacity (MW)
253	Cabrillo substation	40
254	Gates Substation 230-kV Bus	600
261	Mendota-San Joaquin-Helm 70-kV Line	5
272	Henrietta 70-kV Bus	27

5. Study Criteria Summary

5.1 Powerflow Studies

Criteria applied during the powerflow analysis were as follows:

- Normal (Category A) conditions:
  - All line and transformer loadings shall be below normal rating.
  - Bus voltages will not exceed the minimum or maximum limits established.
- Contingency (Category B and C) conditions:
  - No transmission element will be loaded above the emergency rating.
  - Bus voltage deviations shall not exceed 5% for Category B and 10% for Category C outages.
  - There will be no loss of load for Category B outages.

5.2 Transient Stability Analysis

Transient stability studies were performed to assess the impact of the Project on the system. Each contingency was simulated for 20 seconds in order to demonstrate that it complies with NERC/WECC Planning criteria.

Criteria applied in these studies will be as follows:

- All machines in the system shall remain in synchronism as demonstrated by their relative rotor angles.
- System stability is evaluated based on the damping of the relative rotor angles and the damping of the voltage magnitude swings.
- Transient voltage dips and frequency dips must meet the WECC Reliability Criteria summarized in Table 5-1.

Table 5-1: WECC Reliability Criteria

Performance Level	Disturbance	Transient Voltage Dip Criteria	Transient Frequency Dip Criteria	Post Transient Voltage Deviation
B	N-1 (Single Contingency)	Max V Dip at Load Buses- 25% Max Duration of V Dip > 20% - 20 cycles	Duration of Frequency Below 59.6 Hz - 6 cycles	Not to exceed 5%
C	N-2 (Double Contingency)	Max V Dip – 30% Max Duration of V Dip > 20% - 40 cycles	Duration of Frequency Below 59.4 Hz - 6 cycles	Not to exceed 10%

5.3 Reactive Margin Analysis

In order to meet planning standards, the system must have positive reactive margin with the Path flow increased by 5% for Category B outages and increased by 2.5% for Category C outages. Positive reactive margin with rated Path flows is all that is required for outages involving two nuclear units at the Palo Verde, San Onofre, or Diablo Canyon nuclear plants.

6. Steady State Power Flow Study and Results

This SIS investigated the Project's impact on the CAISO Controlled Grid. The study utilized three seasonal base cases to simulate the impact of interconnecting the Project during normal operating conditions as well as during Category B and Category C contingency conditions (described below in section 6.1).

It cannot be guaranteed that the GWF Project can operate at maximum rated output 24 hours a day, year round, without system impacts, nor can it be guaranteed that the GWF Project would not have system impacts during the times and seasons not studied in the SIS.

6.1 Contingencies

The Category "B" and "C" contingencies used in this analysis are provided in Appendix A. The single (Category "B") and selected multiple (Category "C") contingencies include the following outages:

6.1.1 Category "B"

- All single (60 – 500-kV) generator outages within the study area
- All single (60 – 500-kV) transmission circuit outages within the study area
- All single (60 – 500-kV) transformer outages within the study area
- Selected overlapping single generator and transmission circuit outages for the transmission lines and generators within the study area

- 500-kV facility outages were simulated using a governor power flow program.

6.1.2 Category "C"

- Selected bus (60-230-kV) outages within the study area
- Selected outages caused by selected breaker failures (excluding bus tie and sectionalizing breakers) at the same above bus section
- Selected combination of any two-generator/transmission line/transformer outages (except ones included above in Category "B") within the study area
- Selected outages of double circuit tower lines (60-500-kV) within the study area.
- 500-kV facility outages were simulated using a governor power flow program. Path 15 Internal Remedial Action Scheme (IRAS) was also simulated for the relevant outages during the Summer Off-Peak base case in which there are high south-to-north flows across Path 15.

6.2 Power Flow Study Results

Appendix A provides a list of the contingencies studied. Appendix B provides the switching sequences for those 500-kV outages simulated with the governor power flow program. Appendix C shows the power flow analysis results. Appendix D includes power flow plots of those new overloads and overloads that had the most significant increase due to the Project coming on-line.

6.2.1 Normal Overloads (CAISO Category A)

The Project causes no new normal overloads. It did result in slight increases in existing overloads on fourteen (14) facilities during the 2013 Summer Peak, two (2) facilities during the 2013 Summer Off-Peak, and thirteen (13) facilities during the 2013 Spring Peak. The mitigation of these overloads is the responsibility of projects earlier in the CAISO Generation Queue.

6.2.2 Emergency Overloads (CAISO Category B)

The Project results in new Category B overloads occurring on three (3) facilities during the 2013 Summer Peak, two (2) facilities during the 2013 Summer Off-Peak, and twelve (12) facilities during the 2013 Spring Peak conditions. However, these facilities experienced greater overloads in the pre-Project studies. Therefore, the mitigation of those pre-Project overloads is the responsibility of projects earlier in the CAISO Generator

In addition, the Project exacerbated existing overloads on twenty-one (21) facilities during the 2013 Summer Peak, seven (7) facilities during the 2013 Summer Off-Peak, and twenty-one (21) facilities during the 2013 Spring Peak. The mitigation of those pre-Project overloads is the responsibility of projects earlier in the CAISO Generator Queue..

All facility overloads are shown in Appendix C with the pre-Project overloads shown as shaded in the table.

6.2.3 Emergency Overloads (CAISO Category C)

The Project results in new Category C overloads occurring on five (5) facilities during the 2013 Summer Peak, two (2) facilities during the 2013 Summer Off-Peak, and seven (7) facilities during 2013 Spring Peak conditions. However, these facilities experienced overloads during the pre-Project studies. Therefore, the mitigation of those pre-Project overloads is the responsibility of projects earlier in the CAISO Generator Queue. Table 6-2 below summarizes the three impacted facilities that did not overload for any of the pre-Project scenarios and are a result of the addition of the Project.

In addition, the Project exacerbated existing overloads on forty-nine (49) facilities during the 2013 Summer Peak, twenty-four (24) facilities during the Summer Off-Peak, and forty-nine (49) facilities during the 2013 Spring Peak. The mitigation of those pre-Project overloads is the responsibility of projects earlier in the CAISO Generator Queue

All facility overloads are shown in Appendix C with the pre-Project overloads shown as shaded in the table.

7. Reactive Power Deficiency Analysis

The power flow studies of Category "B" and "C" contingencies indicated that the Project did not cause voltage drops of 5% or more from the pre-Project levels, or cause the PG&E system to fail to meet applicable voltage criteria.

Post-transient reactive margin studies were performed on the Summer Off-Peak base cases because of the high south-to-north flow conditions on the Los Banos-North Path modeled in these cases. Reactive Margins were calculated for the following outages:

<u>Category B</u>

- Diablo-Midway 500-kV
- Gates-Midway 500-kV
- Los Banos-Gates #1 500-kV

- Los Banos-Gates #3 500-kV
- Los Banos-Midway 500-kV
- Moss Landing-Los Banos 500-kV
- Tracy-Los Banos 500-kV
- Tesla-Los Banos 500-kV

Category C

- Diablo-Midway #1 & #2 500-kV DLO
- Los Banos-Tesla & Los Banos-Tracy 500-kV DLO w/ Path 15 IRAS
- Los Banos-Midway & Los Banos-Gates 500-kV DLO w/ Path 15 IRAS
- Midway-Gates & Midway-Los Banos 500-kV DLO w/ Path 15 IRAS

2-Nuclear Unit Trip

- Diablo 2-Unit Trip

As shown in Table 7-1 below, the addition of the Project has no negative impact to the reactive margins on the system.

Table 7-1: Reactive Margin Results

Contingency	Bus with smallest Reactive Margin	Reactive Margin (MVAR) 2013 Summer Off-Peak Case		
		Pre-Project	Post-Project	Difference
Category B – Path 15 Flows Increased by 5%				
Diablo-Midway 500-kV	Arco 230-kV	529	529	0
Gates-Midway 500-kV	Arco 230-kV	506	506	0
Los Banos-Gates #1 500-kV	Arco 230-kV	509	509	0
Los Banos-Gates #3 500-kV	Arco 230-kV	520	520	0
Los Banos - Midway 500-kV	Arco 230-kV	498	498	0
Moss Landing-Los Banos 500-kV	Arco 230-kV	519	519	0
Tracy-Los Banos 500-kV	Arco 230-kV	512	512	0
Tesla-Los Banos 500-kV	Arco 230-kV	511	511	0
Category C – Path 15 Flows Increased by 2.5%				
Diablo-Midway #1 & #2 500-kV DLO	Arco 230-kV	517	517	0
Los Banos-Tesla & Los Banos-Tracy 500-kV DLO w/ Path 15 RAS	Arco 230-kV	501	501	0
Los Banos-Midway & Los Banos-Gates 500-kV DLO w/ Path 15 RAS	Arco 230-kV	475	475	0
Midway-Gates & Midway-Los Banos 500-kV DLO w/ Path 15 RAS	Arco 230-kV	496	496	0
Two Unit Outage – No Increase in Path 15 Flows				
Diablo 2-Unit Trip	Arco 230-kV	592	591	-1

8. Transient Stability Results

Transient stability simulations were performed on the 2013 Summer Peak base case for a period of 20 seconds to determine whether the addition of the Project would create any system instability during the following line and generator outages.

8.1 CAISO Category "B"

- Full load rejection (127 MW) of the proposed Project.
- A three-phase close-in fault on the Henrietta-Guernsey 70-kV line at the Henrietta 70-kV bus with normal clearing time followed by the loss of the Henrietta-Guernsey 70-kV line.
- A three-phase close-in fault on the Henrietta-Lemoore NAS 70-kV line at the Henrietta 70-kV bus with normal clearing time followed by the loss of the Henrietta-Lemoore NAS 70-kV line.
- A three-phase close-in fault on the Henrietta-Lemoore 70-kV line at the Henrietta 70-kV bus with normal clearing time followed by the loss of the Henrietta-Lemoore 70-kV line.
- A three-phase close-in fault on the Henrietta 230/70-kV Transformer #2 at the Henrietta 70-kV bus with normal clearing time followed by the loss of the Henrietta 230/70-kV Transformer #2.
- A three-phase close-in fault on the Henrietta 230/70-kV Transformer #4 at the Henrietta 70-kV bus with normal clearing time followed by the loss of the Henrietta 230/70-kV Transformer #4.

8.2 CAISO Category "C"

- A three-phase fault on the Gates-Gregg and Gates-McCall 230-kV lines at the Henrietta 230-kV bus with normal clearing time followed by the loss of the Gates-Gregg and Gates-McCall 230-kV lines.

These dynamic stability studies indicated that there would be no system performance issues caused by the GWF Project. Transient stability plots are given in Appendix E.

Table 8-1: Transient Stability Bus Voltages that dip below 59.6 Hz

			Pre-Project			Post-Project			
Outage	Bus No.	Bus	Duration	Min. Freq.	@ time	Duration	Min. Freq.	@ time	Change in Freq Dip
Henrietta 230/115-kV Bk#4 (8 cycle clearing)	34460	Guernsey 70-kV	9	59.319	0.44	11.2	59.326	0.48	0.007
	34532	Armstrong 70-kV	9	59.284	0.48	11.2	59.279	0.48	-0.005
	34534	Reserve 70-kV	9	59.284	0.48	11.2	59.279	0.48	-0.005
	34540	Henrietta 70-kV	--	--	--	6.7	59.457	0.44	--

9. Short Circuit Study Results

Short circuit studies were performed to determine the impact of adding the Project to the transmission system. The 3-phase fault duties at busses in the proximity of the Project were calculated before and after the Project. The dynamic data supplied by GWF and summarized in Appendix F was used in the analysis of these short circuit studies. The Project step-up transformer was modeled as follows in these studies.

STG: One, three-phase, 13.8/70kV and rated for 35 MVA at 65 degree C temperature rise with 9.0% impedance at 35 MVA base.

9.1 Results

Table 9-1 lists the available pre- and post-Project short circuit duty at the buses electrically adjacent to the Project. As shown in Table 9-1 the only appreciable increase in short circuit duty due to the addition of the Project occurred at the Lemoore NAS 70-kV bus and the Henrietta 70-kV bus.

Table 9-1: Short Circuit Study Results (Amps)

Fault Location	Pre-Project 3Ø	Post-Project 3Ø	% Increase
Henrietta 230-KV Bus	14,457	14,653	1.36%
Henrietta 115-KV Bus	9,468	9,495	0.28%
Henrietta 70-KV Bus	19,131	20,062	4.86%
Lemoore 70-kV Bus	4,890	4,948	1.18%
Lemoore NAS 70-kV Bus	12857	13,272	3.23%
Leprino 70-kV Bus	4,604	4,655	1.11%
Jacobs Corner 70-kV Bus	6,002	6,065	1.05%
Guernsey 70-kV Bus	4,264	4,286	0.54%
Reserve 70-kV Bus	3,686	3,701	0.39%

10. Mitigation

As described in the sub-section below the Project did not create any new overloads that hadn't already been overloaded for under pre-Project conditions.

10.1 Category "A" Normal Overload Mitigation

The power flow results indicated that the Project caused no new Category "A" normal overloads and only slightly increased overloads that existed on the Pre-Project case. Therefore, there is no mitigation needed for Category "A" conditions.

10.2 Category "B" Emergency Overload Mitigation

The power flow results indicated that the Project did not result in overloads on any facilities which were greater than the overloads noted in the Pre-Project studies. Therefore, there is no mitigation needed for Category "B" conditions.

10.3 Category "C" Emergency Overload Mitigation

The power flow results indicate that the Project did not result in overloads on any facilities which were greater than the overloads noted in the pre-Project studies. Therefore, there is no mitigation needed for Category "C" conditions.

11. Cost Estimates

The preliminary cost estimate for the Project interconnection to the CAISO Controlled Grid is **$1.1 million**, exclusive of ITCC. The cost responsibility breakdown is provided below.

Substation Work	
Provide general support at generation site	$1,000,000
Subtotal Substation Work	**$1,000,000**
Building & Land Work	
Land engineering support and permitting activities	$100,000
Subtotal Building & Land Work	**$100,000**
Total Interconnection Facilities Cost before ITCC [3]	**$1,100,000**

[3] Based on information in the Project IFS

12. Environmental Evaluation / Permitting

12.1 CPUC General Order 131-D

As discussed in the Interconnection Feasibility Study (IFS), Pacific Gas and Electric Company (PG&E) is subject to the jurisdiction of the California Public Utilities Commission (CPUC) and must comply with CPUC General Order 131-D (Order) on the construction, modification, alteration, or addition of all electric transmission facilities (i.e., lines, substations, etc.). This includes facilities to be constructed by others and deeded to PG&E. The Order exempts PG&E from obtaining a formal permit from the CPUC on facilities over 200-kV provided the planned facilities involve the replacement of existing facilities or supporting structures with equivalent facilities or structures, the minor relocation of existing facilities, the conversion of existing facilities to underground or the placing of new or additional conductors, insulators, or their accessories on or replacement of structures already built. These exemptions do not apply under certain circumstances when significant environmental impacts may be caused by the work. If the project does not qualify for an exemption, PG&E will need to seek formal approval from the CPUC (i.e., Certificate of Public Convenience and Necessity) taking as much as 18 months or more since the CPUC may decide to conduct its own environmental evaluation (i.e., Negative Declaration or Environmental Impact Report).

For cases where PG&E can claim a valid exemption, PG&E would file an Advice Letter with the CPUC and publish public notice of the proposed construction of the facilities. The noticing process takes about 90 days if no protests are filed, but should be done as early as possible so that a protest does not delay construction. PG&E has no control over the time it takes the CPUC to respond when issues arise. If the protest is granted, PG&E will then need to apply for a formal permit to construct the project (i.e., Certificate of Public Convenience and Necessity).

Facilities built or modified under this procedure must also be designed to include electric and magnetic field (EMF) mitigation measures pursuant to PG&E "EMF Design Guidelines of New Electrical Facilities: Transmission, Substation and Distribution".

Please see Section III, B.1 (f) in General Order 131-D. This document can be found in the CPUC's web page at:

http://www.cpuc.ca.gov/PUBLISHED/GENERAL_ORDER/589.htm

12.2 CPUC Section 851

In addition, and as noted in the IFS, Pacific Gas and Electric Company (PG&E) is subject to the jurisdiction of the California Public Utilities Commission (CPUC) and

must comply with Public Utilities Code Section 851, which among other things requires CPUC approval of leases and licenses to use PG&E property. This includes rights-of-way granted to third parties for interconnection facilities. Obtaining CPUC approval for a Section 851 application can take several months, and requires compliance with the California Environmental Quality Act (CEQA). PG&E recommends that Section 851 issues be identified as early as possible so that the necessary application can be prepared and processed.

13. Study Updates

This SIS was performed according to the assumptions shown in the Sections titled "Study Assumptions" and "Power Flow Study Base Cases". If these assumptions are changed, an updated study may be required to re-evaluate the project's impact on the CAISO Controlled Grid. Examples of changes that might prompt such a study are:

- Change in interconnection date
- Change in Interconnection Queue position
- Change in Project's MW size beyond the provisions set forth in the LGIP
- Change in interconnection plan
- Withdrawal of a higher queued project from the CAISO queue

Appendix A
Category B and C Contingency Lists

Table of Content

Summer Peak Category B Contingencies 1
Summer Peak Category C Contingencies 66
Summer Off-Peak Category B Contingencies 88
Summer Off-Peak Category C Contingencies 154
Spring Peak Category B Contingencies 177
Spring Peak Category C Contingencies 242

Summer Peak Category B Contingencies

```
# Q272 2013 sumpk category b contingency list
# Yosemite and Fresno Divisions Zones 313 and 314
#
  # 2013 sumpk category b contingency list
  # Yosemite Zone 313
  #
  #
  # (1)  B2 LINE OUTAGE (BREAKER-TO-BREAKER)
  #
 1  30515 30800  "1 "    0     # line from  WARNERVL 230.00  BRKR to BRKR  WILSON
230.00
 0
  #
  #
  # (2)  B2 LINE OUTAGE (BREAKER-TO-BREAKER)
  #
 1  30670 30765  "1 "    0     # line from  WESTLEY  230.00  BRKR to BRKR  LOSBANOS
230.00
 0
  #
  #
  # (3)  B2 LINE OUTAGE (BREAKER-TO-BREAKER)
  #
 1  30750 30790  "1 "    0     # line from  MOSSLND2 230.00  BRKR to BRKR  PANOCHE
230.00
 0
  #
  #
  # (4)  B2 LINE OUTAGE (BREAKER-TO-BREAKER)
  #
 1  30760 30790  "1 "    0     # line from  COBURN   230.00  BRKR to BRKR  PANOCHE
230.00
 0
  #
  #
  # (5)  B2 LINE OUTAGE (BREAKER-TO-BREAKER)
  #
 1  30765 30790  "1 "    0     # line from  LOSBANOS 230.00  BRKR to BRKR  PANOCHE
230.00
 0
  #
  #
  # (6)  B2 LINE OUTAGE (BREAKER-TO-BREAKER)
  #
 1  30765 30790  "2 "    0     # line from  LOSBANOS 230.00  BRKR to BRKR  PANOCHE
230.00
 0
  #
  #
  # (7)  B2 LINE OUTAGE (BREAKER-TO-BREAKER)
  #
 1  30765 38615  "1 "    0     # line from  LOSBANOS 230.00  BRKR to BRKR  DS AMIGO
230.00
 0
  #
  #
  # (8)  B2 LINE OUTAGE (BREAKER-TO-BREAKER)
  #
 1  30765 38625  "1 "    0     # line from  LOSBANOS 230.00  BRKR to BRKR  SN LS PP
230.00
 0
  #
  #
  # (9)  B2 LINE OUTAGE (BREAKER-TO-BREAKER)
  #
```

```
 1  30765 38625  "2 "    0     # line from  LOSBANOS 230.00  BRKR to BRKR  SN LS PP
230.00
 0
  #
  #
  # (10)  B2 LINE OUTAGE (BREAKER-TO-BREAKER)
  #
 1  30790 30793  "1 "    0     # line from  PANOCHE  230.00  BRKR to (3)   PANO_EC
230.00
 2  30793 34326  "1 "    0     # TRAN from  PANO_EC  230.00   (3) to (1)   PANO_BS1
13.80
 2  30793 34327  "1 "    0     # TRAN from  PANO_EC  230.00   (3) to (1)   PANO_BS2
13.80
 4  34326     0  "ss"    0     # LOAD-DROP    PANO_BS1  13.80  LOAD==4.50(2.49)
 4  34327     0  "ss"    0     # LOAD-DROP    PANO_BS2  13.80  LOAD==4.50(2.49)
 3  34326     0  "1 "    0     # GEN-DROP    PANO_BS1  13.80  GEN==102.50(20.25)
 3  34326     0  "2 "    0     # GEN-DROP    PANO_BS1  13.80  GEN==102.50(20.25)
 3  34327     0  "3 "    0     # GEN-DROP    PANO_BS2  13.80  GEN==102.50(20.25)
 3  34327     0  "4 "    0     # GEN-DROP    PANO_BS2  13.80  GEN==102.50(20.25)
 0
  #
  #
  # (11)  B2 LINE OUTAGE (BREAKER-TO-BREAKER)
  #
 1  30790 30825  "1 "    0     # line from  PANOCHE  230.00  BRKR to (2)   MCMULLN1
230.00
 1  30825 30830  "1 "    0     # line from  MCMULLN1 230.00   (2) to BRKR  KEARNEY
230.00
 4  30825     0  "1 "    0     # LOAD-DROP    MCMULLN1 230.00  LOAD==20.57(4.18)
 0
  #
  #
  # (12)  B2 LINE OUTAGE (BREAKER-TO-BREAKER)
  #
 1  30790 30873  "1 "    0     # line from  PANOCHE  230.00  BRKR to BRKR  HELM
230.00
 0
  #
  #
  # (13)  B2 LINE OUTAGE (BREAKER-TO-BREAKER)
  #
 1  30790 30900  "1 "    0     # line from  PANOCHE  230.00  BRKR to BRKR  GATES
230.00
 0
  #
  #
  # (14)  B2 LINE OUTAGE (BREAKER-TO-BREAKER)
  #
 1  30790 30900  "2 "    0     # line from  PANOCHE  230.00  BRKR to BRKR  GATES
230.00
 0
  #
  #
  # (15)  B2 LINE OUTAGE (BREAKER-TO-BREAKER)
  #
 1  30795 30805  "1 "    0     # line from  STOREY 2 230.00   (2) to BRKR  BORDEN
230.00
 1  30795 30800  "1 "    0     # line from  STOREY 2 230.00   (2) to BRKR  WILSON
230.00
 4  30795     0  "2 "    0     # LOAD-DROP    STOREY 2 230.00  LOAD==33.89(6.88)
 0
  #
  #
  # (16)  B2 LINE OUTAGE (BREAKER-TO-BREAKER)
  #
 1  30796 30800  "1 "    0     # line from  STOREY 1 230.00   (2) to BRKR  WILSON
230.00
 1  30796 30805  "1 "    0     # line from  STOREY 1 230.00   (2) to BRKR  BORDEN
230.00
 4  30796     0  "1 "    0     # LOAD-DROP    STOREY 1 230.00  LOAD==37.87(7.69)
```

```
 0
  #
  #
  # (17)  B2 LINE OUTAGE (BREAKER-TO-BREAKER)
  #
 1  30805 30806  "1 "    0     # line from  BORDEN   230.00  BRKR to BRKR  Q196
230.00
 0
  #
  #
  # (18)  B2 LINE OUTAGE (BREAKER-TO-BREAKER)
  #
 1  30805 30806  "2 "    0     # line from  BORDEN   230.00  BRKR to BRKR  Q196
230.00
 0
  #
  #
  # (19)  B2 LINE OUTAGE (BREAKER-TO-BREAKER)
  #
 1  30805 30810  "1 "    0     # line from  BORDEN   230.00  BRKR to BRKR  GREGG
230.00
 3  34604     0  "**"    0     # Drop unit#3 with loss of Gregg - Borden line
 0
  #
  #
  # (20)  B2 LINE OUTAGE (BREAKER-TO-BREAKER)
  #
 1  30805 30810  "2 "    0     # line from  BORDEN   230.00  BRKR to BRKR  GREGG
230.00
 3  34604     0  "**"    0     # Drop unit#3 with loss of Gregg - Borden #2 line
 0
  #
  #
  # (21)  B2 LINE OUTAGE (BREAKER-TO-BREAKER)
  #
 1  34017 34010  "1 "    0     # line from  CRWS LDG  60.00   (1) to (3)   CRWS LDJ
60.00
 1  34010 34006  "1 "    0     # line from  CRWS LDJ  60.00   (3) to BRKR  PATTERSN
60.00
 1  34010 34012  "1 "    0     # line from  CRWS LDJ  60.00   (3) to (2)   GUSTN JT
60.00
 1  34012 34014  "1 "    0     # line from  GUSTN JT  60.00   (2) to BRKR  NEWMAN
60.00
 4  34017     0  "1 "    0     # LOAD-DROP    CRWS LDG  60.00  LOAD==3.73(0.17)
 1  34016 34017  "1 "    1      # Switches in Crows Landing SW 57 to transfer load
 4  34017     0  "**"    1      # Restore Load at Crows Landing
 0
  #
  #
  # (22)  B2 LINE OUTAGE (BREAKER-TO-BREAKER)
  #
 1  34100 34101  "1 "    0     # line from  CHWCHLLA 115.00  BRKR to (3)   CERTAN T
115.00
 1  34101 34116  "1 "    0     # line from  CERTAN T 115.00   (3) to BRKR  LE GRAND
115.00
 1  34101 34107  "1 "    0     # line from  CERTAN T 115.00   (3) to (2)   CERTANJ2
115.00
 1  34107 34103  "1 "    0     # line from  CERTANJ2 115.00   (2) to (3)   CHWCGNJT
115.00
 1  34103 34102  "1 "    0     # line from  CHWCGNJT 115.00   (3) to (1)   CERTTEED
115.00
 1  34103 34109  "1 "    0     # line from  CHWCGNJT 115.00   (3) to (3)   CHWCGN
115.00
 1  34109 34111  "1 "    0     # line from  CHWCGN   115.00   (3) to (2)   CHWCHLA2
115.00
 2  34109 34301  "1 "    0     # TRAN from  CHWCGN   115.00   (3) to (1)   CHOWCOGN
13.80
 2  34111 34305  "1 "    0     # TRAN from  CHWCHLA2 115.00   (2) to (1)   CHWCHLA2
13.80
 4  34102     0  "1 "    0     # LOAD-DROP    CERTTEED 115.00  LOAD==9.94(6.94)
```

```
 4  34305     0  "ss"    0     # LOAD-DROP    CHWCHLA2  13.80  LOAD==2.00(1.11)
 3  34301     0  "1 "    0     # GEN-DROP    CHOWCOGN  13.80  GEN==50.00(4.33)
 3  34305     0  "1 "    0     # GEN-DROP    CHWCHLA2  13.80  GEN==12.50(7.30)
 0
  #
  #
  # (23)  B2 LINE OUTAGE (BREAKER-TO-BREAKER)
  #
 1  34104 34106  "1 "    0     # line from  ATWATER  115.00  BRKR to (2)   CASTLE
115.00
 1  34106 34138  "1 "    0     # line from  CASTLE   115.00   (2) to BRKR  EL CAPTN
115.00
 0
  #
  #
  # (24)  B2 LINE OUTAGE (BREAKER-TO-BREAKER)
  #
 1  34104 34108  "1 "    0     # line from  ATWATER  115.00  BRKR to (3)   CRESEY T
115.00
 1  34108 34110  "1 "    0     # line from  CRESEY T 115.00  BRKR to (1)   ATWATR J
115.00
 1  34108 34114  "1 "    0     # line from  CRESEY T 115.00   (3) to (3)   JRWD GEN
115.00
 1  34114 34124  "1 "    0     # line from  JRWD GEN 115.00   (3) to (2)   JR WOOD
115.00
 2  34114 34332  "1 "    0     # TRAN from  JRWD GEN 115.00   (3) to (1)   JRWCOGEN
9.11
 1  34124 34140  "1 "    0     # line from  JR WOOD  115.00   (2) to (1)   CRESSEY
115.00
 4  34124     0  "1 "    0     # LOAD-DROP    JR WOOD  115.00  LOAD==11.70(10.32)
 4  34140     0  "1 "    0     # LOAD-DROP    CRESSEY  115.00  LOAD==19.02(3.86)
 3  34332     0  "1 "    0     # GEN-DROP    JRWCOGEN   9.11  GEN==3.80(5.40)
 0
  #
  #
  # (25)  B2 LINE OUTAGE (BREAKER-TO-BREAKER)
  #
 1  34105 34100  "1 "    0     # line from  CERTANJ1 115.00   (2) to BRKR  CHWCHLLA
115.00
 1  34105 34121  "1 "    0     # line from  CERTANJ1 115.00   (2) to (3)   SHARON T
115.00
 1  34121 34120  "1 "    0     # line from  SHARON T 115.00   (3) to (1)   SHARON
115.00
 1  34121 34128  "1 "    0     # line from  SHARON T 115.00   (3) to (3)   OAKH_JCT
115.00
 1  34128 34126  "1 "    0     # line from  OAKH_JCT 115.00   (3) to (2)   CORSGOLD
115.00
 1  34128 34123  "1 "    0     # line from  OAKH_JCT 115.00   (3) to (2)   K1-JCT
115.00
 1  34126 34122  "1 "    0     # line from  CORSGOLD 115.00   (2) to (1)   OAKHURST
115.00
 1  34123 34358  "2 "    0     # line from  K1-JCT   115.00   (2) to BRKR  KERCKHF2
115.00
 4  34120     0  "1 "    0     # LOAD-DROP    SHARON   115.00  LOAD==7.10(4.96)
 4  34126     0  "1 "    0     # LOAD-DROP    CORSGOLD 115.00  LOAD==2.21(0.45)
 4  34126     0  "2 "    0     # LOAD-DROP    CORSGOLD 115.00  LOAD==26.19(5.32)
 4  34122     0  "1 "    0     # LOAD-DROP    OAKHURST 115.00  LOAD==11.68(2.37)
 4  34122     0  "2 "    0     # LOAD-DROP    OAKHURST 115.00  LOAD==15.01(3.05)
 0
  #
  #
  # (26)  B2 LINE OUTAGE (BREAKER-TO-BREAKER)
  #
 1  34108 34110  "1 "    0     # line from  CRESEY T 115.00  BRKR to (3)   ATWATR J
115.00
 1  34110 34130  "1 "    0     # line from  ATWATR J 115.00   (3) to (2)   LIVNGSTN
115.00
 1  34110 34144  "1 "    0     # line from  ATWATR J 115.00   (3) to BRKR  MERCED
115.00
```

```
 1  34130 34132  "1 "    0     # line from  LIVNGSTN 115.00   (2) to (1)   GALLO
115.00
 4  34130     0  "3 "    0     # LOAD-DROP    LIVNGSTN 115.00  LOAD==24.58(5.00)
 4  34132     0  "1 "    0     # LOAD-DROP    GALLO    115.00  LOAD==4.30(3.68)
 0
  #
  #
  # (27)  B2 LINE OUTAGE (BREAKER-TO-BREAKER)
  #
 1  34112 34116  "1 "    0     # line from  EXCHEQUR 115.00  BRKR to BRKR  LE GRAND
115.00
 3  34306     0  "1 "    0      # Exchequer Unit will trip for this outage
 4  34228     0  "**"    0      # Mariposa Loads will drop if bus is below 64 kV, this is
anticipate
 0
  #
  #
  # (28)  B2 LINE OUTAGE (BREAKER-TO-BREAKER)
  #
 1  34116 34134  "1 "    0     # line from  LE GRAND 115.00  BRKR to BRKR  WILSON A
115.00
 0
  #
  #
  # (29)  B2 LINE OUTAGE (BREAKER-TO-BREAKER)
  #
 1  34116 34154  "1 "    0     # line from  LE GRAND 115.00  BRKR to BRKR  DAIRYLND
115.00
 0
  #
  #
  # (30)  B2 LINE OUTAGE (BREAKER-TO-BREAKER)
  #
 1  34118 34136  "1 "    0     # line from  LE GRNDJ 115.00   (2) to BRKR  WILSON B
115.00
 1  34118 34168  "1 "    0     # line from  LE GRNDJ 115.00   (2) to (2)   EL NIDO
115.00
 1  34168 34162  "1 "    0     # line from  EL NIDO  115.00   (2) to BRKR  ORO LOMA
115.00
 4  34168     0  "1 "    0     # LOAD-DROP    EL NIDO  115.00  LOAD==12.49(2.54)
 4  34168     0  "2 "    0     # LOAD-DROP    EL NIDO  115.00  LOAD==15.00(3.05)
 0
  #
  #
  # (31)  B2 LINE OUTAGE (BREAKER-TO-BREAKER)
  #
 1  34134 34104  "1 "    0     # line from  WILSON A 115.00  BRKR to BRKR  ATWATER
115.00
 0
  #
  #
  # (32)  B2 LINE OUTAGE (BREAKER-TO-BREAKER)
  #
 1  34134 34136  "1 "    0     # line from  WILSON A 115.00  BRKR to BRKR  WILSON B
115.00
 0
  #
  #
  # (33)  B2 LINE OUTAGE (BREAKER-TO-BREAKER)
  #
 1  34134 34144  "1 "    0     # line from  WILSON A 115.00  BRKR to BRKR  MERCED
115.00
 0
  #
  #
  # (34)  B2 LINE OUTAGE (BREAKER-TO-BREAKER)
  #
 1  34136 34138  "1 "    0     # line from  WILSON B 115.00  BRKR to BRKR  EL CAPTN
115.00
 0
```

```
  #
  #
  # (35)  B2 LINE OUTAGE (BREAKER-TO-BREAKER)
  #
 1  34136 34144  "2 "    0     # line from  WILSON B 115.00  BRKR to BRKR  MERCED
115.00
 0
  #
  #
  # (36)  B2 LINE OUTAGE (BREAKER-TO-BREAKER)
  #
 1  34141 34148  "1 "    0     # line from  PAN2_TAP 115.00   (2) to (2)   CHENY
115.00
 2  34141 34142  "1 "    0     # TRAN from  PAN2_TAP 115.00   (2) to (1)   WHD_PAN2
13.80
 1  34148 34149  "1 "    0     # line from  CHENY    115.00   (2) to (3)   CHENYT
115.00
 1  34149 34158  "1 "    0     # line from  CHENYT   115.00   (3) to BRKR  PANOCHE
115.00
 1  34149 34354  "1 "    0     # line from  CHENYT   115.00   (3) to BRKR  SCHINDLR
115.00
 4  34148     0  "1 "    0     # LOAD-DROP    CHENY    115.00  LOAD==13.12(2.66)
 3  34142     0  "1 "    0     # GEN-DROP    WHD_PAN2  13.80  GEN==49.00(4.03)
 0
  #
  #
  # (37)  B2 LINE OUTAGE (BREAKER-TO-BREAKER)
  #
 1  34150 34154  "1 "    0     # line from  NEWHALL  115.00   (2) to BRKR  DAIRYLND
115.00
 1  34150 34178  "1 "    0     # line from  NEWHALL  115.00   (2) to (3)   MADERAPR
115.00
 1  34178 34156  "1 "    0     # line from  MADERAPR 115.00   (3) to BRKR  MENDOTA
115.00
 2  34178 34179  "1 "    0     # TRAN from  MADERAPR 115.00   (3) to (1)   MADERA_G
13.80
 4  34150     0  "2 "    0     # LOAD-DROP    NEWHALL  115.00  LOAD==8.55(1.73)
 4  34150     0  "3 "    0     # LOAD-DROP    NEWHALL  115.00  LOAD==10.62(2.16)
 4  34179     0  "ss"    0     # LOAD-DROP    MADERA_G  13.80  LOAD==3.60(0.85)
 3  34179     0  "1 "    0     # GEN-DROP    MADERA_G  13.80  GEN==28.60(6.34)
 0
  #
  #
  # (38)  B2 LINE OUTAGE (BREAKER-TO-BREAKER)
  #
 1  34157 34156  "1 "    0     # line from  PANOCHET 115.00   (2) to BRKR  MENDOTA
115.00
 1  34157 34158  "1 "    0     # line from  PANOCHET 115.00   (2) to BRKR  PANOCHE
115.00
 3  34186     0  "1 "    0     # DG_PAN Unit trips for Panoche - Mendota 115 kV outage
 0
  #
  #
  # (39)  B2 LINE OUTAGE (BREAKER-TO-BREAKER)
  #
 1  34158 34189  "1 "    0     # line from  PANOCHE  115.00  BRKR to (3)   STARWOOD
115.00
 2  34189 34328  "1 "    0     # TRAN from  STARWOOD 115.00   (3) to (1)   STARGT1
13.80
 2  34189 34329  "1 "    0     # TRAN from  STARWOOD 115.00   (3) to (1)   STARGT2
13.80
 4  34328     0  "ss"    0     # LOAD-DROP    STARGT1   13.80  LOAD==1.00(0.55)
 4  34329     0  "ss"    0     # LOAD-DROP    STARGT2   13.80  LOAD==1.00(0.55)
 3  34328     0  "1 "    0     # GEN-DROP    STARGT1   13.80  GEN==60.94(9.59)
 3  34329     0  "2 "    0     # GEN-DROP    STARGT2   13.80  GEN==60.94(9.59)
 0
  #
  #
  # (40)  B2 LINE OUTAGE (BREAKER-TO-BREAKER)
  #
```

```
 1  34158 34350  "1 "    0     # line from  PANOCHE  115.00  BRKR to (2)   KAMM
115.00
 1  34350 34352  "1 "    0     # line from  KAMM     115.00   (2) to (2)   CANTUA
115.00
 1  34352 34432  "1 "    0     # line from  CANTUA   115.00   (2) to (2)   WESTLNDS
115.00
 1  34432 34354  "1 "    0     # line from  WESTLNDS 115.00   (2) to BRKR  SCHINDLR
115.00
 4  34350     0  "1 "    0     # LOAD-DROP    KAMM     115.00  LOAD==3.85(1.75)
 4  34352     0  "1 "    0     # LOAD-DROP    CANTUA   115.00  LOAD==16.79(3.41)
 4  34432     0  "16"    0     # LOAD-DROP    WESTLNDS 115.00  LOAD==0.94(0.23)
 4  34432     0  "18"    0     # LOAD-DROP    WESTLNDS 115.00  LOAD==1.21(0.32)
 0
  #
  #
  # (41)  B2 LINE OUTAGE (BREAKER-TO-BREAKER)
  #
 1  34159 34158  "1 "    0     # line from  PANOCHEJ 115.00   (3) to BRKR  PANOCHE
115.00
 1  34159 34160  "1 "    0     # line from  PANOCHEJ 115.00   (3) to (2)   HAMMONDS
115.00
 1  34159 34180  "1 "    0     # line from  PANOCHEJ 115.00   (3) to (3)   OXFRDJCT
115.00
 1  34160 34161  "1 "    0     # line from  HAMMONDS 115.00   (2) to (3)   DFSTP
115.00
 1  34161 34162  "1 "    0     # line from  DFSTP    115.00   (3) to BRKR  ORO LOMA
115.00
 1  34161 34164  "1 "    0     # line from  DFSTP    115.00   (3) to (1)   DFS
115.00
 1  34180 34166  "1 "    0     # line from  OXFRDJCT 115.00   (3) to (1)   OXFORD
115.00
 1  34180 34181  "1 "    0     # line from  OXFRDJCT 115.00   (3) to (3)   WSTLDJCT
115.00
 1  34181 34182  "1 "    0     # line from  WSTLDJCT 115.00   (3) to (1)   WSTLD1RA
115.00
 1  34181 34183  "1 "    0     # line from  WSTLDJCT 115.00   (3) to (3)   LUISJCT
115.00
 1  34183 34163  "1 "    0     # line from  LUISJCT  115.00   (3) to (1)   LUIS_#3
115.00
 1  34183 34165  "1 "    0     # line from  LUISJCT  115.00   (3) to (1)   LUIS_#5
115.00
 4  34160     0  "1 "    0     # LOAD-DROP    HAMMONDS 115.00  LOAD==10.00(2.03)
 4  34164     0  "1 "    0     # LOAD-DROP    DFS      115.00  LOAD==1.37(1.06)
 4  34166     0  "1 "    0     # LOAD-DROP    OXFORD   115.00  LOAD==3.87(1.76)
 4  34182     0  "1 "    0     # LOAD-DROP    WSTLD1RA 115.00  LOAD==2.98(0.71)
 4  34163     0  "1 "    0     # LOAD-DROP    LUIS_#3  115.00  LOAD==3.30(0.78)
 4  34165     0  "1 "    0     # LOAD-DROP    LUIS_#5  115.00  LOAD==3.40(0.81)
 0
  #
  #
  # (42)  B2 LINE OUTAGE (BREAKER-TO-BREAKER)
  #
 1  34172 34170  "1 "    0     # line from  WESTLAND  70.00   (2) to (1)   WESIX
70.00
 1  34172 34271  "1 "    0     # line from  WESTLAND  70.00   (2) to (3)   WSTLDJCT
70.00
 1  34271 34269  "1 "    0     # line from  WSTLDJCT  70.00   (3) to (3)   BIOMSJCT
70.00
 1  34271 34469  "1 "    0     # line from  WSTLDJCT  70.00   (3) to (3)   GFFNJCT
70.00
 1  34269 34268  "1 "    0     # line from  BIOMSJCT  70.00   (3) to BRKR  MENDOTA
70.00
 1  34269 34270  "1 "    0     # line from  BIOMSJCT  70.00   (3) to (2)   BIOMASS
70.00
 2  34270 34334  "1 "    0     # TRAN from  BIOMASS   70.00   (2) to (1)   BIO PWR
9.11
 1  34469 34470  "1 "    0     # line from  GFFNJCT   70.00   (3) to (1)   GIFFEN
70.00
 1  34469 34471  "1 "    0     # line from  GFFNJCT   70.00   (3) to (3)   SNJQJCT
70.00
```

```
 1  34471 34472  "1 "    0     # line from  SNJQJCT   70.00   (3) to BRKR  SAN JOQN
70.00
 1  34471 34474  "1 "    0     # line from  SNJQJCT   70.00   (3) to BRKR  HELM
70.00
 4  34172     0  "1 "    0     # LOAD-DROP    WESTLAND  70.00  LOAD==3.20(0.76)
 4  34170     0  "1 "    0     # LOAD-DROP    WESIX     70.00  LOAD==1.60(0.38)
 4  34470     0  "1 "    0     # LOAD-DROP    GIFFEN    70.00  LOAD==9.59(1.95)
 3  34334     0  "1 "    0     # GEN-DROP    BIO PWR    9.11  GEN==21.80(10.99)
 1  34472 34473  "1 "    1      # Switches in San Joaquin CB22 to transfer load
 4  34472     0  "**"    1      # Restore Load at San Joaquin
 0
  #
  #
  # (43)  B2 LINE OUTAGE (BREAKER-TO-BREAKER)
  #
 1  34200 34218  "1 "    0     # line from  ORO LOMA  70.00  BRKR to (2)   DOS PALS
70.00
 1  34218 34216  "1 "    0     # line from  DOS PALS  70.00   (2) to BRKR  SNTA RTA
70.00
 4  34218     0  "1 "    0     # LOAD-DROP    DOS PALS  70.00  LOAD==10.29(2.09)
 0
  #
  #
  # (44)  B2 LINE OUTAGE (BREAKER-TO-BREAKER)
  #
 1  34200 34222  "1 "    0     # line from  ORO LOMA  70.00  BRKR to (3)   MRCYSPRS
70.00
 1  34222 34220  "1 "    0     # line from  MRCYSPRS  70.00   (3) to (2)   ORTIGA
70.00
 1  34222 34224  "1 "    0     # line from  MRCYSPRS  70.00   (3) to (2)   ARBURUA
70.00
 1  34220 34206  "1 "    0     # line from  ORTIGA    70.00   (2) to BRKR  CANAL
70.00
 1  34224 34272  "1 "    0     # line from  ARBURUA   70.00   (2) to (2)   WRGHT PP
70.00
 1  34272 34214  "1 "    0     # line from  WRGHT PP  70.00   (2) to BRKR  LOS BANS
70.00
 4  34220     0  "1 "    0     # LOAD-DROP    ORTIGA    70.00  LOAD==6.88(1.40)
 4  34224     0  "1 "    0     # LOAD-DROP    ARBURUA   70.00  LOAD==3.77(1.83)
 4  34272     0  "1 "    0     # LOAD-DROP    WRGHT PP  70.00  LOAD==9.50(1.93)
 0
  #
  #
  # (45)  B2 LINE OUTAGE (BREAKER-TO-BREAKER)
  #
 1  34200 34234  "1 "    0     # line from  ORO LOMA  70.00  BRKR to (2)   POSO J1
70.00
 1  34234 34266  "1 "    0     # line from  POSO J1   70.00   (2) to (2)   FIREBAGH
70.00
 1  34266 34267  "1 "    0     # line from  FIREBAGH  70.00   (2) to (2)   TOMATAK
70.00
 1  34267 34268  "1 "    0     # line from  TOMATAK   70.00   (2) to BRKR  MENDOTA
70.00
 4  34266     0  "1 "    0     # LOAD-DROP    FIREBAGH  70.00  LOAD==11.13(2.26)
 4  34267     0  "1 "    0     # LOAD-DROP    TOMATAK   70.00  LOAD==6.40(4.97)
 0
  #
  #
  # (46)  B2 LINE OUTAGE (BREAKER-TO-BREAKER)
  #
 1  34202 34203  "1 "    0     # line from  MERCED    70.00  BRKR to (3)   ELNIDOTP
70.00
 1  34203 34205  "1 "    0     # line from  ELNIDOTP  70.00   (3) to (2)   ELNIDO
70.00
 1  34203 34236  "1 "    0     # line from  ELNIDOTP  70.00   (3) to (1)   POSO J2
70.00
 2  34205 34330  "1 "    0     # TRAN from  ELNIDO    70.00   (2) to (1)   ELNIDO
13.80
 4  34330     0  "ss"    0     # LOAD-DROP    ELNIDO    13.80  LOAD==2.00(1.11)
 3  34330     0  "1 "    0     # GEN-DROP    ELNIDO    13.80  GEN==12.50(5.69)
```

```
 0
  #
  #
  # (47)  B2 LINE OUTAGE (BREAKER-TO-BREAKER)
  #
 1  34202 34230  "1 "    0     # line from  MERCED    70.00  BRKR to BRKR  MRCDFLLS
70.00
 0
  #
  #
  # (48)  B2 LINE OUTAGE (BREAKER-TO-BREAKER)
  #
 1  34204 34212  "1 "    0     # line from  LIVNGSTN  70.00   (1) to (3)   LVNGSTNT
70.00
 1  34212 34206  "1 "    0     # line from  LVNGSTNT  70.00   (3) to BRKR  CANAL
70.00
 1  34212 34210  "1 "    0     # line from  LVNGSTNT  70.00   (3) to (2)   SNTA NLA
70.00
 1  34210 34208  "1 "    0     # line from  SNTA NLA  70.00   (2) to (2)   CHEVPIPE
70.00
 1  34208 34214  "1 "    0     # line from  CHEVPIPE  70.00   (2) to BRKR  LOS BANS
70.00
 4  34204     0  "2 "    0     # LOAD-DROP    LIVNGSTN  70.00  LOAD==5.51(1.12)
 4  34210     0  "1 "    0     # LOAD-DROP    SNTA NLA  70.00  LOAD==6.75(1.37)
 4  34210     0  "2 "    0     # LOAD-DROP    SNTA NLA  70.00  LOAD==9.50(1.93)
 4  34208     0  "1 "    0     # LOAD-DROP    CHEVPIPE  70.00  LOAD==0.63(0.42)
 0
  #
  #
  # (49)  B2 LINE OUTAGE (BREAKER-TO-BREAKER)
  #
 1  34206 34216  "1 "    0     # line from  CANAL     70.00  BRKR to BRKR  SNTA RTA
70.00
 0
  #
  #
  # (50)  B2 LINE OUTAGE (BREAKER-TO-BREAKER)
  #
 1  34214 34278  "1 "    0     # line from  LOS BANS  70.00  BRKR to (2)   PCHCO PP
70.00
 1  34278 34280  "1 "    0     # line from  PCHCO PP  70.00   (2) to (2)   INTL TUR
70.00
 2  34280 34342  "1 "    0     # TRAN from  INTL TUR  70.00   (2) to (1)   INT.TURB
9.11
 4  34278     0  "1 "    0     # LOAD-DROP    PCHCO PP  70.00  LOAD==18.00(4.10)
 3  34342     0  "1 "    0     # GEN-DROP    INT.TURB   9.11  GEN==1.10(0.00)
 0
  #
  #
  # (51)  B2 LINE OUTAGE (BREAKER-TO-BREAKER)
  #
 1  34214 34282  "1 "    0     # line from  LOS BANS  70.00  BRKR to (2)   ONLL PMP
69.00
 2  34282 34316  "1 "    0     # TRAN from  ONLL PMP  69.00   (2) to (1)   ONEILPMP
9.11
 4  34282     0  "1 "    0     # LOAD-DROP    ONLL PMP  69.00  LOAD==6.00(1.20)
 3  34316     0  "1 "    0     # GEN-DROP    ONEILPMP   9.11  GEN==0.50(0.00)
 0
  #
  #
  # (52)  B2 LINE OUTAGE (BREAKER-TO-BREAKER)
  #
 1  34228 34232  "1 "    0     # line from  MARIPOS2  70.00   (1) to BRKR  EXCHEQUR
70.00
 4  34228     0  "1 "    0     # LOAD-DROP    MARIPOS2  70.00  LOAD==9.01(1.83)
 4  34228     0  "2 "    0     # LOAD-DROP    MARIPOS2  70.00  LOAD==9.37(1.90)
 1  34228 34244  "1 "    1      # Switches in Mariposa SW 39 to transfer load
 4  34228     0  "**"    1      # Restore Load at Mariposa
 0
  #
```

```
  #
  # (53)  B2 LINE OUTAGE (BREAKER-TO-BREAKER)
  #
 1  34232 34242  "1 "    0     # line from  EXCHEQUR  70.00  BRKR to (2)   BER VLLY
70.00
 1  34242 34244  "1 "    0     # line from  BER VLLY  70.00   (2) to (2)   BRCEBG J
70.00
 1  34244 34246  "1 "    0     # line from  BRCEBG J  70.00   (2) to (3)   SAXONCRK
70.00
 1  34246 34248  "1 "    0     # line from  SAXONCRK  70.00   (3) to (2)   INDN FLT
70.00
 2  34246 34346  "1 "    0     # TRAN from  SAXONCRK  70.00   (3) to (1)   SAXNCK L
4.16
 1  34248 34250  "1 "    0     # line from  INDN FLT  70.00   (2) to (1)   YOSEMITE
70.00
 4  34242     0  "1 "    0     # LOAD-DROP    BER VLLY  70.00  LOAD==5.91(1.20)
 4  34246     0  "1 "    0     # LOAD-DROP    SAXONCRK  70.00  LOAD==0.03(0.02)
 4  34248     0  "1 "    0     # LOAD-DROP    INDN FLT  70.00  LOAD==2.02(0.41)
 4  34250     0  "1 "    0     # LOAD-DROP    YOSEMITE  70.00  LOAD==2.90(0.00)
 0
  #
  #
  # (54)  B2 LINE OUTAGE (BREAKER-TO-BREAKER)
  #
 1  34237 34255  "1 "    0     # line from  CANANDGA  70.00   (2) to (3)   TRIGO J
70.00
 1  34237 34240  "1 "    0     # line from  CANANDGA  70.00   (2) to BRKR  GLASS
70.00
 1  34255 34238  "1 "    0     # line from  TRIGO J   70.00   (3) to BRKR  BONITA
70.00
 1  34255 34254  "1 "    0     # line from  TRIGO J   70.00   (3) to (3)   TRIGO
70.00
 1  34254 34252  "1 "    0     # line from  TRIGO     70.00   (3) to BRKR  MADERA
70.00
 1  34254 34264  "1 "    0     # line from  TRIGO     70.00   (3) to (1)   EL PECO
70.00
 4  34237     0  "1 "    0     # LOAD-DROP    CANANDGA  70.00  LOAD==7.60(5.70)
 4  34238     0  "1 "    0     # LOAD-DROP    BONITA    70.00  LOAD==14.37(2.92)
 4  34264     0  "1 "    0     # LOAD-DROP    EL PECO   70.00  LOAD==9.86(2.01)
 4  34264     0  "2 "    0     # LOAD-DROP    EL PECO   70.00  LOAD==7.26(1.48)
 1  34238 34236  "1 "    1      # Switches in Bonita SW23 to transfer load
 4  34238     0  "1 "    1      # Restore Load at Bonita
 0
  #
  #
  # (55)  B2 LINE OUTAGE (BREAKER-TO-BREAKER)
  #
 1  34252 34256  "1 "    0     # line from  MADERA    70.00  BRKR to BRKR  BORDEN
70.00
 0
  #
  #
  # (56)  B2 LINE OUTAGE (BREAKER-TO-BREAKER)
  #
 1  34252 34256  "2 "    0     # line from  MADERA    70.00  BRKR to BRKR  BORDEN
70.00
 0
  #
  #
  # (57)  B2 LINE OUTAGE (BREAKER-TO-BREAKER)
  #
 1  34256 34240  "1 "    0     # line from  BORDEN    70.00  BRKR to BRKR  GLASS
70.00
 0
  #
  #
  # (58)  B2 LINE OUTAGE (BREAKER-TO-BREAKER)
  #
 1  34256 34262  "1 "    0     # line from  BORDEN    70.00  BRKR to (2)   CASSIDY
70.00
```

```
 1  34262 34454  "1 "    0     # line from  CASSIDY   70.00   (2) to (2)   RIVERROC
70.00
 1  34454 34464  "1 "    0     # line from  RIVERROC  70.00   (2) to BRKR  COPPRMNE
70.00
 4  34262     0  "1 "    0     # LOAD-DROP    CASSIDY   70.00  LOAD==14.31(2.90)
 4  34454     0  "1 "    0     # LOAD-DROP    RIVERROC  70.00  LOAD==2.01(1.83)
 0
  #
  #
  # (59)  B2 LINE OUTAGE (BREAKER-TO-BREAKER)
  #
 1  34259 34261  "1 "    0     # line from  NRTHFORK  70.00   (3) to (2)   SJNO3
70.00
 1  34259 34260  "1 "    0     # line from  NRTHFORK  70.00   (3) to (3)   SJNO2
70.00
 2  34259 34340  "1 "    0     # TRAN from  NRTHFORK  70.00   (3) to (1)   N.FORK E
9.11
 2  34261 34633  "1 "    0     # TRAN from  SJNO3     70.00   (2) to (1)   SJ3GEN
9.11
 1  34260 34452  "1 "    0     # line from  SJNO2     70.00   (3) to BRKR  WISHON
70.00
 2  34260 34631  "1 "    0     # TRAN from  SJNO2     70.00   (3) to (1)   SJ2GEN
9.11
 4  34261     0  "2 "    0     # LOAD-DROP    SJNO3     70.00  LOAD==6.95(1.41)
 4  34260     0  "2 "    0     # LOAD-DROP    SJNO2     70.00  LOAD==3.22(0.66)
 4  34340     0  "1 "    0     # LOAD-DROP    N.FORK E   9.11  LOAD==1.21(0.25)
 3  34633     0  "1 "    0     # GEN-DROP    SJ3GEN     9.11  GEN==1.00(0.00)
 3  34631     0  "1 "    0     # GEN-DROP    SJ2GEN     9.11  GEN==2.00(0.00)
 0
  #
  #
  # (60)  B2 LINE OUTAGE (BREAKER-TO-BREAKER)
  #
 1  34321 34226  "1 "    0     # line from  MCSWAINJ  70.00   (3) to (2)   MC SWAIN
70.00
 1  34321 34230  "1 "    0     # line from  MCSWAINJ  70.00   (3) to BRKR  MRCDFLLS
70.00
 1  34321 34232  "1 "    0     # line from  MCSWAINJ  70.00   (3) to BRKR  EXCHEQUR
70.00
 2  34226 34320  "1 "    0     # TRAN from  MC SWAIN  70.00   (2) to (1)   MCSWAIN
9.11
 3  34320     0  "1 "    0     # GEN-DROP    MCSWAIN    9.11  GEN==10.00(2.00)
 0
  #
  #
  # (61)  B2 LINE OUTAGE (BREAKER-TO-BREAKER)
  #
 1  37563 30800  "1 "    0     # line from  MELONES  230.00  BRKR to BRKR  WILSON
230.00
 3  34604     0  "**"    0      # Drop unit#3 with a loss Melones - Wilson line
 0
  #
  #
  # (62)  B2 LINE OUTAGE (BREAKER-TO-BREAKER)
  #
 1  38615 30790  "1 "    0     # line from  DS AMIGO 230.00  BRKR to BRKR  PANOCHE
230.00
 0
  #
  #
  # (63)  B3 TRANSFORMER OUTAGE (BREAKER-TO-BREAKER)
  #
#      **** 3-WINDING TRANSFORMER  30765  (30069)  30050  34302 :
 2  30765 30050  "1 "    0     # TRAN from  LOSBANOS 230.00  BRKR to (1)   LOSBANOS
500.00
 0
  #
  #
  # (64)  B3 TRANSFORMER OUTAGE (BREAKER-TO-BREAKER)
  #
```

```
#      **** 3-WINDING TRANSFORMER  30790  (30791)  34158  34310 :
 2  30790 34158  "1 "    0     # TRAN from  PANOCHE  230.00  BRKR to (1)   PANOCHE
115.00
 0
  #
  #
  # (65)  B3 TRANSFORMER OUTAGE (BREAKER-TO-BREAKER)
  #
 2  30790 34158  "2 "    0     # TRAN from  PANOCHE  230.00  BRKR to BRKR  PANOCHE
115.00
 0
  #
  #
  # (66)  B3 TRANSFORMER OUTAGE (BREAKER-TO-BREAKER)
  #
#      **** 3-WINDING TRANSFORMER  34112  (34176)  34232  34306 :
 2  34112 34232  "1 "    0     # TRAN from  EXCHEQUR 115.00  BRKR to (4)   EXCHEQUR
70.00
 1  34232 34228  "1 "    0     # line from  EXCHEQUR  70.00  BRKR to (1)   MARIPOS2
70.00
 1  34232 34242  "1 "    0     # line from  EXCHEQUR  70.00  BRKR to (1)   BER VLLY
70.00
 1  34232 34321  "1 "    0     # line from  EXCHEQUR  70.00  BRKR to (1)   MCSWAINJ
70.00
 4  34228     0  "1 "    0     # LOAD-DROP    MARIPOS2  70.00  LOAD==9.01(1.83)
 4  34228     0  "2 "    0     # LOAD-DROP    MARIPOS2  70.00  LOAD==9.37(1.90)
 1  34228 34244  "1 "    1      # Switches in Mariposa SW 39 to transfer load
 4  34228     0  "**"    1      # Restore Load at Mariposa
 0
  #
  #
  # (67)  B3 TRANSFORMER OUTAGE (BREAKER-TO-BREAKER)
  #
 2  34134 30800  "1 "    0     # TRAN from  WILSON A 115.00  BRKR to BRKR  WILSON
230.00
 0
  #
  #
  # (68)  B3 TRANSFORMER OUTAGE (BREAKER-TO-BREAKER)
  #
 2  34136 30800  "2 "    0     # TRAN from  WILSON B 115.00  BRKR to BRKR  WILSON
230.00
 0
  #
  #
  # (69)  B3 TRANSFORMER OUTAGE (BREAKER-TO-BREAKER)
  #
#      **** 3-WINDING TRANSFORMER  34144  (34146)  34202  34312 :
 2  34144 34202  "2 "    0     # TRAN from  MERCED   115.00  BRKR to (1)   MERCED
70.00
 0
  #
  #
  # (70)  B3 TRANSFORMER OUTAGE (BREAKER-TO-BREAKER)
  #
 2  34200 34162  "2 "    0     # TRAN from  ORO LOMA  70.00  BRKR to (3)   ORO LOMA
115.00
 1  34162 34161  "1 "    0     # line from  ORO LOMA 115.00  BRKR to (1)   DFSTP
115.00
 1  34162 34168  "1 "    0     # line from  ORO LOMA 115.00  BRKR to (1)   EL NIDO
115.00
 0
  #
  #
  # (71)  B3 TRANSFORMER OUTAGE (BREAKER-TO-BREAKER)
  #
 2  34214 30765  "3 "    0     # TRAN from  LOS BANS  70.00  BRKR to BRKR  LOSBANOS
230.00
 0
  #
```

```
  #
  # (72)  B3 TRANSFORMER OUTAGE (BREAKER-TO-BREAKER)
  #
 2  34214 30765  "4 "    0     # TRAN from  LOS BANS  70.00  BRKR to BRKR  LOSBANOS
230.00
 0
  #
  #
  # (73)  B3 TRANSFORMER OUTAGE (BREAKER-TO-BREAKER)
  #
 2  34256 30805  "1 "    0     # TRAN from  BORDEN    70.00  BRKR to BRKR  BORDEN
230.00
 0
  #
  #
  # (74)  B3 TRANSFORMER OUTAGE (BREAKER-TO-BREAKER)
  #
 2  34256 30805  "2 "    0     # TRAN from  BORDEN    70.00  BRKR to BRKR  BORDEN
230.00
 0
  #
  #
  # (75)  B3 TRANSFORMER OUTAGE (BREAKER-TO-BREAKER)
  #
 2  34268 34156  "1 "    0     # TRAN from  MENDOTA   70.00  BRKR to (3)   MENDOTA
115.00
 1  34156 34178  "1 "    0     # line from  MENDOTA  115.00  BRKR to (1)   MADERAPR
115.00
 1  34156 34157  "1 "    0     # line from  MENDOTA  115.00  BRKR to (1)   PANOCHET
115.00
 4  34156     0  "1 "    0     # LOAD-DROP    MENDOTA  115.00  LOAD==24.55(4.99)
 0
  #
  #
  # (76)  B1 GENERATOR OUTAGE
  #
 3  34142     0  "1"     0     # WHD_PAN2  13.80       PGEN=49.00  QGEN=-22.43
 0
  #
  #
  # (77)  B1 GENERATOR OUTAGE
  #
 3  34179     0  "1"     0     # MADERA_G  13.80       PGEN=28.60  QGEN=3.67
 0
  #
  #
  # (78)  B1 GENERATOR OUTAGE
  #
 3  34186     0  "1"     0     # DG_PAN1   13.80       PGEN=49.00  QGEN=-17.22
 0
  #
  #
  # (79)  B1 GENERATOR OUTAGE
  #
 3  34301     0  "1"     0     # CHOWCOGN  13.80       PGEN=50.00  QGEN=0.72
 0
  #
  #
  # (80)  B1 GENERATOR OUTAGE
  #
 3  34305     0  "1"     0     # CHWCHLA2  13.80       PGEN=12.50  QGEN=7.35
 0
  #
  #
  # (81)  B1 GENERATOR OUTAGE
  #
 3  34306     0  "1"     0     # EXCHQUER  13.80       PGEN=94.50  QGEN=8.77
 0
  #
  #
```

```
 # (82)  B1 GENERATOR OUTAGE
 #
3  34316     0  "1"     0     # ONEILPMP   9.11       PGEN=0.52  QGEN=0.00
0
 #
 #
 # (83)  B1 GENERATOR OUTAGE
 #
3  34320     0  "1"     0     # MCSWAIN    9.11       PGEN=10.00  QGEN=0.00
0
 #
 #
 # (84)  B1 GENERATOR OUTAGE
 #
3  34322     0  "1"     0     # MERCEDFL   9.11       PGEN=3.50  QGEN=2.00
0
 #
 #
 # (85)  B1 GENERATOR OUTAGE
 #
3  34326     0  "1"     0     # PANO_BS1  13.80       PGEN=102.50  QGEN=25.42
0
 #
 #
 # (86)  B1 GENERATOR OUTAGE
 #
3  34326     0  "2"     0     # PANO_BS1  13.80       PGEN=102.50  QGEN=25.42
0
 #
 #
 # (87)  B1 GENERATOR OUTAGE
 #
3  34327     0  "3"     0     # PANO_BS2  13.80       PGEN=102.50  QGEN=25.42
0
 #
 #
 # (88)  B1 GENERATOR OUTAGE
 #
3  34327     0  "4"     0     # PANO_BS2  13.80       PGEN=102.50  QGEN=25.42
0
 #
 #
 # (89)  B1 GENERATOR OUTAGE
 #
3  34328     0  "1"     0     # STARGT1   13.80       PGEN=60.94  QGEN=13.94
0
 #
 #
 # (90)  B1 GENERATOR OUTAGE
 #
3  34329     0  "2"     0     # STARGT2   13.80       PGEN=60.94  QGEN=13.94
0
 #
 #
 # (91)  B1 GENERATOR OUTAGE
 #
3  34330     0  "1"     0     # ELNIDO    13.80       PGEN=12.50  QGEN=4.15
0
 #
 #
 # (92)  B1 GENERATOR OUTAGE
 #
3  34332     0  "1"     0     # JRWCOGEN   9.11       PGEN=3.80  QGEN=5.40
0
 #
 #
 # (93)  B1 GENERATOR OUTAGE
 #
3  34334     0  "1"     0     # BIO PWR    9.11       PGEN=21.80  QGEN=8.92
0
```

```
 #
 #
 # (94)  B1 GENERATOR OUTAGE
 #
3  34342     0  "1"     0     # INT.TURB   9.11       PGEN=1.10  QGEN=0.00
0
 #
 #
 # (95)  B1 GENERATOR OUTAGE
 #
3  34631     0  "1"     0     # SJ2GEN     9.11       PGEN=2.00  QGEN=0.00
0
 #
 #
 # (96)  B1 GENERATOR OUTAGE
 #
3  34633     0  "1"     0     # SJ3GEN     9.11       PGEN=1.00  QGEN=0.00
0
 #
 #
 # (97)  B1 GENERATOR OUTAGE
 #
3  34335     0  "1"     0     # Q196GT1   16.50       PGEN=192.50  QGEN=31.08
0
 #
 #
 # (98)  B1 GENERATOR OUTAGE
 #
3  34336     0  "2"     0     # Q196GT2   16.50       PGEN=192.50  QGEN=31.08
0
 #
 #
 # (99)  B1 GENERATOR OUTAGE
 #
3  34337     0  "3"     0     # Q196ST1   13.80       PGEN=68.50  QGEN=11.04
0
 #
 #
 # (100)  B1 GENERATOR OUTAGE
 #
3  34338     0  "4"     0     # Q196ST2   13.80       PGEN=68.50  QGEN=11.04
0
 #
 #
 # (101)  B CAPACITOR OUTAGE
 #
6  30765     0  "v"     0     # LOSBANOS  230.0  SVD
0
 #
 #
 # (102)  B CAPACITOR OUTAGE
 #
6  30796     0  "v"     0     # STOREY 1  230.0  SVD
0
 #
 #
 # (103)  B CAPACITOR OUTAGE
 #
6  34134     0  "v"     0     # WILSON A  115.0  SVD
0
 #
 #
 # (104)  B CAPACITOR OUTAGE
 #
6  34252     0  "v"     0     # MADERA     70.0  SVD
0
 #
 #
 # (105)  B CAPACITOR OUTAGE
 #
```

```
 6  34302     0  "v"     0     # L.BANS T   13.8  SVD
 0
  #
  #
  # (106)  L-1/G-1 OVERLAPPING OUTAGE
  # Le Grand - Chowchilla 115 kV Line and Exchequer
 1  34100 34101  "1 "    0     # line from  CHWCHLLA 115.00  BRKR to (3)   CERTAN T
115.00
 1  34101 34116  "1 "    0     # line from  CERTAN T 115.00   (3) to BRKR  LE GRAND
115.00
 1  34101 34107  "1 "    0     # line from  CERTAN T 115.00   (3) to (2)   CERTANJ2
115.00
 1  34107 34103  "1 "    0     # line from  CERTANJ2 115.00   (2) to (3)   CHWCGNJT
115.00
 1  34103 34102  "1 "    0     # line from  CHWCGNJT 115.00   (3) to (1)   CERTTEED
115.00
 1  34103 34109  "1 "    0     # line from  CHWCGNJT 115.00   (3) to (3)   CHWCGN
115.00
 1  34109 34111  "1 "    0     # line from  CHWCGN   115.00   (3) to (2)   CHWCHLA2
115.00
 2  34109 34301  "1 "    0     # TRAN from  CHWCGN   115.00   (3) to (1)   CHOWCOGN
13.80
 2  34111 34305  "1 "    0     # TRAN from  CHWCHLA2 115.00   (2) to (1)   CHWCHLA2
13.80
 4  34102     0  "1 "    0     # LOAD-DROP    CERTTEED 115.00  LOAD==9.94(6.94)
 4  34305     0  "ss"    0     # LOAD-DROP    CHWCHLA2  13.80  LOAD==2.00(1.11)
 3  34301     0  "1 "    0     # GEN-DROP    CHOWCOGN  13.80  GEN==50.00(4.33)
 3  34305     0  "1 "    0     # GEN-DROP    CHWCHLA2  13.80  GEN==12.50(7.30)
  #
 3  34306     0  "1"     0     # EXCHQUER  13.80       PGEN=94.50  QGEN=8.77
 0
  #
  #
  # (107)  L-1/G-1 OVERLAPPING OUTAGE
  # Chowchilla - Kerckhoff #2 115 kV Line and Exchequer
 1  34105 34100  "1 "    0     # line from  CERTANJ1 115.00   (2) to BRKR  CHWCHLLA
115.00
 1  34105 34121  "1 "    0     # line from  CERTANJ1 115.00   (2) to (3)   SHARON T
115.00
 1  34121 34120  "1 "    0     # line from  SHARON T 115.00   (3) to (1)   SHARON
115.00
 1  34121 34128  "1 "    0     # line from  SHARON T 115.00   (3) to (3)   OAKH_JCT
115.00
 1  34128 34126  "1 "    0     # line from  OAKH_JCT 115.00   (3) to (2)   CORSGOLD
115.00
 1  34128 34123  "1 "    0     # line from  OAKH_JCT 115.00   (3) to (2)   K1-JCT
115.00
 1  34126 34122  "1 "    0     # line from  CORSGOLD 115.00   (2) to (1)   OAKHURST
115.00
 1  34123 34358  "2 "    0     # line from  K1-JCT   115.00   (2) to BRKR  KERCKHF2
115.00
 4  34120     0  "1 "    0     # LOAD-DROP    SHARON   115.00  LOAD==7.10(4.96)
 4  34126     0  "1 "    0     # LOAD-DROP    CORSGOLD 115.00  LOAD==2.21(0.45)
 4  34126     0  "2 "    0     # LOAD-DROP    CORSGOLD 115.00  LOAD==26.19(5.32)
 4  34122     0  "1 "    0     # LOAD-DROP    OAKHURST 115.00  LOAD==11.68(2.37)
 4  34122     0  "2 "    0     # LOAD-DROP    OAKHURST 115.00  LOAD==15.01(3.05)
  #
 3  34306     0  "1"     0     # EXCHQUER  13.80       PGEN=94.50  QGEN=8.77
 0
  #
  #
  # (108)  L-1/G-1 OVERLAPPING OUTAGE
  # Atwater - El Capitan 115 kV Line and Exchequer
 1  34104 34106  "1 "    0     # line from  ATWATER  115.00  BRKR to (2)   CASTLE
115.00
 1  34106 34138  "1 "    0     # line from  CASTLE   115.00   (2) to BRKR  EL CAPTN
115.00
  #
 3  34306     0  "1"     0     # EXCHQUER  13.80       PGEN=94.50  QGEN=8.77
 0
```

```
  #
  #
  # (109)  L-1/G-1 OVERLAPPING OUTAGE
  # Atwater - Merced 115 kV Line and Exchequer
 1  34104 34108  "1 "    0     # line from  ATWATER  115.00  BRKR to (3)   CRESEY T
115.00
 1  34108 34110  "1 "    0     # line from  CRESEY T 115.00  BRKR to (1)   ATWATR J
115.00
 1  34108 34114  "1 "    0     # line from  CRESEY T 115.00   (3) to (3)   JRWD GEN
115.00
 1  34114 34124  "1 "    0     # line from  JRWD GEN 115.00   (3) to (2)   JR WOOD
115.00
 2  34114 34332  "1 "    0     # TRAN from  JRWD GEN 115.00   (3) to (1)   JRWCOGEN
9.11
 1  34124 34140  "1 "    0     # line from  JR WOOD  115.00   (2) to (1)   CRESSEY
115.00
 4  34124     0  "1 "    0     # LOAD-DROP    JR WOOD  115.00  LOAD==11.70(10.32)
 4  34140     0  "1 "    0     # LOAD-DROP    CRESSEY  115.00  LOAD==19.02(3.86)
 3  34332     0  "1 "    0     # GEN-DROP    JRWCOGEN   9.11  GEN==3.80(5.40)
  #
 3  34306     0  "1"     0     # EXCHQUER  13.80       PGEN=94.50  QGEN=8.77
 0
  #
  #
  # (110)  L-1/G-1 OVERLAPPING OUTAGE
  # Cressy Tap 115 kV Line and Exchequer
 1  34108 34110  "1 "    0     # line from  CRESEY T 115.00  BRKR to (3)   ATWATR J
115.00
 1  34110 34130  "1 "    0     # line from  ATWATR J 115.00   (3) to (2)   LIVNGSTN
115.00
 1  34110 34144  "1 "    0     # line from  ATWATR J 115.00   (3) to BRKR  MERCED
115.00
 1  34130 34132  "1 "    0     # line from  LIVNGSTN 115.00   (2) to (1)   GALLO
115.00
 4  34130     0  "3 "    0     # LOAD-DROP    LIVNGSTN 115.00  LOAD==24.58(5.00)
 4  34132     0  "1 "    0     # LOAD-DROP    GALLO    115.00  LOAD==4.30(3.68)
  #
 3  34306     0  "1"     0     # EXCHQUER  13.80       PGEN=94.50  QGEN=8.77
 0
  #
  #
  # (111)  L-1/G-1 OVERLAPPING OUTAGE
  # Le Grand - Dairyland 115 kV Line and Exchequer
 1  34116 34154  "1 "    0     # line from  LE GRAND 115.00  BRKR to BRKR  DAIRYLND
115.00
  #
 3  34306     0  "1"     0     # EXCHQUER  13.80       PGEN=94.50  QGEN=8.77
 0
  #
  #
  # (112)  L-1/G-1 OVERLAPPING OUTAGE
  # Wilson - Oro Loma 115 kV Line and Exchequer
 1  34118 34136  "1 "    0     # line from  LE GRNDJ 115.00   (2) to BRKR  WILSON B
115.00
 1  34118 34168  "1 "    0     # line from  LE GRNDJ 115.00   (2) to (2)   EL NIDO
115.00
 1  34168 34162  "1 "    0     # line from  EL NIDO  115.00   (2) to BRKR  ORO LOMA
115.00
 4  34168     0  "1 "    0     # LOAD-DROP    EL NIDO  115.00  LOAD==12.49(2.54)
 4  34168     0  "2 "    0     # LOAD-DROP    EL NIDO  115.00  LOAD==15.00(3.05)
  #
 3  34306     0  "1"     0     # EXCHQUER  13.80       PGEN=94.50  QGEN=8.77
 0
  #
  #
  # (113)  L-1/G-1 OVERLAPPING OUTAGE
  # El Capitan - Wilson 115 kV Line and Exchequer
 1  34136 34138  "1 "    0     # line from  WILSON B 115.00  BRKR to BRKR  EL CAPTN
115.00
  #
```

```
 3  34306     0  "1"     0     # EXCHQUER  13.80       PGEN=94.50  QGEN=8.77
 0
  #
  #
  # (114)  L-1/G-1 OVERLAPPING OUTAGE
  # Dairyland - Mendota 115 kV Line and Exchequer
 1  34150 34154  "1 "    0     # line from  NEWHALL  115.00   (2) to BRKR  DAIRYLND
115.00
 1  34150 34178  "1 "    0     # line from  NEWHALL  115.00   (2) to (3)   MADERAPR
115.00
 1  34178 34156  "1 "    0     # line from  MADERAPR 115.00   (3) to BRKR  MENDOTA
115.00
 2  34178 34179  "1 "    0     # TRAN from  MADERAPR 115.00   (3) to (1)   MADERA_G
13.80
 4  34150     0  "2 "    0     # LOAD-DROP    NEWHALL  115.00  LOAD==8.55(1.73)
 4  34150     0  "3 "    0     # LOAD-DROP    NEWHALL  115.00  LOAD==10.62(2.16)
 4  34179     0  "ss"    0     # LOAD-DROP    MADERA_G  13.80  LOAD==3.60(0.85)
 3  34179     0  "1 "    0     # GEN-DROP    MADERA_G  13.80  GEN==28.60(6.34)
  #
 3  34306     0  "1"     0     # EXCHQUER  13.80       PGEN=94.50  QGEN=8.77
 0
  #
  #
  # (115)  L-1/G-1 OVERLAPPING OUTAGE
  # Panoche - Mendota 115 kV Line and Exchequer
 1  34157 34156  "1 "    0     # line from  PANOCHET 115.00   (2) to BRKR  MENDOTA
115.00
 1  34157 34158  "1 "    0     # line from  PANOCHET 115.00   (2) to BRKR  PANOCHE
115.00
 3  34186     0  "1 "    0     # DG_PAN Unit trips for Panoche - Mendota 115 kV outage
  #
 3  34306     0  "1"     0     # EXCHQUER  13.80       PGEN=94.50  QGEN=8.77
 0
  #
  #
  # (116)  L-1/G-1 OVERLAPPING OUTAGE
  # Glass - Biola - Madera 70 kV Line and Exchequer
 1  34237 34255  "1 "    0     # line from  CANANDGA  70.00   (2) to (3)   TRIGO J
70.00
 1  34237 34240  "1 "    0     # line from  CANANDGA  70.00   (2) to BRKR  GLASS
70.00
 1  34255 34238  "1 "    0     # line from  TRIGO J   70.00   (3) to BRKR  BONITA
70.00
 1  34255 34254  "1 "    0     # line from  TRIGO J   70.00   (3) to (3)   TRIGO
70.00
 1  34254 34252  "1 "    0     # line from  TRIGO     70.00   (3) to BRKR  MADERA
70.00
 1  34254 34264  "1 "    0     # line from  TRIGO     70.00   (3) to (1)   EL PECO
70.00
 4  34237     0  "1 "    0     # LOAD-DROP    CANANDGA  70.00  LOAD==7.60(5.70)
 4  34238     0  "1 "    0     # LOAD-DROP    BONITA    70.00  LOAD==14.37(2.92)
 4  34264     0  "1 "    0     # LOAD-DROP    EL PECO   70.00  LOAD==9.86(2.01)
 4  34264     0  "2 "    0     # LOAD-DROP    EL PECO   70.00  LOAD==7.26(1.48)
 1  34238 34236  "1 "    1      # Switches in Bonita SW23 to transfer load
 4  34238     0  "1 "    1      # Restore Load at Bonita
  #
 3  34306     0  "1"     0     # EXCHQUER  13.80       PGEN=94.50  QGEN=8.77
 0
  #
  #
  # (117)  L-1/G-1 OVERLAPPING OUTAGE
  # Merced Falls - Exchequer 70 kV Line and Exchequer
 1  34321 34226  "1 "    0     # line from  MCSWAINJ  70.00   (3) to (2)   MC SWAIN
70.00
 1  34321 34230  "1 "    0     # line from  MCSWAINJ  70.00   (3) to BRKR  MRCDFLLS
70.00
 1  34321 34232  "1 "    0     # line from  MCSWAINJ  70.00   (3) to BRKR  EXCHEQUR
70.00
 2  34226 34320  "1 "    0     # TRAN from  MC SWAIN  70.00   (2) to (1)   MCSWAIN
9.11
```

```
 3  34320     0  "1 "    0     # GEN-DROP    MCSWAIN    9.11  GEN==10.00(2.00)
  #
 3  34306     0  "1"     0     # EXCHQUER  13.80       PGEN=94.50  QGEN=8.77
 0
  #
  #
  # (118)  L-1/G-1 OVERLAPPING OUTAGE
  # Los Banos - Canal - Oro Loma 70 kV Line and Exchequer
 1  34200 34222  "1 "    0     # line from  ORO LOMA  70.00  BRKR to (3)   MRCYSPRS
70.00
 1  34222 34220  "1 "    0     # line from  MRCYSPRS  70.00   (3) to (2)   ORTIGA
70.00
 1  34222 34224  "1 "    0     # line from  MRCYSPRS  70.00   (3) to (2)   ARBURUA
70.00
 1  34220 34206  "1 "    0     # line from  ORTIGA    70.00   (2) to BRKR  CANAL
70.00
 1  34224 34272  "1 "    0     # line from  ARBURUA   70.00   (2) to (2)   WRGHT PP
70.00
 1  34272 34214  "1 "    0     # line from  WRGHT PP  70.00   (2) to BRKR  LOS BANS
70.00
 4  34220     0  "1 "    0     # LOAD-DROP    ORTIGA    70.00  LOAD==6.88(1.40)
 4  34224     0  "1 "    0     # LOAD-DROP    ARBURUA   70.00  LOAD==3.77(1.83)
 4  34272     0  "1 "    0     # LOAD-DROP    WRGHT PP  70.00  LOAD==9.50(1.93)
  #
 3  34306     0  "1"     0     # EXCHQUER  13.80       PGEN=94.50  QGEN=8.77
 0
  #
  #
  # (119)  L-1/G-1 OVERLAPPING OUTAGE
  # Atwater - El Capitan 115 kV Line and JR Wood Cogen
 1  34104 34106  "1 "    0     # line from  ATWATER  115.00  BRKR to (2)   CASTLE
115.00
 1  34106 34138  "1 "    0     # line from  CASTLE   115.00   (2) to BRKR  EL CAPTN
115.00
  #
 3  34332     0  "1"     0     # JRWCOGEN   9.11       PGEN=4.00  QGEN=5.40
 0
  #
  #
  # (120)  L-1/G-1 OVERLAPPING OUTAGE
  # Wilson - Atwater #2 115 kV Line and JR Wood Cogen
 1  34134 34104  "1 "    0     # line from  WILSON A 115.00  BRKR to BRKR  ATWATER
115.00
  #
 3  34332     0  "1"     0     # JRWCOGEN   9.11       PGEN=4.00  QGEN=5.40
 0
  #
  #
  # (121)  L-1/G-1 OVERLAPPING OUTAGE
  # Le Grand - Chowchilla 115 kV Line and Kerckhoff
 1  34100 34101  "1 "    0     # line from  CHWCHLLA 115.00  BRKR to (3)   CERTAN T
115.00
 1  34101 34116  "1 "    0     # line from  CERTAN T 115.00   (3) to BRKR  LE GRAND
115.00
 1  34101 34107  "1 "    0     # line from  CERTAN T 115.00   (3) to (2)   CERTANJ2
115.00
 1  34107 34103  "1 "    0     # line from  CERTANJ2 115.00   (2) to (3)   CHWCGNJT
115.00
 1  34103 34102  "1 "    0     # line from  CHWCGNJT 115.00   (3) to (1)   CERTTEED
115.00
 1  34103 34109  "1 "    0     # line from  CHWCGNJT 115.00   (3) to (3)   CHWCGN
115.00
 1  34109 34111  "1 "    0     # line from  CHWCGN   115.00   (3) to (2)   CHWCHLA2
115.00
 2  34109 34301  "1 "    0     # TRAN from  CHWCGN   115.00   (3) to (1)   CHOWCOGN
13.80
 2  34111 34305  "1 "    0     # TRAN from  CHWCHLA2 115.00   (2) to (1)   CHWCHLA2
13.80
 4  34102     0  "1 "    0     # LOAD-DROP    CERTTEED 115.00  LOAD==9.94(6.94)
 4  34305     0  "ss"    0     # LOAD-DROP    CHWCHLA2  13.80  LOAD==2.00(1.11)
```

```
 3  34301     0  "1 "    0     # GEN-DROP    CHOWCOGN  13.80  GEN==50.00(4.33)
 3  34305     0  "1 "    0     # GEN-DROP    CHWCHLA2  13.80  GEN==12.50(7.30)
  #
 3  34308     0  "1"     0     # KERCKHOF  13.80       PGEN=129.00  QGEN=16.00
 0
  #
  #
  # (122)  L-1/G-1 OVERLAPPING OUTAGE
  # Exchequer - Le Grand 115 kV Line and Kerckhoff
 1  34112 34116  "1 "    0     # line from  EXCHEQUR 115.00  BRKR to BRKR  LE GRAND
115.00
 3  34306     0  "1 "    0      # Exchequer Unit will trip for this outage
 4  34228     0  "**"    0      # Mariposa Loads will drop if bus is below 64 kV, this is
anticipate
  #
 3  34308     0  "1"     0     # KERCKHOF  13.80       PGEN=129.00  QGEN=16.00
 0
  #
  #
  # (123)  B2 LINE OUTAGE (BREAKER-TO-BREAKER)
  # Le Grand - Dairyland 115 kV Line and Kerckhoff
 1  34116 34154  "1 "    0     # line from  LE GRAND 115.00  BRKR to BRKR  DAIRYLND
115.00
  #
 3  34308     0  "1"     0     # KERCKHOF  13.80       PGEN=129.00  QGEN=16.00
 0
  #
  #
  # (124)  L-1/G-1 OVERLAPPING OUTAGE
  # Glass - Biola - Madera 70 kV Line and Kerckhoff
 1  34237 34255  "1 "    0     # line from  CANANDGA  70.00   (2) to (3)   TRIGO J
70.00
 1  34237 34240  "1 "    0     # line from  CANANDGA  70.00   (2) to BRKR  GLASS
70.00
 1  34255 34238  "1 "    0     # line from  TRIGO J   70.00   (3) to BRKR  BONITA
70.00
 1  34255 34254  "1 "    0     # line from  TRIGO J   70.00   (3) to (3)   TRIGO
70.00
 1  34254 34252  "1 "    0     # line from  TRIGO     70.00   (3) to BRKR  MADERA
70.00
 1  34254 34264  "1 "    0     # line from  TRIGO     70.00   (3) to (1)   EL PECO
70.00
 4  34237     0  "1 "    0     # LOAD-DROP    CANANDGA  70.00  LOAD==7.60(5.70)
 4  34238     0  "1 "    0     # LOAD-DROP    BONITA    70.00  LOAD==14.37(2.92)
 4  34264     0  "1 "    0     # LOAD-DROP    EL PECO   70.00  LOAD==9.86(2.01)
 4  34264     0  "2 "    0     # LOAD-DROP    EL PECO   70.00  LOAD==7.26(1.48)
 1  34238 34236  "1 "    1      # Switches in Bonita SW23 to transfer load
 4  34238     0  "1 "    1      # Restore Load at Bonita
  #
 3  34308     0  "1"     0     # KERCKHOF  13.80       PGEN=129.00  QGEN=16.00
 0
  #
  #
  # (125)  L-1/G-1 OVERLAPPING OUTAGE
  # Los Banos - Canal - Oro Loma 70 kV Line and Oneil Pump
 1  34200 34222  "1 "    0     # line from  ORO LOMA  70.00  BRKR to (3)   MRCYSPRS
70.00
 1  34222 34220  "1 "    0     # line from  MRCYSPRS  70.00   (3) to (2)   ORTIGA
70.00
 1  34222 34224  "1 "    0     # line from  MRCYSPRS  70.00   (3) to (2)   ARBURUA
70.00
 1  34220 34206  "1 "    0     # line from  ORTIGA    70.00   (2) to BRKR  CANAL
70.00
 1  34224 34272  "1 "    0     # line from  ARBURUA   70.00   (2) to (2)   WRGHT PP
70.00
 1  34272 34214  "1 "    0     # line from  WRGHT PP  70.00   (2) to BRKR  LOS BANS
70.00
 4  34220     0  "1 "    0     # LOAD-DROP    ORTIGA    70.00  LOAD==6.88(1.40)
 4  34224     0  "1 "    0     # LOAD-DROP    ARBURUA   70.00  LOAD==3.77(1.83)
 4  34272     0  "1 "    0     # LOAD-DROP    WRGHT PP  70.00  LOAD==9.50(1.93)
```

```
  #
 3  34316     0  "1"     0     # ONEILPMP   9.11       PGEN=0.52  QGEN=0.00
 0
  #
  #
  # (126)  L-1/G-1 OVERLAPPING OUTAGE
  # Warnerville - Wilson 230 kV Line and Melones Unit 1
 1  30515 30800  "1 "    0     # line from  WARNERVL 230.00  BRKR to BRKR  WILSON
230.00
  #
 3  37561     0  "1"     0     # MELONE1   13.80       PGEN=119.00  QGEN=60.00
 0
  #
  #
  # (127)  L-1/G-1 OVERLAPPING OUTAGE
  # Wilson - Borden #1 230 kV Line and Melones Unit 1
 1  30795 30805  "1 "    0     # line from  STOREY 2 230.00   (2) to BRKR  BORDEN
230.00
 1  30795 30800  "1 "    0     # line from  STOREY 2 230.00   (2) to BRKR  WILSON
230.00
 4  30795     0  "2 "    0     # LOAD-DROP    STOREY 2 230.00  LOAD==33.89(6.88)
  #
 3  37561     0  "1"     0     # MELONE1   13.80       PGEN=119.00  QGEN=60.00
 0
  #
  #
  # (128)  L-1/G-1 OVERLAPPING OUTAGE
  # Wilson - Borden #2 230 kV Line and Melones Unit 1
 1  30796 30800  "1 "    0     # line from  STOREY 1 230.00   (2) to BRKR  WILSON
230.00
 1  30796 30805  "1 "    0     # line from  STOREY 1 230.00   (2) to BRKR  BORDEN
230.00
 4  30796     0  "1 "    0     # LOAD-DROP    STOREY 1 230.00  LOAD==37.87(7.69)
  #
 3  37561     0  "1"     0     # MELONE1   13.80       PGEN=119.00  QGEN=60.00
 0
  #
  #
  # (129)  L-1/G-1 OVERLAPPING OUTAGE
  # Borden - Gregg #1 230 kV Line and Melones Unit 1
 1  30805 30810  "1 "    0     # line from  BORDEN   230.00  BRKR to BRKR  GREGG
230.00
 3  34604     0  "**"    0     # Drop unit#3 with loss of Gregg - Borden line
  #
 3  37561     0  "1"     0     # MELONE1   13.80       PGEN=119.00  QGEN=60.00
 0
  #
  #
  # (130)  L-1/G-1 OVERLAPPING OUTAGE
  # Borden - Gregg #2 230 kV Line and Melones Unit 1
 1  30805 30810  "2 "    0     # line from  BORDEN   230.00  BRKR to BRKR  GREGG
230.00
 3  34604     0  "**"    0     # Drop unit#3 with loss of Gregg - Borden #2 line
  #
 3  37561     0  "1"     0     # MELONE1   13.80       PGEN=119.00  QGEN=60.00
 0
  #
  #
  # (131)  L-1/G-1 OVERLAPPING OUTAGE
  # Melones - Wilson 230 kV Line and Melones Unit 1
 1  37563 30800  "1 "    0     # line from  MELONES 230.00   (2) to BRKR  WILSON   230.00
  #
 3  37561     0  "1"     0     # MELONE1   13.80       PGEN=119.00  QGEN=60.00
 0
  #
  #
  # (132)  L-1/G-1 OVERLAPPING OUTAGE
  # Warnerville - Wilson 230 kV Line and Helms Unit 1
 1  30515 30800  "1 "    0     # line from  WARNERVL 230.00  BRKR to BRKR  WILSON
230.00
```

```
  #
 3  34600     0  "1"     0     # HELMS 1   18.00       PGEN=404.00  QGEN=66.02
 0
  #
  #
  # (133)  L-1/G-1 OVERLAPPING OUTAGE
  # Westley - Los Banos 230 kV Line and Helms Unit 1
 1  30670 30765  "1 "    0     # line from  WESTLEY  230.00  BRKR to BRKR  LOSBANOS
230.00
  #
 3  34600     0  "1"     0     # HELMS 1   18.00       PGEN=404.00  QGEN=66.02
 0
  #
  #
  # (134)  L-1/G-1 OVERLAPPING OUTAGE
  # Moss Landing - Panoche 230 kV Line and Helms Unit 1
 1  30750 30790  "1 "    0     # line from  MOSSLND2 230.00  BRKR to BRKR  PANOCHE
230.00
  #
 3  34600     0  "1"     0     # HELMS 1   18.00       PGEN=404.00  QGEN=66.02
 0
  #
  #
  # (135)  L-1/G-1 OVERLAPPING OUTAGE
  # Coburn - Panoche 230 kV Line and Helms Unit 1
 1  30760 30790  "1 "    0     # line from  COBURN   230.00  BRKR to BRKR  PANOCHE
230.00
  #
 3  34600     0  "1"     0     # HELMS 1   18.00       PGEN=404.00  QGEN=66.02
 0
  #
  #
  # (136)  L-1/G-1 OVERLAPPING OUTAGE
  # Los Banos - Panoche #1 230 kV Line and Helms Unit 1
 1  30765 30790  "1 "    0     # line from  LOSBANOS 230.00  BRKR to BRKR  PANOCHE
230.00
  #
 3  34600     0  "1"     0     # HELMS 1   18.00       PGEN=404.00  QGEN=66.02
 0
  #
  #
  # (137)  L-1/G-1 OVERLAPPING OUTAGE
  # Los Banos - Panoche #2 230 kV Line and Helms Unit 1
 1  30765 30790  "2 "    0     # line from  LOSBANOS 230.00  BRKR to BRKR  PANOCHE
230.00
  #
 3  34600     0  "1"     0     # HELMS 1   18.00       PGEN=404.00  QGEN=66.02
 0
  #
  #
  # (138)  L-1/G-1 OVERLAPPING OUTAGE
  # Los Banos - Dos Amigos 230 kV Line and Helms Unit 1
 1  30765 38615  "1 "    0     # line from  LOSBANOS 230.00  BRKR to BRKR  DS AMIGO
230.00
  #
 3  34600     0  "1"     0     # HELMS 1   18.00       PGEN=404.00  QGEN=66.02
 0
  #
  #
  # (139)  L-1/G-1 OVERLAPPING OUTAGE
  # Los Banos - San Luis PGP #1 230 kV Line and Helms Unit 1
 1  30765 38625  "1 "    0     # line from  LOSBANOS 230.00  BRKR to BRKR  SN LS PP
230.00
  #
 3  34600     0  "1"     0     # HELMS 1   18.00       PGEN=404.00  QGEN=66.02
 0
  #
  #
  # (140)  L-1/G-1 OVERLAPPING OUTAGE
  # Los Banos - San Luis PGP #2 230 kV Line and Helms Unit 1
```

```
 1  30765 38625  "2 "    0     # line from  LOSBANOS 230.00  BRKR to BRKR  SN LS PP
230.00
  #
 3  34600     0  "1"     0     # HELMS 1   18.00       PGEN=404.00  QGEN=66.02
 0
  #
  #
  # (141)  L-1/G-1 OVERLAPPING OUTAGE
  # Panoche - Kearney 230 kV Line and Helms Unit 1
 1  30790 30825  "1 "    0     # line from  PANOCHE  230.00  BRKR to (2)   MCMULLN1
230.00
 1  30825 30830  "1 "    0     # line from  MCMULLN1 230.00   (2) to BRKR  KEARNEY
230.00
 4  30825     0  "1 "    0     # LOAD-DROP    MCMULLN1 230.00  LOAD==20.57(4.18)
  #
 3  34600     0  "1"     0     # HELMS 1   18.00       PGEN=404.00  QGEN=66.02
 0
  #
  #
  # (142)  L-1/G-1 OVERLAPPING OUTAGE
  # Panoche - Helm 230 kV Line and Helms Unit 1
 1  30790 30873  "1 "    0     # line from  PANOCHE  230.00  BRKR to BRKR  HELM
230.00
  #
 3  34600     0  "1"     0     # HELMS 1   18.00       PGEN=404.00  QGEN=66.02
 0
  #
  #
  # (143)  L-1/G-1 OVERLAPPING OUTAGE
  # Gates - Panoche #1 230 kV Line and Helms Unit 1
 1  30790 30900  "1 "    0     # line from  PANOCHE  230.00  BRKR to BRKR  GATES
230.00
  #
 3  34600     0  "1"     0     # HELMS 1   18.00       PGEN=404.00  QGEN=66.02
 0
  #
  #
  # (144)  L-1/G-1 OVERLAPPING OUTAGE
  # Gates - Panoche #2 230 kV Line and Helms Unit 1
 1  30790 30900  "2 "    0     # line from  PANOCHE  230.00  BRKR to BRKR  GATES
230.00
  #
 3  34600     0  "1"     0     # HELMS 1   18.00       PGEN=404.00  QGEN=66.02
 0
  #
  #
  # (145)  L-1/G-1 OVERLAPPING OUTAGE
  # Wilson - Borden #1 230 kV Line and Helms Unit 1
 1  30795 30805  "1 "    0     # line from  STOREY 2 230.00   (2) to BRKR  BORDEN
230.00
 1  30795 30800  "1 "    0     # line from  STOREY 2 230.00   (2) to BRKR  WILSON
230.00
 4  30795     0  "2 "    0     # LOAD-DROP    STOREY 2 230.00  LOAD==33.89(6.88)
  #
 3  34600     0  "1"     0     # HELMS 1   18.00       PGEN=404.00  QGEN=66.02
 0
  #
  #
  # (146)  L-1/G-1 OVERLAPPING OUTAGE
  # Wilson - Borden #2 230 kV Line and Helms Unit 1
 1  30796 30800  "1 "    0     # line from  STOREY 1 230.00   (2) to BRKR  WILSON
230.00
 1  30796 30805  "1 "    0     # line from  STOREY 1 230.00   (2) to BRKR  BORDEN
230.00
 4  30796     0  "1 "    0     # LOAD-DROP    STOREY 1 230.00  LOAD==37.87(7.69)
  #
 3  34600     0  "1"     0     # HELMS 1   18.00       PGEN=404.00  QGEN=66.02
 0
  #
  #
```

```
  # (147)  L-1/G-1 OVERLAPPING OUTAGE
  # Melones - Wilson 230 kV Line and Helms Unit 1
 1  37563 30800  "1 "    0     # line from  MELONES 230.00   (2) to BRKR  WILSON   230.00
  #
 3  34600     0  "1"     0     # HELMS 1   18.00       PGEN=404.00  QGEN=66.02
 0
  #
  #
  # (148)  L-1/G-1 OVERLAPPING OUTAGE
  # Borden - Gregg #1 230 kV Line and Helms Unit 1
 1  30805 30810  "1 "    0     # line from  BORDEN   230.00  BRKR to BRKR  GREGG
230.00
 3  34604     0  "**"    0     # Drop unit#3 with loss of Gregg - Borden line
  #
 3  34600     0  "1"     0     # HELMS 1   18.00       PGEN=404.00  QGEN=66.02
 0
  #
  #
  # (149)  L-1/G-1 OVERLAPPING OUTAGE
  # Borden - Gregg #2 230 kV Line and Helms Unit 1
 1  30805 30810  "2 "    0     # line from  BORDEN   230.00  BRKR to BRKR  GREGG
230.00
 3  34604     0  "**"    0     # Drop unit#3 with loss of Gregg - Borden #2 line
  #
 3  34600     0  "1"     0     # HELMS 1   18.00       PGEN=404.00  QGEN=66.02
 0
  #
  #
  # (150)  L-1/G-1 OVERLAPPING OUTAGE
  # Dos Amigos - Panoche 230 kV Line and Helms Unit 1
 1  38615 30790  "1 "    0     # line from  DS AMIGO 230.00  BRKR to BRKR  PANOCHE
230.00
  #
 3  34600     0  "1"     0     # HELMS 1   18.00       PGEN=404.00  QGEN=66.02
 0
  #
  #
  # (151)  L-1/G-1 OVERLAPPING OUTAGE
  # Warnerville - Wilson 230 kV Line and Exchequer
 1  30515 30800  "1 "    0     # line from  WARNERVL 230.00  BRKR to BRKR  WILSON
230.00
  #
 3  34306     0  "1"     0     # EXCHQUER  13.80       PGEN=94.50  QGEN=8.77
 0
  #
  #
  # (152)  L-1/G-1 OVERLAPPING OUTAGE
  # Westley - Los Banos 230 kV Line and Exchequer
 1  30670 30765  "1 "    0     # line from  WESTLEY  230.00  BRKR to BRKR  LOSBANOS
230.00
  #
 3  34306     0  "1"     0     # EXCHQUER  13.80       PGEN=94.50  QGEN=8.77
 0
  #
  #
  # (153)  L-1/G-1 OVERLAPPING OUTAGE
  # Moss Landing - Panoche 230 kV Line and Exchequer
 1  30750 30790  "1 "    0     # line from  MOSSLND2 230.00  BRKR to BRKR  PANOCHE
230.00
  #
 3  34306     0  "1"     0     # EXCHQUER  13.80       PGEN=94.50  QGEN=8.77
 0
  #
  #
  # (154)  L-1/G-1 OVERLAPPING OUTAGE
  # Coburn - Panoche 230 kV Line and Exchequer
 1  30760 30790  "1 "    0     # line from  COBURN   230.00  BRKR to BRKR  PANOCHE
230.00
  #
 3  34306     0  "1"     0     # EXCHQUER  13.80       PGEN=94.50  QGEN=8.77
```

```
 0
  #
  #
  # (155)  L-1/G-1 OVERLAPPING OUTAGE
  # Los Banos - Panoche #1 230 kV Line and Exchequer
 1  30765 30790  "1 "    0     # line from  LOSBANOS 230.00  BRKR to BRKR  PANOCHE
230.00
  #
 3  34306     0  "1"     0     # EXCHQUER  13.80       PGEN=94.50  QGEN=8.77
 0
  #
  #
  # (156)  L-1/G-1 OVERLAPPING OUTAGE
  # Los Banos - Panoche #2 230 kV Line and Exchequer
 1  30765 30790  "2 "    0     # line from  LOSBANOS 230.00  BRKR to BRKR  PANOCHE
230.00
  #
 3  34306     0  "1"     0     # EXCHQUER  13.80       PGEN=94.50  QGEN=8.77
 0
  #
  #
  # (157)  L-1/G-1 OVERLAPPING OUTAGE
  # Los Banos - Dos Amigos 230 kV Line and Exchequer
 1  30765 38615  "1 "    0     # line from  LOSBANOS 230.00  BRKR to BRKR  DS AMIGO
230.00
  #
 3  34306     0  "1"     0     # EXCHQUER  13.80       PGEN=94.50  QGEN=8.77
 0
  #
  #
  # (158)  L-1/G-1 OVERLAPPING OUTAGE
  # Los Banos - San Luis PGP #1 230 kV Line and Exchequer
 1  30765 38625  "1 "    0     # line from  LOSBANOS 230.00  BRKR to BRKR  SN LS PP
230.00
  #
 3  34306     0  "1"     0     # EXCHQUER  13.80       PGEN=94.50  QGEN=8.77
 0
  #
  #
  # (159)  L-1/G-1 OVERLAPPING OUTAGE
  # Los Banos - San Luis PGP #2 230 kV Line and Exchequer
 1  30765 38625  "2 "    0     # line from  LOSBANOS 230.00  BRKR to BRKR  SN LS PP
230.00
  #
 3  34306     0  "1"     0     # EXCHQUER  13.80       PGEN=94.50  QGEN=8.77
 0
  #
  #
  # (160)  L-1/G-1 OVERLAPPING OUTAGE
  # Panoche - Kearney 230 kV Line and Exchequer
 1  30790 30825  "1 "    0     # line from  PANOCHE  230.00  BRKR to (2)   MCMULLN1
230.00
 1  30825 30830  "1 "    0     # line from  MCMULLN1 230.00   (2) to BRKR  KEARNEY
230.00
 4  30825     0  "1 "    0     # LOAD-DROP    MCMULLN1 230.00  LOAD==20.57(4.18)
  #
 3  34306     0  "1"     0     # EXCHQUER  13.80       PGEN=94.50  QGEN=8.77
 0
  #
  #
  # (161)  L-1/G-1 OVERLAPPING OUTAGE
  # Panoche - Helm 230 kV Line and Exchequer
 1  30790 30873  "1 "    0     # line from  PANOCHE  230.00  BRKR to BRKR  HELM
230.00
  #
 3  34306     0  "1"     0     # EXCHQUER  13.80       PGEN=94.50  QGEN=8.77
 0
  #
  #
  # (162)  L-1/G-1 OVERLAPPING OUTAGE
```

```
  # Gates - Panoche #1 230 kV Line and Exchequer
 1  30790 30900  "1 "    0     # line from  PANOCHE  230.00  BRKR to BRKR  GATES
230.00
  #
 3  34306     0  "1"     0     # EXCHQUER  13.80       PGEN=94.50  QGEN=8.77
 0
  #
  #
  # (163)  L-1/G-1 OVERLAPPING OUTAGE
  # Gates - Panoche #2 230 kV Line and Exchequer
 1  30790 30900  "2 "    0     # line from  PANOCHE  230.00  BRKR to BRKR  GATES
230.00
  #
 3  34306     0  "1"     0     # EXCHQUER  13.80       PGEN=94.50  QGEN=8.77
 0
  #
  #
  # (164)  L-1/G-1 OVERLAPPING OUTAGE
  # Wilson - Borden #1 230 kV Line and Exchequer
 1  30795 30805  "1 "    0     # line from  STOREY 2 230.00   (2) to BRKR  BORDEN
230.00
 1  30795 30800  "1 "    0     # line from  STOREY 2 230.00   (2) to BRKR  WILSON
230.00
 4  30795     0  "2 "    0     # LOAD-DROP    STOREY 2 230.00  LOAD==33.89(6.88)
  #
 3  34306     0  "1"     0     # EXCHQUER  13.80       PGEN=94.50  QGEN=8.77
 0
  #
  #
  # (165)  L-1/G-1 OVERLAPPING OUTAGE
  # Wilson - Borden #2 230 kV Line and Exchequer
 1  30796 30800  "1 "    0     # line from  STOREY 1 230.00   (2) to BRKR  WILSON
230.00
 1  30796 30805  "1 "    0     # line from  STOREY 1 230.00   (2) to BRKR  BORDEN
230.00
 4  30796     0  "1 "    0     # LOAD-DROP    STOREY 1 230.00  LOAD==37.87(7.69)
  #
 3  34306     0  "1"     0     # EXCHQUER  13.80       PGEN=94.50  QGEN=8.77
 0
  #
  #
  # (166)  L-1/G-1 OVERLAPPING OUTAGE
  # Melones - Wilson 230 kV Line and Exchequer
 1  37563 30800  "1 "    0     # line from  MELONES 230.00   (2) to BRKR  WILSON   230.00
  #
 3  34306     0  "1"     0     # EXCHQUER  13.80       PGEN=94.50  QGEN=8.77
 0
  #
  #
  # (167)  L-1/G-1 OVERLAPPING OUTAGE
  # Borden - Gregg #1 230 kV Line and Exchequer
 1  30805 30810  "1 "    0     # line from  BORDEN   230.00  BRKR to BRKR  GREGG
230.00
 3  34604     0  "**"    0     # Drop unit#3 with loss of Gregg - Borden line
  #
 3  34306     0  "1"     0     # EXCHQUER  13.80       PGEN=94.50  QGEN=8.77
 0
  #
  #
  # (168)  L-1/G-1 OVERLAPPING OUTAGE
  # Borden - Gregg #2 230 kV Line and Exchequer
 1  30805 30810  "2 "    0     # line from  BORDEN   230.00  BRKR to BRKR  GREGG
230.00
 3  34604     0  "**"    0     # Drop unit#3 with loss of Gregg - Borden #2 line
  #
 3  34306     0  "1"     0     # EXCHQUER  13.80       PGEN=94.50  QGEN=8.77
 0
  #
  #
  # (169)  L-1/G-1 OVERLAPPING OUTAGE
```

```
  # Dos Amigos - Panoche 230 kV Line and Exchequer
 1  38615 30790  "1 "    0     # line from  DS AMIGO 230.00  BRKR to BRKR  PANOCHE
230.00
  #
 3  34306     0  "1"     0     # EXCHQUER  13.80       PGEN=94.50  QGEN=8.77
 0
  #
  #
  # (170)  L-1/G-1 OVERLAPPING OUTAGE
  # Warnerville - Wilson 230 kV Line and Kerckhoff
 1  30515 30800  "1 "    0     # line from  WARNERVL 230.00  BRKR to BRKR  WILSON
230.00
  #
 3  34308     0  "1"     0     # KERCKHOF  13.80       PGEN=129.00  QGEN=16.00
 0
  #
  #
  # (171)  L-1/G-1 OVERLAPPING OUTAGE
  # Westley - Los Banos 230 kV Line and Kerckhoff
 1  30670 30765  "1 "    0     # line from  WESTLEY  230.00  BRKR to BRKR  LOSBANOS
230.00
  #
 3  34308     0  "1"     0     # KERCKHOF  13.80       PGEN=129.00  QGEN=16.00
 0
  #
  #
  # (172)  L-1/G-1 OVERLAPPING OUTAGE
  # Moss Landing - Panoche 230 kV Line and Kerckhoff
 1  30750 30790  "1 "    0     # line from  MOSSLND2 230.00  BRKR to BRKR  PANOCHE
230.00
  #
 3  34308     0  "1"     0     # KERCKHOF  13.80       PGEN=129.00  QGEN=16.00
 0
  #
  #
  # (173)  L-1/G-1 OVERLAPPING OUTAGE
  # Coburn - Panoche 230 kV Line and Kerckhoff
 1  30760 30790  "1 "    0     # line from  COBURN   230.00  BRKR to BRKR  PANOCHE
230.00
  #
 3  34308     0  "1"     0     # KERCKHOF  13.80       PGEN=129.00  QGEN=16.00
 0
  #
  #
  # (174)  L-1/G-1 OVERLAPPING OUTAGE
  # Los Banos - Panoche #1 230 kV Line and Kerckhoff
 1  30765 30790  "1 "    0     # line from  LOSBANOS 230.00  BRKR to BRKR  PANOCHE
230.00
  #
 3  34308     0  "1"     0     # KERCKHOF  13.80       PGEN=129.00  QGEN=16.00
 0
  #
  #
  # (175)  L-1/G-1 OVERLAPPING OUTAGE
  # Los Banos - Panoche #2 230 kV Line and Kerckhoff
 1  30765 30790  "2 "    0     # line from  LOSBANOS 230.00  BRKR to BRKR  PANOCHE
230.00
  #
 3  34308     0  "1"     0     # KERCKHOF  13.80       PGEN=129.00  QGEN=16.00
 0
  #
  #
  # (176)  L-1/G-1 OVERLAPPING OUTAGE
  # Los Banos - Dos Amigos 230 kV Line and Kerckhoff
 1  30765 38615  "1 "    0     # line from  LOSBANOS 230.00  BRKR to BRKR  DS AMIGO
230.00
  #
 3  34308     0  "1"     0     # KERCKHOF  13.80       PGEN=129.00  QGEN=16.00
 0
  #
```

```
  #
  # (177)  L-1/G-1 OVERLAPPING OUTAGE
  # Los Banos - San Luis PGP #1 230 kV Line and Kerckhoff
 1  30765 38625  "1 "    0     # line from  LOSBANOS 230.00  BRKR to BRKR  SN LS PP
230.00
  #
 3  34308     0  "1"     0     # KERCKHOF  13.80       PGEN=129.00  QGEN=16.00
 0
  #
  #
  # (178)  L-1/G-1 OVERLAPPING OUTAGE
  # Los Banos - San Luis PGP #2 230 kV Line and Kerckhoff
 1  30765 38625  "2 "    0     # line from  LOSBANOS 230.00  BRKR to BRKR  SN LS PP
230.00
  #
 3  34308     0  "1"     0     # KERCKHOF  13.80       PGEN=129.00  QGEN=16.00
 0
  #
  #
  # (179)  L-1/G-1 OVERLAPPING OUTAGE
  # Panoche - Kearney 230 kV Line and Kerckhoff
 1  30790 30825  "1 "    0     # line from  PANOCHE  230.00  BRKR to (2)   MCMULLN1
230.00
 1  30825 30830  "1 "    0     # line from  MCMULLN1 230.00   (2) to BRKR  KEARNEY
230.00
 4  30825     0  "1 "    0     # LOAD-DROP    MCMULLN1 230.00  LOAD==20.57(4.18)
  #
 3  34308     0  "1"     0     # KERCKHOF  13.80       PGEN=129.00  QGEN=16.00
 0
  #
  #
  # (180)  L-1/G-1 OVERLAPPING OUTAGE
  # Panoche - Helm 230 kV Line and Kerckhoff
 1  30790 30873  "1 "    0     # line from  PANOCHE  230.00  BRKR to BRKR  HELM
230.00
  #
 3  34308     0  "1"     0     # KERCKHOF  13.80       PGEN=129.00  QGEN=16.00
 0
  #
  #
  # (181)  L-1/G-1 OVERLAPPING OUTAGE
  # Gates - Panoche #1 230 kV Line and Kerckhoff
 1  30790 30900  "1 "    0     # line from  PANOCHE  230.00  BRKR to BRKR  GATES
230.00
  #
 3  34308     0  "1"     0     # KERCKHOF  13.80       PGEN=129.00  QGEN=16.00
 0
  #
  #
  # (182)  L-1/G-1 OVERLAPPING OUTAGE
  # Gates - Panoche #2 230 kV Line and Kerckhoff
 1  30790 30900  "2 "    0     # line from  PANOCHE  230.00  BRKR to BRKR  GATES
230.00
  #
 3  34308     0  "1"     0     # KERCKHOF  13.80       PGEN=129.00  QGEN=16.00
 0
  #
  #
  # (183)  L-1/G-1 OVERLAPPING OUTAGE
  # Wilson - Borden #1 230 kV Line and Kerckhoff
 1  30795 30805  "1 "    0     # line from  STOREY 2 230.00   (2) to BRKR  BORDEN
230.00
 1  30795 30800  "1 "    0     # line from  STOREY 2 230.00   (2) to BRKR  WILSON
230.00
 4  30795     0  "2 "    0     # LOAD-DROP    STOREY 2 230.00  LOAD==33.89(6.88)
  #
 3  34308     0  "1"     0     # KERCKHOF  13.80       PGEN=129.00  QGEN=16.00
 0
  #
  #
```

```
  # (184)  L-1/G-1 OVERLAPPING OUTAGE
  # Wilson - Borden #2 230 kV Line and Kerckhoff
 1  30796 30800  "1 "    0     # line from  STOREY 1 230.00   (2) to BRKR  WILSON
230.00
 1  30796 30805  "1 "    0     # line from  STOREY 1 230.00   (2) to BRKR  BORDEN
230.00
 4  30796     0  "1 "    0     # LOAD-DROP    STOREY 1 230.00  LOAD==37.87(7.69)
  #
 3  34308     0  "1"     0     # KERCKHOF  13.80       PGEN=129.00  QGEN=16.00
 0
  #
  #
  # (185)  L-1/G-1 OVERLAPPING OUTAGE
  # Melones - Wilson 230 kV Line and Kerckhoff
 1  37563 30800  "1 "    0     # line from  MELONES 230.00   (2) to BRKR  WILSON   230.00
  #
 3  34308     0  "1"     0     # KERCKHOF  13.80       PGEN=129.00  QGEN=16.00
 0
  #
  #
  # (186)  L-1/G-1 OVERLAPPING OUTAGE
  # Borden - Gregg #1 230 kV Line and Kerckhoff
 1  30805 30810  "1 "    0     # line from  BORDEN   230.00  BRKR to BRKR  GREGG
230.00
 3  34604     0  "**"    0     # Drop unit#3 with loss of Gregg - Borden line
  #
 3  34308     0  "1"     0     # KERCKHOF  13.80       PGEN=129.00  QGEN=16.00
 0
  #
  #
  # (187)  L-1/G-1 OVERLAPPING OUTAGE
  # Borden - Gregg #2 230 kV Line and Kerckhoff
 1  30805 30810  "2 "    0     # line from  BORDEN   230.00  BRKR to BRKR  GREGG
230.00
 3  34604     0  "**"    0     # Drop unit#3 with loss of Gregg - Borden #2 line
  #
 3  34308     0  "1"     0     # KERCKHOF  13.80       PGEN=129.00  QGEN=16.00
 0
  #
  #
  # (188)  L-1/G-1 OVERLAPPING OUTAGE
  # Dos Amigos - Panoche 230 kV Line and Kerckhoff
 1  38615 30790  "1 "    0     # line from  DS AMIGO 230.00  BRKR to BRKR  PANOCHE
230.00
  #
 3  34308     0  "1"     0     # KERCKHOF  13.80       PGEN=129.00  QGEN=16.00
 0
  #
  #
  # 2013 sumpk category b contingency list
  # Fresno Zone 314
  #
  #
  # (189)  B2 LINE OUTAGE (BREAKER-TO-BREAKER)
  #
 1  30873 30875  "1 "    0     # line from  HELM     230.00  BRKR to BRKR  MC CALL
230.00
 0
  #
  #
  # (190)  B2 LINE OUTAGE (BREAKER-TO-BREAKER)
  #
 1  30810 30820  "1 "    0     # line from  GREGG    230.00  BRKR to BRKR  HELMS PP
230.00
 3  34600     0  "**"    0      # Drop unit#1 with a loss Helm - Gregg #1 line
 0
  #
  #
  # (191)  B2 LINE OUTAGE (BREAKER-TO-BREAKER)
  #
```

```
 1  30810 30820  "2 "    0     # line from  GREGG    230.00  BRKR to BRKR  HELMS PP
230.00
 3  34604     0  "**"    0      # Drop unit#3 with a loss Helm - Gregg #2 line
 0
  #
  #
  # (192)  B2 LINE OUTAGE (BREAKER-TO-BREAKER)
  #
 1  30810 30835  "1 "    0     # line from  GREGG    230.00  BRKR to BRKR  HERNDON
230.00
 3  34604     0  "**"    0      # Drop unit#3 with a loss Gregg - Herndon #1 line
 0
  #
  #
  # (193)  B2 LINE OUTAGE (BREAKER-TO-BREAKER)
  #
 1  30810 30835  "2 "    0     # line from  GREGG    230.00  BRKR to BRKR  HERNDON
230.00
 3  34604     0  "**"    0      # Drop unit#3 with a loss Gregg - Herndon #2 line
 0
  #
  #
  # (194)  B2 LINE OUTAGE (BREAKER-TO-BREAKER)
  #
 1  30810 30845  "1 "    0     # line from  GREGG    230.00  BRKR to (3)   FGRDN T2
230.00
 1  30845 30846  "1 "    0     # line from  FGRDN T2 230.00   (3) to BRKR  FIGRDN 2
230.00
 1  30845 30850  "1 "    0     # line from  FGRDN T2 230.00   (3) to BRKR  ASHLAN
230.00
 4  30846     0  "1 "    0     # LOAD-DROP    FIGRDN 2 230.00  LOAD==52.57(10.67)
 4  30846     0  "2 "    0     # LOAD-DROP    FIGRDN 2 230.00  LOAD==36.77(7.47)
 3  34604     0  "**"    0      # Drop unit#3 with a loss Gregg - Figarden line
 1 30841  30846  "1 "    1      # Switches in Figarden SW 286 to transfer load
 4 30846      0  "**"    1      # Restore Load at Figarden 2
 0
  #
  #
  # (195)  B2 LINE OUTAGE (BREAKER-TO-BREAKER)
  #
 1  30810 30879  "1 "    0     # line from  GREGG    230.00  BRKR to (3)   HENTAP1
230.00
 1  30879 30881  "1 "    0     # line from  HENTAP1  230.00   (3) to BRKR  HENRIETA
230.00
 1  30879 30900  "1 "    0     # line from  HENTAP1  230.00   (3) to BRKR  GATES
230.00
 3  34604     0  "**"    0      # Drop unit#3 with a loss Gregg - Henrietta Tap 1 line
 1  30880 30881  "1 "    1      # Henrietta flip flop (Henrietta CB 222)
 0
  #
  #
  # (196)  B2 LINE OUTAGE (BREAKER-TO-BREAKER)
  #
 1  30830 30835  "1 "    0     # line from  KEARNEY  230.00  BRKR to BRKR  HERNDON
230.00
 0
  #
  #
  # (197)  B2 LINE OUTAGE (BREAKER-TO-BREAKER)
  #
 1  30835 30840  "1 "    0     # line from  HERNDON  230.00  BRKR to (3)   FGRDN T1
230.00
 1  30840 30841  "1 "    0     # line from  FGRDN T1 230.00   (3) to BRKR  FIGRDN 1
230.00
 1  30840 30850  "1 "    0     # line from  FGRDN T1 230.00   (3) to BRKR  ASHLAN
230.00
 4  30841     0  "1 "    0     # LOAD-DROP    FIGRDN 1 230.00  LOAD==73.45(14.92)
 1 30841  30846  "1 "    1      # Switches in Figarden SW 286 to transfer load
 4 30841      0  "**"    1      # Restore Load at Figarden 1
 0
```

```
  #
  #
  # (198)  B2 LINE OUTAGE (BREAKER-TO-BREAKER)
  #
 1  30855 30860  "1 "    0     # line from  HAAS     230.00   (2) to (3)   BALCH3TP
230.00
 2  30855 34610  "1 "    0     # TRAN from  HAAS     230.00   (2) to (1)   HAAS
13.80
 1  30860 30875  "1 "    0     # line from  BALCH3TP 230.00   (3) to BRKR  MC CALL
230.00
 2  30860 34614  "1 "    0     # TRAN from  BALCH3TP 230.00   (3) to (1)   BLCH 2-3
13.80
 3  34610     0  "1 "    0     # GEN-DROP    HAAS      13.80  GEN==70.00(10.21)
 3  34610     0  "2 "    0     # GEN-DROP    HAAS      13.80  GEN==70.00(10.21)
 3  34614     0  "1 "    0     # GEN-DROP    BLCH 2-3  13.80  GEN==50.00(7.64)
 0
  #
  #
  # (199)  B2 LINE OUTAGE (BREAKER-TO-BREAKER)
  #
 1  30865 30870  "1 "    0     # line from  BALCH    230.00   (2) to (3)   PINE FLT
230.00
 2  30865 34612  "1 "    0     # TRAN from  BALCH    230.00   (2) to (1)   BLCH 2-2
13.80
 1  30870 30875  "1 "    0     # line from  PINE FLT 230.00   (3) to BRKR  MC CALL
230.00
 2  30870 38720  "1 "    0     # TRAN from  PINE FLT 230.00   (3) to (1)   PINE FLT
13.80
 3  34612     0  "1 "    0     # GEN-DROP    BLCH 2-2  13.80  GEN==50.00(0.66)
 3  38720     0  "1 "    0     # GEN-DROP    PINE FLT  13.80  GEN==57.00(23.30)
 0
  #
  #
  # (200)  B2 LINE OUTAGE (BREAKER-TO-BREAKER)
  #
 1  30875 30874  "1 "    0     # line from  MC CALL  230.00  BRKR to BRKR  P0615STN
230.00
 0
  #
  #
  # (201)  B2 LINE OUTAGE (BREAKER-TO-BREAKER)
  #
 1  30875 30874  "2 "    0     # line from  MC CALL  230.00  BRKR to BRKR  P0615STN
230.00
 0
  #
  #
  # (202)  B2 LINE OUTAGE (BREAKER-TO-BREAKER)
  #
 1  30875 30880  "1 "    0     # line from  MC CALL  230.00  BRKR to (2)   HENTAP2
230.00
 1  30880 30900  "1 "    0     # line from  HENTAP2  230.00   (2) to BRKR  GATES
230.00
 0
  #
  #
  # (203)  B2 LINE OUTAGE (BREAKER-TO-BREAKER)
  #
 1  30900 30905  "1 "    0     # line from  GATES    230.00  BRKR to BRKR  TEMPLETN
230.00
 0
  #
  #
  # (204)  B2 LINE OUTAGE (BREAKER-TO-BREAKER)
  #
 1  30900 30915  "1 "    0     # line from  GATES    230.00  BRKR to BRKR  MORROBAY
230.00
 0
  #
  #
```

```
  # (205)  B2 LINE OUTAGE (BREAKER-TO-BREAKER)
  #
 1  30900 30935  "1 "    0     # line from  GATES    230.00  BRKR to BRKR  ARCO
230.00
 0
  #
  #
  # (206)  B2 LINE OUTAGE (BREAKER-TO-BREAKER)
  #
 1  30900 30970  "1 "    0     # line from  GATES    230.00  BRKR to BRKR  MIDWAY
230.00
 0
  #
  #
  # (207)  B2 LINE OUTAGE (BREAKER-TO-BREAKER)
  #
 1  34123 34358  "2 "    0     # line from  K1-JCT   115.00   (2) to BRKR  KERCKHF2
115.00
 1  34123 34128  "1 "    0     # line from  K1-JCT   115.00   (2) to (3)   OAKH_JCT
115.00
 1  34128 34121  "1 "    0     # line from  OAKH_JCT 115.00   (3) to (3)   SHARON T
115.00
 1  34128 34126  "1 "    0     # line from  OAKH_JCT 115.00   (3) to (2)   CORSGOLD
115.00
 1  34121 34105  "1 "    0     # line from  SHARON T 115.00   (3) to (2)   CERTANJ1
115.00
 1  34121 34120  "1 "    0     # line from  SHARON T 115.00   (3) to (1)   SHARON
115.00
 1  34105 34100  "1 "    0     # line from  CERTANJ1 115.00   (2) to BRKR  CHWCHLLA
115.00
 1  34126 34122  "1 "    0     # line from  CORSGOLD 115.00   (2) to (1)   OAKHURST
115.00
 4  34126     0  "1 "    0     # LOAD-DROP    CORSGOLD 115.00  LOAD==2.21(0.45)
 4  34126     0  "2 "    0     # LOAD-DROP    CORSGOLD 115.00  LOAD==26.19(5.32)
 4  34120     0  "1 "    0     # LOAD-DROP    SHARON   115.00  LOAD==7.10(4.96)
 4  34122     0  "1 "    0     # LOAD-DROP    OAKHURST 115.00  LOAD==11.68(2.37)
 4  34122     0  "2 "    0     # LOAD-DROP    OAKHURST 115.00  LOAD==15.01(3.05)
 0
  #
  #
  # (208)  B2 LINE OUTAGE (BREAKER-TO-BREAKER)
  #
 1  34149 34354  "1 "    0     # line from  CHENYT   115.00   (3) to BRKR  SCHINDLR
115.00
 1  34149 34148  "1 "    0     # line from  CHENYT   115.00   (3) to (2)   CHENY
115.00
 1  34149 34158  "1 "    0     # line from  CHENYT   115.00   (3) to BRKR  PANOCHE
115.00
 1  34148 34141  "1 "    0     # line from  CHENY    115.00   (2) to (2)   PAN2_TAP
115.00
 2  34141 34142  "1 "    0     # TRAN from  PAN2_TAP 115.00   (2) to (1)   WHD_PAN2
13.80
 4  34148     0  "1 "    0     # LOAD-DROP    CHENY    115.00  LOAD==13.12(2.66)
 3  34142     0  "1 "    0     # GEN-DROP    WHD_PAN2  13.80  GEN==49.00(4.03)
 0
  #
  #
  # (209)  B2 LINE OUTAGE (BREAKER-TO-BREAKER)
  #
 1  34184 34570  "1 "    0     # line from  GATS2_TP  70.00   (3) to BRKR  COLNGA 2
70.00
 1  34184 34552  "1 "    0     # line from  GATS2_TP  70.00   (3) to BRKR  GATES
70.00
 2  34184 34553  "1 "    0     # TRAN from  GATS2_TP  70.00   (3) to (1)   WHD_GAT2
13.80
 3  34553     0  "1 "    0     # GEN-DROP    WHD_GAT2  13.80  GEN==49.00(-25.30)
 0
  #
  #
  # (210)  B2 LINE OUTAGE (BREAKER-TO-BREAKER)
```

```
  #
 1  34356 34358  "1 "    0     # line from  KERCKHF1 115.00  BRKR to BRKR  KERCKHF2
115.00
 0
  #
  #
  # (211)  B2 LINE OUTAGE (BREAKER-TO-BREAKER)
  #
 1  34357 34361  "1 "    0     # line from  AIRWAYJ1 115.00   (3) to BRKR  AIRWAYS
115.00
 1  34357 34368  "1 "    0     # line from  AIRWAYJ1 115.00   (3) to (2)   LASPALMS
115.00
 1  34357 34410  "1 "    0     # line from  AIRWAYJ1 115.00   (3) to BRKR  MANCHSTR
115.00
 1  34368 34366  "1 "    0     # line from  LASPALMS 115.00   (2) to BRKR  SANGER
115.00
 4  34368     0  "1 "    0     # LOAD-DROP    LASPALMS 115.00  LOAD==13.90(11.89)
 0
  #
  #
  # (212)  B2 LINE OUTAGE (BREAKER-TO-BREAKER)
  #
 1  34358 34360  "1 "    0     # line from  KERCKHF2 115.00  BRKR to (3)   WWARD JT
115.00
 1  34360 34414  "1 "    0     # line from  WWARD JT 115.00   (3) to BRKR  WOODWARD
115.00
 1  34360 34363  "1 "    0     # line from  WWARD JT 115.00   (3) to (3)   CLOVISJ1
115.00
 1  34363 34362  "1 "    0     # line from  CLOVISJ1 115.00   (3) to BRKR  CLOVIS-1
115.00
 1  34363 34366  "1 "    0     # line from  CLOVISJ1 115.00   (3) to BRKR  SANGER
115.00
 4  34362     0  "1 "    0     # LOAD-DROP    CLOVIS-1 115.00  LOAD==51.01(10.36)
 4  34362     0  "2 "    0     # LOAD-DROP    CLOVIS-1 115.00  LOAD==50.20(10.20)
 1 34362  34364  "1 "    1      # Switches in Clovis SW 387 to transfer load
 4 34362      0  "**"    1      # Restore Load at Clovis 1
 0
  #
  #
  # (213)  B2 LINE OUTAGE (BREAKER-TO-BREAKER)
  #
 1  34359 34361  "1 "    0     # line from  AIRWAYJ2 115.00   (3) to BRKR  AIRWAYS
115.00
 1  34359 34408  "1 "    0     # line from  AIRWAYJ2 115.00   (3) to BRKR  BARTON
115.00
 1  34359 34366  "1 "    0     # line from  AIRWAYJ2 115.00   (3) to BRKR  SANGER
115.00
 0
  #
  #
  # (214)  B2 LINE OUTAGE (BREAKER-TO-BREAKER)
  #
 1  34364 34365  "1 "    0     # line from  CLOVIS-2 115.00  BRKR to (3)   CLOVISJ2
115.00
 1  34365 34358  "1 "    0     # line from  CLOVISJ2 115.00   (3) to BRKR  KERCKHF2
115.00
 1  34365 34366  "1 "    0     # line from  CLOVISJ2 115.00   (3) to BRKR  SANGER
115.00
 4  34364     0  "3 "    0     # LOAD-DROP    CLOVIS-2 115.00  LOAD==44.76(9.09)
 1 34362  34364  "1 "    1      # Switches in Clovis SW 387 to transfer load
 4 34364      0  "**"    1      # Restore Load at Clovis 2
 0
  #
  #
  # (215)  B2 LINE OUTAGE (BREAKER-TO-BREAKER)
  #
 1  34366 34370  "1 "    0     # line from  SANGER   115.00  BRKR to BRKR  MC CALL
115.00
 0
  #
```

```
  #
  # (216)  B2 LINE OUTAGE (BREAKER-TO-BREAKER)
  #
 1  34366 34370  "2 "    0     # line from  SANGER   115.00  BRKR to BRKR  MC CALL
115.00
 0
  #
  #
  # (217)  B2 LINE OUTAGE (BREAKER-TO-BREAKER)
  #
 1  34366 34370  "3 "    0     # line from  SANGER   115.00  BRKR to BRKR  MC CALL
115.00
 0
  #
  #
  # (218)  B2 LINE OUTAGE (BREAKER-TO-BREAKER)
  #
 1  34366 34372  "1 "    0     # line from  SANGER   115.00  BRKR to BRKR  MALAGA
115.00
 0
  #
  #
  # (219)  B2 LINE OUTAGE (BREAKER-TO-BREAKER)
  #
 1  34366 34389  "1 "    0     # line from  SANGER   115.00  BRKR to (3)   RAINBWTP
115.00
 1  34389 34388  "1 "    0     # line from  RAINBWTP 115.00   (3) to (1)   RAINBW
115.00
 1  34389 34394  "1 "    0     # line from  RAINBWTP 115.00   (3) to (3)   PIEDRA 1
115.00
 1  34394 34380  "1 "    0     # line from  PIEDRA 1 115.00   (3) to BRKR  REEDLEY
115.00
 1  34394 34400  "1 "    0     # line from  PIEDRA 1 115.00   (3) to BRKR  KNGSRVR1
115.00
 4  34388     0  "1 "    0     # LOAD-DROP    RAINBW   115.00  LOAD==16.20(3.29)
 0
  #
  #
  # (220)  B2 LINE OUTAGE (BREAKER-TO-BREAKER)
  #
 1  34366 34396  "1 "    0     # line from  SANGER   115.00  BRKR to (2)   PIEDRA 2
115.00
 1  34396 34398  "1 "    0     # line from  PIEDRA 2 115.00   (2) to (2)   BALCH
115.00
 2  34398 34624  "1 "    0     # TRAN from  BALCH    115.00   (2) to (1)   BALCH 1
13.20
 4  34624     0  "1 "    0     # LOAD-DROP    BALCH 1   13.20  LOAD==0.26(0.00)
 3  34624     0  "1 "    0     # GEN-DROP    BALCH 1   13.20  GEN==27.00(8.33)
 0
  #
  #
  # (221)  B2 LINE OUTAGE (BREAKER-TO-BREAKER)
  #
 1  34369 34370  "1 "    0     # line from  P0418    115.00   (5) to BRKR  MC CALL
115.00
 2  34369 34661  "1 "    0     # TRAN from  P0418    115.00   (5) to (1)   P0418GT1
13.80
 2  34369 34663  "1 "    0     # TRAN from  P0418    115.00   (5) to (1)   P0418GT2
13.80
 2  34369 34665  "1 "    0     # TRAN from  P0418    115.00   (5) to (1)   P0418GT3
13.80
 2  34369 34667  "1 "    0     # TRAN from  P0418    115.00   (5) to (1)   P0418GT4
13.80
 4  34661     0  "ss"    0     # LOAD-DROP    P0418GT1  13.80  LOAD==3.00(1.66)
 4  34663     0  "ss"    0     # LOAD-DROP    P0418GT2  13.80  LOAD==3.00(1.66)
 4  34665     0  "ss"    0     # LOAD-DROP    P0418GT3  13.80  LOAD==3.00(1.66)
 4  34667     0  "ss"    0     # LOAD-DROP    P0418GT4  13.80  LOAD==3.00(1.66)
 3  34661     0  "1 "    0     # GEN-DROP    P0418GT1  13.80  GEN==78.80(13.93)
 3  34663     0  "2 "    0     # GEN-DROP    P0418GT2  13.80  GEN==78.80(13.93)
 3  34665     0  "3 "    0     # GEN-DROP    P0418GT3  13.80  GEN==78.80(13.93)
```

```
 3  34667     0  "4 "    0     # GEN-DROP    P0418GT4  13.80  GEN==78.80(13.93)
 0
  #
  #
  # (222)  B2 LINE OUTAGE (BREAKER-TO-BREAKER)
  #
 1  34370 34382  "1 "    0     # line from  MC CALL  115.00  BRKR to BRKR  WAHTOKE
115.00
 0
  #
  #
  # (223)  B2 LINE OUTAGE (BREAKER-TO-BREAKER)
  #
 1  34370 34385  "1 "    0     # line from  MC CALL  115.00  BRKR to (3)   KINGS J1
115.00
 1  34385 34417  "1 "    0     # line from  KINGS J1 115.00   (3) to (2)   KINGS J2
115.00
 1  34385 34425  "1 "    0     # line from  KINGS J1 115.00   (3) to (3)   KCOGNJCT
115.00
 1  34417 34418  "1 "    0     # line from  KINGS J2 115.00   (2) to BRKR  KINGSBRG
115.00
 1  34425 34387  "1 "    0     # line from  KCOGNJCT 115.00   (3) to (1)   SUNMAID
115.00
 1  34425 34427  "1 "    0     # line from  KCOGNJCT 115.00   (3) to (2)   GRDNGLS2
115.00
 1  34427 34386  "1 "    0     # line from  GRDNGLS2 115.00   (2) to (2)   KNGSCOGN
115.00
 2  34386 34642  "1 "    0     # TRAN from  KNGSCOGN 115.00   (2) to BRKR  KINGSBUR
9.11
 4  34387     0  "1 "    0     # LOAD-DROP    SUNMAID  115.00  LOAD==3.40(3.28)
 3  34642     0  "1 "    0     # GEN-DROP    KINGSBUR   9.11  GEN==34.00(17.30)
 0
  #
  #
  # (224)  B2 LINE OUTAGE (BREAKER-TO-BREAKER)
  #
 1  34402 34404  "1 "    0     # line from  CAL AVE  115.00  BRKR to BRKR  WST FRSO
115.00
 0
  #
  #
  # (225)  B2 LINE OUTAGE (BREAKER-TO-BREAKER)
  #
 1  34372 34376  "1 "    0     # line from  MALAGA   115.00  BRKR to (1)   PPG
115.00
 4  34376     0  "1 "    0     # LOAD-DROP    PPG      115.00  LOAD==6.25(3.87)
 0
  #
  #
  # (226)  B2 LINE OUTAGE (BREAKER-TO-BREAKER)
  #
 1  34372 34379  "1 "    0     # line from  MALAGA   115.00  BRKR to (3)   MALAGATP
115.00
 1  34379 34373  "1 "    0     # line from  MALAGATP 115.00   (3) to (3)   SCWAXJCT
115.00
 1  34379 34375  "1 "    0     # line from  MALAGATP 115.00   (3) to (3)   ULTPWRJ
115.00
 1  34373 34371  "1 "    0     # line from  SCWAXJCT 115.00   (3) to (1)   SCWAX
115.00
 1  34373 34374  "1 "    0     # line from  SCWAXJCT 115.00   (3) to (1)   RANCHRS
115.00
 1  34375 34377  "1 "    0     # line from  ULTPWRJ  115.00   (3) to (2)   AIRPROD
115.00
 2  34375 34640  "1 "    0     # TRAN from  ULTPWRJ  115.00   (3) to (1)   ULTR.PWR
9.11
 1  34377 34370  "1 "    0     # line from  AIRPROD  115.00   (2) to BRKR  MC CALL
115.00
 4  34371     0  "1 "    0     # LOAD-DROP    SCWAX    115.00  LOAD==2.70(1.53)
 4  34374     0  "1 "    0     # LOAD-DROP    RANCHRS  115.00  LOAD==9.16(1.86)
 4  34377     0  "1 "    0     # LOAD-DROP    AIRPROD  115.00  LOAD==5.10(2.02)
```

```
 3  34640     0  "1 "    0     # GEN-DROP    ULTR.PWR   9.11  GEN==14.50(13.00)
 0
  #
  #
  # (227)  B2 LINE OUTAGE (BREAKER-TO-BREAKER)
  #
 1  34372 34381  "1 "    0     # line from  MALAGA   115.00  BRKR to (3)   KRCDP
115.00
 2  34381 34671  "1 "    0     # TRAN from  KRCDP    115.00   (3) to (1)   KRCDPCT1
13.80
 2  34381 34672  "1 "    0     # TRAN from  KRCDP    115.00   (3) to (1)   KRCDPCT2
13.80
 4  34671     0  "ss"    0     # LOAD-DROP    KRCDPCT1  13.80  LOAD==1.05(0.65)
 4  34672     0  "ss"    0     # LOAD-DROP    KRCDPCT2  13.80  LOAD==1.05(0.65)
 3  34671     0  "1 "    0     # GEN-DROP    KRCDPCT1  13.80  GEN==50.00(7.14)
 3  34672     0  "1 "    0     # GEN-DROP    KRCDPCT2  13.80  GEN==50.00(7.14)
 0
  #
  #
  # (228)  B2 LINE OUTAGE (BREAKER-TO-BREAKER)
  #
 1  34380 34384  "1 "    0     # line from  REEDLEY  115.00  BRKR to (2)   GERAWAN
115.00
 1  34384 34382  "1 "    0     # line from  GERAWAN  115.00   (2) to BRKR  WAHTOKE
115.00
 0
  #
  #
  # (229)  B2 LINE OUTAGE (BREAKER-TO-BREAKER)
  #
 1  34390 34370  "1 "    0     # line from  DANISHCM 115.00   (2) to BRKR  MC CALL
115.00
 1  34390 34402  "1 "    0     # line from  DANISHCM 115.00   (2) to BRKR  CAL AVE
115.00
 4  34390     0  "1 "    0     # LOAD-DROP    DANISHCM 115.00  LOAD==4.10(3.51)
 0
  #
  #
  # (230)  B2 LINE OUTAGE (BREAKER-TO-BREAKER)
  #
 1  34391 34392  "1 "    0     # line from  QUEBECTP 115.00   (2) to (1)   QUEBEC
115.00
 1  34391 34426  "1 "    0     # line from  QUEBECTP 115.00   (2) to BRKR  ALPAUGH
115.00
 4  34392     0  "1 "    0     # LOAD-DROP    QUEBEC   115.00  LOAD==11.20(7.82)
 0
  #
  #
  # (231)  B2 LINE OUTAGE (BREAKER-TO-BREAKER)
  #
 1  34404 34370  "1 "    0     # line from  WST FRSO 115.00  BRKR to BRKR  MC CALL
115.00
 0
  #
  #
  # (232)  B2 LINE OUTAGE (BREAKER-TO-BREAKER)
  #
 1  34408 34412  "1 "    0     # line from  BARTON   115.00  BRKR to BRKR  HERNDON
115.00
 0
  #
  #
  # (233)  B2 LINE OUTAGE (BREAKER-TO-BREAKER)
  #
 1  34409 34413  "1 "    0     # line from  PNDLJ2   115.00   (3) to BRKR  PNEDLE
115.00
 1  34409 34416  "1 "    0     # line from  PNDLJ2   115.00   (3) to BRKR  BULLARD
115.00
 1  34409 34412  "1 "    0     # line from  PNDLJ2   115.00   (3) to BRKR  HERNDON
115.00
```

```
 4  34413     0  "2 "    0     # LOAD-DROP    PNEDLE   115.00  LOAD==30.74(6.25)
 4  34413     0  "3 "    0     # LOAD-DROP    PNEDLE   115.00  LOAD==40.42(8.20)
 1  34411 34413  "1 "    1      # Switches in Pindale CB#12 to transfer load
 4  34413     0  "**"    1      # Restore load at Pindale
 0
  #
  #
  # (234)  B2 LINE OUTAGE (BREAKER-TO-BREAKER)
  #
 1  34410 34412  "1 "    0     # line from  MANCHSTR 115.00  BRKR to BRKR  HERNDON
115.00
 0
  #
  #
  # (235)  B2 LINE OUTAGE (BREAKER-TO-BREAKER)
  #
 1  34411 34416  "1 "    0     # line from  PNDLJ1   115.00   (2) to BRKR  BULLARD
115.00
 1  34411 34412  "1 "    0     # line from  PNDLJ1   115.00   (2) to BRKR  HERNDON
115.00
 0
  #
  #
  # (236)  B2 LINE OUTAGE (BREAKER-TO-BREAKER)
  #
 1  34412 34422  "1 "    0     # line from  HERNDON  115.00  BRKR to (2)   CHLDHOSP
115.00
 1  34422 34414  "1 "    0     # line from  CHLDHOSP 115.00   (2) to BRKR  WOODWARD
115.00
 4  34422     0  "1 "    0     # LOAD-DROP    CHLDHOSP 115.00  LOAD==3.50(1.60)
 0
  #
  #
  # (237)  B2 LINE OUTAGE (BREAKER-TO-BREAKER)
  #
 1  34418 34420  "1 "    0     # line from  KINGSBRG 115.00  BRKR to BRKR  CORCORAN
115.00
 0
  #
  #
  # (238)  B2 LINE OUTAGE (BREAKER-TO-BREAKER)
  #
 1  34418 34420  "2 "    0     # line from  KINGSBRG 115.00  BRKR to BRKR  CORCORAN
115.00
 0
  #
  #
  # (239)  B2 LINE OUTAGE (BREAKER-TO-BREAKER)
  #
 1  34418 34423  "1 "    0     # line from  KINGSBRG 115.00  BRKR to (3)   GAURD J1
115.00
 1  34423 34370  "1 "    0     # line from  GAURD J1 115.00   (3) to BRKR  MC CALL
115.00
 1  34423 34421  "1 "    0     # line from  GAURD J1 115.00   (3) to (2)   GAURD J2
115.00
 1  34421 34424  "1 "    0     # line from  GAURD J2 115.00   (2) to (1)   GRDN GLS
115.00
 4  34424     0  "1 "    0     # LOAD-DROP    GRDN GLS 115.00  LOAD==3.50(1.15)
 4  34418     0  "3 "    0      # Kingsburg Bank #3 will also be dropped on this outage
 0
  #
  #
  # (240)  B2 LINE OUTAGE (BREAKER-TO-BREAKER)
  #
 1  34418 34428  "1 "    0     # line from  KINGSBRG 115.00  BRKR to (2)   CONTADNA
115.00
 1  34428 34429  "1 "    0     # line from  CONTADNA 115.00   (2) to (4)   GWF_HEP
115.00
 1  34429 34521  "1 "    0     # line from  GWF_HEP  115.00   (4) to (2)   LEPRNOFD
115.00
```

```
 2  34429 34431  "1 "    0     # TRAN from  GWF_HEP  115.00   (4) to (1)   GWF_HEP1
13.80
 2  34429 34433  "1 "    0     # TRAN from  GWF_HEP  115.00   (4) to (1)   GWF_HEP2
13.80
 1  34521 34430  "1 "    0     # line from  LEPRNOFD 115.00   (2) to BRKR  HENRETTA
115.00
 4  34428     0  "1 "    0     # LOAD-DROP    CONTADNA 115.00  LOAD==7.60(5.70)
 4  34429     0  "ss"    0     # LOAD-DROP    GWF_HEP  115.00  LOAD==3.00(0.68)
 4  34521     0  "1 "    0     # LOAD-DROP    LEPRNOFD 115.00  LOAD==6.65(4.30)
 3  34431     0  "1 "    0     # GEN-DROP    GWF_HEP1  13.80  GEN==50.00(21.27)
 3  34433     0  "1 "    0     # GEN-DROP    GWF_HEP2  13.80  GEN==50.00(21.27)
 0
  #
  #
  # (241)  B2 LINE OUTAGE (BREAKER-TO-BREAKER)
  #
 1  34426 34700  "1 "    0     # line from  ALPAUGH  115.00  BRKR to BRKR  SMYRNA
115.00
 0
  #
  #
  # (242)  B2 LINE OUTAGE (BREAKER-TO-BREAKER)
  #
 1  34452 34260  "1 "    0     # line from  WISHON    70.00  BRKR to (3)   SJNO2
70.00
 1  34260 34259  "1 "    0     # line from  SJNO2     70.00   (3) to (3)   NRTHFORK
70.00
 2  34260 34631  "1 "    0     # TRAN from  SJNO2     70.00   (3) to (1)   SJ2GEN
9.11
 1  34259 34261  "1 "    0     # line from  NRTHFORK  70.00   (3) to (2)   SJNO3
70.00
 2  34259 34340  "1 "    0     # TRAN from  NRTHFORK  70.00   (3) to (1)   N.FORK E
9.11
 2  34261 34633  "1 "    0     # TRAN from  SJNO3     70.00   (2) to (1)   SJ3GEN
9.11
 4  34260     0  "2 "    0     # LOAD-DROP    SJNO2     70.00  LOAD==3.22(0.66)
 4  34261     0  "2 "    0     # LOAD-DROP    SJNO3     70.00  LOAD==6.95(1.41)
 4  34340     0  "1 "    0     # LOAD-DROP    N.FORK E   9.11  LOAD==1.21(0.25)
 3  34631     0  "1 "    0     # GEN-DROP    SJ2GEN     9.11  GEN==2.00(0.00)
 3  34633     0  "1 "    0     # GEN-DROP    SJ3GEN     9.11  GEN==1.00(0.00)
 0
  #
  #
  # (243)  B2 LINE OUTAGE (BREAKER-TO-BREAKER)
  #
 1  34452 34491  "1 "    0     # line from  WISHON    70.00  BRKR to (3)   AUBRYTP
70.00
 1  34491 34464  "1 "    0     # line from  AUBRYTP   70.00   (3) to BRKR  COPPRMNE
70.00
 1  34491 34493  "1 "    0     # line from  AUBRYTP   70.00   (3) to (1)   AUBERRY
70.00
 4  34493     0  "1 "    0     # LOAD-DROP    AUBERRY   70.00  LOAD==6.07(1.23)
 4  34493     0  "2 "    0     # LOAD-DROP    AUBERRY   70.00  LOAD==7.15(1.45)
 0
  #
  #
  # (244)  B2 LINE OUTAGE (BREAKER-TO-BREAKER)
  #
 1  34456 34458  "1 "    0     # line from  HRDWK TP  70.00   (3) to (1)   HARDWICK
70.00
 1  34456 34522  "1 "    0     # line from  HRDWK TP  70.00   (3) to (1)   HNFRD SW
70.00
 1  34456 34576  "1 "    0     # line from  HRDWK TP  70.00   (3) to BRKR  KNGLOBUS
70.00
 4  34458     0  "1 "    0     # LOAD-DROP    HARDWICK  70.00  LOAD==12.86(2.61)
 0
  #
  #
  # (245)  B2 LINE OUTAGE (BREAKER-TO-BREAKER)
  #
```

```
 1  34460 34462  "1 "    0     # line from  GUERNSEY  70.00  BRKR to (3)   GUR3TPT
70.00
 1  34462 34542  "1 "    0     # line from  GUR3TPT   70.00   (3) to (2)   JCBSCRNR
70.00
 1  34462 34554  "1 "    0     # line from  GUR3TPT   70.00   (3) to BRKR  AMSTG SW
70.00
 1  34542 34540  "1 "    0     # line from  JCBSCRNR  70.00   (2) to BRKR  HENRITTA
70.00
 4  34460     0  "1 "    0     # LOAD-DROP    GUERNSEY  70.00  LOAD==10.51(2.13)
 4  34542     0  "1 "    0     # LOAD-DROP    JCBSCRNR  70.00  LOAD==12.05(2.45)
 4  34542     0  "2 "    0     # LOAD-DROP    JCBSCRNR  70.00  LOAD==9.54(1.94)
 0
  #
  #
  # (246)  B2 LINE OUTAGE (BREAKER-TO-BREAKER)
  #
 1  34464 34478  "1 "    0     # line from  COPPRMNE  70.00  BRKR to BRKR  TVY VLLY
70.00
 0
  #
  #
  # (247)  B2 LINE OUTAGE (BREAKER-TO-BREAKER)
  #
 1  34464 34638  "1 "    0     # line from  COPPRMNE  70.00  BRKR to (2)   FRANTDM
70.00
 2  34638 34636  "1 "    0     # TRAN from  FRANTDM   70.00   (2) to (1)   FRIANTDM
6.60
 3  34636     0  "2 "    0     # GEN-DROP    FRIANTDM   6.60  GEN==14.70(5.86)
 3  34636     0  "3 "    0     # GEN-DROP    FRIANTDM   6.60  GEN==7.80(3.11)
 3  34636     0  "4 "    0     # GEN-DROP    FRIANTDM   6.60  GEN==2.30(0.92)
 0
  #
  #
  # (248)  B2 LINE OUTAGE (BREAKER-TO-BREAKER)
  #
 1  34466 34482  "1 "    0     # line from  BIOLA     70.00  BRKR to BRKR  OLDKERN
70.00
 4  34466     0  "1 "    0     # LOAD-DROP    BIOLA     70.00  LOAD==21.80(4.43)
 0
  #
  #
  # (249)  B2 LINE OUTAGE (BREAKER-TO-BREAKER)
  #
 1  34468 34482  "1 "    0     # line from  BOWLES    70.00   (1) to BRKR  OLDKERN
70.00
 4  34468     0  "1 "    0     # LOAD-DROP    BOWLES    70.00  LOAD==18.29(3.72)
 0
  #
  #
  # (250)  B2 LINE OUTAGE (BREAKER-TO-BREAKER)
  #
 1  34469 34271  "1 "    0     # line from  GFFNJCT   70.00   (3) to (3)   WSTLDJCT
70.00
 1  34469 34470  "1 "    0     # line from  GFFNJCT   70.00   (3) to (1)   GIFFEN
70.00
 1  34469 34471  "1 "    0     # line from  GFFNJCT   70.00   (3) to (3)   SNJQJCT
70.00
 1  34271 34172  "1 "    0     # line from  WSTLDJCT  70.00   (3) to (2)   WESTLAND
70.00
 1  34271 34269  "1 "    0     # line from  WSTLDJCT  70.00   (3) to (3)   BIOMSJCT
70.00
 1  34471 34472  "1 "    0     # line from  SNJQJCT   70.00   (3) to BRKR  SAN JOQN
70.00
 1  34471 34474  "1 "    0     # line from  SNJQJCT   70.00   (3) to BRKR  HELM
70.00
 1  34172 34170  "1 "    0     # line from  WESTLAND  70.00   (2) to (1)   WESIX
70.00
 1  34269 34268  "1 "    0     # line from  BIOMSJCT  70.00   (3) to BRKR  MENDOTA
70.00
```

```
 1  34269 34270  "1 "    0     # line from  BIOMSJCT  70.00   (3) to (2)   BIOMASS
70.00
 2  34270 34334  "1 "    0     # TRAN from  BIOMASS   70.00   (2) to (1)   BIO PWR
9.11
 4  34470     0  "1 "    0     # LOAD-DROP    GIFFEN    70.00  LOAD==9.59(1.95)
 4  34172     0  "1 "    0     # LOAD-DROP    WESTLAND  70.00  LOAD==3.20(0.76)
 4  34170     0  "1 "    0     # LOAD-DROP    WESIX     70.00  LOAD==1.60(0.38)
 3  34334     0  "1 "    0     # GEN-DROP    BIO PWR    9.11  GEN==21.80(10.99)
 1  34472 34473  "1 "    1      # Switches in San Joaquin CB22 to transfer load
 4  34472     0  "**"    1      # Restore Load at San Joaquin
 0
  #
  #
  # (251)  B2 LINE OUTAGE (BREAKER-TO-BREAKER)
  #
 1  34473 34472  "1 "    0     # line from  SNJQTP    70.00   (2) to BRKR  SAN JOQN
70.00
 1  34473 34475  "1 "    0     # line from  SNJQTP    70.00   (2) to (3)   AGRCJCT
70.00
 1  34475 34476  "1 "    0     # line from  AGRCJCT   70.00   (3) to (2)   AGRICO
70.00
 1  34475 34484  "1 "    0     # line from  AGRCJCT   70.00   (3) to BRKR  KERMAN
70.00
 2  34476 34608  "1 "    0     # TRAN from  AGRICO    70.00   (2) to (1)   AGRICO
13.80
 4  34484     0  "1 "    0     # LOAD-DROP    KERMAN    70.00  LOAD==19.44(3.95)
 4  34484     0  "2 "    0     # LOAD-DROP    KERMAN    70.00  LOAD==11.78(2.39)
 3  34608     0  "2 "    0     # GEN-DROP    AGRICO    13.80  GEN==7.00(1.08)
 3  34608     0  "3 "    0     # GEN-DROP    AGRICO    13.80  GEN==18.10(2.80)
 3  34608     0  "4 "    0     # GEN-DROP    AGRICO    13.80  GEN==26.00(4.02)
 0
  #
  #
  # (252)  B2 LINE OUTAGE (BREAKER-TO-BREAKER)
  #
 1  34474 34556  "1 "    0     # line from  HELM      70.00  BRKR to BRKR  STRD JCT
70.00
 0
  #
  #
  # (253)  B2 LINE OUTAGE (BREAKER-TO-BREAKER)
  #
 1  34478 34492  "1 "    0     # line from  TVY VLLY  70.00  BRKR to BRKR  REEDLEY
70.00
 0
  #
  #
  # (254)  B2 LINE OUTAGE (BREAKER-TO-BREAKER)
  #
 1  34480 34481  "1 "    0     # line from  KEARNEY   70.00  BRKR to (3)   FRWWTAP
70.00
 1  34481 34483  "1 "    0     # line from  FRWWTAP   70.00   (3) to (3)   FRESNOWW
70.00
 1  34481 34483  "2 "    0     # line from  FRWWTAP   70.00   (3) to (3)   FRESNOWW
70.00
 2  34483 34485  "1 "    0     # TRAN from  FRESNOWW  70.00   (3) to (1)   FRESNOWW
12.47
 4  34485     0  "1 "    0     # LOAD-DROP    FRESNOWW  12.47  LOAD==7.91(0.00)
 3  34485     0  "1 "    0     # GEN-DROP    FRESNOWW  12.47  GEN==9.00(0.00)
 0
  #
  #
  # (255)  B2 LINE OUTAGE (BREAKER-TO-BREAKER)
  #
 1  34480 34482  "1 "    0     # line from  KEARNEY   70.00  BRKR to (3)   OLDKERN
70.00
 1  34482 34466  "1 "    0     # line from  OLDKERN   70.00  BRKR to BRKR  BIOLA
70.00
 1  34482 34468  "1 "    0     # line from  OLDKERN   70.00  BRKR to (1)   BOWLES
70.00
```

```
 4  34482     0  "1 "    0     # LOAD-DROP    OLDKERN   70.00  LOAD==18.75(3.81)
 4  34482     0  "3 "    0     # LOAD-DROP    OLDKERN   70.00  LOAD==7.57(1.54)
 4  34466     0  "1 "    0     # LOAD-DROP    BIOLA     70.00  LOAD==21.80(4.43)
 4  34468     0  "1 "    0     # LOAD-DROP    BOWLES    70.00  LOAD==18.29(3.72)
 0
  #
  #
  # (256)  B2 LINE OUTAGE (BREAKER-TO-BREAKER)
  #
 1  34480 34512  "1 "    0     # line from  KEARNEY   70.00  BRKR to BRKR  CARUTHRS
70.00
 4  34512     0  "1 "    0     # LOAD-DROP    CARUTHRS  70.00  LOAD==19.63(3.98)
 0
  #
  #
  # (257)  B2 LINE OUTAGE (BREAKER-TO-BREAKER)
  #
 1  34487 34489  "1 "    0     # line from  SNGRJCT   70.00   (3) to (2)   SNGRCOGN
70.00
 1  34487 34490  "1 "    0     # line from  SNGRJCT   70.00   (3) to (2)   PARLIER
70.00
 1  34487 34488  "1 "    0     # line from  SNGRJCT   70.00   (3) to BRKR  SANGER
70.00
 2  34489 34646  "1 "    0     # TRAN from  SNGRCOGN  70.00   (2) to (1)   SANGERCO
9.11
 1  34490 34492  "1 "    0     # line from  PARLIER   70.00   (2) to BRKR  REEDLEY
70.00
 4  34490     0  "1 "    0     # LOAD-DROP    PARLIER   70.00  LOAD==20.24(4.11)
 3  34646     0  "1 "    0     # GEN-DROP    SANGERCO   9.11  GEN==37.50(1.40)
 0
  #
  #
  # (258)  B2 LINE OUTAGE (BREAKER-TO-BREAKER)
  #
 1  34488 34366  "1 "    0     # line from  SANGER    70.00  BRKR to BRKR  SANGER
115.00
 0
  #
  #
  # (259)  B2 LINE OUTAGE (BREAKER-TO-BREAKER)
  #
 1  34492 34497  "1 "    0     # line from  REEDLEY   70.00  BRKR to (3)   DNUBAJCT
70.00
 1  34497 34499  "1 "    0     # line from  DNUBAJCT  70.00   (3) to (2)   DNUBAEGY
70.00
 1  34497 34500  "1 "    0     # line from  DNUBAJCT  70.00   (3) to BRKR  DINUBA
70.00
 2  34499 34648  "1 "    0     # TRAN from  DNUBAEGY  70.00   (2) to (1)   DINUBA E
13.80
 4  34648     0  "ss"    0     # LOAD-DROP    DINUBA E  13.80  LOAD==0.30(0.26)
 3  34648     0  "1 "    0     # GEN-DROP    DINUBA E  13.80  GEN==12.00(7.00)
 0
  #
  #
  # (260)  B2 LINE OUTAGE (BREAKER-TO-BREAKER)
  #
 1  34492 34526  "1 "    0     # line from  REEDLEY   70.00  BRKR to (3)   ORSI JCT
70.00
 1  34526 34495  "1 "    0     # line from  ORSI JCT  70.00   (3) to (2)   SANDCRK
70.00
 1  34526 34502  "1 "    0     # line from  ORSI JCT  70.00   (3) to BRKR  OROSI
70.00
 1  34495 34494  "1 "    0     # line from  SANDCRK   70.00   (2) to (1)   DUNLAP
70.00
 4  34495     0  "1 "    0     # LOAD-DROP    SANDCRK   70.00  LOAD==3.14(0.64)
 4  34494     0  "1 "    0     # LOAD-DROP    DUNLAP    70.00  LOAD==4.46(0.91)
 0
  #
  #
  # (261)  B2 LINE OUTAGE (BREAKER-TO-BREAKER)
```

```
  #
 1  34496 34498  "1 "    0     # line from  STCRRL J  70.00   (3) to (1)   STONCRRL
70.00
 1  34496 34500  "1 "    0     # line from  STCRRL J  70.00   (3) to BRKR  DINUBA
70.00
 1  34496 34502  "1 "    0     # line from  STCRRL J  70.00   (3) to (2)   OROSI
70.00
 1  34502 34526  "1 "    0     # line from  OROSI     70.00  BRKR to (1)   ORSI JCT
70.00
 4  34498     0  "2 "    0     # LOAD-DROP    STONCRRL  70.00  LOAD==3.37(0.68)
 4  34498     0  "3 "    0     # LOAD-DROP    STONCRRL  70.00  LOAD==2.68(0.54)
 4  34502     0  "1 "    0     # LOAD-DROP    OROSI     70.00  LOAD==8.38(1.70)
 4  34502     0  "2 "    0     # LOAD-DROP    OROSI     70.00  LOAD==7.43(1.51)
 0
  #
  #
  # (262)  B2 LINE OUTAGE (BREAKER-TO-BREAKER)
  #
 1  34508 34510  "1 "    0     # line from  CAMDEN    70.00   (2) to (1)   CMDN JCT
70.00
 1  34508 34576  "1 "    0     # line from  CAMDEN    70.00   (2) to BRKR  KNGLOBUS
70.00
 4  34508     0  "1 "    0     # LOAD-DROP    CAMDEN    70.00  LOAD==6.87(1.40)
 4  34508     0  "2 "    0     # LOAD-DROP    CAMDEN    70.00  LOAD==10.90(2.22)
 0
  #
  #
  # (263)  B2 LINE OUTAGE (BREAKER-TO-BREAKER)
  #
 1  34514 34540  "1 "    0     # line from  MUSLSLGH  70.00   (1) to BRKR  HENRITTA
70.00
 4  34514     0  "1 "    0     # LOAD-DROP    MUSLSLGH  70.00  LOAD==22.00(13.60)
 0
  #
  #
  # (264)  B2 LINE OUTAGE (BREAKER-TO-BREAKER)
  #
 1  34516 34520  "1 "    0     # line from  LEPRINO   70.00   (1) to (4)   LPRNO TP
70.00
 1  34520 34518  "1 "    0     # line from  LPRNO TP  70.00   (4) to BRKR  LEMOORE
70.00
 1  34520 34524  "1 "    0     # line from  LPRNO TP  70.00   (4) to (1)   CANDLEWK
70.00
 1  34520 34540  "1 "    0     # line from  LPRNO TP  70.00   (4) to BRKR  HENRITTA
70.00
 4  34516     0  "1 "    0     # LOAD-DROP    LEPRINO   70.00  LOAD==16.10(9.12)
 4  34518     0  "1 "    0     # LOAD-DROP    LEMOORE   70.00  LOAD==18.86(3.83)
 4  34518     0  "2 "    0     # LOAD-DROP    LEMOORE   70.00  LOAD==32.81(6.66)
 0
  #
  #
  # (265)  B2 LINE OUTAGE (BREAKER-TO-BREAKER)
  #
 1  34528 34530  "1 "    0     # line from  CORCORAN  70.00  BRKR to (3)   BSWLL TP
70.00
 1  34530 34531  "1 "    0     # line from  BSWLL TP  70.00   (3) to (2)   JGBSWLL
70.00
 1  34530 34538  "1 "    0     # line from  BSWLL TP  70.00   (3) to (1)   BOSWELL
70.00
 1  34531 34536  "1 "    0     # line from  JGBSWLL   70.00   (2) to (1)   ANGIOLA
70.00
 4  34538     0  "1 "    0     # LOAD-DROP    BOSWELL   70.00  LOAD==2.37(1.53)
 4  34536     0  "1 "    0     # LOAD-DROP    ANGIOLA   70.00  LOAD==7.24(1.47)
 0
  #
  #
  # (266)  B2 LINE OUTAGE (BREAKER-TO-BREAKER)
  #
 1  34532 34554  "1 "    0     # line from  ARMSTRNG  70.00   (1) to (4)   AMSTG SW
70.00
```

```
 1  34554 34462  "1 "    0     # line from  AMSTG SW  70.00  BRKR to (1)   GUR3TPT
70.00
 1  34554 34534  "1 "    0     # line from  AMSTG SW  70.00   (4) to (1)   RESERVE
70.00
 2  34554 34650  "1 "    0     # TRAN from  AMSTG SW  70.00  BRKR to (1)   GWF-PWR.
13.80
 4  34534     0  "1 "    0     # LOAD-DROP    RESERVE   70.00  LOAD==2.03(0.41)
 3  34650     0  "1 "    0     # GEN-DROP    GWF-PWR.  13.80  GEN==23.00(12.00)
 0
  #
  #
  # (267)  B2 LINE OUTAGE (BREAKER-TO-BREAKER)
  #
 1  34537 34540  "1 "    0     # line from  GWF_HENR  70.00   (5) to BRKR  HENRITTA
70.00
 2  34537 34539  "1 "    0     # TRAN from  GWF_HENR  70.00   (5) to (1)   GWF_GT1
13.80
 2  34537 34541  "1 "    0     # TRAN from  GWF_HENR  70.00   (5) to (1)   GWF_GT2
13.80
 2  34537 34691  "1 "    0     # TRAN from  GWF_HENR  70.00   (5) to (1)   Q272_ST1
13.80
 2  34537 34692  "1 "    0     # TRAN from  GWF_HENR  70.00   (5) to (1)   Q272SLST
13.80
 4  34539     0  "ss"    0     # LOAD-DROP    GWF_GT1   13.80  LOAD==1.10(0.25)
 4  34541     0  "ss"    0     # LOAD-DROP    GWF_GT2   13.80  LOAD==1.10(0.25)
 4  34691     0  "ss"    0     # LOAD-DROP    Q272_ST1  13.80  LOAD==2.00(1.11)
 4  34692     0  "ss"    0     # LOAD-DROP    Q272SLST  13.80  LOAD==14.00(7.75)
 3  34539     0  "1 "    0     # GEN-DROP    GWF_GT1   13.80  GEN==50.00(4.51)
 3  34541     0  "1 "    0     # GEN-DROP    GWF_GT2   13.80  GEN==50.00(4.51)
 3  34691     0  "1 "    0     # GEN-DROP    Q272_ST1  13.80  GEN==27.00(1.87)
 3  34692     0  "1 "    0     # GEN-DROP    Q272SLST  13.80  GEN==139.00(35.74)
 0
  #
  #
  # (268)  B2 LINE OUTAGE (BREAKER-TO-BREAKER)
  #
 1  34544 34550  "1 "    0     # line from  TLRE LKE  70.00  BRKR to (2)   CHEVPLIN
70.00
 1  34550 34546  "1 "    0     # line from  CHEVPLIN  70.00   (2) to (2)   AVENAL
70.00
 1  34546 34548  "1 "    0     # line from  AVENAL    70.00   (2) to BRKR  KETTLEMN
70.00
 4  34544     0  "1 "    0     # LOAD-DROP    TLRE LKE  70.00  LOAD==6.79(1.38)
 4  34550     0  "1 "    0     # LOAD-DROP    CHEVPLIN  70.00  LOAD==1.01(0.73)
 4  34546     0  "1 "    0     # LOAD-DROP    AVENAL    70.00  LOAD==7.72(1.57)
 0
  #
  #
  # (269)  B2 LINE OUTAGE (BREAKER-TO-BREAKER)
  #
 1  34548 34552  "1 "    0     # line from  KETTLEMN  70.00   (2) to BRKR  GATES
70.00
 1  34548 34546  "1 "    0     # line from  KETTLEMN  70.00  BRKR to (1)   AVENAL
70.00
 4  34548     0  "1 "    0     # LOAD-DROP    KETTLEMN  70.00  LOAD==6.32(1.29)
 0
  #
  #
  # (270)  B2 LINE OUTAGE (BREAKER-TO-BREAKER)
  #
 1  34552 34558  "1 "    0     # line from  GATES     70.00  BRKR to BRKR  HURON
70.00
 0
  #
  #
  # (271)  B2 LINE OUTAGE (BREAKER-TO-BREAKER)
  #
 1  34552 34558  "2 "    0     # line from  GATES     70.00  BRKR to BRKR  HURON
70.00
 0
```

```
  #
  #
  # (272)  B2 LINE OUTAGE (BREAKER-TO-BREAKER)
  #
 1  34552 34578  "1 "    0     # line from  GATES     70.00  BRKR to (2)   JACALITO
70.00
 1  34578 34574  "1 "    0     # line from  JACALITO  70.00   (2) to BRKR  COLNGA 1
70.00
 4  34578     0  "1 "    0     # LOAD-DROP    JACALITO  70.00  LOAD==4.45(2.99)
 0
  #
  #
  # (273)  B2 LINE OUTAGE (BREAKER-TO-BREAKER)
  #
 1  34556 34562  "1 "    0     # line from  STRD JCT  70.00  BRKR to BRKR  SCHLNDLR
70.00
 0
  #
  #
  # (274)  B2 LINE OUTAGE (BREAKER-TO-BREAKER)
  #
 1  34556 34564  "1 "    0     # line from  STRD JCT  70.00   (3) to BRKR  STROUD
70.00
 1  34556 34474  "1 "    0     # line from  STRD JCT  70.00  BRKR to BRKR  HELM
70.00
 1  34556 34562  "1 "    0     # line from  STRD JCT  70.00  BRKR to BRKR  SCHLNDLR
70.00
 4  34564     0  "1 "    0     # LOAD-DROP    STROUD    70.00  LOAD==13.09(2.66)
 0
  #
  #
  # (275)  B2 LINE OUTAGE (BREAKER-TO-BREAKER)
  #
 1  34558 34560  "1 "    0     # line from  HURON     70.00  BRKR to (2)   CALFLAX
70.00
 1  34560 34562  "1 "    0     # line from  CALFLAX   70.00   (2) to BRKR  SCHLNDLR
70.00
 4  34560     0  "1 "    0     # LOAD-DROP    CALFLAX   70.00  LOAD==6.53(1.33)
 1  34552 34558  "2 "    0      # Must include Gates - Huron #2 in this outage
 0
  #
  #
  # (276)  B2 LINE OUTAGE (BREAKER-TO-BREAKER)
  #
 1  34562 34566  "1 "    0     # line from  SCHLNDLR  70.00  BRKR to (2)   PLSNTVLY
70.00
 1  34566 34570  "1 "    0     # line from  PLSNTVLY  70.00   (2) to BRKR  COLNGA 2
70.00
 4  34566     0  "1 "    0     # LOAD-DROP    PLSNTVLY  70.00  LOAD==10.00(2.51)
 0
  #
  #
  # (277)  B2 LINE OUTAGE (BREAKER-TO-BREAKER)
  #
 1  34570 34572  "1 "    0     # line from  COLNGA 2  70.00  BRKR to (3)   TORNADO
70.00
 1  34572 34574  "1 "    0     # line from  TORNADO   70.00   (3) to BRKR  COLNGA 1
70.00
 2  34572 34654  "1 "    0     # TRAN from  TORNADO   70.00   (3) to (1)   COLNGAGN
9.11
 4  34572     0  "1 "    0     # LOAD-DROP    TORNADO   70.00  LOAD==1.74(1.44)
 3  34654     0  "1 "    0     # GEN-DROP    COLNGAGN   9.11  GEN==34.00(5.40)
 2  34570 34652  "1 "    0      # Must include Colinga2 - Chv.coal in this outage -
modeled on bus,
 3  34652     0  "**"    0      # Drops units on Derrick Sub
 4  34652     0  "**"    0      # Drops load at Derrick Sub
 0
  #
  #
  # (278)  B2 LINE OUTAGE (BREAKER-TO-BREAKER)
```

```
  #
 1  36354 34574  "1 "    0     # line from  SAN MIGL  70.00  BRKR to BRKR  COLNGA 1
70.00
 0
  #
  #
  # (279)  B3 TRANSFORMER OUTAGE (BREAKER-TO-BREAKER)
  #
#      **** 3-WINDING TRANSFORMER  30835  (30882)  34412  34630 :
 2  30835 34412  "1 "    0     # TRAN from  HERNDON  230.00  BRKR to (1)   HERNDON
115.00
 0
  #
  #
  # (280)  B3 TRANSFORMER OUTAGE (BREAKER-TO-BREAKER)
  #
#      **** 3-WINDING TRANSFORMER  30835  (30883)  34412  34632 :
 2  30835 34412  "2 "    0     # TRAN from  HERNDON  230.00  BRKR to (1)   HERNDON
115.00
 0
  #
  #
  # (281)  B3 TRANSFORMER OUTAGE (BREAKER-TO-BREAKER)
  #
#      **** 3-WINDING TRANSFORMER  30875  (30876)  34370  34618 :
 2  30875 34370  "1 "    0     # TRAN from  MC CALL  230.00  BRKR to (1)   MC CALL
115.00
 0
  #
  #
  # (282)  B3 TRANSFORMER OUTAGE (BREAKER-TO-BREAKER)
  #
#      **** 3-WINDING TRANSFORMER  30875  (30877)  34370  34620 :
 2  30875 34370  "2 "    0     # TRAN from  MC CALL  230.00  BRKR to (1)   MC CALL
115.00
 0
  #
  #
  # (283)  B3 TRANSFORMER OUTAGE (BREAKER-TO-BREAKER)
  #
#      **** 3-WINDING TRANSFORMER  30875  (30878)  34370  34621 :
 2  30875 34370  "3 "    0     # TRAN from  MC CALL  230.00  BRKR to (1)   MC CALL
115.00
 0
  #
  #
  # (284)  B3 TRANSFORMER OUTAGE (BREAKER-TO-BREAKER)
  #
 2  30881 34430  "3 "    0     # TRAN from  HENRIETA 230.00  BRKR to BRKR  HENRETTA
115.00
 0
  #
  #
  # (285)  B3 TRANSFORMER OUTAGE (BREAKER-TO-BREAKER)
  #
#      **** 3-WINDING TRANSFORMER  30900  (34607)  30055  34606 :
 2  30900 30055  "11"    0     # TRAN from  GATES    230.00  BRKR to (1)   GATES
500.00
 0
  #
  #
  # (286)  B3 TRANSFORMER OUTAGE (BREAKER-TO-BREAKER)
  #
 2  30900 30901  "1 "    0     # TRAN from  GATES    230.00  BRKR to (3)   GATES 1M
230.00
 2  30901 34378  "1 "    0     # TRAN from  GATES 1M 230.00   (3) to BRKR  GATES
115.00
 2  30901 34622  "1 "    0     # TRAN from  GATES 1M 230.00   (3) to (1)   GATES 1T
13.20
 4 34378      0  "3 "    0      # Drop Gates Bank #3
```

```
 0
  #
  #
  # (287)  B3 TRANSFORMER OUTAGE (BREAKER-TO-BREAKER)
  #
 2  34356 34344  "1 "    0     # TRAN from  KERCKHF1 115.00  BRKR to (1)   KERCKHOF
6.60
 4  34344     0  "4 "    0     # LOAD-DROP    KERCKHOF   6.60  LOAD==3.24(0.66)
 3  34344     0  "2 "    0     # GEN-DROP    KERCKHOF   6.60  GEN==6.80(-4.00)
 0
  #
  #
  # (288)  B3 TRANSFORMER OUTAGE (BREAKER-TO-BREAKER)
  #
 2  34366 34590  "1 "    0     # TRAN from  SANGER   115.00  BRKR to (2)   SANGR3T
115.00
 2  34590 34488  "1 "    0     # TRAN from  SANGR3T  115.00   (2) to BRKR  SANGER
70.00
 4  34590     0  "3 "    0     # LOAD-DROP    SANGR3T  115.00  LOAD==20.55(4.17)
 0
  #
  #
  # (289)  B3 TRANSFORMER OUTAGE (BREAKER-TO-BREAKER)
  #
 2  34418 34576  "2 "    0     # TRAN from  KINGSBRG 115.00  BRKR to BRKR  KNGLOBUS
70.00
 0
  #
  #
  # (290)  B3 TRANSFORMER OUTAGE (BREAKER-TO-BREAKER)
  #
 2  34474 30873  "1 "    0     # TRAN from  HELM      70.00  BRKR to BRKR  HELM
230.00
 0
  #
  #
  # (291)  B3 TRANSFORMER OUTAGE (BREAKER-TO-BREAKER)
  #
 2  34480 30830  "2 "    0     # TRAN from  KEARNEY   70.00  BRKR to BRKR  KEARNEY
230.00
 0
  #
  #
  # (292)  B3 TRANSFORMER OUTAGE (BREAKER-TO-BREAKER)
  #
 2  34492 34380  "1 "    0     # TRAN from  REEDLEY   70.00  BRKR to BRKR  REEDLEY
115.00
 0
  #
  #
  # (293)  B3 TRANSFORMER OUTAGE (BREAKER-TO-BREAKER)
  #
 2  34492 34380  "2 "    0     # TRAN from  REEDLEY   70.00  BRKR to BRKR  REEDLEY
115.00
 0
  #
  #
  # (294)  B3 TRANSFORMER OUTAGE (BREAKER-TO-BREAKER)
  #
 2  34528 34420  "2 "    0     # TRAN from  CORCORAN  70.00  BRKR to BRKR  CORCORAN
115.00
 1  34420 34391  "1 "    0      # Must include Corcoran - Quebec   (Corcoran CB 142) in
this outage
 1  34420 34418  "2 "    0      # Must include Corcoran - Kingburg (Corcoran CB 162) in
this outage
 1  34528 34460  "1 "    0      # Must include Corcorna - Guernsey (Corcoran CB  42) in
this outage
 0
  #
  #
```

```
  # (295)  B3 TRANSFORMER OUTAGE (BREAKER-TO-BREAKER)
  #
 2  34540 30881  "2 "    0     # TRAN from  HENRITTA  70.00  BRKR to BRKR  HENRIETA
230.00
 0
  #
  #
  # (296)  B3 TRANSFORMER OUTAGE (BREAKER-TO-BREAKER)
  #
 2  34540 30881  "4 "    0     # TRAN from  HENRITTA  70.00  BRKR to BRKR  HENRIETA
230.00
 0
  #
  #
  # (297)  B3 TRANSFORMER OUTAGE (BREAKER-TO-BREAKER)
  #
 2  34552 34378  "2 "    0     # TRAN from  GATES     70.00  BRKR to BRKR  GATES
115.00
 0
  #
  #
  # (298)  B3 TRANSFORMER OUTAGE (BREAKER-TO-BREAKER)
  #
 2  34562 34354  "1 "    0     # TRAN from  SCHLNDLR  70.00  BRKR to (3)   SCHINDLR
115.00
 1  34354 34149  "1 "    0     # line from  SCHINDLR 115.00  BRKR to (1)   CHENYT
115.00
 1  34354 34432  "1 "    0     # line from  SCHINDLR 115.00  BRKR to (1)   WESTLNDS
115.00
 4  34354     0  "1 "    0     # LOAD-DROP    SCHINDLR 115.00  LOAD==11.22(2.28)
 0
  #
  #
  # (299)  B3 TRANSFORMER OUTAGE (BREAKER-TO-BREAKER)
  #
 2  34652 34570  "1 "    0     # TRAN from  CHV.COAL   9.11   (1) to BRKR  COLNGA 2
70.00
 4  34652     0  "S1"    0     # LOAD-DROP    CHV.COAL   9.11  LOAD==5.12(2.48)
 4  34652     0  "SG"    0     # LOAD-DROP    CHV.COAL   9.11  LOAD==0.94(0.46)
 3  34652     0  "1 "    0     # GEN-DROP    CHV.COAL   9.11  GEN==2.50(8.30)
 3  34652     0  "2 "    0     # GEN-DROP    CHV.COAL   9.11  GEN==8.00(4.00)
 0
  #
  #
  # (300)  B3 TRANSFORMER OUTAGE (BREAKER-TO-BREAKER)
  #
 2  34658 34452  "1 "    0     # TRAN from  WISHON     2.30   (1) to BRKR  WISHON
70.00
 3  34658     0  "3 "    0     # GEN-DROP    WISHON     2.30  GEN==4.50(1.00)
 3  34658     0  "4 "    0     # GEN-DROP    WISHON     2.30  GEN==4.50(1.00)
 0
  #
  #
  # (301)  B1 GENERATOR OUTAGE
  #
 3  34308     0  "1"     0     # KERCKHOF  13.80       PGEN=129.00  QGEN=16.00
 0
  #
  #
  # (302)  B1 GENERATOR OUTAGE
  #
 3  34344     0  "2"     0     # KERCKHOF   6.60       PGEN=6.80  QGEN=-4.00
 0
  #
  #
  # (303)  B1 GENERATOR OUTAGE
  #
 3  34431     0  "1"     0     # GWF_HEP1  13.80       PGEN=50.00  QGEN=21.57
 0
  #
```

```
 #
 # (304)  B1 GENERATOR OUTAGE
 #
3  34433     0  "1"     0     # GWF_HEP2  13.80       PGEN=50.00  QGEN=21.57
0
 #
 #
 # (305)  B1 GENERATOR OUTAGE
 #
3  34485     0  "1"     0     # FRESNOWW  12.47       PGEN=9.00  QGEN=0.00
0
 #
 #
 # (306)  B1 GENERATOR OUTAGE
 #
3  34539     0  "1"     0     # GWF_GT1   13.80       PGEN=50.00  QGEN=1.23
0
 #
 #
 # (307)  B1 GENERATOR OUTAGE
 #
3  34541     0  "1"     0     # GWF_GT2   13.80       PGEN=50.00  QGEN=1.23
0
 #
 #
 # (308)  B1 GENERATOR OUTAGE
 #
3  34553     0  "1"     0     # WHD_GAT2  13.80       PGEN=49.00  QGEN=-25.30
0
 #
 #
 # (309)  B1 GENERATOR OUTAGE
 #
3  34600     0  "1"     0     # HELMS 1   18.00       PGEN=404.00  QGEN=66.02
0
 #
 #
 # (310)  B1 GENERATOR OUTAGE
 #
3  34602     0  "1"     0     # HELMS 2   18.00       PGEN=404.00  QGEN=66.06
0
 #
 #
 # (311)  B1 GENERATOR OUTAGE
 #
3  34604     0  "1"     0     # HELMS 3   18.00       PGEN=404.00  QGEN=66.12
0
 #
 #
 # (312)  B1 GENERATOR OUTAGE
 #
3  34608     0  "2"     0     # AGRICO    13.80       PGEN=7.00  QGEN=1.64
0
 #
 #
 # (313)  B1 GENERATOR OUTAGE
 #
3  34608     0  "3"     0     # AGRICO    13.80       PGEN=18.10  QGEN=4.24
0
 #
 #
 # (314)  B1 GENERATOR OUTAGE
 #
3  34608     0  "4"     0     # AGRICO    13.80       PGEN=26.00  QGEN=6.09
0
 #
 #
 # (315)  B1 GENERATOR OUTAGE
 #
3  34610     0  "1"     0     # HAAS      13.80       PGEN=70.00  QGEN=18.75
```

```
0
 #
 #
 # (316)  B1 GENERATOR OUTAGE
 #
3  34610     0  "2"     0     # HAAS      13.80       PGEN=70.00  QGEN=18.75
0
 #
 #
 # (317)  B1 GENERATOR OUTAGE
 #
3  34612     0  "1"     0     # BLCH 2-2  13.80       PGEN=50.00  QGEN=9.61
0
 #
 #
 # (318)  B1 GENERATOR OUTAGE
 #
3  34614     0  "1"     0     # BLCH 2-3  13.80       PGEN=50.00  QGEN=13.00
0
 #
 #
 # (319)  B1 GENERATOR OUTAGE
 #
3  34616     0  "1"     0     # KINGSRIV  13.80       PGEN=47.00  QGEN=9.00
0
 #
 #
 # (320)  B1 GENERATOR OUTAGE
 #
3  34618     0  "1"     0     # MCCALL1T  13.20       PGEN=0.00  QGEN=36.40
0
 #
 #
 # (321)  B1 GENERATOR OUTAGE
 #
3  34621     0  "1"     0     # MCCALL3T  13.20       PGEN=0.00  QGEN=4.85
0
 #
 #
 # (322)  B1 GENERATOR OUTAGE
 #
3  34624     0  "1"     0     # BALCH 1   13.20       PGEN=27.00  QGEN=10.00
0
 #
 #
 # (323)  B1 GENERATOR OUTAGE
 #
3  34630     0  "1"     0     # HERNDN1T  13.20       PGEN=0.00  QGEN=20.26
0
 #
 #
 # (324)  B1 GENERATOR OUTAGE
 #
3  34632     0  "1"     0     # HERNDN2T  13.20       PGEN=0.00  QGEN=32.58
0
 #
 #
 # (325)  B1 GENERATOR OUTAGE
 #
3  34636     0  "2"     0     # FRIANTDM   6.60       PGEN=14.70  QGEN=6.14
0
 #
 #
 # (326)  B1 GENERATOR OUTAGE
 #
3  34636     0  "3"     0     # FRIANTDM   6.60       PGEN=7.80  QGEN=3.26
0
 #
 #
 # (327)  B1 GENERATOR OUTAGE
```

```
 #
3  34636     0  "4"     0     # FRIANTDM   6.60       PGEN=2.30  QGEN=0.96
0
 #
 #
 # (328)  B1 GENERATOR OUTAGE
 #
3  34640     0  "1"     0     # ULTR.PWR   9.11       PGEN=14.50  QGEN=13.00
0
 #
 #
 # (329)  B1 GENERATOR OUTAGE
 #
3  34642     0  "1"     0     # KINGSBUR   9.11       PGEN=34.00  QGEN=17.30
0
 #
 #
 # (330)  B1 GENERATOR OUTAGE
 #
3  34646     0  "1"     0     # SANGERCO   9.11       PGEN=37.50  QGEN=4.31
0
 #
 #
 # (331)  B1 GENERATOR OUTAGE
 #
3  34648     0  "1"     0     # DINUBA E  13.80       PGEN=12.00  QGEN=7.00
0
 #
 #
 # (332)  B1 GENERATOR OUTAGE
 #
3  34650     0  "1"     0     # GWF-PWR.  13.80       PGEN=23.00  QGEN=12.00
0
 #
 #
 # (333)  B1 GENERATOR OUTAGE
 #
3  34652     0  "1"     0     # CHV.COAL   9.11       PGEN=2.50  QGEN=8.30
0
 #
 #
 # (334)  B1 GENERATOR OUTAGE
 #
3  34652     0  "2"     0     # CHV.COAL   9.11       PGEN=8.00  QGEN=4.00
0
 #
 #
 # (335)  B1 GENERATOR OUTAGE
 #
3  34654     0  "1"     0     # COLNGAGN   9.11       PGEN=34.00  QGEN=-3.48
0
 #
 #
 # (336)  B1 GENERATOR OUTAGE
 #
3  34658     0  "3"     0     # WISHON     2.30       PGEN=4.50  QGEN=1.00
0
 #
 #
 # (337)  B1 GENERATOR OUTAGE
 #
3  34658     0  "4"     0     # WISHON     2.30       PGEN=4.50  QGEN=1.00
0
 #
 #
 # (338)  B1 GENERATOR OUTAGE
 #
3  34671     0  "1"     0     # KRCDPCT1  13.80       PGEN=50.00  QGEN=10.75
0
 #
```

```
 #
 # (339)  B1 GENERATOR OUTAGE
 #
3  34672     0  "1"     0     # KRCDPCT2  13.80       PGEN=50.00  QGEN=10.75
0
 #
 #
 # (340)  B1 GENERATOR OUTAGE
 #
3  38720     0  "1"     0     # PINE FLT  13.80       PGEN=57.00  QGEN=23.30
0
 #
 #
 # (341)  B1 GENERATOR OUTAGE
 #
3  34661     0  "1"     0     # P0418GT1  13.80       PGEN=78.80  QGEN=13.93
0
 #
 #
 # (342)  B1 GENERATOR OUTAGE
 #
3  34663     0  "2"     0     # P0418GT2  13.80       PGEN=78.80  QGEN=13.93
0
 #
 #
 # (343)  B1 GENERATOR OUTAGE
 #
3  34665     0  "3"     0     # P0418GT3  13.80       PGEN=78.80  QGEN=13.93
0
 #
 #
 # (344)  B1 GENERATOR OUTAGE
 #
3  34667     0  "4"     0     # P0418GT4  13.80       PGEN=78.80  QGEN=13.93
0
 #
 #
 # (345)  B1 GENERATOR OUTAGE
 #
3  34685     0  "1"     0     # P0615CT1  16.50       PGEN=192.00  QGEN=35.45
0
 #
 #
 # (346)  B1 GENERATOR OUTAGE
 #
3  34686     0  "1"     0     # P0615CT2  16.50       PGEN=192.00  QGEN=35.45
0
 #
 #
 # (347)  B1 GENERATOR OUTAGE
 #
3  34687     0  "1"     0     # P0615STG  16.50       PGEN=193.00  QGEN=35.57
0
 #
 #
 # (348)  B1 GENERATOR OUTAGE
 #
3  34688     0  "1"     0     # Q254CTG1  18.00       PGEN=172.40  QGEN=41.25
0
 #
 #
 # (349)  B1 GENERATOR OUTAGE
 #
3  34689     0  "2"     0     # Q254CTG2  18.00       PGEN=172.40  QGEN=41.25
0
 #
 #
 # (350)  B1 GENERATOR OUTAGE
 #
3  34690     0  "3"     0     # Q254STG1  18.00       PGEN=290.80  QGEN=67.53
```

```
 0
  #
  #
  # (351)  B1 GENERATOR OUTAGE
  #
 3  34691     0  "1"     0     # Q272_ST1  13.80       PGEN=27.00  QGEN=1.87
 0
  #
  #
  # (352)  B1 GENERATOR OUTAGE
  #
 3  34692     0  "1"     0     # Q272SLST  13.80       PGEN=139.00  QGEN=35.74
 0
  #
  #
  # (353)  L-1/G-1 OVERLAPPING OUTAGE
  # Smyrna - Semitropic - Midway 115 kV Line and Exchequer
 1  34700 34708  "1 "    0     # line from  SMYRNA   115.00  BRKR to (2)   MCKIBBEN
115.00
 1  34708 34742  "1 "    0     # line from  MCKIBBEN 115.00   (2) to (2)   SEMITRPJ
115.00
 1  34742 34746  "1 "    0     # line from  SEMITRPJ 115.00   (2) to (2)   GANSO
115.00
 1  34746 34774  "1 "    0     # line from  GANSO    115.00   (2) to BRKR  MIDWAY
115.00
 4  34746     0  "1 "    0     # LOAD-DROP    GANSO    115.00  LOAD==5.34(1.22)
  #
 3  34306     0  "1"     0     # EXCHQUER  13.80       PGEN=89.95  QGEN=18.49
 0
  #
  #
  # (354)  L-1/G-1 OVERLAPPING OUTAGE
  # Gates - Coalinga #2 70 kV Line and Chevron Coalinga Unit 1
 1  34184 34570  "1 "    0     # line from  GATS2_TP  70.00   (3) to BRKR  COLNGA 2
70.00
 1  34184 34552  "1 "    0     # line from  GATS2_TP  70.00   (3) to BRKR  GATES
70.00
 2  34184 34553  "1 "    0     # TRAN from  GATS2_TP  70.00   (3) to (1)   WHD_GAT2
13.80
 3  34553     0  "1 "    0     # GEN-DROP    WHD_GAT2  13.80  GEN==49.00(-25.30)
  #
 3  34652     0  "1"     0     # CHV.COAL   9.11       PGEN=17.00  QGEN=8.30
 0
  #
  #
  # (355)  L-1/G-1 OVERLAPPING OUTAGE
  # Gates - Coalinga #1 70 kV Line and Chevron Coalinga Unit 1
 1  34552 34578  "1 "    0     # line from  GATES     70.00  BRKR to (2)   JACALITO
70.00
 1  34578 34574  "1 "    0     # line from  JACALITO  70.00   (2) to BRKR  COLNGA 1
70.00
 4  34578     0  "1 "    0     # LOAD-DROP    JACALITO  70.00  LOAD==4.03(2.5) 0
  #
 3  34652     0  "1"     0     # CHV.COAL   9.11       PGEN=17.00  QGEN=8.30
 0
  #
  #
  # (356)  L-1/G-1 OVERLAPPING OUTAGE
  # Gates - Coalinga #2 70 kV Line and Coalinga Cogen
 1  34184 34570  "1 "    0     # line from  GATS2_TP  70.00   (3) to BRKR  COLNGA 2
70.00
 1  34184 34552  "1 "    0     # line from  GATS2_TP  70.00   (3) to BRKR  GATES
70.00
 2  34184 34553  "1 "    0     # TRAN from  GATS2_TP  70.00   (3) to (1)   WHD_GAT2
13.80
 3  34553     0  "1 "    0     # GEN-DROP    WHD_GAT2  13.80  GEN==49.00(-25.30)
  #
 3  34654     0  "1"     0     # COLNGAGN   9.11       PGEN=34.22  QGEN=-13.50
 0
  #
```

```
  #
  # (357)  L-1/G-1 OVERLAPPING OUTAGE
  # Gates - Coalinga #1 70 kV Line and Coalinga Cogen
 1  34552 34578  "1 "    0     # line from  GATES     70.00  BRKR to (2)   JACALITO
70.00
 1  34578 34574  "1 "    0     # line from  JACALITO  70.00   (2) to BRKR  COLNGA 1
70.00
 4  34578     0  "1 "    0     # LOAD-DROP    JACALITO  70.00  LOAD==4.03(2.5) 0
  #
 3  34654     0  "1"     0     # COLNGAGN   9.11       PGEN=34.22  QGEN=-13.50
 0
  #
  #
  # (358)  L-1/G-1 OVERLAPPING OUTAGE
  # Borden - Coppermine 70 kV Line and Friant PP Unit 2
 1  34262 34454  "1 "    0     # line from  CASSIDY   70.00   (2) to (2)   RIVERROC
70.00
 1  34262 34256  "1 "    0     # line from  CASSIDY   70.00   (2) to BRKR  BORDEN
70.00
 1  34454 34464  "1 "    0     # line from  RIVERROC  70.00   (2) to BRKR  COPPRMNE
70.00
 4  34262     0  "1 "    0     # LOAD-DROP    CASSIDY   70.00  LOAD==14.31(2.90)
 4  34454     0  "1 "    0     # LOAD-DROP    RIVERROC  70.00  LOAD==2.01(1.83)
  #
 3  34636     0  "2"     0     # FRIANTDM   6.60       PGEN=14.70  QGEN=6.14
 0
  #
  #
  # (359)  L-1/G-1 OVERLAPPING OUTAGE
  # Henrietta - Lemoore 70 kV Line and GWF Hanford
 1  34516 34520  "1 "    0     # line from  LEPRINO   70.00   (1) to (4)   LPRNO TP
70.00
 1  34520 34518  "1 "    0     # line from  LPRNO TP  70.00   (4) to BRKR  LEMOORE
70.00
 1  34520 34524  "1 "    0     # line from  LPRNO TP  70.00   (4) to (1)   CANDLEWK
70.00
 1  34520 34540  "1 "    0     # line from  LPRNO TP  70.00   (4) to BRKR  HENRITTA
70.00
 4  34516     0  "1 "    0     # LOAD-DROP    LEPRINO   70.00  LOAD==16.10(9.12)
 4  34518     0  "1 "    0     # LOAD-DROP    LEMOORE   70.00  LOAD==18.86(3.83)
 4  34518     0  "2 "    0     # LOAD-DROP    LEMOORE   70.00  LOAD==32.81(6.66)
  #
 3  34650     0  "1"     0     # GWF-PWR.  13.80       PGEN=23.00  QGEN=12.00
 0
  #
  #
  # (360)  L-1/G-1 OVERLAPPING OUTAGE
  # Henrietta - Lemoore 70 kV Line and GWF Henrietta Unit 1
 1  34516 34520  "1 "    0     # line from  LEPRINO   70.00   (1) to (4)   LPRNO TP
70.00
 1  34520 34518  "1 "    0     # line from  LPRNO TP  70.00   (4) to BRKR  LEMOORE
70.00
 1  34520 34524  "1 "    0     # line from  LPRNO TP  70.00   (4) to (1)   CANDLEWK
70.00
 1  34520 34540  "1 "    0     # line from  LPRNO TP  70.00   (4) to BRKR  HENRITTA
70.00
 4  34516     0  "1 "    0     # LOAD-DROP    LEPRINO   70.00  LOAD==16.10(9.12)
 4  34518     0  "1 "    0     # LOAD-DROP    LEMOORE   70.00  LOAD==18.86(3.83)
 4  34518     0  "2 "    0     # LOAD-DROP    LEMOORE   70.00  LOAD==32.81(6.66)
  #
 3  34539     0  "1"     0     # GWF_GT1   13.80       PGEN=50.00  QGEN=1.23
 0
  #
  #
  # (361)  L-1/G-1 OVERLAPPING OUTAGE
  # McCall - Wahtoke 115 kV Line and Sanger Cogen
 1  34370 34382  "1 "    0     # line from  MC CALL  115.00  BRKR to BRKR  WAHTOKE
115.00
  #
 3  34646     0  "1"     0     # SANGERCO   9.11       PGEN=37.50  QGEN=4.31
```

```
 0
  #
  #
  # (362)  L-1/G-1 OVERLAPPING OUTAGE
  # McCall - Wahtoke 115 kV Line and Kings River Power House
 1  34370 34382  "1 "    0     # line from  MC CALL  115.00  BRKR to BRKR  WAHTOKE
115.00
  #
 3  34616     0  "1"     0     # KINGSRIV  13.80       PGEN=47.00  QGEN=9.00
 0
  #
  #
  # (363)  L-1/G-1 OVERLAPPING OUTAGE
  # Helm - McCall 230 kV Line and Exchequer
 1  30873 30875  "1 "    0     # line from  HELM     230.00  BRKR to BRKR  MC CALL
230.00
  #
 3  34306     0  "1"     0     # EXCHQUER  13.80       PGEN=94.50  QGEN=8.77
 0
  #
  #
  # (364)  L-1/G-1 OVERLAPPING OUTAGE
  # Helms - Gregg #1 230 kV Line and Exchequer
 1  30810 30820  "1 "    0     # line from  GREGG    230.00  BRKR to BRKR  HELMS PP
230.00
 3  34600     0  "**"    0      # Drop unit#1 with a loss Helm - Gregg #1 line
  #
 3  34306     0  "1"     0     # EXCHQUER  13.80       PGEN=94.50  QGEN=8.77
 0
  #
  #
  # (365)  L-1/G-1 OVERLAPPING OUTAGE
  # Helms - Gregg #2 230 kV Line and Exchequer
 1  30810 30820  "2 "    0     # line from  GREGG    230.00  BRKR to BRKR  HELMS PP
230.00
 3  34604     0  "**"    0      # Drop unit#3 with a loss Helm - Gregg #2 line
  #
 3  34306     0  "1"     0     # EXCHQUER  13.80       PGEN=94.50  QGEN=8.77
 0
  #
  #
  # (366)  L-1/G-1 OVERLAPPING OUTAGE
  # Gregg - Herndon #1 230 kV Line and Exchequer
 1  30810 30835  "1 "    0     # line from  GREGG    230.00  BRKR to BRKR  HERNDON
230.00
 3  34604     0  "**"    0      # Drop unit#3 with a loss Gregg - Herndon #1 line
  #
 3  34306     0  "1"     0     # EXCHQUER  13.80       PGEN=94.50  QGEN=8.77
 0
  #
  #
  # (367)  L-1/G-1 OVERLAPPING OUTAGE
  # Gregg - Herndon #2 230 kV Line and Exchequer
 1  30810 30835  "2 "    0     # line from  GREGG    230.00  BRKR to BRKR  HERNDON
230.00
 3  34604     0  "**"    0      # Drop unit#3 with a loss Gregg - Herndon #2 line
  #
 3  34306     0  "1"     0     # EXCHQUER  13.80       PGEN=94.50  QGEN=8.77
 0
  #
  #
  # (368)  L-1/G-1 OVERLAPPING OUTAGE
  # Gregg - Ashlan 230 kV Line and Exchequer
 1  30810 30845  "1 "    0     # line from  GREGG    230.00  BRKR to (3)   FGRDN T2
230.00
 1  30845 30846  "1 "    0     # line from  FGRDN T2 230.00   (3) to BRKR  FIGRDN 2
230.00
 1  30845 30850  "1 "    0     # line from  FGRDN T2 230.00   (3) to BRKR  ASHLAN
230.00
 4  30846     0  "1 "    0     # LOAD-DROP    FIGRDN 2 230.00  LOAD==52.57(10.67)
```

```
 4  30846     0  "2 "    0     # LOAD-DROP    FIGRDN 2 230.00  LOAD==36.77(7.47)
 3  34604     0  "**"    0      # Drop unit#3 with a loss Gregg - Figarden line
 1 30841  30846  "1 "    1      # Switches in Figarden SW 286 to transfer load
 4 30846      0  "**"    1      # Restore Load at Figarden 2
  #
 3  34306     0  "1"     0     # EXCHQUER  13.80       PGEN=94.50  QGEN=8.77
 0
  #
  #
  # (369)  L-1/G-1 OVERLAPPING OUTAGE
  # Gates - Gregg 230 kV Line and Exchequer
 1  30810 30879  "1 "    0     # line from  GREGG    230.00  BRKR to (3)   HENTAP1
230.00
 1  30879 30881  "1 "    0     # line from  HENTAP1  230.00   (3) to BRKR  HENRIETA
230.00
 1  30879 30900  "1 "    0     # line from  HENTAP1  230.00   (3) to BRKR  GATES
230.00
 3  34604     0  "**"    0      # Drop unit#3 with a loss Gregg - Henrietta Tap 1 line
 1  30880 30881  "1 "    1      # Henrietta flip flop (Henrietta CB 222)
  #
 3  34306     0  "1"     0     # EXCHQUER  13.80       PGEN=94.50  QGEN=8.77
 0
  #
  #
  # (370)  L-1/G-1 OVERLAPPING OUTAGE
  # Herndon - Kearney 230 kV Line and Exchequer
 1  30830 30835  "1 "    0     # line from  KEARNEY  230.00  BRKR to BRKR  HERNDON
230.00
  #
 3  34306     0  "1"     0     # EXCHQUER  13.80       PGEN=94.50  QGEN=8.77
 0
  #
  #
  # (371)  L-1/G-1 OVERLAPPING OUTAGE
  # Herndon - Ashlan 230 kV Line and Exchequer
 1  30835 30840  "1 "    0     # line from  HERNDON  230.00  BRKR to (3)   FGRDN T1
230.00
 1  30840 30841  "1 "    0     # line from  FGRDN T1 230.00   (3) to BRKR  FIGRDN 1
230.00
 1  30840 30850  "1 "    0     # line from  FGRDN T1 230.00   (3) to BRKR  ASHLAN
230.00
 4  30841     0  "1 "    0     # LOAD-DROP    FIGRDN 1 230.00  LOAD==73.45(14.92)
 1 30841  30846  "1 "    1      # Switches in Figarden SW 286 to transfer load
 4 30841      0  "**"    1      # Restore Load at Figarden 1
  #
 3  34306     0  "1"     0     # EXCHQUER  13.80       PGEN=94.50  QGEN=8.77
 0
  #
  #
  # (372)  L-1/G-1 OVERLAPPING OUTAGE
  # Haas - McCall 230 kV Line and Exchequer
 1  30855 30860  "1 "    0     # line from  HAAS     230.00   (2) to (3)   BALCH3TP
230.00
 2  30855 34610  "1 "    0     # TRAN from  HAAS     230.00   (2) to (1)   HAAS
13.80
 1  30860 30875  "1 "    0     # line from  BALCH3TP 230.00   (3) to BRKR  MC CALL
230.00
 2  30860 34614  "1 "    0     # TRAN from  BALCH3TP 230.00   (3) to (1)   BLCH 2-3
13.80
 3  34610     0  "1 "    0     # GEN-DROP    HAAS      13.80  GEN==70.00(10.21)
 3  34610     0  "2 "    0     # GEN-DROP    HAAS      13.80  GEN==70.00(10.21)
 3  34614     0  "1 "    0     # GEN-DROP    BLCH 2-3  13.80  GEN==50.00(7.64)
  #
 3  34306     0  "1"     0     # EXCHQUER  13.80       PGEN=94.50  QGEN=8.77
 0
  #
  #
  # (373)  L-1/G-1 OVERLAPPING OUTAGE
  # Balch - McCall 230 kV Line and Exchequer
```

```
 1  30865 30870  "1 "    0     # line from  BALCH    230.00   (2) to (3)   PINE FLT
230.00
 2  30865 34612  "1 "    0     # TRAN from  BALCH    230.00   (2) to (1)   BLCH 2-2
13.80
 1  30870 30875  "1 "    0     # line from  PINE FLT 230.00   (3) to BRKR  MC CALL
230.00
 2  30870 38720  "1 "    0     # TRAN from  PINE FLT 230.00   (3) to (1)   PINE FLT
13.80
 3  34612     0  "1 "    0     # GEN-DROP    BLCH 2-2  13.80  GEN==50.00(0.66)
 3  38720     0  "1 "    0     # GEN-DROP    PINE FLT  13.80  GEN==57.00(23.30)
  #
 3  34306     0  "1"     0     # EXCHQUER  13.80       PGEN=94.50  QGEN=8.77
 0
  #
  #
  # (374)  L-1/G-1 OVERLAPPING OUTAGE
  # Gates - McCall 230 kV Line and Exchequer
 1  30875 30880  "1 "    0     # line from  MC CALL  230.00  BRKR to (2)   HENTAP2
230.00
 1  30880 30900  "1 "    0     # line from  HENTAP2  230.00   (2) to BRKR  GATES
230.00
  #
 3  34306     0  "1"     0     # EXCHQUER  13.80       PGEN=94.50  QGEN=8.77
 0
  #
  #
  # (375)  L-1/G-1 OVERLAPPING OUTAGE
  # Templeton - Gates 230 kV Line and Exchequer
 1  30900 30905  "1 "    0     # line from  GATES    230.00  BRKR to BRKR  TEMPLETN
230.00
  #
 3  34306     0  "1"     0     # EXCHQUER  13.80       PGEN=94.50  QGEN=8.77
 0
  #
  #
  # (376)  L-1/G-1 OVERLAPPING OUTAGE
  # Morro Bay - Gates 230 kV Line and Exchequer
 1  30900 30915  "1 "    0     # line from  GATES    230.00  BRKR to BRKR  MORROBAY
230.00
  #
 3  34306     0  "1"     0     # EXCHQUER  13.80       PGEN=94.50  QGEN=8.77
 0
  #
  #
  # (377)  L-1/G-1 OVERLAPPING OUTAGE
  # Gates - Arco 230 kV Line and Exchequer
 1  30900 30935  "1 "    0     # line from  GATES    230.00  BRKR to BRKR  ARCO
230.00
  #
 3  34306     0  "1"     0     # EXCHQUER  13.80       PGEN=94.50  QGEN=8.77
 0
  #
  #
  # (378)  L-1/G-1 OVERLAPPING OUTAGE
  # Gates - Midway 230 kV Line and Exchequer
 1  30900 30970  "1 "    0     # line from  GATES    230.00  BRKR to BRKR  MIDWAY
230.00
  #
 3  34306     0  "1"     0     # EXCHQUER  13.80       PGEN=94.50  QGEN=8.77
 0
  #
  #
  # (379)  L-1/G-1 OVERLAPPING OUTAGE
  # Helm - McCall 230 kV Line and Kerckhoff
 1  30873 30875  "1 "    0     # line from  HELM     230.00  BRKR to BRKR  MC CALL
230.00
  #
 3  34308     0  "1"     0     # KERCKHOF  13.80       PGEN=129.00  QGEN=16.00
 0
  #
```

```
  #
  # (380)  L-1/G-1 OVERLAPPING OUTAGE
  # Helms - Gregg #1 230 kV Line and Kerckhoff
 1  30810 30820  "1 "    0     # line from  GREGG    230.00  BRKR to BRKR  HELMS PP
230.00
 3  34600     0  "**"    0      # Drop unit#1 with a loss Helm - Gregg #1 line
  #
 3  34308     0  "1"     0     # KERCKHOF  13.80       PGEN=129.00  QGEN=16.00
 0
  #
  #
  # (381)  L-1/G-1 OVERLAPPING OUTAGE
  # Helms - Gregg #2 230 kV Line and Kerckhoff
 1  30810 30820  "2 "    0     # line from  GREGG    230.00  BRKR to BRKR  HELMS PP
230.00
 3  34604     0  "**"    0      # Drop unit#3 with a loss Helm - Gregg #2 line
  #
 3  34308     0  "1"     0     # KERCKHOF  13.80       PGEN=129.00  QGEN=16.00
 0
  #
  #
  # (382)  L-1/G-1 OVERLAPPING OUTAGE
  # Gregg - Herndon #1 230 kV Line and Kerckhoff
 1  30810 30835  "1 "    0     # line from  GREGG    230.00  BRKR to BRKR  HERNDON
230.00
 3  34604     0  "**"    0      # Drop unit#3 with a loss Gregg - Herndon #1 line
  #
 3  34308     0  "1"     0     # KERCKHOF  13.80       PGEN=129.00  QGEN=16.00
 0
  #
  #
  # (383)  L-1/G-1 OVERLAPPING OUTAGE
  # Gregg - Herndon #2 230 kV Line and Kerckhoff
 1  30810 30835  "2 "    0     # line from  GREGG    230.00  BRKR to BRKR  HERNDON
230.00
 3  34604     0  "**"    0      # Drop unit#3 with a loss Gregg - Herndon #2 line
  #
 3  34308     0  "1"     0     # KERCKHOF  13.80       PGEN=129.00  QGEN=16.00
 0
  #
  #
  # (384)  L-1/G-1 OVERLAPPING OUTAGE
  # Gregg - Ashlan 230 kV Line and Kerckhoff
 1  30810 30845  "1 "    0     # line from  GREGG    230.00  BRKR to (3)   FGRDN T2
230.00
 1  30845 30846  "1 "    0     # line from  FGRDN T2 230.00   (3) to BRKR  FIGRDN 2
230.00
 1  30845 30850  "1 "    0     # line from  FGRDN T2 230.00   (3) to BRKR  ASHLAN
230.00
 4  30846     0  "1 "    0     # LOAD-DROP    FIGRDN 2 230.00  LOAD==52.57(10.67)
 4  30846     0  "2 "    0     # LOAD-DROP    FIGRDN 2 230.00  LOAD==36.77(7.47)
 3  34604     0  "**"    0      # Drop unit#3 with a loss Gregg - Figarden line
 1 30841  30846  "1 "    1      # Switches in Figarden SW 286 to transfer load
 4 30846      0  "**"    1      # Restore Load at Figarden 2
  #
 3  34308     0  "1"     0     # KERCKHOF  13.80       PGEN=129.00  QGEN=16.00
 0
  #
  #
  # (385)  L-1/G-1 OVERLAPPING OUTAGE
  # Gates - Gregg 230 kV Line and Kerckhoff
 1  30810 30879  "1 "    0     # line from  GREGG    230.00  BRKR to (3)   HENTAP1
230.00
 1  30879 30881  "1 "    0     # line from  HENTAP1  230.00   (3) to BRKR  HENRIETA
230.00
 1  30879 30900  "1 "    0     # line from  HENTAP1  230.00   (3) to BRKR  GATES
230.00
 3  34604     0  "**"    0      # Drop unit#3 with a loss Gregg - Henrietta Tap 1 line
 1  30880 30881  "1 "    1      # Henrietta flip flop (Henrietta CB 222)
  #
```

```
 3  34308     0  "1"     0     # KERCKHOF  13.80       PGEN=129.00  QGEN=16.00
 0
  #
  #
  # (386)  L-1/G-1 OVERLAPPING OUTAGE
  # Herndon - Kearney 230 kV Line and Kerckhoff
 1  30830 30835  "1 "    0     # line from  KEARNEY  230.00  BRKR to BRKR  HERNDON
230.00
  #
 3  34308     0  "1"     0     # KERCKHOF  13.80       PGEN=129.00  QGEN=16.00
 0
  #
  #
  # (387)  L-1/G-1 OVERLAPPING OUTAGE
  # Herndon - Ashlan 230 kV Line and Kerckhoff
 1  30835 30840  "1 "    0     # line from  HERNDON  230.00  BRKR to (3)   FGRDN T1
230.00
 1  30840 30841  "1 "    0     # line from  FGRDN T1 230.00   (3) to BRKR  FIGRDN 1
230.00
 1  30840 30850  "1 "    0     # line from  FGRDN T1 230.00   (3) to BRKR  ASHLAN
230.00
 4  30841     0  "1 "    0     # LOAD-DROP    FIGRDN 1 230.00  LOAD==73.45(14.92)
 1 30841  30846  "1 "    1      # Switches in Figarden SW 286 to transfer load
 4 30841      0  "**"    1      # Restore Load at Figarden 1
  #
 3  34308     0  "1"     0     # KERCKHOF  13.80       PGEN=129.00  QGEN=16.00
 0
  #
  #
  # (388)  L-1/G-1 OVERLAPPING OUTAGE
  # Haas - McCall 230 kV Line and Kerckhoff
 1  30855 30860  "1 "    0     # line from  HAAS     230.00   (2) to (3)   BALCH3TP
230.00
 2  30855 34610  "1 "    0     # TRAN from  HAAS     230.00   (2) to (1)   HAAS
13.80
 1  30860 30875  "1 "    0     # line from  BALCH3TP 230.00   (3) to BRKR  MC CALL
230.00
 2  30860 34614  "1 "    0     # TRAN from  BALCH3TP 230.00   (3) to (1)   BLCH 2-3
13.80
 3  34610     0  "1 "    0     # GEN-DROP    HAAS      13.80  GEN==70.00(10.21)
 3  34610     0  "2 "    0     # GEN-DROP    HAAS      13.80  GEN==70.00(10.21)
 3  34614     0  "1 "    0     # GEN-DROP    BLCH 2-3  13.80  GEN==50.00(7.64)
  #
 3  34308     0  "1"     0     # KERCKHOF  13.80       PGEN=129.00  QGEN=16.00
 0
  #
  #
  # (389)  L-1/G-1 OVERLAPPING OUTAGE
  # Balch - McCall 230 kV Line and Kerckhoff
 1  30865 30870  "1 "    0     # line from  BALCH    230.00   (2) to (3)   PINE FLT
230.00
 2  30865 34612  "1 "    0     # TRAN from  BALCH    230.00   (2) to (1)   BLCH 2-2
13.80
 1  30870 30875  "1 "    0     # line from  PINE FLT 230.00   (3) to BRKR  MC CALL
230.00
 2  30870 38720  "1 "    0     # TRAN from  PINE FLT 230.00   (3) to (1)   PINE FLT
13.80
 3  34612     0  "1 "    0     # GEN-DROP    BLCH 2-2  13.80  GEN==50.00(0.66)
 3  38720     0  "1 "    0     # GEN-DROP    PINE FLT  13.80  GEN==57.00(23.30)
  #
 3  34308     0  "1"     0     # KERCKHOF  13.80       PGEN=129.00  QGEN=16.00
 0
  #
  #
  # (390)  L-1/G-1 OVERLAPPING OUTAGE
  # Gates - McCall 230 kV Line and Kerckhoff
 1  30875 30880  "1 "    0     # line from  MC CALL  230.00  BRKR to (2)   HENTAP2
230.00
 1  30880 30900  "1 "    0     # line from  HENTAP2  230.00   (2) to BRKR  GATES
230.00
```

```
  #
 3  34308     0  "1"     0     # KERCKHOF  13.80       PGEN=129.00  QGEN=16.00
 0
  #
  #
  # (391)  L-1/G-1 OVERLAPPING OUTAGE
  # Templeton - Gates 230 kV Line and Kerckhoff
 1  30900 30905  "1 "    0     # line from  GATES    230.00  BRKR to BRKR  TEMPLETN
230.00
  #
 3  34308     0  "1"     0     # KERCKHOF  13.80       PGEN=129.00  QGEN=16.00
 0
  #
  #
  # (392)  L-1/G-1 OVERLAPPING OUTAGE
  # Morro Bay - Gates 230 kV Line and Kerckhoff
 1  30900 30915  "1 "    0     # line from  GATES    230.00  BRKR to BRKR  MORROBAY
230.00
  #
 3  34308     0  "1"     0     # KERCKHOF  13.80       PGEN=129.00  QGEN=16.00
 0
  #
  #
  # (393)  L-1/G-1 OVERLAPPING OUTAGE
  # Gates - Arco 230 kV Line and Kerckhoff
 1  30900 30935  "1 "    0     # line from  GATES    230.00  BRKR to BRKR  ARCO
230.00
  #
 3  34308     0  "1"     0     # KERCKHOF  13.80       PGEN=129.00  QGEN=16.00
 0
  #
  #
  # (394)  L-1/G-1 OVERLAPPING OUTAGE
  # Gates - Midway 230 kV Line and Kerckhoff
 1  30900 30970  "1 "    0     # line from  GATES    230.00  BRKR to BRKR  MIDWAY
230.00
  #
 3  34308     0  "1"     0     # KERCKHOF  13.80       PGEN=129.00  QGEN=16.00
 0
  #
  #
  # (395)  L-1/G-1 OVERLAPPING OUTAGE
  # Helm - McCall 230 kV Line and Helms Unit 1
 1  30873 30875  "1 "    0     # line from  HELM     230.00  BRKR to BRKR  MC CALL
230.00
  #
 3  34600     0  "1"     0     # HELMS 1   18.00       PGEN=404.00  QGEN=66.02
 0
  #
  #
  # (396)  L-1/G-1 OVERLAPPING OUTAGE
  # Helms - Gregg #1 230 kV Line and Helms Unit 1
 1  30810 30820  "1 "    0     # line from  GREGG    230.00  BRKR to BRKR  HELMS PP
230.00
 3  34600     0  "**"    0      # Drop unit#1 with a loss Helm - Gregg #1 line
  #
 3  34600     0  "1"     0     # HELMS 1   18.00       PGEN=404.00  QGEN=66.02
 0
  #
  #
  # (397)  L-1/G-1 OVERLAPPING OUTAGE
  # Helms - Gregg #2 230 kV Line and Helms Unit 1
 1  30810 30820  "2 "    0     # line from  GREGG    230.00  BRKR to BRKR  HELMS PP
230.00
 3  34604     0  "**"    0      # Drop unit#3 with a loss Helm - Gregg #2 line
  #
 3  34600     0  "1"     0     # HELMS 1   18.00       PGEN=404.00  QGEN=66.02
 0
  #
  #
```

```
  # (398)  L-1/G-1 OVERLAPPING OUTAGE
  # Gregg - Herndon #1 230 kV Line and Helms Unit 1
 1  30810 30835  "1 "    0     # line from  GREGG    230.00  BRKR to BRKR  HERNDON
230.00
 3  34604     0  "**"    0      # Drop unit#3 with a loss Gregg - Herndon #1 line
  #
 3  34600     0  "1"     0     # HELMS 1   18.00       PGEN=404.00  QGEN=66.02
 0
  #
  #
  # (399)  L-1/G-1 OVERLAPPING OUTAGE
  # Gregg - Herndon #2 230 kV Line and Helms Unit 1
 1  30810 30835  "2 "    0     # line from  GREGG    230.00  BRKR to BRKR  HERNDON
230.00
 3  34604     0  "**"    0      # Drop unit#3 with a loss Gregg - Herndon #2 line
  #
 3  34600     0  "1"     0     # HELMS 1   18.00       PGEN=404.00  QGEN=66.02
 0
  #
  #
  # (400)  L-1/G-1 OVERLAPPING OUTAGE
  # Gregg - Ashlan 230 kV Line and Helms Unit 1
 1  30810 30845  "1 "    0     # line from  GREGG    230.00  BRKR to (3)   FGRDN T2
230.00
 1  30845 30846  "1 "    0     # line from  FGRDN T2 230.00   (3) to BRKR  FIGRDN 2
230.00
 1  30845 30850  "1 "    0     # line from  FGRDN T2 230.00   (3) to BRKR  ASHLAN
230.00
 4  30846     0  "1 "    0     # LOAD-DROP    FIGRDN 2 230.00  LOAD==52.57(10.67)
 4  30846     0  "2 "    0     # LOAD-DROP    FIGRDN 2 230.00  LOAD==36.77(7.47)
 3  34604     0  "**"    0      # Drop unit#3 with a loss Gregg - Figarden line
 1 30841  30846  "1 "    1      # Switches in Figarden SW 286 to transfer load
 4 30846      0  "**"    1      # Restore Load at Figarden 2
  #
 3  34600     0  "1"     0     # HELMS 1   18.00       PGEN=404.00  QGEN=66.02
 0
  #
  #
  # (401)  L-1/G-1 OVERLAPPING OUTAGE
  # Gates - Gregg 230 kV Line and Helms Unit 1
 1  30810 30879  "1 "    0     # line from  GREGG    230.00  BRKR to (3)   HENTAP1
230.00
 1  30879 30881  "1 "    0     # line from  HENTAP1  230.00   (3) to BRKR  HENRIETA
230.00
 1  30879 30900  "1 "    0     # line from  HENTAP1  230.00   (3) to BRKR  GATES
230.00
 3  34604     0  "**"    0      # Drop unit#3 with a loss Gregg - Henrietta Tap 1 line
 1  30880 30881  "1 "    1      # Henrietta flip flop (Henrietta CB 222)
  #
 3  34600     0  "1"     0     # HELMS 1   18.00       PGEN=404.00  QGEN=66.02
 0
  #
  #
  # (402)  L-1/G-1 OVERLAPPING OUTAGE
  # Herndon - Kearney 230 kV Line and Helms Unit 1
 1  30830 30835  "1 "    0     # line from  KEARNEY  230.00  BRKR to BRKR  HERNDON
230.00
  #
 3  34600     0  "1"     0     # HELMS 1   18.00       PGEN=404.00  QGEN=66.02
 0
  #
  #
  # (403)  L-1/G-1 OVERLAPPING OUTAGE
  # Herndon - Ashlan 230 kV Line and Helms Unit 1
 1  30835 30840  "1 "    0     # line from  HERNDON  230.00  BRKR to (3)   FGRDN T1
230.00
 1  30840 30841  "1 "    0     # line from  FGRDN T1 230.00   (3) to BRKR  FIGRDN 1
230.00
 1  30840 30850  "1 "    0     # line from  FGRDN T1 230.00   (3) to BRKR  ASHLAN
230.00
```

```
 4  30841     0  "1 "    0     # LOAD-DROP    FIGRDN 1 230.00  LOAD==73.45(14.92)
 1 30841  30846  "1 "    1      # Switches in Figarden SW 286 to transfer load
 4 30841      0  "**"    1      # Restore Load at Figarden 1
  #
 3  34600     0  "1"     0     # HELMS 1   18.00       PGEN=404.00  QGEN=66.02
 0
  #
  #
  # (404)  L-1/G-1 OVERLAPPING OUTAGE
  # Haas - McCall 230 kV Line and Helms Unit 1
 1  30855 30860  "1 "    0     # line from  HAAS     230.00   (2) to (3)   BALCH3TP
230.00
 2  30855 34610  "1 "    0     # TRAN from  HAAS     230.00   (2) to (1)   HAAS
13.80
 1  30860 30875  "1 "    0     # line from  BALCH3TP 230.00   (3) to BRKR  MC CALL
230.00
 2  30860 34614  "1 "    0     # TRAN from  BALCH3TP 230.00   (3) to (1)   BLCH 2-3
13.80
 3  34610     0  "1 "    0     # GEN-DROP    HAAS      13.80  GEN==70.00(10.21)
 3  34610     0  "2 "    0     # GEN-DROP    HAAS      13.80  GEN==70.00(10.21)
 3  34614     0  "1 "    0     # GEN-DROP    BLCH 2-3  13.80  GEN==50.00(7.64)
  #
 3  34600     0  "1"     0     # HELMS 1   18.00       PGEN=404.00  QGEN=66.02
 0
  #
  #
  # (405)  L-1/G-1 OVERLAPPING OUTAGE
  # Balch - McCall 230 kV Line and Helms Unit 1
 1  30865 30870  "1 "    0     # line from  BALCH    230.00   (2) to (3)   PINE FLT
230.00
 2  30865 34612  "1 "    0     # TRAN from  BALCH    230.00   (2) to (1)   BLCH 2-2
13.80
 1  30870 30875  "1 "    0     # line from  PINE FLT 230.00   (3) to BRKR  MC CALL
230.00
 2  30870 38720  "1 "    0     # TRAN from  PINE FLT 230.00   (3) to (1)   PINE FLT
13.80
 3  34612     0  "1 "    0     # GEN-DROP    BLCH 2-2  13.80  GEN==50.00(0.66)
 3  38720     0  "1 "    0     # GEN-DROP    PINE FLT  13.80  GEN==57.00(23.30)
  #
 3  34600     0  "1"     0     # HELMS 1   18.00       PGEN=404.00  QGEN=66.02
 0
  #
  #
  # (406)  L-1/G-1 OVERLAPPING OUTAGE
  # Gates - McCall 230 kV Line and Helms Unit 1
 1  30875 30880  "1 "    0     # line from  MC CALL  230.00  BRKR to (2)   HENTAP2
230.00
 1  30880 30900  "1 "    0     # line from  HENTAP2  230.00   (2) to BRKR  GATES
230.00
  #
 3  34600     0  "1"     0     # HELMS 1   18.00       PGEN=404.00  QGEN=66.02
 0
  #
  #
  # (407)  L-1/G-1 OVERLAPPING OUTAGE
  # Templeton - Gates 230 kV Line and Helms Unit 1
 1  30900 30905  "1 "    0     # line from  GATES    230.00  BRKR to BRKR  TEMPLETN
230.00
  #
 3  34600     0  "1"     0     # HELMS 1   18.00       PGEN=404.00  QGEN=66.02
 0
  #
  #
  # (408)  L-1/G-1 OVERLAPPING OUTAGE
  # Morro Bay - Gates 230 kV Line and Helms Unit 1
 1  30900 30915  "1 "    0     # line from  GATES    230.00  BRKR to BRKR  MORROBAY
230.00
  #
 3  34600     0  "1"     0     # HELMS 1   18.00       PGEN=404.00  QGEN=66.02
 0
```

```
  #
  #
  # (409)  L-1/G-1 OVERLAPPING OUTAGE
  # Gates - Arco 230 kV Line and Helms Unit 1
 1  30900 30935  "1 "    0     # line from  GATES    230.00  BRKR to BRKR  ARCO
230.00
  #
 3  34600     0  "1"     0     # HELMS 1   18.00       PGEN=404.00  QGEN=66.02
 0
  #
  #
  # (410)  L-1/G-1 OVERLAPPING OUTAGE
  # Gates - Midway 230 kV Line and Helms Unit 1
 1  30900 30970  "1 "    0     # line from  GATES    230.00  BRKR to BRKR  MIDWAY
230.00
  #
 3  34600     0  "1"     0     # HELMS 1   18.00       PGEN=404.00  QGEN=66.02
 0
  #
  #
  # (411)  L-1/G-1 OVERLAPPING OUTAGE
  # Panoche - Kearney 230 kV Line and Melones Unit 1
 1  30790 30825  "1 "    0     # line from  PANOCHE  230.00  BRKR to (2)   MCMULLN1
230.00
 1  30825 30830  "1 "    0     # line from  MCMULLN1 230.00   (2) to BRKR  KEARNEY
230.00
 4  30825     0  "1 "    0     # LOAD-DROP    MCMULLN1 230.00  LOAD==20.57(4.18)
  #
 3  37561     0  "1"     0     # MELONE1   13.80       PGEN=119.00  QGEN=60.00
 0
  #
  #
  # (412)  L-1/G-1 OVERLAPPING OUTAGE
  # Panoche - Helm 230 kV Line and Melones Unit 1
 1  30790 30873  "1 "    0     # line from  PANOCHE  230.00  BRKR to BRKR  HELM
230.00
  #
 3  37561     0  "1"     0     # MELONE1   13.80       PGEN=119.00  QGEN=60.00
 0
  #
  #
  # (413)  L-1/G-1 OVERLAPPING OUTAGE
  # Gates - Panoche #1 230 kV Line and Melones Unit 1
 1  30790 30900  "1 "    0     # line from  PANOCHE  230.00  BRKR to BRKR  GATES
230.00
  #
 3  37561     0  "1"     0     # MELONE1   13.80       PGEN=119.00  QGEN=60.00
 0
  #
  #
  # (414)  L-1/G-1 OVERLAPPING OUTAGE
  # Gates - Panoche #2 230 kV Line and Melones Unit 1
 1  30790 30900  "2 "    0     # line from  PANOCHE  230.00  BRKR to BRKR  GATES
230.00
  #
 3  37561     0  "1"     0     # MELONE1   13.80       PGEN=119.00  QGEN=60.00
 0
  #
  #
  # (415)  L-1/G-1 OVERLAPPING OUTAGE
  # Helm - McCall 230 kV Line and Melones Unit 1
 1  30873 30875  "1 "    0     # line from  HELM     230.00  BRKR to BRKR  MC CALL
230.00
  #
 3  37561     0  "1"     0     # MELONE1   13.80       PGEN=119.00  QGEN=60.00
 0
  #
  #
  # (416)  L-1/G-1 OVERLAPPING OUTAGE
  # Helms - Gregg #1 230 kV Line and Melones Unit 1
```

```
 1  30810 30820  "1 "    0     # line from  GREGG    230.00  BRKR to BRKR  HELMS PP
230.00
 3  34600     0  "**"    0      # Drop unit#1 with a loss Helm - Gregg #1 line
  #
 3  37561     0  "1"     0     # MELONE1   13.80       PGEN=119.00  QGEN=60.00
 0
  #
  #
  # (417)  L-1/G-1 OVERLAPPING OUTAGE
  # Helms - Gregg #2 230 kV Line and Melones Unit 1
 1  30810 30820  "2 "    0     # line from  GREGG    230.00  BRKR to BRKR  HELMS PP
230.00
 3  34604     0  "**"    0      # Drop unit#3 with a loss Helm - Gregg #2 line
  #
 3  37561     0  "1"     0     # MELONE1   13.80       PGEN=119.00  QGEN=60.00
 0
  #
  #
  # (418)  L-1/G-1 OVERLAPPING OUTAGE
  # Gregg - Herndon #1 230 kV Line and Melones Unit 1
 1  30810 30835  "1 "    0     # line from  GREGG    230.00  BRKR to BRKR  HERNDON
230.00
 3  34604     0  "**"    0      # Drop unit#3 with a loss Gregg - Herndon #1 line
  #
 3  37561     0  "1"     0     # MELONE1   13.80       PGEN=119.00  QGEN=60.00
 0
  #
  #
  # (419)  L-1/G-1 OVERLAPPING OUTAGE
  # Gregg - Herndon #2 230 kV Line and Melones Unit 1
 1  30810 30835  "2 "    0     # line from  GREGG    230.00  BRKR to BRKR  HERNDON
230.00
 3  34604     0  "**"    0      # Drop unit#3 with a loss Gregg - Herndon #2 line
  #
 3  37561     0  "1"     0     # MELONE1   13.80       PGEN=119.00  QGEN=60.00
 0
  #
  #
  # (420)  L-1/G-1 OVERLAPPING OUTAGE
  # Gregg - Ashlan 230 kV Line and Melones Unit 1
 1  30810 30845  "1 "    0     # line from  GREGG    230.00  BRKR to (3)   FGRDN T2
230.00
 1  30845 30846  "1 "    0     # line from  FGRDN T2 230.00   (3) to BRKR  FIGRDN 2
230.00
 1  30845 30850  "1 "    0     # line from  FGRDN T2 230.00   (3) to BRKR  ASHLAN
230.00
 4  30846     0  "1 "    0     # LOAD-DROP    FIGRDN 2 230.00  LOAD==52.57(10.67)
 4  30846     0  "2 "    0     # LOAD-DROP    FIGRDN 2 230.00  LOAD==36.77(7.47)
 3  34604     0  "**"    0      # Drop unit#3 with a loss Gregg - Figarden line
 1 30841  30846  "1 "    1      # Switches in Figarden SW 286 to transfer load
 4 30846      0  "**"    1      # Restore Load at Figarden 2
  #
 3  37561     0  "1"     0     # MELONE1   13.80       PGEN=119.00  QGEN=60.00
 0
  #
  #
  # (421)  L-1/G-1 OVERLAPPING OUTAGE
  # Gates - Gregg 230 kV Line and Melones Unit 1
 1  30810 30879  "1 "    0     # line from  GREGG    230.00  BRKR to (3)   HENTAP1
230.00
 1  30879 30881  "1 "    0     # line from  HENTAP1  230.00   (3) to BRKR  HENRIETA
230.00
 1  30879 30900  "1 "    0     # line from  HENTAP1  230.00   (3) to BRKR  GATES
230.00
 3  34604     0  "**"    0      # Drop unit#3 with a loss Gregg - Henrietta Tap 1 line
 1  30880 30881  "1 "    1      # Henrietta flip flop (Henrietta CB 222)
  #
 3  37561     0  "1"     0     # MELONE1   13.80       PGEN=119.00  QGEN=60.00
 0
  #
```

```
  #
  # (422)  L-1/G-1 OVERLAPPING OUTAGE
  # Herndon - Kearney 230 kV Line and Melones Unit 1
 1  30830 30835  "1 "    0     # line from  KEARNEY  230.00  BRKR to BRKR  HERNDON
230.00
  #
 3  37561     0  "1"     0     # MELONE1   13.80       PGEN=119.00  QGEN=60.00
 0
  #
  #
  # (423)  L-1/G-1 OVERLAPPING OUTAGE
  # Herndon - Ashlan 230 kV Line and Melones Unit 1
 1  30835 30840  "1 "    0     # line from  HERNDON  230.00  BRKR to (3)   FGRDN T1
230.00
 1  30840 30841  "1 "    0     # line from  FGRDN T1 230.00   (3) to BRKR  FIGRDN 1
230.00
 1  30840 30850  "1 "    0     # line from  FGRDN T1 230.00   (3) to BRKR  ASHLAN
230.00
 4  30841     0  "1 "    0     # LOAD-DROP    FIGRDN 1 230.00  LOAD==73.45(14.92)
 1 30841  30846  "1 "    1      # Switches in Figarden SW 286 to transfer load
 4 30841      0  "**"    1      # Restore Load at Figarden 1
  #
 3  37561     0  "1"     0     # MELONE1   13.80       PGEN=119.00  QGEN=60.00
 0
  #
  #
  # (424)  L-1/G-1 OVERLAPPING OUTAGE
  # Haas - McCall 230 kV Line and Melones Unit 1
 1  30855 30860  "1 "    0     # line from  HAAS     230.00   (2) to (3)   BALCH3TP
230.00
 2  30855 34610  "1 "    0     # TRAN from  HAAS     230.00   (2) to (1)   HAAS
13.80
 1  30860 30875  "1 "    0     # line from  BALCH3TP 230.00   (3) to BRKR  MC CALL
230.00
 2  30860 34614  "1 "    0     # TRAN from  BALCH3TP 230.00   (3) to (1)   BLCH 2-3
13.80
 3  34610     0  "1 "    0     # GEN-DROP    HAAS      13.80  GEN==70.00(10.21)
 3  34610     0  "2 "    0     # GEN-DROP    HAAS      13.80  GEN==70.00(10.21)
 3  34614     0  "1 "    0     # GEN-DROP    BLCH 2-3  13.80  GEN==50.00(7.64)
  #
 3  37561     0  "1"     0     # MELONE1   13.80       PGEN=119.00  QGEN=60.00
 0
  #
  #
  # (425)  L-1/G-1 OVERLAPPING OUTAGE
  # Balch - McCall 230 kV Line and Melones Unit 1
 1  30865 30870  "1 "    0     # line from  BALCH    230.00   (2) to (3)   PINE FLT
230.00
 2  30865 34612  "1 "    0     # TRAN from  BALCH    230.00   (2) to (1)   BLCH 2-2
13.80
 1  30870 30875  "1 "    0     # line from  PINE FLT 230.00   (3) to BRKR  MC CALL
230.00
 2  30870 38720  "1 "    0     # TRAN from  PINE FLT 230.00   (3) to (1)   PINE FLT
13.80
 3  34612     0  "1 "    0     # GEN-DROP    BLCH 2-2  13.80  GEN==50.00(0.66)
 3  38720     0  "1 "    0     # GEN-DROP    PINE FLT  13.80  GEN==57.00(23.30)
  #
 3  37561     0  "1"     0     # MELONE1   13.80       PGEN=119.00  QGEN=60.00
 0
  #
  #
  # (426)  L-1/G-1 OVERLAPPING OUTAGE
  # Gates - McCall 230 kV Line and Melones Unit 1
 1  30875 30880  "1 "    0     # line from  MC CALL  230.00  BRKR to (2)   HENTAP2
230.00
 1  30880 30900  "1 "    0     # line from  HENTAP2  230.00   (2) to BRKR  GATES
230.00
  #
 3  37561     0  "1"     0     # MELONE1   13.80       PGEN=119.00  QGEN=60.00
 0
```

```
  #
  #
  # (427)  L-1/G-1 OVERLAPPING OUTAGE
  # Templeton - Gates 230 kV Line and Melones Unit 1
 1  30900 30905  "1 "    0     # line from  GATES    230.00  BRKR to BRKR  TEMPLETN
230.00
  #
 3  37561     0  "1"     0     # MELONE1   13.80       PGEN=119.00  QGEN=60.00
 0
  #
  #
  # (428)  L-1/G-1 OVERLAPPING OUTAGE
  # Morro Bay - Gates 230 kV Line and Melones Unit 1
 1  30900 30915  "1 "    0     # line from  GATES    230.00  BRKR to BRKR  MORROBAY
230.00
  #
 3  37561     0  "1"     0     # MELONE1   13.80       PGEN=119.00  QGEN=60.00
 0
  #
  #
  # (429)  L-1/G-1 OVERLAPPING OUTAGE
  # Gates - Arco 230 kV Line and Melones Unit 1
 1  30900 30935  "1 "    0     # line from  GATES    230.00  BRKR to BRKR  ARCO
230.00
  #
 3  37561     0  "1"     0     # MELONE1   13.80       PGEN=119.00  QGEN=60.00
 0
  #
  #
  # (430)  L-1/G-1 OVERLAPPING OUTAGE
  # Gates - Midway 230 kV Line and Melones Unit 1
 1  30900 30970  "1 "    0     # line from  GATES    230.00  BRKR to BRKR  MIDWAY
230.00
  #
 3  37561     0  "1"     0     # MELONE1   13.80       PGEN=119.00  QGEN=60.00
 0
  #
  #
 -1
  # EOF
```

Summer Peak Category C Contingencies

```
# Q272 2013 sumpk category c contingency list (dctl and bus outages)
# Yosemite and Fresno Divisions Zones 313 and 314
#
  # 2013 sumpk category c contingency list
  # Yosemite Zone 313
  #
  #
  # (1)   C5 DCTL OUTAGE
  # Wilson - Atwater and El Capitan - Wilson 115 kV Lines
 1  34134 34104  "1 "    0     # line from  WILSON A 115.00  BRKR to BRKR  ATWATER
115.00
  #
 1  34136 34138  "1 "    0     # line from  WILSON B 115.00  BRKR to BRKR  EL CAPTN
115.00
 0
  #
  #
  # (2)   C5 DCTL OUTAGE
  # Wilson - Atwater and Atwater - El Capitan 115 kV Lines
 1  34134 34104  "1 "    0     # line from  WILSON A 115.00  BRKR to BRKR  ATWATER
115.00
  #
 1  34104 34106  "1 "    0     # line from  ATWATER  115.00  BRKR to (2)   CASTLE
115.00
 1  34106 34138  "1 "    0     # line from  CASTLE   115.00   (2) to BRKR  EL CAPTN
115.00
 0
  #
  #
  # (3)   C5 DCTL OUTAGE
  # Wilson - Merced #2 and Wilson - Oro Loma 115 kV Lines
 1  34134 34144  "1 "    0     # line from  WILSON A 115.00  BRKR to BRKR  MERCED
115.00
  #
 1  34118 34136  "1 "    0     # line from  LE GRNDJ 115.00   (2) to BRKR  WILSON B
115.00
 1  34118 34168  "1 "    0     # line from  LE GRNDJ 115.00   (2) to (2)   EL NIDO
115.00
 1  34168 34162  "1 "    0     # line from  EL NIDO  115.00   (2) to BRKR  ORO LOMA
115.00
 4  34168     0  "1 "    0     # LOAD-DROP    EL NIDO  115.00  LOAD==12.49(2.54)
 4  34168     0  "2 "    0     # LOAD-DROP    EL NIDO  115.00  LOAD==15.00(3.05)
 0
  #
  #
  # (4)   C5 DCTL OUTAGE
  # Panoche - Schindler #1 and #2 115 kV Lines
 1  34158 34350  "1 "    0     # line from  PANOCHE  115.00  BRKR to (2)   KAMM
115.00
 1  34350 34352  "1 "    0     # line from  KAMM     115.00   (2) to (2)   CANTUA
115.00
 1  34352 34432  "1 "    0     # line from  CANTUA   115.00   (2) to (2)   WESTLNDS
115.00
 1  34432 34354  "1 "    0     # line from  WESTLNDS 115.00   (2) to BRKR  SCHINDLR
115.00
 4  34350     0  "1 "    0     # LOAD-DROP    KAMM     115.00  LOAD==3.85(1.75)
 4  34352     0  "1 "    0     # LOAD-DROP    CANTUA   115.00  LOAD==16.79(3.41)
 4  34432     0  "16"    0     # LOAD-DROP    WESTLNDS 115.00  LOAD==0.94(0.23)
 4  34432     0  "18"    0     # LOAD-DROP    WESTLNDS 115.00  LOAD==1.21(0.32)
  #
 1  34141 34148  "1 "    0     # line from  PAN2_TAP 115.00   (2) to (2)   CHENY
115.00
 2  34141 34142  "1 "    0     # TRAN from  PAN2_TAP 115.00   (2) to (1)   WHD_PAN2
13.80
```

```
 1  34148 34149  "1 "    0     # line from  CHENY    115.00   (2) to (3)   CHENYT
115.00
 1  34149 34158  "1 "    0     # line from  CHENYT   115.00   (3) to BRKR  PANOCHE
115.00
 1  34149 34354  "1 "    0     # line from  CHENYT   115.00   (3) to BRKR  SCHINDLR
115.00
 4  34148     0  "1 "    0     # LOAD-DROP    CHENY    115.00  LOAD==13.12(2.66)
 3  34142     0  "1 "    0     # GEN-DROP    WHD_PAN2  13.80  GEN==49.00(4.03)
 0
  #
  #
  # (5)   C5 DCTL OUTAGE
  # Gates - Panoche #1 and #2 230 kV Lines
 1  30790 30900  "1 "    0     # line from  PANOCHE  230.00  BRKR to BRKR  GATES
230.00
  #
 1  30790 30900  "2 "    0     # line from  PANOCHE  230.00  BRKR to BRKR  GATES
230.00
 0
  #
  #
  # (6)   C5 DCTL OUTAGE
  # Los Banos - Panoche #2 and Los Banos - Dos Amigos 230 kV Lines
 1  30765 30790  "2 "    0     # line from  LOSBANOS 230.00  BRKR to BRKR  PANOCHE
230.00
  #
 1  30765 38615  "1 "    0     # line from  LOSBANOS 230.00  BRKR to BRKR  DS AMIGO
230.00
 0
  #
  #
  # (7)   C5 DCTL OUTAGE
  # Los Banos - Panoche #2 and Dos Amigos - Panoche 230 kV Lines
 1  30765 30790  "2 "    0     # line from  LOSBANOS 230.00  BRKR to BRKR  PANOCHE
230.00
  #
 1  38615 30790  "1 "    0     # line from  DS AMIGO 230.00  BRKR to BRKR  PANOCHE
230.00
 0
  #
  #
  # (8)   C5 DCTL OUTAGE
  # Los Banos - San Luis PGP #1 and #2 230 kV Lines
 1  30765 38625  "1 "    0     # line from  LOSBANOS 230.00  BRKR to BRKR  SN LS PP
230.00
  #
 1  30765 38625  "2 "    0     # line from  LOSBANOS 230.00  BRKR to BRKR  SN LS PP
230.00
 0
  #
  #
  # (9)   C5 DCTL OUTAGE
  # Bellota - Melones and Bellota - Warnerville 230 kV Lines
 1  30500 38206  "1 "    0     # line from  BELLOTA  230.00  BRKR to (2)   COTTLE A
230.00
 1  38206 37563  "1 "    0     # line from  COTTLE A 230.00   (2) to BRKR  MELONES
230.00
 4  38206     0  "1 "    0     # LOAD-DROP    COTTLE A 230.00  LOAD==19.23(0.00)
 3  34604     0  "**"    0     # Drop Helms unit#3 with a loss Bellota - Melones line
  #
 1  30500 38208  "1 "    0     # line from  BELLOTA  230.00  BRKR to (3)   COTTLE B
230.00
 1  38208 30515  "1 "    0     # line from  COTTLE B 230.00   (3) to BRKR  WARNERVL
230.00
 4  38208     0  "2 "    0     # LOAD-DROP    COTTLE B 230.00  LOAD==21.32(7.38)
 0
  #
  #
  # (10)   C5 DCTL OUTAGE
  # Bellota - Melones and Warnerville - Wilson 230 kV Lines
```

```
 1  30500 38206  "1 "    0     # line from  BELLOTA  230.00  BRKR to (2)   COTTLE A
230.00
 1  38206 37563  "1 "    0     # line from  COTTLE A 230.00   (2) to BRKR  MELONES
230.00
 4  38206     0  "1 "    0     # LOAD-DROP    COTTLE A 230.00  LOAD==19.23(0.00)
 3  34604     0  "**"    0     # Drop Helms unit#3 with a loss Bellota - Melones line
  #
 1  30515 30800  "1 "    0     # line from  WARNERVL 230.00  BRKR to BRKR  WILSON
230.00
 0
  #
  #
  # (11)   C5 DCTL OUTAGE
  # Bellota - Melones and Melones - Wilson 230 kV Lines
 1  30500 38206  "1 "    0     # line from  BELLOTA  230.00  BRKR to (2)   COTTLE A
230.00
 1  38206 37563  "1 "    0     # line from  COTTLE A 230.00   (2) to BRKR  MELONES
230.00
 4  38206     0  "1 "    0     # LOAD-DROP    COTTLE A 230.00  LOAD==19.23(0.00)
 3  34604     0  "**"    0     # Drop Helms unit#3 with a loss Bellota - Melones line
  #
 1  37563 30800  "1 "    0     # line from  MELONES  230.00  BRKR to BRKR  WILSON
230.00
 3  34604     0  "**"    0     # Drop Helms unit#3 with a loss Melones - Wilson line
 0
  #
  #
  # (12)   C5 DCTL OUTAGE
  # Melones - Wilson and Warnerville - Wilson 230 kV Lines
 1  37563 30800  "1 "    0     # line from  MELONES  230.00  BRKR to BRKR  WILSON
230.00
 3  34604     0  "**"    0     # Drop Helms unit#3 with a loss Melones - Wilson line
  #
 1  30515 30800  "1 "    0     # line from  WARNERVL 230.00  BRKR to BRKR  WILSON
230.00
 0
  #
  #
  # (13)   C5 DCTL OUTAGE
  # Wilson - Borden #1 and #2 230 kV Lines
 1  30795 30805  "1 "    0     # line from  STOREY 2 230.00   (2) to BRKR  BORDEN
230.00
 1  30795 30800  "1 "    0     # line from  STOREY 2 230.00   (2) to BRKR  WILSON
230.00
 4  30795     0  "2 "    0     # LOAD-DROP    STOREY 2 230.00  LOAD==33.89(6.88)
  #
 1  30796 30800  "1 "    0     # line from  STOREY 1 230.00   (2) to BRKR  WILSON
230.00
 1  30796 30805  "1 "    0     # line from  STOREY 1 230.00   (2) to BRKR  BORDEN
230.00
 4  30796     0  "1 "    0     # LOAD-DROP    STOREY 1 230.00  LOAD==37.87(7.69)
 0
  #
  #
  # (14)   C5 DCTL OUTAGE
  # Borden - Gregg #1 and #2 230 kV Lines
 1  30805 30810  "1 "    0     # line from  BORDEN   230.00  BRKR to BRKR  GREGG
230.00
 3  34604     0  "**"    0     # Drop unit#3 with loss of Gregg - Borden line
  #
 1  30805 30810  "2 "    0     # line from  BORDEN   230.00  BRKR to BRKR  GREGG
230.00
 3  34604     0  "**"    0     # Drop unit#3 with loss of Gregg - Borden #2 line
 0
  #
  #
  # (15)   C5 DCTL OUTAGE
  # Moss Landing - Panoche and Coburn - Panoche 230 kV Lines
 1  30750 30790  "1 "    0     # line from  MOSSLND2 230.00  BRKR to BRKR  PANOCHE
230.00
```

```
  #
 1  30760 30790  "1 "    0     # line from  COBURN   230.00  BRKR to BRKR  PANOCHE
230.00
 0
  #
  #
  # (16)   C5 DCTL OUTAGE
  # Panoche - Helm and Panoche - Kearney 230 kV Lines
 1  30790 30873  "1 "    0     # line from  PANOCHE  230.00  BRKR to BRKR  HELM
230.00
  #
 1  30790 30825  "1 "    0     # line from  PANOCHE  230.00  BRKR to (2)   MCMULLN1
230.00
 1  30825 30830  "1 "    0     # line from  MCMULLN1 230.00   (2) to BRKR  KEARNEY
230.00
 4  30825     0  "1 "    0     # LOAD-DROP    MCMULLN1 230.00  LOAD==20.57(4.18)
 0
  #
  #
  # (17) BUS FAULT  30765  "LOSBANOS" Bus Section 1
  #
 1  30765  30670  "1"    0     # LINE from  LOSBANOS 230.00  to  WESTLEY  230.00
 1  30765  30790  "2"    0     # LINE from  LOSBANOS 230.00  to  PANOCHE  230.00
 1  30765  38625  "1"    0     # LINE from  LOSBANOS 230.00  to  SN LS PP 230.00
 1  30765  38625  "2"    0     # LINE from  LOSBANOS 230.00  to  SN LS PP 230.00
 2  30765  34214  "3"    0     # TRAN from  LOSBANOS 230.00  to  LOS BANS  70.00
 6  30765     0  "v"     0     # drop Los Banos 230 kV shunt Caps
 0
  #
  #
  # (18) BUS FAULT  30765  "LOSBANOS" Bus Section 2
  #
 1  30765  30790  "1"    0     # LINE from  LOSBANOS 230.00  to  PANOCHE  230.00
 1  30765  38615  "1"    0     # LINE from  LOSBANOS 230.00  to  DS AMIGO 230.00
 2  30765  34214  "4"    0     # TRAN from  LOSBANOS 230.00  to  LOS BANS  70.00
 0
  #
  #
  # (19) BUS FAULT  30790  "PANOCHE" Bus Section 1
  #
 1  30790  30760  "1"    0     # LINE from  PANOCHE  230.00  to  COBURN   230.00
 1  30790  30765  "1"    0     # LINE from  PANOCHE  230.00  to  LOSBANOS 230.00
 1  30790  30765  "2"    0     # LINE from  PANOCHE  230.00  to  LOSBANOS 230.00
 1  30790  30825  "1"    0     # LINE from  PANOCHE  230.00  to  MCMULLN1 230.00
 1  30790  30900  "1"    0     # LINE from  PANOCHE  230.00  to  GATES    230.00
 2  30790  30791  "1"    0     # TRAN from  PANOCHE  230.00  to  PNCHE 1M 230.00
 0
  #
  #
  # (20) BUS FAULT  30790  "PANOCHE" Bus Section 2
  #
 1  30790  30750  "1"    0     # LINE from  PANOCHE  230.00  to  MOSSLND2 230.00
 1  30790  30793  "1"    0     # LINE from  PANOCHE  230.00  to  PANO_EC  230.00
 1  30790  30873  "1"    0     # LINE from  PANOCHE  230.00  to  HELM     230.00
 1  30790  30900  "2"    0     # LINE from  PANOCHE  230.00  to  GATES    230.00
 1  30790  38615  "1"    0     # LINE from  PANOCHE  230.00  to  DS AMIGO 230.00
 2  30790  34158  "2"    0     # TRAN from  PANOCHE  230.00  to  PANOCHE  115.00
 0
  #
  #
  # (21) BUS FAULT  34100  "CHWCHLLA"
  #
 1  34100  34101  "1"    0     # LINE from  CHWCHLLA 115.00  to  CERTAN T 115.00
 1  34100  34105  "1"    0     # LINE from  CHWCHLLA 115.00  to  CERTANJ1 115.00
 4  34100     0  "1 "    0     # LOAD-DROP    CHWCHLLA 115.00  LOAD==10.13(2.06)
 4  34100     0  "2 "    0     # LOAD-DROP    CHWCHLLA 115.00  LOAD==13.86(2.82)
 0
  #
  #
  # (22) BUS FAULT  34104  "ATWATER"
```

```
 #
1  34104  34106  "1"    0     # LINE from  ATWATER  115.00  to  CASTLE   115.00
1  34104  34108  "1"    0     # LINE from  ATWATER  115.00  to  CRESEY T 115.00
1  34104  34134  "1"    0     # LINE from  ATWATER  115.00  to  WILSON A 115.00
4  34104     0  "1 "    0     # LOAD-DROP    ATWATER  115.00  LOAD==32.40(6.57)
4  34104     0  "2 "    0     # LOAD-DROP    ATWATER  115.00  LOAD==28.36(5.76)
0
 #
 #
 # (23) BUS FAULT  34112  "EXCHEQUR"
 #
1  34112  34116  "1"    0     # LINE from  EXCHEQUR 115.00  to  LE GRAND 115.00
2  34112  34176  "1"    0     # TRAN from  EXCHEQUR 115.00  to  EXCHQRTP 115.00
0
 #
 #
 # (24) BUS FAULT  34116  "LE GRAND"
 #
1  34116  34101  "1"    0     # LINE from  LE GRAND 115.00  to  CERTAN T 115.00
1  34116  34112  "1"    0     # LINE from  LE GRAND 115.00  to  EXCHEQUR 115.00
1  34116  34134  "1"    0     # LINE from  LE GRAND 115.00  to  WILSON A 115.00
1  34116  34154  "1"    0     # LINE from  LE GRAND 115.00  to  DAIRYLND 115.00
4  34116     0  "1 "    0     # LOAD-DROP    LE GRAND 115.00  LOAD==13.41(2.72)
0
 #
 #
 # (25) BUS FAULT  34134  "WILSON A"
 #
1  34134  34116  "1"    0     # LINE from  WILSON A 115.00  to  LE GRAND 115.00
1  34134  34104  "1"    0     # LINE from  WILSON A 115.00  to  ATWATER  115.00
1  34134  34136  "1"    0     # LINE from  WILSON A 115.00  to  WILSON B 115.00
1  34134  34144  "1"    0     # LINE from  WILSON A 115.00  to  MERCED   115.00
2  34134  30800  "1"    0     # TRAN from  WILSON A 115.00  to  WILSON   230.00
4  34134     0  "3 "    0     # LOAD-DROP    WILSON A 115.00  LOAD==18.66(3.79)
6  34134     0  "v"     0     # drop Wilson A 115 kV shunt Caps
0
 #
 #
 # (26) BUS FAULT  34136  "WILSON B"
 #
1  34136  34118  "1"    0     # LINE from  WILSON B 115.00  to  LE GRNDJ 115.00
1  34136  34134  "1"    0     # LINE from  WILSON B 115.00  to  WILSON A 115.00
1  34136  34138  "1"    0     # LINE from  WILSON B 115.00  to  EL CAPTN 115.00
1  34136  34144  "2"    0     # LINE from  WILSON B 115.00  to  MERCED   115.00
2  34136  30800  "2"    0     # TRAN from  WILSON B 115.00  to  WILSON   230.00
0
 #
 #
 # (27) BUS FAULT  34138  "EL CAPTN"
 #
1  34138  34106  "1"    0     # LINE from  EL CAPTN 115.00  to  CASTLE   115.00
1  34138  34136  "1"    0     # LINE from  EL CAPTN 115.00  to  WILSON B 115.00
4  34138     0  "1 "    0     # LOAD-DROP    EL CAPTN 115.00  LOAD==19.47(3.95)
4  34138     0  "2 "    0     # LOAD-DROP    EL CAPTN 115.00  LOAD==25.91(5.26)
4  34138     0  "3 "    0     # LOAD-DROP    EL CAPTN 115.00  LOAD==33.05(6.71)
0
 #
 #
 # (28) BUS FAULT  34144  "MERCED"
 #
1  34144  34110  "1"    0     # LINE from  MERCED   115.00  to  ATWATR J 115.00
1  34144  34134  "1"    0     # LINE from  MERCED   115.00  to  WILSON A 115.00
1  34144  34136  "2"    0     # LINE from  MERCED   115.00  to  WILSON B 115.00
2  34144  34146  "2"    0     # TRAN from  MERCED   115.00  to  MERCED M 115.00
4  34144     0  "1 "    0     # LOAD-DROP    MERCED   115.00  LOAD==37.10(7.53)
4  34144     0  "3 "    0     # LOAD-DROP    MERCED   115.00  LOAD==19.45(3.95)
0
 #
 #
 # (29) BUS FAULT  34154  "DAIRYLND"
```

```
 #
1  34154  34116  "1"    0     # LINE from  DAIRYLND 115.00  to  LE GRAND 115.00
1  34154  34150  "1"    0     # LINE from  DAIRYLND 115.00  to  NEWHALL  115.00
4  34154     0  "1 "    0     # LOAD-DROP    DAIRYLND 115.00  LOAD==25.82(5.24)
0
 #
 #
 # (30) BUS FAULT  34158  "PANOCHE" Bus Section 1
 #
1  34158  34149  "1"    0     # LINE from  PANOCHE  115.00  to  CHENYT   115.00
1  34158  34159  "1"    0     # LINE from  PANOCHE  115.00  to  PANOCHEJ 115.00
2  34158  30790  "2"    0     # TRAN from  PANOCHE  115.00  to  PANOCHE  230.00
2  34158  34186  "1"    0     # TRAN from  PANOCHE  115.00  to  DG_PAN1   13.80
0
 #
 #
 # (31) BUS FAULT  34158  "PANOCHE" Bus Section 2
 #
1  34158  34157  "1"    0     # LINE from  PANOCHE  115.00  to  PANOCHET 115.00
1  34158  34189  "1"    0     # LINE from  PANOCHE  115.00  to  STARWOOD 115.00
1  34158  34350  "1"    0     # LINE from  PANOCHE  115.00  to  KAMM     115.00
2  34158  30791  "1"    0     # TRAN from  PANOCHE  115.00  to  PNCHE 1M 230.00
0
 #
 #
 # (32) BUS FAULT  34200  "ORO LOMA"
 #
1  34200  34218  "1"    0     # LINE from  ORO LOMA  70.00  to  DOS PALS  70.00
1  34200  34222  "1"    0     # LINE from  ORO LOMA  70.00  to  MRCYSPRS  70.00
1  34200  34234  "1"    0     # LINE from  ORO LOMA  70.00  to  POSO J1   70.00
2  34200  34162  "2"    0     # TRAN from  ORO LOMA  70.00  to  ORO LOMA 115.00
4  34200     0  "1 "    0     # LOAD-DROP    ORO LOMA  70.00  LOAD==8.64(1.75)
0
 #
 #
 # (33) BUS FAULT  34202  "MERCED"
 #
1  34202  34203  "1"    0     # LINE from  MERCED    70.00  to  ELNIDOTP  70.00
1  34202  34230  "1"    0     # LINE from  MERCED    70.00  to  MRCDFLLS  70.00
2  34202  34146  "2"    0     # TRAN from  MERCED    70.00  to  MERCED M 115.00
0
 #
 #
 # (34) BUS FAULT  34206  "CANAL"
 #
1  34206  34212  "1"    0     # LINE from  CANAL     70.00  to  LVNGSTNT  70.00
1  34206  34216  "1"    0     # LINE from  CANAL     70.00  to  SNTA RTA  70.00
1  34206  34220  "1"    0     # LINE from  CANAL     70.00  to  ORTIGA    70.00
4  34206     0  "1 "    0     # LOAD-DROP    CANAL     70.00  LOAD==30.56(6.21)
4  34206     0  "2 "    0     # LOAD-DROP    CANAL     70.00  LOAD==31.27(6.35)
0
 #
 #
 # (35) BUS FAULT  34214  "LOS BANS"
 #
1  34214  34208  "1"    0     # LINE from  LOS BANS  70.00  to  CHEVPIPE  70.00
1  34214  34272  "1"    0     # LINE from  LOS BANS  70.00  to  WRGHT PP  70.00
1  34214  34278  "1"    0     # LINE from  LOS BANS  70.00  to  PCHCO PP  70.00
1  34214  34282  "1"    0     # LINE from  LOS BANS  70.00  to  ONLL PMP  69.00
2  34214  30765  "3"    0     # TRAN from  LOS BANS  70.00  to  LOSBANOS 230.00
2  34214  30765  "4"    0     # TRAN from  LOS BANS  70.00  to  LOSBANOS 230.00
0
 #
 #
 # (36) BUS FAULT  34216  "SNTA RTA"
 #
1  34216  34206  "1"    0     # LINE from  SNTA RTA  70.00  to  CANAL     70.00
1  34216  34218  "1"    0     # LINE from  SNTA RTA  70.00  to  DOS PALS  70.00
4  34216     0  "1 "    0     # LOAD-DROP    SNTA RTA  70.00  LOAD==7.48(1.52)
0
```

```
 #
 #
 # (37) BUS FAULT  34230  "MRCDFLLS"
 #
1  34230  34202  "1"    0     # LINE from  MRCDFLLS  70.00  to  MERCED    70.00
1  34230  34321  "1"    0     # LINE from  MRCDFLLS  70.00  to  MCSWAINJ  70.00
2  34230  34322  "1"    0     # TRAN from  MRCDFLLS  70.00  to  MERCEDFL   9.11
2  34230  34322  "2"    0     # TRAN from  MRCDFLLS  70.00  to  MERCEDFL   9.11
4  34230     0  "2 "    0     # LOAD-DROP    MRCDFLLS  70.00  LOAD==8.94(1.82)
0
 #
 #
 # (38) BUS FAULT  34238  "BONITA"
 #
1  34238  34236  "1"    0     # LINE from  BONITA    70.00  to  POSO J2   70.00
1  34238  34255  "1"    0     # LINE from  BONITA    70.00  to  TRIGO J   70.00
4  34238     0  "1 "    0     # LOAD-DROP    BONITA    70.00  LOAD==14.37(2.92)
0
 #
 #
 # (39) BUS FAULT  34240  "GLASS"
 #
1  34240  34237  "1"    0     # LINE from  GLASS     70.00  to  CANANDGA  70.00
1  34240  34256  "1"    0     # LINE from  GLASS     70.00  to  BORDEN    70.00
4  34240     0  "1 "    0     # LOAD-DROP    GLASS     70.00  LOAD==9.05(4.89)
0
 #
 #
 # (40) BUS FAULT  34252  "MADERA"
 #
1  34252  34254  "1"    0     # LINE from  MADERA    70.00  to  TRIGO     70.00
1  34252  34256  "1"    0     # LINE from  MADERA    70.00  to  BORDEN    70.00
1  34252  34256  "2"    0     # LINE from  MADERA    70.00  to  BORDEN    70.00
4  34252     0  "1 "    0     # LOAD-DROP    MADERA    70.00  LOAD==17.99(3.65)
4  34252     0  "2 "    0     # LOAD-DROP    MADERA    70.00  LOAD==23.16(4.71)
6  34252     0  "v"     0     # drop Madera 70 kV shunt Caps
0
 #
 #
 # (41) BUS FAULT  34256  "BORDEN"
 #
1  34256  34252  "1"    0     # LINE from  BORDEN    70.00  to  MADERA    70.00
1  34256  34252  "2"    0     # LINE from  BORDEN    70.00  to  MADERA    70.00
1  34256  34240  "1"    0     # LINE from  BORDEN    70.00  to  GLASS     70.00
1  34256  34262  "1"    0     # LINE from  BORDEN    70.00  to  CASSIDY   70.00
2  34256  30805  "1"    0     # TRAN from  BORDEN    70.00  to  BORDEN   230.00
2  34256  30805  "2"    0     # TRAN from  BORDEN    70.00  to  BORDEN   230.00
0
 #
 #
 # (42) BUS FAULT  34268  "MENDOTA"
 #
1  34268  34267  "1"    0     # LINE from  MENDOTA   70.00  to  TOMATAK   70.00
1  34268  34269  "1"    0     # LINE from  MENDOTA   70.00  to  BIOMSJCT  70.00
2  34268  34156  "1"    0     # TRAN from  MENDOTA   70.00  to  MENDOTA  115.00
0
 #
 #
 # 2013 sumpk category c contingency list
 # Fresno Zone 314
 #
 #
 # (43)   C5 DCTL OUTAGE
 # Gates - Schindler and Gates - Huron #1 70 kV Lines
1  34558 34560  "1 "    0     # line from  HURON     70.00  BRKR to (2)   CALFLAX
70.00
1  34560 34562  "1 "    0     # line from  CALFLAX   70.00   (2) to BRKR  SCHLNDLR
70.00
4  34560     0  "1 "    0     # LOAD-DROP    CALFLAX   70.00  LOAD==6.53(1.33)
1  34552 34558  "2 "    0      # Must include Gates - Huron #2 in this outage
```

```
  #
 1  34552 34558  "1 "    0     # line from  GATES     70.00  BRKR to BRKR  HURON
70.00
 0
  #
  #
  # (44)   C5 DCTL OUTAGE
  # Barton - Sanger and Manchester - Sanger 115 kV Lines
 1  34359 34361  "1 "    0     # line from  AIRWAYJ2 115.00   (3) to BRKR  AIRWAYS
115.00
 1  34359 34408  "1 "    0     # line from  AIRWAYJ2 115.00   (3) to BRKR  BARTON
115.00
 1  34359 34366  "1 "    0     # line from  AIRWAYJ2 115.00   (3) to BRKR  SANGER
115.00
  #
 1  34357 34361  "1 "    0     # line from  AIRWAYJ1 115.00   (3) to BRKR  AIRWAYS
115.00
 1  34357 34368  "1 "    0     # line from  AIRWAYJ1 115.00   (3) to (2)   LASPALMS
115.00
 1  34357 34410  "1 "    0     # line from  AIRWAYJ1 115.00   (3) to BRKR  MANCHSTR
115.00
 1  34368 34366  "1 "    0     # line from  LASPALMS 115.00   (2) to BRKR  SANGER
115.00
 4  34368     0  "1 "    0     # LOAD-DROP    LASPALMS 115.00  LOAD==13.90(11.89)
 0
  #
  #
  # (45)   C5 DCTL OUTAGE
  # Herndon - Barton and Herndon - Manchester 115 kV Lines
 1  34408 34412  "1 "    0     # line from  BARTON   115.00  BRKR to BRKR  HERNDON
115.00
  #
 1  34410 34412  "1 "    0     # line from  MANCHSTR 115.00  BRKR to BRKR  HERNDON
115.00
 0
  #
  #
  # (46)   C5 DCTL OUTAGE
  # Herndon - Barton and Manchester - Sanger 115 kV Lines
 1  34408 34412  "1 "    0     # line from  BARTON   115.00  BRKR to BRKR  HERNDON
115.00
  #
 1  34357 34361  "1 "    0     # line from  AIRWAYJ1 115.00   (3) to BRKR  AIRWAYS
115.00
 1  34357 34368  "1 "    0     # line from  AIRWAYJ1 115.00   (3) to (2)   LASPALMS
115.00
 1  34357 34410  "1 "    0     # line from  AIRWAYJ1 115.00   (3) to BRKR  MANCHSTR
115.00
 1  34368 34366  "1 "    0     # line from  LASPALMS 115.00   (2) to BRKR  SANGER
115.00
 4  34368     0  "1 "    0     # LOAD-DROP    LASPALMS 115.00  LOAD==13.90(11.89)
 0
  #
  #
  # (47)   C5 DCTL OUTAGE
  # Herndon - Bullard #1 and #2 115 kV Lines
 1  34411 34416  "1 "    0     # line from  PNDLJ1   115.00   (2) to BRKR  BULLARD
115.00
 1  34411 34412  "1 "    0     # line from  PNDLJ1   115.00   (2) to BRKR  HERNDON
115.00
  #
 1  34409 34413  "1 "    0     # line from  PNDLJ2   115.00   (3) to BRKR  PNEDLE
115.00
 1  34409 34416  "1 "    0     # line from  PNDLJ2   115.00   (3) to BRKR  BULLARD
115.00
 1  34409 34412  "1 "    0     # line from  PNDLJ2   115.00   (3) to BRKR  HERNDON
115.00
 4  34413     0  "2 "    0     # LOAD-DROP    PNEDLE   115.00  LOAD==30.74(6.25)
 4  34413     0  "3 "    0     # LOAD-DROP    PNEDLE   115.00  LOAD==40.42(8.20)
 1  34411 34413  "1 "    1      # Switches in Pindale CB#12 to transfer load
```

```
 4  34413     0  "**"    1      # Restore load at Pindale
 0
  #
  #
  # (48)   C5 DCTL OUTAGE
  # Kerckhoff - Clovis - Sanger #1 and #2 115 kV Lines
 1  34358 34360  "1 "    0     # line from  KERCKHF2 115.00  BRKR to (3)   WWARD JT
115.00
 1  34360 34414  "1 "    0     # line from  WWARD JT 115.00   (3) to BRKR  WOODWARD
115.00
 1  34360 34363  "1 "    0     # line from  WWARD JT 115.00   (3) to (3)   CLOVISJ1
115.00
 1  34363 34362  "1 "    0     # line from  CLOVISJ1 115.00   (3) to BRKR  CLOVIS-1
115.00
 1  34363 34366  "1 "    0     # line from  CLOVISJ1 115.00   (3) to BRKR  SANGER
115.00
 4  34362     0  "1 "    0     # LOAD-DROP    CLOVIS-1 115.00  LOAD==51.01(10.36)
 4  34362     0  "2 "    0     # LOAD-DROP    CLOVIS-1 115.00  LOAD==50.20(10.20)
 1 34362  34364  "1 "    1      # Switches in Clovis SW 387 to transfer load
 4 34362      0  "**"    1      # Restore Load at Clovis 1
  #
 1  34364 34365  "1 "    0     # line from  CLOVIS-2 115.00  BRKR to (3)   CLOVISJ2
115.00
 1  34365 34358  "1 "    0     # line from  CLOVISJ2 115.00   (3) to BRKR  KERCKHF2
115.00
 1  34365 34366  "1 "    0     # line from  CLOVISJ2 115.00   (3) to BRKR  SANGER
115.00
 4  34364     0  "3 "    0     # LOAD-DROP    CLOVIS-2 115.00  LOAD==44.76(9.09)
 1 34362  34364  "1 "    1      # Switches in Clovis SW 387 to transfer load
 4 34364      0  "**"    1      # Restore Load at Clovis 2
 0
  #
  #
  # (49)   C5 DCTL OUTAGE
  # Kingburg - Corcoran #1 and #2 115 kV Lines
 1  34418 34420  "1 "    0     # line from  KINGSBRG 115.00  BRKR to BRKR  CORCORAN
115.00
  #
 1  34418 34420  "2 "    0     # line from  KINGSBRG 115.00  BRKR to BRKR  CORCORAN
115.00
 0
  #
  #
  # (50)   C5 DCTL OUTAGE
  # Kings River - Sanger - Reedley and Balch - Sanger 115 kV Lines
 1  34366 34389  "1 "    0     # line from  SANGER   115.00  BRKR to (3)   RAINBWTP
115.00
 1  34389 34388  "1 "    0     # line from  RAINBWTP 115.00   (3) to (1)   RAINBW
115.00
 1  34389 34394  "1 "    0     # line from  RAINBWTP 115.00   (3) to (3)   PIEDRA 1
115.00
 1  34394 34380  "1 "    0     # line from  PIEDRA 1 115.00   (3) to BRKR  REEDLEY
115.00
 1  34394 34400  "1 "    0     # line from  PIEDRA 1 115.00   (3) to BRKR  KNGSRVR1
115.00
 4  34388     0  "1 "    0     # LOAD-DROP    RAINBW   115.00  LOAD==16.20(3.29)
  #
 1  34366 34396  "1 "    0     # line from  SANGER   115.00  BRKR to (2)   PIEDRA 2
115.00
 1  34396 34398  "1 "    0     # line from  PIEDRA 2 115.00   (2) to (2)   BALCH
115.00
 2  34398 34624  "1 "    0     # TRAN from  BALCH    115.00   (2) to (1)   BALCH 1
13.20
 4  34624     0  "1 "    0     # LOAD-DROP    BALCH 1   13.20  LOAD==0.26(0.00)
 3  34624     0  "1 "    0     # GEN-DROP    BALCH 1   13.20  GEN==27.00(8.33)
 0
  #
  #
  # (51)   C5 DCTL OUTAGE
  # McCall - Kingsburg #1 and #2 115 kV Lines
```

```
 1  34370 34385  "1 "    0     # line from  MC CALL  115.00  BRKR to (3)   KINGS J1
115.00
 1  34385 34417  "1 "    0     # line from  KINGS J1 115.00   (3) to (2)   KINGS J2
115.00
 1  34385 34425  "1 "    0     # line from  KINGS J1 115.00   (3) to (3)   KCOGNJCT
115.00
 1  34417 34418  "1 "    0     # line from  KINGS J2 115.00   (2) to BRKR  KINGSBRG
115.00
 1  34425 34387  "1 "    0     # line from  KCOGNJCT 115.00   (3) to (1)   SUNMAID
115.00
 1  34425 34427  "1 "    0     # line from  KCOGNJCT 115.00   (3) to (2)   GRDNGLS2
115.00
 1  34427 34386  "1 "    0     # line from  GRDNGLS2 115.00   (2) to (2)   KNGSCOGN
115.00
 2  34386 34642  "1 "    0     # TRAN from  KNGSCOGN 115.00   (2) to BRKR  KINGSBUR
9.11
 4  34387     0  "1 "    0     # LOAD-DROP    SUNMAID  115.00  LOAD==3.40(3.28)
 3  34642     0  "1 "    0     # GEN-DROP    KINGSBUR   9.11  GEN==34.00(17.30)
  #
 1  34418 34423  "1 "    0     # line from  KINGSBRG 115.00  BRKR to (3)   GAURD J1
115.00
 1  34423 34370  "1 "    0     # line from  GAURD J1 115.00   (3) to BRKR  MC CALL
115.00
 1  34423 34421  "1 "    0     # line from  GAURD J1 115.00   (3) to (2)   GAURD J2
115.00
 1  34421 34424  "1 "    0     # line from  GAURD J2 115.00   (2) to (1)   GRDN GLS
115.00
 4  34424     0  "1 "    0     # LOAD-DROP    GRDN GLS 115.00  LOAD==3.50(1.15)
 4  34418     0  "3 "    0      # Kingsburg Bank #3 will also be dropped on this outage
 0
  #
  #
  # (52)   C5 DCTL OUTAGE
  # McCall - Sanger #1 and #2 115 kV Lines
 1  34366 34370  "1 "    0     # line from  SANGER   115.00  BRKR to BRKR  MC CALL
115.00
  #
 1  34366 34370  "2 "    0     # line from  SANGER   115.00  BRKR to BRKR  MC CALL
115.00
 0
  #
  #
  # (53)   C5 DCTL OUTAGE
  # McCall - West Fresno and California Ave. - West Fresno 115 kV Lines
 1  34404 34370  "1 "    0     # line from  WST FRSO 115.00  BRKR to BRKR  MC CALL
115.00
  #
 1  34402 34404  "1 "    0     # line from  CAL AVE  115.00  BRKR to BRKR  WST FRSO
115.00
 0
  #
  #
  # (54)   C5 DCTL OUTAGE
  # McCall - West Fresno and California Ave. - McCall 115 kV Lines
 1  34404 34370  "1 "    0     # line from  WST FRSO 115.00  BRKR to BRKR  MC CALL
115.00
  #
 1  34390 34370  "1 "    0     # line from  DANISHCM 115.00   (2) to BRKR  MC CALL
115.00
 1  34390 34402  "1 "    0     # line from  DANISHCM 115.00   (2) to BRKR  CAL AVE
115.00
 4  34390     0  "1 "    0     # LOAD-DROP    DANISHCM 115.00  LOAD==4.10(3.51)
 0
  #
  #
  # (55)   C5 DCTL OUTAGE
  # Gates - Gregg and Gates - McCall 230 kV Lines
 1  30810 30879  "1 "    0     # line from  GREGG    230.00  BRKR to (3)   HENTAP1
230.00
```

```
 1  30879 30881  "1 "    0     # line from  HENTAP1  230.00   (3) to BRKR  HENRIETA
230.00
 1  30879 30900  "1 "    0     # line from  HENTAP1  230.00   (3) to BRKR  GATES
230.00
 3  34604     0  "**"    0      # Drop unit#3 with a loss Gregg - Henrietta Tap 1 line
 1  30880 30881  "1 "    1      # Henrietta flip flop (Henrietta CB 222)
  #
 1  30875 30880  "1 "    0     # line from  MC CALL  230.00  BRKR to (2)   HENTAP2
230.00
 1  30880 30900  "1 "    0     # line from  HENTAP2  230.00   (2) to BRKR  GATES
230.00
 0
  #
  #
  # (56)   C5 DCTL OUTAGE
  # Panoche - Kearney and Gates - Gregg 230 kV Lines
 1  30790 30825  "1 "    0     # line from  PANOCHE  230.00  BRKR to (2)   MCMULLN1
230.00
 1  30825 30830  "1 "    0     # line from  MCMULLN1 230.00   (2) to BRKR  KEARNEY
230.00
 4  30825     0  "1 "    0     # LOAD-DROP    MCMULLN1 230.00  LOAD==20.57(4.18)
  #
 1  30810 30879  "1 "    0     # line from  GREGG    230.00  BRKR to (3)   HENTAP1
230.00
 1  30879 30881  "1 "    0     # line from  HENTAP1  230.00   (3) to BRKR  HENRIETA
230.00
 1  30879 30900  "1 "    0     # line from  HENTAP1  230.00   (3) to BRKR  GATES
230.00
 3  34604     0  "**"    0      # Drop unit#3 with a loss Gregg - Henrietta Tap 1 line
 1  30880 30881  "1 "    1      # Henrietta flip flop (Henrietta CB 222)
 0
  #
  #
  # (57)   C5 DCTL OUTAGE
  # Panoche - Kearney and Panoche - Helm 230 kV Lines
 1  30790 30825  "1 "    0     # line from  PANOCHE  230.00  BRKR to (2)   MCMULLN1
230.00
 1  30825 30830  "1 "    0     # line from  MCMULLN1 230.00   (2) to BRKR  KEARNEY
230.00
 4  30825     0  "1 "    0     # LOAD-DROP    MCMULLN1 230.00  LOAD==20.57(4.18)
  #
 1  30790 30873  "1 "    0     # line from  PANOCHE  230.00  BRKR to BRKR  HELM
230.00
 0
  #
  #
  # (58)   C5 DCTL OUTAGE
  # Panoche - Kearney and Helm - McCall 230 kV Lines
 1  30790 30825  "1 "    0     # line from  PANOCHE  230.00  BRKR to (2)   MCMULLN1
230.00
 1  30825 30830  "1 "    0     # line from  MCMULLN1 230.00   (2) to BRKR  KEARNEY
230.00
 4  30825     0  "1 "    0     # LOAD-DROP    MCMULLN1 230.00  LOAD==20.57(4.18)
  #
 1  30873 30875  "1 "    0     # line from  HELM     230.00  BRKR to BRKR  MC CALL
230.00
 0
  #
  #
  # (59)   C5 DCTL OUTAGE
  # Helm - McCall and Gates - McCall 230 kV Lines
 1  30873 30875  "1 "    0     # line from  HELM     230.00  BRKR to BRKR  MC CALL
230.00
  #
 1  30875 30880  "1 "    0     # line from  MC CALL  230.00  BRKR to (2)   HENTAP2
230.00
 1  30880 30900  "1 "    0     # line from  HENTAP2  230.00   (2) to BRKR  GATES
230.00
 0
  #
```

```
  #
  # (60)   C5 DCTL OUTAGE
  # Helms - Gregg #1 and #2 230 kV Lines
 1  30810 30820  "1 "    0     # line from  GREGG    230.00  BRKR to BRKR  HELMS PP
230.00
 3  34600     0  "**"    0      # Drop unit#1 with a loss Helm - Gregg #1 line
  #
 1  30810 30820  "2 "    0     # line from  GREGG    230.00  BRKR to BRKR  HELMS PP
230.00
 3  34604     0  "**"    0      # Drop unit#3 with a loss Helm - Gregg #2 line
 0
  #
  #
  # (61)   C5 DCTL OUTAGE
  # Gregg - Herndon #1 and #2 230 kV Lines
 1  30810 30835  "1 "    0     # line from  GREGG    230.00  BRKR to BRKR  HERNDON
230.00
 3  34604     0  "**"    0      # Drop unit#3 with a loss Gregg - Herndon #1 line
  #
 1  30810 30835  "2 "    0     # line from  GREGG    230.00  BRKR to BRKR  HERNDON
230.00
 3  34604     0  "**"    0      # Drop unit#3 with a loss Gregg - Herndon #2 line
 0
  #
  #
  # (62)   C5 DCTL OUTAGE
  # Herndon - Kearney and Herndon - Ashlan 230 kV Lines
 1  30830 30835  "1 "    0     # line from  KEARNEY  230.00  BRKR to BRKR  HERNDON
230.00
  #
 1  30835 30840  "1 "    0     # line from  HERNDON  230.00  BRKR to (3)   FGRDN T1
230.00
 1  30840 30841  "1 "    0     # line from  FGRDN T1 230.00   (3) to BRKR  FIGRDN 1
230.00
 1  30840 30850  "1 "    0     # line from  FGRDN T1 230.00   (3) to BRKR  ASHLAN
230.00
 4  30841     0  "1 "    0     # LOAD-DROP    FIGRDN 1 230.00  LOAD==73.45(14.92)
 1 30841  30846  "1 "    1      # Switches in Figarden SW 286 to transfer load
 4 30841      0  "**"    1      # Restore Load at Figarden 1
 0
  #
  #
  # (63)   C5 DCTL OUTAGE
  # Herndon - Kearney and Gates - Gregg 230 kV Lines
 1  30830 30835  "1 "    0     # line from  KEARNEY  230.00  BRKR to BRKR  HERNDON
230.00
  #
 1  30810 30879  "1 "    0     # line from  GREGG    230.00  BRKR to (3)   HENTAP1
230.00
 1  30879 30881  "1 "    0     # line from  HENTAP1  230.00   (3) to BRKR  HENRIETA
230.00
 1  30879 30900  "1 "    0     # line from  HENTAP1  230.00   (3) to BRKR  GATES
230.00
 3  34604     0  "**"    0      # Drop unit#3 with a loss Gregg - Henrietta Tap 1 line
 1  30880 30881  "1 "    1      # Henrietta flip flop (Henrietta CB 222)
 0
  #
  #
  # (64)   C5 DCTL OUTAGE
  # Gates - Gregg and Gregg - Ashlan 230 kV Lines
 1  30810 30879  "1 "    0     # line from  GREGG    230.00  BRKR to (3)   HENTAP1
230.00
 1  30879 30881  "1 "    0     # line from  HENTAP1  230.00   (3) to BRKR  HENRIETA
230.00
 1  30879 30900  "1 "    0     # line from  HENTAP1  230.00   (3) to BRKR  GATES
230.00
 3  34604     0  "**"    0      # Drop unit#3 with a loss Gregg - Henrietta Tap 1 line
 1  30880 30881  "1 "    1      # Henrietta flip flop (Henrietta CB 222)
  #
```

```
 1  30810 30845  "1 "    0     # line from  GREGG    230.00  BRKR to (3)   FGRDN T2
230.00
 1  30845 30846  "1 "    0     # line from  FGRDN T2 230.00   (3) to BRKR  FIGRDN 2
230.00
 1  30845 30850  "1 "    0     # line from  FGRDN T2 230.00   (3) to BRKR  ASHLAN
230.00
 4  30846     0  "1 "    0     # LOAD-DROP    FIGRDN 2 230.00  LOAD==52.57(10.67)
 4  30846     0  "2 "    0     # LOAD-DROP    FIGRDN 2 230.00  LOAD==36.77(7.47)
 3  34604     0  "**"    0      # Drop unit#3 with a loss Gregg - Figarden line
 1 30841  30846  "1 "    1      # Switches in Figarden SW 286 to transfer load
 4 30846      0  "**"    1      # Restore Load at Figarden 2
 0
  #
  #
  # (65)   C5 DCTL OUTAGE
  # Herndon - Ashlan and Gregg - Ashlan 230 kV Lines
 1  30835 30840  "1 "    0     # line from  HERNDON  230.00  BRKR to (3)   FGRDN T1
230.00
 1  30840 30841  "1 "    0     # line from  FGRDN T1 230.00   (3) to BRKR  FIGRDN 1
230.00
 1  30840 30850  "1 "    0     # line from  FGRDN T1 230.00   (3) to BRKR  ASHLAN
230.00
 4  30841     0  "1 "    0     # LOAD-DROP    FIGRDN 1 230.00  LOAD==73.45(14.92)
 1 30841  30846  "1 "    1      # Switches in Figarden SW 286 to transfer load
 4 30841      0  "**"    1      # Restore Load at Figarden 1
  #
 1  30810 30845  "1 "    0     # line from  GREGG    230.00  BRKR to (3)   FGRDN T2
230.00
 1  30845 30846  "1 "    0     # line from  FGRDN T2 230.00   (3) to BRKR  FIGRDN 2
230.00
 1  30845 30850  "1 "    0     # line from  FGRDN T2 230.00   (3) to BRKR  ASHLAN
230.00
 4  30846     0  "1 "    0     # LOAD-DROP    FIGRDN 2 230.00  LOAD==52.57(10.67)
 4  30846     0  "2 "    0     # LOAD-DROP    FIGRDN 2 230.00  LOAD==36.77(7.47)
 3  34604     0  "**"    0      # Drop unit#3 with a loss Gregg - Figarden line
 1 30841  30846  "1 "    1      # Switches in Figarden SW 286 to transfer load
 4 30846      0  "**"    1      # Restore Load at Figarden 2
 0
  #
  #
  # (66)   C5 DCTL OUTAGE
  # Haas - McCall and Balch - McCall 230 kV Lines
 1  30855 30860  "1 "    0     # line from  HAAS     230.00   (2) to (3)   BALCH3TP
230.00
 2  30855 34610  "1 "    0     # TRAN from  HAAS     230.00   (2) to (1)   HAAS
13.80
 1  30860 30875  "1 "    0     # line from  BALCH3TP 230.00   (3) to BRKR  MC CALL
230.00
 2  30860 34614  "1 "    0     # TRAN from  BALCH3TP 230.00   (3) to (1)   BLCH 2-3
13.80
 3  34610     0  "1 "    0     # GEN-DROP    HAAS      13.80  GEN==70.00(10.21)
 3  34610     0  "2 "    0     # GEN-DROP    HAAS      13.80  GEN==70.00(10.21)
 3  34614     0  "1 "    0     # GEN-DROP    BLCH 2-3  13.80  GEN==50.00(7.64)
  #
 1  30865 30870  "1 "    0     # line from  BALCH    230.00   (2) to (3)   PINE FLT
230.00
 2  30865 34612  "1 "    0     # TRAN from  BALCH    230.00   (2) to (1)   BLCH 2-2
13.80
 1  30870 30875  "1 "    0     # line from  PINE FLT 230.00   (3) to BRKR  MC CALL
230.00
 2  30870 38720  "1 "    0     # TRAN from  PINE FLT 230.00   (3) to (1)   PINE FLT
13.80
 3  34612     0  "1 "    0     # GEN-DROP    BLCH 2-2  13.80  GEN==50.00(0.66)
 3  38720     0  "1 "    0     # GEN-DROP    PINE FLT  13.80  GEN==57.00(23.30)
 0
  #
  #
  # (67)   C5 DCTL OUTAGE
  # Morro Bay - Gates and Templeton - Gates 230 kV Lines
```

```
 1  30900 30915  "1 "    0     # line from  GATES    230.00  BRKR to BRKR  MORROBAY
230.00
  #
 1  30900 30905  "1 "    0     # line from  GATES    230.00  BRKR to BRKR  TEMPLETN
230.00
 0
  #
  #
  # (68)   C5 DCTL OUTAGE
  # Gates - Midway and Gates - Arco 230 kV Lines
 1  30900 30970  "1 "    0     # line from  GATES    230.00  BRKR to BRKR  MIDWAY
230.00
  #
 1  30900 30935  "1 "    0     # line from  GATES    230.00  BRKR to BRKR  ARCO
230.00
 0
  #
  #
  # (69) BUS FAULT  30820  "HELMS PP"
  #
 1  30820  30810  "1"    0     # LINE from  HELMS PP 230.00  to  GREGG    230.00
 1  30820  30810  "2"    0     # LINE from  HELMS PP 230.00  to  GREGG    230.00
 2  30820  34600  "1"    0     # TRAN from  HELMS PP 230.00  to  HELMS 1   18.00
 2  30820  34602  "1"    0     # TRAN from  HELMS PP 230.00  to  HELMS 2   18.00
 2  30820  34604  "1"    0     # TRAN from  HELMS PP 230.00  to  HELMS 3   18.00
 0
  #
  #
  # (70) BUS FAULT  30830  "KEARNEY"
  #
 1  30830  30825  "1"    0     # LINE from  KEARNEY  230.00  to  MCMULLN1 230.00
 1  30830  30835  "1"    0     # LINE from  KEARNEY  230.00  to  HERNDON  230.00
 2  30830  34480  "2"    0     # TRAN from  KEARNEY  230.00  to  KEARNEY   70.00
 0
  #
  #
  # (71) BUS FAULT  30835  "HERNDON" 230 kV Bus Section 1
  #
 1  30835  30810  "1"    0     # LINE from  HERNDON  230.00  to  GREGG    230.00
 1  30835  30830  "1"    0     # LINE from  HERNDON  230.00  to  KEARNEY  230.00
 2  30835  30882  "1"    0     # TRAN from  HERNDON  230.00  to  HERNDN1M 115.00
 0
  #
  #
  # (72) BUS FAULT  30835  "HERNDON" 230 kV Bus Section 2
  #
 1  30835  30810  "2"    0     # LINE from  HERNDON  230.00  to  GREGG    230.00
 1  30835  30840  "1"    0     # LINE from  HERNDON  230.00  to  FGRDN T1 230.00
 2  30835  30883  "2"    0     # TRAN from  HERNDON  230.00  to  HERNDN2M 115.00
 0
  #
  #
  # (73) BUS FAULT  30841  "FIGRDN 1"
  #
 1  30841  30840  "1"    0     # LINE from  FIGRDN 1 230.00  to  FGRDN T1 230.00
 1  30841  30846  "1"    0     # LINE from  FIGRDN 1 230.00  to  FIGRDN 2 230.00
 4  30841     0  "1 "    0     # LOAD-DROP    FIGRDN 1 230.00  LOAD==73.45(14.92)
 0
  #
  #
  # (74) BUS FAULT  30846  "FIGRDN 2"
  #
 1  30846  30841  "1"    0     # LINE from  FIGRDN 2 230.00  to  FIGRDN 1 230.00
 1  30846  30845  "1"    0     # LINE from  FIGRDN 2 230.00  to  FGRDN T2 230.00
 4  30846     0  "1 "    0     # LOAD-DROP    FIGRDN 2 230.00  LOAD==52.57(10.67)
 4  30846     0  "2 "    0     # LOAD-DROP    FIGRDN 2 230.00  LOAD==36.77(7.47)
 0
  #
  #
  # (75) BUS FAULT  30850  "ASHLAN"
```

```
 #
1  30850  30840  "1"    0     # LINE from  ASHLAN   230.00  to  FGRDN T1 230.00
1  30850  30845  "1"    0     # LINE from  ASHLAN   230.00  to  FGRDN T2 230.00
4  30850     0  "1 "    0     # LOAD-DROP    ASHLAN   230.00  LOAD==69.20(13.40)
4  30850     0  "2 "    0     # LOAD-DROP    ASHLAN   230.00  LOAD==64.54(12.84)
4  30850     0  "3 "    0     # LOAD-DROP    ASHLAN   230.00  LOAD==65.51(12.49)
0
 #
 #
 # (76) BUS FAULT  30873  "HELM"
 #
1  30873  30790  "1"    0     # LINE from  HELM     230.00  to  PANOCHE  230.00
1  30873  30875  "1"    0     # LINE from  HELM     230.00  to  MC CALL  230.00
2  30873  34474  "1"    0     # TRAN from  HELM     230.00  to  HELM      70.00
0
 #
 #
 # (77) BUS FAULT  30874  "P0615STN"
 #
1  30874  30875  "1"    0     # LINE from  P0615STN 230.00  to  MC CALL  230.00
1  30874  30875  "2"    0     # LINE from  P0615STN 230.00  to  MC CALL  230.00
2  30874  34685  "1"    0     # TRAN from  P0615STN 230.00  to  P0615CT1  16.50
2  30874  34686  "1"    0     # TRAN from  P0615STN 230.00  to  P0615CT2  16.50
2  30874  34687  "1"    0     # TRAN from  P0615STN 230.00  to  P0615STG  16.50
0
 #
 #
 # (78) BUS FAULT  30875  "MC CALL" 230 kV Bus Section 1
 #
1  30875  30870  "1"    0     # LINE from  MC CALL  230.00  to  PINE FLT 230.00
1  30875  30874  "1"    0     # LINE from  MC CALL  230.00  to  P0615STN 230.00
1  30875  30880  "1"    0     # LINE from  MC CALL  230.00  to  HENTAP2  230.00
2  30875  30877  "2"    0     # TRAN from  MC CALL  230.00  to  MCCALL2M 115.00
6  30875  0      "v"    0     # SVD  from  MC CALL  230.00
0
 #
 #
 # (79) BUS FAULT  30875  "MC CALL" 230 kV Bus Section 2
 #
1  30875  30873  "1"    0     # LINE from  MC CALL  230.00  to  HELM     230.00
1  30875  30860  "1"    0     # LINE from  MC CALL  230.00  to  BALCH3TP 230.00
1  30875  30874  "2"    0     # LINE from  MC CALL  230.00  to  P0615STN 230.00
2  30875  30876  "1"    0     # TRAN from  MC CALL  230.00  to  MCCALL1M 115.00
2  30875  30878  "3"    0     # TRAN from  MC CALL  230.00  to  MCCALL3M 115.00
0
 #
 #
 # (80) BUS FAULT  30881  "HENRIETA"
 #
1  30881  30879  "1"    0     # LINE from  HENRIETA 230.00  to  HENTAP1  230.00
1  30881  30880  "1"    0     # LINE from  HENRIETA 230.00  to  HENTAP2  230.00
2  30881  34430  "3"    0     # TRAN from  HENRIETA 230.00  to  HENRETTA 115.00
2  30881  34540  "2"    0     # TRAN from  HENRIETA 230.00  to  HENRITTA  70.00
2  30881  34540  "4"    0     # TRAN from  HENRIETA 230.00  to  HENRITTA  70.00
0
 #
 #
 # (81) BUS FAULT  30900  "GATES" 230 kV Bus Section 1D
 #
1  30900  30790  "1"    0     # LINE from  GATES    230.00  to  PANOCHE  230.00
1  30900  30905  "1"    0     # LINE from  GATES    230.00  to  TEMPLETN 230.00
2  30900  30901  "1"    0     # TRAN from  GATES    230.00  to  GATES 1M 230.00
6  30900  0      "v"    0     # SVD  from  GATES    230.00
0
 #
 #
 # (82) BUS FAULT  30900  "GATES" 230 kV Bus Section 2D
 #
1  30900  30790  "2"    0     # LINE from  GATES    230.00  to  PANOCHE  230.00
1  30900  30915  "1"    0     # LINE from  GATES    230.00  to  MORROBAY 230.00
```

```
0
 #
 #
 # (83) BUS FAULT  30900  "GATES" 230 kV Bus Section 1E
 #
1  30900  30879  "1"    0     # LINE from  GATES    230.00  to  HENTAP1  230.00
1  30900  30935  "1"    0     # LINE from  GATES    230.00  to  ARCO     230.00
0
 #
 #
 # (84) BUS FAULT  30900  "GATES" 230 kV Bus Section 2E
 #
1  30900  30880  "1"    0     # LINE from  GATES    230.00  to  HENTAP2  230.00
1  30900  30970  "1"    0     # LINE from  GATES    230.00  to  MIDWAY   230.00
0
 #
 #
 # (85) BUS FAULT  34356  "KERCKHF1"
 #
1  34356  34123  "2"    0     # LINE from  KERCKHF1 115.00  to  K1-JCT   115.00
1  34356  34358  "1"    0     # LINE from  KERCKHF1 115.00  to  KERCKHF2 115.00
2  34356  34344  "1"    0     # TRAN from  KERCKHF1 115.00  to  KERCKHOF   6.60
0
 #
 #
 # (86) BUS FAULT  34358  "KERCKHF2"
 #
1  34358  34123  "2"    0     # LINE from  KERCKHF2 115.00  to  K1-JCT   115.00
1  34358  34356  "1"    0     # LINE from  KERCKHF2 115.00  to  KERCKHF1 115.00
1  34358  34360  "1"    0     # LINE from  KERCKHF2 115.00  to  WWARD JT 115.00
1  34358  34365  "1"    0     # LINE from  KERCKHF2 115.00  to  CLOVISJ2 115.00
2  34358  34308  "1"    0     # TRAN from  KERCKHF2 115.00  to  KERCKHOF  13.80
0
 #
 #
 # (87) BUS FAULT  34361  "AIRWAYS"
 #
1  34361  34357  "1"    0     # LINE from  AIRWAYS  115.00  to  AIRWAYJ1 115.00
1  34361  34359  "1"    0     # LINE from  AIRWAYS  115.00  to  AIRWAYJ2 115.00
4  34361     0  "1 "    0     # LOAD-DROP    AIRWAYS  115.00  LOAD==38.39(7.43)
4  34361     0  "2 "    0     # LOAD-DROP    AIRWAYS  115.00  LOAD==12.60(2.56)
0
 #
 #
 # (88) BUS FAULT  34362  "CLOVIS-1"
 #
1  34362  34363  "1"    0     # LINE from  CLOVIS-1 115.00  to  CLOVISJ1 115.00
1  34362  34364  "1"    0     # LINE from  CLOVIS-1 115.00  to  CLOVIS-2 115.00
4  34362     0  "1 "    0     # LOAD-DROP    CLOVIS-1 115.00  LOAD==51.01(10.36)
4  34362     0  "2 "    0     # LOAD-DROP    CLOVIS-1 115.00  LOAD==50.20(10.20)
0
 #
 #
 # (89) BUS FAULT  34364  "CLOVIS-2"
 #
1  34364  34362  "1"    0     # LINE from  CLOVIS-2 115.00  to  CLOVIS-1 115.00
1  34364  34365  "1"    0     # LINE from  CLOVIS-2 115.00  to  CLOVISJ2 115.00
4  34364     0  "3 "    0     # LOAD-DROP    CLOVIS-2 115.00  LOAD==44.76(9.09)
0
 #
 #
 # (90) BUS FAULT  34366  "SANGER"
 #
1  34366  34363  "1"    0     # LINE from  SANGER   115.00  to  CLOVISJ1 115.00
1  34366  34365  "1"    0     # LINE from  SANGER   115.00  to  CLOVISJ2 115.00
1  34366  34359  "1"    0     # LINE from  SANGER   115.00  to  AIRWAYJ2 115.00
1  34366  34368  "1"    0     # LINE from  SANGER   115.00  to  LASPALMS 115.00
1  34366  34370  "1"    0     # LINE from  SANGER   115.00  to  MC CALL  115.00
1  34366  34370  "2"    0     # LINE from  SANGER   115.00  to  MC CALL  115.00
1  34366  34370  "3"    0     # LINE from  SANGER   115.00  to  MC CALL  115.00
```

```
1  34366  34372  "1"    0     # LINE from  SANGER   115.00  to  MALAGA   115.00
1  34366  34389  "1"    0     # LINE from  SANGER   115.00  to  RAINBWTP 115.00
1  34366  34396  "1"    0     # LINE from  SANGER   115.00  to  PIEDRA 2 115.00
1  34366  34488  "1"    0     # LINE from  SANGER   115.00  to  SANGER    70.00
2  34366  34590  "1"    0     # TRAN from  SANGER   115.00  to  SANGR3T  115.00
4  34366     0  "1 "    0     # LOAD-DROP    SANGER   115.00  LOAD==24.26(4.93)
0
 #
 #
 # (91) BUS FAULT  34372  "MALAGA"
 #
1  34372  34366  "1"    0     # LINE from  MALAGA   115.00  to  SANGER   115.00
1  34372  34376  "1"    0     # LINE from  MALAGA   115.00  to  PPG      115.00
1  34372  34379  "1"    0     # LINE from  MALAGA   115.00  to  MALAGATP 115.00
1  34372  34381  "1"    0     # LINE from  MALAGA   115.00  to  KRCDP    115.00
4  34372     0  "1 "    0     # LOAD-DROP    MALAGA   115.00  LOAD==25.25(5.12)
4  34372     0  "2 "    0     # LOAD-DROP    MALAGA   115.00  LOAD==22.76(4.62)
4  34372     0  "3 "    0     # LOAD-DROP    MALAGA   115.00  LOAD==23.13(4.69)
0
 #
 #
 # (92) BUS FAULT  34378  "GATES"
 #
2  34378  30901  "1"    0     # TRAN from  GATES    115.00  to  GATES 1M 230.00
2  34378  34552  "2"    0     # TRAN from  GATES    115.00  to  GATES     70.00
4  34378     0  "3 "    0     # LOAD-DROP    GATES    115.00  LOAD==19.45(3.95)
0
 #
 #
 # (93) BUS FAULT  34380  "REEDLEY"
 #
1  34380  34384  "1"    0     # LINE from  REEDLEY  115.00  to  GERAWAN  115.00
1  34380  34394  "1"    0     # LINE from  REEDLEY  115.00  to  PIEDRA 1 115.00
2  34380  34492  "1"    0     # TRAN from  REEDLEY  115.00  to  REEDLEY   70.00
2  34380  34492  "2"    0     # TRAN from  REEDLEY  115.00  to  REEDLEY   70.00
4  34380     0  "3 "    0     # LOAD-DROP    REEDLEY  115.00  LOAD==26.17(5.31)
0
 #
 #
 # (94) BUS FAULT  34382  "WAHTOKE"
 #
1  34382  34370  "1"    0     # LINE from  WAHTOKE  115.00  to  MC CALL  115.00
1  34382  34384  "1"    0     # LINE from  WAHTOKE  115.00  to  GERAWAN  115.00
4  34382     0  "2 "    0     # LOAD-DROP    WAHTOKE  115.00  LOAD==30.36(6.17)
4  34382     0  "3 "    0     # LOAD-DROP    WAHTOKE  115.00  LOAD==20.84(4.24)
0
 #
 #
 # (95) BUS FAULT  34400  "KNGSRVR1"
 #
1  34400  34394  "1"    0     # LINE from  KNGSRVR1 115.00  to  PIEDRA 1 115.00
2  34400  34616  "1"    0     # TRAN from  KNGSRVR1 115.00  to  KINGSRIV  13.80
0
 #
 #
 # (96) BUS FAULT  34402  "CAL AVE"
 #
1  34402  34390  "1"    0     # LINE from  CAL AVE  115.00  to  DANISHCM 115.00
1  34402  34404  "1"    0     # LINE from  CAL AVE  115.00  to  WST FRSO 115.00
4  34402     0  "1 "    0     # LOAD-DROP    CAL AVE  115.00  LOAD==28.95(5.87)
4  34402     0  "2 "    0     # LOAD-DROP    CAL AVE  115.00  LOAD==31.26(6.35)
4  34402     0  "3 "    0     # LOAD-DROP    CAL AVE  115.00  LOAD==24.42(4.96)
0
 #
 #
 # (97) BUS FAULT  34404  "WST FRSO"
 #
1  34404  34370  "1"    0     # LINE from  WST FRSO 115.00  to  MC CALL  115.00
1  34404  34402  "1"    0     # LINE from  WST FRSO 115.00  to  CAL AVE  115.00
4  34404     0  "1 "    0     # LOAD-DROP    WST FRSO 115.00  LOAD==37.55(7.63)
```

```
4  34404     0  "2 "    0     # LOAD-DROP    WST FRSO 115.00  LOAD==39.04(7.93)
0
 #
 #
 # (98) BUS FAULT  34408  "BARTON"
 #
1  34408  34359  "1"    0     # LINE from  BARTON   115.00  to  AIRWAYJ2 115.00
1  34408  34412  "1"    0     # LINE from  BARTON   115.00  to  HERNDON  115.00
4  34408     0  "1 "    0     # LOAD-DROP    BARTON   115.00  LOAD==43.27(8.79)
4  34408     0  "2 "    0     # LOAD-DROP    BARTON   115.00  LOAD==37.15(7.54)
4  34408     0  "3 "    0     # LOAD-DROP    BARTON   115.00  LOAD==26.96(5.47)
0
 #
 #
 # (99) BUS FAULT  34410  "MANCHSTR"
 #
1  34410  34357  "1"    0     # LINE from  MANCHSTR 115.00  to  AIRWAYJ1 115.00
1  34410  34412  "1"    0     # LINE from  MANCHSTR 115.00  to  HERNDON  115.00
4  34410     0  "1 "    0     # LOAD-DROP    MANCHSTR 115.00  LOAD==25.28(5.13)
4  34410     0  "2 "    0     # LOAD-DROP    MANCHSTR 115.00  LOAD==25.47(5.18)
4  34410     0  "3 "    0     # LOAD-DROP    MANCHSTR 115.00  LOAD==36.21(7.36)
0
 #
 #
 # (100) BUS FAULT  34412  "HERNDON" 115 kV Bus Section 1
 #
1  34412  34408  "1"    0     # LINE from  HERNDON  115.00  to  BARTON   115.00
1  34412  34409  "1"    0     # LINE from  HERNDON  115.00  to  PNDLJ2   115.00
2  34412  30882  "1"    0     # TRAN from  HERNDON  115.00  to  HERNDN1M 115.00
0
 #
 #
 # (101) BUS FAULT  34412  "HERNDON" 115 kV Bus Section 2
 #
1  34412  34410  "1"    0     # LINE from  HERNDON  115.00  to  MANCHSTR 115.00
1  34412  34411  "1"    0     # LINE from  HERNDON  115.00  to  PNDLJ1   115.00
1  34412  34422  "1"    0     # LINE from  HERNDON  115.00  to  CHLDHOSP 115.00
0
 #
 #
 # (102) BUS FAULT  34413  "PNEDLE"
 #
1  34413  34409  "1"    0     # LINE from  PNEDLE   115.00  to  PNDLJ2   115.00
1  34413  34411  "1"    0     # LINE from  PNEDLE   115.00  to  PNDLJ1   115.00
4  34413     0  "2 "    0     # LOAD-DROP    PNEDLE   115.00  LOAD==30.74(6.25)
4  34413     0  "3 "    0     # LOAD-DROP    PNEDLE   115.00  LOAD==40.42(8.20)
0
 #
 #
 # (103) BUS FAULT  34414  "WOODWARD"
 #
1  34414  34360  "1"    0     # LINE from  WOODWARD 115.00  to  WWARD JT 115.00
1  34414  34422  "1"    0     # LINE from  WOODWARD 115.00  to  CHLDHOSP 115.00
4  34414     0  "1 "    0     # LOAD-DROP    WOODWARD 115.00  LOAD==42.25(8.58)
4  34414     0  "2 "    0     # LOAD-DROP    WOODWARD 115.00  LOAD==52.69(10.70)
4  34414     0  "3 "    0     # LOAD-DROP    WOODWARD 115.00  LOAD==44.09(8.95)
0
 #
 #
 # (104) BUS FAULT  34416  "BULLARD"
 #
1  34416  34409  "1"    0     # LINE from  BULLARD  115.00  to  PNDLJ2   115.00
1  34416  34411  "1"    0     # LINE from  BULLARD  115.00  to  PNDLJ1   115.00
4  34416     0  "1 "    0     # LOAD-DROP    BULLARD  115.00  LOAD==44.87(9.11)
4  34416     0  "2 "    0     # LOAD-DROP    BULLARD  115.00  LOAD==44.65(9.07)
4  34416     0  "3 "    0     # LOAD-DROP    BULLARD  115.00  LOAD==42.52(8.63)
0
 #
 #
 # (105) BUS FAULT  34418  "KINGSBRG" 115 kV Bus Section D
```

```
 #
1  34418  34417  "1"    0     # LINE from  KINGSBRG 115.00  to  KINGS J2 115.00
1  34418  34428  "1"    0     # LINE from  KINGSBRG 115.00  to  CONTADNA 115.00
1  34418  34420  "2"    0     # LINE from  KINGSBRG 115.00  to  CORCORAN 115.00
4  34418     0  "1 "    0     # LOAD-DROP    KINGSBRG 115.00  LOAD==39.24(7.96)
0
 #
 #
 # (106) BUS FAULT  34418  "KINGSBRG" 115 kV Bus Section E
 #
1  34418  34420  "1"    0     # LINE from  KINGSBRG 115.00  to  CORCORAN 115.00
1  34418  34423  "1"    0     # LINE from  KINGSBRG 115.00  to  GAURD J1 115.00
2  34418  34576  "2"    0     # TRAN from  KINGSBRG 115.00  to  KNGLOBUS  70.00
4  34418     0  "3 "    0     # LOAD-DROP    KINGSBRG 115.00  LOAD==24.32(4.94)
0
 #
 #
 # (107) BUS FAULT  34420  "CORCORAN"
 #
1  34420  34391  "1"    0     # LINE from  CORCORAN 115.00  to  QUEBECTP 115.00
1  34420  34418  "1"    0     # LINE from  CORCORAN 115.00  to  KINGSBRG 115.00
1  34420  34418  "2"    0     # LINE from  CORCORAN 115.00  to  KINGSBRG 115.00
2  34420  34528  "2"    0     # TRAN from  CORCORAN 115.00  to  CORCORAN  70.00
4  34420     0  "3 "    0     # LOAD-DROP    CORCORAN 115.00  LOAD==16.21(3.30)
4  34420     0  "4 "    0     # LOAD-DROP    CORCORAN 115.00  LOAD==17.81(3.61)
0
 #
 #
 # (108) BUS FAULT  34426  "ALPAUGH"
 #
1  34426  34391  "1"    0     # LINE from  ALPAUGH  115.00  to  QUEBECTP 115.00
1  34426  34700  "1"    0     # LINE from  ALPAUGH  115.00  to  SMYRNA   115.00
4  34426     0  "2 "    0     # LOAD-DROP    ALPAUGH  115.00  LOAD==5.62(1.14)
0
 #
 #
 # (109) BUS FAULT  34430  "HENRETTA"
 #
1  34430  34521  "1"    0     # LINE from  HENRETTA 115.00  to  LEPRNOFD 115.00
2  34430  30881  "3"    0     # TRAN from  HENRETTA 115.00  to  HENRIETA 230.00
0
 #
 #
 # (110) BUS FAULT  34452  "WISHON"
 #
1  34452  34260  "1"    0     # LINE from  WISHON    70.00  to  SJNO2     70.00
1  34452  34491  "1"    0     # LINE from  WISHON    70.00  to  AUBRYTP   70.00
2  34452  34658  "1"    0     # TRAN from  WISHON    70.00  to  WISHON     2.30
0
 #
 #
 # (111) BUS FAULT  34460  "GUERNSEY"
 #
1  34460  34462  "1"    0     # LINE from  GUERNSEY  70.00  to  GUR3TPT   70.00
1  34460  34528  "1"    0     # LINE from  GUERNSEY  70.00  to  CORCORAN  70.00
4  34460     0  "1 "    0     # LOAD-DROP    GUERNSEY  70.00  LOAD==10.51(2.13)
0
 #
 #
 # (112) BUS FAULT  34464  "COPPRMNE"
 #
1  34464  34454  "1"    0     # LINE from  COPPRMNE  70.00  to  RIVERROC  70.00
1  34464  34478  "1"    0     # LINE from  COPPRMNE  70.00  to  TVY VLLY  70.00
1  34464  34638  "1"    0     # LINE from  COPPRMNE  70.00  to  FRANTDM   70.00
1  34464  34491  "1"    0     # LINE from  COPPRMNE  70.00  to  AUBRYTP   70.00
4  34464     0  "1 "    0     # LOAD-DROP    COPPRMNE  70.00  LOAD==22.96(4.67)
0
 #
 #
 # (113) BUS FAULT  34466  "BIOLA"
```

```
 #
1  34466  34264  "1"    0     # LINE from  BIOLA     70.00  to  EL PECO   70.00
1  34466  34482  "1"    0     # LINE from  BIOLA     70.00  to  OLDKERN   70.00
4  34466     0  "1 "    0     # LOAD-DROP    BIOLA     70.00  LOAD==21.80(4.43)
0
 #
 #
 # (114) BUS FAULT  34472  "SAN JOQN"
 #
1  34472  34471  "1"    0     # LINE from  SAN JOQN  70.00  to  SNJQJCT   70.00
1  34472  34473  "1"    0     # LINE from  SAN JOQN  70.00  to  SNJQTP    70.00
4  34472     0  "1 "    0     # LOAD-DROP    SAN JOQN  70.00  LOAD==6.44(1.31)
4  34472     0  "2 "    0     # LOAD-DROP    SAN JOQN  70.00  LOAD==3.92(0.79)
0
 #
 #
 # (115) BUS FAULT  34474  "HELM"
 #
1  34474  34471  "1"    0     # LINE from  HELM      70.00  to  SNJQJCT   70.00
1  34474  34473  "1"    0     # LINE from  HELM      70.00  to  SNJQTP    70.00
1  34474  34556  "1"    0     # LINE from  HELM      70.00  to  STRD JCT  70.00
1  34474  34564  "1"    0     # LINE from  HELM      70.00  to  STROUD    70.00
2  34474  30873  "1"    0     # TRAN from  HELM      70.00  to  HELM     230.00
0
 #
 #
 # (116) BUS FAULT  34478  "TVY VLLY"
 #
1  34478  34464  "1"    0     # LINE from  TVY VLLY  70.00  to  COPPRMNE  70.00
1  34478  34492  "1"    0     # LINE from  TVY VLLY  70.00  to  REEDLEY   70.00
4  34478     0  "1 "    0     # LOAD-DROP    TVY VLLY  70.00  LOAD==10.27(2.09)
0
 #
 #
 # (117) BUS FAULT  34480  "KEARNEY"
 #
1  34480  34481  "1"    0     # LINE from  KEARNEY   70.00  to  FRWWTAP   70.00
1  34480  34482  "1"    0     # LINE from  KEARNEY   70.00  to  OLDKERN   70.00
1  34480  34512  "1"    0     # LINE from  KEARNEY   70.00  to  CARUTHRS  70.00
2  34480  30830  "2"    0     # TRAN from  KEARNEY   70.00  to  KEARNEY  230.00
0
 #
 #
 # (118) BUS FAULT  34484  "KERMAN"
 #
1  34484  34475  "1"    0     # LINE from  KERMAN    70.00  to  AGRCJCT   70.00
1  34484  34481  "1"    0     # LINE from  KERMAN    70.00  to  FRWWTAP   70.00
4  34484     0  "1 "    0     # LOAD-DROP    KERMAN    70.00  LOAD==19.44(3.95)
4  34484     0  "2 "    0     # LOAD-DROP    KERMAN    70.00  LOAD==11.78(2.39)
0
 #
 #
 # (119) BUS FAULT  34486  "CALIFRNV"
 #
1  34486  34488  "1"    0     # LINE from  CALIFRNV  70.00  to  SANGER    70.00
1  34486  34488  "2"    0     # LINE from  CALIFRNV  70.00  to  SANGER    70.00
0
 #
 #
 # (120) BUS FAULT  34488  "SANGER"
 #
1  34488  34486  "1"    0     # LINE from  SANGER    70.00  to  CALIFRNV  70.00
1  34488  34486  "2"    0     # LINE from  SANGER    70.00  to  CALIFRNV  70.00
1  34488  34366  "1"    0     # LINE from  SANGER    70.00  to  SANGER   115.00
1  34488  34487  "1"    0     # LINE from  SANGER    70.00  to  SNGRJCT   70.00
2  34488  34590  "1"    0     # TRAN from  SANGER    70.00  to  SANGR3T  115.00
0
 #
 #
 # (121) BUS FAULT  34492  "REEDLEY"
```

```
 #
1  34492  34478  "1"    0     # LINE from  REEDLEY   70.00  to  TVY VLLY  70.00
1  34492  34490  "1"    0     # LINE from  REEDLEY   70.00  to  PARLIER   70.00
1  34492  34497  "1"    0     # LINE from  REEDLEY   70.00  to  DNUBAJCT  70.00
1  34492  34526  "1"    0     # LINE from  REEDLEY   70.00  to  ORSI JCT  70.00
2  34492  34380  "1"    0     # TRAN from  REEDLEY   70.00  to  REEDLEY  115.00
2  34492  34380  "2"    0     # TRAN from  REEDLEY   70.00  to  REEDLEY  115.00
4  34492     0  "1 "    0     # LOAD-DROP    REEDLEY   70.00  LOAD==17.42(3.54)
0
 #
 #
 # (122) BUS FAULT  34500  "DINUBA"
 #
1  34500  34496  "1"    0     # LINE from  DINUBA    70.00  to  STCRRL J  70.00
1  34500  34497  "1"    0     # LINE from  DINUBA    70.00  to  DNUBAJCT  70.00
4  34500     0  "1 "    0     # LOAD-DROP    DINUBA    70.00  LOAD==19.23(3.91)
4  34500     0  "2 "    0     # LOAD-DROP    DINUBA    70.00  LOAD==9.33(1.90)
0
 #
 #
 # (123) BUS FAULT  34512  "CARUTHRS"
 #
1  34512  34480  "1"    0     # LINE from  CARUTHRS  70.00  to  KEARNEY   70.00
1  34512  34510  "1"    0     # LINE from  CARUTHRS  70.00  to  CMDN JCT  70.00
4  34512     0  "1 "    0     # LOAD-DROP    CARUTHRS  70.00  LOAD==19.63(3.98)
0
 #
 #
 # (124) BUS FAULT  34518  "LEMOORE"
 #
1  34518  34520  "1"    0     # LINE from  LEMOORE   70.00  to  LPRNO TP  70.00
1  34518  34522  "1"    0     # LINE from  LEMOORE   70.00  to  HNFRD SW  70.00
4  34518     0  "1 "    0     # LOAD-DROP    LEMOORE   70.00  LOAD==18.86(3.83)
4  34518     0  "2 "    0     # LOAD-DROP    LEMOORE   70.00  LOAD==32.81(6.66)
0
 #
 #
 # (125) BUS FAULT  34528  "CORCORAN"
 #
1  34528  34460  "1"    0     # LINE from  CORCORAN  70.00  to  GUERNSEY  70.00
1  34528  34530  "1"    0     # LINE from  CORCORAN  70.00  to  BSWLL TP  70.00
2  34528  34420  "2"    0     # TRAN from  CORCORAN  70.00  to  CORCORAN 115.00
0
 #
 #
 # (126) BUS FAULT  34540  "HENRITTA"
 #
1  34540  34514  "1"    0     # LINE from  HENRITTA  70.00  to  MUSLSLGH  70.00
1  34540  34520  "1"    0     # LINE from  HENRITTA  70.00  to  LPRNO TP  70.00
1  34540  34537  "1"    0     # LINE from  HENRITTA  70.00  to  GWF_HENR  70.00
1  34540  34542  "1"    0     # LINE from  HENRITTA  70.00  to  JCBSCRNR  70.00
1  34540  34544  "1"    0     # LINE from  HENRITTA  70.00  to  TLRE LKE  70.00
2  34540  30881  "2"    0     # TRAN from  HENRITTA  70.00  to  HENRIETA 230.00
2  34540  30881  "4"    0     # TRAN from  HENRITTA  70.00  to  HENRIETA 230.00
4  34540     0  "1 "    0     # LOAD-DROP    HENRITTA  70.00  LOAD==8.20(1.67)
0
 #
 #
 # (127) BUS FAULT  34544  "TLRE LKE"
 #
1  34544  34540  "1"    0     # LINE from  TLRE LKE  70.00  to  HENRITTA  70.00
1  34544  34550  "1"    0     # LINE from  TLRE LKE  70.00  to  CHEVPLIN  70.00
1  34544  34580  "1"    0     # LINE from  TLRE LKE  70.00  to  BDGR HLL  70.00
4  34544     0  "1 "    0     # LOAD-DROP    TLRE LKE  70.00  LOAD==6.79(1.38)
0
 #
 #
 # (128) BUS FAULT  34552  "GATES"
 #
1  34552  34548  "1"    0     # LINE from  GATES     70.00  to  KETTLEMN  70.00
```

```
 1  34552  34184  "1"    0     # LINE from  GATES     70.00  to  GATS2_TP  70.00
 1  34552  34558  "1"    0     # LINE from  GATES     70.00  to  HURON     70.00
 1  34552  34558  "2"    0     # LINE from  GATES     70.00  to  HURON     70.00
 1  34552  34578  "1"    0     # LINE from  GATES     70.00  to  JACALITO  70.00
 2  34552  34378  "2"    0     # TRAN from  GATES     70.00  to  GATES    115.00
 0
  #
  #
  # (129) BUS FAULT  34558  "HURON"
  #
 1  34558  34552  "1"    0     # LINE from  HURON     70.00  to  GATES     70.00
 1  34558  34552  "2"    0     # LINE from  HURON     70.00  to  GATES     70.00
 1  34558  34560  "1"    0     # LINE from  HURON     70.00  to  CALFLAX   70.00
 4  34558 34552  "1 "    1     # LOAD-TRANSFER  HURON     70.00  TO  GATES     70.00
LOAD==15.33(3.11)
 0
  #
  #
  # (130) BUS FAULT  34562  "SCHLNDLR"
  #
 1  34562  34556  "1"    0     # LINE from  SCHLNDLR  70.00  to  STRD JCT  70.00
 1  34562  34560  "1"    0     # LINE from  SCHLNDLR  70.00  to  CALFLAX   70.00
 1  34562  34566  "1"    0     # LINE from  SCHLNDLR  70.00  to  PLSNTVLY  70.00
 2  34562  34354  "1"    0     # TRAN from  SCHLNDLR  70.00  to  SCHINDLR 115.00
 4  34562     0  "1 "    0     # LOAD-DROP    SCHLNDLR  70.00  LOAD==9.59(1.95)
 0
  #
  #
  # (131) BUS FAULT  34564  "STROUD"
  #
 1  34564  34556  "1"    0     # LINE from  STROUD    70.00  to  STRD JCT  70.00
 1  34564  34474  "1"    0     # LINE from  STROUD    70.00  to  HELM      70.00
 4  34564     0  "1 "    0     # LOAD-DROP    STROUD    70.00  LOAD==13.09(2.66)
 0
  #
  #
  # (132) BUS FAULT  34570  "COLNGA 2"
  #
 1  34570  34184  "1"    0     # LINE from  COLNGA 2  70.00  to  GATS2_TP  70.00
 1  34570  34566  "1"    0     # LINE from  COLNGA 2  70.00  to  PLSNTVLY  70.00
 1  34570  34572  "1"    0     # LINE from  COLNGA 2  70.00  to  TORNADO   70.00
 2  34570  34652  "1"    0     # TRAN from  COLNGA 2  70.00  to  CHV.COAL   9.11
 4  34570     0  "1 "    0     # LOAD-DROP    COLNGA 2  70.00  LOAD==8.23(1.67)
 0
  #
  #
  # (133) BUS FAULT  34574  "COLNGA 1"
  #
 1  34574  34572  "1"    0     # LINE from  COLNGA 1  70.00  to  TORNADO   70.00
 1  34574  34578  "1"    0     # LINE from  COLNGA 1  70.00  to  JACALITO  70.00
 1  34574  36354  "1"    0     # LINE from  COLNGA 1  70.00  to  SAN MIGL  70.00
 4  34574     0  "1 "    0     # LOAD-DROP    COLNGA 1  70.00  LOAD==9.34(1.90)
 4  34574     0  "2 "    0     # LOAD-DROP    COLNGA 1  70.00  LOAD==9.99(2.03)
 0
  #
  #
  # (134) BUS FAULT  34576  "KNGLOBUS"
  #
 1  34576  34456  "1"    0     # LINE from  KNGLOBUS  70.00  to  HRDWK TP  70.00
 1  34576  34508  "1"    0     # LINE from  KNGLOBUS  70.00  to  CAMDEN    70.00
 2  34576  34418  "2"    0     # TRAN from  KNGLOBUS  70.00  to  KINGSBRG 115.00
 0
  #
  #
 -1
  # EOF
```

Summer Off-Peak Category B Contingencies

```
# Q272 2013 sumop category b contingency list
# Yosemite and Fresno Divisions Zones 313 and 314
#
  # 2013 sumop category b contingency list
  # Yosemite Zone 313
  #
  #
  # (1)  B2 LINE OUTAGE (BREAKER-TO-BREAKER)
  #
 1  30515 30800  "1 "    0     # line from  WARNERVL 230.00  BRKR to BRKR  WILSON
230.00
 0
  #
  #
  # (2)  B2 LINE OUTAGE (BREAKER-TO-BREAKER)
  #
 1  30670 30765  "1 "    0     # line from  WESTLEY  230.00  BRKR to BRKR  LOSBANOS
230.00
 0
  #
  #
  # (3)  B2 LINE OUTAGE (BREAKER-TO-BREAKER)
  #
 1  30750 30790  "1 "    0     # line from  MOSSLND2 230.00  BRKR to BRKR  PANOCHE
230.00
 0
  #
  #
  # (4)  B2 LINE OUTAGE (BREAKER-TO-BREAKER)
  #
 1  30760 30790  "1 "    0     # line from  COBURN   230.00  BRKR to BRKR  PANOCHE
230.00
 0
  #
  #
  # (5)  B2 LINE OUTAGE (BREAKER-TO-BREAKER)
  #
 1  30765 30790  "1 "    0     # line from  LOSBANOS 230.00  BRKR to BRKR  PANOCHE
230.00
 0
  #
  #
  # (6)  B2 LINE OUTAGE (BREAKER-TO-BREAKER)
  #
 1  30765 30790  "2 "    0     # line from  LOSBANOS 230.00  BRKR to BRKR  PANOCHE
230.00
 0
  #
  #
  # (7)  B2 LINE OUTAGE (BREAKER-TO-BREAKER)
  #
 1  30765 38615  "1 "    0     # line from  LOSBANOS 230.00  BRKR to BRKR  DS AMIGO
230.00
 0
  #
  #
  # (8)  B2 LINE OUTAGE (BREAKER-TO-BREAKER)
  #
 1  30765 38625  "1 "    0     # line from  LOSBANOS 230.00  BRKR to BRKR  SN LS PP
230.00
 0
  #
  #
  # (9)  B2 LINE OUTAGE (BREAKER-TO-BREAKER)
  #
```

```
 1  30765 38625  "2 "    0     # line from  LOSBANOS 230.00  BRKR to BRKR  SN LS PP
230.00
 0
  #
  #
  # (10)  B2 LINE OUTAGE (BREAKER-TO-BREAKER)
  #
 1  30790 30793  "1 "    0     # line from  PANOCHE  230.00  BRKR to (3)   PANO_EC
230.00
 2  30793 34326  "1 "    0     # TRAN from  PANO_EC  230.00   (3) to (1)   PANO_BS1
13.80
 2  30793 34327  "1 "    0     # TRAN from  PANO_EC  230.00   (3) to (1)   PANO_BS2
13.80
 4  34326     0  "ss"    0     # LOAD-DROP    PANO_BS1  13.80  LOAD==4.50(2.49)
 4  34327     0  "ss"    0     # LOAD-DROP    PANO_BS2  13.80  LOAD==4.50(2.49)
 3  34326     0  "1 "    0     # GEN-DROP    PANO_BS1  13.80  GEN==102.50(20.25)
 3  34326     0  "2 "    0     # GEN-DROP    PANO_BS1  13.80  GEN==102.50(20.25)
 3  34327     0  "3 "    0     # GEN-DROP    PANO_BS2  13.80  GEN==102.50(20.25)
 3  34327     0  "4 "    0     # GEN-DROP    PANO_BS2  13.80  GEN==102.50(20.25)
 0
  #
  #
  # (11)  B2 LINE OUTAGE (BREAKER-TO-BREAKER)
  # sumop outage
 1  30790 30825  "1 "    0     # line from  PANOCHE  230.00  BRKR to (2)   MCMULLN1
230.00
 1  30825 30830  "1 "    0     # line from  MCMULLN1 230.00   (2) to BRKR  KEARNEY
230.00
 4  30825     0  "1 "    0     # LOAD-DROP    MCMULLN1 230.00  LOAD==20.57(4.18)
 3  34600     0  "**"    0     # Trip Helms 1 for Panoche - Kearney 230 kV line outage
HTT/RAS
 0
  #
  #
  # (12)  B2 LINE OUTAGE (BREAKER-TO-BREAKER)
  #
 1  30790 30873  "1 "    0     # line from  PANOCHE  230.00  BRKR to BRKR  HELM
230.00
 0
  #
  #
  # (13)  B2 LINE OUTAGE (BREAKER-TO-BREAKER)
  #
 1  30790 30900  "1 "    0     # line from  PANOCHE  230.00  BRKR to BRKR  GATES
230.00
 0
  #
  #
  # (14)  B2 LINE OUTAGE (BREAKER-TO-BREAKER)
  #
 1  30790 30900  "2 "    0     # line from  PANOCHE  230.00  BRKR to BRKR  GATES
230.00
 0
  #
  #
  # (15)  B2 LINE OUTAGE (BREAKER-TO-BREAKER)
  #
 1  30795 30805  "1 "    0     # line from  STOREY 2 230.00   (2) to BRKR  BORDEN
230.00
 1  30795 30800  "1 "    0     # line from  STOREY 2 230.00   (2) to BRKR  WILSON
230.00
 4  30795     0  "2 "    0     # LOAD-DROP    STOREY 2 230.00  LOAD==33.89(6.88)
 0
  #
  #
  # (16)  B2 LINE OUTAGE (BREAKER-TO-BREAKER)
  #
 1  30796 30800  "1 "    0     # line from  STOREY 1 230.00   (2) to BRKR  WILSON
230.00
```

```
 1  30796 30805  "1 "    0     # line from  STOREY 1 230.00   (2) to BRKR  BORDEN
230.00
 4  30796     0  "1 "    0     # LOAD-DROP    STOREY 1 230.00  LOAD==37.87(7.69)
 0
  #
  #
  # (17)  B2 LINE OUTAGE (BREAKER-TO-BREAKER)
  #
 1  30805 30806  "1 "    0     # line from  BORDEN   230.00  BRKR to BRKR  Q196
230.00
 0
  #
  #
  # (18)  B2 LINE OUTAGE (BREAKER-TO-BREAKER)
  #
 1  30805 30806  "2 "    0     # line from  BORDEN   230.00  BRKR to BRKR  Q196
230.00
 0
  #
  #
  # (19)  B2 LINE OUTAGE (BREAKER-TO-BREAKER)
  #
 1  30805 30810  "1 "    0     # line from  BORDEN   230.00  BRKR to BRKR  GREGG
230.00
 3  34604     0  "**"    0     # Drop unit#3 with loss of Gregg - Borden line
 0
  #
  #
  # (20)  B2 LINE OUTAGE (BREAKER-TO-BREAKER)
  #
 1  30805 30810  "2 "    0     # line from  BORDEN   230.00  BRKR to BRKR  GREGG
230.00
 3  34604     0  "**"    0     # Drop unit#3 with loss of Gregg - Borden #2 line
 0
  #
  #
  # (21)  B2 LINE OUTAGE (BREAKER-TO-BREAKER)
  #
 1  34017 34010  "1 "    0     # line from  CRWS LDG  60.00   (1) to (3)   CRWS LDJ
60.00
 1  34010 34006  "1 "    0     # line from  CRWS LDJ  60.00   (3) to BRKR  PATTERSN
60.00
 1  34010 34012  "1 "    0     # line from  CRWS LDJ  60.00   (3) to (2)   GUSTN JT
60.00
 1  34012 34014  "1 "    0     # line from  GUSTN JT  60.00   (2) to BRKR  NEWMAN
60.00
 4  34017     0  "1 "    0     # LOAD-DROP    CRWS LDG  60.00  LOAD==3.73(0.17)
 1  34016 34017  "1 "    1      # Switches in Crows Landing SW 57 to transfer load
 4  34017     0  "**"    1      # Restore Load at Crows Landing
 0
  #
  #
  # (22)  B2 LINE OUTAGE (BREAKER-TO-BREAKER)
  #
 1  34100 34101  "1 "    0     # line from  CHWCHLLA 115.00  BRKR to (3)   CERTAN T
115.00
 1  34101 34116  "1 "    0     # line from  CERTAN T 115.00   (3) to BRKR  LE GRAND
115.00
 1  34101 34107  "1 "    0     # line from  CERTAN T 115.00   (3) to (2)   CERTANJ2
115.00
 1  34107 34103  "1 "    0     # line from  CERTANJ2 115.00   (2) to (3)   CHWCGNJT
115.00
 1  34103 34102  "1 "    0     # line from  CHWCGNJT 115.00   (3) to (1)   CERTTEED
115.00
 1  34103 34109  "1 "    0     # line from  CHWCGNJT 115.00   (3) to (3)   CHWCGN
115.00
 1  34109 34111  "1 "    0     # line from  CHWCGN   115.00   (3) to (2)   CHWCHLA2
115.00
 2  34109 34301  "1 "    0     # TRAN from  CHWCGN   115.00   (3) to (1)   CHOWCOGN
13.80
```

```
 2  34111 34305  "1 "    0     # TRAN from  CHWCHLA2 115.00   (2) to (1)   CHWCHLA2
13.80
 4  34102     0  "1 "    0     # LOAD-DROP    CERTTEED 115.00  LOAD==9.94(6.94)
 4  34305     0  "ss"    0     # LOAD-DROP    CHWCHLA2  13.80  LOAD==2.00(1.11)
 3  34301     0  "1 "    0     # GEN-DROP    CHOWCOGN  13.80  GEN==50.00(4.33)
 3  34305     0  "1 "    0     # GEN-DROP    CHWCHLA2  13.80  GEN==12.50(7.30)
 0
  #
  #
  # (23)  B2 LINE OUTAGE (BREAKER-TO-BREAKER)
  #
 1  34104 34106  "1 "    0     # line from  ATWATER  115.00  BRKR to (2)   CASTLE
115.00
 1  34106 34138  "1 "    0     # line from  CASTLE   115.00   (2) to BRKR  EL CAPTN
115.00
 0
  #
  #
  # (24)  B2 LINE OUTAGE (BREAKER-TO-BREAKER)
  #
 1  34104 34108  "1 "    0     # line from  ATWATER  115.00  BRKR to (3)   CRESEY T
115.00
 1  34108 34110  "1 "    0     # line from  CRESEY T 115.00  BRKR to (1)   ATWATR J
115.00
 1  34108 34114  "1 "    0     # line from  CRESEY T 115.00   (3) to (3)   JRWD GEN
115.00
 1  34114 34124  "1 "    0     # line from  JRWD GEN 115.00   (3) to (2)   JR WOOD
115.00
 2  34114 34332  "1 "    0     # TRAN from  JRWD GEN 115.00   (3) to (1)   JRWCOGEN
9.11
 1  34124 34140  "1 "    0     # line from  JR WOOD  115.00   (2) to (1)   CRESSEY
115.00
 4  34124     0  "1 "    0     # LOAD-DROP    JR WOOD  115.00  LOAD==11.70(10.32)
 4  34140     0  "1 "    0     # LOAD-DROP    CRESSEY  115.00  LOAD==19.02(3.86)
 3  34332     0  "1 "    0     # GEN-DROP    JRWCOGEN   9.11  GEN==3.80(5.40)
 0
  #
  #
  # (25)  B2 LINE OUTAGE (BREAKER-TO-BREAKER)
  #
 1  34105 34100  "1 "    0     # line from  CERTANJ1 115.00   (2) to BRKR  CHWCHLLA
115.00
 1  34105 34121  "1 "    0     # line from  CERTANJ1 115.00   (2) to (3)   SHARON T
115.00
 1  34121 34120  "1 "    0     # line from  SHARON T 115.00   (3) to (1)   SHARON
115.00
 1  34121 34128  "1 "    0     # line from  SHARON T 115.00   (3) to (3)   OAKH_JCT
115.00
 1  34128 34126  "1 "    0     # line from  OAKH_JCT 115.00   (3) to (2)   CORSGOLD
115.00
 1  34128 34123  "1 "    0     # line from  OAKH_JCT 115.00   (3) to (2)   K1-JCT
115.00
 1  34126 34122  "1 "    0     # line from  CORSGOLD 115.00   (2) to (1)   OAKHURST
115.00
 1  34123 34358  "2 "    0     # line from  K1-JCT   115.00   (2) to BRKR  KERCKHF2
115.00
 4  34120     0  "1 "    0     # LOAD-DROP    SHARON   115.00  LOAD==7.10(4.96)
 4  34126     0  "1 "    0     # LOAD-DROP    CORSGOLD 115.00  LOAD==2.21(0.45)
 4  34126     0  "2 "    0     # LOAD-DROP    CORSGOLD 115.00  LOAD==26.19(5.32)
 4  34122     0  "1 "    0     # LOAD-DROP    OAKHURST 115.00  LOAD==11.68(2.37)
 4  34122     0  "2 "    0     # LOAD-DROP    OAKHURST 115.00  LOAD==15.01(3.05)
 0
  #
  #
  # (26)  B2 LINE OUTAGE (BREAKER-TO-BREAKER)
  #
 1  34108 34110  "1 "    0     # line from  CRESEY T 115.00  BRKR to (3)   ATWATR J
115.00
 1  34110 34130  "1 "    0     # line from  ATWATR J 115.00   (3) to (2)   LIVNGSTN
115.00
```

```
 1  34110 34144  "1 "    0     # line from  ATWATR J 115.00   (3) to BRKR  MERCED
115.00
 1  34130 34132  "1 "    0     # line from  LIVNGSTN 115.00   (2) to (1)   GALLO
115.00
 4  34130     0  "3 "    0     # LOAD-DROP    LIVNGSTN 115.00  LOAD==24.58(5.00)
 4  34132     0  "1 "    0     # LOAD-DROP    GALLO    115.00  LOAD==4.30(3.68)
 0
  #
  #
  # (27)  B2 LINE OUTAGE (BREAKER-TO-BREAKER)
  #
 1  34112 34116  "1 "    0     # line from  EXCHEQUR 115.00  BRKR to BRKR  LE GRAND
115.00
 3  34306     0  "1 "    0      # Exchequer Unit will trip for this outage
 4  34228     0  "**"    0      # Mariposa Loads will drop if bus is below 64 kV, this is
anticipate
 0
  #
  #
  # (28)  B2 LINE OUTAGE (BREAKER-TO-BREAKER)
  #
 1  34116 34134  "1 "    0     # line from  LE GRAND 115.00  BRKR to BRKR  WILSON A
115.00
 0
  #
  #
  # (29)  B2 LINE OUTAGE (BREAKER-TO-BREAKER)
  #
 1  34116 34154  "1 "    0     # line from  LE GRAND 115.00  BRKR to BRKR  DAIRYLND
115.00
 0
  #
  #
  # (30)  B2 LINE OUTAGE (BREAKER-TO-BREAKER)
  #
 1  34118 34136  "1 "    0     # line from  LE GRNDJ 115.00   (2) to BRKR  WILSON B
115.00
 1  34118 34168  "1 "    0     # line from  LE GRNDJ 115.00   (2) to (2)   EL NIDO
115.00
 1  34168 34162  "1 "    0     # line from  EL NIDO  115.00   (2) to BRKR  ORO LOMA
115.00
 4  34168     0  "1 "    0     # LOAD-DROP    EL NIDO  115.00  LOAD==12.49(2.54)
 4  34168     0  "2 "    0     # LOAD-DROP    EL NIDO  115.00  LOAD==15.00(3.05)
 0
  #
  #
  # (31)  B2 LINE OUTAGE (BREAKER-TO-BREAKER)
  #
 1  34134 34104  "1 "    0     # line from  WILSON A 115.00  BRKR to BRKR  ATWATER
115.00
 0
  #
  #
  # (32)  B2 LINE OUTAGE (BREAKER-TO-BREAKER)
  #
 1  34134 34136  "1 "    0     # line from  WILSON A 115.00  BRKR to BRKR  WILSON B
115.00
 0
  #
  #
  # (33)  B2 LINE OUTAGE (BREAKER-TO-BREAKER)
  #
 1  34134 34144  "1 "    0     # line from  WILSON A 115.00  BRKR to BRKR  MERCED
115.00
 0
  #
  #
  # (34)  B2 LINE OUTAGE (BREAKER-TO-BREAKER)
  #
```

```
 1  34136 34138  "1 "    0     # line from  WILSON B 115.00  BRKR to BRKR  EL CAPTN
115.00
 0
  #
  #
  # (35)  B2 LINE OUTAGE (BREAKER-TO-BREAKER)
  #
 1  34136 34144  "2 "    0     # line from  WILSON B 115.00  BRKR to BRKR  MERCED
115.00
 0
  #
  #
  # (36)  B2 LINE OUTAGE (BREAKER-TO-BREAKER)
  #
 1  34141 34148  "1 "    0     # line from  PAN2_TAP 115.00   (2) to (2)   CHENY
115.00
 2  34141 34142  "1 "    0     # TRAN from  PAN2_TAP 115.00   (2) to (1)   WHD_PAN2
13.80
 1  34148 34149  "1 "    0     # line from  CHENY    115.00   (2) to (3)   CHENYT
115.00
 1  34149 34158  "1 "    0     # line from  CHENYT   115.00   (3) to BRKR  PANOCHE
115.00
 1  34149 34354  "1 "    0     # line from  CHENYT   115.00   (3) to BRKR  SCHINDLR
115.00
 4  34148     0  "1 "    0     # LOAD-DROP    CHENY    115.00  LOAD==13.12(2.66)
 3  34142     0  "1 "    0     # GEN-DROP    WHD_PAN2  13.80  GEN==49.00(4.03)
 0
  #
  #
  # (37)  B2 LINE OUTAGE (BREAKER-TO-BREAKER)
  #
 1  34150 34154  "1 "    0     # line from  NEWHALL  115.00   (2) to BRKR  DAIRYLND
115.00
 1  34150 34178  "1 "    0     # line from  NEWHALL  115.00   (2) to (3)   MADERAPR
115.00
 1  34178 34156  "1 "    0     # line from  MADERAPR 115.00   (3) to BRKR  MENDOTA
115.00
 2  34178 34179  "1 "    0     # TRAN from  MADERAPR 115.00   (3) to (1)   MADERA_G
13.80
 4  34150     0  "2 "    0     # LOAD-DROP    NEWHALL  115.00  LOAD==8.55(1.73)
 4  34150     0  "3 "    0     # LOAD-DROP    NEWHALL  115.00  LOAD==10.62(2.16)
 4  34179     0  "ss"    0     # LOAD-DROP    MADERA_G  13.80  LOAD==3.60(0.85)
 3  34179     0  "1 "    0     # GEN-DROP    MADERA_G  13.80  GEN==28.60(6.34)
 0
  #
  #
  # (38)  B2 LINE OUTAGE (BREAKER-TO-BREAKER)
  #
 1  34157 34156  "1 "    0     # line from  PANOCHET 115.00   (2) to BRKR  MENDOTA
115.00
 1  34157 34158  "1 "    0     # line from  PANOCHET 115.00   (2) to BRKR  PANOCHE
115.00
 3  34186     0  "1 "    0     # DG_PAN Unit trips for Panoche - Mendota 115 kV outage
 0
  #
  #
  # (39)  B2 LINE OUTAGE (BREAKER-TO-BREAKER)
  #
 1  34158 34189  "1 "    0     # line from  PANOCHE  115.00  BRKR to (3)   STARWOOD
115.00
 2  34189 34328  "1 "    0     # TRAN from  STARWOOD 115.00   (3) to (1)   STARGT1
13.80
 2  34189 34329  "1 "    0     # TRAN from  STARWOOD 115.00   (3) to (1)   STARGT2
13.80
 4  34328     0  "ss"    0     # LOAD-DROP    STARGT1   13.80  LOAD==1.00(0.55)
 4  34329     0  "ss"    0     # LOAD-DROP    STARGT2   13.80  LOAD==1.00(0.55)
 3  34328     0  "1 "    0     # GEN-DROP    STARGT1   13.80  GEN==60.94(9.59)
 3  34329     0  "2 "    0     # GEN-DROP    STARGT2   13.80  GEN==60.94(9.59)
 0
  #
```

```
  #
  # (40)  B2 LINE OUTAGE (BREAKER-TO-BREAKER)
  #
 1  34158 34350  "1 "    0     # line from  PANOCHE  115.00  BRKR to (2)   KAMM
115.00
 1  34350 34352  "1 "    0     # line from  KAMM     115.00   (2) to (2)   CANTUA
115.00
 1  34352 34432  "1 "    0     # line from  CANTUA   115.00   (2) to (2)   WESTLNDS
115.00
 1  34432 34354  "1 "    0     # line from  WESTLNDS 115.00   (2) to BRKR  SCHINDLR
115.00
 4  34350     0  "1 "    0     # LOAD-DROP    KAMM     115.00  LOAD==3.85(1.75)
 4  34352     0  "1 "    0     # LOAD-DROP    CANTUA   115.00  LOAD==16.79(3.41)
 4  34432     0  "16"    0     # LOAD-DROP    WESTLNDS 115.00  LOAD==0.94(0.23)
 4  34432     0  "18"    0     # LOAD-DROP    WESTLNDS 115.00  LOAD==1.21(0.32)
 0
  #
  #
  # (41)  B2 LINE OUTAGE (BREAKER-TO-BREAKER)
  #
 1  34159 34158  "1 "    0     # line from  PANOCHEJ 115.00   (3) to BRKR  PANOCHE
115.00
 1  34159 34160  "1 "    0     # line from  PANOCHEJ 115.00   (3) to (2)   HAMMONDS
115.00
 1  34159 34180  "1 "    0     # line from  PANOCHEJ 115.00   (3) to (3)   OXFRDJCT
115.00
 1  34160 34161  "1 "    0     # line from  HAMMONDS 115.00   (2) to (3)   DFSTP
115.00
 1  34161 34162  "1 "    0     # line from  DFSTP    115.00   (3) to BRKR  ORO LOMA
115.00
 1  34161 34164  "1 "    0     # line from  DFSTP    115.00   (3) to (1)   DFS
115.00
 1  34180 34166  "1 "    0     # line from  OXFRDJCT 115.00   (3) to (1)   OXFORD
115.00
 1  34180 34181  "1 "    0     # line from  OXFRDJCT 115.00   (3) to (3)   WSTLDJCT
115.00
 1  34181 34182  "1 "    0     # line from  WSTLDJCT 115.00   (3) to (1)   WSTLD1RA
115.00
 1  34181 34183  "1 "    0     # line from  WSTLDJCT 115.00   (3) to (3)   LUISJCT
115.00
 1  34183 34163  "1 "    0     # line from  LUISJCT  115.00   (3) to (1)   LUIS_#3
115.00
 1  34183 34165  "1 "    0     # line from  LUISJCT  115.00   (3) to (1)   LUIS_#5
115.00
 4  34160     0  "1 "    0     # LOAD-DROP    HAMMONDS 115.00  LOAD==10.00(2.03)
 4  34164     0  "1 "    0     # LOAD-DROP    DFS      115.00  LOAD==1.37(1.06)
 4  34166     0  "1 "    0     # LOAD-DROP    OXFORD   115.00  LOAD==3.87(1.76)
 4  34182     0  "1 "    0     # LOAD-DROP    WSTLD1RA 115.00  LOAD==2.98(0.71)
 4  34163     0  "1 "    0     # LOAD-DROP    LUIS_#3  115.00  LOAD==3.30(0.78)
 4  34165     0  "1 "    0     # LOAD-DROP    LUIS_#5  115.00  LOAD==3.40(0.81)
 0
  #
  #
  # (42)  B2 LINE OUTAGE (BREAKER-TO-BREAKER)
  #
 1  34172 34170  "1 "    0     # line from  WESTLAND  70.00   (2) to (1)   WESIX
70.00
 1  34172 34271  "1 "    0     # line from  WESTLAND  70.00   (2) to (3)   WSTLDJCT
70.00
 1  34271 34269  "1 "    0     # line from  WSTLDJCT  70.00   (3) to (3)   BIOMSJCT
70.00
 1  34271 34469  "1 "    0     # line from  WSTLDJCT  70.00   (3) to (3)   GFFNJCT
70.00
 1  34269 34268  "1 "    0     # line from  BIOMSJCT  70.00   (3) to BRKR  MENDOTA
70.00
 1  34269 34270  "1 "    0     # line from  BIOMSJCT  70.00   (3) to (2)   BIOMASS
70.00
 2  34270 34334  "1 "    0     # TRAN from  BIOMASS   70.00   (2) to (1)   BIO PWR
9.11
```

```
 1  34469 34470  "1 "    0     # line from  GFFNJCT   70.00   (3) to (1)   GIFFEN
70.00
 1  34469 34471  "1 "    0     # line from  GFFNJCT   70.00   (3) to (3)   SNJQJCT
70.00
 1  34471 34472  "1 "    0     # line from  SNJQJCT   70.00   (3) to BRKR  SAN JOQN
70.00
 1  34471 34474  "1 "    0     # line from  SNJQJCT   70.00   (3) to BRKR  HELM
70.00
 4  34172     0  "1 "    0     # LOAD-DROP    WESTLAND  70.00  LOAD==3.20(0.76)
 4  34170     0  "1 "    0     # LOAD-DROP    WESIX     70.00  LOAD==1.60(0.38)
 4  34470     0  "1 "    0     # LOAD-DROP    GIFFEN    70.00  LOAD==9.59(1.95)
 3  34334     0  "1 "    0     # GEN-DROP    BIO PWR    9.11  GEN==21.80(10.99)
 1  34472 34473  "1 "    1      # Switches in San Joaquin CB22 to transfer load
 4  34472     0  "**"    1      # Restore Load at San Joaquin
 0
  #
  #
  # (43)  B2 LINE OUTAGE (BREAKER-TO-BREAKER)
  #
 1  34200 34218  "1 "    0     # line from  ORO LOMA  70.00  BRKR to (2)   DOS PALS
70.00
 1  34218 34216  "1 "    0     # line from  DOS PALS  70.00   (2) to BRKR  SNTA RTA
70.00
 4  34218     0  "1 "    0     # LOAD-DROP    DOS PALS  70.00  LOAD==10.29(2.09)
 0
  #
  #
  # (44)  B2 LINE OUTAGE (BREAKER-TO-BREAKER)
  #
 1  34200 34222  "1 "    0     # line from  ORO LOMA  70.00  BRKR to (3)   MRCYSPRS
70.00
 1  34222 34220  "1 "    0     # line from  MRCYSPRS  70.00   (3) to (2)   ORTIGA
70.00
 1  34222 34224  "1 "    0     # line from  MRCYSPRS  70.00   (3) to (2)   ARBURUA
70.00
 1  34220 34206  "1 "    0     # line from  ORTIGA    70.00   (2) to BRKR  CANAL
70.00
 1  34224 34272  "1 "    0     # line from  ARBURUA   70.00   (2) to (2)   WRGHT PP
70.00
 1  34272 34214  "1 "    0     # line from  WRGHT PP  70.00   (2) to BRKR  LOS BANS
70.00
 4  34220     0  "1 "    0     # LOAD-DROP    ORTIGA    70.00  LOAD==6.88(1.40)
 4  34224     0  "1 "    0     # LOAD-DROP    ARBURUA   70.00  LOAD==3.77(1.83)
 4  34272     0  "1 "    0     # LOAD-DROP    WRGHT PP  70.00  LOAD==9.50(1.93)
 0
  #
  #
  # (45)  B2 LINE OUTAGE (BREAKER-TO-BREAKER)
  #
 1  34200 34234  "1 "    0     # line from  ORO LOMA  70.00  BRKR to (2)   POSO J1
70.00
 1  34234 34266  "1 "    0     # line from  POSO J1   70.00   (2) to (2)   FIREBAGH
70.00
 1  34266 34267  "1 "    0     # line from  FIREBAGH  70.00   (2) to (2)   TOMATAK
70.00
 1  34267 34268  "1 "    0     # line from  TOMATAK   70.00   (2) to BRKR  MENDOTA
70.00
 4  34266     0  "1 "    0     # LOAD-DROP    FIREBAGH  70.00  LOAD==11.13(2.26)
 4  34267     0  "1 "    0     # LOAD-DROP    TOMATAK   70.00  LOAD==6.40(4.97)
 0
  #
  #
  # (46)  B2 LINE OUTAGE (BREAKER-TO-BREAKER)
  #
 1  34202 34203  "1 "    0     # line from  MERCED    70.00  BRKR to (3)   ELNIDOTP
70.00
 1  34203 34205  "1 "    0     # line from  ELNIDOTP  70.00   (3) to (2)   ELNIDO
70.00
 1  34203 34236  "1 "    0     # line from  ELNIDOTP  70.00   (3) to (1)   POSO J2
70.00
```

```
 2  34205 34330  "1 "    0     # TRAN from  ELNIDO    70.00   (2) to (1)   ELNIDO
13.80
 4  34330     0  "ss"    0     # LOAD-DROP    ELNIDO    13.80  LOAD==2.00(1.11)
 3  34330     0  "1 "    0     # GEN-DROP    ELNIDO    13.80  GEN==12.50(5.69)
 0
  #
  #
  # (47)  B2 LINE OUTAGE (BREAKER-TO-BREAKER)
  #
 1  34202 34230  "1 "    0     # line from  MERCED    70.00  BRKR to BRKR  MRCDFLLS
70.00
 0
  #
  #
  # (48)  B2 LINE OUTAGE (BREAKER-TO-BREAKER)
  #
 1  34204 34212  "1 "    0     # line from  LIVNGSTN  70.00   (1) to (3)   LVNGSTNT
70.00
 1  34212 34206  "1 "    0     # line from  LVNGSTNT  70.00   (3) to BRKR  CANAL
70.00
 1  34212 34210  "1 "    0     # line from  LVNGSTNT  70.00   (3) to (2)   SNTA NLA
70.00
 1  34210 34208  "1 "    0     # line from  SNTA NLA  70.00   (2) to (2)   CHEVPIPE
70.00
 1  34208 34214  "1 "    0     # line from  CHEVPIPE  70.00   (2) to BRKR  LOS BANS
70.00
 4  34204     0  "2 "    0     # LOAD-DROP    LIVNGSTN  70.00  LOAD==5.51(1.12)
 4  34210     0  "1 "    0     # LOAD-DROP    SNTA NLA  70.00  LOAD==6.75(1.37)
 4  34210     0  "2 "    0     # LOAD-DROP    SNTA NLA  70.00  LOAD==9.50(1.93)
 4  34208     0  "1 "    0     # LOAD-DROP    CHEVPIPE  70.00  LOAD==0.63(0.42)
 0
  #
  #
  # (49)  B2 LINE OUTAGE (BREAKER-TO-BREAKER)
  #
 1  34206 34216  "1 "    0     # line from  CANAL     70.00  BRKR to BRKR  SNTA RTA
70.00
 0
  #
  #
  # (50)  B2 LINE OUTAGE (BREAKER-TO-BREAKER)
  #
 1  34214 34278  "1 "    0     # line from  LOS BANS  70.00  BRKR to (2)   PCHCO PP
70.00
 1  34278 34280  "1 "    0     # line from  PCHCO PP  70.00   (2) to (2)   INTL TUR
70.00
 2  34280 34342  "1 "    0     # TRAN from  INTL TUR  70.00   (2) to (1)   INT.TURB
9.11
 4  34278     0  "1 "    0     # LOAD-DROP    PCHCO PP  70.00  LOAD==18.00(4.10)
 3  34342     0  "1 "    0     # GEN-DROP    INT.TURB   9.11  GEN==1.10(0.00)
 0
  #
  #
  # (51)  B2 LINE OUTAGE (BREAKER-TO-BREAKER)
  #
 1  34214 34282  "1 "    0     # line from  LOS BANS  70.00  BRKR to (2)   ONLL PMP
69.00
 2  34282 34316  "1 "    0     # TRAN from  ONLL PMP  69.00   (2) to (1)   ONEILPMP
9.11
 4  34282     0  "1 "    0     # LOAD-DROP    ONLL PMP  69.00  LOAD==6.00(1.20)
 3  34316     0  "1 "    0     # GEN-DROP    ONEILPMP   9.11  GEN==0.50(0.00)
 0
  #
  #
  # (52)  B2 LINE OUTAGE (BREAKER-TO-BREAKER)
  #
 1  34228 34232  "1 "    0     # line from  MARIPOS2  70.00   (1) to BRKR  EXCHEQUR
70.00
 4  34228     0  "1 "    0     # LOAD-DROP    MARIPOS2  70.00  LOAD==9.01(1.83)
 4  34228     0  "2 "    0     # LOAD-DROP    MARIPOS2  70.00  LOAD==9.37(1.90)
```

```
 1  34228 34244  "1 "    1      # Switches in Mariposa SW 39 to transfer load
 4  34228     0  "**"    1      # Restore Load at Mariposa
 0
  #
  #
  # (53)  B2 LINE OUTAGE (BREAKER-TO-BREAKER)
  #
 1  34232 34242  "1 "    0     # line from  EXCHEQUR  70.00  BRKR to (2)   BER VLLY
70.00
 1  34242 34244  "1 "    0     # line from  BER VLLY  70.00   (2) to (2)   BRCEBG J
70.00
 1  34244 34246  "1 "    0     # line from  BRCEBG J  70.00   (2) to (3)   SAXONCRK
70.00
 1  34246 34248  "1 "    0     # line from  SAXONCRK  70.00   (3) to (2)   INDN FLT
70.00
 2  34246 34346  "1 "    0     # TRAN from  SAXONCRK  70.00   (3) to (1)   SAXNCK L
4.16
 1  34248 34250  "1 "    0     # line from  INDN FLT  70.00   (2) to (1)   YOSEMITE
70.00
 4  34242     0  "1 "    0     # LOAD-DROP    BER VLLY  70.00  LOAD==5.91(1.20)
 4  34246     0  "1 "    0     # LOAD-DROP    SAXONCRK  70.00  LOAD==0.03(0.02)
 4  34248     0  "1 "    0     # LOAD-DROP    INDN FLT  70.00  LOAD==2.02(0.41)
 4  34250     0  "1 "    0     # LOAD-DROP    YOSEMITE  70.00  LOAD==2.90(0.00)
 0
  #
  #
  # (54)  B2 LINE OUTAGE (BREAKER-TO-BREAKER)
  #
 1  34237 34255  "1 "    0     # line from  CANANDGA  70.00   (2) to (3)   TRIGO J
70.00
 1  34237 34240  "1 "    0     # line from  CANANDGA  70.00   (2) to BRKR  GLASS
70.00
 1  34255 34238  "1 "    0     # line from  TRIGO J   70.00   (3) to BRKR  BONITA
70.00
 1  34255 34254  "1 "    0     # line from  TRIGO J   70.00   (3) to (3)   TRIGO
70.00
 1  34254 34252  "1 "    0     # line from  TRIGO     70.00   (3) to BRKR  MADERA
70.00
 1  34254 34264  "1 "    0     # line from  TRIGO     70.00   (3) to (1)   EL PECO
70.00
 4  34237     0  "1 "    0     # LOAD-DROP    CANANDGA  70.00  LOAD==7.60(5.70)
 4  34238     0  "1 "    0     # LOAD-DROP    BONITA    70.00  LOAD==14.37(2.92)
 4  34264     0  "1 "    0     # LOAD-DROP    EL PECO   70.00  LOAD==9.86(2.01)
 4  34264     0  "2 "    0     # LOAD-DROP    EL PECO   70.00  LOAD==7.26(1.48)
 1  34238 34236  "1 "    1      # Switches in Bonita SW23 to transfer load
 4  34238     0  "1 "    1      # Restore Load at Bonita
 0
  #
  #
  # (55)  B2 LINE OUTAGE (BREAKER-TO-BREAKER)
  #
 1  34252 34256  "1 "    0     # line from  MADERA    70.00  BRKR to BRKR  BORDEN
70.00
 0
  #
  #
  # (56)  B2 LINE OUTAGE (BREAKER-TO-BREAKER)
  #
 1  34252 34256  "2 "    0     # line from  MADERA    70.00  BRKR to BRKR  BORDEN
70.00
 0
  #
  #
  # (57)  B2 LINE OUTAGE (BREAKER-TO-BREAKER)
  #
 1  34256 34240  "1 "    0     # line from  BORDEN    70.00  BRKR to BRKR  GLASS
70.00
 0
  #
  #
```

```
  # (58)  B2 LINE OUTAGE (BREAKER-TO-BREAKER)
  #
 1  34256 34262  "1 "    0     # line from  BORDEN    70.00  BRKR to (2)   CASSIDY
70.00
 1  34262 34454  "1 "    0     # line from  CASSIDY   70.00   (2) to (2)   RIVERROC
70.00
 1  34454 34464  "1 "    0     # line from  RIVERROC  70.00   (2) to BRKR  COPPRMNE
70.00
 4  34262     0  "1 "    0     # LOAD-DROP    CASSIDY   70.00  LOAD==14.31(2.90)
 4  34454     0  "1 "    0     # LOAD-DROP    RIVERROC  70.00  LOAD==2.01(1.83)
 0
  #
  #
  # (59)  B2 LINE OUTAGE (BREAKER-TO-BREAKER)
  #
 1  34259 34261  "1 "    0     # line from  NRTHFORK  70.00   (3) to (2)   SJNO3
70.00
 1  34259 34260  "1 "    0     # line from  NRTHFORK  70.00   (3) to (3)   SJNO2
70.00
 2  34259 34340  "1 "    0     # TRAN from  NRTHFORK  70.00   (3) to (1)   N.FORK E
9.11
 2  34261 34633  "1 "    0     # TRAN from  SJNO3     70.00   (2) to (1)   SJ3GEN
9.11
 1  34260 34452  "1 "    0     # line from  SJNO2     70.00   (3) to BRKR  WISHON
70.00
 2  34260 34631  "1 "    0     # TRAN from  SJNO2     70.00   (3) to (1)   SJ2GEN
9.11
 4  34261     0  "2 "    0     # LOAD-DROP    SJNO3     70.00  LOAD==6.95(1.41)
 4  34260     0  "2 "    0     # LOAD-DROP    SJNO2     70.00  LOAD==3.22(0.66)
 4  34340     0  "1 "    0     # LOAD-DROP    N.FORK E   9.11  LOAD==1.21(0.25)
 3  34633     0  "1 "    0     # GEN-DROP    SJ3GEN     9.11  GEN==1.00(0.00)
 3  34631     0  "1 "    0     # GEN-DROP    SJ2GEN     9.11  GEN==2.00(0.00)
 0
  #
  #
  # (60)  B2 LINE OUTAGE (BREAKER-TO-BREAKER)
  #
 1  34321 34226  "1 "    0     # line from  MCSWAINJ  70.00   (3) to (2)   MC SWAIN
70.00
 1  34321 34230  "1 "    0     # line from  MCSWAINJ  70.00   (3) to BRKR  MRCDFLLS
70.00
 1  34321 34232  "1 "    0     # line from  MCSWAINJ  70.00   (3) to BRKR  EXCHEQUR
70.00
 2  34226 34320  "1 "    0     # TRAN from  MC SWAIN  70.00   (2) to (1)   MCSWAIN
9.11
 3  34320     0  "1 "    0     # GEN-DROP    MCSWAIN    9.11  GEN==10.00(2.00)
 0
  #
  #
  # (61)  B2 LINE OUTAGE (BREAKER-TO-BREAKER)
  #
 1  37563 30800  "1 "    0     # line from  MELONES  230.00  BRKR to BRKR  WILSON
230.00
 3  34604     0  "**"    0      # Drop unit#3 with a loss Melones - Wilson line
 0
  #
  #
  # (62)  B2 LINE OUTAGE (BREAKER-TO-BREAKER)
  #
 1  38615 30790  "1 "    0     # line from  DS AMIGO 230.00  BRKR to BRKR  PANOCHE
230.00
 0
  #
  #
  # (63)  B3 TRANSFORMER OUTAGE (BREAKER-TO-BREAKER)
  #
#      **** 3-WINDING TRANSFORMER  30765  (30069)  30050  34302 :
 2  30765 30050  "1 "    0     # TRAN from  LOSBANOS 230.00  BRKR to (1)   LOSBANOS
500.00
 0
```

```
  #
  #
  # (64)  B3 TRANSFORMER OUTAGE (BREAKER-TO-BREAKER)
  #
#      **** 3-WINDING TRANSFORMER  30790  (30791)  34158  34310 :
 2  30790 34158  "1 "    0     # TRAN from  PANOCHE  230.00  BRKR to (1)   PANOCHE
115.00
 0
  #
  #
  # (65)  B3 TRANSFORMER OUTAGE (BREAKER-TO-BREAKER)
  #
 2  30790 34158  "2 "    0     # TRAN from  PANOCHE  230.00  BRKR to BRKR  PANOCHE
115.00
 0
  #
  #
  # (66)  B3 TRANSFORMER OUTAGE (BREAKER-TO-BREAKER)
  #
#      **** 3-WINDING TRANSFORMER  34112  (34176)  34232  34306 :
 2  34112 34232  "1 "    0     # TRAN from  EXCHEQUR 115.00  BRKR to (4)   EXCHEQUR
70.00
 1  34232 34228  "1 "    0     # line from  EXCHEQUR  70.00  BRKR to (1)   MARIPOS2
70.00
 1  34232 34242  "1 "    0     # line from  EXCHEQUR  70.00  BRKR to (1)   BER VLLY
70.00
 1  34232 34321  "1 "    0     # line from  EXCHEQUR  70.00  BRKR to (1)   MCSWAINJ
70.00
 4  34228     0  "1 "    0     # LOAD-DROP    MARIPOS2  70.00  LOAD==9.01(1.83)
 4  34228     0  "2 "    0     # LOAD-DROP    MARIPOS2  70.00  LOAD==9.37(1.90)
 1  34228 34244  "1 "    1      # Switches in Mariposa SW 39 to transfer load
 4  34228     0  "**"    1      # Restore Load at Mariposa
 0
  #
  #
  # (67)  B3 TRANSFORMER OUTAGE (BREAKER-TO-BREAKER)
  #
 2  34134 30800  "1 "    0     # TRAN from  WILSON A 115.00  BRKR to BRKR  WILSON
230.00
 0
  #
  #
  # (68)  B3 TRANSFORMER OUTAGE (BREAKER-TO-BREAKER)
  #
 2  34136 30800  "2 "    0     # TRAN from  WILSON B 115.00  BRKR to BRKR  WILSON
230.00
 0
  #
  #
  # (69)  B3 TRANSFORMER OUTAGE (BREAKER-TO-BREAKER)
  #
#      **** 3-WINDING TRANSFORMER  34144  (34146)  34202  34312 :
 2  34144 34202  "2 "    0     # TRAN from  MERCED   115.00  BRKR to (1)   MERCED
70.00
 0
  #
  #
  # (70)  B3 TRANSFORMER OUTAGE (BREAKER-TO-BREAKER)
  #
 2  34200 34162  "2 "    0     # TRAN from  ORO LOMA  70.00  BRKR to (3)   ORO LOMA
115.00
 1  34162 34161  "1 "    0     # line from  ORO LOMA 115.00  BRKR to (1)   DFSTP
115.00
 1  34162 34168  "1 "    0     # line from  ORO LOMA 115.00  BRKR to (1)   EL NIDO
115.00
 0
  #
  #
  # (71)  B3 TRANSFORMER OUTAGE (BREAKER-TO-BREAKER)
  #
```

```
 2  34214 30765  "3 "    0     # TRAN from  LOS BANS  70.00  BRKR to BRKR  LOSBANOS
230.00
 0
  #
  #
  # (72)  B3 TRANSFORMER OUTAGE (BREAKER-TO-BREAKER)
  #
 2  34214 30765  "4 "    0     # TRAN from  LOS BANS  70.00  BRKR to BRKR  LOSBANOS
230.00
 0
  #
  #
  # (73)  B3 TRANSFORMER OUTAGE (BREAKER-TO-BREAKER)
  #
 2  34256 30805  "1 "    0     # TRAN from  BORDEN    70.00  BRKR to BRKR  BORDEN
230.00
 0
  #
  #
  # (74)  B3 TRANSFORMER OUTAGE (BREAKER-TO-BREAKER)
  #
 2  34256 30805  "2 "    0     # TRAN from  BORDEN    70.00  BRKR to BRKR  BORDEN
230.00
 0
  #
  #
  # (75)  B3 TRANSFORMER OUTAGE (BREAKER-TO-BREAKER)
  #
 2  34268 34156  "1 "    0     # TRAN from  MENDOTA   70.00  BRKR to (3)   MENDOTA
115.00
 1  34156 34178  "1 "    0     # line from  MENDOTA  115.00  BRKR to (1)   MADERAPR
115.00
 1  34156 34157  "1 "    0     # line from  MENDOTA  115.00  BRKR to (1)   PANOCHET
115.00
 4  34156     0  "1 "    0     # LOAD-DROP    MENDOTA  115.00  LOAD==24.55(4.99)
 0
  #
  #
  # (76)  B1 GENERATOR OUTAGE
  #
 3  34142     0  "1"     0     # WHD_PAN2  13.80       PGEN=49.00  QGEN=-22.43
 0
  #
  #
  # (77)  B1 GENERATOR OUTAGE
  #
 3  34179     0  "1"     0     # MADERA_G  13.80       PGEN=28.60  QGEN=3.67
 0
  #
  #
  # (78)  B1 GENERATOR OUTAGE
  #
 3  34186     0  "1"     0     # DG_PAN1   13.80       PGEN=49.00  QGEN=-17.22
 0
  #
  #
  # (79)  B1 GENERATOR OUTAGE
  #
 3  34301     0  "1"     0     # CHOWCOGN  13.80       PGEN=50.00  QGEN=0.72
 0
  #
  #
  # (80)  B1 GENERATOR OUTAGE
  #
 3  34305     0  "1"     0     # CHWCHLA2  13.80       PGEN=12.50  QGEN=7.35
 0
  #
  #
  # (81)  B1 GENERATOR OUTAGE
  #
```

```
3  34306     0  "1"     0     # EXCHQUER  13.80       PGEN=94.50  QGEN=8.77
0
 #
 #
 # (82)  B1 GENERATOR OUTAGE
 #
3  34316     0  "1"     0     # ONEILPMP   9.11       PGEN=0.52  QGEN=0.00
0
 #
 #
 # (83)  B1 GENERATOR OUTAGE
 #
3  34320     0  "1"     0     # MCSWAIN    9.11       PGEN=10.00  QGEN=0.00
0
 #
 #
 # (84)  B1 GENERATOR OUTAGE
 #
3  34322     0  "1"     0     # MERCEDFL   9.11       PGEN=3.50  QGEN=2.00
0
 #
 #
 # (85)  B1 GENERATOR OUTAGE
 #
3  34326     0  "1"     0     # PANO_BS1  13.80       PGEN=102.50  QGEN=25.42
0
 #
 #
 # (86)  B1 GENERATOR OUTAGE
 #
3  34326     0  "2"     0     # PANO_BS1  13.80       PGEN=102.50  QGEN=25.42
0
 #
 #
 # (87)  B1 GENERATOR OUTAGE
 #
3  34327     0  "3"     0     # PANO_BS2  13.80       PGEN=102.50  QGEN=25.42
0
 #
 #
 # (88)  B1 GENERATOR OUTAGE
 #
3  34327     0  "4"     0     # PANO_BS2  13.80       PGEN=102.50  QGEN=25.42
0
 #
 #
 # (89)  B1 GENERATOR OUTAGE
 #
3  34328     0  "1"     0     # STARGT1   13.80       PGEN=60.94  QGEN=13.94
0
 #
 #
 # (90)  B1 GENERATOR OUTAGE
 #
3  34329     0  "2"     0     # STARGT2   13.80       PGEN=60.94  QGEN=13.94
0
 #
 #
 # (91)  B1 GENERATOR OUTAGE
 #
3  34330     0  "1"     0     # ELNIDO    13.80       PGEN=12.50  QGEN=4.15
0
 #
 #
 # (92)  B1 GENERATOR OUTAGE
 #
3  34332     0  "1"     0     # JRWCOGEN   9.11       PGEN=3.80  QGEN=5.40
0
 #
 #
```

```
 # (93)  B1 GENERATOR OUTAGE
 #
3  34334     0  "1"     0     # BIO PWR    9.11       PGEN=21.80  QGEN=8.92
0
 #
 #
 # (94)  B1 GENERATOR OUTAGE
 #
3  34342     0  "1"     0     # INT.TURB   9.11       PGEN=1.10  QGEN=0.00
0
 #
 #
 # (95)  B1 GENERATOR OUTAGE
 #
3  34631     0  "1"     0     # SJ2GEN     9.11       PGEN=2.00  QGEN=0.00
0
 #
 #
 # (96)  B1 GENERATOR OUTAGE
 #
3  34633     0  "1"     0     # SJ3GEN     9.11       PGEN=1.00  QGEN=0.00
0
 #
 #
 # (97)  B1 GENERATOR OUTAGE
 #
3  34335     0  "1"     0     # Q196GT1   16.50       PGEN=192.50  QGEN=31.08
0
 #
 #
 # (98)  B1 GENERATOR OUTAGE
 #
3  34336     0  "2"     0     # Q196GT2   16.50       PGEN=192.50  QGEN=31.08
0
 #
 #
 # (99)  B1 GENERATOR OUTAGE
 #
3  34337     0  "3"     0     # Q196ST1   13.80       PGEN=68.50  QGEN=11.04
0
 #
 #
 # (100)  B1 GENERATOR OUTAGE
 #
3  34338     0  "4"     0     # Q196ST2   13.80       PGEN=68.50  QGEN=11.04
0
 #
 #
 # (101)  B CAPACITOR OUTAGE
 #
6  30765     0  "v"     0     # LOSBANOS  230.0  SVD
0
 #
 #
 # (102)  B CAPACITOR OUTAGE
 #
6  30796     0  "v"     0     # STOREY 1  230.0  SVD
0
 #
 #
 # (103)  B CAPACITOR OUTAGE
 #
6  34134     0  "v"     0     # WILSON A  115.0  SVD
0
 #
 #
 # (104)  B CAPACITOR OUTAGE
 #
6  34252     0  "v"     0     # MADERA     70.0  SVD
0
```

```
  #
  #
  # (105)  B CAPACITOR OUTAGE
  #
 6  34302     0  "v"     0     # L.BANS T   13.8  SVD
 0
  #
  #
  # (106)  L-1/G-1 OVERLAPPING OUTAGE
  # Le Grand - Chowchilla 115 kV Line and Exchequer
 1  34100 34101  "1 "    0     # line from  CHWCHLLA 115.00  BRKR to (3)   CERTAN T
115.00
 1  34101 34116  "1 "    0     # line from  CERTAN T 115.00   (3) to BRKR  LE GRAND
115.00
 1  34101 34107  "1 "    0     # line from  CERTAN T 115.00   (3) to (2)   CERTANJ2
115.00
 1  34107 34103  "1 "    0     # line from  CERTANJ2 115.00   (2) to (3)   CHWCGNJT
115.00
 1  34103 34102  "1 "    0     # line from  CHWCGNJT 115.00   (3) to (1)   CERTTEED
115.00
 1  34103 34109  "1 "    0     # line from  CHWCGNJT 115.00   (3) to (3)   CHWCGN
115.00
 1  34109 34111  "1 "    0     # line from  CHWCGN   115.00   (3) to (2)   CHWCHLA2
115.00
 2  34109 34301  "1 "    0     # TRAN from  CHWCGN   115.00   (3) to (1)   CHOWCOGN
13.80
 2  34111 34305  "1 "    0     # TRAN from  CHWCHLA2 115.00   (2) to (1)   CHWCHLA2
13.80
 4  34102     0  "1 "    0     # LOAD-DROP    CERTTEED 115.00  LOAD==9.94(6.94)
 4  34305     0  "ss"    0     # LOAD-DROP    CHWCHLA2  13.80  LOAD==2.00(1.11)
 3  34301     0  "1 "    0     # GEN-DROP    CHOWCOGN  13.80  GEN==50.00(4.33)
 3  34305     0  "1 "    0     # GEN-DROP    CHWCHLA2  13.80  GEN==12.50(7.30)
  #
 3  34306     0  "1"     0     # EXCHQUER  13.80       PGEN=94.50  QGEN=8.77
 0
  #
  #
  # (107)  L-1/G-1 OVERLAPPING OUTAGE
  # Chowchilla - Kerckhoff #2 115 kV Line and Exchequer
 1  34105 34100  "1 "    0     # line from  CERTANJ1 115.00   (2) to BRKR  CHWCHLLA
115.00
 1  34105 34121  "1 "    0     # line from  CERTANJ1 115.00   (2) to (3)   SHARON T
115.00
 1  34121 34120  "1 "    0     # line from  SHARON T 115.00   (3) to (1)   SHARON
115.00
 1  34121 34128  "1 "    0     # line from  SHARON T 115.00   (3) to (3)   OAKH_JCT
115.00
 1  34128 34126  "1 "    0     # line from  OAKH_JCT 115.00   (3) to (2)   CORSGOLD
115.00
 1  34128 34123  "1 "    0     # line from  OAKH_JCT 115.00   (3) to (2)   K1-JCT
115.00
 1  34126 34122  "1 "    0     # line from  CORSGOLD 115.00   (2) to (1)   OAKHURST
115.00
 1  34123 34358  "2 "    0     # line from  K1-JCT   115.00   (2) to BRKR  KERCKHF2
115.00
 4  34120     0  "1 "    0     # LOAD-DROP    SHARON   115.00  LOAD==7.10(4.96)
 4  34126     0  "1 "    0     # LOAD-DROP    CORSGOLD 115.00  LOAD==2.21(0.45)
 4  34126     0  "2 "    0     # LOAD-DROP    CORSGOLD 115.00  LOAD==26.19(5.32)
 4  34122     0  "1 "    0     # LOAD-DROP    OAKHURST 115.00  LOAD==11.68(2.37)
 4  34122     0  "2 "    0     # LOAD-DROP    OAKHURST 115.00  LOAD==15.01(3.05)
  #
 3  34306     0  "1"     0     # EXCHQUER  13.80       PGEN=94.50  QGEN=8.77
 0
  #
  #
  # (108)  L-1/G-1 OVERLAPPING OUTAGE
  # Atwater - El Capitan 115 kV Line and Exchequer
 1  34104 34106  "1 "    0     # line from  ATWATER  115.00  BRKR to (2)   CASTLE
115.00
```

```
 1  34106 34138  "1 "    0     # line from  CASTLE   115.00   (2) to BRKR  EL CAPTN
115.00
  #
 3  34306     0  "1"     0     # EXCHQUER  13.80       PGEN=94.50  QGEN=8.77
 0
  #
  #
  # (109)  L-1/G-1 OVERLAPPING OUTAGE
  # Atwater - Merced 115 kV Line and Exchequer
 1  34104 34108  "1 "    0     # line from  ATWATER  115.00  BRKR to (3)   CRESEY T
115.00
 1  34108 34110  "1 "    0     # line from  CRESEY T 115.00  BRKR to (1)   ATWATR J
115.00
 1  34108 34114  "1 "    0     # line from  CRESEY T 115.00   (3) to (3)   JRWD GEN
115.00
 1  34114 34124  "1 "    0     # line from  JRWD GEN 115.00   (3) to (2)   JR WOOD
115.00
 2  34114 34332  "1 "    0     # TRAN from  JRWD GEN 115.00   (3) to (1)   JRWCOGEN
9.11
 1  34124 34140  "1 "    0     # line from  JR WOOD  115.00   (2) to (1)   CRESSEY
115.00
 4  34124     0  "1 "    0     # LOAD-DROP    JR WOOD  115.00  LOAD==11.70(10.32)
 4  34140     0  "1 "    0     # LOAD-DROP    CRESSEY  115.00  LOAD==19.02(3.86)
 3  34332     0  "1 "    0     # GEN-DROP    JRWCOGEN   9.11  GEN==3.80(5.40)
  #
 3  34306     0  "1"     0     # EXCHQUER  13.80       PGEN=94.50  QGEN=8.77
 0
  #
  #
  # (110)  L-1/G-1 OVERLAPPING OUTAGE
  # Cressy Tap 115 kV Line and Exchequer
 1  34108 34110  "1 "    0     # line from  CRESEY T 115.00  BRKR to (3)   ATWATR J
115.00
 1  34110 34130  "1 "    0     # line from  ATWATR J 115.00   (3) to (2)   LIVNGSTN
115.00
 1  34110 34144  "1 "    0     # line from  ATWATR J 115.00   (3) to BRKR  MERCED
115.00
 1  34130 34132  "1 "    0     # line from  LIVNGSTN 115.00   (2) to (1)   GALLO
115.00
 4  34130     0  "3 "    0     # LOAD-DROP    LIVNGSTN 115.00  LOAD==24.58(5.00)
 4  34132     0  "1 "    0     # LOAD-DROP    GALLO    115.00  LOAD==4.30(3.68)
  #
 3  34306     0  "1"     0     # EXCHQUER  13.80       PGEN=94.50  QGEN=8.77
 0
  #
  #
  # (111)  L-1/G-1 OVERLAPPING OUTAGE
  # Le Grand - Dairyland 115 kV Line and Exchequer
 1  34116 34154  "1 "    0     # line from  LE GRAND 115.00  BRKR to BRKR  DAIRYLND
115.00
  #
 3  34306     0  "1"     0     # EXCHQUER  13.80       PGEN=94.50  QGEN=8.77
 0
  #
  #
  # (112)  L-1/G-1 OVERLAPPING OUTAGE
  # Wilson - Oro Loma 115 kV Line and Exchequer
 1  34118 34136  "1 "    0     # line from  LE GRNDJ 115.00   (2) to BRKR  WILSON B
115.00
 1  34118 34168  "1 "    0     # line from  LE GRNDJ 115.00   (2) to (2)   EL NIDO
115.00
 1  34168 34162  "1 "    0     # line from  EL NIDO  115.00   (2) to BRKR  ORO LOMA
115.00
 4  34168     0  "1 "    0     # LOAD-DROP    EL NIDO  115.00  LOAD==12.49(2.54)
 4  34168     0  "2 "    0     # LOAD-DROP    EL NIDO  115.00  LOAD==15.00(3.05)
  #
 3  34306     0  "1"     0     # EXCHQUER  13.80       PGEN=94.50  QGEN=8.77
 0
  #
  #
```

```
  # (113)  L-1/G-1 OVERLAPPING OUTAGE
  # El Capitan - Wilson 115 kV Line and Exchequer
 1  34136 34138  "1 "    0     # line from  WILSON B 115.00  BRKR to BRKR  EL CAPTN
115.00
  #
 3  34306     0  "1"     0     # EXCHQUER  13.80       PGEN=94.50  QGEN=8.77
 0
  #
  #
  # (114)  L-1/G-1 OVERLAPPING OUTAGE
  # Dairyland - Mendota 115 kV Line and Exchequer
 1  34150 34154  "1 "    0     # line from  NEWHALL  115.00   (2) to BRKR  DAIRYLND
115.00
 1  34150 34178  "1 "    0     # line from  NEWHALL  115.00   (2) to (3)   MADERAPR
115.00
 1  34178 34156  "1 "    0     # line from  MADERAPR 115.00   (3) to BRKR  MENDOTA
115.00
 2  34178 34179  "1 "    0     # TRAN from  MADERAPR 115.00   (3) to (1)   MADERA_G
13.80
 4  34150     0  "2 "    0     # LOAD-DROP    NEWHALL  115.00  LOAD==8.55(1.73)
 4  34150     0  "3 "    0     # LOAD-DROP    NEWHALL  115.00  LOAD==10.62(2.16)
 4  34179     0  "ss"    0     # LOAD-DROP    MADERA_G  13.80  LOAD==3.60(0.85)
 3  34179     0  "1 "    0     # GEN-DROP    MADERA_G  13.80  GEN==28.60(6.34)
  #
 3  34306     0  "1"     0     # EXCHQUER  13.80       PGEN=94.50  QGEN=8.77
 0
  #
  #
  # (115)  L-1/G-1 OVERLAPPING OUTAGE
  # Panoche - Mendota 115 kV Line and Exchequer
 1  34157 34156  "1 "    0     # line from  PANOCHET 115.00   (2) to BRKR  MENDOTA
115.00
 1  34157 34158  "1 "    0     # line from  PANOCHET 115.00   (2) to BRKR  PANOCHE
115.00
 3  34186     0  "1 "    0     # DG_PAN Unit trips for Panoche - Mendota 115 kV outage
  #
 3  34306     0  "1"     0     # EXCHQUER  13.80       PGEN=94.50  QGEN=8.77
 0
  #
  #
  # (116)  L-1/G-1 OVERLAPPING OUTAGE
  # Glass - Biola - Madera 70 kV Line and Exchequer
 1  34237 34255  "1 "    0     # line from  CANANDGA  70.00   (2) to (3)   TRIGO J
70.00
 1  34237 34240  "1 "    0     # line from  CANANDGA  70.00   (2) to BRKR  GLASS
70.00
 1  34255 34238  "1 "    0     # line from  TRIGO J   70.00   (3) to BRKR  BONITA
70.00
 1  34255 34254  "1 "    0     # line from  TRIGO J   70.00   (3) to (3)   TRIGO
70.00
 1  34254 34252  "1 "    0     # line from  TRIGO     70.00   (3) to BRKR  MADERA
70.00
 1  34254 34264  "1 "    0     # line from  TRIGO     70.00   (3) to (1)   EL PECO
70.00
 4  34237     0  "1 "    0     # LOAD-DROP    CANANDGA  70.00  LOAD==7.60(5.70)
 4  34238     0  "1 "    0     # LOAD-DROP    BONITA    70.00  LOAD==14.37(2.92)
 4  34264     0  "1 "    0     # LOAD-DROP    EL PECO   70.00  LOAD==9.86(2.01)
 4  34264     0  "2 "    0     # LOAD-DROP    EL PECO   70.00  LOAD==7.26(1.48)
 1  34238 34236  "1 "    1      # Switches in Bonita SW23 to transfer load
 4  34238     0  "1 "    1      # Restore Load at Bonita
  #
 3  34306     0  "1"     0     # EXCHQUER  13.80       PGEN=94.50  QGEN=8.77
 0
  #
  #
  # (117)  L-1/G-1 OVERLAPPING OUTAGE
  # Merced Falls - Exchequer 70 kV Line and Exchequer
 1  34321 34226  "1 "    0     # line from  MCSWAINJ  70.00   (3) to (2)   MC SWAIN
70.00
```

```
 1  34321 34230  "1 "    0     # line from  MCSWAINJ  70.00   (3) to BRKR  MRCDFLLS
70.00
 1  34321 34232  "1 "    0     # line from  MCSWAINJ  70.00   (3) to BRKR  EXCHEQUR
70.00
 2  34226 34320  "1 "    0     # TRAN from  MC SWAIN  70.00   (2) to (1)   MCSWAIN
9.11
 3  34320     0  "1 "    0     # GEN-DROP    MCSWAIN    9.11  GEN==10.00(2.00)
  #
 3  34306     0  "1"     0     # EXCHQUER  13.80       PGEN=94.50  QGEN=8.77
 0
  #
  #
  # (118)  L-1/G-1 OVERLAPPING OUTAGE
  # Los Banos - Canal - Oro Loma 70 kV Line and Exchequer
 1  34200 34222  "1 "    0     # line from  ORO LOMA  70.00  BRKR to (3)   MRCYSPRS
70.00
 1  34222 34220  "1 "    0     # line from  MRCYSPRS  70.00   (3) to (2)   ORTIGA
70.00
 1  34222 34224  "1 "    0     # line from  MRCYSPRS  70.00   (3) to (2)   ARBURUA
70.00
 1  34220 34206  "1 "    0     # line from  ORTIGA    70.00   (2) to BRKR  CANAL
70.00
 1  34224 34272  "1 "    0     # line from  ARBURUA   70.00   (2) to (2)   WRGHT PP
70.00
 1  34272 34214  "1 "    0     # line from  WRGHT PP  70.00   (2) to BRKR  LOS BANS
70.00
 4  34220     0  "1 "    0     # LOAD-DROP    ORTIGA    70.00  LOAD==6.88(1.40)
 4  34224     0  "1 "    0     # LOAD-DROP    ARBURUA   70.00  LOAD==3.77(1.83)
 4  34272     0  "1 "    0     # LOAD-DROP    WRGHT PP  70.00  LOAD==9.50(1.93)
  #
 3  34306     0  "1"     0     # EXCHQUER  13.80       PGEN=94.50  QGEN=8.77
 0
  #
  #
  # (119)  L-1/G-1 OVERLAPPING OUTAGE
  # Atwater - El Capitan 115 kV Line and JR Wood Cogen
 1  34104 34106  "1 "    0     # line from  ATWATER  115.00  BRKR to (2)   CASTLE
115.00
 1  34106 34138  "1 "    0     # line from  CASTLE   115.00   (2) to BRKR  EL CAPTN
115.00
  #
 3  34332     0  "1"     0     # JRWCOGEN   9.11       PGEN=4.00  QGEN=5.40
 0
  #
  #
  # (120)  L-1/G-1 OVERLAPPING OUTAGE
  # Wilson - Atwater #2 115 kV Line and JR Wood Cogen
 1  34134 34104  "1 "    0     # line from  WILSON A 115.00  BRKR to BRKR  ATWATER
115.00
  #
 3  34332     0  "1"     0     # JRWCOGEN   9.11       PGEN=4.00  QGEN=5.40
 0
  #
  #
  # (121)  L-1/G-1 OVERLAPPING OUTAGE
  # Le Grand - Chowchilla 115 kV Line and Kerckhoff
 1  34100 34101  "1 "    0     # line from  CHWCHLLA 115.00  BRKR to (3)   CERTAN T
115.00
 1  34101 34116  "1 "    0     # line from  CERTAN T 115.00   (3) to BRKR  LE GRAND
115.00
 1  34101 34107  "1 "    0     # line from  CERTAN T 115.00   (3) to (2)   CERTANJ2
115.00
 1  34107 34103  "1 "    0     # line from  CERTANJ2 115.00   (2) to (3)   CHWCGNJT
115.00
 1  34103 34102  "1 "    0     # line from  CHWCGNJT 115.00   (3) to (1)   CERTTEED
115.00
 1  34103 34109  "1 "    0     # line from  CHWCGNJT 115.00   (3) to (3)   CHWCGN
115.00
 1  34109 34111  "1 "    0     # line from  CHWCGN   115.00   (3) to (2)   CHWCHLA2
115.00
```

```
 2  34109 34301  "1 "    0     # TRAN from  CHWCGN   115.00   (3) to (1)   CHOWCOGN
13.80
 2  34111 34305  "1 "    0     # TRAN from  CHWCHLA2 115.00   (2) to (1)   CHWCHLA2
13.80
 4  34102     0  "1 "    0     # LOAD-DROP    CERTTEED 115.00  LOAD==9.94(6.94)
 4  34305     0  "ss"    0     # LOAD-DROP    CHWCHLA2  13.80  LOAD==2.00(1.11)
 3  34301     0  "1 "    0     # GEN-DROP    CHOWCOGN  13.80  GEN==50.00(4.33)
 3  34305     0  "1 "    0     # GEN-DROP    CHWCHLA2  13.80  GEN==12.50(7.30)
  #
 3  34308     0  "1"     0     # KERCKHOF  13.80       PGEN=129.00  QGEN=16.00
 0
  #
  #
  # (122)  L-1/G-1 OVERLAPPING OUTAGE
  # Exchequer - Le Grand 115 kV Line and Kerckhoff
 1  34112 34116  "1 "    0     # line from  EXCHEQUR 115.00  BRKR to BRKR  LE GRAND
115.00
 3  34306     0  "1 "    0      # Exchequer Unit will trip for this outage
 4  34228     0  "**"    0      # Mariposa Loads will drop if bus is below 64 kV, this is
anticipate
  #
 3  34308     0  "1"     0     # KERCKHOF  13.80       PGEN=129.00  QGEN=16.00
 0
  #
  #
  # (123)  B2 LINE OUTAGE (BREAKER-TO-BREAKER)
  # Le Grand - Dairyland 115 kV Line and Kerckhoff
 1  34116 34154  "1 "    0     # line from  LE GRAND 115.00  BRKR to BRKR  DAIRYLND
115.00
  #
 3  34308     0  "1"     0     # KERCKHOF  13.80       PGEN=129.00  QGEN=16.00
 0
  #
  #
  # (124)  L-1/G-1 OVERLAPPING OUTAGE
  # Glass - Biola - Madera 70 kV Line and Kerckhoff
 1  34237 34255  "1 "    0     # line from  CANANDGA  70.00   (2) to (3)   TRIGO J
70.00
 1  34237 34240  "1 "    0     # line from  CANANDGA  70.00   (2) to BRKR  GLASS
70.00
 1  34255 34238  "1 "    0     # line from  TRIGO J   70.00   (3) to BRKR  BONITA
70.00
 1  34255 34254  "1 "    0     # line from  TRIGO J   70.00   (3) to (3)   TRIGO
70.00
 1  34254 34252  "1 "    0     # line from  TRIGO     70.00   (3) to BRKR  MADERA
70.00
 1  34254 34264  "1 "    0     # line from  TRIGO     70.00   (3) to (1)   EL PECO
70.00
 4  34237     0  "1 "    0     # LOAD-DROP    CANANDGA  70.00  LOAD==7.60(5.70)
 4  34238     0  "1 "    0     # LOAD-DROP    BONITA    70.00  LOAD==14.37(2.92)
 4  34264     0  "1 "    0     # LOAD-DROP    EL PECO   70.00  LOAD==9.86(2.01)
 4  34264     0  "2 "    0     # LOAD-DROP    EL PECO   70.00  LOAD==7.26(1.48)
 1  34238 34236  "1 "    1      # Switches in Bonita SW23 to transfer load
 4  34238     0  "1 "    1      # Restore Load at Bonita
  #
 3  34308     0  "1"     0     # KERCKHOF  13.80       PGEN=129.00  QGEN=16.00
 0
  #
  #
  # (125)  L-1/G-1 OVERLAPPING OUTAGE
  # Los Banos - Canal - Oro Loma 70 kV Line and Oneil Pump
 1  34200 34222  "1 "    0     # line from  ORO LOMA  70.00  BRKR to (3)   MRCYSPRS
70.00
 1  34222 34220  "1 "    0     # line from  MRCYSPRS  70.00   (3) to (2)   ORTIGA
70.00
 1  34222 34224  "1 "    0     # line from  MRCYSPRS  70.00   (3) to (2)   ARBURUA
70.00
 1  34220 34206  "1 "    0     # line from  ORTIGA    70.00   (2) to BRKR  CANAL
70.00
```

```
 1  34224 34272  "1 "    0     # line from  ARBURUA   70.00   (2) to (2)   WRGHT PP
70.00
 1  34272 34214  "1 "    0     # line from  WRGHT PP  70.00   (2) to BRKR  LOS BANS
70.00
 4  34220     0  "1 "    0     # LOAD-DROP    ORTIGA    70.00  LOAD==6.88(1.40)
 4  34224     0  "1 "    0     # LOAD-DROP    ARBURUA   70.00  LOAD==3.77(1.83)
 4  34272     0  "1 "    0     # LOAD-DROP    WRGHT PP  70.00  LOAD==9.50(1.93)
  #
 3  34316     0  "1"     0     # ONEILPMP   9.11       PGEN=0.52  QGEN=0.00
 0
  #
  #
  # (126)  L-1/G-1 OVERLAPPING OUTAGE
  # Warnerville - Wilson 230 kV Line and Melones Unit 1
 1  30515 30800  "1 "    0     # line from  WARNERVL 230.00  BRKR to BRKR  WILSON
230.00
  #
 3  37561     0  "1"     0     # MELONE1   13.80       PGEN=119.00  QGEN=60.00
 0
  #
  #
  # (127)  L-1/G-1 OVERLAPPING OUTAGE
  # Wilson - Borden #1 230 kV Line and Melones Unit 1
 1  30795 30805  "1 "    0     # line from  STOREY 2 230.00   (2) to BRKR  BORDEN
230.00
 1  30795 30800  "1 "    0     # line from  STOREY 2 230.00   (2) to BRKR  WILSON
230.00
 4  30795     0  "2 "    0     # LOAD-DROP    STOREY 2 230.00  LOAD==33.89(6.88)
  #
 3  37561     0  "1"     0     # MELONE1   13.80       PGEN=119.00  QGEN=60.00
 0
  #
  #
  # (128)  L-1/G-1 OVERLAPPING OUTAGE
  # Wilson - Borden #2 230 kV Line and Melones Unit 1
 1  30796 30800  "1 "    0     # line from  STOREY 1 230.00   (2) to BRKR  WILSON
230.00
 1  30796 30805  "1 "    0     # line from  STOREY 1 230.00   (2) to BRKR  BORDEN
230.00
 4  30796     0  "1 "    0     # LOAD-DROP    STOREY 1 230.00  LOAD==37.87(7.69)
  #
 3  37561     0  "1"     0     # MELONE1   13.80       PGEN=119.00  QGEN=60.00
 0
  #
  #
  # (129)  L-1/G-1 OVERLAPPING OUTAGE
  # Borden - Gregg #1 230 kV Line and Melones Unit 1
 1  30805 30810  "1 "    0     # line from  BORDEN   230.00  BRKR to BRKR  GREGG
230.00
 3  34604     0  "**"    0     # Drop unit#3 with loss of Gregg - Borden line
  #
 3  37561     0  "1"     0     # MELONE1   13.80       PGEN=119.00  QGEN=60.00
 0
  #
  #
  # (130)  L-1/G-1 OVERLAPPING OUTAGE
  # Borden - Gregg #2 230 kV Line and Melones Unit 1
 1  30805 30810  "2 "    0     # line from  BORDEN   230.00  BRKR to BRKR  GREGG
230.00
 3  34604     0  "**"    0     # Drop unit#3 with loss of Gregg - Borden #2 line
  #
 3  37561     0  "1"     0     # MELONE1   13.80       PGEN=119.00  QGEN=60.00
 0
  #
  #
  # (131)  L-1/G-1 OVERLAPPING OUTAGE
  # Melones - Wilson 230 kV Line and Melones Unit 1
 1  37563 30800  "1 "    0     # line from  MELONES 230.00   (2) to BRKR  WILSON   230.00
  #
 3  37561     0  "1"     0     # MELONE1   13.80       PGEN=119.00  QGEN=60.00
```

```
 0
  #
  #
  # (132)  L-1/G-1 OVERLAPPING OUTAGE
  # Warnerville - Wilson 230 kV Line and Helms Unit 1
 1  30515 30800  "1 "    0     # line from  WARNERVL 230.00  BRKR to BRKR  WILSON
230.00
  #
 3  34600     0  "1"     0     # HELMS 1   18.00       PGEN=404.00  QGEN=66.02
 0
  #
  #
  # (133)  L-1/G-1 OVERLAPPING OUTAGE
  # Westley - Los Banos 230 kV Line and Helms Unit 1
 1  30670 30765  "1 "    0     # line from  WESTLEY  230.00  BRKR to BRKR  LOSBANOS
230.00
  #
 3  34600     0  "1"     0     # HELMS 1   18.00       PGEN=404.00  QGEN=66.02
 0
  #
  #
  # (134)  L-1/G-1 OVERLAPPING OUTAGE
  # Moss Landing - Panoche 230 kV Line and Helms Unit 1
 1  30750 30790  "1 "    0     # line from  MOSSLND2 230.00  BRKR to BRKR  PANOCHE
230.00
  #
 3  34600     0  "1"     0     # HELMS 1   18.00       PGEN=404.00  QGEN=66.02
 0
  #
  #
  # (135)  L-1/G-1 OVERLAPPING OUTAGE
  # Coburn - Panoche 230 kV Line and Helms Unit 1
 1  30760 30790  "1 "    0     # line from  COBURN   230.00  BRKR to BRKR  PANOCHE
230.00
  #
 3  34600     0  "1"     0     # HELMS 1   18.00       PGEN=404.00  QGEN=66.02
 0
  #
  #
  # (136)  L-1/G-1 OVERLAPPING OUTAGE
  # Los Banos - Panoche #1 230 kV Line and Helms Unit 1
 1  30765 30790  "1 "    0     # line from  LOSBANOS 230.00  BRKR to BRKR  PANOCHE
230.00
  #
 3  34600     0  "1"     0     # HELMS 1   18.00       PGEN=404.00  QGEN=66.02
 0
  #
  #
  # (137)  L-1/G-1 OVERLAPPING OUTAGE
  # Los Banos - Panoche #2 230 kV Line and Helms Unit 1
 1  30765 30790  "2 "    0     # line from  LOSBANOS 230.00  BRKR to BRKR  PANOCHE
230.00
  #
 3  34600     0  "1"     0     # HELMS 1   18.00       PGEN=404.00  QGEN=66.02
 0
  #
  #
  # (138)  L-1/G-1 OVERLAPPING OUTAGE
  # Los Banos - Dos Amigos 230 kV Line and Helms Unit 1
 1  30765 38615  "1 "    0     # line from  LOSBANOS 230.00  BRKR to BRKR  DS AMIGO
230.00
  #
 3  34600     0  "1"     0     # HELMS 1   18.00       PGEN=404.00  QGEN=66.02
 0
  #
  #
  # (139)  L-1/G-1 OVERLAPPING OUTAGE
  # Los Banos - San Luis PGP #1 230 kV Line and Helms Unit 1
 1  30765 38625  "1 "    0     # line from  LOSBANOS 230.00  BRKR to BRKR  SN LS PP
230.00
```

```
  #
 3  34600     0  "1"     0     # HELMS 1   18.00       PGEN=404.00  QGEN=66.02
 0
  #
  #
  # (140)  L-1/G-1 OVERLAPPING OUTAGE
  # Los Banos - San Luis PGP #2 230 kV Line and Helms Unit 1
 1  30765 38625  "2 "    0     # line from  LOSBANOS 230.00  BRKR to BRKR  SN LS PP
230.00
  #
 3  34600     0  "1"     0     # HELMS 1   18.00       PGEN=404.00  QGEN=66.02
 0
  #
  #
  # (141)  L-1/G-1 OVERLAPPING OUTAGE
  # Panoche - Kearney 230 kV Line and Helms Unit 1 sumop outage
 1  30790 30825  "1 "    0     # line from  PANOCHE  230.00  BRKR to (2)   MCMULLN1
230.00
 1  30825 30830  "1 "    0     # line from  MCMULLN1 230.00   (2) to BRKR  KEARNEY
230.00
 4  30825     0  "1 "    0     # LOAD-DROP    MCMULLN1 230.00  LOAD==20.57(4.18)
 3  34600     0  "**"    0     # Trip Helms 1 for Panoche - Kearney 230 kV line outage
HTT/RAS
  #
 3  34600     0  "1"     0     # HELMS 1   18.00       PGEN=404.00  QGEN=66.02
 0
  #
  #
  # (142)  L-1/G-1 OVERLAPPING OUTAGE
  # Panoche - Helm 230 kV Line and Helms Unit 1
 1  30790 30873  "1 "    0     # line from  PANOCHE  230.00  BRKR to BRKR  HELM
230.00
  #
 3  34600     0  "1"     0     # HELMS 1   18.00       PGEN=404.00  QGEN=66.02
 0
  #
  #
  # (143)  L-1/G-1 OVERLAPPING OUTAGE
  # Gates - Panoche #1 230 kV Line and Helms Unit 1
 1  30790 30900  "1 "    0     # line from  PANOCHE  230.00  BRKR to BRKR  GATES
230.00
  #
 3  34600     0  "1"     0     # HELMS 1   18.00       PGEN=404.00  QGEN=66.02
 0
  #
  #
  # (144)  L-1/G-1 OVERLAPPING OUTAGE
  # Gates - Panoche #2 230 kV Line and Helms Unit 1
 1  30790 30900  "2 "    0     # line from  PANOCHE  230.00  BRKR to BRKR  GATES
230.00
  #
 3  34600     0  "1"     0     # HELMS 1   18.00       PGEN=404.00  QGEN=66.02
 0
  #
  #
  # (145)  L-1/G-1 OVERLAPPING OUTAGE
  # Wilson - Borden #1 230 kV Line and Helms Unit 1
 1  30795 30805  "1 "    0     # line from  STOREY 2 230.00   (2) to BRKR  BORDEN
230.00
 1  30795 30800  "1 "    0     # line from  STOREY 2 230.00   (2) to BRKR  WILSON
230.00
 4  30795     0  "2 "    0     # LOAD-DROP    STOREY 2 230.00  LOAD==33.89(6.88)
  #
 3  34600     0  "1"     0     # HELMS 1   18.00       PGEN=404.00  QGEN=66.02
 0
  #
  #
  # (146)  L-1/G-1 OVERLAPPING OUTAGE
  # Wilson - Borden #2 230 kV Line and Helms Unit 1
```

```
 1  30796 30800  "1 "    0     # line from  STOREY 1 230.00   (2) to BRKR  WILSON
230.00
 1  30796 30805  "1 "    0     # line from  STOREY 1 230.00   (2) to BRKR  BORDEN
230.00
 4  30796     0  "1 "    0     # LOAD-DROP    STOREY 1 230.00  LOAD==37.87(7.69)
  #
 3  34600     0  "1"     0     # HELMS 1   18.00       PGEN=404.00  QGEN=66.02
 0
  #
  #
  # (147)  L-1/G-1 OVERLAPPING OUTAGE
  # Melones - Wilson 230 kV Line and Helms Unit 1
 1  37563 30800  "1 "    0     # line from  MELONES 230.00   (2) to BRKR  WILSON   230.00
  #
 3  34600     0  "1"     0     # HELMS 1   18.00       PGEN=404.00  QGEN=66.02
 0
  #
  #
  # (148)  L-1/G-1 OVERLAPPING OUTAGE
  # Borden - Gregg #1 230 kV Line and Helms Unit 1
 1  30805 30810  "1 "    0     # line from  BORDEN   230.00  BRKR to BRKR  GREGG
230.00
 3  34604     0  "**"    0     # Drop unit#3 with loss of Gregg - Borden line
  #
 3  34600     0  "1"     0     # HELMS 1   18.00       PGEN=404.00  QGEN=66.02
 0
  #
  #
  # (149)  L-1/G-1 OVERLAPPING OUTAGE
  # Borden - Gregg #2 230 kV Line and Helms Unit 1
 1  30805 30810  "2 "    0     # line from  BORDEN   230.00  BRKR to BRKR  GREGG
230.00
 3  34604     0  "**"    0     # Drop unit#3 with loss of Gregg - Borden #2 line
  #
 3  34600     0  "1"     0     # HELMS 1   18.00       PGEN=404.00  QGEN=66.02
 0
  #
  #
  # (150)  L-1/G-1 OVERLAPPING OUTAGE
  # Dos Amigos - Panoche 230 kV Line and Helms Unit 1
 1  38615 30790  "1 "    0     # line from  DS AMIGO 230.00  BRKR to BRKR  PANOCHE
230.00
  #
 3  34600     0  "1"     0     # HELMS 1   18.00       PGEN=404.00  QGEN=66.02
 0
  #
  #
  # (151)  L-1/G-1 OVERLAPPING OUTAGE
  # Warnerville - Wilson 230 kV Line and Exchequer
 1  30515 30800  "1 "    0     # line from  WARNERVL 230.00  BRKR to BRKR  WILSON
230.00
  #
 3  34306     0  "1"     0     # EXCHQUER  13.80       PGEN=94.50  QGEN=8.77
 0
  #
  #
  # (152)  L-1/G-1 OVERLAPPING OUTAGE
  # Westley - Los Banos 230 kV Line and Exchequer
 1  30670 30765  "1 "    0     # line from  WESTLEY  230.00  BRKR to BRKR  LOSBANOS
230.00
  #
 3  34306     0  "1"     0     # EXCHQUER  13.80       PGEN=94.50  QGEN=8.77
 0
  #
  #
  # (153)  L-1/G-1 OVERLAPPING OUTAGE
  # Moss Landing - Panoche 230 kV Line and Exchequer
 1  30750 30790  "1 "    0     # line from  MOSSLND2 230.00  BRKR to BRKR  PANOCHE
230.00
  #
```

```
 3  34306     0  "1"     0     # EXCHQUER  13.80       PGEN=94.50  QGEN=8.77
 0
  #
  #
  # (154)  L-1/G-1 OVERLAPPING OUTAGE
  # Coburn - Panoche 230 kV Line and Exchequer
 1  30760 30790  "1 "    0     # line from  COBURN   230.00  BRKR to BRKR  PANOCHE
230.00
  #
 3  34306     0  "1"     0     # EXCHQUER  13.80       PGEN=94.50  QGEN=8.77
 0
  #
  #
  # (155)  L-1/G-1 OVERLAPPING OUTAGE
  # Los Banos - Panoche #1 230 kV Line and Exchequer
 1  30765 30790  "1 "    0     # line from  LOSBANOS 230.00  BRKR to BRKR  PANOCHE
230.00
  #
 3  34306     0  "1"     0     # EXCHQUER  13.80       PGEN=94.50  QGEN=8.77
 0
  #
  #
  # (156)  L-1/G-1 OVERLAPPING OUTAGE
  # Los Banos - Panoche #2 230 kV Line and Exchequer
 1  30765 30790  "2 "    0     # line from  LOSBANOS 230.00  BRKR to BRKR  PANOCHE
230.00
  #
 3  34306     0  "1"     0     # EXCHQUER  13.80       PGEN=94.50  QGEN=8.77
 0
  #
  #
  # (157)  L-1/G-1 OVERLAPPING OUTAGE
  # Los Banos - Dos Amigos 230 kV Line and Exchequer
 1  30765 38615  "1 "    0     # line from  LOSBANOS 230.00  BRKR to BRKR  DS AMIGO
230.00
  #
 3  34306     0  "1"     0     # EXCHQUER  13.80       PGEN=94.50  QGEN=8.77
 0
  #
  #
  # (158)  L-1/G-1 OVERLAPPING OUTAGE
  # Los Banos - San Luis PGP #1 230 kV Line and Exchequer
 1  30765 38625  "1 "    0     # line from  LOSBANOS 230.00  BRKR to BRKR  SN LS PP
230.00
  #
 3  34306     0  "1"     0     # EXCHQUER  13.80       PGEN=94.50  QGEN=8.77
 0
  #
  #
  # (159)  L-1/G-1 OVERLAPPING OUTAGE
  # Los Banos - San Luis PGP #2 230 kV Line and Exchequer
 1  30765 38625  "2 "    0     # line from  LOSBANOS 230.00  BRKR to BRKR  SN LS PP
230.00
  #
 3  34306     0  "1"     0     # EXCHQUER  13.80       PGEN=94.50  QGEN=8.77
 0
  #
  #
  # (160)  L-1/G-1 OVERLAPPING OUTAGE
  # Panoche - Kearney 230 kV Line and Exchequer sumop outage
 1  30790 30825  "1 "    0     # line from  PANOCHE  230.00  BRKR to (2)   MCMULLN1
230.00
 1  30825 30830  "1 "    0     # line from  MCMULLN1 230.00   (2) to BRKR  KEARNEY
230.00
 4  30825     0  "1 "    0     # LOAD-DROP    MCMULLN1 230.00  LOAD==20.57(4.18)
 3  34600     0  "**"    0     # Trip Helms 1 for Panoche - Kearney 230 kV line outage
HTT/RAS
  #
 3  34306     0  "1"     0     # EXCHQUER  13.80       PGEN=94.50  QGEN=8.77
 0
```

```
  #
  #
  # (161)  L-1/G-1 OVERLAPPING OUTAGE
  # Panoche - Helm 230 kV Line and Exchequer
 1  30790 30873  "1 "    0     # line from  PANOCHE  230.00  BRKR to BRKR  HELM
230.00
  #
 3  34306     0  "1"     0     # EXCHQUER  13.80       PGEN=94.50  QGEN=8.77
 0
  #
  #
  # (162)  L-1/G-1 OVERLAPPING OUTAGE
  # Gates - Panoche #1 230 kV Line and Exchequer
 1  30790 30900  "1 "    0     # line from  PANOCHE  230.00  BRKR to BRKR  GATES
230.00
  #
 3  34306     0  "1"     0     # EXCHQUER  13.80       PGEN=94.50  QGEN=8.77
 0
  #
  #
  # (163)  L-1/G-1 OVERLAPPING OUTAGE
  # Gates - Panoche #2 230 kV Line and Exchequer
 1  30790 30900  "2 "    0     # line from  PANOCHE  230.00  BRKR to BRKR  GATES
230.00
  #
 3  34306     0  "1"     0     # EXCHQUER  13.80       PGEN=94.50  QGEN=8.77
 0
  #
  #
  # (164)  L-1/G-1 OVERLAPPING OUTAGE
  # Wilson - Borden #1 230 kV Line and Exchequer
 1  30795 30805  "1 "    0     # line from  STOREY 2 230.00   (2) to BRKR  BORDEN
230.00
 1  30795 30800  "1 "    0     # line from  STOREY 2 230.00   (2) to BRKR  WILSON
230.00
 4  30795     0  "2 "    0     # LOAD-DROP    STOREY 2 230.00  LOAD==33.89(6.88)
  #
 3  34306     0  "1"     0     # EXCHQUER  13.80       PGEN=94.50  QGEN=8.77
 0
  #
  #
  # (165)  L-1/G-1 OVERLAPPING OUTAGE
  # Wilson - Borden #2 230 kV Line and Exchequer
 1  30796 30800  "1 "    0     # line from  STOREY 1 230.00   (2) to BRKR  WILSON
230.00
 1  30796 30805  "1 "    0     # line from  STOREY 1 230.00   (2) to BRKR  BORDEN
230.00
 4  30796     0  "1 "    0     # LOAD-DROP    STOREY 1 230.00  LOAD==37.87(7.69)
  #
 3  34306     0  "1"     0     # EXCHQUER  13.80       PGEN=94.50  QGEN=8.77
 0
  #
  #
  # (166)  L-1/G-1 OVERLAPPING OUTAGE
  # Melones - Wilson 230 kV Line and Exchequer
 1  37563 30800  "1 "    0     # line from  MELONES 230.00   (2) to BRKR  WILSON   230.00
  #
 3  34306     0  "1"     0     # EXCHQUER  13.80       PGEN=94.50  QGEN=8.77
 0
  #
  #
  # (167)  L-1/G-1 OVERLAPPING OUTAGE
  # Borden - Gregg #1 230 kV Line and Exchequer
 1  30805 30810  "1 "    0     # line from  BORDEN   230.00  BRKR to BRKR  GREGG
230.00
 3  34604     0  "**"    0     # Drop unit#3 with loss of Gregg - Borden line
  #
 3  34306     0  "1"     0     # EXCHQUER  13.80       PGEN=94.50  QGEN=8.77
 0
  #
```

```
  #
  # (168)  L-1/G-1 OVERLAPPING OUTAGE
  # Borden - Gregg #2 230 kV Line and Exchequer
 1  30805 30810  "2 "    0     # line from  BORDEN   230.00  BRKR to BRKR  GREGG
230.00
 3  34604     0  "**"    0     # Drop unit#3 with loss of Gregg - Borden #2 line
  #
 3  34306     0  "1"     0     # EXCHQUER  13.80       PGEN=94.50  QGEN=8.77
 0
  #
  #
  # (169)  L-1/G-1 OVERLAPPING OUTAGE
  # Dos Amigos - Panoche 230 kV Line and Exchequer
 1  38615 30790  "1 "    0     # line from  DS AMIGO 230.00  BRKR to BRKR  PANOCHE
230.00
  #
 3  34306     0  "1"     0     # EXCHQUER  13.80       PGEN=94.50  QGEN=8.77
 0
  #
  #
  # (170)  L-1/G-1 OVERLAPPING OUTAGE
  # Warnerville - Wilson 230 kV Line and Kerckhoff
 1  30515 30800  "1 "    0     # line from  WARNERVL 230.00  BRKR to BRKR  WILSON
230.00
  #
 3  34308     0  "1"     0     # KERCKHOF  13.80       PGEN=129.00  QGEN=16.00
 0
  #
  #
  # (171)  L-1/G-1 OVERLAPPING OUTAGE
  # Westley - Los Banos 230 kV Line and Kerckhoff
 1  30670 30765  "1 "    0     # line from  WESTLEY  230.00  BRKR to BRKR  LOSBANOS
230.00
  #
 3  34308     0  "1"     0     # KERCKHOF  13.80       PGEN=129.00  QGEN=16.00
 0
  #
  #
  # (172)  L-1/G-1 OVERLAPPING OUTAGE
  # Moss Landing - Panoche 230 kV Line and Kerckhoff
 1  30750 30790  "1 "    0     # line from  MOSSLND2 230.00  BRKR to BRKR  PANOCHE
230.00
  #
 3  34308     0  "1"     0     # KERCKHOF  13.80       PGEN=129.00  QGEN=16.00
 0
  #
  #
  # (173)  L-1/G-1 OVERLAPPING OUTAGE
  # Coburn - Panoche 230 kV Line and Kerckhoff
 1  30760 30790  "1 "    0     # line from  COBURN   230.00  BRKR to BRKR  PANOCHE
230.00
  #
 3  34308     0  "1"     0     # KERCKHOF  13.80       PGEN=129.00  QGEN=16.00
 0
  #
  #
  # (174)  L-1/G-1 OVERLAPPING OUTAGE
  # Los Banos - Panoche #1 230 kV Line and Kerckhoff
 1  30765 30790  "1 "    0     # line from  LOSBANOS 230.00  BRKR to BRKR  PANOCHE
230.00
  #
 3  34308     0  "1"     0     # KERCKHOF  13.80       PGEN=129.00  QGEN=16.00
 0
  #
  #
  # (175)  L-1/G-1 OVERLAPPING OUTAGE
  # Los Banos - Panoche #2 230 kV Line and Kerckhoff
 1  30765 30790  "2 "    0     # line from  LOSBANOS 230.00  BRKR to BRKR  PANOCHE
230.00
  #
```

```
 3  34308     0  "1"     0     # KERCKHOF  13.80       PGEN=129.00  QGEN=16.00
 0
  #
  #
  # (176)  L-1/G-1 OVERLAPPING OUTAGE
  # Los Banos - Dos Amigos 230 kV Line and Kerckhoff
 1  30765 38615  "1 "    0     # line from  LOSBANOS 230.00  BRKR to BRKR  DS AMIGO
230.00
  #
 3  34308     0  "1"     0     # KERCKHOF  13.80       PGEN=129.00  QGEN=16.00
 0
  #
  #
  # (177)  L-1/G-1 OVERLAPPING OUTAGE
  # Los Banos - San Luis PGP #1 230 kV Line and Kerckhoff
 1  30765 38625  "1 "    0     # line from  LOSBANOS 230.00  BRKR to BRKR  SN LS PP
230.00
  #
 3  34308     0  "1"     0     # KERCKHOF  13.80       PGEN=129.00  QGEN=16.00
 0
  #
  #
  # (178)  L-1/G-1 OVERLAPPING OUTAGE
  # Los Banos - San Luis PGP #2 230 kV Line and Kerckhoff
 1  30765 38625  "2 "    0     # line from  LOSBANOS 230.00  BRKR to BRKR  SN LS PP
230.00
  #
 3  34308     0  "1"     0     # KERCKHOF  13.80       PGEN=129.00  QGEN=16.00
 0
  #
  #
  # (179)  L-1/G-1 OVERLAPPING OUTAGE
  # Panoche - Kearney 230 kV Line and Kerckhoff sumop outage
 1  30790 30825  "1 "    0     # line from  PANOCHE  230.00  BRKR to (2)   MCMULLN1
230.00
 1  30825 30830  "1 "    0     # line from  MCMULLN1 230.00   (2) to BRKR  KEARNEY
230.00
 4  30825     0  "1 "    0     # LOAD-DROP    MCMULLN1 230.00  LOAD==20.57(4.18)
 3  34600     0  "**"    0     # Trip Helms 1 for Panoche - Kearney 230 kV line outage
HTT/RAS
  #
 3  34308     0  "1"     0     # KERCKHOF  13.80       PGEN=129.00  QGEN=16.00
 0
  #
  #
  # (180)  L-1/G-1 OVERLAPPING OUTAGE
  # Panoche - Helm 230 kV Line and Kerckhoff
 1  30790 30873  "1 "    0     # line from  PANOCHE  230.00  BRKR to BRKR  HELM
230.00
  #
 3  34308     0  "1"     0     # KERCKHOF  13.80       PGEN=129.00  QGEN=16.00
 0
  #
  #
  # (181)  L-1/G-1 OVERLAPPING OUTAGE
  # Gates - Panoche #1 230 kV Line and Kerckhoff
 1  30790 30900  "1 "    0     # line from  PANOCHE  230.00  BRKR to BRKR  GATES
230.00
  #
 3  34308     0  "1"     0     # KERCKHOF  13.80       PGEN=129.00  QGEN=16.00
 0
  #
  #
  # (182)  L-1/G-1 OVERLAPPING OUTAGE
  # Gates - Panoche #2 230 kV Line and Kerckhoff
 1  30790 30900  "2 "    0     # line from  PANOCHE  230.00  BRKR to BRKR  GATES
230.00
  #
 3  34308     0  "1"     0     # KERCKHOF  13.80       PGEN=129.00  QGEN=16.00
 0
```

```
  #
  #
  # (183)  L-1/G-1 OVERLAPPING OUTAGE
  # Wilson - Borden #1 230 kV Line and Kerckhoff
 1  30795 30805  "1 "    0     # line from  STOREY 2 230.00   (2) to BRKR  BORDEN
230.00
 1  30795 30800  "1 "    0     # line from  STOREY 2 230.00   (2) to BRKR  WILSON
230.00
 4  30795     0  "2 "    0     # LOAD-DROP    STOREY 2 230.00  LOAD==33.89(6.88)
  #
 3  34308     0  "1"     0     # KERCKHOF  13.80       PGEN=129.00  QGEN=16.00
 0
  #
  #
  # (184)  L-1/G-1 OVERLAPPING OUTAGE
  # Wilson - Borden #2 230 kV Line and Kerckhoff
 1  30796 30800  "1 "    0     # line from  STOREY 1 230.00   (2) to BRKR  WILSON
230.00
 1  30796 30805  "1 "    0     # line from  STOREY 1 230.00   (2) to BRKR  BORDEN
230.00
 4  30796     0  "1 "    0     # LOAD-DROP    STOREY 1 230.00  LOAD==37.87(7.69)
  #
 3  34308     0  "1"     0     # KERCKHOF  13.80       PGEN=129.00  QGEN=16.00
 0
  #
  #
  # (185)  L-1/G-1 OVERLAPPING OUTAGE
  # Melones - Wilson 230 kV Line and Kerckhoff
 1  37563 30800  "1 "    0     # line from  MELONES 230.00   (2) to BRKR  WILSON   230.00
  #
 3  34308     0  "1"     0     # KERCKHOF  13.80       PGEN=129.00  QGEN=16.00
 0
  #
  #
  # (186)  L-1/G-1 OVERLAPPING OUTAGE
  # Borden - Gregg #1 230 kV Line and Kerckhoff
 1  30805 30810  "1 "    0     # line from  BORDEN   230.00  BRKR to BRKR  GREGG
230.00
 3  34604     0  "**"    0     # Drop unit#3 with loss of Gregg - Borden line
  #
 3  34308     0  "1"     0     # KERCKHOF  13.80       PGEN=129.00  QGEN=16.00
 0
  #
  #
  # (187)  L-1/G-1 OVERLAPPING OUTAGE
  # Borden - Gregg #2 230 kV Line and Kerckhoff
 1  30805 30810  "2 "    0     # line from  BORDEN   230.00  BRKR to BRKR  GREGG
230.00
 3  34604     0  "**"    0     # Drop unit#3 with loss of Gregg - Borden #2 line
  #
 3  34308     0  "1"     0     # KERCKHOF  13.80       PGEN=129.00  QGEN=16.00
 0
  #
  #
  # (188)  L-1/G-1 OVERLAPPING OUTAGE
  # Dos Amigos - Panoche 230 kV Line and Kerckhoff
 1  38615 30790  "1 "    0     # line from  DS AMIGO 230.00  BRKR to BRKR  PANOCHE
230.00
  #
 3  34308     0  "1"     0     # KERCKHOF  13.80       PGEN=129.00  QGEN=16.00
 0
  #
  #
  # 2013 sumop category b contingency list
  # Fresno Zone 314
  #
  #
  # (189)  B2 LINE OUTAGE (BREAKER-TO-BREAKER)
  #
```

```
 1  30873 30875  "1 "    0     # line from  HELM     230.00  BRKR to BRKR  MC CALL
230.00
 0
  #
  #
  # (190)  B2 LINE OUTAGE (BREAKER-TO-BREAKER)
  # sumop outage
 1  30810 30820  "1 "    0     # line from  GREGG    230.00  BRKR to BRKR  HELMS PP
230.00
 3  34604     0  "**"    0      # Drop unit#3 with a loss Helm - Gregg #1 line sumop
 3  34602     0  "**"    0      # Drop unit#2 with a loss Helm - Gregg #1 line sumop
 0
  #
  #
  # (191)  B2 LINE OUTAGE (BREAKER-TO-BREAKER)
  # sumop outage
 1  30810 30820  "2 "    0     # line from  GREGG    230.00  BRKR to BRKR  HELMS PP
230.00
 3  34604     0  "**"    0      # Drop unit#3 with a loss Helm - Gregg #2 line
 3  34602     0  "**"    0      # Drop unit#2 with a loss Helm - Gregg #2 line sumop
 0
  #
  #
  # (192)  B2 LINE OUTAGE (BREAKER-TO-BREAKER)
  #
 1  30810 30835  "1 "    0     # line from  GREGG    230.00  BRKR to BRKR  HERNDON
230.00
 3  34604     0  "**"    0      # Drop unit#3 with a loss Gregg - Herndon #1 line
 0
  #
  #
  # (193)  B2 LINE OUTAGE (BREAKER-TO-BREAKER)
  #
 1  30810 30835  "2 "    0     # line from  GREGG    230.00  BRKR to BRKR  HERNDON
230.00
 3  34604     0  "**"    0      # Drop unit#3 with a loss Gregg - Herndon #2 line
 0
  #
  #
  # (194)  B2 LINE OUTAGE (BREAKER-TO-BREAKER)
  #
 1  30810 30845  "1 "    0     # line from  GREGG    230.00  BRKR to (3)   FGRDN T2
230.00
 1  30845 30846  "1 "    0     # line from  FGRDN T2 230.00   (3) to BRKR  FIGRDN 2
230.00
 1  30845 30850  "1 "    0     # line from  FGRDN T2 230.00   (3) to BRKR  ASHLAN
230.00
 4  30846     0  "1 "    0     # LOAD-DROP    FIGRDN 2 230.00  LOAD==52.57(10.67)
 4  30846     0  "2 "    0     # LOAD-DROP    FIGRDN 2 230.00  LOAD==36.77(7.47)
 3  34604     0  "**"    0      # Drop unit#3 with a loss Gregg - Figarden line
 1 30841  30846  "1 "    1      # Switches in Figarden SW 286 to transfer load
 4 30846      0  "**"    1      # Restore Load at Figarden 2
 0
  #
  #
  # (195)  B2 LINE OUTAGE (BREAKER-TO-BREAKER)
  # sumop outage
 1  30810 30879  "1 "    0     # line from  GREGG    230.00  BRKR to (3)   HENTAP1
230.00
 1  30879 30881  "1 "    0     # line from  HENTAP1  230.00   (3) to BRKR  HENRIETA
230.00
 1  30879 30900  "1 "    0     # line from  HENTAP1  230.00   (3) to BRKR  GATES
230.00
 3  34604     0  "**"    0      # Drop unit#3 with a loss Gregg - Henrietta Tap 1 line
 1  30880 30881  "1 "    1      # Henrietta flip flop (Henrietta CB 222)
 3  34600     0  "**"    0     # Trip Helms 1 for Gates - Gregg 230 kV line outage
HTT/RAS
 0
  #
  #
```

```
  # (196)  B2 LINE OUTAGE (BREAKER-TO-BREAKER)
  # sumop outage
 1  30830 30835  "1 "    0     # line from  KEARNEY  230.00  BRKR to BRKR  HERNDON
230.00
 3  34600     0  "**"    0     # Trip Helms 1 for Herndon - Kearney 230 kV line outage
HTT/RAS
 0
  #
  #
  # (197)  B2 LINE OUTAGE (BREAKER-TO-BREAKER)
  #
 1  30835 30840  "1 "    0     # line from  HERNDON  230.00  BRKR to (3)   FGRDN T1
230.00
 1  30840 30841  "1 "    0     # line from  FGRDN T1 230.00   (3) to BRKR  FIGRDN 1
230.00
 1  30840 30850  "1 "    0     # line from  FGRDN T1 230.00   (3) to BRKR  ASHLAN
230.00
 4  30841     0  "1 "    0     # LOAD-DROP    FIGRDN 1 230.00  LOAD==73.45(14.92)
 1 30841  30846  "1 "    1      # Switches in Figarden SW 286 to transfer load
 4 30841      0  "**"    1      # Restore Load at Figarden 1
 0
  #
  #
  # (198)  B2 LINE OUTAGE (BREAKER-TO-BREAKER)
  #
 1  30855 30860  "1 "    0     # line from  HAAS     230.00   (2) to (3)   BALCH3TP
230.00
 2  30855 34610  "1 "    0     # TRAN from  HAAS     230.00   (2) to (1)   HAAS
13.80
 1  30860 30875  "1 "    0     # line from  BALCH3TP 230.00   (3) to BRKR  MC CALL
230.00
 2  30860 34614  "1 "    0     # TRAN from  BALCH3TP 230.00   (3) to (1)   BLCH 2-3
13.80
 3  34610     0  "1 "    0     # GEN-DROP    HAAS      13.80  GEN==70.00(10.21)
 3  34610     0  "2 "    0     # GEN-DROP    HAAS      13.80  GEN==70.00(10.21)
 3  34614     0  "1 "    0     # GEN-DROP    BLCH 2-3  13.80  GEN==50.00(7.64)
 0
  #
  #
  # (199)  B2 LINE OUTAGE (BREAKER-TO-BREAKER)
  #
 1  30865 30870  "1 "    0     # line from  BALCH    230.00   (2) to (3)   PINE FLT
230.00
 2  30865 34612  "1 "    0     # TRAN from  BALCH    230.00   (2) to (1)   BLCH 2-2
13.80
 1  30870 30875  "1 "    0     # line from  PINE FLT 230.00   (3) to BRKR  MC CALL
230.00
 2  30870 38720  "1 "    0     # TRAN from  PINE FLT 230.00   (3) to (1)   PINE FLT
13.80
 3  34612     0  "1 "    0     # GEN-DROP    BLCH 2-2  13.80  GEN==50.00(0.66)
 3  38720     0  "1 "    0     # GEN-DROP    PINE FLT  13.80  GEN==57.00(23.30)
 0
  #
  #
  # (200)  B2 LINE OUTAGE (BREAKER-TO-BREAKER)
  #
 1  30875 30874  "1 "    0     # line from  MC CALL  230.00  BRKR to BRKR  P0615STN
230.00
 0
  #
  #
  # (201)  B2 LINE OUTAGE (BREAKER-TO-BREAKER)
  #
 1  30875 30874  "2 "    0     # line from  MC CALL  230.00  BRKR to BRKR  P0615STN
230.00
 0
  #
  #
  # (202)  B2 LINE OUTAGE (BREAKER-TO-BREAKER)
  #
```

```
 1  30875 30880  "1 "    0     # line from  MC CALL  230.00  BRKR to (2)   HENTAP2
230.00
 1  30880 30900  "1 "    0     # line from  HENTAP2  230.00   (2) to BRKR  GATES
230.00
 0
  #
  #
  # (203)  B2 LINE OUTAGE (BREAKER-TO-BREAKER)
  #
 1  30900 30905  "1 "    0     # line from  GATES    230.00  BRKR to BRKR  TEMPLETN
230.00
 0
  #
  #
  # (204)  B2 LINE OUTAGE (BREAKER-TO-BREAKER)
  #
 1  30900 30915  "1 "    0     # line from  GATES    230.00  BRKR to BRKR  MORROBAY
230.00
 0
  #
  #
  # (205)  B2 LINE OUTAGE (BREAKER-TO-BREAKER)
  #
 1  30900 30935  "1 "    0     # line from  GATES    230.00  BRKR to BRKR  ARCO
230.00
 0
  #
  #
  # (206)  B2 LINE OUTAGE (BREAKER-TO-BREAKER)
  #
 1  30900 30970  "1 "    0     # line from  GATES    230.00  BRKR to BRKR  MIDWAY
230.00
 0
  #
  #
  # (207)  B2 LINE OUTAGE (BREAKER-TO-BREAKER)
  #
 1  34123 34358  "2 "    0     # line from  K1-JCT   115.00   (2) to BRKR  KERCKHF2
115.00
 1  34123 34128  "1 "    0     # line from  K1-JCT   115.00   (2) to (3)   OAKH_JCT
115.00
 1  34128 34121  "1 "    0     # line from  OAKH_JCT 115.00   (3) to (3)   SHARON T
115.00
 1  34128 34126  "1 "    0     # line from  OAKH_JCT 115.00   (3) to (2)   CORSGOLD
115.00
 1  34121 34105  "1 "    0     # line from  SHARON T 115.00   (3) to (2)   CERTANJ1
115.00
 1  34121 34120  "1 "    0     # line from  SHARON T 115.00   (3) to (1)   SHARON
115.00
 1  34105 34100  "1 "    0     # line from  CERTANJ1 115.00   (2) to BRKR  CHWCHLLA
115.00
 1  34126 34122  "1 "    0     # line from  CORSGOLD 115.00   (2) to (1)   OAKHURST
115.00
 4  34126     0  "1 "    0     # LOAD-DROP    CORSGOLD 115.00  LOAD==2.21(0.45)
 4  34126     0  "2 "    0     # LOAD-DROP    CORSGOLD 115.00  LOAD==26.19(5.32)
 4  34120     0  "1 "    0     # LOAD-DROP    SHARON   115.00  LOAD==7.10(4.96)
 4  34122     0  "1 "    0     # LOAD-DROP    OAKHURST 115.00  LOAD==11.68(2.37)
 4  34122     0  "2 "    0     # LOAD-DROP    OAKHURST 115.00  LOAD==15.01(3.05)
 0
  #
  #
  # (208)  B2 LINE OUTAGE (BREAKER-TO-BREAKER)
  #
 1  34149 34354  "1 "    0     # line from  CHENYT   115.00   (3) to BRKR  SCHINDLR
115.00
 1  34149 34148  "1 "    0     # line from  CHENYT   115.00   (3) to (2)   CHENY
115.00
 1  34149 34158  "1 "    0     # line from  CHENYT   115.00   (3) to BRKR  PANOCHE
115.00
```

```
 1  34148 34141  "1 "    0     # line from  CHENY    115.00   (2) to (2)   PAN2_TAP
115.00
 2  34141 34142  "1 "    0     # TRAN from  PAN2_TAP 115.00   (2) to (1)   WHD_PAN2
13.80
 4  34148     0  "1 "    0     # LOAD-DROP    CHENY    115.00  LOAD==13.12(2.66)
 3  34142     0  "1 "    0     # GEN-DROP    WHD_PAN2  13.80  GEN==49.00(4.03)
 0
  #
  #
  # (209)  B2 LINE OUTAGE (BREAKER-TO-BREAKER)
  #
 1  34184 34570  "1 "    0     # line from  GATS2_TP  70.00   (3) to BRKR  COLNGA 2
70.00
 1  34184 34552  "1 "    0     # line from  GATS2_TP  70.00   (3) to BRKR  GATES
70.00
 2  34184 34553  "1 "    0     # TRAN from  GATS2_TP  70.00   (3) to (1)   WHD_GAT2
13.80
 3  34553     0  "1 "    0     # GEN-DROP    WHD_GAT2  13.80  GEN==49.00(-25.30)
 0
  #
  #
  # (210)  B2 LINE OUTAGE (BREAKER-TO-BREAKER)
  #
 1  34356 34358  "1 "    0     # line from  KERCKHF1 115.00  BRKR to BRKR  KERCKHF2
115.00
 0
  #
  #
  # (211)  B2 LINE OUTAGE (BREAKER-TO-BREAKER)
  #
 1  34357 34361  "1 "    0     # line from  AIRWAYJ1 115.00   (3) to BRKR  AIRWAYS
115.00
 1  34357 34368  "1 "    0     # line from  AIRWAYJ1 115.00   (3) to (2)   LASPALMS
115.00
 1  34357 34410  "1 "    0     # line from  AIRWAYJ1 115.00   (3) to BRKR  MANCHSTR
115.00
 1  34368 34366  "1 "    0     # line from  LASPALMS 115.00   (2) to BRKR  SANGER
115.00
 4  34368     0  "1 "    0     # LOAD-DROP    LASPALMS 115.00  LOAD==13.90(11.89)
 0
  #
  #
  # (212)  B2 LINE OUTAGE (BREAKER-TO-BREAKER)
  #
 1  34358 34360  "1 "    0     # line from  KERCKHF2 115.00  BRKR to (3)   WWARD JT
115.00
 1  34360 34414  "1 "    0     # line from  WWARD JT 115.00   (3) to BRKR  WOODWARD
115.00
 1  34360 34363  "1 "    0     # line from  WWARD JT 115.00   (3) to (3)   CLOVISJ1
115.00
 1  34363 34362  "1 "    0     # line from  CLOVISJ1 115.00   (3) to BRKR  CLOVIS-1
115.00
 1  34363 34366  "1 "    0     # line from  CLOVISJ1 115.00   (3) to BRKR  SANGER
115.00
 4  34362     0  "1 "    0     # LOAD-DROP    CLOVIS-1 115.00  LOAD==51.01(10.36)
 4  34362     0  "2 "    0     # LOAD-DROP    CLOVIS-1 115.00  LOAD==50.20(10.20)
 1 34362  34364  "1 "    1      # Switches in Clovis SW 387 to transfer load
 4 34362      0  "**"    1      # Restore Load at Clovis 1
 0
  #
  #
  # (213)  B2 LINE OUTAGE (BREAKER-TO-BREAKER)
  #
 1  34359 34361  "1 "    0     # line from  AIRWAYJ2 115.00   (3) to BRKR  AIRWAYS
115.00
 1  34359 34408  "1 "    0     # line from  AIRWAYJ2 115.00   (3) to BRKR  BARTON
115.00
 1  34359 34366  "1 "    0     # line from  AIRWAYJ2 115.00   (3) to BRKR  SANGER
115.00
 0
```

```
  #
  #
  # (214)  B2 LINE OUTAGE (BREAKER-TO-BREAKER)
  #
 1  34364 34365  "1 "    0     # line from  CLOVIS-2 115.00  BRKR to (3)   CLOVISJ2
115.00
 1  34365 34358  "1 "    0     # line from  CLOVISJ2 115.00   (3) to BRKR  KERCKHF2
115.00
 1  34365 34366  "1 "    0     # line from  CLOVISJ2 115.00   (3) to BRKR  SANGER
115.00
 4  34364     0  "3 "    0     # LOAD-DROP    CLOVIS-2 115.00  LOAD==44.76(9.09)
 1 34362  34364  "1 "    1      # Switches in Clovis SW 387 to transfer load
 4 34364      0  "**"    1      # Restore Load at Clovis 2
 0
  #
  #
  # (215)  B2 LINE OUTAGE (BREAKER-TO-BREAKER)
  #
 1  34366 34370  "1 "    0     # line from  SANGER   115.00  BRKR to BRKR  MC CALL
115.00
 0
  #
  #
  # (216)  B2 LINE OUTAGE (BREAKER-TO-BREAKER)
  #
 1  34366 34370  "2 "    0     # line from  SANGER   115.00  BRKR to BRKR  MC CALL
115.00
 0
  #
  #
  # (217)  B2 LINE OUTAGE (BREAKER-TO-BREAKER)
  #
 1  34366 34370  "3 "    0     # line from  SANGER   115.00  BRKR to BRKR  MC CALL
115.00
 0
  #
  #
  # (218)  B2 LINE OUTAGE (BREAKER-TO-BREAKER)
  #
 1  34366 34372  "1 "    0     # line from  SANGER   115.00  BRKR to BRKR  MALAGA
115.00
 0
  #
  #
  # (219)  B2 LINE OUTAGE (BREAKER-TO-BREAKER)
  #
 1  34366 34389  "1 "    0     # line from  SANGER   115.00  BRKR to (3)   RAINBWTP
115.00
 1  34389 34388  "1 "    0     # line from  RAINBWTP 115.00   (3) to (1)   RAINBW
115.00
 1  34389 34394  "1 "    0     # line from  RAINBWTP 115.00   (3) to (3)   PIEDRA 1
115.00
 1  34394 34380  "1 "    0     # line from  PIEDRA 1 115.00   (3) to BRKR  REEDLEY
115.00
 1  34394 34400  "1 "    0     # line from  PIEDRA 1 115.00   (3) to BRKR  KNGSRVR1
115.00
 4  34388     0  "1 "    0     # LOAD-DROP    RAINBW   115.00  LOAD==16.20(3.29)
 0
  #
  #
  # (220)  B2 LINE OUTAGE (BREAKER-TO-BREAKER)
  #
 1  34366 34396  "1 "    0     # line from  SANGER   115.00  BRKR to (2)   PIEDRA 2
115.00
 1  34396 34398  "1 "    0     # line from  PIEDRA 2 115.00   (2) to (2)   BALCH
115.00
 2  34398 34624  "1 "    0     # TRAN from  BALCH    115.00   (2) to (1)   BALCH 1
13.20
 4  34624     0  "1 "    0     # LOAD-DROP    BALCH 1   13.20  LOAD==0.26(0.00)
 3  34624     0  "1 "    0     # GEN-DROP    BALCH 1   13.20  GEN==27.00(8.33)
```

```
 0
  #
  #
  # (221)  B2 LINE OUTAGE (BREAKER-TO-BREAKER)
  #
 1  34369 34370  "1 "    0     # line from  P0418    115.00   (5) to BRKR  MC CALL
115.00
 2  34369 34661  "1 "    0     # TRAN from  P0418    115.00   (5) to (1)   P0418GT1
13.80
 2  34369 34663  "1 "    0     # TRAN from  P0418    115.00   (5) to (1)   P0418GT2
13.80
 2  34369 34665  "1 "    0     # TRAN from  P0418    115.00   (5) to (1)   P0418GT3
13.80
 2  34369 34667  "1 "    0     # TRAN from  P0418    115.00   (5) to (1)   P0418GT4
13.80
 4  34661     0  "ss"    0     # LOAD-DROP    P0418GT1  13.80  LOAD==3.00(1.66)
 4  34663     0  "ss"    0     # LOAD-DROP    P0418GT2  13.80  LOAD==3.00(1.66)
 4  34665     0  "ss"    0     # LOAD-DROP    P0418GT3  13.80  LOAD==3.00(1.66)
 4  34667     0  "ss"    0     # LOAD-DROP    P0418GT4  13.80  LOAD==3.00(1.66)
 3  34661     0  "1 "    0     # GEN-DROP    P0418GT1  13.80  GEN==78.80(13.93)
 3  34663     0  "2 "    0     # GEN-DROP    P0418GT2  13.80  GEN==78.80(13.93)
 3  34665     0  "3 "    0     # GEN-DROP    P0418GT3  13.80  GEN==78.80(13.93)
 3  34667     0  "4 "    0     # GEN-DROP    P0418GT4  13.80  GEN==78.80(13.93)
 0
  #
  #
  # (222)  B2 LINE OUTAGE (BREAKER-TO-BREAKER)
  #
 1  34370 34382  "1 "    0     # line from  MC CALL  115.00  BRKR to BRKR  WAHTOKE
115.00
 0
  #
  #
  # (223)  B2 LINE OUTAGE (BREAKER-TO-BREAKER)
  #
 1  34370 34385  "1 "    0     # line from  MC CALL  115.00  BRKR to (3)   KINGS J1
115.00
 1  34385 34417  "1 "    0     # line from  KINGS J1 115.00   (3) to (2)   KINGS J2
115.00
 1  34385 34425  "1 "    0     # line from  KINGS J1 115.00   (3) to (3)   KCOGNJCT
115.00
 1  34417 34418  "1 "    0     # line from  KINGS J2 115.00   (2) to BRKR  KINGSBRG
115.00
 1  34425 34387  "1 "    0     # line from  KCOGNJCT 115.00   (3) to (1)   SUNMAID
115.00
 1  34425 34427  "1 "    0     # line from  KCOGNJCT 115.00   (3) to (2)   GRDNGLS2
115.00
 1  34427 34386  "1 "    0     # line from  GRDNGLS2 115.00   (2) to (2)   KNGSCOGN
115.00
 2  34386 34642  "1 "    0     # TRAN from  KNGSCOGN 115.00   (2) to BRKR  KINGSBUR
9.11
 4  34387     0  "1 "    0     # LOAD-DROP    SUNMAID  115.00  LOAD==3.40(3.28)
 3  34642     0  "1 "    0     # GEN-DROP    KINGSBUR   9.11  GEN==34.00(17.30)
 0
  #
  #
  # (224)  B2 LINE OUTAGE (BREAKER-TO-BREAKER)
  #
 1  34402 34404  "1 "    0     # line from  CAL AVE  115.00  BRKR to BRKR  WST FRSO
115.00
 0
  #
  #
  # (225)  B2 LINE OUTAGE (BREAKER-TO-BREAKER)
  #
 1  34372 34376  "1 "    0     # line from  MALAGA   115.00  BRKR to (1)   PPG
115.00
 4  34376     0  "1 "    0     # LOAD-DROP    PPG      115.00  LOAD==6.25(3.87)
 0
  #
```

```
  #
  # (226)  B2 LINE OUTAGE (BREAKER-TO-BREAKER)
  #
 1  34372 34379  "1 "    0     # line from  MALAGA   115.00  BRKR to (3)   MALAGATP
115.00
 1  34379 34373  "1 "    0     # line from  MALAGATP 115.00   (3) to (3)   SCWAXJCT
115.00
 1  34379 34375  "1 "    0     # line from  MALAGATP 115.00   (3) to (3)   ULTPWRJ
115.00
 1  34373 34371  "1 "    0     # line from  SCWAXJCT 115.00   (3) to (1)   SCWAX
115.00
 1  34373 34374  "1 "    0     # line from  SCWAXJCT 115.00   (3) to (1)   RANCHRS
115.00
 1  34375 34377  "1 "    0     # line from  ULTPWRJ  115.00   (3) to (2)   AIRPROD
115.00
 2  34375 34640  "1 "    0     # TRAN from  ULTPWRJ  115.00   (3) to (1)   ULTR.PWR
9.11
 1  34377 34370  "1 "    0     # line from  AIRPROD  115.00   (2) to BRKR  MC CALL
115.00
 4  34371     0  "1 "    0     # LOAD-DROP    SCWAX    115.00  LOAD==2.70(1.53)
 4  34374     0  "1 "    0     # LOAD-DROP    RANCHRS  115.00  LOAD==9.16(1.86)
 4  34377     0  "1 "    0     # LOAD-DROP    AIRPROD  115.00  LOAD==5.10(2.02)
 3  34640     0  "1 "    0     # GEN-DROP    ULTR.PWR   9.11  GEN==14.50(13.00)
 0
  #
  #
  # (227)  B2 LINE OUTAGE (BREAKER-TO-BREAKER)
  #
 1  34372 34381  "1 "    0     # line from  MALAGA   115.00  BRKR to (3)   KRCDP
115.00
 2  34381 34671  "1 "    0     # TRAN from  KRCDP    115.00   (3) to (1)   KRCDPCT1
13.80
 2  34381 34672  "1 "    0     # TRAN from  KRCDP    115.00   (3) to (1)   KRCDPCT2
13.80
 4  34671     0  "ss"    0     # LOAD-DROP    KRCDPCT1  13.80  LOAD==1.05(0.65)
 4  34672     0  "ss"    0     # LOAD-DROP    KRCDPCT2  13.80  LOAD==1.05(0.65)
 3  34671     0  "1 "    0     # GEN-DROP    KRCDPCT1  13.80  GEN==50.00(7.14)
 3  34672     0  "1 "    0     # GEN-DROP    KRCDPCT2  13.80  GEN==50.00(7.14)
 0
  #
  #
  # (228)  B2 LINE OUTAGE (BREAKER-TO-BREAKER)
  #
 1  34380 34384  "1 "    0     # line from  REEDLEY  115.00  BRKR to (2)   GERAWAN
115.00
 1  34384 34382  "1 "    0     # line from  GERAWAN  115.00   (2) to BRKR  WAHTOKE
115.00
 0
  #
  #
  # (229)  B2 LINE OUTAGE (BREAKER-TO-BREAKER)
  #
 1  34390 34370  "1 "    0     # line from  DANISHCM 115.00   (2) to BRKR  MC CALL
115.00
 1  34390 34402  "1 "    0     # line from  DANISHCM 115.00   (2) to BRKR  CAL AVE
115.00
 4  34390     0  "1 "    0     # LOAD-DROP    DANISHCM 115.00  LOAD==4.10(3.51)
 0
  #
  #
  # (230)  B2 LINE OUTAGE (BREAKER-TO-BREAKER)
  #
 1  34391 34392  "1 "    0     # line from  QUEBECTP 115.00   (2) to (1)   QUEBEC
115.00
 1  34391 34426  "1 "    0     # line from  QUEBECTP 115.00   (2) to BRKR  ALPAUGH
115.00
 4  34392     0  "1 "    0     # LOAD-DROP    QUEBEC   115.00  LOAD==11.20(7.82)
 0
  #
  #
```

```
  # (231)  B2 LINE OUTAGE (BREAKER-TO-BREAKER)
  #
 1  34404 34370  "1 "    0     # line from  WST FRSO 115.00  BRKR to BRKR  MC CALL
115.00
 0
  #
  #
  # (232)  B2 LINE OUTAGE (BREAKER-TO-BREAKER)
  #
 1  34408 34412  "1 "    0     # line from  BARTON   115.00  BRKR to BRKR  HERNDON
115.00
 0
  #
  #
  # (233)  B2 LINE OUTAGE (BREAKER-TO-BREAKER)
  #
 1  34409 34413  "1 "    0     # line from  PNDLJ2   115.00   (3) to BRKR  PNEDLE
115.00
 1  34409 34416  "1 "    0     # line from  PNDLJ2   115.00   (3) to BRKR  BULLARD
115.00
 1  34409 34412  "1 "    0     # line from  PNDLJ2   115.00   (3) to BRKR  HERNDON
115.00
 4  34413     0  "2 "    0     # LOAD-DROP    PNEDLE   115.00  LOAD==30.74(6.25)
 4  34413     0  "3 "    0     # LOAD-DROP    PNEDLE   115.00  LOAD==40.42(8.20)
 1  34411 34413  "1 "    1      # Switches in Pindale CB#12 to transfer load
 4  34413     0  "**"    1      # Restore load at Pindale
 0
  #
  #
  # (234)  B2 LINE OUTAGE (BREAKER-TO-BREAKER)
  #
 1  34410 34412  "1 "    0     # line from  MANCHSTR 115.00  BRKR to BRKR  HERNDON
115.00
 0
  #
  #
  # (235)  B2 LINE OUTAGE (BREAKER-TO-BREAKER)
  #
 1  34411 34416  "1 "    0     # line from  PNDLJ1   115.00   (2) to BRKR  BULLARD
115.00
 1  34411 34412  "1 "    0     # line from  PNDLJ1   115.00   (2) to BRKR  HERNDON
115.00
 0
  #
  #
  # (236)  B2 LINE OUTAGE (BREAKER-TO-BREAKER)
  #
 1  34412 34422  "1 "    0     # line from  HERNDON  115.00  BRKR to (2)   CHLDHOSP
115.00
 1  34422 34414  "1 "    0     # line from  CHLDHOSP 115.00   (2) to BRKR  WOODWARD
115.00
 4  34422     0  "1 "    0     # LOAD-DROP    CHLDHOSP 115.00  LOAD==3.50(1.60)
 0
  #
  #
  # (237)  B2 LINE OUTAGE (BREAKER-TO-BREAKER)
  #
 1  34418 34420  "1 "    0     # line from  KINGSBRG 115.00  BRKR to BRKR  CORCORAN
115.00
 0
  #
  #
  # (238)  B2 LINE OUTAGE (BREAKER-TO-BREAKER)
  #
 1  34418 34420  "2 "    0     # line from  KINGSBRG 115.00  BRKR to BRKR  CORCORAN
115.00
 0
  #
  #
  # (239)  B2 LINE OUTAGE (BREAKER-TO-BREAKER)
```

```
  #
 1  34418 34423  "1 "    0     # line from  KINGSBRG 115.00  BRKR to (3)   GAURD J1
115.00
 1  34423 34370  "1 "    0     # line from  GAURD J1 115.00   (3) to BRKR  MC CALL
115.00
 1  34423 34421  "1 "    0     # line from  GAURD J1 115.00   (3) to (2)   GAURD J2
115.00
 1  34421 34424  "1 "    0     # line from  GAURD J2 115.00   (2) to (1)   GRDN GLS
115.00
 4  34424     0  "1 "    0     # LOAD-DROP    GRDN GLS 115.00  LOAD==3.50(1.15)
 4  34418     0  "3 "    0      # Kingsburg Bank #3 will also be dropped on this outage
 0
  #
  #
  # (240)  B2 LINE OUTAGE (BREAKER-TO-BREAKER)
  #
 1  34418 34428  "1 "    0     # line from  KINGSBRG 115.00  BRKR to (2)   CONTADNA
115.00
 1  34428 34429  "1 "    0     # line from  CONTADNA 115.00   (2) to (4)   GWF_HEP
115.00
 1  34429 34521  "1 "    0     # line from  GWF_HEP  115.00   (4) to (2)   LEPRNOFD
115.00
 2  34429 34431  "1 "    0     # TRAN from  GWF_HEP  115.00   (4) to (1)   GWF_HEP1
13.80
 2  34429 34433  "1 "    0     # TRAN from  GWF_HEP  115.00   (4) to (1)   GWF_HEP2
13.80
 1  34521 34430  "1 "    0     # line from  LEPRNOFD 115.00   (2) to BRKR  HENRETTA
115.00
 4  34428     0  "1 "    0     # LOAD-DROP    CONTADNA 115.00  LOAD==7.60(5.70)
 4  34429     0  "ss"    0     # LOAD-DROP    GWF_HEP  115.00  LOAD==3.00(0.68)
 4  34521     0  "1 "    0     # LOAD-DROP    LEPRNOFD 115.00  LOAD==6.65(4.30)
 3  34431     0  "1 "    0     # GEN-DROP    GWF_HEP1  13.80  GEN==50.00(21.27)
 3  34433     0  "1 "    0     # GEN-DROP    GWF_HEP2  13.80  GEN==50.00(21.27)
 0
  #
  #
  # (241)  B2 LINE OUTAGE (BREAKER-TO-BREAKER)
  #
 1  34426 34700  "1 "    0     # line from  ALPAUGH  115.00  BRKR to BRKR  SMYRNA
115.00
 0
  #
  #
  # (242)  B2 LINE OUTAGE (BREAKER-TO-BREAKER)
  #
 1  34452 34260  "1 "    0     # line from  WISHON    70.00  BRKR to (3)   SJNO2
70.00
 1  34260 34259  "1 "    0     # line from  SJNO2     70.00   (3) to (3)   NRTHFORK
70.00
 2  34260 34631  "1 "    0     # TRAN from  SJNO2     70.00   (3) to (1)   SJ2GEN
9.11
 1  34259 34261  "1 "    0     # line from  NRTHFORK  70.00   (3) to (2)   SJNO3
70.00
 2  34259 34340  "1 "    0     # TRAN from  NRTHFORK  70.00   (3) to (1)   N.FORK E
9.11
 2  34261 34633  "1 "    0     # TRAN from  SJNO3     70.00   (2) to (1)   SJ3GEN
9.11
 4  34260     0  "2 "    0     # LOAD-DROP    SJNO2     70.00  LOAD==3.22(0.66)
 4  34261     0  "2 "    0     # LOAD-DROP    SJNO3     70.00  LOAD==6.95(1.41)
 4  34340     0  "1 "    0     # LOAD-DROP    N.FORK E   9.11  LOAD==1.21(0.25)
 3  34631     0  "1 "    0     # GEN-DROP    SJ2GEN     9.11  GEN==2.00(0.00)
 3  34633     0  "1 "    0     # GEN-DROP    SJ3GEN     9.11  GEN==1.00(0.00)
 0
  #
  #
  # (243)  B2 LINE OUTAGE (BREAKER-TO-BREAKER)
  #
 1  34452 34491  "1 "    0     # line from  WISHON    70.00  BRKR to (3)   AUBRYTP
70.00
```

```
 1  34491 34464  "1 "    0     # line from  AUBRYTP   70.00   (3) to BRKR  COPPRMNE
70.00
 1  34491 34493  "1 "    0     # line from  AUBRYTP   70.00   (3) to (1)   AUBERRY
70.00
 4  34493     0  "1 "    0     # LOAD-DROP    AUBERRY   70.00  LOAD==6.07(1.23)
 4  34493     0  "2 "    0     # LOAD-DROP    AUBERRY   70.00  LOAD==7.15(1.45)
 0
  #
  #
  # (244)  B2 LINE OUTAGE (BREAKER-TO-BREAKER)
  #
 1  34456 34458  "1 "    0     # line from  HRDWK TP  70.00   (3) to (1)   HARDWICK
70.00
 1  34456 34522  "1 "    0     # line from  HRDWK TP  70.00   (3) to (1)   HNFRD SW
70.00
 1  34456 34576  "1 "    0     # line from  HRDWK TP  70.00   (3) to BRKR  KNGLOBUS
70.00
 4  34458     0  "1 "    0     # LOAD-DROP    HARDWICK  70.00  LOAD==12.86(2.61)
 0
  #
  #
  # (245)  B2 LINE OUTAGE (BREAKER-TO-BREAKER)
  #
 1  34460 34462  "1 "    0     # line from  GUERNSEY  70.00  BRKR to (3)   GUR3TPT
70.00
 1  34462 34542  "1 "    0     # line from  GUR3TPT   70.00   (3) to (2)   JCBSCRNR
70.00
 1  34462 34554  "1 "    0     # line from  GUR3TPT   70.00   (3) to BRKR  AMSTG SW
70.00
 1  34542 34540  "1 "    0     # line from  JCBSCRNR  70.00   (2) to BRKR  HENRITTA
70.00
 4  34460     0  "1 "    0     # LOAD-DROP    GUERNSEY  70.00  LOAD==10.51(2.13)
 4  34542     0  "1 "    0     # LOAD-DROP    JCBSCRNR  70.00  LOAD==12.05(2.45)
 4  34542     0  "2 "    0     # LOAD-DROP    JCBSCRNR  70.00  LOAD==9.54(1.94)
 0
  #
  #
  # (246)  B2 LINE OUTAGE (BREAKER-TO-BREAKER)
  #
 1  34464 34478  "1 "    0     # line from  COPPRMNE  70.00  BRKR to BRKR  TVY VLLY
70.00
 0
  #
  #
  # (247)  B2 LINE OUTAGE (BREAKER-TO-BREAKER)
  #
 1  34464 34638  "1 "    0     # line from  COPPRMNE  70.00  BRKR to (2)   FRANTDM
70.00
 2  34638 34636  "1 "    0     # TRAN from  FRANTDM   70.00   (2) to (1)   FRIANTDM
6.60
 3  34636     0  "2 "    0     # GEN-DROP    FRIANTDM   6.60  GEN==14.70(5.86)
 3  34636     0  "3 "    0     # GEN-DROP    FRIANTDM   6.60  GEN==7.80(3.11)
 3  34636     0  "4 "    0     # GEN-DROP    FRIANTDM   6.60  GEN==2.30(0.92)
 0
  #
  #
  # (248)  B2 LINE OUTAGE (BREAKER-TO-BREAKER)
  #
 1  34466 34482  "1 "    0     # line from  BIOLA     70.00  BRKR to BRKR  OLDKERN
70.00
 4  34466     0  "1 "    0     # LOAD-DROP    BIOLA     70.00  LOAD==21.80(4.43)
 0
  #
  #
  # (249)  B2 LINE OUTAGE (BREAKER-TO-BREAKER)
  #
 1  34468 34482  "1 "    0     # line from  BOWLES    70.00   (1) to BRKR  OLDKERN
70.00
 4  34468     0  "1 "    0     # LOAD-DROP    BOWLES    70.00  LOAD==18.29(3.72)
 0
```

```
  #
  #
  # (250)  B2 LINE OUTAGE (BREAKER-TO-BREAKER)
  #
 1  34469 34271  "1 "    0     # line from  GFFNJCT   70.00   (3) to (3)   WSTLDJCT
70.00
 1  34469 34470  "1 "    0     # line from  GFFNJCT   70.00   (3) to (1)   GIFFEN
70.00
 1  34469 34471  "1 "    0     # line from  GFFNJCT   70.00   (3) to (3)   SNJQJCT
70.00
 1  34271 34172  "1 "    0     # line from  WSTLDJCT  70.00   (3) to (2)   WESTLAND
70.00
 1  34271 34269  "1 "    0     # line from  WSTLDJCT  70.00   (3) to (3)   BIOMSJCT
70.00
 1  34471 34472  "1 "    0     # line from  SNJQJCT   70.00   (3) to BRKR  SAN JOQN
70.00
 1  34471 34474  "1 "    0     # line from  SNJQJCT   70.00   (3) to BRKR  HELM
70.00
 1  34172 34170  "1 "    0     # line from  WESTLAND  70.00   (2) to (1)   WESIX
70.00
 1  34269 34268  "1 "    0     # line from  BIOMSJCT  70.00   (3) to BRKR  MENDOTA
70.00
 1  34269 34270  "1 "    0     # line from  BIOMSJCT  70.00   (3) to (2)   BIOMASS
70.00
 2  34270 34334  "1 "    0     # TRAN from  BIOMASS   70.00   (2) to (1)   BIO PWR
9.11
 4  34470     0  "1 "    0     # LOAD-DROP    GIFFEN    70.00  LOAD==9.59(1.95)
 4  34172     0  "1 "    0     # LOAD-DROP    WESTLAND  70.00  LOAD==3.20(0.76)
 4  34170     0  "1 "    0     # LOAD-DROP    WESIX     70.00  LOAD==1.60(0.38)
 3  34334     0  "1 "    0     # GEN-DROP    BIO PWR    9.11  GEN==21.80(10.99)
 1  34472 34473  "1 "    1      # Switches in San Joaquin CB22 to transfer load
 4  34472     0  "**"    1      # Restore Load at San Joaquin
 0
  #
  #
  # (251)  B2 LINE OUTAGE (BREAKER-TO-BREAKER)
  #
 1  34473 34472  "1 "    0     # line from  SNJQTP    70.00   (2) to BRKR  SAN JOQN
70.00
 1  34473 34475  "1 "    0     # line from  SNJQTP    70.00   (2) to (3)   AGRCJCT
70.00
 1  34475 34476  "1 "    0     # line from  AGRCJCT   70.00   (3) to (2)   AGRICO
70.00
 1  34475 34484  "1 "    0     # line from  AGRCJCT   70.00   (3) to BRKR  KERMAN
70.00
 2  34476 34608  "1 "    0     # TRAN from  AGRICO    70.00   (2) to (1)   AGRICO
13.80
 4  34484     0  "1 "    0     # LOAD-DROP    KERMAN    70.00  LOAD==19.44(3.95)
 4  34484     0  "2 "    0     # LOAD-DROP    KERMAN    70.00  LOAD==11.78(2.39)
 3  34608     0  "2 "    0     # GEN-DROP    AGRICO    13.80  GEN==7.00(1.08)
 3  34608     0  "3 "    0     # GEN-DROP    AGRICO    13.80  GEN==18.10(2.80)
 3  34608     0  "4 "    0     # GEN-DROP    AGRICO    13.80  GEN==26.00(4.02)
 0
  #
  #
  # (252)  B2 LINE OUTAGE (BREAKER-TO-BREAKER)
  #
 1  34474 34556  "1 "    0     # line from  HELM      70.00  BRKR to BRKR  STRD JCT
70.00
 0
  #
  #
  # (253)  B2 LINE OUTAGE (BREAKER-TO-BREAKER)
  #
 1  34478 34492  "1 "    0     # line from  TVY VLLY  70.00  BRKR to BRKR  REEDLEY
70.00
 0
  #
  #
  # (254)  B2 LINE OUTAGE (BREAKER-TO-BREAKER)
```

```
  #
 1  34480 34481  "1 "    0     # line from  KEARNEY   70.00  BRKR to (3)   FRWWTAP
70.00
 1  34481 34483  "1 "    0     # line from  FRWWTAP   70.00   (3) to (3)   FRESNOWW
70.00
 1  34481 34483  "2 "    0     # line from  FRWWTAP   70.00   (3) to (3)   FRESNOWW
70.00
 2  34483 34485  "1 "    0     # TRAN from  FRESNOWW  70.00   (3) to (1)   FRESNOWW
12.47
 4  34485     0  "1 "    0     # LOAD-DROP    FRESNOWW  12.47  LOAD==7.91(0.00)
 3  34485     0  "1 "    0     # GEN-DROP    FRESNOWW  12.47  GEN==9.00(0.00)
 0
  #
  #
  # (255)  B2 LINE OUTAGE (BREAKER-TO-BREAKER)
  #
 1  34480 34482  "1 "    0     # line from  KEARNEY   70.00  BRKR to (3)   OLDKERN
70.00
 1  34482 34466  "1 "    0     # line from  OLDKERN   70.00  BRKR to BRKR  BIOLA
70.00
 1  34482 34468  "1 "    0     # line from  OLDKERN   70.00  BRKR to (1)   BOWLES
70.00
 4  34482     0  "1 "    0     # LOAD-DROP    OLDKERN   70.00  LOAD==18.75(3.81)
 4  34482     0  "3 "    0     # LOAD-DROP    OLDKERN   70.00  LOAD==7.57(1.54)
 4  34466     0  "1 "    0     # LOAD-DROP    BIOLA     70.00  LOAD==21.80(4.43)
 4  34468     0  "1 "    0     # LOAD-DROP    BOWLES    70.00  LOAD==18.29(3.72)
 0
  #
  #
  # (256)  B2 LINE OUTAGE (BREAKER-TO-BREAKER)
  #
 1  34480 34512  "1 "    0     # line from  KEARNEY   70.00  BRKR to BRKR  CARUTHRS
70.00
 4  34512     0  "1 "    0     # LOAD-DROP    CARUTHRS  70.00  LOAD==19.63(3.98)
 0
  #
  #
  # (257)  B2 LINE OUTAGE (BREAKER-TO-BREAKER)
  #
 1  34487 34489  "1 "    0     # line from  SNGRJCT   70.00   (3) to (2)   SNGRCOGN
70.00
 1  34487 34490  "1 "    0     # line from  SNGRJCT   70.00   (3) to (2)   PARLIER
70.00
 1  34487 34488  "1 "    0     # line from  SNGRJCT   70.00   (3) to BRKR  SANGER
70.00
 2  34489 34646  "1 "    0     # TRAN from  SNGRCOGN  70.00   (2) to (1)   SANGERCO
9.11
 1  34490 34492  "1 "    0     # line from  PARLIER   70.00   (2) to BRKR  REEDLEY
70.00
 4  34490     0  "1 "    0     # LOAD-DROP    PARLIER   70.00  LOAD==20.24(4.11)
 3  34646     0  "1 "    0     # GEN-DROP    SANGERCO   9.11  GEN==37.50(1.40)
 0
  #
  #
  # (258)  B2 LINE OUTAGE (BREAKER-TO-BREAKER)
  #
 1  34488 34366  "1 "    0     # line from  SANGER    70.00  BRKR to BRKR  SANGER
115.00
 0
  #
  #
  # (259)  B2 LINE OUTAGE (BREAKER-TO-BREAKER)
  #
 1  34492 34497  "1 "    0     # line from  REEDLEY   70.00  BRKR to (3)   DNUBAJCT
70.00
 1  34497 34499  "1 "    0     # line from  DNUBAJCT  70.00   (3) to (2)   DNUBAEGY
70.00
 1  34497 34500  "1 "    0     # line from  DNUBAJCT  70.00   (3) to BRKR  DINUBA
70.00
```

```
 2  34499 34648  "1 "    0     # TRAN from  DNUBAEGY  70.00   (2) to (1)   DINUBA E
13.80
 4  34648     0  "ss"    0     # LOAD-DROP    DINUBA E  13.80  LOAD==0.30(0.26)
 3  34648     0  "1 "    0     # GEN-DROP    DINUBA E  13.80  GEN==12.00(7.00)
 0
  #
  #
  # (260)  B2 LINE OUTAGE (BREAKER-TO-BREAKER)
  #
 1  34492 34526  "1 "    0     # line from  REEDLEY   70.00  BRKR to (3)   ORSI JCT
70.00
 1  34526 34495  "1 "    0     # line from  ORSI JCT  70.00   (3) to (2)   SANDCRK
70.00
 1  34526 34502  "1 "    0     # line from  ORSI JCT  70.00   (3) to BRKR  OROSI
70.00
 1  34495 34494  "1 "    0     # line from  SANDCRK   70.00   (2) to (1)   DUNLAP
70.00
 4  34495     0  "1 "    0     # LOAD-DROP    SANDCRK   70.00  LOAD==3.14(0.64)
 4  34494     0  "1 "    0     # LOAD-DROP    DUNLAP    70.00  LOAD==4.46(0.91)
 0
  #
  #
  # (261)  B2 LINE OUTAGE (BREAKER-TO-BREAKER)
  #
 1  34496 34498  "1 "    0     # line from  STCRRL J  70.00   (3) to (1)   STONCRRL
70.00
 1  34496 34500  "1 "    0     # line from  STCRRL J  70.00   (3) to BRKR  DINUBA
70.00
 1  34496 34502  "1 "    0     # line from  STCRRL J  70.00   (3) to (2)   OROSI
70.00
 1  34502 34526  "1 "    0     # line from  OROSI     70.00  BRKR to (1)   ORSI JCT
70.00
 4  34498     0  "2 "    0     # LOAD-DROP    STONCRRL  70.00  LOAD==3.37(0.68)
 4  34498     0  "3 "    0     # LOAD-DROP    STONCRRL  70.00  LOAD==2.68(0.54)
 4  34502     0  "1 "    0     # LOAD-DROP    OROSI     70.00  LOAD==8.38(1.70)
 4  34502     0  "2 "    0     # LOAD-DROP    OROSI     70.00  LOAD==7.43(1.51)
 0
  #
  #
  # (262)  B2 LINE OUTAGE (BREAKER-TO-BREAKER)
  #
 1  34508 34510  "1 "    0     # line from  CAMDEN    70.00   (2) to (1)   CMDN JCT
70.00
 1  34508 34576  "1 "    0     # line from  CAMDEN    70.00   (2) to BRKR  KNGLOBUS
70.00
 4  34508     0  "1 "    0     # LOAD-DROP    CAMDEN    70.00  LOAD==6.87(1.40)
 4  34508     0  "2 "    0     # LOAD-DROP    CAMDEN    70.00  LOAD==10.90(2.22)
 0
  #
  #
  # (263)  B2 LINE OUTAGE (BREAKER-TO-BREAKER)
  #
 1  34514 34540  "1 "    0     # line from  MUSLSLGH  70.00   (1) to BRKR  HENRITTA
70.00
 4  34514     0  "1 "    0     # LOAD-DROP    MUSLSLGH  70.00  LOAD==22.00(13.60)
 0
  #
  #
  # (264)  B2 LINE OUTAGE (BREAKER-TO-BREAKER)
  #
 1  34516 34520  "1 "    0     # line from  LEPRINO   70.00   (1) to (4)   LPRNO TP
70.00
 1  34520 34518  "1 "    0     # line from  LPRNO TP  70.00   (4) to BRKR  LEMOORE
70.00
 1  34520 34524  "1 "    0     # line from  LPRNO TP  70.00   (4) to (1)   CANDLEWK
70.00
 1  34520 34540  "1 "    0     # line from  LPRNO TP  70.00   (4) to BRKR  HENRITTA
70.00
 4  34516     0  "1 "    0     # LOAD-DROP    LEPRINO   70.00  LOAD==16.10(9.12)
 4  34518     0  "1 "    0     # LOAD-DROP    LEMOORE   70.00  LOAD==18.86(3.83)
```

```
 4  34518     0  "2 "    0     # LOAD-DROP    LEMOORE   70.00  LOAD==32.81(6.66)
 0
  #
  #
  # (265)  B2 LINE OUTAGE (BREAKER-TO-BREAKER)
  #
 1  34528 34530  "1 "    0     # line from  CORCORAN  70.00  BRKR to (3)   BSWLL TP
70.00
 1  34530 34531  "1 "    0     # line from  BSWLL TP  70.00   (3) to (2)   JGBSWLL
70.00
 1  34530 34538  "1 "    0     # line from  BSWLL TP  70.00   (3) to (1)   BOSWELL
70.00
 1  34531 34536  "1 "    0     # line from  JGBSWLL   70.00   (2) to (1)   ANGIOLA
70.00
 4  34538     0  "1 "    0     # LOAD-DROP    BOSWELL   70.00  LOAD==2.37(1.53)
 4  34536     0  "1 "    0     # LOAD-DROP    ANGIOLA   70.00  LOAD==7.24(1.47)
 0
  #
  #
  # (266)  B2 LINE OUTAGE (BREAKER-TO-BREAKER)
  #
 1  34532 34554  "1 "    0     # line from  ARMSTRNG  70.00   (1) to (4)   AMSTG SW
70.00
 1  34554 34462  "1 "    0     # line from  AMSTG SW  70.00  BRKR to (1)   GUR3TPT
70.00
 1  34554 34534  "1 "    0     # line from  AMSTG SW  70.00   (4) to (1)   RESERVE
70.00
 2  34554 34650  "1 "    0     # TRAN from  AMSTG SW  70.00  BRKR to (1)   GWF-PWR.
13.80
 4  34534     0  "1 "    0     # LOAD-DROP    RESERVE   70.00  LOAD==2.03(0.41)
 3  34650     0  "1 "    0     # GEN-DROP    GWF-PWR.  13.80  GEN==23.00(12.00)
 0
  #
  #
  # (267)  B2 LINE OUTAGE (BREAKER-TO-BREAKER)
  #
 1  34537 34540  "1 "    0     # line from  GWF_HENR  70.00   (5) to BRKR  HENRITTA
70.00
 2  34537 34539  "1 "    0     # TRAN from  GWF_HENR  70.00   (5) to (1)   GWF_GT1
13.80
 2  34537 34541  "1 "    0     # TRAN from  GWF_HENR  70.00   (5) to (1)   GWF_GT2
13.80
 2  34537 34691  "1 "    0     # TRAN from  GWF_HENR  70.00   (5) to (1)   Q272_ST1
13.80
 2  34537 34692  "1 "    0     # TRAN from  GWF_HENR  70.00   (5) to (1)   Q272SLST
13.80
 4  34539     0  "ss"    0     # LOAD-DROP    GWF_GT1   13.80  LOAD==1.10(0.25)
 4  34541     0  "ss"    0     # LOAD-DROP    GWF_GT2   13.80  LOAD==1.10(0.25)
 4  34691     0  "ss"    0     # LOAD-DROP    Q272_ST1  13.80  LOAD==2.00(1.11)
 4  34692     0  "ss"    0     # LOAD-DROP    Q272SLST  13.80  LOAD==14.00(7.75)
 3  34539     0  "1 "    0     # GEN-DROP    GWF_GT1   13.80  GEN==50.00(4.51)
 3  34541     0  "1 "    0     # GEN-DROP    GWF_GT2   13.80  GEN==50.00(4.51)
 3  34691     0  "1 "    0     # GEN-DROP    Q272_ST1  13.80  GEN==27.00(1.87)
 3  34692     0  "1 "    0     # GEN-DROP    Q272SLST  13.80  GEN==139.00(35.74)
 0
  #
  #
  # (268)  B2 LINE OUTAGE (BREAKER-TO-BREAKER)
  #
 1  34544 34550  "1 "    0     # line from  TLRE LKE  70.00  BRKR to (2)   CHEVPLIN
70.00
 1  34550 34546  "1 "    0     # line from  CHEVPLIN  70.00   (2) to (2)   AVENAL
70.00
 1  34546 34548  "1 "    0     # line from  AVENAL    70.00   (2) to BRKR  KETTLEMN
70.00
 4  34544     0  "1 "    0     # LOAD-DROP    TLRE LKE  70.00  LOAD==6.79(1.38)
 4  34550     0  "1 "    0     # LOAD-DROP    CHEVPLIN  70.00  LOAD==1.01(0.73)
 4  34546     0  "1 "    0     # LOAD-DROP    AVENAL    70.00  LOAD==7.72(1.57)
 0
  #
```

```
  #
  # (269)  B2 LINE OUTAGE (BREAKER-TO-BREAKER)
  #
 1  34548 34552  "1 "    0     # line from  KETTLEMN  70.00   (2) to BRKR  GATES
70.00
 1  34548 34546  "1 "    0     # line from  KETTLEMN  70.00  BRKR to (1)   AVENAL
70.00
 4  34548     0  "1 "    0     # LOAD-DROP    KETTLEMN  70.00  LOAD==6.32(1.29)
 0
  #
  #
  # (270)  B2 LINE OUTAGE (BREAKER-TO-BREAKER)
  #
 1  34552 34558  "1 "    0     # line from  GATES     70.00  BRKR to BRKR  HURON
70.00
 0
  #
  #
  # (271)  B2 LINE OUTAGE (BREAKER-TO-BREAKER)
  #
 1  34552 34558  "2 "    0     # line from  GATES     70.00  BRKR to BRKR  HURON
70.00
 0
  #
  #
  # (272)  B2 LINE OUTAGE (BREAKER-TO-BREAKER)
  #
 1  34552 34578  "1 "    0     # line from  GATES     70.00  BRKR to (2)   JACALITO
70.00
 1  34578 34574  "1 "    0     # line from  JACALITO  70.00   (2) to BRKR  COLNGA 1
70.00
 4  34578     0  "1 "    0     # LOAD-DROP    JACALITO  70.00  LOAD==4.45(2.99)
 0
  #
  #
  # (273)  B2 LINE OUTAGE (BREAKER-TO-BREAKER)
  #
 1  34556 34562  "1 "    0     # line from  STRD JCT  70.00  BRKR to BRKR  SCHLNDLR
70.00
 0
  #
  #
  # (274)  B2 LINE OUTAGE (BREAKER-TO-BREAKER)
  #
 1  34556 34564  "1 "    0     # line from  STRD JCT  70.00   (3) to BRKR  STROUD
70.00
 1  34556 34474  "1 "    0     # line from  STRD JCT  70.00  BRKR to BRKR  HELM
70.00
 1  34556 34562  "1 "    0     # line from  STRD JCT  70.00  BRKR to BRKR  SCHLNDLR
70.00
 4  34564     0  "1 "    0     # LOAD-DROP    STROUD    70.00  LOAD==13.09(2.66)
 0
  #
  #
  # (275)  B2 LINE OUTAGE (BREAKER-TO-BREAKER)
  #
 1  34558 34560  "1 "    0     # line from  HURON     70.00  BRKR to (2)   CALFLAX
70.00
 1  34560 34562  "1 "    0     # line from  CALFLAX   70.00   (2) to BRKR  SCHLNDLR
70.00
 4  34560     0  "1 "    0     # LOAD-DROP    CALFLAX   70.00  LOAD==6.53(1.33)
 1  34552 34558  "2 "    0      # Must include Gates - Huron in this outage
 0
  #
  #
  # (276)  B2 LINE OUTAGE (BREAKER-TO-BREAKER)
  #
 1  34562 34566  "1 "    0     # line from  SCHLNDLR  70.00  BRKR to (2)   PLSNTVLY
70.00
```

```
 1  34566 34570  "1 "    0     # line from  PLSNTVLY  70.00   (2) to BRKR  COLNGA 2
70.00
 4  34566     0  "1 "    0     # LOAD-DROP    PLSNTVLY  70.00  LOAD==10.00(2.51)
 0
  #
  #
  # (277)  B2 LINE OUTAGE (BREAKER-TO-BREAKER)
  #
 1  34570 34572  "1 "    0     # line from  COLNGA 2  70.00  BRKR to (3)   TORNADO
70.00
 1  34572 34574  "1 "    0     # line from  TORNADO   70.00   (3) to BRKR  COLNGA 1
70.00
 2  34572 34654  "1 "    0     # TRAN from  TORNADO   70.00   (3) to (1)   COLNGAGN
9.11
 4  34572     0  "1 "    0     # LOAD-DROP    TORNADO   70.00  LOAD==1.74(1.44)
 3  34654     0  "1 "    0     # GEN-DROP    COLNGAGN   9.11  GEN==34.00(5.40)
 2  34570 34652  "1 "    0      # Must include Colinga2 - Chv.coal in this outage -
modeled on bus,
 3  34652     0  "**"    0      # Drops units on Derrick Sub
 4  34652     0  "**"    0      # Drops load at Derrick Sub
 0
  #
  #
  # (278)  B2 LINE OUTAGE (BREAKER-TO-BREAKER)
  #
 1  36354 34574  "1 "    0     # line from  SAN MIGL  70.00  BRKR to BRKR  COLNGA 1
70.00
 0
  #
  #
  # (279)  B3 TRANSFORMER OUTAGE (BREAKER-TO-BREAKER)
  #
#      **** 3-WINDING TRANSFORMER  30835  (30882)  34412  34630 :
 2  30835 34412  "1 "    0     # TRAN from  HERNDON  230.00  BRKR to (1)   HERNDON
115.00
 0
  #
  #
  # (280)  B3 TRANSFORMER OUTAGE (BREAKER-TO-BREAKER)
  #
#      **** 3-WINDING TRANSFORMER  30835  (30883)  34412  34632 :
 2  30835 34412  "2 "    0     # TRAN from  HERNDON  230.00  BRKR to (1)   HERNDON
115.00
 0
  #
  #
  # (281)  B3 TRANSFORMER OUTAGE (BREAKER-TO-BREAKER)
  #
#      **** 3-WINDING TRANSFORMER  30875  (30876)  34370  34618 :
 2  30875 34370  "1 "    0     # TRAN from  MC CALL  230.00  BRKR to (1)   MC CALL
115.00
 0
  #
  #
  # (282)  B3 TRANSFORMER OUTAGE (BREAKER-TO-BREAKER)
  #
#      **** 3-WINDING TRANSFORMER  30875  (30877)  34370  34620 :
 2  30875 34370  "2 "    0     # TRAN from  MC CALL  230.00  BRKR to (1)   MC CALL
115.00
 0
  #
  #
  # (283)  B3 TRANSFORMER OUTAGE (BREAKER-TO-BREAKER)
  #
#      **** 3-WINDING TRANSFORMER  30875  (30878)  34370  34621 :
 2  30875 34370  "3 "    0     # TRAN from  MC CALL  230.00  BRKR to (1)   MC CALL
115.00
 0
  #
  #
```

```
  # (284)  B3 TRANSFORMER OUTAGE (BREAKER-TO-BREAKER)
  #
 2  30881 34430  "3 "    0     # TRAN from  HENRIETA 230.00  BRKR to BRKR  HENRETTA
115.00
 0
  #
  #
  # (285)  B3 TRANSFORMER OUTAGE (BREAKER-TO-BREAKER)
  #
#      **** 3-WINDING TRANSFORMER  30900  (34607)  30055  34606 :
 2  30900 30055  "11"    0     # TRAN from  GATES    230.00  BRKR to (1)   GATES
500.00
 0
  #
  #
  # (286)  B3 TRANSFORMER OUTAGE (BREAKER-TO-BREAKER)
  #
 2  30900 30901  "1 "    0     # TRAN from  GATES    230.00  BRKR to (3)   GATES 1M
230.00
 2  30901 34378  "1 "    0     # TRAN from  GATES 1M 230.00   (3) to BRKR  GATES
115.00
 2  30901 34622  "1 "    0     # TRAN from  GATES 1M 230.00   (3) to (1)   GATES 1T
13.20
 4 34378      0  "3 "    0      # Drop Gates Bank #3
 0
  #
  #
  # (287)  B3 TRANSFORMER OUTAGE (BREAKER-TO-BREAKER)
  #
 2  34356 34344  "1 "    0     # TRAN from  KERCKHF1 115.00  BRKR to (1)   KERCKHOF
6.60
 4  34344     0  "4 "    0     # LOAD-DROP    KERCKHOF   6.60  LOAD==3.24(0.66)
 3  34344     0  "2 "    0     # GEN-DROP    KERCKHOF   6.60  GEN==6.80(-4.00)
 0
  #
  #
  # (288)  B3 TRANSFORMER OUTAGE (BREAKER-TO-BREAKER)
  #
 2  34366 34590  "1 "    0     # TRAN from  SANGER   115.00  BRKR to (2)   SANGR3T
115.00
 2  34590 34488  "1 "    0     # TRAN from  SANGR3T  115.00   (2) to BRKR  SANGER
70.00
 4  34590     0  "3 "    0     # LOAD-DROP    SANGR3T  115.00  LOAD==20.55(4.17)
 0
  #
  #
  # (289)  B3 TRANSFORMER OUTAGE (BREAKER-TO-BREAKER)
  #
 2  34418 34576  "2 "    0     # TRAN from  KINGSBRG 115.00  BRKR to BRKR  KNGLOBUS
70.00
 0
  #
  #
  # (290)  B3 TRANSFORMER OUTAGE (BREAKER-TO-BREAKER)
  #
 2  34474 30873  "1 "    0     # TRAN from  HELM      70.00  BRKR to BRKR  HELM
230.00
 0
  #
  #
  # (291)  B3 TRANSFORMER OUTAGE (BREAKER-TO-BREAKER)
  #
 2  34480 30830  "2 "    0     # TRAN from  KEARNEY   70.00  BRKR to BRKR  KEARNEY
230.00
 0
  #
  #
  # (292)  B3 TRANSFORMER OUTAGE (BREAKER-TO-BREAKER)
  #
```

```
 2  34492 34380  "1 "    0     # TRAN from  REEDLEY   70.00  BRKR to BRKR  REEDLEY
115.00
 0
  #
  #
  # (293)  B3 TRANSFORMER OUTAGE (BREAKER-TO-BREAKER)
  #
 2  34492 34380  "2 "    0     # TRAN from  REEDLEY   70.00  BRKR to BRKR  REEDLEY
115.00
 0
  #
  #
  # (294)  B3 TRANSFORMER OUTAGE (BREAKER-TO-BREAKER)
  #
 2  34528 34420  "2 "    0     # TRAN from  CORCORAN  70.00  BRKR to BRKR  CORCORAN
115.00
 1  34420 34391  "1 "    0      # Must include Corcoran - Quebec   (Corcoran CB 142) in
this outage
 1  34420 34418  "2 "    0      # Must include Corcoran - Kingburg (Corcoran CB 162) in
this outage
 1  34528 34460  "1 "    0      # Must include Corcorna - Guernsey (Corcoran CB  42) in
this outage
 0
  #
  #
  # (295)  B3 TRANSFORMER OUTAGE (BREAKER-TO-BREAKER)
  #
 2  34540 30881  "2 "    0     # TRAN from  HENRITTA  70.00  BRKR to BRKR  HENRIETA
230.00
 0
  #
  #
  # (296)  B3 TRANSFORMER OUTAGE (BREAKER-TO-BREAKER)
  #
 2  34540 30881  "4 "    0     # TRAN from  HENRITTA  70.00  BRKR to BRKR  HENRIETA
230.00
 0
  #
  #
  # (297)  B3 TRANSFORMER OUTAGE (BREAKER-TO-BREAKER)
  #
 2  34552 34378  "2 "    0     # TRAN from  GATES     70.00  BRKR to BRKR  GATES
115.00
 0
  #
  #
  # (298)  B3 TRANSFORMER OUTAGE (BREAKER-TO-BREAKER)
  #
 2  34562 34354  "1 "    0     # TRAN from  SCHLNDLR  70.00  BRKR to (3)   SCHINDLR
115.00
 1  34354 34149  "1 "    0     # line from  SCHINDLR 115.00  BRKR to (1)   CHENYT
115.00
 1  34354 34432  "1 "    0     # line from  SCHINDLR 115.00  BRKR to (1)   WESTLNDS
115.00
 4  34354     0  "1 "    0     # LOAD-DROP    SCHINDLR 115.00  LOAD==11.22(2.28)
 0
  #
  #
  # (299)  B3 TRANSFORMER OUTAGE (BREAKER-TO-BREAKER)
  #
 2  34652 34570  "1 "    0     # TRAN from  CHV.COAL   9.11   (1) to BRKR  COLNGA 2
70.00
 4  34652     0  "S1"    0     # LOAD-DROP    CHV.COAL   9.11  LOAD==5.12(2.48)
 4  34652     0  "SG"    0     # LOAD-DROP    CHV.COAL   9.11  LOAD==0.94(0.46)
 3  34652     0  "1 "    0     # GEN-DROP    CHV.COAL   9.11  GEN==2.50(8.30)
 3  34652     0  "2 "    0     # GEN-DROP    CHV.COAL   9.11  GEN==8.00(4.00)
 0
  #
  #
  # (300)  B3 TRANSFORMER OUTAGE (BREAKER-TO-BREAKER)
```

```
 #
 2  34658 34452  "1 "    0     # TRAN from  WISHON     2.30   (1) to BRKR  WISHON
70.00
 3  34658     0  "3 "    0     # GEN-DROP    WISHON     2.30  GEN==4.50(1.00)
 3  34658     0  "4 "    0     # GEN-DROP    WISHON     2.30  GEN==4.50(1.00)
 0
 #
 #
 # (301)  B1 GENERATOR OUTAGE
 #
 3  34308     0  "1"     0     # KERCKHOF  13.80       PGEN=129.00  QGEN=16.00
 0
 #
 #
 # (302)  B1 GENERATOR OUTAGE
 #
 3  34344     0  "2"     0     # KERCKHOF   6.60       PGEN=6.80  QGEN=-4.00
 0
 #
 #
 # (303)  B1 GENERATOR OUTAGE
 #
 3  34431     0  "1"     0     # GWF_HEP1  13.80       PGEN=50.00  QGEN=21.57
 0
 #
 #
 # (304)  B1 GENERATOR OUTAGE
 #
 3  34433     0  "1"     0     # GWF_HEP2  13.80       PGEN=50.00  QGEN=21.57
 0
 #
 #
 # (305)  B1 GENERATOR OUTAGE
 #
 3  34485     0  "1"     0     # FRESNOWW  12.47       PGEN=9.00  QGEN=0.00
 0
 #
 #
 # (306)  B1 GENERATOR OUTAGE
 #
 3  34539     0  "1"     0     # GWF_GT1   13.80       PGEN=50.00  QGEN=1.23
 0
 #
 #
 # (307)  B1 GENERATOR OUTAGE
 #
 3  34541     0  "1"     0     # GWF_GT2   13.80       PGEN=50.00  QGEN=1.23
 0
 #
 #
 # (308)  B1 GENERATOR OUTAGE
 #
 3  34553     0  "1"     0     # WHD_GAT2  13.80       PGEN=49.00  QGEN=-25.30
 0
 #
 #
 # (309)  B1 GENERATOR OUTAGE
 #
 3  34600     0  "1"     0     # HELMS 1   18.00       PGEN=404.00  QGEN=66.02
 0
 #
 #
 # (310)  B1 GENERATOR OUTAGE
 #
 3  34602     0  "1"     0     # HELMS 2   18.00       PGEN=404.00  QGEN=66.06
 0
 #
 #
 # (311)  B1 GENERATOR OUTAGE
 #
```

```
3  34604     0  "1"     0     # HELMS 3   18.00       PGEN=404.00  QGEN=66.12
0
 #
 #
 # (312)  B1 GENERATOR OUTAGE
 #
3  34608     0  "2"     0     # AGRICO    13.80       PGEN=7.00  QGEN=1.64
0
 #
 #
 # (313)  B1 GENERATOR OUTAGE
 #
3  34608     0  "3"     0     # AGRICO    13.80       PGEN=18.10  QGEN=4.24
0
 #
 #
 # (314)  B1 GENERATOR OUTAGE
 #
3  34608     0  "4"     0     # AGRICO    13.80       PGEN=26.00  QGEN=6.09
0
 #
 #
 # (315)  B1 GENERATOR OUTAGE
 #
3  34610     0  "1"     0     # HAAS      13.80       PGEN=70.00  QGEN=18.75
0
 #
 #
 # (316)  B1 GENERATOR OUTAGE
 #
3  34610     0  "2"     0     # HAAS      13.80       PGEN=70.00  QGEN=18.75
0
 #
 #
 # (317)  B1 GENERATOR OUTAGE
 #
3  34612     0  "1"     0     # BLCH 2-2  13.80       PGEN=50.00  QGEN=9.61
0
 #
 #
 # (318)  B1 GENERATOR OUTAGE
 #
3  34614     0  "1"     0     # BLCH 2-3  13.80       PGEN=50.00  QGEN=13.00
0
 #
 #
 # (319)  B1 GENERATOR OUTAGE
 #
3  34616     0  "1"     0     # KINGSRIV  13.80       PGEN=47.00  QGEN=9.00
0
 #
 #
 # (320)  B1 GENERATOR OUTAGE
 #
3  34618     0  "1"     0     # MCCALL1T  13.20       PGEN=0.00  QGEN=36.40
0
 #
 #
 # (321)  B1 GENERATOR OUTAGE
 #
3  34621     0  "1"     0     # MCCALL3T  13.20       PGEN=0.00  QGEN=4.85
0
 #
 #
 # (322)  B1 GENERATOR OUTAGE
 #
3  34624     0  "1"     0     # BALCH 1   13.20       PGEN=27.00  QGEN=10.00
0
 #
 #
```

```
 # (323)  B1 GENERATOR OUTAGE
 #
3  34630     0  "1"     0     # HERNDN1T  13.20       PGEN=0.00  QGEN=20.26
0
 #
 #
 # (324)  B1 GENERATOR OUTAGE
 #
3  34632     0  "1"     0     # HERNDN2T  13.20       PGEN=0.00  QGEN=32.58
0
 #
 #
 # (325)  B1 GENERATOR OUTAGE
 #
3  34636     0  "2"     0     # FRIANTDM   6.60       PGEN=14.70  QGEN=6.14
0
 #
 #
 # (326)  B1 GENERATOR OUTAGE
 #
3  34636     0  "3"     0     # FRIANTDM   6.60       PGEN=7.80  QGEN=3.26
0
 #
 #
 # (327)  B1 GENERATOR OUTAGE
 #
3  34636     0  "4"     0     # FRIANTDM   6.60       PGEN=2.30  QGEN=0.96
0
 #
 #
 # (328)  B1 GENERATOR OUTAGE
 #
3  34640     0  "1"     0     # ULTR.PWR   9.11       PGEN=14.50  QGEN=13.00
0
 #
 #
 # (329)  B1 GENERATOR OUTAGE
 #
3  34642     0  "1"     0     # KINGSBUR   9.11       PGEN=34.00  QGEN=17.30
0
 #
 #
 # (330)  B1 GENERATOR OUTAGE
 #
3  34646     0  "1"     0     # SANGERCO   9.11       PGEN=37.50  QGEN=4.31
0
 #
 #
 # (331)  B1 GENERATOR OUTAGE
 #
3  34648     0  "1"     0     # DINUBA E  13.80       PGEN=12.00  QGEN=7.00
0
 #
 #
 # (332)  B1 GENERATOR OUTAGE
 #
3  34650     0  "1"     0     # GWF-PWR.  13.80       PGEN=23.00  QGEN=12.00
0
 #
 #
 # (333)  B1 GENERATOR OUTAGE
 #
3  34652     0  "1"     0     # CHV.COAL   9.11       PGEN=2.50  QGEN=8.30
0
 #
 #
 # (334)  B1 GENERATOR OUTAGE
 #
3  34652     0  "2"     0     # CHV.COAL   9.11       PGEN=8.00  QGEN=4.00
0
```

```
 #
 #
 # (335)  B1 GENERATOR OUTAGE
 #
3  34654     0  "1"     0     # COLNGAGN   9.11       PGEN=34.00  QGEN=-3.48
0
 #
 #
 # (336)  B1 GENERATOR OUTAGE
 #
3  34658     0  "3"     0     # WISHON     2.30       PGEN=4.50  QGEN=1.00
0
 #
 #
 # (337)  B1 GENERATOR OUTAGE
 #
3  34658     0  "4"     0     # WISHON     2.30       PGEN=4.50  QGEN=1.00
0
 #
 #
 # (338)  B1 GENERATOR OUTAGE
 #
3  34671     0  "1"     0     # KRCDPCT1  13.80       PGEN=50.00  QGEN=10.75
0
 #
 #
 # (339)  B1 GENERATOR OUTAGE
 #
3  34672     0  "1"     0     # KRCDPCT2  13.80       PGEN=50.00  QGEN=10.75
0
 #
 #
 # (340)  B1 GENERATOR OUTAGE
 #
3  38720     0  "1"     0     # PINE FLT  13.80       PGEN=57.00  QGEN=23.30
0
 #
 #
 # (341)  B1 GENERATOR OUTAGE
 #
3  34661     0  "1"     0     # P0418GT1  13.80       PGEN=78.80  QGEN=13.93
0
 #
 #
 # (342)  B1 GENERATOR OUTAGE
 #
3  34663     0  "2"     0     # P0418GT2  13.80       PGEN=78.80  QGEN=13.93
0
 #
 #
 # (343)  B1 GENERATOR OUTAGE
 #
3  34665     0  "3"     0     # P0418GT3  13.80       PGEN=78.80  QGEN=13.93
0
 #
 #
 # (344)  B1 GENERATOR OUTAGE
 #
3  34667     0  "4"     0     # P0418GT4  13.80       PGEN=78.80  QGEN=13.93
0
 #
 #
 # (345)  B1 GENERATOR OUTAGE
 #
3  34685     0  "1"     0     # P0615CT1  16.50       PGEN=192.00  QGEN=35.45
0
 #
 #
 # (346)  B1 GENERATOR OUTAGE
 #
```

```
 3  34686     0  "1"     0     # P0615CT2  16.50       PGEN=192.00  QGEN=35.45
 0
  #
  #
  # (347)  B1 GENERATOR OUTAGE
  #
 3  34687     0  "1"     0     # P0615STG  16.50       PGEN=193.00  QGEN=35.57
 0
  #
  #
  # (348)  B1 GENERATOR OUTAGE
  #
 3  34688     0  "1"     0     # Q254CTG1  18.00       PGEN=172.40  QGEN=41.25
 0
  #
  #
  # (349)  B1 GENERATOR OUTAGE
  #
 3  34689     0  "2"     0     # Q254CTG2  18.00       PGEN=172.40  QGEN=41.25
 0
  #
  #
  # (350)  B1 GENERATOR OUTAGE
  #
 3  34690     0  "3"     0     # Q254STG1  18.00       PGEN=290.80  QGEN=67.53
 0
  #
  #
  # (351)  B1 GENERATOR OUTAGE
  #
 3  34691     0  "1"     0     # Q272_ST1  13.80       PGEN=27.00  QGEN=1.87
 0
  #
  #
  # (352)  B1 GENERATOR OUTAGE
  #
 3  34692     0  "1"     0     # Q272SLST  13.80       PGEN=139.00  QGEN=35.74
 0
  #
  #
  # (353)  L-1/G-1 OVERLAPPING OUTAGE
  # Smyrna - Semitropic - Midway 115 kV Line and Exchequer
 1  34700 34708  "1 "    0     # line from  SMYRNA   115.00  BRKR to (2)   MCKIBBEN
115.00
 1  34708 34742  "1 "    0     # line from  MCKIBBEN 115.00   (2) to (2)   SEMITRPJ
115.00
 1  34742 34746  "1 "    0     # line from  SEMITRPJ 115.00   (2) to (2)   GANSO
115.00
 1  34746 34774  "1 "    0     # line from  GANSO    115.00   (2) to BRKR  MIDWAY
115.00
 4  34746     0  "1 "    0     # LOAD-DROP    GANSO    115.00  LOAD==5.34(1.22)
  #
 3  34306     0  "1"     0     # EXCHQUER  13.80       PGEN=89.95  QGEN=18.49
 0
  #
  #
  # (354)  L-1/G-1 OVERLAPPING OUTAGE
  # Gates - Coalinga #2 70 kV Line and Chevron Coalinga Unit 1
 1  34184 34570  "1 "    0     # line from  GATS2_TP  70.00   (3) to BRKR  COLNGA 2
70.00
 1  34184 34552  "1 "    0     # line from  GATS2_TP  70.00   (3) to BRKR  GATES
70.00
 2  34184 34553  "1 "    0     # TRAN from  GATS2_TP  70.00   (3) to (1)   WHD_GAT2
13.80
 3  34553     0  "1 "    0     # GEN-DROP    WHD_GAT2  13.80  GEN==49.00(-25.30)
  #
 3  34652     0  "1"     0     # CHV.COAL   9.11       PGEN=17.00  QGEN=8.30
 0
  #
  #
```

```
  # (355)  L-1/G-1 OVERLAPPING OUTAGE
  # Gates - Coalinga #1 70 kV Line and Chevron Coalinga Unit 1
 1  34552 34578  "1 "    0     # line from  GATES     70.00  BRKR to (2)   JACALITO
70.00
 1  34578 34574  "1 "    0     # line from  JACALITO  70.00   (2) to BRKR  COLNGA 1
70.00
 4  34578     0  "1 "    0     # LOAD-DROP    JACALITO  70.00  LOAD==4.03(2.5) 0
  #
 3  34652     0  "1"     0     # CHV.COAL   9.11       PGEN=17.00  QGEN=8.30
 0
  #
  #
  # (356)  L-1/G-1 OVERLAPPING OUTAGE
  # Gates - Coalinga #2 70 kV Line and Coalinga Cogen
 1  34184 34570  "1 "    0     # line from  GATS2_TP  70.00   (3) to BRKR  COLNGA 2
70.00
 1  34184 34552  "1 "    0     # line from  GATS2_TP  70.00   (3) to BRKR  GATES
70.00
 2  34184 34553  "1 "    0     # TRAN from  GATS2_TP  70.00   (3) to (1)   WHD_GAT2
13.80
 3  34553     0  "1 "    0     # GEN-DROP    WHD_GAT2  13.80  GEN==49.00(-25.30)
  #
 3  34654     0  "1"     0     # COLNGAGN   9.11       PGEN=34.22  QGEN=-13.50
 0
  #
  #
  # (357)  L-1/G-1 OVERLAPPING OUTAGE
  # Gates - Coalinga #1 70 kV Line and Coalinga Cogen
 1  34552 34578  "1 "    0     # line from  GATES     70.00  BRKR to (2)   JACALITO
70.00
 1  34578 34574  "1 "    0     # line from  JACALITO  70.00   (2) to BRKR  COLNGA 1
70.00
 4  34578     0  "1 "    0     # LOAD-DROP    JACALITO  70.00  LOAD==4.03(2.5) 0
  #
 3  34654     0  "1"     0     # COLNGAGN   9.11       PGEN=34.22  QGEN=-13.50
 0
  #
  #
  # (358)  L-1/G-1 OVERLAPPING OUTAGE
  # Borden - Coppermine 70 kV Line and Friant PP Unit 2
 1  34262 34454  "1 "    0     # line from  CASSIDY   70.00   (2) to (2)   RIVERROC
70.00
 1  34262 34256  "1 "    0     # line from  CASSIDY   70.00   (2) to BRKR  BORDEN
70.00
 1  34454 34464  "1 "    0     # line from  RIVERROC  70.00   (2) to BRKR  COPPRMNE
70.00
 4  34262     0  "1 "    0     # LOAD-DROP    CASSIDY   70.00  LOAD==14.31(2.90)
 4  34454     0  "1 "    0     # LOAD-DROP    RIVERROC  70.00  LOAD==2.01(1.83)
  #
 3  34636     0  "2"     0     # FRIANTDM   6.60       PGEN=14.70  QGEN=6.14
 0
  #
  #
  # (359)  L-1/G-1 OVERLAPPING OUTAGE
  # Henrietta - Lemoore 70 kV Line and GWF Hanford
 1  34516 34520  "1 "    0     # line from  LEPRINO   70.00   (1) to (4)   LPRNO TP
70.00
 1  34520 34518  "1 "    0     # line from  LPRNO TP  70.00   (4) to BRKR  LEMOORE
70.00
 1  34520 34524  "1 "    0     # line from  LPRNO TP  70.00   (4) to (1)   CANDLEWK
70.00
 1  34520 34540  "1 "    0     # line from  LPRNO TP  70.00   (4) to BRKR  HENRITTA
70.00
 4  34516     0  "1 "    0     # LOAD-DROP    LEPRINO   70.00  LOAD==16.10(9.12)
 4  34518     0  "1 "    0     # LOAD-DROP    LEMOORE   70.00  LOAD==18.86(3.83)
 4  34518     0  "2 "    0     # LOAD-DROP    LEMOORE   70.00  LOAD==32.81(6.66)
  #
 3  34650     0  "1"     0     # GWF-PWR.  13.80       PGEN=23.00  QGEN=12.00
 0
  #
```

```
  #
  # (360)  L-1/G-1 OVERLAPPING OUTAGE
  # Henrietta - Lemoore 70 kV Line and GWF Henrietta Unit 1
 1  34516 34520  "1 "    0     # line from  LEPRINO   70.00   (1) to (4)   LPRNO TP
70.00
 1  34520 34518  "1 "    0     # line from  LPRNO TP  70.00   (4) to BRKR  LEMOORE
70.00
 1  34520 34524  "1 "    0     # line from  LPRNO TP  70.00   (4) to (1)   CANDLEWK
70.00
 1  34520 34540  "1 "    0     # line from  LPRNO TP  70.00   (4) to BRKR  HENRITTA
70.00
 4  34516     0  "1 "    0     # LOAD-DROP    LEPRINO   70.00  LOAD==16.10(9.12)
 4  34518     0  "1 "    0     # LOAD-DROP    LEMOORE   70.00  LOAD==18.86(3.83)
 4  34518     0  "2 "    0     # LOAD-DROP    LEMOORE   70.00  LOAD==32.81(6.66)
  #
 3  34539     0  "1"     0     # GWF_GT1   13.80       PGEN=50.00  QGEN=1.23
 0
  #
  #
  # (361)  L-1/G-1 OVERLAPPING OUTAGE
  # McCall - Wahtoke 115 kV Line and Sanger Cogen
 1  34370 34382  "1 "    0     # line from  MC CALL  115.00  BRKR to BRKR  WAHTOKE
115.00
  #
 3  34646     0  "1"     0     # SANGERCO   9.11       PGEN=37.50  QGEN=4.31
 0
  #
  #
  # (362)  L-1/G-1 OVERLAPPING OUTAGE
  # McCall - Wahtoke 115 kV Line and Kings River Power House
 1  34370 34382  "1 "    0     # line from  MC CALL  115.00  BRKR to BRKR  WAHTOKE
115.00
  #
 3  34616     0  "1"     0     # KINGSRIV  13.80       PGEN=47.00  QGEN=9.00
 0
  #
  #
  # (363)  L-1/G-1 OVERLAPPING OUTAGE
  # Helm - McCall 230 kV Line and Exchequer
 1  30873 30875  "1 "    0     # line from  HELM     230.00  BRKR to BRKR  MC CALL
230.00
  #
 3  34306     0  "1"     0     # EXCHQUER  13.80       PGEN=94.50  QGEN=8.77
 0
  #
  #
  # (364)  L-1/G-1 OVERLAPPING OUTAGE
  # Helms - Gregg #1 230 kV Line and Exchequer sumop outage
 1  30810 30820  "1 "    0     # line from  GREGG    230.00  BRKR to BRKR  HELMS PP
230.00
 3  34604     0  "**"    0      # Drop unit#3 with a loss Helm - Gregg #1 line sumop
 3  34602     0  "**"    0      # Drop unit#2 with a loss Helm - Gregg #1 line sumop
  #
 3  34306     0  "1"     0     # EXCHQUER  13.80       PGEN=94.50  QGEN=8.77
 0
  #
  #
  # (365)  L-1/G-1 OVERLAPPING OUTAGE
  # Helms - Gregg #2 230 kV Line and Exchequer sumop outage
 1  30810 30820  "2 "    0     # line from  GREGG    230.00  BRKR to BRKR  HELMS PP
230.00
 3  34604     0  "**"    0      # Drop unit#3 with a loss Helm - Gregg #2 line sumop
 3  34602     0  "**"    0      # Drop unit#2 with a loss Helm - Gregg #2 line sumop
  #
 3  34306     0  "1"     0     # EXCHQUER  13.80       PGEN=94.50  QGEN=8.77
 0
  #
  #
  # (366)  L-1/G-1 OVERLAPPING OUTAGE
  # Gregg - Herndon #1 230 kV Line and Exchequer
```

```
 1  30810 30835  "1 "    0     # line from  GREGG    230.00  BRKR to BRKR  HERNDON
230.00
 3  34604     0  "**"    0      # Drop unit#3 with a loss Gregg - Herndon #1 line
  #
 3  34306     0  "1"     0     # EXCHQUER  13.80       PGEN=94.50  QGEN=8.77
 0
  #
  #
  # (367)  L-1/G-1 OVERLAPPING OUTAGE
  # Gregg - Herndon #2 230 kV Line and Exchequer
 1  30810 30835  "2 "    0     # line from  GREGG    230.00  BRKR to BRKR  HERNDON
230.00
 3  34604     0  "**"    0      # Drop unit#3 with a loss Gregg - Herndon #2 line
  #
 3  34306     0  "1"     0     # EXCHQUER  13.80       PGEN=94.50  QGEN=8.77
 0
  #
  #
  # (368)  L-1/G-1 OVERLAPPING OUTAGE
  # Gregg - Ashlan 230 kV Line and Exchequer
 1  30810 30845  "1 "    0     # line from  GREGG    230.00  BRKR to (3)   FGRDN T2
230.00
 1  30845 30846  "1 "    0     # line from  FGRDN T2 230.00   (3) to BRKR  FIGRDN 2
230.00
 1  30845 30850  "1 "    0     # line from  FGRDN T2 230.00   (3) to BRKR  ASHLAN
230.00
 4  30846     0  "1 "    0     # LOAD-DROP    FIGRDN 2 230.00  LOAD==52.57(10.67)
 4  30846     0  "2 "    0     # LOAD-DROP    FIGRDN 2 230.00  LOAD==36.77(7.47)
 3  34604     0  "**"    0      # Drop unit#3 with a loss Gregg - Figarden line
 1 30841  30846  "1 "    1      # Switches in Figarden SW 286 to transfer load
 4 30846      0  "**"    1      # Restore Load at Figarden 2
  #
 3  34306     0  "1"     0     # EXCHQUER  13.80       PGEN=94.50  QGEN=8.77
 0
  #
  #
  # (369)  L-1/G-1 OVERLAPPING OUTAGE
  # Gates - Gregg 230 kV Line and Exchequer sumop outage
 1  30810 30879  "1 "    0     # line from  GREGG    230.00  BRKR to (3)   HENTAP1
230.00
 1  30879 30881  "1 "    0     # line from  HENTAP1  230.00   (3) to BRKR  HENRIETA
230.00
 1  30879 30900  "1 "    0     # line from  HENTAP1  230.00   (3) to BRKR  GATES
230.00
 3  34604     0  "**"    0      # Drop unit#3 with a loss Gregg - Henrietta Tap 1 line
 1  30880 30881  "1 "    1      # Henrietta flip flop (Henrietta CB 222)
 3  34600     0  "**"    0     # Trip Helms 1 for Gates - Gregg 230 kV line outage
HTT/RAS
  #
 3  34306     0  "1"     0     # EXCHQUER  13.80       PGEN=94.50  QGEN=8.77
 0
  #
  #
  # (370)  L-1/G-1 OVERLAPPING OUTAGE
  # Herndon - Kearney 230 kV Line and Exchequer sumop outage
 1  30830 30835  "1 "    0     # line from  KEARNEY  230.00  BRKR to BRKR  HERNDON
230.00
 3  34600     0  "**"    0     # Trip Helms 1 for Herndon - Kearney 230 kV line outage
HTT/RAS
  #
 3  34306     0  "1"     0     # EXCHQUER  13.80       PGEN=94.50  QGEN=8.77
 0
  #
  #
  # (371)  L-1/G-1 OVERLAPPING OUTAGE
  # Herndon - Ashlan 230 kV Line and Exchequer
 1  30835 30840  "1 "    0     # line from  HERNDON  230.00  BRKR to (3)   FGRDN T1
230.00
 1  30840 30841  "1 "    0     # line from  FGRDN T1 230.00   (3) to BRKR  FIGRDN 1
230.00
```

```
 1  30840 30850  "1 "    0     # line from  FGRDN T1 230.00   (3) to BRKR  ASHLAN
230.00
 4  30841     0  "1 "    0     # LOAD-DROP    FIGRDN 1 230.00  LOAD==73.45(14.92)
 1 30841  30846  "1 "    1      # Switches in Figarden SW 286 to transfer load
 4 30841      0  "**"    1      # Restore Load at Figarden 1
  #
 3  34306     0  "1"     0     # EXCHQUER  13.80       PGEN=94.50  QGEN=8.77
 0
  #
  #
  # (372)  L-1/G-1 OVERLAPPING OUTAGE
  # Haas - McCall 230 kV Line and Exchequer
 1  30855 30860  "1 "    0     # line from  HAAS     230.00   (2) to (3)   BALCH3TP
230.00
 2  30855 34610  "1 "    0     # TRAN from  HAAS     230.00   (2) to (1)   HAAS
13.80
 1  30860 30875  "1 "    0     # line from  BALCH3TP 230.00   (3) to BRKR  MC CALL
230.00
 2  30860 34614  "1 "    0     # TRAN from  BALCH3TP 230.00   (3) to (1)   BLCH 2-3
13.80
 3  34610     0  "1 "    0     # GEN-DROP    HAAS      13.80  GEN==70.00(10.21)
 3  34610     0  "2 "    0     # GEN-DROP    HAAS      13.80  GEN==70.00(10.21)
 3  34614     0  "1 "    0     # GEN-DROP    BLCH 2-3  13.80  GEN==50.00(7.64)
  #
 3  34306     0  "1"     0     # EXCHQUER  13.80       PGEN=94.50  QGEN=8.77
 0
  #
  #
  # (373)  L-1/G-1 OVERLAPPING OUTAGE
  # Balch - McCall 230 kV Line and Exchequer
 1  30865 30870  "1 "    0     # line from  BALCH    230.00   (2) to (3)   PINE FLT
230.00
 2  30865 34612  "1 "    0     # TRAN from  BALCH    230.00   (2) to (1)   BLCH 2-2
13.80
 1  30870 30875  "1 "    0     # line from  PINE FLT 230.00   (3) to BRKR  MC CALL
230.00
 2  30870 38720  "1 "    0     # TRAN from  PINE FLT 230.00   (3) to (1)   PINE FLT
13.80
 3  34612     0  "1 "    0     # GEN-DROP    BLCH 2-2  13.80  GEN==50.00(0.66)
 3  38720     0  "1 "    0     # GEN-DROP    PINE FLT  13.80  GEN==57.00(23.30)
  #
 3  34306     0  "1"     0     # EXCHQUER  13.80       PGEN=94.50  QGEN=8.77
 0
  #
  #
  # (374)  L-1/G-1 OVERLAPPING OUTAGE
  # Gates - McCall 230 kV Line and Exchequer
 1  30875 30880  "1 "    0     # line from  MC CALL  230.00  BRKR to (2)   HENTAP2
230.00
 1  30880 30900  "1 "    0     # line from  HENTAP2  230.00   (2) to BRKR  GATES
230.00
  #
 3  34306     0  "1"     0     # EXCHQUER  13.80       PGEN=94.50  QGEN=8.77
 0
  #
  #
  # (375)  L-1/G-1 OVERLAPPING OUTAGE
  # Templeton - Gates 230 kV Line and Exchequer
 1  30900 30905  "1 "    0     # line from  GATES    230.00  BRKR to BRKR  TEMPLETN
230.00
  #
 3  34306     0  "1"     0     # EXCHQUER  13.80       PGEN=94.50  QGEN=8.77
 0
  #
  #
  # (376)  L-1/G-1 OVERLAPPING OUTAGE
  # Morro Bay - Gates 230 kV Line and Exchequer
 1  30900 30915  "1 "    0     # line from  GATES    230.00  BRKR to BRKR  MORROBAY
230.00
  #
```

```
 3  34306     0  "1"     0     # EXCHQUER  13.80       PGEN=94.50  QGEN=8.77
 0
  #
  #
  # (377)  L-1/G-1 OVERLAPPING OUTAGE
  # Gates - Arco 230 kV Line and Exchequer
 1  30900 30935  "1 "    0     # line from  GATES    230.00  BRKR to BRKR  ARCO
230.00
  #
 3  34306     0  "1"     0     # EXCHQUER  13.80       PGEN=94.50  QGEN=8.77
 0
  #
  #
  # (378)  L-1/G-1 OVERLAPPING OUTAGE
  # Gates - Midway 230 kV Line and Exchequer
 1  30900 30970  "1 "    0     # line from  GATES    230.00  BRKR to BRKR  MIDWAY
230.00
  #
 3  34306     0  "1"     0     # EXCHQUER  13.80       PGEN=94.50  QGEN=8.77
 0
  #
  #
  # (379)  L-1/G-1 OVERLAPPING OUTAGE
  # Helm - McCall 230 kV Line and Kerckhoff
 1  30873 30875  "1 "    0     # line from  HELM     230.00  BRKR to BRKR  MC CALL
230.00
  #
 3  34308     0  "1"     0     # KERCKHOF  13.80       PGEN=129.00  QGEN=16.00
 0
  #
  #
  # (380)  L-1/G-1 OVERLAPPING OUTAGE
  # Helms - Gregg #1 230 kV Line and Kerckhoff sumop outage
 1  30810 30820  "1 "    0     # line from  GREGG    230.00  BRKR to BRKR  HELMS PP
230.00
 3  34604     0  "**"    0      # Drop unit#3 with a loss Helm - Gregg #1 line sumop
 3  34602     0  "**"    0      # Drop unit#2 with a loss Helm - Gregg #1 line sumop
  #
 3  34308     0  "1"     0     # KERCKHOF  13.80       PGEN=129.00  QGEN=16.00
 0
  #
  #
  # (381)  L-1/G-1 OVERLAPPING OUTAGE
  # Helms - Gregg #2 230 kV Line and Kerckhoff sumop outage
 1  30810 30820  "2 "    0     # line from  GREGG    230.00  BRKR to BRKR  HELMS PP
230.00
 3  34604     0  "**"    0      # Drop unit#3 with a loss Helm - Gregg #2 line sumop
 3  34602     0  "**"    0      # Drop unit#2 with a loss Helm - Gregg #2 line sumop
  #
 3  34308     0  "1"     0     # KERCKHOF  13.80       PGEN=129.00  QGEN=16.00
 0
  #
  #
  # (382)  L-1/G-1 OVERLAPPING OUTAGE
  # Gregg - Herndon #1 230 kV Line and Kerckhoff
 1  30810 30835  "1 "    0     # line from  GREGG    230.00  BRKR to BRKR  HERNDON
230.00
 3  34604     0  "**"    0      # Drop unit#3 with a loss Gregg - Herndon #1 line
  #
 3  34308     0  "1"     0     # KERCKHOF  13.80       PGEN=129.00  QGEN=16.00
 0
  #
  #
  # (383)  L-1/G-1 OVERLAPPING OUTAGE
  # Gregg - Herndon #2 230 kV Line and Kerckhoff
 1  30810 30835  "2 "    0     # line from  GREGG    230.00  BRKR to BRKR  HERNDON
230.00
 3  34604     0  "**"    0      # Drop unit#3 with a loss Gregg - Herndon #2 line
  #
 3  34308     0  "1"     0     # KERCKHOF  13.80       PGEN=129.00  QGEN=16.00
```

```
 0
  #
  #
  # (384)  L-1/G-1 OVERLAPPING OUTAGE
  # Gregg - Ashlan 230 kV Line and Kerckhoff
 1  30810 30845  "1 "    0     # line from  GREGG    230.00  BRKR to (3)   FGRDN T2
230.00
 1  30845 30846  "1 "    0     # line from  FGRDN T2 230.00   (3) to BRKR  FIGRDN 2
230.00
 1  30845 30850  "1 "    0     # line from  FGRDN T2 230.00   (3) to BRKR  ASHLAN
230.00
 4  30846     0  "1 "    0     # LOAD-DROP    FIGRDN 2 230.00  LOAD==52.57(10.67)
 4  30846     0  "2 "    0     # LOAD-DROP    FIGRDN 2 230.00  LOAD==36.77(7.47)
 3  34604     0  "**"    0      # Drop unit#3 with a loss Gregg - Figarden line
 1 30841  30846  "1 "    1      # Switches in Figarden SW 286 to transfer load
 4 30846      0  "**"    1      # Restore Load at Figarden 2
  #
 3  34308     0  "1"     0     # KERCKHOF  13.80       PGEN=129.00  QGEN=16.00
 0
  #
  #
  # (385)  L-1/G-1 OVERLAPPING OUTAGE
  # Gates - Gregg 230 kV Line and Kerckhoff sumop outage
 1  30810 30879  "1 "    0     # line from  GREGG    230.00  BRKR to (3)   HENTAP1
230.00
 1  30879 30881  "1 "    0     # line from  HENTAP1  230.00   (3) to BRKR  HENRIETA
230.00
 1  30879 30900  "1 "    0     # line from  HENTAP1  230.00   (3) to BRKR  GATES
230.00
 3  34604     0  "**"    0      # Drop unit#3 with a loss Gregg - Henrietta Tap 1 line
 1  30880 30881  "1 "    1      # Henrietta flip flop (Henrietta CB 222)
 3  34600     0  "**"    0     # Trip Helms 1 for Gates - Gregg 230 kV line outage
HTT/RAS
  #
 3  34308     0  "1"     0     # KERCKHOF  13.80       PGEN=129.00  QGEN=16.00
 0
  #
  #
  # (386)  L-1/G-1 OVERLAPPING OUTAGE
  # Herndon - Kearney 230 kV Line and Kerckhoff sumop outage
 1  30830 30835  "1 "    0     # line from  KEARNEY  230.00  BRKR to BRKR  HERNDON
230.00
 3  34600     0  "**"    0     # Trip Helms 1 for Herndon - Kearney 230 kV line outage
HTT/RAS
  #
 3  34308     0  "1"     0     # KERCKHOF  13.80       PGEN=129.00  QGEN=16.00
 0
  #
  #
  # (387)  L-1/G-1 OVERLAPPING OUTAGE
  # Herndon - Ashlan 230 kV Line and Kerckhoff
 1  30835 30840  "1 "    0     # line from  HERNDON  230.00  BRKR to (3)   FGRDN T1
230.00
 1  30840 30841  "1 "    0     # line from  FGRDN T1 230.00   (3) to BRKR  FIGRDN 1
230.00
 1  30840 30850  "1 "    0     # line from  FGRDN T1 230.00   (3) to BRKR  ASHLAN
230.00
 4  30841     0  "1 "    0     # LOAD-DROP    FIGRDN 1 230.00  LOAD==73.45(14.92)
 1 30841  30846  "1 "    1      # Switches in Figarden SW 286 to transfer load
 4 30841      0  "**"    1      # Restore Load at Figarden 1
  #
 3  34308     0  "1"     0     # KERCKHOF  13.80       PGEN=129.00  QGEN=16.00
 0
  #
  #
  # (388)  L-1/G-1 OVERLAPPING OUTAGE
  # Haas - McCall 230 kV Line and Kerckhoff
 1  30855 30860  "1 "    0     # line from  HAAS     230.00   (2) to (3)   BALCH3TP
230.00
```

```
 2  30855 34610  "1 "    0     # TRAN from  HAAS     230.00   (2) to (1)   HAAS
13.80
 1  30860 30875  "1 "    0     # line from  BALCH3TP 230.00   (3) to BRKR  MC CALL
230.00
 2  30860 34614  "1 "    0     # TRAN from  BALCH3TP 230.00   (3) to (1)   BLCH 2-3
13.80
 3  34610     0  "1 "    0     # GEN-DROP    HAAS      13.80  GEN==70.00(10.21)
 3  34610     0  "2 "    0     # GEN-DROP    HAAS      13.80  GEN==70.00(10.21)
 3  34614     0  "1 "    0     # GEN-DROP    BLCH 2-3  13.80  GEN==50.00(7.64)
  #
 3  34308     0  "1"     0     # KERCKHOF  13.80       PGEN=129.00  QGEN=16.00
 0
  #
  #
  # (389)  L-1/G-1 OVERLAPPING OUTAGE
  # Balch - McCall 230 kV Line and Kerckhoff
 1  30865 30870  "1 "    0     # line from  BALCH    230.00   (2) to (3)   PINE FLT
230.00
 2  30865 34612  "1 "    0     # TRAN from  BALCH    230.00   (2) to (1)   BLCH 2-2
13.80
 1  30870 30875  "1 "    0     # line from  PINE FLT 230.00   (3) to BRKR  MC CALL
230.00
 2  30870 38720  "1 "    0     # TRAN from  PINE FLT 230.00   (3) to (1)   PINE FLT
13.80
 3  34612     0  "1 "    0     # GEN-DROP    BLCH 2-2  13.80  GEN==50.00(0.66)
 3  38720     0  "1 "    0     # GEN-DROP    PINE FLT  13.80  GEN==57.00(23.30)
  #
 3  34308     0  "1"     0     # KERCKHOF  13.80       PGEN=129.00  QGEN=16.00
 0
  #
  #
  # (390)  L-1/G-1 OVERLAPPING OUTAGE
  # Gates - McCall 230 kV Line and Kerckhoff
 1  30875 30880  "1 "    0     # line from  MC CALL  230.00  BRKR to (2)   HENTAP2
230.00
 1  30880 30900  "1 "    0     # line from  HENTAP2  230.00   (2) to BRKR  GATES
230.00
  #
 3  34308     0  "1"     0     # KERCKHOF  13.80       PGEN=129.00  QGEN=16.00
 0
  #
  #
  # (391)  L-1/G-1 OVERLAPPING OUTAGE
  # Templeton - Gates 230 kV Line and Kerckhoff
 1  30900 30905  "1 "    0     # line from  GATES    230.00  BRKR to BRKR  TEMPLETN
230.00
  #
 3  34308     0  "1"     0     # KERCKHOF  13.80       PGEN=129.00  QGEN=16.00
 0
  #
  #
  # (392)  L-1/G-1 OVERLAPPING OUTAGE
  # Morro Bay - Gates 230 kV Line and Kerckhoff
 1  30900 30915  "1 "    0     # line from  GATES    230.00  BRKR to BRKR  MORROBAY
230.00
  #
 3  34308     0  "1"     0     # KERCKHOF  13.80       PGEN=129.00  QGEN=16.00
 0
  #
  #
  # (393)  L-1/G-1 OVERLAPPING OUTAGE
  # Gates - Arco 230 kV Line and Kerckhoff
 1  30900 30935  "1 "    0     # line from  GATES    230.00  BRKR to BRKR  ARCO
230.00
  #
 3  34308     0  "1"     0     # KERCKHOF  13.80       PGEN=129.00  QGEN=16.00
 0
  #
  #
  # (394)  L-1/G-1 OVERLAPPING OUTAGE
```

```
  # Gates - Midway 230 kV Line and Kerckhoff
 1  30900 30970  "1 "    0     # line from  GATES    230.00  BRKR to BRKR  MIDWAY
230.00
  #
 3  34308     0  "1"     0     # KERCKHOF  13.80       PGEN=129.00  QGEN=16.00
 0
  #
  #
  # (395)  L-1/G-1 OVERLAPPING OUTAGE
  # Helm - McCall 230 kV Line and Helms Unit 1
 1  30873 30875  "1 "    0     # line from  HELM     230.00  BRKR to BRKR  MC CALL
230.00
  #
 3  34600     0  "1"     0     # HELMS 1   18.00       PGEN=404.00  QGEN=66.02
 0
  #
  #
  # (396)  L-1/G-1 OVERLAPPING OUTAGE
  # Helms - Gregg #1 230 kV Line and Helms Unit 1 sumop outage
 1  30810 30820  "1 "    0     # line from  GREGG    230.00  BRKR to BRKR  HELMS PP
230.00
 3  34604     0  "**"    0      # Drop unit#3 with a loss Helm - Gregg #1 line sumop
 3  34602     0  "**"    0      # Drop unit#2 with a loss Helm - Gregg #1 line sumop
  #
 3  34600     0  "1"     0     # HELMS 1   18.00       PGEN=404.00  QGEN=66.02
 0
  #
  #
  # (397)  L-1/G-1 OVERLAPPING OUTAGE
  # Helms - Gregg #2 230 kV Line and Helms Unit 1 sumop outage
 1  30810 30820  "2 "    0     # line from  GREGG    230.00  BRKR to BRKR  HELMS PP
230.00
 3  34604     0  "**"    0      # Drop unit#3 with a loss Helm - Gregg #2 line sumop
 3  34602     0  "**"    0      # Drop unit#2 with a loss Helm - Gregg #2 line sumop
  #
 3  34600     0  "1"     0     # HELMS 1   18.00       PGEN=404.00  QGEN=66.02
 0
  #
  #
  # (398)  L-1/G-1 OVERLAPPING OUTAGE
  # Gregg - Herndon #1 230 kV Line and Helms Unit 1
 1  30810 30835  "1 "    0     # line from  GREGG    230.00  BRKR to BRKR  HERNDON
230.00
 3  34604     0  "**"    0      # Drop unit#3 with a loss Gregg - Herndon #1 line
  #
 3  34600     0  "1"     0     # HELMS 1   18.00       PGEN=404.00  QGEN=66.02
 0
  #
  #
  # (399)  L-1/G-1 OVERLAPPING OUTAGE
  # Gregg - Herndon #2 230 kV Line and Helms Unit 1
 1  30810 30835  "2 "    0     # line from  GREGG    230.00  BRKR to BRKR  HERNDON
230.00
 3  34604     0  "**"    0      # Drop unit#3 with a loss Gregg - Herndon #2 line
  #
 3  34600     0  "1"     0     # HELMS 1   18.00       PGEN=404.00  QGEN=66.02
 0
  #
  #
  # (400)  L-1/G-1 OVERLAPPING OUTAGE
  # Gregg - Ashlan 230 kV Line and Helms Unit 1
 1  30810 30845  "1 "    0     # line from  GREGG    230.00  BRKR to (3)   FGRDN T2
230.00
 1  30845 30846  "1 "    0     # line from  FGRDN T2 230.00   (3) to BRKR  FIGRDN 2
230.00
 1  30845 30850  "1 "    0     # line from  FGRDN T2 230.00   (3) to BRKR  ASHLAN
230.00
 4  30846     0  "1 "    0     # LOAD-DROP    FIGRDN 2 230.00  LOAD==52.57(10.67)
 4  30846     0  "2 "    0     # LOAD-DROP    FIGRDN 2 230.00  LOAD==36.77(7.47)
 3  34604     0  "**"    0      # Drop unit#3 with a loss Gregg - Figarden line
```

```
 1 30841  30846  "1 "    1      # Switches in Figarden SW 286 to transfer load
 4 30846      0  "**"    1      # Restore Load at Figarden 2
  #
 3  34600     0  "1"     0     # HELMS 1   18.00       PGEN=404.00  QGEN=66.02
 0
  #
  #
  # (401)  L-1/G-1 OVERLAPPING OUTAGE
  # Gates - Gregg 230 kV Line and Helms Unit 1 sumop outage
 1  30810 30879  "1 "    0     # line from  GREGG    230.00  BRKR to (3)   HENTAP1
230.00
 1  30879 30881  "1 "    0     # line from  HENTAP1  230.00   (3) to BRKR  HENRIETA
230.00
 1  30879 30900  "1 "    0     # line from  HENTAP1  230.00   (3) to BRKR  GATES
230.00
 3  34604     0  "**"    0      # Drop unit#3 with a loss Gregg - Henrietta Tap 1 line
 1  30880 30881  "1 "    1      # Henrietta flip flop (Henrietta CB 222)
 3  34600     0  "**"    0     # Trip Helms 1 for Gates - Gregg 230 kV line outage
HTT/RAS
  #
 3  34600     0  "1"     0     # HELMS 1   18.00       PGEN=404.00  QGEN=66.02
 0
  #
  #
  # (402)  L-1/G-1 OVERLAPPING OUTAGE
  # Herndon - Kearney 230 kV Line and Helms Unit 1 sumop outage
 1  30830 30835  "1 "    0     # line from  KEARNEY  230.00  BRKR to BRKR  HERNDON
230.00
 3  34600     0  "**"    0     # Trip Helms 1 for Herndon - Kearney 230 kV line outage
HTT/RAS
  #
 3  34600     0  "1"     0     # HELMS 1   18.00       PGEN=404.00  QGEN=66.02
 0
  #
  #
  # (403)  L-1/G-1 OVERLAPPING OUTAGE
  # Herndon - Ashlan 230 kV Line and Helms Unit 1
 1  30835 30840  "1 "    0     # line from  HERNDON  230.00  BRKR to (3)   FGRDN T1
230.00
 1  30840 30841  "1 "    0     # line from  FGRDN T1 230.00   (3) to BRKR  FIGRDN 1
230.00
 1  30840 30850  "1 "    0     # line from  FGRDN T1 230.00   (3) to BRKR  ASHLAN
230.00
 4  30841     0  "1 "    0     # LOAD-DROP    FIGRDN 1 230.00  LOAD==73.45(14.92)
 1 30841  30846  "1 "    1      # Switches in Figarden SW 286 to transfer load
 4 30841      0  "**"    1      # Restore Load at Figarden 1
  #
 3  34600     0  "1"     0     # HELMS 1   18.00       PGEN=404.00  QGEN=66.02
 0
  #
  #
  # (404)  L-1/G-1 OVERLAPPING OUTAGE
  # Haas - McCall 230 kV Line and Helms Unit 1
 1  30855 30860  "1 "    0     # line from  HAAS     230.00   (2) to (3)   BALCH3TP
230.00
 2  30855 34610  "1 "    0     # TRAN from  HAAS     230.00   (2) to (1)   HAAS
13.80
 1  30860 30875  "1 "    0     # line from  BALCH3TP 230.00   (3) to BRKR  MC CALL
230.00
 2  30860 34614  "1 "    0     # TRAN from  BALCH3TP 230.00   (3) to (1)   BLCH 2-3
13.80
 3  34610     0  "1 "    0     # GEN-DROP    HAAS      13.80  GEN==70.00(10.21)
 3  34610     0  "2 "    0     # GEN-DROP    HAAS      13.80  GEN==70.00(10.21)
 3  34614     0  "1 "    0     # GEN-DROP    BLCH 2-3  13.80  GEN==50.00(7.64)
  #
 3  34600     0  "1"     0     # HELMS 1   18.00       PGEN=404.00  QGEN=66.02
 0
  #
  #
  # (405)  L-1/G-1 OVERLAPPING OUTAGE
```

```
  # Balch - McCall 230 kV Line and Helms Unit 1
 1  30865 30870  "1 "    0     # line from  BALCH    230.00   (2) to (3)   PINE FLT
230.00
 2  30865 34612  "1 "    0     # TRAN from  BALCH    230.00   (2) to (1)   BLCH 2-2
13.80
 1  30870 30875  "1 "    0     # line from  PINE FLT 230.00   (3) to BRKR  MC CALL
230.00
 2  30870 38720  "1 "    0     # TRAN from  PINE FLT 230.00   (3) to (1)   PINE FLT
13.80
 3  34612     0  "1 "    0     # GEN-DROP    BLCH 2-2  13.80  GEN==50.00(0.66)
 3  38720     0  "1 "    0     # GEN-DROP    PINE FLT  13.80  GEN==57.00(23.30)
  #
 3  34600     0  "1"     0     # HELMS 1   18.00       PGEN=404.00  QGEN=66.02
 0
  #
  #
  # (406)  L-1/G-1 OVERLAPPING OUTAGE
  # Gates - McCall 230 kV Line and Helms Unit 1
 1  30875 30880  "1 "    0     # line from  MC CALL  230.00  BRKR to (2)   HENTAP2
230.00
 1  30880 30900  "1 "    0     # line from  HENTAP2  230.00   (2) to BRKR  GATES
230.00
  #
 3  34600     0  "1"     0     # HELMS 1   18.00       PGEN=404.00  QGEN=66.02
 0
  #
  #
  # (407)  L-1/G-1 OVERLAPPING OUTAGE
  # Templeton - Gates 230 kV Line and Helms Unit 1
 1  30900 30905  "1 "    0     # line from  GATES    230.00  BRKR to BRKR  TEMPLETN
230.00
  #
 3  34600     0  "1"     0     # HELMS 1   18.00       PGEN=404.00  QGEN=66.02
 0
  #
  #
  # (408)  L-1/G-1 OVERLAPPING OUTAGE
  # Morro Bay - Gates 230 kV Line and Helms Unit 1
 1  30900 30915  "1 "    0     # line from  GATES    230.00  BRKR to BRKR  MORROBAY
230.00
  #
 3  34600     0  "1"     0     # HELMS 1   18.00       PGEN=404.00  QGEN=66.02
 0
  #
  #
  # (409)  L-1/G-1 OVERLAPPING OUTAGE
  # Gates - Arco 230 kV Line and Helms Unit 1
 1  30900 30935  "1 "    0     # line from  GATES    230.00  BRKR to BRKR  ARCO
230.00
  #
 3  34600     0  "1"     0     # HELMS 1   18.00       PGEN=404.00  QGEN=66.02
 0
  #
  #
  # (410)  L-1/G-1 OVERLAPPING OUTAGE
  # Gates - Midway 230 kV Line and Helms Unit 1
 1  30900 30970  "1 "    0     # line from  GATES    230.00  BRKR to BRKR  MIDWAY
230.00
  #
 3  34600     0  "1"     0     # HELMS 1   18.00       PGEN=404.00  QGEN=66.02
 0
  #
  #
  # (411)  L-1/G-1 OVERLAPPING OUTAGE
  # Panoche - Kearney 230 kV Line and Melones Unit 1 sumop outage
 1  30790 30825  "1 "    0     # line from  PANOCHE  230.00  BRKR to (2)   MCMULLN1
230.00
 1  30825 30830  "1 "    0     # line from  MCMULLN1 230.00   (2) to BRKR  KEARNEY
230.00
 4  30825     0  "1 "    0     # LOAD-DROP    MCMULLN1 230.00  LOAD==20.57(4.18)
```

```
 3  34600     0  "**"    0     # Trip Helms 1 for Panoche - Kearney 230 kV line outage
HTT/RAS
  #
 3  37561     0  "1"     0     # MELONE1   13.80       PGEN=119.00  QGEN=60.00
 0
  #
  #
  # (412)  L-1/G-1 OVERLAPPING OUTAGE
  # Panoche - Helm 230 kV Line and Melones Unit 1
 1  30790 30873  "1 "    0     # line from  PANOCHE  230.00  BRKR to BRKR  HELM
230.00
  #
 3  37561     0  "1"     0     # MELONE1   13.80       PGEN=119.00  QGEN=60.00
 0
  #
  #
  # (413)  L-1/G-1 OVERLAPPING OUTAGE
  # Gates - Panoche #1 230 kV Line and Melones Unit 1
 1  30790 30900  "1 "    0     # line from  PANOCHE  230.00  BRKR to BRKR  GATES
230.00
  #
 3  37561     0  "1"     0     # MELONE1   13.80       PGEN=119.00  QGEN=60.00
 0
  #
  #
  # (414)  L-1/G-1 OVERLAPPING OUTAGE
  # Gates - Panoche #2 230 kV Line and Melones Unit 1
 1  30790 30900  "2 "    0     # line from  PANOCHE  230.00  BRKR to BRKR  GATES
230.00
  #
 3  37561     0  "1"     0     # MELONE1   13.80       PGEN=119.00  QGEN=60.00
 0
  #
  #
  # (415)  L-1/G-1 OVERLAPPING OUTAGE
  # Helm - McCall 230 kV Line and Melones Unit 1
 1  30873 30875  "1 "    0     # line from  HELM     230.00  BRKR to BRKR  MC CALL
230.00
  #
 3  37561     0  "1"     0     # MELONE1   13.80       PGEN=119.00  QGEN=60.00
 0
  #
  #
  # (416)  L-1/G-1 OVERLAPPING OUTAGE
  # Helms - Gregg #1 230 kV Line and Melones Unit 1 sumop outage
 1  30810 30820  "1 "    0     # line from  GREGG    230.00  BRKR to BRKR  HELMS PP
230.00
 3  34604     0  "**"    0      # Drop unit#3 with a loss Helm - Gregg #1 line sumop
 3  34602     0  "**"    0      # Drop unit#2 with a loss Helm - Gregg #1 line sumop
  #
 3  37561     0  "1"     0     # MELONE1   13.80       PGEN=119.00  QGEN=60.00
 0
  #
  #
  # (417)  L-1/G-1 OVERLAPPING OUTAGE
  # Helms - Gregg #2 230 kV Line and Melones Unit 1 sumop outage
 1  30810 30820  "2 "    0     # line from  GREGG    230.00  BRKR to BRKR  HELMS PP
230.00
 3  34604     0  "**"    0      # Drop unit#3 with a loss Helm - Gregg #2 line sumop
 3  34602     0  "**"    0      # Drop unit#2 with a loss Helm - Gregg #2 line sumop
  #
 3  37561     0  "1"     0     # MELONE1   13.80       PGEN=119.00  QGEN=60.00
 0
  #
  #
  # (418)  L-1/G-1 OVERLAPPING OUTAGE
  # Gregg - Herndon #1 230 kV Line and Melones Unit 1
 1  30810 30835  "1 "    0     # line from  GREGG    230.00  BRKR to BRKR  HERNDON
230.00
 3  34604     0  "**"    0      # Drop unit#3 with a loss Gregg - Herndon #1 line
```

```
  #
 3  37561     0  "1"     0     # MELONE1   13.80       PGEN=119.00  QGEN=60.00
 0
  #
  #
  # (419)  L-1/G-1 OVERLAPPING OUTAGE
  # Gregg - Herndon #2 230 kV Line and Melones Unit 1
 1  30810 30835  "2 "    0     # line from  GREGG    230.00  BRKR to BRKR  HERNDON
230.00
 3  34604     0  "**"    0      # Drop unit#3 with a loss Gregg - Herndon #2 line
  #
 3  37561     0  "1"     0     # MELONE1   13.80       PGEN=119.00  QGEN=60.00
 0
  #
  #
  # (420)  L-1/G-1 OVERLAPPING OUTAGE
  # Gregg - Ashlan 230 kV Line and Melones Unit 1
 1  30810 30845  "1 "    0     # line from  GREGG    230.00  BRKR to (3)   FGRDN T2
230.00
 1  30845 30846  "1 "    0     # line from  FGRDN T2 230.00   (3) to BRKR  FIGRDN 2
230.00
 1  30845 30850  "1 "    0     # line from  FGRDN T2 230.00   (3) to BRKR  ASHLAN
230.00
 4  30846     0  "1 "    0     # LOAD-DROP    FIGRDN 2 230.00  LOAD==52.57(10.67)
 4  30846     0  "2 "    0     # LOAD-DROP    FIGRDN 2 230.00  LOAD==36.77(7.47)
 3  34604     0  "**"    0      # Drop unit#3 with a loss Gregg - Figarden line
 1 30841  30846  "1 "    1      # Switches in Figarden SW 286 to transfer load
 4 30846      0  "**"    1      # Restore Load at Figarden 2
  #
 3  37561     0  "1"     0     # MELONE1   13.80       PGEN=119.00  QGEN=60.00
 0
  #
  #
  # (421)  L-1/G-1 OVERLAPPING OUTAGE
  # Gates - Gregg 230 kV Line and Melones Unit 1 sumop outage
 1  30810 30879  "1 "    0     # line from  GREGG    230.00  BRKR to (3)   HENTAP1
230.00
 1  30879 30881  "1 "    0     # line from  HENTAP1  230.00   (3) to BRKR  HENRIETA
230.00
 1  30879 30900  "1 "    0     # line from  HENTAP1  230.00   (3) to BRKR  GATES
230.00
 3  34604     0  "**"    0      # Drop unit#3 with a loss Gregg - Henrietta Tap 1 line
 1  30880 30881  "1 "    1      # Henrietta flip flop (Henrietta CB 222)
 3  34600     0  "**"    0     # Trip Helms 1 for Gates - Gregg 230 kV line outage
HTT/RAS
  #
 3  37561     0  "1"     0     # MELONE1   13.80       PGEN=119.00  QGEN=60.00
 0
  #
  #
  # (422)  L-1/G-1 OVERLAPPING OUTAGE
  # Herndon - Kearney 230 kV Line and Melones Unit 1 sumop outage
 1  30830 30835  "1 "    0     # line from  KEARNEY  230.00  BRKR to BRKR  HERNDON
230.00
 3  34600     0  "**"    0     # Trip Helms 1 for Herndon - Kearney 230 kV line outage
HTT/RAS
  #
 3  37561     0  "1"     0     # MELONE1   13.80       PGEN=119.00  QGEN=60.00
 0
  #
  #
  # (423)  L-1/G-1 OVERLAPPING OUTAGE
  # Herndon - Ashlan 230 kV Line and Melones Unit 1
 1  30835 30840  "1 "    0     # line from  HERNDON  230.00  BRKR to (3)   FGRDN T1
230.00
 1  30840 30841  "1 "    0     # line from  FGRDN T1 230.00   (3) to BRKR  FIGRDN 1
230.00
 1  30840 30850  "1 "    0     # line from  FGRDN T1 230.00   (3) to BRKR  ASHLAN
230.00
 4  30841     0  "1 "    0     # LOAD-DROP    FIGRDN 1 230.00  LOAD==73.45(14.92)
```

```
 1 30841  30846  "1 "    1      # Switches in Figarden SW 286 to transfer load
 4 30841      0  "**"    1      # Restore Load at Figarden 1
  #
 3  37561     0  "1"     0     # MELONE1   13.80       PGEN=119.00  QGEN=60.00
 0
  #
  #
  # (424)  L-1/G-1 OVERLAPPING OUTAGE
  # Haas - McCall 230 kV Line and Melones Unit 1
 1  30855 30860  "1 "    0     # line from  HAAS     230.00   (2) to (3)   BALCH3TP
230.00
 2  30855 34610  "1 "    0     # TRAN from  HAAS     230.00   (2) to (1)   HAAS
13.80
 1  30860 30875  "1 "    0     # line from  BALCH3TP 230.00   (3) to BRKR  MC CALL
230.00
 2  30860 34614  "1 "    0     # TRAN from  BALCH3TP 230.00   (3) to (1)   BLCH 2-3
13.80
 3  34610     0  "1 "    0     # GEN-DROP    HAAS      13.80  GEN==70.00(10.21)
 3  34610     0  "2 "    0     # GEN-DROP    HAAS      13.80  GEN==70.00(10.21)
 3  34614     0  "1 "    0     # GEN-DROP    BLCH 2-3  13.80  GEN==50.00(7.64)
  #
 3  37561     0  "1"     0     # MELONE1   13.80       PGEN=119.00  QGEN=60.00
 0
  #
  #
  # (425)  L-1/G-1 OVERLAPPING OUTAGE
  # Balch - McCall 230 kV Line and Melones Unit 1
 1  30865 30870  "1 "    0     # line from  BALCH    230.00   (2) to (3)   PINE FLT
230.00
 2  30865 34612  "1 "    0     # TRAN from  BALCH    230.00   (2) to (1)   BLCH 2-2
13.80
 1  30870 30875  "1 "    0     # line from  PINE FLT 230.00   (3) to BRKR  MC CALL
230.00
 2  30870 38720  "1 "    0     # TRAN from  PINE FLT 230.00   (3) to (1)   PINE FLT
13.80
 3  34612     0  "1 "    0     # GEN-DROP    BLCH 2-2  13.80  GEN==50.00(0.66)
 3  38720     0  "1 "    0     # GEN-DROP    PINE FLT  13.80  GEN==57.00(23.30)
  #
 3  37561     0  "1"     0     # MELONE1   13.80       PGEN=119.00  QGEN=60.00
 0
  #
  #
  # (426)  L-1/G-1 OVERLAPPING OUTAGE
  # Gates - McCall 230 kV Line and Melones Unit 1
 1  30875 30880  "1 "    0     # line from  MC CALL  230.00  BRKR to (2)   HENTAP2
230.00
 1  30880 30900  "1 "    0     # line from  HENTAP2  230.00   (2) to BRKR  GATES
230.00
  #
 3  37561     0  "1"     0     # MELONE1   13.80       PGEN=119.00  QGEN=60.00
 0
  #
  #
  # (427)  L-1/G-1 OVERLAPPING OUTAGE
  # Templeton - Gates 230 kV Line and Melones Unit 1
 1  30900 30905  "1 "    0     # line from  GATES    230.00  BRKR to BRKR  TEMPLETN
230.00
  #
 3  37561     0  "1"     0     # MELONE1   13.80       PGEN=119.00  QGEN=60.00
 0
  #
  #
  # (428)  L-1/G-1 OVERLAPPING OUTAGE
  # Morro Bay - Gates 230 kV Line and Melones Unit 1
 1  30900 30915  "1 "    0     # line from  GATES    230.00  BRKR to BRKR  MORROBAY
230.00
  #
 3  37561     0  "1"     0     # MELONE1   13.80       PGEN=119.00  QGEN=60.00
 0
  #
```

```
  #
  # (429)  L-1/G-1 OVERLAPPING OUTAGE
  # Gates - Arco 230 kV Line and Melones Unit 1
 1  30900 30935  "1 "    0     # line from  GATES    230.00  BRKR to BRKR  ARCO
230.00
  #
 3  37561     0  "1"     0     # MELONE1   13.80       PGEN=119.00  QGEN=60.00
 0
  #
  #
  # (430)  L-1/G-1 OVERLAPPING OUTAGE
  # Gates - Midway 230 kV Line and Melones Unit 1
 1  30900 30970  "1 "    0     # line from  GATES    230.00  BRKR to BRKR  MIDWAY
230.00
  #
 3  37561     0  "1"     0     # MELONE1   13.80       PGEN=119.00  QGEN=60.00
 0
  #
  #
 -1
  # EOF
```

Summer Off-Peak Category C Contingencies

```
# Q272 2013 sumop category c contingency list (dctl and bus outages)
# Yosemite and Fresno Divisions Zones 313 and 314
#
  # 2013 sumop category c contingency list
  # Yosemite Zone 313
  #
  #
  # (1)   C5 DCTL OUTAGE
  # Wilson - Atwater and El Capitan - Wilson 115 kV Lines
 1  34134 34104  "1 "    0     # line from  WILSON A 115.00  BRKR to BRKR  ATWATER
115.00
  #
 1  34136 34138  "1 "    0     # line from  WILSON B 115.00  BRKR to BRKR  EL CAPTN
115.00
 0
  #
  #
  # (2)   C5 DCTL OUTAGE
  # Wilson - Atwater and Atwater - El Capitan 115 kV Lines
 1  34134 34104  "1 "    0     # line from  WILSON A 115.00  BRKR to BRKR  ATWATER
115.00
  #
 1  34104 34106  "1 "    0     # line from  ATWATER  115.00  BRKR to (2)   CASTLE
115.00
 1  34106 34138  "1 "    0     # line from  CASTLE   115.00   (2) to BRKR  EL CAPTN
115.00
 0
  #
  #
  # (3)   C5 DCTL OUTAGE
  # Wilson - Merced #2 and Wilson - Oro Loma 115 kV Lines
 1  34134 34144  "1 "    0     # line from  WILSON A 115.00  BRKR to BRKR  MERCED
115.00
  #
 1  34118 34136  "1 "    0     # line from  LE GRNDJ 115.00   (2) to BRKR  WILSON B
115.00
 1  34118 34168  "1 "    0     # line from  LE GRNDJ 115.00   (2) to (2)   EL NIDO
115.00
 1  34168 34162  "1 "    0     # line from  EL NIDO  115.00   (2) to BRKR  ORO LOMA
115.00
 4  34168     0  "1 "    0     # LOAD-DROP    EL NIDO  115.00  LOAD==12.49(2.54)
 4  34168     0  "2 "    0     # LOAD-DROP    EL NIDO  115.00  LOAD==15.00(3.05)
 0
  #
  #
  # (4)   C5 DCTL OUTAGE
  # Panoche - Schindler #1 and #2 115 kV Lines
 1  34158 34350  "1 "    0     # line from  PANOCHE  115.00  BRKR to (2)   KAMM
115.00
 1  34350 34352  "1 "    0     # line from  KAMM     115.00   (2) to (2)   CANTUA
115.00
 1  34352 34432  "1 "    0     # line from  CANTUA   115.00   (2) to (2)   WESTLNDS
115.00
 1  34432 34354  "1 "    0     # line from  WESTLNDS 115.00   (2) to BRKR  SCHINDLR
115.00
 4  34350     0  "1 "    0     # LOAD-DROP    KAMM     115.00  LOAD==3.85(1.75)
 4  34352     0  "1 "    0     # LOAD-DROP    CANTUA   115.00  LOAD==16.79(3.41)
 4  34432     0  "16"    0     # LOAD-DROP    WESTLNDS 115.00  LOAD==0.94(0.23)
 4  34432     0  "18"    0     # LOAD-DROP    WESTLNDS 115.00  LOAD==1.21(0.32)
  #
 1  34141 34148  "1 "    0     # line from  PAN2_TAP 115.00   (2) to (2)   CHENY
115.00
 2  34141 34142  "1 "    0     # TRAN from  PAN2_TAP 115.00   (2) to (1)   WHD_PAN2
13.80
```

```
 1  34148 34149  "1 "    0     # line from  CHENY    115.00   (2) to (3)   CHENYT
115.00
 1  34149 34158  "1 "    0     # line from  CHENYT   115.00   (3) to BRKR  PANOCHE
115.00
 1  34149 34354  "1 "    0     # line from  CHENYT   115.00   (3) to BRKR  SCHINDLR
115.00
 4  34148     0  "1 "    0     # LOAD-DROP    CHENY    115.00  LOAD==13.12(2.66)
 3  34142     0  "1 "    0     # GEN-DROP    WHD_PAN2  13.80  GEN==49.00(4.03)
 0
  #
  #
  # (5)   C5 DCTL OUTAGE
  # Gates - Panoche #1 and #2 230 kV Lines
 1  30790 30900  "1 "    0     # line from  PANOCHE  230.00  BRKR to BRKR  GATES
230.00
  #
 1  30790 30900  "2 "    0     # line from  PANOCHE  230.00  BRKR to BRKR  GATES
230.00
 0
  #
  #
  # (6)   C5 DCTL OUTAGE
  # Los Banos - Panoche #2 and Los Banos - Dos Amigos 230 kV Lines
 1  30765 30790  "2 "    0     # line from  LOSBANOS 230.00  BRKR to BRKR  PANOCHE
230.00
  #
 1  30765 38615  "1 "    0     # line from  LOSBANOS 230.00  BRKR to BRKR  DS AMIGO
230.00
 0
  #
  #
  # (7)   C5 DCTL OUTAGE
  # Los Banos - Panoche #2 and Dos Amigos - Panoche 230 kV Lines
 1  30765 30790  "2 "    0     # line from  LOSBANOS 230.00  BRKR to BRKR  PANOCHE
230.00
  #
 1  38615 30790  "1 "    0     # line from  DS AMIGO 230.00  BRKR to BRKR  PANOCHE
230.00
 0
  #
  #
  # (8)   C5 DCTL OUTAGE
  # Los Banos - San Luis PGP #1 and #2 230 kV Lines
 1  30765 38625  "1 "    0     # line from  LOSBANOS 230.00  BRKR to BRKR  SN LS PP
230.00
  #
 1  30765 38625  "2 "    0     # line from  LOSBANOS 230.00  BRKR to BRKR  SN LS PP
230.00
 0
  #
  #
  # (9)   C5 DCTL OUTAGE
  # Bellota - Melones and Bellota - Warnerville 230 kV Lines
 1  30500 38206  "1 "    0     # line from  BELLOTA  230.00  BRKR to (2)   COTTLE A
230.00
 1  38206 37563  "1 "    0     # line from  COTTLE A 230.00   (2) to BRKR  MELONES
230.00
 4  38206     0  "1 "    0     # LOAD-DROP    COTTLE A 230.00  LOAD==19.23(0.00)
 3  34604     0  "**"    0     # Drop Helms unit#3 with a loss Bellota - Melones line
  #
 1  30500 38208  "1 "    0     # line from  BELLOTA  230.00  BRKR to (3)   COTTLE B
230.00
 1  38208 30515  "1 "    0     # line from  COTTLE B 230.00   (3) to BRKR  WARNERVL
230.00
 4  38208     0  "2 "    0     # LOAD-DROP    COTTLE B 230.00  LOAD==21.32(7.38)
 0
  #
  #
  # (10)   C5 DCTL OUTAGE
  # Bellota - Melones and Warnerville - Wilson 230 kV Lines
```

```
 1  30500 38206  "1 "    0     # line from  BELLOTA  230.00  BRKR to (2)   COTTLE A
230.00
 1  38206 37563  "1 "    0     # line from  COTTLE A 230.00   (2) to BRKR  MELONES
230.00
 4  38206     0  "1 "    0     # LOAD-DROP    COTTLE A 230.00  LOAD==19.23(0.00)
 3  34604     0  "**"    0     # Drop Helms unit#3 with a loss Bellota - Melones line
  #
 1  30515 30800  "1 "    0     # line from  WARNERVL 230.00  BRKR to BRKR  WILSON
230.00
 0
  #
  #
  # (11)   C5 DCTL OUTAGE
  # Bellota - Melones and Melones - Wilson 230 kV Lines
 1  30500 38206  "1 "    0     # line from  BELLOTA  230.00  BRKR to (2)   COTTLE A
230.00
 1  38206 37563  "1 "    0     # line from  COTTLE A 230.00   (2) to BRKR  MELONES
230.00
 4  38206     0  "1 "    0     # LOAD-DROP    COTTLE A 230.00  LOAD==19.23(0.00)
 3  34604     0  "**"    0     # Drop Helms unit#3 with a loss Bellota - Melones line
  #
 1  37563 30800  "1 "    0     # line from  MELONES  230.00  BRKR to BRKR  WILSON
230.00
 3  34604     0  "**"    0     # Drop Helms unit#3 with a loss Melones - Wilson line
 0
  #
  #
  # (12)   C5 DCTL OUTAGE
  # Melones - Wilson and Warnerville - Wilson 230 kV Lines
 1  37563 30800  "1 "    0     # line from  MELONES  230.00  BRKR to BRKR  WILSON
230.00
 3  34604     0  "**"    0     # Drop Helms unit#3 with a loss Melones - Wilson line
  #
 1  30515 30800  "1 "    0     # line from  WARNERVL 230.00  BRKR to BRKR  WILSON
230.00
 0
  #
  #
  # (13)   C5 DCTL OUTAGE
  # Wilson - Borden #1 and #2 230 kV Lines
 1  30795 30805  "1 "    0     # line from  STOREY 2 230.00   (2) to BRKR  BORDEN
230.00
 1  30795 30800  "1 "    0     # line from  STOREY 2 230.00   (2) to BRKR  WILSON
230.00
 4  30795     0  "2 "    0     # LOAD-DROP    STOREY 2 230.00  LOAD==33.89(6.88)
  #
 1  30796 30800  "1 "    0     # line from  STOREY 1 230.00   (2) to BRKR  WILSON
230.00
 1  30796 30805  "1 "    0     # line from  STOREY 1 230.00   (2) to BRKR  BORDEN
230.00
 4  30796     0  "1 "    0     # LOAD-DROP    STOREY 1 230.00  LOAD==37.87(7.69)
 0
  #
  #
  # (14)   C5 DCTL OUTAGE
  # Borden - Gregg #1 and #2 230 kV Lines
 1  30805 30810  "1 "    0     # line from  BORDEN   230.00  BRKR to BRKR  GREGG
230.00
 3  34604     0  "**"    0     # Drop unit#3 with loss of Gregg - Borden line
  #
 1  30805 30810  "2 "    0     # line from  BORDEN   230.00  BRKR to BRKR  GREGG
230.00
 3  34604     0  "**"    0     # Drop unit#3 with loss of Gregg - Borden #2 line
 0
  #
  #
  # (15)   C5 DCTL OUTAGE
  # Moss Landing - Panoche and Coburn - Panoche 230 kV Lines
 1  30750 30790  "1 "    0     # line from  MOSSLND2 230.00  BRKR to BRKR  PANOCHE
230.00
```

```
  #
 1  30760 30790  "1 "    0     # line from  COBURN   230.00  BRKR to BRKR  PANOCHE
230.00
 0
  #
  #
  # (16)   C5 DCTL OUTAGE
  # Panoche - Helm and Panoche - Kearney 230 kV Lines sumop outage
 1  30790 30873  "1 "    0     # line from  PANOCHE  230.00  BRKR to BRKR  HELM
230.00
  #
 1  30790 30825  "1 "    0     # line from  PANOCHE  230.00  BRKR to (2)   MCMULLN1
230.00
 1  30825 30830  "1 "    0     # line from  MCMULLN1 230.00   (2) to BRKR  KEARNEY
230.00
 4  30825     0  "1 "    0     # LOAD-DROP    MCMULLN1 230.00  LOAD==20.57(4.18)
 3  34600     0  "**"    0     # Trip Helms 1 for Panoche - Kearney 230 kV line outage
HTT/RAS
 0
  #
  #
  # (17) BUS FAULT  30765  "LOSBANOS" Bus Section 1
  #
 1  30765  30670  "1"    0     # LINE from  LOSBANOS 230.00  to  WESTLEY  230.00
 1  30765  30790  "2"    0     # LINE from  LOSBANOS 230.00  to  PANOCHE  230.00
 1  30765  38625  "1"    0     # LINE from  LOSBANOS 230.00  to  SN LS PP 230.00
 1  30765  38625  "2"    0     # LINE from  LOSBANOS 230.00  to  SN LS PP 230.00
 2  30765  34214  "3"    0     # TRAN from  LOSBANOS 230.00  to  LOS BANS  70.00
 6  30765     0  "v"     0     # drop Los Banos 230 kV shunt Caps
 0
  #
  #
  # (18) BUS FAULT  30765  "LOSBANOS" Bus Section 2
  #
 1  30765  30790  "1"    0     # LINE from  LOSBANOS 230.00  to  PANOCHE  230.00
 1  30765  38615  "1"    0     # LINE from  LOSBANOS 230.00  to  DS AMIGO 230.00
 2  30765  34214  "4"    0     # TRAN from  LOSBANOS 230.00  to  LOS BANS  70.00
 0
  #
  #
  # (19) BUS FAULT  30790  "PANOCHE" Bus Section 1
  #
 1  30790  30760  "1"    0     # LINE from  PANOCHE  230.00  to  COBURN   230.00
 1  30790  30765  "1"    0     # LINE from  PANOCHE  230.00  to  LOSBANOS 230.00
 1  30790  30765  "2"    0     # LINE from  PANOCHE  230.00  to  LOSBANOS 230.00
 1  30790  30825  "1"    0     # LINE from  PANOCHE  230.00  to  MCMULLN1 230.00
 1  30790  30900  "1"    0     # LINE from  PANOCHE  230.00  to  GATES    230.00
 2  30790  30791  "1"    0     # TRAN from  PANOCHE  230.00  to  PNCHE 1M 230.00
 0
  #
  #
  # (20) BUS FAULT  30790  "PANOCHE" Bus Section 2
  #
 1  30790  30750  "1"    0     # LINE from  PANOCHE  230.00  to  MOSSLND2 230.00
 1  30790  30793  "1"    0     # LINE from  PANOCHE  230.00  to  PANO_EC  230.00
 1  30790  30873  "1"    0     # LINE from  PANOCHE  230.00  to  HELM     230.00
 1  30790  30900  "2"    0     # LINE from  PANOCHE  230.00  to  GATES    230.00
 1  30790  38615  "1"    0     # LINE from  PANOCHE  230.00  to  DS AMIGO 230.00
 2  30790  34158  "2"    0     # TRAN from  PANOCHE  230.00  to  PANOCHE  115.00
 0
  #
  #
  # (21) BUS FAULT  34100  "CHWCHLLA"
  #
 1  34100  34101  "1"    0     # LINE from  CHWCHLLA 115.00  to  CERTAN T 115.00
 1  34100  34105  "1"    0     # LINE from  CHWCHLLA 115.00  to  CERTANJ1 115.00
 4  34100     0  "1 "    0     # LOAD-DROP    CHWCHLLA 115.00  LOAD==10.13(2.06)
 4  34100     0  "2 "    0     # LOAD-DROP    CHWCHLLA 115.00  LOAD==13.86(2.82)
 0
  #
```

```
 #
 # (22) BUS FAULT  34104  "ATWATER"
 #
1  34104  34106  "1"    0     # LINE from  ATWATER  115.00  to  CASTLE   115.00
1  34104  34108  "1"    0     # LINE from  ATWATER  115.00  to  CRESEY T 115.00
1  34104  34134  "1"    0     # LINE from  ATWATER  115.00  to  WILSON A 115.00
4  34104     0  "1 "    0     # LOAD-DROP    ATWATER  115.00  LOAD==32.40(6.57)
4  34104     0  "2 "    0     # LOAD-DROP    ATWATER  115.00  LOAD==28.36(5.76)
0
 #
 #
 # (23) BUS FAULT  34112  "EXCHEQUR"
 #
1  34112  34116  "1"    0     # LINE from  EXCHEQUR 115.00  to  LE GRAND 115.00
2  34112  34176  "1"    0     # TRAN from  EXCHEQUR 115.00  to  EXCHQRTP 115.00
0
 #
 #
 # (24) BUS FAULT  34116  "LE GRAND"
 #
1  34116  34101  "1"    0     # LINE from  LE GRAND 115.00  to  CERTAN T 115.00
1  34116  34112  "1"    0     # LINE from  LE GRAND 115.00  to  EXCHEQUR 115.00
1  34116  34134  "1"    0     # LINE from  LE GRAND 115.00  to  WILSON A 115.00
1  34116  34154  "1"    0     # LINE from  LE GRAND 115.00  to  DAIRYLND 115.00
4  34116     0  "1 "    0     # LOAD-DROP    LE GRAND 115.00  LOAD==13.41(2.72)
0
 #
 #
 # (25) BUS FAULT  34134  "WILSON A"
 #
1  34134  34116  "1"    0     # LINE from  WILSON A 115.00  to  LE GRAND 115.00
1  34134  34104  "1"    0     # LINE from  WILSON A 115.00  to  ATWATER  115.00
1  34134  34136  "1"    0     # LINE from  WILSON A 115.00  to  WILSON B 115.00
1  34134  34144  "1"    0     # LINE from  WILSON A 115.00  to  MERCED   115.00
2  34134  30800  "1"    0     # TRAN from  WILSON A 115.00  to  WILSON   230.00
4  34134     0  "3 "    0     # LOAD-DROP    WILSON A 115.00  LOAD==18.66(3.79)
6  34134     0  "v"     0     # drop Wilson A 115 kV shunt Caps
0
 #
 #
 # (26) BUS FAULT  34136  "WILSON B"
 #
1  34136  34118  "1"    0     # LINE from  WILSON B 115.00  to  LE GRNDJ 115.00
1  34136  34134  "1"    0     # LINE from  WILSON B 115.00  to  WILSON A 115.00
1  34136  34138  "1"    0     # LINE from  WILSON B 115.00  to  EL CAPTN 115.00
1  34136  34144  "2"    0     # LINE from  WILSON B 115.00  to  MERCED   115.00
2  34136  30800  "2"    0     # TRAN from  WILSON B 115.00  to  WILSON   230.00
0
 #
 #
 # (27) BUS FAULT  34138  "EL CAPTN"
 #
1  34138  34106  "1"    0     # LINE from  EL CAPTN 115.00  to  CASTLE   115.00
1  34138  34136  "1"    0     # LINE from  EL CAPTN 115.00  to  WILSON B 115.00
4  34138     0  "1 "    0     # LOAD-DROP    EL CAPTN 115.00  LOAD==19.47(3.95)
4  34138     0  "2 "    0     # LOAD-DROP    EL CAPTN 115.00  LOAD==25.91(5.26)
4  34138     0  "3 "    0     # LOAD-DROP    EL CAPTN 115.00  LOAD==33.05(6.71)
0
 #
 #
 # (28) BUS FAULT  34144  "MERCED"
 #
1  34144  34110  "1"    0     # LINE from  MERCED   115.00  to  ATWATR J 115.00
1  34144  34134  "1"    0     # LINE from  MERCED   115.00  to  WILSON A 115.00
1  34144  34136  "2"    0     # LINE from  MERCED   115.00  to  WILSON B 115.00
2  34144  34146  "2"    0     # TRAN from  MERCED   115.00  to  MERCED M 115.00
4  34144     0  "1 "    0     # LOAD-DROP    MERCED   115.00  LOAD==37.10(7.53)
4  34144     0  "3 "    0     # LOAD-DROP    MERCED   115.00  LOAD==19.45(3.95)
0
 #
```

```
 #
 # (29) BUS FAULT  34154  "DAIRYLND"
 #
1  34154  34116  "1"    0     # LINE from  DAIRYLND 115.00  to  LE GRAND 115.00
1  34154  34150  "1"    0     # LINE from  DAIRYLND 115.00  to  NEWHALL  115.00
4  34154     0  "1 "    0     # LOAD-DROP    DAIRYLND 115.00  LOAD==25.82(5.24)
0
 #
 #
 # (30) BUS FAULT  34158  "PANOCHE" Bus Section 1
 #
1  34158  34149  "1"    0     # LINE from  PANOCHE  115.00  to  CHENYT   115.00
1  34158  34159  "1"    0     # LINE from  PANOCHE  115.00  to  PANOCHEJ 115.00
2  34158  30790  "2"    0     # TRAN from  PANOCHE  115.00  to  PANOCHE  230.00
2  34158  34186  "1"    0     # TRAN from  PANOCHE  115.00  to  DG_PAN1   13.80
0
 #
 #
 # (31) BUS FAULT  34158  "PANOCHE" Bus Section 2
 #
1  34158  34157  "1"    0     # LINE from  PANOCHE  115.00  to  PANOCHET 115.00
1  34158  34189  "1"    0     # LINE from  PANOCHE  115.00  to  STARWOOD 115.00
1  34158  34350  "1"    0     # LINE from  PANOCHE  115.00  to  KAMM     115.00
2  34158  30791  "1"    0     # TRAN from  PANOCHE  115.00  to  PNCHE 1M 230.00
0
 #
 #
 # (32) BUS FAULT  34200  "ORO LOMA"
 #
1  34200  34218  "1"    0     # LINE from  ORO LOMA  70.00  to  DOS PALS  70.00
1  34200  34222  "1"    0     # LINE from  ORO LOMA  70.00  to  MRCYSPRS  70.00
1  34200  34234  "1"    0     # LINE from  ORO LOMA  70.00  to  POSO J1   70.00
2  34200  34162  "2"    0     # TRAN from  ORO LOMA  70.00  to  ORO LOMA 115.00
4  34200     0  "1 "    0     # LOAD-DROP    ORO LOMA  70.00  LOAD==8.64(1.75)
0
 #
 #
 # (33) BUS FAULT  34202  "MERCED"
 #
1  34202  34203  "1"    0     # LINE from  MERCED    70.00  to  ELNIDOTP  70.00
1  34202  34230  "1"    0     # LINE from  MERCED    70.00  to  MRCDFLLS  70.00
2  34202  34146  "2"    0     # TRAN from  MERCED    70.00  to  MERCED M 115.00
0
 #
 #
 # (34) BUS FAULT  34206  "CANAL"
 #
1  34206  34212  "1"    0     # LINE from  CANAL     70.00  to  LVNGSTNT  70.00
1  34206  34216  "1"    0     # LINE from  CANAL     70.00  to  SNTA RTA  70.00
1  34206  34220  "1"    0     # LINE from  CANAL     70.00  to  ORTIGA    70.00
4  34206     0  "1 "    0     # LOAD-DROP    CANAL     70.00  LOAD==30.56(6.21)
4  34206     0  "2 "    0     # LOAD-DROP    CANAL     70.00  LOAD==31.27(6.35)
0
 #
 #
 # (35) BUS FAULT  34214  "LOS BANS"
 #
1  34214  34208  "1"    0     # LINE from  LOS BANS  70.00  to  CHEVPIPE  70.00
1  34214  34272  "1"    0     # LINE from  LOS BANS  70.00  to  WRGHT PP  70.00
1  34214  34278  "1"    0     # LINE from  LOS BANS  70.00  to  PCHCO PP  70.00
1  34214  34282  "1"    0     # LINE from  LOS BANS  70.00  to  ONLL PMP  69.00
2  34214  30765  "3"    0     # TRAN from  LOS BANS  70.00  to  LOSBANOS 230.00
2  34214  30765  "4"    0     # TRAN from  LOS BANS  70.00  to  LOSBANOS 230.00
0
 #
 #
 # (36) BUS FAULT  34216  "SNTA RTA"
 #
1  34216  34206  "1"    0     # LINE from  SNTA RTA  70.00  to  CANAL     70.00
1  34216  34218  "1"    0     # LINE from  SNTA RTA  70.00  to  DOS PALS  70.00
```

```
4  34216     0  "1 "    0     # LOAD-DROP    SNTA RTA  70.00  LOAD==7.48(1.52)
0
 #
 #
 # (37) BUS FAULT  34230  "MRCDFLLS"
 #
1  34230  34202  "1"    0     # LINE from  MRCDFLLS  70.00  to  MERCED    70.00
1  34230  34321  "1"    0     # LINE from  MRCDFLLS  70.00  to  MCSWAINJ  70.00
2  34230  34322  "1"    0     # TRAN from  MRCDFLLS  70.00  to  MERCEDFL   9.11
2  34230  34322  "2"    0     # TRAN from  MRCDFLLS  70.00  to  MERCEDFL   9.11
4  34230     0  "2 "    0     # LOAD-DROP    MRCDFLLS  70.00  LOAD==8.94(1.82)
0
 #
 #
 # (38) BUS FAULT  34238  "BONITA"
 #
1  34238  34236  "1"    0     # LINE from  BONITA    70.00  to  POSO J2   70.00
1  34238  34255  "1"    0     # LINE from  BONITA    70.00  to  TRIGO J   70.00
4  34238     0  "1 "    0     # LOAD-DROP    BONITA    70.00  LOAD==14.37(2.92)
0
 #
 #
 # (39) BUS FAULT  34240  "GLASS"
 #
1  34240  34237  "1"    0     # LINE from  GLASS     70.00  to  CANANDGA  70.00
1  34240  34256  "1"    0     # LINE from  GLASS     70.00  to  BORDEN    70.00
4  34240     0  "1 "    0     # LOAD-DROP    GLASS     70.00  LOAD==9.05(4.89)
0
 #
 #
 # (40) BUS FAULT  34252  "MADERA"
 #
1  34252  34254  "1"    0     # LINE from  MADERA    70.00  to  TRIGO     70.00
1  34252  34256  "1"    0     # LINE from  MADERA    70.00  to  BORDEN    70.00
1  34252  34256  "2"    0     # LINE from  MADERA    70.00  to  BORDEN    70.00
4  34252     0  "1 "    0     # LOAD-DROP    MADERA    70.00  LOAD==17.99(3.65)
4  34252     0  "2 "    0     # LOAD-DROP    MADERA    70.00  LOAD==23.16(4.71)
6  34252     0  "v"     0     # drop Madera 70 kV shunt Caps
0
 #
 #
 # (41) BUS FAULT  34256  "BORDEN"
 #
1  34256  34252  "1"    0     # LINE from  BORDEN    70.00  to  MADERA    70.00
1  34256  34252  "2"    0     # LINE from  BORDEN    70.00  to  MADERA    70.00
1  34256  34240  "1"    0     # LINE from  BORDEN    70.00  to  GLASS     70.00
1  34256  34262  "1"    0     # LINE from  BORDEN    70.00  to  CASSIDY   70.00
2  34256  30805  "1"    0     # TRAN from  BORDEN    70.00  to  BORDEN   230.00
2  34256  30805  "2"    0     # TRAN from  BORDEN    70.00  to  BORDEN   230.00
0
 #
 #
 # (42) BUS FAULT  34268  "MENDOTA"
 #
1  34268  34267  "1"    0     # LINE from  MENDOTA   70.00  to  TOMATAK   70.00
1  34268  34269  "1"    0     # LINE from  MENDOTA   70.00  to  BIOMSJCT  70.00
2  34268  34156  "1"    0     # TRAN from  MENDOTA   70.00  to  MENDOTA  115.00
0
 #
 #
 # 2013 sumop category c contingency list
 # Fresno Zone 314
 #
 #
 # (43)   C5 DCTL OUTAGE
 # Gates - Schindler and Gates - Huron #1 70 kV Lines
1  34558 34560  "1 "    0     # line from  HURON     70.00  BRKR to (2)   CALFLAX
70.00
1  34560 34562  "1 "    0     # line from  CALFLAX   70.00   (2) to BRKR  SCHLNDLR
70.00
```

```
 4  34560     0  "1 "    0     # LOAD-DROP    CALFLAX   70.00  LOAD==6.53(1.33)
 1  34552 34558  "2 "    0      # Must include Gates - Huron #2 in this outage
  #
 1  34552 34558  "1 "    0     # line from  GATES     70.00  BRKR to BRKR  HURON
70.00
 0
  #
  #
  # (44)   C5 DCTL OUTAGE
  # Barton - Sanger and Manchester - Sanger 115 kV Lines
 1  34359 34361  "1 "    0     # line from  AIRWAYJ2 115.00   (3) to BRKR  AIRWAYS
115.00
 1  34359 34408  "1 "    0     # line from  AIRWAYJ2 115.00   (3) to BRKR  BARTON
115.00
 1  34359 34366  "1 "    0     # line from  AIRWAYJ2 115.00   (3) to BRKR  SANGER
115.00
  #
 1  34357 34361  "1 "    0     # line from  AIRWAYJ1 115.00   (3) to BRKR  AIRWAYS
115.00
 1  34357 34368  "1 "    0     # line from  AIRWAYJ1 115.00   (3) to (2)   LASPALMS
115.00
 1  34357 34410  "1 "    0     # line from  AIRWAYJ1 115.00   (3) to BRKR  MANCHSTR
115.00
 1  34368 34366  "1 "    0     # line from  LASPALMS 115.00   (2) to BRKR  SANGER
115.00
 4  34368     0  "1 "    0     # LOAD-DROP    LASPALMS 115.00  LOAD==13.90(11.89)
 0
  #
  #
  # (45)   C5 DCTL OUTAGE
  # Herndon - Barton and Herndon - Manchester 115 kV Lines
 1  34408 34412  "1 "    0     # line from  BARTON   115.00  BRKR to BRKR  HERNDON
115.00
  #
 1  34410 34412  "1 "    0     # line from  MANCHSTR 115.00  BRKR to BRKR  HERNDON
115.00
 0
  #
  #
  # (46)   C5 DCTL OUTAGE
  # Herndon - Barton and Manchester - Sanger 115 kV Lines
 1  34408 34412  "1 "    0     # line from  BARTON   115.00  BRKR to BRKR  HERNDON
115.00
  #
 1  34357 34361  "1 "    0     # line from  AIRWAYJ1 115.00   (3) to BRKR  AIRWAYS
115.00
 1  34357 34368  "1 "    0     # line from  AIRWAYJ1 115.00   (3) to (2)   LASPALMS
115.00
 1  34357 34410  "1 "    0     # line from  AIRWAYJ1 115.00   (3) to BRKR  MANCHSTR
115.00
 1  34368 34366  "1 "    0     # line from  LASPALMS 115.00   (2) to BRKR  SANGER
115.00
 4  34368     0  "1 "    0     # LOAD-DROP    LASPALMS 115.00  LOAD==13.90(11.89)
 0
  #
  #
  # (47)   C5 DCTL OUTAGE
  # Herndon - Bullard #1 and #2 115 kV Lines
 1  34411 34416  "1 "    0     # line from  PNDLJ1   115.00   (2) to BRKR  BULLARD
115.00
 1  34411 34412  "1 "    0     # line from  PNDLJ1   115.00   (2) to BRKR  HERNDON
115.00
  #
 1  34409 34413  "1 "    0     # line from  PNDLJ2   115.00   (3) to BRKR  PNEDLE
115.00
 1  34409 34416  "1 "    0     # line from  PNDLJ2   115.00   (3) to BRKR  BULLARD
115.00
 1  34409 34412  "1 "    0     # line from  PNDLJ2   115.00   (3) to BRKR  HERNDON
115.00
 4  34413     0  "2 "    0     # LOAD-DROP    PNEDLE   115.00  LOAD==30.74(6.25)
```

```
 4  34413     0  "3 "    0     # LOAD-DROP    PNEDLE   115.00  LOAD==40.42(8.20)
 1  34411 34413  "1 "    1      # Switches in Pindale CB#12 to transfer load
 4  34413     0  "**"    1      # Restore load at Pindale
 0
  #
  #
  # (48)   C5 DCTL OUTAGE
  # Kerckhoff - Clovis - Sanger #1 and #2 115 kV Lines
 1  34358 34360  "1 "    0     # line from  KERCKHF2 115.00  BRKR to (3)   WWARD JT
115.00
 1  34360 34414  "1 "    0     # line from  WWARD JT 115.00   (3) to BRKR  WOODWARD
115.00
 1  34360 34363  "1 "    0     # line from  WWARD JT 115.00   (3) to (3)   CLOVISJ1
115.00
 1  34363 34362  "1 "    0     # line from  CLOVISJ1 115.00   (3) to BRKR  CLOVIS-1
115.00
 1  34363 34366  "1 "    0     # line from  CLOVISJ1 115.00   (3) to BRKR  SANGER
115.00
 4  34362     0  "1 "    0     # LOAD-DROP    CLOVIS-1 115.00  LOAD==51.01(10.36)
 4  34362     0  "2 "    0     # LOAD-DROP    CLOVIS-1 115.00  LOAD==50.20(10.20)
 1 34362  34364  "1 "    1      # Switches in Clovis SW 387 to transfer load
 4 34362      0  "**"    1      # Restore Load at Clovis 1
  #
 1  34364 34365  "1 "    0     # line from  CLOVIS-2 115.00  BRKR to (3)   CLOVISJ2
115.00
 1  34365 34358  "1 "    0     # line from  CLOVISJ2 115.00   (3) to BRKR  KERCKHF2
115.00
 1  34365 34366  "1 "    0     # line from  CLOVISJ2 115.00   (3) to BRKR  SANGER
115.00
 4  34364     0  "3 "    0     # LOAD-DROP    CLOVIS-2 115.00  LOAD==44.76(9.09)
 1 34362  34364  "1 "    1      # Switches in Clovis SW 387 to transfer load
 4 34364      0  "**"    1      # Restore Load at Clovis 2
 0
  #
  #
  # (49)   C5 DCTL OUTAGE
  # Kingburg - Corcoran #1 and #2 115 kV Lines
 1  34418 34420  "1 "    0     # line from  KINGSBRG 115.00  BRKR to BRKR  CORCORAN
115.00
  #
 1  34418 34420  "2 "    0     # line from  KINGSBRG 115.00  BRKR to BRKR  CORCORAN
115.00
 0
  #
  #
  # (50)   C5 DCTL OUTAGE
  # Kings River - Sanger - Reedley and Balch - Sanger 115 kV Lines
 1  34366 34389  "1 "    0     # line from  SANGER   115.00  BRKR to (3)   RAINBWTP
115.00
 1  34389 34388  "1 "    0     # line from  RAINBWTP 115.00   (3) to (1)   RAINBW
115.00
 1  34389 34394  "1 "    0     # line from  RAINBWTP 115.00   (3) to (3)   PIEDRA 1
115.00
 1  34394 34380  "1 "    0     # line from  PIEDRA 1 115.00   (3) to BRKR  REEDLEY
115.00
 1  34394 34400  "1 "    0     # line from  PIEDRA 1 115.00   (3) to BRKR  KNGSRVR1
115.00
 4  34388     0  "1 "    0     # LOAD-DROP    RAINBW   115.00  LOAD==16.20(3.29)
  #
 1  34366 34396  "1 "    0     # line from  SANGER   115.00  BRKR to (2)   PIEDRA 2
115.00
 1  34396 34398  "1 "    0     # line from  PIEDRA 2 115.00   (2) to (2)   BALCH
115.00
 2  34398 34624  "1 "    0     # TRAN from  BALCH    115.00   (2) to (1)   BALCH 1
13.20
 4  34624     0  "1 "    0     # LOAD-DROP    BALCH 1   13.20  LOAD==0.26(0.00)
 3  34624     0  "1 "    0     # GEN-DROP    BALCH 1   13.20  GEN==27.00(8.33)
 0
  #
  #
```

```
  # (51)   C5 DCTL OUTAGE
  # McCall - Kingsburg #1 and #2 115 kV Lines
 1  34370 34385  "1 "    0     # line from  MC CALL  115.00  BRKR to (3)   KINGS J1
115.00
 1  34385 34417  "1 "    0     # line from  KINGS J1 115.00   (3) to (2)   KINGS J2
115.00
 1  34385 34425  "1 "    0     # line from  KINGS J1 115.00   (3) to (3)   KCOGNJCT
115.00
 1  34417 34418  "1 "    0     # line from  KINGS J2 115.00   (2) to BRKR  KINGSBRG
115.00
 1  34425 34387  "1 "    0     # line from  KCOGNJCT 115.00   (3) to (1)   SUNMAID
115.00
 1  34425 34427  "1 "    0     # line from  KCOGNJCT 115.00   (3) to (2)   GRDNGLS2
115.00
 1  34427 34386  "1 "    0     # line from  GRDNGLS2 115.00   (2) to (2)   KNGSCOGN
115.00
 2  34386 34642  "1 "    0     # TRAN from  KNGSCOGN 115.00   (2) to BRKR  KINGSBUR
9.11
 4  34387     0  "1 "    0     # LOAD-DROP    SUNMAID  115.00  LOAD==3.40(3.28)
 3  34642     0  "1 "    0     # GEN-DROP    KINGSBUR   9.11  GEN==34.00(17.30)
  #
 1  34418 34423  "1 "    0     # line from  KINGSBRG 115.00  BRKR to (3)   GAURD J1
115.00
 1  34423 34370  "1 "    0     # line from  GAURD J1 115.00   (3) to BRKR  MC CALL
115.00
 1  34423 34421  "1 "    0     # line from  GAURD J1 115.00   (3) to (2)   GAURD J2
115.00
 1  34421 34424  "1 "    0     # line from  GAURD J2 115.00   (2) to (1)   GRDN GLS
115.00
 4  34424     0  "1 "    0     # LOAD-DROP    GRDN GLS 115.00  LOAD==3.50(1.15)
 4  34418     0  "3 "    0      # Kingsburg Bank #3 will also be dropped on this outage
 0
  #
  #
  # (52)   C5 DCTL OUTAGE
  # McCall - Sanger #1 and #2 115 kV Lines
 1  34366 34370  "1 "    0     # line from  SANGER   115.00  BRKR to BRKR  MC CALL
115.00
  #
 1  34366 34370  "2 "    0     # line from  SANGER   115.00  BRKR to BRKR  MC CALL
115.00
 0
  #
  #
  # (53)   C5 DCTL OUTAGE
  # McCall - West Fresno and California Ave. - West Fresno 115 kV Lines
 1  34404 34370  "1 "    0     # line from  WST FRSO 115.00  BRKR to BRKR  MC CALL
115.00
  #
 1  34402 34404  "1 "    0     # line from  CAL AVE  115.00  BRKR to BRKR  WST FRSO
115.00
 0
  #
  #
  # (54)   C5 DCTL OUTAGE
  # McCall - West Fresno and California Ave. - McCall 115 kV Lines
 1  34404 34370  "1 "    0     # line from  WST FRSO 115.00  BRKR to BRKR  MC CALL
115.00
  #
 1  34390 34370  "1 "    0     # line from  DANISHCM 115.00   (2) to BRKR  MC CALL
115.00
 1  34390 34402  "1 "    0     # line from  DANISHCM 115.00   (2) to BRKR  CAL AVE
115.00
 4  34390     0  "1 "    0     # LOAD-DROP    DANISHCM 115.00  LOAD==4.10(3.51)
 0
  #
  #
  # (55)   C5 DCTL OUTAGE
  # Gates - Gregg and Gates - McCall 230 kV Lines sumop outage
```

```
 1  30810 30879  "1 "    0     # line from  GREGG    230.00  BRKR to (3)   HENTAP1
230.00
 1  30879 30881  "1 "    0     # line from  HENTAP1  230.00   (3) to BRKR  HENRIETA
230.00
 1  30879 30900  "1 "    0     # line from  HENTAP1  230.00   (3) to BRKR  GATES
230.00
 3  34604     0  "**"    0      # Drop unit#3 with a loss Gregg - Henrietta Tap 1 line
 1  30880 30881  "1 "    1      # Henrietta flip flop (Henrietta CB 222)
 3  34600     0  "**"    0     # Trip Helms 1 for Gates - Gregg 230 kV line outage
HTT/RAS
  #
 1  30875 30880  "1 "    0     # line from  MC CALL  230.00  BRKR to (2)   HENTAP2
230.00
 1  30880 30900  "1 "    0     # line from  HENTAP2  230.00   (2) to BRKR  GATES
230.00
 0
  #
  #
  # (56)   C5 DCTL OUTAGE
  # Panoche - Kearney and Gates - Gregg 230 kV Lines sumop outage
 1  30790 30825  "1 "    0     # line from  PANOCHE  230.00  BRKR to (2)   MCMULLN1
230.00
 1  30825 30830  "1 "    0     # line from  MCMULLN1 230.00   (2) to BRKR  KEARNEY
230.00
 4  30825     0  "1 "    0     # LOAD-DROP    MCMULLN1 230.00  LOAD==20.57(4.18)
 3  34600     0  "**"    0     # Trip Helms 1 for Panoche - Kearney 230 kV line outage
HTT/RAS
  #
 1  30810 30879  "1 "    0     # line from  GREGG    230.00  BRKR to (3)   HENTAP1
230.00
 1  30879 30881  "1 "    0     # line from  HENTAP1  230.00   (3) to BRKR  HENRIETA
230.00
 1  30879 30900  "1 "    0     # line from  HENTAP1  230.00   (3) to BRKR  GATES
230.00
 3  34604     0  "**"    0      # Drop unit#3 with a loss Gregg - Henrietta Tap 1 line
 1  30880 30881  "1 "    1      # Henrietta flip flop (Henrietta CB 222)
 3  34600     0  "**"    0     # Trip Helms 1 for Gates - Gregg 230 kV line outage
HTT/RAS
 0
  #
  #
  # (57)   C5 DCTL OUTAGE
  # Panoche - Kearney and Panoche - Helm 230 kV Lines sumop outage
 1  30790 30825  "1 "    0     # line from  PANOCHE  230.00  BRKR to (2)   MCMULLN1
230.00
 1  30825 30830  "1 "    0     # line from  MCMULLN1 230.00   (2) to BRKR  KEARNEY
230.00
 4  30825     0  "1 "    0     # LOAD-DROP    MCMULLN1 230.00  LOAD==20.57(4.18)
 3  34600     0  "**"    0     # Trip Helms 1 for Panoche - Q055BUS1 230 kV line outage
HTT/RAS
  #
 1  30790 30873  "1 "    0     # line from  PANOCHE  230.00  BRKR to BRKR  HELM
230.00
 0
  #
  #
  # (58)   C5 DCTL OUTAGE
  # Panoche - Kearney and Helm - McCall 230 kV Lines sumop outage
 1  30790 30825  "1 "    0     # line from  PANOCHE  230.00  BRKR to (2)   MCMULLN1
230.00
 1  30825 30830  "1 "    0     # line from  MCMULLN1 230.00   (2) to BRKR  KEARNEY
230.00
 4  30825     0  "1 "    0     # LOAD-DROP    MCMULLN1 230.00  LOAD==20.57(4.18)
 3  34600     0  "**"    0     # Trip Helms 1 for Panoche - Kearney 230 kV line outage
HTT/RAS
  #
 1  30873 30875  "1 "    0     # line from  HELM     230.00  BRKR to BRKR  MC CALL
230.00
 0
  #
```

```
  #
  # (59)   C5 DCTL OUTAGE
  # Helm - McCall and Gates - McCall 230 kV Lines
 1  30873 30875  "1 "    0     # line from  HELM     230.00  BRKR to BRKR  MC CALL
230.00
  #
 1  30875 30880  "1 "    0     # line from  MC CALL  230.00  BRKR to (2)   HENTAP2
230.00
 1  30880 30900  "1 "    0     # line from  HENTAP2  230.00   (2) to BRKR  GATES
230.00
 0
  #
  #
  # (60)   C5 DCTL OUTAGE
  # Helms - Gregg #1 and #2 230 kV Lines
 1  30810 30820  "1 "    0     # line from  GREGG    230.00  BRKR to BRKR  HELMS PP
230.00
 3  34604     0  "**"    0      # Drop unit#3 with a loss Helm - Gregg #1 line sumop
 3  34602     0  "**"    0      # Drop unit#2 with a loss Helm - Gregg #1 line sumop
  #
 1  30810 30820  "2 "    0     # line from  GREGG    230.00  BRKR to BRKR  HELMS PP
230.00
 3  34604     0  "**"    0      # Drop unit#3 with a loss Helm - Gregg #2 line sumop
 3  34602     0  "**"    0      # Drop unit#2 with a loss Helm - Gregg #2 line sumop
 0
  #
  #
  # (61)   C5 DCTL OUTAGE
  # Gregg - Herndon #1 and #2 230 kV Lines
 1  30810 30835  "1 "    0     # line from  GREGG    230.00  BRKR to BRKR  HERNDON
230.00
 3  34604     0  "**"    0      # Drop unit#3 with a loss Gregg - Herndon #1 line
  #
 1  30810 30835  "2 "    0     # line from  GREGG    230.00  BRKR to BRKR  HERNDON
230.00
 3  34604     0  "**"    0      # Drop unit#3 with a loss Gregg - Herndon #2 line
 0
  #
  #
  # (62)   C5 DCTL OUTAGE
  # Herndon - Kearney and Herndon - Ashlan 230 kV Lines sumop outage
 1  30830 30835  "1 "    0     # line from  KEARNEY  230.00  BRKR to BRKR  HERNDON
230.00
 3  34600     0  "**"    0     # Trip Helms 1 for Herndon - Kearney 230 kV line outage
HTT/RAS
  #
 1  30835 30840  "1 "    0     # line from  HERNDON  230.00  BRKR to (3)   FGRDN T1
230.00
 1  30840 30841  "1 "    0     # line from  FGRDN T1 230.00   (3) to BRKR  FIGRDN 1
230.00
 1  30840 30850  "1 "    0     # line from  FGRDN T1 230.00   (3) to BRKR  ASHLAN
230.00
 4  30841     0  "1 "    0     # LOAD-DROP    FIGRDN 1 230.00  LOAD==73.45(14.92)
 1 30841  30846  "1 "    1      # Switches in Figarden SW 286 to transfer load
 4 30841      0  "**"    1      # Restore Load at Figarden 1
 0
  #
  #
  # (63)   C5 DCTL OUTAGE
  # Herndon - Kearney and Gates - Gregg 230 kV Lines sumop outage
 1  30830 30835  "1 "    0     # line from  KEARNEY  230.00  BRKR to BRKR  HERNDON
230.00
 3  34600     0  "**"    0     # Trip Helms 1 for Herndon - Kearney 230 kV line outage
HTT/RAS
  #
 1  30810 30879  "1 "    0     # line from  GREGG    230.00  BRKR to (3)   HENTAP1
230.00
 1  30879 30881  "1 "    0     # line from  HENTAP1  230.00   (3) to BRKR  HENRIETA
230.00
```

```
 1  30879 30900  "1 "    0     # line from  HENTAP1  230.00   (3) to BRKR  GATES
230.00
 3  34604     0  "**"    0      # Drop unit#3 with a loss Gregg - Henrietta Tap 1 line
 1  30880 30881  "1 "    1      # Henrietta flip flop (Henrietta CB 222)
 3  34600     0  "**"    0     # Trip Helms 1 for Gates - Gregg 230 kV line outage
HTT/RAS
 0
  #
  #
  # (64)   C5 DCTL OUTAGE
  # Gates - Gregg and Gregg - Ashlan 230 kV Lines sumop outage
 1  30810 30879  "1 "    0     # line from  GREGG    230.00  BRKR to (3)   HENTAP1
230.00
 1  30879 30881  "1 "    0     # line from  HENTAP1  230.00   (3) to BRKR  HENRIETA
230.00
 1  30879 30900  "1 "    0     # line from  HENTAP1  230.00   (3) to BRKR  GATES
230.00
 3  34604     0  "**"    0      # Drop unit#3 with a loss Gregg - Henrietta Tap 1 line
 1  30880 30881  "1 "    1      # Henrietta flip flop (Henrietta CB 222)
 3  34600     0  "**"    0     # Trip Helms 1 for Gates - Gregg 230 kV line outage
HTT/RAS
  #
 1  30810 30845  "1 "    0     # line from  GREGG    230.00  BRKR to (3)   FGRDN T2
230.00
 1  30845 30846  "1 "    0     # line from  FGRDN T2 230.00   (3) to BRKR  FIGRDN 2
230.00
 1  30845 30850  "1 "    0     # line from  FGRDN T2 230.00   (3) to BRKR  ASHLAN
230.00
 4  30846     0  "1 "    0     # LOAD-DROP    FIGRDN 2 230.00  LOAD==52.57(10.67)
 4  30846     0  "2 "    0     # LOAD-DROP    FIGRDN 2 230.00  LOAD==36.77(7.47)
 3  34604     0  "**"    0      # Drop unit#3 with a loss Gregg - Figarden line
 1 30841  30846  "1 "    1      # Switches in Figarden SW 286 to transfer load
 4 30846      0  "**"    1      # Restore Load at Figarden 2
 0
  #
  #
  # (65)   C5 DCTL OUTAGE
  # Herndon - Ashlan and Gregg - Ashlan 230 kV Lines
 1  30835 30840  "1 "    0     # line from  HERNDON  230.00  BRKR to (3)   FGRDN T1
230.00
 1  30840 30841  "1 "    0     # line from  FGRDN T1 230.00   (3) to BRKR  FIGRDN 1
230.00
 1  30840 30850  "1 "    0     # line from  FGRDN T1 230.00   (3) to BRKR  ASHLAN
230.00
 4  30841     0  "1 "    0     # LOAD-DROP    FIGRDN 1 230.00  LOAD==73.45(14.92)
 1 30841  30846  "1 "    1      # Switches in Figarden SW 286 to transfer load
 4 30841      0  "**"    1      # Restore Load at Figarden 1
  #
 1  30810 30845  "1 "    0     # line from  GREGG    230.00  BRKR to (3)   FGRDN T2
230.00
 1  30845 30846  "1 "    0     # line from  FGRDN T2 230.00   (3) to BRKR  FIGRDN 2
230.00
 1  30845 30850  "1 "    0     # line from  FGRDN T2 230.00   (3) to BRKR  ASHLAN
230.00
 4  30846     0  "1 "    0     # LOAD-DROP    FIGRDN 2 230.00  LOAD==52.57(10.67)
 4  30846     0  "2 "    0     # LOAD-DROP    FIGRDN 2 230.00  LOAD==36.77(7.47)
 3  34604     0  "**"    0      # Drop unit#3 with a loss Gregg - Figarden line
 1 30841  30846  "1 "    1      # Switches in Figarden SW 286 to transfer load
 4 30846      0  "**"    1      # Restore Load at Figarden 2
 0
  #
  #
  # (66)   C5 DCTL OUTAGE
  # Haas - McCall and Balch - McCall 230 kV Lines
 1  30855 30860  "1 "    0     # line from  HAAS     230.00   (2) to (3)   BALCH3TP
230.00
 2  30855 34610  "1 "    0     # TRAN from  HAAS     230.00   (2) to (1)   HAAS
13.80
 1  30860 30875  "1 "    0     # line from  BALCH3TP 230.00   (3) to BRKR  MC CALL
230.00
```

```
 2  30860 34614  "1 "    0     # TRAN from  BALCH3TP 230.00   (3) to (1)   BLCH 2-3
13.80
 3  34610     0  "1 "    0     # GEN-DROP    HAAS      13.80  GEN==70.00(10.21)
 3  34610     0  "2 "    0     # GEN-DROP    HAAS      13.80  GEN==70.00(10.21)
 3  34614     0  "1 "    0     # GEN-DROP    BLCH 2-3  13.80  GEN==50.00(7.64)
  #
 1  30865 30870  "1 "    0     # line from  BALCH    230.00   (2) to (3)   PINE FLT
230.00
 2  30865 34612  "1 "    0     # TRAN from  BALCH    230.00   (2) to (1)   BLCH 2-2
13.80
 1  30870 30875  "1 "    0     # line from  PINE FLT 230.00   (3) to BRKR  MC CALL
230.00
 2  30870 38720  "1 "    0     # TRAN from  PINE FLT 230.00   (3) to (1)   PINE FLT
13.80
 3  34612     0  "1 "    0     # GEN-DROP    BLCH 2-2  13.80  GEN==50.00(0.66)
 3  38720     0  "1 "    0     # GEN-DROP    PINE FLT  13.80  GEN==57.00(23.30)
 0
  #
  #
  # (67)   C5 DCTL OUTAGE
  # Morro Bay - Gates and Templeton - Gates 230 kV Lines
 1  30900 30915  "1 "    0     # line from  GATES    230.00  BRKR to BRKR  MORROBAY
230.00
  #
 1  30900 30905  "1 "    0     # line from  GATES    230.00  BRKR to BRKR  TEMPLETN
230.00
 0
  #
  #
  # (68)   C5 DCTL OUTAGE
  # Gates - Midway and Gates - Arco 230 kV Lines
 1  30900 30970  "1 "    0     # line from  GATES    230.00  BRKR to BRKR  MIDWAY
230.00
  #
 1  30900 30935  "1 "    0     # line from  GATES    230.00  BRKR to BRKR  ARCO
230.00
 0
  #
  #
  # (69) BUS FAULT  30820  "HELMS PP"
  #
 1  30820  30810  "1"    0     # LINE from  HELMS PP 230.00  to  GREGG    230.00
 1  30820  30810  "2"    0     # LINE from  HELMS PP 230.00  to  GREGG    230.00
 2  30820  34600  "1"    0     # TRAN from  HELMS PP 230.00  to  HELMS 1   18.00
 2  30820  34602  "1"    0     # TRAN from  HELMS PP 230.00  to  HELMS 2   18.00
 2  30820  34604  "1"    0     # TRAN from  HELMS PP 230.00  to  HELMS 3   18.00
 0
  #
  #
  # (70) BUS FAULT  30830  "KEARNEY"
  #
 1  30830  30825  "1"    0     # LINE from  KEARNEY  230.00  to  MCMULLN1 230.00
 1  30830  30835  "1"    0     # LINE from  KEARNEY  230.00  to  HERNDON  230.00
 2  30830  34480  "2"    0     # TRAN from  KEARNEY  230.00  to  KEARNEY   70.00
 0
  #
  #
  # (71) BUS FAULT  30835  "HERNDON" 230 kV Bus Section 1
  #
 1  30835  30810  "1"    0     # LINE from  HERNDON  230.00  to  GREGG    230.00
 1  30835  30830  "1"    0     # LINE from  HERNDON  230.00  to  KEARNEY  230.00
 2  30835  30882  "1"    0     # TRAN from  HERNDON  230.00  to  HERNDN1M 115.00
 0
  #
  #
  # (72) BUS FAULT  30835  "HERNDON" 230 kV Bus Section 2
  #
 1  30835  30810  "2"    0     # LINE from  HERNDON  230.00  to  GREGG    230.00
 1  30835  30840  "1"    0     # LINE from  HERNDON  230.00  to  FGRDN T1 230.00
 2  30835  30883  "2"    0     # TRAN from  HERNDON  230.00  to  HERNDN2M 115.00
```

```
0
 #
 #
 # (73) BUS FAULT  30841  "FIGRDN 1"
 #
1  30841  30840  "1"    0     # LINE from  FIGRDN 1 230.00  to  FGRDN T1 230.00
1  30841  30846  "1"    0     # LINE from  FIGRDN 1 230.00  to  FIGRDN 2 230.00
4  30841     0  "1 "    0     # LOAD-DROP    FIGRDN 1 230.00  LOAD==73.45(14.92)
0
 #
 #
 # (74) BUS FAULT  30846  "FIGRDN 2"
 #
1  30846  30841  "1"    0     # LINE from  FIGRDN 2 230.00  to  FIGRDN 1 230.00
1  30846  30845  "1"    0     # LINE from  FIGRDN 2 230.00  to  FGRDN T2 230.00
4  30846     0  "1 "    0     # LOAD-DROP    FIGRDN 2 230.00  LOAD==52.57(10.67)
4  30846     0  "2 "    0     # LOAD-DROP    FIGRDN 2 230.00  LOAD==36.77(7.47)
0
 #
 #
 # (75) BUS FAULT  30850  "ASHLAN"
 #
1  30850  30840  "1"    0     # LINE from  ASHLAN   230.00  to  FGRDN T1 230.00
1  30850  30845  "1"    0     # LINE from  ASHLAN   230.00  to  FGRDN T2 230.00
4  30850     0  "1 "    0     # LOAD-DROP    ASHLAN   230.00  LOAD==69.20(13.40)
4  30850     0  "2 "    0     # LOAD-DROP    ASHLAN   230.00  LOAD==64.54(12.84)
4  30850     0  "3 "    0     # LOAD-DROP    ASHLAN   230.00  LOAD==65.51(12.49)
0
 #
 #
 # (76) BUS FAULT  30873  "HELM"
 #
1  30873  30790  "1"    0     # LINE from  HELM     230.00  to  PANOCHE  230.00
1  30873  30875  "1"    0     # LINE from  HELM     230.00  to  MC CALL  230.00
2  30873  34474  "1"    0     # TRAN from  HELM     230.00  to  HELM      70.00
0
 #
 #
 # (77) BUS FAULT  30874  "P0615STN"
 #
1  30874  30875  "1"    0     # LINE from  P0615STN 230.00  to  MC CALL  230.00
1  30874  30875  "2"    0     # LINE from  P0615STN 230.00  to  MC CALL  230.00
2  30874  34685  "1"    0     # TRAN from  P0615STN 230.00  to  P0615CT1  16.50
2  30874  34686  "1"    0     # TRAN from  P0615STN 230.00  to  P0615CT2  16.50
2  30874  34687  "1"    0     # TRAN from  P0615STN 230.00  to  P0615STG  16.50
0
 #
 #
 # (78) BUS FAULT  30875  "MC CALL" 230 kV Bus Section 1
 #
1  30875  30870  "1"    0     # LINE from  MC CALL  230.00  to  PINE FLT 230.00
1  30875  30874  "1"    0     # LINE from  MC CALL  230.00  to  P0615STN 230.00
1  30875  30880  "1"    0     # LINE from  MC CALL  230.00  to  HENTAP2  230.00
2  30875  30877  "2"    0     # TRAN from  MC CALL  230.00  to  MCCALL2M 115.00
6  30875  0      "v"    0     # SVD  from  MC CALL  230.00
0
 #
 #
 # (79) BUS FAULT  30875  "MC CALL" 230 kV Bus Section 2
 #
1  30875  30873  "1"    0     # LINE from  MC CALL  230.00  to  HELM     230.00
1  30875  30860  "1"    0     # LINE from  MC CALL  230.00  to  BALCH3TP 230.00
1  30875  30874  "2"    0     # LINE from  MC CALL  230.00  to  P0615STN 230.00
2  30875  30876  "1"    0     # TRAN from  MC CALL  230.00  to  MCCALL1M 115.00
2  30875  30878  "3"    0     # TRAN from  MC CALL  230.00  to  MCCALL3M 115.00
0
 #
 #
 # (80) BUS FAULT  30881  "HENRIETA"
 #
```

```
1  30881  30879  "1"    0     # LINE from  HENRIETA 230.00  to  HENTAP1  230.00
1  30881  30880  "1"    0     # LINE from  HENRIETA 230.00  to  HENTAP2  230.00
2  30881  34430  "3"    0     # TRAN from  HENRIETA 230.00  to  HENRETTA 115.00
2  30881  34540  "2"    0     # TRAN from  HENRIETA 230.00  to  HENRITTA  70.00
2  30881  34540  "4"    0     # TRAN from  HENRIETA 230.00  to  HENRITTA  70.00
0
 #
 #
 # (81) BUS FAULT  30900  "GATES" 230 kV Bus Section 1D
 #
1  30900  30790  "1"    0     # LINE from  GATES    230.00  to  PANOCHE  230.00
1  30900  30905  "1"    0     # LINE from  GATES    230.00  to  TEMPLETN 230.00
2  30900  30901  "1"    0     # TRAN from  GATES    230.00  to  GATES 1M 230.00
6  30900  0      "v"    0     # SVD  from  GATES    230.00
0
 #
 #
 # (82) BUS FAULT  30900  "GATES" 230 kV Bus Section 2D
 #
1  30900  30790  "2"    0     # LINE from  GATES    230.00  to  PANOCHE  230.00
1  30900  30915  "1"    0     # LINE from  GATES    230.00  to  MORROBAY 230.00
0
 #
 #
 # (83) BUS FAULT  30900  "GATES" 230 kV Bus Section 1E
 #
1  30900  30879  "1"    0     # LINE from  GATES    230.00  to  HENTAP1  230.00
1  30900  30935  "1"    0     # LINE from  GATES    230.00  to  ARCO     230.00
0
 #
 #
 # (84) BUS FAULT  30900  "GATES" 230 kV Bus Section 2E
 #
1  30900  30880  "1"    0     # LINE from  GATES    230.00  to  HENTAP2  230.00
1  30900  30970  "1"    0     # LINE from  GATES    230.00  to  MIDWAY   230.00
0
 #
 #
 # (85) BUS FAULT  34356  "KERCKHF1"
 #
1  34356  34123  "2"    0     # LINE from  KERCKHF1 115.00  to  K1-JCT   115.00
1  34356  34358  "1"    0     # LINE from  KERCKHF1 115.00  to  KERCKHF2 115.00
2  34356  34344  "1"    0     # TRAN from  KERCKHF1 115.00  to  KERCKHOF   6.60
0
 #
 #
 # (86) BUS FAULT  34358  "KERCKHF2"
 #
1  34358  34123  "2"    0     # LINE from  KERCKHF2 115.00  to  K1-JCT   115.00
1  34358  34356  "1"    0     # LINE from  KERCKHF2 115.00  to  KERCKHF1 115.00
1  34358  34360  "1"    0     # LINE from  KERCKHF2 115.00  to  WWARD JT 115.00
1  34358  34365  "1"    0     # LINE from  KERCKHF2 115.00  to  CLOVISJ2 115.00
2  34358  34308  "1"    0     # TRAN from  KERCKHF2 115.00  to  KERCKHOF  13.80
0
 #
 #
 # (87) BUS FAULT  34361  "AIRWAYS"
 #
1  34361  34357  "1"    0     # LINE from  AIRWAYS  115.00  to  AIRWAYJ1 115.00
1  34361  34359  "1"    0     # LINE from  AIRWAYS  115.00  to  AIRWAYJ2 115.00
4  34361     0  "1 "    0     # LOAD-DROP    AIRWAYS  115.00  LOAD==38.39(7.43)
4  34361     0  "2 "    0     # LOAD-DROP    AIRWAYS  115.00  LOAD==12.60(2.56)
0
 #
 #
 # (88) BUS FAULT  34362  "CLOVIS-1"
 #
1  34362  34363  "1"    0     # LINE from  CLOVIS-1 115.00  to  CLOVISJ1 115.00
1  34362  34364  "1"    0     # LINE from  CLOVIS-1 115.00  to  CLOVIS-2 115.00
4  34362     0  "1 "    0     # LOAD-DROP    CLOVIS-1 115.00  LOAD==51.01(10.36)
```

```
4  34362     0  "2 "    0     # LOAD-DROP    CLOVIS-1 115.00  LOAD==50.20(10.20)
0
 #
 #
 # (89) BUS FAULT  34364  "CLOVIS-2"
 #
1  34364  34362  "1"    0     # LINE from  CLOVIS-2 115.00  to  CLOVIS-1 115.00
1  34364  34365  "1"    0     # LINE from  CLOVIS-2 115.00  to  CLOVISJ2 115.00
4  34364     0  "3 "    0     # LOAD-DROP    CLOVIS-2 115.00  LOAD==44.76(9.09)
0
 #
 #
 # (90) BUS FAULT  34366  "SANGER"
 #
1  34366  34363  "1"    0     # LINE from  SANGER   115.00  to  CLOVISJ1 115.00
1  34366  34365  "1"    0     # LINE from  SANGER   115.00  to  CLOVISJ2 115.00
1  34366  34359  "1"    0     # LINE from  SANGER   115.00  to  AIRWAYJ2 115.00
1  34366  34368  "1"    0     # LINE from  SANGER   115.00  to  LASPALMS 115.00
1  34366  34370  "1"    0     # LINE from  SANGER   115.00  to  MC CALL  115.00
1  34366  34370  "2"    0     # LINE from  SANGER   115.00  to  MC CALL  115.00
1  34366  34370  "3"    0     # LINE from  SANGER   115.00  to  MC CALL  115.00
1  34366  34372  "1"    0     # LINE from  SANGER   115.00  to  MALAGA   115.00
1  34366  34389  "1"    0     # LINE from  SANGER   115.00  to  RAINBWTP 115.00
1  34366  34396  "1"    0     # LINE from  SANGER   115.00  to  PIEDRA 2 115.00
1  34366  34488  "1"    0     # LINE from  SANGER   115.00  to  SANGER    70.00
2  34366  34590  "1"    0     # TRAN from  SANGER   115.00  to  SANGR3T  115.00
4  34366     0  "1 "    0     # LOAD-DROP    SANGER   115.00  LOAD==24.26(4.93)
0
 #
 #
 # (91) BUS FAULT  34372  "MALAGA"
 #
1  34372  34366  "1"    0     # LINE from  MALAGA   115.00  to  SANGER   115.00
1  34372  34376  "1"    0     # LINE from  MALAGA   115.00  to  PPG      115.00
1  34372  34379  "1"    0     # LINE from  MALAGA   115.00  to  MALAGATP 115.00
1  34372  34381  "1"    0     # LINE from  MALAGA   115.00  to  KRCDP    115.00
4  34372     0  "1 "    0     # LOAD-DROP    MALAGA   115.00  LOAD==25.25(5.12)
4  34372     0  "2 "    0     # LOAD-DROP    MALAGA   115.00  LOAD==22.76(4.62)
4  34372     0  "3 "    0     # LOAD-DROP    MALAGA   115.00  LOAD==23.13(4.69)
0
 #
 #
 # (92) BUS FAULT  34378  "GATES"
 #
2  34378  30901  "1"    0     # TRAN from  GATES    115.00  to  GATES 1M 230.00
2  34378  34552  "2"    0     # TRAN from  GATES    115.00  to  GATES     70.00
4  34378     0  "3 "    0     # LOAD-DROP    GATES    115.00  LOAD==19.45(3.95)
0
 #
 #
 # (93) BUS FAULT  34380  "REEDLEY"
 #
1  34380  34384  "1"    0     # LINE from  REEDLEY  115.00  to  GERAWAN  115.00
1  34380  34394  "1"    0     # LINE from  REEDLEY  115.00  to  PIEDRA 1 115.00
2  34380  34492  "1"    0     # TRAN from  REEDLEY  115.00  to  REEDLEY   70.00
2  34380  34492  "2"    0     # TRAN from  REEDLEY  115.00  to  REEDLEY   70.00
4  34380     0  "3 "    0     # LOAD-DROP    REEDLEY  115.00  LOAD==26.17(5.31)
0
 #
 #
 # (94) BUS FAULT  34382  "WAHTOKE"
 #
1  34382  34370  "1"    0     # LINE from  WAHTOKE  115.00  to  MC CALL  115.00
1  34382  34384  "1"    0     # LINE from  WAHTOKE  115.00  to  GERAWAN  115.00
4  34382     0  "2 "    0     # LOAD-DROP    WAHTOKE  115.00  LOAD==30.36(6.17)
4  34382     0  "3 "    0     # LOAD-DROP    WAHTOKE  115.00  LOAD==20.84(4.24)
0
 #
 #
 # (95) BUS FAULT  34400  "KNGSRVR1"
```

```
 #
1  34400  34394  "1"    0     # LINE from  KNGSRVR1 115.00  to  PIEDRA 1 115.00
2  34400  34616  "1"    0     # TRAN from  KNGSRVR1 115.00  to  KINGSRIV  13.80
0
 #
 #
 # (96) BUS FAULT  34402  "CAL AVE"
 #
1  34402  34390  "1"    0     # LINE from  CAL AVE  115.00  to  DANISHCM 115.00
1  34402  34404  "1"    0     # LINE from  CAL AVE  115.00  to  WST FRSO 115.00
4  34402     0  "1 "    0     # LOAD-DROP    CAL AVE  115.00  LOAD==28.95(5.87)
4  34402     0  "2 "    0     # LOAD-DROP    CAL AVE  115.00  LOAD==31.26(6.35)
4  34402     0  "3 "    0     # LOAD-DROP    CAL AVE  115.00  LOAD==24.42(4.96)
0
 #
 #
 # (97) BUS FAULT  34404  "WST FRSO"
 #
1  34404  34370  "1"    0     # LINE from  WST FRSO 115.00  to  MC CALL  115.00
1  34404  34402  "1"    0     # LINE from  WST FRSO 115.00  to  CAL AVE  115.00
4  34404     0  "1 "    0     # LOAD-DROP    WST FRSO 115.00  LOAD==37.55(7.63)
4  34404     0  "2 "    0     # LOAD-DROP    WST FRSO 115.00  LOAD==39.04(7.93)
0
 #
 #
 # (98) BUS FAULT  34408  "BARTON"
 #
1  34408  34359  "1"    0     # LINE from  BARTON   115.00  to  AIRWAYJ2 115.00
1  34408  34412  "1"    0     # LINE from  BARTON   115.00  to  HERNDON  115.00
4  34408     0  "1 "    0     # LOAD-DROP    BARTON   115.00  LOAD==43.27(8.79)
4  34408     0  "2 "    0     # LOAD-DROP    BARTON   115.00  LOAD==37.15(7.54)
4  34408     0  "3 "    0     # LOAD-DROP    BARTON   115.00  LOAD==26.96(5.47)
0
 #
 #
 # (99) BUS FAULT  34410  "MANCHSTR"
 #
1  34410  34357  "1"    0     # LINE from  MANCHSTR 115.00  to  AIRWAYJ1 115.00
1  34410  34412  "1"    0     # LINE from  MANCHSTR 115.00  to  HERNDON  115.00
4  34410     0  "1 "    0     # LOAD-DROP    MANCHSTR 115.00  LOAD==25.28(5.13)
4  34410     0  "2 "    0     # LOAD-DROP    MANCHSTR 115.00  LOAD==25.47(5.18)
4  34410     0  "3 "    0     # LOAD-DROP    MANCHSTR 115.00  LOAD==36.21(7.36)
0
 #
 #
 # (100) BUS FAULT  34412  "HERNDON" 115 kV Bus Section 1
 #
1  34412  34408  "1"    0     # LINE from  HERNDON  115.00  to  BARTON   115.00
1  34412  34409  "1"    0     # LINE from  HERNDON  115.00  to  PNDLJ2   115.00
2  34412  30882  "1"    0     # TRAN from  HERNDON  115.00  to  HERNDN1M 115.00
0
 #
 #
 # (101) BUS FAULT  34412  "HERNDON" 115 kV Bus Section 2
 #
1  34412  34410  "1"    0     # LINE from  HERNDON  115.00  to  MANCHSTR 115.00
1  34412  34411  "1"    0     # LINE from  HERNDON  115.00  to  PNDLJ1   115.00
1  34412  34422  "1"    0     # LINE from  HERNDON  115.00  to  CHLDHOSP 115.00
0
 #
 #
 # (102) BUS FAULT  34413  "PNEDLE"
 #
1  34413  34409  "1"    0     # LINE from  PNEDLE   115.00  to  PNDLJ2   115.00
1  34413  34411  "1"    0     # LINE from  PNEDLE   115.00  to  PNDLJ1   115.00
4  34413     0  "2 "    0     # LOAD-DROP    PNEDLE   115.00  LOAD==30.74(6.25)
4  34413     0  "3 "    0     # LOAD-DROP    PNEDLE   115.00  LOAD==40.42(8.20)
0
 #
 #
```

```
 # (103) BUS FAULT  34414  "WOODWARD"
 #
1  34414  34360  "1"    0     # LINE from  WOODWARD 115.00  to  WWARD JT 115.00
1  34414  34422  "1"    0     # LINE from  WOODWARD 115.00  to  CHLDHOSP 115.00
4  34414     0  "1 "    0     # LOAD-DROP    WOODWARD 115.00  LOAD==42.25(8.58)
4  34414     0  "2 "    0     # LOAD-DROP    WOODWARD 115.00  LOAD==52.69(10.70)
4  34414     0  "3 "    0     # LOAD-DROP    WOODWARD 115.00  LOAD==44.09(8.95)
0
 #
 #
 # (104) BUS FAULT  34416  "BULLARD"
 #
1  34416  34409  "1"    0     # LINE from  BULLARD  115.00  to  PNDLJ2   115.00
1  34416  34411  "1"    0     # LINE from  BULLARD  115.00  to  PNDLJ1   115.00
4  34416     0  "1 "    0     # LOAD-DROP    BULLARD  115.00  LOAD==44.87(9.11)
4  34416     0  "2 "    0     # LOAD-DROP    BULLARD  115.00  LOAD==44.65(9.07)
4  34416     0  "3 "    0     # LOAD-DROP    BULLARD  115.00  LOAD==42.52(8.63)
0
 #
 #
 # (105) BUS FAULT  34418  "KINGSBRG" 115 kV Bus Section D
 #
1  34418  34417  "1"    0     # LINE from  KINGSBRG 115.00  to  KINGS J2 115.00
1  34418  34428  "1"    0     # LINE from  KINGSBRG 115.00  to  CONTADNA 115.00
1  34418  34420  "2"    0     # LINE from  KINGSBRG 115.00  to  CORCORAN 115.00
4  34418     0  "1 "    0     # LOAD-DROP    KINGSBRG 115.00  LOAD==39.24(7.96)
0
 #
 #
 # (106) BUS FAULT  34418  "KINGSBRG" 115 kV Bus Section E
 #
1  34418  34420  "1"    0     # LINE from  KINGSBRG 115.00  to  CORCORAN 115.00
1  34418  34423  "1"    0     # LINE from  KINGSBRG 115.00  to  GAURD J1 115.00
2  34418  34576  "2"    0     # TRAN from  KINGSBRG 115.00  to  KNGLOBUS  70.00
4  34418     0  "3 "    0     # LOAD-DROP    KINGSBRG 115.00  LOAD==24.32(4.94)
0
 #
 #
 # (107) BUS FAULT  34420  "CORCORAN"
 #
1  34420  34391  "1"    0     # LINE from  CORCORAN 115.00  to  QUEBECTP 115.00
1  34420  34418  "1"    0     # LINE from  CORCORAN 115.00  to  KINGSBRG 115.00
1  34420  34418  "2"    0     # LINE from  CORCORAN 115.00  to  KINGSBRG 115.00
2  34420  34528  "2"    0     # TRAN from  CORCORAN 115.00  to  CORCORAN  70.00
4  34420     0  "3 "    0     # LOAD-DROP    CORCORAN 115.00  LOAD==16.21(3.30)
4  34420     0  "4 "    0     # LOAD-DROP    CORCORAN 115.00  LOAD==17.81(3.61)
0
 #
 #
 # (108) BUS FAULT  34426  "ALPAUGH"
 #
1  34426  34391  "1"    0     # LINE from  ALPAUGH  115.00  to  QUEBECTP 115.00
1  34426  34700  "1"    0     # LINE from  ALPAUGH  115.00  to  SMYRNA   115.00
4  34426     0  "2 "    0     # LOAD-DROP    ALPAUGH  115.00  LOAD==5.62(1.14)
0
 #
 #
 # (109) BUS FAULT  34430  "HENRETTA"
 #
1  34430  34521  "1"    0     # LINE from  HENRETTA 115.00  to  LEPRNOFD 115.00
2  34430  30881  "3"    0     # TRAN from  HENRETTA 115.00  to  HENRIETA 230.00
0
 #
 #
 # (110) BUS FAULT  34452  "WISHON"
 #
1  34452  34260  "1"    0     # LINE from  WISHON    70.00  to  SJNO2     70.00
1  34452  34491  "1"    0     # LINE from  WISHON    70.00  to  AUBRYTP   70.00
2  34452  34658  "1"    0     # TRAN from  WISHON    70.00  to  WISHON     2.30
0
```

```
 #
 #
 # (111) BUS FAULT  34460  "GUERNSEY"
 #
1  34460  34462  "1"    0     # LINE from  GUERNSEY  70.00  to  GUR3TPT   70.00
1  34460  34528  "1"    0     # LINE from  GUERNSEY  70.00  to  CORCORAN  70.00
4  34460     0  "1 "    0     # LOAD-DROP    GUERNSEY  70.00  LOAD==10.51(2.13)
0
 #
 #
 # (112) BUS FAULT  34464  "COPPRMNE"
 #
1  34464  34454  "1"    0     # LINE from  COPPRMNE  70.00  to  RIVERROC  70.00
1  34464  34478  "1"    0     # LINE from  COPPRMNE  70.00  to  TVY VLLY  70.00
1  34464  34638  "1"    0     # LINE from  COPPRMNE  70.00  to  FRANTDM   70.00
1  34464  34491  "1"    0     # LINE from  COPPRMNE  70.00  to  AUBRYTP   70.00
4  34464     0  "1 "    0     # LOAD-DROP    COPPRMNE  70.00  LOAD==22.96(4.67)
0
 #
 #
 # (113) BUS FAULT  34466  "BIOLA"
 #
1  34466  34264  "1"    0     # LINE from  BIOLA     70.00  to  EL PECO   70.00
1  34466  34482  "1"    0     # LINE from  BIOLA     70.00  to  OLDKERN   70.00
4  34466     0  "1 "    0     # LOAD-DROP    BIOLA     70.00  LOAD==21.80(4.43)
0
 #
 #
 # (114) BUS FAULT  34472  "SAN JOQN"
 #
1  34472  34471  "1"    0     # LINE from  SAN JOQN  70.00  to  SNJQJCT   70.00
1  34472  34473  "1"    0     # LINE from  SAN JOQN  70.00  to  SNJQTP    70.00
4  34472     0  "1 "    0     # LOAD-DROP    SAN JOQN  70.00  LOAD==6.44(1.31)
4  34472     0  "2 "    0     # LOAD-DROP    SAN JOQN  70.00  LOAD==3.92(0.79)
0
 #
 #
 # (115) BUS FAULT  34474  "HELM"
 #
1  34474  34471  "1"    0     # LINE from  HELM      70.00  to  SNJQJCT   70.00
1  34474  34473  "1"    0     # LINE from  HELM      70.00  to  SNJQTP    70.00
1  34474  34556  "1"    0     # LINE from  HELM      70.00  to  STRD JCT  70.00
1  34474  34564  "1"    0     # LINE from  HELM      70.00  to  STROUD    70.00
2  34474  30873  "1"    0     # TRAN from  HELM      70.00  to  HELM     230.00
0
 #
 #
 # (116) BUS FAULT  34478  "TVY VLLY"
 #
1  34478  34464  "1"    0     # LINE from  TVY VLLY  70.00  to  COPPRMNE  70.00
1  34478  34492  "1"    0     # LINE from  TVY VLLY  70.00  to  REEDLEY   70.00
4  34478     0  "1 "    0     # LOAD-DROP    TVY VLLY  70.00  LOAD==10.27(2.09)
0
 #
 #
 # (117) BUS FAULT  34480  "KEARNEY"
 #
1  34480  34481  "1"    0     # LINE from  KEARNEY   70.00  to  FRWWTAP   70.00
1  34480  34482  "1"    0     # LINE from  KEARNEY   70.00  to  OLDKERN   70.00
1  34480  34512  "1"    0     # LINE from  KEARNEY   70.00  to  CARUTHRS  70.00
2  34480  30830  "2"    0     # TRAN from  KEARNEY   70.00  to  KEARNEY  230.00
0
 #
 #
 # (118) BUS FAULT  34484  "KERMAN"
 #
1  34484  34475  "1"    0     # LINE from  KERMAN    70.00  to  AGRCJCT   70.00
1  34484  34481  "1"    0     # LINE from  KERMAN    70.00  to  FRWWTAP   70.00
4  34484     0  "1 "    0     # LOAD-DROP    KERMAN    70.00  LOAD==19.44(3.95)
4  34484     0  "2 "    0     # LOAD-DROP    KERMAN    70.00  LOAD==11.78(2.39)
```

```
0
 #
 #
 # (119) BUS FAULT  34486  "CALIFRNV"
 #
1  34486  34488  "1"    0     # LINE from  CALIFRNV  70.00  to  SANGER    70.00
1  34486  34488  "2"    0     # LINE from  CALIFRNV  70.00  to  SANGER    70.00
0
 #
 #
 # (120) BUS FAULT  34488  "SANGER"
 #
1  34488  34486  "1"    0     # LINE from  SANGER    70.00  to  CALIFRNV  70.00
1  34488  34486  "2"    0     # LINE from  SANGER    70.00  to  CALIFRNV  70.00
1  34488  34366  "1"    0     # LINE from  SANGER    70.00  to  SANGER   115.00
1  34488  34487  "1"    0     # LINE from  SANGER    70.00  to  SNGRJCT   70.00
2  34488  34590  "1"    0     # TRAN from  SANGER    70.00  to  SANGR3T  115.00
0
 #
 #
 # (121) BUS FAULT  34492  "REEDLEY"
 #
1  34492  34478  "1"    0     # LINE from  REEDLEY   70.00  to  TVY VLLY  70.00
1  34492  34490  "1"    0     # LINE from  REEDLEY   70.00  to  PARLIER   70.00
1  34492  34497  "1"    0     # LINE from  REEDLEY   70.00  to  DNUBAJCT  70.00
1  34492  34526  "1"    0     # LINE from  REEDLEY   70.00  to  ORSI JCT  70.00
2  34492  34380  "1"    0     # TRAN from  REEDLEY   70.00  to  REEDLEY  115.00
2  34492  34380  "2"    0     # TRAN from  REEDLEY   70.00  to  REEDLEY  115.00
4  34492     0  "1 "    0     # LOAD-DROP    REEDLEY   70.00  LOAD==17.42(3.54)
0
 #
 #
 # (122) BUS FAULT  34500  "DINUBA"
 #
1  34500  34496  "1"    0     # LINE from  DINUBA    70.00  to  STCRRL J  70.00
1  34500  34497  "1"    0     # LINE from  DINUBA    70.00  to  DNUBAJCT  70.00
4  34500     0  "1 "    0     # LOAD-DROP    DINUBA    70.00  LOAD==19.23(3.91)
4  34500     0  "2 "    0     # LOAD-DROP    DINUBA    70.00  LOAD==9.33(1.90)
0
 #
 #
 # (123) BUS FAULT  34512  "CARUTHRS"
 #
1  34512  34480  "1"    0     # LINE from  CARUTHRS  70.00  to  KEARNEY   70.00
1  34512  34510  "1"    0     # LINE from  CARUTHRS  70.00  to  CMDN JCT  70.00
4  34512     0  "1 "    0     # LOAD-DROP    CARUTHRS  70.00  LOAD==19.63(3.98)
0
 #
 #
 # (124) BUS FAULT  34518  "LEMOORE"
 #
1  34518  34520  "1"    0     # LINE from  LEMOORE   70.00  to  LPRNO TP  70.00
1  34518  34522  "1"    0     # LINE from  LEMOORE   70.00  to  HNFRD SW  70.00
4  34518     0  "1 "    0     # LOAD-DROP    LEMOORE   70.00  LOAD==18.86(3.83)
4  34518     0  "2 "    0     # LOAD-DROP    LEMOORE   70.00  LOAD==32.81(6.66)
0
 #
 #
 # (125) BUS FAULT  34528  "CORCORAN"
 #
1  34528  34460  "1"    0     # LINE from  CORCORAN  70.00  to  GUERNSEY  70.00
1  34528  34530  "1"    0     # LINE from  CORCORAN  70.00  to  BSWLL TP  70.00
2  34528  34420  "2"    0     # TRAN from  CORCORAN  70.00  to  CORCORAN 115.00
0
 #
 #
 # (126) BUS FAULT  34540  "HENRITTA"
 #
1  34540  34514  "1"    0     # LINE from  HENRITTA  70.00  to  MUSLSLGH  70.00
1  34540  34520  "1"    0     # LINE from  HENRITTA  70.00  to  LPRNO TP  70.00
```

```
 1  34540  34537  "1"    0     # LINE from  HENRITTA  70.00  to  GWF_HENR  70.00
 1  34540  34542  "1"    0     # LINE from  HENRITTA  70.00  to  JCBSCRNR  70.00
 1  34540  34544  "1"    0     # LINE from  HENRITTA  70.00  to  TLRE LKE  70.00
 2  34540  30881  "2"    0     # TRAN from  HENRITTA  70.00  to  HENRIETA 230.00
 2  34540  30881  "4"    0     # TRAN from  HENRITTA  70.00  to  HENRIETA 230.00
 4  34540     0  "1 "    0     # LOAD-DROP    HENRITTA  70.00  LOAD==8.20(1.67)
 0
  #
  #
  # (127) BUS FAULT  34544  "TLRE LKE"
  #
 1  34544  34540  "1"    0     # LINE from  TLRE LKE  70.00  to  HENRITTA  70.00
 1  34544  34550  "1"    0     # LINE from  TLRE LKE  70.00  to  CHEVPLIN  70.00
 1  34544  34580  "1"    0     # LINE from  TLRE LKE  70.00  to  BDGR HLL  70.00
 4  34544     0  "1 "    0     # LOAD-DROP    TLRE LKE  70.00  LOAD==6.79(1.38)
 0
  #
  #
  # (128) BUS FAULT  34552  "GATES"
  #
 1  34552  34548  "1"    0     # LINE from  GATES     70.00  to  KETTLEMN  70.00
 1  34552  34184  "1"    0     # LINE from  GATES     70.00  to  GATS2_TP  70.00
 1  34552  34558  "1"    0     # LINE from  GATES     70.00  to  HURON     70.00
 1  34552  34558  "2"    0     # LINE from  GATES     70.00  to  HURON     70.00
 1  34552  34578  "1"    0     # LINE from  GATES     70.00  to  JACALITO  70.00
 2  34552  34378  "2"    0     # TRAN from  GATES     70.00  to  GATES    115.00
 0
  #
  #
  # (129) BUS FAULT  34558  "HURON"
  #
 1  34558  34552  "1"    0     # LINE from  HURON     70.00  to  GATES     70.00
 1  34558  34552  "2"    0     # LINE from  HURON     70.00  to  GATES     70.00
 1  34558  34560  "1"    0     # LINE from  HURON     70.00  to  CALFLAX   70.00
 4  34558 34552  "1 "    1     # LOAD-TRANSFER  HURON     70.00  TO  GATES     70.00
LOAD==15.33(3.11)
 0
  #
  #
  # (130) BUS FAULT  34562  "SCHLNDLR"
  #
 1  34562  34556  "1"    0     # LINE from  SCHLNDLR  70.00  to  STRD JCT  70.00
 1  34562  34560  "1"    0     # LINE from  SCHLNDLR  70.00  to  CALFLAX   70.00
 1  34562  34566  "1"    0     # LINE from  SCHLNDLR  70.00  to  PLSNTVLY  70.00
 2  34562  34354  "1"    0     # TRAN from  SCHLNDLR  70.00  to  SCHINDLR 115.00
 4  34562     0  "1 "    0     # LOAD-DROP    SCHLNDLR  70.00  LOAD==9.59(1.95)
 0
  #
  #
  # (131) BUS FAULT  34564  "STROUD"
  #
 1  34564  34556  "1"    0     # LINE from  STROUD    70.00  to  STRD JCT  70.00
 1  34564  34474  "1"    0     # LINE from  STROUD    70.00  to  HELM      70.00
 4  34564     0  "1 "    0     # LOAD-DROP    STROUD    70.00  LOAD==13.09(2.66)
 0
  #
  #
  # (132) BUS FAULT  34570  "COLNGA 2"
  #
 1  34570  34184  "1"    0     # LINE from  COLNGA 2  70.00  to  GATS2_TP  70.00
 1  34570  34566  "1"    0     # LINE from  COLNGA 2  70.00  to  PLSNTVLY  70.00
 1  34570  34572  "1"    0     # LINE from  COLNGA 2  70.00  to  TORNADO   70.00
 2  34570  34652  "1"    0     # TRAN from  COLNGA 2  70.00  to  CHV.COAL   9.11
 4  34570     0  "1 "    0     # LOAD-DROP    COLNGA 2  70.00  LOAD==8.23(1.67)
 0
  #
  #
  # (133) BUS FAULT  34574  "COLNGA 1"
  #
 1  34574  34572  "1"    0     # LINE from  COLNGA 1  70.00  to  TORNADO   70.00
```

```
1  34574  34578  "1"    0     # LINE from  COLNGA 1  70.00  to  JACALITO  70.00
1  34574  36354  "1"    0     # LINE from  COLNGA 1  70.00  to  SAN MIGL  70.00
4  34574     0  "1 "    0     # LOAD-DROP    COLNGA 1  70.00  LOAD==9.34(1.90)
4  34574     0  "2 "    0     # LOAD-DROP    COLNGA 1  70.00  LOAD==9.99(2.03)
0
 #
 #
 # (134) BUS FAULT  34576  "KNGLOBUS"
 #
1  34576  34456  "1"    0     # LINE from  KNGLOBUS  70.00  to  HRDWK TP  70.00
1  34576  34508  "1"    0     # LINE from  KNGLOBUS  70.00  to  CAMDEN    70.00
2  34576  34418  "2"    0     # TRAN from  KNGLOBUS  70.00  to  KINGSBRG 115.00
0
 #
 #
-1
 # EOF
```

Spring Peak Category B Contingencies

```
# Q272 2013 sprpk category b contingency list
# Yosemite and Fresno Divisions Zones 313 and 314
#
  # 2013 sprpk category b contingency list
  # Yosemite Zone 313
  #
  #
  # (1)  B2 LINE OUTAGE (BREAKER-TO-BREAKER)
  #
 1  30515 30800  "1 "    0     # line from  WARNERVL 230.00  BRKR to BRKR  WILSON
230.00
 0
  #
  #
  # (2)  B2 LINE OUTAGE (BREAKER-TO-BREAKER)
  #
 1  30670 30765  "1 "    0     # line from  WESTLEY  230.00  BRKR to BRKR  LOSBANOS
230.00
 0
  #
  #
  # (3)  B2 LINE OUTAGE (BREAKER-TO-BREAKER)
  #
 1  30750 30790  "1 "    0     # line from  MOSSLND2 230.00  BRKR to BRKR  PANOCHE
230.00
 0
  #
  #
  # (4)  B2 LINE OUTAGE (BREAKER-TO-BREAKER)
  #
 1  30760 30790  "1 "    0     # line from  COBURN   230.00  BRKR to BRKR  PANOCHE
230.00
 0
  #
  #
  # (5)  B2 LINE OUTAGE (BREAKER-TO-BREAKER)
  #
 1  30765 30790  "1 "    0     # line from  LOSBANOS 230.00  BRKR to BRKR  PANOCHE
230.00
 0
  #
  #
  # (6)  B2 LINE OUTAGE (BREAKER-TO-BREAKER)
  #
 1  30765 30790  "2 "    0     # line from  LOSBANOS 230.00  BRKR to BRKR  PANOCHE
230.00
 0
  #
  #
  # (7)  B2 LINE OUTAGE (BREAKER-TO-BREAKER)
  #
 1  30765 38615  "1 "    0     # line from  LOSBANOS 230.00  BRKR to BRKR  DS AMIGO
230.00
 0
  #
  #
  # (8)  B2 LINE OUTAGE (BREAKER-TO-BREAKER)
  #
 1  30765 38625  "1 "    0     # line from  LOSBANOS 230.00  BRKR to BRKR  SN LS PP
230.00
 0
  #
  #
  # (9)  B2 LINE OUTAGE (BREAKER-TO-BREAKER)
  #
```

```
 1  30765 38625  "2 "    0     # line from  LOSBANOS 230.00  BRKR to BRKR  SN LS PP
230.00
 0
  #
  #
  # (10)  B2 LINE OUTAGE (BREAKER-TO-BREAKER)
  #
 1  30790 30793  "1 "    0     # line from  PANOCHE  230.00  BRKR to (3)   PANO_EC
230.00
 2  30793 34326  "1 "    0     # TRAN from  PANO_EC  230.00   (3) to (1)   PANO_BS1
13.80
 2  30793 34327  "1 "    0     # TRAN from  PANO_EC  230.00   (3) to (1)   PANO_BS2
13.80
 4  34326     0  "ss"    0     # LOAD-DROP    PANO_BS1  13.80  LOAD==4.50(2.49)
 4  34327     0  "ss"    0     # LOAD-DROP    PANO_BS2  13.80  LOAD==4.50(2.49)
 3  34326     0  "1 "    0     # GEN-DROP    PANO_BS1  13.80  GEN==102.50(20.25)
 3  34326     0  "2 "    0     # GEN-DROP    PANO_BS1  13.80  GEN==102.50(20.25)
 3  34327     0  "3 "    0     # GEN-DROP    PANO_BS2  13.80  GEN==102.50(20.25)
 3  34327     0  "4 "    0     # GEN-DROP    PANO_BS2  13.80  GEN==102.50(20.25)
 0
  #
  #
  # (11)  B2 LINE OUTAGE (BREAKER-TO-BREAKER)
  #
 1  30790 30825  "1 "    0     # line from  PANOCHE  230.00  BRKR to (2)   MCMULLN1
230.00
 1  30825 30830  "1 "    0     # line from  MCMULLN1 230.00   (2) to BRKR  KEARNEY
230.00
 4  30825     0  "1 "    0     # LOAD-DROP    MCMULLN1 230.00  LOAD==20.57(4.18)
 0
  #
  #
  # (12)  B2 LINE OUTAGE (BREAKER-TO-BREAKER)
  #
 1  30790 30873  "1 "    0     # line from  PANOCHE  230.00  BRKR to BRKR  HELM
230.00
 0
  #
  #
  # (13)  B2 LINE OUTAGE (BREAKER-TO-BREAKER)
  #
 1  30790 30900  "1 "    0     # line from  PANOCHE  230.00  BRKR to BRKR  GATES
230.00
 0
  #
  #
  # (14)  B2 LINE OUTAGE (BREAKER-TO-BREAKER)
  #
 1  30790 30900  "2 "    0     # line from  PANOCHE  230.00  BRKR to BRKR  GATES
230.00
 0
  #
  #
  # (15)  B2 LINE OUTAGE (BREAKER-TO-BREAKER)
  #
 1  30795 30805  "1 "    0     # line from  STOREY 2 230.00   (2) to BRKR  BORDEN
230.00
 1  30795 30800  "1 "    0     # line from  STOREY 2 230.00   (2) to BRKR  WILSON
230.00
 4  30795     0  "2 "    0     # LOAD-DROP    STOREY 2 230.00  LOAD==33.89(6.88)
 0
  #
  #
  # (16)  B2 LINE OUTAGE (BREAKER-TO-BREAKER)
  #
 1  30796 30800  "1 "    0     # line from  STOREY 1 230.00   (2) to BRKR  WILSON
230.00
 1  30796 30805  "1 "    0     # line from  STOREY 1 230.00   (2) to BRKR  BORDEN
230.00
 4  30796     0  "1 "    0     # LOAD-DROP    STOREY 1 230.00  LOAD==37.87(7.69)
```

```
 0
  #
  #
  # (17)  B2 LINE OUTAGE (BREAKER-TO-BREAKER)
  #
 1  30805 30806  "1 "    0     # line from  BORDEN   230.00  BRKR to BRKR  Q196
230.00
 0
  #
  #
  # (18)  B2 LINE OUTAGE (BREAKER-TO-BREAKER)
  #
 1  30805 30806  "2 "    0     # line from  BORDEN   230.00  BRKR to BRKR  Q196
230.00
 0
  #
  #
  # (19)  B2 LINE OUTAGE (BREAKER-TO-BREAKER)
  #
 1  30805 30810  "1 "    0     # line from  BORDEN   230.00  BRKR to BRKR  GREGG
230.00
 3  34604     0  "**"    0     # Drop unit#3 with loss of Gregg - Borden line
 0
  #
  #
  # (20)  B2 LINE OUTAGE (BREAKER-TO-BREAKER)
  #
 1  30805 30810  "2 "    0     # line from  BORDEN   230.00  BRKR to BRKR  GREGG
230.00
 3  34604     0  "**"    0     # Drop unit#3 with loss of Gregg - Borden #2 line
 0
  #
  #
  # (21)  B2 LINE OUTAGE (BREAKER-TO-BREAKER)
  #
 1  34017 34010  "1 "    0     # line from  CRWS LDG  60.00   (1) to (3)   CRWS LDJ
60.00
 1  34010 34006  "1 "    0     # line from  CRWS LDJ  60.00   (3) to BRKR  PATTERSN
60.00
 1  34010 34012  "1 "    0     # line from  CRWS LDJ  60.00   (3) to (2)   GUSTN JT
60.00
 1  34012 34014  "1 "    0     # line from  GUSTN JT  60.00   (2) to BRKR  NEWMAN
60.00
 4  34017     0  "1 "    0     # LOAD-DROP    CRWS LDG  60.00  LOAD==3.73(0.17)
 1  34016 34017  "1 "    1      # Switches in Crows Landing SW 57 to transfer load
 4  34017     0  "**"    1      # Restore Load at Crows Landing
 0
  #
  #
  # (22)  B2 LINE OUTAGE (BREAKER-TO-BREAKER)
  #
 1  34100 34101  "1 "    0     # line from  CHWCHLLA 115.00  BRKR to (3)   CERTAN T
115.00
 1  34101 34116  "1 "    0     # line from  CERTAN T 115.00   (3) to BRKR  LE GRAND
115.00
 1  34101 34107  "1 "    0     # line from  CERTAN T 115.00   (3) to (2)   CERTANJ2
115.00
 1  34107 34103  "1 "    0     # line from  CERTANJ2 115.00   (2) to (3)   CHWCGNJT
115.00
 1  34103 34102  "1 "    0     # line from  CHWCGNJT 115.00   (3) to (1)   CERTTEED
115.00
 1  34103 34109  "1 "    0     # line from  CHWCGNJT 115.00   (3) to (3)   CHWCGN
115.00
 1  34109 34111  "1 "    0     # line from  CHWCGN   115.00   (3) to (2)   CHWCHLA2
115.00
 2  34109 34301  "1 "    0     # TRAN from  CHWCGN   115.00   (3) to (1)   CHOWCOGN
13.80
 2  34111 34305  "1 "    0     # TRAN from  CHWCHLA2 115.00   (2) to (1)   CHWCHLA2
13.80
 4  34102     0  "1 "    0     # LOAD-DROP    CERTTEED 115.00  LOAD==9.94(6.94)
```

```
 4  34305     0  "ss"    0     # LOAD-DROP    CHWCHLA2  13.80  LOAD==2.00(1.11)
 3  34301     0  "1 "    0     # GEN-DROP    CHOWCOGN  13.80  GEN==50.00(4.33)
 3  34305     0  "1 "    0     # GEN-DROP    CHWCHLA2  13.80  GEN==12.50(7.30)
 0
  #
  #
  # (23)  B2 LINE OUTAGE (BREAKER-TO-BREAKER)
  #
 1  34104 34106  "1 "    0     # line from  ATWATER  115.00  BRKR to (2)   CASTLE
115.00
 1  34106 34138  "1 "    0     # line from  CASTLE   115.00   (2) to BRKR  EL CAPTN
115.00
 0
  #
  #
  # (24)  B2 LINE OUTAGE (BREAKER-TO-BREAKER)
  #
 1  34104 34108  "1 "    0     # line from  ATWATER  115.00  BRKR to (3)   CRESEY T
115.00
 1  34108 34110  "1 "    0     # line from  CRESEY T 115.00  BRKR to (1)   ATWATR J
115.00
 1  34108 34114  "1 "    0     # line from  CRESEY T 115.00   (3) to (3)   JRWD GEN
115.00
 1  34114 34124  "1 "    0     # line from  JRWD GEN 115.00   (3) to (2)   JR WOOD
115.00
 2  34114 34332  "1 "    0     # TRAN from  JRWD GEN 115.00   (3) to (1)   JRWCOGEN
9.11
 1  34124 34140  "1 "    0     # line from  JR WOOD  115.00   (2) to (1)   CRESSEY
115.00
 4  34124     0  "1 "    0     # LOAD-DROP    JR WOOD  115.00  LOAD==11.70(10.32)
 4  34140     0  "1 "    0     # LOAD-DROP    CRESSEY  115.00  LOAD==19.02(3.86)
 3  34332     0  "1 "    0     # GEN-DROP    JRWCOGEN   9.11  GEN==3.80(5.40)
 0
  #
  #
  # (25)  B2 LINE OUTAGE (BREAKER-TO-BREAKER)
  #
 1  34105 34100  "1 "    0     # line from  CERTANJ1 115.00   (2) to BRKR  CHWCHLLA
115.00
 1  34105 34121  "1 "    0     # line from  CERTANJ1 115.00   (2) to (3)   SHARON T
115.00
 1  34121 34120  "1 "    0     # line from  SHARON T 115.00   (3) to (1)   SHARON
115.00
 1  34121 34128  "1 "    0     # line from  SHARON T 115.00   (3) to (3)   OAKH_JCT
115.00
 1  34128 34126  "1 "    0     # line from  OAKH_JCT 115.00   (3) to (2)   CORSGOLD
115.00
 1  34128 34123  "1 "    0     # line from  OAKH_JCT 115.00   (3) to (2)   K1-JCT
115.00
 1  34126 34122  "1 "    0     # line from  CORSGOLD 115.00   (2) to (1)   OAKHURST
115.00
 1  34123 34358  "2 "    0     # line from  K1-JCT   115.00   (2) to BRKR  KERCKHF2
115.00
 4  34120     0  "1 "    0     # LOAD-DROP    SHARON   115.00  LOAD==7.10(4.96)
 4  34126     0  "1 "    0     # LOAD-DROP    CORSGOLD 115.00  LOAD==2.21(0.45)
 4  34126     0  "2 "    0     # LOAD-DROP    CORSGOLD 115.00  LOAD==26.19(5.32)
 4  34122     0  "1 "    0     # LOAD-DROP    OAKHURST 115.00  LOAD==11.68(2.37)
 4  34122     0  "2 "    0     # LOAD-DROP    OAKHURST 115.00  LOAD==15.01(3.05)
 0
  #
  #
  # (26)  B2 LINE OUTAGE (BREAKER-TO-BREAKER)
  #
 1  34108 34110  "1 "    0     # line from  CRESEY T 115.00  BRKR to (3)   ATWATR J
115.00
 1  34110 34130  "1 "    0     # line from  ATWATR J 115.00   (3) to (2)   LIVNGSTN
115.00
 1  34110 34144  "1 "    0     # line from  ATWATR J 115.00   (3) to BRKR  MERCED
115.00
```

```
 1  34130 34132  "1 "    0     # line from  LIVNGSTN 115.00   (2) to (1)   GALLO
115.00
 4  34130     0  "3 "    0     # LOAD-DROP    LIVNGSTN 115.00  LOAD==24.58(5.00)
 4  34132     0  "1 "    0     # LOAD-DROP    GALLO    115.00  LOAD==4.30(3.68)
 0
  #
  #
  # (27)  B2 LINE OUTAGE (BREAKER-TO-BREAKER)
  #
 1  34112 34116  "1 "    0     # line from  EXCHEQUR 115.00  BRKR to BRKR  LE GRAND
115.00
 3  34306     0  "1 "    0      # Exchequer Unit will trip for this outage
 4  34228     0  "**"    0      # Mariposa Loads will drop if bus is below 64 kV, this is
anticipate
 0
  #
  #
  # (28)  B2 LINE OUTAGE (BREAKER-TO-BREAKER)
  #
 1  34116 34134  "1 "    0     # line from  LE GRAND 115.00  BRKR to BRKR  WILSON A
115.00
 0
  #
  #
  # (29)  B2 LINE OUTAGE (BREAKER-TO-BREAKER)
  #
 1  34116 34154  "1 "    0     # line from  LE GRAND 115.00  BRKR to BRKR  DAIRYLND
115.00
 0
  #
  #
  # (30)  B2 LINE OUTAGE (BREAKER-TO-BREAKER)
  #
 1  34118 34136  "1 "    0     # line from  LE GRNDJ 115.00   (2) to BRKR  WILSON B
115.00
 1  34118 34168  "1 "    0     # line from  LE GRNDJ 115.00   (2) to (2)   EL NIDO
115.00
 1  34168 34162  "1 "    0     # line from  EL NIDO  115.00   (2) to BRKR  ORO LOMA
115.00
 4  34168     0  "1 "    0     # LOAD-DROP    EL NIDO  115.00  LOAD==12.49(2.54)
 4  34168     0  "2 "    0     # LOAD-DROP    EL NIDO  115.00  LOAD==15.00(3.05)
 0
  #
  #
  # (31)  B2 LINE OUTAGE (BREAKER-TO-BREAKER)
  #
 1  34134 34104  "1 "    0     # line from  WILSON A 115.00  BRKR to BRKR  ATWATER
115.00
 0
  #
  #
  # (32)  B2 LINE OUTAGE (BREAKER-TO-BREAKER)
  #
 1  34134 34136  "1 "    0     # line from  WILSON A 115.00  BRKR to BRKR  WILSON B
115.00
 0
  #
  #
  # (33)  B2 LINE OUTAGE (BREAKER-TO-BREAKER)
  #
 1  34134 34144  "1 "    0     # line from  WILSON A 115.00  BRKR to BRKR  MERCED
115.00
 0
  #
  #
  # (34)  B2 LINE OUTAGE (BREAKER-TO-BREAKER)
  #
 1  34136 34138  "1 "    0     # line from  WILSON B 115.00  BRKR to BRKR  EL CAPTN
115.00
 0
```

```
  #
  #
  # (35)  B2 LINE OUTAGE (BREAKER-TO-BREAKER)
  #
 1  34136 34144  "2 "    0     # line from  WILSON B 115.00  BRKR to BRKR  MERCED
115.00
 0
  #
  #
  # (36)  B2 LINE OUTAGE (BREAKER-TO-BREAKER)
  #
 1  34141 34148  "1 "    0     # line from  PAN2_TAP 115.00   (2) to (2)   CHENY
115.00
 2  34141 34142  "1 "    0     # TRAN from  PAN2_TAP 115.00   (2) to (1)   WHD_PAN2
13.80
 1  34148 34149  "1 "    0     # line from  CHENY    115.00   (2) to (3)   CHENYT
115.00
 1  34149 34158  "1 "    0     # line from  CHENYT   115.00   (3) to BRKR  PANOCHE
115.00
 1  34149 34354  "1 "    0     # line from  CHENYT   115.00   (3) to BRKR  SCHINDLR
115.00
 4  34148     0  "1 "    0     # LOAD-DROP    CHENY    115.00  LOAD==13.12(2.66)
 3  34142     0  "1 "    0     # GEN-DROP    WHD_PAN2  13.80  GEN==49.00(4.03)
 0
  #
  #
  # (37)  B2 LINE OUTAGE (BREAKER-TO-BREAKER)
  #
 1  34150 34154  "1 "    0     # line from  NEWHALL  115.00   (2) to BRKR  DAIRYLND
115.00
 1  34150 34178  "1 "    0     # line from  NEWHALL  115.00   (2) to (3)   MADERAPR
115.00
 1  34178 34156  "1 "    0     # line from  MADERAPR 115.00   (3) to BRKR  MENDOTA
115.00
 2  34178 34179  "1 "    0     # TRAN from  MADERAPR 115.00   (3) to (1)   MADERA_G
13.80
 4  34150     0  "2 "    0     # LOAD-DROP    NEWHALL  115.00  LOAD==8.55(1.73)
 4  34150     0  "3 "    0     # LOAD-DROP    NEWHALL  115.00  LOAD==10.62(2.16)
 4  34179     0  "ss"    0     # LOAD-DROP    MADERA_G  13.80  LOAD==3.60(0.85)
 3  34179     0  "1 "    0     # GEN-DROP    MADERA_G  13.80  GEN==28.60(6.34)
 0
  #
  #
  # (38)  B2 LINE OUTAGE (BREAKER-TO-BREAKER)
  #
 1  34157 34156  "1 "    0     # line from  PANOCHET 115.00   (2) to BRKR  MENDOTA
115.00
 1  34157 34158  "1 "    0     # line from  PANOCHET 115.00   (2) to BRKR  PANOCHE
115.00
 3  34186     0  "1 "    0     # DG_PAN Unit trips for Panoche - Mendota 115 kV outage
 0
  #
  #
  # (39)  B2 LINE OUTAGE (BREAKER-TO-BREAKER)
  #
 1  34158 34189  "1 "    0     # line from  PANOCHE  115.00  BRKR to (3)   STARWOOD
115.00
 2  34189 34328  "1 "    0     # TRAN from  STARWOOD 115.00   (3) to (1)   STARGT1
13.80
 2  34189 34329  "1 "    0     # TRAN from  STARWOOD 115.00   (3) to (1)   STARGT2
13.80
 4  34328     0  "ss"    0     # LOAD-DROP    STARGT1   13.80  LOAD==1.00(0.55)
 4  34329     0  "ss"    0     # LOAD-DROP    STARGT2   13.80  LOAD==1.00(0.55)
 3  34328     0  "1 "    0     # GEN-DROP    STARGT1   13.80  GEN==60.94(9.59)
 3  34329     0  "2 "    0     # GEN-DROP    STARGT2   13.80  GEN==60.94(9.59)
 0
  #
  #
  # (40)  B2 LINE OUTAGE (BREAKER-TO-BREAKER)
  #
```

```
 1  34158 34350  "1 "    0     # line from  PANOCHE  115.00  BRKR to (2)   KAMM
115.00
 1  34350 34352  "1 "    0     # line from  KAMM     115.00   (2) to (2)   CANTUA
115.00
 1  34352 34432  "1 "    0     # line from  CANTUA   115.00   (2) to (2)   WESTLNDS
115.00
 1  34432 34354  "1 "    0     # line from  WESTLNDS 115.00   (2) to BRKR  SCHINDLR
115.00
 4  34350     0  "1 "    0     # LOAD-DROP    KAMM     115.00  LOAD==3.85(1.75)
 4  34352     0  "1 "    0     # LOAD-DROP    CANTUA   115.00  LOAD==16.79(3.41)
 4  34432     0  "16"    0     # LOAD-DROP    WESTLNDS 115.00  LOAD==0.94(0.23)
 4  34432     0  "18"    0     # LOAD-DROP    WESTLNDS 115.00  LOAD==1.21(0.32)
 0
  #
  #
  # (41)  B2 LINE OUTAGE (BREAKER-TO-BREAKER)
  #
 1  34159 34158  "1 "    0     # line from  PANOCHEJ 115.00   (3) to BRKR  PANOCHE
115.00
 1  34159 34160  "1 "    0     # line from  PANOCHEJ 115.00   (3) to (2)   HAMMONDS
115.00
 1  34159 34180  "1 "    0     # line from  PANOCHEJ 115.00   (3) to (3)   OXFRDJCT
115.00
 1  34160 34161  "1 "    0     # line from  HAMMONDS 115.00   (2) to (3)   DFSTP
115.00
 1  34161 34162  "1 "    0     # line from  DFSTP    115.00   (3) to BRKR  ORO LOMA
115.00
 1  34161 34164  "1 "    0     # line from  DFSTP    115.00   (3) to (1)   DFS
115.00
 1  34180 34166  "1 "    0     # line from  OXFRDJCT 115.00   (3) to (1)   OXFORD
115.00
 1  34180 34181  "1 "    0     # line from  OXFRDJCT 115.00   (3) to (3)   WSTLDJCT
115.00
 1  34181 34182  "1 "    0     # line from  WSTLDJCT 115.00   (3) to (1)   WSTLD1RA
115.00
 1  34181 34183  "1 "    0     # line from  WSTLDJCT 115.00   (3) to (3)   LUISJCT
115.00
 1  34183 34163  "1 "    0     # line from  LUISJCT  115.00   (3) to (1)   LUIS_#3
115.00
 1  34183 34165  "1 "    0     # line from  LUISJCT  115.00   (3) to (1)   LUIS_#5
115.00
 4  34160     0  "1 "    0     # LOAD-DROP    HAMMONDS 115.00  LOAD==10.00(2.03)
 4  34164     0  "1 "    0     # LOAD-DROP    DFS      115.00  LOAD==1.37(1.06)
 4  34166     0  "1 "    0     # LOAD-DROP    OXFORD   115.00  LOAD==3.87(1.76)
 4  34182     0  "1 "    0     # LOAD-DROP    WSTLD1RA 115.00  LOAD==2.98(0.71)
 4  34163     0  "1 "    0     # LOAD-DROP    LUIS_#3  115.00  LOAD==3.30(0.78)
 4  34165     0  "1 "    0     # LOAD-DROP    LUIS_#5  115.00  LOAD==3.40(0.81)
 0
  #
  #
  # (42)  B2 LINE OUTAGE (BREAKER-TO-BREAKER)
  #
 1  34172 34170  "1 "    0     # line from  WESTLAND  70.00   (2) to (1)   WESIX
70.00
 1  34172 34271  "1 "    0     # line from  WESTLAND  70.00   (2) to (3)   WSTLDJCT
70.00
 1  34271 34269  "1 "    0     # line from  WSTLDJCT  70.00   (3) to (3)   BIOMSJCT
70.00
 1  34271 34469  "1 "    0     # line from  WSTLDJCT  70.00   (3) to (3)   GFFNJCT
70.00
 1  34269 34268  "1 "    0     # line from  BIOMSJCT  70.00   (3) to BRKR  MENDOTA
70.00
 1  34269 34270  "1 "    0     # line from  BIOMSJCT  70.00   (3) to (2)   BIOMASS
70.00
 2  34270 34334  "1 "    0     # TRAN from  BIOMASS   70.00   (2) to (1)   BIO PWR
9.11
 1  34469 34470  "1 "    0     # line from  GFFNJCT   70.00   (3) to (1)   GIFFEN
70.00
 1  34469 34471  "1 "    0     # line from  GFFNJCT   70.00   (3) to (3)   SNJQJCT
70.00
```

```
 1  34471 34472  "1 "    0     # line from  SNJQJCT   70.00   (3) to BRKR  SAN JOQN
70.00
 1  34471 34474  "1 "    0     # line from  SNJQJCT   70.00   (3) to BRKR  HELM
70.00
 4  34172     0  "1 "    0     # LOAD-DROP    WESTLAND  70.00  LOAD==3.20(0.76)
 4  34170     0  "1 "    0     # LOAD-DROP    WESIX     70.00  LOAD==1.60(0.38)
 4  34470     0  "1 "    0     # LOAD-DROP    GIFFEN    70.00  LOAD==9.59(1.95)
 3  34334     0  "1 "    0     # GEN-DROP    BIO PWR    9.11  GEN==21.80(10.99)
 1  34472 34473  "1 "    1      # Switches in San Joaquin CB22 to transfer load
 4  34472     0  "**"    1      # Restore Load at San Joaquin
 0
  #
  #
  # (43)  B2 LINE OUTAGE (BREAKER-TO-BREAKER)
  #
 1  34200 34218  "1 "    0     # line from  ORO LOMA  70.00  BRKR to (2)   DOS PALS
70.00
 1  34218 34216  "1 "    0     # line from  DOS PALS  70.00   (2) to BRKR  SNTA RTA
70.00
 4  34218     0  "1 "    0     # LOAD-DROP    DOS PALS  70.00  LOAD==10.29(2.09)
 0
  #
  #
  # (44)  B2 LINE OUTAGE (BREAKER-TO-BREAKER)
  #
 1  34200 34222  "1 "    0     # line from  ORO LOMA  70.00  BRKR to (3)   MRCYSPRS
70.00
 1  34222 34220  "1 "    0     # line from  MRCYSPRS  70.00   (3) to (2)   ORTIGA
70.00
 1  34222 34224  "1 "    0     # line from  MRCYSPRS  70.00   (3) to (2)   ARBURUA
70.00
 1  34220 34206  "1 "    0     # line from  ORTIGA    70.00   (2) to BRKR  CANAL
70.00
 1  34224 34272  "1 "    0     # line from  ARBURUA   70.00   (2) to (2)   WRGHT PP
70.00
 1  34272 34214  "1 "    0     # line from  WRGHT PP  70.00   (2) to BRKR  LOS BANS
70.00
 4  34220     0  "1 "    0     # LOAD-DROP    ORTIGA    70.00  LOAD==6.88(1.40)
 4  34224     0  "1 "    0     # LOAD-DROP    ARBURUA   70.00  LOAD==3.77(1.83)
 4  34272     0  "1 "    0     # LOAD-DROP    WRGHT PP  70.00  LOAD==9.50(1.93)
 0
  #
  #
  # (45)  B2 LINE OUTAGE (BREAKER-TO-BREAKER)
  #
 1  34200 34234  "1 "    0     # line from  ORO LOMA  70.00  BRKR to (2)   POSO J1
70.00
 1  34234 34266  "1 "    0     # line from  POSO J1   70.00   (2) to (2)   FIREBAGH
70.00
 1  34266 34267  "1 "    0     # line from  FIREBAGH  70.00   (2) to (2)   TOMATAK
70.00
 1  34267 34268  "1 "    0     # line from  TOMATAK   70.00   (2) to BRKR  MENDOTA
70.00
 4  34266     0  "1 "    0     # LOAD-DROP    FIREBAGH  70.00  LOAD==11.13(2.26)
 4  34267     0  "1 "    0     # LOAD-DROP    TOMATAK   70.00  LOAD==6.40(4.97)
 0
  #
  #
  # (46)  B2 LINE OUTAGE (BREAKER-TO-BREAKER)
  #
 1  34202 34203  "1 "    0     # line from  MERCED    70.00  BRKR to (3)   ELNIDOTP
70.00
 1  34203 34205  "1 "    0     # line from  ELNIDOTP  70.00   (3) to (2)   ELNIDO
70.00
 1  34203 34236  "1 "    0     # line from  ELNIDOTP  70.00   (3) to (1)   POSO J2
70.00
 2  34205 34330  "1 "    0     # TRAN from  ELNIDO    70.00   (2) to (1)   ELNIDO
13.80
 4  34330     0  "ss"    0     # LOAD-DROP    ELNIDO    13.80  LOAD==2.00(1.11)
 3  34330     0  "1 "    0     # GEN-DROP    ELNIDO    13.80  GEN==12.50(5.69)
```

```
 0
  #
  #
  # (47)  B2 LINE OUTAGE (BREAKER-TO-BREAKER)
  #
 1  34202 34230  "1 "    0     # line from  MERCED    70.00  BRKR to BRKR  MRCDFLLS
70.00
 0
  #
  #
  # (48)  B2 LINE OUTAGE (BREAKER-TO-BREAKER)
  #
 1  34204 34212  "1 "    0     # line from  LIVNGSTN  70.00   (1) to (3)   LVNGSTNT
70.00
 1  34212 34206  "1 "    0     # line from  LVNGSTNT  70.00   (3) to BRKR  CANAL
70.00
 1  34212 34210  "1 "    0     # line from  LVNGSTNT  70.00   (3) to (2)   SNTA NLA
70.00
 1  34210 34208  "1 "    0     # line from  SNTA NLA  70.00   (2) to (2)   CHEVPIPE
70.00
 1  34208 34214  "1 "    0     # line from  CHEVPIPE  70.00   (2) to BRKR  LOS BANS
70.00
 4  34204     0  "2 "    0     # LOAD-DROP    LIVNGSTN  70.00  LOAD==5.51(1.12)
 4  34210     0  "1 "    0     # LOAD-DROP    SNTA NLA  70.00  LOAD==6.75(1.37)
 4  34210     0  "2 "    0     # LOAD-DROP    SNTA NLA  70.00  LOAD==9.50(1.93)
 4  34208     0  "1 "    0     # LOAD-DROP    CHEVPIPE  70.00  LOAD==0.63(0.42)
 0
  #
  #
  # (49)  B2 LINE OUTAGE (BREAKER-TO-BREAKER)
  #
 1  34206 34216  "1 "    0     # line from  CANAL     70.00  BRKR to BRKR  SNTA RTA
70.00
 0
  #
  #
  # (50)  B2 LINE OUTAGE (BREAKER-TO-BREAKER)
  #
 1  34214 34278  "1 "    0     # line from  LOS BANS  70.00  BRKR to (2)   PCHCO PP
70.00
 1  34278 34280  "1 "    0     # line from  PCHCO PP  70.00   (2) to (2)   INTL TUR
70.00
 2  34280 34342  "1 "    0     # TRAN from  INTL TUR  70.00   (2) to (1)   INT.TURB
9.11
 4  34278     0  "1 "    0     # LOAD-DROP    PCHCO PP  70.00  LOAD==18.00(4.10)
 3  34342     0  "1 "    0     # GEN-DROP    INT.TURB   9.11  GEN==1.10(0.00)
 0
  #
  #
  # (51)  B2 LINE OUTAGE (BREAKER-TO-BREAKER)
  #
 1  34214 34282  "1 "    0     # line from  LOS BANS  70.00  BRKR to (2)   ONLL PMP
69.00
 2  34282 34316  "1 "    0     # TRAN from  ONLL PMP  69.00   (2) to (1)   ONEILPMP
9.11
 4  34282     0  "1 "    0     # LOAD-DROP    ONLL PMP  69.00  LOAD==6.00(1.20)
 3  34316     0  "1 "    0     # GEN-DROP    ONEILPMP   9.11  GEN==0.50(0.00)
 0
  #
  #
  # (52)  B2 LINE OUTAGE (BREAKER-TO-BREAKER)
  #
 1  34228 34232  "1 "    0     # line from  MARIPOS2  70.00   (1) to BRKR  EXCHEQUR
70.00
 4  34228     0  "1 "    0     # LOAD-DROP    MARIPOS2  70.00  LOAD==9.01(1.83)
 4  34228     0  "2 "    0     # LOAD-DROP    MARIPOS2  70.00  LOAD==9.37(1.90)
 1  34228 34244  "1 "    1      # Switches in Mariposa SW 39 to transfer load
 4  34228     0  "**"    1      # Restore Load at Mariposa
 0
  #
```

```
  #
  # (53)  B2 LINE OUTAGE (BREAKER-TO-BREAKER)
  #
 1  34232 34242  "1 "    0     # line from  EXCHEQUR  70.00  BRKR to (2)   BER VLLY
70.00
 1  34242 34244  "1 "    0     # line from  BER VLLY  70.00   (2) to (2)   BRCEBG J
70.00
 1  34244 34246  "1 "    0     # line from  BRCEBG J  70.00   (2) to (3)   SAXONCRK
70.00
 1  34246 34248  "1 "    0     # line from  SAXONCRK  70.00   (3) to (2)   INDN FLT
70.00
 2  34246 34346  "1 "    0     # TRAN from  SAXONCRK  70.00   (3) to (1)   SAXNCK L
4.16
 1  34248 34250  "1 "    0     # line from  INDN FLT  70.00   (2) to (1)   YOSEMITE
70.00
 4  34242     0  "1 "    0     # LOAD-DROP    BER VLLY  70.00  LOAD==5.91(1.20)
 4  34246     0  "1 "    0     # LOAD-DROP    SAXONCRK  70.00  LOAD==0.03(0.02)
 4  34248     0  "1 "    0     # LOAD-DROP    INDN FLT  70.00  LOAD==2.02(0.41)
 4  34250     0  "1 "    0     # LOAD-DROP    YOSEMITE  70.00  LOAD==2.90(0.00)
 0
  #
  #
  # (54)  B2 LINE OUTAGE (BREAKER-TO-BREAKER)
  #
 1  34237 34255  "1 "    0     # line from  CANANDGA  70.00   (2) to (3)   TRIGO J
70.00
 1  34237 34240  "1 "    0     # line from  CANANDGA  70.00   (2) to BRKR  GLASS
70.00
 1  34255 34238  "1 "    0     # line from  TRIGO J   70.00   (3) to BRKR  BONITA
70.00
 1  34255 34254  "1 "    0     # line from  TRIGO J   70.00   (3) to (3)   TRIGO
70.00
 1  34254 34252  "1 "    0     # line from  TRIGO     70.00   (3) to BRKR  MADERA
70.00
 1  34254 34264  "1 "    0     # line from  TRIGO     70.00   (3) to (1)   EL PECO
70.00
 4  34237     0  "1 "    0     # LOAD-DROP    CANANDGA  70.00  LOAD==7.60(5.70)
 4  34238     0  "1 "    0     # LOAD-DROP    BONITA    70.00  LOAD==14.37(2.92)
 4  34264     0  "1 "    0     # LOAD-DROP    EL PECO   70.00  LOAD==9.86(2.01)
 4  34264     0  "2 "    0     # LOAD-DROP    EL PECO   70.00  LOAD==7.26(1.48)
 1  34238 34236  "1 "    1      # Switches in Bonita SW23 to transfer load
 4  34238     0  "1 "    1      # Restore Load at Bonita
 0
  #
  #
  # (55)  B2 LINE OUTAGE (BREAKER-TO-BREAKER)
  #
 1  34252 34256  "1 "    0     # line from  MADERA    70.00  BRKR to BRKR  BORDEN
70.00
 0
  #
  #
  # (56)  B2 LINE OUTAGE (BREAKER-TO-BREAKER)
  #
 1  34252 34256  "2 "    0     # line from  MADERA    70.00  BRKR to BRKR  BORDEN
70.00
 0
  #
  #
  # (57)  B2 LINE OUTAGE (BREAKER-TO-BREAKER)
  #
 1  34256 34240  "1 "    0     # line from  BORDEN    70.00  BRKR to BRKR  GLASS
70.00
 0
  #
  #
  # (58)  B2 LINE OUTAGE (BREAKER-TO-BREAKER)
  #
 1  34256 34262  "1 "    0     # line from  BORDEN    70.00  BRKR to (2)   CASSIDY
70.00
```

```
 1  34262 34454  "1 "    0     # line from  CASSIDY   70.00   (2) to (2)   RIVERROC
70.00
 1  34454 34464  "1 "    0     # line from  RIVERROC  70.00   (2) to BRKR  COPPRMNE
70.00
 4  34262     0  "1 "    0     # LOAD-DROP    CASSIDY   70.00  LOAD==14.31(2.90)
 4  34454     0  "1 "    0     # LOAD-DROP    RIVERROC  70.00  LOAD==2.01(1.83)
 0
  #
  #
  # (59)  B2 LINE OUTAGE (BREAKER-TO-BREAKER)
  #
 1  34259 34261  "1 "    0     # line from  NRTHFORK  70.00   (3) to (2)   SJNO3
70.00
 1  34259 34260  "1 "    0     # line from  NRTHFORK  70.00   (3) to (3)   SJNO2
70.00
 2  34259 34340  "1 "    0     # TRAN from  NRTHFORK  70.00   (3) to (1)   N.FORK E
9.11
 2  34261 34633  "1 "    0     # TRAN from  SJNO3     70.00   (2) to (1)   SJ3GEN
9.11
 1  34260 34452  "1 "    0     # line from  SJNO2     70.00   (3) to BRKR  WISHON
70.00
 2  34260 34631  "1 "    0     # TRAN from  SJNO2     70.00   (3) to (1)   SJ2GEN
9.11
 4  34261     0  "2 "    0     # LOAD-DROP    SJNO3     70.00  LOAD==6.95(1.41)
 4  34260     0  "2 "    0     # LOAD-DROP    SJNO2     70.00  LOAD==3.22(0.66)
 4  34340     0  "1 "    0     # LOAD-DROP    N.FORK E   9.11  LOAD==1.21(0.25)
 3  34633     0  "1 "    0     # GEN-DROP    SJ3GEN     9.11  GEN==1.00(0.00)
 3  34631     0  "1 "    0     # GEN-DROP    SJ2GEN     9.11  GEN==2.00(0.00)
 0
  #
  #
  # (60)  B2 LINE OUTAGE (BREAKER-TO-BREAKER)
  #
 1  34321 34226  "1 "    0     # line from  MCSWAINJ  70.00   (3) to (2)   MC SWAIN
70.00
 1  34321 34230  "1 "    0     # line from  MCSWAINJ  70.00   (3) to BRKR  MRCDFLLS
70.00
 1  34321 34232  "1 "    0     # line from  MCSWAINJ  70.00   (3) to BRKR  EXCHEQUR
70.00
 2  34226 34320  "1 "    0     # TRAN from  MC SWAIN  70.00   (2) to (1)   MCSWAIN
9.11
 3  34320     0  "1 "    0     # GEN-DROP    MCSWAIN    9.11  GEN==10.00(2.00)
 0
  #
  #
  # (61)  B2 LINE OUTAGE (BREAKER-TO-BREAKER)
  #
 1  37563 30800  "1 "    0     # line from  MELONES  230.00  BRKR to BRKR  WILSON
230.00
 3  34604     0  "**"    0      # Drop unit#3 with a loss Melones - Wilson line
 0
  #
  #
  # (62)  B2 LINE OUTAGE (BREAKER-TO-BREAKER)
  #
 1  38615 30790  "1 "    0     # line from  DS AMIGO 230.00  BRKR to BRKR  PANOCHE
230.00
 0
  #
  #
  # (63)  B3 TRANSFORMER OUTAGE (BREAKER-TO-BREAKER)
  #
#      **** 3-WINDING TRANSFORMER  30765  (30069)  30050  34302 :
 2  30765 30050  "1 "    0     # TRAN from  LOSBANOS 230.00  BRKR to (1)   LOSBANOS
500.00
 0
  #
  #
  # (64)  B3 TRANSFORMER OUTAGE (BREAKER-TO-BREAKER)
  #
```

```
#      **** 3-WINDING TRANSFORMER  30790  (30791)  34158  34310 :
 2  30790 34158  "1 "    0     # TRAN from  PANOCHE  230.00  BRKR to (1)   PANOCHE
115.00
 0
  #
  #
  # (65)  B3 TRANSFORMER OUTAGE (BREAKER-TO-BREAKER)
  #
 2  30790 34158  "2 "    0     # TRAN from  PANOCHE  230.00  BRKR to BRKR  PANOCHE
115.00
 0
  #
  #
  # (66)  B3 TRANSFORMER OUTAGE (BREAKER-TO-BREAKER)
  #
#      **** 3-WINDING TRANSFORMER  34112  (34176)  34232  34306 :
 2  34112 34232  "1 "    0     # TRAN from  EXCHEQUR 115.00  BRKR to (4)   EXCHEQUR
70.00
 1  34232 34228  "1 "    0     # line from  EXCHEQUR  70.00  BRKR to (1)   MARIPOS2
70.00
 1  34232 34242  "1 "    0     # line from  EXCHEQUR  70.00  BRKR to (1)   BER VLLY
70.00
 1  34232 34321  "1 "    0     # line from  EXCHEQUR  70.00  BRKR to (1)   MCSWAINJ
70.00
 4  34228     0  "1 "    0     # LOAD-DROP    MARIPOS2  70.00  LOAD==9.01(1.83)
 4  34228     0  "2 "    0     # LOAD-DROP    MARIPOS2  70.00  LOAD==9.37(1.90)
 1  34228 34244  "1 "    1      # Switches in Mariposa SW 39 to transfer load
 4  34228     0  "**"    1      # Restore Load at Mariposa
 0
  #
  #
  # (67)  B3 TRANSFORMER OUTAGE (BREAKER-TO-BREAKER)
  #
 2  34134 30800  "1 "    0     # TRAN from  WILSON A 115.00  BRKR to BRKR  WILSON
230.00
 0
  #
  #
  # (68)  B3 TRANSFORMER OUTAGE (BREAKER-TO-BREAKER)
  #
 2  34136 30800  "2 "    0     # TRAN from  WILSON B 115.00  BRKR to BRKR  WILSON
230.00
 0
  #
  #
  # (69)  B3 TRANSFORMER OUTAGE (BREAKER-TO-BREAKER)
  #
#      **** 3-WINDING TRANSFORMER  34144  (34146)  34202  34312 :
 2  34144 34202  "2 "    0     # TRAN from  MERCED   115.00  BRKR to (1)   MERCED
70.00
 0
  #
  #
  # (70)  B3 TRANSFORMER OUTAGE (BREAKER-TO-BREAKER)
  #
 2  34200 34162  "2 "    0     # TRAN from  ORO LOMA  70.00  BRKR to (3)   ORO LOMA
115.00
 1  34162 34161  "1 "    0     # line from  ORO LOMA 115.00  BRKR to (1)   DFSTP
115.00
 1  34162 34168  "1 "    0     # line from  ORO LOMA 115.00  BRKR to (1)   EL NIDO
115.00
 0
  #
  #
  # (71)  B3 TRANSFORMER OUTAGE (BREAKER-TO-BREAKER)
  #
 2  34214 30765  "3 "    0     # TRAN from  LOS BANS  70.00  BRKR to BRKR  LOSBANOS
230.00
 0
  #
```

```
  #
  # (72)  B3 TRANSFORMER OUTAGE (BREAKER-TO-BREAKER)
  #
 2  34214 30765  "4 "    0     # TRAN from  LOS BANS  70.00  BRKR to BRKR  LOSBANOS
230.00
 0
  #
  #
  # (73)  B3 TRANSFORMER OUTAGE (BREAKER-TO-BREAKER)
  #
 2  34256 30805  "1 "    0     # TRAN from  BORDEN    70.00  BRKR to BRKR  BORDEN
230.00
 0
  #
  #
  # (74)  B3 TRANSFORMER OUTAGE (BREAKER-TO-BREAKER)
  #
 2  34256 30805  "2 "    0     # TRAN from  BORDEN    70.00  BRKR to BRKR  BORDEN
230.00
 0
  #
  #
  # (75)  B3 TRANSFORMER OUTAGE (BREAKER-TO-BREAKER)
  #
 2  34268 34156  "1 "    0     # TRAN from  MENDOTA   70.00  BRKR to (3)   MENDOTA
115.00
 1  34156 34178  "1 "    0     # line from  MENDOTA  115.00  BRKR to (1)   MADERAPR
115.00
 1  34156 34157  "1 "    0     # line from  MENDOTA  115.00  BRKR to (1)   PANOCHET
115.00
 4  34156     0  "1 "    0     # LOAD-DROP    MENDOTA  115.00  LOAD==24.55(4.99)
 0
  #
  #
  # (76)  B1 GENERATOR OUTAGE
  #
 3  34142     0  "1"     0     # WHD_PAN2  13.80       PGEN=49.00  QGEN=-22.43
 0
  #
  #
  # (77)  B1 GENERATOR OUTAGE
  #
 3  34179     0  "1"     0     # MADERA_G  13.80       PGEN=28.60  QGEN=3.67
 0
  #
  #
  # (78)  B1 GENERATOR OUTAGE
  #
 3  34186     0  "1"     0     # DG_PAN1   13.80       PGEN=49.00  QGEN=-17.22
 0
  #
  #
  # (79)  B1 GENERATOR OUTAGE
  #
 3  34301     0  "1"     0     # CHOWCOGN  13.80       PGEN=50.00  QGEN=0.72
 0
  #
  #
  # (80)  B1 GENERATOR OUTAGE
  #
 3  34305     0  "1"     0     # CHWCHLA2  13.80       PGEN=12.50  QGEN=7.35
 0
  #
  #
  # (81)  B1 GENERATOR OUTAGE
  #
 3  34306     0  "1"     0     # EXCHQUER  13.80       PGEN=94.50  QGEN=8.77
 0
  #
  #
```

```
 # (82)  B1 GENERATOR OUTAGE
 #
3  34316     0  "1"     0     # ONEILPMP   9.11       PGEN=0.52  QGEN=0.00
0
 #
 #
 # (83)  B1 GENERATOR OUTAGE
 #
3  34320     0  "1"     0     # MCSWAIN    9.11       PGEN=10.00  QGEN=0.00
0
 #
 #
 # (84)  B1 GENERATOR OUTAGE
 #
3  34322     0  "1"     0     # MERCEDFL   9.11       PGEN=3.50  QGEN=2.00
0
 #
 #
 # (85)  B1 GENERATOR OUTAGE
 #
3  34326     0  "1"     0     # PANO_BS1  13.80       PGEN=102.50  QGEN=25.42
0
 #
 #
 # (86)  B1 GENERATOR OUTAGE
 #
3  34326     0  "2"     0     # PANO_BS1  13.80       PGEN=102.50  QGEN=25.42
0
 #
 #
 # (87)  B1 GENERATOR OUTAGE
 #
3  34327     0  "3"     0     # PANO_BS2  13.80       PGEN=102.50  QGEN=25.42
0
 #
 #
 # (88)  B1 GENERATOR OUTAGE
 #
3  34327     0  "4"     0     # PANO_BS2  13.80       PGEN=102.50  QGEN=25.42
0
 #
 #
 # (89)  B1 GENERATOR OUTAGE
 #
3  34328     0  "1"     0     # STARGT1   13.80       PGEN=60.94  QGEN=13.94
0
 #
 #
 # (90)  B1 GENERATOR OUTAGE
 #
3  34329     0  "2"     0     # STARGT2   13.80       PGEN=60.94  QGEN=13.94
0
 #
 #
 # (91)  B1 GENERATOR OUTAGE
 #
3  34330     0  "1"     0     # ELNIDO    13.80       PGEN=12.50  QGEN=4.15
0
 #
 #
 # (92)  B1 GENERATOR OUTAGE
 #
3  34332     0  "1"     0     # JRWCOGEN   9.11       PGEN=3.80  QGEN=5.40
0
 #
 #
 # (93)  B1 GENERATOR OUTAGE
 #
3  34334     0  "1"     0     # BIO PWR    9.11       PGEN=21.80  QGEN=8.92
0
```

```
 #
 #
 # (94)  B1 GENERATOR OUTAGE
 #
3  34342     0  "1"     0     # INT.TURB   9.11       PGEN=1.10  QGEN=0.00
0
 #
 #
 # (95)  B1 GENERATOR OUTAGE
 #
3  34631     0  "1"     0     # SJ2GEN     9.11       PGEN=2.00  QGEN=0.00
0
 #
 #
 # (96)  B1 GENERATOR OUTAGE
 #
3  34633     0  "1"     0     # SJ3GEN     9.11       PGEN=1.00  QGEN=0.00
0
 #
 #
 # (97)  B1 GENERATOR OUTAGE
 #
3  34335     0  "1"     0     # Q196GT1   16.50       PGEN=192.50  QGEN=31.08
0
 #
 #
 # (98)  B1 GENERATOR OUTAGE
 #
3  34336     0  "2"     0     # Q196GT2   16.50       PGEN=192.50  QGEN=31.08
0
 #
 #
 # (99)  B1 GENERATOR OUTAGE
 #
3  34337     0  "3"     0     # Q196ST1   13.80       PGEN=68.50  QGEN=11.04
0
 #
 #
 # (100)  B1 GENERATOR OUTAGE
 #
3  34338     0  "4"     0     # Q196ST2   13.80       PGEN=68.50  QGEN=11.04
0
 #
 #
 # (101)  B CAPACITOR OUTAGE
 #
6  30765     0  "v"     0     # LOSBANOS  230.0  SVD
0
 #
 #
 # (102)  B CAPACITOR OUTAGE
 #
6  30796     0  "v"     0     # STOREY 1  230.0  SVD
0
 #
 #
 # (103)  B CAPACITOR OUTAGE
 #
6  34134     0  "v"     0     # WILSON A  115.0  SVD
0
 #
 #
 # (104)  B CAPACITOR OUTAGE
 #
6  34252     0  "v"     0     # MADERA     70.0  SVD
0
 #
 #
 # (105)  B CAPACITOR OUTAGE
 #
```

```
 6  34302     0  "v"     0     # L.BANS T   13.8  SVD
 0
  #
  #
  # (106)  L-1/G-1 OVERLAPPING OUTAGE
  # Le Grand - Chowchilla 115 kV Line and Exchequer
 1  34100 34101  "1 "    0     # line from  CHWCHLLA 115.00  BRKR to (3)   CERTAN T
115.00
 1  34101 34116  "1 "    0     # line from  CERTAN T 115.00   (3) to BRKR  LE GRAND
115.00
 1  34101 34107  "1 "    0     # line from  CERTAN T 115.00   (3) to (2)   CERTANJ2
115.00
 1  34107 34103  "1 "    0     # line from  CERTANJ2 115.00   (2) to (3)   CHWCGNJT
115.00
 1  34103 34102  "1 "    0     # line from  CHWCGNJT 115.00   (3) to (1)   CERTTEED
115.00
 1  34103 34109  "1 "    0     # line from  CHWCGNJT 115.00   (3) to (3)   CHWCGN
115.00
 1  34109 34111  "1 "    0     # line from  CHWCGN   115.00   (3) to (2)   CHWCHLA2
115.00
 2  34109 34301  "1 "    0     # TRAN from  CHWCGN   115.00   (3) to (1)   CHOWCOGN
13.80
 2  34111 34305  "1 "    0     # TRAN from  CHWCHLA2 115.00   (2) to (1)   CHWCHLA2
13.80
 4  34102     0  "1 "    0     # LOAD-DROP    CERTTEED 115.00  LOAD==9.94(6.94)
 4  34305     0  "ss"    0     # LOAD-DROP    CHWCHLA2  13.80  LOAD==2.00(1.11)
 3  34301     0  "1 "    0     # GEN-DROP    CHOWCOGN  13.80  GEN==50.00(4.33)
 3  34305     0  "1 "    0     # GEN-DROP    CHWCHLA2  13.80  GEN==12.50(7.30)
  #
 3  34306     0  "1"     0     # EXCHQUER  13.80       PGEN=94.50  QGEN=8.77
 0
  #
  #
  # (107)  L-1/G-1 OVERLAPPING OUTAGE
  # Chowchilla - Kerckhoff #2 115 kV Line and Exchequer
 1  34105 34100  "1 "    0     # line from  CERTANJ1 115.00   (2) to BRKR  CHWCHLLA
115.00
 1  34105 34121  "1 "    0     # line from  CERTANJ1 115.00   (2) to (3)   SHARON T
115.00
 1  34121 34120  "1 "    0     # line from  SHARON T 115.00   (3) to (1)   SHARON
115.00
 1  34121 34128  "1 "    0     # line from  SHARON T 115.00   (3) to (3)   OAKH_JCT
115.00
 1  34128 34126  "1 "    0     # line from  OAKH_JCT 115.00   (3) to (2)   CORSGOLD
115.00
 1  34128 34123  "1 "    0     # line from  OAKH_JCT 115.00   (3) to (2)   K1-JCT
115.00
 1  34126 34122  "1 "    0     # line from  CORSGOLD 115.00   (2) to (1)   OAKHURST
115.00
 1  34123 34358  "2 "    0     # line from  K1-JCT   115.00   (2) to BRKR  KERCKHF2
115.00
 4  34120     0  "1 "    0     # LOAD-DROP    SHARON   115.00  LOAD==7.10(4.96)
 4  34126     0  "1 "    0     # LOAD-DROP    CORSGOLD 115.00  LOAD==2.21(0.45)
 4  34126     0  "2 "    0     # LOAD-DROP    CORSGOLD 115.00  LOAD==26.19(5.32)
 4  34122     0  "1 "    0     # LOAD-DROP    OAKHURST 115.00  LOAD==11.68(2.37)
 4  34122     0  "2 "    0     # LOAD-DROP    OAKHURST 115.00  LOAD==15.01(3.05)
  #
 3  34306     0  "1"     0     # EXCHQUER  13.80       PGEN=94.50  QGEN=8.77
 0
  #
  #
  # (108)  L-1/G-1 OVERLAPPING OUTAGE
  # Atwater - El Capitan 115 kV Line and Exchequer
 1  34104 34106  "1 "    0     # line from  ATWATER  115.00  BRKR to (2)   CASTLE
115.00
 1  34106 34138  "1 "    0     # line from  CASTLE   115.00   (2) to BRKR  EL CAPTN
115.00
  #
 3  34306     0  "1"     0     # EXCHQUER  13.80       PGEN=94.50  QGEN=8.77
 0
```

```
  #
  #
  # (109)  L-1/G-1 OVERLAPPING OUTAGE
  # Atwater - Merced 115 kV Line and Exchequer
 1  34104 34108  "1 "    0     # line from  ATWATER  115.00  BRKR to (3)   CRESEY T
115.00
 1  34108 34110  "1 "    0     # line from  CRESEY T 115.00  BRKR to (1)   ATWATR J
115.00
 1  34108 34114  "1 "    0     # line from  CRESEY T 115.00   (3) to (3)   JRWD GEN
115.00
 1  34114 34124  "1 "    0     # line from  JRWD GEN 115.00   (3) to (2)   JR WOOD
115.00
 2  34114 34332  "1 "    0     # TRAN from  JRWD GEN 115.00   (3) to (1)   JRWCOGEN
9.11
 1  34124 34140  "1 "    0     # line from  JR WOOD  115.00   (2) to (1)   CRESSEY
115.00
 4  34124     0  "1 "    0     # LOAD-DROP    JR WOOD  115.00  LOAD==11.70(10.32)
 4  34140     0  "1 "    0     # LOAD-DROP    CRESSEY  115.00  LOAD==19.02(3.86)
 3  34332     0  "1 "    0     # GEN-DROP    JRWCOGEN   9.11  GEN==3.80(5.40)
  #
 3  34306     0  "1"     0     # EXCHQUER  13.80       PGEN=94.50  QGEN=8.77
 0
  #
  #
  # (110)  L-1/G-1 OVERLAPPING OUTAGE
  # Cressy Tap 115 kV Line and Exchequer
 1  34108 34110  "1 "    0     # line from  CRESEY T 115.00  BRKR to (3)   ATWATR J
115.00
 1  34110 34130  "1 "    0     # line from  ATWATR J 115.00   (3) to (2)   LIVNGSTN
115.00
 1  34110 34144  "1 "    0     # line from  ATWATR J 115.00   (3) to BRKR  MERCED
115.00
 1  34130 34132  "1 "    0     # line from  LIVNGSTN 115.00   (2) to (1)   GALLO
115.00
 4  34130     0  "3 "    0     # LOAD-DROP    LIVNGSTN 115.00  LOAD==24.58(5.00)
 4  34132     0  "1 "    0     # LOAD-DROP    GALLO    115.00  LOAD==4.30(3.68)
  #
 3  34306     0  "1"     0     # EXCHQUER  13.80       PGEN=94.50  QGEN=8.77
 0
  #
  #
  # (111)  L-1/G-1 OVERLAPPING OUTAGE
  # Le Grand - Dairyland 115 kV Line and Exchequer
 1  34116 34154  "1 "    0     # line from  LE GRAND 115.00  BRKR to BRKR  DAIRYLND
115.00
  #
 3  34306     0  "1"     0     # EXCHQUER  13.80       PGEN=94.50  QGEN=8.77
 0
  #
  #
  # (112)  L-1/G-1 OVERLAPPING OUTAGE
  # Wilson - Oro Loma 115 kV Line and Exchequer
 1  34118 34136  "1 "    0     # line from  LE GRNDJ 115.00   (2) to BRKR  WILSON B
115.00
 1  34118 34168  "1 "    0     # line from  LE GRNDJ 115.00   (2) to (2)   EL NIDO
115.00
 1  34168 34162  "1 "    0     # line from  EL NIDO  115.00   (2) to BRKR  ORO LOMA
115.00
 4  34168     0  "1 "    0     # LOAD-DROP    EL NIDO  115.00  LOAD==12.49(2.54)
 4  34168     0  "2 "    0     # LOAD-DROP    EL NIDO  115.00  LOAD==15.00(3.05)
  #
 3  34306     0  "1"     0     # EXCHQUER  13.80       PGEN=94.50  QGEN=8.77
 0
  #
  #
  # (113)  L-1/G-1 OVERLAPPING OUTAGE
  # El Capitan - Wilson 115 kV Line and Exchequer
 1  34136 34138  "1 "    0     # line from  WILSON B 115.00  BRKR to BRKR  EL CAPTN
115.00
  #
```

```
 3  34306     0  "1"     0     # EXCHQUER  13.80       PGEN=94.50  QGEN=8.77
 0
  #
  #
  # (114)  L-1/G-1 OVERLAPPING OUTAGE
  # Dairyland - Mendota 115 kV Line and Exchequer
 1  34150 34154  "1 "    0     # line from  NEWHALL  115.00   (2) to BRKR  DAIRYLND
115.00
 1  34150 34178  "1 "    0     # line from  NEWHALL  115.00   (2) to (3)   MADERAPR
115.00
 1  34178 34156  "1 "    0     # line from  MADERAPR 115.00   (3) to BRKR  MENDOTA
115.00
 2  34178 34179  "1 "    0     # TRAN from  MADERAPR 115.00   (3) to (1)   MADERA_G
13.80
 4  34150     0  "2 "    0     # LOAD-DROP    NEWHALL  115.00  LOAD==8.55(1.73)
 4  34150     0  "3 "    0     # LOAD-DROP    NEWHALL  115.00  LOAD==10.62(2.16)
 4  34179     0  "ss"    0     # LOAD-DROP    MADERA_G  13.80  LOAD==3.60(0.85)
 3  34179     0  "1 "    0     # GEN-DROP    MADERA_G  13.80  GEN==28.60(6.34)
  #
 3  34306     0  "1"     0     # EXCHQUER  13.80       PGEN=94.50  QGEN=8.77
 0
  #
  #
  # (115)  L-1/G-1 OVERLAPPING OUTAGE
  # Panoche - Mendota 115 kV Line and Exchequer
 1  34157 34156  "1 "    0     # line from  PANOCHET 115.00   (2) to BRKR  MENDOTA
115.00
 1  34157 34158  "1 "    0     # line from  PANOCHET 115.00   (2) to BRKR  PANOCHE
115.00
 3  34186     0  "1 "    0     # DG_PAN Unit trips for Panoche - Mendota 115 kV outage
  #
 3  34306     0  "1"     0     # EXCHQUER  13.80       PGEN=94.50  QGEN=8.77
 0
  #
  #
  # (116)  L-1/G-1 OVERLAPPING OUTAGE
  # Glass - Biola - Madera 70 kV Line and Exchequer
 1  34237 34255  "1 "    0     # line from  CANANDGA  70.00   (2) to (3)   TRIGO J
70.00
 1  34237 34240  "1 "    0     # line from  CANANDGA  70.00   (2) to BRKR  GLASS
70.00
 1  34255 34238  "1 "    0     # line from  TRIGO J   70.00   (3) to BRKR  BONITA
70.00
 1  34255 34254  "1 "    0     # line from  TRIGO J   70.00   (3) to (3)   TRIGO
70.00
 1  34254 34252  "1 "    0     # line from  TRIGO     70.00   (3) to BRKR  MADERA
70.00
 1  34254 34264  "1 "    0     # line from  TRIGO     70.00   (3) to (1)   EL PECO
70.00
 4  34237     0  "1 "    0     # LOAD-DROP    CANANDGA  70.00  LOAD==7.60(5.70)
 4  34238     0  "1 "    0     # LOAD-DROP    BONITA    70.00  LOAD==14.37(2.92)
 4  34264     0  "1 "    0     # LOAD-DROP    EL PECO   70.00  LOAD==9.86(2.01)
 4  34264     0  "2 "    0     # LOAD-DROP    EL PECO   70.00  LOAD==7.26(1.48)
 1  34238 34236  "1 "    1      # Switches in Bonita SW23 to transfer load
 4  34238     0  "1 "    1      # Restore Load at Bonita
  #
 3  34306     0  "1"     0     # EXCHQUER  13.80       PGEN=94.50  QGEN=8.77
 0
  #
  #
  # (117)  L-1/G-1 OVERLAPPING OUTAGE
  # Merced Falls - Exchequer 70 kV Line and Exchequer
 1  34321 34226  "1 "    0     # line from  MCSWAINJ  70.00   (3) to (2)   MC SWAIN
70.00
 1  34321 34230  "1 "    0     # line from  MCSWAINJ  70.00   (3) to BRKR  MRCDFLLS
70.00
 1  34321 34232  "1 "    0     # line from  MCSWAINJ  70.00   (3) to BRKR  EXCHEQUR
70.00
 2  34226 34320  "1 "    0     # TRAN from  MC SWAIN  70.00   (2) to (1)   MCSWAIN
9.11
```

```
 3  34320     0  "1 "    0     # GEN-DROP    MCSWAIN    9.11  GEN==10.00(2.00)
  #
 3  34306     0  "1"     0     # EXCHQUER  13.80       PGEN=94.50  QGEN=8.77
 0
  #
  #
  # (118)  L-1/G-1 OVERLAPPING OUTAGE
  # Los Banos - Canal - Oro Loma 70 kV Line and Exchequer
 1  34200 34222  "1 "    0     # line from  ORO LOMA  70.00  BRKR to (3)   MRCYSPRS
70.00
 1  34222 34220  "1 "    0     # line from  MRCYSPRS  70.00   (3) to (2)   ORTIGA
70.00
 1  34222 34224  "1 "    0     # line from  MRCYSPRS  70.00   (3) to (2)   ARBURUA
70.00
 1  34220 34206  "1 "    0     # line from  ORTIGA    70.00   (2) to BRKR  CANAL
70.00
 1  34224 34272  "1 "    0     # line from  ARBURUA   70.00   (2) to (2)   WRGHT PP
70.00
 1  34272 34214  "1 "    0     # line from  WRGHT PP  70.00   (2) to BRKR  LOS BANS
70.00
 4  34220     0  "1 "    0     # LOAD-DROP    ORTIGA    70.00  LOAD==6.88(1.40)
 4  34224     0  "1 "    0     # LOAD-DROP    ARBURUA   70.00  LOAD==3.77(1.83)
 4  34272     0  "1 "    0     # LOAD-DROP    WRGHT PP  70.00  LOAD==9.50(1.93)
  #
 3  34306     0  "1"     0     # EXCHQUER  13.80       PGEN=94.50  QGEN=8.77
 0
  #
  #
  # (119)  L-1/G-1 OVERLAPPING OUTAGE
  # Atwater - El Capitan 115 kV Line and JR Wood Cogen
 1  34104 34106  "1 "    0     # line from  ATWATER  115.00  BRKR to (2)   CASTLE
115.00
 1  34106 34138  "1 "    0     # line from  CASTLE   115.00   (2) to BRKR  EL CAPTN
115.00
  #
 3  34332     0  "1"     0     # JRWCOGEN   9.11       PGEN=4.00  QGEN=5.40
 0
  #
  #
  # (120)  L-1/G-1 OVERLAPPING OUTAGE
  # Wilson - Atwater #2 115 kV Line and JR Wood Cogen
 1  34134 34104  "1 "    0     # line from  WILSON A 115.00  BRKR to BRKR  ATWATER
115.00
  #
 3  34332     0  "1"     0     # JRWCOGEN   9.11       PGEN=4.00  QGEN=5.40
 0
  #
  #
  # (121)  L-1/G-1 OVERLAPPING OUTAGE
  # Le Grand - Chowchilla 115 kV Line and Kerckhoff
 1  34100 34101  "1 "    0     # line from  CHWCHLLA 115.00  BRKR to (3)   CERTAN T
115.00
 1  34101 34116  "1 "    0     # line from  CERTAN T 115.00   (3) to BRKR  LE GRAND
115.00
 1  34101 34107  "1 "    0     # line from  CERTAN T 115.00   (3) to (2)   CERTANJ2
115.00
 1  34107 34103  "1 "    0     # line from  CERTANJ2 115.00   (2) to (3)   CHWCGNJT
115.00
 1  34103 34102  "1 "    0     # line from  CHWCGNJT 115.00   (3) to (1)   CERTTEED
115.00
 1  34103 34109  "1 "    0     # line from  CHWCGNJT 115.00   (3) to (3)   CHWCGN
115.00
 1  34109 34111  "1 "    0     # line from  CHWCGN   115.00   (3) to (2)   CHWCHLA2
115.00
 2  34109 34301  "1 "    0     # TRAN from  CHWCGN   115.00   (3) to (1)   CHOWCOGN
13.80
 2  34111 34305  "1 "    0     # TRAN from  CHWCHLA2 115.00   (2) to (1)   CHWCHLA2
13.80
 4  34102     0  "1 "    0     # LOAD-DROP    CERTTEED 115.00  LOAD==9.94(6.94)
 4  34305     0  "ss"    0     # LOAD-DROP    CHWCHLA2  13.80  LOAD==2.00(1.11)
```

```
 3  34301     0  "1 "    0     # GEN-DROP    CHOWCOGN  13.80  GEN==50.00(4.33)
 3  34305     0  "1 "    0     # GEN-DROP    CHWCHLA2  13.80  GEN==12.50(7.30)
  #
 3  34308     0  "1"     0     # KERCKHOF  13.80       PGEN=129.00  QGEN=16.00
 0
  #
  #
  # (122)  L-1/G-1 OVERLAPPING OUTAGE
  # Exchequer - Le Grand 115 kV Line and Kerckhoff
 1  34112 34116  "1 "    0     # line from  EXCHEQUR 115.00  BRKR to BRKR  LE GRAND
115.00
 3  34306     0  "1 "    0      # Exchequer Unit will trip for this outage
 4  34228     0  "**"    0      # Mariposa Loads will drop if bus is below 64 kV, this is
anticipate
  #
 3  34308     0  "1"     0     # KERCKHOF  13.80       PGEN=129.00  QGEN=16.00
 0
  #
  #
  # (123)  B2 LINE OUTAGE (BREAKER-TO-BREAKER)
  # Le Grand - Dairyland 115 kV Line and Kerckhoff
 1  34116 34154  "1 "    0     # line from  LE GRAND 115.00  BRKR to BRKR  DAIRYLND
115.00
  #
 3  34308     0  "1"     0     # KERCKHOF  13.80       PGEN=129.00  QGEN=16.00
 0
  #
  #
  # (124)  L-1/G-1 OVERLAPPING OUTAGE
  # Glass - Biola - Madera 70 kV Line and Kerckhoff
 1  34237 34255  "1 "    0     # line from  CANANDGA  70.00   (2) to (3)   TRIGO J
70.00
 1  34237 34240  "1 "    0     # line from  CANANDGA  70.00   (2) to BRKR  GLASS
70.00
 1  34255 34238  "1 "    0     # line from  TRIGO J   70.00   (3) to BRKR  BONITA
70.00
 1  34255 34254  "1 "    0     # line from  TRIGO J   70.00   (3) to (3)   TRIGO
70.00
 1  34254 34252  "1 "    0     # line from  TRIGO     70.00   (3) to BRKR  MADERA
70.00
 1  34254 34264  "1 "    0     # line from  TRIGO     70.00   (3) to (1)   EL PECO
70.00
 4  34237     0  "1 "    0     # LOAD-DROP    CANANDGA  70.00  LOAD==7.60(5.70)
 4  34238     0  "1 "    0     # LOAD-DROP    BONITA    70.00  LOAD==14.37(2.92)
 4  34264     0  "1 "    0     # LOAD-DROP    EL PECO   70.00  LOAD==9.86(2.01)
 4  34264     0  "2 "    0     # LOAD-DROP    EL PECO   70.00  LOAD==7.26(1.48)
 1  34238 34236  "1 "    1      # Switches in Bonita SW23 to transfer load
 4  34238     0  "1 "    1      # Restore Load at Bonita
  #
 3  34308     0  "1"     0     # KERCKHOF  13.80       PGEN=129.00  QGEN=16.00
 0
  #
  #
  # (125)  L-1/G-1 OVERLAPPING OUTAGE
  # Los Banos - Canal - Oro Loma 70 kV Line and Oneil Pump
 1  34200 34222  "1 "    0     # line from  ORO LOMA  70.00  BRKR to (3)   MRCYSPRS
70.00
 1  34222 34220  "1 "    0     # line from  MRCYSPRS  70.00   (3) to (2)   ORTIGA
70.00
 1  34222 34224  "1 "    0     # line from  MRCYSPRS  70.00   (3) to (2)   ARBURUA
70.00
 1  34220 34206  "1 "    0     # line from  ORTIGA    70.00   (2) to BRKR  CANAL
70.00
 1  34224 34272  "1 "    0     # line from  ARBURUA   70.00   (2) to (2)   WRGHT PP
70.00
 1  34272 34214  "1 "    0     # line from  WRGHT PP  70.00   (2) to BRKR  LOS BANS
70.00
 4  34220     0  "1 "    0     # LOAD-DROP    ORTIGA    70.00  LOAD==6.88(1.40)
 4  34224     0  "1 "    0     # LOAD-DROP    ARBURUA   70.00  LOAD==3.77(1.83)
 4  34272     0  "1 "    0     # LOAD-DROP    WRGHT PP  70.00  LOAD==9.50(1.93)
```

```
  #
 3  34316     0  "1"     0     # ONEILPMP   9.11       PGEN=0.52  QGEN=0.00
 0
  #
  #
  # (126)  L-1/G-1 OVERLAPPING OUTAGE
  # Warnerville - Wilson 230 kV Line and Melones Unit 1
 1  30515 30800  "1 "    0     # line from  WARNERVL 230.00  BRKR to BRKR  WILSON
230.00
  #
 3  37561     0  "1"     0     # MELONE1   13.80       PGEN=119.00  QGEN=60.00
 0
  #
  #
  # (127)  L-1/G-1 OVERLAPPING OUTAGE
  # Wilson - Borden #1 230 kV Line and Melones Unit 1
 1  30795 30805  "1 "    0     # line from  STOREY 2 230.00   (2) to BRKR  BORDEN
230.00
 1  30795 30800  "1 "    0     # line from  STOREY 2 230.00   (2) to BRKR  WILSON
230.00
 4  30795     0  "2 "    0     # LOAD-DROP    STOREY 2 230.00  LOAD==33.89(6.88)
  #
 3  37561     0  "1"     0     # MELONE1   13.80       PGEN=119.00  QGEN=60.00
 0
  #
  #
  # (128)  L-1/G-1 OVERLAPPING OUTAGE
  # Wilson - Borden #2 230 kV Line and Melones Unit 1
 1  30796 30800  "1 "    0     # line from  STOREY 1 230.00   (2) to BRKR  WILSON
230.00
 1  30796 30805  "1 "    0     # line from  STOREY 1 230.00   (2) to BRKR  BORDEN
230.00
 4  30796     0  "1 "    0     # LOAD-DROP    STOREY 1 230.00  LOAD==37.87(7.69)
  #
 3  37561     0  "1"     0     # MELONE1   13.80       PGEN=119.00  QGEN=60.00
 0
  #
  #
  # (129)  L-1/G-1 OVERLAPPING OUTAGE
  # Borden - Gregg #1 230 kV Line and Melones Unit 1
 1  30805 30810  "1 "    0     # line from  BORDEN   230.00  BRKR to BRKR  GREGG
230.00
 3  34604     0  "**"    0     # Drop unit#3 with loss of Gregg - Borden line
  #
 3  37561     0  "1"     0     # MELONE1   13.80       PGEN=119.00  QGEN=60.00
 0
  #
  #
  # (130)  L-1/G-1 OVERLAPPING OUTAGE
  # Borden - Gregg #2 230 kV Line and Melones Unit 1
 1  30805 30810  "2 "    0     # line from  BORDEN   230.00  BRKR to BRKR  GREGG
230.00
 3  34604     0  "**"    0     # Drop unit#3 with loss of Gregg - Borden #2 line
  #
 3  37561     0  "1"     0     # MELONE1   13.80       PGEN=119.00  QGEN=60.00
 0
  #
  #
  # (131)  L-1/G-1 OVERLAPPING OUTAGE
  # Melones - Wilson 230 kV Line and Melones Unit 1
 1  37563 30800  "1 "    0     # line from  MELONES 230.00   (2) to BRKR  WILSON   230.00
  #
 3  37561     0  "1"     0     # MELONE1   13.80       PGEN=119.00  QGEN=60.00
 0
  #
  #
  # (132)  L-1/G-1 OVERLAPPING OUTAGE
  # Warnerville - Wilson 230 kV Line and Helms Unit 1
 1  30515 30800  "1 "    0     # line from  WARNERVL 230.00  BRKR to BRKR  WILSON
230.00
```

```
  #
 3  34600     0  "1"     0     # HELMS 1   18.00       PGEN=404.00  QGEN=66.02
 0
  #
  #
  # (133)  L-1/G-1 OVERLAPPING OUTAGE
  # Westley - Los Banos 230 kV Line and Helms Unit 1
 1  30670 30765  "1 "    0     # line from  WESTLEY  230.00  BRKR to BRKR  LOSBANOS
230.00
  #
 3  34600     0  "1"     0     # HELMS 1   18.00       PGEN=404.00  QGEN=66.02
 0
  #
  #
  # (134)  L-1/G-1 OVERLAPPING OUTAGE
  # Moss Landing - Panoche 230 kV Line and Helms Unit 1
 1  30750 30790  "1 "    0     # line from  MOSSLND2 230.00  BRKR to BRKR  PANOCHE
230.00
  #
 3  34600     0  "1"     0     # HELMS 1   18.00       PGEN=404.00  QGEN=66.02
 0
  #
  #
  # (135)  L-1/G-1 OVERLAPPING OUTAGE
  # Coburn - Panoche 230 kV Line and Helms Unit 1
 1  30760 30790  "1 "    0     # line from  COBURN   230.00  BRKR to BRKR  PANOCHE
230.00
  #
 3  34600     0  "1"     0     # HELMS 1   18.00       PGEN=404.00  QGEN=66.02
 0
  #
  #
  # (136)  L-1/G-1 OVERLAPPING OUTAGE
  # Los Banos - Panoche #1 230 kV Line and Helms Unit 1
 1  30765 30790  "1 "    0     # line from  LOSBANOS 230.00  BRKR to BRKR  PANOCHE
230.00
  #
 3  34600     0  "1"     0     # HELMS 1   18.00       PGEN=404.00  QGEN=66.02
 0
  #
  #
  # (137)  L-1/G-1 OVERLAPPING OUTAGE
  # Los Banos - Panoche #2 230 kV Line and Helms Unit 1
 1  30765 30790  "2 "    0     # line from  LOSBANOS 230.00  BRKR to BRKR  PANOCHE
230.00
  #
 3  34600     0  "1"     0     # HELMS 1   18.00       PGEN=404.00  QGEN=66.02
 0
  #
  #
  # (138)  L-1/G-1 OVERLAPPING OUTAGE
  # Los Banos - Dos Amigos 230 kV Line and Helms Unit 1
 1  30765 38615  "1 "    0     # line from  LOSBANOS 230.00  BRKR to BRKR  DS AMIGO
230.00
  #
 3  34600     0  "1"     0     # HELMS 1   18.00       PGEN=404.00  QGEN=66.02
 0
  #
  #
  # (139)  L-1/G-1 OVERLAPPING OUTAGE
  # Los Banos - San Luis PGP #1 230 kV Line and Helms Unit 1
 1  30765 38625  "1 "    0     # line from  LOSBANOS 230.00  BRKR to BRKR  SN LS PP
230.00
  #
 3  34600     0  "1"     0     # HELMS 1   18.00       PGEN=404.00  QGEN=66.02
 0
  #
  #
  # (140)  L-1/G-1 OVERLAPPING OUTAGE
  # Los Banos - San Luis PGP #2 230 kV Line and Helms Unit 1
```

```
 1  30765 38625  "2 "    0     # line from  LOSBANOS 230.00  BRKR to BRKR  SN LS PP
230.00
  #
 3  34600     0  "1"     0     # HELMS 1   18.00       PGEN=404.00  QGEN=66.02
 0
  #
  #
  # (141)  L-1/G-1 OVERLAPPING OUTAGE
  # Panoche - Kearney 230 kV Line and Helms Unit 1
 1  30790 30825  "1 "    0     # line from  PANOCHE  230.00  BRKR to (2)   MCMULLN1
230.00
 1  30825 30830  "1 "    0     # line from  MCMULLN1 230.00   (2) to BRKR  KEARNEY
230.00
 4  30825     0  "1 "    0     # LOAD-DROP    MCMULLN1 230.00  LOAD==20.57(4.18)
  #
 3  34600     0  "1"     0     # HELMS 1   18.00       PGEN=404.00  QGEN=66.02
 0
  #
  #
  # (142)  L-1/G-1 OVERLAPPING OUTAGE
  # Panoche - Helm 230 kV Line and Helms Unit 1
 1  30790 30873  "1 "    0     # line from  PANOCHE  230.00  BRKR to BRKR  HELM
230.00
  #
 3  34600     0  "1"     0     # HELMS 1   18.00       PGEN=404.00  QGEN=66.02
 0
  #
  #
  # (143)  L-1/G-1 OVERLAPPING OUTAGE
  # Gates - Panoche #1 230 kV Line and Helms Unit 1
 1  30790 30900  "1 "    0     # line from  PANOCHE  230.00  BRKR to BRKR  GATES
230.00
  #
 3  34600     0  "1"     0     # HELMS 1   18.00       PGEN=404.00  QGEN=66.02
 0
  #
  #
  # (144)  L-1/G-1 OVERLAPPING OUTAGE
  # Gates - Panoche #2 230 kV Line and Helms Unit 1
 1  30790 30900  "2 "    0     # line from  PANOCHE  230.00  BRKR to BRKR  GATES
230.00
  #
 3  34600     0  "1"     0     # HELMS 1   18.00       PGEN=404.00  QGEN=66.02
 0
  #
  #
  # (145)  L-1/G-1 OVERLAPPING OUTAGE
  # Wilson - Borden #1 230 kV Line and Helms Unit 1
 1  30795 30805  "1 "    0     # line from  STOREY 2 230.00   (2) to BRKR  BORDEN
230.00
 1  30795 30800  "1 "    0     # line from  STOREY 2 230.00   (2) to BRKR  WILSON
230.00
 4  30795     0  "2 "    0     # LOAD-DROP    STOREY 2 230.00  LOAD==33.89(6.88)
  #
 3  34600     0  "1"     0     # HELMS 1   18.00       PGEN=404.00  QGEN=66.02
 0
  #
  #
  # (146)  L-1/G-1 OVERLAPPING OUTAGE
  # Wilson - Borden #2 230 kV Line and Helms Unit 1
 1  30796 30800  "1 "    0     # line from  STOREY 1 230.00   (2) to BRKR  WILSON
230.00
 1  30796 30805  "1 "    0     # line from  STOREY 1 230.00   (2) to BRKR  BORDEN
230.00
 4  30796     0  "1 "    0     # LOAD-DROP    STOREY 1 230.00  LOAD==37.87(7.69)
  #
 3  34600     0  "1"     0     # HELMS 1   18.00       PGEN=404.00  QGEN=66.02
 0
  #
  #
```

```
  # (147)  L-1/G-1 OVERLAPPING OUTAGE
  # Melones - Wilson 230 kV Line and Helms Unit 1
 1  37563 30800  "1 "    0     # line from  MELONES 230.00   (2) to BRKR  WILSON   230.00
  #
 3  34600     0  "1"     0     # HELMS 1   18.00       PGEN=404.00  QGEN=66.02
 0
  #
  #
  # (148)  L-1/G-1 OVERLAPPING OUTAGE
  # Borden - Gregg #1 230 kV Line and Helms Unit 1
 1  30805 30810  "1 "    0     # line from  BORDEN   230.00  BRKR to BRKR  GREGG
230.00
 3  34604     0  "**"    0     # Drop unit#3 with loss of Gregg - Borden line
  #
 3  34600     0  "1"     0     # HELMS 1   18.00       PGEN=404.00  QGEN=66.02
 0
  #
  #
  # (149)  L-1/G-1 OVERLAPPING OUTAGE
  # Borden - Gregg #2 230 kV Line and Helms Unit 1
 1  30805 30810  "2 "    0     # line from  BORDEN   230.00  BRKR to BRKR  GREGG
230.00
 3  34604     0  "**"    0     # Drop unit#3 with loss of Gregg - Borden #2 line
  #
 3  34600     0  "1"     0     # HELMS 1   18.00       PGEN=404.00  QGEN=66.02
 0
  #
  #
  # (150)  L-1/G-1 OVERLAPPING OUTAGE
  # Dos Amigos - Panoche 230 kV Line and Helms Unit 1
 1  38615 30790  "1 "    0     # line from  DS AMIGO 230.00  BRKR to BRKR  PANOCHE
230.00
  #
 3  34600     0  "1"     0     # HELMS 1   18.00       PGEN=404.00  QGEN=66.02
 0
  #
  #
  # (151)  L-1/G-1 OVERLAPPING OUTAGE
  # Warnerville - Wilson 230 kV Line and Exchequer
 1  30515 30800  "1 "    0     # line from  WARNERVL 230.00  BRKR to BRKR  WILSON
230.00
  #
 3  34306     0  "1"     0     # EXCHQUER  13.80       PGEN=94.50  QGEN=8.77
 0
  #
  #
  # (152)  L-1/G-1 OVERLAPPING OUTAGE
  # Westley - Los Banos 230 kV Line and Exchequer
 1  30670 30765  "1 "    0     # line from  WESTLEY  230.00  BRKR to BRKR  LOSBANOS
230.00
  #
 3  34306     0  "1"     0     # EXCHQUER  13.80       PGEN=94.50  QGEN=8.77
 0
  #
  #
  # (153)  L-1/G-1 OVERLAPPING OUTAGE
  # Moss Landing - Panoche 230 kV Line and Exchequer
 1  30750 30790  "1 "    0     # line from  MOSSLND2 230.00  BRKR to BRKR  PANOCHE
230.00
  #
 3  34306     0  "1"     0     # EXCHQUER  13.80       PGEN=94.50  QGEN=8.77
 0
  #
  #
  # (154)  L-1/G-1 OVERLAPPING OUTAGE
  # Coburn - Panoche 230 kV Line and Exchequer
 1  30760 30790  "1 "    0     # line from  COBURN   230.00  BRKR to BRKR  PANOCHE
230.00
  #
 3  34306     0  "1"     0     # EXCHQUER  13.80       PGEN=94.50  QGEN=8.77
```

```
 0
  #
  #
  # (155)  L-1/G-1 OVERLAPPING OUTAGE
  # Los Banos - Panoche #1 230 kV Line and Exchequer
 1  30765 30790  "1 "    0     # line from  LOSBANOS 230.00  BRKR to BRKR  PANOCHE
230.00
  #
 3  34306     0  "1"     0     # EXCHQUER  13.80       PGEN=94.50  QGEN=8.77
 0
  #
  #
  # (156)  L-1/G-1 OVERLAPPING OUTAGE
  # Los Banos - Panoche #2 230 kV Line and Exchequer
 1  30765 30790  "2 "    0     # line from  LOSBANOS 230.00  BRKR to BRKR  PANOCHE
230.00
  #
 3  34306     0  "1"     0     # EXCHQUER  13.80       PGEN=94.50  QGEN=8.77
 0
  #
  #
  # (157)  L-1/G-1 OVERLAPPING OUTAGE
  # Los Banos - Dos Amigos 230 kV Line and Exchequer
 1  30765 38615  "1 "    0     # line from  LOSBANOS 230.00  BRKR to BRKR  DS AMIGO
230.00
  #
 3  34306     0  "1"     0     # EXCHQUER  13.80       PGEN=94.50  QGEN=8.77
 0
  #
  #
  # (158)  L-1/G-1 OVERLAPPING OUTAGE
  # Los Banos - San Luis PGP #1 230 kV Line and Exchequer
 1  30765 38625  "1 "    0     # line from  LOSBANOS 230.00  BRKR to BRKR  SN LS PP
230.00
  #
 3  34306     0  "1"     0     # EXCHQUER  13.80       PGEN=94.50  QGEN=8.77
 0
  #
  #
  # (159)  L-1/G-1 OVERLAPPING OUTAGE
  # Los Banos - San Luis PGP #2 230 kV Line and Exchequer
 1  30765 38625  "2 "    0     # line from  LOSBANOS 230.00  BRKR to BRKR  SN LS PP
230.00
  #
 3  34306     0  "1"     0     # EXCHQUER  13.80       PGEN=94.50  QGEN=8.77
 0
  #
  #
  # (160)  L-1/G-1 OVERLAPPING OUTAGE
  # Panoche - Kearney 230 kV Line and Exchequer
 1  30790 30825  "1 "    0     # line from  PANOCHE  230.00  BRKR to (2)   MCMULLN1
230.00
 1  30825 30830  "1 "    0     # line from  MCMULLN1 230.00   (2) to BRKR  KEARNEY
230.00
 4  30825     0  "1 "    0     # LOAD-DROP    MCMULLN1 230.00  LOAD==20.57(4.18)
  #
 3  34306     0  "1"     0     # EXCHQUER  13.80       PGEN=94.50  QGEN=8.77
 0
  #
  #
  # (161)  L-1/G-1 OVERLAPPING OUTAGE
  # Panoche - Helm 230 kV Line and Exchequer
 1  30790 30873  "1 "    0     # line from  PANOCHE  230.00  BRKR to BRKR  HELM
230.00
  #
 3  34306     0  "1"     0     # EXCHQUER  13.80       PGEN=94.50  QGEN=8.77
 0
  #
  #
  # (162)  L-1/G-1 OVERLAPPING OUTAGE
```

```
  # Gates - Panoche #1 230 kV Line and Exchequer
 1  30790 30900  "1 "    0     # line from  PANOCHE  230.00  BRKR to BRKR  GATES
230.00
  #
 3  34306     0  "1"     0     # EXCHQUER  13.80       PGEN=94.50  QGEN=8.77
 0
  #
  #
  # (163)  L-1/G-1 OVERLAPPING OUTAGE
  # Gates - Panoche #2 230 kV Line and Exchequer
 1  30790 30900  "2 "    0     # line from  PANOCHE  230.00  BRKR to BRKR  GATES
230.00
  #
 3  34306     0  "1"     0     # EXCHQUER  13.80       PGEN=94.50  QGEN=8.77
 0
  #
  #
  # (164)  L-1/G-1 OVERLAPPING OUTAGE
  # Wilson - Borden #1 230 kV Line and Exchequer
 1  30795 30805  "1 "    0     # line from  STOREY 2 230.00   (2) to BRKR  BORDEN
230.00
 1  30795 30800  "1 "    0     # line from  STOREY 2 230.00   (2) to BRKR  WILSON
230.00
 4  30795     0  "2 "    0     # LOAD-DROP    STOREY 2 230.00  LOAD==33.89(6.88)
  #
 3  34306     0  "1"     0     # EXCHQUER  13.80       PGEN=94.50  QGEN=8.77
 0
  #
  #
  # (165)  L-1/G-1 OVERLAPPING OUTAGE
  # Wilson - Borden #2 230 kV Line and Exchequer
 1  30796 30800  "1 "    0     # line from  STOREY 1 230.00   (2) to BRKR  WILSON
230.00
 1  30796 30805  "1 "    0     # line from  STOREY 1 230.00   (2) to BRKR  BORDEN
230.00
 4  30796     0  "1 "    0     # LOAD-DROP    STOREY 1 230.00  LOAD==37.87(7.69)
  #
 3  34306     0  "1"     0     # EXCHQUER  13.80       PGEN=94.50  QGEN=8.77
 0
  #
  #
  # (166)  L-1/G-1 OVERLAPPING OUTAGE
  # Melones - Wilson 230 kV Line and Exchequer
 1  37563 30800  "1 "    0     # line from  MELONES 230.00   (2) to BRKR  WILSON   230.00
  #
 3  34306     0  "1"     0     # EXCHQUER  13.80       PGEN=94.50  QGEN=8.77
 0
  #
  #
  # (167)  L-1/G-1 OVERLAPPING OUTAGE
  # Borden - Gregg #1 230 kV Line and Exchequer
 1  30805 30810  "1 "    0     # line from  BORDEN   230.00  BRKR to BRKR  GREGG
230.00
 3  34604     0  "**"    0     # Drop unit#3 with loss of Gregg - Borden line
  #
 3  34306     0  "1"     0     # EXCHQUER  13.80       PGEN=94.50  QGEN=8.77
 0
  #
  #
  # (168)  L-1/G-1 OVERLAPPING OUTAGE
  # Borden - Gregg #2 230 kV Line and Exchequer
 1  30805 30810  "2 "    0     # line from  BORDEN   230.00  BRKR to BRKR  GREGG
230.00
 3  34604     0  "**"    0     # Drop unit#3 with loss of Gregg - Borden #2 line
  #
 3  34306     0  "1"     0     # EXCHQUER  13.80       PGEN=94.50  QGEN=8.77
 0
  #
  #
  # (169)  L-1/G-1 OVERLAPPING OUTAGE
```

```
  # Dos Amigos - Panoche 230 kV Line and Exchequer
 1  38615 30790  "1 "    0     # line from  DS AMIGO 230.00  BRKR to BRKR  PANOCHE
230.00
  #
 3  34306     0  "1"     0     # EXCHQUER  13.80       PGEN=94.50  QGEN=8.77
 0
  #
  #
  # (170)  L-1/G-1 OVERLAPPING OUTAGE
  # Warnerville - Wilson 230 kV Line and Kerckhoff
 1  30515 30800  "1 "    0     # line from  WARNERVL 230.00  BRKR to BRKR  WILSON
230.00
  #
 3  34308     0  "1"     0     # KERCKHOF  13.80       PGEN=129.00  QGEN=16.00
 0
  #
  #
  # (171)  L-1/G-1 OVERLAPPING OUTAGE
  # Westley - Los Banos 230 kV Line and Kerckhoff
 1  30670 30765  "1 "    0     # line from  WESTLEY  230.00  BRKR to BRKR  LOSBANOS
230.00
  #
 3  34308     0  "1"     0     # KERCKHOF  13.80       PGEN=129.00  QGEN=16.00
 0
  #
  #
  # (172)  L-1/G-1 OVERLAPPING OUTAGE
  # Moss Landing - Panoche 230 kV Line and Kerckhoff
 1  30750 30790  "1 "    0     # line from  MOSSLND2 230.00  BRKR to BRKR  PANOCHE
230.00
  #
 3  34308     0  "1"     0     # KERCKHOF  13.80       PGEN=129.00  QGEN=16.00
 0
  #
  #
  # (173)  L-1/G-1 OVERLAPPING OUTAGE
  # Coburn - Panoche 230 kV Line and Kerckhoff
 1  30760 30790  "1 "    0     # line from  COBURN   230.00  BRKR to BRKR  PANOCHE
230.00
  #
 3  34308     0  "1"     0     # KERCKHOF  13.80       PGEN=129.00  QGEN=16.00
 0
  #
  #
  # (174)  L-1/G-1 OVERLAPPING OUTAGE
  # Los Banos - Panoche #1 230 kV Line and Kerckhoff
 1  30765 30790  "1 "    0     # line from  LOSBANOS 230.00  BRKR to BRKR  PANOCHE
230.00
  #
 3  34308     0  "1"     0     # KERCKHOF  13.80       PGEN=129.00  QGEN=16.00
 0
  #
  #
  # (175)  L-1/G-1 OVERLAPPING OUTAGE
  # Los Banos - Panoche #2 230 kV Line and Kerckhoff
 1  30765 30790  "2 "    0     # line from  LOSBANOS 230.00  BRKR to BRKR  PANOCHE
230.00
  #
 3  34308     0  "1"     0     # KERCKHOF  13.80       PGEN=129.00  QGEN=16.00
 0
  #
  #
  # (176)  L-1/G-1 OVERLAPPING OUTAGE
  # Los Banos - Dos Amigos 230 kV Line and Kerckhoff
 1  30765 38615  "1 "    0     # line from  LOSBANOS 230.00  BRKR to BRKR  DS AMIGO
230.00
  #
 3  34308     0  "1"     0     # KERCKHOF  13.80       PGEN=129.00  QGEN=16.00
 0
  #
```

```
  #
  # (177)  L-1/G-1 OVERLAPPING OUTAGE
  # Los Banos - San Luis PGP #1 230 kV Line and Kerckhoff
 1  30765 38625  "1 "    0     # line from  LOSBANOS 230.00  BRKR to BRKR  SN LS PP
230.00
  #
 3  34308     0  "1"     0     # KERCKHOF  13.80       PGEN=129.00  QGEN=16.00
 0
  #
  #
  # (178)  L-1/G-1 OVERLAPPING OUTAGE
  # Los Banos - San Luis PGP #2 230 kV Line and Kerckhoff
 1  30765 38625  "2 "    0     # line from  LOSBANOS 230.00  BRKR to BRKR  SN LS PP
230.00
  #
 3  34308     0  "1"     0     # KERCKHOF  13.80       PGEN=129.00  QGEN=16.00
 0
  #
  #
  # (179)  L-1/G-1 OVERLAPPING OUTAGE
  # Panoche - Kearney 230 kV Line and Kerckhoff
 1  30790 30825  "1 "    0     # line from  PANOCHE  230.00  BRKR to (2)   MCMULLN1
230.00
 1  30825 30830  "1 "    0     # line from  MCMULLN1 230.00   (2) to BRKR  KEARNEY
230.00
 4  30825     0  "1 "    0     # LOAD-DROP    MCMULLN1 230.00  LOAD==20.57(4.18)
  #
 3  34308     0  "1"     0     # KERCKHOF  13.80       PGEN=129.00  QGEN=16.00
 0
  #
  #
  # (180)  L-1/G-1 OVERLAPPING OUTAGE
  # Panoche - Helm 230 kV Line and Kerckhoff
 1  30790 30873  "1 "    0     # line from  PANOCHE  230.00  BRKR to BRKR  HELM
230.00
  #
 3  34308     0  "1"     0     # KERCKHOF  13.80       PGEN=129.00  QGEN=16.00
 0
  #
  #
  # (181)  L-1/G-1 OVERLAPPING OUTAGE
  # Gates - Panoche #1 230 kV Line and Kerckhoff
 1  30790 30900  "1 "    0     # line from  PANOCHE  230.00  BRKR to BRKR  GATES
230.00
  #
 3  34308     0  "1"     0     # KERCKHOF  13.80       PGEN=129.00  QGEN=16.00
 0
  #
  #
  # (182)  L-1/G-1 OVERLAPPING OUTAGE
  # Gates - Panoche #2 230 kV Line and Kerckhoff
 1  30790 30900  "2 "    0     # line from  PANOCHE  230.00  BRKR to BRKR  GATES
230.00
  #
 3  34308     0  "1"     0     # KERCKHOF  13.80       PGEN=129.00  QGEN=16.00
 0
  #
  #
  # (183)  L-1/G-1 OVERLAPPING OUTAGE
  # Wilson - Borden #1 230 kV Line and Kerckhoff
 1  30795 30805  "1 "    0     # line from  STOREY 2 230.00   (2) to BRKR  BORDEN
230.00
 1  30795 30800  "1 "    0     # line from  STOREY 2 230.00   (2) to BRKR  WILSON
230.00
 4  30795     0  "2 "    0     # LOAD-DROP    STOREY 2 230.00  LOAD==33.89(6.88)
  #
 3  34308     0  "1"     0     # KERCKHOF  13.80       PGEN=129.00  QGEN=16.00
 0
  #
  #
```

```
  # (184)  L-1/G-1 OVERLAPPING OUTAGE
  # Wilson - Borden #2 230 kV Line and Kerckhoff
 1  30796 30800  "1 "    0     # line from  STOREY 1 230.00   (2) to BRKR  WILSON
230.00
 1  30796 30805  "1 "    0     # line from  STOREY 1 230.00   (2) to BRKR  BORDEN
230.00
 4  30796     0  "1 "    0     # LOAD-DROP    STOREY 1 230.00  LOAD==37.87(7.69)
  #
 3  34308     0  "1"     0     # KERCKHOF  13.80       PGEN=129.00  QGEN=16.00
 0
  #
  #
  # (185)  L-1/G-1 OVERLAPPING OUTAGE
  # Melones - Wilson 230 kV Line and Kerckhoff
 1  37563 30800  "1 "    0     # line from  MELONES 230.00   (2) to BRKR  WILSON   230.00
  #
 3  34308     0  "1"     0     # KERCKHOF  13.80       PGEN=129.00  QGEN=16.00
 0
  #
  #
  # (186)  L-1/G-1 OVERLAPPING OUTAGE
  # Borden - Gregg #1 230 kV Line and Kerckhoff
 1  30805 30810  "1 "    0     # line from  BORDEN   230.00  BRKR to BRKR  GREGG
230.00
 3  34604     0  "**"    0     # Drop unit#3 with loss of Gregg - Borden line
  #
 3  34308     0  "1"     0     # KERCKHOF  13.80       PGEN=129.00  QGEN=16.00
 0
  #
  #
  # (187)  L-1/G-1 OVERLAPPING OUTAGE
  # Borden - Gregg #2 230 kV Line and Kerckhoff
 1  30805 30810  "2 "    0     # line from  BORDEN   230.00  BRKR to BRKR  GREGG
230.00
 3  34604     0  "**"    0     # Drop unit#3 with loss of Gregg - Borden #2 line
  #
 3  34308     0  "1"     0     # KERCKHOF  13.80       PGEN=129.00  QGEN=16.00
 0
  #
  #
  # (188)  L-1/G-1 OVERLAPPING OUTAGE
  # Dos Amigos - Panoche 230 kV Line and Kerckhoff
 1  38615 30790  "1 "    0     # line from  DS AMIGO 230.00  BRKR to BRKR  PANOCHE
230.00
  #
 3  34308     0  "1"     0     # KERCKHOF  13.80       PGEN=129.00  QGEN=16.00
 0
  #
  #
  # 2013 sprpk category b contingency list
  # Fresno Zone 314
  #
  #
  # (189)  B2 LINE OUTAGE (BREAKER-TO-BREAKER)
  #
 1  30873 30875  "1 "    0     # line from  HELM     230.00  BRKR to BRKR  MC CALL
230.00
 0
  #
  #
  # (190)  B2 LINE OUTAGE (BREAKER-TO-BREAKER)
  #
 1  30810 30820  "1 "    0     # line from  GREGG    230.00  BRKR to BRKR  HELMS PP
230.00
 3  34600     0  "**"    0      # Drop unit#1 with a loss Helm - Gregg #1 line
 0
  #
  #
  # (191)  B2 LINE OUTAGE (BREAKER-TO-BREAKER)
  #
```

```
 1  30810 30820  "2 "    0     # line from  GREGG    230.00  BRKR to BRKR  HELMS PP
230.00
 3  34604     0  "**"    0      # Drop unit#3 with a loss Helm - Gregg #2 line
 0
  #
  #
  # (192)  B2 LINE OUTAGE (BREAKER-TO-BREAKER)
  #
 1  30810 30835  "1 "    0     # line from  GREGG    230.00  BRKR to BRKR  HERNDON
230.00
 3  34604     0  "**"    0      # Drop unit#3 with a loss Gregg - Herndon #1 line
 0
  #
  #
  # (193)  B2 LINE OUTAGE (BREAKER-TO-BREAKER)
  #
 1  30810 30835  "2 "    0     # line from  GREGG    230.00  BRKR to BRKR  HERNDON
230.00
 3  34604     0  "**"    0      # Drop unit#3 with a loss Gregg - Herndon #2 line
 0
  #
  #
  # (194)  B2 LINE OUTAGE (BREAKER-TO-BREAKER)
  #
 1  30810 30845  "1 "    0     # line from  GREGG    230.00  BRKR to (3)   FGRDN T2
230.00
 1  30845 30846  "1 "    0     # line from  FGRDN T2 230.00   (3) to BRKR  FIGRDN 2
230.00
 1  30845 30850  "1 "    0     # line from  FGRDN T2 230.00   (3) to BRKR  ASHLAN
230.00
 4  30846     0  "1 "    0     # LOAD-DROP    FIGRDN 2 230.00  LOAD==52.57(10.67)
 4  30846     0  "2 "    0     # LOAD-DROP    FIGRDN 2 230.00  LOAD==36.77(7.47)
 3  34604     0  "**"    0      # Drop unit#3 with a loss Gregg - Figarden line
 1 30841  30846  "1 "    1      # Switches in Figarden SW 286 to transfer load
 4 30846      0  "**"    1      # Restore Load at Figarden 2
 0
  #
  #
  # (195)  B2 LINE OUTAGE (BREAKER-TO-BREAKER)
  #
 1  30810 30879  "1 "    0     # line from  GREGG    230.00  BRKR to (3)   HENTAP1
230.00
 1  30879 30881  "1 "    0     # line from  HENTAP1  230.00   (3) to BRKR  HENRIETA
230.00
 1  30879 30900  "1 "    0     # line from  HENTAP1  230.00   (3) to BRKR  GATES
230.00
 3  34604     0  "**"    0      # Drop unit#3 with a loss Gregg - Henrietta Tap 1 line
 1  30880 30881  "1 "    1      # Henrietta flip flop (Henrietta CB 222)
 0
  #
  #
  # (196)  B2 LINE OUTAGE (BREAKER-TO-BREAKER)
  #
 1  30830 30835  "1 "    0     # line from  KEARNEY  230.00  BRKR to BRKR  HERNDON
230.00
 0
  #
  #
  # (197)  B2 LINE OUTAGE (BREAKER-TO-BREAKER)
  #
 1  30835 30840  "1 "    0     # line from  HERNDON  230.00  BRKR to (3)   FGRDN T1
230.00
 1  30840 30841  "1 "    0     # line from  FGRDN T1 230.00   (3) to BRKR  FIGRDN 1
230.00
 1  30840 30850  "1 "    0     # line from  FGRDN T1 230.00   (3) to BRKR  ASHLAN
230.00
 4  30841     0  "1 "    0     # LOAD-DROP    FIGRDN 1 230.00  LOAD==73.45(14.92)
 1 30841  30846  "1 "    1      # Switches in Figarden SW 286 to transfer load
 4 30841      0  "**"    1      # Restore Load at Figarden 1
 0
```

```
  #
  #
  # (198)  B2 LINE OUTAGE (BREAKER-TO-BREAKER)
  #
 1  30855 30860  "1 "    0     # line from  HAAS     230.00   (2) to (3)   BALCH3TP
230.00
 2  30855 34610  "1 "    0     # TRAN from  HAAS     230.00   (2) to (1)   HAAS
13.80
 1  30860 30875  "1 "    0     # line from  BALCH3TP 230.00   (3) to BRKR  MC CALL
230.00
 2  30860 34614  "1 "    0     # TRAN from  BALCH3TP 230.00   (3) to (1)   BLCH 2-3
13.80
 3  34610     0  "1 "    0     # GEN-DROP    HAAS      13.80  GEN==70.00(10.21)
 3  34610     0  "2 "    0     # GEN-DROP    HAAS      13.80  GEN==70.00(10.21)
 3  34614     0  "1 "    0     # GEN-DROP    BLCH 2-3  13.80  GEN==50.00(7.64)
 0
  #
  #
  # (199)  B2 LINE OUTAGE (BREAKER-TO-BREAKER)
  #
 1  30865 30870  "1 "    0     # line from  BALCH    230.00   (2) to (3)   PINE FLT
230.00
 2  30865 34612  "1 "    0     # TRAN from  BALCH    230.00   (2) to (1)   BLCH 2-2
13.80
 1  30870 30875  "1 "    0     # line from  PINE FLT 230.00   (3) to BRKR  MC CALL
230.00
 2  30870 38720  "1 "    0     # TRAN from  PINE FLT 230.00   (3) to (1)   PINE FLT
13.80
 3  34612     0  "1 "    0     # GEN-DROP    BLCH 2-2  13.80  GEN==50.00(0.66)
 3  38720     0  "1 "    0     # GEN-DROP    PINE FLT  13.80  GEN==57.00(23.30)
 0
  #
  #
  # (200)  B2 LINE OUTAGE (BREAKER-TO-BREAKER)
  #
 1  30875 30874  "1 "    0     # line from  MC CALL  230.00  BRKR to BRKR  P0615STN
230.00
 0
  #
  #
  # (201)  B2 LINE OUTAGE (BREAKER-TO-BREAKER)
  #
 1  30875 30874  "2 "    0     # line from  MC CALL  230.00  BRKR to BRKR  P0615STN
230.00
 0
  #
  #
  # (202)  B2 LINE OUTAGE (BREAKER-TO-BREAKER)
  #
 1  30875 30880  "1 "    0     # line from  MC CALL  230.00  BRKR to (2)   HENTAP2
230.00
 1  30880 30900  "1 "    0     # line from  HENTAP2  230.00   (2) to BRKR  GATES
230.00
 0
  #
  #
  # (203)  B2 LINE OUTAGE (BREAKER-TO-BREAKER)
  #
 1  30900 30905  "1 "    0     # line from  GATES    230.00  BRKR to BRKR  TEMPLETN
230.00
 0
  #
  #
  # (204)  B2 LINE OUTAGE (BREAKER-TO-BREAKER)
  #
 1  30900 30915  "1 "    0     # line from  GATES    230.00  BRKR to BRKR  MORROBAY
230.00
 0
  #
  #
```

```
  # (205)  B2 LINE OUTAGE (BREAKER-TO-BREAKER)
  #
 1  30900 30935  "1 "    0     # line from  GATES    230.00  BRKR to BRKR  ARCO
230.00
 0
  #
  #
  # (206)  B2 LINE OUTAGE (BREAKER-TO-BREAKER)
  #
 1  30900 30970  "1 "    0     # line from  GATES    230.00  BRKR to BRKR  MIDWAY
230.00
 0
  #
  #
  # (207)  B2 LINE OUTAGE (BREAKER-TO-BREAKER)
  #
 1  34123 34358  "2 "    0     # line from  K1-JCT   115.00   (2) to BRKR  KERCKHF2
115.00
 1  34123 34128  "1 "    0     # line from  K1-JCT   115.00   (2) to (3)   OAKH_JCT
115.00
 1  34128 34121  "1 "    0     # line from  OAKH_JCT 115.00   (3) to (3)   SHARON T
115.00
 1  34128 34126  "1 "    0     # line from  OAKH_JCT 115.00   (3) to (2)   CORSGOLD
115.00
 1  34121 34105  "1 "    0     # line from  SHARON T 115.00   (3) to (2)   CERTANJ1
115.00
 1  34121 34120  "1 "    0     # line from  SHARON T 115.00   (3) to (1)   SHARON
115.00
 1  34105 34100  "1 "    0     # line from  CERTANJ1 115.00   (2) to BRKR  CHWCHLLA
115.00
 1  34126 34122  "1 "    0     # line from  CORSGOLD 115.00   (2) to (1)   OAKHURST
115.00
 4  34126     0  "1 "    0     # LOAD-DROP    CORSGOLD 115.00  LOAD==2.21(0.45)
 4  34126     0  "2 "    0     # LOAD-DROP    CORSGOLD 115.00  LOAD==26.19(5.32)
 4  34120     0  "1 "    0     # LOAD-DROP    SHARON   115.00  LOAD==7.10(4.96)
 4  34122     0  "1 "    0     # LOAD-DROP    OAKHURST 115.00  LOAD==11.68(2.37)
 4  34122     0  "2 "    0     # LOAD-DROP    OAKHURST 115.00  LOAD==15.01(3.05)
 0
  #
  #
  # (208)  B2 LINE OUTAGE (BREAKER-TO-BREAKER)
  #
 1  34149 34354  "1 "    0     # line from  CHENYT   115.00   (3) to BRKR  SCHINDLR
115.00
 1  34149 34148  "1 "    0     # line from  CHENYT   115.00   (3) to (2)   CHENY
115.00
 1  34149 34158  "1 "    0     # line from  CHENYT   115.00   (3) to BRKR  PANOCHE
115.00
 1  34148 34141  "1 "    0     # line from  CHENY    115.00   (2) to (2)   PAN2_TAP
115.00
 2  34141 34142  "1 "    0     # TRAN from  PAN2_TAP 115.00   (2) to (1)   WHD_PAN2
13.80
 4  34148     0  "1 "    0     # LOAD-DROP    CHENY    115.00  LOAD==13.12(2.66)
 3  34142     0  "1 "    0     # GEN-DROP    WHD_PAN2  13.80  GEN==49.00(4.03)
 0
  #
  #
  # (209)  B2 LINE OUTAGE (BREAKER-TO-BREAKER)
  #
 1  34184 34570  "1 "    0     # line from  GATS2_TP  70.00   (3) to BRKR  COLNGA 2
70.00
 1  34184 34552  "1 "    0     # line from  GATS2_TP  70.00   (3) to BRKR  GATES
70.00
 2  34184 34553  "1 "    0     # TRAN from  GATS2_TP  70.00   (3) to (1)   WHD_GAT2
13.80
 3  34553     0  "1 "    0     # GEN-DROP    WHD_GAT2  13.80  GEN==49.00(-25.30)
 0
  #
  #
  # (210)  B2 LINE OUTAGE (BREAKER-TO-BREAKER)
```

```
  #
 1  34356 34358  "1 "    0     # line from  KERCKHF1 115.00  BRKR to BRKR  KERCKHF2
115.00
 0
  #
  #
  # (211)  B2 LINE OUTAGE (BREAKER-TO-BREAKER)
  #
 1  34357 34361  "1 "    0     # line from  AIRWAYJ1 115.00   (3) to BRKR  AIRWAYS
115.00
 1  34357 34368  "1 "    0     # line from  AIRWAYJ1 115.00   (3) to (2)   LASPALMS
115.00
 1  34357 34410  "1 "    0     # line from  AIRWAYJ1 115.00   (3) to BRKR  MANCHSTR
115.00
 1  34368 34366  "1 "    0     # line from  LASPALMS 115.00   (2) to BRKR  SANGER
115.00
 4  34368     0  "1 "    0     # LOAD-DROP    LASPALMS 115.00  LOAD==13.90(11.89)
 0
  #
  #
  # (212)  B2 LINE OUTAGE (BREAKER-TO-BREAKER)
  #
 1  34358 34360  "1 "    0     # line from  KERCKHF2 115.00  BRKR to (3)   WWARD JT
115.00
 1  34360 34414  "1 "    0     # line from  WWARD JT 115.00   (3) to BRKR  WOODWARD
115.00
 1  34360 34363  "1 "    0     # line from  WWARD JT 115.00   (3) to (3)   CLOVISJ1
115.00
 1  34363 34362  "1 "    0     # line from  CLOVISJ1 115.00   (3) to BRKR  CLOVIS-1
115.00
 1  34363 34366  "1 "    0     # line from  CLOVISJ1 115.00   (3) to BRKR  SANGER
115.00
 4  34362     0  "1 "    0     # LOAD-DROP    CLOVIS-1 115.00  LOAD==51.01(10.36)
 4  34362     0  "2 "    0     # LOAD-DROP    CLOVIS-1 115.00  LOAD==50.20(10.20)
 1 34362  34364  "1 "    1      # Switches in Clovis SW 387 to transfer load
 4 34362      0  "**"    1      # Restore Load at Clovis 1
 0
  #
  #
  # (213)  B2 LINE OUTAGE (BREAKER-TO-BREAKER)
  #
 1  34359 34361  "1 "    0     # line from  AIRWAYJ2 115.00   (3) to BRKR  AIRWAYS
115.00
 1  34359 34408  "1 "    0     # line from  AIRWAYJ2 115.00   (3) to BRKR  BARTON
115.00
 1  34359 34366  "1 "    0     # line from  AIRWAYJ2 115.00   (3) to BRKR  SANGER
115.00
 0
  #
  #
  # (214)  B2 LINE OUTAGE (BREAKER-TO-BREAKER)
  #
 1  34364 34365  "1 "    0     # line from  CLOVIS-2 115.00  BRKR to (3)   CLOVISJ2
115.00
 1  34365 34358  "1 "    0     # line from  CLOVISJ2 115.00   (3) to BRKR  KERCKHF2
115.00
 1  34365 34366  "1 "    0     # line from  CLOVISJ2 115.00   (3) to BRKR  SANGER
115.00
 4  34364     0  "3 "    0     # LOAD-DROP    CLOVIS-2 115.00  LOAD==44.76(9.09)
 1 34362  34364  "1 "    1      # Switches in Clovis SW 387 to transfer load
 4 34364      0  "**"    1      # Restore Load at Clovis 2
 0
  #
  #
  # (215)  B2 LINE OUTAGE (BREAKER-TO-BREAKER)
  #
 1  34366 34370  "1 "    0     # line from  SANGER   115.00  BRKR to BRKR  MC CALL
115.00
 0
  #
```

```
  #
  # (216)  B2 LINE OUTAGE (BREAKER-TO-BREAKER)
  #
 1  34366 34370  "2 "    0     # line from  SANGER   115.00  BRKR to BRKR  MC CALL
115.00
 0
  #
  #
  # (217)  B2 LINE OUTAGE (BREAKER-TO-BREAKER)
  #
 1  34366 34370  "3 "    0     # line from  SANGER   115.00  BRKR to BRKR  MC CALL
115.00
 0
  #
  #
  # (218)  B2 LINE OUTAGE (BREAKER-TO-BREAKER)
  #
 1  34366 34372  "1 "    0     # line from  SANGER   115.00  BRKR to BRKR  MALAGA
115.00
 0
  #
  #
  # (219)  B2 LINE OUTAGE (BREAKER-TO-BREAKER)
  #
 1  34366 34389  "1 "    0     # line from  SANGER   115.00  BRKR to (3)   RAINBWTP
115.00
 1  34389 34388  "1 "    0     # line from  RAINBWTP 115.00   (3) to (1)   RAINBW
115.00
 1  34389 34394  "1 "    0     # line from  RAINBWTP 115.00   (3) to (3)   PIEDRA 1
115.00
 1  34394 34380  "1 "    0     # line from  PIEDRA 1 115.00   (3) to BRKR  REEDLEY
115.00
 1  34394 34400  "1 "    0     # line from  PIEDRA 1 115.00   (3) to BRKR  KNGSRVR1
115.00
 4  34388     0  "1 "    0     # LOAD-DROP    RAINBW   115.00  LOAD==16.20(3.29)
 0
  #
  #
  # (220)  B2 LINE OUTAGE (BREAKER-TO-BREAKER)
  #
 1  34366 34396  "1 "    0     # line from  SANGER   115.00  BRKR to (2)   PIEDRA 2
115.00
 1  34396 34398  "1 "    0     # line from  PIEDRA 2 115.00   (2) to (2)   BALCH
115.00
 2  34398 34624  "1 "    0     # TRAN from  BALCH    115.00   (2) to (1)   BALCH 1
13.20
 4  34624     0  "1 "    0     # LOAD-DROP    BALCH 1   13.20  LOAD==0.26(0.00)
 3  34624     0  "1 "    0     # GEN-DROP    BALCH 1   13.20  GEN==27.00(8.33)
 0
  #
  #
  # (221)  B2 LINE OUTAGE (BREAKER-TO-BREAKER)
  #
 1  34369 34370  "1 "    0     # line from  P0418    115.00   (5) to BRKR  MC CALL
115.00
 2  34369 34661  "1 "    0     # TRAN from  P0418    115.00   (5) to (1)   P0418GT1
13.80
 2  34369 34663  "1 "    0     # TRAN from  P0418    115.00   (5) to (1)   P0418GT2
13.80
 2  34369 34665  "1 "    0     # TRAN from  P0418    115.00   (5) to (1)   P0418GT3
13.80
 2  34369 34667  "1 "    0     # TRAN from  P0418    115.00   (5) to (1)   P0418GT4
13.80
 4  34661     0  "ss"    0     # LOAD-DROP    P0418GT1  13.80  LOAD==3.00(1.66)
 4  34663     0  "ss"    0     # LOAD-DROP    P0418GT2  13.80  LOAD==3.00(1.66)
 4  34665     0  "ss"    0     # LOAD-DROP    P0418GT3  13.80  LOAD==3.00(1.66)
 4  34667     0  "ss"    0     # LOAD-DROP    P0418GT4  13.80  LOAD==3.00(1.66)
 3  34661     0  "1 "    0     # GEN-DROP    P0418GT1  13.80  GEN==78.80(13.93)
 3  34663     0  "2 "    0     # GEN-DROP    P0418GT2  13.80  GEN==78.80(13.93)
 3  34665     0  "3 "    0     # GEN-DROP    P0418GT3  13.80  GEN==78.80(13.93)
```

```
 3  34667     0  "4 "    0     # GEN-DROP    P0418GT4  13.80  GEN==78.80(13.93)
 0
  #
  #
  # (222)  B2 LINE OUTAGE (BREAKER-TO-BREAKER)
  #
 1  34370 34382  "1 "    0     # line from  MC CALL  115.00  BRKR to BRKR  WAHTOKE
115.00
 0
  #
  #
  # (223)  B2 LINE OUTAGE (BREAKER-TO-BREAKER)
  #
 1  34370 34385  "1 "    0     # line from  MC CALL  115.00  BRKR to (3)   KINGS J1
115.00
 1  34385 34417  "1 "    0     # line from  KINGS J1 115.00   (3) to (2)   KINGS J2
115.00
 1  34385 34425  "1 "    0     # line from  KINGS J1 115.00   (3) to (3)   KCOGNJCT
115.00
 1  34417 34418  "1 "    0     # line from  KINGS J2 115.00   (2) to BRKR  KINGSBRG
115.00
 1  34425 34387  "1 "    0     # line from  KCOGNJCT 115.00   (3) to (1)   SUNMAID
115.00
 1  34425 34427  "1 "    0     # line from  KCOGNJCT 115.00   (3) to (2)   GRDNGLS2
115.00
 1  34427 34386  "1 "    0     # line from  GRDNGLS2 115.00   (2) to (2)   KNGSCOGN
115.00
 2  34386 34642  "1 "    0     # TRAN from  KNGSCOGN 115.00   (2) to BRKR  KINGSBUR
9.11
 4  34387     0  "1 "    0     # LOAD-DROP    SUNMAID  115.00  LOAD==3.40(3.28)
 3  34642     0  "1 "    0     # GEN-DROP    KINGSBUR   9.11  GEN==34.00(17.30)
 0
  #
  #
  # (224)  B2 LINE OUTAGE (BREAKER-TO-BREAKER)
  #
 1  34402 34404  "1 "    0     # line from  CAL AVE  115.00  BRKR to BRKR  WST FRSO
115.00
 0
  #
  #
  # (225)  B2 LINE OUTAGE (BREAKER-TO-BREAKER)
  #
 1  34372 34376  "1 "    0     # line from  MALAGA   115.00  BRKR to (1)   PPG
115.00
 4  34376     0  "1 "    0     # LOAD-DROP    PPG      115.00  LOAD==6.25(3.87)
 0
  #
  #
  # (226)  B2 LINE OUTAGE (BREAKER-TO-BREAKER)
  #
 1  34372 34379  "1 "    0     # line from  MALAGA   115.00  BRKR to (3)   MALAGATP
115.00
 1  34379 34373  "1 "    0     # line from  MALAGATP 115.00   (3) to (3)   SCWAXJCT
115.00
 1  34379 34375  "1 "    0     # line from  MALAGATP 115.00   (3) to (3)   ULTPWRJ
115.00
 1  34373 34371  "1 "    0     # line from  SCWAXJCT 115.00   (3) to (1)   SCWAX
115.00
 1  34373 34374  "1 "    0     # line from  SCWAXJCT 115.00   (3) to (1)   RANCHRS
115.00
 1  34375 34377  "1 "    0     # line from  ULTPWRJ  115.00   (3) to (2)   AIRPROD
115.00
 2  34375 34640  "1 "    0     # TRAN from  ULTPWRJ  115.00   (3) to (1)   ULTR.PWR
9.11
 1  34377 34370  "1 "    0     # line from  AIRPROD  115.00   (2) to BRKR  MC CALL
115.00
 4  34371     0  "1 "    0     # LOAD-DROP    SCWAX    115.00  LOAD==2.70(1.53)
 4  34374     0  "1 "    0     # LOAD-DROP    RANCHRS  115.00  LOAD==9.16(1.86)
 4  34377     0  "1 "    0     # LOAD-DROP    AIRPROD  115.00  LOAD==5.10(2.02)
```

```
 3  34640     0  "1 "    0     # GEN-DROP    ULTR.PWR   9.11  GEN==14.50(13.00)
 0
  #
  #
  # (227)  B2 LINE OUTAGE (BREAKER-TO-BREAKER)
  #
 1  34372 34381  "1 "    0     # line from  MALAGA   115.00  BRKR to (3)   KRCDP
115.00
 2  34381 34671  "1 "    0     # TRAN from  KRCDP    115.00   (3) to (1)   KRCDPCT1
13.80
 2  34381 34672  "1 "    0     # TRAN from  KRCDP    115.00   (3) to (1)   KRCDPCT2
13.80
 4  34671     0  "ss"    0     # LOAD-DROP    KRCDPCT1  13.80  LOAD==1.05(0.65)
 4  34672     0  "ss"    0     # LOAD-DROP    KRCDPCT2  13.80  LOAD==1.05(0.65)
 3  34671     0  "1 "    0     # GEN-DROP    KRCDPCT1  13.80  GEN==50.00(7.14)
 3  34672     0  "1 "    0     # GEN-DROP    KRCDPCT2  13.80  GEN==50.00(7.14)
 0
  #
  #
  # (228)  B2 LINE OUTAGE (BREAKER-TO-BREAKER)
  #
 1  34380 34384  "1 "    0     # line from  REEDLEY  115.00  BRKR to (2)   GERAWAN
115.00
 1  34384 34382  "1 "    0     # line from  GERAWAN  115.00   (2) to BRKR  WAHTOKE
115.00
 0
  #
  #
  # (229)  B2 LINE OUTAGE (BREAKER-TO-BREAKER)
  #
 1  34390 34370  "1 "    0     # line from  DANISHCM 115.00   (2) to BRKR  MC CALL
115.00
 1  34390 34402  "1 "    0     # line from  DANISHCM 115.00   (2) to BRKR  CAL AVE
115.00
 4  34390     0  "1 "    0     # LOAD-DROP    DANISHCM 115.00  LOAD==4.10(3.51)
 0
  #
  #
  # (230)  B2 LINE OUTAGE (BREAKER-TO-BREAKER)
  #
 1  34391 34392  "1 "    0     # line from  QUEBECTP 115.00   (2) to (1)   QUEBEC
115.00
 1  34391 34426  "1 "    0     # line from  QUEBECTP 115.00   (2) to BRKR  ALPAUGH
115.00
 4  34392     0  "1 "    0     # LOAD-DROP    QUEBEC   115.00  LOAD==11.20(7.82)
 0
  #
  #
  # (231)  B2 LINE OUTAGE (BREAKER-TO-BREAKER)
  #
 1  34404 34370  "1 "    0     # line from  WST FRSO 115.00  BRKR to BRKR  MC CALL
115.00
 0
  #
  #
  # (232)  B2 LINE OUTAGE (BREAKER-TO-BREAKER)
  #
 1  34408 34412  "1 "    0     # line from  BARTON   115.00  BRKR to BRKR  HERNDON
115.00
 0
  #
  #
  # (233)  B2 LINE OUTAGE (BREAKER-TO-BREAKER)
  #
 1  34409 34413  "1 "    0     # line from  PNDLJ2   115.00   (3) to BRKR  PNEDLE
115.00
 1  34409 34416  "1 "    0     # line from  PNDLJ2   115.00   (3) to BRKR  BULLARD
115.00
 1  34409 34412  "1 "    0     # line from  PNDLJ2   115.00   (3) to BRKR  HERNDON
115.00
```

```
 4  34413     0  "2 "    0     # LOAD-DROP    PNEDLE   115.00  LOAD==30.74(6.25)
 4  34413     0  "3 "    0     # LOAD-DROP    PNEDLE   115.00  LOAD==40.42(8.20)
 1  34411 34413  "1 "    1      # Switches in Pindale CB#12 to transfer load
 4  34413     0  "**"    1      # Restore load at Pindale
 0
  #
  #
  # (234)  B2 LINE OUTAGE (BREAKER-TO-BREAKER)
  #
 1  34410 34412  "1 "    0     # line from  MANCHSTR 115.00  BRKR to BRKR  HERNDON
115.00
 0
  #
  #
  # (235)  B2 LINE OUTAGE (BREAKER-TO-BREAKER)
  #
 1  34411 34416  "1 "    0     # line from  PNDLJ1   115.00   (2) to BRKR  BULLARD
115.00
 1  34411 34412  "1 "    0     # line from  PNDLJ1   115.00   (2) to BRKR  HERNDON
115.00
 0
  #
  #
  # (236)  B2 LINE OUTAGE (BREAKER-TO-BREAKER)
  #
 1  34412 34422  "1 "    0     # line from  HERNDON  115.00  BRKR to (2)   CHLDHOSP
115.00
 1  34422 34414  "1 "    0     # line from  CHLDHOSP 115.00   (2) to BRKR  WOODWARD
115.00
 4  34422     0  "1 "    0     # LOAD-DROP    CHLDHOSP 115.00  LOAD==3.50(1.60)
 0
  #
  #
  # (237)  B2 LINE OUTAGE (BREAKER-TO-BREAKER)
  #
 1  34418 34420  "1 "    0     # line from  KINGSBRG 115.00  BRKR to BRKR  CORCORAN
115.00
 0
  #
  #
  # (238)  B2 LINE OUTAGE (BREAKER-TO-BREAKER)
  #
 1  34418 34420  "2 "    0     # line from  KINGSBRG 115.00  BRKR to BRKR  CORCORAN
115.00
 0
  #
  #
  # (239)  B2 LINE OUTAGE (BREAKER-TO-BREAKER)
  #
 1  34418 34423  "1 "    0     # line from  KINGSBRG 115.00  BRKR to (3)   GAURD J1
115.00
 1  34423 34370  "1 "    0     # line from  GAURD J1 115.00   (3) to BRKR  MC CALL
115.00
 1  34423 34421  "1 "    0     # line from  GAURD J1 115.00   (3) to (2)   GAURD J2
115.00
 1  34421 34424  "1 "    0     # line from  GAURD J2 115.00   (2) to (1)   GRDN GLS
115.00
 4  34424     0  "1 "    0     # LOAD-DROP    GRDN GLS 115.00  LOAD==3.50(1.15)
 4  34418     0  "3 "    0      # Kingsburg Bank #3 will also be dropped on this outage
 0
  #
  #
  # (240)  B2 LINE OUTAGE (BREAKER-TO-BREAKER)
  #
 1  34418 34428  "1 "    0     # line from  KINGSBRG 115.00  BRKR to (2)   CONTADNA
115.00
 1  34428 34429  "1 "    0     # line from  CONTADNA 115.00   (2) to (4)   GWF_HEP
115.00
 1  34429 34521  "1 "    0     # line from  GWF_HEP  115.00   (4) to (2)   LEPRNOFD
115.00
```

```
 2  34429 34431  "1 "    0     # TRAN from  GWF_HEP  115.00   (4) to (1)   GWF_HEP1
13.80
 2  34429 34433  "1 "    0     # TRAN from  GWF_HEP  115.00   (4) to (1)   GWF_HEP2
13.80
 1  34521 34430  "1 "    0     # line from  LEPRNOFD 115.00   (2) to BRKR  HENRETTA
115.00
 4  34428     0  "1 "    0     # LOAD-DROP    CONTADNA 115.00  LOAD==7.60(5.70)
 4  34429     0  "ss"    0     # LOAD-DROP    GWF_HEP  115.00  LOAD==3.00(0.68)
 4  34521     0  "1 "    0     # LOAD-DROP    LEPRNOFD 115.00  LOAD==6.65(4.30)
 3  34431     0  "1 "    0     # GEN-DROP    GWF_HEP1  13.80  GEN==50.00(21.27)
 3  34433     0  "1 "    0     # GEN-DROP    GWF_HEP2  13.80  GEN==50.00(21.27)
 0
  #
  #
  # (241)  B2 LINE OUTAGE (BREAKER-TO-BREAKER)
  #
 1  34426 34700  "1 "    0     # line from  ALPAUGH  115.00  BRKR to BRKR  SMYRNA
115.00
 0
  #
  #
  # (242)  B2 LINE OUTAGE (BREAKER-TO-BREAKER)
  #
 1  34452 34260  "1 "    0     # line from  WISHON    70.00  BRKR to (3)   SJNO2
70.00
 1  34260 34259  "1 "    0     # line from  SJNO2     70.00   (3) to (3)   NRTHFORK
70.00
 2  34260 34631  "1 "    0     # TRAN from  SJNO2     70.00   (3) to (1)   SJ2GEN
9.11
 1  34259 34261  "1 "    0     # line from  NRTHFORK  70.00   (3) to (2)   SJNO3
70.00
 2  34259 34340  "1 "    0     # TRAN from  NRTHFORK  70.00   (3) to (1)   N.FORK E
9.11
 2  34261 34633  "1 "    0     # TRAN from  SJNO3     70.00   (2) to (1)   SJ3GEN
9.11
 4  34260     0  "2 "    0     # LOAD-DROP    SJNO2     70.00  LOAD==3.22(0.66)
 4  34261     0  "2 "    0     # LOAD-DROP    SJNO3     70.00  LOAD==6.95(1.41)
 4  34340     0  "1 "    0     # LOAD-DROP    N.FORK E   9.11  LOAD==1.21(0.25)
 3  34631     0  "1 "    0     # GEN-DROP    SJ2GEN     9.11  GEN==2.00(0.00)
 3  34633     0  "1 "    0     # GEN-DROP    SJ3GEN     9.11  GEN==1.00(0.00)
 0
  #
  #
  # (243)  B2 LINE OUTAGE (BREAKER-TO-BREAKER)
  #
 1  34452 34491  "1 "    0     # line from  WISHON    70.00  BRKR to (3)   AUBRYTP
70.00
 1  34491 34464  "1 "    0     # line from  AUBRYTP   70.00   (3) to BRKR  COPPRMNE
70.00
 1  34491 34493  "1 "    0     # line from  AUBRYTP   70.00   (3) to (1)   AUBERRY
70.00
 4  34493     0  "1 "    0     # LOAD-DROP    AUBERRY   70.00  LOAD==6.07(1.23)
 4  34493     0  "2 "    0     # LOAD-DROP    AUBERRY   70.00  LOAD==7.15(1.45)
 0
  #
  #
  # (244)  B2 LINE OUTAGE (BREAKER-TO-BREAKER)
  # spring outage
 1  34456 34458  "1 "    0     # line from  HRDWK TP  70.00   (3) to (1)   HARDWICK
70.00
 1  34456 34522  "1 "    0     # line from  HRDWK TP  70.00   (3) to (2)   HNFRD SW
70.00
 1  34456 34576  "1 "    0     # line from  HRDWK TP  70.00   (3) to BRKR  KNGLOBUS
70.00
 1  34522 34518  "1 "    0     # line from  HNFRD SW  70.00   (2) to BRKR  LEMOORE
70.00
 4  34458     0  "1 "    0     # LOAD-DROP    HARDWICK  70.00  LOAD==12.86(2.61)
 0
  #
  #
```

```
  # (245)  B2 LINE OUTAGE (BREAKER-TO-BREAKER)
  #
 1  34460 34462  "1 "    0     # line from  GUERNSEY  70.00  BRKR to (3)   GUR3TPT
70.00
 1  34462 34542  "1 "    0     # line from  GUR3TPT   70.00   (3) to (2)   JCBSCRNR
70.00
 1  34462 34554  "1 "    0     # line from  GUR3TPT   70.00   (3) to BRKR  AMSTG SW
70.00
 1  34542 34540  "1 "    0     # line from  JCBSCRNR  70.00   (2) to BRKR  HENRITTA
70.00
 4  34460     0  "1 "    0     # LOAD-DROP    GUERNSEY  70.00  LOAD==10.51(2.13)
 4  34542     0  "1 "    0     # LOAD-DROP    JCBSCRNR  70.00  LOAD==12.05(2.45)
 4  34542     0  "2 "    0     # LOAD-DROP    JCBSCRNR  70.00  LOAD==9.54(1.94)
 0
  #
  #
  # (246)  B2 LINE OUTAGE (BREAKER-TO-BREAKER)
  #
 1  34464 34478  "1 "    0     # line from  COPPRMNE  70.00  BRKR to BRKR  TVY VLLY
70.00
 0
  #
  #
  # (247)  B2 LINE OUTAGE (BREAKER-TO-BREAKER)
  #
 1  34464 34638  "1 "    0     # line from  COPPRMNE  70.00  BRKR to (2)   FRANTDM
70.00
 2  34638 34636  "1 "    0     # TRAN from  FRANTDM   70.00   (2) to (1)   FRIANTDM
6.60
 3  34636     0  "2 "    0     # GEN-DROP    FRIANTDM   6.60  GEN==14.70(5.86)
 3  34636     0  "3 "    0     # GEN-DROP    FRIANTDM   6.60  GEN==7.80(3.11)
 3  34636     0  "4 "    0     # GEN-DROP    FRIANTDM   6.60  GEN==2.30(0.92)
 0
  #
  #
  # (248)  B2 LINE OUTAGE (BREAKER-TO-BREAKER)
  #
 1  34466 34482  "1 "    0     # line from  BIOLA     70.00  BRKR to BRKR  OLDKERN
70.00
 4  34466     0  "1 "    0     # LOAD-DROP    BIOLA     70.00  LOAD==21.80(4.43)
 0
  #
  #
  # (249)  B2 LINE OUTAGE (BREAKER-TO-BREAKER)
  #
 1  34468 34482  "1 "    0     # line from  BOWLES    70.00   (1) to BRKR  OLDKERN
70.00
 4  34468     0  "1 "    0     # LOAD-DROP    BOWLES    70.00  LOAD==18.29(3.72)
 0
  #
  #
  # (250)  B2 LINE OUTAGE (BREAKER-TO-BREAKER)
  #
 1  34469 34271  "1 "    0     # line from  GFFNJCT   70.00   (3) to (3)   WSTLDJCT
70.00
 1  34469 34470  "1 "    0     # line from  GFFNJCT   70.00   (3) to (1)   GIFFEN
70.00
 1  34469 34471  "1 "    0     # line from  GFFNJCT   70.00   (3) to (3)   SNJQJCT
70.00
 1  34271 34172  "1 "    0     # line from  WSTLDJCT  70.00   (3) to (2)   WESTLAND
70.00
 1  34271 34269  "1 "    0     # line from  WSTLDJCT  70.00   (3) to (3)   BIOMSJCT
70.00
 1  34471 34472  "1 "    0     # line from  SNJQJCT   70.00   (3) to BRKR  SAN JOQN
70.00
 1  34471 34474  "1 "    0     # line from  SNJQJCT   70.00   (3) to BRKR  HELM
70.00
 1  34172 34170  "1 "    0     # line from  WESTLAND  70.00   (2) to (1)   WESIX
70.00
```

```
 1  34269 34268  "1 "    0     # line from  BIOMSJCT  70.00   (3) to BRKR  MENDOTA
70.00
 1  34269 34270  "1 "    0     # line from  BIOMSJCT  70.00   (3) to (2)   BIOMASS
70.00
 2  34270 34334  "1 "    0     # TRAN from  BIOMASS   70.00   (2) to (1)   BIO PWR
9.11
 4  34470     0  "1 "    0     # LOAD-DROP    GIFFEN    70.00  LOAD==9.59(1.95)
 4  34172     0  "1 "    0     # LOAD-DROP    WESTLAND  70.00  LOAD==3.20(0.76)
 4  34170     0  "1 "    0     # LOAD-DROP    WESIX     70.00  LOAD==1.60(0.38)
 3  34334     0  "1 "    0     # GEN-DROP    BIO PWR    9.11  GEN==21.80(10.99)
 1  34472 34473  "1 "    1      # Switches in San Joaquin CB22 to transfer load
 4  34472     0  "**"    1      # Restore Load at San Joaquin
 0
  #
  #
  # (251)  B2 LINE OUTAGE (BREAKER-TO-BREAKER)
  #
 1  34473 34472  "1 "    0     # line from  SNJQTP    70.00   (2) to BRKR  SAN JOQN
70.00
 1  34473 34475  "1 "    0     # line from  SNJQTP    70.00   (2) to (3)   AGRCJCT
70.00
 1  34475 34476  "1 "    0     # line from  AGRCJCT   70.00   (3) to (2)   AGRICO
70.00
 1  34475 34484  "1 "    0     # line from  AGRCJCT   70.00   (3) to BRKR  KERMAN
70.00
 2  34476 34608  "1 "    0     # TRAN from  AGRICO    70.00   (2) to (1)   AGRICO
13.80
 4  34484     0  "1 "    0     # LOAD-DROP    KERMAN    70.00  LOAD==19.44(3.95)
 4  34484     0  "2 "    0     # LOAD-DROP    KERMAN    70.00  LOAD==11.78(2.39)
 3  34608     0  "2 "    0     # GEN-DROP    AGRICO    13.80  GEN==7.00(1.08)
 3  34608     0  "3 "    0     # GEN-DROP    AGRICO    13.80  GEN==18.10(2.80)
 3  34608     0  "4 "    0     # GEN-DROP    AGRICO    13.80  GEN==26.00(4.02)
 0
  #
  #
  # (252)  B2 LINE OUTAGE (BREAKER-TO-BREAKER)
  #
 1  34474 34556  "1 "    0     # line from  HELM      70.00  BRKR to BRKR  STRD JCT
70.00
 0
  #
  #
  # (253)  B2 LINE OUTAGE (BREAKER-TO-BREAKER)
  #
 1  34478 34492  "1 "    0     # line from  TVY VLLY  70.00  BRKR to BRKR  REEDLEY
70.00
 0
  #
  #
  # (254)  B2 LINE OUTAGE (BREAKER-TO-BREAKER)
  # spring outage
 1  34480 34481  "1 "    0     # line from  KEARNEY   70.00  BRKR to (4)   FRWWTAP
70.00
 1  34481 34483  "1 "    0     # line from  FRWWTAP   70.00   (4) to (3)   FRESNOWW
70.00
 1  34481 34483  "2 "    0     # line from  FRWWTAP   70.00   (4) to (3)   FRESNOWW
70.00
 1  34481 34484  "1 "    0     # line from  FRWWTAP   70.00   (4) to BRKR  KERMAN
70.00
 2  34483 34485  "1 "    0     # TRAN from  FRESNOWW  70.00   (3) to (1)   FRESNOWW
12.47
 4  34485     0  "1 "    0     # LOAD-DROP    FRESNOWW  12.47  LOAD==7.91(0.00)
 3  34485     0  "1 "    0     # GEN-DROP    FRESNOWW  12.47  GEN==9.00(0.00)
 0
  #
  #
  # (255)  B2 LINE OUTAGE (BREAKER-TO-BREAKER)
  #
 1  34480 34482  "1 "    0     # line from  KEARNEY   70.00  BRKR to (3)   OLDKERN
70.00
```

```
 1  34482 34466  "1 "    0     # line from  OLDKERN   70.00  BRKR to BRKR  BIOLA
70.00
 1  34482 34468  "1 "    0     # line from  OLDKERN   70.00  BRKR to (1)   BOWLES
70.00
 4  34482     0  "1 "    0     # LOAD-DROP    OLDKERN   70.00  LOAD==18.75(3.81)
 4  34482     0  "3 "    0     # LOAD-DROP    OLDKERN   70.00  LOAD==7.57(1.54)
 4  34466     0  "1 "    0     # LOAD-DROP    BIOLA     70.00  LOAD==21.80(4.43)
 4  34468     0  "1 "    0     # LOAD-DROP    BOWLES    70.00  LOAD==18.29(3.72)
 0
  #
  #
  # (256)  B2 LINE OUTAGE (BREAKER-TO-BREAKER)
  #
 1  34480 34512  "1 "    0     # line from  KEARNEY   70.00  BRKR to BRKR  CARUTHRS
70.00
 4  34512     0  "1 "    0     # LOAD-DROP    CARUTHRS  70.00  LOAD==19.63(3.98)
 0
  #
  #
  # (257)  B2 LINE OUTAGE (BREAKER-TO-BREAKER)
  #
 1  34487 34489  "1 "    0     # line from  SNGRJCT   70.00   (3) to (2)   SNGRCOGN
70.00
 1  34487 34490  "1 "    0     # line from  SNGRJCT   70.00   (3) to (2)   PARLIER
70.00
 1  34487 34488  "1 "    0     # line from  SNGRJCT   70.00   (3) to BRKR  SANGER
70.00
 2  34489 34646  "1 "    0     # TRAN from  SNGRCOGN  70.00   (2) to (1)   SANGERCO
9.11
 1  34490 34492  "1 "    0     # line from  PARLIER   70.00   (2) to BRKR  REEDLEY
70.00
 4  34490     0  "1 "    0     # LOAD-DROP    PARLIER   70.00  LOAD==20.24(4.11)
 3  34646     0  "1 "    0     # GEN-DROP    SANGERCO   9.11  GEN==37.50(1.40)
 0
  #
  #
  # (258)  B2 LINE OUTAGE (BREAKER-TO-BREAKER)
  #
 1  34488 34366  "1 "    0     # line from  SANGER    70.00  BRKR to BRKR  SANGER
115.00
 0
  #
  #
  # (259)  B2 LINE OUTAGE (BREAKER-TO-BREAKER)
  #
 1  34492 34497  "1 "    0     # line from  REEDLEY   70.00  BRKR to (3)   DNUBAJCT
70.00
 1  34497 34499  "1 "    0     # line from  DNUBAJCT  70.00   (3) to (2)   DNUBAEGY
70.00
 1  34497 34500  "1 "    0     # line from  DNUBAJCT  70.00   (3) to BRKR  DINUBA
70.00
 2  34499 34648  "1 "    0     # TRAN from  DNUBAEGY  70.00   (2) to (1)   DINUBA E
13.80
 4  34648     0  "ss"    0     # LOAD-DROP    DINUBA E  13.80  LOAD==0.30(0.26)
 3  34648     0  "1 "    0     # GEN-DROP    DINUBA E  13.80  GEN==12.00(7.00)
 0
  #
  #
  # (260)  B2 LINE OUTAGE (BREAKER-TO-BREAKER)
  #
 1  34492 34526  "1 "    0     # line from  REEDLEY   70.00  BRKR to (3)   ORSI JCT
70.00
 1  34526 34495  "1 "    0     # line from  ORSI JCT  70.00   (3) to (2)   SANDCRK
70.00
 1  34526 34502  "1 "    0     # line from  ORSI JCT  70.00   (3) to BRKR  OROSI
70.00
 1  34495 34494  "1 "    0     # line from  SANDCRK   70.00   (2) to (1)   DUNLAP
70.00
 4  34495     0  "1 "    0     # LOAD-DROP    SANDCRK   70.00  LOAD==3.14(0.64)
 4  34494     0  "1 "    0     # LOAD-DROP    DUNLAP    70.00  LOAD==4.46(0.91)
```

```
 0
  #
  #
  # (261)  B2 LINE OUTAGE (BREAKER-TO-BREAKER)
  #
 1  34496 34498  "1 "    0     # line from  STCRRL J  70.00   (3) to (1)   STONCRRL
70.00
 1  34496 34500  "1 "    0     # line from  STCRRL J  70.00   (3) to BRKR  DINUBA
70.00
 1  34496 34502  "1 "    0     # line from  STCRRL J  70.00   (3) to (2)   OROSI
70.00
 1  34502 34526  "1 "    0     # line from  OROSI     70.00  BRKR to (1)   ORSI JCT
70.00
 4  34498     0  "2 "    0     # LOAD-DROP    STONCRRL  70.00  LOAD==3.37(0.68)
 4  34498     0  "3 "    0     # LOAD-DROP    STONCRRL  70.00  LOAD==2.68(0.54)
 4  34502     0  "1 "    0     # LOAD-DROP    OROSI     70.00  LOAD==8.38(1.70)
 4  34502     0  "2 "    0     # LOAD-DROP    OROSI     70.00  LOAD==7.43(1.51)
 0
  #
  #
  # (262)  B2 LINE OUTAGE (BREAKER-TO-BREAKER)
  # spring outage
 1  34508 34510  "1 "    0     # line from  CAMDEN    70.00   (2) to (2)   CMDN JCT
70.00
 1  34508 34576  "1 "    0     # line from  CAMDEN    70.00   (2) to BRKR  KNGLOBUS
70.00
 1  34510 34512  "1 "    0     # line from  CMDN JCT  70.00   (2) to BRKR  CARUTHRS
70.00
 4  34508     0  "1 "    0     # LOAD-DROP    CAMDEN    70.00  LOAD==6.87(1.40)
 4  34508     0  "2 "    0     # LOAD-DROP    CAMDEN    70.00  LOAD==10.90(2.22)
 0
  #
  #
  # (263)  B2 LINE OUTAGE (BREAKER-TO-BREAKER)
  #
 1  34514 34540  "1 "    0     # line from  MUSLSLGH  70.00   (1) to BRKR  HENRITTA
70.00
 4  34514     0  "1 "    0     # LOAD-DROP    MUSLSLGH  70.00  LOAD==22.00(13.60)
 0
  #
  #
  # (264)  B2 LINE OUTAGE (BREAKER-TO-BREAKER)
  #
 1  34516 34520  "1 "    0     # line from  LEPRINO   70.00   (1) to (4)   LPRNO TP
70.00
 1  34520 34518  "1 "    0     # line from  LPRNO TP  70.00   (4) to BRKR  LEMOORE
70.00
 1  34520 34524  "1 "    0     # line from  LPRNO TP  70.00   (4) to (1)   CANDLEWK
70.00
 1  34520 34540  "1 "    0     # line from  LPRNO TP  70.00   (4) to BRKR  HENRITTA
70.00
 4  34516     0  "1 "    0     # LOAD-DROP    LEPRINO   70.00  LOAD==16.10(9.12)
 4  34518     0  "1 "    0     # LOAD-DROP    LEMOORE   70.00  LOAD==18.86(3.83)
 4  34518     0  "2 "    0     # LOAD-DROP    LEMOORE   70.00  LOAD==32.81(6.66)
 0
  #
  #
  # (265)  B2 LINE OUTAGE (BREAKER-TO-BREAKER)
  #
 1  34528 34530  "1 "    0     # line from  CORCORAN  70.00  BRKR to (3)   BSWLL TP
70.00
 1  34530 34531  "1 "    0     # line from  BSWLL TP  70.00   (3) to (2)   JGBSWLL
70.00
 1  34530 34538  "1 "    0     # line from  BSWLL TP  70.00   (3) to (1)   BOSWELL
70.00
 1  34531 34536  "1 "    0     # line from  JGBSWLL   70.00   (2) to (1)   ANGIOLA
70.00
 4  34538     0  "1 "    0     # LOAD-DROP    BOSWELL   70.00  LOAD==2.37(1.53)
 4  34536     0  "1 "    0     # LOAD-DROP    ANGIOLA   70.00  LOAD==7.24(1.47)
 0
```

```
  #
  #
  # (266)  B2 LINE OUTAGE (BREAKER-TO-BREAKER)
  #
 1  34532 34554  "1 "    0     # line from  ARMSTRNG  70.00   (1) to (4)   AMSTG SW
70.00
 1  34554 34462  "1 "    0     # line from  AMSTG SW  70.00  BRKR to (1)   GUR3TPT
70.00
 1  34554 34534  "1 "    0     # line from  AMSTG SW  70.00   (4) to (1)   RESERVE
70.00
 2  34554 34650  "1 "    0     # TRAN from  AMSTG SW  70.00  BRKR to (1)   GWF-PWR.
13.80
 4  34534     0  "1 "    0     # LOAD-DROP    RESERVE   70.00  LOAD==2.03(0.41)
 3  34650     0  "1 "    0     # GEN-DROP    GWF-PWR.  13.80  GEN==23.00(12.00)
 0
  #
  #
  # (267)  B2 LINE OUTAGE (BREAKER-TO-BREAKER)
  #
 1  34537 34540  "1 "    0     # line from  GWF_HENR  70.00   (5) to BRKR  HENRITTA
70.00
 2  34537 34539  "1 "    0     # TRAN from  GWF_HENR  70.00   (5) to (1)   GWF_GT1
13.80
 2  34537 34541  "1 "    0     # TRAN from  GWF_HENR  70.00   (5) to (1)   GWF_GT2
13.80
 2  34537 34691  "1 "    0     # TRAN from  GWF_HENR  70.00   (5) to (1)   Q272_ST1
13.80
 2  34537 34692  "1 "    0     # TRAN from  GWF_HENR  70.00   (5) to (1)   Q272SLST
13.80
 4  34539     0  "ss"    0     # LOAD-DROP    GWF_GT1   13.80  LOAD==1.10(0.25)
 4  34541     0  "ss"    0     # LOAD-DROP    GWF_GT2   13.80  LOAD==1.10(0.25)
 4  34691     0  "ss"    0     # LOAD-DROP    Q272_ST1  13.80  LOAD==2.00(1.11)
 4  34692     0  "ss"    0     # LOAD-DROP    Q272SLST  13.80  LOAD==14.00(7.75)
 3  34539     0  "1 "    0     # GEN-DROP    GWF_GT1   13.80  GEN==50.00(4.51)
 3  34541     0  "1 "    0     # GEN-DROP    GWF_GT2   13.80  GEN==50.00(4.51)
 3  34691     0  "1 "    0     # GEN-DROP    Q272_ST1  13.80  GEN==27.00(1.87)
 3  34692     0  "1 "    0     # GEN-DROP    Q272SLST  13.80  GEN==139.00(35.74)
 0
  #
  #
  # (268)  B2 LINE OUTAGE (BREAKER-TO-BREAKER)
  #
 1  34544 34550  "1 "    0     # line from  TLRE LKE  70.00  BRKR to (2)   CHEVPLIN
70.00
 1  34550 34546  "1 "    0     # line from  CHEVPLIN  70.00   (2) to (2)   AVENAL
70.00
 1  34546 34548  "1 "    0     # line from  AVENAL    70.00   (2) to BRKR  KETTLEMN
70.00
 4  34544     0  "1 "    0     # LOAD-DROP    TLRE LKE  70.00  LOAD==6.79(1.38)
 4  34550     0  "1 "    0     # LOAD-DROP    CHEVPLIN  70.00  LOAD==1.01(0.73)
 4  34546     0  "1 "    0     # LOAD-DROP    AVENAL    70.00  LOAD==7.72(1.57)
 0
  #
  #
  # (269)  B2 LINE OUTAGE (BREAKER-TO-BREAKER)
  #
 1  34548 34552  "1 "    0     # line from  KETTLEMN  70.00   (2) to BRKR  GATES
70.00
 1  34548 34546  "1 "    0     # line from  KETTLEMN  70.00  BRKR to (1)   AVENAL
70.00
 4  34548     0  "1 "    0     # LOAD-DROP    KETTLEMN  70.00  LOAD==6.32(1.29)
 0
  #
  #
  # (270)  B2 LINE OUTAGE (BREAKER-TO-BREAKER)
  #
 1  34552 34558  "1 "    0     # line from  GATES     70.00  BRKR to BRKR  HURON
70.00
 0
  #
```

```
  #
  # (271)  B2 LINE OUTAGE (BREAKER-TO-BREAKER)
  #
 1  34552 34558  "2 "    0     # line from  GATES     70.00  BRKR to BRKR  HURON
70.00
 0
  #
  #
  # (272)  B2 LINE OUTAGE (BREAKER-TO-BREAKER)
  #
 1  34552 34578  "1 "    0     # line from  GATES     70.00  BRKR to (2)   JACALITO
70.00
 1  34578 34574  "1 "    0     # line from  JACALITO  70.00   (2) to BRKR  COLNGA 1
70.00
 4  34578     0  "1 "    0     # LOAD-DROP    JACALITO  70.00  LOAD==4.45(2.99)
 0
  #
  #
  # (273)  B2 LINE OUTAGE (BREAKER-TO-BREAKER)
  #
 1  34556 34562  "1 "    0     # line from  STRD JCT  70.00  BRKR to BRKR  SCHLNDLR
70.00
 0
  #
  #
  # (274)  B2 LINE OUTAGE (BREAKER-TO-BREAKER)
  #
 1  34556 34564  "1 "    0     # line from  STRD JCT  70.00   (3) to BRKR  STROUD
70.00
 1  34556 34474  "1 "    0     # line from  STRD JCT  70.00  BRKR to BRKR  HELM
70.00
 1  34556 34562  "1 "    0     # line from  STRD JCT  70.00  BRKR to BRKR  SCHLNDLR
70.00
 4  34564     0  "1 "    0     # LOAD-DROP    STROUD    70.00  LOAD==13.09(2.66)
 0
  #
  #
  # (275)  B2 LINE OUTAGE (BREAKER-TO-BREAKER)
  #
 1  34558 34560  "1 "    0     # line from  HURON     70.00  BRKR to (2)   CALFLAX
70.00
 1  34560 34562  "1 "    0     # line from  CALFLAX   70.00   (2) to BRKR  SCHLNDLR
70.00
 4  34560     0  "1 "    0     # LOAD-DROP    CALFLAX   70.00  LOAD==6.53(1.33)
 1  34552 34558  "2 "    0      # Must include Gates - Huron in this outage
 0
  #
  #
  # (276)  B2 LINE OUTAGE (BREAKER-TO-BREAKER)
  #
 1  34562 34566  "1 "    0     # line from  SCHLNDLR  70.00  BRKR to (2)   PLSNTVLY
70.00
 1  34566 34570  "1 "    0     # line from  PLSNTVLY  70.00   (2) to BRKR  COLNGA 2
70.00
 4  34566     0  "1 "    0     # LOAD-DROP    PLSNTVLY  70.00  LOAD==10.00(2.51)
 0
  #
  #
  # (277)  B2 LINE OUTAGE (BREAKER-TO-BREAKER)
  #
 1  34570 34572  "1 "    0     # line from  COLNGA 2  70.00  BRKR to (3)   TORNADO
70.00
 1  34572 34574  "1 "    0     # line from  TORNADO   70.00   (3) to BRKR  COLNGA 1
70.00
 2  34572 34654  "1 "    0     # TRAN from  TORNADO   70.00   (3) to (1)   COLNGAGN
9.11
 4  34572     0  "1 "    0     # LOAD-DROP    TORNADO   70.00  LOAD==1.74(1.44)
 3  34654     0  "1 "    0     # GEN-DROP    COLNGAGN   9.11  GEN==34.00(5.40)
 2  34570 34652  "1 "    0      # Must include Colinga2 - Chv.coal in this outage -
modeled on bus,
```

```
 3  34652     0  "**"    0      # Drops units on Derrick Sub
 4  34652     0  "**"    0      # Drops load at Derrick Sub
 0
  #
  #
  # (278)  B2 LINE OUTAGE (BREAKER-TO-BREAKER)
  #
 1  36354 34574  "1 "    0     # line from  SAN MIGL  70.00  BRKR to BRKR  COLNGA 1
70.00
 0
  #
  #
  # (279)  B3 TRANSFORMER OUTAGE (BREAKER-TO-BREAKER)
  #
#      **** 3-WINDING TRANSFORMER  30835  (30882)  34412  34630 :
 2  30835 34412  "1 "    0     # TRAN from  HERNDON  230.00  BRKR to (1)   HERNDON
115.00
 0
  #
  #
  # (280)  B3 TRANSFORMER OUTAGE (BREAKER-TO-BREAKER)
  #
#      **** 3-WINDING TRANSFORMER  30835  (30883)  34412  34632 :
 2  30835 34412  "2 "    0     # TRAN from  HERNDON  230.00  BRKR to (1)   HERNDON
115.00
 0
  #
  #
  # (281)  B3 TRANSFORMER OUTAGE (BREAKER-TO-BREAKER)
  #
#      **** 3-WINDING TRANSFORMER  30875  (30876)  34370  34618 :
 2  30875 34370  "1 "    0     # TRAN from  MC CALL  230.00  BRKR to (1)   MC CALL
115.00
 0
  #
  #
  # (282)  B3 TRANSFORMER OUTAGE (BREAKER-TO-BREAKER)
  #
#      **** 3-WINDING TRANSFORMER  30875  (30877)  34370  34620 :
 2  30875 34370  "2 "    0     # TRAN from  MC CALL  230.00  BRKR to (1)   MC CALL
115.00
 0
  #
  #
  # (283)  B3 TRANSFORMER OUTAGE (BREAKER-TO-BREAKER)
  #
#      **** 3-WINDING TRANSFORMER  30875  (30878)  34370  34621 :
 2  30875 34370  "3 "    0     # TRAN from  MC CALL  230.00  BRKR to (1)   MC CALL
115.00
 0
  #
  #
  # (284)  B3 TRANSFORMER OUTAGE (BREAKER-TO-BREAKER)
  #
 2  30881 34430  "3 "    0     # TRAN from  HENRIETA 230.00  BRKR to BRKR  HENRETTA
115.00
 0
  #
  #
  # (285)  B3 TRANSFORMER OUTAGE (BREAKER-TO-BREAKER)
  #
#      **** 3-WINDING TRANSFORMER  30900  (34607)  30055  34606 :
 2  30900 30055  "11"    0     # TRAN from  GATES    230.00  BRKR to (1)   GATES
500.00
 0
  #
  #
  # (286)  B3 TRANSFORMER OUTAGE (BREAKER-TO-BREAKER)
  #
```

```
 2  30900 30901  "1 "    0     # TRAN from  GATES    230.00  BRKR to (3)   GATES 1M
230.00
 2  30901 34378  "1 "    0     # TRAN from  GATES 1M 230.00   (3) to BRKR  GATES
115.00
 2  30901 34622  "1 "    0     # TRAN from  GATES 1M 230.00   (3) to (1)   GATES 1T
13.20
 4 34378      0  "3 "    0      # Drop Gates Bank #3
 0
  #
  #
  # (287)  B3 TRANSFORMER OUTAGE (BREAKER-TO-BREAKER)
  #
 2  34356 34344  "1 "    0     # TRAN from  KERCKHF1 115.00  BRKR to (1)   KERCKHOF
6.60
 4  34344     0  "4 "    0     # LOAD-DROP    KERCKHOF   6.60  LOAD==3.24(0.66)
 3  34344     0  "2 "    0     # GEN-DROP    KERCKHOF   6.60  GEN==6.80(-4.00)
 0
  #
  #
  # (288)  B3 TRANSFORMER OUTAGE (BREAKER-TO-BREAKER)
  #
 2  34366 34590  "1 "    0     # TRAN from  SANGER   115.00  BRKR to (2)   SANGR3T
115.00
 2  34590 34488  "1 "    0     # TRAN from  SANGR3T  115.00   (2) to BRKR  SANGER
70.00
 4  34590     0  "3 "    0     # LOAD-DROP    SANGR3T  115.00  LOAD==20.55(4.17)
 0
  #
  #
  # (289)  B3 TRANSFORMER OUTAGE (BREAKER-TO-BREAKER)
  #
 2  34418 34576  "2 "    0     # TRAN from  KINGSBRG 115.00  BRKR to BRKR  KNGLOBUS
70.00
 0
  #
  #
  # (290)  B3 TRANSFORMER OUTAGE (BREAKER-TO-BREAKER)
  #
 2  34474 30873  "1 "    0     # TRAN from  HELM      70.00  BRKR to BRKR  HELM
230.00
 0
  #
  #
  # (291)  B3 TRANSFORMER OUTAGE (BREAKER-TO-BREAKER)
  #
 2  34480 30830  "2 "    0     # TRAN from  KEARNEY   70.00  BRKR to BRKR  KEARNEY
230.00
 0
  #
  #
  # (292)  B3 TRANSFORMER OUTAGE (BREAKER-TO-BREAKER)
  #
 2  34492 34380  "1 "    0     # TRAN from  REEDLEY   70.00  BRKR to BRKR  REEDLEY
115.00
 0
  #
  #
  # (293)  B3 TRANSFORMER OUTAGE (BREAKER-TO-BREAKER)
  #
 2  34492 34380  "2 "    0     # TRAN from  REEDLEY   70.00  BRKR to BRKR  REEDLEY
115.00
 0
  #
  #
  # (294)  B3 TRANSFORMER OUTAGE (BREAKER-TO-BREAKER)
  #
 2  34528 34420  "2 "    0     # TRAN from  CORCORAN  70.00  BRKR to BRKR  CORCORAN
115.00
 1  34420 34391  "1 "    0      # Must include Corcoran - Quebec   (Corcoran CB 142) in
this outage
```

```
 1  34420 34418  "2 "    0      # Must include Corcoran - Kingburg (Corcoran CB 162) in
this outage
 1  34528 34460  "1 "    0      # Must include Corcorna - Guernsey (Corcoran CB  42) in
this outage
 0
  #
  #
  # (295)  B3 TRANSFORMER OUTAGE (BREAKER-TO-BREAKER)
  #
 2  34540 30881  "2 "    0     # TRAN from  HENRITTA  70.00  BRKR to BRKR  HENRIETA
230.00
 0
  #
  #
  # (296)  B3 TRANSFORMER OUTAGE (BREAKER-TO-BREAKER)
  #
 2  34540 30881  "4 "    0     # TRAN from  HENRITTA  70.00  BRKR to BRKR  HENRIETA
230.00
 0
  #
  #
  # (297)  B3 TRANSFORMER OUTAGE (BREAKER-TO-BREAKER)
  #
 2  34552 34378  "2 "    0     # TRAN from  GATES     70.00  BRKR to BRKR  GATES
115.00
 0
  #
  #
  # (298)  B3 TRANSFORMER OUTAGE (BREAKER-TO-BREAKER)
  #
 2  34562 34354  "1 "    0     # TRAN from  SCHLNDLR  70.00  BRKR to (3)   SCHINDLR
115.00
 1  34354 34149  "1 "    0     # line from  SCHINDLR 115.00  BRKR to (1)   CHENYT
115.00
 1  34354 34432  "1 "    0     # line from  SCHINDLR 115.00  BRKR to (1)   WESTLNDS
115.00
 4  34354     0  "1 "    0     # LOAD-DROP    SCHINDLR 115.00  LOAD==11.22(2.28)
 0
  #
  #
  # (299)  B3 TRANSFORMER OUTAGE (BREAKER-TO-BREAKER)
  #
 2  34652 34570  "1 "    0     # TRAN from  CHV.COAL   9.11   (1) to BRKR  COLNGA 2
70.00
 4  34652     0  "S1"    0     # LOAD-DROP    CHV.COAL   9.11  LOAD==5.12(2.48)
 4  34652     0  "SG"    0     # LOAD-DROP    CHV.COAL   9.11  LOAD==0.94(0.46)
 3  34652     0  "1 "    0     # GEN-DROP    CHV.COAL   9.11  GEN==2.50(8.30)
 3  34652     0  "2 "    0     # GEN-DROP    CHV.COAL   9.11  GEN==8.00(4.00)
 0
  #
  #
  # (300)  B3 TRANSFORMER OUTAGE (BREAKER-TO-BREAKER)
  #
 2  34658 34452  "1 "    0     # TRAN from  WISHON     2.30   (1) to BRKR  WISHON
70.00
 3  34658     0  "3 "    0     # GEN-DROP    WISHON     2.30  GEN==4.50(1.00)
 3  34658     0  "4 "    0     # GEN-DROP    WISHON     2.30  GEN==4.50(1.00)
 0
  #
  #
  # (301)  B1 GENERATOR OUTAGE
  #
 3  34308     0  "1"     0     # KERCKHOF  13.80       PGEN=129.00  QGEN=16.00
 0
  #
  #
  # (302)  B1 GENERATOR OUTAGE
  #
 3  34344     0  "2"     0     # KERCKHOF   6.60       PGEN=6.80  QGEN=-4.00
 0
```

```
 #
 #
 # (303)  B1 GENERATOR OUTAGE
 #
3  34431     0  "1"     0     # GWF_HEP1  13.80       PGEN=50.00  QGEN=21.57
0
 #
 #
 # (304)  B1 GENERATOR OUTAGE
 #
3  34433     0  "1"     0     # GWF_HEP2  13.80       PGEN=50.00  QGEN=21.57
0
 #
 #
 # (305)  B1 GENERATOR OUTAGE
 #
3  34485     0  "1"     0     # FRESNOWW  12.47       PGEN=9.00  QGEN=0.00
0
 #
 #
 # (306)  B1 GENERATOR OUTAGE
 #
3  34539     0  "1"     0     # GWF_GT1   13.80       PGEN=50.00  QGEN=1.23
0
 #
 #
 # (307)  B1 GENERATOR OUTAGE
 #
3  34541     0  "1"     0     # GWF_GT2   13.80       PGEN=50.00  QGEN=1.23
0
 #
 #
 # (308)  B1 GENERATOR OUTAGE
 #
3  34553     0  "1"     0     # WHD_GAT2  13.80       PGEN=49.00  QGEN=-25.30
0
 #
 #
 # (309)  B1 GENERATOR OUTAGE
 #
3  34600     0  "1"     0     # HELMS 1   18.00       PGEN=404.00  QGEN=66.02
0
 #
 #
 # (310)  B1 GENERATOR OUTAGE
 #
3  34602     0  "1"     0     # HELMS 2   18.00       PGEN=404.00  QGEN=66.06
0
 #
 #
 # (311)  B1 GENERATOR OUTAGE
 #
3  34604     0  "1"     0     # HELMS 3   18.00       PGEN=404.00  QGEN=66.12
0
 #
 #
 # (312)  B1 GENERATOR OUTAGE
 #
3  34608     0  "2"     0     # AGRICO    13.80       PGEN=7.00  QGEN=1.64
0
 #
 #
 # (313)  B1 GENERATOR OUTAGE
 #
3  34608     0  "3"     0     # AGRICO    13.80       PGEN=18.10  QGEN=4.24
0
 #
 #
 # (314)  B1 GENERATOR OUTAGE
 #
```

```
3  34608     0  "4"     0     # AGRICO    13.80       PGEN=26.00  QGEN=6.09
0
 #
 #
 # (315)  B1 GENERATOR OUTAGE
 #
3  34610     0  "1"     0     # HAAS      13.80       PGEN=70.00  QGEN=18.75
0
 #
 #
 # (316)  B1 GENERATOR OUTAGE
 #
3  34610     0  "2"     0     # HAAS      13.80       PGEN=70.00  QGEN=18.75
0
 #
 #
 # (317)  B1 GENERATOR OUTAGE
 #
3  34612     0  "1"     0     # BLCH 2-2  13.80       PGEN=50.00  QGEN=9.61
0
 #
 #
 # (318)  B1 GENERATOR OUTAGE
 #
3  34614     0  "1"     0     # BLCH 2-3  13.80       PGEN=50.00  QGEN=13.00
0
 #
 #
 # (319)  B1 GENERATOR OUTAGE
 #
3  34616     0  "1"     0     # KINGSRIV  13.80       PGEN=47.00  QGEN=9.00
0
 #
 #
 # (320)  B1 GENERATOR OUTAGE
 #
3  34618     0  "1"     0     # MCCALL1T  13.20       PGEN=0.00  QGEN=36.40
0
 #
 #
 # (321)  B1 GENERATOR OUTAGE
 #
3  34621     0  "1"     0     # MCCALL3T  13.20       PGEN=0.00  QGEN=4.85
0
 #
 #
 # (322)  B1 GENERATOR OUTAGE
 #
3  34624     0  "1"     0     # BALCH 1   13.20       PGEN=27.00  QGEN=10.00
0
 #
 #
 # (323)  B1 GENERATOR OUTAGE
 #
3  34630     0  "1"     0     # HERNDN1T  13.20       PGEN=0.00  QGEN=20.26
0
 #
 #
 # (324)  B1 GENERATOR OUTAGE
 #
3  34632     0  "1"     0     # HERNDN2T  13.20       PGEN=0.00  QGEN=32.58
0
 #
 #
 # (325)  B1 GENERATOR OUTAGE
 #
3  34636     0  "2"     0     # FRIANTDM   6.60       PGEN=14.70  QGEN=6.14
0
 #
 #
```

```
 # (326)  B1 GENERATOR OUTAGE
 #
3  34636     0  "3"     0     # FRIANTDM   6.60       PGEN=7.80  QGEN=3.26
0
 #
 #
 # (327)  B1 GENERATOR OUTAGE
 #
3  34636     0  "4"     0     # FRIANTDM   6.60       PGEN=2.30  QGEN=0.96
0
 #
 #
 # (328)  B1 GENERATOR OUTAGE
 #
3  34640     0  "1"     0     # ULTR.PWR   9.11       PGEN=14.50  QGEN=13.00
0
 #
 #
 # (329)  B1 GENERATOR OUTAGE
 #
3  34642     0  "1"     0     # KINGSBUR   9.11       PGEN=34.00  QGEN=17.30
0
 #
 #
 # (330)  B1 GENERATOR OUTAGE
 #
3  34646     0  "1"     0     # SANGERCO   9.11       PGEN=37.50  QGEN=4.31
0
 #
 #
 # (331)  B1 GENERATOR OUTAGE
 #
3  34648     0  "1"     0     # DINUBA E  13.80       PGEN=12.00  QGEN=7.00
0
 #
 #
 # (332)  B1 GENERATOR OUTAGE
 #
3  34650     0  "1"     0     # GWF-PWR.  13.80       PGEN=23.00  QGEN=12.00
0
 #
 #
 # (333)  B1 GENERATOR OUTAGE
 #
3  34652     0  "1"     0     # CHV.COAL   9.11       PGEN=2.50  QGEN=8.30
0
 #
 #
 # (334)  B1 GENERATOR OUTAGE
 #
3  34652     0  "2"     0     # CHV.COAL   9.11       PGEN=8.00  QGEN=4.00
0
 #
 #
 # (335)  B1 GENERATOR OUTAGE
 #
3  34654     0  "1"     0     # COLNGAGN   9.11       PGEN=34.00  QGEN=-3.48
0
 #
 #
 # (336)  B1 GENERATOR OUTAGE
 #
3  34658     0  "3"     0     # WISHON     2.30       PGEN=4.50  QGEN=1.00
0
 #
 #
 # (337)  B1 GENERATOR OUTAGE
 #
3  34658     0  "4"     0     # WISHON     2.30       PGEN=4.50  QGEN=1.00
0
```

```
 #
 #
 # (338)  B1 GENERATOR OUTAGE
 #
3  34671     0  "1"     0     # KRCDPCT1  13.80       PGEN=50.00  QGEN=10.75
0
 #
 #
 # (339)  B1 GENERATOR OUTAGE
 #
3  34672     0  "1"     0     # KRCDPCT2  13.80       PGEN=50.00  QGEN=10.75
0
 #
 #
 # (340)  B1 GENERATOR OUTAGE
 #
3  38720     0  "1"     0     # PINE FLT  13.80       PGEN=57.00  QGEN=23.30
0
 #
 #
 # (341)  B1 GENERATOR OUTAGE
 #
3  34661     0  "1"     0     # P0418GT1  13.80       PGEN=78.80  QGEN=13.93
0
 #
 #
 # (342)  B1 GENERATOR OUTAGE
 #
3  34663     0  "2"     0     # P0418GT2  13.80       PGEN=78.80  QGEN=13.93
0
 #
 #
 # (343)  B1 GENERATOR OUTAGE
 #
3  34665     0  "3"     0     # P0418GT3  13.80       PGEN=78.80  QGEN=13.93
0
 #
 #
 # (344)  B1 GENERATOR OUTAGE
 #
3  34667     0  "4"     0     # P0418GT4  13.80       PGEN=78.80  QGEN=13.93
0
 #
 #
 # (345)  B1 GENERATOR OUTAGE
 #
3  34685     0  "1"     0     # P0615CT1  16.50       PGEN=192.00  QGEN=35.45
0
 #
 #
 # (346)  B1 GENERATOR OUTAGE
 #
3  34686     0  "1"     0     # P0615CT2  16.50       PGEN=192.00  QGEN=35.45
0
 #
 #
 # (347)  B1 GENERATOR OUTAGE
 #
3  34687     0  "1"     0     # P0615STG  16.50       PGEN=193.00  QGEN=35.57
0
 #
 #
 # (348)  B1 GENERATOR OUTAGE
 #
3  34688     0  "1"     0     # Q254CTG1  18.00       PGEN=172.40  QGEN=41.25
0
 #
 #
 # (349)  B1 GENERATOR OUTAGE
 #
```

```
 3  34689     0  "2"     0     # Q254CTG2  18.00       PGEN=172.40  QGEN=41.25
 0
  #
  #
  # (350)  B1 GENERATOR OUTAGE
  #
 3  34690     0  "3"     0     # Q254STG1  18.00       PGEN=290.80  QGEN=67.53
 0
  #
  #
  # (351)  B1 GENERATOR OUTAGE
  #
 3  34691     0  "1"     0     # Q272_ST1  13.80       PGEN=27.00  QGEN=1.87
 0
  #
  #
  # (352)  B1 GENERATOR OUTAGE
  #
 3  34692     0  "1"     0     # Q272SLST  13.80       PGEN=139.00  QGEN=35.74
 0
  #
  #
  # (353)  L-1/G-1 OVERLAPPING OUTAGE
  # Smyrna - Semitropic - Midway 115 kV Line and Exchequer
 1  34700 34708  "1 "    0     # line from  SMYRNA   115.00  BRKR to (2)   MCKIBBEN
115.00
 1  34708 34742  "1 "    0     # line from  MCKIBBEN 115.00   (2) to (2)   SEMITRPJ
115.00
 1  34742 34746  "1 "    0     # line from  SEMITRPJ 115.00   (2) to (2)   GANSO
115.00
 1  34746 34774  "1 "    0     # line from  GANSO    115.00   (2) to BRKR  MIDWAY
115.00
 4  34746     0  "1 "    0     # LOAD-DROP    GANSO    115.00  LOAD==5.34(1.22)
  #
 3  34306     0  "1"     0     # EXCHQUER  13.80       PGEN=89.95  QGEN=18.49
 0
  #
  #
  # (354)  L-1/G-1 OVERLAPPING OUTAGE
  # Gates - Coalinga #2 70 kV Line and Chevron Coalinga Unit 1
 1  34184 34570  "1 "    0     # line from  GATS2_TP  70.00   (3) to BRKR  COLNGA 2
70.00
 1  34184 34552  "1 "    0     # line from  GATS2_TP  70.00   (3) to BRKR  GATES
70.00
 2  34184 34553  "1 "    0     # TRAN from  GATS2_TP  70.00   (3) to (1)   WHD_GAT2
13.80
 3  34553     0  "1 "    0     # GEN-DROP    WHD_GAT2  13.80  GEN==49.00(-25.30)
  #
 3  34652     0  "1"     0     # CHV.COAL   9.11       PGEN=17.00  QGEN=8.30
 0
  #
  #
  # (355)  L-1/G-1 OVERLAPPING OUTAGE
  # Gates - Coalinga #1 70 kV Line and Chevron Coalinga Unit 1
 1  34552 34578  "1 "    0     # line from  GATES     70.00  BRKR to (2)   JACALITO
70.00
 1  34578 34574  "1 "    0     # line from  JACALITO  70.00   (2) to BRKR  COLNGA 1
70.00
 4  34578     0  "1 "    0     # LOAD-DROP    JACALITO  70.00  LOAD==4.03(2.5) 0
  #
 3  34652     0  "1"     0     # CHV.COAL   9.11       PGEN=17.00  QGEN=8.30
 0
  #
  #
  # (356)  L-1/G-1 OVERLAPPING OUTAGE
  # Gates - Coalinga #2 70 kV Line and Coalinga Cogen
 1  34184 34570  "1 "    0     # line from  GATS2_TP  70.00   (3) to BRKR  COLNGA 2
70.00
 1  34184 34552  "1 "    0     # line from  GATS2_TP  70.00   (3) to BRKR  GATES
70.00
```

```
 2  34184 34553  "1 "    0     # TRAN from  GATS2_TP  70.00   (3) to (1)   WHD_GAT2
13.80
 3  34553     0  "1 "    0     # GEN-DROP    WHD_GAT2  13.80  GEN==49.00(-25.30)
  #
 3  34654     0  "1"     0     # COLNGAGN   9.11       PGEN=34.22  QGEN=-13.50
 0
  #
  #
  # (357)  L-1/G-1 OVERLAPPING OUTAGE
  # Gates - Coalinga #1 70 kV Line and Coalinga Cogen
 1  34552 34578  "1 "    0     # line from  GATES     70.00  BRKR to (2)   JACALITO
70.00
 1  34578 34574  "1 "    0     # line from  JACALITO  70.00   (2) to BRKR  COLNGA 1
70.00
 4  34578     0  "1 "    0     # LOAD-DROP    JACALITO  70.00  LOAD==4.03(2.5) 0
  #
 3  34654     0  "1"     0     # COLNGAGN   9.11       PGEN=34.22  QGEN=-13.50
 0
  #
  #
  # (358)  L-1/G-1 OVERLAPPING OUTAGE
  # Borden - Coppermine 70 kV Line and Friant PP Unit 2
 1  34262 34454  "1 "    0     # line from  CASSIDY   70.00   (2) to (2)   RIVERROC
70.00
 1  34262 34256  "1 "    0     # line from  CASSIDY   70.00   (2) to BRKR  BORDEN
70.00
 1  34454 34464  "1 "    0     # line from  RIVERROC  70.00   (2) to BRKR  COPPRMNE
70.00
 4  34262     0  "1 "    0     # LOAD-DROP    CASSIDY   70.00  LOAD==14.31(2.90)
 4  34454     0  "1 "    0     # LOAD-DROP    RIVERROC  70.00  LOAD==2.01(1.83)
  #
 3  34636     0  "2"     0     # FRIANTDM   6.60       PGEN=14.70  QGEN=6.14
 0
  #
  #
  # (359)  L-1/G-1 OVERLAPPING OUTAGE
  # Henrietta - Lemoore 70 kV Line and GWF Hanford
 1  34516 34520  "1 "    0     # line from  LEPRINO   70.00   (1) to (4)   LPRNO TP
70.00
 1  34520 34518  "1 "    0     # line from  LPRNO TP  70.00   (4) to BRKR  LEMOORE
70.00
 1  34520 34524  "1 "    0     # line from  LPRNO TP  70.00   (4) to (1)   CANDLEWK
70.00
 1  34520 34540  "1 "    0     # line from  LPRNO TP  70.00   (4) to BRKR  HENRITTA
70.00
 4  34516     0  "1 "    0     # LOAD-DROP    LEPRINO   70.00  LOAD==16.10(9.12)
 4  34518     0  "1 "    0     # LOAD-DROP    LEMOORE   70.00  LOAD==18.86(3.83)
 4  34518     0  "2 "    0     # LOAD-DROP    LEMOORE   70.00  LOAD==32.81(6.66)
  #
 3  34650     0  "1"     0     # GWF-PWR.  13.80       PGEN=23.00  QGEN=12.00
 0
  #
  #
  # (360)  L-1/G-1 OVERLAPPING OUTAGE
  # Henrietta - Lemoore 70 kV Line and GWF Henrietta Unit 1
 1  34516 34520  "1 "    0     # line from  LEPRINO   70.00   (1) to (4)   LPRNO TP
70.00
 1  34520 34518  "1 "    0     # line from  LPRNO TP  70.00   (4) to BRKR  LEMOORE
70.00
 1  34520 34524  "1 "    0     # line from  LPRNO TP  70.00   (4) to (1)   CANDLEWK
70.00
 1  34520 34540  "1 "    0     # line from  LPRNO TP  70.00   (4) to BRKR  HENRITTA
70.00
 4  34516     0  "1 "    0     # LOAD-DROP    LEPRINO   70.00  LOAD==16.10(9.12)
 4  34518     0  "1 "    0     # LOAD-DROP    LEMOORE   70.00  LOAD==18.86(3.83)
 4  34518     0  "2 "    0     # LOAD-DROP    LEMOORE   70.00  LOAD==32.81(6.66)
  #
 3  34539     0  "1"     0     # GWF_GT1   13.80       PGEN=50.00  QGEN=1.23
 0
  #
```

```
  #
  # (361)  L-1/G-1 OVERLAPPING OUTAGE
  # McCall - Wahtoke 115 kV Line and Sanger Cogen
 1  34370 34382  "1 "    0     # line from  MC CALL  115.00  BRKR to BRKR  WAHTOKE
115.00
  #
 3  34646     0  "1"     0     # SANGERCO   9.11       PGEN=37.50  QGEN=4.31
 0
  #
  #
  # (362)  L-1/G-1 OVERLAPPING OUTAGE
  # McCall - Wahtoke 115 kV Line and Kings River Power House
 1  34370 34382  "1 "    0     # line from  MC CALL  115.00  BRKR to BRKR  WAHTOKE
115.00
  #
 3  34616     0  "1"     0     # KINGSRIV  13.80       PGEN=47.00  QGEN=9.00
 0
  #
  #
  # (363)  L-1/G-1 OVERLAPPING OUTAGE
  # Helm - McCall 230 kV Line and Exchequer
 1  30873 30875  "1 "    0     # line from  HELM     230.00  BRKR to BRKR  MC CALL
230.00
  #
 3  34306     0  "1"     0     # EXCHQUER  13.80       PGEN=94.50  QGEN=8.77
 0
  #
  #
  # (364)  L-1/G-1 OVERLAPPING OUTAGE
  # Helms - Gregg #1 230 kV Line and Exchequer
 1  30810 30820  "1 "    0     # line from  GREGG    230.00  BRKR to BRKR  HELMS PP
230.00
 3  34600     0  "**"    0      # Drop unit#1 with a loss Helm - Gregg #1 line
  #
 3  34306     0  "1"     0     # EXCHQUER  13.80       PGEN=94.50  QGEN=8.77
 0
  #
  #
  # (365)  L-1/G-1 OVERLAPPING OUTAGE
  # Helms - Gregg #2 230 kV Line and Exchequer
 1  30810 30820  "2 "    0     # line from  GREGG    230.00  BRKR to BRKR  HELMS PP
230.00
 3  34604     0  "**"    0      # Drop unit#3 with a loss Helm - Gregg #2 line
  #
 3  34306     0  "1"     0     # EXCHQUER  13.80       PGEN=94.50  QGEN=8.77
 0
  #
  #
  # (366)  L-1/G-1 OVERLAPPING OUTAGE
  # Gregg - Herndon #1 230 kV Line and Exchequer
 1  30810 30835  "1 "    0     # line from  GREGG    230.00  BRKR to BRKR  HERNDON
230.00
 3  34604     0  "**"    0      # Drop unit#3 with a loss Gregg - Herndon #1 line
  #
 3  34306     0  "1"     0     # EXCHQUER  13.80       PGEN=94.50  QGEN=8.77
 0
  #
  #
  # (367)  L-1/G-1 OVERLAPPING OUTAGE
  # Gregg - Herndon #2 230 kV Line and Exchequer
 1  30810 30835  "2 "    0     # line from  GREGG    230.00  BRKR to BRKR  HERNDON
230.00
 3  34604     0  "**"    0      # Drop unit#3 with a loss Gregg - Herndon #2 line
  #
 3  34306     0  "1"     0     # EXCHQUER  13.80       PGEN=94.50  QGEN=8.77
 0
  #
  #
  # (368)  L-1/G-1 OVERLAPPING OUTAGE
  # Gregg - Ashlan 230 kV Line and Exchequer
```

```
 1  30810 30845  "1 "    0     # line from  GREGG    230.00  BRKR to (3)   FGRDN T2
230.00
 1  30845 30846  "1 "    0     # line from  FGRDN T2 230.00   (3) to BRKR  FIGRDN 2
230.00
 1  30845 30850  "1 "    0     # line from  FGRDN T2 230.00   (3) to BRKR  ASHLAN
230.00
 4  30846     0  "1 "    0     # LOAD-DROP    FIGRDN 2 230.00  LOAD==52.57(10.67)
 4  30846     0  "2 "    0     # LOAD-DROP    FIGRDN 2 230.00  LOAD==36.77(7.47)
 3  34604     0  "**"    0      # Drop unit#3 with a loss Gregg - Figarden line
 1 30841  30846  "1 "    1      # Switches in Figarden SW 286 to transfer load
 4 30846      0  "**"    1      # Restore Load at Figarden 2
  #
 3  34306     0  "1"     0     # EXCHQUER  13.80       PGEN=94.50  QGEN=8.77
 0
  #
  #
  # (369)  L-1/G-1 OVERLAPPING OUTAGE
  # Gates - Gregg 230 kV Line and Exchequer
 1  30810 30879  "1 "    0     # line from  GREGG    230.00  BRKR to (3)   HENTAP1
230.00
 1  30879 30881  "1 "    0     # line from  HENTAP1  230.00   (3) to BRKR  HENRIETA
230.00
 1  30879 30900  "1 "    0     # line from  HENTAP1  230.00   (3) to BRKR  GATES
230.00
 3  34604     0  "**"    0      # Drop unit#3 with a loss Gregg - Henrietta Tap 1 line
 1  30880 30881  "1 "    1      # Henrietta flip flop (Henrietta CB 222)
  #
 3  34306     0  "1"     0     # EXCHQUER  13.80       PGEN=94.50  QGEN=8.77
 0
  #
  #
  # (370)  L-1/G-1 OVERLAPPING OUTAGE
  # Herndon - Kearney 230 kV Line and Exchequer
 1  30830 30835  "1 "    0     # line from  KEARNEY  230.00  BRKR to BRKR  HERNDON
230.00
  #
 3  34306     0  "1"     0     # EXCHQUER  13.80       PGEN=94.50  QGEN=8.77
 0
  #
  #
  # (371)  L-1/G-1 OVERLAPPING OUTAGE
  # Herndon - Ashlan 230 kV Line and Exchequer
 1  30835 30840  "1 "    0     # line from  HERNDON  230.00  BRKR to (3)   FGRDN T1
230.00
 1  30840 30841  "1 "    0     # line from  FGRDN T1 230.00   (3) to BRKR  FIGRDN 1
230.00
 1  30840 30850  "1 "    0     # line from  FGRDN T1 230.00   (3) to BRKR  ASHLAN
230.00
 4  30841     0  "1 "    0     # LOAD-DROP    FIGRDN 1 230.00  LOAD==73.45(14.92)
 1 30841  30846  "1 "    1      # Switches in Figarden SW 286 to transfer load
 4 30841      0  "**"    1      # Restore Load at Figarden 1
  #
 3  34306     0  "1"     0     # EXCHQUER  13.80       PGEN=94.50  QGEN=8.77
 0
  #
  #
  # (372)  L-1/G-1 OVERLAPPING OUTAGE
  # Haas - McCall 230 kV Line and Exchequer
 1  30855 30860  "1 "    0     # line from  HAAS     230.00   (2) to (3)   BALCH3TP
230.00
 2  30855 34610  "1 "    0     # TRAN from  HAAS     230.00   (2) to (1)   HAAS
13.80
 1  30860 30875  "1 "    0     # line from  BALCH3TP 230.00   (3) to BRKR  MC CALL
230.00
 2  30860 34614  "1 "    0     # TRAN from  BALCH3TP 230.00   (3) to (1)   BLCH 2-3
13.80
 3  34610     0  "1 "    0     # GEN-DROP    HAAS      13.80  GEN==70.00(10.21)
 3  34610     0  "2 "    0     # GEN-DROP    HAAS      13.80  GEN==70.00(10.21)
 3  34614     0  "1 "    0     # GEN-DROP    BLCH 2-3  13.80  GEN==50.00(7.64)
  #
```

```
 3  34306     0  "1"     0     # EXCHQUER  13.80       PGEN=94.50  QGEN=8.77
 0
  #
  #
  # (373)  L-1/G-1 OVERLAPPING OUTAGE
  # Balch - McCall 230 kV Line and Exchequer
 1  30865 30870  "1 "    0     # line from  BALCH    230.00   (2) to (3)   PINE FLT
230.00
 2  30865 34612  "1 "    0     # TRAN from  BALCH    230.00   (2) to (1)   BLCH 2-2
13.80
 1  30870 30875  "1 "    0     # line from  PINE FLT 230.00   (3) to BRKR  MC CALL
230.00
 2  30870 38720  "1 "    0     # TRAN from  PINE FLT 230.00   (3) to (1)   PINE FLT
13.80
 3  34612     0  "1 "    0     # GEN-DROP    BLCH 2-2  13.80  GEN==50.00(0.66)
 3  38720     0  "1 "    0     # GEN-DROP    PINE FLT  13.80  GEN==57.00(23.30)
  #
 3  34306     0  "1"     0     # EXCHQUER  13.80       PGEN=94.50  QGEN=8.77
 0
  #
  #
  # (374)  L-1/G-1 OVERLAPPING OUTAGE
  # Gates - McCall 230 kV Line and Exchequer
 1  30875 30880  "1 "    0     # line from  MC CALL  230.00  BRKR to (2)   HENTAP2
230.00
 1  30880 30900  "1 "    0     # line from  HENTAP2  230.00   (2) to BRKR  GATES
230.00
  #
 3  34306     0  "1"     0     # EXCHQUER  13.80       PGEN=94.50  QGEN=8.77
 0
  #
  #
  # (375)  L-1/G-1 OVERLAPPING OUTAGE
  # Templeton - Gates 230 kV Line and Exchequer
 1  30900 30905  "1 "    0     # line from  GATES    230.00  BRKR to BRKR  TEMPLETN
230.00
  #
 3  34306     0  "1"     0     # EXCHQUER  13.80       PGEN=94.50  QGEN=8.77
 0
  #
  #
  # (376)  L-1/G-1 OVERLAPPING OUTAGE
  # Morro Bay - Gates 230 kV Line and Exchequer
 1  30900 30915  "1 "    0     # line from  GATES    230.00  BRKR to BRKR  MORROBAY
230.00
  #
 3  34306     0  "1"     0     # EXCHQUER  13.80       PGEN=94.50  QGEN=8.77
 0
  #
  #
  # (377)  L-1/G-1 OVERLAPPING OUTAGE
  # Gates - Arco 230 kV Line and Exchequer
 1  30900 30935  "1 "    0     # line from  GATES    230.00  BRKR to BRKR  ARCO
230.00
  #
 3  34306     0  "1"     0     # EXCHQUER  13.80       PGEN=94.50  QGEN=8.77
 0
  #
  #
  # (378)  L-1/G-1 OVERLAPPING OUTAGE
  # Gates - Midway 230 kV Line and Exchequer
 1  30900 30970  "1 "    0     # line from  GATES    230.00  BRKR to BRKR  MIDWAY
230.00
  #
 3  34306     0  "1"     0     # EXCHQUER  13.80       PGEN=94.50  QGEN=8.77
 0
  #
  #
  # (379)  L-1/G-1 OVERLAPPING OUTAGE
  # Helm - McCall 230 kV Line and Kerckhoff
```

```
 1  30873 30875  "1 "    0     # line from  HELM     230.00  BRKR to BRKR  MC CALL
230.00
  #
 3  34308     0  "1"     0     # KERCKHOF  13.80       PGEN=129.00  QGEN=16.00
 0
  #
  #
  # (380)  L-1/G-1 OVERLAPPING OUTAGE
  # Helms - Gregg #1 230 kV Line and Kerckhoff
 1  30810 30820  "1 "    0     # line from  GREGG    230.00  BRKR to BRKR  HELMS PP
230.00
 3  34600     0  "**"    0      # Drop unit#1 with a loss Helm - Gregg #1 line
  #
 3  34308     0  "1"     0     # KERCKHOF  13.80       PGEN=129.00  QGEN=16.00
 0
  #
  #
  # (381)  L-1/G-1 OVERLAPPING OUTAGE
  # Helms - Gregg #2 230 kV Line and Kerckhoff
 1  30810 30820  "2 "    0     # line from  GREGG    230.00  BRKR to BRKR  HELMS PP
230.00
 3  34604     0  "**"    0      # Drop unit#3 with a loss Helm - Gregg #2 line
  #
 3  34308     0  "1"     0     # KERCKHOF  13.80       PGEN=129.00  QGEN=16.00
 0
  #
  #
  # (382)  L-1/G-1 OVERLAPPING OUTAGE
  # Gregg - Herndon #1 230 kV Line and Kerckhoff
 1  30810 30835  "1 "    0     # line from  GREGG    230.00  BRKR to BRKR  HERNDON
230.00
 3  34604     0  "**"    0      # Drop unit#3 with a loss Gregg - Herndon #1 line
  #
 3  34308     0  "1"     0     # KERCKHOF  13.80       PGEN=129.00  QGEN=16.00
 0
  #
  #
  # (383)  L-1/G-1 OVERLAPPING OUTAGE
  # Gregg - Herndon #2 230 kV Line and Kerckhoff
 1  30810 30835  "2 "    0     # line from  GREGG    230.00  BRKR to BRKR  HERNDON
230.00
 3  34604     0  "**"    0      # Drop unit#3 with a loss Gregg - Herndon #2 line
  #
 3  34308     0  "1"     0     # KERCKHOF  13.80       PGEN=129.00  QGEN=16.00
 0
  #
  #
  # (384)  L-1/G-1 OVERLAPPING OUTAGE
  # Gregg - Ashlan 230 kV Line and Kerckhoff
 1  30810 30845  "1 "    0     # line from  GREGG    230.00  BRKR to (3)   FGRDN T2
230.00
 1  30845 30846  "1 "    0     # line from  FGRDN T2 230.00   (3) to BRKR  FIGRDN 2
230.00
 1  30845 30850  "1 "    0     # line from  FGRDN T2 230.00   (3) to BRKR  ASHLAN
230.00
 4  30846     0  "1 "    0     # LOAD-DROP    FIGRDN 2 230.00  LOAD==52.57(10.67)
 4  30846     0  "2 "    0     # LOAD-DROP    FIGRDN 2 230.00  LOAD==36.77(7.47)
 3  34604     0  "**"    0      # Drop unit#3 with a loss Gregg - Figarden line
 1 30841  30846  "1 "    1      # Switches in Figarden SW 286 to transfer load
 4 30846      0  "**"    1      # Restore Load at Figarden 2
  #
 3  34308     0  "1"     0     # KERCKHOF  13.80       PGEN=129.00  QGEN=16.00
 0
  #
  #
  # (385)  L-1/G-1 OVERLAPPING OUTAGE
  # Gates - Gregg 230 kV Line and Kerckhoff
 1  30810 30879  "1 "    0     # line from  GREGG    230.00  BRKR to (3)   HENTAP1
230.00
```

```
 1  30879 30881  "1 "    0     # line from  HENTAP1  230.00   (3) to BRKR  HENRIETA
230.00
 1  30879 30900  "1 "    0     # line from  HENTAP1  230.00   (3) to BRKR  GATES
230.00
 3  34604     0  "**"    0      # Drop unit#3 with a loss Gregg - Henrietta Tap 1 line
 1  30880 30881  "1 "    1      # Henrietta flip flop (Henrietta CB 222)
  #
 3  34308     0  "1"     0     # KERCKHOF  13.80       PGEN=129.00  QGEN=16.00
 0
  #
  #
  # (386)  L-1/G-1 OVERLAPPING OUTAGE
  # Herndon - Kearney 230 kV Line and Kerckhoff
 1  30830 30835  "1 "    0     # line from  KEARNEY  230.00  BRKR to BRKR  HERNDON
230.00
  #
 3  34308     0  "1"     0     # KERCKHOF  13.80       PGEN=129.00  QGEN=16.00
 0
  #
  #
  # (387)  L-1/G-1 OVERLAPPING OUTAGE
  # Herndon - Ashlan 230 kV Line and Kerckhoff
 1  30835 30840  "1 "    0     # line from  HERNDON  230.00  BRKR to (3)   FGRDN T1
230.00
 1  30840 30841  "1 "    0     # line from  FGRDN T1 230.00   (3) to BRKR  FIGRDN 1
230.00
 1  30840 30850  "1 "    0     # line from  FGRDN T1 230.00   (3) to BRKR  ASHLAN
230.00
 4  30841     0  "1 "    0     # LOAD-DROP    FIGRDN 1 230.00  LOAD==73.45(14.92)
 1 30841  30846  "1 "    1      # Switches in Figarden SW 286 to transfer load
 4 30841      0  "**"    1      # Restore Load at Figarden 1
  #
 3  34308     0  "1"     0     # KERCKHOF  13.80       PGEN=129.00  QGEN=16.00
 0
  #
  #
  # (388)  L-1/G-1 OVERLAPPING OUTAGE
  # Haas - McCall 230 kV Line and Kerckhoff
 1  30855 30860  "1 "    0     # line from  HAAS     230.00   (2) to (3)   BALCH3TP
230.00
 2  30855 34610  "1 "    0     # TRAN from  HAAS     230.00   (2) to (1)   HAAS
13.80
 1  30860 30875  "1 "    0     # line from  BALCH3TP 230.00   (3) to BRKR  MC CALL
230.00
 2  30860 34614  "1 "    0     # TRAN from  BALCH3TP 230.00   (3) to (1)   BLCH 2-3
13.80
 3  34610     0  "1 "    0     # GEN-DROP    HAAS      13.80  GEN==70.00(10.21)
 3  34610     0  "2 "    0     # GEN-DROP    HAAS      13.80  GEN==70.00(10.21)
 3  34614     0  "1 "    0     # GEN-DROP    BLCH 2-3  13.80  GEN==50.00(7.64)
  #
 3  34308     0  "1"     0     # KERCKHOF  13.80       PGEN=129.00  QGEN=16.00
 0
  #
  #
  # (389)  L-1/G-1 OVERLAPPING OUTAGE
  # Balch - McCall 230 kV Line and Kerckhoff
 1  30865 30870  "1 "    0     # line from  BALCH    230.00   (2) to (3)   PINE FLT
230.00
 2  30865 34612  "1 "    0     # TRAN from  BALCH    230.00   (2) to (1)   BLCH 2-2
13.80
 1  30870 30875  "1 "    0     # line from  PINE FLT 230.00   (3) to BRKR  MC CALL
230.00
 2  30870 38720  "1 "    0     # TRAN from  PINE FLT 230.00   (3) to (1)   PINE FLT
13.80
 3  34612     0  "1 "    0     # GEN-DROP    BLCH 2-2  13.80  GEN==50.00(0.66)
 3  38720     0  "1 "    0     # GEN-DROP    PINE FLT  13.80  GEN==57.00(23.30)
  #
 3  34308     0  "1"     0     # KERCKHOF  13.80       PGEN=129.00  QGEN=16.00
 0
  #
```

```
  #
  # (390)  L-1/G-1 OVERLAPPING OUTAGE
  # Gates - McCall 230 kV Line and Kerckhoff
 1  30875 30880  "1 "    0     # line from  MC CALL  230.00  BRKR to (2)   HENTAP2
230.00
 1  30880 30900  "1 "    0     # line from  HENTAP2  230.00   (2) to BRKR  GATES
230.00
  #
 3  34308     0  "1"     0     # KERCKHOF  13.80       PGEN=129.00  QGEN=16.00
 0
  #
  #
  # (391)  L-1/G-1 OVERLAPPING OUTAGE
  # Templeton - Gates 230 kV Line and Kerckhoff
 1  30900 30905  "1 "    0     # line from  GATES    230.00  BRKR to BRKR  TEMPLETN
230.00
  #
 3  34308     0  "1"     0     # KERCKHOF  13.80       PGEN=129.00  QGEN=16.00
 0
  #
  #
  # (392)  L-1/G-1 OVERLAPPING OUTAGE
  # Morro Bay - Gates 230 kV Line and Kerckhoff
 1  30900 30915  "1 "    0     # line from  GATES    230.00  BRKR to BRKR  MORROBAY
230.00
  #
 3  34308     0  "1"     0     # KERCKHOF  13.80       PGEN=129.00  QGEN=16.00
 0
  #
  #
  # (393)  L-1/G-1 OVERLAPPING OUTAGE
  # Gates - Arco 230 kV Line and Kerckhoff
 1  30900 30935  "1 "    0     # line from  GATES    230.00  BRKR to BRKR  ARCO
230.00
  #
 3  34308     0  "1"     0     # KERCKHOF  13.80       PGEN=129.00  QGEN=16.00
 0
  #
  #
  # (394)  L-1/G-1 OVERLAPPING OUTAGE
  # Gates - Midway 230 kV Line and Kerckhoff
 1  30900 30970  "1 "    0     # line from  GATES    230.00  BRKR to BRKR  MIDWAY
230.00
  #
 3  34308     0  "1"     0     # KERCKHOF  13.80       PGEN=129.00  QGEN=16.00
 0
  #
  #
  # (395)  L-1/G-1 OVERLAPPING OUTAGE
  # Helm - McCall 230 kV Line and Helms Unit 1
 1  30873 30875  "1 "    0     # line from  HELM     230.00  BRKR to BRKR  MC CALL
230.00
  #
 3  34600     0  "1"     0     # HELMS 1   18.00       PGEN=404.00  QGEN=66.02
 0
  #
  #
  # (396)  L-1/G-1 OVERLAPPING OUTAGE
  # Helms - Gregg #1 230 kV Line and Helms Unit 1
 1  30810 30820  "1 "    0     # line from  GREGG    230.00  BRKR to BRKR  HELMS PP
230.00
 3  34600     0  "**"    0      # Drop unit#1 with a loss Helm - Gregg #1 line
  #
 3  34600     0  "1"     0     # HELMS 1   18.00       PGEN=404.00  QGEN=66.02
 0
  #
  #
  # (397)  L-1/G-1 OVERLAPPING OUTAGE
  # Helms - Gregg #2 230 kV Line and Helms Unit 1
```

```
 1  30810 30820  "2 "    0     # line from  GREGG    230.00  BRKR to BRKR  HELMS PP
230.00
 3  34604     0  "**"    0      # Drop unit#3 with a loss Helm - Gregg #2 line
  #
 3  34600     0  "1"     0     # HELMS 1   18.00       PGEN=404.00  QGEN=66.02
 0
  #
  #
  # (398)  L-1/G-1 OVERLAPPING OUTAGE
  # Gregg - Herndon #1 230 kV Line and Helms Unit 1
 1  30810 30835  "1 "    0     # line from  GREGG    230.00  BRKR to BRKR  HERNDON
230.00
 3  34604     0  "**"    0      # Drop unit#3 with a loss Gregg - Herndon #1 line
  #
 3  34600     0  "1"     0     # HELMS 1   18.00       PGEN=404.00  QGEN=66.02
 0
  #
  #
  # (399)  L-1/G-1 OVERLAPPING OUTAGE
  # Gregg - Herndon #2 230 kV Line and Helms Unit 1
 1  30810 30835  "2 "    0     # line from  GREGG    230.00  BRKR to BRKR  HERNDON
230.00
 3  34604     0  "**"    0      # Drop unit#3 with a loss Gregg - Herndon #2 line
  #
 3  34600     0  "1"     0     # HELMS 1   18.00       PGEN=404.00  QGEN=66.02
 0
  #
  #
  # (400)  L-1/G-1 OVERLAPPING OUTAGE
  # Gregg - Ashlan 230 kV Line and Helms Unit 1
 1  30810 30845  "1 "    0     # line from  GREGG    230.00  BRKR to (3)   FGRDN T2
230.00
 1  30845 30846  "1 "    0     # line from  FGRDN T2 230.00   (3) to BRKR  FIGRDN 2
230.00
 1  30845 30850  "1 "    0     # line from  FGRDN T2 230.00   (3) to BRKR  ASHLAN
230.00
 4  30846     0  "1 "    0     # LOAD-DROP    FIGRDN 2 230.00  LOAD==52.57(10.67)
 4  30846     0  "2 "    0     # LOAD-DROP    FIGRDN 2 230.00  LOAD==36.77(7.47)
 3  34604     0  "**"    0      # Drop unit#3 with a loss Gregg - Figarden line
 1 30841  30846  "1 "    1      # Switches in Figarden SW 286 to transfer load
 4 30846      0  "**"    1      # Restore Load at Figarden 2
  #
 3  34600     0  "1"     0     # HELMS 1   18.00       PGEN=404.00  QGEN=66.02
 0
  #
  #
  # (401)  L-1/G-1 OVERLAPPING OUTAGE
  # Gates - Gregg 230 kV Line and Helms Unit 1
 1  30810 30879  "1 "    0     # line from  GREGG    230.00  BRKR to (3)   HENTAP1
230.00
 1  30879 30881  "1 "    0     # line from  HENTAP1  230.00   (3) to BRKR  HENRIETA
230.00
 1  30879 30900  "1 "    0     # line from  HENTAP1  230.00   (3) to BRKR  GATES
230.00
 3  34604     0  "**"    0      # Drop unit#3 with a loss Gregg - Henrietta Tap 1 line
 1  30880 30881  "1 "    1      # Henrietta flip flop (Henrietta CB 222)
  #
 3  34600     0  "1"     0     # HELMS 1   18.00       PGEN=404.00  QGEN=66.02
 0
  #
  #
  # (402)  L-1/G-1 OVERLAPPING OUTAGE
  # Herndon - Kearney 230 kV Line and Helms Unit 1
 1  30830 30835  "1 "    0     # line from  KEARNEY  230.00  BRKR to BRKR  HERNDON
230.00
  #
 3  34600     0  "1"     0     # HELMS 1   18.00       PGEN=404.00  QGEN=66.02
 0
  #
  #
```

```
  # (403)  L-1/G-1 OVERLAPPING OUTAGE
  # Herndon - Ashlan 230 kV Line and Helms Unit 1
 1  30835 30840  "1 "    0     # line from  HERNDON  230.00  BRKR to (3)   FGRDN T1
230.00
 1  30840 30841  "1 "    0     # line from  FGRDN T1 230.00   (3) to BRKR  FIGRDN 1
230.00
 1  30840 30850  "1 "    0     # line from  FGRDN T1 230.00   (3) to BRKR  ASHLAN
230.00
 4  30841     0  "1 "    0     # LOAD-DROP    FIGRDN 1 230.00  LOAD==73.45(14.92)
 1 30841  30846  "1 "    1      # Switches in Figarden SW 286 to transfer load
 4 30841      0  "**"    1      # Restore Load at Figarden 1
  #
 3  34600     0  "1"     0     # HELMS 1   18.00       PGEN=404.00  QGEN=66.02
 0
  #
  #
  # (404)  L-1/G-1 OVERLAPPING OUTAGE
  # Haas - McCall 230 kV Line and Helms Unit 1
 1  30855 30860  "1 "    0     # line from  HAAS     230.00   (2) to (3)   BALCH3TP
230.00
 2  30855 34610  "1 "    0     # TRAN from  HAAS     230.00   (2) to (1)   HAAS
13.80
 1  30860 30875  "1 "    0     # line from  BALCH3TP 230.00   (3) to BRKR  MC CALL
230.00
 2  30860 34614  "1 "    0     # TRAN from  BALCH3TP 230.00   (3) to (1)   BLCH 2-3
13.80
 3  34610     0  "1 "    0     # GEN-DROP    HAAS      13.80  GEN==70.00(10.21)
 3  34610     0  "2 "    0     # GEN-DROP    HAAS      13.80  GEN==70.00(10.21)
 3  34614     0  "1 "    0     # GEN-DROP    BLCH 2-3  13.80  GEN==50.00(7.64)
  #
 3  34600     0  "1"     0     # HELMS 1   18.00       PGEN=404.00  QGEN=66.02
 0
  #
  #
  # (405)  L-1/G-1 OVERLAPPING OUTAGE
  # Balch - McCall 230 kV Line and Helms Unit 1
 1  30865 30870  "1 "    0     # line from  BALCH    230.00   (2) to (3)   PINE FLT
230.00
 2  30865 34612  "1 "    0     # TRAN from  BALCH    230.00   (2) to (1)   BLCH 2-2
13.80
 1  30870 30875  "1 "    0     # line from  PINE FLT 230.00   (3) to BRKR  MC CALL
230.00
 2  30870 38720  "1 "    0     # TRAN from  PINE FLT 230.00   (3) to (1)   PINE FLT
13.80
 3  34612     0  "1 "    0     # GEN-DROP    BLCH 2-2  13.80  GEN==50.00(0.66)
 3  38720     0  "1 "    0     # GEN-DROP    PINE FLT  13.80  GEN==57.00(23.30)
  #
 3  34600     0  "1"     0     # HELMS 1   18.00       PGEN=404.00  QGEN=66.02
 0
  #
  #
  # (406)  L-1/G-1 OVERLAPPING OUTAGE
  # Gates - McCall 230 kV Line and Helms Unit 1
 1  30875 30880  "1 "    0     # line from  MC CALL  230.00  BRKR to (2)   HENTAP2
230.00
 1  30880 30900  "1 "    0     # line from  HENTAP2  230.00   (2) to BRKR  GATES
230.00
  #
 3  34600     0  "1"     0     # HELMS 1   18.00       PGEN=404.00  QGEN=66.02
 0
  #
  #
  # (407)  L-1/G-1 OVERLAPPING OUTAGE
  # Templeton - Gates 230 kV Line and Helms Unit 1
 1  30900 30905  "1 "    0     # line from  GATES    230.00  BRKR to BRKR  TEMPLETN
230.00
  #
 3  34600     0  "1"     0     # HELMS 1   18.00       PGEN=404.00  QGEN=66.02
 0
  #
```

```
  #
  # (408)  L-1/G-1 OVERLAPPING OUTAGE
  # Morro Bay - Gates 230 kV Line and Helms Unit 1
 1  30900 30915  "1 "    0     # line from  GATES    230.00  BRKR to BRKR  MORROBAY
230.00
  #
 3  34600     0  "1"     0     # HELMS 1   18.00       PGEN=404.00  QGEN=66.02
 0
  #
  #
  # (409)  L-1/G-1 OVERLAPPING OUTAGE
  # Gates - Arco 230 kV Line and Helms Unit 1
 1  30900 30935  "1 "    0     # line from  GATES    230.00  BRKR to BRKR  ARCO
230.00
  #
 3  34600     0  "1"     0     # HELMS 1   18.00       PGEN=404.00  QGEN=66.02
 0
  #
  #
  # (410)  L-1/G-1 OVERLAPPING OUTAGE
  # Gates - Midway 230 kV Line and Helms Unit 1
 1  30900 30970  "1 "    0     # line from  GATES    230.00  BRKR to BRKR  MIDWAY
230.00
  #
 3  34600     0  "1"     0     # HELMS 1   18.00       PGEN=404.00  QGEN=66.02
 0
  #
  #
  # (411)  L-1/G-1 OVERLAPPING OUTAGE
  # Panoche - Kearney 230 kV Line and Melones Unit 1
 1  30790 30825  "1 "    0     # line from  PANOCHE  230.00  BRKR to (2)   MCMULLN1
230.00
 1  30825 30830  "1 "    0     # line from  MCMULLN1 230.00   (2) to BRKR  KEARNEY
230.00
 4  30825     0  "1 "    0     # LOAD-DROP    MCMULLN1 230.00  LOAD==20.57(4.18)
  #
 3  37561     0  "1"     0     # MELONE1   13.80       PGEN=119.00  QGEN=60.00
 0
  #
  #
  # (412)  L-1/G-1 OVERLAPPING OUTAGE
  # Panoche - Helm 230 kV Line and Melones Unit 1
 1  30790 30873  "1 "    0     # line from  PANOCHE  230.00  BRKR to BRKR  HELM
230.00
  #
 3  37561     0  "1"     0     # MELONE1   13.80       PGEN=119.00  QGEN=60.00
 0
  #
  #
  # (413)  L-1/G-1 OVERLAPPING OUTAGE
  # Gates - Panoche #1 230 kV Line and Melones Unit 1
 1  30790 30900  "1 "    0     # line from  PANOCHE  230.00  BRKR to BRKR  GATES
230.00
  #
 3  37561     0  "1"     0     # MELONE1   13.80       PGEN=119.00  QGEN=60.00
 0
  #
  #
  # (414)  L-1/G-1 OVERLAPPING OUTAGE
  # Gates - Panoche #2 230 kV Line and Melones Unit 1
 1  30790 30900  "2 "    0     # line from  PANOCHE  230.00  BRKR to BRKR  GATES
230.00
  #
 3  37561     0  "1"     0     # MELONE1   13.80       PGEN=119.00  QGEN=60.00
 0
  #
  #
  # (415)  L-1/G-1 OVERLAPPING OUTAGE
  # Helm - McCall 230 kV Line and Melones Unit 1
```

```
 1  30873 30875  "1 "    0     # line from  HELM     230.00  BRKR to BRKR  MC CALL
230.00
  #
 3  37561     0  "1"     0     # MELONE1   13.80       PGEN=119.00  QGEN=60.00
 0
  #
  #
  # (416)  L-1/G-1 OVERLAPPING OUTAGE
  # Helms - Gregg #1 230 kV Line and Melones Unit 1
 1  30810 30820  "1 "    0     # line from  GREGG    230.00  BRKR to BRKR  HELMS PP
230.00
 3  34600     0  "**"    0      # Drop unit#1 with a loss Helm - Gregg #1 line
  #
 3  37561     0  "1"     0     # MELONE1   13.80       PGEN=119.00  QGEN=60.00
 0
  #
  #
  # (417)  L-1/G-1 OVERLAPPING OUTAGE
  # Helms - Gregg #2 230 kV Line and Melones Unit 1
 1  30810 30820  "2 "    0     # line from  GREGG    230.00  BRKR to BRKR  HELMS PP
230.00
 3  34604     0  "**"    0      # Drop unit#3 with a loss Helm - Gregg #2 line
  #
 3  37561     0  "1"     0     # MELONE1   13.80       PGEN=119.00  QGEN=60.00
 0
  #
  #
  # (418)  L-1/G-1 OVERLAPPING OUTAGE
  # Gregg - Herndon #1 230 kV Line and Melones Unit 1
 1  30810 30835  "1 "    0     # line from  GREGG    230.00  BRKR to BRKR  HERNDON
230.00
 3  34604     0  "**"    0      # Drop unit#3 with a loss Gregg - Herndon #1 line
  #
 3  37561     0  "1"     0     # MELONE1   13.80       PGEN=119.00  QGEN=60.00
 0
  #
  #
  # (419)  L-1/G-1 OVERLAPPING OUTAGE
  # Gregg - Herndon #2 230 kV Line and Melones Unit 1
 1  30810 30835  "2 "    0     # line from  GREGG    230.00  BRKR to BRKR  HERNDON
230.00
 3  34604     0  "**"    0      # Drop unit#3 with a loss Gregg - Herndon #2 line
  #
 3  37561     0  "1"     0     # MELONE1   13.80       PGEN=119.00  QGEN=60.00
 0
  #
  #
  # (420)  L-1/G-1 OVERLAPPING OUTAGE
  # Gregg - Ashlan 230 kV Line and Melones Unit 1
 1  30810 30845  "1 "    0     # line from  GREGG    230.00  BRKR to (3)   FGRDN T2
230.00
 1  30845 30846  "1 "    0     # line from  FGRDN T2 230.00   (3) to BRKR  FIGRDN 2
230.00
 1  30845 30850  "1 "    0     # line from  FGRDN T2 230.00   (3) to BRKR  ASHLAN
230.00
 4  30846     0  "1 "    0     # LOAD-DROP    FIGRDN 2 230.00  LOAD==52.57(10.67)
 4  30846     0  "2 "    0     # LOAD-DROP    FIGRDN 2 230.00  LOAD==36.77(7.47)
 3  34604     0  "**"    0      # Drop unit#3 with a loss Gregg - Figarden line
 1 30841  30846  "1 "    1      # Switches in Figarden SW 286 to transfer load
 4 30846      0  "**"    1      # Restore Load at Figarden 2
  #
 3  37561     0  "1"     0     # MELONE1   13.80       PGEN=119.00  QGEN=60.00
 0
  #
  #
  # (421)  L-1/G-1 OVERLAPPING OUTAGE
  # Gates - Gregg 230 kV Line and Melones Unit 1
 1  30810 30879  "1 "    0     # line from  GREGG    230.00  BRKR to (3)   HENTAP1
230.00
```

```
 1  30879 30881  "1 "    0     # line from  HENTAP1  230.00   (3) to BRKR  HENRIETA
230.00
 1  30879 30900  "1 "    0     # line from  HENTAP1  230.00   (3) to BRKR  GATES
230.00
 3  34604     0  "**"    0      # Drop unit#3 with a loss Gregg - Henrietta Tap 1 line
 1  30880 30881  "1 "    1      # Henrietta flip flop (Henrietta CB 222)
  #
 3  37561     0  "1"     0     # MELONE1   13.80       PGEN=119.00  QGEN=60.00
 0
  #
  #
  # (422)  L-1/G-1 OVERLAPPING OUTAGE
  # Herndon - Kearney 230 kV Line and Melones Unit 1
 1  30830 30835  "1 "    0     # line from  KEARNEY  230.00  BRKR to BRKR  HERNDON
230.00
  #
 3  37561     0  "1"     0     # MELONE1   13.80       PGEN=119.00  QGEN=60.00
 0
  #
  #
  # (423)  L-1/G-1 OVERLAPPING OUTAGE
  # Herndon - Ashlan 230 kV Line and Melones Unit 1
 1  30835 30840  "1 "    0     # line from  HERNDON  230.00  BRKR to (3)   FGRDN T1
230.00
 1  30840 30841  "1 "    0     # line from  FGRDN T1 230.00   (3) to BRKR  FIGRDN 1
230.00
 1  30840 30850  "1 "    0     # line from  FGRDN T1 230.00   (3) to BRKR  ASHLAN
230.00
 4  30841     0  "1 "    0     # LOAD-DROP    FIGRDN 1 230.00  LOAD==73.45(14.92)
 1 30841  30846  "1 "    1      # Switches in Figarden SW 286 to transfer load
 4 30841      0  "**"    1      # Restore Load at Figarden 1
  #
 3  37561     0  "1"     0     # MELONE1   13.80       PGEN=119.00  QGEN=60.00
 0
  #
  #
  # (424)  L-1/G-1 OVERLAPPING OUTAGE
  # Haas - McCall 230 kV Line and Melones Unit 1
 1  30855 30860  "1 "    0     # line from  HAAS     230.00   (2) to (3)   BALCH3TP
230.00
 2  30855 34610  "1 "    0     # TRAN from  HAAS     230.00   (2) to (1)   HAAS
13.80
 1  30860 30875  "1 "    0     # line from  BALCH3TP 230.00   (3) to BRKR  MC CALL
230.00
 2  30860 34614  "1 "    0     # TRAN from  BALCH3TP 230.00   (3) to (1)   BLCH 2-3
13.80
 3  34610     0  "1 "    0     # GEN-DROP    HAAS      13.80  GEN==70.00(10.21)
 3  34610     0  "2 "    0     # GEN-DROP    HAAS      13.80  GEN==70.00(10.21)
 3  34614     0  "1 "    0     # GEN-DROP    BLCH 2-3  13.80  GEN==50.00(7.64)
  #
 3  37561     0  "1"     0     # MELONE1   13.80       PGEN=119.00  QGEN=60.00
 0
  #
  #
  # (425)  L-1/G-1 OVERLAPPING OUTAGE
  # Balch - McCall 230 kV Line and Melones Unit 1
 1  30865 30870  "1 "    0     # line from  BALCH    230.00   (2) to (3)   PINE FLT
230.00
 2  30865 34612  "1 "    0     # TRAN from  BALCH    230.00   (2) to (1)   BLCH 2-2
13.80
 1  30870 30875  "1 "    0     # line from  PINE FLT 230.00   (3) to BRKR  MC CALL
230.00
 2  30870 38720  "1 "    0     # TRAN from  PINE FLT 230.00   (3) to (1)   PINE FLT
13.80
 3  34612     0  "1 "    0     # GEN-DROP    BLCH 2-2  13.80  GEN==50.00(0.66)
 3  38720     0  "1 "    0     # GEN-DROP    PINE FLT  13.80  GEN==57.00(23.30)
  #
 3  37561     0  "1"     0     # MELONE1   13.80       PGEN=119.00  QGEN=60.00
 0
  #
```

```
  #
  # (426)  L-1/G-1 OVERLAPPING OUTAGE
  # Gates - McCall 230 kV Line and Melones Unit 1
 1  30875 30880  "1 "    0     # line from  MC CALL  230.00  BRKR to (2)   HENTAP2
230.00
 1  30880 30900  "1 "    0     # line from  HENTAP2  230.00   (2) to BRKR  GATES
230.00
  #
 3  37561     0  "1"     0     # MELONE1   13.80       PGEN=119.00  QGEN=60.00
 0
  #
  #
  # (427)  L-1/G-1 OVERLAPPING OUTAGE
  # Templeton - Gates 230 kV Line and Melones Unit 1
 1  30900 30905  "1 "    0     # line from  GATES    230.00  BRKR to BRKR  TEMPLETN
230.00
  #
 3  37561     0  "1"     0     # MELONE1   13.80       PGEN=119.00  QGEN=60.00
 0
  #
  #
  # (428)  L-1/G-1 OVERLAPPING OUTAGE
  # Morro Bay - Gates 230 kV Line and Melones Unit 1
 1  30900 30915  "1 "    0     # line from  GATES    230.00  BRKR to BRKR  MORROBAY
230.00
  #
 3  37561     0  "1"     0     # MELONE1   13.80       PGEN=119.00  QGEN=60.00
 0
  #
  #
  # (429)  L-1/G-1 OVERLAPPING OUTAGE
  # Gates - Arco 230 kV Line and Melones Unit 1
 1  30900 30935  "1 "    0     # line from  GATES    230.00  BRKR to BRKR  ARCO
230.00
  #
 3  37561     0  "1"     0     # MELONE1   13.80       PGEN=119.00  QGEN=60.00
 0
  #
  #
  # (430)  L-1/G-1 OVERLAPPING OUTAGE
  # Gates - Midway 230 kV Line and Melones Unit 1
 1  30900 30970  "1 "    0     # line from  GATES    230.00  BRKR to BRKR  MIDWAY
230.00
  #
 3  37561     0  "1"     0     # MELONE1   13.80       PGEN=119.00  QGEN=60.00
 0
  #
  #
 -1
  # EOF
```

Spring Peak Category C Contingencies

```
# Q272 2013 sprpk category c contingency list (dctl and bus outages)
# Yosemite and Fresno Divisions Zones 313 and 314
#
  # 2013 sprpk category c contingency list
  # Yosemite Zone 313
  #
  #
  # (1)   C5 DCTL OUTAGE
  # Wilson - Atwater and El Capitan - Wilson 115 kV Lines
 1  34134 34104  "1 "    0     # line from  WILSON A 115.00  BRKR to BRKR  ATWATER
115.00
  #
 1  34136 34138  "1 "    0     # line from  WILSON B 115.00  BRKR to BRKR  EL CAPTN
115.00
 0
  #
  #
  # (2)   C5 DCTL OUTAGE
  # Wilson - Atwater and Atwater - El Capitan 115 kV Lines
 1  34134 34104  "1 "    0     # line from  WILSON A 115.00  BRKR to BRKR  ATWATER
115.00
  #
 1  34104 34106  "1 "    0     # line from  ATWATER  115.00  BRKR to (2)   CASTLE
115.00
 1  34106 34138  "1 "    0     # line from  CASTLE   115.00   (2) to BRKR  EL CAPTN
115.00
 0
  #
  #
  # (3)   C5 DCTL OUTAGE
  # Wilson - Merced #2 and Wilson - Oro Loma 115 kV Lines
 1  34134 34144  "1 "    0     # line from  WILSON A 115.00  BRKR to BRKR  MERCED
115.00
  #
 1  34118 34136  "1 "    0     # line from  LE GRNDJ 115.00   (2) to BRKR  WILSON B
115.00
 1  34118 34168  "1 "    0     # line from  LE GRNDJ 115.00   (2) to (2)   EL NIDO
115.00
 1  34168 34162  "1 "    0     # line from  EL NIDO  115.00   (2) to BRKR  ORO LOMA
115.00
 4  34168     0  "1 "    0     # LOAD-DROP    EL NIDO  115.00  LOAD==12.49(2.54)
 4  34168     0  "2 "    0     # LOAD-DROP    EL NIDO  115.00  LOAD==15.00(3.05)
 0
  #
  #
  # (4)   C5 DCTL OUTAGE
  # Panoche - Schindler #1 and #2 115 kV Lines
 1  34158 34350  "1 "    0     # line from  PANOCHE  115.00  BRKR to (2)   KAMM
115.00
 1  34350 34352  "1 "    0     # line from  KAMM     115.00   (2) to (2)   CANTUA
115.00
 1  34352 34432  "1 "    0     # line from  CANTUA   115.00   (2) to (2)   WESTLNDS
115.00
 1  34432 34354  "1 "    0     # line from  WESTLNDS 115.00   (2) to BRKR  SCHINDLR
115.00
 4  34350     0  "1 "    0     # LOAD-DROP    KAMM     115.00  LOAD==3.85(1.75)
 4  34352     0  "1 "    0     # LOAD-DROP    CANTUA   115.00  LOAD==16.79(3.41)
 4  34432     0  "16"    0     # LOAD-DROP    WESTLNDS 115.00  LOAD==0.94(0.23)
 4  34432     0  "18"    0     # LOAD-DROP    WESTLNDS 115.00  LOAD==1.21(0.32)
  #
 1  34141 34148  "1 "    0     # line from  PAN2_TAP 115.00   (2) to (2)   CHENY
115.00
 2  34141 34142  "1 "    0     # TRAN from  PAN2_TAP 115.00   (2) to (1)   WHD_PAN2
13.80
```

```
 1  34148 34149  "1 "    0     # line from  CHENY    115.00   (2) to (3)   CHENYT
115.00
 1  34149 34158  "1 "    0     # line from  CHENYT   115.00   (3) to BRKR  PANOCHE
115.00
 1  34149 34354  "1 "    0     # line from  CHENYT   115.00   (3) to BRKR  SCHINDLR
115.00
 4  34148     0  "1 "    0     # LOAD-DROP    CHENY    115.00  LOAD==13.12(2.66)
 3  34142     0  "1 "    0     # GEN-DROP    WHD_PAN2  13.80  GEN==49.00(4.03)
 0
  #
  #
  # (5)   C5 DCTL OUTAGE
  # Gates - Panoche #1 and #2 230 kV Lines
 1  30790 30900  "1 "    0     # line from  PANOCHE  230.00  BRKR to BRKR  GATES
230.00
  #
 1  30790 30900  "2 "    0     # line from  PANOCHE  230.00  BRKR to BRKR  GATES
230.00
 0
  #
  #
  # (6)   C5 DCTL OUTAGE
  # Los Banos - Panoche #2 and Los Banos - Dos Amigos 230 kV Lines
 1  30765 30790  "2 "    0     # line from  LOSBANOS 230.00  BRKR to BRKR  PANOCHE
230.00
  #
 1  30765 38615  "1 "    0     # line from  LOSBANOS 230.00  BRKR to BRKR  DS AMIGO
230.00
 0
  #
  #
  # (7)   C5 DCTL OUTAGE
  # Los Banos - Panoche #2 and Dos Amigos - Panoche 230 kV Lines
 1  30765 30790  "2 "    0     # line from  LOSBANOS 230.00  BRKR to BRKR  PANOCHE
230.00
  #
 1  38615 30790  "1 "    0     # line from  DS AMIGO 230.00  BRKR to BRKR  PANOCHE
230.00
 0
  #
  #
  # (8)   C5 DCTL OUTAGE
  # Los Banos - San Luis PGP #1 and #2 230 kV Lines
 1  30765 38625  "1 "    0     # line from  LOSBANOS 230.00  BRKR to BRKR  SN LS PP
230.00
  #
 1  30765 38625  "2 "    0     # line from  LOSBANOS 230.00  BRKR to BRKR  SN LS PP
230.00
 0
  #
  #
  # (9)   C5 DCTL OUTAGE
  # Bellota - Melones and Bellota - Warnerville 230 kV Lines
 1  30500 38206  "1 "    0     # line from  BELLOTA  230.00  BRKR to (2)   COTTLE A
230.00
 1  38206 37563  "1 "    0     # line from  COTTLE A 230.00   (2) to BRKR  MELONES
230.00
 4  38206     0  "1 "    0     # LOAD-DROP    COTTLE A 230.00  LOAD==19.23(0.00)
 3  34604     0  "**"    0     # Drop Helms unit#3 with a loss Bellota - Melones line
  #
 1  30500 38208  "1 "    0     # line from  BELLOTA  230.00  BRKR to (3)   COTTLE B
230.00
 1  38208 30515  "1 "    0     # line from  COTTLE B 230.00   (3) to BRKR  WARNERVL
230.00
 4  38208     0  "2 "    0     # LOAD-DROP    COTTLE B 230.00  LOAD==21.32(7.38)
 0
  #
  #
  # (10)   C5 DCTL OUTAGE
  # Bellota - Melones and Warnerville - Wilson 230 kV Lines
```

```
 1  30500 38206  "1 "    0     # line from  BELLOTA  230.00  BRKR to (2)   COTTLE A
230.00
 1  38206 37563  "1 "    0     # line from  COTTLE A 230.00   (2) to BRKR  MELONES
230.00
 4  38206     0  "1 "    0     # LOAD-DROP    COTTLE A 230.00  LOAD==19.23(0.00)
 3  34604     0  "**"    0     # Drop Helms unit#3 with a loss Bellota - Melones line
  #
 1  30515 30800  "1 "    0     # line from  WARNERVL 230.00  BRKR to BRKR  WILSON
230.00
 0
  #
  #
  # (11)   C5 DCTL OUTAGE
  # Bellota - Melones and Melones - Wilson 230 kV Lines
 1  30500 38206  "1 "    0     # line from  BELLOTA  230.00  BRKR to (2)   COTTLE A
230.00
 1  38206 37563  "1 "    0     # line from  COTTLE A 230.00   (2) to BRKR  MELONES
230.00
 4  38206     0  "1 "    0     # LOAD-DROP    COTTLE A 230.00  LOAD==19.23(0.00)
 3  34604     0  "**"    0     # Drop Helms unit#3 with a loss Bellota - Melones line
  #
 1  37563 30800  "1 "    0     # line from  MELONES  230.00  BRKR to BRKR  WILSON
230.00
 3  34604     0  "**"    0     # Drop Helms unit#3 with a loss Melones - Wilson line
 0
  #
  #
  # (12)   C5 DCTL OUTAGE
  # Melones - Wilson and Warnerville - Wilson 230 kV Lines
 1  37563 30800  "1 "    0     # line from  MELONES  230.00  BRKR to BRKR  WILSON
230.00
 3  34604     0  "**"    0     # Drop Helms unit#3 with a loss Melones - Wilson line
  #
 1  30515 30800  "1 "    0     # line from  WARNERVL 230.00  BRKR to BRKR  WILSON
230.00
 0
  #
  #
  # (13)   C5 DCTL OUTAGE
  # Wilson - Borden #1 and #2 230 kV Lines
 1  30795 30805  "1 "    0     # line from  STOREY 2 230.00   (2) to BRKR  BORDEN
230.00
 1  30795 30800  "1 "    0     # line from  STOREY 2 230.00   (2) to BRKR  WILSON
230.00
 4  30795     0  "2 "    0     # LOAD-DROP    STOREY 2 230.00  LOAD==33.89(6.88)
  #
 1  30796 30800  "1 "    0     # line from  STOREY 1 230.00   (2) to BRKR  WILSON
230.00
 1  30796 30805  "1 "    0     # line from  STOREY 1 230.00   (2) to BRKR  BORDEN
230.00
 4  30796     0  "1 "    0     # LOAD-DROP    STOREY 1 230.00  LOAD==37.87(7.69)
 0
  #
  #
  # (14)   C5 DCTL OUTAGE
  # Borden - Gregg #1 and #2 230 kV Lines
 1  30805 30810  "1 "    0     # line from  BORDEN   230.00  BRKR to BRKR  GREGG
230.00
 3  34604     0  "**"    0     # Drop unit#3 with loss of Gregg - Borden line
  #
 1  30805 30810  "2 "    0     # line from  BORDEN   230.00  BRKR to BRKR  GREGG
230.00
 3  34604     0  "**"    0     # Drop unit#3 with loss of Gregg - Borden #2 line
 0
  #
  #
  # (15)   C5 DCTL OUTAGE
  # Moss Landing - Panoche and Coburn - Panoche 230 kV Lines
 1  30750 30790  "1 "    0     # line from  MOSSLND2 230.00  BRKR to BRKR  PANOCHE
230.00
```

```
  #
 1  30760 30790  "1 "    0     # line from  COBURN   230.00  BRKR to BRKR  PANOCHE
230.00
 0
  #
  #
  # (16)   C5 DCTL OUTAGE
  # Panoche - Helm and Panoche - Kearney 230 kV Lines
 1  30790 30873  "1 "    0     # line from  PANOCHE  230.00  BRKR to BRKR  HELM
230.00
  #
 1  30790 30825  "1 "    0     # line from  PANOCHE  230.00  BRKR to (2)   MCMULLN1
230.00
 1  30825 30830  "1 "    0     # line from  MCMULLN1 230.00   (2) to BRKR  KEARNEY
230.00
 4  30825     0  "1 "    0     # LOAD-DROP    MCMULLN1 230.00  LOAD==20.57(4.18)
 0
  #
  #
  # (17) BUS FAULT  30765  "LOSBANOS" Bus Section 1
  #
 1  30765  30670  "1"    0     # LINE from  LOSBANOS 230.00  to  WESTLEY  230.00
 1  30765  30790  "2"    0     # LINE from  LOSBANOS 230.00  to  PANOCHE  230.00
 1  30765  38625  "1"    0     # LINE from  LOSBANOS 230.00  to  SN LS PP 230.00
 1  30765  38625  "2"    0     # LINE from  LOSBANOS 230.00  to  SN LS PP 230.00
 2  30765  34214  "3"    0     # TRAN from  LOSBANOS 230.00  to  LOS BANS  70.00
 6  30765     0  "v"     0     # drop Los Banos 230 kV shunt Caps
 0
  #
  #
  # (18) BUS FAULT  30765  "LOSBANOS" Bus Section 2
  #
 1  30765  30790  "1"    0     # LINE from  LOSBANOS 230.00  to  PANOCHE  230.00
 1  30765  38615  "1"    0     # LINE from  LOSBANOS 230.00  to  DS AMIGO 230.00
 2  30765  34214  "4"    0     # TRAN from  LOSBANOS 230.00  to  LOS BANS  70.00
 0
  #
  #
  # (19) BUS FAULT  30790  "PANOCHE" Bus Section 1
  #
 1  30790  30760  "1"    0     # LINE from  PANOCHE  230.00  to  COBURN   230.00
 1  30790  30765  "1"    0     # LINE from  PANOCHE  230.00  to  LOSBANOS 230.00
 1  30790  30765  "2"    0     # LINE from  PANOCHE  230.00  to  LOSBANOS 230.00
 1  30790  30825  "1"    0     # LINE from  PANOCHE  230.00  to  MCMULLN1 230.00
 1  30790  30900  "1"    0     # LINE from  PANOCHE  230.00  to  GATES    230.00
 2  30790  30791  "1"    0     # TRAN from  PANOCHE  230.00  to  PNCHE 1M 230.00
 0
  #
  #
  # (20) BUS FAULT  30790  "PANOCHE" Bus Section 2
  #
 1  30790  30750  "1"    0     # LINE from  PANOCHE  230.00  to  MOSSLND2 230.00
 1  30790  30793  "1"    0     # LINE from  PANOCHE  230.00  to  PANO_EC  230.00
 1  30790  30873  "1"    0     # LINE from  PANOCHE  230.00  to  HELM     230.00
 1  30790  30900  "2"    0     # LINE from  PANOCHE  230.00  to  GATES    230.00
 1  30790  38615  "1"    0     # LINE from  PANOCHE  230.00  to  DS AMIGO 230.00
 2  30790  34158  "2"    0     # TRAN from  PANOCHE  230.00  to  PANOCHE  115.00
 0
  #
  #
  # (21) BUS FAULT  34100  "CHWCHLLA"
  #
 1  34100  34101  "1"    0     # LINE from  CHWCHLLA 115.00  to  CERTAN T 115.00
 1  34100  34105  "1"    0     # LINE from  CHWCHLLA 115.00  to  CERTANJ1 115.00
 4  34100     0  "1 "    0     # LOAD-DROP    CHWCHLLA 115.00  LOAD==10.13(2.06)
 4  34100     0  "2 "    0     # LOAD-DROP    CHWCHLLA 115.00  LOAD==13.86(2.82)
 0
  #
  #
  # (22) BUS FAULT  34104  "ATWATER"
```

```
 #
1  34104  34106  "1"    0     # LINE from  ATWATER  115.00  to  CASTLE   115.00
1  34104  34108  "1"    0     # LINE from  ATWATER  115.00  to  CRESEY T 115.00
1  34104  34134  "1"    0     # LINE from  ATWATER  115.00  to  WILSON A 115.00
4  34104     0  "1 "    0     # LOAD-DROP    ATWATER  115.00  LOAD==32.40(6.57)
4  34104     0  "2 "    0     # LOAD-DROP    ATWATER  115.00  LOAD==28.36(5.76)
0
 #
 #
 # (23) BUS FAULT  34112  "EXCHEQUR"
 #
1  34112  34116  "1"    0     # LINE from  EXCHEQUR 115.00  to  LE GRAND 115.00
2  34112  34176  "1"    0     # TRAN from  EXCHEQUR 115.00  to  EXCHQRTP 115.00
0
 #
 #
 # (24) BUS FAULT  34116  "LE GRAND"
 #
1  34116  34101  "1"    0     # LINE from  LE GRAND 115.00  to  CERTAN T 115.00
1  34116  34112  "1"    0     # LINE from  LE GRAND 115.00  to  EXCHEQUR 115.00
1  34116  34134  "1"    0     # LINE from  LE GRAND 115.00  to  WILSON A 115.00
1  34116  34154  "1"    0     # LINE from  LE GRAND 115.00  to  DAIRYLND 115.00
4  34116     0  "1 "    0     # LOAD-DROP    LE GRAND 115.00  LOAD==13.41(2.72)
0
 #
 #
 # (25) BUS FAULT  34134  "WILSON A"
 #
1  34134  34116  "1"    0     # LINE from  WILSON A 115.00  to  LE GRAND 115.00
1  34134  34104  "1"    0     # LINE from  WILSON A 115.00  to  ATWATER  115.00
1  34134  34136  "1"    0     # LINE from  WILSON A 115.00  to  WILSON B 115.00
1  34134  34144  "1"    0     # LINE from  WILSON A 115.00  to  MERCED   115.00
2  34134  30800  "1"    0     # TRAN from  WILSON A 115.00  to  WILSON   230.00
4  34134     0  "3 "    0     # LOAD-DROP    WILSON A 115.00  LOAD==18.66(3.79)
6  34134     0  "v"     0     # drop Wilson A 115 kV shunt Caps
0
 #
 #
 # (26) BUS FAULT  34136  "WILSON B"
 #
1  34136  34118  "1"    0     # LINE from  WILSON B 115.00  to  LE GRNDJ 115.00
1  34136  34134  "1"    0     # LINE from  WILSON B 115.00  to  WILSON A 115.00
1  34136  34138  "1"    0     # LINE from  WILSON B 115.00  to  EL CAPTN 115.00
1  34136  34144  "2"    0     # LINE from  WILSON B 115.00  to  MERCED   115.00
2  34136  30800  "2"    0     # TRAN from  WILSON B 115.00  to  WILSON   230.00
0
 #
 #
 # (27) BUS FAULT  34138  "EL CAPTN"
 #
1  34138  34106  "1"    0     # LINE from  EL CAPTN 115.00  to  CASTLE   115.00
1  34138  34136  "1"    0     # LINE from  EL CAPTN 115.00  to  WILSON B 115.00
4  34138     0  "1 "    0     # LOAD-DROP    EL CAPTN 115.00  LOAD==19.47(3.95)
4  34138     0  "2 "    0     # LOAD-DROP    EL CAPTN 115.00  LOAD==25.91(5.26)
4  34138     0  "3 "    0     # LOAD-DROP    EL CAPTN 115.00  LOAD==33.05(6.71)
0
 #
 #
 # (28) BUS FAULT  34144  "MERCED"
 #
1  34144  34110  "1"    0     # LINE from  MERCED   115.00  to  ATWATR J 115.00
1  34144  34134  "1"    0     # LINE from  MERCED   115.00  to  WILSON A 115.00
1  34144  34136  "2"    0     # LINE from  MERCED   115.00  to  WILSON B 115.00
2  34144  34146  "2"    0     # TRAN from  MERCED   115.00  to  MERCED M 115.00
4  34144     0  "1 "    0     # LOAD-DROP    MERCED   115.00  LOAD==37.10(7.53)
4  34144     0  "3 "    0     # LOAD-DROP    MERCED   115.00  LOAD==19.45(3.95)
0
 #
 #
 # (29) BUS FAULT  34154  "DAIRYLND"
```

```
 #
1  34154  34116  "1"    0     # LINE from  DAIRYLND 115.00  to  LE GRAND 115.00
1  34154  34150  "1"    0     # LINE from  DAIRYLND 115.00  to  NEWHALL  115.00
4  34154     0  "1 "    0     # LOAD-DROP    DAIRYLND 115.00  LOAD==25.82(5.24)
0
 #
 #
 # (30) BUS FAULT  34158  "PANOCHE" Bus Section 1
 #
1  34158  34149  "1"    0     # LINE from  PANOCHE  115.00  to  CHENYT   115.00
1  34158  34159  "1"    0     # LINE from  PANOCHE  115.00  to  PANOCHEJ 115.00
2  34158  30790  "2"    0     # TRAN from  PANOCHE  115.00  to  PANOCHE  230.00
2  34158  34186  "1"    0     # TRAN from  PANOCHE  115.00  to  DG_PAN1   13.80
0
 #
 #
 # (31) BUS FAULT  34158  "PANOCHE" Bus Section 2
 #
1  34158  34157  "1"    0     # LINE from  PANOCHE  115.00  to  PANOCHET 115.00
1  34158  34189  "1"    0     # LINE from  PANOCHE  115.00  to  STARWOOD 115.00
1  34158  34350  "1"    0     # LINE from  PANOCHE  115.00  to  KAMM     115.00
2  34158  30791  "1"    0     # TRAN from  PANOCHE  115.00  to  PNCHE 1M 230.00
0
 #
 #
 # (32) BUS FAULT  34200  "ORO LOMA"
 #
1  34200  34218  "1"    0     # LINE from  ORO LOMA  70.00  to  DOS PALS  70.00
1  34200  34222  "1"    0     # LINE from  ORO LOMA  70.00  to  MRCYSPRS  70.00
1  34200  34234  "1"    0     # LINE from  ORO LOMA  70.00  to  POSO J1   70.00
2  34200  34162  "2"    0     # TRAN from  ORO LOMA  70.00  to  ORO LOMA 115.00
4  34200     0  "1 "    0     # LOAD-DROP    ORO LOMA  70.00  LOAD==8.64(1.75)
0
 #
 #
 # (33) BUS FAULT  34202  "MERCED"
 #
1  34202  34203  "1"    0     # LINE from  MERCED    70.00  to  ELNIDOTP  70.00
1  34202  34230  "1"    0     # LINE from  MERCED    70.00  to  MRCDFLLS  70.00
2  34202  34146  "2"    0     # TRAN from  MERCED    70.00  to  MERCED M 115.00
0
 #
 #
 # (34) BUS FAULT  34206  "CANAL"
 #
1  34206  34212  "1"    0     # LINE from  CANAL     70.00  to  LVNGSTNT  70.00
1  34206  34216  "1"    0     # LINE from  CANAL     70.00  to  SNTA RTA  70.00
1  34206  34220  "1"    0     # LINE from  CANAL     70.00  to  ORTIGA    70.00
4  34206     0  "1 "    0     # LOAD-DROP    CANAL     70.00  LOAD==30.56(6.21)
4  34206     0  "2 "    0     # LOAD-DROP    CANAL     70.00  LOAD==31.27(6.35)
0
 #
 #
 # (35) BUS FAULT  34214  "LOS BANS"
 #
1  34214  34208  "1"    0     # LINE from  LOS BANS  70.00  to  CHEVPIPE  70.00
1  34214  34272  "1"    0     # LINE from  LOS BANS  70.00  to  WRGHT PP  70.00
1  34214  34278  "1"    0     # LINE from  LOS BANS  70.00  to  PCHCO PP  70.00
1  34214  34282  "1"    0     # LINE from  LOS BANS  70.00  to  ONLL PMP  69.00
2  34214  30765  "3"    0     # TRAN from  LOS BANS  70.00  to  LOSBANOS 230.00
2  34214  30765  "4"    0     # TRAN from  LOS BANS  70.00  to  LOSBANOS 230.00
0
 #
 #
 # (36) BUS FAULT  34216  "SNTA RTA"
 #
1  34216  34206  "1"    0     # LINE from  SNTA RTA  70.00  to  CANAL     70.00
1  34216  34218  "1"    0     # LINE from  SNTA RTA  70.00  to  DOS PALS  70.00
4  34216     0  "1 "    0     # LOAD-DROP    SNTA RTA  70.00  LOAD==7.48(1.52)
0
```

```
 #
 #
 # (37) BUS FAULT  34230  "MRCDFLLS"
 #
1  34230  34202  "1"    0     # LINE from  MRCDFLLS  70.00  to  MERCED    70.00
1  34230  34321  "1"    0     # LINE from  MRCDFLLS  70.00  to  MCSWAINJ  70.00
2  34230  34322  "1"    0     # TRAN from  MRCDFLLS  70.00  to  MERCEDFL   9.11
2  34230  34322  "2"    0     # TRAN from  MRCDFLLS  70.00  to  MERCEDFL   9.11
4  34230     0  "2 "    0     # LOAD-DROP    MRCDFLLS  70.00  LOAD==8.94(1.82)
0
 #
 #
 # (38) BUS FAULT  34238  "BONITA"
 #
1  34238  34236  "1"    0     # LINE from  BONITA    70.00  to  POSO J2   70.00
1  34238  34255  "1"    0     # LINE from  BONITA    70.00  to  TRIGO J   70.00
4  34238     0  "1 "    0     # LOAD-DROP    BONITA    70.00  LOAD==14.37(2.92)
0
 #
 #
 # (39) BUS FAULT  34240  "GLASS"
 #
1  34240  34237  "1"    0     # LINE from  GLASS     70.00  to  CANANDGA  70.00
1  34240  34256  "1"    0     # LINE from  GLASS     70.00  to  BORDEN    70.00
4  34240     0  "1 "    0     # LOAD-DROP    GLASS     70.00  LOAD==9.05(4.89)
0
 #
 #
 # (40) BUS FAULT  34252  "MADERA"
 #
1  34252  34254  "1"    0     # LINE from  MADERA    70.00  to  TRIGO     70.00
1  34252  34256  "1"    0     # LINE from  MADERA    70.00  to  BORDEN    70.00
1  34252  34256  "2"    0     # LINE from  MADERA    70.00  to  BORDEN    70.00
4  34252     0  "1 "    0     # LOAD-DROP    MADERA    70.00  LOAD==17.99(3.65)
4  34252     0  "2 "    0     # LOAD-DROP    MADERA    70.00  LOAD==23.16(4.71)
6  34252     0  "v"     0     # drop Madera 70 kV shunt Caps
0
 #
 #
 # (41) BUS FAULT  34256  "BORDEN"
 #
1  34256  34252  "1"    0     # LINE from  BORDEN    70.00  to  MADERA    70.00
1  34256  34252  "2"    0     # LINE from  BORDEN    70.00  to  MADERA    70.00
1  34256  34240  "1"    0     # LINE from  BORDEN    70.00  to  GLASS     70.00
1  34256  34262  "1"    0     # LINE from  BORDEN    70.00  to  CASSIDY   70.00
2  34256  30805  "1"    0     # TRAN from  BORDEN    70.00  to  BORDEN   230.00
2  34256  30805  "2"    0     # TRAN from  BORDEN    70.00  to  BORDEN   230.00
0
 #
 #
 # (42) BUS FAULT  34268  "MENDOTA"
 #
1  34268  34267  "1"    0     # LINE from  MENDOTA   70.00  to  TOMATAK   70.00
1  34268  34269  "1"    0     # LINE from  MENDOTA   70.00  to  BIOMSJCT  70.00
2  34268  34156  "1"    0     # TRAN from  MENDOTA   70.00  to  MENDOTA  115.00
0
 #
 #
 # 2013 sprpk category c contingency list
 # Fresno Zone 314
 #
 #
 # (43)   C5 DCTL OUTAGE
 # Gates - Schindler and Gates - Huron #1 70 kV Lines
1  34558 34560  "1 "    0     # line from  HURON     70.00  BRKR to (2)   CALFLAX
70.00
1  34560 34562  "1 "    0     # line from  CALFLAX   70.00   (2) to BRKR  SCHLNDLR
70.00
4  34560     0  "1 "    0     # LOAD-DROP    CALFLAX   70.00  LOAD==6.53(1.33)
1  34552 34558  "2 "    0      # Must include Gates - Huron #2 in this outage
```

```
  #
 1  34552 34558  "1 "    0     # line from  GATES     70.00  BRKR to BRKR  HURON
70.00
 0
  #
  #
  # (44)   C5 DCTL OUTAGE
  # Barton - Sanger and Manchester - Sanger 115 kV Lines
 1  34359 34361  "1 "    0     # line from  AIRWAYJ2 115.00   (3) to BRKR  AIRWAYS
115.00
 1  34359 34408  "1 "    0     # line from  AIRWAYJ2 115.00   (3) to BRKR  BARTON
115.00
 1  34359 34366  "1 "    0     # line from  AIRWAYJ2 115.00   (3) to BRKR  SANGER
115.00
  #
 1  34357 34361  "1 "    0     # line from  AIRWAYJ1 115.00   (3) to BRKR  AIRWAYS
115.00
 1  34357 34368  "1 "    0     # line from  AIRWAYJ1 115.00   (3) to (2)   LASPALMS
115.00
 1  34357 34410  "1 "    0     # line from  AIRWAYJ1 115.00   (3) to BRKR  MANCHSTR
115.00
 1  34368 34366  "1 "    0     # line from  LASPALMS 115.00   (2) to BRKR  SANGER
115.00
 4  34368     0  "1 "    0     # LOAD-DROP    LASPALMS 115.00  LOAD==13.90(11.89)
 0
  #
  #
  # (45)   C5 DCTL OUTAGE
  # Herndon - Barton and Herndon - Manchester 115 kV Lines
 1  34408 34412  "1 "    0     # line from  BARTON   115.00  BRKR to BRKR  HERNDON
115.00
  #
 1  34410 34412  "1 "    0     # line from  MANCHSTR 115.00  BRKR to BRKR  HERNDON
115.00
 0
  #
  #
  # (46)   C5 DCTL OUTAGE
  # Herndon - Barton and Manchester - Sanger 115 kV Lines
 1  34408 34412  "1 "    0     # line from  BARTON   115.00  BRKR to BRKR  HERNDON
115.00
  #
 1  34357 34361  "1 "    0     # line from  AIRWAYJ1 115.00   (3) to BRKR  AIRWAYS
115.00
 1  34357 34368  "1 "    0     # line from  AIRWAYJ1 115.00   (3) to (2)   LASPALMS
115.00
 1  34357 34410  "1 "    0     # line from  AIRWAYJ1 115.00   (3) to BRKR  MANCHSTR
115.00
 1  34368 34366  "1 "    0     # line from  LASPALMS 115.00   (2) to BRKR  SANGER
115.00
 4  34368     0  "1 "    0     # LOAD-DROP    LASPALMS 115.00  LOAD==13.90(11.89)
 0
  #
  #
  # (47)   C5 DCTL OUTAGE
  # Herndon - Bullard #1 and #2 115 kV Lines
 1  34411 34416  "1 "    0     # line from  PNDLJ1   115.00   (2) to BRKR  BULLARD
115.00
 1  34411 34412  "1 "    0     # line from  PNDLJ1   115.00   (2) to BRKR  HERNDON
115.00
  #
 1  34409 34413  "1 "    0     # line from  PNDLJ2   115.00   (3) to BRKR  PNEDLE
115.00
 1  34409 34416  "1 "    0     # line from  PNDLJ2   115.00   (3) to BRKR  BULLARD
115.00
 1  34409 34412  "1 "    0     # line from  PNDLJ2   115.00   (3) to BRKR  HERNDON
115.00
 4  34413     0  "2 "    0     # LOAD-DROP    PNEDLE   115.00  LOAD==30.74(6.25)
 4  34413     0  "3 "    0     # LOAD-DROP    PNEDLE   115.00  LOAD==40.42(8.20)
 1  34411 34413  "1 "    1      # Switches in Pindale CB#12 to transfer load
```

```
 4  34413     0  "**"    1      # Restore load at Pindale
 0
  #
  #
  # (48)   C5 DCTL OUTAGE
  # Kerckhoff - Clovis - Sanger #1 and #2 115 kV Lines
 1  34358 34360  "1 "    0     # line from  KERCKHF2 115.00  BRKR to (3)   WWARD JT
115.00
 1  34360 34414  "1 "    0     # line from  WWARD JT 115.00   (3) to BRKR  WOODWARD
115.00
 1  34360 34363  "1 "    0     # line from  WWARD JT 115.00   (3) to (3)   CLOVISJ1
115.00
 1  34363 34362  "1 "    0     # line from  CLOVISJ1 115.00   (3) to BRKR  CLOVIS-1
115.00
 1  34363 34366  "1 "    0     # line from  CLOVISJ1 115.00   (3) to BRKR  SANGER
115.00
 4  34362     0  "1 "    0     # LOAD-DROP    CLOVIS-1 115.00  LOAD==51.01(10.36)
 4  34362     0  "2 "    0     # LOAD-DROP    CLOVIS-1 115.00  LOAD==50.20(10.20)
 1 34362  34364  "1 "    1      # Switches in Clovis SW 387 to transfer load
 4 34362      0  "**"    1      # Restore Load at Clovis 1
  #
 1  34364 34365  "1 "    0     # line from  CLOVIS-2 115.00  BRKR to (3)   CLOVISJ2
115.00
 1  34365 34358  "1 "    0     # line from  CLOVISJ2 115.00   (3) to BRKR  KERCKHF2
115.00
 1  34365 34366  "1 "    0     # line from  CLOVISJ2 115.00   (3) to BRKR  SANGER
115.00
 4  34364     0  "3 "    0     # LOAD-DROP    CLOVIS-2 115.00  LOAD==44.76(9.09)
 1 34362  34364  "1 "    1      # Switches in Clovis SW 387 to transfer load
 4 34364      0  "**"    1      # Restore Load at Clovis 2
 0
  #
  #
  # (49)   C5 DCTL OUTAGE
  # Kingburg - Corcoran #1 and #2 115 kV Lines
 1  34418 34420  "1 "    0     # line from  KINGSBRG 115.00  BRKR to BRKR  CORCORAN
115.00
  #
 1  34418 34420  "2 "    0     # line from  KINGSBRG 115.00  BRKR to BRKR  CORCORAN
115.00
 0
  #
  #
  # (50)   C5 DCTL OUTAGE
  # Kings River - Sanger - Reedley and Balch - Sanger 115 kV Lines
 1  34366 34389  "1 "    0     # line from  SANGER   115.00  BRKR to (3)   RAINBWTP
115.00
 1  34389 34388  "1 "    0     # line from  RAINBWTP 115.00   (3) to (1)   RAINBW
115.00
 1  34389 34394  "1 "    0     # line from  RAINBWTP 115.00   (3) to (3)   PIEDRA 1
115.00
 1  34394 34380  "1 "    0     # line from  PIEDRA 1 115.00   (3) to BRKR  REEDLEY
115.00
 1  34394 34400  "1 "    0     # line from  PIEDRA 1 115.00   (3) to BRKR  KNGSRVR1
115.00
 4  34388     0  "1 "    0     # LOAD-DROP    RAINBW   115.00  LOAD==16.20(3.29)
  #
 1  34366 34396  "1 "    0     # line from  SANGER   115.00  BRKR to (2)   PIEDRA 2
115.00
 1  34396 34398  "1 "    0     # line from  PIEDRA 2 115.00   (2) to (2)   BALCH
115.00
 2  34398 34624  "1 "    0     # TRAN from  BALCH    115.00   (2) to (1)   BALCH 1
13.20
 4  34624     0  "1 "    0     # LOAD-DROP    BALCH 1   13.20  LOAD==0.26(0.00)
 3  34624     0  "1 "    0     # GEN-DROP    BALCH 1   13.20  GEN==27.00(8.33)
 0
  #
  #
  # (51)   C5 DCTL OUTAGE
  # McCall - Kingsburg #1 and #2 115 kV Lines
```

```
 1  34370 34385  "1 "    0     # line from  MC CALL  115.00  BRKR to (3)   KINGS J1
115.00
 1  34385 34417  "1 "    0     # line from  KINGS J1 115.00   (3) to (2)   KINGS J2
115.00
 1  34385 34425  "1 "    0     # line from  KINGS J1 115.00   (3) to (3)   KCOGNJCT
115.00
 1  34417 34418  "1 "    0     # line from  KINGS J2 115.00   (2) to BRKR  KINGSBRG
115.00
 1  34425 34387  "1 "    0     # line from  KCOGNJCT 115.00   (3) to (1)   SUNMAID
115.00
 1  34425 34427  "1 "    0     # line from  KCOGNJCT 115.00   (3) to (2)   GRDNGLS2
115.00
 1  34427 34386  "1 "    0     # line from  GRDNGLS2 115.00   (2) to (2)   KNGSCOGN
115.00
 2  34386 34642  "1 "    0     # TRAN from  KNGSCOGN 115.00   (2) to BRKR  KINGSBUR
9.11
 4  34387     0  "1 "    0     # LOAD-DROP    SUNMAID  115.00  LOAD==3.40(3.28)
 3  34642     0  "1 "    0     # GEN-DROP    KINGSBUR   9.11  GEN==34.00(17.30)
  #
 1  34418 34423  "1 "    0     # line from  KINGSBRG 115.00  BRKR to (3)   GAURD J1
115.00
 1  34423 34370  "1 "    0     # line from  GAURD J1 115.00   (3) to BRKR  MC CALL
115.00
 1  34423 34421  "1 "    0     # line from  GAURD J1 115.00   (3) to (2)   GAURD J2
115.00
 1  34421 34424  "1 "    0     # line from  GAURD J2 115.00   (2) to (1)   GRDN GLS
115.00
 4  34424     0  "1 "    0     # LOAD-DROP    GRDN GLS 115.00  LOAD==3.50(1.15)
 4  34418     0  "3 "    0      # Kingsburg Bank #3 will also be dropped on this outage
 0
  #
  #
  # (52)   C5 DCTL OUTAGE
  # McCall - Sanger #1 and #2 115 kV Lines
 1  34366 34370  "1 "    0     # line from  SANGER   115.00  BRKR to BRKR  MC CALL
115.00
  #
 1  34366 34370  "2 "    0     # line from  SANGER   115.00  BRKR to BRKR  MC CALL
115.00
 0
  #
  #
  # (53)   C5 DCTL OUTAGE
  # McCall - West Fresno and California Ave. - West Fresno 115 kV Lines
 1  34404 34370  "1 "    0     # line from  WST FRSO 115.00  BRKR to BRKR  MC CALL
115.00
  #
 1  34402 34404  "1 "    0     # line from  CAL AVE  115.00  BRKR to BRKR  WST FRSO
115.00
 0
  #
  #
  # (54)   C5 DCTL OUTAGE
  # McCall - West Fresno and California Ave. - McCall 115 kV Lines
 1  34404 34370  "1 "    0     # line from  WST FRSO 115.00  BRKR to BRKR  MC CALL
115.00
  #
 1  34390 34370  "1 "    0     # line from  DANISHCM 115.00   (2) to BRKR  MC CALL
115.00
 1  34390 34402  "1 "    0     # line from  DANISHCM 115.00   (2) to BRKR  CAL AVE
115.00
 4  34390     0  "1 "    0     # LOAD-DROP    DANISHCM 115.00  LOAD==4.10(3.51)
 0
  #
  #
  # (55)   C5 DCTL OUTAGE
  # Gates - Gregg and Gates - McCall 230 kV Lines
 1  30810 30879  "1 "    0     # line from  GREGG    230.00  BRKR to (3)   HENTAP1
230.00
```

```
 1  30879 30881  "1 "    0     # line from  HENTAP1  230.00   (3) to BRKR  HENRIETA
230.00
 1  30879 30900  "1 "    0     # line from  HENTAP1  230.00   (3) to BRKR  GATES
230.00
 3  34604     0  "**"    0      # Drop unit#3 with a loss Gregg - Henrietta Tap 1 line
 1  30880 30881  "1 "    1      # Henrietta flip flop (Henrietta CB 222)
  #
 1  30875 30880  "1 "    0     # line from  MC CALL  230.00  BRKR to (2)   HENTAP2
230.00
 1  30880 30900  "1 "    0     # line from  HENTAP2  230.00   (2) to BRKR  GATES
230.00
 0
  #
  #
  # (56)   C5 DCTL OUTAGE
  # Panoche - Kearney and Gates - Gregg 230 kV Lines
 1  30790 30825  "1 "    0     # line from  PANOCHE  230.00  BRKR to (2)   MCMULLN1
230.00
 1  30825 30830  "1 "    0     # line from  MCMULLN1 230.00   (2) to BRKR  KEARNEY
230.00
 4  30825     0  "1 "    0     # LOAD-DROP    MCMULLN1 230.00  LOAD==20.57(4.18)
  #
 1  30810 30879  "1 "    0     # line from  GREGG    230.00  BRKR to (3)   HENTAP1
230.00
 1  30879 30881  "1 "    0     # line from  HENTAP1  230.00   (3) to BRKR  HENRIETA
230.00
 1  30879 30900  "1 "    0     # line from  HENTAP1  230.00   (3) to BRKR  GATES
230.00
 3  34604     0  "**"    0      # Drop unit#3 with a loss Gregg - Henrietta Tap 1 line
 1  30880 30881  "1 "    1      # Henrietta flip flop (Henrietta CB 222)
 0
  #
  #
  # (57)   C5 DCTL OUTAGE
  # Panoche - Kearney and Panoche - Helm 230 kV Lines
 1  30790 30825  "1 "    0     # line from  PANOCHE  230.00  BRKR to (2)   MCMULLN1
230.00
 1  30825 30830  "1 "    0     # line from  MCMULLN1 230.00   (2) to BRKR  KEARNEY
230.00
 4  30825     0  "1 "    0     # LOAD-DROP    MCMULLN1 230.00  LOAD==20.57(4.18)
  #
 1  30790 30873  "1 "    0     # line from  PANOCHE  230.00  BRKR to BRKR  HELM
230.00
 0
  #
  #
  # (58)   C5 DCTL OUTAGE
  # Panoche - Kearney and Helm - McCall 230 kV Lines
 1  30790 30825  "1 "    0     # line from  PANOCHE  230.00  BRKR to (2)   MCMULLN1
230.00
 1  30825 30830  "1 "    0     # line from  MCMULLN1 230.00   (2) to BRKR  KEARNEY
230.00
 4  30825     0  "1 "    0     # LOAD-DROP    MCMULLN1 230.00  LOAD==20.57(4.18)
  #
 1  30873 30875  "1 "    0     # line from  HELM     230.00  BRKR to BRKR  MC CALL
230.00
 0
  #
  #
  # (59)   C5 DCTL OUTAGE
  # Helm - McCall and Gates - McCall 230 kV Lines
 1  30873 30875  "1 "    0     # line from  HELM     230.00  BRKR to BRKR  MC CALL
230.00
  #
 1  30875 30880  "1 "    0     # line from  MC CALL  230.00  BRKR to (2)   HENTAP2
230.00
 1  30880 30900  "1 "    0     # line from  HENTAP2  230.00   (2) to BRKR  GATES
230.00
 0
  #
```

```
  #
  # (60)   C5 DCTL OUTAGE
  # Helms - Gregg #1 and #2 230 kV Lines
 1  30810 30820  "1 "    0     # line from  GREGG    230.00  BRKR to BRKR  HELMS PP
230.00
 3  34600     0  "**"    0      # Drop unit#1 with a loss Helm - Gregg #1 line
  #
 1  30810 30820  "2 "    0     # line from  GREGG    230.00  BRKR to BRKR  HELMS PP
230.00
 3  34604     0  "**"    0      # Drop unit#3 with a loss Helm - Gregg #2 line
 0
  #
  #
  # (61)   C5 DCTL OUTAGE
  # Gregg - Herndon #1 and #2 230 kV Lines
 1  30810 30835  "1 "    0     # line from  GREGG    230.00  BRKR to BRKR  HERNDON
230.00
 3  34604     0  "**"    0      # Drop unit#3 with a loss Gregg - Herndon #1 line
  #
 1  30810 30835  "2 "    0     # line from  GREGG    230.00  BRKR to BRKR  HERNDON
230.00
 3  34604     0  "**"    0      # Drop unit#3 with a loss Gregg - Herndon #2 line
 0
  #
  #
  # (62)   C5 DCTL OUTAGE
  # Herndon - Kearney and Herndon - Ashlan 230 kV Lines
 1  30830 30835  "1 "    0     # line from  KEARNEY  230.00  BRKR to BRKR  HERNDON
230.00
  #
 1  30835 30840  "1 "    0     # line from  HERNDON  230.00  BRKR to (3)   FGRDN T1
230.00
 1  30840 30841  "1 "    0     # line from  FGRDN T1 230.00   (3) to BRKR  FIGRDN 1
230.00
 1  30840 30850  "1 "    0     # line from  FGRDN T1 230.00   (3) to BRKR  ASHLAN
230.00
 4  30841     0  "1 "    0     # LOAD-DROP    FIGRDN 1 230.00  LOAD==73.45(14.92)
 1 30841  30846  "1 "    1      # Switches in Figarden SW 286 to transfer load
 4 30841      0  "**"    1      # Restore Load at Figarden 1
 0
  #
  #
  # (63)   C5 DCTL OUTAGE
  # Herndon - Kearney and Gates - Gregg 230 kV Lines
 1  30830 30835  "1 "    0     # line from  KEARNEY  230.00  BRKR to BRKR  HERNDON
230.00
  #
 1  30810 30879  "1 "    0     # line from  GREGG    230.00  BRKR to (3)   HENTAP1
230.00
 1  30879 30881  "1 "    0     # line from  HENTAP1  230.00   (3) to BRKR  HENRIETA
230.00
 1  30879 30900  "1 "    0     # line from  HENTAP1  230.00   (3) to BRKR  GATES
230.00
 3  34604     0  "**"    0      # Drop unit#3 with a loss Gregg - Henrietta Tap 1 line
 1  30880 30881  "1 "    1      # Henrietta flip flop (Henrietta CB 222)
 0
  #
  #
  # (64)   C5 DCTL OUTAGE
  # Gates - Gregg and Gregg - Ashlan 230 kV Lines
 1  30810 30879  "1 "    0     # line from  GREGG    230.00  BRKR to (3)   HENTAP1
230.00
 1  30879 30881  "1 "    0     # line from  HENTAP1  230.00   (3) to BRKR  HENRIETA
230.00
 1  30879 30900  "1 "    0     # line from  HENTAP1  230.00   (3) to BRKR  GATES
230.00
 3  34604     0  "**"    0      # Drop unit#3 with a loss Gregg - Henrietta Tap 1 line
 1  30880 30881  "1 "    1      # Henrietta flip flop (Henrietta CB 222)
  #
```

```
 1  30810 30845  "1 "    0     # line from  GREGG    230.00  BRKR to (3)   FGRDN T2
230.00
 1  30845 30846  "1 "    0     # line from  FGRDN T2 230.00   (3) to BRKR  FIGRDN 2
230.00
 1  30845 30850  "1 "    0     # line from  FGRDN T2 230.00   (3) to BRKR  ASHLAN
230.00
 4  30846     0  "1 "    0     # LOAD-DROP    FIGRDN 2 230.00  LOAD==52.57(10.67)
 4  30846     0  "2 "    0     # LOAD-DROP    FIGRDN 2 230.00  LOAD==36.77(7.47)
 3  34604     0  "**"    0      # Drop unit#3 with a loss Gregg - Figarden line
 1 30841  30846  "1 "    1      # Switches in Figarden SW 286 to transfer load
 4 30846      0  "**"    1      # Restore Load at Figarden 2
 0
  #
  #
  # (65)   C5 DCTL OUTAGE
  # Herndon - Ashlan and Gregg - Ashlan 230 kV Lines
 1  30835 30840  "1 "    0     # line from  HERNDON  230.00  BRKR to (3)   FGRDN T1
230.00
 1  30840 30841  "1 "    0     # line from  FGRDN T1 230.00   (3) to BRKR  FIGRDN 1
230.00
 1  30840 30850  "1 "    0     # line from  FGRDN T1 230.00   (3) to BRKR  ASHLAN
230.00
 4  30841     0  "1 "    0     # LOAD-DROP    FIGRDN 1 230.00  LOAD==73.45(14.92)
 1 30841  30846  "1 "    1      # Switches in Figarden SW 286 to transfer load
 4 30841      0  "**"    1      # Restore Load at Figarden 1
  #
 1  30810 30845  "1 "    0     # line from  GREGG    230.00  BRKR to (3)   FGRDN T2
230.00
 1  30845 30846  "1 "    0     # line from  FGRDN T2 230.00   (3) to BRKR  FIGRDN 2
230.00
 1  30845 30850  "1 "    0     # line from  FGRDN T2 230.00   (3) to BRKR  ASHLAN
230.00
 4  30846     0  "1 "    0     # LOAD-DROP    FIGRDN 2 230.00  LOAD==52.57(10.67)
 4  30846     0  "2 "    0     # LOAD-DROP    FIGRDN 2 230.00  LOAD==36.77(7.47)
 3  34604     0  "**"    0      # Drop unit#3 with a loss Gregg - Figarden line
 1 30841  30846  "1 "    1      # Switches in Figarden SW 286 to transfer load
 4 30846      0  "**"    1      # Restore Load at Figarden 2
 0
  #
  #
  # (66)   C5 DCTL OUTAGE
  # Haas - McCall and Balch - McCall 230 kV Lines
 1  30855 30860  "1 "    0     # line from  HAAS     230.00   (2) to (3)   BALCH3TP
230.00
 2  30855 34610  "1 "    0     # TRAN from  HAAS     230.00   (2) to (1)   HAAS
13.80
 1  30860 30875  "1 "    0     # line from  BALCH3TP 230.00   (3) to BRKR  MC CALL
230.00
 2  30860 34614  "1 "    0     # TRAN from  BALCH3TP 230.00   (3) to (1)   BLCH 2-3
13.80
 3  34610     0  "1 "    0     # GEN-DROP    HAAS      13.80  GEN==70.00(10.21)
 3  34610     0  "2 "    0     # GEN-DROP    HAAS      13.80  GEN==70.00(10.21)
 3  34614     0  "1 "    0     # GEN-DROP    BLCH 2-3  13.80  GEN==50.00(7.64)
  #
 1  30865 30870  "1 "    0     # line from  BALCH    230.00   (2) to (3)   PINE FLT
230.00
 2  30865 34612  "1 "    0     # TRAN from  BALCH    230.00   (2) to (1)   BLCH 2-2
13.80
 1  30870 30875  "1 "    0     # line from  PINE FLT 230.00   (3) to BRKR  MC CALL
230.00
 2  30870 38720  "1 "    0     # TRAN from  PINE FLT 230.00   (3) to (1)   PINE FLT
13.80
 3  34612     0  "1 "    0     # GEN-DROP    BLCH 2-2  13.80  GEN==50.00(0.66)
 3  38720     0  "1 "    0     # GEN-DROP    PINE FLT  13.80  GEN==57.00(23.30)
 0
  #
  #
  # (67)   C5 DCTL OUTAGE
  # Morro Bay - Gates and Templeton - Gates 230 kV Lines
```

```
 1  30900 30915  "1 "    0     # line from  GATES    230.00  BRKR to BRKR  MORROBAY
230.00
  #
 1  30900 30905  "1 "    0     # line from  GATES    230.00  BRKR to BRKR  TEMPLETN
230.00
 0
  #
  #
  # (68)   C5 DCTL OUTAGE
  # Gates - Midway and Gates - Arco 230 kV Lines
 1  30900 30970  "1 "    0     # line from  GATES    230.00  BRKR to BRKR  MIDWAY
230.00
  #
 1  30900 30935  "1 "    0     # line from  GATES    230.00  BRKR to BRKR  ARCO
230.00
 0
  #
  #
  # (69) BUS FAULT  30820  "HELMS PP"
  #
 1  30820  30810  "1"    0     # LINE from  HELMS PP 230.00  to  GREGG    230.00
 1  30820  30810  "2"    0     # LINE from  HELMS PP 230.00  to  GREGG    230.00
 2  30820  34600  "1"    0     # TRAN from  HELMS PP 230.00  to  HELMS 1   18.00
 2  30820  34602  "1"    0     # TRAN from  HELMS PP 230.00  to  HELMS 2   18.00
 2  30820  34604  "1"    0     # TRAN from  HELMS PP 230.00  to  HELMS 3   18.00
 0
  #
  #
  # (70) BUS FAULT  30830  "KEARNEY"
  #
 1  30830  30825  "1"    0     # LINE from  KEARNEY  230.00  to  MCMULLN1 230.00
 1  30830  30835  "1"    0     # LINE from  KEARNEY  230.00  to  HERNDON  230.00
 2  30830  34480  "2"    0     # TRAN from  KEARNEY  230.00  to  KEARNEY   70.00
 0
  #
  #
  # (71) BUS FAULT  30835  "HERNDON" 230 kV Bus Section 1
  #
 1  30835  30810  "1"    0     # LINE from  HERNDON  230.00  to  GREGG    230.00
 1  30835  30830  "1"    0     # LINE from  HERNDON  230.00  to  KEARNEY  230.00
 2  30835  30882  "1"    0     # TRAN from  HERNDON  230.00  to  HERNDN1M 115.00
 0
  #
  #
  # (72) BUS FAULT  30835  "HERNDON" 230 kV Bus Section 2
  #
 1  30835  30810  "2"    0     # LINE from  HERNDON  230.00  to  GREGG    230.00
 1  30835  30840  "1"    0     # LINE from  HERNDON  230.00  to  FGRDN T1 230.00
 2  30835  30883  "2"    0     # TRAN from  HERNDON  230.00  to  HERNDN2M 115.00
 0
  #
  #
  # (73) BUS FAULT  30841  "FIGRDN 1"
  #
 1  30841  30840  "1"    0     # LINE from  FIGRDN 1 230.00  to  FGRDN T1 230.00
 1  30841  30846  "1"    0     # LINE from  FIGRDN 1 230.00  to  FIGRDN 2 230.00
 4  30841     0  "1 "    0     # LOAD-DROP    FIGRDN 1 230.00  LOAD==73.45(14.92)
 0
  #
  #
  # (74) BUS FAULT  30846  "FIGRDN 2"
  #
 1  30846  30841  "1"    0     # LINE from  FIGRDN 2 230.00  to  FIGRDN 1 230.00
 1  30846  30845  "1"    0     # LINE from  FIGRDN 2 230.00  to  FGRDN T2 230.00
 4  30846     0  "1 "    0     # LOAD-DROP    FIGRDN 2 230.00  LOAD==52.57(10.67)
 4  30846     0  "2 "    0     # LOAD-DROP    FIGRDN 2 230.00  LOAD==36.77(7.47)
 0
  #
  #
  # (75) BUS FAULT  30850  "ASHLAN"
```

```
 #
1  30850  30840  "1"    0     # LINE from  ASHLAN   230.00  to  FGRDN T1 230.00
1  30850  30845  "1"    0     # LINE from  ASHLAN   230.00  to  FGRDN T2 230.00
4  30850     0  "1 "    0     # LOAD-DROP    ASHLAN   230.00  LOAD==69.20(13.40)
4  30850     0  "2 "    0     # LOAD-DROP    ASHLAN   230.00  LOAD==64.54(12.84)
4  30850     0  "3 "    0     # LOAD-DROP    ASHLAN   230.00  LOAD==65.51(12.49)
0
 #
 #
 # (76) BUS FAULT  30873  "HELM"
 #
1  30873  30790  "1"    0     # LINE from  HELM     230.00  to  PANOCHE  230.00
1  30873  30875  "1"    0     # LINE from  HELM     230.00  to  MC CALL  230.00
2  30873  34474  "1"    0     # TRAN from  HELM     230.00  to  HELM      70.00
0
 #
 #
 # (77) BUS FAULT  30874  "P0615STN"
 #
1  30874  30875  "1"    0     # LINE from  P0615STN 230.00  to  MC CALL  230.00
1  30874  30875  "2"    0     # LINE from  P0615STN 230.00  to  MC CALL  230.00
2  30874  34685  "1"    0     # TRAN from  P0615STN 230.00  to  P0615CT1  16.50
2  30874  34686  "1"    0     # TRAN from  P0615STN 230.00  to  P0615CT2  16.50
2  30874  34687  "1"    0     # TRAN from  P0615STN 230.00  to  P0615STG  16.50
0
 #
 #
 # (78) BUS FAULT  30875  "MC CALL" 230 kV Bus Section 1
 #
1  30875  30870  "1"    0     # LINE from  MC CALL  230.00  to  PINE FLT 230.00
1  30875  30874  "1"    0     # LINE from  MC CALL  230.00  to  P0615STN 230.00
1  30875  30880  "1"    0     # LINE from  MC CALL  230.00  to  HENTAP2  230.00
2  30875  30877  "2"    0     # TRAN from  MC CALL  230.00  to  MCCALL2M 115.00
6  30875  0      "v"    0     # SVD  from  MC CALL  230.00
0
 #
 #
 # (79) BUS FAULT  30875  "MC CALL" 230 kV Bus Section 2
 #
1  30875  30873  "1"    0     # LINE from  MC CALL  230.00  to  HELM     230.00
1  30875  30860  "1"    0     # LINE from  MC CALL  230.00  to  BALCH3TP 230.00
1  30875  30874  "2"    0     # LINE from  MC CALL  230.00  to  P0615STN 230.00
2  30875  30876  "1"    0     # TRAN from  MC CALL  230.00  to  MCCALL1M 115.00
2  30875  30878  "3"    0     # TRAN from  MC CALL  230.00  to  MCCALL3M 115.00
0
 #
 #
 # (80) BUS FAULT  30881  "HENRIETA"
 #
1  30881  30879  "1"    0     # LINE from  HENRIETA 230.00  to  HENTAP1  230.00
1  30881  30880  "1"    0     # LINE from  HENRIETA 230.00  to  HENTAP2  230.00
2  30881  34430  "3"    0     # TRAN from  HENRIETA 230.00  to  HENRETTA 115.00
2  30881  34540  "2"    0     # TRAN from  HENRIETA 230.00  to  HENRITTA  70.00
2  30881  34540  "4"    0     # TRAN from  HENRIETA 230.00  to  HENRITTA  70.00
0
 #
 #
 # (81) BUS FAULT  30900  "GATES" 230 kV Bus Section 1D
 #
1  30900  30790  "1"    0     # LINE from  GATES    230.00  to  PANOCHE  230.00
1  30900  30905  "1"    0     # LINE from  GATES    230.00  to  TEMPLETN 230.00
2  30900  30901  "1"    0     # TRAN from  GATES    230.00  to  GATES 1M 230.00
6  30900  0      "v"    0     # SVD  from  GATES    230.00
0
 #
 #
 # (82) BUS FAULT  30900  "GATES" 230 kV Bus Section 2D
 #
1  30900  30790  "2"    0     # LINE from  GATES    230.00  to  PANOCHE  230.00
1  30900  30915  "1"    0     # LINE from  GATES    230.00  to  MORROBAY 230.00
```

```
0
 #
 #
 # (83) BUS FAULT  30900  "GATES" 230 kV Bus Section 1E
 #
1  30900  30879  "1"    0     # LINE from  GATES    230.00  to  HENTAP1  230.00
1  30900  30935  "1"    0     # LINE from  GATES    230.00  to  ARCO     230.00
0
 #
 #
 # (84) BUS FAULT  30900  "GATES" 230 kV Bus Section 2E
 #
1  30900  30880  "1"    0     # LINE from  GATES    230.00  to  HENTAP2  230.00
1  30900  30970  "1"    0     # LINE from  GATES    230.00  to  MIDWAY   230.00
0
 #
 #
 # (85) BUS FAULT  34356  "KERCKHF1"
 #
1  34356  34123  "2"    0     # LINE from  KERCKHF1 115.00  to  K1-JCT   115.00
1  34356  34358  "1"    0     # LINE from  KERCKHF1 115.00  to  KERCKHF2 115.00
2  34356  34344  "1"    0     # TRAN from  KERCKHF1 115.00  to  KERCKHOF   6.60
0
 #
 #
 # (86) BUS FAULT  34358  "KERCKHF2"
 #
1  34358  34123  "2"    0     # LINE from  KERCKHF2 115.00  to  K1-JCT   115.00
1  34358  34356  "1"    0     # LINE from  KERCKHF2 115.00  to  KERCKHF1 115.00
1  34358  34360  "1"    0     # LINE from  KERCKHF2 115.00  to  WWARD JT 115.00
1  34358  34365  "1"    0     # LINE from  KERCKHF2 115.00  to  CLOVISJ2 115.00
2  34358  34308  "1"    0     # TRAN from  KERCKHF2 115.00  to  KERCKHOF  13.80
0
 #
 #
 # (87) BUS FAULT  34361  "AIRWAYS"
 #
1  34361  34357  "1"    0     # LINE from  AIRWAYS  115.00  to  AIRWAYJ1 115.00
1  34361  34359  "1"    0     # LINE from  AIRWAYS  115.00  to  AIRWAYJ2 115.00
4  34361     0  "1 "    0     # LOAD-DROP    AIRWAYS  115.00  LOAD==38.39(7.43)
4  34361     0  "2 "    0     # LOAD-DROP    AIRWAYS  115.00  LOAD==12.60(2.56)
0
 #
 #
 # (88) BUS FAULT  34362  "CLOVIS-1"
 #
1  34362  34363  "1"    0     # LINE from  CLOVIS-1 115.00  to  CLOVISJ1 115.00
1  34362  34364  "1"    0     # LINE from  CLOVIS-1 115.00  to  CLOVIS-2 115.00
4  34362     0  "1 "    0     # LOAD-DROP    CLOVIS-1 115.00  LOAD==51.01(10.36)
4  34362     0  "2 "    0     # LOAD-DROP    CLOVIS-1 115.00  LOAD==50.20(10.20)
0
 #
 #
 # (89) BUS FAULT  34364  "CLOVIS-2"
 #
1  34364  34362  "1"    0     # LINE from  CLOVIS-2 115.00  to  CLOVIS-1 115.00
1  34364  34365  "1"    0     # LINE from  CLOVIS-2 115.00  to  CLOVISJ2 115.00
4  34364     0  "3 "    0     # LOAD-DROP    CLOVIS-2 115.00  LOAD==44.76(9.09)
0
 #
 #
 # (90) BUS FAULT  34366  "SANGER"
 #
1  34366  34363  "1"    0     # LINE from  SANGER   115.00  to  CLOVISJ1 115.00
1  34366  34365  "1"    0     # LINE from  SANGER   115.00  to  CLOVISJ2 115.00
1  34366  34359  "1"    0     # LINE from  SANGER   115.00  to  AIRWAYJ2 115.00
1  34366  34368  "1"    0     # LINE from  SANGER   115.00  to  LASPALMS 115.00
1  34366  34370  "1"    0     # LINE from  SANGER   115.00  to  MC CALL  115.00
1  34366  34370  "2"    0     # LINE from  SANGER   115.00  to  MC CALL  115.00
1  34366  34370  "3"    0     # LINE from  SANGER   115.00  to  MC CALL  115.00
```

```
1  34366  34372  "1"    0     # LINE from  SANGER   115.00  to  MALAGA   115.00
1  34366  34389  "1"    0     # LINE from  SANGER   115.00  to  RAINBWTP 115.00
1  34366  34396  "1"    0     # LINE from  SANGER   115.00  to  PIEDRA 2 115.00
1  34366  34488  "1"    0     # LINE from  SANGER   115.00  to  SANGER    70.00
2  34366  34590  "1"    0     # TRAN from  SANGER   115.00  to  SANGR3T  115.00
4  34366     0  "1 "    0     # LOAD-DROP    SANGER   115.00  LOAD==24.26(4.93)
0
 #
 #
 # (91) BUS FAULT  34372  "MALAGA"
 #
1  34372  34366  "1"    0     # LINE from  MALAGA   115.00  to  SANGER   115.00
1  34372  34376  "1"    0     # LINE from  MALAGA   115.00  to  PPG      115.00
1  34372  34379  "1"    0     # LINE from  MALAGA   115.00  to  MALAGATP 115.00
1  34372  34381  "1"    0     # LINE from  MALAGA   115.00  to  KRCDP    115.00
4  34372     0  "1 "    0     # LOAD-DROP    MALAGA   115.00  LOAD==25.25(5.12)
4  34372     0  "2 "    0     # LOAD-DROP    MALAGA   115.00  LOAD==22.76(4.62)
4  34372     0  "3 "    0     # LOAD-DROP    MALAGA   115.00  LOAD==23.13(4.69)
0
 #
 #
 # (92) BUS FAULT  34378  "GATES"
 #
2  34378  30901  "1"    0     # TRAN from  GATES    115.00  to  GATES 1M 230.00
2  34378  34552  "2"    0     # TRAN from  GATES    115.00  to  GATES     70.00
4  34378     0  "3 "    0     # LOAD-DROP    GATES    115.00  LOAD==19.45(3.95)
0
 #
 #
 # (93) BUS FAULT  34380  "REEDLEY"
 #
1  34380  34384  "1"    0     # LINE from  REEDLEY  115.00  to  GERAWAN  115.00
1  34380  34394  "1"    0     # LINE from  REEDLEY  115.00  to  PIEDRA 1 115.00
2  34380  34492  "1"    0     # TRAN from  REEDLEY  115.00  to  REEDLEY   70.00
2  34380  34492  "2"    0     # TRAN from  REEDLEY  115.00  to  REEDLEY   70.00
4  34380     0  "3 "    0     # LOAD-DROP    REEDLEY  115.00  LOAD==26.17(5.31)
0
 #
 #
 # (94) BUS FAULT  34382  "WAHTOKE"
 #
1  34382  34370  "1"    0     # LINE from  WAHTOKE  115.00  to  MC CALL  115.00
1  34382  34384  "1"    0     # LINE from  WAHTOKE  115.00  to  GERAWAN  115.00
4  34382     0  "2 "    0     # LOAD-DROP    WAHTOKE  115.00  LOAD==30.36(6.17)
4  34382     0  "3 "    0     # LOAD-DROP    WAHTOKE  115.00  LOAD==20.84(4.24)
0
 #
 #
 # (95) BUS FAULT  34400  "KNGSRVR1"
 #
1  34400  34394  "1"    0     # LINE from  KNGSRVR1 115.00  to  PIEDRA 1 115.00
2  34400  34616  "1"    0     # TRAN from  KNGSRVR1 115.00  to  KINGSRIV  13.80
0
 #
 #
 # (96) BUS FAULT  34402  "CAL AVE"
 #
1  34402  34390  "1"    0     # LINE from  CAL AVE  115.00  to  DANISHCM 115.00
1  34402  34404  "1"    0     # LINE from  CAL AVE  115.00  to  WST FRSO 115.00
4  34402     0  "1 "    0     # LOAD-DROP    CAL AVE  115.00  LOAD==28.95(5.87)
4  34402     0  "2 "    0     # LOAD-DROP    CAL AVE  115.00  LOAD==31.26(6.35)
4  34402     0  "3 "    0     # LOAD-DROP    CAL AVE  115.00  LOAD==24.42(4.96)
0
 #
 #
 # (97) BUS FAULT  34404  "WST FRSO"
 #
1  34404  34370  "1"    0     # LINE from  WST FRSO 115.00  to  MC CALL  115.00
1  34404  34402  "1"    0     # LINE from  WST FRSO 115.00  to  CAL AVE  115.00
4  34404     0  "1 "    0     # LOAD-DROP    WST FRSO 115.00  LOAD==37.55(7.63)
```

```
4  34404     0  "2 "    0     # LOAD-DROP    WST FRSO 115.00  LOAD==39.04(7.93)
0
 #
 #
 # (98) BUS FAULT  34408  "BARTON"
 #
1  34408  34359  "1"    0     # LINE from  BARTON   115.00  to  AIRWAYJ2 115.00
1  34408  34412  "1"    0     # LINE from  BARTON   115.00  to  HERNDON  115.00
4  34408     0  "1 "    0     # LOAD-DROP    BARTON   115.00  LOAD==43.27(8.79)
4  34408     0  "2 "    0     # LOAD-DROP    BARTON   115.00  LOAD==37.15(7.54)
4  34408     0  "3 "    0     # LOAD-DROP    BARTON   115.00  LOAD==26.96(5.47)
0
 #
 #
 # (99) BUS FAULT  34410  "MANCHSTR"
 #
1  34410  34357  "1"    0     # LINE from  MANCHSTR 115.00  to  AIRWAYJ1 115.00
1  34410  34412  "1"    0     # LINE from  MANCHSTR 115.00  to  HERNDON  115.00
4  34410     0  "1 "    0     # LOAD-DROP    MANCHSTR 115.00  LOAD==25.28(5.13)
4  34410     0  "2 "    0     # LOAD-DROP    MANCHSTR 115.00  LOAD==25.47(5.18)
4  34410     0  "3 "    0     # LOAD-DROP    MANCHSTR 115.00  LOAD==36.21(7.36)
0
 #
 #
 # (100) BUS FAULT  34412  "HERNDON" 115 kV Bus Section 1
 #
1  34412  34408  "1"    0     # LINE from  HERNDON  115.00  to  BARTON   115.00
1  34412  34409  "1"    0     # LINE from  HERNDON  115.00  to  PNDLJ2   115.00
2  34412  30882  "1"    0     # TRAN from  HERNDON  115.00  to  HERNDN1M 115.00
0
 #
 #
 # (101) BUS FAULT  34412  "HERNDON" 115 kV Bus Section 2
 #
1  34412  34410  "1"    0     # LINE from  HERNDON  115.00  to  MANCHSTR 115.00
1  34412  34411  "1"    0     # LINE from  HERNDON  115.00  to  PNDLJ1   115.00
1  34412  34422  "1"    0     # LINE from  HERNDON  115.00  to  CHLDHOSP 115.00
0
 #
 #
 # (102) BUS FAULT  34413  "PNEDLE"
 #
1  34413  34409  "1"    0     # LINE from  PNEDLE   115.00  to  PNDLJ2   115.00
1  34413  34411  "1"    0     # LINE from  PNEDLE   115.00  to  PNDLJ1   115.00
4  34413     0  "2 "    0     # LOAD-DROP    PNEDLE   115.00  LOAD==30.74(6.25)
4  34413     0  "3 "    0     # LOAD-DROP    PNEDLE   115.00  LOAD==40.42(8.20)
0
 #
 #
 # (103) BUS FAULT  34414  "WOODWARD"
 #
1  34414  34360  "1"    0     # LINE from  WOODWARD 115.00  to  WWARD JT 115.00
1  34414  34422  "1"    0     # LINE from  WOODWARD 115.00  to  CHLDHOSP 115.00
4  34414     0  "1 "    0     # LOAD-DROP    WOODWARD 115.00  LOAD==42.25(8.58)
4  34414     0  "2 "    0     # LOAD-DROP    WOODWARD 115.00  LOAD==52.69(10.70)
4  34414     0  "3 "    0     # LOAD-DROP    WOODWARD 115.00  LOAD==44.09(8.95)
0
 #
 #
 # (104) BUS FAULT  34416  "BULLARD"
 #
1  34416  34409  "1"    0     # LINE from  BULLARD  115.00  to  PNDLJ2   115.00
1  34416  34411  "1"    0     # LINE from  BULLARD  115.00  to  PNDLJ1   115.00
4  34416     0  "1 "    0     # LOAD-DROP    BULLARD  115.00  LOAD==44.87(9.11)
4  34416     0  "2 "    0     # LOAD-DROP    BULLARD  115.00  LOAD==44.65(9.07)
4  34416     0  "3 "    0     # LOAD-DROP    BULLARD  115.00  LOAD==42.52(8.63)
0
 #
 #
 # (105) BUS FAULT  34418  "KINGSBRG" 115 kV Bus Section D
```

```
 #
1  34418  34417  "1"    0     # LINE from  KINGSBRG 115.00  to  KINGS J2 115.00
1  34418  34428  "1"    0     # LINE from  KINGSBRG 115.00  to  CONTADNA 115.00
1  34418  34420  "2"    0     # LINE from  KINGSBRG 115.00  to  CORCORAN 115.00
4  34418     0  "1 "    0     # LOAD-DROP    KINGSBRG 115.00  LOAD==39.24(7.96)
0
 #
 #
 # (106) BUS FAULT  34418  "KINGSBRG" 115 kV Bus Section E
 #
1  34418  34420  "1"    0     # LINE from  KINGSBRG 115.00  to  CORCORAN 115.00
1  34418  34423  "1"    0     # LINE from  KINGSBRG 115.00  to  GAURD J1 115.00
2  34418  34576  "2"    0     # TRAN from  KINGSBRG 115.00  to  KNGLOBUS  70.00
4  34418     0  "3 "    0     # LOAD-DROP    KINGSBRG 115.00  LOAD==24.32(4.94)
0
 #
 #
 # (107) BUS FAULT  34420  "CORCORAN"
 #
1  34420  34391  "1"    0     # LINE from  CORCORAN 115.00  to  QUEBECTP 115.00
1  34420  34418  "1"    0     # LINE from  CORCORAN 115.00  to  KINGSBRG 115.00
1  34420  34418  "2"    0     # LINE from  CORCORAN 115.00  to  KINGSBRG 115.00
2  34420  34528  "2"    0     # TRAN from  CORCORAN 115.00  to  CORCORAN  70.00
4  34420     0  "3 "    0     # LOAD-DROP    CORCORAN 115.00  LOAD==16.21(3.30)
4  34420     0  "4 "    0     # LOAD-DROP    CORCORAN 115.00  LOAD==17.81(3.61)
0
 #
 #
 # (108) BUS FAULT  34426  "ALPAUGH"
 #
1  34426  34391  "1"    0     # LINE from  ALPAUGH  115.00  to  QUEBECTP 115.00
1  34426  34700  "1"    0     # LINE from  ALPAUGH  115.00  to  SMYRNA   115.00
4  34426     0  "2 "    0     # LOAD-DROP    ALPAUGH  115.00  LOAD==5.62(1.14)
0
 #
 #
 # (109) BUS FAULT  34430  "HENRETTA"
 #
1  34430  34521  "1"    0     # LINE from  HENRETTA 115.00  to  LEPRNOFD 115.00
2  34430  30881  "3"    0     # TRAN from  HENRETTA 115.00  to  HENRIETA 230.00
0
 #
 #
 # (110) BUS FAULT  34452  "WISHON"
 #
1  34452  34260  "1"    0     # LINE from  WISHON    70.00  to  SJNO2     70.00
1  34452  34491  "1"    0     # LINE from  WISHON    70.00  to  AUBRYTP   70.00
2  34452  34658  "1"    0     # TRAN from  WISHON    70.00  to  WISHON     2.30
0
 #
 #
 # (111) BUS FAULT  34460  "GUERNSEY"
 #
1  34460  34462  "1"    0     # LINE from  GUERNSEY  70.00  to  GUR3TPT   70.00
1  34460  34528  "1"    0     # LINE from  GUERNSEY  70.00  to  CORCORAN  70.00
4  34460     0  "1 "    0     # LOAD-DROP    GUERNSEY  70.00  LOAD==10.51(2.13)
0
 #
 #
 # (112) BUS FAULT  34464  "COPPRMNE"
 #
1  34464  34454  "1"    0     # LINE from  COPPRMNE  70.00  to  RIVERROC  70.00
1  34464  34478  "1"    0     # LINE from  COPPRMNE  70.00  to  TVY VLLY  70.00
1  34464  34638  "1"    0     # LINE from  COPPRMNE  70.00  to  FRANTDM   70.00
1  34464  34491  "1"    0     # LINE from  COPPRMNE  70.00  to  AUBRYTP   70.00
4  34464     0  "1 "    0     # LOAD-DROP    COPPRMNE  70.00  LOAD==22.96(4.67)
0
 #
 #
 # (113) BUS FAULT  34466  "BIOLA"
```

```
 #
1  34466  34264  "1"    0     # LINE from  BIOLA     70.00  to  EL PECO   70.00
1  34466  34482  "1"    0     # LINE from  BIOLA     70.00  to  OLDKERN   70.00
4  34466     0  "1 "    0     # LOAD-DROP    BIOLA     70.00  LOAD==21.80(4.43)
0
 #
 #
 # (114) BUS FAULT  34472  "SAN JOQN"
 #
1  34472  34471  "1"    0     # LINE from  SAN JOQN  70.00  to  SNJQJCT   70.00
1  34472  34473  "1"    0     # LINE from  SAN JOQN  70.00  to  SNJQTP    70.00
4  34472     0  "1 "    0     # LOAD-DROP    SAN JOQN  70.00  LOAD==6.44(1.31)
4  34472     0  "2 "    0     # LOAD-DROP    SAN JOQN  70.00  LOAD==3.92(0.79)
0
 #
 #
 # (115) BUS FAULT  34474  "HELM"
 #
1  34474  34471  "1"    0     # LINE from  HELM      70.00  to  SNJQJCT   70.00
1  34474  34473  "1"    0     # LINE from  HELM      70.00  to  SNJQTP    70.00
1  34474  34556  "1"    0     # LINE from  HELM      70.00  to  STRD JCT  70.00
1  34474  34564  "1"    0     # LINE from  HELM      70.00  to  STROUD    70.00
2  34474  30873  "1"    0     # TRAN from  HELM      70.00  to  HELM     230.00
0
 #
 #
 # (116) BUS FAULT  34478  "TVY VLLY"
 #
1  34478  34464  "1"    0     # LINE from  TVY VLLY  70.00  to  COPPRMNE  70.00
1  34478  34492  "1"    0     # LINE from  TVY VLLY  70.00  to  REEDLEY   70.00
4  34478     0  "1 "    0     # LOAD-DROP    TVY VLLY  70.00  LOAD==10.27(2.09)
0
 #
 #
 # (117) BUS FAULT  34480  "KEARNEY"
 #
1  34480  34481  "1"    0     # LINE from  KEARNEY   70.00  to  FRWWTAP   70.00
1  34480  34482  "1"    0     # LINE from  KEARNEY   70.00  to  OLDKERN   70.00
1  34480  34512  "1"    0     # LINE from  KEARNEY   70.00  to  CARUTHRS  70.00
2  34480  30830  "2"    0     # TRAN from  KEARNEY   70.00  to  KEARNEY  230.00
0
 #
 #
 # (118) BUS FAULT  34484  "KERMAN"
 #
1  34484  34475  "1"    0     # LINE from  KERMAN    70.00  to  AGRCJCT   70.00
1  34484  34481  "1"    0     # LINE from  KERMAN    70.00  to  FRWWTAP   70.00
4  34484     0  "1 "    0     # LOAD-DROP    KERMAN    70.00  LOAD==19.44(3.95)
4  34484     0  "2 "    0     # LOAD-DROP    KERMAN    70.00  LOAD==11.78(2.39)
0
 #
 #
 # (119) BUS FAULT  34486  "CALIFRNV"
 #
1  34486  34488  "1"    0     # LINE from  CALIFRNV  70.00  to  SANGER    70.00
1  34486  34488  "2"    0     # LINE from  CALIFRNV  70.00  to  SANGER    70.00
0
 #
 #
 # (120) BUS FAULT  34488  "SANGER"
 #
1  34488  34486  "1"    0     # LINE from  SANGER    70.00  to  CALIFRNV  70.00
1  34488  34486  "2"    0     # LINE from  SANGER    70.00  to  CALIFRNV  70.00
1  34488  34366  "1"    0     # LINE from  SANGER    70.00  to  SANGER   115.00
1  34488  34487  "1"    0     # LINE from  SANGER    70.00  to  SNGRJCT   70.00
2  34488  34590  "1"    0     # TRAN from  SANGER    70.00  to  SANGR3T  115.00
0
 #
 #
 # (121) BUS FAULT  34492  "REEDLEY"
```

```
 #
1  34492  34478  "1"    0     # LINE from  REEDLEY   70.00  to  TVY VLLY  70.00
1  34492  34490  "1"    0     # LINE from  REEDLEY   70.00  to  PARLIER   70.00
1  34492  34497  "1"    0     # LINE from  REEDLEY   70.00  to  DNUBAJCT  70.00
1  34492  34526  "1"    0     # LINE from  REEDLEY   70.00  to  ORSI JCT  70.00
2  34492  34380  "1"    0     # TRAN from  REEDLEY   70.00  to  REEDLEY  115.00
2  34492  34380  "2"    0     # TRAN from  REEDLEY   70.00  to  REEDLEY  115.00
4  34492     0  "1 "    0     # LOAD-DROP    REEDLEY   70.00  LOAD==17.42(3.54)
0
 #
 #
 # (122) BUS FAULT  34500  "DINUBA"
 #
1  34500  34496  "1"    0     # LINE from  DINUBA    70.00  to  STCRRL J  70.00
1  34500  34497  "1"    0     # LINE from  DINUBA    70.00  to  DNUBAJCT  70.00
4  34500     0  "1 "    0     # LOAD-DROP    DINUBA    70.00  LOAD==19.23(3.91)
4  34500     0  "2 "    0     # LOAD-DROP    DINUBA    70.00  LOAD==9.33(1.90)
0
 #
 #
 # (123) BUS FAULT  34512  "CARUTHRS"
 #
1  34512  34480  "1"    0     # LINE from  CARUTHRS  70.00  to  KEARNEY   70.00
1  34512  34510  "1"    0     # LINE from  CARUTHRS  70.00  to  CMDN JCT  70.00
4  34512     0  "1 "    0     # LOAD-DROP    CARUTHRS  70.00  LOAD==19.63(3.98)
0
 #
 #
 # (124) BUS FAULT  34518  "LEMOORE"
 #
1  34518  34520  "1"    0     # LINE from  LEMOORE   70.00  to  LPRNO TP  70.00
1  34518  34522  "1"    0     # LINE from  LEMOORE   70.00  to  HNFRD SW  70.00
4  34518     0  "1 "    0     # LOAD-DROP    LEMOORE   70.00  LOAD==18.86(3.83)
4  34518     0  "2 "    0     # LOAD-DROP    LEMOORE   70.00  LOAD==32.81(6.66)
0
 #
 #
 # (125) BUS FAULT  34528  "CORCORAN"
 #
1  34528  34460  "1"    0     # LINE from  CORCORAN  70.00  to  GUERNSEY  70.00
1  34528  34530  "1"    0     # LINE from  CORCORAN  70.00  to  BSWLL TP  70.00
2  34528  34420  "2"    0     # TRAN from  CORCORAN  70.00  to  CORCORAN 115.00
0
 #
 #
 # (126) BUS FAULT  34540  "HENRITTA"
 #
1  34540  34514  "1"    0     # LINE from  HENRITTA  70.00  to  MUSLSLGH  70.00
1  34540  34520  "1"    0     # LINE from  HENRITTA  70.00  to  LPRNO TP  70.00
1  34540  34537  "1"    0     # LINE from  HENRITTA  70.00  to  GWF_HENR  70.00
1  34540  34542  "1"    0     # LINE from  HENRITTA  70.00  to  JCBSCRNR  70.00
1  34540  34544  "1"    0     # LINE from  HENRITTA  70.00  to  TLRE LKE  70.00
2  34540  30881  "2"    0     # TRAN from  HENRITTA  70.00  to  HENRIETA 230.00
2  34540  30881  "4"    0     # TRAN from  HENRITTA  70.00  to  HENRIETA 230.00
4  34540     0  "1 "    0     # LOAD-DROP    HENRITTA  70.00  LOAD==8.20(1.67)
0
 #
 #
 # (127) BUS FAULT  34544  "TLRE LKE"
 #
1  34544  34540  "1"    0     # LINE from  TLRE LKE  70.00  to  HENRITTA  70.00
1  34544  34550  "1"    0     # LINE from  TLRE LKE  70.00  to  CHEVPLIN  70.00
1  34544  34580  "1"    0     # LINE from  TLRE LKE  70.00  to  BDGR HLL  70.00
4  34544     0  "1 "    0     # LOAD-DROP    TLRE LKE  70.00  LOAD==6.79(1.38)
0
 #
 #
 # (128) BUS FAULT  34552  "GATES"
 #
1  34552  34548  "1"    0     # LINE from  GATES     70.00  to  KETTLEMN  70.00
```

```
 1  34552  34184  "1"    0     # LINE from  GATES     70.00  to  GATS2_TP  70.00
 1  34552  34558  "1"    0     # LINE from  GATES     70.00  to  HURON     70.00
 1  34552  34558  "2"    0     # LINE from  GATES     70.00  to  HURON     70.00
 1  34552  34578  "1"    0     # LINE from  GATES     70.00  to  JACALITO  70.00
 2  34552  34378  "2"    0     # TRAN from  GATES     70.00  to  GATES    115.00
 0
  #
  #
  # (129) BUS FAULT  34558  "HURON"
  #
 1  34558  34552  "1"    0     # LINE from  HURON     70.00  to  GATES     70.00
 1  34558  34552  "2"    0     # LINE from  HURON     70.00  to  GATES     70.00
 1  34558  34560  "1"    0     # LINE from  HURON     70.00  to  CALFLAX   70.00
 4  34558 34552  "1 "    1     # LOAD-TRANSFER  HURON     70.00  TO  GATES     70.00
LOAD==15.33(3.11)
 0
  #
  #
  # (130) BUS FAULT  34562  "SCHLNDLR"
  #
 1  34562  34556  "1"    0     # LINE from  SCHLNDLR  70.00  to  STRD JCT  70.00
 1  34562  34560  "1"    0     # LINE from  SCHLNDLR  70.00  to  CALFLAX   70.00
 1  34562  34566  "1"    0     # LINE from  SCHLNDLR  70.00  to  PLSNTVLY  70.00
 2  34562  34354  "1"    0     # TRAN from  SCHLNDLR  70.00  to  SCHINDLR 115.00
 4  34562     0  "1 "    0     # LOAD-DROP    SCHLNDLR  70.00  LOAD==9.59(1.95)
 0
  #
  #
  # (131) BUS FAULT  34564  "STROUD"
  #
 1  34564  34556  "1"    0     # LINE from  STROUD    70.00  to  STRD JCT  70.00
 1  34564  34474  "1"    0     # LINE from  STROUD    70.00  to  HELM      70.00
 4  34564     0  "1 "    0     # LOAD-DROP    STROUD    70.00  LOAD==13.09(2.66)
 0
  #
  #
  # (132) BUS FAULT  34570  "COLNGA 2"
  #
 1  34570  34184  "1"    0     # LINE from  COLNGA 2  70.00  to  GATS2_TP  70.00
 1  34570  34566  "1"    0     # LINE from  COLNGA 2  70.00  to  PLSNTVLY  70.00
 1  34570  34572  "1"    0     # LINE from  COLNGA 2  70.00  to  TORNADO   70.00
 2  34570  34652  "1"    0     # TRAN from  COLNGA 2  70.00  to  CHV.COAL   9.11
 4  34570     0  "1 "    0     # LOAD-DROP    COLNGA 2  70.00  LOAD==8.23(1.67)
 0
  #
  #
  # (133) BUS FAULT  34574  "COLNGA 1"
  #
 1  34574  34572  "1"    0     # LINE from  COLNGA 1  70.00  to  TORNADO   70.00
 1  34574  34578  "1"    0     # LINE from  COLNGA 1  70.00  to  JACALITO  70.00
 1  34574  36354  "1"    0     # LINE from  COLNGA 1  70.00  to  SAN MIGL  70.00
 4  34574     0  "1 "    0     # LOAD-DROP    COLNGA 1  70.00  LOAD==9.34(1.90)
 4  34574     0  "2 "    0     # LOAD-DROP    COLNGA 1  70.00  LOAD==9.99(2.03)
 0
  #
  #
  # (134) BUS FAULT  34576  "KNGLOBUS"
  #
 1  34576  34456  "1"    0     # LINE from  KNGLOBUS  70.00  to  HRDWK TP  70.00
 1  34576  34508  "1"    0     # LINE from  KNGLOBUS  70.00  to  CAMDEN    70.00
 2  34576  34418  "2"    0     # TRAN from  KNGLOBUS  70.00  to  KINGSBRG 115.00
 0
  #
  #
 -1
  # EOF
```

Appendix B
Governor Power Flow Switching Sequences

Table of Content

Category B Contingencies

Gates - Los Banos #1 500-kV Single Line Outage 1
Gates - Los Banos #3 500-kV Single Line Outage 2
Gates - Midway 500-kV Single Line Outage 3
Los Banos - Gates #1 500-kV Single Line Outage 4
Los Banos - Gates #3 500-kV Single Line Outage 5
Diablo - Midway 500-kV Single Line Outage 6
Tracy - Los Banos 500-kV Single Line Outage 7
Tesla - Los Banos 500-kV Single Line Outage 8
Los Banos - Midway 500-kV Single Line Outage 9
Moss Landing - Los Banos 500-kV Single Line Outage 10

Category C Contingencies

Diablo - Midway #2 & #3 500-kV Double Line Outage 11
Los Banos - Tesla & Los Banos – Tracy 500-kV Double Line Outage (North-to-South Flow) 12
Los Banos - Midway and Los Banos – Gates 500-kV Double Line Outage (North-to-South Flow) 13
Midway - Gates and Midway - Los Banos Double Line Outage (North-to-South Flow) 15
Los Banos - Tesla & Los Banos – Tracy 500-kV Double Line Outage (South-to-North Flow) 16
Los Banos - Midway and Los Banos – Gates 500-kV Double Line Outage (South-to-North Flow) 20
Midway - Gates and Midway - Los Banos Double Line Outage (South-to-North Flow) 24

Gates - Los Banos #1 500-kV Single Line Outage

```
*
*  CC cards for post-transient only
*
*   Readjust Northwest SVC's
CC  MSV 0.0 "KEEL-SVC" 19.60 "1 "  350. -300.
CC  MSV 0.0 "MV-SVC  " 19.60 "1 "  350. -300.
*
DL   4.0 "GATES   " 500. "LOSBANOS" 500.  "1 "
*
```

Gates - Los Banos #3 500-kV Single Line Outage

```
*
*  CC cards for post-transient only
*
*   Readjust Northwest SVC's
CC  MSV 0.0 "KEEL-SVC" 19.60 "1 "  350. -300.
CC  MSV 0.0 "MV-SVC  " 19.60 "1 "  350. -300.
*
DL   4.0 "GATES   " 500. "LOSBANOS" 500.  "3 "
*
```

Gates - Midway 500-kV Single Line Outage

```
*
*  CC cards for post-transient only
*
*   Readjust Northwest SVC's
CC  MSV 0.0 "KEEL-SVC" 19.60 "1 "  350. -300.
CC  MSV 0.0 "MV-SVC  " 19.60 "1 "  350. -300.
*
DL   4.0 "GATES   " 500. "MIDWAY  " 500. "1 "
*
```

Los Banos - Gates #1 500-kV Single Line Outage

```
*
*  CC cards for post-transient only
*
*   Readjust Northwest SVC's
CC  MSV 0.0 "KEEL-SVC" 19.60 "1 "  350. -300.
CC  MSV 0.0 "MV-SVC  " 19.60 "1 "  350. -300.
*
DL   4.0 "LOSBANOS " 500. "GATES" 500. "1 "
*
```

Los Banos - Gates #3 500-kV Single Line Outage

```
*
*  CC cards for post-transient only
*
*   Readjust Northwest SVC's
CC  MSV 0.0 "KEEL-SVC" 19.60 "1 "  350. -300.
CC  MSV 0.0 "MV-SVC  " 19.60 "1 "  350. -300.
*
DL   4.0 "LOSBANOS " 500. "GATES" 500. "3 "
*
```

Diablo - Midway 500-kV Single Line Outage

```
*
*  CC cards for post-transient only
*
*   Readjust Northwest SVC's
CC  MSV 0.0 "KEEL-SVC" 19.60 "1 "  350. -300.
CC  MSV 0.0 "MV-SVC  " 19.60 "1 "  350. -300.
*
DL   4.0 "DIABLO " 500. "MIDWAY" 500. "2 "
*
```

Tracy - Los Banos 500-kV Single Line Outage

```
*
*   CC cards for post-transient only
*
CC MSV 0.0 "KEEL-SVC" 19.60 "1 "  350. -300.
CC MSV 0.0 "MV-SVC  " 19.60 "1 "  350. -300.
*
DL  4.0  "TRACY   " 500.0  "LOSBANOS" 500.0  "1 "
*
*   THE 454 MVAr TABLE MT MSC TAKES MORE THAN ONE SECOND
*   TO INSERT AND IS NOT USUALLY MODELED FOR STABILITY
*
CC MSD 17.5  "TABLE MT"  500.0 "v "  "C"  4.54
*
```

Tesla - Los Banos 500-kV Single Line Outage

```
*
*   CC cards for post-transient only
*
*   Readjust Northwest SVC's
*
CC MSV 0.0 "KEEL-SVC" 19.60 "1 "  350. -300.
CC MSV 0.0 "MV-SVC  " 19.60 "1 "  350. -300.
*
DL  4.0  "TESLA   " 500.0  "LOSBANOS" 500.0  "1 "
*
*   THE 454 MVAr TABLE MT MSC TAKES MORE THAN ONE SECOND
*   TO INSERT AND IS NOT USUALLY MODELED FOR STABILITY
*
CC MSD 17.5  "TABLE MT"  500.0 "v "  "C"  4.54
*
*
```

Los Banos - Midway 500-kV Single Line Outage

```
*
*  CC cards for post-transient only
*
*   Readjust Northwest SVC's
CC  MSV 0.0 "KEEL-SVC" 19.60 "1 "  350. -300.
CC  MSV 0.0 "MV-SVC  " 19.60 "1 "  350. -300.
*
DL   4.0 "LOSBANOS " 500. "MIDWAY" 500. "1 "
```

Moss Landing - Los Banos 500-kV Single Line Outage

```
*
*   CC cards for post-transient only
*
*   Readjust Northwest SVC's
*
CC MSV 0.0 "KEEL-SVC" 19.60 "1 "  350. -300.
CC MSV 0.0 "MV-SVC  " 19.60 "1 "  350. -300.
*
DL  4.0  "MOSSLAND" 500.0  "LOSBANOS" 500.0  "1 "
*
```

Diablo - Midway #2 & #3 500-kV Double Line Outage

```
*
*  CC cards for post-transient only
*
*   Readjust Northwest SVC's
CC  MSV 0.0 "KEEL-SVC" 19.60 "1 "  350. -300.
CC  MSV 0.0 "MV-SVC  " 19.60 "1 "  350. -300.
*
DL   4.0 "DIABLO " 500. "MIDWAY" 500. "2 "
DL   4.0 "DIABLO " 500. "MIDWAY" 500. "3 "
*
*   THE 454 MVAr TABLE MT MSC TAKES MORE THAN ONE SECOND
*   TO INSERT AND IS NOT USUALLY MODELED FOR STABILITY
*
CC MSD 90.0 "TABLE MT"  500.0 "v "  "C"  4.54
CC MLS 90.0 "TABLE MT"  500.0 "TESLA  "  500.0 "1 " 1  "f"  D
```

Los Banos - Tesla & Los Banos – Tracy 500-kV Double Line Outage (North-to-South Flow)

```
*
*  CC cards for post-transient only
*
*   Readjust Northwest SVC's
*
CC  MSV 0.0 "KEEL-SVC" 19.60 "1 "  350. -300.
CC  MSV 0.0 "MV-SVC  " 19.60 "1 "  350. -300.
*
*   Trip Los Banos North lines
*
DL   4.0 "TESLA " 500. "LOSBANOS " 500. "1 "
DL   4.0 "TRACY " 500. "LOSBANOS " 500. "1 "
*
```

Los Banos - Midway and Los Banos – Gates 500-kV Double Line Outage (North-to-South Flow)

```
*
*   Readjust Northwest SVC's
*
CC  MSV 0.0 "KEEL-SVC" 19.60 "1 "  350. -300.
CC  MSV 0.0 "MV-SVC  " 19.60 "1 "  350. -300.
*   CC  RG  0.0 "DALLES 3"  13.8 "1 "  180. -270.
*
*   Fault bus at Los Banos
FB   0.0 "LOSBANOS" 500.
*
*   Clear fault at Los Banos
CFB  4.0 "LOSBANOS " 500.
*
*   Trip Los Banos South lines
DL   4.0 "LOSBANOS " 500. "GATES " 500. "1 "
DL   4.0 "LOSBANOS " 500. "MIDWAY" 500. "1 "
*
*   Drop CDWR/Feather River Generation
TG   13.0 "HYATT 1 "  12.5 "**"
TG   13.0 "HYATT 2 "  12.5 "**"
TG   13.0 "HYATT 3 "  12.5 "**"
TG   13.0 "HYATT 4 "  12.5 "**"
TG   13.0 "HYATT 5 "  12.5 "**"
TG   13.0 "HYATT 6 "  12.5 "**"
TG   13.0 "THERMLT1"  13.8 "**"
TG   13.0 "THERMLT2"  13.8 "**"
TG   13.0 "THERMLT3"  13.8 "**"
TG   13.0 "THERMLT4"  13.8 "**"
*
*
*   Drop CDWR/Feather River Generation
TG   15.0 "CRBOU2-3"  11.5 "**"
*
*   Drop CDWR Pumps
TG   15.0 "DELTA A " 13.2 "**"
TG   15.0 "DELTA B " 13.2 "**"
TG   15.0 "DELTA C " 13.2 "**"
TG   15.0 "DELTA D " 13.2 "**"
TG   15.0 "DELTA E " 13.2 "**"
*
TG   15.0 "WINDGAP1 " 13.2 "**"
TG   15.0 "WINDGAP2 " 13.2 "**"
TG   15.0 "WINDGAP3 " 13.2 "**"
TG   15.0 "WINDGAP4 " 13.2 "**"
*
TG   15.0 "BUENAVS1 " 13.2 "**"
TG   15.0 "BUENAVS2 " 13.2 "**"
*
TG   15.0 "WHLR RD1" 13.2 "**"
TG   15.0 "WHLR RD2" 13.2 "**"
*
TG   18.0 "DOS AMG1" 13.2 "**"
TG   18.0 "DOS AMG2" 13.2 "**"
*
TG   18.0 "PEARBMAP" 13.2 "**"
TG   18.0 "PEARBMBP" 13.2 "**"
*
*   INSERT 200 MVAr CAPACITORS AT OLINDA 500 kV
*   REMOVE 380 MVAr REACTORS   AT OLINDA 500 kV
*
CC MSD 18.0  "OLINDA  " 500.0 "v "  "C"  2.00
CC MLS 17.5  "OLINDA  " 500.0 "MAXWELL " 500.0 "1 " 1 "t" "D"
CC MLS 17.5  "CAPTJACK" 500.0 "OLINDA  " 500.0 "1 " 3 "f" "D"
*   Switch on Table Mountain Shunt cap
*   2 x 217 caps (91 Mvar reactor modeled separately)
```

```
*
CC MSD 90.0 "TABLE MT"  500.0 "v "  "C"  4.54
CC MLS 90.0 "TABLE MT"  500.0 "TESLA  "  500.0 "1 " 1  "f"  D
*
*  Bypass capacitors
*
FC   300. "OLINDA  " 500. "MAXWELL " 500. "1 " 3
FC   300. "TABLE MT" 500. "TESLA   " 500. "1 " 1
FC   300. "TABLE MT" 500. "VACA-DIX" 500. "1 " 1
FC   300. "TABLE MT" 500. "VACA-DIX" 500. "1 " 3
*
*    Drop PGE Generation
TG   310. "BUTTVLLY"  13.8 "**"
*
*  Edmonston & Pear Blossom CDWR pumps have a 5 minutes ramp down time, not modeled for
transient
*
CC TG   9999.0 "EDMON1AP " 14.4 "**"
CC TG   9999.0 "EDMON2AP " 14.4 "**"
CC TG   9999.0 "EDMON3AP " 14.4 "**"
CC TG   9999.0 "EDMON4AP " 14.4 "**"
CC TG   9999.0 "EDMON5AP " 14.4 "**"
CC TG   9999.0 "EDMON6AP " 14.4 "**"
CC TG   9999.0 "EDMON7AP " 14.4 "**"
CC TG   9999.0 "EDMON8AP " 14.4 "**"
*
```

Midway - Gates and Midway - Los Banos Double Line Outage (North-to-South Flow)

```
*
*  CC cards for post-transient only
*
*   Readjust Northwest SVC's
*
CC  MSV 0.0 "KEEL-SVC" 19.60 "1 "  350. -300.
CC  MSV 0.0 "MV-SVC  " 19.60 "1 "  350. -300.
*   CC  RG  0.0 "DALLES 3"  13.8 "1 "  180. -270.
*
*   Fault bus at Midway
FB   0.0 "MIDWAY " 500.
*
*   Clear fault at Midway
CFB  4.0 "MIDWAY " 500.
*
*   Trip Midway North lines
DL   4.0 "MIDWAY " 500. "GATES   " 500. "1 "
DL   4.0 "MIDWAY " 500. "LOSBANOS" 500. "1 "
*
*   Drop CDWR Pumps
TG   15.0 "DELTA A " 13.2 "**"
TG   15.0 "DELTA B " 13.2 "**"
TG   15.0 "DELTA C " 13.2 "**"
TG   15.0 "DELTA D " 13.2 "**"
TG   15.0 "DELTA E " 13.2 "**"
*
TG   15.0 "WINDGAP1 " 13.2 "**"
TG   15.0 "WINDGAP2 " 13.2 "**"
TG   15.0 "WINDGAP3 " 13.2 "**"
TG   15.0 "WINDGAP4 " 13.2 "**"
*
TG   15.0 "BUENAVS1 " 13.2 "**"
TG   15.0 "BUENAVS2 " 13.2 "**"
*
TG   15.0 "WHLR RD1" 13.2 "**"
TG   15.0 "WHLR RD2" 13.2 "**"
```

Los Banos - Tesla & Los Banos – Tracy 500-kV Double Line Outage (South-to-North Flow)

```
*
*   CC cards for post-transient only
*
*   Readjust Northwest SVC's
*
CC MSV 0.0 "KEEL-SVC" 19.60 "1 "  350. -300.
CC MSV 0.0 "MV-SVC  " 19.60 "1 "  350. -300.
*
*  FAULT ON LOS BANOS 500 KV BUS
*
FB  0.0 "LOSBANOS"  500.0
*
*
*     CLEAR FAULT AND OPEN LINES - 4 CYCLES
*
CFB  4.0  "LOS BANOS"   500.0
DL   4.0  "TESLA"   500.0 "LOSBANOS" 500.0  "1 "
DL   4.0  "TRACY"   500.0 "LOSBANOS" 500.0  "1 "
*
*
* CDWR Pumps *
TG    22.0   "DOS AMG1" 13.20 "1 "              */gen  drop is   -30.00 MW     0.00 MVAr
TG    22.0   "DOS AMG1" 13.20 "2 "              */gen  drop is   -30.00 MW     0.00 MVAr
TG    22.0   "DOS AMG1" 13.20 "3 "              */gen  drop is   -30.00 MW     0.00 MVAr
TG    22.0   "DELTA E " 13.20 "11"              */gen  drop is    -1.00 MW     0.00 MVAr
* Gen Group 1 *
MBL   22.0   "SUNST   " 230.00 "SG"      "D"   */   11.79 MW     4.28 MVAr
TG    22.0   "SUNSET G" 13.80 "1 "              */gen  drop is    75.00 MW    26.70 MVAr
TG    22.0   "SUNSET G" 13.80 "2 "              */gen  drop is    75.00 MW    26.70 MVAr
TG    22.0   "SUNSET G" 13.80 "3 "              */gen  drop is    75.00 MW    26.70 MVAr
MBL   22.0   "DEXEL + " 13.80 "SG"      "D"   */    0.32 MW     0.08 MVAr
TG    22.0   "DEXEL + " 13.80 "1 "              */gen  drop is    28.60 MW     6.42 MVAr
TG    22.0   "DOUBLE C" 13.80 "1 "              */gen  drop is    42.50 MW     5.96 MVAr
MBL   22.0   "KERNFRNT"  9.11 "SG"      "D"   */    0.70 MW     0.34 MVAr
TG    22.0   "KERNFRNT"  9.11 "1 "              */gen  drop is    47.70 MW    16.00 MVAr
TG    22.0   "HISIERRA" 13.80 "1 "              */gen  drop is    47.90 MW     6.87 MVAr
TG    22.0   "BADGERCK" 13.80 "1 "              */gen  drop is    46.30 MW     6.59 MVAr
TG    22.0   "TEXCO_NM"  9.11 "1 "              */gen  drop is     5.40 MW     5.50 MVAr
TG    22.0   "TEXCO_NM"  9.11 "2 "              */gen  drop is     2.70 MW     5.00 MVAr
MBL   22.0   "CHV-CYMR"  9.11 "SG"      "D"   */    0.41 MW     0.10 MVAr
TG    22.0   "CHV-CYMR"  9.11 "1 "              */gen  drop is    13.50 MW    -1.24 MVAr
TG    22.0   "MIDSUN +" 13.80 "1 "              */gen  drop is    24.50 MW    15.20 MVAr
* Load Group 1 *
MBL   22.0   "EL CRRTO" 115.00 "1 "      "D"    */   20.73 MW     4.72 MVAr
MBL   22.0   "EL CRRTO" 115.00 "2 "      "D"    */   25.79 MW     5.88 MVAr
MBL   22.0   "EL CRRTO" 115.00 "4 "      "D"    */   45.19 MW    10.30 MVAr
MBL   22.0   "CORDELIA" 115.00 "2 "      "D"   */   15.10 MW     0.68 MVAr
MBL   22.0   "VACAVLL2" 115.00 "2 "      "D"   */   38.30 MW     1.71 MVAr
MBL   22.0   "VACAVLL2" 115.00 "3 "      "D"   */   37.61 MW     1.68 MVAr
MBL   22.0   "HALE    " 115.00 "1 "      "D"   */    2.39 MW     1.42 MVAr
MBL   22.0   "VACAVLL1" 115.00 "1 "      "D"   */   26.13 MW     1.17 MVAr
MBL   22.0   "JAMESON " 115.00 "1 "      "D"   */   33.35 MW     1.49 MVAr
MBL   22.0   "SCHMLBCH" 115.00 "1 "      "D"   */   10.08 MW     6.77 MVAr
MBL   22.0   "SUISUN  " 115.00 "1 "      "D"   */   25.41 MW     1.14 MVAr
MBL   22.0   "SUISUN  " 115.00 "2 "      "D"   */   27.60 MW     1.23 MVAr
MBL   22.0   "SUISUN  " 115.00 "3 "      "D"   */   22.48 MW     1.01 MVAr
TG    22.0   "CTY FAIR"  9.11 "1 "              */gen  drop is     0.80 MW     0.07 MVAr
TG    22.0   "CTY FAIR"  9.11 "2 "              */gen  drop is     1.50 MW     0.13 MVAr
MBL   22.0   "FREMNT  " 115.00 "1 "      "D"   */   29.09 MW     6.63 MVAr
MBL   22.0   "FREMNT  " 115.00 "2 "      "D"   */   17.77 MW     4.05 MVAr
MBL   22.0   "FREMNT  " 115.00 "3 "      "D"   */   25.24 MW     5.75 MVAr
MBL   22.0   "JARVIS  " 115.00 "1 "      "D"   */   16.23 MW     3.70 MVAr
MBL   22.0   "JARVIS  " 115.00 "2 "      "D"   */   24.39 MW     5.56 MVAr
MBL   22.0   "JARVIS  " 115.00 "3 "      "D"   */   31.32 MW     7.14 MVAr
MBL   22.0   "JV BART " 115.00 "1 "      "D"   */    7.10 MW     1.44 MVAr
```

```
MBL   22.0   "CRYOGEN " 115.00 "1 "      "D"   */    0.17 MW     0.04 MVAr
MBL   22.0   "WHISMAN " 115.00 "1 "      "D"   */   19.38 MW     4.42 MVAr
MBL   22.0   "WHISMAN " 115.00 "2 "      "D"   */   20.85 MW     4.75 MVAr
MBL   22.0   "WHISMAN " 115.00 "3 "      "D"   */   17.65 MW     4.02 MVAr
MBL   22.0   "MT VIEW " 115.00 "1 "      "D"   */   26.30 MW     6.00 MVAr
MBL   22.0   "MT VIEW " 115.00 "2 "      "D"   */   27.95 MW     6.37 MVAr
MBL   22.0   "MT VIEW " 115.00 "3 "      "D"   */   25.27 MW     5.76 MVAr
MBL   22.0   "STELLING" 115.00 "1 "      "D"   */   26.98 MW     6.15 MVAr
MBL   22.0   "STELLING" 115.00 "2 "      "D"   */   27.53 MW     6.27 MVAr
MBL   22.0   "STELLING" 115.00 "3 "      "D"   */   28.16 MW     6.42 MVAr
MBL   22.0   "WOLFE   " 115.00 "1 "      "D"   */   21.97 MW     5.01 MVAr
MBL   22.0   "WOLFE   " 115.00 "2 "      "D"   */   27.70 MW     6.31 MVAr
MBL   22.0   "WOLFE   " 115.00 "3 "      "D"   */   14.27 MW     3.25 MVAr
MBL   22.0   "MOFT.FLD" 115.00 "1 "      "D"   */    4.46 MW     1.12 MVAr
MBL   22.0   "LOCKHD 1" 115.00 "1 "      "D"   */   18.14 MW    15.03 MVAr
MBL   22.0   "LAWRENCE" 115.00 "1 "      "D"   */   43.73 MW     9.97 MVAr
MBL   22.0   "LAWRENCE" 115.00 "2 "      "D"   */   17.31 MW     3.94 MVAr
MBL   22.0   "LAWRENCE" 115.00 "3 "      "D"   */   30.52 MW     6.96 MVAr
MBL   22.0   "PHILLIPS" 115.00 "1 "      "D"   */    1.74 MW     0.00 MVAr
MBL   22.0   "LOCKHD 2" 115.00 "1 "      "D"   */   16.06 MW    12.46 MVAr
MBL   22.0   "LOCKHD 2" 115.00 "2 "      "D"   */    8.08 MW     1.84 MVAr
MBL   22.0   "A.M.D   " 115.00 "1 "      "D"   */    7.85 MW     5.48 MVAr
MBL   22.0   "BRITTN  " 115.00 "1 "      "D"   */   24.09 MW     5.49 MVAr
MBL   22.0   "BRITTN  " 115.00 "2 "      "D"   */   41.32 MW     9.42 MVAr
MBL   22.0   "BRITTN  " 115.00 "3 "      "D"   */   20.35 MW     4.64 MVAr
MBL   22.0   "APP MAT " 115.00 "1 "      "D"   */   12.24 MW     3.07 MVAr
* Gen Group 2 *
MBL   22.0   "ELKHIL1G" 18.00 "ss"      "D"   */    6.70 MW     1.68 MVAr
TG    22.0   "ELKHIL1G" 18.00 "1 "              */gen  drop is   185.00 MW    61.32 MVAr
MBL   22.0   "ELKHIL2G" 18.00 "ss"      "D"   */    6.70 MW     1.68 MVAr
TG    22.0   "ELKHIL2G" 18.00 "1 "              */gen  drop is   185.00 MW    61.32 MVAr
TG    22.0   "ELKHIL3G" 18.00 "1 "              */gen  drop is   225.50 MW    65.14 MVAr
* Load Group 2 *
MBL   22.0   "MARTIN C" 115.00 "4 "      "D"    */   31.16 MW     1.97 MVAr
MBL   22.0   "MARTIN C" 115.00 "1 "      "D"    */   31.16 MW     1.97 MVAr
MBL   22.0   "CLAYTN  " 115.00 "1 "      "D"   */   24.22 MW     5.52 MVAr
MBL   22.0   "CLAYTN  " 115.00 "2 "      "D"   */   38.65 MW     8.81 MVAr
MBL   22.0   "CLAYTN  " 115.00 "3 "      "D"   */   41.05 MW     9.36 MVAr
MBL   22.0   "CLAYTN  " 115.00 "5 "      "D"   */    8.55 MW     1.95 MVAr
MBL   22.0   "MEDW LNE" 115.00 "1 "      "D"   */   35.45 MW     8.08 MVAr
MBL   22.0   "MEDW LNE" 115.00 "2 "      "D"   */   42.22 MW     9.62 MVAr
MBL   22.0   "MEDW LNE" 115.00 "3 "      "D"   */   39.54 MW     9.01 MVAr
MBL   22.0   "EBMUDGRY" 115.00 "1 "      "D"   */    5.64 MW     1.85 MVAr
MBL   22.0   "LAKEWD-C" 115.00 "5 "      "D"   */   17.55 MW     4.00 MVAr
MBL   22.0   "LAKEWD-C" 115.00 "6 "      "D"   */   39.82 MW     9.08 MVAr
MBL   22.0   "LAKEWD-M" 115.00 "1 "      "D"   */   34.30 MW     7.82 MVAr
MBL   22.0   "LAKEWD-M" 115.00 "2 "      "D"   */   23.18 MW     5.28 MVAr
MBL   22.0   "LAKEWD-M" 115.00 "4 "      "D"   */   43.34 MW     9.88 MVAr
MBL   22.0   "LAKEWD-M" 115.00 "LW"      "D"   */    5.66 MW     1.15 MVAr
MBL   22.0   "DALY CTY" 115.00 "1 "      "D"   */   32.76 MW     7.47 MVAr
MBL   22.0   "DALY CTY" 115.00 "2 "      "D"   */   19.77 MW     4.50 MVAr
MBL   22.0   "SERRMNTE" 115.00 "1 "      "D"   */    7.44 MW     1.69 MVAr
* Gen Group 3 *
TG    22.0   "LAPLM_G1" 21.00 "1 "              */gen  drop is   230.00 MW   101.64 MVAr
TG    22.0   "LAPLM_G2" 21.00 "1 "              */gen  drop is   230.00 MW   101.64 MVAr
* Load Group 3 *
MBL   22.0   "ELDORAD " 115.00 "1 "      "D"   */    9.95 MW     0.45 MVAr
MBL   22.0   "APPLE HL" 115.00 "1 "      "D"   */   15.59 MW     0.70 MVAr
MBL   22.0   "APPLE HL" 115.00 "2 "      "D"   */    9.85 MW     0.44 MVAr
MBL   22.0   "PLCRVLB2" 115.00 "2 "      "D"   */    9.60 MW     0.43 MVAr
MBL   22.0   "PLCRVLB3" 115.00 "3 "      "D"   */   27.61 MW     1.24 MVAr
MBL   22.0   "DMND SPR" 115.00 "1 "      "D"   */   10.49 MW     0.47 MVAr
MBL   22.0   "DMND SPR" 115.00 "2 "      "D"   */   29.87 MW     1.33 MVAr
MBL   22.0   "SHPRING " 115.00 "1 "      "D"   */   20.82 MW     0.93 MVAr
MBL   22.0   "SHPRING " 115.00 "2 "      "D"   */   22.87 MW     1.02 MVAr
#MBL   22.0   "CPM     " 115.00 "1 "      "D"   */    0.00 MW     0.00 MVAr: Load Status
Off
MBL   22.0   "SPICAMIN" 115.00 "1 "      "D"   */    4.19 MW     3.70 MVAr
TG    22.0   "CHILIBAR"  4.16 "1 "              */gen  drop is     5.50 MW     4.00 MVAr
MBL   22.0   "ELDRADO1" 21.60 "SG"      "D"   */    0.04 MW     0.01 MVAr
```

```
TG    22.0   "ELDRADO1" 21.60 "1 "              */gen  drop is    10.00 MW    -0.51 MVAr
MBL   22.0   "ELDRADO2" 21.60 "SG"      "D"   */    0.04 MW     0.01 MVAr
TG    22.0   "ELDRADO2" 21.60 "1 "              */gen  drop is    10.00 MW    -0.51 MVAr
MBL   22.0   "CLRKSVLE" 115.00 "1 "      "D"   */   47.44 MW     2.13 MVAr
MBL   22.0   "CLRKSVLE" 115.00 "2 "      "D"   */   50.42 MW     2.25 MVAr
MBL   22.0   "CLRKSVLE" 115.00 "3 "      "D"   */   48.18 MW     2.16 MVAr
MBL   22.0   "BAY MDWS" 115.00 "1 "      "D"   */   27.94 MW     6.37 MVAr
MBL   22.0   "BAY MDWS" 115.00 "2 "      "D"   */   22.32 MW     5.09 MVAr
MBL   22.0   "BAY MDWS" 115.00 "3 "      "D"   */   13.20 MW     3.01 MVAr
MBL   22.0   "BAY MDWS" 115.00 "5 "      "D"   */   12.14 MW     2.77 MVAr
* Gen Group 4 *
TG    22.0   "TEXSUN1G" 18.00 "1 "              */gen  drop is   169.00 MW    13.12 MVAr
TG    22.0   "TEXSUN2G" 18.00 "1 "              */gen  drop is   169.00 MW    13.12 MVAr
TG    22.0   "TEXSUNST" 18.00 "1 "              */gen  drop is   222.00 MW    60.83 MVAr
* Load Group 4 *
MBL   22.0   "GUALALA " 60.00 "1 "      "D"   */    2.86 MW     0.58 MVAr
MBL   22.0   "GUALALA " 60.00 "2 "      "D"   */    1.39 MW     0.28 MVAr
MBL   22.0   "ANNAPOLS" 60.00 "1 "      "D"   */    0.24 MW     0.05 MVAr
MBL   22.0   "FORT RSS" 60.00 "1 "      "D"   */    0.81 MW     0.17 MVAr
MBL   22.0   "SLMN CRK" 60.00 "1 "      "D"   */    3.15 MW     0.64 MVAr
MBL   22.0   "MONTE RO" 60.00 "1 "      "D"   */    3.72 MW     0.76 MVAr
MBL   22.0   "MONTE RO" 60.00 "2 "      "D"   */    4.77 MW     0.97 MVAr
MBL   22.0   "WOHLER  " 60.00 "1 "      "D"   */    4.54 MW     1.93 MVAr
MBL   22.0   "MIRABEL " 60.00 "1 "      "D"   */    9.76 MW     1.98 MVAr
MBL   22.0   "MOLINO  " 60.00 "1 "      "D"   */    7.01 MW     1.42 MVAr
MBL   22.0   "MOLINO  " 60.00 "2 "      "D"   */   18.02 MW     3.66 MVAr
MBL   22.0   "LAGUNA  " 60.00 "1 "      "D"   */    5.94 MW     1.49 MVAr
MBL   22.0   "COTATI  " 60.00 "1 "      "D"   */    6.58 MW     1.34 MVAr
MBL   22.0   "COTATI  " 60.00 "2 "      "D"   */    6.00 MW     1.22 MVAr
TG    22.0   "SONMA LF"  9.11 "1 "              */gen  drop is     4.00 MW     0.00 MVAr
MBL   22.0   "HIGHWAY " 115.00 "1 "      "D"   */   17.39 MW     3.53 MVAr
MBL   22.0   "HIGHWAY " 115.00 "2 "      "D"   */   21.35 MW     4.33 MVAr
MBL   22.0   "LS GLLNS" 115.00 "1 "      "D"   */   12.37 MW     2.51 MVAr
MBL   22.0   "LS GLLNS" 115.00 "2 "      "D"   */    8.35 MW     1.70 MVAr
MBL   22.0   "LS GLLNS" 115.00 "3 "      "D"   */    9.33 MW     1.89 MVAr
MBL   22.0   "SAN RAFL" 115.00 "1 "      "D"   */   22.68 MW     4.61 MVAr
MBL   22.0   "SAN RAFL" 115.00 "2 "      "D"   */   21.62 MW     4.39 MVAr
MBL   22.0   "SAN RAFL" 115.00 "3 "      "D"   */   15.02 MW     3.05 MVAr
MBL   22.0   "MEYERS  " 115.00 "1 "      "D"   */    0.24 MW     0.05 MVAr
MBL   22.0   "CARQUINZ" 115.00 "1 "      "D"   */   11.14 MW     2.26 MVAr
MBL   22.0   "CARQUINZ" 115.00 "2 "      "D"   */    9.48 MW     1.92 MVAr
MBL   22.0   "MRE IS-Q" 115.00 "1 "      "D"   */    4.25 MW     0.86 MVAr
* Gen Group 5 *
TG    22.0   "LAPLM_G3" 21.00 "1 "              */gen  drop is   229.00 MW   101.52 MVAr
TG    22.0   "LAPLM_G4" 21.00 "1 "              */gen  drop is   230.00 MW   101.64 MVAr
* Load Group 5 *
MBL   22.0   "STAGG   " 60.00 "2 "      "D"   */   18.49 MW     0.82 MVAr
MBL   22.0   "STAGG   " 60.00 "3 "      "D"   */   18.49 MW     0.82 MVAr
MBL   22.0   "CNTRY CB" 60.00 "1 "      "D"   */    5.82 MW     0.26 MVAr
MBL   22.0   "CNTRY CB" 60.00 "2 "      "D"   */    9.54 MW     0.42 MVAr
MBL   22.0   "CNTRY CB" 60.00 "3 "      "D"   */   10.58 MW     0.48 MVAr
MBL   22.0   "CNTRY CB" 60.00 "4 "      "D"   */   16.21 MW     0.72 MVAr
MBL   22.0   "UOP     " 60.00 "1 "      "D"   */    5.99 MW     4.18 MVAr
MBL   22.0   "HAMMER  " 60.00 "1 "      "D"   */   18.60 MW     0.83 MVAr
MBL   22.0   "HAMMER  " 60.00 "2 "      "D"   */   17.83 MW     0.80 MVAr
MBL   22.0   "HAMMER  " 60.00 "3 "      "D"   */   19.45 MW     0.87 MVAr
MBL   22.0   "METTLER " 60.00 "3 "      "D"   */    8.13 MW     0.37 MVAr
MBL   22.0   "TERMNOUS" 60.00 "1 "      "D"   */    4.69 MW     0.21 MVAr
MBL   22.0   "SEBASTIA" 60.00 "1 "      "D"   */    2.82 MW     2.11 MVAr
MBL   22.0   "NEW HOPE" 60.00 "1 "      "D"   */    2.65 MW     0.12 MVAr
MBL   22.0   "MSHR 60V" 60.00 "1 "      "D"   */   19.65 MW     0.88 MVAr
MBL   22.0   "MSHR 60V" 60.00 "2 "      "D"   */   32.80 MW     1.47 MVAr
MBL   22.0   "STAGG_5 " 21.00 "5 "      "D"   */   58.29 MW     2.61 MVAr
MBL   22.0   "STAGG_6 " 21.00 "6 "      "D"   */   51.06 MW     2.28 MVAr
MBL   22.0   "CMP EVRS" 115.00 "1 "      "D"   */   19.11 MW     3.88 MVAr
MBL   22.0   "CMP EVRS" 115.00 "2 "      "D"   */   18.61 MW     3.78 MVAr
MBL   22.0   "PAUL SWT" 115.00 "1 "      "D"   */   26.41 MW     5.36 MVAr
MBL   22.0   "PAUL SWT" 115.00 "2 "      "D"   */   20.10 MW     4.08 MVAr
MBL   22.0   "PAUL SWT" 115.00 "3 "      "D"   */   27.66 MW     5.62 MVAr
MBL   22.0   "ROB ROY " 115.00 "1 "      "D"   */   11.56 MW     2.35 MVAr
```

```
TG    22.0   "PSWTSTCM"  8.00 "1 "              */gen  drop is     0.00 MW    41.03 MVAr
MBL   22.0   "CSTRVLLE" 115.00 "1 "      "D"   */   16.97 MW     3.45 MVAr
MBL   22.0   "DEL MNTE" 115.00 "1 "      "D"   */   15.17 MW     3.08 MVAr
MBL   22.0   "DEL MNTE" 115.00 "2 "      "D"   */   23.32 MW     4.74 MVAr
MBL   22.0   "FORT ORD" 60.00 "1 "      "D"   */   25.76 MW     5.23 MVAr
MBL   22.0   "MANZANTA" 60.00 "1 "      "D"   */    0.99 MW     0.20 MVAr
MBL   22.0   "MONTEREY" 60.00 "1 "      "D"   */    3.65 MW     0.74 MVAr
MBL   22.0   "NVY SCHL" 60.00 "1 "      "D"   */    2.13 MW     1.09 MVAr
MBL   22.0   "VIEJO   " 60.00 "1 "      "D"   */   11.58 MW     2.35 MVAr
MBL   22.0   "VIEJO   " 60.00 "2 "      "D"   */   13.74 MW     2.79 MVAr
MBL   22.0   "HATTON  " 60.00 "1 "      "D"   */   10.06 MW     2.04 MVAr
MBL   22.0   "NAVY LAB" 60.00 "1 "      "D"   */    1.64 MW     0.70 MVAr
MBL   22.0   "BORONDA " 60.00 "1 "      "D"   */    7.01 MW     1.42 MVAr
MBL   22.0   "RSVTN RD" 60.00 "1 "      "D"   */    8.85 MW     1.80 MVAr
MBL   22.0   "LAURELES" 60.00 "1 "      "D"   */    4.94 MW     1.00 MVAr
MBL   22.0   "OTTER   " 60.00 "1 "      "D"   */    2.90 MW     0.59 MVAr
*
MSD 180.0 "GATES"    230.0  "v " "D"
MSD 180.0 "LOSBANOS" 230.0  "v " "D"
```

Los Banos - Midway and Los Banos – Gates 500-kV Double Line Outage (South-to-North Flow)

```
*
*   CC cards for post-transient only
*
*   Readjust Northwest SVC's
*
CC MSV 0.0 "KEEL-SVC" 19.60 "1 "  350. -300.
CC MSV 0.0 "MV-SVC  " 19.60 "1 "  350. -300.
*
*
*  Fault at Los Banos 500 kV bus
*
FB  0.0 "LOSBANOS"  500.0
*
*   CLEAR FAULT AND OPEN LINES - 4 CYCLES
*
CFB  4.0  "LOSBANOS"   500.0
DL   4.0  "LOSBANOS" 500. "MIDWAY  " 500. "1 "
DL   4.0  "LOSBANOS" 500. "GATES   " 500. "1 "
*
*
* CDWR Pumps *
TG    13.0   "SANLUIS1" 13.80 "1"             */
TG    13.0   "SANLUIS1" 13.80 "2"             */
TG    13.0   "SANLUIS2" 13.80 "1"             */
TG    13.0   "SANLUIS2" 13.80 "2"             */
TG    13.0   "SANLUIS3" 13.80 "1"             */
TG    13.0   "SANLUIS3" 13.80 "2"             */
TG    13.0   "SANLUIS4" 13.80 "1"             */
TG    13.0   "SANLUIS4" 13.80 "2"             */
*
*     REMOVE OLINDA and TRACY Capacitors
*
MSD   13.0  "OLINDA  "  500.0   "v"    "D"
MSD   13.0  "TRACY   "  500.0   "v"    "D"
*
MLS   13.0  "OLINDA  "  500.0 "MAXWELL " 500.0 "1 " 1 "f" "R"
MLS   13.0  "CAPTJACK"  500.0 "OLINDA  " 500.0 "1 " 3 "t" "R"
MLS   13.0  "MAXWELL "  500.0 "TRACY   " 500.0 "1 " 3 "t" "R"
*
TG    14.0   "HELMS 1 " 18.00 "1"             */gen  drop is  -310.00 MW    65.88 MVAr
TG    14.0   "HELMS 2 " 18.00 "1"             */gen  drop is  -310.00 MW   155.01 MVAr
TG    14.0   "HELMS 3 " 18.00 "1"             */gen  drop is   310.25 MW    83.10 MVAr:
Units Are Off-Line
*
* CDWR Pumps *
TG    22.0   "DOS AMG1" 13.20 "1 "              */gen  drop is   -30.00 MW     0.00 MVAr
TG    22.0   "DOS AMG1" 13.20 "2 "              */gen  drop is   -30.00 MW     0.00 MVAr
TG    22.0   "DOS AMG1" 13.20 "3 "              */gen  drop is   -30.00 MW     0.00 MVAr
TG    22.0   "DELTA E " 13.20 "11"              */gen  drop is    -1.00 MW     0.00 MVAr
* Gen Group 1 *
MBL   22.0   "SUNST   " 230.00 "SG"      "D"   */    9.59 MW     3.48 MVAr
TG    22.0   "SUNSET G" 13.80 "1 "              */gen  drop is    75.00 MW   -20.00 MVAr
TG    22.0   "SUNSET G" 13.80 "2 "              */gen  drop is    75.00 MW   -20.00 MVAr
TG    22.0   "SUNSET G" 13.80 "3 "              */gen  drop is    75.00 MW   -20.00 MVAr
MBL   22.0   "KERNFRNT"  9.11 "SG"      "D"   */    0.57 MW     0.28 MVAr
TG    22.0   "KERNFRNT"  9.11 "1 "              */gen  drop is    47.70 MW   -12.00 MVAr
TG    22.0   "DOUBLE C" 13.80 "1 "              */gen  drop is    42.50 MW     9.69 MVAr
TG    22.0   "HISIERRA" 13.80 "1 "              */gen  drop is    47.90 MW    10.61 MVAr
TG    22.0   "BADGERCK" 13.80 "1 "              */gen  drop is    46.30 MW    10.32 MVAr
TG    22.0   "TEXCO_NM"  9.11 "1 "              */gen  drop is     5.40 MW    -3.60 MVAr
TG    22.0   "TEXCO_NM"  9.11 "2 "              */gen  drop is     2.70 MW    -3.00 MVAr
MBL   22.0   "CHV-CYMR"  9.11 "SG"      "D"   */    0.33 MW     0.08 MVAr
TG    22.0   "CHV-CYMR"  9.11 "1 "              */gen  drop is    13.50 MW    -0.39 MVAr
TG    22.0   "MIDSUN +" 13.80 "1 "              */gen  drop is    24.50 MW    15.20 MVAr
MBL   22.0   "DEXEL + " 13.80 "SG"      "D"   */    0.26 MW     0.06 MVAr
```

```
TG    22.0   "DEXEL + " 13.80 "1 "              */gen  drop is    28.60 MW     9.99 MVAr
* Load Group 1 *
MBL   22.0   "EL CRRTO" 115.00 "1 "      "D"    */   13.64 MW     3.11 MVAr
MBL   22.0   "EL CRRTO" 115.00 "2 "      "D"    */   16.97 MW     3.87 MVAr
MBL   22.0   "EL CRRTO" 115.00 "4 "      "D"    */   29.73 MW     6.77 MVAr
MBL   22.0   "WHISMAN " 115.00 "3 "      "D"   */    9.00 MW     2.05 MVAr
MBL   22.0   "WHISMAN " 115.00 "2 "      "D"   */   10.63 MW     2.42 MVAr
MBL   22.0   "WHISMAN " 115.00 "1 "      "D"   */    9.88 MW     2.25 MVAr
MBL   22.0   "MT VIEW " 115.00 "3 "      "D"   */   12.88 MW     2.93 MVAr
MBL   22.0   "MT VIEW " 115.00 "2 "      "D"   */   14.25 MW     3.25 MVAr
MBL   22.0   "MT VIEW " 115.00 "1 "      "D"   */   13.40 MW     3.06 MVAr
MBL   22.0   "HALE    " 115.00 "1 "      "D"   */    1.68 MW     1.00 MVAr
MBL   22.0   "VACAVLL1" 115.00 "1 "      "D"   */   10.33 MW     0.46 MVAr
MBL   22.0   "JAMESON " 115.00 "1 "      "D"   */   13.19 MW     0.59 MVAr
MBL   22.0   "CORDELIA" 115.00 "2 "      "D"   */    5.97 MW     0.27 MVAr
MBL   22.0   "VACAVLL2" 115.00 "3 "      "D"   */   14.87 MW     0.67 MVAr
MBL   22.0   "VACAVLL2" 115.00 "2 "      "D"   */   15.14 MW     0.68 MVAr
MBL   22.0   "SCHMLBCH" 115.00 "1 "      "D"   */    7.10 MW     4.77 MVAr
MBL   22.0   "SUISUN  " 115.00 "3 "      "D"   */    8.89 MW     0.40 MVAr
MBL   22.0   "SUISUN  " 115.00 "2 "      "D"   */   10.91 MW     0.49 MVAr
MBL   22.0   "SUISUN  " 115.00 "1 "      "D"   */   10.04 MW     0.45 MVAr
TG    22.0   "CTY FAIR"  9.11 "1 "              */gen  drop is     0.80 MW     0.10 MVAr
TG    22.0   "CTY FAIR"  9.11 "2 "              */gen  drop is     1.50 MW     0.10 MVAr
MBL   22.0   "WOLFSKIL" 13.80 "ss"      "D"   */    1.30 MW     0.81 MVAr
*TG    22.0   "WOLFSKIL" 13.80 "1 "              */gen  drop is    50.00 MW    -6.30 MVAr:
Unit Is Off-Line
MBL   22.0   "FREMNT  " 115.00 "3 "      "D"   */   10.74 MW     2.45 MVAr
MBL   22.0   "FREMNT  " 115.00 "2 "      "D"   */    7.56 MW     1.72 MVAr
MBL   22.0   "FREMNT  " 115.00 "1 "      "D"   */   12.38 MW     2.82 MVAr
MBL   22.0   "JARVIS  " 115.00 "3 "      "D"   */   13.33 MW     3.04 MVAr
MBL   22.0   "JARVIS  " 115.00 "2 "      "D"   */   10.38 MW     2.36 MVAr
MBL   22.0   "JARVIS  " 115.00 "1 "      "D"   */    6.91 MW     1.57 MVAr
MBL   22.0   "JV BART " 115.00 "1 "      "D"   */    5.11 MW     1.04 MVAr
MBL   22.0   "CRYOGEN " 115.00 "1 "      "D"   */    0.12 MW     0.03 MVAr
MBL   22.0   "STELLING" 115.00 "3 "      "D"   */   14.35 MW     3.27 MVAr
MBL   22.0   "STELLING" 115.00 "2 "      "D"   */   14.03 MW     3.20 MVAr
MBL   22.0   "STELLING" 115.00 "1 "      "D"   */   13.75 MW     3.13 MVAr
MBL   22.0   "WOLFE   " 115.00 "3 "      "D"   */    7.27 MW     1.66 MVAr
MBL   22.0   "WOLFE   " 115.00 "2 "      "D"   */   14.12 MW     3.22 MVAr
MBL   22.0   "WOLFE   " 115.00 "1 "      "D"   */   11.20 MW     2.55 MVAr
MBL   22.0   "MOFT.FLD" 115.00 "1 "      "D"   */    3.48 MW     0.87 MVAr
MBL   22.0   "LOCKHD 1" 115.00 "1 "      "D"   */   14.14 MW    11.71 MVAr
MBL   22.0   "LAWRENCE" 115.00 "3 "      "D"   */   15.56 MW     3.55 MVAr
MBL   22.0   "LAWRENCE" 115.00 "2 "      "D"   */    8.82 MW     2.01 MVAr
MBL   22.0   "LAWRENCE" 115.00 "1 "      "D"   */   22.29 MW     5.08 MVAr
MBL   22.0   "PHILLIPS" 115.00 "1 "      "D"   */    1.36 MW     0.00 MVAr
MBL   22.0   "LOCKHD 2" 115.00 "2 "      "D"   */    6.18 MW     1.41 MVAr
MBL   22.0   "LOCKHD 2" 115.00 "1 "      "D"   */   12.51 MW     9.71 MVAr
MBL   22.0   "A.M.D   " 115.00 "1 "      "D"   */    6.12 MW     4.27 MVAr
MBL   22.0   "BRITTN  " 115.00 "3 "      "D"   */   10.37 MW     2.36 MVAr
MBL   22.0   "BRITTN  " 115.00 "2 "      "D"   */   21.06 MW     4.80 MVAr
MBL   22.0   "BRITTN  " 115.00 "1 "      "D"   */   12.28 MW     2.80 MVAr
MBL   22.0   "APP MAT " 115.00 "1 "      "D"   */    9.54 MW     2.39 MVAr
* Gen Group 2 *
MBL   22.0   "ELKHIL1G" 18.00 "ss"      "D"   */    6.70 MW     1.68 MVAr
TG    22.0   "ELKHIL1G" 18.00 "1 "              */gen  drop is   166.80 MW    59.64 MVAr
MBL   22.0   "ELKHIL2G" 18.00 "ss"      "D"   */    6.70 MW     1.68 MVAr
TG    22.0   "ELKHIL2G" 18.00 "1 "              */gen  drop is   166.80 MW    59.64 MVAr
TG    22.0   "ELKHIL3G" 18.00 "1 "              */gen  drop is   225.50 MW    65.23 MVAr
* Load Group 2 *
MBL   22.0   "MARTIN C" 115.00 "4 "      "D"    */   17.44 MW     1.11 MVAr
MBL   22.0   "MARTIN C" 115.00 "1 "      "D"    */   17.44 MW     1.11 MVAr
MBL   22.0   "CLAYTN  " 115.00 "5 "      "D"   */    3.27 MW     0.74 MVAr
MBL   22.0   "CLAYTN  " 115.00 "3 "      "D"   */   15.68 MW     3.57 MVAr
MBL   22.0   "CLAYTN  " 115.00 "2 "      "D"   */   14.76 MW     3.36 MVAr
MBL   22.0   "CLAYTN  " 115.00 "1 "      "D"   */    9.25 MW     2.11 MVAr
MBL   22.0   "MEDW LNE" 115.00 "3 "      "D"   */   15.10 MW     3.44 MVAr
MBL   22.0   "MEDW LNE" 115.00 "2 "      "D"   */   16.12 MW     3.67 MVAr
MBL   22.0   "MEDW LNE" 115.00 "1 "      "D"   */   13.54 MW     3.08 MVAr
MBL   22.0   "EBMUDGRY" 115.00 "1 "      "D"   */    4.13 MW     1.36 MVAr
```

```
MBL   22.0   "LAKEWD-C" 115.00 "6 "      "D"   */   15.21 MW     3.47 MVAr
MBL   22.0   "LAKEWD-C" 115.00 "5 "      "D"   */    6.70 MW     1.53 MVAr
MBL   22.0   "LAKEWD-M" 115.00 "LW"      "D"   */    4.15 MW     0.84 MVAr
MBL   22.0   "LAKEWD-M" 115.00 "4 "      "D"   */   16.55 MW     3.77 MVAr
MBL   22.0   "LAKEWD-M" 115.00 "2 "      "D"   */    8.85 MW     2.02 MVAr
MBL   22.0   "LAKEWD-M" 115.00 "1 "      "D"   */   13.10 MW     2.99 MVAr
MBL   22.0   "DALY CTY" 115.00 "2 "      "D"   */   11.94 MW     2.72 MVAr
MBL   22.0   "DALY CTY" 115.00 "1 "      "D"   */   19.78 MW     4.51 MVAr
MBL   22.0   "SERRMNTE" 115.00 "1 "      "D"   */    4.49 MW     1.02 MVAr
* Gen Group 3 *
TG    22.0   "LAPLM_G1" 21.00 "1 "              */gen  drop is   230.00 MW   101.84 MVAr
TG    22.0   "LAPLM_G2" 21.00 "1 "              */gen  drop is   230.00 MW   101.84 MVAr
* Load Group 3 *
MBL   22.0   "ELDORAD " 115.00 "1 "      "D"   */    3.29 MW     0.15 MVAr
MBL   22.0   "APPLE HL" 115.00 "2 "      "D"   */    3.26 MW     0.14 MVAr
MBL   22.0   "APPLE HL" 115.00 "1 "      "D"   */    5.15 MW     0.23 MVAr
MBL   22.0   "PLCRVLB2" 115.00 "2 "      "D"   */    3.17 MW     0.14 MVAr
MBL   22.0   "PLCRVLB3" 115.00 "3 "      "D"   */    9.12 MW     0.41 MVAr
MBL   22.0   "DMND SPR" 115.00 "2 "      "D"   */    9.87 MW     0.44 MVAr
MBL   22.0   "DMND SPR" 115.00 "1 "      "D"   */    3.47 MW     0.16 MVAr
MBL   22.0   "SHPRING " 115.00 "2 "      "D"   */    7.56 MW     0.34 MVAr
MBL   22.0   "SHPRING " 115.00 "1 "      "D"   */    6.88 MW     0.31 MVAr
*MBL   22.0   "CPM     " 115.00 "1 "      "D"   */    0.00 MW     0.00 MVAr: Load Status
Off
MBL   22.0   "SPICAMIN" 115.00 "1 "      "D"   */    2.87 MW     2.53 MVAr
TG    22.0   "CHILIBAR"  4.16 "1 "              */gen  drop is     2.00 MW    -2.00 MVAr
MBL   22.0   "ELDRADO1" 21.60 "SG"      "D"   */    0.03 MW     0.01 MVAr
TG    22.0   "ELDRADO1" 21.60 "1 "              */gen  drop is     9.96 MW    -3.30 MVAr
MBL   22.0   "ELDRADO2" 21.60 "SG"      "D"   */    0.03 MW     0.01 MVAr
TG    22.0   "ELDRADO2" 21.60 "1 "              */gen  drop is     9.96 MW    -3.30 MVAr
MBL   22.0   "CLRKSVLE" 115.00 "3 "      "D"   */   15.92 MW     0.71 MVAr
MBL   22.0   "CLRKSVLE" 115.00 "2 "      "D"   */   16.66 MW     0.75 MVAr
MBL   22.0   "CLRKSVLE" 115.00 "1 "      "D"   */   15.68 MW     0.70 MVAr
MBL   22.0   "BAY MDWS" 115.00 "5 "      "D"   */    7.33 MW     1.67 MVAr
MBL   22.0   "BAY MDWS" 115.00 "3 "      "D"   */    7.97 MW     1.82 MVAr
MBL   22.0   "BAY MDWS" 115.00 "2 "      "D"   */   13.47 MW     3.07 MVAr
MBL   22.0   "BAY MDWS" 115.00 "1 "      "D"   */   16.87 MW     3.85 MVAr
* Gen Group 4 *
TG    22.0   "TEXSUN2G" 18.00 "1 "              */gen  drop is   169.00 MW    13.22 MVAr
TG    22.0   "TEXSUN1G" 18.00 "1 "              */gen  drop is   169.00 MW    13.22 MVAr
TG    22.0   "TEXSUNST" 18.00 "1 "              */gen  drop is   222.00 MW    60.97 MVAr
* Load Group 4 *
MBL   22.0   "HIGHWAY " 115.00 "2 "      "D"   */   11.09 MW     2.25 MVAr
MBL   22.0   "HIGHWAY " 115.00 "1 "      "D"   */    9.03 MW     1.84 MVAr
MBL   22.0   "MEYERS  " 115.00 "1 "      "D"   */    0.18 MW     0.04 MVAr
MBL   22.0   "CARQUINZ" 115.00 "2 "      "D"   */    4.92 MW     1.00 MVAr
MBL   22.0   "CARQUINZ" 115.00 "1 "      "D"   */    5.78 MW     1.17 MVAr
MBL   22.0   "MRE IS-Q" 115.00 "1 "      "D"   */    4.25 MW     0.86 MVAr
MBL   22.0   "GUALALA " 60.00 "2 "      "D"   */    0.59 MW     0.12 MVAr
MBL   22.0   "GUALALA " 60.00 "1 "      "D"   */    1.21 MW     0.25 MVAr
MBL   22.0   "ANNAPOLS" 60.00 "1 "      "D"   */    0.10 MW     0.02 MVAr
MBL   22.0   "FORT RSS" 60.00 "1 "      "D"   */    0.34 MW     0.07 MVAr
MBL   22.0   "SLMN CRK" 60.00 "1 "      "D"   */    1.33 MW     0.27 MVAr
MBL   22.0   "MONTE RO" 60.00 "2 "      "D"   */    2.02 MW     0.41 MVAr
MBL   22.0   "MONTE RO" 60.00 "1 "      "D"   */    1.58 MW     0.32 MVAr
MBL   22.0   "WOHLER  " 60.00 "1 "      "D"   */    3.21 MW     1.37 MVAr
MBL   22.0   "MIRABEL " 60.00 "1 "      "D"   */    4.13 MW     0.84 MVAr
MBL   22.0   "MOLINO  " 60.00 "2 "      "D"   */    7.63 MW     1.55 MVAr
MBL   22.0   "MOLINO  " 60.00 "1 "      "D"   */    2.97 MW     0.60 MVAr
MBL   22.0   "LAGUNA  " 60.00 "1 "      "D"   */    4.20 MW     1.05 MVAr
MBL   22.0   "COTATI  " 60.00 "2 "      "D"   */    2.54 MW     0.51 MVAr
MBL   22.0   "COTATI  " 60.00 "1 "      "D"   */    2.79 MW     0.57 MVAr
TG    22.0   "SONMA LF"  9.11 "1 "              */gen  drop is     4.00 MW     0.00 MVAr
MBL   22.0   "LS GLLNS" 115.00 "3 "      "D"   */    4.84 MW     0.98 MVAr
MBL   22.0   "LS GLLNS" 115.00 "2 "      "D"   */    4.33 MW     0.88 MVAr
MBL   22.0   "LS GLLNS" 115.00 "1 "      "D"   */    6.42 MW     1.30 MVAr
MBL   22.0   "SAN RAFL" 115.00 "3 "      "D"   */    7.80 MW     1.59 MVAr
MBL   22.0   "SAN RAFL" 115.00 "2 "      "D"   */   11.23 MW     2.28 MVAr
MBL   22.0   "SAN RAFL" 115.00 "1 "      "D"   */   11.78 MW     2.39 MVAr
* Gen Group 5 *
```

```
TG    22.0   "LAPLM_G3" 21.00 "1 "              */gen  drop is   229.00 MW   101.72 MVAr
TG    22.0   "LAPLM_G4" 21.00 "1 "              */gen  drop is   230.00 MW   101.84 MVAr
* Load Group 5 *
MBL   22.0   "NEW HOPE" 60.00 "1 "      "D"   */    1.21 MW     0.05 MVAr
MBL   22.0   "SEBASTIA" 60.00 "1 "      "D"   */    2.12 MW     1.59 MVAr
MBL   22.0   "STAGG   " 60.00 "3 "      "D"   */    8.43 MW     0.38 MVAr
MBL   22.0   "STAGG   " 60.00 "2 "      "D"   */    8.43 MW     0.38 MVAr
MBL   22.0   "CNTRY CB" 60.00 "4 "      "D"   */    7.39 MW     0.33 MVAr
MBL   22.0   "CNTRY CB" 60.00 "3 "      "D"   */    4.82 MW     0.22 MVAr
MBL   22.0   "CNTRY CB" 60.00 "2 "      "D"   */    4.34 MW     0.19 MVAr
MBL   22.0   "CNTRY CB" 60.00 "1 "      "D"   */    2.65 MW     0.12 MVAr
MBL   22.0   "UOP     " 60.00 "1 "      "D"   */    4.51 MW     3.15 MVAr
MBL   22.0   "HAMMER  " 60.00 "3 "      "D"   */    8.86 MW     0.40 MVAr
MBL   22.0   "HAMMER  " 60.00 "2 "      "D"   */    8.13 MW     0.36 MVAr
MBL   22.0   "HAMMER  " 60.00 "1 "      "D"   */    8.47 MW     0.38 MVAr
MBL   22.0   "METTLER " 60.00 "3 "      "D"   */    3.70 MW     0.17 MVAr
MBL   22.0   "TERMNOUS" 60.00 "1 "      "D"   */    2.14 MW     0.10 MVAr
MBL   22.0   "MSHR 60V" 60.00 "2 "      "D"   */   14.95 MW     0.67 MVAr
MBL   22.0   "MSHR 60V" 60.00 "1 "      "D"   */    8.95 MW     0.40 MVAr
MBL   22.0   "STAGG_5 " 21.00 "5 "      "D"   */   26.56 MW     1.19 MVAr
MBL   22.0   "STAGG_6 " 21.00 "6 "      "D"   */   23.27 MW     1.04 MVAr
MBL   22.0   "CMP EVRS" 115.00 "2 "      "D"   */   11.31 MW     2.30 MVAr
MBL   22.0   "CMP EVRS" 115.00 "1 "      "D"   */   11.61 MW     2.36 MVAr
MBL   22.0   "PAUL SWT" 115.00 "3 "      "D"   */   16.81 MW     3.42 MVAr
MBL   22.0   "PAUL SWT" 115.00 "2 "      "D"   */   12.22 MW     2.48 MVAr
MBL   22.0   "PAUL SWT" 115.00 "1 "      "D"   */   16.05 MW     3.26 MVAr
MBL   22.0   "ROB ROY " 115.00 "1 "      "D"   */    7.02 MW     1.43 MVAr
TG    22.0   "PSWTSTCM"  8.00 "1 "              */gen  drop is     0.00 MW   -18.90 MVAr
MBL   22.0   "CSTRVLLE" 115.00 "1 "      "D"   */   10.31 MW     2.10 MVAr
MBL   22.0   "DEL MNTE" 115.00 "2 "      "D"   */   14.17 MW     2.88 MVAr
MBL   22.0   "DEL MNTE" 115.00 "1 "      "D"   */    9.22 MW     1.87 MVAr
MBL   22.0   "FORT ORD" 60.00 "1 "      "D"   */   15.66 MW     3.18 MVAr
MBL   22.0   "MANZANTA" 60.00 "1 "      "D"   */    0.60 MW     0.12 MVAr
MBL   22.0   "MONTEREY" 60.00 "1 "      "D"   */    2.22 MW     0.45 MVAr
MBL   22.0   "NVY SCHL" 60.00 "1 "      "D"   */    1.70 MW     0.87 MVAr
MBL   22.0   "VIEJO   " 60.00 "2 "      "D"   */    8.35 MW     1.70 MVAr
MBL   22.0   "VIEJO   " 60.00 "1 "      "D"   */    7.04 MW     1.43 MVAr
MBL   22.0   "HATTON  " 60.00 "1 "      "D"   */    6.11 MW     1.24 MVAr
MBL   22.0   "NAVY LAB" 60.00 "1 "      "D"   */    1.30 MW     0.56 MVAr
MBL   22.0   "BORONDA " 60.00 "1 "      "D"   */    4.26 MW     0.86 MVAr
MBL   22.0   "RSVTN RD" 60.00 "1 "      "D"   */    5.38 MW     1.09 MVAr
MBL   22.0   "LAURELES" 60.00 "1 "      "D"   */    3.00 MW     0.61 MVAr
MBL   22.0   "OTTER   " 60.00 "1 "      "D"   */    1.76 MW     0.36 MVAr
*
*  REMOVE GARRISON REACTOR AND INSERT KINPORT CAP
MBS  180.0 "KINPORT " 345.    "1 "  "R"
MSD  180.0 "GARRISON" 500.    "s "  "D"
*
*
MSD 180.0 "GATES"    230.0  "v " "D"
MSD 180.0 "LOSBANOS" 230.0  "v " "D"
*
```

Midway - Gates and Midway - Los Banos Double Line Outage (South-to-North Flow)

```
*
*   CC cards for post-transient only
*
*   Readjust Northwest SVC's
*
CC MSV 0.0 "KEEL-SVC" 19.60 "1 "  350. -300.
CC MSV 0.0 "MV-SVC  " 19.60 "1 "  350. -300.
*
*
*  Fault at Midway 500 kV bus
*
FB  0.0 "MIDWAY"  500.0
*
*   CLEAR FAULT AND OPEN LINES - 4 CYCLES
*
CFB  4.0  "MIDWAY"   500.0
DL   4.0  "GATES   " 500. "MIDWAY" 500. "1 "
DL   4.0  "LOSBANOS" 500. "MIDWAY" 500. "1 "
*
*
*
* CDWR Pumps *
TG    22.0   "DOS AMG1" 13.20 "1 "              */gen  drop is   -30.00 MW     0.00 MVAr
TG    22.0   "DOS AMG1" 13.20 "2 "              */gen  drop is   -30.00 MW     0.00 MVAr
TG    22.0   "DOS AMG1" 13.20 "3 "              */gen  drop is   -30.00 MW     0.00 MVAr
TG    22.0   "DELTA E " 13.20 "11"              */gen  drop is    -1.00 MW     0.00 MVAr
* Helms Pumps *
*TG    22.0   "HELMS 1 "18.00 "1 "              */gen  drop is  -310.00 MW   120.00 MVAr:
TG    22.0   "HELMS 2 " 18.00 "1 "              */gen  drop is  -310.00 MW   120.00 MVAr
TG    22.0   "HELMS 3 " 18.00 "1 "              */gen  drop is  -310.00 MW   120.00 MVAr
* Gen Group 1 *
MBL   22.0   "SUNST   " 230.00 "SG"      "D"   */    9.59 MW     3.48 MVAr
TG    22.0   "SUNSET G" 13.80 "1 "              */gen  drop is    75.00 MW   -20.00 MVAr
TG    22.0   "SUNSET G" 13.80 "2 "              */gen  drop is    75.00 MW   -20.00 MVAr
TG    22.0   "SUNSET G" 13.80 "3 "              */gen  drop is    75.00 MW   -20.00 MVAr
MBL   22.0   "KERNFRNT"  9.11 "SG"      "D"   */    0.57 MW     0.28 MVAr
TG    22.0   "KERNFRNT"  9.11 "1 "              */gen  drop is    47.70 MW   -12.00 MVAr
TG    22.0   "DOUBLE C" 13.80 "1 "              */gen  drop is    42.50 MW     9.69 MVAr
TG    22.0   "HISIERRA" 13.80 "1 "              */gen  drop is    47.90 MW    10.61 MVAr
TG    22.0   "BADGERCK" 13.80 "1 "              */gen  drop is    46.30 MW    10.32 MVAr
TG    22.0   "TEXCO_NM"  9.11 "1 "              */gen  drop is     5.40 MW    -3.60 MVAr
TG    22.0   "TEXCO_NM"  9.11 "2 "              */gen  drop is     2.70 MW    -3.00 MVAr
MBL   22.0   "CHV-CYMR"  9.11 "SG"      "D"   */    0.33 MW     0.08 MVAr
TG    22.0   "CHV-CYMR"  9.11 "1 "              */gen  drop is    13.50 MW    -0.39 MVAr
TG    22.0   "MIDSUN +" 13.80 "1 "              */gen  drop is    24.50 MW    15.20 MVAr
MBL   22.0   "DEXEL + " 13.80 "SG"      "D"   */    0.26 MW     0.06 MVAr
TG    22.0   "DEXEL + " 13.80 "1 "              */gen  drop is    28.60 MW     9.99 MVAr
* Load Group 1 *
MBL   22.0   "EL CRRTO" 115.00 "1 "      "D"    */   13.64 MW     3.11 MVAr
MBL   22.0   "EL CRRTO" 115.00 "2 "      "D"    */   16.97 MW     3.87 MVAr
MBL   22.0   "EL CRRTO" 115.00 "4 "      "D"    */   29.73 MW     6.77 MVAr
MBL   22.0   "WHISMAN " 115.00 "3 "      "D"   */    9.00 MW     2.05 MVAr
MBL   22.0   "WHISMAN " 115.00 "2 "      "D"   */   10.63 MW     2.42 MVAr
MBL   22.0   "WHISMAN " 115.00 "1 "      "D"   */    9.88 MW     2.25 MVAr
MBL   22.0   "MT VIEW " 115.00 "3 "      "D"   */   12.88 MW     2.93 MVAr
MBL   22.0   "MT VIEW " 115.00 "2 "      "D"   */   14.25 MW     3.25 MVAr
MBL   22.0   "MT VIEW " 115.00 "1 "      "D"   */   13.40 MW     3.06 MVAr
MBL   22.0   "HALE    " 115.00 "1 "      "D"   */    1.68 MW     1.00 MVAr
MBL   22.0   "VACAVLL1" 115.00 "1 "      "D"   */   10.33 MW     0.46 MVAr
MBL   22.0   "JAMESON " 115.00 "1 "      "D"   */   13.19 MW     0.59 MVAr
MBL   22.0   "CORDELIA" 115.00 "2 "      "D"   */    5.97 MW     0.27 MVAr
MBL   22.0   "VACAVLL2" 115.00 "3 "      "D"   */   14.87 MW     0.67 MVAr
MBL   22.0   "VACAVLL2" 115.00 "2 "      "D"   */   15.14 MW     0.68 MVAr
MBL   22.0   "SCHMLBCH" 115.00 "1 "      "D"   */    7.10 MW     4.77 MVAr
MBL   22.0   "SUISUN  " 115.00 "3 "      "D"   */    8.89 MW     0.40 MVAr
```

```
MBL   22.0   "SUISUN  " 115.00 "2 "      "D"   */   10.91 MW     0.49 MVAr
MBL   22.0   "SUISUN  " 115.00 "1 "      "D"   */   10.04 MW     0.45 MVAr
TG    22.0   "CTY FAIR"  9.11 "1 "              */gen  drop is     0.80 MW     0.10 MVAr
TG    22.0   "CTY FAIR"  9.11 "2 "              */gen  drop is     1.50 MW     0.10 MVAr
MBL   22.0   "WOLFSKIL" 13.80 "ss"      "D"   */    1.30 MW     0.81 MVAr
MBL   22.0   "FREMNT  " 115.00 "3 "      "D"   */   10.74 MW     2.45 MVAr
MBL   22.0   "FREMNT  " 115.00 "2 "      "D"   */    7.56 MW     1.72 MVAr
MBL   22.0   "FREMNT  " 115.00 "1 "      "D"   */   12.38 MW     2.82 MVAr
MBL   22.0   "JARVIS  " 115.00 "3 "      "D"   */   13.33 MW     3.04 MVAr
MBL   22.0   "JARVIS  " 115.00 "2 "      "D"   */   10.38 MW     2.36 MVAr
MBL   22.0   "JARVIS  " 115.00 "1 "      "D"   */    6.91 MW     1.57 MVAr
MBL   22.0   "JV BART " 115.00 "1 "      "D"   */    5.11 MW     1.04 MVAr
MBL   22.0   "CRYOGEN " 115.00 "1 "      "D"   */    0.12 MW     0.03 MVAr
MBL   22.0   "STELLING" 115.00 "3 "      "D"   */   14.35 MW     3.27 MVAr
MBL   22.0   "STELLING" 115.00 "2 "      "D"   */   14.03 MW     3.20 MVAr
MBL   22.0   "STELLING" 115.00 "1 "      "D"   */   13.75 MW     3.13 MVAr
MBL   22.0   "WOLFE   " 115.00 "3 "      "D"   */    7.27 MW     1.66 MVAr
MBL   22.0   "WOLFE   " 115.00 "2 "      "D"   */   14.12 MW     3.22 MVAr
MBL   22.0   "WOLFE   " 115.00 "1 "      "D"   */   11.20 MW     2.55 MVAr
MBL   22.0   "MOFT.FLD" 115.00 "1 "      "D"   */    3.48 MW     0.87 MVAr
MBL   22.0   "LOCKHD 1" 115.00 "1 "      "D"   */   14.14 MW    11.71 MVAr
MBL   22.0   "LAWRENCE" 115.00 "3 "      "D"   */   15.56 MW     3.55 MVAr
MBL   22.0   "LAWRENCE" 115.00 "2 "      "D"   */    8.82 MW     2.01 MVAr
MBL   22.0   "LAWRENCE" 115.00 "1 "      "D"   */   22.29 MW     5.08 MVAr
MBL   22.0   "PHILLIPS" 115.00 "1 "      "D"   */    1.36 MW     0.00 MVAr
MBL   22.0   "LOCKHD 2" 115.00 "2 "      "D"   */    6.18 MW     1.41 MVAr
MBL   22.0   "LOCKHD 2" 115.00 "1 "      "D"   */   12.51 MW     9.71 MVAr
MBL   22.0   "A.M.D   " 115.00 "1 "      "D"   */    6.12 MW     4.27 MVAr
MBL   22.0   "BRITTN  " 115.00 "3 "      "D"   */   10.37 MW     2.36 MVAr
MBL   22.0   "BRITTN  " 115.00 "2 "      "D"   */   21.06 MW     4.80 MVAr
MBL   22.0   "BRITTN  " 115.00 "1 "      "D"   */   12.28 MW     2.80 MVAr
MBL   22.0   "APP MAT " 115.00 "1 "      "D"   */    9.54 MW     2.39 MVAr
* Gen Group 2 *
MBL   22.0   "ELKHIL1G" 18.00 "ss"      "D"   */    6.70 MW     1.68 MVAr
TG    22.0   "ELKHIL1G" 18.00 "1 "              */gen  drop is   166.80 MW    59.64 MVAr
MBL   22.0   "ELKHIL2G" 18.00 "ss"      "D"   */    6.70 MW     1.68 MVAr
TG    22.0   "ELKHIL2G" 18.00 "1 "              */gen  drop is   166.80 MW    59.64 MVAr
TG    22.0   "ELKHIL3G" 18.00 "1 "              */gen  drop is   225.50 MW    65.23 MVAr
* Load Group 2 *
MBL   22.0   "MARTIN C" 115.00 "4 "      "D"    */   17.44 MW     1.11 MVAr
MBL   22.0   "MARTIN C" 115.00 "1 "      "D"    */   17.44 MW     1.11 MVAr
MBL   22.0   "CLAYTN  " 115.00 "5 "      "D"   */    3.27 MW     0.74 MVAr
MBL   22.0   "CLAYTN  " 115.00 "3 "      "D"   */   15.68 MW     3.57 MVAr
MBL   22.0   "CLAYTN  " 115.00 "2 "      "D"   */   14.76 MW     3.36 MVAr
MBL   22.0   "CLAYTN  " 115.00 "1 "      "D"   */    9.25 MW     2.11 MVAr
MBL   22.0   "MEDW LNE" 115.00 "3 "      "D"   */   15.10 MW     3.44 MVAr
MBL   22.0   "MEDW LNE" 115.00 "2 "      "D"   */   16.12 MW     3.67 MVAr
MBL   22.0   "MEDW LNE" 115.00 "1 "      "D"   */   13.54 MW     3.08 MVAr
MBL   22.0   "EBMUDGRY" 115.00 "1 "      "D"   */    4.13 MW     1.36 MVAr
MBL   22.0   "LAKEWD-C" 115.00 "6 "      "D"   */   15.21 MW     3.47 MVAr
MBL   22.0   "LAKEWD-C" 115.00 "5 "      "D"   */    6.70 MW     1.53 MVAr
MBL   22.0   "LAKEWD-M" 115.00 "LW"      "D"   */    4.15 MW     0.84 MVAr
MBL   22.0   "LAKEWD-M" 115.00 "4 "      "D"   */   16.55 MW     3.77 MVAr
MBL   22.0   "LAKEWD-M" 115.00 "2 "      "D"   */    8.85 MW     2.02 MVAr
MBL   22.0   "LAKEWD-M" 115.00 "1 "      "D"   */   13.10 MW     2.99 MVAr
MBL   22.0   "DALY CTY" 115.00 "2 "      "D"   */   11.94 MW     2.72 MVAr
MBL   22.0   "DALY CTY" 115.00 "1 "      "D"   */   19.78 MW     4.51 MVAr
MBL   22.0   "SERRMNTE" 115.00 "1 "      "D"   */    4.49 MW     1.02 MVAr
* Gen Group 3 *
TG    22.0   "LAPLM_G1" 21.00 "1 "              */gen  drop is   230.00 MW   101.84 MVAr
TG    22.0   "LAPLM_G2" 21.00 "1 "              */gen  drop is   230.00 MW   101.84 MVAr
* Load Group 3 *
MBL   22.0   "ELDORAD " 115.00 "1 "      "D"   */    3.29 MW     0.15 MVAr
MBL   22.0   "APPLE HL" 115.00 "2 "      "D"   */    3.26 MW     0.14 MVAr
MBL   22.0   "APPLE HL" 115.00 "1 "      "D"   */    5.15 MW     0.23 MVAr
MBL   22.0   "PLCRVLB2" 115.00 "2 "      "D"   */    3.17 MW     0.14 MVAr
MBL   22.0   "PLCRVLB3" 115.00 "3 "      "D"   */    9.12 MW     0.41 MVAr
MBL   22.0   "DMND SPR" 115.00 "2 "      "D"   */    9.87 MW     0.44 MVAr
MBL   22.0   "DMND SPR" 115.00 "1 "      "D"   */    3.47 MW     0.16 MVAr
MBL   22.0   "SHPRING " 115.00 "2 "      "D"   */    7.56 MW     0.34 MVAr
```

```
MBL   22.0   "SHPRING " 115.00 "1 "      "D"   */    6.88 MW     0.31 MVAr
MBL   22.0   "SPICAMIN" 115.00 "1 "      "D"   */    2.87 MW     2.53 MVAr
TG    22.0   "CHILIBAR"  4.16 "1 "              */gen  drop is     2.00 MW    -2.00 MVAr
MBL   22.0   "ELDRADO1" 21.60 "SG"      "D"   */    0.03 MW     0.01 MVAr
TG    22.0   "ELDRADO1" 21.60 "1 "              */gen  drop is     9.96 MW    -3.30 MVAr
MBL   22.0   "ELDRADO2" 21.60 "SG"      "D"   */    0.03 MW     0.01 MVAr
TG    22.0   "ELDRADO2" 21.60 "1 "              */gen  drop is     9.96 MW    -3.30 MVAr
MBL   22.0   "CLRKSVLE" 115.00 "3 "      "D"   */   15.92 MW     0.71 MVAr
MBL   22.0   "CLRKSVLE" 115.00 "2 "      "D"   */   16.66 MW     0.75 MVAr
MBL   22.0   "CLRKSVLE" 115.00 "1 "      "D"   */   15.68 MW     0.70 MVAr
MBL   22.0   "BAY MDWS" 115.00 "5 "      "D"   */    7.33 MW     1.67 MVAr
MBL   22.0   "BAY MDWS" 115.00 "3 "      "D"   */    7.97 MW     1.82 MVAr
MBL   22.0   "BAY MDWS" 115.00 "2 "      "D"   */   13.47 MW     3.07 MVAr
MBL   22.0   "BAY MDWS" 115.00 "1 "      "D"   */   16.87 MW     3.85 MVAr
* Gen Group 4 *
TG    22.0   "TEXSUN2G" 18.00 "1 "              */gen  drop is   169.00 MW    13.22 MVAr
TG    22.0   "TEXSUN1G" 18.00 "1 "              */gen  drop is   169.00 MW    13.22 MVAr
TG    22.0   "TEXSUNST" 18.00 "1 "              */gen  drop is   222.00 MW    60.97 MVAr
* Load Group 4 *
MBL   22.0   "HIGHWAY " 115.00 "2 "      "D"   */   11.09 MW     2.25 MVAr
MBL   22.0   "HIGHWAY " 115.00 "1 "      "D"   */    9.03 MW     1.84 MVAr
MBL   22.0   "MEYERS  " 115.00 "1 "      "D"   */    0.18 MW     0.04 MVAr
MBL   22.0   "CARQUINZ" 115.00 "2 "      "D"   */    4.92 MW     1.00 MVAr
MBL   22.0   "CARQUINZ" 115.00 "1 "      "D"   */    5.78 MW     1.17 MVAr
MBL   22.0   "MRE IS-Q" 115.00 "1 "      "D"   */    4.25 MW     0.86 MVAr
MBL   22.0   "GUALALA " 60.00 "2 "      "D"   */    0.59 MW     0.12 MVAr
MBL   22.0   "GUALALA " 60.00 "1 "      "D"   */    1.21 MW     0.25 MVAr
MBL   22.0   "ANNAPOLS" 60.00 "1 "      "D"   */    0.10 MW     0.02 MVAr
MBL   22.0   "FORT RSS" 60.00 "1 "      "D"   */    0.34 MW     0.07 MVAr
MBL   22.0   "SLMN CRK" 60.00 "1 "      "D"   */    1.33 MW     0.27 MVAr
MBL   22.0   "MONTE RO" 60.00 "2 "      "D"   */    2.02 MW     0.41 MVAr
MBL   22.0   "MONTE RO" 60.00 "1 "      "D"   */    1.58 MW     0.32 MVAr
MBL   22.0   "WOHLER  " 60.00 "1 "      "D"   */    3.21 MW     1.37 MVAr
MBL   22.0   "MIRABEL " 60.00 "1 "      "D"   */    4.13 MW     0.84 MVAr
MBL   22.0   "MOLINO  " 60.00 "2 "      "D"   */    7.63 MW     1.55 MVAr
MBL   22.0   "MOLINO  " 60.00 "1 "      "D"   */    2.97 MW     0.60 MVAr
MBL   22.0   "LAGUNA  " 60.00 "1 "      "D"   */    4.20 MW     1.05 MVAr
MBL   22.0   "COTATI  " 60.00 "2 "      "D"   */    2.54 MW     0.51 MVAr
MBL   22.0   "COTATI  " 60.00 "1 "      "D"   */    2.79 MW     0.57 MVAr
TG    22.0   "SONMA LF"  9.11 "1 "              */gen  drop is     4.00 MW     0.00 MVAr
MBL   22.0   "LS GLLNS" 115.00 "3 "      "D"   */    4.84 MW     0.98 MVAr
MBL   22.0   "LS GLLNS" 115.00 "2 "      "D"   */    4.33 MW     0.88 MVAr
MBL   22.0   "LS GLLNS" 115.00 "1 "      "D"   */    6.42 MW     1.30 MVAr
MBL   22.0   "SAN RAFL" 115.00 "3 "      "D"   */    7.80 MW     1.59 MVAr
MBL   22.0   "SAN RAFL" 115.00 "2 "      "D"   */   11.23 MW     2.28 MVAr
MBL   22.0   "SAN RAFL" 115.00 "1 "      "D"   */   11.78 MW     2.39 MVAr
* Gen Group 5 *
TG    22.0   "LAPLM_G3" 21.00 "1 "              */gen  drop is   229.00 MW   101.72 MVAr
TG    22.0   "LAPLM_G4" 21.00 "1 "              */gen  drop is   230.00 MW   101.84 MVAr
* Load Group 5 *
MBL   22.0   "NEW HOPE" 60.00 "1 "      "D"   */    1.21 MW     0.05 MVAr
MBL   22.0   "SEBASTIA" 60.00 "1 "      "D"   */    2.12 MW     1.59 MVAr
MBL   22.0   "STAGG   " 60.00 "3 "      "D"   */    8.43 MW     0.38 MVAr
MBL   22.0   "STAGG   " 60.00 "2 "      "D"   */    8.43 MW     0.38 MVAr
MBL   22.0   "CNTRY CB" 60.00 "4 "      "D"   */    7.39 MW     0.33 MVAr
MBL   22.0   "CNTRY CB" 60.00 "3 "      "D"   */    4.82 MW     0.22 MVAr
MBL   22.0   "CNTRY CB" 60.00 "2 "      "D"   */    4.34 MW     0.19 MVAr
MBL   22.0   "CNTRY CB" 60.00 "1 "      "D"   */    2.65 MW     0.12 MVAr
MBL   22.0   "UOP     " 60.00 "1 "      "D"   */    4.51 MW     3.15 MVAr
MBL   22.0   "HAMMER  " 60.00 "3 "      "D"   */    8.86 MW     0.40 MVAr
MBL   22.0   "HAMMER  " 60.00 "2 "      "D"   */    8.13 MW     0.36 MVAr
MBL   22.0   "HAMMER  " 60.00 "1 "      "D"   */    8.47 MW     0.38 MVAr
MBL   22.0   "METTLER " 60.00 "3 "      "D"   */    3.70 MW     0.17 MVAr
MBL   22.0   "TERMNOUS" 60.00 "1 "      "D"   */    2.14 MW     0.10 MVAr
MBL   22.0   "MSHR 60V" 60.00 "2 "      "D"   */   14.95 MW     0.67 MVAr
MBL   22.0   "MSHR 60V" 60.00 "1 "      "D"   */    8.95 MW     0.40 MVAr
MBL   22.0   "STAGG_5 " 21.00 "5 "      "D"   */   26.56 MW     1.19 MVAr
MBL   22.0   "STAGG_6 " 21.00 "6 "      "D"   */   23.27 MW     1.04 MVAr
MBL   22.0   "CMP EVRS" 115.00 "2 "      "D"   */   11.31 MW     2.30 MVAr
MBL   22.0   "CMP EVRS" 115.00 "1 "      "D"   */   11.61 MW     2.36 MVAr
```

```
MBL   22.0   "PAUL SWT" 115.00 "3 "      "D"   */   16.81 MW     3.42 MVAr
MBL   22.0   "PAUL SWT" 115.00 "2 "      "D"   */   12.22 MW     2.48 MVAr
MBL   22.0   "PAUL SWT" 115.00 "1 "      "D"   */   16.05 MW     3.26 MVAr
MBL   22.0   "ROB ROY " 115.00 "1 "      "D"   */    7.02 MW     1.43 MVAr
TG    22.0   "PSWTSTCM"  8.00 "1 "              */gen  drop is     0.00 MW   -18.90 MVAr
MBL   22.0   "CSTRVLLE" 115.00 "1 "      "D"   */   10.31 MW     2.10 MVAr
MBL   22.0   "DEL MNTE" 115.00 "2 "      "D"   */   14.17 MW     2.88 MVAr
MBL   22.0   "DEL MNTE" 115.00 "1 "      "D"   */    9.22 MW     1.87 MVAr
MBL   22.0   "FORT ORD" 60.00 "1 "      "D"   */   15.66 MW     3.18 MVAr
MBL   22.0   "MANZANTA" 60.00 "1 "      "D"   */    0.60 MW     0.12 MVAr
MBL   22.0   "MONTEREY" 60.00 "1 "      "D"   */    2.22 MW     0.45 MVAr
MBL   22.0   "NVY SCHL" 60.00 "1 "      "D"   */    1.70 MW     0.87 MVAr
MBL   22.0   "VIEJO   " 60.00 "2 "      "D"   */    8.35 MW     1.70 MVAr
MBL   22.0   "VIEJO   " 60.00 "1 "      "D"   */    7.04 MW     1.43 MVAr
MBL   22.0   "HATTON  " 60.00 "1 "      "D"   */    6.11 MW     1.24 MVAr
MBL   22.0   "NAVY LAB" 60.00 "1 "      "D"   */    1.30 MW     0.56 MVAr
MBL   22.0   "BORONDA " 60.00 "1 "      "D"   */    4.26 MW     0.86 MVAr
MBL   22.0   "RSVTN RD" 60.00 "1 "      "D"   */    5.38 MW     1.09 MVAr
MBL   22.0   "LAURELES" 60.00 "1 "      "D"   */    3.00 MW     0.61 MVAr
MBL   22.0   "OTTER   " 60.00 "1 "      "D"   */    1.76 MW     0.36 MVAr
*
*
MSD 180.0 "GATES"    230.0  "v " "D"
MSD 180.0 "LOSBANOS" 230.0  "v " "D"
*
```

Appendix C
Powerflow Results

Table of Content

Table C-1: Category "A" Normal Overloads 1
2013 Summer Peak 1
2013 Summer Off-Peak 1
2013 Spring Peak 2
Table C-2: Category "B" Emergency Overloads 3
2013 Summer Peak 3
2013 Summer Off-Peak 45
2013 Spring Peak 59
Table C-3: Category "C" Emergency Overloads 86
2013 Summer Peak 86
2013 Summer Off-Peak 133
2013 Spring Peak 148

Table C-1: Category "A" Normal Overloads

#	Outage Description	Facility	Rating	Unit	PU Flow	PU Flow	% Change
2013 Summer Peak							
1	BASE CASE	WILSON -WARNERVL 230.00kV Ckt#1 Sec# 1	675.25	Amps	131.7	132.5	0.8
1	BASE CASE	WARNERVL-COTTLE B 230.00kV Ckt#1 Sec# 1	675.25	Amps	145.4	146.2	0.8
1	BASE CASE	TEMBLOR -BELRIDGE 115.00kV Ckt#1 Sec# 1	632.58	Amps	101.9	101.9	0.1
1	BASE CASE	STOREY 2-WILSON 230.00kV Ckt#1 Sec# 1	675.25	Amps	111.8	112.4	0.5
1	BASE CASE	STOREY 2-BORDEN 230.00kV Ckt#1 Sec# 1	675.25	Amps	124.7	125.2	0.5
1	BASE CASE	STOREY 1-WILSON 230.00kV Ckt#1 Sec# 1	743.02	Amps	119.7	120.2	0.6
1	BASE CASE	Q238TAP -CARRIZO 115.00kV Ckt#1 Sec# 1	376.53	Amps	104.6	104.7	0.1
1	BASE CASE	Q194SWST-Q166 230.00kV Ckt#1 Sec# 1	825.86	Amps	128.8	128.9	0.1
1	BASE CASE	Q194SWST-MIDWAY 230.00kV Ckt#1 Sec# 1	825.86	Amps	185.5	185.6	0.1
1	BASE CASE	Q166 -MIDWAY 230.00kV Ckt#1 Sec# 1	825.86	Amps	183.9	184.0	0.1
1	BASE CASE	PLACER -PLACER 115.00/ 60.00kV Bk#1	77	MVA	105.4	105.4	0.0
1	BASE CASE	ORO LOMA-DOS PALS 70.00kV Ckt#1 Sec# 1	243.31	Amps	105.5	104.8	-0.7
1	BASE CASE	MORROBAY-GATES 230.00kV Ckt#1 Sec# 1	825.11	Amps	107.9	107.7	-0.2
1	BASE CASE	LOSBANOS-WESTLEY 230.00kV Ckt#1 Sec# 1	1484.04	Amps	110.8	111.1	0.3
1	BASE CASE	LE GRAND-WILSON A 115.00kV Ckt#1 Sec# 1	441.8	Amps	102.8	102.9	0.0
1	BASE CASE	LAKE -LAKE 2 230.00/ 69.00kV Bk#1	160	MVA	101.1	101.1	0.0
1	BASE CASE	E.NICOLS-E.NICOLS 115.00/ 60.00kV Bk#2	58.5	MVA	123.8	123.8	0.0
1	BASE CASE	DELTA -CASCADE 115.00kV Ckt#1 Sec# 1	416.7	Amps	98.8	98.7	-0.1
1	BASE CASE	COTTLE B-BELLOTA 230.00kV Ckt#1 Sec# 1	675.25	Amps	134.1	134.8	0.8
1	BASE CASE	CHWCGNJT-CHWCGN 115.00kV Ckt#1 Sec# 1	296.21	Amps	101.6	101.6	0.0
1	BASE CASE	CARRIZO -TEMBLOR 115.00kV Ckt#1 Sec# 1	376.03	Amps	104.2	104.4	0.1
1	BASE CASE	BORDEN -STOREY 1 230.00kV Ckt#1 Sec# 1	675.25	Amps	146.1	146.7	0.6
1	BASE CASE	BELLTA T-BLLTA 1M 13.80/ 230.00kV Bk#1	40	MVA	100.0	100.0	0.0
2013 Summer Off-Peak							
1	BASE CASE	WHEELBR -COTWDPGE 115.00kV Ckt#1 Sec# 1	441.8	Amps	100.9	100.9	0.0

#	Outage Description	Facility	Rating	Unit	PU Flow	PU Flow	% Change
1	BASE CASE	WARNERVL-COTTLE B 230.00kV Ckt#1 Sec# 1	675.25	Amps	108.5	109.2	0.7
1	BASE CASE	SANGER -MC CALL 115.00kV Ckt#3 Sec# 1	823.35	Amps	108.7	108.7	0.0
1	BASE CASE	LOSBANOS-WESTLEY 230.00kV Ckt#1 Sec# 1	1484.04	Amps	118.7	119.3	0.5
1	BASE CASE	COTTLE B-BELLOTA 230.00kV Ckt#1 Sec# 1	675.25	Amps	103.2	103.9	0.7
2013 Spring Peak							
1	BASE CASE	WILSON -WARNERVL 230.00kV Ckt#1 Sec# 1	675.25	Amps	122.4	123.5	1.0
1	BASE CASE	WARNERVL-COTTLE B 230.00kV Ckt#1 Sec# 1	675.25	Amps	121.9	122.7	0.8
1	BASE CASE	STOREY 2-WILSON 230.00kV Ckt#1 Sec# 1	675.25	Amps	103.1	103.8	0.7
1	BASE CASE	STOREY 2-BORDEN 230.00kV Ckt#1 Sec# 1	675.25	Amps	113.2	113.9	0.7
1	BASE CASE	STOREY 1-WILSON 230.00kV Ckt#1 Sec# 1	743.02	Amps	110.4	111.1	0.7
1	BASE CASE	Q239SWST-Q166 230.00kV Ckt#2 Sec# 1	825.86	Amps	101.4	101.6	0.1
1	BASE CASE	Q239SWST-Q166 230.00kV Ckt#1 Sec# 1	825.86	Amps	101.4	101.6	0.1
1	BASE CASE	Q194SWST-MIDWAY 230.00kV Ckt#1 Sec# 1	825.86	Amps	101.4	101.6	0.1
1	BASE CASE	Q166 -Q194SWST 230.00kV Ckt#1 Sec# 1	825.86	Amps	101.4	101.6	0.1
1	BASE CASE	Q166 -MIDWAY 230.00kV Ckt#1 Sec# 1	825.86	Amps	101.4	101.6	0.1
1	BASE CASE	COTTLE B-BELLOTA 230.00kV Ckt#1 Sec# 1	675.25	Amps	112.8	113.6	0.8
1	BASE CASE	BORDEN -STOREY 1 230.00kV Ckt#1 Sec# 1	675.25	Amps	132.8	133.6	0.8
1	BASE CASE	BELLTA T-BLLTA 1M 13.80/ 230.00kV Bk#1	40	MVA	99.7	100.0	0.3

Table C-2: Category "B" Overloads

#	Outage Description	Facility	Rating	Unit	PU Flow	PU Flow	% Change
2013 Summer Peak							
131	Open Line MELONES 230-WILSON 230 #1 : Drop Generator at MELONE1 13.8 #1: 119 MW Dropped :	WILSON -WARNERVL 230.00kV Ckt#1 Sec# 1	793.23	Amps	136.7	137.9	1.2
285	Open Xfmr GATES 230/GATES 500 #11 :	WILSON -WARNERVL 230.00kV Ckt#1 Sec# 1	793.23	Amps	134.9	136.2	1.2
2	Open Line WESTLEY 230-LOSBANOS 230 #1 :	WILSON -WARNERVL 230.00kV Ckt#1 Sec# 1	793.23	Amps	130.3	131.5	1.2
185	Open Line MELONES 230-WILSON 230 #1 : Drop Generator at KERCKHOF 13.8 #1: 129 MW Dropped :	WILSON -WARNERVL 230.00kV Ckt#1 Sec# 1	793.23	Amps	125.6	126.4	0.8
166	Open Line MELONES 230-WILSON 230 #1 : Drop Generator at EXCHQUER 13.8 #1: 94.5 MW Droppe :	WILSON -WARNERVL 230.00kV Ckt#1 Sec# 1	793.23	Amps	124.4	125.5	1.1
196	Open Line KEARNEY 230-HERNDON 230 #1 :	WILSON -WARNERVL 230.00kV Ckt#1 Sec# 1	793.23	Amps	123.9	125.0	1.1
171	Open Line WESTLEY 230-LOSBANOS 230 #1 : Drop Generator at KERCKHOF 13.8 #1: 129 MW Dropped :	WILSON -WARNERVL 230.00kV Ckt#1 Sec# 1	793.23	Amps	123.1	123.9	0.7
152	Open Line WESTLEY 230-LOSBANOS 230 #1 : Drop Generator at EXCHQUER 13.8 #1: 94.5 MW Droppe :	WILSON -WARNERVL 230.00kV Ckt#1 Sec# 1	793.23	Amps	122.3	123.4	1.0
422	Open Line KEARNEY 230-HERNDON 230 #1 : Drop Generator at MELONE1 13.8 #1: 119 MW Dropped :	WILSON -WARNERVL 230.00kV Ckt#1 Sec# 1	793.23	Amps	120.7	121.7	1.0
11	Open Line PANOCHE 230-MCMULLN1 230 #1 : Open Line MCMULLN1 230-KEARNEY 230 #1 : Drop Load at MCMULLN1 230 #1 : 20.6 MW 4.1 MVAR D :	WILSON -WARNERVL 230.00kV Ckt#1 Sec# 1	793.23	Amps	119.4	120.1	0.8
LB-Gts1	Los Banos - Gates #1 500-kV	WILSON -WARNERVL 230.00kV Ckt#1 Sec# 1	793.23	Amps	118.9	119.6	0.7
Tsl-LB	Tracy-Los Banos 500-kV	WILSON -WARNERVL 230.00kV Ckt#1 Sec# 1	793.23	Amps	118.9	119.6	0.7
Tcy-LB	Tracy-Los Banos 500-kV	WILSON -WARNERVL 230.00kV Ckt#1 Sec# 1	793.23	Amps	117.3	118.0	0.7
189	Open Line HELM 230-MC CALL 230 #1 :	WILSON -WARNERVL 230.00kV Ckt#1 Sec# 1	793.23	Amps	117.0	117.7	0.7
291	Open Xfmr KEARNEY 70/KEARNEY 230 #2 :	WILSON -WARNERVL 230.00kV Ckt#1 Sec# 1	793.23	Amps	117.0	117.7	0.7
386	Open Line KEARNEY 230-HERNDON 230 #1 : Drop Generator at KERCKHOF 13.8 #1: 129 MW Dropped :	WILSON -WARNERVL 230.00kV Ckt#1 Sec# 1	793.23	Amps	116.2	117.0	0.8
62	Open Line DS AMIGO 230-PANOCHE 230 #1 :	WILSON -WARNERVL 230.00kV Ckt#1 Sec# 1	793.23	Amps	116.2	116.8	0.7
12	Open Line PANOCHE 230-HELM 230 #1 :	WILSON -WARNERVL 230.00kV Ckt#1 Sec# 1	793.23	Amps	116.1	116.8	0.7

#	Outage Description	Facility	Rating	Unit	PU Flow	PU Flow	% Change
411	Open Line PANOCHE 230-MCMULLN1 230 #1 : Open Line MCMULLN1 230-KEARNEY 230 #1 : Drop Load at MCMULLN1 230 #1 : 20.6 MW 4.1 MVAR D : Drop Generator at MELONE1 13.8 #1: 119 MW Dropped :	WILSON -WARNERVL 230.00kV Ckt#1 Sec# 1	793.23	Amps	116.0	116.8	0.8
3	Open Line MOSSLND2 230-PANOCHE 230 #1 :	WILSON -WARNERVL 230.00kV Ckt#1 Sec# 1	793.23	Amps	115.8	116.7	0.9
370	Open Line KEARNEY 230-HERNDON 230 #1 : Drop Generator at EXCHQUER 13.8 #1: 94.5 MW Droppe :	WILSON -WARNERVL 230.00kV Ckt#1 Sec# 1	793.23	Amps	115.9	116.7	0.8
5	Open Line LOSBANOS 230-PANOCHE 230 #1 :	WILSON -WARNERVL 230.00kV Ckt#1 Sec# 1	793.23	Amps	115.9	116.6	0.7
255	Open Line KEARNEY 70-OLDKERN 70 #1 : Open Line OLDKERN 70-BIOLA 70 #1 : Open Line OLDKERN 70-BOWLES 70 #1 : Drop Load at OLDKERN 70 #1 : 19 MW 3.8 MVAR Dropp : Drop Load at OLDKERN 70 #3 : 7.7 MW 1.5 MVAR Drop : Drop Load at BIOLA 70 #1 : 22 MW 4.4 MVAR Dropped : Drop Load at BOWLES 70 #1 : 18.5 MW 3.7 MVAR Drop :	WILSON -WARNERVL 230.00kV Ckt#1 Sec# 1	793.23	Amps	115.8	116.6	0.8
6	Open Line LOSBANOS 230-PANOCHE 230 #2 :	WILSON -WARNERVL 230.00kV Ckt#1 Sec# 1	793.23	Amps	115.6	116.3	0.7
202	Open Line MC CALL 230-HENTAP2 230 #1 : Open Line HENTAP2 230-GATES 230 #1 :	WILSON -WARNERVL 230.00kV Ckt#1 Sec# 1	793.23	Amps	115.4	116.1	0.6
26	Open Line CRESEY T 115-ATWATR J 115 #1 : Open Line ATWATR J 115-LIVNGSTN 115 #1 : Open Line ATWATR J 115-MERCED 115 #1 : Open Line LIVNGSTN 115-GALLO 115 #1 : Drop Load at LIVNGSTN 115 #3 : 24.9 MW 5 MVAR Dro : Drop Load at GALLO 115 #1 : 4.3 MW 3.6 MVAR Dropp :	WILSON -WARNERVL 230.00kV Ckt#1 Sec# 1	793.23	Amps	114.9	115.6	0.6
7	Open Line LOSBANOS 230-DS AMIGO 230 #1 :	WILSON -WARNERVL 230.00kV Ckt#1 Sec# 1	793.23	Amps	114.8	115.4	0.7
24	Open Line ATWATER 115-CRESEY T 115 #1 : Open Line CRESEY T 115-ATWATR J 115 #1 : Open Line CRESEY T 115-JRWD GEN 115 #1 : Open Line JRWD GEN 115-JR WOOD 115 #1 : Open Xfmr JRWD GEN 115/JRWCOGEN 9.11 #1 : Open Line JR WOOD 115-CRESSEY 115 #1 : Drop Load at JR WOOD 115 #1 : 11.7 MW 10.3 MVAR D : Drop Load at CRESSEY 115 #1 : 19.3 MW 3.9 MVAR Dr : Drop Generator at JRWCOGEN 9.11 #1 : 3.8 MW Droppe :	WILSON -WARNERVL 230.00kV Ckt#1 Sec# 1	793.23	Amps	114.7	115.3	0.6
233	Open Line PNDLJ2 115-PNEDLE 115 #1 : Open Line PNDLJ2 115-BULLARD 115 #1 : Open Line PNDLJ2 115-HERNDON 115 #1 : Drop Load at PNEDLE 115 #2 : 31.1 MW 6.3 MVAR Dro : Drop Load at PNEDLE 115 #3 : 40.9 MW 8.2 MVAR Dro : Close Line PNDLJ1 115-PNEDLE 115 #1 :	WILSON -WARNERVL 230.00kV Ckt#1 Sec# 1	793.23	Amps	114.6	115.2	0.6

#	Outage Description	Facility	Rating	Unit	PU Flow	PU Flow	% Change
25	Open Line CERTANJ1 115-CHWCHLLA 115 #1 : Open Line CERTANJ1 115-SHARON T 115 #1 : Open Line SHARON T 115-SHARON 115 #1 : Open Line SHARON T 115-OAKH_JCT 115 #1 : Open Line OAKH_JCT 115-CORSGOLD 115 #1 : Open Line OAKH_JCT 115-K1-JCT 115 #1 : Open Line CORSGOLD 115-OAKHURST 115 #1 : Open Line K1-JCT 115-KERCKHF2 115 #2 : Drop Load at SHARON 115 #1 : 7.1 MW 4.9 MVAR Drop : Drop Load at CORSGOLD 115 #1 : 2.2 MW 0.4 MVAR Dr :	WILSON -WARNERVL 230.00kV Ckt#1 Sec# 1	793.23	Amps	114.1	114.7	0.6
207	Open Line K1-JCT 115-KERCKHF2 115 #2 : Open Line K1-JCT 115-OAKH_JCT 115 #1 : Open Line OAKH_JCT 115-SHARON T 115 #1 : Open Line OAKH_JCT 115-CORSGOLD 115 #1 : Open Line SHARON T 115-CERTANJ1 115 #1 : Open Line SHARON T 115-SHARON 115 #1 : Open Line CERTANJ1 115-CHWCHLLA 115 #1 : Open Line CORSGOLD 115-OAKHURST 115 #1 : Drop Load at CORSGOLD 115 #1 : 2.2 MW 0.4 MVAR Dr : Drop Load at CORSGOLD 115 #2 : 26.5 MW 5.3 MVAR D :	WILSON -WARNERVL 230.00kV Ckt#1 Sec# 1	793.23	Amps	114.1	114.7	0.6
214	Open Line CLOVIS-2 115-CLOVISJ2 115 #1 : Open Line CLOVISJ2 115-KERCKHF2 115 #1 : Open Line CLOVISJ2 115-SANGER 115 #1 : Drop Load at CLOVIS-2 115 #3 : 45.3 MW 9.1 MVAR D : Close Line CLOVIS-1 115-CLOVIS-2 115 #1 :	WILSON -WARNERVL 230.00kV Ckt#1 Sec# 1	793.23	Amps	114.0	114.7	0.6
264	Open Line LEPRINO 70-LPRNO TP 70 #1 : Open Line LPRNO TP 70-LEMOORE 70 #1 : Open Line LPRNO TP 70-CANDLEWK 70 #1 : Open Line LPRNO TP 70-HENRITTA 70 #1 : Drop Load at LEPRINO 70 #1 : 6.6 MW 4.2 MVAR Drop : Drop Load at LEMOORE 70 #1 : 19.1 MW 3.8 MVAR Dro : Drop Load at LEMOORE 70 #2 : 33.2 MW 6.7 MVAR Dro :	WILSON -WARNERVL 230.00kV Ckt#1 Sec# 1	793.23	Amps	114.0	114.7	0.6
67	Open Xfmr WILSON A 115/WILSON 230 #1 :	WILSON -WARNERVL 230.00kV Ckt#1 Sec# 1	793.23	Amps	113.7	114.4	0.6
68	Open Xfmr WILSON B 115/WILSON 230 #2 :	WILSON -WARNERVL 230.00kV Ckt#1 Sec# 1	793.23	Amps	113.7	114.3	0.6
239	Open Line KINGSBRG 115-GAURD J1 115 #1 : Open Line GAURD J1 115-MC CALL 115 #1 : Open Line GAURD J1 115-GAURD J2 115 #1 : Open Line GAURD J2 115-GRDN GLS 115 #1 : Drop Load at GRDN GLS 115 #1 : 3.5 MW 1.1 MVAR Dr : Drop Load at KINGSBRG 115 #3 : 33 MW 6.6 MVAR Dro :	WILSON -WARNERVL 230.00kV Ckt#1 Sec# 1	793.23	Amps	113.6	114.3	0.6
58	Open Line BORDEN 70-CASSIDY 70 #1 : Open Line CASSIDY 70-RIVERROC 70 #1 : Open Line RIVERROC 70-COPPRMNE 70 #1 : Drop Load at CASSIDY 70 #1 : 14.5 MW 2.9 MVAR Dro : Drop	WILSON -WARNERVL 230.00kV Ckt#1 Sec# 1	793.23	Amps	113.5	114.2	0.7

#	Outage Description	Facility	Rating	Unit	PU Flow	PU Flow	% Change
	Load at RIVERROC 70 #1 : 2 MW 1.8 MVAR Dropp :						
280	Open Xfmr HERNDON 230/HERNDON 115 #2 :	WILSON -WARNERVL 230.00kV Ckt#1 Sec# 1	793.23	Amps	113.5	114.1	0.6
279	Open Xfmr HERNDON 230/HERNDON 115 #1 :	WILSON -WARNERVL 230.00kV Ckt#1 Sec# 1	793.23	Amps	113.5	114.1	0.7
54	Open Line CANANDGA 70-TRIGO J 70 #1 : Open Line CANANDGA 70-GLASS 70 #1 : Open Line TRIGO J 70-BONITA 70 #1 : Open Line TRIGO J 70-TRIGO 70 #1 : Open Line TRIGO 70-MADERA 70 #1 : Open Line TRIGO 70-EL PECO 70 #1 : Drop Load at CANANDGA 70 #1 : 7.6 MW 5.7 MVAR Dro : Drop Load at BONITA 70 #1 : 14.6 MW 2.9 MVAR Drop : Drop Load at EL PECO 70 #1 : 10 MW 2 MVAR Dropped : Drop Load at EL PECO 70 #2 : 7.3 MW 1.4 MVAR Drop :	WILSON -WARNERVL 230.00kV Ckt#1 Sec# 1	793.23	Amps	113.4	114.1	0.7
248	Open Line BIOLA 70-OLDKERN 70 #1 : Drop Load at BIOLA 70 #1 : 22 MW 4.4 MVAR Dropped :	WILSON -WARNERVL 230.00kV Ckt#1 Sec# 1	793.23	Amps	113.4	114.1	0.6
289	Open Xfmr KINGSBRG 115/KNGLOBUS 70 #2 :	WILSON -WARNERVL 230.00kV Ckt#1 Sec# 1	793.23	Amps	113.4	114.1	0.6
131	Open Line MELONES 230-WILSON 230 #1 : Drop Generator at MELONE1 13.8 #1: 119 MW Dropped :	WARNERVL-COTTLE B 230.00kV Ckt#1 Sec# 1	793.23	Amps	148.6	149.1	0.5
285	Open Xfmr GATES 230/GATES 500 #11 :	WARNERVL-COTTLE B 230.00kV Ckt#1 Sec# 1	793.23	Amps	140.1	140.8	0.6
185	Open Line MELONES 230-WILSON 230 #1 : Drop Generator at KERCKHOF 13.8 #1: 129 MW Dropped :	WARNERVL-COTTLE B 230.00kV Ckt#1 Sec# 1	793.23	Amps	136.5	137.3	0.8
166	Open Line MELONES 230-WILSON 230 #1 : Drop Generator at EXCHQUER 13.8 #1: 94.5 MW Droppe :	WARNERVL-COTTLE B 230.00kV Ckt#1 Sec# 1	793.23	Amps	136.0	136.4	0.3
196	Open Line KEARNEY 230-HERNDON 230 #1 :	WARNERVL-COTTLE B 230.00kV Ckt#1 Sec# 1	793.23	Amps	131.6	132.0	0.4
422	Open Line KEARNEY 230-HERNDON 230 #1 : Drop Generator at MELONE1 13.8 #1: 119 MW Dropped :	WARNERVL-COTTLE B 230.00kV Ckt#1 Sec# 1	793.23	Amps	130.8	131.2	0.4
Tsl-LB	Tracy-Los Banos 500-kV	WARNERVL-COTTLE B 230.00kV Ckt#1 Sec# 1	793.23	Amps	129.6	130.4	0.7
11	Open Line PANOCHE 230-MCMULLN1 230 #1 : Open Line MCMULLN1 230-KEARNEY 230 #1 : Drop Load at MCMULLN1 230 #1 : 20.6 MW 4.1 MVAR D :	WARNERVL-COTTLE B 230.00kV Ckt#1 Sec# 1	793.23	Amps	128.3	129.0	0.7
411	Open Line PANOCHE 230-MCMULLN1 230 #1 : Open Line MCMULLN1 230-KEARNEY 230 #1 : Drop Load at MCMULLN1 230 #1 : 20.6 MW 4.1 MVAR D : Drop Generator at MELONE1 13.8 #1: 119 MW Dropped :	WARNERVL-COTTLE B 230.00kV Ckt#1 Sec# 1	793.23	Amps	127.6	128.2	0.7
291	Open Xfmr KEARNEY 70/KEARNEY 230 #2 :	WARNERVL-COTTLE B 230.00kV Ckt#1 Sec# 1	793.23	Amps	127.3	127.9	0.6

#	Outage Description	Facility	Rating	Unit	PU Flow	PU Flow	% Change
3	Open Line MOSSLND2 230-PANOCHE 230 #1 :	WARNERVL-COTTLE B 230.00kV Ckt#1 Sec# 1	793.23	Amps	126.7	127.5	0.7
189	Open Line HELM 230-MC CALL 230 #1 :	WARNERVL-COTTLE B 230.00kV Ckt#1 Sec# 1	793.23	Amps	126.6	127.3	0.7
255	Open Line KEARNEY 70-OLDKERN 70 #1 : Open Line OLDKERN 70-BIOLA 70 #1 : Open Line OLDKERN 70-BOWLES 70 #1 : Drop Load at OLDKERN 70 #1 : 19 MW 3.8 MVAR Dropp : Drop Load at OLDKERN 70 #3 : 7.7 MW 1.5 MVAR Drop : Drop Load at BIOLA 70 #1 : 22 MW 4.4 MVAR Dropped : Drop Load at BOWLES 70 #1 : 18.5 MW 3.7 MVAR Drop :	WARNERVL-COTTLE B 230.00kV Ckt#1 Sec# 1	793.23	Amps	126.6	127.1	0.5
12	Open Line PANOCHE 230-HELM 230 #1 :	WARNERVL-COTTLE B 230.00kV Ckt#1 Sec# 1	793.23	Amps	126.1	126.8	0.7
415	Open Line HELM 230-MC CALL 230 #1 : Drop Generator at MELONE1 13.8 #1: 119 MW Dropped :	WARNERVL-COTTLE B 230.00kV Ckt#1 Sec# 1	793.23	Amps	126.2	126.8	0.6
202	Open Line MC CALL 230-HENTAP2 230 #1 : Open Line HENTAP2 230-GATES 230 #1 :	WARNERVL-COTTLE B 230.00kV Ckt#1 Sec# 1	793.23	Amps	125.9	126.6	0.7
26	Open Line CRESEY T 115-ATWATR J 115 #1 : Open Line ATWATR J 115-LIVNGSTN 115 #1 : Open Line ATWATR J 115-MERCED 115 #1 : Open Line LIVNGSTN 115-GALLO 115 #1 : Drop Load at LIVNGSTN 115 #3 : 24.9 MW 5 MVAR Dro : Drop Load at GALLO 115 #1 : 4.3 MW 3.6 MVAR Dropp :	WARNERVL-COTTLE B 230.00kV Ckt#1 Sec# 1	793.23	Amps	125.9	126.5	0.7
386	Open Line KEARNEY 230-HERNDON 230 #1 : Drop Generator at KERCKHOF 13.8 #1: 129 MW Dropped :	WARNERVL-COTTLE B 230.00kV Ckt#1 Sec# 1	793.23	Amps	125.8	126.5	0.8
62	Open Line DS AMIGO 230-PANOCHE 230 #1 :	WARNERVL-COTTLE B 230.00kV Ckt#1 Sec# 1	793.23	Amps	125.8	126.5	0.7
24	Open Line ATWATER 115-CRESEY T 115 #1 : Open Line CRESEY T 115-ATWATR J 115 #1 : Open Line CRESEY T 115-JRWD GEN 115 #1 : Open Line JRWD GEN 115-JR WOOD 115 #1 : Open Xfmr JRWD GEN 115/JRWCOGEN 9.11 #1 : Open Line JR WOOD 115-CRESSEY 115 #1 : Drop Load at JR WOOD 115 #1 : 11.7 MW 10.3 MVAR D : Drop Load at CRESSEY 115 #1 : 19.3 MW 3.9 MVAR Dr : Drop Generator at JRWCOGEN 9.11 #1 : 3.8 MW Droppe :	WARNERVL-COTTLE B 230.00kV Ckt#1 Sec# 1	793.23	Amps	125.7	126.4	0.7
5	Open Line LOSBANOS 230-PANOCHE 230 #1 :	WARNERVL-COTTLE B 230.00kV Ckt#1 Sec# 1	793.23	Amps	125.7	126.4	0.7
6	Open Line LOSBANOS 230-PANOCHE 230 #2 :	WARNERVL-COTTLE B 230.00kV Ckt#1 Sec# 1	793.23	Amps	125.5	126.2	0.7
412	Open Line PANOCHE 230-HELM 230 #1 : Drop Generator at MELONE1 13.8 #1: 119 MW Dropped :	WARNERVL-COTTLE B 230.00kV Ckt#1 Sec# 1	793.23	Amps	125.7	126.2	0.5
233	Open Line PNDLJ2 115-PNEDLE 115 #1 : Open Line PNDLJ2 115-BULLARD 115 #1 : Open Line PNDLJ2 115-HERNDON 115 #1 : Drop Load at PNEDLE 115 #2 : 31.1 MW 6.3 MVAR Dro : Drop Load at	WARNERVL-COTTLE B 230.00kV Ckt#1 Sec# 1	793.23	Amps	125.4	126.1	0.7

#	Outage Description	Facility	Rating	Unit	PU Flow	PU Flow	% Change
	PNEDLE 115 #3 : 40.9 MW 8.2 MVAR Dro : Close Line PNDLJ1 115-PNEDLE 115 #1 :						
25	Open Line CERTANJ1 115-CHWCHLLA 115 #1 : Open Line CERTANJ1 115-SHARON T 115 #1 : Open Line SHARON T 115-SHARON 115 #1 : Open Line SHARON T 115-OAKH_JCT 115 #1 : Open Line OAKH_JCT 115-CORSGOLD 115 #1 : Open Line OAKH_JCT 115-K1-JCT 115 #1 : Open Line CORSGOLD 115-OAKHURST 115 #1 : Open Line K1-JCT 115-KERCKHF2 115 #2 : Drop Load at SHARON 115 #1 : 7.1 MW 4.9 MVAR Drop : Drop Load at CORSGOLD 115 #1 : 2.2 MW 0.4 MVAR Dr :	WARNERVL-COTTLE B 230.00kV Ckt#1 Sec# 1	793.23	Amps	125.2	125.9	0.7
207	Open Line K1-JCT 115-KERCKHF2 115 #2 : Open Line K1-JCT 115-OAKH_JCT 115 #1 : Open Line OAKH_JCT 115-SHARON T 115 #1 : Open Line OAKH_JCT 115-CORSGOLD 115 #1 : Open Line SHARON T 115-CERTANJ1 115 #1 : Open Line SHARON T 115-SHARON 115 #1 : Open Line CERTANJ1 115-CHWCHLLA 115 #1 : Open Line CORSGOLD 115-OAKHURST 115 #1 : Drop Load at CORSGOLD 115 #1 : 2.2 MW 0.4 MVAR Dr : Drop Load at CORSGOLD 115 #2 : 26.5 MW 5.3 MVAR D :	WARNERVL-COTTLE B 230.00kV Ckt#1 Sec# 1	793.23	Amps	125.2	125.9	0.7
264	Open Line LEPRINO 70-LPRNO TP 70 #1 : Open Line LPRNO TP 70-LEMOORE 70 #1 : Open Line LPRNO TP 70-CANDLEWK 70 #1 : Open Line LPRNO TP 70-HENRITTA 70 #1 : Drop Load at LEPRINO 70 #1 : 6.6 MW 4.2 MVAR Drop : Drop Load at LEMOORE 70 #1 : 19.1 MW 3.8 MVAR Dro : Drop Load at LEMOORE 70 #2 : 33.2 MW 6.7 MVAR Dro :	WARNERVL-COTTLE B 230.00kV Ckt#1 Sec# 1	793.23	Amps	125.1	125.8	0.7
358	Open Line CASSIDY 70-RIVERROC 70 #1 : Open Line CASSIDY 70-BORDEN 70 #1 : Open Line RIVERROC 70-COPPRMNE 70 #1 : Drop Load at CASSIDY 70 #1 : 14.5 MW 2.9 MVAR Dro : Drop Load at RIVERROC 70 #1 : 2 MW 1.8 MVAR Dropp : Drop Generator at FRIANTDM 6.6 #2: 14.7 MW Dropped :	TVY VLLY-REEDLEY 70.00kV Ckt#1 Sec# 1	297.75	Amps	128.3	128.2	-0.1
70	Open Xfmr ORO LOMA 70/ORO LOMA 115 #2 : Open Line ORO LOMA 115-DFSTP 115 #1 : Open Line ORO LOMA 115-EL NIDO 115 #1 :	TOMATAK -MENDOTA 70.00kV Ckt#1 Sec# 1	395.9	Amps	104.7	105.1	0.3
408	Open Line GATES 230-MORROBAY 230 #1 : Drop Generator at HELMS 1 18 #1: 404 MW Dropped :	TEMPLETN-GATES 230.00kV Ckt#1 Sec# 1	974.97	Amps	119.9	119.7	-0.2
392	Open Line GATES 230-MORROBAY 230 #1 : Drop Generator at	TEMPLETN-GATES 230.00kV Ckt#1 Sec# 1	974.97	Amps	118.5	118.3	-0.2

#	Outage Description	Facility	Rating	Unit	PU Flow	PU Flow	% Change
	KERCKHOF 13.8 #1: 129 MW Dropped :						
376	Open Line GATES 230-MORROBAY 230 #1 : Drop Generator at EXCHQUER 13.8 #1: 94.5 MW Droppe :	TEMPLETN-GATES 230.00kV Ckt#1 Sec# 1	974.97	Amps	118.1	117.9	-0.2
428	Open Line GATES 230-MORROBAY 230 #1 : Drop Generator at MELONE1 13.8 #1: 119 MW Dropped :	TEMPLETN-GATES 230.00kV Ckt#1 Sec# 1	974.97	Amps	118.0	117.8	-0.2
204	Open Line GATES 230-MORROBAY 230 #1 :	TEMPLETN-GATES 230.00kV Ckt#1 Sec# 1	974.97	Amps	117.8	117.6	-0.2
204	Open Line GATES 230-MORROBAY 230 #1 :	TEMBLOR -BELRIDGE 115.00kV Ckt#1 Sec# 1	743.02	Amps	100.4	100.4	0.0
428	Open Line GATES 230-MORROBAY 230 #1 : Drop Generator at MELONE1 13.8 #1: 119 MW Dropped :	TEMBLOR -BELRIDGE 115.00kV Ckt#1 Sec# 1	743.02	Amps	100.3	100.4	0.0
376	Open Line GATES 230-MORROBAY 230 #1 : Drop Generator at EXCHQUER 13.8 #1: 94.5 MW Droppe :	TEMBLOR -BELRIDGE 115.00kV Ckt#1 Sec# 1	743.02	Amps	100.3	100.3	0.0
392	Open Line GATES 230-MORROBAY 230 #1 : Drop Generator at KERCKHOF 13.8 #1: 129 MW Dropped :	TEMBLOR -BELRIDGE 115.00kV Ckt#1 Sec# 1	743.02	Amps	100.1	100.1	0.0
128	Open Line STOREY 1 230-WILSON 230 #1 : Open Line STOREY 1 230-BORDEN 230 #1 : Drop Load at STOREY 1 230 #1 : 38.3 MW 7.7 MVAR D : Drop Generator at MELONE1 13.8 #1: 119 MW Dropped :	STOREY 2-WILSON 230.00kV Ckt#1 Sec# 1	793.23	Amps	166.7	167.7	0.9
165	Open Line STOREY 1 230-WILSON 230 #1 : Open Line STOREY 1 230-BORDEN 230 #1 : Drop Load at STOREY 1 230 #1 : 38.3 MW 7.7 MVAR D : Drop Generator at EXCHQUER 13.8 #1: 94.5 MW Droppe :	STOREY 2-WILSON 230.00kV Ckt#1 Sec# 1	793.23	Amps	166.2	167.1	0.9
16	Open Line STOREY 1 230-WILSON 230 #1 : Open Line STOREY 1 230-BORDEN 230 #1 : Drop Load at STOREY 1 230 #1 : 38.3 MW 7.7 MVAR D :	STOREY 2-WILSON 230.00kV Ckt#1 Sec# 1	793.23	Amps	161.4	162.4	0.9
184	Open Line STOREY 1 230-WILSON 230 #1 : Open Line STOREY 1 230-BORDEN 230 #1 : Drop Load at STOREY 1 230 #1 : 38.3 MW 7.7 MVAR D : Drop Generator at KERCKHOF 13.8 #1: 129 MW Dropped :	STOREY 2-WILSON 230.00kV Ckt#1 Sec# 1	793.23	Amps	157.1	157.8	0.7
146	Open Line STOREY 1 230-WILSON 230 #1 : Open Line STOREY 1 230-BORDEN 230 #1 : Drop Load at STOREY 1 230 #1 : 38.3 MW 7.7 MVAR D : Drop Generator at HELMS 1 18 #1: 404 MW Dropped :	STOREY 2-WILSON 230.00kV Ckt#1 Sec# 1	793.23	Amps	129.8	130.5	0.7
285	Open Xfmr GATES 230/GATES 500 #11 :	STOREY 2-WILSON 230.00kV Ckt#1 Sec# 1	793.23	Amps	109.1	109.9	0.8
422	Open Line KEARNEY 230-HERNDON 230 #1 : Drop Generator at MELONE1 13.8 #1: 119 MW Dropped :	STOREY 2-WILSON 230.00kV Ckt#1 Sec# 1	793.23	Amps	109.0	109.6	0.6
370	Open Line KEARNEY 230-HERNDON 230 #1 : Drop Generator at EXCHQUER 13.8 #1: 94.5 MW Droppe :	STOREY 2-WILSON 230.00kV Ckt#1 Sec# 1	793.23	Amps	108.5	109.1	0.5
196	Open Line KEARNEY 230-HERNDON 230 #1 :	STOREY 2-WILSON 230.00kV Ckt#1 Sec# 1	793.23	Amps	106.1	106.7	0.6
152	Open Line WESTLEY 230-LOSBANOS 230 #1 : Drop Generator at	STOREY 2-WILSON 230.00kV Ckt#1 Sec# 1	793.23	Amps	105.4	106.0	0.7

#	Outage Description	Facility	Rating	Unit	PU Flow	PU Flow	% Change
	EXCHQUER 13.8 #1: 94.5 MW Droppe :						
411	Open Line PANOCHE 230-MCMULLN1 230 #1 : Open Line MCMULLN1 230-KEARNEY 230 #1 : Drop Load at MCMULLN1 230 #1 : 20.6 MW 4.1 MVAR D : Drop Generator at MELONE1 13.8 #1: 119 MW Dropped :	STOREY 2-WILSON 230.00kV Ckt#1 Sec# 1	793.23	Amps	104.4	104.9	0.5
160	Open Line PANOCHE 230-MCMULLN1 230 #1 : Open Line MCMULLN1 230-KEARNEY 230 #1 : Drop Load at MCMULLN1 230 #1 : 20.6 MW 4.1 MVAR D : Drop Generator at EXCHQUER 13.8 #1: 94.5 MW Droppe :	STOREY 2-WILSON 230.00kV Ckt#1 Sec# 1	793.23	Amps	103.9	104.4	0.5
107	Open Line CERTANJ1 115-CHWCHLLA 115 #1 : Open Line CERTANJ1 115-SHARON T 115 #1 : Open Line SHARON T 115-SHARON 115 #1 : Open Line SHARON T 115-OAKH_JCT 115 #1 : Open Line OAKH_JCT 115-CORSGOLD 115 #1 : Open Line OAKH_JCT 115-K1-JCT 115 #1 : Open Line CORSGOLD 115-OAKHURST 115 #1 : Open Line K1-JCT 115-KERCKHF2 115 #2 : Drop Load at SHARON 115 #1 : 7.1 MW 4.9 MVAR Drop : Drop Load at CORSGOLD 115 #1 : 2.2 MW 0.4 MVAR Dr :	STOREY 2-WILSON 230.00kV Ckt#1 Sec# 1	793.23	Amps	103.0	103.5	0.5
2	Open Line WESTLEY 230-LOSBANOS 230 #1 :	STOREY 2-WILSON 230.00kV Ckt#1 Sec# 1	793.23	Amps	102.6	103.2	0.7
386	Open Line KEARNEY 230-HERNDON 230 #1 : Drop Generator at KERCKHOF 13.8 #1: 129 MW Dropped :	STOREY 2-WILSON 230.00kV Ckt#1 Sec# 1	793.23	Amps	102.5	103.1	0.6
415	Open Line HELM 230-MC CALL 230 #1 : Drop Generator at MELONE1 13.8 #1: 119 MW Dropped :	STOREY 2-WILSON 230.00kV Ckt#1 Sec# 1	793.23	Amps	102.6	103.0	0.4
363	Open Line HELM 230-MC CALL 230 #1 : Drop Generator at EXCHQUER 13.8 #1: 94.5 MW Droppe :	STOREY 2-WILSON 230.00kV Ckt#1 Sec# 1	793.23	Amps	102.2	102.6	0.5
11	Open Line PANOCHE 230-MCMULLN1 230 #1 : Open Line MCMULLN1 230-KEARNEY 230 #1 : Drop Load at MCMULLN1 230 #1 : 20.6 MW 4.1 MVAR D :	STOREY 2-WILSON 230.00kV Ckt#1 Sec# 1	793.23	Amps	101.5	102.1	0.5
412	Open Line PANOCHE 230-HELM 230 #1 : Drop Generator at MELONE1 13.8 #1: 119 MW Dropped :	STOREY 2-WILSON 230.00kV Ckt#1 Sec# 1	793.23	Amps	101.3	101.7	0.4
106	Open Line CHWCHLLA 115-CERTAN T 115 #1 : Open Line CERTAN T 115-LE GRAND 115 #1 : Open Line CERTAN T 115-CERTANJ2 115 #1 : Open Line CERTANJ2 115-CHWCGNJT 115 #1 : Open Line CHWCGNJT 115-CERTTEED 115 #1 : Open Line CHWCGNJT 115-CHWCGN 115 #1 : Open Line CHWCGN 115-CHWCHLA2 115 #1 : Open Xfmr CHWCGN 115/CHOWCOGN 13.8 #1 : Open Xfmr CHWCHLA2 115/CHWCHLA2 13.8 #1 :	STOREY 2-WILSON 230.00kV Ckt#1 Sec# 1	793.23	Amps	101.0	101.4	0.5

#	Outage Description	Facility	Rating	Unit	PU Flow	PU Flow	% Change
	Drop Load at CERTTEED 115 #1 : 9.9 MW 6.9 MVAR Dr :						
28	Open Line LE GRAND 115-WILSON A 115 #1 :	STOREY 2-WILSON 230.00kV Ckt#1 Sec# 1	793.23	Amps	100.9	101.4	0.5
161	Open Line PANOCHE 230-HELM 230 #1 : Drop Generator at EXCHQUER 13.8 #1: 94.5 MW Droppe :	STOREY 2-WILSON 230.00kV Ckt#1 Sec# 1	793.23	Amps	100.8	101.3	0.5
116	Open Line CANANDGA 70-TRIGO J 70 #1 : Open Line CANANDGA 70-GLASS 70 #1 : Open Line TRIGO J 70-BONITA 70 #1 : Open Line TRIGO J 70-TRIGO 70 #1 : Open Line TRIGO 70-MADERA 70 #1 : Open Line TRIGO 70-EL PECO 70 #1 : Drop Load at CANANDGA 70 #1 : 7.6 MW 5.7 MVAR Dro : Drop Load at BONITA 70 #1 : 14.6 MW 2.9 MVAR Drop : Drop Load at EL PECO 70 #1 : 10 MW 2 MVAR Dropped : Drop Load at EL PECO 70 #2 : 7.3 MW 1.4 MVAR Drop :	STOREY 2-WILSON 230.00kV Ckt#1 Sec# 1	793.23	Amps	100.7	101.2	0.4
426	Open Line MC CALL 230-HENTAP2 230 #1 : Open Line HENTAP2 230-GATES 230 #1 : Drop Generator at MELONE1 13.8 #1: 119 MW Dropped :	STOREY 2-WILSON 230.00kV Ckt#1 Sec# 1	793.23	Amps	100.3	100.8	0.4
114	Open Line NEWHALL 115-DAIRYLND 115 #1 : Open Line NEWHALL 115-MADERAPR 115 #1 : Open Line MADERAPR 115-MENDOTA 115 #1 : Open Xfmr MADERAPR 115/MADERA_G 13.8 #1 : Drop Load at NEWHALL 115 #2 : 8.7 MW 1.7 MVAR Dro : Drop Load at NEWHALL 115 #3 : 10.8 MW 2.1 MVAR Dr : Drop Load at MADERA_G 13.8 #ss: 3.6 MW 0.8 MVAR D : Drop Generator at MADERA_G 13.8 #1 : 28.6 MW Dropp : Drop Generator at EXCHQUER 13.8 #1: 94.5 MW Droppe :	STOREY 2-WILSON 230.00kV Ckt#1 Sec# 1	793.23	Amps	100.2	100.6	0.4
169	Open Line DS AMIGO 230-PANOCHE 230 #1 : Drop Generator at EXCHQUER 13.8 #1: 94.5 MW Droppe :	STOREY 2-WILSON 230.00kV Ckt#1 Sec# 1	793.23	Amps	99.9	100.3	0.5
374	Open Line MC CALL 230-HENTAP2 230 #1 : Open Line HENTAP2 230-GATES 230 #1 : Drop Generator at EXCHQUER 13.8 #1: 94.5 MW Droppe :	STOREY 2-WILSON 230.00kV Ckt#1 Sec# 1	793.23	Amps	99.9	100.3	0.4
155	Open Line LOSBANOS 230-PANOCHE 230 #1 : Drop Generator at EXCHQUER 13.8 #1: 94.5 MW Droppe :	STOREY 2-WILSON 230.00kV Ckt#1 Sec# 1	793.23	Amps	99.8	100.2	0.5
171	Open Line WESTLEY 230-LOSBANOS 230 #1 : Drop Generator at KERCKHOF 13.8 #1: 129 MW Dropped :	STOREY 2-WILSON 230.00kV Ckt#1 Sec# 1	793.23	Amps	99.8	100.2	0.5

#	Outage Description	Facility	Rating	Unit	PU Flow	PU Flow	% Change
153	Open Line MOSSLND2 230-PANOCHE 230 #1 : Drop Generator at EXCHQUER 13.8 #1: 94.5 MW Droppe :	STOREY 2-WILSON 230.00kV Ckt#1 Sec# 1	793.23	Amps	99.6	100.2	0.6
156	Open Line LOSBANOS 230-PANOCHE 230 #2 : Drop Generator at EXCHQUER 13.8 #1: 94.5 MW Droppe :	STOREY 2-WILSON 230.00kV Ckt#1 Sec# 1	793.23	Amps	99.6	100.1	0.5
115	Open Line PANOCHET 115-MENDOTA 115 #1 : Open Line PANOCHET 115-PANOCHE 115 #1 : Drop Generator at DG_PAN1 13.8 #1 : 49 MW Dropped : Drop Generator at EXCHQUER 13.8 #1: 94.5 MW Droppe :	STOREY 2-WILSON 230.00kV Ckt#1 Sec# 1	793.23	Amps	99.6	100.1	0.4
128	Open Line STOREY 1 230-WILSON 230 #1 : Open Line STOREY 1 230-BORDEN 230 #1 : Drop Load at STOREY 1 230 #1 : 38.3 MW 7.7 MVAR D : Drop Generator at MELONE1 13.8 #1: 119 MW Dropped :	STOREY 2-BORDEN 230.00kV Ckt#1 Sec# 1	793.23	Amps	177.9	178.9	0.9
165	Open Line STOREY 1 230-WILSON 230 #1 : Open Line STOREY 1 230-BORDEN 230 #1 : Drop Load at STOREY 1 230 #1 : 38.3 MW 7.7 MVAR D : Drop Generator at EXCHQUER 13.8 #1: 94.5 MW Droppe :	STOREY 2-BORDEN 230.00kV Ckt#1 Sec# 1	793.23	Amps	177.3	178.2	0.9
16	Open Line STOREY 1 230-WILSON 230 #1 : Open Line STOREY 1 230-BORDEN 230 #1 : Drop Load at STOREY 1 230 #1 : 38.3 MW 7.7 MVAR D :	STOREY 2-BORDEN 230.00kV Ckt#1 Sec# 1	793.23	Amps	172.5	173.5	0.9
184	Open Line STOREY 1 230-WILSON 230 #1 : Open Line STOREY 1 230-BORDEN 230 #1 : Drop Load at STOREY 1 230 #1 : 38.3 MW 7.7 MVAR D : Drop Generator at KERCKHOF 13.8 #1: 129 MW Dropped :	STOREY 2-BORDEN 230.00kV Ckt#1 Sec# 1	793.23	Amps	168.2	168.9	0.7
146	Open Line STOREY 1 230-WILSON 230 #1 : Open Line STOREY 1 230-BORDEN 230 #1 : Drop Load at STOREY 1 230 #1 : 38.3 MW 7.7 MVAR D : Drop Generator at HELMS 1 18 #1: 404 MW Dropped :	STOREY 2-BORDEN 230.00kV Ckt#1 Sec# 1	793.23	Amps	140.7	141.4	0.7
285	Open Xfmr GATES 230/GATES 500 #11 :	STOREY 2-BORDEN 230.00kV Ckt#1 Sec# 1	793.23	Amps	120.2	120.9	0.8
422	Open Line KEARNEY 230-HERNDON 230 #1 : Drop Generator at MELONE1 13.8 #1: 119 MW Dropped :	STOREY 2-BORDEN 230.00kV Ckt#1 Sec# 1	793.23	Amps	120.1	120.7	0.6
370	Open Line KEARNEY 230-HERNDON 230 #1 : Drop Generator at EXCHQUER 13.8 #1: 94.5 MW Droppe :	STOREY 2-BORDEN 230.00kV Ckt#1 Sec# 1	793.23	Amps	119.6	120.1	0.5
196	Open Line KEARNEY 230-HERNDON 230 #1 :	STOREY 2-BORDEN 230.00kV Ckt#1 Sec# 1	793.23	Amps	117.1	117.7	0.6
152	Open Line WESTLEY 230-LOSBANOS 230 #1 : Drop Generator at EXCHQUER 13.8 #1: 94.5 MW Droppe :	STOREY 2-BORDEN 230.00kV Ckt#1 Sec# 1	793.23	Amps	116.4	117.1	0.7
411	Open Line PANOCHE 230-MCMULLN1 230 #1 : Open Line MCMULLN1 230-KEARNEY 230 #1 : Drop Load at MCMULLN1 230 #1 : 20.6 MW 4.1 MVAR D : Drop Generator at MELONE1 13.8 #1: 119 MW Dropped :	STOREY 2-BORDEN 230.00kV Ckt#1 Sec# 1	793.23	Amps	115.5	116.0	0.6

#	Outage Description	Facility	Rating	Unit	PU Flow	PU Flow	% Change
160	Open Line PANOCHE 230-MCMULLN1 230 #1 : Open Line MCMULLN1 230-KEARNEY 230 #1 : Drop Load at MCMULLN1 230 #1 : 20.6 MW 4.1 MVAR D : Drop Generator at EXCHQUER 13.8 #1: 94.5 MW Droppe :	STOREY 2-BORDEN 230.00kV Ckt#1 Sec# 1	793.23	Amps	114.9	115.5	0.5
107	Open Line CERTANJ1 115-CHWCHLLA 115 #1 : Open Line CERTANJ1 115-SHARON T 115 #1 : Open Line SHARON T 115-SHARON 115 #1 : Open Line SHARON T 115-OAKH_JCT 115 #1 : Open Line OAKH_JCT 115-CORSGOLD 115 #1 : Open Line OAKH_JCT 115-K1-JCT 115 #1 : Open Line CORSGOLD 115-OAKHURST 115 #1 : Open Line K1-JCT 115-KERCKHF2 115 #2 : Drop Load at SHARON 115 #1 : 7.1 MW 4.9 MVAR Drop : Drop Load at CORSGOLD 115 #1 : 2.2 MW 0.4 MVAR Dr :	STOREY 2-BORDEN 230.00kV Ckt#1 Sec# 1	793.23	Amps	114.0	114.4	0.5
2	Open Line WESTLEY 230-LOSBANOS 230 #1 :	STOREY 2-BORDEN 230.00kV Ckt#1 Sec# 1	793.23	Amps	113.6	114.3	0.6
415	Open Line HELM 230-MC CALL 230 #1 : Drop Generator at MELONE1 13.8 #1: 119 MW Dropped :	STOREY 2-BORDEN 230.00kV Ckt#1 Sec# 1	793.23	Amps	113.7	114.1	0.4
386	Open Line KEARNEY 230-HERNDON 230 #1 : Drop Generator at KERCKHOF 13.8 #1: 129 MW Dropped :	STOREY 2-BORDEN 230.00kV Ckt#1 Sec# 1	793.23	Amps	113.5	114.0	0.5
363	Open Line HELM 230-MC CALL 230 #1 : Drop Generator at EXCHQUER 13.8 #1: 94.5 MW Droppe :	STOREY 2-BORDEN 230.00kV Ckt#1 Sec# 1	793.23	Amps	113.2	113.6	0.5
11	Open Line PANOCHE 230-MCMULLN1 230 #1 : Open Line MCMULLN1 230-KEARNEY 230 #1 : Drop Load at MCMULLN1 230 #1 : 20.6 MW 4.1 MVAR D :	STOREY 2-BORDEN 230.00kV Ckt#1 Sec# 1	793.23	Amps	112.5	113.1	0.5
412	Open Line PANOCHE 230-HELM 230 #1 : Drop Generator at MELONE1 13.8 #1: 119 MW Dropped :	STOREY 2-BORDEN 230.00kV Ckt#1 Sec# 1	793.23	Amps	112.3	112.8	0.4
106	Open Line CHWCHLLA 115-CERTAN T 115 #1 : Open Line CERTAN T 115-LE GRAND 115 #1 : Open Line CERTAN T 115-CERTANJ2 115 #1 : Open Line CERTANJ2 115-CHWCGNJT 115 #1 : Open Line CHWCGNJT 115-CERTTEED 115 #1 : Open Line CHWCGNJT 115-CHWCGN 115 #1 : Open Line CHWCGN 115-CHWCHLA2 115 #1 : Open Xfmr CHWCGN 115/CHOWCOGN 13.8 #1 : Open Xfmr CHWCHLA2 115/CHWCHLA2 13.8 #1 : Drop Load at CERTTEED 115 #1 : 9.9 MW 6.9 MVAR Dr :	STOREY 2-BORDEN 230.00kV Ckt#1 Sec# 1	793.23	Amps	111.9	112.4	0.5
28	Open Line LE GRAND 115-WILSON A 115 #1 :	STOREY 2-BORDEN 230.00kV Ckt#1 Sec# 1	793.23	Amps	111.9	112.3	0.5
161	Open Line PANOCHE 230-HELM 230 #1 : Drop Generator at EXCHQUER 13.8 #1: 94.5 MW Droppe :	STOREY 2-BORDEN 230.00kV Ckt#1 Sec# 1	793.23	Amps	111.8	112.3	0.5

#	Outage Description	Facility	Rating	Unit	PU Flow	PU Flow	% Change
116	Open Line CANANDGA 70-TRIGO J 70 #1 : Open Line CANANDGA 70-GLASS 70 #1 : Open Line TRIGO J 70-BONITA 70 #1 : Open Line TRIGO J 70-TRIGO 70 #1 : Open Line TRIGO 70-MADERA 70 #1 : Open Line TRIGO 70-EL PECO 70 #1 : Drop Load at CANANDGA 70 #1 : 7.6 MW 5.7 MVAR Dro : Drop Load at BONITA 70 #1 : 14.6 MW 2.9 MVAR Drop : Drop Load at EL PECO 70 #1 : 10 MW 2 MVAR Dropped : Drop Load at EL PECO 70 #2 : 7.3 MW 1.4 MVAR Drop :	STOREY 2-BORDEN 230.00kV Ckt#1 Sec# 1	793.23	Amps	111.7	112.2	0.4
426	Open Line MC CALL 230-HENTAP2 230 #1 : Open Line HENTAP2 230-GATES 230 #1 : Drop Generator at MELONE1 13.8 #1: 119 MW Dropped :	STOREY 2-BORDEN 230.00kV Ckt#1 Sec# 1	793.23	Amps	111.4	111.8	0.4
114	Open Line NEWHALL 115-DAIRYLND 115 #1 : Open Line NEWHALL 115-MADERAPR 115 #1 : Open Line MADERAPR 115-MENDOTA 115 #1 : Open Xfmr MADERAPR 115/MADERA_G 13.8 #1 : Drop Load at NEWHALL 115 #2 : 8.7 MW 1.7 MVAR Dro : Drop Load at NEWHALL 115 #3 : 10.8 MW 2.1 MVAR Dr : Drop Load at MADERA_G 13.8 #ss: 3.6 MW 0.8 MVAR D : Drop Generator at MADERA_G 13.8 #1 : 28.6 MW Dropp : Drop Generator at EXCHQUER 13.8 #1: 94.5 MW Droppe :	STOREY 2-BORDEN 230.00kV Ckt#1 Sec# 1	793.23	Amps	111.2	111.6	0.4
169	Open Line DS AMIGO 230-PANOCHE 230 #1 : Drop Generator at EXCHQUER 13.8 #1: 94.5 MW Droppe :	STOREY 2-BORDEN 230.00kV Ckt#1 Sec# 1	793.23	Amps	110.9	111.3	0.5
374	Open Line MC CALL 230-HENTAP2 230 #1 : Open Line HENTAP2 230-GATES 230 #1 : Drop Generator at EXCHQUER 13.8 #1: 94.5 MW Droppe :	STOREY 2-BORDEN 230.00kV Ckt#1 Sec# 1	793.23	Amps	110.9	111.3	0.4
155	Open Line LOSBANOS 230-PANOCHE 230 #1 : Drop Generator at EXCHQUER 13.8 #1: 94.5 MW Droppe :	STOREY 2-BORDEN 230.00kV Ckt#1 Sec# 1	793.23	Amps	110.8	111.2	0.5
171	Open Line WESTLEY 230-LOSBANOS 230 #1 : Drop Generator at KERCKHOF 13.8 #1: 129 MW Dropped :	STOREY 2-BORDEN 230.00kV Ckt#1 Sec# 1	793.23	Amps	110.8	111.2	0.4
153	Open Line MOSSLND2 230-PANOCHE 230 #1 : Drop Generator at EXCHQUER 13.8 #1: 94.5 MW Droppe :	STOREY 2-BORDEN 230.00kV Ckt#1 Sec# 1	793.23	Amps	110.6	111.2	0.6
156	Open Line LOSBANOS 230-PANOCHE 230 #2 : Drop Generator at EXCHQUER 13.8 #1: 94.5 MW Droppe :	STOREY 2-BORDEN 230.00kV Ckt#1 Sec# 1	793.23	Amps	110.6	111.1	0.5
115	Open Line PANOCHET 115-MENDOTA 115 #1 : Open Line PANOCHET 115-PANOCHE 115 #1 : Drop Generator at DG_PAN1 13.8 #1 : 49 MW Dropped : Drop Generator at EXCHQUER 13.8 #1: 94.5 MW Droppe :	STOREY 2-BORDEN 230.00kV Ckt#1 Sec# 1	793.23	Amps	110.6	111.1	0.4

#	Outage Description	Facility	Rating	Unit	PU Flow	PU Flow	% Change
189	Open Line HELM 230-MC CALL 230 #1 :	STOREY 2-BORDEN 230.00kV Ckt#1 Sec# 1	793.23	Amps	110.4	110.8	0.5
157	Open Line LOSBANOS 230-DS AMIGO 230 #1 : Drop Generator at EXCHQUER 13.8 #1: 94.5 MW Droppe :	STOREY 2-BORDEN 230.00kV Ckt#1 Sec# 1	793.23	Amps	110.2	110.7	0.5
207	Open Line K1-JCT 115-KERCKHF2 115 #2 : Open Line K1-JCT 115-OAKH_JCT 115 #1 : Open Line OAKH_JCT 115-SHARON T 115 #1 : Open Line OAKH_JCT 115-CORSGOLD 115 #1 : Open Line SHARON T 115-CERTANJ1 115 #1 : Open Line SHARON T 115-SHARON 115 #1 : Open Line CERTANJ1 115-CHWCHLLA 115 #1 : Open Line CORSGOLD 115-OAKHURST 115 #1 : Drop Load at CORSGOLD 115 #1 : 2.2 MW 0.4 MVAR Dr : Drop Load at CORSGOLD 115 #2 : 26.5 MW 5.3 MVAR D :	STOREY 2-BORDEN 230.00kV Ckt#1 Sec# 1	793.23	Amps	110.2	110.6	0.5
111	Open Line LE GRAND 115-DAIRYLND 115 #1 : Drop Generator at EXCHQUER 13.8 #1: 94.5 MW Droppe :	STOREY 2-BORDEN 230.00kV Ckt#1 Sec# 1	793.23	Amps	110.0	110.4	0.4
429	Open Line GATES 230-ARCO 230 #1 : Drop Generator at MELONE1 13.8 #1: 119 MW Dropped :	STOREY 2-BORDEN 230.00kV Ckt#1 Sec# 1	793.23	Amps	109.9	110.3	0.4
430	Open Line GATES 230-MIDWAY 230 #1 : Drop Generator at MELONE1 13.8 #1: 119 MW Dropped :	STOREY 2-BORDEN 230.00kV Ckt#1 Sec# 1	793.23	Amps	109.8	110.2	0.4
291	Open Xfmr KEARNEY 70/KEARNEY 230 #2 :	STOREY 2-BORDEN 230.00kV Ckt#1 Sec# 1	793.23	Amps	109.7	110.1	0.4
112	Open Line LE GRNDJ 115-WILSON B 115 #1 : Open Line LE GRNDJ 115-EL NIDO 115 #1 : Open Line EL NIDO 115-ORO LOMA 115 #1 : Drop Load at EL NIDO 115 #1 : 12.6 MW 2.5 MVAR Dr : Drop Load at EL NIDO 115 #2 : 15.2 MW 3 MVAR Drop : Drop Generator at EXCHQUER 13.8 #1: 94.5 MW Droppe :	STOREY 2-BORDEN 230.00kV Ckt#1 Sec# 1	793.23	Amps	109.7	110.1	0.4
413	Open Line PANOCHE 230-GATES 230 #1 : Drop Generator at MELONE1 13.8 #1: 119 MW Dropped :	STOREY 2-BORDEN 230.00kV Ckt#1 Sec# 1	793.23	Amps	109.6	110.1	0.4
414	Open Line PANOCHE 230-GATES 230 #2 : Drop Generator at MELONE1 13.8 #1: 119 MW Dropped :	STOREY 2-BORDEN 230.00kV Ckt#1 Sec# 1	793.23	Amps	109.6	110.1	0.4
154	Open Line COBURN 230-PANOCHE 230 #1 : Drop Generator at EXCHQUER 13.8 #1: 94.5 MW Droppe :	STOREY 2-BORDEN 230.00kV Ckt#1 Sec# 1	793.23	Amps	109.5	109.9	0.5
423	Open Line HERNDON 230-FGRDN T1 230 #1 : Open Line FGRDN T1 230-FIGRDN 1 230 #1 : Open Line FGRDN T1 230-ASHLAN 230 #1 : Drop Load at FIGRDN 1 230 #1 : 74.3 MW 15 MVAR Dr : Close Line FIGRDN 1 230-FIGRDN 2 230 #1 : Drop Generator at MELONE1 13.8 #1: 119 MW Dropped :	STOREY 2-BORDEN 230.00kV Ckt#1 Sec# 1	793.23	Amps	109.5	109.9	0.4
377	Open Line GATES 230-ARCO 230 #1 : Drop Generator at EXCHQUER 13.8 #1: 94.5 MW Droppe :	STOREY 2-BORDEN 230.00kV Ckt#1 Sec# 1	793.23	Amps	109.4	109.9	0.5

#	Outage Description	Facility	Rating	Unit	PU Flow	PU Flow	% Change
378	Open Line GATES 230-MIDWAY 230 #1 : Drop Generator at EXCHQUER 13.8 #1: 94.5 MW Droppe :	STOREY 2-BORDEN 230.00kV Ckt#1 Sec# 1	793.23	Amps	109.3	109.7	0.4
117	Open Line MCSWAINJ 70-MC SWAIN 70 #1 : Open Line MCSWAINJ 70-MRCDFLLS 70 #1 : Open Line MCSWAINJ 70-EXCHEQUR 70 #1 : Open Xfmr MC SWAIN 70/MCSWAIN 9.11 #1 : Drop Generator at MCSWAIN 9.11 #1 : 9 MW Dropped : Drop Generator at EXCHQUER 13.8 #1: 94.5 MW Droppe :	STOREY 2-BORDEN 230.00kV Ckt#1 Sec# 1	793.23	Amps	109.3	109.7	0.4
353	Open Line SMYRNA 115-MCKIBBEN 115 #1 : Open Line MCKIBBEN 115-SEMITRPJ 115 #1 : Open Line SEMITRPJ 115-GANSO 115 #1 : Open Line GANSO 115-MIDWAY 115 #1 : Drop Load at GANSO 115 #1 : 3.9 MW 0.7 MVAR Dropp : Drop Generator at EXCHQUER 13.8 #1: 94.5 MW Droppe :	STOREY 2-BORDEN 230.00kV Ckt#1 Sec# 1	793.23	Amps	109.2	109.7	0.4
162	Open Line PANOCHE 230-GATES 230 #1 : Drop Generator at EXCHQUER 13.8 #1: 94.5 MW Droppe :	STOREY 2-BORDEN 230.00kV Ckt#1 Sec# 1	793.23	Amps	109.2	109.6	0.5
163	Open Line PANOCHE 230-GATES 230 #2 : Drop Generator at EXCHQUER 13.8 #1: 94.5 MW Droppe :	STOREY 2-BORDEN 230.00kV Ckt#1 Sec# 1	793.23	Amps	109.2	109.6	0.5
113	Open Line WILSON B 115-EL CAPTN 115 #1 : Drop Generator at EXCHQUER 13.8 #1: 94.5 MW Droppe :	STOREY 2-BORDEN 230.00kV Ckt#1 Sec# 1	793.23	Amps	109.2	109.6	0.4
41	Open Line PANOCHEJ 115-PANOCHE 115 #1 : Open Line PANOCHEJ 115-HAMMONDS 115 #1 : Open Line PANOCHEJ 115-OXFRDJCT 115 #1 : Open Line HAMMONDS 115-DFSTP 115 #1 : Open Line DFSTP 115-ORO LOMA 115 #1 : Open Line DFSTP 115-DFS 115 #1 : Open Line OXFRDJCT 115-OXFORD 115 #1 : Open Line OXFRDJCT 115-WSTLDJCT 115 #1 : Open Line WSTLDJCT 115-WSTLD1RA 115 #1 : Open Line WSTLDJCT 115-LUISJCT 115 #1 :	STOREY 2-BORDEN 230.00kV Ckt#1 Sec# 1	793.23	Amps	109.0	109.6	0.6
27	Open Line EXCHEQUR 115-LE GRAND 115 #1 : Drop Generator at EXCHQUER 13.8 #1 : 94.5 MW Dropp : Drop Load at MARIPOS2 70 #**: 9.1 MW 1.8 MVAR Dro :	STOREY 2-BORDEN 230.00kV Ckt#1 Sec# 1	793.23	Amps	109.1	109.5	0.4
81	Drop Generator at EXCHQUER 13.8 #1: 94.5 MW Droppe :	STOREY 2-BORDEN 230.00kV Ckt#1 Sec# 1	793.23	Amps	109.0	109.5	0.5
108	Open Line ATWATER 115-CASTLE 115 #1 : Open Line CASTLE 115-EL CAPTN 115 #1 : Drop Generator at EXCHQUER 13.8 #1: 94.5 MW Droppe :	STOREY 2-BORDEN 230.00kV Ckt#1 Sec# 1	793.23	Amps	109.0	109.5	0.4
158	Open Line LOSBANOS 230-SN LS PP 230 #1 : Drop Generator at EXCHQUER 13.8 #1: 94.5 MW Droppe :	STOREY 2-BORDEN 230.00kV Ckt#1 Sec# 1	793.23	Amps	109.0	109.5	0.4
159	Open Line LOSBANOS 230-SN LS PP 230 #2 : Drop Generator at	STOREY 2-BORDEN 230.00kV Ckt#1 Sec# 1	793.23	Amps	109.0	109.5	0.4

#	Outage Description	Facility	Rating	Unit	PU Flow	PU Flow	% Change
	EXCHQUER 13.8 #1: 94.5 MW Droppe :						
12	Open Line PANOCHE 230-HELM 230 #1 :	STOREY 2-BORDEN 230.00kV Ckt#1 Sec# 1	793.23	Amps	109.0	109.5	0.5
371	Open Line HERNDON 230-FGRDN T1 230 #1 : Open Line FGRDN T1 230-FIGRDN 1 230 #1 : Open Line FGRDN T1 230-ASHLAN 230 #1 : Drop Load at FIGRDN 1 230 #1 : 74.3 MW 15 MVAR Dr : Close Line FIGRDN 1 230-FIGRDN 2 230 #1 : Drop Generator at EXCHQUER 13.8 #1: 94.5 MW Droppe :	STOREY 2-BORDEN 230.00kV Ckt#1 Sec# 1	793.23	Amps	109.0	109.4	0.4
179	Open Line PANOCHE 230-MCMULLN1 230 #1 : Open Line MCMULLN1 230-KEARNEY 230 #1 : Drop Load at MCMULLN1 230 #1 : 20.6 MW 4.1 MVAR D : Drop Generator at KERCKHOF 13.8 #1: 129 MW Dropped :	STOREY 2-BORDEN 230.00kV Ckt#1 Sec# 1	793.23	Amps	108.9	109.4	0.6
118	Open Line ORO LOMA 70-MRCYSPRS 70 #1 : Open Line MRCYSPRS 70-ORTIGA 70 #1 : Open Line MRCYSPRS 70-ARBURUA 70 #1 : Open Line ORTIGA 70-CANAL 70 #1 : Open Line ARBURUA 70-WRGHT PP 70 #1 : Open Line WRGHT PP 70-LOS BANS 70 #1 : Drop Load at ORTIGA 70 #1 : 7 MW 1.4 MVAR Dropped : Drop Load at ARBURUA 70 #1 : 3.8 MW 1.8 MVAR Drop : Drop Load at WRGHT PP 70 #1 : 9.6 MW 1.9 MVAR Dro : Drop Generator at EXCHQUER 13.8 #1: 94.5 MW Droppe :	STOREY 2-BORDEN 230.00kV Ckt#1 Sec# 1	793.23	Amps	108.9	109.4	0.4
255	Open Line KEARNEY 70-OLDKERN 70 #1 : Open Line OLDKERN 70-BIOLA 70 #1 : Open Line OLDKERN 70-BOWLES 70 #1 : Drop Load at OLDKERN 70 #1 : 19 MW 3.8 MVAR Dropp : Drop Load at OLDKERN 70 #3 : 7.7 MW 1.5 MVAR Drop : Drop Load at BIOLA 70 #1 : 22 MW 4.4 MVAR Dropped : Drop Load at BOWLES 70 #1 : 18.5 MW 3.7 MVAR Drop :	STOREY 2-BORDEN 230.00kV Ckt#1 Sec# 1	793.23	Amps	108.9	109.4	0.5
427	Open Line GATES 230-TEMPLETN 230 #1 : Drop Generator at MELONE1 13.8 #1: 119 MW Dropped :	STOREY 2-BORDEN 230.00kV Ckt#1 Sec# 1	793.23	Amps	108.4	108.9	0.5
428	Open Line GATES 230-MORROBAY 230 #1 : Drop Generator at MELONE1 13.8 #1: 119 MW Dropped :	STOREY 2-BORDEN 230.00kV Ckt#1 Sec# 1	793.23	Amps	108.2	108.7	0.5
70	Open Xfmr ORO LOMA 70/ORO LOMA 115 #2 : Open Line ORO LOMA 115-DFSTP 115 #1 : Open Line ORO LOMA 115-EL NIDO 115 #1 :	STOREY 2-BORDEN 230.00kV Ckt#1 Sec# 1	793.23	Amps	108.0	108.6	0.6
202	Open Line MC CALL 230-HENTAP2 230 #1 : Open Line HENTAP2 230-GATES 230 #1 :	STOREY 2-BORDEN 230.00kV Ckt#1 Sec# 1	793.23	Amps	108.1	108.6	0.4
236	Open Line HERNDON 115-CHLDHOSP 115 #1 : Open Line CHLDHOSP 115-WOODWARD 115 #1 : Drop Load at CHLDHOSP	STOREY 2-BORDEN 230.00kV Ckt#1 Sec# 1	793.23	Amps	108.1	108.5	0.5

#	Outage Description	Facility	Rating	Unit	PU Flow	PU Flow	% Change
	115 #1 : 3.5 MW 1.5 MVAR Dr :						
62	Open Line DS AMIGO 230-PANOCHE 230 #1 :	STOREY 2-BORDEN 230.00kV Ckt#1 Sec# 1	793.23	Amps	108.1	108.5	0.5
66	Open Xfmr EXCHEQUR 115/EXCHEQUR 70 #1 : Open Line EXCHEQUR 70-MARIPOS2 70 #1 : Open Line EXCHEQUR 70-BER VLLY 70 #1 : Open Line EXCHEQUR 70-MCSWAINJ 70 #1 : Drop Load at MARIPOS2 70 #1 : 9.1 MW 1.8 MVAR Dro : Drop Load at MARIPOS2 70 #2 : 9.5 MW 1.9 MVAR Dro : Close Line MARIPOS2 70-BRCEBG J 70 #1 :	STOREY 2-BORDEN 230.00kV Ckt#1 Sec# 1	793.23	Amps	108.0	108.5	0.5
375	Open Line GATES 230-TEMPLETN 230 #1 : Drop Generator at EXCHQUER 13.8 #1: 94.5 MW Droppe :	STOREY 2-BORDEN 230.00kV Ckt#1 Sec# 1	793.23	Amps	108.0	108.4	0.4
5	Open Line LOSBANOS 230-PANOCHE 230 #1 :	STOREY 2-BORDEN 230.00kV Ckt#1 Sec# 1	793.23	Amps	107.9	108.4	0.5
3	Open Line MOSSLND2 230-PANOCHE 230 #1 :	STOREY 2-BORDEN 230.00kV Ckt#1 Sec# 1	793.23	Amps	107.8	108.4	0.6
233	Open Line PNDLJ2 115-PNEDLE 115 #1 : Open Line PNDLJ2 115-BULLARD 115 #1 : Open Line PNDLJ2 115-HERNDON 115 #1 : Drop Load at PNEDLE 115 #2 : 31.1 MW 6.3 MVAR Dro : Drop Load at PNEDLE 115 #3 : 40.9 MW 8.2 MVAR Dro : Close Line PNDLJ1 115-PNEDLE 115 #1 :	STOREY 2-BORDEN 230.00kV Ckt#1 Sec# 1	793.23	Amps	107.9	108.3	0.4
280	Open Xfmr HERNDON 230/HERNDON 115 #2 :	STOREY 2-BORDEN 230.00kV Ckt#1 Sec# 1	793.23	Amps	107.9	108.3	0.4
279	Open Xfmr HERNDON 230/HERNDON 115 #1 :	STOREY 2-BORDEN 230.00kV Ckt#1 Sec# 1	793.23	Amps	107.8	108.3	0.4
6	Open Line LOSBANOS 230-PANOCHE 230 #2 :	STOREY 2-BORDEN 230.00kV Ckt#1 Sec# 1	793.23	Amps	107.8	108.3	0.5
109	Open Line ATWATER 115-CRESEY T 115 #1 : Open Line CRESEY T 115-ATWATR J 115 #1 : Open Line CRESEY T 115-JRWD GEN 115 #1 : Open Line JRWD GEN 115-JR WOOD 115 #1 : Open Xfmr JRWD GEN 115/JRWCOGEN 9.11 #1 : Open Line JR WOOD 115-CRESSEY 115 #1 : Drop Load at JR WOOD 115 #1 : 11.7 MW 10.3 MVAR D : Drop Load at CRESSEY 115 #1 : 19.3 MW 3.9 MVAR Dr : Drop Generator at JRWCOGEN 9.11 #1 : 3.8 MW Droppe : Drop Generator at EXCHQUER 13.8 #1: 94.5 MW Droppe :	STOREY 2-BORDEN 230.00kV Ckt#1 Sec# 1	793.23	Amps	107.8	108.2	0.4
376	Open Line GATES 230-MORROBAY 230 #1 : Drop Generator at EXCHQUER 13.8 #1: 94.5 MW Droppe :	STOREY 2-BORDEN 230.00kV Ckt#1 Sec# 1	793.23	Amps	107.8	108.2	0.4
110	Open Line CRESEY T 115-ATWATR J 115 #1 : Open Line ATWATR J 115-LIVNGSTN 115 #1 : Open Line ATWATR J 115-MERCED 115 #1 : Open Line LIVNGSTN 115-GALLO 115 #1 : Drop Load at LIVNGSTN 115 #3 : 24.9 MW 5 MVAR Dro : Drop Load at GALLO 115	STOREY 2-BORDEN 230.00kV Ckt#1 Sec# 1	793.23	Amps	107.7	108.1	0.4

#	Outage Description	Facility	Rating	Unit	PU Flow	PU Flow	% Change
	#1 : 4.3 MW 3.6 MVAR Dropp : Drop Generator at EXCHQUER 13.8 #1: 94.5 MW Droppe :						
75	Open Xfmr MENDOTA 70/MENDOTA 115 #1 : Open Line MENDOTA 115-MADERAPR 115 #1 : Open Line MENDOTA 115-PANOCHET 115 #1 : Drop Load at MENDOTA 115 #1 : 24.9 MW 5 MVAR Drop :	STOREY 2-BORDEN 230.00kV Ckt#1 Sec# 1	793.23	Amps	107.5	107.9	0.4
37	Open Line NEWHALL 115-DAIRYLND 115 #1 : Open Line NEWHALL 115-MADERAPR 115 #1 : Open Line MADERAPR 115-MENDOTA 115 #1 : Open Xfmr MADERAPR 115/MADERA_G 13.8 #1 : Drop Load at NEWHALL 115 #2 : 8.7 MW 1.7 MVAR Dro : Drop Load at NEWHALL 115 #3 : 10.8 MW 2.1 MVAR Dr : Drop Load at MADERA_G 13.8 #ss: 3.6 MW 0.8 MVAR D : Drop Generator at MADERA_G 13.8 #1 : 28.6 MW Dropp :	STOREY 2-BORDEN 230.00kV Ckt#1 Sec# 1	793.23	Amps	107.4	107.9	0.4
264	Open Line LEPRINO 70-LPRNO TP 70 #1 : Open Line LPRNO TP 70-LEMOORE 70 #1 : Open Line LPRNO TP 70-CANDLEWK 70 #1 : Open Line LPRNO TP 70-HENRITTA 70 #1 : Drop Load at LEPRINO 70 #1 : 6.6 MW 4.2 MVAR Drop : Drop Load at LEMOORE 70 #1 : 19.1 MW 3.8 MVAR Dro : Drop Load at LEMOORE 70 #2 : 33.2 MW 6.7 MVAR Dro :	STOREY 2-BORDEN 230.00kV Ckt#1 Sec# 1	793.23	Amps	107.4	107.9	0.4
7	Open Line LOSBANOS 230-DS AMIGO 230 #1 :	STOREY 2-BORDEN 230.00kV Ckt#1 Sec# 1	793.23	Amps	107.4	107.8	0.5
214	Open Line CLOVIS-2 115-CLOVISJ2 115 #1 : Open Line CLOVISJ2 115-KERCKHF2 115 #1 : Open Line CLOVISJ2 115-SANGER 115 #1 : Drop Load at CLOVIS-2 115 #3 : 45.3 MW 9.1 MVAR D : Close Line CLOVIS-1 115-CLOVIS-2 115 #1 :	STOREY 2-BORDEN 230.00kV Ckt#1 Sec# 1	793.23	Amps	107.4	107.8	0.4
58	Open Line BORDEN 70-CASSIDY 70 #1 : Open Line CASSIDY 70-RIVERROC 70 #1 : Open Line RIVERROC 70-COPPRMNE 70 #1 : Drop Load at CASSIDY 70 #1 : 14.5 MW 2.9 MVAR Dro : Drop Load at RIVERROC 70 #1 : 2 MW 1.8 MVAR Dropp :	STOREY 2-BORDEN 230.00kV Ckt#1 Sec# 1	793.23	Amps	107.3	107.7	0.4
127	Open Line STOREY 2 230-BORDEN 230 #1 : Open Line STOREY 2 230-WILSON 230 #1 : Drop Load at STOREY 2 230 #2 : 34.3 MW 6.9 MVAR D : Drop Generator at MELONE1 13.8 #1: 119 MW Dropped :	STOREY 1-WILSON 230.00kV Ckt#1 Sec# 1	850.96	Amps	166.0	167.0	1.0
164	Open Line STOREY 2 230-BORDEN 230 #1 : Open Line STOREY 2 230-WILSON 230 #1 : Drop Load at STOREY 2 230 #2 : 34.3 MW 6.9 MVAR D : Drop Generator at EXCHQUER 13.8 #1: 94.5 MW Droppe :	STOREY 1-WILSON 230.00kV Ckt#1 Sec# 1	850.96	Amps	165.4	166.4	1.0

#	Outage Description	Facility	Rating	Unit	PU Flow	PU Flow	% Change
15	Open Line STOREY 2 230-BORDEN 230 #1 : Open Line STOREY 2 230-WILSON 230 #1 : Drop Load at STOREY 2 230 #2 : 34.3 MW 6.9 MVAR D :	STOREY 1-WILSON 230.00kV Ckt#1 Sec# 1	850.96	Amps	160.7	161.6	0.9
183	Open Line STOREY 2 230-BORDEN 230 #1 : Open Line STOREY 2 230-WILSON 230 #1 : Drop Load at STOREY 2 230 #2 : 34.3 MW 6.9 MVAR D : Drop Generator at KERCKHOF 13.8 #1: 129 MW Dropped :	STOREY 1-WILSON 230.00kV Ckt#1 Sec# 1	850.96	Amps	156.4	157.1	0.7
145	Open Line STOREY 2 230-BORDEN 230 #1 : Open Line STOREY 2 230-WILSON 230 #1 : Drop Load at STOREY 2 230 #2 : 34.3 MW 6.9 MVAR D : Drop Generator at HELMS 1 18 #1: 404 MW Dropped :	STOREY 1-WILSON 230.00kV Ckt#1 Sec# 1	850.96	Amps	129.0	129.8	0.8
285	Open Xfmr GATES 230/GATES 500 #11 :	STOREY 1-WILSON 230.00kV Ckt#1 Sec# 1	850.96	Amps	119.8	120.6	0.8
422	Open Line KEARNEY 230-HERNDON 230 #1 : Drop Generator at MELONE1 13.8 #1: 119 MW Dropped :	STOREY 1-WILSON 230.00kV Ckt#1 Sec# 1	850.96	Amps	119.7	120.3	0.6
370	Open Line KEARNEY 230-HERNDON 230 #1 : Drop Generator at EXCHQUER 13.8 #1: 94.5 MW Droppe :	STOREY 1-WILSON 230.00kV Ckt#1 Sec# 1	850.96	Amps	119.1	119.7	0.6
196	Open Line KEARNEY 230-HERNDON 230 #1 :	STOREY 1-WILSON 230.00kV Ckt#1 Sec# 1	850.96	Amps	116.4	117.1	0.7
152	Open Line WESTLEY 230-LOSBANOS 230 #1 : Drop Generator at EXCHQUER 13.8 #1: 94.5 MW Droppe :	STOREY 1-WILSON 230.00kV Ckt#1 Sec# 1	850.96	Amps	115.7	116.4	0.7
411	Open Line PANOCHE 230-MCMULLN1 230 #1 : Open Line MCMULLN1 230-KEARNEY 230 #1 : Drop Load at MCMULLN1 230 #1 : 20.6 MW 4.1 MVAR D : Drop Generator at MELONE1 13.8 #1: 119 MW Dropped :	STOREY 1-WILSON 230.00kV Ckt#1 Sec# 1	850.96	Amps	114.6	115.2	0.6
160	Open Line PANOCHE 230-MCMULLN1 230 #1 : Open Line MCMULLN1 230-KEARNEY 230 #1 : Drop Load at MCMULLN1 230 #1 : 20.6 MW 4.1 MVAR D : Drop Generator at EXCHQUER 13.8 #1: 94.5 MW Droppe :	STOREY 1-WILSON 230.00kV Ckt#1 Sec# 1	850.96	Amps	114.0	114.6	0.6
107	Open Line CERTANJ1 115-CHWCHLLA 115 #1 : Open Line CERTANJ1 115-SHARON T 115 #1 : Open Line SHARON T 115-SHARON 115 #1 : Open Line SHARON T 115-OAKH_JCT 115 #1 : Open Line OAKH_JCT 115-CORSGOLD 115 #1 : Open Line OAKH_JCT 115-K1-JCT 115 #1 : Open Line CORSGOLD 115-OAKHURST 115 #1 : Open Line K1-JCT 115-KERCKHF2 115 #2 : Drop Load at SHARON 115 #1 : 7.1 MW 4.9 MVAR Drop : Drop Load at CORSGOLD 115 #1 : 2.2 MW 0.4 MVAR Dr :	STOREY 1-WILSON 230.00kV Ckt#1 Sec# 1	850.96	Amps	113.1	113.5	0.5
2	Open Line WESTLEY 230-LOSBANOS 230 #1 :	STOREY 1-WILSON 230.00kV Ckt#1 Sec# 1	850.96	Amps	112.6	113.3	0.7
415	Open Line HELM 230-MC CALL 230 #1 : Drop Generator at MELONE1 13.8 #1: 119 MW Dropped :	STOREY 1-WILSON 230.00kV Ckt#1 Sec# 1	850.96	Amps	112.7	113.1	0.5

#	Outage Description	Facility	Rating	Unit	PU Flow	PU Flow	% Change
386	Open Line KEARNEY 230-HERNDON 230 #1 : Drop Generator at KERCKHOF 13.8 #1: 129 MW Dropped :	STOREY 1-WILSON 230.00kV Ckt#1 Sec# 1	850.96	Amps	112.5	113.1	0.6
363	Open Line HELM 230-MC CALL 230 #1 : Drop Generator at EXCHQUER 13.8 #1: 94.5 MW Droppe :	STOREY 1-WILSON 230.00kV Ckt#1 Sec# 1	850.96	Amps	112.1	112.6	0.5
11	Open Line PANOCHE 230-MCMULLN1 230 #1 : Open Line MCMULLN1 230-KEARNEY 230 #1 : Drop Load at MCMULLN1 230 #1 : 20.6 MW 4.1 MVAR D :	STOREY 1-WILSON 230.00kV Ckt#1 Sec# 1	850.96	Amps	111.4	112.0	0.6
412	Open Line PANOCHE 230-HELM 230 #1 : Drop Generator at MELONE1 13.8 #1: 119 MW Dropped :	STOREY 1-WILSON 230.00kV Ckt#1 Sec# 1	850.96	Amps	111.2	111.7	0.5
106	Open Line CHWCHLLA 115-CERTAN T 115 #1 : Open Line CERTAN T 115-LE GRAND 115 #1 : Open Line CERTAN T 115-CERTANJ2 115 #1 : Open Line CERTANJ2 115-CHWCGNJT 115 #1 : Open Line CHWCGNJT 115-CERTTEED 115 #1 : Open Line CHWCGNJT 115-CHWCGN 115 #1 : Open Line CHWCGN 115-CHWCHLA2 115 #1 : Open Xfmr CHWCGN 115/CHOWCOGN 13.8 #1 : Open Xfmr CHWCHLA2 115/CHWCHLA2 13.8 #1 : Drop Load at CERTTEED 115 #1 : 9.9 MW 6.9 MVAR Dr :	STOREY 1-WILSON 230.00kV Ckt#1 Sec# 1	850.96	Amps	110.8	111.3	0.5
28	Open Line LE GRAND 115-WILSON A 115 #1 :	STOREY 1-WILSON 230.00kV Ckt#1 Sec# 1	850.96	Amps	110.7	111.2	0.5
161	Open Line PANOCHE 230-HELM 230 #1 : Drop Generator at EXCHQUER 13.8 #1: 94.5 MW Droppe :	STOREY 1-WILSON 230.00kV Ckt#1 Sec# 1	850.96	Amps	110.6	111.2	0.5
116	Open Line CANANDGA 70-TRIGO J 70 #1 : Open Line CANANDGA 70-GLASS 70 #1 : Open Line TRIGO J 70-BONITA 70 #1 : Open Line TRIGO J 70-TRIGO 70 #1 : Open Line TRIGO 70-MADERA 70 #1 : Open Line TRIGO 70-EL PECO 70 #1 : Drop Load at CANANDGA 70 #1 : 7.6 MW 5.7 MVAR Dro : Drop Load at BONITA 70 #1 : 14.6 MW 2.9 MVAR Drop : Drop Load at EL PECO 70 #1 : 10 MW 2 MVAR Dropped : Drop Load at EL PECO 70 #2 : 7.3 MW 1.4 MVAR Drop :	STOREY 1-WILSON 230.00kV Ckt#1 Sec# 1	850.96	Amps	110.6	111.1	0.5
426	Open Line MC CALL 230-HENTAP2 230 #1 : Open Line HENTAP2 230-GATES 230 #1 : Drop Generator at MELONE1 13.8 #1: 119 MW Dropped :	STOREY 1-WILSON 230.00kV Ckt#1 Sec# 1	850.96	Amps	110.2	110.6	0.5
114	Open Line NEWHALL 115-DAIRYLND 115 #1 : Open Line NEWHALL 115-MADERAPR 115 #1 : Open Line MADERAPR 115-MENDOTA 115 #1 : Open Xfmr MADERAPR 115/MADERA_G 13.8 #1 : Drop Load at NEWHALL 115 #2 : 8.7 MW 1.7 MVAR Dro : Drop Load at NEWHALL 115 #3 : 10.8 MW 2.1 MVAR Dr : Drop Load at	STOREY 1-WILSON 230.00kV Ckt#1 Sec# 1	850.96	Amps	109.9	110.4	0.5

#	Outage Description	Facility	Rating	Unit	PU Flow	PU Flow	% Change
	MADERA_G 13.8 #ss: 3.6 MW 0.8 MVAR D : Drop Generator at MADERA_G 13.8 #1 : 28.6 MW Dropp : Drop Generator at EXCHQUER 13.8 #1: 94.5 MW Droppe :						
169	Open Line DS AMIGO 230-PANOCHE 230 #1 : Drop Generator at EXCHQUER 13.8 #1: 94.5 MW Droppe :	STOREY 1-WILSON 230.00kV Ckt#1 Sec# 1	850.96	Amps	109.6	110.1	0.5
374	Open Line MC CALL 230-HENTAP2 230 #1 : Open Line HENTAP2 230-GATES 230 #1 : Drop Generator at EXCHQUER 13.8 #1: 94.5 MW Droppe :	STOREY 1-WILSON 230.00kV Ckt#1 Sec# 1	850.96	Amps	109.6	110.1	0.5
155	Open Line LOSBANOS 230-PANOCHE 230 #1 : Drop Generator at EXCHQUER 13.8 #1: 94.5 MW Droppe :	STOREY 1-WILSON 230.00kV Ckt#1 Sec# 1	850.96	Amps	109.5	110.0	0.5
171	Open Line WESTLEY 230-LOSBANOS 230 #1 : Drop Generator at KERCKHOF 13.8 #1: 129 MW Dropped :	STOREY 1-WILSON 230.00kV Ckt#1 Sec# 1	850.96	Amps	109.5	110.0	0.5
153	Open Line MOSSLND2 230-PANOCHE 230 #1 : Drop Generator at EXCHQUER 13.8 #1: 94.5 MW Droppe :	STOREY 1-WILSON 230.00kV Ckt#1 Sec# 1	850.96	Amps	109.3	110.0	0.7
156	Open Line LOSBANOS 230-PANOCHE 230 #2 : Drop Generator at EXCHQUER 13.8 #1: 94.5 MW Droppe :	STOREY 1-WILSON 230.00kV Ckt#1 Sec# 1	850.96	Amps	109.4	109.9	0.5
115	Open Line PANOCHET 115-MENDOTA 115 #1 : Open Line PANOCHET 115-PANOCHE 115 #1 : Drop Generator at DG_PAN1 13.8 #1 : 49 MW Dropped : Drop Generator at EXCHQUER 13.8 #1: 94.5 MW Droppe :	STOREY 1-WILSON 230.00kV Ckt#1 Sec# 1	850.96	Amps	109.3	109.8	0.5
189	Open Line HELM 230-MC CALL 230 #1 :	STOREY 1-WILSON 230.00kV Ckt#1 Sec# 1	850.96	Amps	109.1	109.6	0.5
157	Open Line LOSBANOS 230-DS AMIGO 230 #1 : Drop Generator at EXCHQUER 13.8 #1: 94.5 MW Droppe :	STOREY 1-WILSON 230.00kV Ckt#1 Sec# 1	850.96	Amps	108.9	109.4	0.5
207	Open Line K1-JCT 115-KERCKHF2 115 #2 : Open Line K1-JCT 115-OAKH_JCT 115 #1 : Open Line OAKH_JCT 115-SHARON T 115 #1 : Open Line OAKH_JCT 115-CORSGOLD 115 #1 : Open Line SHARON T 115-CERTANJ1 115 #1 : Open Line SHARON T 115-SHARON 115 #1 : Open Line CERTANJ1 115-CHWCHLLA 115 #1 : Open Line CORSGOLD 115-OAKHURST 115 #1 : Drop Load at CORSGOLD 115 #1 : 2.2 MW 0.4 MVAR Dr : Drop Load at CORSGOLD 115 #2 : 26.5 MW 5.3 MVAR D :	STOREY 1-WILSON 230.00kV Ckt#1 Sec# 1	850.96	Amps	108.9	109.4	0.5
111	Open Line LE GRAND 115-DAIRYLND 115 #1 : Drop Generator at EXCHQUER 13.8 #1: 94.5 MW Droppe :	STOREY 1-WILSON 230.00kV Ckt#1 Sec# 1	850.96	Amps	108.7	109.1	0.5

#	Outage Description	Facility	Rating	Unit	PU Flow	PU Flow	% Change
429	Open Line GATES 230-ARCO 230 #1 : Drop Generator at MELONE1 13.8 #1: 119 MW Dropped :	STOREY 1-WILSON 230.00kV Ckt#1 Sec# 1	850.96	Amps	108.5	109.0	0.5
430	Open Line GATES 230-MIDWAY 230 #1 : Drop Generator at MELONE1 13.8 #1: 119 MW Dropped :	STOREY 1-WILSON 230.00kV Ckt#1 Sec# 1	850.96	Amps	108.4	108.9	0.5
291	Open Xfmr KEARNEY 70/KEARNEY 230 #2 :	STOREY 1-WILSON 230.00kV Ckt#1 Sec# 1	850.96	Amps	108.4	108.8	0.5
112	Open Line LE GRNDJ 115-WILSON B 115 #1 : Open Line LE GRNDJ 115-EL NIDO 115 #1 : Open Line EL NIDO 115-ORO LOMA 115 #1 : Drop Load at EL NIDO 115 #1 : 12.6 MW 2.5 MVAR Dr : Drop Load at EL NIDO 115 #2 : 15.2 MW 3 MVAR Drop : Drop Generator at EXCHQUER 13.8 #1: 94.5 MW Droppe :	STOREY 1-WILSON 230.00kV Ckt#1 Sec# 1	850.96	Amps	108.3	108.8	0.5
413	Open Line PANOCHE 230-GATES 230 #1 : Drop Generator at MELONE1 13.8 #1: 119 MW Dropped :	STOREY 1-WILSON 230.00kV Ckt#1 Sec# 1	850.96	Amps	108.2	108.7	0.5
414	Open Line PANOCHE 230-GATES 230 #2 : Drop Generator at MELONE1 13.8 #1: 119 MW Dropped :	STOREY 1-WILSON 230.00kV Ckt#1 Sec# 1	850.96	Amps	108.2	108.7	0.5
154	Open Line COBURN 230-PANOCHE 230 #1 : Drop Generator at EXCHQUER 13.8 #1: 94.5 MW Droppe :	STOREY 1-WILSON 230.00kV Ckt#1 Sec# 1	850.96	Amps	108.1	108.6	0.5
377	Open Line GATES 230-ARCO 230 #1 : Drop Generator at EXCHQUER 13.8 #1: 94.5 MW Droppe :	STOREY 1-WILSON 230.00kV Ckt#1 Sec# 1	850.96	Amps	108.0	108.5	0.5
423	Open Line HERNDON 230-FGRDN T1 230 #1 : Open Line FGRDN T1 230-FIGRDN 1 230 #1 : Open Line FGRDN T1 230-ASHLAN 230 #1 : Drop Load at FIGRDN 1 230 #1 : 74.3 MW 15 MVAR Dr : Close Line FIGRDN 1 230-FIGRDN 2 230 #1 : Drop Generator at MELONE1 13.8 #1: 119 MW Dropped :	STOREY 1-WILSON 230.00kV Ckt#1 Sec# 1	850.96	Amps	108.1	108.5	0.4
117	Open Line MCSWAINJ 70-MC SWAIN 70 #1 : Open Line MCSWAINJ 70-MRCDFLLS 70 #1 : Open Line MCSWAINJ 70-EXCHEQUR 70 #1 : Open Xfmr MC SWAIN 70/MCSWAIN 9.11 #1 : Drop Generator at MCSWAIN 9.11 #1 : 9 MW Dropped : Drop Generator at EXCHQUER 13.8 #1: 94.5 MW Droppe :	STOREY 1-WILSON 230.00kV Ckt#1 Sec# 1	850.96	Amps	107.9	108.4	0.5
378	Open Line GATES 230-MIDWAY 230 #1 : Drop Generator at EXCHQUER 13.8 #1: 94.5 MW Droppe :	STOREY 1-WILSON 230.00kV Ckt#1 Sec# 1	850.96	Amps	107.9	108.4	0.5
353	Open Line SMYRNA 115-MCKIBBEN 115 #1 : Open Line MCKIBBEN 115-SEMITRPJ 115 #1 : Open Line SEMITRPJ 115-GANSO 115 #1 : Open Line GANSO 115-MIDWAY 115 #1 : Drop Load at GANSO 115 #1 : 3.9 MW 0.7 MVAR Dropp : Drop Generator at EXCHQUER 13.8 #1: 94.5 MW Droppe :	STOREY 1-WILSON 230.00kV Ckt#1 Sec# 1	850.96	Amps	107.8	108.3	0.5
162	Open Line PANOCHE 230-GATES 230 #1 : Drop Generator at	STOREY 1-WILSON 230.00kV Ckt#1 Sec# 1	850.96	Amps	107.8	108.3	0.5

#	Outage Description	Facility	Rating	Unit	PU Flow	PU Flow	% Change
	EXCHQUER 13.8 #1: 94.5 MW Droppe :						
163	Open Line PANOCHE 230-GATES 230 #2 : Drop Generator at EXCHQUER 13.8 #1: 94.5 MW Droppe :	STOREY 1-WILSON 230.00kV Ckt#1 Sec# 1	850.96	Amps	107.8	108.3	0.5
113	Open Line WILSON B 115-EL CAPTN 115 #1 : Drop Generator at EXCHQUER 13.8 #1: 94.5 MW Droppe :	STOREY 1-WILSON 230.00kV Ckt#1 Sec# 1	850.96	Amps	107.7	108.2	0.5
41	Open Line PANOCHEJ 115-PANOCHE 115 #1 : Open Line PANOCHEJ 115-HAMMONDS 115 #1 : Open Line PANOCHEJ 115-OXFRDJCT 115 #1 : Open Line HAMMONDS 115-DFSTP 115 #1 : Open Line DFSTP 115-ORO LOMA 115 #1 : Open Line DFSTP 115-DFS 115 #1 : Open Line OXFRDJCT 115-OXFORD 115 #1 : Open Line OXFRDJCT 115-WSTLDJCT 115 #1 : Open Line WSTLDJCT 115-WSTLD1RA 115 #1 : Open Line WSTLDJCT 115-LUISJCT 115 #1 :	STOREY 1-WILSON 230.00kV Ckt#1 Sec# 1	850.96	Amps	107.5	108.2	0.7
27	Open Line EXCHEQUR 115-LE GRAND 115 #1 : Drop Generator at EXCHQUER 13.8 #1 : 94.5 MW Dropp : Drop Load at MARIPOS2 70 #**: 9.1 MW 1.8 MVAR Dro :	STOREY 1-WILSON 230.00kV Ckt#1 Sec# 1	850.96	Amps	107.6	108.1	0.5
158	Open Line LOSBANOS 230-SN LS PP 230 #1 : Drop Generator at EXCHQUER 13.8 #1: 94.5 MW Droppe :	STOREY 1-WILSON 230.00kV Ckt#1 Sec# 1	850.96	Amps	107.6	108.1	0.5
159	Open Line LOSBANOS 230-SN LS PP 230 #2 : Drop Generator at EXCHQUER 13.8 #1: 94.5 MW Droppe :	STOREY 1-WILSON 230.00kV Ckt#1 Sec# 1	850.96	Amps	107.6	108.1	0.5
81	Drop Generator at EXCHQUER 13.8 #1: 94.5 MW Droppe :	STOREY 1-WILSON 230.00kV Ckt#1 Sec# 1	850.96	Amps	107.6	108.1	0.5
108	Open Line ATWATER 115-CASTLE 115 #1 : Open Line CASTLE 115-EL CAPTN 115 #1 : Drop Generator at EXCHQUER 13.8 #1: 94.5 MW Droppe :	STOREY 1-WILSON 230.00kV Ckt#1 Sec# 1	850.96	Amps	107.6	108.1	0.5
12	Open Line PANOCHE 230-HELM 230 #1 :	STOREY 1-WILSON 230.00kV Ckt#1 Sec# 1	850.96	Amps	107.6	108.1	0.5
371	Open Line HERNDON 230-FGRDN T1 230 #1 : Open Line FGRDN T1 230-FIGRDN 1 230 #1 : Open Line FGRDN T1 230-ASHLAN 230 #1 : Drop Load at FIGRDN 1 230 #1 : 74.3 MW 15 MVAR Dr : Close Line FIGRDN 1 230-FIGRDN 2 230 #1 : Drop Generator at EXCHQUER 13.8 #1: 94.5 MW Droppe :	STOREY 1-WILSON 230.00kV Ckt#1 Sec# 1	850.96	Amps	107.6	108.1	0.5
179	Open Line PANOCHE 230-MCMULLN1 230 #1 : Open Line MCMULLN1 230-KEARNEY 230 #1 : Drop Load at MCMULLN1 230 #1 : 20.6 MW 4.1 MVAR D : Drop Generator at KERCKHOF 13.8 #1: 129 MW Dropped :	STOREY 1-WILSON 230.00kV Ckt#1 Sec# 1	850.96	Amps	107.4	108.0	0.6

#	Outage Description	Facility	Rating	Unit	PU Flow	PU Flow	% Change
255	Open Line KEARNEY 70-OLDKERN 70 #1 : Open Line OLDKERN 70-BIOLA 70 #1 : Open Line OLDKERN 70-BOWLES 70 #1 : Drop Load at OLDKERN 70 #1 : 19 MW 3.8 MVAR Dropp : Drop Load at OLDKERN 70 #3 : 7.7 MW 1.5 MVAR Drop : Drop Load at BIOLA 70 #1 : 22 MW 4.4 MVAR Dropped : Drop Load at BOWLES 70 #1 : 18.5 MW 3.7 MVAR Drop :	STOREY 1-WILSON 230.00kV Ckt#1 Sec# 1	850.96	Amps	107.5	108.0	0.5
118	Open Line ORO LOMA 70-MRCYSPRS 70 #1 : Open Line MRCYSPRS 70-ORTIGA 70 #1 : Open Line MRCYSPRS 70-ARBURUA 70 #1 : Open Line ORTIGA 70-CANAL 70 #1 : Open Line ARBURUA 70-WRGHT PP 70 #1 : Open Line WRGHT PP 70-LOS BANS 70 #1 : Drop Load at ORTIGA 70 #1 : 7 MW 1.4 MVAR Dropped : Drop Load at ARBURUA 70 #1 : 3.8 MW 1.8 MVAR Drop : Drop Load at WRGHT PP 70 #1 : 9.6 MW 1.9 MVAR Dro : Drop Generator at EXCHQUER 13.8 #1: 94.5 MW Droppe :	STOREY 1-WILSON 230.00kV Ckt#1 Sec# 1	850.96	Amps	107.5	108.0	0.5
427	Open Line GATES 230-TEMPLETN 230 #1 : Drop Generator at MELONE1 13.8 #1: 119 MW Dropped :	STOREY 1-WILSON 230.00kV Ckt#1 Sec# 1	850.96	Amps	106.9	107.4	0.5
428	Open Line GATES 230-MORROBAY 230 #1 : Drop Generator at MELONE1 13.8 #1: 119 MW Dropped :	STOREY 1-WILSON 230.00kV Ckt#1 Sec# 1	850.96	Amps	106.7	107.2	0.5
70	Open Xfmr ORO LOMA 70/ORO LOMA 115 #2 : Open Line ORO LOMA 115-DFSTP 115 #1 : Open Line ORO LOMA 115-EL NIDO 115 #1 :	STOREY 1-WILSON 230.00kV Ckt#1 Sec# 1	850.96	Amps	106.5	107.1	0.7
202	Open Line MC CALL 230-HENTAP2 230 #1 : Open Line HENTAP2 230-GATES 230 #1 :	STOREY 1-WILSON 230.00kV Ckt#1 Sec# 1	850.96	Amps	106.6	107.1	0.5
236	Open Line HERNDON 115-CHLDHOSP 115 #1 : Open Line CHLDHOSP 115-WOODWARD 115 #1 : Drop Load at CHLDHOSP 115 #1 : 3.5 MW 1.5 MVAR Dr :	STOREY 1-WILSON 230.00kV Ckt#1 Sec# 1	850.96	Amps	106.6	107.1	0.5
62	Open Line DS AMIGO 230-PANOCHE 230 #1 :	STOREY 1-WILSON 230.00kV Ckt#1 Sec# 1	850.96	Amps	106.5	107.0	0.5
66	Open Xfmr EXCHEQUR 115/EXCHEQUR 70 #1 : Open Line EXCHEQUR 70-MARIPOS2 70 #1 : Open Line EXCHEQUR 70-BER VLLY 70 #1 : Open Line EXCHEQUR 70-MCSWAINJ 70 #1 : Drop Load at MARIPOS2 70 #1 : 9.1 MW 1.8 MVAR Dro : Drop Load at MARIPOS2 70 #2 : 9.5 MW 1.9 MVAR Dro : Close Line MARIPOS2 70-BRCEBG J 70 #1 :	STOREY 1-WILSON 230.00kV Ckt#1 Sec# 1	850.96	Amps	106.5	107.0	0.5
375	Open Line GATES 230-TEMPLETN 230 #1 : Drop Generator at EXCHQUER 13.8 #1: 94.5 MW Droppe :	STOREY 1-WILSON 230.00kV Ckt#1 Sec# 1	850.96	Amps	106.4	106.9	0.5
5	Open Line LOSBANOS 230-PANOCHE 230 #1 :	STOREY 1-WILSON 230.00kV Ckt#1 Sec# 1	850.96	Amps	106.4	106.9	0.5

#	Outage Description	Facility	Rating	Unit	PU Flow	PU Flow	% Change
3	Open Line MOSSLND2 230-PANOCHE 230 #1 :	STOREY 1-WILSON 230.00kV Ckt#1 Sec# 1	850.96	Amps	106.2	106.9	0.7
233	Open Line PNDLJ2 115-PNEDLE 115 #1 : Open Line PNDLJ2 115-BULLARD 115 #1 : Open Line PNDLJ2 115-HERNDON 115 #1 : Drop Load at PNEDLE 115 #2 : 31.1 MW 6.3 MVAR Dro : Drop Load at PNEDLE 115 #3 : 40.9 MW 8.2 MVAR Dro : Close Line PNDLJ1 115-PNEDLE 115 #1 :	STOREY 1-WILSON 230.00kV Ckt#1 Sec# 1	850.96	Amps	106.4	106.9	0.5
280	Open Xfmr HERNDON 230/HERNDON 115 #2 :	STOREY 1-WILSON 230.00kV Ckt#1 Sec# 1	850.96	Amps	106.3	106.8	0.5
279	Open Xfmr HERNDON 230/HERNDON 115 #1 :	STOREY 1-WILSON 230.00kV Ckt#1 Sec# 1	850.96	Amps	106.3	106.8	0.5
6	Open Line LOSBANOS 230-PANOCHE 230 #2 :	STOREY 1-WILSON 230.00kV Ckt#1 Sec# 1	850.96	Amps	106.3	106.8	0.5
109	Open Line ATWATER 115-CRESEY T 115 #1 : Open Line CRESEY T 115-ATWATR J 115 #1 : Open Line CRESEY T 115-JRWD GEN 115 #1 : Open Line JRWD GEN 115-JR WOOD 115 #1 : Open Xfmr JRWD GEN 115/JRWCOGEN 9.11 #1 : Open Line JR WOOD 115-CRESSEY 115 #1 : Drop Load at JR WOOD 115 #1 : 11.7 MW 10.3 MVAR D : Drop Load at CRESSEY 115 #1 : 19.3 MW 3.9 MVAR Dr : Drop Generator at JRWCOGEN 9.11 #1 : 3.8 MW Droppe : Drop Generator at EXCHQUER 13.8 #1: 94.5 MW Droppe :	STOREY 1-WILSON 230.00kV Ckt#1 Sec# 1	850.96	Amps	106.3	106.8	0.5
376	Open Line GATES 230-MORROBAY 230 #1 : Drop Generator at EXCHQUER 13.8 #1: 94.5 MW Droppe :	STOREY 1-WILSON 230.00kV Ckt#1 Sec# 1	850.96	Amps	106.2	106.7	0.5
110	Open Line CRESEY T 115-ATWATR J 115 #1 : Open Line ATWATR J 115-LIVNGSTN 115 #1 : Open Line ATWATR J 115-MERCED 115 #1 : Open Line LIVNGSTN 115-GALLO 115 #1 : Drop Load at LIVNGSTN 115 #3 : 24.9 MW 5 MVAR Dro : Drop Load at GALLO 115 #1 : 4.3 MW 3.6 MVAR Dropp : Drop Generator at EXCHQUER 13.8 #1: 94.5 MW Droppe :	STOREY 1-WILSON 230.00kV Ckt#1 Sec# 1	850.96	Amps	106.2	106.6	0.5
75	Open Xfmr MENDOTA 70/MENDOTA 115 #1 : Open Line MENDOTA 115-MADERAPR 115 #1 : Open Line MENDOTA 115-PANOCHET 115 #1 : Drop Load at MENDOTA 115 #1 : 24.9 MW 5 MVAR Drop :	STOREY 1-WILSON 230.00kV Ckt#1 Sec# 1	850.96	Amps	105.9	106.4	0.5
37	Open Line NEWHALL 115-DAIRYLND 115 #1 : Open Line NEWHALL 115-MADERAPR 115 #1 : Open Line MADERAPR 115-MENDOTA 115 #1 : Open Xfmr MADERAPR 115/MADERA_G 13.8 #1 : Drop Load at NEWHALL 115 #2 : 8.7 MW 1.7 MVAR Dro : Drop Load at NEWHALL 115 #3 : 10.8 MW 2.1 MVAR Dr : Drop Load at MADERA_G 13.8 #ss: 3.6 MW 0.8 MVAR D : Drop Generator at MADERA_G 13.8 #1 : 28.6 MW Dropp :	STOREY 1-WILSON 230.00kV Ckt#1 Sec# 1	850.96	Amps	105.9	106.3	0.5

#	Outage Description	Facility	Rating	Unit	PU Flow	PU Flow	% Change
264	Open Line LEPRINO 70-LPRNO TP 70 #1 : Open Line LPRNO TP 70-LEMOORE 70 #1 : Open Line LPRNO TP 70-CANDLEWK 70 #1 : Open Line LPRNO TP 70-HENRITTA 70 #1 : Drop Load at LEPRINO 70 #1 : 6.6 MW 4.2 MVAR Drop : Drop Load at LEMOORE 70 #1 : 19.1 MW 3.8 MVAR Dro : Drop Load at LEMOORE 70 #2 : 33.2 MW 6.7 MVAR Dro :	STOREY 1-WILSON 230.00kV Ckt#1 Sec# 1	850.96	Amps	105.8	106.3	0.5
7	Open Line LOSBANOS 230-DS AMIGO 230 #1 :	STOREY 1-WILSON 230.00kV Ckt#1 Sec# 1	850.96	Amps	105.8	106.3	0.5
214	Open Line CLOVIS-2 115-CLOVISJ2 115 #1 : Open Line CLOVISJ2 115-KERCKHF2 115 #1 : Open Line CLOVISJ2 115-SANGER 115 #1 : Drop Load at CLOVIS-2 115 #3 : 45.3 MW 9.1 MVAR D : Close Line CLOVIS-1 115-CLOVIS-2 115 #1 :	STOREY 1-WILSON 230.00kV Ckt#1 Sec# 1	850.96	Amps	105.8	106.3	0.5
58	Open Line BORDEN 70-CASSIDY 70 #1 : Open Line CASSIDY 70-RIVERROC 70 #1 : Open Line RIVERROC 70-COPPRMNE 70 #1 : Drop Load at CASSIDY 70 #1 : 14.5 MW 2.9 MVAR Dro : Drop Load at RIVERROC 70 #1 : 2 MW 1.8 MVAR Dropp :	STOREY 1-WILSON 230.00kV Ckt#1 Sec# 1	850.96	Amps	105.7	106.2	0.5
38	Open Line PANOCHET 115-MENDOTA 115 #1 : Open Line PANOCHET 115-PANOCHE 115 #1 : Drop Generator at DG_PAN1 13.8 #1 : 49 MW Dropped :	STOREY 1-WILSON 230.00kV Ckt#1 Sec# 1	850.96	Amps	105.7	106.1	0.5
127	Open Line STOREY 2 230-BORDEN 230 #1 : Open Line STOREY 2 230-WILSON 230 #1 : Drop Load at STOREY 2 230 #2 : 34.3 MW 6.9 MVAR D : Drop Generator at MELONE1 13.8 #1: 119 MW Dropped :	STOREY 1-BORDEN 230.00kV Ckt#1 Sec# 1	793.23	Amps	190.2	191.3	1.0
164	Open Line STOREY 2 230-BORDEN 230 #1 : Open Line STOREY 2 230-WILSON 230 #1 : Drop Load at STOREY 2 230 #2 : 34.3 MW 6.9 MVAR D : Drop Generator at EXCHQUER 13.8 #1: 94.5 MW Droppe :	STOREY 1-BORDEN 230.00kV Ckt#1 Sec# 1	793.23	Amps	189.6	190.6	1.1
15	Open Line STOREY 2 230-BORDEN 230 #1 : Open Line STOREY 2 230-WILSON 230 #1 : Drop Load at STOREY 2 230 #2 : 34.3 MW 6.9 MVAR D :	STOREY 1-BORDEN 230.00kV Ckt#1 Sec# 1	793.23	Amps	184.5	185.6	1.0
183	Open Line STOREY 2 230-BORDEN 230 #1 : Open Line STOREY 2 230-WILSON 230 #1 : Drop Load at STOREY 2 230 #2 : 34.3 MW 6.9 MVAR D : Drop Generator at KERCKHOF 13.8 #1: 129 MW Dropped :	STOREY 1-BORDEN 230.00kV Ckt#1 Sec# 1	793.23	Amps	180.0	180.7	0.7
285	Open Xfmr GATES 230/GATES 500 #11 :	STOREY 1-BORDEN 230.00kV Ckt#1 Sec# 1	793.23	Amps	140.7	141.6	0.9
422	Open Line KEARNEY 230-HERNDON 230 #1 : Drop Generator at MELONE1 13.8 #1: 119 MW Dropped :	STOREY 1-BORDEN 230.00kV Ckt#1 Sec# 1	793.23	Amps	140.6	141.2	0.7
370	Open Line KEARNEY 230-HERNDON 230 #1 : Drop Generator at EXCHQUER 13.8 #1: 94.5 MW Droppe :	STOREY 1-BORDEN 230.00kV Ckt#1 Sec# 1	793.23	Amps	140.0	140.7	0.6
152	Open Line WESTLEY 230-LOSBANOS 230 #1 : Drop Generator at	STOREY 1-BORDEN 230.00kV Ckt#1 Sec# 1	793.23	Amps	136.3	137.1	0.8

#	Outage Description	Facility	Rating	Unit	PU Flow	PU Flow	% Change
	EXCHQUER 13.8 #1: 94.5 MW Droppe :						
411	Open Line PANOCHE 230-MCMULLN1 230 #1 : Open Line MCMULLN1 230-KEARNEY 230 #1 : Drop Load at MCMULLN1 230 #1 : 20.6 MW 4.1 MVAR D : Drop Generator at MELONE1 13.8 #1: 119 MW Dropped :	STOREY 1-BORDEN 230.00kV Ckt#1 Sec# 1	793.23	Amps	135.2	135.8	0.7
2	Open Line WESTLEY 230-LOSBANOS 230 #1 :	STOREY 1-BORDEN 230.00kV Ckt#1 Sec# 1	793.23	Amps	133.0	133.8	0.8
415	Open Line HELM 230-MC CALL 230 #1 : Drop Generator at MELONE1 13.8 #1: 119 MW Dropped :	STOREY 1-BORDEN 230.00kV Ckt#1 Sec# 1	793.23	Amps	133.1	133.6	0.5
412	Open Line PANOCHE 230-HELM 230 #1 : Drop Generator at MELONE1 13.8 #1: 119 MW Dropped :	STOREY 1-BORDEN 230.00kV Ckt#1 Sec# 1	793.23	Amps	131.5	132.0	0.5
426	Open Line MC CALL 230-HENTAP2 230 #1 : Open Line HENTAP2 230-GATES 230 #1 : Drop Generator at MELONE1 13.8 #1: 119 MW Dropped :	STOREY 1-BORDEN 230.00kV Ckt#1 Sec# 1	793.23	Amps	130.4	130.9	0.5
429	Open Line GATES 230-ARCO 230 #1 : Drop Generator at MELONE1 13.8 #1: 119 MW Dropped :	STOREY 1-BORDEN 230.00kV Ckt#1 Sec# 1	793.23	Amps	128.6	129.1	0.5
430	Open Line GATES 230-MIDWAY 230 #1 : Drop Generator at MELONE1 13.8 #1: 119 MW Dropped :	STOREY 1-BORDEN 230.00kV Ckt#1 Sec# 1	793.23	Amps	128.5	129.0	0.5
413	Open Line PANOCHE 230-GATES 230 #1 : Drop Generator at MELONE1 13.8 #1: 119 MW Dropped :	STOREY 1-BORDEN 230.00kV Ckt#1 Sec# 1	793.23	Amps	128.3	128.8	0.5
414	Open Line PANOCHE 230-GATES 230 #2 : Drop Generator at MELONE1 13.8 #1: 119 MW Dropped :	STOREY 1-BORDEN 230.00kV Ckt#1 Sec# 1	793.23	Amps	128.3	128.8	0.5
423	Open Line HERNDON 230-FGRDN T1 230 #1 : Open Line FGRDN T1 230-FIGRDN 1 230 #1 : Open Line FGRDN T1 230-ASHLAN 230 #1 : Drop Load at FIGRDN 1 230 #1 : 74.3 MW 15 MVAR Dr : Close Line FIGRDN 1 230-FIGRDN 2 230 #1 : Drop Generator at MELONE1 13.8 #1: 119 MW Dropped :	STOREY 1-BORDEN 230.00kV Ckt#1 Sec# 1	793.23	Amps	128.2	128.6	0.5
427	Open Line GATES 230-TEMPLETN 230 #1 : Drop Generator at MELONE1 13.8 #1: 119 MW Dropped :	STOREY 1-BORDEN 230.00kV Ckt#1 Sec# 1	793.23	Amps	126.9	127.4	0.6
428	Open Line GATES 230-MORROBAY 230 #1 : Drop Generator at MELONE1 13.8 #1: 119 MW Dropped :	STOREY 1-BORDEN 230.00kV Ckt#1 Sec# 1	793.23	Amps	126.6	127.2	0.6
361	Open Line MC CALL 115-WAHTOKE 115 #1 : Drop Generator at SANGERCO 9.11 #1: 37.5 MW Droppe :	SNGRJCT -SANGER 70.00kV Ckt#1 Sec# 1	395.9	Amps	104.2	104.2	0.0
361	Open Line MC CALL 115-WAHTOKE 115 #1 : Drop Generator at SANGERCO 9.11 #1: 37.5 MW Droppe :	REEDLEY -PIEDRA 1 115.00kV Ckt#1 Sec# 1	597.43	Amps	109.2	109.1	0.0
222	Open Line MC CALL 115-WAHTOKE 115 #1 :	REEDLEY -PIEDRA 1 115.00kV Ckt#1 Sec# 1	597.43	Amps	102.4	102.4	0.0

#	Outage Description	Facility	Rating	Unit	PU Flow	PU Flow	% Change
362	Open Line MC CALL 115-WAHTOKE 115 #1 : Drop Generator at KINGSRIV 13.8 #1: 47 MW Dropped :	RAINBWTP-SANGER 115.00kV Ckt#1 Sec# 1	612.49	Amps	107.6	107.5	0.0
204	Open Line GATES 230-MORROBAY 230 #1 :	Q238TAP -CARRIZO 115.00kV Ckt#1 Sec# 1	436.78	Amps	115.3	115.4	0.0
428	Open Line GATES 230-MORROBAY 230 #1 : Drop Generator at MELONE1 13.8 #1: 119 MW Dropped :	Q238TAP -CARRIZO 115.00kV Ckt#1 Sec# 1	436.78	Amps	115.2	115.2	0.0
376	Open Line GATES 230-MORROBAY 230 #1 : Drop Generator at EXCHQUER 13.8 #1: 94.5 MW Droppe :	Q238TAP -CARRIZO 115.00kV Ckt#1 Sec# 1	436.78	Amps	115.0	115.1	0.1
392	Open Line GATES 230-MORROBAY 230 #1 : Drop Generator at KERCKHOF 13.8 #1: 129 MW Dropped :	Q238TAP -CARRIZO 115.00kV Ckt#1 Sec# 1	436.78	Amps	114.8	114.9	0.1
408	Open Line GATES 230-MORROBAY 230 #1 : Drop Generator at HELMS 1 18 #1: 404 MW Dropped :	Q238TAP -CARRIZO 115.00kV Ckt#1 Sec# 1	436.78	Amps	113.9	113.9	0.1
203	Open Line GATES 230-TEMPLETN 230 #1 :	Q238TAP -CARRIZO 115.00kV Ckt#1 Sec# 1	436.78	Amps	113.6	113.7	0.0
427	Open Line GATES 230-TEMPLETN 230 #1 : Drop Generator at MELONE1 13.8 #1: 119 MW Dropped :	Q238TAP -CARRIZO 115.00kV Ckt#1 Sec# 1	436.78	Amps	113.5	113.6	0.1
375	Open Line GATES 230-TEMPLETN 230 #1 : Drop Generator at EXCHQUER 13.8 #1: 94.5 MW Droppe :	Q238TAP -CARRIZO 115.00kV Ckt#1 Sec# 1	436.78	Amps	113.4	113.4	0.1
391	Open Line GATES 230-TEMPLETN 230 #1 : Drop Generator at KERCKHOF 13.8 #1: 129 MW Dropped :	Q238TAP -CARRIZO 115.00kV Ckt#1 Sec# 1	436.78	Amps	113.2	113.2	0.1
407	Open Line GATES 230-TEMPLETN 230 #1 : Drop Generator at HELMS 1 18 #1: 404 MW Dropped :	Q238TAP -CARRIZO 115.00kV Ckt#1 Sec# 1	436.78	Amps	112.2	112.3	0.1
285	Open Xfmr GATES 230/GATES 500 #11 :	Q238TAP -CARRIZO 115.00kV Ckt#1 Sec# 1	436.78	Amps	111.1	111.5	0.4
204	Open Line GATES 230-MORROBAY 230 #1 :	Q194SWST-Q194 230.00kV Ckt#1 Sec# 1	483.22	Amps	101.3	101.2	-0.1
428	Open Line GATES 230-MORROBAY 230 #1 : Drop Generator at MELONE1 13.8 #1: 119 MW Dropped :	Q194SWST-Q194 230.00kV Ckt#1 Sec# 1	483.22	Amps	101.3	101.2	-0.1
376	Open Line GATES 230-MORROBAY 230 #1 : Drop Generator at EXCHQUER 13.8 #1: 94.5 MW Droppe :	Q194SWST-Q194 230.00kV Ckt#1 Sec# 1	483.22	Amps	101.2	101.1	0.0
392	Open Line GATES 230-MORROBAY 230 #1 : Drop Generator at KERCKHOF 13.8 #1: 129 MW Dropped :	Q194SWST-Q194 230.00kV Ckt#1 Sec# 1	483.22	Amps	101.1	101.0	0.0
408	Open Line GATES 230-MORROBAY 230 #1 : Drop Generator at HELMS 1 18 #1: 404 MW Dropped :	Q194SWST-Q194 230.00kV Ckt#1 Sec# 1	483.22	Amps	100.7	100.6	-0.1
203	Open Line GATES 230-TEMPLETN 230 #1 :	Q194SWST-Q194 230.00kV Ckt#1 Sec# 1	483.22	Amps	100.2	100.2	0.0
427	Open Line GATES 230-TEMPLETN 230 #1 : Drop Generator at MELONE1 13.8 #1: 119 MW Dropped :	Q194SWST-Q194 230.00kV Ckt#1 Sec# 1	483.22	Amps	100.2	100.2	0.0
375	Open Line GATES 230-TEMPLETN 230 #1 : Drop Generator at EXCHQUER 13.8 #1: 94.5 MW Droppe :	Q194SWST-Q194 230.00kV Ckt#1 Sec# 1	483.22	Amps	100.1	100.1	0.0

#	Outage Description	Facility	Rating	Unit	PU Flow	PU Flow	% Change
375	Open Line GATES 230-TEMPLETN 230 #1 : Drop Generator at EXCHQUER 13.8 #1: 94.5 MW Droppe :	Q194SWST-Q166 230.00kV Ckt#1 Sec# 1	976.48	Amps	129.9	130.0	0.1
391	Open Line GATES 230-TEMPLETN 230 #1 : Drop Generator at KERCKHOF 13.8 #1: 129 MW Dropped :	Q194SWST-Q166 230.00kV Ckt#1 Sec# 1	976.48	Amps	129.7	129.8	0.1
407	Open Line GATES 230-TEMPLETN 230 #1 : Drop Generator at HELMS 1 18 #1: 404 MW Dropped :	Q194SWST-Q166 230.00kV Ckt#1 Sec# 1	976.48	Amps	128.9	128.9	0.1
285	Open Xfmr GATES 230/GATES 500 #11 :	Q194SWST-Q166 230.00kV Ckt#1 Sec# 1	976.48	Amps	128.1	128.5	0.4
1	Open Line WARNERVL 230-WILSON 230 #1 :	Q194SWST-Q166 230.00kV Ckt#1 Sec# 1	976.48	Amps	110.2	110.4	0.2
204	Open Line GATES 230-MORROBAY 230 #1 :	Q194SWST-MIDWAY 230.00kV Ckt#1 Sec# 1	976.48	Amps	182.9	182.9	0.0
428	Open Line GATES 230-MORROBAY 230 #1 : Drop Generator at MELONE1 13.8 #1: 119 MW Dropped :	Q194SWST-MIDWAY 230.00kV Ckt#1 Sec# 1	976.48	Amps	182.7	182.8	0.0
376	Open Line GATES 230-MORROBAY 230 #1 : Drop Generator at EXCHQUER 13.8 #1: 94.5 MW Droppe :	Q194SWST-MIDWAY 230.00kV Ckt#1 Sec# 1	976.48	Amps	182.6	182.6	0.0
392	Open Line GATES 230-MORROBAY 230 #1 : Drop Generator at KERCKHOF 13.8 #1: 129 MW Dropped :	Q194SWST-MIDWAY 230.00kV Ckt#1 Sec# 1	976.48	Amps	182.4	182.4	0.0
408	Open Line GATES 230-MORROBAY 230 #1 : Drop Generator at HELMS 1 18 #1: 404 MW Dropped :	Q194SWST-MIDWAY 230.00kV Ckt#1 Sec# 1	976.48	Amps	181.4	181.5	0.0
203	Open Line GATES 230-TEMPLETN 230 #1 :	Q194SWST-MIDWAY 230.00kV Ckt#1 Sec# 1	976.48	Amps	178.7	178.8	0.1
427	Open Line GATES 230-TEMPLETN 230 #1 : Drop Generator at MELONE1 13.8 #1: 119 MW Dropped :	Q194SWST-MIDWAY 230.00kV Ckt#1 Sec# 1	976.48	Amps	178.6	178.7	0.0
375	Open Line GATES 230-TEMPLETN 230 #1 : Drop Generator at EXCHQUER 13.8 #1: 94.5 MW Droppe :	Q194SWST-MIDWAY 230.00kV Ckt#1 Sec# 1	976.48	Amps	178.5	178.5	0.1
391	Open Line GATES 230-TEMPLETN 230 #1 : Drop Generator at KERCKHOF 13.8 #1: 129 MW Dropped :	Q194SWST-MIDWAY 230.00kV Ckt#1 Sec# 1	976.48	Amps	178.3	178.3	0.0
407	Open Line GATES 230-TEMPLETN 230 #1 : Drop Generator at HELMS 1 18 #1: 404 MW Dropped :	Q194SWST-MIDWAY 230.00kV Ckt#1 Sec# 1	976.48	Amps	177.3	177.4	0.0
285	Open Xfmr GATES 230/GATES 500 #11 :	Q194SWST-MIDWAY 230.00kV Ckt#1 Sec# 1	976.48	Amps	176.8	177.2	0.4
204	Open Line GATES 230-MORROBAY 230 #1 :	Q194 -Q194SWST 230.00kV Ckt#1 Sec# 1	483.22	Amps	101.3	101.2	-0.1
428	Open Line GATES 230-MORROBAY 230 #1 : Drop Generator at MELONE1 13.8 #1: 119 MW Dropped :	Q194 -Q194SWST 230.00kV Ckt#1 Sec# 1	483.22	Amps	101.3	101.2	-0.1
376	Open Line GATES 230-MORROBAY 230 #1 : Drop Generator at EXCHQUER 13.8 #1: 94.5 MW Droppe :	Q194 -Q194SWST 230.00kV Ckt#1 Sec# 1	483.22	Amps	101.2	101.1	0.0
392	Open Line GATES 230-MORROBAY 230 #1 : Drop Generator at KERCKHOF 13.8 #1: 129 MW Dropped :	Q194 -Q194SWST 230.00kV Ckt#1 Sec# 1	483.22	Amps	101.1	101.0	0.0
408	Open Line GATES 230-MORROBAY 230 #1 : Drop Generator at	Q194 -Q194SWST 230.00kV Ckt#1 Sec# 1	483.22	Amps	100.7	100.6	-0.1

#	Outage Description	Facility	Rating	Unit	PU Flow	PU Flow	% Change
	HELMS 1 18 #1: 404 MW Dropped :						
203	Open Line GATES 230-TEMPLETN 230 #1 :	Q194 -Q194SWST 230.00kV Ckt#1 Sec# 1	483.22	Amps	100.2	100.2	0.0
427	Open Line GATES 230-TEMPLETN 230 #1 : Drop Generator at MELONE1 13.8 #1: 119 MW Dropped :	Q194 -Q194SWST 230.00kV Ckt#1 Sec# 1	483.22	Amps	100.2	100.2	0.0
375	Open Line GATES 230-TEMPLETN 230 #1 : Drop Generator at EXCHQUER 13.8 #1: 94.5 MW Droppe :	Q194 -Q194SWST 230.00kV Ckt#1 Sec# 1	483.22	Amps	100.1	100.1	0.0
204	Open Line GATES 230-MORROBAY 230 #1 :	Q166 -Q194SWST 230.00kV Ckt#1 Sec# 1	976.48	Amps	134.1	134.2	0.0
428	Open Line GATES 230-MORROBAY 230 #1 : Drop Generator at MELONE1 13.8 #1: 119 MW Dropped :	Q166 -Q194SWST 230.00kV Ckt#1 Sec# 1	976.48	Amps	134.0	134.1	0.1
376	Open Line GATES 230-MORROBAY 230 #1 : Drop Generator at EXCHQUER 13.8 #1: 94.5 MW Droppe :	Q166 -Q194SWST 230.00kV Ckt#1 Sec# 1	976.48	Amps	133.9	133.9	0.1
392	Open Line GATES 230-MORROBAY 230 #1 : Drop Generator at KERCKHOF 13.8 #1: 129 MW Dropped :	Q166 -Q194SWST 230.00kV Ckt#1 Sec# 1	976.48	Amps	133.7	133.7	0.0
408	Open Line GATES 230-MORROBAY 230 #1 : Drop Generator at HELMS 1 18 #1: 404 MW Dropped :	Q166 -Q194SWST 230.00kV Ckt#1 Sec# 1	976.48	Amps	132.8	132.9	0.0
203	Open Line GATES 230-TEMPLETN 230 #1 :	Q166 -Q194SWST 230.00kV Ckt#1 Sec# 1	976.48	Amps	130.2	130.2	0.0
427	Open Line GATES 230-TEMPLETN 230 #1 : Drop Generator at MELONE1 13.8 #1: 119 MW Dropped :	Q166 -Q194SWST 230.00kV Ckt#1 Sec# 1	976.48	Amps	130.0	130.1	0.1
375	Open Line GATES 230-TEMPLETN 230 #1 : Drop Generator at EXCHQUER 13.8 #1: 94.5 MW Droppe :	Q166 -Q194SWST 230.00kV Ckt#1 Sec# 1	976.48	Amps	129.9	130.0	0.1
391	Open Line GATES 230-TEMPLETN 230 #1 : Drop Generator at KERCKHOF 13.8 #1: 129 MW Dropped :	Q166 -Q194SWST 230.00kV Ckt#1 Sec# 1	976.48	Amps	129.7	129.8	0.1
204	Open Line GATES 230-MORROBAY 230 #1 :	Q166 -MIDWAY 230.00kV Ckt#1 Sec# 1	976.48	Amps	181.4	181.5	0.0
428	Open Line GATES 230-MORROBAY 230 #1 : Drop Generator at MELONE1 13.8 #1: 119 MW Dropped :	Q166 -MIDWAY 230.00kV Ckt#1 Sec# 1	976.48	Amps	181.3	181.4	0.0
376	Open Line GATES 230-MORROBAY 230 #1 : Drop Generator at EXCHQUER 13.8 #1: 94.5 MW Droppe :	Q166 -MIDWAY 230.00kV Ckt#1 Sec# 1	976.48	Amps	181.2	181.2	0.0
392	Open Line GATES 230-MORROBAY 230 #1 : Drop Generator at KERCKHOF 13.8 #1: 129 MW Dropped :	Q166 -MIDWAY 230.00kV Ckt#1 Sec# 1	976.48	Amps	180.9	181.0	0.1
408	Open Line GATES 230-MORROBAY 230 #1 : Drop Generator at HELMS 1 18 #1: 404 MW Dropped :	Q166 -MIDWAY 230.00kV Ckt#1 Sec# 1	976.48	Amps	180.0	180.1	0.0
203	Open Line GATES 230-TEMPLETN 230 #1 :	Q166 -MIDWAY 230.00kV Ckt#1 Sec# 1	976.48	Amps	177.3	177.4	0.1
427	Open Line GATES 230-TEMPLETN 230 #1 : Drop Generator at MELONE1 13.8 #1: 119 MW Dropped :	Q166 -MIDWAY 230.00kV Ckt#1 Sec# 1	976.48	Amps	177.2	177.3	0.1
375	Open Line GATES 230-TEMPLETN 230 #1 : Drop Generator at	Q166 -MIDWAY 230.00kV Ckt#1 Sec# 1	976.48	Amps	177.1	177.1	0.1

#	Outage Description	Facility	Rating	Unit	PU Flow	PU Flow	% Change
	EXCHQUER 13.8 #1: 94.5 MW Droppe :						
391	Open Line GATES 230-TEMPLETN 230 #1 : Drop Generator at KERCKHOF 13.8 #1: 129 MW Dropped :	Q166 -MIDWAY 230.00kV Ckt#1 Sec# 1	976.48	Amps	176.8	176.9	0.0
407	Open Line GATES 230-TEMPLETN 230 #1 : Drop Generator at HELMS 1 18 #1: 404 MW Dropped :	Q166 -MIDWAY 230.00kV Ckt#1 Sec# 1	976.48	Amps	175.9	176.0	0.0
285	Open Xfmr GATES 230/GATES 500 #11 :	Q166 -MIDWAY 230.00kV Ckt#1 Sec# 1	976.48	Amps	175.4	175.8	0.4
362	Open Line MC CALL 115-WAHTOKE 115 #1 : Drop Generator at KINGSRIV 13.8 #1: 47 MW Dropped :	PARLIER -SNGRJCT 70.00kV Ckt#1 Sec# 1	470.13	Amps	112.7	112.7	0.0
222	Open Line MC CALL 115-WAHTOKE 115 #1 :	PARLIER -SNGRJCT 70.00kV Ckt#1 Sec# 1	470.13	Amps	101.8	101.8	0.0
285	Open Xfmr GATES 230/GATES 500 #11 :	PANOCHE -DS AMIGO 230.00kV Ckt#1 Sec# 1	849.96	Amps	104.4	105.1	0.7
125	Open Line ORO LOMA 70-MRCYSPRS 70 #1 : Open Line MRCYSPRS 70-ORTIGA 70 #1 : Open Line MRCYSPRS 70-ARBURUA 70 #1 : Open Line ORTIGA 70-CANAL 70 #1 : Open Line ARBURUA 70-WRGHT PP 70 #1 : Open Line WRGHT PP 70-LOS BANS 70 #1 : Drop Load at ORTIGA 70 #1 : 7 MW 1.4 MVAR Dropped : Drop Load at ARBURUA 70 #1 : 3.8 MW 1.8 MVAR Drop : Drop Load at WRGHT PP 70 #1 : 9.6 MW 1.9 MVAR Dro : Drop Generator at ONEILPMP 9.11 #1: 0.5 MW Dropped :	ORO LOMA-DOS PALS 70.00kV Ckt#1 Sec# 1	282.08	Amps	127.2	126.5	-0.8
44	Open Line ORO LOMA 70-MRCYSPRS 70 #1 : Open Line MRCYSPRS 70-ORTIGA 70 #1 : Open Line MRCYSPRS 70-ARBURUA 70 #1 : Open Line ORTIGA 70-CANAL 70 #1 : Open Line ARBURUA 70-WRGHT PP 70 #1 : Open Line WRGHT PP 70-LOS BANS 70 #1 : Drop Load at ORTIGA 70 #1 : 7 MW 1.4 MVAR Dropped : Drop Load at ARBURUA 70 #1 : 3.8 MW 1.8 MVAR Drop : Drop Load at WRGHT PP 70 #1 : 9.6 MW 1.9 MVAR Dro :	ORO LOMA-DOS PALS 70.00kV Ckt#1 Sec# 1	282.08	Amps	127.1	126.4	-0.8
118	Open Line ORO LOMA 70-MRCYSPRS 70 #1 : Open Line MRCYSPRS 70-ORTIGA 70 #1 : Open Line MRCYSPRS 70-ARBURUA 70 #1 : Open Line ORTIGA 70-CANAL 70 #1 : Open Line ARBURUA 70-WRGHT PP 70 #1 : Open Line WRGHT PP 70-LOS BANS 70 #1 : Drop Load at ORTIGA 70 #1 : 7 MW 1.4 MVAR Dropped : Drop Load at ARBURUA 70 #1 : 3.8 MW 1.8 MVAR Drop : Drop Load at WRGHT PP 70 #1 : 9.6 MW 1.9 MVAR Dro : Drop Generator at EXCHQUER 13.8 #1: 94.5 MW Droppe :	ORO LOMA-DOS PALS 70.00kV Ckt#1 Sec# 1	282.08	Amps	121.9	121.2	-0.8
285	Open Xfmr GATES 230/GATES 500 #11 :	ORO LOMA-DOS PALS 70.00kV Ckt#1 Sec# 1	282.08	Amps	100.9	101.3	0.3
1	Open Line WARNERVL 230-WILSON 230 #1 :	ORO LOMA-DOS PALS 70.00kV Ckt#1 Sec# 1	282.08	Amps	100.8	101.1	0.3

#	Outage Description	Facility	Rating	Unit	PU Flow	PU Flow	% Change
72	Open Xfmr LOS BANS 70/LOSBANOS 230 #4 :	ORO LOMA-DOS PALS 70.00kV Ckt#1 Sec# 1	282.08	Amps	100.9	100.4	-0.6
71	Open Xfmr LOS BANS 70/LOSBANOS 230 #3 :	ORO LOMA-DOS PALS 70.00kV Ckt#1 Sec# 1	282.08	Amps	100.4	99.8	-0.6
407	Open Line GATES 230-TEMPLETN 230 #1 : Drop Generator at HELMS 1 18 #1: 404 MW Dropped :	MORROBAY-GATES 230.00kV Ckt#1 Sec# 1	974.97	Amps	125.6	125.4	-0.2
391	Open Line GATES 230-TEMPLETN 230 #1 : Drop Generator at KERCKHOF 13.8 #1: 129 MW Dropped :	MORROBAY-GATES 230.00kV Ckt#1 Sec# 1	974.97	Amps	124.1	123.9	-0.2
375	Open Line GATES 230-TEMPLETN 230 #1 : Drop Generator at EXCHQUER 13.8 #1: 94.5 MW Droppe :	MORROBAY-GATES 230.00kV Ckt#1 Sec# 1	974.97	Amps	123.8	123.6	-0.2
427	Open Line GATES 230-TEMPLETN 230 #1 : Drop Generator at MELONE1 13.8 #1: 119 MW Dropped :	MORROBAY-GATES 230.00kV Ckt#1 Sec# 1	974.97	Amps	123.6	123.4	-0.2
203	Open Line GATES 230-TEMPLETN 230 #1 :	MORROBAY-GATES 230.00kV Ckt#1 Sec# 1	974.97	Amps	123.4	123.2	-0.2
1	Open Line WARNERVL 230-WILSON 230 #1 :	MELONES -COTTLE A 230.00kV Ckt#1 Sec# 1	849.96	Amps	101.9	102.4	0.5
Tsl-LB	Tracy-Los Banos 500-kV	LOSBANOS-WESTLEY 230.00kV Ckt#1 Sec# 1	1699.92	Amps	109.9	110.3	0.4
1	Open Line WARNERVL 230-WILSON 230 #1 :	LOSBANOS-WESTLEY 230.00kV Ckt#1 Sec# 1	1699.92	Amps	106.8	107.4	0.5
Tcy-LB	Tracy-Los Banos 500-kV	LOSBANOS-WESTLEY 230.00kV Ckt#1 Sec# 1	1699.92	Amps	107.0	107.4	0.4
126	Open Line WARNERVL 230-WILSON 230 #1 : Drop Generator at MELONE1 13.8 #1: 119 MW Dropped :	LOSBANOS-WESTLEY 230.00kV Ckt#1 Sec# 1	1699.92	Amps	106.4	107.0	0.5
Moss-LB	Moss Landing - Los Banos #1& #2 500-kV DLO	LOSBANOS-WESTLEY 230.00kV Ckt#1 Sec# 1	1699.92	Amps	105.4	105.7	0.4
285	Open Xfmr GATES 230/GATES 500 #11 :	LOSBANOS-WESTLEY 230.00kV Ckt#1 Sec# 1	1699.92	Amps	104.8	105.4	0.6
151	Open Line WARNERVL 230-WILSON 230 #1 : Drop Generator at EXCHQUER 13.8 #1: 94.5 MW Droppe :	LOSBANOS-WESTLEY 230.00kV Ckt#1 Sec# 1	1699.92	Amps	104.7	105.2	0.6
170	Open Line WARNERVL 230-WILSON 230 #1 : Drop Generator at KERCKHOF 13.8 #1: 129 MW Dropped :	LOSBANOS-WESTLEY 230.00kV Ckt#1 Sec# 1	1699.92	Amps	103.8	104.4	0.6
3	Open Line MOSSLND2 230-PANOCHE 230 #1 :	LOSBANOS-WESTLEY 230.00kV Ckt#1 Sec# 1	1699.92	Amps	100.9	101.5	0.6
128	Open Line STOREY 1 230-WILSON 230 #1 : Open Line STOREY 1 230-BORDEN 230 #1 : Drop Load at STOREY 1 230 #1 : 38.3 MW 7.7 MVAR D : Drop Generator at MELONE1 13.8 #1: 119 MW Dropped :	LOSBANOS-WESTLEY 230.00kV Ckt#1 Sec# 1	1699.92	Amps	100.9	101.4	0.5
16	Open Line STOREY 1 230-WILSON 230 #1 : Open Line STOREY 1 230-BORDEN 230 #1 : Drop Load at STOREY 1 230 #1 : 38.3 MW 7.7 MVAR D :	LOSBANOS-WESTLEY 230.00kV Ckt#1 Sec# 1	1699.92	Amps	100.8	101.4	0.5
15	Open Line STOREY 2 230-BORDEN 230 #1 : Open Line STOREY 2 230-WILSON 230 #1 : Drop Load at STOREY 2 230 #2 : 34.3 MW 6.9 MVAR D :	LOSBANOS-WESTLEY 230.00kV Ckt#1 Sec# 1	1699.92	Amps	99.9	100.4	0.6

#	Outage Description	Facility	Rating	Unit	PU Flow	PU Flow	% Change
127	Open Line STOREY 2 230-BORDEN 230 #1 : Open Line STOREY 2 230-WILSON 230 #1 : Drop Load at STOREY 2 230 #2 : 34.3 MW 6.9 MVAR D : Drop Generator at MELONE1 13.8 #1: 119 MW Dropped :	LOSBANOS-WESTLEY 230.00kV Ckt#1 Sec# 1	1699.92	Amps	99.9	100.4	0.5
165	Open Line STOREY 1 230-WILSON 230 #1 : Open Line STOREY 1 230-BORDEN 230 #1 : Drop Load at STOREY 1 230 #1 : 38.3 MW 7.7 MVAR D : Drop Generator at EXCHQUER 13.8 #1: 94.5 MW Droppe :	LOSBANOS-WESTLEY 230.00kV Ckt#1 Sec# 1	1699.92	Amps	99.5	100.1	0.5
153	Open Line MOSSLND2 230-PANOCHE 230 #1 : Drop Generator at EXCHQUER 13.8 #1: 94.5 MW Droppe :	LOSBANOS-WESTLEY 230.00kV Ckt#1 Sec# 1	1699.92	Amps	99.4	100.0	0.6
128	Open Line STOREY 1 230-WILSON 230 #1 : Open Line STOREY 1 230-BORDEN 230 #1 : Drop Load at STOREY 1 230 #1 : 38.3 MW 7.7 MVAR D : Drop Generator at MELONE1 13.8 #1: 119 MW Dropped :	LE GRAND-WILSON A 115.00kV Ckt#1 Sec# 1	512.08	Amps	121.1	121.5	0.4
16	Open Line STOREY 1 230-WILSON 230 #1 : Open Line STOREY 1 230-BORDEN 230 #1 : Drop Load at STOREY 1 230 #1 : 38.3 MW 7.7 MVAR D :	LE GRAND-WILSON A 115.00kV Ckt#1 Sec# 1	512.08	Amps	116.5	116.8	0.3
146	Open Line STOREY 1 230-WILSON 230 #1 : Open Line STOREY 1 230-BORDEN 230 #1 : Drop Load at STOREY 1 230 #1 : 38.3 MW 7.7 MVAR D : Drop Generator at HELMS 1 18 #1: 404 MW Dropped :	LE GRAND-WILSON A 115.00kV Ckt#1 Sec# 1	512.08	Amps	115.7	115.8	0.1
127	Open Line STOREY 2 230-BORDEN 230 #1 : Open Line STOREY 2 230-WILSON 230 #1 : Drop Load at STOREY 2 230 #2 : 34.3 MW 6.9 MVAR D : Drop Generator at MELONE1 13.8 #1: 119 MW Dropped :	LE GRAND-WILSON A 115.00kV Ckt#1 Sec# 1	512.08	Amps	114.3	114.6	0.3
145	Open Line STOREY 2 230-BORDEN 230 #1 : Open Line STOREY 2 230-WILSON 230 #1 : Drop Load at STOREY 2 230 #2 : 34.3 MW 6.9 MVAR D : Drop Generator at HELMS 1 18 #1: 404 MW Dropped :	LE GRAND-WILSON A 115.00kV Ckt#1 Sec# 1	512.08	Amps	110.4	110.6	0.2
15	Open Line STOREY 2 230-BORDEN 230 #1 : Open Line STOREY 2 230-WILSON 230 #1 : Drop Load at STOREY 2 230 #2 : 34.3 MW 6.9 MVAR D :	LE GRAND-WILSON A 115.00kV Ckt#1 Sec# 1	512.08	Amps	109.9	110.2	0.3
69	Open Xfmr MERCED 115/MERCED 70 #2 :	LE GRAND-WILSON A 115.00kV Ckt#1 Sec# 1	512.08	Amps	107.5	107.5	0.0
401	Open Line GREGG 230-HENTAP1 230 #1 : Open Line HENTAP1 230-HENRIETA 230 #1 : Open Line HENTAP1 230-GATES 230 #1 : Drop Generator at HELMS 3 18 #**: 404 MW Dropped : Close Line HENTAP2 230-HENRIETA 230 #1 : Drop Generator at HELMS 1 18 #1: 404 MW Dropped :	LE GRAND-WILSON A 115.00kV Ckt#1 Sec# 1	512.08	Amps	104.1	104.4	0.3
133	Open Line WESTLEY 230-LOSBANOS 230 #1 : Drop Generator at HELMS 1 18 #1: 404 MW Dropped :	LE GRAND-WILSON A 115.00kV Ckt#1 Sec# 1	512.08	Amps	103.6	103.7	0.1
184	Open Line STOREY 1 230-WILSON 230 #1 : Open Line STOREY 1 230-BORDEN 230 #1 : Drop Load at STOREY 1 230 #1 : 38.3 MW	LE GRAND-WILSON A 115.00kV Ckt#1 Sec# 1	512.08	Amps	100.9	101.0	0.1

#	Outage Description	Facility	Rating	Unit	PU Flow	PU Flow	% Change
	7.7 MVAR D : Drop Generator at KERCKHOF 13.8 #1: 129 MW Dropped :						
47	Open Line MERCED 70-MRCDFLLS 70 #1 :	LE GRAND-WILSON A 115.00kV Ckt#1 Sec# 1	512.08	Amps	100.4	100.5	0.0
421	Open Line GREGG 230-HENTAP1 230 #1 : Open Line HENTAP1 230-HENRIETA 230 #1 : Open Line HENTAP1 230-GATES 230 #1 : Drop Generator at HELMS 3 18 #**: 404 MW Dropped : Close Line HENTAP2 230-HENRIETA 230 #1 : Drop Generator at MELONE1 13.8 #1: 119 MW Dropped :	LE GRAND-WILSON A 115.00kV Ckt#1 Sec# 1	512.08	Amps	99.9	100.1	0.3
12	Open Line PANOCHE 230-HELM 230 #1 :	HELM -STRD JCT 70.00kV Ckt#1 Sec# 1	377.75	Amps	107.4	107.8	0.4
412	Open Line PANOCHE 230-HELM 230 #1 : Drop Generator at MELONE1 13.8 #1: 119 MW Dropped :	HELM -STRD JCT 70.00kV Ckt#1 Sec# 1	377.75	Amps	106.2	106.7	0.5
161	Open Line PANOCHE 230-HELM 230 #1 : Drop Generator at EXCHQUER 13.8 #1: 94.5 MW Droppe :	HELM -STRD JCT 70.00kV Ckt#1 Sec# 1	377.75	Amps	105.1	105.5	0.4
48	Open Line LIVNGSTN 70-LVNGSTNT 70 #1 : Open Line LVNGSTNT 70-CANAL 70 #1 : Open Line LVNGSTNT 70-SNTA NLA 70 #1 : Open Line SNTA NLA 70-CHEVPIPE 70 #1 : Open Line CHEVPIPE 70-LOS BANS 70 #1 : Drop Load at LIVNGSTN 70 #2 : 5.6 MW 1.1 MVAR Dro : Drop Load at SNTA NLA 70 #1 : 6.8 MW 1.3 MVAR Dro : Drop Load at SNTA NLA 70 #2 : 9.6 MW 1.9 MVAR Dro : Drop Load at CHEVPIPE 70 #1 : 0.6 MW 0.4 MVAR Dro :	DOS PALS-ORO LOMA 70.00kV Ckt#1 Sec# 1	282.08	Amps	115.0	114.3	-0.6
131	Open Line MELONES 230-WILSON 230 #1 : Drop Generator at MELONE1 13.8 #1: 119 MW Dropped :	COTTLE B-BELLOTA 230.00kV Ckt#1 Sec# 1	793.23	Amps	138.9	139.3	0.4
285	Open Xfmr GATES 230/GATES 500 #11 :	COTTLE B-BELLOTA 230.00kV Ckt#1 Sec# 1	793.23	Amps	130.4	131.1	0.6
185	Open Line MELONES 230-WILSON 230 #1 : Drop Generator at KERCKHOF 13.8 #1: 129 MW Dropped :	COTTLE B-BELLOTA 230.00kV Ckt#1 Sec# 1	793.23	Amps	126.9	127.7	0.8
166	Open Line MELONES 230-WILSON 230 #1 : Drop Generator at EXCHQUER 13.8 #1: 94.5 MW Droppe :	COTTLE B-BELLOTA 230.00kV Ckt#1 Sec# 1	793.23	Amps	126.4	126.7	0.3
196	Open Line KEARNEY 230-HERNDON 230 #1 :	COTTLE B-BELLOTA 230.00kV Ckt#1 Sec# 1	793.23	Amps	122.0	122.3	0.4
422	Open Line KEARNEY 230-HERNDON 230 #1 : Drop Generator at MELONE1 13.8 #1: 119 MW Dropped :	COTTLE B-BELLOTA 230.00kV Ckt#1 Sec# 1	793.23	Amps	121.1	121.5	0.5
Tsl-LB	Tracy-Los Banos 500-kV	COTTLE B-BELLOTA 230.00kV Ckt#1 Sec# 1	793.23	Amps	119.9	120.7	0.7
11	Open Line PANOCHE 230-MCMULLN1 230 #1 : Open Line MCMULLN1 230-KEARNEY 230 #1 : Drop Load at MCMULLN1 230 #1 : 20.6 MW 4.1 MVAR D :	COTTLE B-BELLOTA 230.00kV Ckt#1 Sec# 1	793.23	Amps	118.6	119.3	0.7

#	Outage Description	Facility	Rating	Unit	PU Flow	PU Flow	% Change
411	Open Line PANOCHE 230-MCMULLN1 230 #1 : Open Line MCMULLN1 230-KEARNEY 230 #1 : Drop Load at MCMULLN1 230 #1 : 20.6 MW 4.1 MVAR D : Drop Generator at MELONE1 13.8 #1: 119 MW Dropped :	COTTLE B-BELLOTA 230.00kV Ckt#1 Sec# 1	793.23	Amps	117.8	118.5	0.7
291	Open Xfmr KEARNEY 70/KEARNEY 230 #2 :	COTTLE B-BELLOTA 230.00kV Ckt#1 Sec# 1	793.23	Amps	117.6	118.2	0.6
3	Open Line MOSSLND2 230-PANOCHE 230 #1 :	COTTLE B-BELLOTA 230.00kV Ckt#1 Sec# 1	793.23	Amps	117.0	117.8	0.7
189	Open Line HELM 230-MC CALL 230 #1 :	COTTLE B-BELLOTA 230.00kV Ckt#1 Sec# 1	793.23	Amps	117.0	117.6	0.7
255	Open Line KEARNEY 70-OLDKERN 70 #1 : Open Line OLDKERN 70-BIOLA 70 #1 : Open Line OLDKERN 70-BOWLES 70 #1 : Drop Load at OLDKERN 70 #1 : 19 MW 3.8 MVAR Dropp : Drop Load at OLDKERN 70 #3 : 7.7 MW 1.5 MVAR Drop : Drop Load at BIOLA 70 #1 : 22 MW 4.4 MVAR Dropped : Drop Load at BOWLES 70 #1 : 18.5 MW 3.7 MVAR Drop :	COTTLE B-BELLOTA 230.00kV Ckt#1 Sec# 1	793.23	Amps	116.9	117.5	0.5
12	Open Line PANOCHE 230-HELM 230 #1 :	COTTLE B-BELLOTA 230.00kV Ckt#1 Sec# 1	793.23	Amps	116.4	117.1	0.7
415	Open Line HELM 230-MC CALL 230 #1 : Drop Generator at MELONE1 13.8 #1: 119 MW Dropped :	COTTLE B-BELLOTA 230.00kV Ckt#1 Sec# 1	793.23	Amps	116.5	117.1	0.5
202	Open Line MC CALL 230-HENTAP2 230 #1 : Open Line HENTAP2 230-GATES 230 #1 :	COTTLE B-BELLOTA 230.00kV Ckt#1 Sec# 1	793.23	Amps	116.2	116.9	0.7
386	Open Line KEARNEY 230-HERNDON 230 #1 : Drop Generator at KERCKHOF 13.8 #1: 129 MW Dropped :	COTTLE B-BELLOTA 230.00kV Ckt#1 Sec# 1	793.23	Amps	116.1	116.9	0.8
26	Open Line CRESEY T 115-ATWATR J 115 #1 : Open Line ATWATR J 115-LIVNGSTN 115 #1 : Open Line ATWATR J 115-MERCED 115 #1 : Open Line LIVNGSTN 115-GALLO 115 #1 : Drop Load at LIVNGSTN 115 #3 : 24.9 MW 5 MVAR Dro : Drop Load at GALLO 115 #1 : 4.3 MW 3.6 MVAR Dropp :	COTTLE B-BELLOTA 230.00kV Ckt#1 Sec# 1	793.23	Amps	116.2	116.9	0.7
62	Open Line DS AMIGO 230-PANOCHE 230 #1 :	COTTLE B-BELLOTA 230.00kV Ckt#1 Sec# 1	793.23	Amps	116.1	116.8	0.7
24	Open Line ATWATER 115-CRESEY T 115 #1 : Open Line CRESEY T 115-ATWATR J 115 #1 : Open Line CRESEY T 115-JRWD GEN 115 #1 : Open Line JRWD GEN 115-JR WOOD 115 #1 : Open Xfmr JRWD GEN 115/JRWCOGEN 9.11 #1 : Open Line JR WOOD 115-CRESSEY 115 #1 : Drop Load at JR WOOD 115 #1 : 11.7 MW 10.3 MVAR D : Drop Load at CRESSEY 115 #1 : 19.3 MW 3.9 MVAR Dr : Drop Generator at JRWCOGEN 9.11 #1 : 3.8 MW Droppe :	COTTLE B-BELLOTA 230.00kV Ckt#1 Sec# 1	793.23	Amps	116.1	116.7	0.7
5	Open Line LOSBANOS 230-PANOCHE 230 #1 :	COTTLE B-BELLOTA 230.00kV Ckt#1 Sec# 1	793.23	Amps	116.0	116.7	0.7
6	Open Line LOSBANOS 230-PANOCHE 230 #2 :	COTTLE B-BELLOTA 230.00kV Ckt#1 Sec# 1	793.23	Amps	115.9	116.5	0.7

#	Outage Description	Facility	Rating	Unit	PU Flow	PU Flow	% Change
412	Open Line PANOCHE 230-HELM 230 #1 : Drop Generator at MELONE1 13.8 #1: 119 MW Dropped :	COTTLE B-BELLOTA 230.00kV Ckt#1 Sec# 1	793.23	Amps	116.0	116.5	0.5
233	Open Line PNDLJ2 115-PNEDLE 115 #1 : Open Line PNDLJ2 115-BULLARD 115 #1 : Open Line PNDLJ2 115-HERNDON 115 #1 : Drop Load at PNEDLE 115 #2 : 31.1 MW 6.3 MVAR Dro : Drop Load at PNEDLE 115 #3 : 40.9 MW 8.2 MVAR Dro : Close Line PNDLJ1 115-PNEDLE 115 #1 :	COTTLE B-BELLOTA 230.00kV Ckt#1 Sec# 1	793.23	Amps	115.8	116.4	0.7
370	Open Line KEARNEY 230-HERNDON 230 #1 : Drop Generator at EXCHQUER 13.8 #1: 94.5 MW Droppe :	COTTLE B-BELLOTA 230.00kV Ckt#1 Sec# 1	793.23	Amps	115.7	116.4	0.7
25	Open Line CERTANJ1 115-CHWCHLLA 115 #1 : Open Line CERTANJ1 115-SHARON T 115 #1 : Open Line SHARON T 115-SHARON 115 #1 : Open Line SHARON T 115-OAKH_JCT 115 #1 : Open Line OAKH_JCT 115-CORSGOLD 115 #1 : Open Line OAKH_JCT 115-K1-JCT 115 #1 : Open Line CORSGOLD 115-OAKHURST 115 #1 : Open Line K1-JCT 115-KERCKHF2 115 #2 : Drop Load at SHARON 115 #1 : 7.1 MW 4.9 MVAR Drop : Drop Load at CORSGOLD 115 #1 : 2.2 MW 0.4 MVAR Dr :	COTTLE B-BELLOTA 230.00kV Ckt#1 Sec# 1	793.23	Amps	115.6	116.2	0.7
207	Open Line K1-JCT 115-KERCKHF2 115 #2 : Open Line K1-JCT 115-OAKH_JCT 115 #1 : Open Line OAKH_JCT 115-SHARON T 115 #1 : Open Line OAKH_JCT 115-CORSGOLD 115 #1 : Open Line SHARON T 115-CERTANJ1 115 #1 : Open Line SHARON T 115-SHARON 115 #1 : Open Line CERTANJ1 115-CHWCHLLA 115 #1 : Open Line CORSGOLD 115-OAKHURST 115 #1 : Drop Load at CORSGOLD 115 #1 : 2.2 MW 0.4 MVAR Dr : Drop Load at CORSGOLD 115 #2 : 26.5 MW 5.3 MVAR D :	COTTLE B-BELLOTA 230.00kV Ckt#1 Sec# 1	793.23	Amps	115.6	116.2	0.7
2	Open Line WESTLEY 230-LOSBANOS 230 #1 :	COTTLE B-BELLOTA 230.00kV Ckt#1 Sec# 1	793.23	Amps	116.4	116.2	-0.2
264	Open Line LEPRINO 70-LPRNO TP 70 #1 : Open Line LPRNO TP 70-LEMOORE 70 #1 : Open Line LPRNO TP 70-CANDLEWK 70 #1 : Open Line LPRNO TP 70-HENRITTA 70 #1 : Drop Load at LEPRINO 70 #1 : 6.6 MW 4.2 MVAR Drop : Drop Load at LEMOORE 70 #1 : 19.1 MW 3.8 MVAR Dro : Drop Load at LEMOORE 70 #2 : 33.2 MW 6.7 MVAR Dro :	COTTLE B-BELLOTA 230.00kV Ckt#1 Sec# 1	793.23	Amps	115.4	116.1	0.7
7	Open Line LOSBANOS 230-DS AMIGO 230 #1 :	COTTLE B-BELLOTA 230.00kV Ckt#1 Sec# 1	793.23	Amps	115.4	116.1	0.7
214	Open Line CLOVIS-2 115-CLOVISJ2 115 #1 : Open Line CLOVISJ2 115-KERCKHF2 115 #1 : Open Line CLOVISJ2 115-SANGER 115 #1 : Drop Load at CLOVIS-2 115 #3 : 45.3 MW 9.1 MVAR D : Close Line	COTTLE B-BELLOTA 230.00kV Ckt#1 Sec# 1	793.23	Amps	115.4	116.1	0.7

#	Outage Description	Facility	Rating	Unit	PU Flow	PU Flow	% Change
	CLOVIS-1 115-CLOVIS-2 115 #1 :						
165	Open Line STOREY 1 230-WILSON 230 #1 : Open Line STOREY 1 230-BORDEN 230 #1 : Drop Load at STOREY 1 230 #1 : 38.3 MW 7.7 MVAR D : Drop Generator at EXCHQUER 13.8 #1: 94.5 MW Droppe :	CERTAN T-LE GRAND 115.00kV Ckt#1 Sec# 1	396.61	Amps	109.3	109.8	0.5
164	Open Line STOREY 2 230-BORDEN 230 #1 : Open Line STOREY 2 230-WILSON 230 #1 : Drop Load at STOREY 2 230 #2 : 34.3 MW 6.9 MVAR D : Drop Generator at EXCHQUER 13.8 #1: 94.5 MW Droppe :	CERTAN T-LE GRAND 115.00kV Ckt#1 Sec# 1	396.61	Amps	104.0	104.4	0.4
363	Open Line HELM 230-MC CALL 230 #1 : Drop Generator at EXCHQUER 13.8 #1: 94.5 MW Droppe :	CERTAN T-LE GRAND 115.00kV Ckt#1 Sec# 1	396.61	Amps	101.0	101.4	0.4
204	Open Line GATES 230-MORROBAY 230 #1 :	CARRIZO -TEMBLOR 115.00kV Ckt#1 Sec# 1	436.78	Amps	114.9	114.9	0.0
428	Open Line GATES 230-MORROBAY 230 #1 : Drop Generator at MELONE1 13.8 #1: 119 MW Dropped :	CARRIZO -TEMBLOR 115.00kV Ckt#1 Sec# 1	436.78	Amps	114.7	114.8	0.1
376	Open Line GATES 230-MORROBAY 230 #1 : Drop Generator at EXCHQUER 13.8 #1: 94.5 MW Droppe :	CARRIZO -TEMBLOR 115.00kV Ckt#1 Sec# 1	436.78	Amps	114.6	114.7	0.1
392	Open Line GATES 230-MORROBAY 230 #1 : Drop Generator at KERCKHOF 13.8 #1: 129 MW Dropped :	CARRIZO -TEMBLOR 115.00kV Ckt#1 Sec# 1	436.78	Amps	114.4	114.4	0.1
408	Open Line GATES 230-MORROBAY 230 #1 : Drop Generator at HELMS 1 18 #1: 404 MW Dropped :	CARRIZO -TEMBLOR 115.00kV Ckt#1 Sec# 1	436.78	Amps	113.4	113.5	0.1
203	Open Line GATES 230-TEMPLETN 230 #1 :	CARRIZO -TEMBLOR 115.00kV Ckt#1 Sec# 1	436.78	Amps	113.2	113.3	0.0
427	Open Line GATES 230-TEMPLETN 230 #1 : Drop Generator at MELONE1 13.8 #1: 119 MW Dropped :	CARRIZO -TEMBLOR 115.00kV Ckt#1 Sec# 1	436.78	Amps	113.1	113.2	0.1
375	Open Line GATES 230-TEMPLETN 230 #1 : Drop Generator at EXCHQUER 13.8 #1: 94.5 MW Droppe :	CARRIZO -TEMBLOR 115.00kV Ckt#1 Sec# 1	436.78	Amps	113.0	113.0	0.1
391	Open Line GATES 230-TEMPLETN 230 #1 : Drop Generator at KERCKHOF 13.8 #1: 129 MW Dropped :	CARRIZO -TEMBLOR 115.00kV Ckt#1 Sec# 1	436.78	Amps	112.7	112.8	0.0
407	Open Line GATES 230-TEMPLETN 230 #1 : Drop Generator at HELMS 1 18 #1: 404 MW Dropped :	CARRIZO -TEMBLOR 115.00kV Ckt#1 Sec# 1	436.78	Amps	111.8	111.9	0.1
285	Open Xfmr GATES 230/GATES 500 #11 :	CARRIZO -TEMBLOR 115.00kV Ckt#1 Sec# 1	436.78	Amps	110.6	111.1	0.4
145	Open Line STOREY 2 230-BORDEN 230 #1 : Open Line STOREY 2 230-WILSON 230 #1 : Drop Load at STOREY 2 230 #2 : 34.3 MW 6.9 MVAR D : Drop Generator at HELMS 1 18 #1: 404 MW Dropped :	BORDEN -STOREY 1 230.00kV Ckt#1 Sec# 1	793.23	Amps	150.6	151.4	0.8
196	Open Line KEARNEY 230-HERNDON 230 #1 :	BORDEN -STOREY 1 230.00kV Ckt#1 Sec# 1	793.23	Amps	137.1	137.9	0.7

#	Outage Description	Facility	Rating	Unit	PU Flow	PU Flow	% Change
160	Open Line PANOCHE 230-MCMULLN1 230 #1 : Open Line MCMULLN1 230-KEARNEY 230 #1 : Drop Load at MCMULLN1 230 #1 : 20.6 MW 4.1 MVAR D : Drop Generator at EXCHQUER 13.8 #1: 94.5 MW Droppe :	BORDEN -STOREY 1 230.00kV Ckt#1 Sec# 1	793.23	Amps	134.6	135.3	0.6
107	Open Line CERTANJ1 115-CHWCHLLA 115 #1 : Open Line CERTANJ1 115-SHARON T 115 #1 : Open Line SHARON T 115-SHARON 115 #1 : Open Line SHARON T 115-OAKH_JCT 115 #1 : Open Line OAKH_JCT 115-CORSGOLD 115 #1 : Open Line OAKH_JCT 115-K1-JCT 115 #1 : Open Line CORSGOLD 115-OAKHURST 115 #1 : Open Line K1-JCT 115-KERCKHF2 115 #2 : Drop Load at SHARON 115 #1 : 7.1 MW 4.9 MVAR Drop : Drop Load at CORSGOLD 115 #1 : 2.2 MW 0.4 MVAR Dr :	BORDEN -STOREY 1 230.00kV Ckt#1 Sec# 1	793.23	Amps	133.6	134.1	0.5
386	Open Line KEARNEY 230-HERNDON 230 #1 : Drop Generator at KERCKHOF 13.8 #1: 129 MW Dropped :	BORDEN -STOREY 1 230.00kV Ckt#1 Sec# 1	793.23	Amps	133.0	133.6	0.7
363	Open Line HELM 230-MC CALL 230 #1 : Drop Generator at EXCHQUER 13.8 #1: 94.5 MW Droppe :	BORDEN -STOREY 1 230.00kV Ckt#1 Sec# 1	793.23	Amps	132.6	133.1	0.5
11	Open Line PANOCHE 230-MCMULLN1 230 #1 : Open Line MCMULLN1 230-KEARNEY 230 #1 : Drop Load at MCMULLN1 230 #1 : 20.6 MW 4.1 MVAR D :	BORDEN -STOREY 1 230.00kV Ckt#1 Sec# 1	793.23	Amps	131.8	132.5	0.6
106	Open Line CHWCHLLA 115-CERTAN T 115 #1 : Open Line CERTAN T 115-LE GRAND 115 #1 : Open Line CERTAN T 115-CERTANJ2 115 #1 : Open Line CERTANJ2 115-CHWCGNJT 115 #1 : Open Line CHWCGNJT 115-CERTTEED 115 #1 : Open Line CHWCGNJT 115-CHWCGN 115 #1 : Open Line CHWCGN 115-CHWCHLA2 115 #1 : Open Xfmr CHWCGN 115/CHOWCOGN 13.8 #1 : Open Xfmr CHWCHLA2 115/CHWCHLA2 13.8 #1 : Drop Load at CERTTEED 115 #1 : 9.9 MW 6.9 MVAR Dr :	BORDEN -STOREY 1 230.00kV Ckt#1 Sec# 1	793.23	Amps	131.2	131.7	0.5
28	Open Line LE GRAND 115-WILSON A 115 #1 :	BORDEN -STOREY 1 230.00kV Ckt#1 Sec# 1	793.23	Amps	131.1	131.6	0.5
161	Open Line PANOCHE 230-HELM 230 #1 : Drop Generator at EXCHQUER 13.8 #1: 94.5 MW Droppe :	BORDEN -STOREY 1 230.00kV Ckt#1 Sec# 1	793.23	Amps	131.0	131.5	0.5
116	Open Line CANANDGA 70-TRIGO J 70 #1 : Open Line CANANDGA 70-GLASS 70 #1 : Open Line TRIGO J 70-BONITA 70 #1 : Open Line TRIGO J 70-TRIGO 70 #1 : Open Line TRIGO 70-MADERA 70 #1 : Open Line TRIGO 70-EL PECO 70 #1 : Drop Load at CANANDGA 70 #1 : 7.6 MW 5.7 MVAR Dro : Drop Load at BONITA 70 #1 : 14.6 MW 2.9 MVAR Drop : Drop Load at EL	BORDEN -STOREY 1 230.00kV Ckt#1 Sec# 1	793.23	Amps	130.8	131.4	0.5

#	Outage Description	Facility	Rating	Unit	PU Flow	PU Flow	% Change
	PECO 70 #1 : 10 MW 2 MVAR Dropped : Drop Load at EL PECO 70 #2 : 7.3 MW 1.4 MVAR Drop :						
114	Open Line NEWHALL 115-DAIRYLND 115 #1 : Open Line NEWHALL 115-MADERAPR 115 #1 : Open Line MADERAPR 115-MENDOTA 115 #1 : Open Xfmr MADERAPR 115/MADERA_G 13.8 #1 : Drop Load at NEWHALL 115 #2 : 8.7 MW 1.7 MVAR Dro : Drop Load at NEWHALL 115 #3 : 10.8 MW 2.1 MVAR Dr : Drop Load at MADERA_G 13.8 #ss: 3.6 MW 0.8 MVAR D : Drop Generator at MADERA_G 13.8 #1 : 28.6 MW Dropp : Drop Generator at EXCHQUER 13.8 #1: 94.5 MW Droppe :	BORDEN -STOREY 1 230.00kV Ckt#1 Sec# 1	793.23	Amps	130.2	130.7	0.5
169	Open Line DS AMIGO 230-PANOCHE 230 #1 : Drop Generator at EXCHQUER 13.8 #1: 94.5 MW Droppe :	BORDEN -STOREY 1 230.00kV Ckt#1 Sec# 1	793.23	Amps	129.9	130.4	0.5
374	Open Line MC CALL 230-HENTAP2 230 #1 : Open Line HENTAP2 230-GATES 230 #1 : Drop Generator at EXCHQUER 13.8 #1: 94.5 MW Droppe :	BORDEN -STOREY 1 230.00kV Ckt#1 Sec# 1	793.23	Amps	129.9	130.4	0.5
155	Open Line LOSBANOS 230-PANOCHE 230 #1 : Drop Generator at EXCHQUER 13.8 #1: 94.5 MW Droppe :	BORDEN -STOREY 1 230.00kV Ckt#1 Sec# 1	793.23	Amps	129.7	130.3	0.5
171	Open Line WESTLEY 230-LOSBANOS 230 #1 : Drop Generator at KERCKHOF 13.8 #1: 129 MW Dropped :	BORDEN -STOREY 1 230.00kV Ckt#1 Sec# 1	793.23	Amps	129.8	130.3	0.5
153	Open Line MOSSLND2 230-PANOCHE 230 #1 : Drop Generator at EXCHQUER 13.8 #1: 94.5 MW Droppe :	BORDEN -STOREY 1 230.00kV Ckt#1 Sec# 1	793.23	Amps	129.5	130.2	0.8
156	Open Line LOSBANOS 230-PANOCHE 230 #2 : Drop Generator at EXCHQUER 13.8 #1: 94.5 MW Droppe :	BORDEN -STOREY 1 230.00kV Ckt#1 Sec# 1	793.23	Amps	129.6	130.1	0.5
115	Open Line PANOCHET 115-MENDOTA 115 #1 : Open Line PANOCHET 115-PANOCHE 115 #1 : Drop Generator at DG_PAN1 13.8 #1 : 49 MW Dropped : Drop Generator at EXCHQUER 13.8 #1: 94.5 MW Droppe :	BORDEN -STOREY 1 230.00kV Ckt#1 Sec# 1	793.23	Amps	129.6	130.1	0.5
189	Open Line HELM 230-MC CALL 230 #1 :	BORDEN -STOREY 1 230.00kV Ckt#1 Sec# 1	793.23	Amps	129.3	129.8	0.6
157	Open Line LOSBANOS 230-DS AMIGO 230 #1 : Drop Generator at EXCHQUER 13.8 #1: 94.5 MW Droppe :	BORDEN -STOREY 1 230.00kV Ckt#1 Sec# 1	793.23	Amps	129.1	129.6	0.5

#	Outage Description	Facility	Rating	Unit	PU Flow	PU Flow	% Change
207	Open Line K1-JCT 115-KERCKHF2 115 #2 : Open Line K1-JCT 115-OAKH_JCT 115 #1 : Open Line OAKH_JCT 115-SHARON T 115 #1 : Open Line OAKH_JCT 115-CORSGOLD 115 #1 : Open Line SHARON T 115-CERTANJ1 115 #1 : Open Line SHARON T 115-SHARON 115 #1 : Open Line CERTANJ1 115-CHWCHLLA 115 #1 : Open Line CORSGOLD 115-OAKHURST 115 #1 : Drop Load at CORSGOLD 115 #1 : 2.2 MW 0.4 MVAR Dr : Drop Load at CORSGOLD 115 #2 : 26.5 MW 5.3 MVAR D :	BORDEN -STOREY 1 230.00kV Ckt#1 Sec# 1	793.23	Amps	129.1	129.6	0.5
111	Open Line LE GRAND 115-DAIRYLND 115 #1 : Drop Generator at EXCHQUER 13.8 #1: 94.5 MW Droppe :	BORDEN -STOREY 1 230.00kV Ckt#1 Sec# 1	793.23	Amps	128.8	129.4	0.5
112	Open Line LE GRNDJ 115-WILSON B 115 #1 : Open Line LE GRNDJ 115-EL NIDO 115 #1 : Open Line EL NIDO 115-ORO LOMA 115 #1 : Drop Load at EL NIDO 115 #1 : 12.6 MW 2.5 MVAR Dr : Drop Load at EL NIDO 115 #2 : 15.2 MW 3 MVAR Drop : Drop Generator at EXCHQUER 13.8 #1: 94.5 MW Droppe :	BORDEN -STOREY 1 230.00kV Ckt#1 Sec# 1	793.23	Amps	128.5	129.0	0.5
291	Open Xfmr KEARNEY 70/KEARNEY 230 #2 :	BORDEN -STOREY 1 230.00kV Ckt#1 Sec# 1	793.23	Amps	128.5	129.0	0.5
154	Open Line COBURN 230-PANOCHE 230 #1 : Drop Generator at EXCHQUER 13.8 #1: 94.5 MW Droppe :	BORDEN -STOREY 1 230.00kV Ckt#1 Sec# 1	793.23	Amps	128.2	128.7	0.5
377	Open Line GATES 230-ARCO 230 #1 : Drop Generator at EXCHQUER 13.8 #1: 94.5 MW Droppe :	BORDEN -STOREY 1 230.00kV Ckt#1 Sec# 1	793.23	Amps	128.2	128.7	0.5
378	Open Line GATES 230-MIDWAY 230 #1 : Drop Generator at EXCHQUER 13.8 #1: 94.5 MW Droppe :	BORDEN -STOREY 1 230.00kV Ckt#1 Sec# 1	793.23	Amps	128.0	128.5	0.5
117	Open Line MCSWAINJ 70-MC SWAIN 70 #1 : Open Line MCSWAINJ 70-MRCDFLLS 70 #1 : Open Line MCSWAINJ 70-EXCHEQUR 70 #1 : Open Xfmr MC SWAIN 70/MCSWAIN 9.11 #1 : Drop Generator at MCSWAIN 9.11 #1 : 9 MW Dropped : Drop Generator at EXCHQUER 13.8 #1: 94.5 MW Droppe :	BORDEN -STOREY 1 230.00kV Ckt#1 Sec# 1	793.23	Amps	128.0	128.5	0.5
353	Open Line SMYRNA 115-MCKIBBEN 115 #1 : Open Line MCKIBBEN 115-SEMITRPJ 115 #1 : Open Line SEMITRPJ 115-GANSO 115 #1 : Open Line GANSO 115-MIDWAY 115 #1 : Drop Load at GANSO 115 #1 : 3.9 MW 0.7 MVAR Dropp : Drop Generator at EXCHQUER 13.8 #1: 94.5 MW Droppe :	BORDEN -STOREY 1 230.00kV Ckt#1 Sec# 1	793.23	Amps	127.9	128.4	0.5
162	Open Line PANOCHE 230-GATES 230 #1 : Drop Generator at EXCHQUER 13.8 #1: 94.5 MW Droppe :	BORDEN -STOREY 1 230.00kV Ckt#1 Sec# 1	793.23	Amps	127.9	128.4	0.5
163	Open Line PANOCHE 230-GATES 230 #2 : Drop Generator at EXCHQUER 13.8 #1: 94.5 MW Droppe :	BORDEN -STOREY 1 230.00kV Ckt#1 Sec# 1	793.23	Amps	127.9	128.4	0.5

#	Outage Description	Facility	Rating	Unit	PU Flow	PU Flow	% Change
41	Open Line PANOCHEJ 115-PANOCHE 115 #1 : Open Line PANOCHEJ 115-HAMMONDS 115 #1 : Open Line PANOCHEJ 115-OXFRDJCT 115 #1 : Open Line HAMMONDS 115-DFSTP 115 #1 : Open Line DFSTP 115-ORO LOMA 115 #1 : Open Line DFSTP 115-DFS 115 #1 : Open Line OXFRDJCT 115-OXFORD 115 #1 : Open Line OXFRDJCT 115-WSTLDJCT 115 #1 : Open Line WSTLDJCT 115-WSTLD1RA 115 #1 : Open Line WSTLDJCT 115-LUISJCT 115 #1 :	BORDEN -STOREY 1 230.00kV Ckt#1 Sec# 1	793.23	Amps	127.6	128.3	0.7
113	Open Line WILSON B 115-EL CAPTN 115 #1 : Drop Generator at EXCHQUER 13.8 #1: 94.5 MW Droppe :	BORDEN -STOREY 1 230.00kV Ckt#1 Sec# 1	793.23	Amps	127.8	128.3	0.5
27	Open Line EXCHEQUR 115-LE GRAND 115 #1 : Drop Generator at EXCHQUER 13.8 #1 : 94.5 MW Dropp : Drop Load at MARIPOS2 70 #**: 9.1 MW 1.8 MVAR Dro :	BORDEN -STOREY 1 230.00kV Ckt#1 Sec# 1	793.23	Amps	127.7	128.3	0.5
81	Drop Generator at EXCHQUER 13.8 #1: 94.5 MW Droppe :	BORDEN -STOREY 1 230.00kV Ckt#1 Sec# 1	793.23	Amps	127.7	128.2	0.5
108	Open Line ATWATER 115-CASTLE 115 #1 : Open Line CASTLE 115-EL CAPTN 115 #1 : Drop Generator at EXCHQUER 13.8 #1: 94.5 MW Droppe :	BORDEN -STOREY 1 230.00kV Ckt#1 Sec# 1	793.23	Amps	127.7	128.2	0.5
158	Open Line LOSBANOS 230-SN LS PP 230 #1 : Drop Generator at EXCHQUER 13.8 #1: 94.5 MW Droppe :	BORDEN -STOREY 1 230.00kV Ckt#1 Sec# 1	793.23	Amps	127.7	128.2	0.5
159	Open Line LOSBANOS 230-SN LS PP 230 #2 : Drop Generator at EXCHQUER 13.8 #1: 94.5 MW Droppe :	BORDEN -STOREY 1 230.00kV Ckt#1 Sec# 1	793.23	Amps	127.7	128.2	0.5
12	Open Line PANOCHE 230-HELM 230 #1 :	BORDEN -STOREY 1 230.00kV Ckt#1 Sec# 1	793.23	Amps	127.7	128.2	0.5
179	Open Line PANOCHE 230-MCMULLN1 230 #1 : Open Line MCMULLN1 230-KEARNEY 230 #1 : Drop Load at MCMULLN1 230 #1 : 20.6 MW 4.1 MVAR D : Drop Generator at KERCKHOF 13.8 #1: 129 MW Dropped :	BORDEN -STOREY 1 230.00kV Ckt#1 Sec# 1	793.23	Amps	127.6	128.2	0.7
371	Open Line HERNDON 230-FGRDN T1 230 #1 : Open Line FGRDN T1 230-FIGRDN 1 230 #1 : Open Line FGRDN T1 230-ASHLAN 230 #1 : Drop Load at FIGRDN 1 230 #1 : 74.3 MW 15 MVAR Dr : Close Line FIGRDN 1 230-FIGRDN 2 230 #1 : Drop Generator at EXCHQUER 13.8 #1: 94.5 MW Droppe :	BORDEN -STOREY 1 230.00kV Ckt#1 Sec# 1	793.23	Amps	127.7	128.2	0.5

#	Outage Description	Facility	Rating	Unit	PU Flow	PU Flow	% Change
118	Open Line ORO LOMA 70-MRCYSPRS 70 #1 : Open Line MRCYSPRS 70-ORTIGA 70 #1 : Open Line MRCYSPRS 70-ARBURUA 70 #1 : Open Line ORTIGA 70-CANAL 70 #1 : Open Line ARBURUA 70-WRGHT PP 70 #1 : Open Line WRGHT PP 70-LOS BANS 70 #1 : Drop Load at ORTIGA 70 #1 : 7 MW 1.4 MVAR Dropped : Drop Load at ARBURUA 70 #1 : 3.8 MW 1.8 MVAR Drop : Drop Load at WRGHT PP 70 #1 : 9.6 MW 1.9 MVAR Dro : Drop Generator at EXCHQUER 13.8 #1: 94.5 MW Droppe :	BORDEN -STOREY 1 230.00kV Ckt#1 Sec# 1	793.23	Amps	127.6	128.1	0.5
255	Open Line KEARNEY 70-OLDKERN 70 #1 : Open Line OLDKERN 70-BIOLA 70 #1 : Open Line OLDKERN 70-BOWLES 70 #1 : Drop Load at OLDKERN 70 #1 : 19 MW 3.8 MVAR Dropp : Drop Load at OLDKERN 70 #3 : 7.7 MW 1.5 MVAR Drop : Drop Load at BIOLA 70 #1 : 22 MW 4.4 MVAR Dropped : Drop Load at BOWLES 70 #1 : 18.5 MW 3.7 MVAR Drop :	BORDEN -STOREY 1 230.00kV Ckt#1 Sec# 1	793.23	Amps	127.5	128.1	0.5
70	Open Xfmr ORO LOMA 70/ORO LOMA 115 #2 : Open Line ORO LOMA 115-DFSTP 115 #1 : Open Line ORO LOMA 115-EL NIDO 115 #1 :	BORDEN -STOREY 1 230.00kV Ckt#1 Sec# 1	793.23	Amps	126.5	127.2	0.7
202	Open Line MC CALL 230-HENTAP2 230 #1 : Open Line HENTAP2 230-GATES 230 #1 :	BORDEN -STOREY 1 230.00kV Ckt#1 Sec# 1	793.23	Amps	126.6	127.2	0.5
236	Open Line HERNDON 115-CHLDHOSP 115 #1 : Open Line CHLDHOSP 115-WOODWARD 115 #1 : Drop Load at CHLDHOSP 115 #1 : 3.5 MW 1.5 MVAR Dr :	BORDEN -STOREY 1 230.00kV Ckt#1 Sec# 1	793.23	Amps	126.6	127.1	0.5
62	Open Line DS AMIGO 230-PANOCHE 230 #1 :	BORDEN -STOREY 1 230.00kV Ckt#1 Sec# 1	793.23	Amps	126.6	127.1	0.5
66	Open Xfmr EXCHEQUR 115/EXCHEQUR 70 #1 : Open Line EXCHEQUR 70-MARIPOS2 70 #1 : Open Line EXCHEQUR 70-BER VLLY 70 #1 : Open Line EXCHEQUR 70-MCSWAINJ 70 #1 : Drop Load at MARIPOS2 70 #1 : 9.1 MW 1.8 MVAR Dro : Drop Load at MARIPOS2 70 #2 : 9.5 MW 1.9 MVAR Dro : Close Line MARIPOS2 70-BRCEBG J 70 #1 :	BORDEN -STOREY 1 230.00kV Ckt#1 Sec# 1	793.23	Amps	126.6	127.1	0.5
375	Open Line GATES 230-TEMPLETN 230 #1 : Drop Generator at EXCHQUER 13.8 #1: 94.5 MW Droppe :	BORDEN -STOREY 1 230.00kV Ckt#1 Sec# 1	793.23	Amps	126.5	127.0	0.5
5	Open Line LOSBANOS 230-PANOCHE 230 #1 :	BORDEN -STOREY 1 230.00kV Ckt#1 Sec# 1	793.23	Amps	126.4	127.0	0.5
3	Open Line MOSSLND2 230-PANOCHE 230 #1 :	BORDEN -STOREY 1 230.00kV Ckt#1 Sec# 1	793.23	Amps	126.2	126.9	0.7
233	Open Line PNDLJ2 115-PNEDLE 115 #1 : Open Line PNDLJ2 115-BULLARD 115 #1 : Open Line PNDLJ2 115-HERNDON 115 #1 : Drop Load at PNEDLE 115 #2 : 31.1 MW 6.3 MVAR Dro : Drop Load at	BORDEN -STOREY 1 230.00kV Ckt#1 Sec# 1	793.23	Amps	126.4	126.9	0.5

#	Outage Description	Facility	Rating	Unit	PU Flow	PU Flow	% Change
	PNEDLE 115 #3 : 40.9 MW 8.2 MVAR Dro : Close Line PNDLJ1 115-PNEDLE 115 #1 :						
280	Open Xfmr HERNDON 230/HERNDON 115 #2 :	BORDEN -STOREY 1 230.00kV Ckt#1 Sec# 1	793.23	Amps	126.4	126.9	0.5
279	Open Xfmr HERNDON 230/HERNDON 115 #1 :	BORDEN -STOREY 1 230.00kV Ckt#1 Sec# 1	793.23	Amps	126.3	126.8	0.5
109	Open Line ATWATER 115-CRESEY T 115 #1 : Open Line CRESEY T 115-ATWATR J 115 #1 : Open Line CRESEY T 115-JRWD GEN 115 #1 : Open Line JRWD GEN 115-JR WOOD 115 #1 : Open Xfmr JRWD GEN 115/JRWCOGEN 9.11 #1 : Open Line JR WOOD 115-CRESSEY 115 #1 : Drop Load at JR WOOD 115 #1 : 11.7 MW 10.3 MVAR D : Drop Load at CRESSEY 115 #1 : 19.3 MW 3.9 MVAR Dr : Drop Generator at JRWCOGEN 9.11 #1 : 3.8 MW Droppe : Drop Generator at EXCHQUER 13.8 #1: 94.5 MW Droppe :	BORDEN -STOREY 1 230.00kV Ckt#1 Sec# 1	793.23	Amps	126.3	126.8	0.5
6	Open Line LOSBANOS 230-PANOCHE 230 #2 :	BORDEN -STOREY 1 230.00kV Ckt#1 Sec# 1	793.23	Amps	126.3	126.8	0.5
376	Open Line GATES 230-MORROBAY 230 #1 : Drop Generator at EXCHQUER 13.8 #1: 94.5 MW Droppe :	BORDEN -STOREY 1 230.00kV Ckt#1 Sec# 1	793.23	Amps	126.2	126.8	0.5
110	Open Line CRESEY T 115-ATWATR J 115 #1 : Open Line ATWATR J 115-LIVNGSTN 115 #1 : Open Line ATWATR J 115-MERCED 115 #1 : Open Line LIVNGSTN 115-GALLO 115 #1 : Drop Load at LIVNGSTN 115 #3 : 24.9 MW 5 MVAR Dro : Drop Load at GALLO 115 #1 : 4.3 MW 3.6 MVAR Dropp : Drop Generator at EXCHQUER 13.8 #1: 94.5 MW Droppe :	BORDEN -STOREY 1 230.00kV Ckt#1 Sec# 1	793.23	Amps	126.2	126.7	0.5
75	Open Xfmr MENDOTA 70/MENDOTA 115 #1 : Open Line MENDOTA 115-MADERAPR 115 #1 : Open Line MENDOTA 115-PANOCHET 115 #1 : Drop Load at MENDOTA 115 #1 : 24.9 MW 5 MVAR Drop :	BORDEN -STOREY 1 230.00kV Ckt#1 Sec# 1	793.23	Amps	125.9	126.4	0.5
37	Open Line NEWHALL 115-DAIRYLND 115 #1 : Open Line NEWHALL 115-MADERAPR 115 #1 : Open Line MADERAPR 115-MENDOTA 115 #1 : Open Xfmr MADERAPR 115/MADERA_G 13.8 #1 : Drop Load at NEWHALL 115 #2 : 8.7 MW 1.7 MVAR Dro : Drop Load at NEWHALL 115 #3 : 10.8 MW 2.1 MVAR Dr : Drop Load at MADERA_G 13.8 #ss: 3.6 MW 0.8 MVAR D : Drop Generator at MADERA_G 13.8 #1 : 28.6 MW Dropp :	BORDEN -STOREY 1 230.00kV Ckt#1 Sec# 1	793.23	Amps	125.8	126.3	0.5

#	Outage Description	Facility	Rating	Unit	PU Flow	PU Flow	% Change
264	Open Line LEPRINO 70-LPRNO TP 70 #1 : Open Line LPRNO TP 70-LEMOORE 70 #1 : Open Line LPRNO TP 70-CANDLEWK 70 #1 : Open Line LPRNO TP 70-HENRITTA 70 #1 : Drop Load at LEPRINO 70 #1 : 6.6 MW 4.2 MVAR Drop : Drop Load at LEMOORE 70 #1 : 19.1 MW 3.8 MVAR Dro : Drop Load at LEMOORE 70 #2 : 33.2 MW 6.7 MVAR Dro :	BORDEN -STOREY 1 230.00kV Ckt#1 Sec# 1	793.23	Amps	125.8	126.3	0.5
7	Open Line LOSBANOS 230-DS AMIGO 230 #1 :	BORDEN -STOREY 1 230.00kV Ckt#1 Sec# 1	793.23	Amps	125.8	126.3	0.5
214	Open Line CLOVIS-2 115-CLOVISJ2 115 #1 : Open Line CLOVISJ2 115-KERCKHF2 115 #1 : Open Line CLOVISJ2 115-SANGER 115 #1 : Drop Load at CLOVIS-2 115 #3 : 45.3 MW 9.1 MVAR D : Close Line CLOVIS-1 115-CLOVIS-2 115 #1 :	BORDEN -STOREY 1 230.00kV Ckt#1 Sec# 1	793.23	Amps	125.7	126.3	0.5
58	Open Line BORDEN 70-CASSIDY 70 #1 : Open Line CASSIDY 70-RIVERROC 70 #1 : Open Line RIVERROC 70-COPPRMNE 70 #1 : Drop Load at CASSIDY 70 #1 : 14.5 MW 2.9 MVAR Dro : Drop Load at RIVERROC 70 #1 : 2 MW 1.8 MVAR Dropp :	BORDEN -STOREY 1 230.00kV Ckt#1 Sec# 1	793.23	Amps	125.7	126.2	0.5
2013 Summer Off-Peak							
Tcy-LB	Tracy-Los Banos 500-kV	TESLA - LOSBANOS 500.0 Ckt #1	2963.89	Amps	100.6	101.0	0.4
LB-Mdwy	Los Banos - Midway 500-kV	LOSBANOS - GATES 500.0 Ckt#1	2963.89	Amps	107.4	107.8	0.4
396	Open Line GREGG 230-HELMS PP 230 #1 : Drop Generator at HELMS 2 18 #**: -310 MW Dropped : Drop Generator at HELMS 1 18 #1: -310 MW Dropped :	WARNERVL-COTTLE B 230.00kV Ckt#1 Sec# 1	793.23	Amps	122.4	123.0	0.6
397	Open Line GREGG 230-HELMS PP 230 #2 : Drop Generator at HELMS 2 18 #**: -310 MW Dropped : Drop Generator at HELMS 1 18 #1: -310 MW Dropped :	WARNERVL-COTTLE B 230.00kV Ckt#1 Sec# 1	793.23	Amps	122.4	123.0	0.6
147	Open Line MELONES 230-WILSON 230 #1 : Drop Generator at HELMS 1 18 #1: -310 MW Dropped :	WARNERVL-COTTLE B 230.00kV Ckt#1 Sec# 1	793.23	Amps	120.9	121.7	0.8
134	Open Line MOSSLND2 230-PANOCHE 230 #1 : Drop Generator at HELMS 1 18 #1: -310 MW Dropped :	WARNERVL-COTTLE B 230.00kV Ckt#1 Sec# 1	793.23	Amps	111.6	112.3	0.6
395	Open Line HELM 230-MC CALL 230 #1 : Drop Generator at HELMS 1 18 #1: -310 MW Dropped :	WARNERVL-COTTLE B 230.00kV Ckt#1 Sec# 1	793.23	Amps	111.0	111.7	0.6
142	Open Line PANOCHE 230-HELM 230 #1 : Drop Generator at HELMS 1 18 #1: -310 MW Dropped :	WARNERVL-COTTLE B 230.00kV Ckt#1 Sec# 1	793.23	Amps	110.2	110.9	0.6
Tsl-LB	Tracy-Los Banos 500-kV	WARNERVL-COTTLE B 230.00kV Ckt#1 Sec# 1	793.23	Amps	110.1	110.8	0.7
133	Open Line WESTLEY 230-LOSBANOS 230 #1 : Drop Generator at	WARNERVL-COTTLE B 230.00kV Ckt#1 Sec# 1	793.23	Amps	110.1	110.7	0.6

#	Outage Description	Facility	Rating	Unit	PU Flow	PU Flow	% Change
	HELMS 1 18 #1: -310 MW Dropped :						
150	Open Line DS AMIGO 230-PANOCHE 230 #1 : Drop Generator at HELMS 1 18 #1: -310 MW Dropped :	WARNERVL-COTTLE B 230.00kV Ckt#1 Sec# 1	793.23	Amps	109.7	110.3	0.6
136	Open Line LOSBANOS 230-PANOCHE 230 #1 : Drop Generator at HELMS 1 18 #1: -310 MW Dropped :	WARNERVL-COTTLE B 230.00kV Ckt#1 Sec# 1	793.23	Amps	109.6	110.2	0.6
406	Open Line MC CALL 230-HENTAP2 230 #1 : Open Line HENTAP2 230-GATES 230 #1 : Drop Generator at HELMS 1 18 #1: -310 MW Dropped :	WARNERVL-COTTLE B 230.00kV Ckt#1 Sec# 1	793.23	Amps	109.4	110.0	0.6
137	Open Line LOSBANOS 230-PANOCHE 230 #2 : Drop Generator at HELMS 1 18 #1: -310 MW Dropped :	WARNERVL-COTTLE B 230.00kV Ckt#1 Sec# 1	793.23	Amps	109.4	110.0	0.6
138	Open Line LOSBANOS 230-DS AMIGO 230 #1 : Drop Generator at HELMS 1 18 #1: -310 MW Dropped :	WARNERVL-COTTLE B 230.00kV Ckt#1 Sec# 1	793.23	Amps	108.9	109.5	0.6
135	Open Line COBURN 230-PANOCHE 230 #1 : Drop Generator at HELMS 1 18 #1: -310 MW Dropped :	WARNERVL-COTTLE B 230.00kV Ckt#1 Sec# 1	793.23	Amps	108.4	109.0	0.6
402	Open Line KEARNEY 230-HERNDON 230 #1 : Drop Generator at HELMS 1 18 #**: -310 MW Dropped :	WARNERVL-COTTLE B 230.00kV Ckt#1 Sec# 1	793.23	Amps	108.2	108.9	0.7
148	Open Line BORDEN 230-GREGG 230 #1 : Drop Generator at HELMS 1 18 #1: -310 MW Dropped :	WARNERVL-COTTLE B 230.00kV Ckt#1 Sec# 1	793.23	Amps	107.9	108.5	0.6
149	Open Line BORDEN 230-GREGG 230 #2 : Drop Generator at HELMS 1 18 #1: -310 MW Dropped :	WARNERVL-COTTLE B 230.00kV Ckt#1 Sec# 1	793.23	Amps	107.9	108.5	0.6
400	Open Line GREGG 230-FGRDN T2 230 #1 : Open Line FGRDN T2 230-FIGRDN 2 230 #1 : Open Line FGRDN T2 230-ASHLAN 230 #1 : Drop Load at FIGRDN 2 230 #1 : 24.1 MW 4.8 MVAR D : Close Line FIGRDN 1 230-FIGRDN 2 230 #1 : Drop Generator at HELMS 1 18 #1: -310 MW Dropped :	WARNERVL-COTTLE B 230.00kV Ckt#1 Sec# 1	793.23	Amps	107.5	108.1	0.6
310	Drop Generator at HELMS 2 18 #1: -310 MW Dropped :	WARNERVL-COTTLE B 230.00kV Ckt#1 Sec# 1	793.23	Amps	107.5	108.1	0.6
139	Open Line LOSBANOS 230-SN LS PP 230 #1 : Drop Generator at HELMS 1 18 #1: -310 MW Dropped :	WARNERVL-COTTLE B 230.00kV Ckt#1 Sec# 1	793.23	Amps	107.5	108.1	0.6
140	Open Line LOSBANOS 230-SN LS PP 230 #2 : Drop Generator at HELMS 1 18 #1: -310 MW Dropped :	WARNERVL-COTTLE B 230.00kV Ckt#1 Sec# 1	793.23	Amps	107.5	108.1	0.6
309	Drop Generator at HELMS 1 18 #1: -310 MW Dropped :	WARNERVL-COTTLE B 230.00kV Ckt#1 Sec# 1	793.23	Amps	107.5	108.1	0.6
398	Open Line GREGG 230-HERNDON 230 #1 : Drop Generator at HELMS 1 18 #1: -310 MW Dropped :	WARNERVL-COTTLE B 230.00kV Ckt#1 Sec# 1	793.23	Amps	107.5	108.1	0.6
399	Open Line GREGG 230-HERNDON 230 #2 : Drop Generator at HELMS 1 18 #1: -310 MW Dropped :	WARNERVL-COTTLE B 230.00kV Ckt#1 Sec# 1	793.23	Amps	107.5	108.1	0.6

#	Outage Description	Facility	Rating	Unit	PU Flow	PU Flow	% Change
409	Open Line GATES 230-ARCO 230 #1 : Drop Generator at HELMS 1 18 #1: -310 MW Dropped :	WARNERVL-COTTLE B 230.00kV Ckt#1 Sec# 1	793.23	Amps	107.4	108.0	0.6
403	Open Line HERNDON 230-FGRDN T1 230 #1 : Open Line FGRDN T1 230-FIGRDN 1 230 #1 : Open Line FGRDN T1 230-ASHLAN 230 #1 : Drop Load at FIGRDN 1 230 #1 : 33.6 MW 6.8 MVAR D : Close Line FIGRDN 1 230-FIGRDN 2 230 #1 : Drop Generator at HELMS 1 18 #1: -310 MW Dropped :	WARNERVL-COTTLE B 230.00kV Ckt#1 Sec# 1	793.23	Amps	107.4	108.0	0.6
190	Open Line GREGG 230-HELMS PP 230 #1 : Drop Generator at HELMS 2 18 #**: -310 MW Dropped :	WARNERVL-COTTLE B 230.00kV Ckt#1 Sec# 1	793.23	Amps	107.4	108.0	0.6
191	Open Line GREGG 230-HELMS PP 230 #2 : Drop Generator at HELMS 2 18 #**: -310 MW Dropped :	WARNERVL-COTTLE B 230.00kV Ckt#1 Sec# 1	793.23	Amps	107.4	108.0	0.6
410	Open Line GATES 230-MIDWAY 230 #1 : Drop Generator at HELMS 1 18 #1: -310 MW Dropped :	WARNERVL-COTTLE B 230.00kV Ckt#1 Sec# 1	793.23	Amps	107.3	107.9	0.6
Tcy-LB	Tracy-Los Banos 500-kV	WARNERVL-COTTLE B 230.00kV Ckt#1 Sec# 1	793.23	Amps	107.0	107.7	0.7
422	Open Line KEARNEY 230-HERNDON 230 #1 : Drop Generator at HELMS 1 18 #**: -310 MW Dropped : Drop Generator at MELONE1 13.8 #1: 100 MW Dropped :	WARNERVL-COTTLE B 230.00kV Ckt#1 Sec# 1	793.23	Amps	107.0	107.6	0.7
141	Open Line PANOCHE 230-MCMULLN1 230 #1 : Open Line MCMULLN1 230-KEARNEY 230 #1 : Drop Load at MCMULLN1 230 #1 : 9.3 MW 1.8 MVAR Dr : Drop Generator at HELMS 1 18 #**: -310 MW Dropped :	WARNERVL-COTTLE B 230.00kV Ckt#1 Sec# 1	793.23	Amps	106.5	107.2	0.7
143	Open Line PANOCHE 230-GATES 230 #1 : Drop Generator at HELMS 1 18 #1: -310 MW Dropped :	WARNERVL-COTTLE B 230.00kV Ckt#1 Sec# 1	793.23	Amps	106.6	107.2	0.6
144	Open Line PANOCHE 230-GATES 230 #2 : Drop Generator at HELMS 1 18 #1: -310 MW Dropped :	WARNERVL-COTTLE B 230.00kV Ckt#1 Sec# 1	793.23	Amps	106.6	107.2	0.6
416	Open Line GREGG 230-HELMS PP 230 #1 : Drop Generator at HELMS 2 18 #**: -310 MW Dropped : Drop Generator at MELONE1 13.8 #1: 100 MW Dropped :	WARNERVL-COTTLE B 230.00kV Ckt#1 Sec# 1	793.23	Amps	106.5	107.1	0.6
417	Open Line GREGG 230-HELMS PP 230 #2 : Drop Generator at HELMS 2 18 #**: -310 MW Dropped : Drop Generator at MELONE1 13.8 #1: 100 MW Dropped :	WARNERVL-COTTLE B 230.00kV Ckt#1 Sec# 1	793.23	Amps	106.5	107.1	0.6
131	Open Line MELONES 230-WILSON 230 #1 : Drop Generator at MELONE1 13.8 #1: 100 MW Dropped :	WARNERVL-COTTLE B 230.00kV Ckt#1 Sec# 1	793.23	Amps	106.2	107.0	0.8
407	Open Line GATES 230-TEMPLETN 230 #1 : Drop Generator at HELMS 1 18 #1: -310 MW Dropped :	WARNERVL-COTTLE B 230.00kV Ckt#1 Sec# 1	793.23	Amps	106.3	106.9	0.6

#	Outage Description	Facility	Rating	Unit	PU Flow	PU Flow	% Change
386	Open Line KEARNEY 230-HERNDON 230 #1 : Drop Generator at HELMS 1 18 #**: -310 MW Dropped : Drop Generator at KERCKHOF 13.8 #1: 44 MW Dropped :	WARNERVL-COTTLE B 230.00kV Ckt#1 Sec# 1	793.23	Amps	106.2	106.9	0.7
408	Open Line GATES 230-MORROBAY 230 #1 : Drop Generator at HELMS 1 18 #1: -310 MW Dropped :	WARNERVL-COTTLE B 230.00kV Ckt#1 Sec# 1	793.23	Amps	106.1	106.7	0.6
370	Open Line KEARNEY 230-HERNDON 230 #1 : Drop Generator at HELMS 1 18 #**: -310 MW Dropped : Drop Generator at EXCHQUER 13.8 #1: 38 MW Dropped :	WARNERVL-COTTLE B 230.00kV Ckt#1 Sec# 1	793.23	Amps	105.7	106.4	0.7
380	Open Line GREGG 230-HELMS PP 230 #1 : Drop Generator at HELMS 2 18 #**: -310 MW Dropped : Drop Generator at KERCKHOF 13.8 #1: 44 MW Dropped :	WARNERVL-COTTLE B 230.00kV Ckt#1 Sec# 1	793.23	Amps	105.6	106.2	0.6
381	Open Line GREGG 230-HELMS PP 230 #2 : Drop Generator at HELMS 2 18 #**: -310 MW Dropped : Drop Generator at KERCKHOF 13.8 #1: 44 MW Dropped :	WARNERVL-COTTLE B 230.00kV Ckt#1 Sec# 1	793.23	Amps	105.6	106.2	0.6
411	Open Line PANOCHE 230-MCMULLN1 230 #1 : Open Line MCMULLN1 230-KEARNEY 230 #1 : Drop Load at MCMULLN1 230 #1 : 9.3 MW 1.8 MVAR Dr : Drop Generator at HELMS 1 18 #**: -310 MW Dropped : Drop Generator at MELONE1 13.8 #1: 100 MW Dropped :	WARNERVL-COTTLE B 230.00kV Ckt#1 Sec# 1	793.23	Amps	105.3	105.9	0.7
364	Open Line GREGG 230-HELMS PP 230 #1 : Drop Generator at HELMS 2 18 #**: -310 MW Dropped : Drop Generator at EXCHQUER 13.8 #1: 38 MW Dropped :	WARNERVL-COTTLE B 230.00kV Ckt#1 Sec# 1	793.23	Amps	105.1	105.7	0.6
365	Open Line GREGG 230-HELMS PP 230 #2 : Drop Generator at HELMS 2 18 #**: -310 MW Dropped : Drop Generator at EXCHQUER 13.8 #1: 38 MW Dropped :	WARNERVL-COTTLE B 230.00kV Ckt#1 Sec# 1	793.23	Amps	105.1	105.7	0.6
404	Open Line HAAS 230-BALCH3TP 230 #1 : Open Xfmr HAAS 230/HAAS 13.8 #1 : Open Line BALCH3TP 230-MC CALL 230 #1 : Open Xfmr BALCH3TP 230/BLCH 2-3 13.8 #1 : Drop Generator at HAAS 13.8 #1 : 60 MW Dropped : Drop Generator at HAAS 13.8 #2 : 0 MW Dropped : Drop Generator at BLCH 2-3 13.8 #1 : 39 MW Dropped : Drop Generator at HELMS 1 18 #1: -310 MW Dropped :	WARNERVL-COTTLE B 230.00kV Ckt#1 Sec# 1	793.23	Amps	104.8	105.4	0.6
179	Open Line PANOCHE 230-MCMULLN1 230 #1 : Open Line MCMULLN1 230-KEARNEY 230 #1 : Drop Load at MCMULLN1 230 #1 : 9.3 MW 1.8 MVAR Dr : Drop Generator at HELMS 1 18 #**: -310 MW Dropped : Drop Generator at KERCKHOF 13.8 #1: 44 MW Dropped :	WARNERVL-COTTLE B 230.00kV Ckt#1 Sec# 1	793.23	Amps	104.5	105.2	0.7

#	Outage Description	Facility	Rating	Unit	PU Flow	PU Flow	% Change
160	Open Line PANOCHE 230-MCMULLN1 230 #1 : Open Line MCMULLN1 230-KEARNEY 230 #1 : Drop Load at MCMULLN1 230 #1 : 9.3 MW 1.8 MVAR Dr : Drop Generator at HELMS 1 18 #**: -310 MW Dropped : Drop Generator at EXCHQUER 13.8 #1: 38 MW Dropped :	WARNERVL-COTTLE B 230.00kV Ckt#1 Sec# 1	793.23	Amps	104.0	104.7	0.7
285	Open Xfmr GATES 230/GATES 500 #11 :	WARNERVL-COTTLE B 230.00kV Ckt#1 Sec# 1	793.23	Amps	103.7	104.5	0.8
LB-Gts1	Los Banos - Gates #1 500-kV	WARNERVL-COTTLE B 230.00kV Ckt#1 Sec# 1	793.23	Amps	102.2	102.9	0.6
405	Open Line BALCH 230-PINE FLT 230 #1 : Open Xfmr BALCH 230/BLCH 2-2 13.8 #1 : Open Line PINE FLT 230-MC CALL 230 #1 : Open Xfmr PINE FLT 230/PINE FLT 13.8 #1 : Drop Generator at BLCH 2-2 13.8 #1 : 39 MW Dropped : Drop Generator at PINE FLT 13.8 #1 : 54 MW Dropped : Drop Generator at HELMS 1 18 #1: -310 MW Dropped :	WARNERVL-COTTLE B 230.00kV Ckt#1 Sec# 1	793.23	Amps	102.0	102.6	0.6
61	Open Line MELONES 230-WILSON 230 #1 :	WARNERVL-COTTLE B 230.00kV Ckt#1 Sec# 1	793.23	Amps	101.5	102.3	0.8
145	Open Line STOREY 2 230-BORDEN 230 #1 : Open Line STOREY 2 230-WILSON 230 #1 : Drop Load at STOREY 2 230 #2 : 15 MW 3 MVAR Dropp : Drop Generator at HELMS 1 18 #1: -310 MW Dropped :	WARNERVL-COTTLE B 230.00kV Ckt#1 Sec# 1	793.23	Amps	101.7	102.2	0.5
146	Open Line STOREY 1 230-WILSON 230 #1 : Open Line STOREY 1 230-BORDEN 230 #1 : Drop Load at STOREY 1 230 #1 : 16.8 MW 3.4 MVAR D : Drop Generator at HELMS 1 18 #1: -310 MW Dropped :	WARNERVL-COTTLE B 230.00kV Ckt#1 Sec# 1	793.23	Amps	99.8	100.4	0.5
392	Open Line GATES 230-MORROBAY 230 #1 : Drop Generator at KERCKHOF 13.8 #1: 44 MW Dropped :	TEMPLETN-GATES 230.00kV Ckt#1 Sec# 1	974.97	Amps	111.4	111.1	-0.2
428	Open Line GATES 230-MORROBAY 230 #1 : Drop Generator at MELONE1 13.8 #1: 100 MW Dropped :	TEMPLETN-GATES 230.00kV Ckt#1 Sec# 1	974.97	Amps	111.3	111.1	-0.2
376	Open Line GATES 230-MORROBAY 230 #1 : Drop Generator at EXCHQUER 13.8 #1: 38 MW Dropped :	TEMPLETN-GATES 230.00kV Ckt#1 Sec# 1	974.97	Amps	111.3	111.1	-0.2
204	Open Line GATES 230-MORROBAY 230 #1 :	TEMPLETN-GATES 230.00kV Ckt#1 Sec# 1	974.97	Amps	111.1	110.9	-0.2
408	Open Line GATES 230-MORROBAY 230 #1 : Drop Generator at HELMS 1 18 #1: -310 MW Dropped :	TEMPLETN-GATES 230.00kV Ckt#1 Sec# 1	974.97	Amps	109.4	109.2	-0.2
213	Open Line AIRWAYJ2 115-AIRWAYS 115 #1 : Open Line AIRWAYJ2 115-BARTON 115 #1 : Open Line AIRWAYJ2 115-SANGER 115 #1 :	SANGER -LASPALMS 115.00kV Ckt#1 Sec# 1	1124.58	Amps	106.9	106.9	0.0
211	Open Line AIRWAYJ1 115-AIRWAYS 115 #1 : Open Line AIRWAYJ1 115-LASPALMS 115 #1 : Open Line AIRWAYJ1 115-MANCHSTR 115 #1 : Open Line LASPALMS 115-SANGER 115 #1 : Drop Load at LASPALMS 115 #1 : 10.5 MW 8.9 MVAR D :	SANGER -AIRWAYJ2 115.00kV Ckt#1 Sec# 1	1124.58	Amps	110.1	110.1	0.0
391	Open Line GATES 230-TEMPLETN 230 #1 : Drop Generator at	MORROBAY-GATES 230.00kV Ckt#1 Sec# 1	974.97	Amps	114.6	114.4	-0.2

#	Outage Description	Facility	Rating	Unit	PU Flow	PU Flow	% Change
	KERCKHOF 13.8 #1: 44 MW Dropped :						
427	Open Line GATES 230-TEMPLETN 230 #1 : Drop Generator at MELONE1 13.8 #1: 100 MW Dropped :	MORROBAY-GATES 230.00kV Ckt#1 Sec# 1	974.97	Amps	114.6	114.4	-0.2
375	Open Line GATES 230-TEMPLETN 230 #1 : Drop Generator at EXCHQUER 13.8 #1: 38 MW Dropped :	MORROBAY-GATES 230.00kV Ckt#1 Sec# 1	974.97	Amps	114.5	114.3	-0.2
203	Open Line GATES 230-TEMPLETN 230 #1 :	MORROBAY-GATES 230.00kV Ckt#1 Sec# 1	974.97	Amps	114.4	114.2	-0.2
407	Open Line GATES 230-TEMPLETN 230 #1 : Drop Generator at HELMS 1 18 #1: -310 MW Dropped :	MORROBAY-GATES 230.00kV Ckt#1 Sec# 1	974.97	Amps	112.7	112.5	-0.2
215	Open Line SANGER 115-MC CALL 115 #1 :	MC CALL -SANGER 115.00kV Ckt#3 Sec# 1	973.96	Amps	120.0	120.0	0.0
216	Open Line SANGER 115-MC CALL 115 #2 :	MC CALL -SANGER 115.00kV Ckt#3 Sec# 1	973.96	Amps	120.0	120.0	0.0
379	Open Line HELM 230-MC CALL 230 #1 : Drop Generator at KERCKHOF 13.8 #1: 44 MW Dropped :	MC CALL -SANGER 115.00kV Ckt#3 Sec# 1	973.96	Amps	112.4	112.5	0.1
415	Open Line HELM 230-MC CALL 230 #1 : Drop Generator at MELONE1 13.8 #1: 100 MW Dropped :	MC CALL -SANGER 115.00kV Ckt#3 Sec# 1	973.96	Amps	110.9	111.0	0.1
363	Open Line HELM 230-MC CALL 230 #1 : Drop Generator at EXCHQUER 13.8 #1: 38 MW Dropped :	MC CALL -SANGER 115.00kV Ckt#3 Sec# 1	973.96	Amps	110.7	110.8	0.1
189	Open Line HELM 230-MC CALL 230 #1 :	MC CALL -SANGER 115.00kV Ckt#3 Sec# 1	973.96	Amps	110.1	110.2	0.1
180	Open Line PANOCHE 230-HELM 230 #1 : Drop Generator at KERCKHOF 13.8 #1: 44 MW Dropped :	MC CALL -SANGER 115.00kV Ckt#3 Sec# 1	973.96	Amps	106.9	107.0	0.1
362	Open Line MC CALL 115-WAHTOKE 115 #1 : Drop Generator at KINGSRIV 13.8 #1: 33 MW Dropped :	MC CALL -SANGER 115.00kV Ckt#3 Sec# 1	973.96	Amps	106.3	106.3	0.0
412	Open Line PANOCHE 230-HELM 230 #1 : Drop Generator at MELONE1 13.8 #1: 100 MW Dropped :	MC CALL -SANGER 115.00kV Ckt#3 Sec# 1	973.96	Amps	105.3	105.3	0.1
226	Open Line MALAGA 115-MALAGATP 115 #1 : Open Line MALAGATP 115-SCWAXJCT 115 #1 : Open Line MALAGATP 115-ULTPWRJ 115 #1 : Open Line SCWAXJCT 115-SCWAX 115 #1 : Open Line SCWAXJCT 115-RANCHRS 115 #1 : Open Line ULTPWRJ 115-AIRPROD 115 #1 : Open Xfmr ULTPWRJ 115/ULTR.PWR 9.11 #1 : Open Line AIRPROD 115-MC CALL 115 #1 : Drop Load at SCWAX 115 #1 : 2 MW 1.1 MVAR Dropped : Drop Load at RANCHRS 115 #1 : 4.2 MW 0.8 MVAR Dro :	MC CALL -SANGER 115.00kV Ckt#3 Sec# 1	973.96	Amps	105.3	105.3	0.0
161	Open Line PANOCHE 230-HELM 230 #1 : Drop Generator at EXCHQUER 13.8 #1: 38 MW Dropped :	MC CALL -SANGER 115.00kV Ckt#3 Sec# 1	973.96	Amps	105.1	105.2	0.1
12	Open Line PANOCHE 230-HELM 230 #1 :	MC CALL -SANGER 115.00kV Ckt#3 Sec# 1	973.96	Amps	104.4	104.5	0.1
361	Open Line MC CALL 115-WAHTOKE 115 #1 :	MC CALL -SANGER 115.00kV Ckt#3 Sec# 1	973.96	Amps	103.4	103.4	0.0

#	Outage Description	Facility	Rating	Unit	PU Flow	PU Flow	% Change
395	Open Line HELM 230-MC CALL 230 #1 : Drop Generator at HELMS 1 18 #1: -310 MW Dropped :	MC CALL -SANGER 115.00kV Ckt#3 Sec# 1	973.96	Amps	103.2	103.3	0.1
228	Open Line REEDLEY 115-GERAWAN 115 #1 : Open Line GERAWAN 115-WAHTOKE 115 #1 :	MC CALL -SANGER 115.00kV Ckt#3 Sec# 1	973.96	Amps	100.1	100.1	0.0
406	Open Line MC CALL 230-HENTAP2 230 #1 : Open Line HENTAP2 230-GATES 230 #1 : Drop Generator at HELMS 1 18 #1: -310 MW Dropped :	MC CALL -HELM 230.00kV Ckt#1 Sec# 1	849.96	Amps	101.2	101.6	0.4
Tsl-LB	Tracy-Los Banos 500-kV	LOSBANOS-WESTLEY 230.00kV Ckt#1 Sec# 1	1699.92	Amps	142.0	142.6	0.6
Tcy-LB	Tracy-Los Banos 500-kV	LOSBANOS-WESTLEY 230.00kV Ckt#1 Sec# 1	1699.92	Amps	137.1	137.8	0.6
132	Open Line WARNERVL 230-WILSON 230 #1 : Drop Generator at HELMS 1 18 #1: -310 MW Dropped :	LOSBANOS-WESTLEY 230.00kV Ckt#1 Sec# 1	1699.92	Amps	116.6	117.2	0.6
Moss-LB	Moss Landing - Los Banos #1& #2 500-kV DLO	LOSBANOS-WESTLEY 230.00kV Ckt#1 Sec# 1	1699.92	Amps	116.5	117.0	0.5
134	Open Line MOSSLND2 230-PANOCHE 230 #1 : Drop Generator at HELMS 1 18 #1: -310 MW Dropped :	LOSBANOS-WESTLEY 230.00kV Ckt#1 Sec# 1	1699.92	Amps	115.3	115.9	0.5
396	Open Line GREGG 230-HELMS PP 230 #1 : Drop Generator at HELMS 2 18 #**: -310 MW Dropped : Drop Generator at HELMS 1 18 #1: -310 MW Dropped :	LOSBANOS-WESTLEY 230.00kV Ckt#1 Sec# 1	1699.92	Amps	115.0	115.5	0.5
397	Open Line GREGG 230-HELMS PP 230 #2 : Drop Generator at HELMS 2 18 #**: -310 MW Dropped : Drop Generator at HELMS 1 18 #1: -310 MW Dropped :	LOSBANOS-WESTLEY 230.00kV Ckt#1 Sec# 1	1699.92	Amps	115.0	115.5	0.5
146	Open Line STOREY 1 230-WILSON 230 #1 : Open Line STOREY 1 230-BORDEN 230 #1 : Drop Load at STOREY 1 230 #1 : 16.8 MW 3.4 MVAR D : Drop Generator at HELMS 1 18 #1: -310 MW Dropped :	LOSBANOS-WESTLEY 230.00kV Ckt#1 Sec# 1	1699.92	Amps	111.8	112.3	0.5
145	Open Line STOREY 2 230-BORDEN 230 #1 : Open Line STOREY 2 230-WILSON 230 #1 : Drop Load at STOREY 2 230 #2 : 15 MW 3 MVAR Dropp : Drop Generator at HELMS 1 18 #1: -310 MW Dropped :	LOSBANOS-WESTLEY 230.00kV Ckt#1 Sec# 1	1699.92	Amps	111.2	111.7	0.5
147	Open Line MELONES 230-WILSON 230 #1 : Drop Generator at HELMS 1 18 #1: -310 MW Dropped :	LOSBANOS-WESTLEY 230.00kV Ckt#1 Sec# 1	1699.92	Amps	110.8	111.3	0.5
135	Open Line COBURN 230-PANOCHE 230 #1 : Drop Generator at HELMS 1 18 #1: -310 MW Dropped :	LOSBANOS-WESTLEY 230.00kV Ckt#1 Sec# 1	1699.92	Amps	110.6	111.1	0.5
141	Open Line PANOCHE 230-MCMULLN1 230 #1 : Open Line MCMULLN1 230-KEARNEY 230 #1 : Drop Load at MCMULLN1 230 #1 : 9.3 MW 1.8 MVAR Dr : Drop Generator at HELMS 1 18 #**: -310 MW Dropped :	LOSBANOS-WESTLEY 230.00kV Ckt#1 Sec# 1	1699.92	Amps	110.1	110.6	0.5

#	Outage Description	Facility	Rating	Unit	PU Flow	PU Flow	% Change
401	Open Line GREGG 230-HENTAP1 230 #1 : Open Line HENTAP1 230-HENRIETA 230 #1 : Open Line HENTAP1 230-GATES 230 #1 : Close Line HENTAP2 230-HENRIETA 230 #1 : Drop Generator at HELMS 1 18 #**: -310 MW Dropped :	LOSBANOS-WESTLEY 230.00kV Ckt#1 Sec# 1	1699.92	Amps	110.0	110.5	0.5
411	Open Line PANOCHE 230-MCMULLN1 230 #1 : Open Line MCMULLN1 230-KEARNEY 230 #1 : Drop Load at MCMULLN1 230 #1 : 9.3 MW 1.8 MVAR Dr : Drop Generator at HELMS 1 18 #**: -310 MW Dropped : Drop Generator at MELONE1 13.8 #1: 100 MW Dropped :	LOSBANOS-WESTLEY 230.00kV Ckt#1 Sec# 1	1699.92	Amps	110.0	110.4	0.5
421	Open Line GREGG 230-HENTAP1 230 #1 : Open Line HENTAP1 230-HENRIETA 230 #1 : Open Line HENTAP1 230-GATES 230 #1 : Close Line HENTAP2 230-HENRIETA 230 #1 : Drop Generator at HELMS 1 18 #**: -310 MW Dropped : Drop Generator at MELONE1 13.8 #1: 100 MW Dropped :	LOSBANOS-WESTLEY 230.00kV Ckt#1 Sec# 1	1699.92	Amps	109.7	110.2	0.5
285	Open Xfmr GATES 230/GATES 500 #11 :	LOSBANOS-WESTLEY 230.00kV Ckt#1 Sec# 1	1699.92	Amps	109.6	110.1	0.6
406	Open Line MC CALL 230-HENTAP2 230 #1 : Open Line HENTAP2 230-GATES 230 #1 : Drop Generator at HELMS 1 18 #1: -310 MW Dropped :	LOSBANOS-WESTLEY 230.00kV Ckt#1 Sec# 1	1699.92	Amps	109.6	110.0	0.5
160	Open Line PANOCHE 230-MCMULLN1 230 #1 : Open Line MCMULLN1 230-KEARNEY 230 #1 : Drop Load at MCMULLN1 230 #1 : 9.3 MW 1.8 MVAR Dr : Drop Generator at HELMS 1 18 #**: -310 MW Dropped : Drop Generator at EXCHQUER 13.8 #1: 38 MW Dropped :	LOSBANOS-WESTLEY 230.00kV Ckt#1 Sec# 1	1699.92	Amps	109.6	110.0	0.5
369	Open Line GREGG 230-HENTAP1 230 #1 : Open Line HENTAP1 230-HENRIETA 230 #1 : Open Line HENTAP1 230-GATES 230 #1 : Close Line HENTAP2 230-HENRIETA 230 #1 : Drop Generator at HELMS 1 18 #**: -310 MW Dropped : Drop Generator at EXCHQUER 13.8 #1: 38 MW Dropped :	LOSBANOS-WESTLEY 230.00kV Ckt#1 Sec# 1	1699.92	Amps	109.4	109.9	0.5
179	Open Line PANOCHE 230-MCMULLN1 230 #1 : Open Line MCMULLN1 230-KEARNEY 230 #1 : Drop Load at MCMULLN1 230 #1 : 9.3 MW 1.8 MVAR Dr : Drop Generator at HELMS 1 18 #**: -310 MW Dropped : Drop Generator at KERCKHOF 13.8 #1: 44 MW Dropped :	LOSBANOS-WESTLEY 230.00kV Ckt#1 Sec# 1	1699.92	Amps	109.4	109.9	0.5
398	Open Line GREGG 230-HERNDON 230 #1 : Drop Generator at HELMS 1 18 #1: -310 MW Dropped :	LOSBANOS-WESTLEY 230.00kV Ckt#1 Sec# 1	1699.92	Amps	109.3	109.8	0.5
399	Open Line GREGG 230-HERNDON 230 #2 : Drop Generator at HELMS 1 18 #1: -310 MW Dropped :	LOSBANOS-WESTLEY 230.00kV Ckt#1 Sec# 1	1699.92	Amps	109.3	109.8	0.5
190	Open Line GREGG 230-HELMS PP 230 #1 : Drop Generator at HELMS 2 18 #**: -310 MW Dropped :	LOSBANOS-WESTLEY 230.00kV Ckt#1 Sec# 1	1699.92	Amps	109.3	109.8	0.5

#	Outage Description	Facility	Rating	Unit	PU Flow	PU Flow	% Change
191	Open Line GREGG 230-HELMS PP 230 #2 : Drop Generator at HELMS 2 18 #**: -310 MW Dropped :	LOSBANOS-WESTLEY 230.00kV Ckt#1 Sec# 1	1699.92	Amps	109.3	109.8	0.5
403	Open Line HERNDON 230-FGRDN T1 230 #1 : Open Line FGRDN T1 230-FIGRDN 1 230 #1 : Open Line FGRDN T1 230-ASHLAN 230 #1 : Drop Load at FIGRDN 1 230 #1 : 33.6 MW 6.8 MVAR D : Close Line FIGRDN 1 230-FIGRDN 2 230 #1 : Drop Generator at HELMS 1 18 #1: -310 MW Dropped :	LOSBANOS-WESTLEY 230.00kV Ckt#1 Sec# 1	1699.92	Amps	109.3	109.8	0.5
139	Open Line LOSBANOS 230-SN LS PP 230 #1 : Drop Generator at HELMS 1 18 #1: -310 MW Dropped :	LOSBANOS-WESTLEY 230.00kV Ckt#1 Sec# 1	1699.92	Amps	109.3	109.8	0.5
140	Open Line LOSBANOS 230-SN LS PP 230 #2 : Drop Generator at HELMS 1 18 #1: -310 MW Dropped :	LOSBANOS-WESTLEY 230.00kV Ckt#1 Sec# 1	1699.92	Amps	109.3	109.8	0.5
309	Drop Generator at HELMS 1 18 #1: -310 MW Dropped :	LOSBANOS-WESTLEY 230.00kV Ckt#1 Sec# 1	1699.92	Amps	109.3	109.8	0.5
310	Drop Generator at HELMS 2 18 #1: -310 MW Dropped :	LOSBANOS-WESTLEY 230.00kV Ckt#1 Sec# 1	1699.92	Amps	109.3	109.8	0.5
400	Open Line GREGG 230-FGRDN T2 230 #1 : Open Line FGRDN T2 230-FIGRDN 2 230 #1 : Open Line FGRDN T2 230-ASHLAN 230 #1 : Drop Load at FIGRDN 2 230 #1 : 24.1 MW 4.8 MVAR D : Close Line FIGRDN 1 230-FIGRDN 2 230 #1 : Drop Generator at HELMS 1 18 #1: -310 MW Dropped :	LOSBANOS-WESTLEY 230.00kV Ckt#1 Sec# 1	1699.92	Amps	109.3	109.8	0.5
409	Open Line GATES 230-ARCO 230 #1 : Drop Generator at HELMS 1 18 #1: -310 MW Dropped :	LOSBANOS-WESTLEY 230.00kV Ckt#1 Sec# 1	1699.92	Amps	109.3	109.8	0.5
LB-Gts1	Los Banos - Gates #1 500-kV	LOSBANOS-WESTLEY 230.00kV Ckt#1 Sec# 1	1699.92	Amps	109.2	109.7	0.5
410	Open Line GATES 230-MIDWAY 230 #1 : Drop Generator at HELMS 1 18 #1: -310 MW Dropped :	LOSBANOS-WESTLEY 230.00kV Ckt#1 Sec# 1	1699.92	Amps	109.2	109.7	0.5
148	Open Line BORDEN 230-GREGG 230 #1 : Drop Generator at HELMS 1 18 #1: -310 MW Dropped :	LOSBANOS-WESTLEY 230.00kV Ckt#1 Sec# 1	1699.92	Amps	109.2	109.7	0.5
149	Open Line BORDEN 230-GREGG 230 #2 : Drop Generator at HELMS 1 18 #1: -310 MW Dropped :	LOSBANOS-WESTLEY 230.00kV Ckt#1 Sec# 1	1699.92	Amps	109.2	109.7	0.5
385	Open Line GREGG 230-HENTAP1 230 #1 : Open Line HENTAP1 230-HENRIETA 230 #1 : Open Line HENTAP1 230-GATES 230 #1 : Close Line HENTAP2 230-HENRIETA 230 #1 : Drop Generator at HELMS 1 18 #**: -310 MW Dropped : Drop Generator at KERCKHOF 13.8 #1: 44 MW Dropped :	LOSBANOS-WESTLEY 230.00kV Ckt#1 Sec# 1	1699.92	Amps	109.2	109.7	0.5
3	Open Line MOSSLND2 230-PANOCHE 230 #1 :	LOSBANOS-WESTLEY 230.00kV Ckt#1 Sec# 1	1699.92	Amps	109.1	109.6	0.5

#	Outage Description	Facility	Rating	Unit	PU Flow	PU Flow	% Change
416	Open Line GREGG 230-HELMS PP 230 #1 : Drop Generator at HELMS 2 18 #**: -310 MW Dropped : Drop Generator at MELONE1 13.8 #1: 100 MW Dropped :	LOSBANOS-WESTLEY 230.00kV Ckt#1 Sec# 1	1699.92	Amps	109.0	109.5	0.5
417	Open Line GREGG 230-HELMS PP 230 #2 : Drop Generator at HELMS 2 18 #**: -310 MW Dropped : Drop Generator at MELONE1 13.8 #1: 100 MW Dropped :	LOSBANOS-WESTLEY 230.00kV Ckt#1 Sec# 1	1699.92	Amps	109.0	109.5	0.5
402	Open Line KEARNEY 230-HERNDON 230 #1 : Drop Generator at HELMS 1 18 #**: -310 MW Dropped :	LOSBANOS-WESTLEY 230.00kV Ckt#1 Sec# 1	1699.92	Amps	109.0	109.5	0.5
1	Open Line WARNERVL 230-WILSON 230 #1 :	LOSBANOS-WESTLEY 230.00kV Ckt#1 Sec# 1	1699.92	Amps	108.8	109.4	0.6
422	Open Line KEARNEY 230-HERNDON 230 #1 : Drop Generator at HELMS 1 18 #**: -310 MW Dropped : Drop Generator at MELONE1 13.8 #1: 100 MW Dropped :	LOSBANOS-WESTLEY 230.00kV Ckt#1 Sec# 1	1699.92	Amps	108.8	109.3	0.5
364	Open Line GREGG 230-HELMS PP 230 #1 : Drop Generator at HELMS 2 18 #**: -310 MW Dropped : Drop Generator at EXCHQUER 13.8 #1: 38 MW Dropped :	LOSBANOS-WESTLEY 230.00kV Ckt#1 Sec# 1	1699.92	Amps	108.7	109.2	0.5
365	Open Line GREGG 230-HELMS PP 230 #2 : Drop Generator at HELMS 2 18 #**: -310 MW Dropped : Drop Generator at EXCHQUER 13.8 #1: 38 MW Dropped :	LOSBANOS-WESTLEY 230.00kV Ckt#1 Sec# 1	1699.92	Amps	108.7	109.2	0.5
407	Open Line GATES 230-TEMPLETN 230 #1 : Drop Generator at HELMS 1 18 #1: -310 MW Dropped :	LOSBANOS-WESTLEY 230.00kV Ckt#1 Sec# 1	1699.92	Amps	108.5	109.0	0.5
380	Open Line GREGG 230-HELMS PP 230 #1 : Drop Generator at HELMS 2 18 #**: -310 MW Dropped : Drop Generator at KERCKHOF 13.8 #1: 44 MW Dropped :	LOSBANOS-WESTLEY 230.00kV Ckt#1 Sec# 1	1699.92	Amps	108.5	109.0	0.5
381	Open Line GREGG 230-HELMS PP 230 #2 : Drop Generator at HELMS 2 18 #**: -310 MW Dropped : Drop Generator at KERCKHOF 13.8 #1: 44 MW Dropped :	LOSBANOS-WESTLEY 230.00kV Ckt#1 Sec# 1	1699.92	Amps	108.5	109.0	0.5
153	Open Line MOSSLND2 230-PANOCHE 230 #1 : Drop Generator at EXCHQUER 13.8 #1: 38 MW Dropped :	LOSBANOS-WESTLEY 230.00kV Ckt#1 Sec# 1	1699.92	Amps	108.4	108.9	0.5
370	Open Line KEARNEY 230-HERNDON 230 #1 : Drop Generator at HELMS 1 18 #**: -310 MW Dropped : Drop Generator at EXCHQUER 13.8 #1: 38 MW Dropped :	LOSBANOS-WESTLEY 230.00kV Ckt#1 Sec# 1	1699.92	Amps	108.5	108.9	0.5
408	Open Line GATES 230-MORROBAY 230 #1 : Drop Generator at HELMS 1 18 #1: -310 MW Dropped :	LOSBANOS-WESTLEY 230.00kV Ckt#1 Sec# 1	1699.92	Amps	108.4	108.9	0.5
386	Open Line KEARNEY 230-HERNDON 230 #1 : Drop Generator at HELMS 1 18 #**: -310 MW Dropped : Drop Generator at KERCKHOF 13.8 #1: 44 MW Dropped :	LOSBANOS-WESTLEY 230.00kV Ckt#1 Sec# 1	1699.92	Amps	108.3	108.7	0.5

#	Outage Description	Facility	Rating	Unit	PU Flow	PU Flow	% Change
172	Open Line MOSSLND2 230-PANOCHE 230 #1 : Drop Generator at KERCKHOF 13.8 #1: 44 MW Dropped :	LOSBANOS-WESTLEY 230.00kV Ckt#1 Sec# 1	1699.92	Amps	108.2	108.7	0.5
126	Open Line WARNERVL 230-WILSON 230 #1 : Drop Generator at MELONE1 13.8 #1: 100 MW Dropped :	LOSBANOS-WESTLEY 230.00kV Ckt#1 Sec# 1	1699.92	Amps	108.1	108.7	0.6
151	Open Line WARNERVL 230-WILSON 230 #1 : Drop Generator at EXCHQUER 13.8 #1: 38 MW Dropped :	LOSBANOS-WESTLEY 230.00kV Ckt#1 Sec# 1	1699.92	Amps	107.9	108.4	0.6
170	Open Line WARNERVL 230-WILSON 230 #1 : Drop Generator at KERCKHOF 13.8 #1: 44 MW Dropped :	LOSBANOS-WESTLEY 230.00kV Ckt#1 Sec# 1	1699.92	Amps	107.7	108.3	0.6
404	Open Line HAAS 230-BALCH3TP 230 #1 : Open Xfmr HAAS 230/HAAS 13.8 #1 : Open Line BALCH3TP 230-MC CALL 230 #1 : Open Xfmr BALCH3TP 230/BLCH 2-3 13.8 #1 : Drop Generator at HAAS 13.8 #1 : 60 MW Dropped : Drop Generator at HAAS 13.8 #2 : 0 MW Dropped : Drop Generator at BLCH 2-3 13.8 #1 : 39 MW Dropped : Drop Generator at HELMS 1 18 #1: -310 MW Dropped :	LOSBANOS-WESTLEY 230.00kV Ckt#1 Sec# 1	1699.92	Amps	107.3	107.8	0.5
143	Open Line PANOCHE 230-GATES 230 #1 : Drop Generator at HELMS 1 18 #1: -310 MW Dropped :	LOSBANOS-WESTLEY 230.00kV Ckt#1 Sec# 1	1699.92	Amps	106.6	107.0	0.5
144	Open Line PANOCHE 230-GATES 230 #2 : Drop Generator at HELMS 1 18 #1: -310 MW Dropped :	LOSBANOS-WESTLEY 230.00kV Ckt#1 Sec# 1	1699.92	Amps	106.6	107.0	0.5
142	Open Line PANOCHE 230-HELM 230 #1 : Drop Generator at HELMS 1 18 #1: -310 MW Dropped :	LOSBANOS-WESTLEY 230.00kV Ckt#1 Sec# 1	1699.92	Amps	106.4	106.8	0.5
395	Open Line HELM 230-MC CALL 230 #1 : Drop Generator at HELMS 1 18 #1: -310 MW Dropped :	LOSBANOS-WESTLEY 230.00kV Ckt#1 Sec# 1	1699.92	Amps	105.6	106.0	0.5
16	Open Line STOREY 1 230-WILSON 230 #1 : Open Line STOREY 1 230-BORDEN 230 #1 : Drop Load at STOREY 1 230 #1 : 16.8 MW 3.4 MVAR D :	LOSBANOS-WESTLEY 230.00kV Ckt#1 Sec# 1	1699.92	Amps	105.4	105.9	0.5
138	Open Line LOSBANOS 230-DS AMIGO 230 #1 : Drop Generator at HELMS 1 18 #1: -310 MW Dropped :	LOSBANOS-WESTLEY 230.00kV Ckt#1 Sec# 1	1699.92	Amps	105.4	105.9	0.5
128	Open Line STOREY 1 230-WILSON 230 #1 : Open Line STOREY 1 230-BORDEN 230 #1 : Drop Load at STOREY 1 230 #1 : 16.8 MW 3.4 MVAR D : Drop Generator at MELONE1 13.8 #1: 100 MW Dropped :	LOSBANOS-WESTLEY 230.00kV Ckt#1 Sec# 1	1699.92	Amps	105.2	105.7	0.5
405	Open Line BALCH 230-PINE FLT 230 #1 : Open Xfmr BALCH 230/BLCH 2-2 13.8 #1 : Open Line PINE FLT 230-MC CALL 230 #1 : Open Xfmr PINE FLT 230/PINE FLT 13.8 #1 : Drop Generator at BLCH 2-2 13.8 #1 : 39 MW Dropped : Drop Generator at PINE FLT 13.8 #1 : 54 MW Dropped : Drop Generator at HELMS 1 18 #1: -310 MW Dropped :	LOSBANOS-WESTLEY 230.00kV Ckt#1 Sec# 1	1699.92	Amps	105.1	105.6	0.5

#	Outage Description	Facility	Rating	Unit	PU Flow	PU Flow	% Change
15	Open Line STOREY 2 230-BORDEN 230 #1 : Open Line STOREY 2 230-WILSON 230 #1 : Drop Load at STOREY 2 230 #2 : 15 MW 3 MVAR Dropp :	LOSBANOS-WESTLEY 230.00kV Ckt#1 Sec# 1	1699.92	Amps	105.0	105.5	0.5
131	Open Line MELONES 230-WILSON 230 #1 : Drop Generator at MELONE1 13.8 #1: 100 MW Dropped :	LOSBANOS-WESTLEY 230.00kV Ckt#1 Sec# 1	1699.92	Amps	105.0	105.5	0.5
165	Open Line STOREY 1 230-WILSON 230 #1 : Open Line STOREY 1 230-BORDEN 230 #1 : Drop Load at STOREY 1 230 #1 : 16.8 MW 3.4 MVAR D : Drop Generator at EXCHQUER 13.8 #1: 38 MW Dropped :	LOSBANOS-WESTLEY 230.00kV Ckt#1 Sec# 1	1699.92	Amps	104.9	105.4	0.5
127	Open Line STOREY 2 230-BORDEN 230 #1 : Open Line STOREY 2 230-WILSON 230 #1 : Drop Load at STOREY 2 230 #2 : 15 MW 3 MVAR Dropp : Drop Generator at MELONE1 13.8 #1: 100 MW Dropped :	LOSBANOS-WESTLEY 230.00kV Ckt#1 Sec# 1	1699.92	Amps	104.8	105.3	0.5
213	Open Line AIRWAYJ2 115-AIRWAYS 115 #1 : Open Line AIRWAYJ2 115-BARTON 115 #1 : Open Line AIRWAYJ2 115-SANGER 115 #1 :	LASPALMS-AIRWAYJ1 115.00kV Ckt#1 Sec# 1	1124.58	Amps	103.0	103.0	0.0
396	Open Line GREGG 230-HELMS PP 230 #1 : Drop Generator at HELMS 2 18 #**: -310 MW Dropped : Drop Generator at HELMS 1 18 #1: -310 MW Dropped :	COTTLE B-BELLOTA 230.00kV Ckt#1 Sec# 1	793.23	Amps	117.9	118.5	0.6
397	Open Line GREGG 230-HELMS PP 230 #2 : Drop Generator at HELMS 2 18 #**: -310 MW Dropped : Drop Generator at HELMS 1 18 #1: -310 MW Dropped :	COTTLE B-BELLOTA 230.00kV Ckt#1 Sec# 1	793.23	Amps	117.9	118.5	0.6
147	Open Line MELONES 230-WILSON 230 #1 : Drop Generator at HELMS 1 18 #1: -310 MW Dropped :	COTTLE B-BELLOTA 230.00kV Ckt#1 Sec# 1	793.23	Amps	116.5	117.2	0.8
134	Open Line MOSSLND2 230-PANOCHE 230 #1 : Drop Generator at HELMS 1 18 #1: -310 MW Dropped :	COTTLE B-BELLOTA 230.00kV Ckt#1 Sec# 1	793.23	Amps	107.1	107.8	0.6
395	Open Line HELM 230-MC CALL 230 #1 : Drop Generator at HELMS 1 18 #1: -310 MW Dropped :	COTTLE B-BELLOTA 230.00kV Ckt#1 Sec# 1	793.23	Amps	106.6	107.2	0.6
142	Open Line PANOCHE 230-HELM 230 #1 : Drop Generator at HELMS 1 18 #1: -310 MW Dropped :	COTTLE B-BELLOTA 230.00kV Ckt#1 Sec# 1	793.23	Amps	105.8	106.4	0.6
Tsl-LB	Tracy-Los Banos 500-kV	COTTLE B-BELLOTA 230.00kV Ckt#1 Sec# 1	793.23	Amps	105.6	106.3	0.7
133	Open Line WESTLEY 230-LOSBANOS 230 #1 : Drop Generator at HELMS 1 18 #1: -310 MW Dropped :	COTTLE B-BELLOTA 230.00kV Ckt#1 Sec# 1	793.23	Amps	105.6	106.2	0.6
150	Open Line DS AMIGO 230-PANOCHE 230 #1 : Drop Generator at HELMS 1 18 #1: -310 MW Dropped :	COTTLE B-BELLOTA 230.00kV Ckt#1 Sec# 1	793.23	Amps	105.2	105.8	0.6
136	Open Line LOSBANOS 230-PANOCHE 230 #1 : Drop Generator at HELMS 1 18 #1: -310 MW Dropped :	COTTLE B-BELLOTA 230.00kV Ckt#1 Sec# 1	793.23	Amps	105.1	105.7	0.6

#	Outage Description	Facility	Rating	Unit	PU Flow	PU Flow	% Change
406	Open Line MC CALL 230-HENTAP2 230 #1 : Open Line HENTAP2 230-GATES 230 #1 : Drop Generator at HELMS 1 18 #1: -310 MW Dropped :	COTTLE B-BELLOTA 230.00kV Ckt#1 Sec# 1	793.23	Amps	105.0	105.6	0.6
137	Open Line LOSBANOS 230-PANOCHE 230 #2 : Drop Generator at HELMS 1 18 #1: -310 MW Dropped :	COTTLE B-BELLOTA 230.00kV Ckt#1 Sec# 1	793.23	Amps	104.9	105.5	0.6
138	Open Line LOSBANOS 230-DS AMIGO 230 #1 : Drop Generator at HELMS 1 18 #1: -310 MW Dropped :	COTTLE B-BELLOTA 230.00kV Ckt#1 Sec# 1	793.23	Amps	104.4	105.1	0.6
135	Open Line COBURN 230-PANOCHE 230 #1 : Drop Generator at HELMS 1 18 #1: -310 MW Dropped :	COTTLE B-BELLOTA 230.00kV Ckt#1 Sec# 1	793.23	Amps	103.9	104.5	0.6
402	Open Line KEARNEY 230-HERNDON 230 #1 : Drop Generator at HELMS 1 18 #**: -310 MW Dropped :	COTTLE B-BELLOTA 230.00kV Ckt#1 Sec# 1	793.23	Amps	103.7	104.4	0.7
148	Open Line BORDEN 230-GREGG 230 #1 : Drop Generator at HELMS 1 18 #1: -310 MW Dropped :	COTTLE B-BELLOTA 230.00kV Ckt#1 Sec# 1	793.23	Amps	103.4	104.0	0.6
149	Open Line BORDEN 230-GREGG 230 #2 : Drop Generator at HELMS 1 18 #1: -310 MW Dropped :	COTTLE B-BELLOTA 230.00kV Ckt#1 Sec# 1	793.23	Amps	103.4	104.0	0.6
400	Open Line GREGG 230-FGRDN T2 230 #1 : Open Line FGRDN T2 230-FIGRDN 2 230 #1 : Open Line FGRDN T2 230-ASHLAN 230 #1 : Drop Load at FIGRDN 2 230 #1 : 24.1 MW 4.8 MVAR D : Close Line FIGRDN 1 230-FIGRDN 2 230 #1 : Drop Generator at HELMS 1 18 #1: -310 MW Dropped :	COTTLE B-BELLOTA 230.00kV Ckt#1 Sec# 1	793.23	Amps	103.0	103.6	0.6
309	Drop Generator at HELMS 1 18 #1: -310 MW Dropped :	COTTLE B-BELLOTA 230.00kV Ckt#1 Sec# 1	793.23	Amps	103.0	103.6	0.6
310	Drop Generator at HELMS 2 18 #1: -310 MW Dropped :	COTTLE B-BELLOTA 230.00kV Ckt#1 Sec# 1	793.23	Amps	103.0	103.6	0.6
139	Open Line LOSBANOS 230-SN LS PP 230 #1 : Drop Generator at HELMS 1 18 #1: -310 MW Dropped :	COTTLE B-BELLOTA 230.00kV Ckt#1 Sec# 1	793.23	Amps	103.0	103.6	0.6
140	Open Line LOSBANOS 230-SN LS PP 230 #2 : Drop Generator at HELMS 1 18 #1: -310 MW Dropped :	COTTLE B-BELLOTA 230.00kV Ckt#1 Sec# 1	793.23	Amps	103.0	103.6	0.6
398	Open Line GREGG 230-HERNDON 230 #1 : Drop Generator at HELMS 1 18 #1: -310 MW Dropped :	COTTLE B-BELLOTA 230.00kV Ckt#1 Sec# 1	793.23	Amps	103.0	103.6	0.6
399	Open Line GREGG 230-HERNDON 230 #2 : Drop Generator at HELMS 1 18 #1: -310 MW Dropped :	COTTLE B-BELLOTA 230.00kV Ckt#1 Sec# 1	793.23	Amps	103.0	103.6	0.6
409	Open Line GATES 230-ARCO 230 #1 : Drop Generator at HELMS 1 18 #1: -310 MW Dropped :	COTTLE B-BELLOTA 230.00kV Ckt#1 Sec# 1	793.23	Amps	103.0	103.6	0.6
403	Open Line HERNDON 230-FGRDN T1 230 #1 : Open Line FGRDN T1 230-FIGRDN 1 230 #1 : Open Line FGRDN T1 230-ASHLAN 230 #1 : Drop Load at FIGRDN 1 230 #1 : 33.6 MW 6.8 MVAR D : Close Line FIGRDN 1 230-FIGRDN 2 230 #1 : Drop Generator at HELMS 1	COTTLE B-BELLOTA 230.00kV Ckt#1 Sec# 1	793.23	Amps	103.0	103.6	0.6

#	Outage Description	Facility	Rating	Unit	PU Flow	PU Flow	% Change
	18 #1: -310 MW Dropped :						
190	Open Line GREGG 230-HELMS PP 230 #1 : Drop Generator at HELMS 2 18 #**: -310 MW Dropped :	COTTLE B-BELLOTA 230.00kV Ckt#1 Sec# 1	793.23	Amps	102.9	103.5	0.6
191	Open Line GREGG 230-HELMS PP 230 #2 : Drop Generator at HELMS 2 18 #**: -310 MW Dropped :	COTTLE B-BELLOTA 230.00kV Ckt#1 Sec# 1	793.23	Amps	102.9	103.5	0.6
410	Open Line GATES 230-MIDWAY 230 #1 : Drop Generator at HELMS 1 18 #1: -310 MW Dropped :	COTTLE B-BELLOTA 230.00kV Ckt#1 Sec# 1	793.23	Amps	102.8	103.4	0.6
Tcy-LB	Tracy-Los Banos 500-kV	COTTLE B-BELLOTA 230.00kV Ckt#1 Sec# 1	793.23	Amps	102.5	103.2	0.7
422	Open Line KEARNEY 230-HERNDON 230 #1 : Drop Generator at HELMS 1 18 #**: -310 MW Dropped : Drop Generator at MELONE1 13.8 #1: 100 MW Dropped :	COTTLE B-BELLOTA 230.00kV Ckt#1 Sec# 1	793.23	Amps	102.5	103.2	0.7
141	Open Line PANOCHE 230-MCMULLN1 230 #1 : Open Line MCMULLN1 230-KEARNEY 230 #1 : Drop Load at MCMULLN1 230 #1 : 9.3 MW 1.8 MVAR Dr : Drop Generator at HELMS 1 18 #**: -310 MW Dropped :	COTTLE B-BELLOTA 230.00kV Ckt#1 Sec# 1	793.23	Amps	102.0	102.7	0.7
143	Open Line PANOCHE 230-GATES 230 #1 : Drop Generator at HELMS 1 18 #1: -310 MW Dropped :	COTTLE B-BELLOTA 230.00kV Ckt#1 Sec# 1	793.23	Amps	102.1	102.7	0.6
144	Open Line PANOCHE 230-GATES 230 #2 : Drop Generator at HELMS 1 18 #1: -310 MW Dropped :	COTTLE B-BELLOTA 230.00kV Ckt#1 Sec# 1	793.23	Amps	102.1	102.7	0.6
416	Open Line GREGG 230-HELMS PP 230 #1 : Drop Generator at HELMS 2 18 #**: -310 MW Dropped : Drop Generator at MELONE1 13.8 #1: 100 MW Dropped :	COTTLE B-BELLOTA 230.00kV Ckt#1 Sec# 1	793.23	Amps	102.0	102.6	0.6
417	Open Line GREGG 230-HELMS PP 230 #2 : Drop Generator at HELMS 2 18 #**: -310 MW Dropped : Drop Generator at MELONE1 13.8 #1: 100 MW Dropped :	COTTLE B-BELLOTA 230.00kV Ckt#1 Sec# 1	793.23	Amps	102.0	102.6	0.6
131	Open Line MELONES 230-WILSON 230 #1 : Drop Generator at MELONE1 13.8 #1: 100 MW Dropped :	COTTLE B-BELLOTA 230.00kV Ckt#1 Sec# 1	793.23	Amps	101.7	102.5	0.8
407	Open Line GATES 230-TEMPLETN 230 #1 : Drop Generator at HELMS 1 18 #1: -310 MW Dropped :	COTTLE B-BELLOTA 230.00kV Ckt#1 Sec# 1	793.23	Amps	101.8	102.4	0.6
386	Open Line KEARNEY 230-HERNDON 230 #1 : Drop Generator at HELMS 1 18 #**: -310 MW Dropped : Drop Generator at KERCKHOF 13.8 #1: 44 MW Dropped :	COTTLE B-BELLOTA 230.00kV Ckt#1 Sec# 1	793.23	Amps	101.7	102.4	0.7
408	Open Line GATES 230-MORROBAY 230 #1 : Drop Generator at HELMS 1 18 #1: -310 MW Dropped :	COTTLE B-BELLOTA 230.00kV Ckt#1 Sec# 1	793.23	Amps	101.6	102.2	0.6

#	Outage Description	Facility	Rating	Unit	PU Flow	PU Flow	% Change
370	Open Line KEARNEY 230-HERNDON 230 #1 : Drop Generator at HELMS 1 18 #**: -310 MW Dropped : Drop Generator at EXCHQUER 13.8 #1: 38 MW Dropped :	COTTLE B-BELLOTA 230.00kV Ckt#1 Sec# 1	793.23	Amps	101.2	101.9	0.7
380	Open Line GREGG 230-HELMS PP 230 #1 : Drop Generator at HELMS 2 18 #**: -310 MW Dropped : Drop Generator at KERCKHOF 13.8 #1: 44 MW Dropped :	COTTLE B-BELLOTA 230.00kV Ckt#1 Sec# 1	793.23	Amps	101.2	101.8	0.6
381	Open Line GREGG 230-HELMS PP 230 #2 : Drop Generator at HELMS 2 18 #**: -310 MW Dropped : Drop Generator at KERCKHOF 13.8 #1: 44 MW Dropped :	COTTLE B-BELLOTA 230.00kV Ckt#1 Sec# 1	793.23	Amps	101.2	101.8	0.6
411	Open Line PANOCHE 230-MCMULLN1 230 #1 : Open Line MCMULLN1 230-KEARNEY 230 #1 : Drop Load at MCMULLN1 230 #1 : 9.3 MW 1.8 MVAR Dr : Drop Generator at HELMS 1 18 #**: -310 MW Dropped : Drop Generator at MELONE1 13.8 #1: 100 MW Dropped :	COTTLE B-BELLOTA 230.00kV Ckt#1 Sec# 1	793.23	Amps	100.8	101.4	0.7
364	Open Line GREGG 230-HELMS PP 230 #1 : Drop Generator at HELMS 2 18 #**: -310 MW Dropped : Drop Generator at EXCHQUER 13.8 #1: 38 MW Dropped :	COTTLE B-BELLOTA 230.00kV Ckt#1 Sec# 1	793.23	Amps	100.6	101.2	0.6
365	Open Line GREGG 230-HELMS PP 230 #2 : Drop Generator at HELMS 2 18 #**: -310 MW Dropped : Drop Generator at EXCHQUER 13.8 #1: 38 MW Dropped :	COTTLE B-BELLOTA 230.00kV Ckt#1 Sec# 1	793.23	Amps	100.6	101.2	0.6
404	Open Line HAAS 230-BALCH3TP 230 #1 : Open Xfmr HAAS 230/HAAS 13.8 #1 : Open Line BALCH3TP 230-MC CALL 230 #1 : Open Xfmr BALCH3TP 230/BLCH 2-3 13.8 #1 : Drop Generator at HAAS 13.8 #1 : 60 MW Dropped : Drop Generator at HAAS 13.8 #2 : 0 MW Dropped : Drop Generator at BLCH 2-3 13.8 #1 : 39 MW Dropped : Drop Generator at HELMS 1 18 #1: -310 MW Dropped :	COTTLE B-BELLOTA 230.00kV Ckt#1 Sec# 1	793.23	Amps	100.4	101.0	0.6
179	Open Line PANOCHE 230-MCMULLN1 230 #1 : Open Line MCMULLN1 230-KEARNEY 230 #1 : Drop Load at MCMULLN1 230 #1 : 9.3 MW 1.8 MVAR Dr : Drop Generator at HELMS 1 18 #**: -310 MW Dropped : Drop Generator at KERCKHOF 13.8 #1: 44 MW Dropped :	COTTLE B-BELLOTA 230.00kV Ckt#1 Sec# 1	793.23	Amps	100.0	100.7	0.7
160	Open Line PANOCHE 230-MCMULLN1 230 #1 : Open Line MCMULLN1 230-KEARNEY 230 #1 : Drop Load at MCMULLN1 230 #1 : 9.3 MW 1.8 MVAR Dr : Drop Generator at HELMS 1 18 #**: -310 MW Dropped : Drop Generator at EXCHQUER 13.8 #1: 38 MW Dropped :	COTTLE B-BELLOTA 230.00kV Ckt#1 Sec# 1	793.23	Amps	99.5	100.2	0.7
2013 Spring Peak							
285	Open Xfmr GATES 230/GATES 500 #11 :	WILSON -WARNERVL 230.00kV Ckt#1 Sec# 1	793.23	Amps	128.7	129.8	1.1

#	Outage Description	Facility	Rating	Unit	PU Flow	PU Flow	% Change
131	Open Line MELONES 230-WILSON 230 #1 : Drop Generator at MELONE1 13.8 #1: 166 MW Dropped :	WILSON -WARNERVL 230.00kV Ckt#1 Sec# 1	793.23	Amps	123.9	125.0	1.1
196	Open Line KEARNEY 230-HERNDON 230 #1 :	WILSON -WARNERVL 230.00kV Ckt#1 Sec# 1	793.23	Amps	119.7	120.7	1.0
2	Open Line WESTLEY 230-LOSBANOS 230 #1 :	WILSON -WARNERVL 230.00kV Ckt#1 Sec# 1	793.23	Amps	119.7	120.5	0.9
11	Open Line PANOCHE 230-MCMULLN1 230 #1 : Open Line MCMULLN1 230-KEARNEY 230 #1 : Drop Load at MCMULLN1 230 #1 : 16.4 MW 3.3 MVAR D :	WILSON -WARNERVL 230.00kV Ckt#1 Sec# 1	793.23	Amps	115.9	116.8	1.0
422	Open Line KEARNEY 230-HERNDON 230 #1 : Drop Generator at MELONE1 13.8 #1: 166 MW Dropped :	WILSON -WARNERVL 230.00kV Ckt#1 Sec# 1	793.23	Amps	114.2	115.1	1.0
370	Open Line KEARNEY 230-HERNDON 230 #1 : Drop Generator at EXCHQUER 13.8 #1: 90 MW Dropped :	WILSON -WARNERVL 230.00kV Ckt#1 Sec# 1	793.23	Amps	111.8	112.7	1.0
152	Open Line WESTLEY 230-LOSBANOS 230 #1 : Drop Generator at EXCHQUER 13.8 #1: 90 MW Dropped :	WILSON -WARNERVL 230.00kV Ckt#1 Sec# 1	793.23	Amps	111.9	112.7	0.9
171	Open Line WESTLEY 230-LOSBANOS 230 #1 : Drop Generator at KERCKHOF 13.8 #1: 145 MW Dropped :	WILSON -WARNERVL 230.00kV Ckt#1 Sec# 1	793.23	Amps	111.5	112.4	0.8
386	Open Line KEARNEY 230-HERNDON 230 #1 : Drop Generator at KERCKHOF 13.8 #1: 145 MW Dropped :	WILSON -WARNERVL 230.00kV Ckt#1 Sec# 1	793.23	Amps	111.0	112.0	1.0
166	Open Line MELONES 230-WILSON 230 #1 : Drop Generator at EXCHQUER 13.8 #1: 90 MW Dropped :	WILSON -WARNERVL 230.00kV Ckt#1 Sec# 1	793.23	Amps	110.4	111.5	1.1
411	Open Line PANOCHE 230-MCMULLN1 230 #1 : Open Line MCMULLN1 230-KEARNEY 230 #1 : Drop Load at MCMULLN1 230 #1 : 16.4 MW 3.3 MVAR D : Drop Generator at MELONE1 13.8 #1: 166 MW Dropped :	WILSON -WARNERVL 230.00kV Ckt#1 Sec# 1	793.23	Amps	110.4	111.4	1.0
185	Open Line MELONES 230-WILSON 230 #1 : Drop Generator at KERCKHOF 13.8 #1: 145 MW Dropped :	WILSON -WARNERVL 230.00kV Ckt#1 Sec# 1	793.23	Amps	110.1	111.2	1.1
189	Open Line HELM 230-MC CALL 230 #1 :	WILSON -WARNERVL 230.00kV Ckt#1 Sec# 1	793.23	Amps	109.6	110.5	0.9
202	Open Line MC CALL 230-HENTAP2 230 #1 : Open Line HENTAP2 230-GATES 230 #1 :	WILSON -WARNERVL 230.00kV Ckt#1 Sec# 1	793.23	Amps	109.6	110.5	0.9
12	Open Line PANOCHE 230-HELM 230 #1 :	WILSON -WARNERVL 230.00kV Ckt#1 Sec# 1	793.23	Amps	109.1	110.0	0.9
3	Open Line MOSSLND2 230-PANOCHE 230 #1 :	WILSON -WARNERVL 230.00kV Ckt#1 Sec# 1	793.23	Amps	108.8	109.7	0.9
160	Open Line PANOCHE 230-MCMULLN1 230 #1 : Open Line MCMULLN1 230-KEARNEY 230 #1 : Drop Load at MCMULLN1 230 #1 : 16.4 MW 3.3 MVAR D : Drop Generator at EXCHQUER 13.8 #1: 90 MW Dropped :	WILSON -WARNERVL 230.00kV Ckt#1 Sec# 1	793.23	Amps	107.9	108.9	1.0
62	Open Line DS AMIGO 230-PANOCHE 230 #1 :	WILSON -WARNERVL 230.00kV Ckt#1 Sec# 1	793.23	Amps	107.8	108.7	0.9

#	Outage Description	Facility	Rating	Unit	PU Flow	PU Flow	% Change
5	Open Line LOSBANOS 230-PANOCHE 230 #1 :	WILSON -WARNERVL 230.00kV Ckt#1 Sec# 1	793.23	Amps	107.8	108.7	0.9
6	Open Line LOSBANOS 230-PANOCHE 230 #2 :	WILSON -WARNERVL 230.00kV Ckt#1 Sec# 1	793.23	Amps	107.5	108.4	0.9
179	Open Line PANOCHE 230-MCMULLN1 230 #1 : Open Line MCMULLN1 230-KEARNEY 230 #1 : Drop Load at MCMULLN1 230 #1 : 16.4 MW 3.3 MVAR D : Drop Generator at KERCKHOF 13.8 #1: 145 MW Dropped :	WILSON -WARNERVL 230.00kV Ckt#1 Sec# 1	793.23	Amps	107.2	108.2	1.0
7	Open Line LOSBANOS 230-DS AMIGO 230 #1 :	WILSON -WARNERVL 230.00kV Ckt#1 Sec# 1	793.23	Amps	107.0	107.9	0.9
255	Open Line KEARNEY 70-OLDKERN 70 #1 : Open Line OLDKERN 70-BIOLA 70 #1 : Open Line OLDKERN 70-BOWLES 70 #1 : Drop Load at OLDKERN 70 #1 : 15.1 MW 3 MVAR Dropp : Drop Load at OLDKERN 70 #3 : 6.1 MW 1.2 MVAR Drop : Drop Load at BIOLA 70 #1 : 17.5 MW 3.5 MVAR Dropp : Drop Load at BOWLES 70 #1 : 14.7 MW 2.9 MVAR Drop :	WILSON -WARNERVL 230.00kV Ckt#1 Sec# 1	793.23	Amps	106.8	107.7	0.9
30	Open Line LE GRNDJ 115-WILSON B 115 #1 : Open Line LE GRNDJ 115-EL NIDO 115 #1 : Open Line EL NIDO 115-ORO LOMA 115 #1 : Drop Load at EL NIDO 115 #1 : 10 MW 2 MVAR Droppe : Drop Load at EL NIDO 115 #2 : 12 MW 2.4 MVAR Drop :	WILSON -WARNERVL 230.00kV Ckt#1 Sec# 1	793.23	Amps	106.7	107.6	0.9
26	Open Line CRESEY T 115-ATWATR J 115 #1 : Open Line ATWATR J 115-LIVNGSTN 115 #1 : Open Line ATWATR J 115-MERCED 115 #1 : Open Line LIVNGSTN 115-GALLO 115 #1 : Drop Load at LIVNGSTN 115 #3 : 19.6 MW 3.9 MVAR D : Drop Load at GALLO 115 #1 : 4 MW 3.4 MVAR Dropped :	WILSON -WARNERVL 230.00kV Ckt#1 Sec# 1	793.23	Amps	106.5	107.4	0.9
24	Open Line ATWATER 115-CRESEY T 115 #1 : Open Line CRESEY T 115-ATWATR J 115 #1 : Open Line CRESEY T 115-JRWD GEN 115 #1 : Open Line JRWD GEN 115-JR WOOD 115 #1 : Open Xfmr JRWD GEN 115/JRWCOGEN 9.11 #1 : Open Line JR WOOD 115-CRESSEY 115 #1 : Drop Load at JR WOOD 115 #1 : 10.9 MW 9.6 MVAR Dr : Drop Load at CRESSEY 115 #1 : 15.2 MW 3 MVAR Drop : Drop Generator at JRWCOGEN 9.11 #1 : 3.8 MW Droppe :	WILSON -WARNERVL 230.00kV Ckt#1 Sec# 1	793.23	Amps	106.4	107.3	0.9
29	Open Line LE GRAND 115-DAIRYLND 115 #1 :	WILSON -WARNERVL 230.00kV Ckt#1 Sec# 1	793.23	Amps	106.1	107.0	0.9
233	Open Line PNDLJ2 115-PNEDLE 115 #1 : Open Line PNDLJ2 115-BULLARD 115 #1 : Open Line PNDLJ2 115-HERNDON 115 #1 : Drop Load at PNEDLE 115 #2 : 24.7 MW 5 MVAR Dropp : Drop Load at PNEDLE 115 #3 : 32.5 MW 6.5 MVAR Dro : Close Line PNDLJ1 115-PNEDLE 115 #1 :	WILSON -WARNERVL 230.00kV Ckt#1 Sec# 1	793.23	Amps	106.1	107.0	0.9
67	Open Xfmr WILSON A 115/WILSON 230 #1 :	WILSON -WARNERVL 230.00kV Ckt#1 Sec# 1	793.23	Amps	105.9	106.8	0.9

#	Outage Description	Facility	Rating	Unit	PU Flow	PU Flow	% Change
68	Open Xfmr WILSON B 115/WILSON 230 #2 :	WILSON -WARNERVL 230.00kV Ckt#1 Sec# 1	793.23	Amps	105.9	106.8	0.9
214	Open Line CLOVIS-2 115-CLOVISJ2 115 #1 : Open Line CLOVISJ2 115-KERCKHF2 115 #1 : Open Line CLOVISJ2 115-SANGER 115 #1 : Drop Load at CLOVIS-2 115 #3 : 36 MW 7.3 MVAR Dro : Close Line CLOVIS-1 115-CLOVIS-2 115 #1 :	WILSON -WARNERVL 230.00kV Ckt#1 Sec# 1	793.23	Amps	105.8	106.7	0.9
264	Open Line LEPRINO 70-LPRNO TP 70 #1 : Open Line LPRNO TP 70-LEMOORE 70 #1 : Open Line LPRNO TP 70-CANDLEWK 70 #1 : Open Line LPRNO TP 70-HENRITTA 70 #1 : Drop Load at LEPRINO 70 #1 : 6.2 MW 4 MVAR Droppe : Drop Load at LEMOORE 70 #1 : 15.2 MW 3 MVAR Dropp : Drop Load at LEMOORE 70 #2 : 26.4 MW 5.3 MVAR Dro :	WILSON -WARNERVL 230.00kV Ckt#1 Sec# 1	793.23	Amps	105.8	106.6	0.9
291	Open Xfmr KEARNEY 70/KEARNEY 230 #2 :	WILSON -WARNERVL 230.00kV Ckt#1 Sec# 1	793.23	Amps	105.5	106.4	0.9
4	Open Line COBURN 230-PANOCHE 230 #1 :	WILSON -WARNERVL 230.00kV Ckt#1 Sec# 1	793.23	Amps	105.4	106.3	0.9
239	Open Line KINGSBRG 115-GAURD J1 115 #1 : Open Line GAURD J1 115-MC CALL 115 #1 : Open Line GAURD J1 115-GAURD J2 115 #1 : Open Line GAURD J2 115-GRDN GLS 115 #1 : Drop Load at GRDN GLS 115 #1 : 3.3 MW 1 MVAR Drop : Drop Load at KINGSBRG 115 #3 : 26.2 MW 5.3 MVAR D :	WILSON -WARNERVL 230.00kV Ckt#1 Sec# 1	793.23	Amps	105.4	106.3	0.9
2	Open Line WESTLEY 230-LOSBANOS 230 #1 :	WARNERVL-WRNRVLLE 230.00/ 115.00kV Bk#3	75	MVA	102.1	102.3	0.2
171	Open Line WESTLEY 230-LOSBANOS 230 #1 : Drop Generator at KERCKHOF 13.8 #1: 145 MW Dropped :	WARNERVL-WRNRVLLE 230.00/ 115.00kV Bk#3	75	MVA	99.9	100.1	0.2
2	Open Line WESTLEY 230-LOSBANOS 230 #1 :	WARNERVL-WRNRVLLE 230.00/ 115.00kV Bk#2	75	MVA	102.1	102.3	0.2
171	Open Line WESTLEY 230-LOSBANOS 230 #1 : Drop Generator at KERCKHOF 13.8 #1: 145 MW Dropped :	WARNERVL-WRNRVLLE 230.00/ 115.00kV Bk#2	75	MVA	99.9	100.1	0.2
2	Open Line WESTLEY 230-LOSBANOS 230 #1 :	WARNERVL-WRNRVLLE 230.00/ 115.00kV Bk#1	150	MVA	102.0	102.3	0.2
171	Open Line WESTLEY 230-LOSBANOS 230 #1 : Drop Generator at KERCKHOF 13.8 #1: 145 MW Dropped :	WARNERVL-WRNRVLLE 230.00/ 115.00kV Bk#1	150	MVA	99.8	100.1	0.2
131	Open Line MELONES 230-WILSON 230 #1 : Drop Generator at MELONE1 13.8 #1: 166 MW Dropped :	WARNERVL-COTTLE B 230.00kV Ckt#1 Sec# 1	793.23	Amps	125.0	125.8	0.9
285	Open Xfmr GATES 230/GATES 500 #11 :	WARNERVL-COTTLE B 230.00kV Ckt#1 Sec# 1	793.23	Amps	121.7	122.5	0.8
196	Open Line KEARNEY 230-HERNDON 230 #1 :	WARNERVL-COTTLE B 230.00kV Ckt#1 Sec# 1	793.23	Amps	114.1	114.8	0.7
422	Open Line KEARNEY 230-HERNDON 230 #1 : Drop Generator at	WARNERVL-COTTLE B 230.00kV Ckt#1 Sec# 1	793.23	Amps	112.7	113.4	0.7

#	Outage Description	Facility	Rating	Unit	PU Flow	PU Flow	% Change
	MELONE1 13.8 #1: 166 MW Dropped :						
11	Open Line PANOCHE 230-MCMULLN1 230 #1 : Open Line MCMULLN1 230-KEARNEY 230 #1 : Drop Load at MCMULLN1 230 #1 : 16.4 MW 3.3 MVAR D :	WARNERVL-COTTLE B 230.00kV Ckt#1 Sec# 1	793.23	Amps	111.6	112.4	0.7
166	Open Line MELONES 230-WILSON 230 #1 : Drop Generator at EXCHQUER 13.8 #1: 90 MW Dropped :	WARNERVL-COTTLE B 230.00kV Ckt#1 Sec# 1	793.23	Amps	111.1	111.9	0.9
185	Open Line MELONES 230-WILSON 230 #1 : Drop Generator at KERCKHOF 13.8 #1: 145 MW Dropped :	WARNERVL-COTTLE B 230.00kV Ckt#1 Sec# 1	793.23	Amps	110.7	111.5	0.9
411	Open Line PANOCHE 230-MCMULLN1 230 #1 : Open Line MCMULLN1 230-KEARNEY 230 #1 : Drop Load at MCMULLN1 230 #1 : 16.4 MW 3.3 MVAR D : Drop Generator at MELONE1 13.8 #1: 166 MW Dropped :	WARNERVL-COTTLE B 230.00kV Ckt#1 Sec# 1	793.23	Amps	110.2	111.0	0.7
370	Open Line KEARNEY 230-HERNDON 230 #1 : Drop Generator at EXCHQUER 13.8 #1: 90 MW Dropped :	WARNERVL-COTTLE B 230.00kV Ckt#1 Sec# 1	793.23	Amps	108.6	109.3	0.7
386	Open Line KEARNEY 230-HERNDON 230 #1 : Drop Generator at KERCKHOF 13.8 #1: 145 MW Dropped :	WARNERVL-COTTLE B 230.00kV Ckt#1 Sec# 1	793.23	Amps	107.9	108.6	0.7
202	Open Line MC CALL 230-HENTAP2 230 #1 : Open Line HENTAP2 230-GATES 230 #1 :	WARNERVL-COTTLE B 230.00kV Ckt#1 Sec# 1	793.23	Amps	107.6	108.3	0.7
3	Open Line MOSSLND2 230-PANOCHE 230 #1 :	WARNERVL-COTTLE B 230.00kV Ckt#1 Sec# 1	793.23	Amps	107.5	108.2	0.7
189	Open Line HELM 230-MC CALL 230 #1 :	WARNERVL-COTTLE B 230.00kV Ckt#1 Sec# 1	793.23	Amps	107.2	107.9	0.7
12	Open Line PANOCHE 230-HELM 230 #1 :	WARNERVL-COTTLE B 230.00kV Ckt#1 Sec# 1	793.23	Amps	106.9	107.6	0.7
2	Open Line WESTLEY 230-LOSBANOS 230 #1 :	WARNERVL-COTTLE B 230.00kV Ckt#1 Sec# 1	793.23	Amps	106.6	107.2	0.6
426	Open Line MC CALL 230-HENTAP2 230 #1 : Open Line HENTAP2 230-GATES 230 #1 : Drop Generator at MELONE1 13.8 #1: 166 MW Dropped :	WARNERVL-COTTLE B 230.00kV Ckt#1 Sec# 1	793.23	Amps	106.5	107.1	0.7
415	Open Line HELM 230-MC CALL 230 #1 : Drop Generator at MELONE1 13.8 #1: 166 MW Dropped :	WARNERVL-COTTLE B 230.00kV Ckt#1 Sec# 1	793.23	Amps	106.1	106.8	0.7
160	Open Line PANOCHE 230-MCMULLN1 230 #1 : Open Line MCMULLN1 230-KEARNEY 230 #1 : Drop Load at MCMULLN1 230 #1 : 16.4 MW 3.3 MVAR D : Drop Generator at EXCHQUER 13.8 #1: 90 MW Dropped :	WARNERVL-COTTLE B 230.00kV Ckt#1 Sec# 1	793.23	Amps	106.1	106.8	0.7
412	Open Line PANOCHE 230-HELM 230 #1 : Drop Generator at MELONE1 13.8 #1: 166 MW Dropped :	WARNERVL-COTTLE B 230.00kV Ckt#1 Sec# 1	793.23	Amps	105.8	106.5	0.7
62	Open Line DS AMIGO 230-PANOCHE 230 #1 :	WARNERVL-COTTLE B 230.00kV Ckt#1 Sec# 1	793.23	Amps	105.8	106.5	0.7
5	Open Line LOSBANOS 230-PANOCHE 230 #1 :	WARNERVL-COTTLE B 230.00kV Ckt#1 Sec# 1	793.23	Amps	105.8	106.4	0.7

#	Outage Description	Facility	Rating	Unit	PU Flow	PU Flow	% Change
255	Open Line KEARNEY 70-OLDKERN 70 #1 : Open Line OLDKERN 70-BIOLA 70 #1 : Open Line OLDKERN 70-BOWLES 70 #1 : Drop Load at OLDKERN 70 #1 : 15.1 MW 3 MVAR Dropp : Drop Load at OLDKERN 70 #3 : 6.1 MW 1.2 MVAR Drop : Drop Load at BIOLA 70 #1 : 17.5 MW 3.5 MVAR Dropp : Drop Load at BOWLES 70 #1 : 14.7 MW 2.9 MVAR Drop :	WARNERVL-COTTLE B 230.00kV Ckt#1 Sec# 1	793.23	Amps	105.7	106.4	0.7
6	Open Line LOSBANOS 230-PANOCHE 230 #2 :	WARNERVL-COTTLE B 230.00kV Ckt#1 Sec# 1	793.23	Amps	105.6	106.3	0.7
30	Open Line LE GRNDJ 115-WILSON B 115 #1 : Open Line LE GRNDJ 115-EL NIDO 115 #1 : Open Line EL NIDO 115-ORO LOMA 115 #1 : Drop Load at EL NIDO 115 #1 : 10 MW 2 MVAR Droppe : Drop Load at EL NIDO 115 #2 : 12 MW 2.4 MVAR Drop :	WARNERVL-COTTLE B 230.00kV Ckt#1 Sec# 1	793.23	Amps	105.5	106.2	0.7
179	Open Line PANOCHE 230-MCMULLN1 230 #1 : Open Line MCMULLN1 230-KEARNEY 230 #1 : Drop Load at MCMULLN1 230 #1 : 16.4 MW 3.3 MVAR D : Drop Generator at KERCKHOF 13.8 #1: 145 MW Dropped :	WARNERVL-COTTLE B 230.00kV Ckt#1 Sec# 1	793.23	Amps	105.4	106.2	0.7
26	Open Line CRESEY T 115-ATWATR J 115 #1 : Open Line ATWATR J 115-LIVNGSTN 115 #1 : Open Line ATWATR J 115-MERCED 115 #1 : Open Line LIVNGSTN 115-GALLO 115 #1 : Drop Load at LIVNGSTN 115 #3 : 19.6 MW 3.9 MVAR D : Drop Load at GALLO 115 #1 : 4 MW 3.4 MVAR Dropped :	WARNERVL-COTTLE B 230.00kV Ckt#1 Sec# 1	793.23	Amps	105.4	106.1	0.7
7	Open Line LOSBANOS 230-DS AMIGO 230 #1 :	WARNERVL-COTTLE B 230.00kV Ckt#1 Sec# 1	793.23	Amps	105.3	106.0	0.7
24	Open Line ATWATER 115-CRESEY T 115 #1 : Open Line CRESEY T 115-ATWATR J 115 #1 : Open Line CRESEY T 115-JRWD GEN 115 #1 : Open Line JRWD GEN 115-JR WOOD 115 #1 : Open Xfmr JRWD GEN 115/JRWCOGEN 9.11 #1 : Open Line JR WOOD 115-CRESSEY 115 #1 : Drop Load at JR WOOD 115 #1 : 10.9 MW 9.6 MVAR Dr : Drop Load at CRESSEY 115 #1 : 15.2 MW 3 MVAR Drop : Drop Generator at JRWCOGEN 9.11 #1 : 3.8 MW Droppe :	WARNERVL-COTTLE B 230.00kV Ckt#1 Sec# 1	793.23	Amps	105.3	106.0	0.7
233	Open Line PNDLJ2 115-PNEDLE 115 #1 : Open Line PNDLJ2 115-BULLARD 115 #1 : Open Line PNDLJ2 115-HERNDON 115 #1 : Drop Load at PNEDLE 115 #2 : 24.7 MW 5 MVAR Dropp : Drop Load at PNEDLE 115 #3 : 32.5 MW 6.5 MVAR Dro : Close Line PNDLJ1 115-PNEDLE 115 #1 :	WARNERVL-COTTLE B 230.00kV Ckt#1 Sec# 1	793.23	Amps	105.1	105.8	0.7
29	Open Line LE GRAND 115-DAIRYLND 115 #1 :	WARNERVL-COTTLE B 230.00kV Ckt#1 Sec# 1	793.23	Amps	105.1	105.7	0.7

#	Outage Description	Facility	Rating	Unit	PU Flow	PU Flow	% Change
214	Open Line CLOVIS-2 115-CLOVISJ2 115 #1 : Open Line CLOVISJ2 115-KERCKHF2 115 #1 : Open Line CLOVISJ2 115-SANGER 115 #1 : Drop Load at CLOVIS-2 115 #3 : 36 MW 7.3 MVAR Dro : Close Line CLOVIS-1 115-CLOVIS-2 115 #1 :	WARNERVL-COTTLE B 230.00kV Ckt#1 Sec# 1	793.23	Amps	105.0	105.7	0.7
67	Open Xfmr WILSON A 115/WILSON 230 #1 :	WARNERVL-COTTLE B 230.00kV Ckt#1 Sec# 1	793.23	Amps	105.0	105.6	0.7
264	Open Line LEPRINO 70-LPRNO TP 70 #1 : Open Line LPRNO TP 70-LEMOORE 70 #1 : Open Line LPRNO TP 70-CANDLEWK 70 #1 : Open Line LPRNO TP 70-HENRITTA 70 #1 : Drop Load at LEPRINO 70 #1 : 6.2 MW 4 MVAR Droppe : Drop Load at LEMOORE 70 #1 : 15.2 MW 3 MVAR Dropp : Drop Load at LEMOORE 70 #2 : 26.4 MW 5.3 MVAR Dro :	WARNERVL-COTTLE B 230.00kV Ckt#1 Sec# 1	793.23	Amps	105.0	105.6	0.7
68	Open Xfmr WILSON B 115/WILSON 230 #2 :	WARNERVL-COTTLE B 230.00kV Ckt#1 Sec# 1	793.23	Amps	104.9	105.6	0.7
12	Open Line PANOCHE 230-HELM 230 #1 :	STRD JCT-SCHLNDLR 70.00kV Ckt#1 Sec# 1	377.75	Amps	101.3	101.8	0.5
128	Open Line STOREY 1 230-WILSON 230 #1 : Open Line STOREY 1 230-BORDEN 230 #1 : Drop Load at STOREY 1 230 #1 : 30.2 MW 6.1 MVAR D : Drop Generator at MELONE1 13.8 #1: 166 MW Dropped :	STOREY 2-WILSON 230.00kV Ckt#1 Sec# 1	793.23	Amps	156.0	156.9	0.9
165	Open Line STOREY 1 230-WILSON 230 #1 : Open Line STOREY 1 230-BORDEN 230 #1 : Drop Load at STOREY 1 230 #1 : 30.2 MW 6.1 MVAR D : Drop Generator at EXCHQUER 13.8 #1: 90 MW Dropped :	STOREY 2-WILSON 230.00kV Ckt#1 Sec# 1	793.23	Amps	152.8	153.7	0.8
16	Open Line STOREY 1 230-WILSON 230 #1 : Open Line STOREY 1 230-BORDEN 230 #1 : Drop Load at STOREY 1 230 #1 : 30.2 MW 6.1 MVAR D :	STOREY 2-WILSON 230.00kV Ckt#1 Sec# 1	793.23	Amps	148.3	149.1	0.8
184	Open Line STOREY 1 230-WILSON 230 #1 : Open Line STOREY 1 230-BORDEN 230 #1 : Drop Load at STOREY 1 230 #1 : 30.2 MW 6.1 MVAR D : Drop Generator at KERCKHOF 13.8 #1: 145 MW Dropped :	STOREY 2-WILSON 230.00kV Ckt#1 Sec# 1	793.23	Amps	143.3	144.2	1.0
146	Open Line STOREY 1 230-WILSON 230 #1 : Open Line STOREY 1 230-BORDEN 230 #1 : Drop Load at STOREY 1 230 #1 : 30.2 MW 6.1 MVAR D : Drop Generator at HELMS 1 18 #1: 400 MW Dropped :	STOREY 2-WILSON 230.00kV Ckt#1 Sec# 1	793.23	Amps	117.7	118.6	0.9
422	Open Line KEARNEY 230-HERNDON 230 #1 : Drop Generator at MELONE1 13.8 #1: 166 MW Dropped :	STOREY 2-WILSON 230.00kV Ckt#1 Sec# 1	793.23	Amps	106.3	107.0	0.7
370	Open Line KEARNEY 230-HERNDON 230 #1 : Drop Generator at EXCHQUER 13.8 #1: 90 MW Dropped :	STOREY 2-WILSON 230.00kV Ckt#1 Sec# 1	793.23	Amps	104.5	105.2	0.7
285	Open Xfmr GATES 230/GATES 500 #11 :	STOREY 2-WILSON 230.00kV Ckt#1 Sec# 1	793.23	Amps	102.7	103.4	0.7
411	Open Line PANOCHE 230-MCMULLN1 230 #1 : Open Line MCMULLN1 230-KEARNEY 230 #1 : Drop Load at MCMULLN1 230 #1 : 16.4 MW 3.3 MVAR D : Drop Generator at MELONE1 13.8 #1: 166	STOREY 2-WILSON 230.00kV Ckt#1 Sec# 1	793.23	Amps	102.5	103.2	0.7

#	Outage Description	Facility	Rating	Unit	PU Flow	PU Flow	% Change
	MW Dropped :						
196	Open Line KEARNEY 230-HERNDON 230 #1 :	STOREY 2-WILSON 230.00kV Ckt#1 Sec# 1	793.23	Amps	102.2	102.8	0.6
160	Open Line PANOCHE 230-MCMULLN1 230 #1 : Open Line MCMULLN1 230-KEARNEY 230 #1 : Drop Load at MCMULLN1 230 #1 : 16.4 MW 3.3 MVAR D : Drop Generator at EXCHQUER 13.8 #1: 90 MW Dropped :	STOREY 2-WILSON 230.00kV Ckt#1 Sec# 1	793.23	Amps	100.6	101.3	0.7
128	Open Line STOREY 1 230-WILSON 230 #1 : Open Line STOREY 1 230-BORDEN 230 #1 : Drop Load at STOREY 1 230 #1 : 30.2 MW 6.1 MVAR D : Drop Generator at MELONE1 13.8 #1: 166 MW Dropped :	STOREY 2-BORDEN 230.00kV Ckt#1 Sec# 1	793.23	Amps	164.7	165.6	0.9
165	Open Line STOREY 1 230-WILSON 230 #1 : Open Line STOREY 1 230-BORDEN 230 #1 : Drop Load at STOREY 1 230 #1 : 30.2 MW 6.1 MVAR D : Drop Generator at EXCHQUER 13.8 #1: 90 MW Dropped :	STOREY 2-BORDEN 230.00kV Ckt#1 Sec# 1	793.23	Amps	161.5	162.4	0.9
16	Open Line STOREY 1 230-WILSON 230 #1 : Open Line STOREY 1 230-BORDEN 230 #1 : Drop Load at STOREY 1 230 #1 : 30.2 MW 6.1 MVAR D :	STOREY 2-BORDEN 230.00kV Ckt#1 Sec# 1	793.23	Amps	156.9	157.8	0.8
184	Open Line STOREY 1 230-WILSON 230 #1 : Open Line STOREY 1 230-BORDEN 230 #1 : Drop Load at STOREY 1 230 #1 : 30.2 MW 6.1 MVAR D : Drop Generator at KERCKHOF 13.8 #1: 145 MW Dropped :	STOREY 2-BORDEN 230.00kV Ckt#1 Sec# 1	793.23	Amps	151.9	152.9	1.0
146	Open Line STOREY 1 230-WILSON 230 #1 : Open Line STOREY 1 230-BORDEN 230 #1 : Drop Load at STOREY 1 230 #1 : 30.2 MW 6.1 MVAR D : Drop Generator at HELMS 1 18 #1: 400 MW Dropped :	STOREY 2-BORDEN 230.00kV Ckt#1 Sec# 1	793.23	Amps	126.2	127.2	0.9
422	Open Line KEARNEY 230-HERNDON 230 #1 : Drop Generator at MELONE1 13.8 #1: 166 MW Dropped :	STOREY 2-BORDEN 230.00kV Ckt#1 Sec# 1	793.23	Amps	115.1	115.7	0.7
370	Open Line KEARNEY 230-HERNDON 230 #1 : Drop Generator at EXCHQUER 13.8 #1: 90 MW Dropped :	STOREY 2-BORDEN 230.00kV Ckt#1 Sec# 1	793.23	Amps	113.2	113.8	0.7
285	Open Xfmr GATES 230/GATES 500 #11 :	STOREY 2-BORDEN 230.00kV Ckt#1 Sec# 1	793.23	Amps	111.3	112.1	0.7
411	Open Line PANOCHE 230-MCMULLN1 230 #1 : Open Line MCMULLN1 230-KEARNEY 230 #1 : Drop Load at MCMULLN1 230 #1 : 16.4 MW 3.3 MVAR D : Drop Generator at MELONE1 13.8 #1: 166 MW Dropped :	STOREY 2-BORDEN 230.00kV Ckt#1 Sec# 1	793.23	Amps	111.2	111.9	0.7
196	Open Line KEARNEY 230-HERNDON 230 #1 :	STOREY 2-BORDEN 230.00kV Ckt#1 Sec# 1	793.23	Amps	110.8	111.5	0.7
160	Open Line PANOCHE 230-MCMULLN1 230 #1 : Open Line MCMULLN1 230-KEARNEY 230 #1 : Drop Load at MCMULLN1 230 #1 : 16.4 MW 3.3 MVAR D : Drop Generator at EXCHQUER 13.8 #1: 90 MW Dropped :	STOREY 2-BORDEN 230.00kV Ckt#1 Sec# 1	793.23	Amps	109.3	110.0	0.7

#	Outage Description	Facility	Rating	Unit	PU Flow	PU Flow	% Change
11	Open Line PANOCHE 230-MCMULLN1 230 #1 : Open Line MCMULLN1 230-KEARNEY 230 #1 : Drop Load at MCMULLN1 230 #1 : 16.4 MW 3.3 MVAR D :	STOREY 2-BORDEN 230.00kV Ckt#1 Sec# 1	793.23	Amps	106.9	107.6	0.7
386	Open Line KEARNEY 230-HERNDON 230 #1 : Drop Generator at KERCKHOF 13.8 #1: 145 MW Dropped :	STOREY 2-BORDEN 230.00kV Ckt#1 Sec# 1	793.23	Amps	106.9	107.6	0.7
415	Open Line HELM 230-MC CALL 230 #1 : Drop Generator at MELONE1 13.8 #1: 166 MW Dropped :	STOREY 2-BORDEN 230.00kV Ckt#1 Sec# 1	793.23	Amps	105.8	106.4	0.6
152	Open Line WESTLEY 230-LOSBANOS 230 #1 : Drop Generator at EXCHQUER 13.8 #1: 90 MW Dropped :	STOREY 2-BORDEN 230.00kV Ckt#1 Sec# 1	793.23	Amps	105.4	105.9	0.6
107	Open Line CERTANJ1 115-CHWCHLLA 115 #1 : Open Line CERTANJ1 115-SHARON T 115 #1 : Open Line SHARON T 115-SHARON 115 #1 : Open Line SHARON T 115-OAKH_JCT 115 #1 : Open Line OAKH_JCT 115-CORSGOLD 115 #1 : Open Line OAKH_JCT 115-K1-JCT 115 #1 : Open Line CORSGOLD 115-OAKHURST 115 #1 : Open Line K1-JCT 115-KERCKHF2 115 #2 : Drop Load at SHARON 115 #1 : 6.6 MW 4.6 MVAR Drop : Drop Load at CORSGOLD 115 #1 : 1.8 MW 0.3 MVAR Dr :	STOREY 2-BORDEN 230.00kV Ckt#1 Sec# 1	793.23	Amps	104.9	105.5	0.6
412	Open Line PANOCHE 230-HELM 230 #1 : Drop Generator at MELONE1 13.8 #1: 166 MW Dropped :	STOREY 2-BORDEN 230.00kV Ckt#1 Sec# 1	793.23	Amps	104.9	105.5	0.6
426	Open Line MC CALL 230-HENTAP2 230 #1 : Open Line HENTAP2 230-GATES 230 #1 : Drop Generator at MELONE1 13.8 #1: 166 MW Dropped :	STOREY 2-BORDEN 230.00kV Ckt#1 Sec# 1	793.23	Amps	104.4	105.0	0.6
363	Open Line HELM 230-MC CALL 230 #1 : Drop Generator at EXCHQUER 13.8 #1: 90 MW Dropped :	STOREY 2-BORDEN 230.00kV Ckt#1 Sec# 1	793.23	Amps	103.8	104.4	0.6
179	Open Line PANOCHE 230-MCMULLN1 230 #1 : Open Line MCMULLN1 230-KEARNEY 230 #1 : Drop Load at MCMULLN1 230 #1 : 16.4 MW 3.3 MVAR D : Drop Generator at KERCKHOF 13.8 #1: 145 MW Dropped :	STOREY 2-BORDEN 230.00kV Ckt#1 Sec# 1	793.23	Amps	103.1	103.7	0.7
161	Open Line PANOCHE 230-HELM 230 #1 : Drop Generator at EXCHQUER 13.8 #1: 90 MW Dropped :	STOREY 2-BORDEN 230.00kV Ckt#1 Sec# 1	793.23	Amps	102.8	103.4	0.6
2	Open Line WESTLEY 230-LOSBANOS 230 #1 :	STOREY 2-BORDEN 230.00kV Ckt#1 Sec# 1	793.23	Amps	102.7	103.2	0.5
374	Open Line MC CALL 230-HENTAP2 230 #1 : Open Line HENTAP2 230-GATES 230 #1 : Drop Generator at EXCHQUER 13.8 #1: 90 MW Dropped :	STOREY 2-BORDEN 230.00kV Ckt#1 Sec# 1	793.23	Amps	102.4	102.9	0.6

#	Outage Description	Facility	Rating	Unit	PU Flow	PU Flow	% Change
106	Open Line CHWCHLLA 115-CERTAN T 115 #1 : Open Line CERTAN T 115-LE GRAND 115 #1 : Open Line CERTAN T 115-CERTANJ2 115 #1 : Open Line CERTANJ2 115-CHWCGNJT 115 #1 : Open Line CHWCGNJT 115-CERTTEED 115 #1 : Open Line CHWCGNJT 115-CHWCGN 115 #1 : Open Line CHWCGN 115-CHWCHLA2 115 #1 : Open Xfmr CHWCGN 115/CHOWCOGN 13.8 #1 : Open Xfmr CHWCHLA2 115/CHWCHLA2 13.8 #1 : Drop Load at CERTTEED 115 #1 : 9.3 MW 6.4 MVAR Dr :	STOREY 2-BORDEN 230.00kV Ckt#1 Sec# 1	793.23	Amps	101.9	102.5	0.6
429	Open Line GATES 230-ARCO 230 #1 : Drop Generator at MELONE1 13.8 #1: 166 MW Dropped :	STOREY 2-BORDEN 230.00kV Ckt#1 Sec# 1	793.23	Amps	101.7	102.3	0.6
430	Open Line GATES 230-MIDWAY 230 #1 : Drop Generator at MELONE1 13.8 #1: 166 MW Dropped :	STOREY 2-BORDEN 230.00kV Ckt#1 Sec# 1	793.23	Amps	101.7	102.3	0.6
207	Open Line K1-JCT 115-KERCKHF2 115 #2 : Open Line K1-JCT 115-OAKH_JCT 115 #1 : Open Line OAKH_JCT 115-SHARON T 115 #1 : Open Line OAKH_JCT 115-CORSGOLD 115 #1 : Open Line SHARON T 115-CERTANJ1 115 #1 : Open Line SHARON T 115-SHARON 115 #1 : Open Line CERTANJ1 115-CHWCHLLA 115 #1 : Open Line CORSGOLD 115-OAKHURST 115 #1 : Drop Load at CORSGOLD 115 #1 : 1.8 MW 0.3 MVAR Dr : Drop Load at CORSGOLD 115 #2 : 20.9 MW 4.2 MVAR D :	STOREY 2-BORDEN 230.00kV Ckt#1 Sec# 1	793.23	Amps	101.3	101.9	0.6
413	Open Line PANOCHE 230-GATES 230 #1 : Drop Generator at MELONE1 13.8 #1: 166 MW Dropped :	STOREY 2-BORDEN 230.00kV Ckt#1 Sec# 1	793.23	Amps	101.3	101.9	0.6
414	Open Line PANOCHE 230-GATES 230 #2 : Drop Generator at MELONE1 13.8 #1: 166 MW Dropped :	STOREY 2-BORDEN 230.00kV Ckt#1 Sec# 1	793.23	Amps	101.3	101.9	0.6
116	Open Line CANANDGA 70-TRIGO J 70 #1 : Open Line CANANDGA 70-GLASS 70 #1 : Open Line TRIGO J 70-BONITA 70 #1 : Open Line TRIGO J 70-TRIGO 70 #1 : Open Line TRIGO 70-MADERA 70 #1 : Open Line TRIGO 70-EL PECO 70 #1 : Drop Load at CANANDGA 70 #1 : 7.1 MW 5.3 MVAR Dro : Drop Load at BONITA 70 #1 : 11.5 MW 2.3 MVAR Drop : Drop Load at EL PECO 70 #1 : 7.9 MW 1.6 MVAR Drop : Drop Load at EL PECO 70 #2 : 5.8 MW 1.1 MVAR Drop :	STOREY 2-BORDEN 230.00kV Ckt#1 Sec# 1	793.23	Amps	101.3	101.8	0.6
423	Open Line HERNDON 230-FGRDN T1 230 #1 : Open Line FGRDN T1 230-FIGRDN 1 230 #1 : Open Line FGRDN T1 230-ASHLAN 230 #1 : Drop Load at FIGRDN 1 230 #1 : 59.1 MW 11.9 MVAR : Close Line FIGRDN 1 230-FIGRDN 2 230 #1 : Drop Generator at MELONE1 13.8 #1: 166 MW Dropped :	STOREY 2-BORDEN 230.00kV Ckt#1 Sec# 1	793.23	Amps	101.2	101.7	0.6

#	Outage Description	Facility	Rating	Unit	PU Flow	PU Flow	% Change
153	Open Line MOSSLND2 230-PANOCHE 230 #1 : Drop Generator at EXCHQUER 13.8 #1: 90 MW Dropped :	STOREY 2-BORDEN 230.00kV Ckt#1 Sec# 1	793.23	Amps	101.1	101.7	0.6
189	Open Line HELM 230-MC CALL 230 #1 :	STOREY 2-BORDEN 230.00kV Ckt#1 Sec# 1	793.23	Amps	101.1	101.7	0.6
155	Open Line LOSBANOS 230-PANOCHE 230 #1 : Drop Generator at EXCHQUER 13.8 #1: 90 MW Dropped :	STOREY 2-BORDEN 230.00kV Ckt#1 Sec# 1	793.23	Amps	100.8	101.4	0.6
169	Open Line DS AMIGO 230-PANOCHE 230 #1 : Drop Generator at EXCHQUER 13.8 #1: 90 MW Dropped :	STOREY 2-BORDEN 230.00kV Ckt#1 Sec# 1	793.23	Amps	100.8	101.4	0.6
156	Open Line LOSBANOS 230-PANOCHE 230 #2 : Drop Generator at EXCHQUER 13.8 #1: 90 MW Dropped :	STOREY 2-BORDEN 230.00kV Ckt#1 Sec# 1	793.23	Amps	100.6	101.2	0.6
115	Open Line PANOCHET 115-MENDOTA 115 #1 : Open Line PANOCHET 115-PANOCHE 115 #1 : Drop Generator at EXCHQUER 13.8 #1: 90 MW Dropped :	STOREY 2-BORDEN 230.00kV Ckt#1 Sec# 1	793.23	Amps	100.5	101.1	0.6
427	Open Line GATES 230-TEMPLETN 230 #1 : Drop Generator at MELONE1 13.8 #1: 166 MW Dropped :	STOREY 2-BORDEN 230.00kV Ckt#1 Sec# 1	793.23	Amps	100.5	101.1	0.6
157	Open Line LOSBANOS 230-DS AMIGO 230 #1 : Drop Generator at EXCHQUER 13.8 #1: 90 MW Dropped :	STOREY 2-BORDEN 230.00kV Ckt#1 Sec# 1	793.23	Amps	100.4	101.0	0.6
428	Open Line GATES 230-MORROBAY 230 #1 : Drop Generator at MELONE1 13.8 #1: 166 MW Dropped :	STOREY 2-BORDEN 230.00kV Ckt#1 Sec# 1	793.23	Amps	100.3	100.9	0.6
12	Open Line PANOCHE 230-HELM 230 #1 :	STOREY 2-BORDEN 230.00kV Ckt#1 Sec# 1	793.23	Amps	100.1	100.7	0.6
114	Open Line NEWHALL 115-DAIRYLND 115 #1 : Open Line NEWHALL 115-MADERAPR 115 #1 : Open Line MADERAPR 115-MENDOTA 115 #1 : Open Xfmr MADERAPR 115/MADERA_G 13.8 #1 : Drop Load at NEWHALL 115 #2 : 6.8 MW 1.3 MVAR Dro : Drop Load at NEWHALL 115 #3 : 8.5 MW 1.7 MVAR Dro : Drop Load at MADERA_G 13.8 #ss: 3.6 MW 0.8 MVAR D : Drop Generator at EXCHQUER 13.8 #1: 90 MW Dropped :	STOREY 2-BORDEN 230.00kV Ckt#1 Sec# 1	793.23	Amps	99.9	100.5	0.6
154	Open Line COBURN 230-PANOCHE 230 #1 : Drop Generator at EXCHQUER 13.8 #1: 90 MW Dropped :	STOREY 2-BORDEN 230.00kV Ckt#1 Sec# 1	793.23	Amps	99.7	100.3	0.6
202	Open Line MC CALL 230-HENTAP2 230 #1 : Open Line HENTAP2 230-GATES 230 #1 :	STOREY 2-BORDEN 230.00kV Ckt#1 Sec# 1	793.23	Amps	99.7	100.3	0.6
377	Open Line GATES 230-ARCO 230 #1 : Drop Generator at EXCHQUER 13.8 #1: 90 MW Dropped :	STOREY 2-BORDEN 230.00kV Ckt#1 Sec# 1	793.23	Amps	99.7	100.3	0.6
378	Open Line GATES 230-MIDWAY 230 #1 : Drop Generator at EXCHQUER 13.8 #1: 90 MW Dropped :	STOREY 2-BORDEN 230.00kV Ckt#1 Sec# 1	793.23	Amps	99.6	100.2	0.6
171	Open Line WESTLEY 230-LOSBANOS 230 #1 : Drop Generator at KERCKHOF 13.8 #1: 145 MW Dropped :	STOREY 2-BORDEN 230.00kV Ckt#1 Sec# 1	793.23	Amps	99.5	100.1	0.5

#	Outage Description	Facility	Rating	Unit	PU Flow	PU Flow	% Change
127	Open Line STOREY 2 230-BORDEN 230 #1 : Open Line STOREY 2 230-WILSON 230 #1 : Drop Load at STOREY 2 230 #2 : 27 MW 5.4 MVAR Dro : Drop Generator at MELONE1 13.8 #1: 166 MW Dropped :	STOREY 1-WILSON 230.00kV Ckt#1 Sec# 1	850.96	Amps	155.5	156.4	0.9
164	Open Line STOREY 2 230-BORDEN 230 #1 : Open Line STOREY 2 230-WILSON 230 #1 : Drop Load at STOREY 2 230 #2 : 27 MW 5.4 MVAR Dro : Drop Generator at EXCHQUER 13.8 #1: 90 MW Dropped :	STOREY 1-WILSON 230.00kV Ckt#1 Sec# 1	850.96	Amps	152.2	153.1	0.9
15	Open Line STOREY 2 230-BORDEN 230 #1 : Open Line STOREY 2 230-WILSON 230 #1 : Drop Load at STOREY 2 230 #2 : 27 MW 5.4 MVAR Dro :	STOREY 1-WILSON 230.00kV Ckt#1 Sec# 1	850.96	Amps	147.6	148.6	0.9
183	Open Line STOREY 2 230-BORDEN 230 #1 : Open Line STOREY 2 230-WILSON 230 #1 : Drop Load at STOREY 2 230 #2 : 27 MW 5.4 MVAR Dro : Drop Generator at KERCKHOF 13.8 #1: 145 MW Dropped :	STOREY 1-WILSON 230.00kV Ckt#1 Sec# 1	850.96	Amps	142.7	143.7	0.9
145	Open Line STOREY 2 230-BORDEN 230 #1 : Open Line STOREY 2 230-WILSON 230 #1 : Drop Load at STOREY 2 230 #2 : 27 MW 5.4 MVAR Dro : Drop Generator at HELMS 1 18 #1: 400 MW Dropped :	STOREY 1-WILSON 230.00kV Ckt#1 Sec# 1	850.96	Amps	117.1	118.1	0.9
422	Open Line KEARNEY 230-HERNDON 230 #1 : Drop Generator at MELONE1 13.8 #1: 166 MW Dropped :	STOREY 1-WILSON 230.00kV Ckt#1 Sec# 1	850.96	Amps	116.8	117.5	0.7
370	Open Line KEARNEY 230-HERNDON 230 #1 : Drop Generator at EXCHQUER 13.8 #1: 90 MW Dropped :	STOREY 1-WILSON 230.00kV Ckt#1 Sec# 1	850.96	Amps	114.7	115.5	0.7
285	Open Xfmr GATES 230/GATES 500 #11 :	STOREY 1-WILSON 230.00kV Ckt#1 Sec# 1	850.96	Amps	112.7	113.5	0.8
411	Open Line PANOCHE 230-MCMULLN1 230 #1 : Open Line MCMULLN1 230-KEARNEY 230 #1 : Drop Load at MCMULLN1 230 #1 : 16.4 MW 3.3 MVAR D : Drop Generator at MELONE1 13.8 #1: 166 MW Dropped :	STOREY 1-WILSON 230.00kV Ckt#1 Sec# 1	850.96	Amps	112.6	113.3	0.7
196	Open Line KEARNEY 230-HERNDON 230 #1 :	STOREY 1-WILSON 230.00kV Ckt#1 Sec# 1	850.96	Amps	112.2	112.9	0.7
160	Open Line PANOCHE 230-MCMULLN1 230 #1 : Open Line MCMULLN1 230-KEARNEY 230 #1 : Drop Load at MCMULLN1 230 #1 : 16.4 MW 3.3 MVAR D : Drop Generator at EXCHQUER 13.8 #1: 90 MW Dropped :	STOREY 1-WILSON 230.00kV Ckt#1 Sec# 1	850.96	Amps	110.5	111.2	0.7
386	Open Line KEARNEY 230-HERNDON 230 #1 : Drop Generator at KERCKHOF 13.8 #1: 145 MW Dropped :	STOREY 1-WILSON 230.00kV Ckt#1 Sec# 1	850.96	Amps	107.9	108.6	0.7
11	Open Line PANOCHE 230-MCMULLN1 230 #1 : Open Line MCMULLN1 230-KEARNEY 230 #1 : Drop Load at MCMULLN1 230 #1 : 16.4 MW 3.3 MVAR D :	STOREY 1-WILSON 230.00kV Ckt#1 Sec# 1	850.96	Amps	107.9	108.6	0.7
415	Open Line HELM 230-MC CALL 230 #1 : Drop Generator at MELONE1 13.8 #1: 166 MW Dropped :	STOREY 1-WILSON 230.00kV Ckt#1 Sec# 1	850.96	Amps	106.7	107.3	0.7

#	Outage Description	Facility	Rating	Unit	PU Flow	PU Flow	% Change
152	Open Line WESTLEY 230-LOSBANOS 230 #1 : Drop Generator at EXCHQUER 13.8 #1: 90 MW Dropped :	STOREY 1-WILSON 230.00kV Ckt#1 Sec# 1	850.96	Amps	106.2	106.8	0.6
107	Open Line CERTANJ1 115-CHWCHLLA 115 #1 : Open Line CERTANJ1 115-SHARON T 115 #1 : Open Line SHARON T 115-SHARON 115 #1 : Open Line SHARON T 115-OAKH_JCT 115 #1 : Open Line OAKH_JCT 115-CORSGOLD 115 #1 : Open Line OAKH_JCT 115-K1-JCT 115 #1 : Open Line CORSGOLD 115-OAKHURST 115 #1 : Open Line K1-JCT 115-KERCKHF2 115 #2 : Drop Load at SHARON 115 #1 : 6.6 MW 4.6 MVAR Drop : Drop Load at CORSGOLD 115 #1 : 1.8 MW 0.3 MVAR Dr :	STOREY 1-WILSON 230.00kV Ckt#1 Sec# 1	850.96	Amps	105.8	106.4	0.7
412	Open Line PANOCHE 230-HELM 230 #1 : Drop Generator at MELONE1 13.8 #1: 166 MW Dropped :	STOREY 1-WILSON 230.00kV Ckt#1 Sec# 1	850.96	Amps	105.6	106.3	0.7
426	Open Line MC CALL 230-HENTAP2 230 #1 : Open Line HENTAP2 230-GATES 230 #1 : Drop Generator at MELONE1 13.8 #1: 166 MW Dropped :	STOREY 1-WILSON 230.00kV Ckt#1 Sec# 1	850.96	Amps	105.1	105.8	0.6
363	Open Line HELM 230-MC CALL 230 #1 : Drop Generator at EXCHQUER 13.8 #1: 90 MW Dropped :	STOREY 1-WILSON 230.00kV Ckt#1 Sec# 1	850.96	Amps	104.5	105.1	0.7
179	Open Line PANOCHE 230-MCMULLN1 230 #1 : Open Line MCMULLN1 230-KEARNEY 230 #1 : Drop Load at MCMULLN1 230 #1 : 16.4 MW 3.3 MVAR D : Drop Generator at KERCKHOF 13.8 #1: 145 MW Dropped :	STOREY 1-WILSON 230.00kV Ckt#1 Sec# 1	850.96	Amps	103.7	104.4	0.7
161	Open Line PANOCHE 230-HELM 230 #1 : Drop Generator at EXCHQUER 13.8 #1: 90 MW Dropped :	STOREY 1-WILSON 230.00kV Ckt#1 Sec# 1	850.96	Amps	103.4	104.1	0.7
2	Open Line WESTLEY 230-LOSBANOS 230 #1 :	STOREY 1-WILSON 230.00kV Ckt#1 Sec# 1	850.96	Amps	103.2	103.8	0.6
374	Open Line MC CALL 230-HENTAP2 230 #1 : Open Line HENTAP2 230-GATES 230 #1 : Drop Generator at EXCHQUER 13.8 #1: 90 MW Dropped :	STOREY 1-WILSON 230.00kV Ckt#1 Sec# 1	850.96	Amps	102.9	103.6	0.6
106	Open Line CHWCHLLA 115-CERTAN T 115 #1 : Open Line CERTAN T 115-LE GRAND 115 #1 : Open Line CERTAN T 115-CERTANJ2 115 #1 : Open Line CERTANJ2 115-CHWCGNJT 115 #1 : Open Line CHWCGNJT 115-CERTTEED 115 #1 : Open Line CHWCGNJT 115-CHWCGN 115 #1 : Open Line CHWCGN 115-CHWCHLA2 115 #1 : Open Xfmr CHWCGN 115/CHOWCOGN 13.8 #1 : Open Xfmr CHWCHLA2 115/CHWCHLA2 13.8 #1 : Drop Load at CERTTEED 115 #1 : 9.3 MW 6.4 MVAR Dr :	STOREY 1-WILSON 230.00kV Ckt#1 Sec# 1	850.96	Amps	102.4	103.1	0.7
429	Open Line GATES 230-ARCO 230 #1 : Drop Generator at	STOREY 1-WILSON 230.00kV Ckt#1 Sec# 1	850.96	Amps	102.2	102.8	0.6

#	Outage Description	Facility	Rating	Unit	PU Flow	PU Flow	% Change
	MELONE1 13.8 #1: 166 MW Dropped :						
430	Open Line GATES 230-MIDWAY 230 #1 : Drop Generator at MELONE1 13.8 #1: 166 MW Dropped :	STOREY 1-WILSON 230.00kV Ckt#1 Sec# 1	850.96	Amps	102.1	102.8	0.6
207	Open Line K1-JCT 115-KERCKHF2 115 #2 : Open Line K1-JCT 115-OAKH_JCT 115 #1 : Open Line OAKH_JCT 115-SHARON T 115 #1 : Open Line OAKH_JCT 115-CORSGOLD 115 #1 : Open Line SHARON T 115-CERTANJ1 115 #1 : Open Line SHARON T 115-SHARON 115 #1 : Open Line CERTANJ1 115-CHWCHLLA 115 #1 : Open Line CORSGOLD 115-OAKHURST 115 #1 : Drop Load at CORSGOLD 115 #1 : 1.8 MW 0.3 MVAR Dr : Drop Load at CORSGOLD 115 #2 : 20.9 MW 4.2 MVAR D :	STOREY 1-WILSON 230.00kV Ckt#1 Sec# 1	850.96	Amps	101.8	102.4	0.7
116	Open Line CANANDGA 70-TRIGO J 70 #1 : Open Line CANANDGA 70-GLASS 70 #1 : Open Line TRIGO J 70-BONITA 70 #1 : Open Line TRIGO J 70-TRIGO 70 #1 : Open Line TRIGO 70-MADERA 70 #1 : Open Line TRIGO 70-EL PECO 70 #1 : Drop Load at CANANDGA 70 #1 : 7.1 MW 5.3 MVAR Dro : Drop Load at BONITA 70 #1 : 11.5 MW 2.3 MVAR Drop : Drop Load at EL PECO 70 #1 : 7.9 MW 1.6 MVAR Drop : Drop Load at EL PECO 70 #2 : 5.8 MW 1.1 MVAR Drop :	STOREY 1-WILSON 230.00kV Ckt#1 Sec# 1	850.96	Amps	101.7	102.4	0.6
413	Open Line PANOCHE 230-GATES 230 #1 : Drop Generator at MELONE1 13.8 #1: 166 MW Dropped :	STOREY 1-WILSON 230.00kV Ckt#1 Sec# 1	850.96	Amps	101.7	102.4	0.6
414	Open Line PANOCHE 230-GATES 230 #2 : Drop Generator at MELONE1 13.8 #1: 166 MW Dropped :	STOREY 1-WILSON 230.00kV Ckt#1 Sec# 1	850.96	Amps	101.7	102.4	0.6
153	Open Line MOSSLND2 230-PANOCHE 230 #1 : Drop Generator at EXCHQUER 13.8 #1: 90 MW Dropped :	STOREY 1-WILSON 230.00kV Ckt#1 Sec# 1	850.96	Amps	101.6	102.2	0.6
423	Open Line HERNDON 230-FGRDN T1 230 #1 : Open Line FGRDN T1 230-FIGRDN 1 230 #1 : Open Line FGRDN T1 230-ASHLAN 230 #1 : Drop Load at FIGRDN 1 230 #1 : 59.1 MW 11.9 MVAR : Close Line FIGRDN 1 230-FIGRDN 2 230 #1 : Drop Generator at MELONE1 13.8 #1: 166 MW Dropped :	STOREY 1-WILSON 230.00kV Ckt#1 Sec# 1	850.96	Amps	101.6	102.2	0.6
189	Open Line HELM 230-MC CALL 230 #1 :	STOREY 1-WILSON 230.00kV Ckt#1 Sec# 1	850.96	Amps	101.5	102.2	0.7
169	Open Line DS AMIGO 230-PANOCHE 230 #1 : Drop Generator at EXCHQUER 13.8 #1: 90 MW Dropped :	STOREY 1-WILSON 230.00kV Ckt#1 Sec# 1	850.96	Amps	101.2	101.8	0.6
155	Open Line LOSBANOS 230-PANOCHE 230 #1 : Drop Generator at EXCHQUER 13.8 #1: 90 MW Dropped :	STOREY 1-WILSON 230.00kV Ckt#1 Sec# 1	850.96	Amps	101.2	101.8	0.6
156	Open Line LOSBANOS 230-PANOCHE 230 #2 : Drop Generator at	STOREY 1-WILSON 230.00kV Ckt#1 Sec# 1	850.96	Amps	101.0	101.7	0.6

#	Outage Description	Facility	Rating	Unit	PU Flow	PU Flow	% Change
	EXCHQUER 13.8 #1: 90 MW Dropped :						
427	Open Line GATES 230-TEMPLETN 230 #1 : Drop Generator at MELONE1 13.8 #1: 166 MW Dropped :	STOREY 1-WILSON 230.00kV Ckt#1 Sec# 1	850.96	Amps	100.8	101.5	0.6
115	Open Line PANOCHET 115-MENDOTA 115 #1 : Open Line PANOCHET 115-PANOCHE 115 #1 : Drop Generator at EXCHQUER 13.8 #1: 90 MW Dropped :	STOREY 1-WILSON 230.00kV Ckt#1 Sec# 1	850.96	Amps	100.9	101.5	0.6
157	Open Line LOSBANOS 230-DS AMIGO 230 #1 : Drop Generator at EXCHQUER 13.8 #1: 90 MW Dropped :	STOREY 1-WILSON 230.00kV Ckt#1 Sec# 1	850.96	Amps	100.8	101.4	0.6
428	Open Line GATES 230-MORROBAY 230 #1 : Drop Generator at MELONE1 13.8 #1: 166 MW Dropped :	STOREY 1-WILSON 230.00kV Ckt#1 Sec# 1	850.96	Amps	100.7	101.3	0.6
12	Open Line PANOCHE 230-HELM 230 #1 :	STOREY 1-WILSON 230.00kV Ckt#1 Sec# 1	850.96	Amps	100.5	101.1	0.7
114	Open Line NEWHALL 115-DAIRYLND 115 #1 : Open Line NEWHALL 115-MADERAPR 115 #1 : Open Line MADERAPR 115-MENDOTA 115 #1 : Open Xfmr MADERAPR 115/MADERA_G 13.8 #1 : Drop Load at NEWHALL 115 #2 : 6.8 MW 1.3 MVAR Dro : Drop Load at NEWHALL 115 #3 : 8.5 MW 1.7 MVAR Dro : Drop Load at MADERA_G 13.8 #ss: 3.6 MW 0.8 MVAR D : Drop Generator at EXCHQUER 13.8 #1: 90 MW Dropped :	STOREY 1-WILSON 230.00kV Ckt#1 Sec# 1	850.96	Amps	100.2	100.8	0.6
154	Open Line COBURN 230-PANOCHE 230 #1 : Drop Generator at EXCHQUER 13.8 #1: 90 MW Dropped :	STOREY 1-WILSON 230.00kV Ckt#1 Sec# 1	850.96	Amps	100.0	100.6	0.6
377	Open Line GATES 230-ARCO 230 #1 : Drop Generator at EXCHQUER 13.8 #1: 90 MW Dropped :	STOREY 1-WILSON 230.00kV Ckt#1 Sec# 1	850.96	Amps	100.0	100.6	0.6
202	Open Line MC CALL 230-HENTAP2 230 #1 : Open Line HENTAP2 230-GATES 230 #1 :	STOREY 1-WILSON 230.00kV Ckt#1 Sec# 1	850.96	Amps	100.0	100.6	0.6
378	Open Line GATES 230-MIDWAY 230 #1 : Drop Generator at EXCHQUER 13.8 #1: 90 MW Dropped :	STOREY 1-WILSON 230.00kV Ckt#1 Sec# 1	850.96	Amps	99.9	100.6	0.6
171	Open Line WESTLEY 230-LOSBANOS 230 #1 : Drop Generator at KERCKHOF 13.8 #1: 145 MW Dropped :	STOREY 1-WILSON 230.00kV Ckt#1 Sec# 1	850.96	Amps	99.8	100.4	0.6
117	Open Line MCSWAINJ 70-MC SWAIN 70 #1 : Open Line MCSWAINJ 70-MRCDFLLS 70 #1 : Open Line MCSWAINJ 70-EXCHEQUR 70 #1 : Open Xfmr MC SWAIN 70/MCSWAIN 9.11 #1 : Drop Generator at MCSWAIN 9.11 #1 : 9 MW Dropped : Drop Generator at EXCHQUER 13.8 #1: 90 MW Dropped :	STOREY 1-WILSON 230.00kV Ckt#1 Sec# 1	850.96	Amps	99.6	100.3	0.6
353	Open Line SMYRNA 115-MCKIBBEN 115 #1 : Open Line MCKIBBEN 115-SEMITRPJ 115 #1 : Open Line SEMITRPJ 115-GANSO 115 #1 : Open Line GANSO 115-MIDWAY 115 #1	STOREY 1-WILSON 230.00kV Ckt#1 Sec# 1	850.96	Amps	99.6	100.2	0.6

#	Outage Description	Facility	Rating	Unit	PU Flow	PU Flow	% Change
	: Drop Load at GANSO 115 #1 : 3 MW 0.6 MVAR Dropped : Drop Generator at EXCHQUER 13.8 #1: 90 MW Dropped :						
162	Open Line PANOCHE 230-GATES 230 #1 : Drop Generator at EXCHQUER 13.8 #1: 90 MW Dropped :	STOREY 1-WILSON 230.00kV Ckt#1 Sec# 1	850.96	Amps	99.5	100.2	0.6
163	Open Line PANOCHE 230-GATES 230 #2 : Drop Generator at EXCHQUER 13.8 #1: 90 MW Dropped :	STOREY 1-WILSON 230.00kV Ckt#1 Sec# 1	850.96	Amps	99.5	100.2	0.6
113	Open Line WILSON B 115-EL CAPTN 115 #1 : Drop Generator at EXCHQUER 13.8 #1: 90 MW Dropped :	STOREY 1-WILSON 230.00kV Ckt#1 Sec# 1	850.96	Amps	99.5	100.1	0.6
28	Open Line LE GRAND 115-WILSON A 115 #1 :	STOREY 1-WILSON 230.00kV Ckt#1 Sec# 1	850.96	Amps	99.4	100.1	0.6
158	Open Line LOSBANOS 230-SN LS PP 230 #1 : Drop Generator at EXCHQUER 13.8 #1: 90 MW Dropped :	STOREY 1-WILSON 230.00kV Ckt#1 Sec# 1	850.96	Amps	99.4	100.1	0.6
159	Open Line LOSBANOS 230-SN LS PP 230 #2 : Drop Generator at EXCHQUER 13.8 #1: 90 MW Dropped :	STOREY 1-WILSON 230.00kV Ckt#1 Sec# 1	850.96	Amps	99.4	100.1	0.6
285	Open Xfmr GATES 230/GATES 500 #11 :	Q239SWST-Q166 230.00kV Ckt#2 Sec# 1	976.48	Amps	106.6	106.9	0.4
204	Open Line GATES 230-MORROBAY 230 #1 :	Q239SWST-Q166 230.00kV Ckt#2 Sec# 1	976.48	Amps	103.5	103.6	0.1
428	Open Line GATES 230-MORROBAY 230 #1 : Drop Generator at MELONE1 13.8 #1: 166 MW Dropped :	Q239SWST-Q166 230.00kV Ckt#2 Sec# 1	976.48	Amps	103.3	103.4	0.1
376	Open Line GATES 230-MORROBAY 230 #1 : Drop Generator at EXCHQUER 13.8 #1: 90 MW Dropped :	Q239SWST-Q166 230.00kV Ckt#2 Sec# 1	976.48	Amps	103.3	103.3	0.1
392	Open Line GATES 230-MORROBAY 230 #1 : Drop Generator at KERCKHOF 13.8 #1: 145 MW Dropped :	Q239SWST-Q166 230.00kV Ckt#2 Sec# 1	976.48	Amps	103.0	103.1	0.1
408	Open Line GATES 230-MORROBAY 230 #1 : Drop Generator at HELMS 1 18 #1: 400 MW Dropped :	Q239SWST-Q166 230.00kV Ckt#2 Sec# 1	976.48	Amps	102.2	102.3	0.1
203	Open Line GATES 230-TEMPLETN 230 #1 :	Q239SWST-Q166 230.00kV Ckt#2 Sec# 1	976.48	Amps	100.2	100.3	0.1
427	Open Line GATES 230-TEMPLETN 230 #1 : Drop Generator at MELONE1 13.8 #1: 166 MW Dropped :	Q239SWST-Q166 230.00kV Ckt#2 Sec# 1	976.48	Amps	100.0	100.1	0.1
285	Open Xfmr GATES 230/GATES 500 #11 :	Q239SWST-Q166 230.00kV Ckt#1 Sec# 1	976.48	Amps	106.6	106.9	0.4
204	Open Line GATES 230-MORROBAY 230 #1 :	Q239SWST-Q166 230.00kV Ckt#1 Sec# 1	976.48	Amps	103.5	103.6	0.1
428	Open Line GATES 230-MORROBAY 230 #1 : Drop Generator at MELONE1 13.8 #1: 166 MW Dropped :	Q239SWST-Q166 230.00kV Ckt#1 Sec# 1	976.48	Amps	103.3	103.4	0.1
376	Open Line GATES 230-MORROBAY 230 #1 : Drop Generator at EXCHQUER 13.8 #1: 90 MW Dropped :	Q239SWST-Q166 230.00kV Ckt#1 Sec# 1	976.48	Amps	103.3	103.3	0.1
392	Open Line GATES 230-MORROBAY 230 #1 : Drop Generator at KERCKHOF 13.8 #1: 145 MW Dropped :	Q239SWST-Q166 230.00kV Ckt#1 Sec# 1	976.48	Amps	103.0	103.1	0.1

#	Outage Description	Facility	Rating	Unit	PU Flow	PU Flow	% Change
408	Open Line GATES 230-MORROBAY 230 #1 : Drop Generator at HELMS 1 18 #1: 400 MW Dropped :	Q239SWST-Q166 230.00kV Ckt#1 Sec# 1	976.48	Amps	102.2	102.3	0.1
203	Open Line GATES 230-TEMPLETN 230 #1 :	Q239SWST-Q166 230.00kV Ckt#1 Sec# 1	976.48	Amps	100.2	100.3	0.1
427	Open Line GATES 230-TEMPLETN 230 #1 : Drop Generator at MELONE1 13.8 #1: 166 MW Dropped :	Q239SWST-Q166 230.00kV Ckt#1 Sec# 1	976.48	Amps	100.0	100.1	0.1
285	Open Xfmr GATES 230/GATES 500 #11 :	Q194SWST-MIDWAY 230.00kV Ckt#1 Sec# 1	976.48	Amps	106.6	106.9	0.4
204	Open Line GATES 230-MORROBAY 230 #1 :	Q194SWST-MIDWAY 230.00kV Ckt#1 Sec# 1	976.48	Amps	103.5	103.6	0.1
428	Open Line GATES 230-MORROBAY 230 #1 : Drop Generator at MELONE1 13.8 #1: 166 MW Dropped :	Q194SWST-MIDWAY 230.00kV Ckt#1 Sec# 1	976.48	Amps	103.3	103.4	0.1
376	Open Line GATES 230-MORROBAY 230 #1 : Drop Generator at EXCHQUER 13.8 #1: 90 MW Dropped :	Q194SWST-MIDWAY 230.00kV Ckt#1 Sec# 1	976.48	Amps	103.2	103.3	0.1
392	Open Line GATES 230-MORROBAY 230 #1 : Drop Generator at KERCKHOF 13.8 #1: 145 MW Dropped :	Q194SWST-MIDWAY 230.00kV Ckt#1 Sec# 1	976.48	Amps	103.0	103.1	0.1
408	Open Line GATES 230-MORROBAY 230 #1 : Drop Generator at HELMS 1 18 #1: 400 MW Dropped :	Q194SWST-MIDWAY 230.00kV Ckt#1 Sec# 1	976.48	Amps	102.2	102.3	0.1
203	Open Line GATES 230-TEMPLETN 230 #1 :	Q194SWST-MIDWAY 230.00kV Ckt#1 Sec# 1	976.48	Amps	100.2	100.3	0.1
427	Open Line GATES 230-TEMPLETN 230 #1 : Drop Generator at MELONE1 13.8 #1: 166 MW Dropped :	Q194SWST-MIDWAY 230.00kV Ckt#1 Sec# 1	976.48	Amps	100.0	100.1	0.1
285	Open Xfmr GATES 230/GATES 500 #11 :	Q166 -Q194SWST 230.00kV Ckt#1 Sec# 1	976.48	Amps	106.6	106.9	0.4
204	Open Line GATES 230-MORROBAY 230 #1 :	Q166 -Q194SWST 230.00kV Ckt#1 Sec# 1	976.48	Amps	103.5	103.6	0.1
428	Open Line GATES 230-MORROBAY 230 #1 : Drop Generator at MELONE1 13.8 #1: 166 MW Dropped :	Q166 -Q194SWST 230.00kV Ckt#1 Sec# 1	976.48	Amps	103.3	103.4	0.1
376	Open Line GATES 230-MORROBAY 230 #1 : Drop Generator at EXCHQUER 13.8 #1: 90 MW Dropped :	Q166 -Q194SWST 230.00kV Ckt#1 Sec# 1	976.48	Amps	103.3	103.3	0.1
392	Open Line GATES 230-MORROBAY 230 #1 : Drop Generator at KERCKHOF 13.8 #1: 145 MW Dropped :	Q166 -Q194SWST 230.00kV Ckt#1 Sec# 1	976.48	Amps	103.0	103.1	0.1
408	Open Line GATES 230-MORROBAY 230 #1 : Drop Generator at HELMS 1 18 #1: 400 MW Dropped :	Q166 -Q194SWST 230.00kV Ckt#1 Sec# 1	976.48	Amps	102.2	102.3	0.1
203	Open Line GATES 230-TEMPLETN 230 #1 :	Q166 -Q194SWST 230.00kV Ckt#1 Sec# 1	976.48	Amps	100.2	100.3	0.1
427	Open Line GATES 230-TEMPLETN 230 #1 : Drop Generator at MELONE1 13.8 #1: 166 MW Dropped :	Q166 -Q194SWST 230.00kV Ckt#1 Sec# 1	976.48	Amps	100.0	100.1	0.1
285	Open Xfmr GATES 230/GATES 500 #11 :	Q166 -MIDWAY 230.00kV Ckt#1 Sec# 1	976.48	Amps	106.6	106.9	0.4
204	Open Line GATES 230-MORROBAY 230 #1 :	Q166 -MIDWAY 230.00kV Ckt#1 Sec# 1	976.48	Amps	103.5	103.6	0.1
428	Open Line GATES 230-MORROBAY 230 #1 : Drop Generator at	Q166 -MIDWAY 230.00kV Ckt#1 Sec# 1	976.48	Amps	103.3	103.4	0.1

#	Outage Description	Facility	Rating	Unit	PU Flow	PU Flow	% Change
	MELONE1 13.8 #1: 166 MW Dropped :						
376	Open Line GATES 230-MORROBAY 230 #1 : Drop Generator at EXCHQUER 13.8 #1: 90 MW Dropped :	Q166 -MIDWAY 230.00kV Ckt#1 Sec# 1	976.48	Amps	103.2	103.3	0.1
392	Open Line GATES 230-MORROBAY 230 #1 : Drop Generator at KERCKHOF 13.8 #1: 145 MW Dropped :	Q166 -MIDWAY 230.00kV Ckt#1 Sec# 1	976.48	Amps	103.0	103.1	0.1
408	Open Line GATES 230-MORROBAY 230 #1 : Drop Generator at HELMS 1 18 #1: 400 MW Dropped :	Q166 -MIDWAY 230.00kV Ckt#1 Sec# 1	976.48	Amps	102.2	102.3	0.1
203	Open Line GATES 230-TEMPLETN 230 #1 :	Q166 -MIDWAY 230.00kV Ckt#1 Sec# 1	976.48	Amps	100.2	100.3	0.1
427	Open Line GATES 230-TEMPLETN 230 #1 : Drop Generator at MELONE1 13.8 #1: 166 MW Dropped :	Q166 -MIDWAY 230.00kV Ckt#1 Sec# 1	976.48	Amps	100.0	100.1	0.1
44	Open Line ORO LOMA 70-MRCYSPRS 70 #1 : Open Line MRCYSPRS 70-ORTIGA 70 #1 : Open Line MRCYSPRS 70-ARBURUA 70 #1 : Open Line ORTIGA 70-CANAL 70 #1 : Open Line ARBURUA 70-WRGHT PP 70 #1 : Open Line WRGHT PP 70-LOS BANS 70 #1 : Drop Load at ORTIGA 70 #1 : 5.5 MW 1.1 MVAR Dropp : Drop Load at ARBURUA 70 #1 : 3.5 MW 1.7 MVAR Drop : Drop Load at WRGHT PP 70 #1 : 7.6 MW 1.5 MVAR Dro :	ORO LOMA-DOS PALS 70.00kV Ckt#1 Sec# 1	282.08	Amps	108.4	108.8	0.4
125	Open Line ORO LOMA 70-MRCYSPRS 70 #1 : Open Line MRCYSPRS 70-ORTIGA 70 #1 : Open Line MRCYSPRS 70-ARBURUA 70 #1 : Open Line ORTIGA 70-CANAL 70 #1 : Open Line ARBURUA 70-WRGHT PP 70 #1 : Open Line WRGHT PP 70-LOS BANS 70 #1 : Drop Load at ORTIGA 70 #1 : 5.5 MW 1.1 MVAR Dropp : Drop Load at ARBURUA 70 #1 : 3.5 MW 1.7 MVAR Drop : Drop Load at WRGHT PP 70 #1 : 7.6 MW 1.5 MVAR Dro : Drop Generator at ONEILPMP 9.11 #1: -6 MW Dropped :	ORO LOMA-DOS PALS 70.00kV Ckt#1 Sec# 1	282.08	Amps	107.3	107.7	0.4
118	Open Line ORO LOMA 70-MRCYSPRS 70 #1 : Open Line MRCYSPRS 70-ORTIGA 70 #1 : Open Line MRCYSPRS 70-ARBURUA 70 #1 : Open Line ORTIGA 70-CANAL 70 #1 : Open Line ARBURUA 70-WRGHT PP 70 #1 : Open Line WRGHT PP 70-LOS BANS 70 #1 : Drop Load at ORTIGA 70 #1 : 5.5 MW 1.1 MVAR Dropp : Drop Load at ARBURUA 70 #1 : 3.5 MW 1.7 MVAR Drop : Drop Load at WRGHT PP 70 #1 : 7.6 MW 1.5 MVAR Dro : Drop Generator at EXCHQUER 13.8 #1: 90 MW Dropped :	ORO LOMA-DOS PALS 70.00kV Ckt#1 Sec# 1	282.08	Amps	103.4	103.8	0.4
165	Open Line STOREY 1 230-WILSON 230 #1 : Open Line STOREY 1 230-BORDEN 230 #1 : Drop Load at STOREY 1 230 #1 : 30.2 MW 6.1 MVAR D : Drop Generator at EXCHQUER 13.8 #1: 90 MW Dropped :	OAKH_JCT-SHARON T 115.00kV Ckt#1 Sec# 1	396.61	Amps	104.9	105.4	0.5

#	Outage Description	Facility	Rating	Unit	PU Flow	PU Flow	% Change
363	Open Line HELM 230-MC CALL 230 #1 : Drop Generator at EXCHQUER 13.8 #1: 90 MW Dropped :	OAKH_JCT-SHARON T 115.00kV Ckt#1 Sec# 1	396.61	Amps	100.2	100.8	0.5
164	Open Line STOREY 2 230-BORDEN 230 #1 : Open Line STOREY 2 230-WILSON 230 #1 : Drop Load at STOREY 2 230 #2 : 27 MW 5.4 MVAR Dro : Drop Generator at EXCHQUER 13.8 #1: 90 MW Dropped :	OAKH_JCT-SHARON T 115.00kV Ckt#1 Sec# 1	396.61	Amps	99.7	100.2	0.5
1	Open Line WARNERVL 230-WILSON 230 #1 :	MELONES -COTTLE A 230.00kV Ckt#1 Sec# 1	849.96	Amps	102.6	103.2	0.5
202	Open Line MC CALL 230-HENTAP2 230 #1 : Open Line HENTAP2 230-GATES 230 #1 :	MC CALL -HELM 230.00kV Ckt#1 Sec# 1	849.96	Amps	108.5	109.0	0.6
426	Open Line MC CALL 230-HENTAP2 230 #1 : Open Line HENTAP2 230-GATES 230 #1 : Drop Generator at MELONE1 13.8 #1: 166 MW Dropped :	MC CALL -HELM 230.00kV Ckt#1 Sec# 1	849.96	Amps	106.8	107.3	0.5
374	Open Line MC CALL 230-HENTAP2 230 #1 : Open Line HENTAP2 230-GATES 230 #1 : Drop Generator at EXCHQUER 13.8 #1: 90 MW Dropped :	MC CALL -HELM 230.00kV Ckt#1 Sec# 1	849.96	Amps	106.5	107.0	0.5
291	Open Xfmr KEARNEY 70/KEARNEY 230 #2 :	KERMAN -AGRCJCT 70.00kV Ckt#1 Sec# 1	379.4	Amps	163.2	163.1	-0.1
291	Open Xfmr KEARNEY 70/KEARNEY 230 #2 :	KEARNEY -FRWWTAP 70.00kV Ckt#1 Sec# 1	379.4	Amps	111.5	111.4	-0.1
12	Open Line PANOCHE 230-HELM 230 #1 :	HELM -STRD JCT 70.00kV Ckt#1 Sec# 1	377.75	Amps	122.2	122.7	0.5
412	Open Line PANOCHE 230-HELM 230 #1 : Drop Generator at MELONE1 13.8 #1: 166 MW Dropped :	HELM -STRD JCT 70.00kV Ckt#1 Sec# 1	377.75	Amps	120.2	120.7	0.5
161	Open Line PANOCHE 230-HELM 230 #1 : Drop Generator at EXCHQUER 13.8 #1: 90 MW Dropped :	HELM -STRD JCT 70.00kV Ckt#1 Sec# 1	377.75	Amps	120.0	120.6	0.5
180	Open Line PANOCHE 230-HELM 230 #1 : Drop Generator at KERCKHOF 13.8 #1: 145 MW Dropped :	HELM -STRD JCT 70.00kV Ckt#1 Sec# 1	377.75	Amps	112.4	112.9	0.5
142	Open Line PANOCHE 230-HELM 230 #1 : Drop Generator at HELMS 1 18 #1: 400 MW Dropped :	HELM -STRD JCT 70.00kV Ckt#1 Sec# 1	377.75	Amps	106.0	106.5	0.5
291	Open Xfmr KEARNEY 70/KEARNEY 230 #2 :	FRWWTAP -KERMAN 70.00kV Ckt#1 Sec# 1	379.4	Amps	107.9	107.8	-0.1
131	Open Line MELONES 230-WILSON 230 #1 : Drop Generator at MELONE1 13.8 #1: 166 MW Dropped :	COTTLE B-BELLOTA 230.00kV Ckt#1 Sec# 1	793.23	Amps	117.1	118.0	0.8
285	Open Xfmr GATES 230/GATES 500 #11 :	COTTLE B-BELLOTA 230.00kV Ckt#1 Sec# 1	793.23	Amps	113.8	114.7	0.9
196	Open Line KEARNEY 230-HERNDON 230 #1 :	COTTLE B-BELLOTA 230.00kV Ckt#1 Sec# 1	793.23	Amps	106.3	107.1	0.7
422	Open Line KEARNEY 230-HERNDON 230 #1 : Drop Generator at MELONE1 13.8 #1: 166 MW Dropped :	COTTLE B-BELLOTA 230.00kV Ckt#1 Sec# 1	793.23	Amps	104.9	105.6	0.7
11	Open Line PANOCHE 230-MCMULLN1 230 #1 : Open Line MCMULLN1 230-KEARNEY 230 #1 : Drop Load at MCMULLN1 230 #1 : 16.4 MW 3.3 MVAR D :	COTTLE B-BELLOTA 230.00kV Ckt#1 Sec# 1	793.23	Amps	103.8	104.6	0.7

#	Outage Description	Facility	Rating	Unit	PU Flow	PU Flow	% Change
166	Open Line MELONES 230-WILSON 230 #1 : Drop Generator at EXCHQUER 13.8 #1: 90 MW Dropped :	COTTLE B-BELLOTA 230.00kV Ckt#1 Sec# 1	793.23	Amps	103.4	104.2	0.8
185	Open Line MELONES 230-WILSON 230 #1 : Drop Generator at KERCKHOF 13.8 #1: 145 MW Dropped :	COTTLE B-BELLOTA 230.00kV Ckt#1 Sec# 1	793.23	Amps	103.0	103.8	0.8
411	Open Line PANOCHE 230-MCMULLN1 230 #1 : Open Line MCMULLN1 230-KEARNEY 230 #1 : Drop Load at MCMULLN1 230 #1 : 16.4 MW 3.3 MVAR D : Drop Generator at MELONE1 13.8 #1: 166 MW Dropped :	COTTLE B-BELLOTA 230.00kV Ckt#1 Sec# 1	793.23	Amps	102.4	103.2	0.7
370	Open Line KEARNEY 230-HERNDON 230 #1 : Drop Generator at EXCHQUER 13.8 #1: 90 MW Dropped :	COTTLE B-BELLOTA 230.00kV Ckt#1 Sec# 1	793.23	Amps	100.8	101.5	0.7
386	Open Line KEARNEY 230-HERNDON 230 #1 : Drop Generator at KERCKHOF 13.8 #1: 145 MW Dropped :	COTTLE B-BELLOTA 230.00kV Ckt#1 Sec# 1	793.23	Amps	100.1	100.9	0.7
202	Open Line MC CALL 230-HENTAP2 230 #1 : Open Line HENTAP2 230-GATES 230 #1 :	COTTLE B-BELLOTA 230.00kV Ckt#1 Sec# 1	793.23	Amps	99.8	100.5	0.7
3	Open Line MOSSLND2 230-PANOCHE 230 #1 :	COTTLE B-BELLOTA 230.00kV Ckt#1 Sec# 1	793.23	Amps	99.7	100.4	0.7
189	Open Line HELM 230-MC CALL 230 #1 :	COTTLE B-BELLOTA 230.00kV Ckt#1 Sec# 1	793.23	Amps	99.5	100.2	0.7
291	Open Xfmr KEARNEY 70/KEARNEY 230 #2 :	CAMDEN -KNGLOBUS 70.00kV Ckt#1 Sec# 1	398.37	Amps	100.7	101.0	0.3
127	Open Line STOREY 2 230-BORDEN 230 #1 : Open Line STOREY 2 230-WILSON 230 #1 : Drop Load at STOREY 2 230 #2 : 27 MW 5.4 MVAR Dro : Drop Generator at MELONE1 13.8 #1: 166 MW Dropped :	BORDEN -STOREY 1 230.00kV Ckt#1 Sec# 1	793.23	Amps	176.2	177.2	0.9
164	Open Line STOREY 2 230-BORDEN 230 #1 : Open Line STOREY 2 230-WILSON 230 #1 : Drop Load at STOREY 2 230 #2 : 27 MW 5.4 MVAR Dro : Drop Generator at EXCHQUER 13.8 #1: 90 MW Dropped :	BORDEN -STOREY 1 230.00kV Ckt#1 Sec# 1	793.23	Amps	172.8	173.8	1.0
15	Open Line STOREY 2 230-BORDEN 230 #1 : Open Line STOREY 2 230-WILSON 230 #1 : Drop Load at STOREY 2 230 #2 : 27 MW 5.4 MVAR Dro :	BORDEN -STOREY 1 230.00kV Ckt#1 Sec# 1	793.23	Amps	167.9	168.9	1.0
183	Open Line STOREY 2 230-BORDEN 230 #1 : Open Line STOREY 2 230-WILSON 230 #1 : Drop Load at STOREY 2 230 #2 : 27 MW 5.4 MVAR Dro : Drop Generator at KERCKHOF 13.8 #1: 145 MW Dropped :	BORDEN -STOREY 1 230.00kV Ckt#1 Sec# 1	793.23	Amps	162.7	163.7	1.0
145	Open Line STOREY 2 230-BORDEN 230 #1 : Open Line STOREY 2 230-WILSON 230 #1 : Drop Load at STOREY 2 230 #2 : 27 MW 5.4 MVAR Dro : Drop Generator at HELMS 1 18 #1: 400 MW Dropped :	BORDEN -STOREY 1 230.00kV Ckt#1 Sec# 1	793.23	Amps	135.2	136.2	1.0
422	Open Line KEARNEY 230-HERNDON 230 #1 : Drop Generator at MELONE1 13.8 #1: 166 MW Dropped :	BORDEN -STOREY 1 230.00kV Ckt#1 Sec# 1	793.23	Amps	134.8	135.6	0.8
370	Open Line KEARNEY 230-HERNDON 230 #1 : Drop Generator at EXCHQUER 13.8 #1: 90 MW Dropped :	BORDEN -STOREY 1 230.00kV Ckt#1 Sec# 1	793.23	Amps	132.7	133.4	0.8

#	Outage Description	Facility	Rating	Unit	PU Flow	PU Flow	% Change
285	Open Xfmr GATES 230/GATES 500 #11 :	BORDEN -STOREY 1 230.00kV Ckt#1 Sec# 1	793.23	Amps	130.5	131.3	0.8
411	Open Line PANOCHE 230-MCMULLN1 230 #1 : Open Line MCMULLN1 230-KEARNEY 230 #1 : Drop Load at MCMULLN1 230 #1 : 16.4 MW 3.3 MVAR D : Drop Generator at MELONE1 13.8 #1: 166 MW Dropped :	BORDEN -STOREY 1 230.00kV Ckt#1 Sec# 1	793.23	Amps	130.3	131.1	0.8
196	Open Line KEARNEY 230-HERNDON 230 #1 :	BORDEN -STOREY 1 230.00kV Ckt#1 Sec# 1	793.23	Amps	129.9	130.7	0.8
160	Open Line PANOCHE 230-MCMULLN1 230 #1 : Open Line MCMULLN1 230-KEARNEY 230 #1 : Drop Load at MCMULLN1 230 #1 : 16.4 MW 3.3 MVAR D : Drop Generator at EXCHQUER 13.8 #1: 90 MW Dropped :	BORDEN -STOREY 1 230.00kV Ckt#1 Sec# 1	793.23	Amps	128.2	128.9	0.8
386	Open Line KEARNEY 230-HERNDON 230 #1 : Drop Generator at KERCKHOF 13.8 #1: 145 MW Dropped :	BORDEN -STOREY 1 230.00kV Ckt#1 Sec# 1	793.23	Amps	125.4	126.2	0.8
11	Open Line PANOCHE 230-MCMULLN1 230 #1 : Open Line MCMULLN1 230-KEARNEY 230 #1 : Drop Load at MCMULLN1 230 #1 : 16.4 MW 3.3 MVAR D :	BORDEN -STOREY 1 230.00kV Ckt#1 Sec# 1	793.23	Amps	125.4	126.1	0.8
415	Open Line HELM 230-MC CALL 230 #1 : Drop Generator at MELONE1 13.8 #1: 166 MW Dropped :	BORDEN -STOREY 1 230.00kV Ckt#1 Sec# 1	793.23	Amps	124.0	124.7	0.7
152	Open Line WESTLEY 230-LOSBANOS 230 #1 : Drop Generator at EXCHQUER 13.8 #1: 90 MW Dropped :	BORDEN -STOREY 1 230.00kV Ckt#1 Sec# 1	793.23	Amps	123.5	124.1	0.6
107	Open Line CERTANJ1 115-CHWCHLLA 115 #1 : Open Line CERTANJ1 115-SHARON T 115 #1 : Open Line SHARON T 115-SHARON 115 #1 : Open Line SHARON T 115-OAKH_JCT 115 #1 : Open Line OAKH_JCT 115-CORSGOLD 115 #1 : Open Line OAKH_JCT 115-K1-JCT 115 #1 : Open Line CORSGOLD 115-OAKHURST 115 #1 : Open Line K1-JCT 115-KERCKHF2 115 #2 : Drop Load at SHARON 115 #1 : 6.6 MW 4.6 MVAR Drop : Drop Load at CORSGOLD 115 #1 : 1.8 MW 0.3 MVAR Dr :	BORDEN -STOREY 1 230.00kV Ckt#1 Sec# 1	793.23	Amps	123.1	123.8	0.7
412	Open Line PANOCHE 230-HELM 230 #1 : Drop Generator at MELONE1 13.8 #1: 166 MW Dropped :	BORDEN -STOREY 1 230.00kV Ckt#1 Sec# 1	793.23	Amps	122.8	123.6	0.7
426	Open Line MC CALL 230-HENTAP2 230 #1 : Open Line HENTAP2 230-GATES 230 #1 : Drop Generator at MELONE1 13.8 #1: 166 MW Dropped :	BORDEN -STOREY 1 230.00kV Ckt#1 Sec# 1	793.23	Amps	122.3	123.0	0.7
363	Open Line HELM 230-MC CALL 230 #1 : Drop Generator at EXCHQUER 13.8 #1: 90 MW Dropped :	BORDEN -STOREY 1 230.00kV Ckt#1 Sec# 1	793.23	Amps	121.7	122.4	0.7
179	Open Line PANOCHE 230-MCMULLN1 230 #1 : Open Line MCMULLN1 230-KEARNEY 230 #1 : Drop Load at MCMULLN1	BORDEN -STOREY 1 230.00kV Ckt#1 Sec# 1	793.23	Amps	120.9	121.7	0.8

#	Outage Description	Facility	Rating	Unit	PU Flow	PU Flow	% Change
	230 #1 : 16.4 MW 3.3 MVAR D : Drop Generator at KERCKHOF 13.8 #1: 145 MW Dropped :						
161	Open Line PANOCHE 230-HELM 230 #1 : Drop Generator at EXCHQUER 13.8 #1: 90 MW Dropped :	BORDEN -STOREY 1 230.00kV Ckt#1 Sec# 1	793.23	Amps	120.6	121.3	0.7
2	Open Line WESTLEY 230-LOSBANOS 230 #1 :	BORDEN -STOREY 1 230.00kV Ckt#1 Sec# 1	793.23	Amps	120.3	121.0	0.6
374	Open Line MC CALL 230-HENTAP2 230 #1 : Open Line HENTAP2 230-GATES 230 #1 : Drop Generator at EXCHQUER 13.8 #1: 90 MW Dropped :	BORDEN -STOREY 1 230.00kV Ckt#1 Sec# 1	793.23	Amps	120.0	120.7	0.7
106	Open Line CHWCHLLA 115-CERTAN T 115 #1 : Open Line CERTAN T 115-LE GRAND 115 #1 : Open Line CERTAN T 115-CERTANJ2 115 #1 : Open Line CERTANJ2 115-CHWCGNJT 115 #1 : Open Line CHWCGNJT 115-CERTTEED 115 #1 : Open Line CHWCGNJT 115-CHWCGN 115 #1 : Open Line CHWCGN 115-CHWCHLA2 115 #1 : Open Xfmr CHWCGN 115/CHOWCOGN 13.8 #1 : Open Xfmr CHWCHLA2 115/CHWCHLA2 13.8 #1 : Drop Load at CERTTEED 115 #1 : 9.3 MW 6.4 MVAR Dr :	BORDEN -STOREY 1 230.00kV Ckt#1 Sec# 1	793.23	Amps	119.5	120.2	0.7
429	Open Line GATES 230-ARCO 230 #1 : Drop Generator at MELONE1 13.8 #1: 166 MW Dropped :	BORDEN -STOREY 1 230.00kV Ckt#1 Sec# 1	793.23	Amps	119.2	119.8	0.7
430	Open Line GATES 230-MIDWAY 230 #1 : Drop Generator at MELONE1 13.8 #1: 166 MW Dropped :	BORDEN -STOREY 1 230.00kV Ckt#1 Sec# 1	793.23	Amps	119.1	119.8	0.7
207	Open Line K1-JCT 115-KERCKHF2 115 #2 : Open Line K1-JCT 115-OAKH_JCT 115 #1 : Open Line OAKH_JCT 115-SHARON T 115 #1 : Open Line OAKH_JCT 115-CORSGOLD 115 #1 : Open Line SHARON T 115-CERTANJ1 115 #1 : Open Line SHARON T 115-SHARON 115 #1 : Open Line CERTANJ1 115-CHWCHLLA 115 #1 : Open Line CORSGOLD 115-OAKHURST 115 #1 : Drop Load at CORSGOLD 115 #1 : 1.8 MW 0.3 MVAR Dr : Drop Load at CORSGOLD 115 #2 : 20.9 MW 4.2 MVAR D :	BORDEN -STOREY 1 230.00kV Ckt#1 Sec# 1	793.23	Amps	118.8	119.5	0.7
116	Open Line CANANDGA 70-TRIGO J 70 #1 : Open Line CANANDGA 70-GLASS 70 #1 : Open Line TRIGO J 70-BONITA 70 #1 : Open Line TRIGO J 70-TRIGO 70 #1 : Open Line TRIGO 70-MADERA 70 #1 : Open Line TRIGO 70-EL PECO 70 #1 : Drop Load at CANANDGA 70 #1 : 7.1 MW 5.3 MVAR Dro : Drop Load at BONITA 70 #1 : 11.5 MW 2.3 MVAR Drop : Drop Load at EL PECO 70 #1 : 7.9 MW 1.6 MVAR Drop : Drop Load at EL PECO 70 #2 : 5.8 MW 1.1 MVAR Drop :	BORDEN -STOREY 1 230.00kV Ckt#1 Sec# 1	793.23	Amps	118.7	119.4	0.7

#	Outage Description	Facility	Rating	Unit	PU Flow	PU Flow	% Change
413	Open Line PANOCHE 230-GATES 230 #1 : Drop Generator at MELONE1 13.8 #1: 166 MW Dropped :	BORDEN -STOREY 1 230.00kV Ckt#1 Sec# 1	793.23	Amps	118.7	119.3	0.7
414	Open Line PANOCHE 230-GATES 230 #2 : Drop Generator at MELONE1 13.8 #1: 166 MW Dropped :	BORDEN -STOREY 1 230.00kV Ckt#1 Sec# 1	793.23	Amps	118.7	119.3	0.7
153	Open Line MOSSLND2 230-PANOCHE 230 #1 : Drop Generator at EXCHQUER 13.8 #1: 90 MW Dropped :	BORDEN -STOREY 1 230.00kV Ckt#1 Sec# 1	793.23	Amps	118.6	119.3	0.7
189	Open Line HELM 230-MC CALL 230 #1 :	BORDEN -STOREY 1 230.00kV Ckt#1 Sec# 1	793.23	Amps	118.5	119.2	0.7
423	Open Line HERNDON 230-FGRDN T1 230 #1 : Open Line FGRDN T1 230-FIGRDN 1 230 #1 : Open Line FGRDN T1 230-ASHLAN 230 #1 : Drop Load at FIGRDN 1 230 #1 : 59.1 MW 11.9 MVAR : Close Line FIGRDN 1 230-FIGRDN 2 230 #1 : Drop Generator at MELONE1 13.8 #1: 166 MW Dropped :	BORDEN -STOREY 1 230.00kV Ckt#1 Sec# 1	793.23	Amps	118.5	119.2	0.7
169	Open Line DS AMIGO 230-PANOCHE 230 #1 : Drop Generator at EXCHQUER 13.8 #1: 90 MW Dropped :	BORDEN -STOREY 1 230.00kV Ckt#1 Sec# 1	793.23	Amps	118.2	118.9	0.7
155	Open Line LOSBANOS 230-PANOCHE 230 #1 : Drop Generator at EXCHQUER 13.8 #1: 90 MW Dropped :	BORDEN -STOREY 1 230.00kV Ckt#1 Sec# 1	793.23	Amps	118.2	118.9	0.7
156	Open Line LOSBANOS 230-PANOCHE 230 #2 : Drop Generator at EXCHQUER 13.8 #1: 90 MW Dropped :	BORDEN -STOREY 1 230.00kV Ckt#1 Sec# 1	793.23	Amps	118.0	118.7	0.7
115	Open Line PANOCHET 115-MENDOTA 115 #1 : Open Line PANOCHET 115-PANOCHE 115 #1 : Drop Generator at EXCHQUER 13.8 #1: 90 MW Dropped :	BORDEN -STOREY 1 230.00kV Ckt#1 Sec# 1	793.23	Amps	117.8	118.4	0.7
157	Open Line LOSBANOS 230-DS AMIGO 230 #1 : Drop Generator at EXCHQUER 13.8 #1: 90 MW Dropped :	BORDEN -STOREY 1 230.00kV Ckt#1 Sec# 1	793.23	Amps	117.7	118.4	0.7
427	Open Line GATES 230-TEMPLETN 230 #1 : Drop Generator at MELONE1 13.8 #1: 166 MW Dropped :	BORDEN -STOREY 1 230.00kV Ckt#1 Sec# 1	793.23	Amps	117.7	118.4	0.7
428	Open Line GATES 230-MORROBAY 230 #1 : Drop Generator at MELONE1 13.8 #1: 166 MW Dropped :	BORDEN -STOREY 1 230.00kV Ckt#1 Sec# 1	793.23	Amps	117.5	118.2	0.7
12	Open Line PANOCHE 230-HELM 230 #1 :	BORDEN -STOREY 1 230.00kV Ckt#1 Sec# 1	793.23	Amps	117.4	118.1	0.7
114	Open Line NEWHALL 115-DAIRYLND 115 #1 : Open Line NEWHALL 115-MADERAPR 115 #1 : Open Line MADERAPR 115-MENDOTA 115 #1 : Open Xfmr MADERAPR 115/MADERA_G 13.8 #1 : Drop Load at NEWHALL 115 #2 : 6.8 MW 1.3 MVAR Dro : Drop Load at NEWHALL 115 #3 : 8.5 MW 1.7 MVAR Dro : Drop Load at MADERA_G 13.8 #ss: 3.6 MW 0.8 MVAR D : Drop Generator at EXCHQUER 13.8 #1: 90 MW Dropped :	BORDEN -STOREY 1 230.00kV Ckt#1 Sec# 1	793.23	Amps	117.1	117.8	0.7
154	Open Line COBURN 230-PANOCHE 230 #1 : Drop Generator at	BORDEN -STOREY 1 230.00kV Ckt#1 Sec# 1	793.23	Amps	116.9	117.6	0.7

#	Outage Description	Facility	Rating	Unit	PU Flow	PU Flow	% Change
	EXCHQUER 13.8 #1: 90 MW Dropped :						
202	Open Line MC CALL 230-HENTAP2 230 #1 : Open Line HENTAP2 230-GATES 230 #1 :	BORDEN -STOREY 1 230.00kV Ckt#1 Sec# 1	793.23	Amps	116.9	117.6	0.7
377	Open Line GATES 230-ARCO 230 #1 : Drop Generator at EXCHQUER 13.8 #1: 90 MW Dropped :	BORDEN -STOREY 1 230.00kV Ckt#1 Sec# 1	793.23	Amps	116.9	117.6	0.7
378	Open Line GATES 230-MIDWAY 230 #1 : Drop Generator at EXCHQUER 13.8 #1: 90 MW Dropped :	BORDEN -STOREY 1 230.00kV Ckt#1 Sec# 1	793.23	Amps	116.8	117.5	0.7
171	Open Line WESTLEY 230-LOSBANOS 230 #1 : Drop Generator at KERCKHOF 13.8 #1: 145 MW Dropped :	BORDEN -STOREY 1 230.00kV Ckt#1 Sec# 1	793.23	Amps	116.7	117.3	0.6
117	Open Line MCSWAINJ 70-MC SWAIN 70 #1 : Open Line MCSWAINJ 70-MRCDFLLS 70 #1 : Open Line MCSWAINJ 70-EXCHEQUR 70 #1 : Open Xfmr MC SWAIN 70/MCSWAIN 9.11 #1 : Drop Generator at MCSWAIN 9.11 #1 : 9 MW Dropped : Drop Generator at EXCHQUER 13.8 #1: 90 MW Dropped :	BORDEN -STOREY 1 230.00kV Ckt#1 Sec# 1	793.23	Amps	116.5	117.2	0.7
353	Open Line SMYRNA 115-MCKIBBEN 115 #1 : Open Line MCKIBBEN 115-SEMITRPJ 115 #1 : Open Line SEMITRPJ 115-GANSO 115 #1 : Open Line GANSO 115-MIDWAY 115 #1 : Drop Load at GANSO 115 #1 : 3 MW 0.6 MVAR Dropped : Drop Generator at EXCHQUER 13.8 #1: 90 MW Dropped :	BORDEN -STOREY 1 230.00kV Ckt#1 Sec# 1	793.23	Amps	116.4	117.1	0.7
162	Open Line PANOCHE 230-GATES 230 #1 : Drop Generator at EXCHQUER 13.8 #1: 90 MW Dropped :	BORDEN -STOREY 1 230.00kV Ckt#1 Sec# 1	793.23	Amps	116.4	117.1	0.7
163	Open Line PANOCHE 230-GATES 230 #2 : Drop Generator at EXCHQUER 13.8 #1: 90 MW Dropped :	BORDEN -STOREY 1 230.00kV Ckt#1 Sec# 1	793.23	Amps	116.4	117.1	0.7
28	Open Line LE GRAND 115-WILSON A 115 #1 :	BORDEN -STOREY 1 230.00kV Ckt#1 Sec# 1	793.23	Amps	116.4	117.1	0.7
113	Open Line WILSON B 115-EL CAPTN 115 #1 : Drop Generator at EXCHQUER 13.8 #1: 90 MW Dropped :	BORDEN -STOREY 1 230.00kV Ckt#1 Sec# 1	793.23	Amps	116.3	117.0	0.7
81	Drop Generator at EXCHQUER 13.8 #1: 90 MW Dropped :	BORDEN -STOREY 1 230.00kV Ckt#1 Sec# 1	793.23	Amps	116.3	116.9	0.7
108	Open Line ATWATER 115-CASTLE 115 #1 : Open Line CASTLE 115-EL CAPTN 115 #1 : Drop Generator at EXCHQUER 13.8 #1: 90 MW Dropped :	BORDEN -STOREY 1 230.00kV Ckt#1 Sec# 1	793.23	Amps	116.3	116.9	0.7
158	Open Line LOSBANOS 230-SN LS PP 230 #1 : Drop Generator at EXCHQUER 13.8 #1: 90 MW Dropped :	BORDEN -STOREY 1 230.00kV Ckt#1 Sec# 1	793.23	Amps	116.3	116.9	0.7
159	Open Line LOSBANOS 230-SN LS PP 230 #2 : Drop Generator at EXCHQUER 13.8 #1: 90 MW Dropped :	BORDEN -STOREY 1 230.00kV Ckt#1 Sec# 1	793.23	Amps	116.3	116.9	0.7

#	Outage Description	Facility	Rating	Unit	PU Flow	PU Flow	% Change
371	Open Line HERNDON 230-FGRDN T1 230 #1 : Open Line FGRDN T1 230-FIGRDN 1 230 #1 : Open Line FGRDN T1 230-ASHLAN 230 #1 : Drop Load at FIGRDN 1 230 #1 : 59.1 MW 11.9 MVAR : Close Line FIGRDN 1 230-FIGRDN 2 230 #1 : Drop Generator at EXCHQUER 13.8 #1: 90 MW Dropped :	BORDEN -STOREY 1 230.00kV Ckt#1 Sec# 1	793.23	Amps	116.3	116.9	0.7
27	Open Line EXCHEQUR 115-LE GRAND 115 #1 : Drop Generator at EXCHQUER 13.8 #1 : 90 MW Dropped : Drop Load at MARIPOS2 70 #**: 7.2 MW 1.4 MVAR Dro :	BORDEN -STOREY 1 230.00kV Ckt#1 Sec# 1	793.23	Amps	116.2	116.9	0.7
118	Open Line ORO LOMA 70-MRCYSPRS 70 #1 : Open Line MRCYSPRS 70-ORTIGA 70 #1 : Open Line MRCYSPRS 70-ARBURUA 70 #1 : Open Line ORTIGA 70-CANAL 70 #1 : Open Line ARBURUA 70-WRGHT PP 70 #1 : Open Line WRGHT PP 70-LOS BANS 70 #1 : Drop Load at ORTIGA 70 #1 : 5.5 MW 1.1 MVAR Dropp : Drop Load at ARBURUA 70 #1 : 3.5 MW 1.7 MVAR Drop : Drop Load at WRGHT PP 70 #1 : 7.6 MW 1.5 MVAR Dro : Drop Generator at EXCHQUER 13.8 #1: 90 MW Dropped :	BORDEN -STOREY 1 230.00kV Ckt#1 Sec# 1	793.23	Amps	116.1	116.7	0.7
111	Open Line LE GRAND 115-DAIRYLND 115 #1 : Drop Generator at EXCHQUER 13.8 #1: 90 MW Dropped :	BORDEN -STOREY 1 230.00kV Ckt#1 Sec# 1	793.23	Amps	115.8	116.5	0.7
425	Open Line BALCH 230-PINE FLT 230 #1 : Open Xfmr BALCH 230/BLCH 2-2 13.8 #1 : Open Line PINE FLT 230-MC CALL 230 #1 : Open Xfmr PINE FLT 230/PINE FLT 13.8 #1 : Drop Generator at BLCH 2-2 13.8 #1 : 52 MW Dropped : Drop Generator at PINE FLT 13.8 #1 : 63 MW Dropped : Drop Generator at MELONE1 13.8 #1: 166 MW Dropped :	BORDEN -STOREY 1 230.00kV Ckt#1 Sec# 1	793.23	Amps	115.7	116.4	0.7
375	Open Line GATES 230-TEMPLETN 230 #1 : Drop Generator at EXCHQUER 13.8 #1: 90 MW Dropped :	BORDEN -STOREY 1 230.00kV Ckt#1 Sec# 1	793.23	Amps	115.4	116.1	0.7
3	Open Line MOSSLND2 230-PANOCHE 230 #1 :	BORDEN -STOREY 1 230.00kV Ckt#1 Sec# 1	793.23	Amps	115.4	116.1	0.7
112	Open Line LE GRNDJ 115-WILSON B 115 #1 : Open Line LE GRNDJ 115-EL NIDO 115 #1 : Open Line EL NIDO 115-ORO LOMA 115 #1 : Drop Load at EL NIDO 115 #1 : 10 MW 2 MVAR Droppe : Drop Load at EL NIDO 115 #2 : 12 MW 2.4 MVAR Drop : Drop Generator at EXCHQUER 13.8 #1: 90 MW Dropped :	BORDEN -STOREY 1 230.00kV Ckt#1 Sec# 1	793.23	Amps	115.3	116.0	0.7
376	Open Line GATES 230-MORROBAY 230 #1 : Drop Generator at EXCHQUER 13.8 #1: 90 MW Dropped :	BORDEN -STOREY 1 230.00kV Ckt#1 Sec# 1	793.23	Amps	115.3	115.9	0.7

#	Outage Description	Facility	Rating	Unit	PU Flow	PU Flow	% Change
66	Open Xfmr EXCHEQUR 115/EXCHEQUR 70 #1 : Open Line EXCHEQUR 70-MARIPOS2 70 #1 : Open Line EXCHEQUR 70-BER VLLY 70 #1 : Open Line EXCHEQUR 70-MCSWAINJ 70 #1 : Drop Load at MARIPOS2 70 #1 : 7.2 MW 1.4 MVAR Dro : Drop Load at MARIPOS2 70 #2 : 7.5 MW 1.5 MVAR Dro : Close Line MARIPOS2 70-BRCEBG J 70 #1 :	BORDEN -STOREY 1 230.00kV Ckt#1 Sec# 1	793.23	Amps	115.3	115.9	0.7
41	Open Line PANOCHEJ 115-PANOCHE 115 #1 : Open Line PANOCHEJ 115-HAMMONDS 115 #1 : Open Line PANOCHEJ 115-OXFRDJCT 115 #1 : Open Line HAMMONDS 115-DFSTP 115 #1 : Open Line DFSTP 115-ORO LOMA 115 #1 : Open Line DFSTP 115-DFS 115 #1 : Open Line OXFRDJCT 115-OXFORD 115 #1 : Open Line OXFRDJCT 115-WSTLDJCT 115 #1 : Open Line WSTLDJCT 115-WSTLD1RA 115 #1 : Open Line WSTLDJCT 115-LUISJCT 115 #1 :	BORDEN -STOREY 1 230.00kV Ckt#1 Sec# 1	793.23	Amps	115.2	115.9	0.7
109	Open Line ATWATER 115-CRESEY T 115 #1 : Open Line CRESEY T 115-ATWATR J 115 #1 : Open Line CRESEY T 115-JRWD GEN 115 #1 : Open Line JRWD GEN 115-JR WOOD 115 #1 : Open Xfmr JRWD GEN 115/JRWCOGEN 9.11 #1 : Open Line JR WOOD 115-CRESSEY 115 #1 : Drop Load at JR WOOD 115 #1 : 10.9 MW 9.6 MVAR Dr : Drop Load at CRESSEY 115 #1 : 15.2 MW 3 MVAR Drop : Drop Generator at JRWCOGEN 9.11 #1 : 3.8 MW Droppe : Drop Generator at EXCHQUER 13.8 #1: 90 MW Dropped :	BORDEN -STOREY 1 230.00kV Ckt#1 Sec# 1	793.23	Amps	115.1	115.8	0.7
255	Open Line KEARNEY 70-OLDKERN 70 #1 : Open Line OLDKERN 70-BIOLA 70 #1 : Open Line OLDKERN 70-BOWLES 70 #1 : Drop Load at OLDKERN 70 #1 : 15.1 MW 3 MVAR Dropp : Drop Load at OLDKERN 70 #3 : 6.1 MW 1.2 MVAR Drop : Drop Load at BIOLA 70 #1 : 17.5 MW 3.5 MVAR Dropp : Drop Load at BOWLES 70 #1 : 14.7 MW 2.9 MVAR Drop :	BORDEN -STOREY 1 230.00kV Ckt#1 Sec# 1	793.23	Amps	115.0	115.7	0.7
110	Open Line CRESEY T 115-ATWATR J 115 #1 : Open Line ATWATR J 115-LIVNGSTN 115 #1 : Open Line ATWATR J 115-MERCED 115 #1 : Open Line LIVNGSTN 115-GALLO 115 #1 : Drop Load at LIVNGSTN 115 #3 : 19.6 MW 3.9 MVAR D : Drop Load at GALLO 115 #1 : 4 MW 3.4 MVAR Dropped : Drop Generator at EXCHQUER 13.8 #1: 90 MW Dropped :	BORDEN -STOREY 1 230.00kV Ckt#1 Sec# 1	793.23	Amps	115.0	115.7	0.7
5	Open Line LOSBANOS 230-PANOCHE 230 #1 :	BORDEN -STOREY 1 230.00kV Ckt#1 Sec# 1	793.23	Amps	115.0	115.7	0.7
62	Open Line DS AMIGO 230-PANOCHE 230 #1 :	BORDEN -STOREY 1 230.00kV Ckt#1 Sec# 1	793.23	Amps	115.0	115.7	0.7

#	Outage Description	Facility	Rating	Unit	PU Flow	PU Flow	% Change
236	Open Line HERNDON 115-CHLDHOSP 115 #1 : Open Line CHLDHOSP 115-WOODWARD 115 #1 : Drop Load at CHLDHOSP 115 #1 : 3.3 MW 1.4 MVAR Dr :	BORDEN -STOREY 1 230.00kV Ckt#1 Sec# 1	793.23	Amps	114.9	115.6	0.7
6	Open Line LOSBANOS 230-PANOCHE 230 #2 :	BORDEN -STOREY 1 230.00kV Ckt#1 Sec# 1	793.23	Amps	114.8	115.5	0.7
291	Open Xfmr KEARNEY 70/KEARNEY 230 #2 :	BORDEN -STOREY 1 230.00kV Ckt#1 Sec# 1	793.23	Amps	114.8	115.4	0.7
279	Open Xfmr HERNDON 230/HERNDON 115 #1 :	BORDEN -STOREY 1 230.00kV Ckt#1 Sec# 1	793.23	Amps	114.7	115.3	0.7
379	Open Line HELM 230-MC CALL 230 #1 : Drop Generator at KERCKHOF 13.8 #1: 145 MW Dropped :	BORDEN -STOREY 1 230.00kV Ckt#1 Sec# 1	793.23	Amps	114.6	115.3	0.7
233	Open Line PNDLJ2 115-PNEDLE 115 #1 : Open Line PNDLJ2 115-BULLARD 115 #1 : Open Line PNDLJ2 115-HERNDON 115 #1 : Drop Load at PNEDLE 115 #2 : 24.7 MW 5 MVAR Dropp : Drop Load at PNEDLE 115 #3 : 32.5 MW 6.5 MVAR Dro : Close Line PNDLJ1 115-PNEDLE 115 #1 :	BORDEN -STOREY 1 230.00kV Ckt#1 Sec# 1	793.23	Amps	114.6	115.3	0.7
7	Open Line LOSBANOS 230-DS AMIGO 230 #1 :	BORDEN -STOREY 1 230.00kV Ckt#1 Sec# 1	793.23	Amps	114.5	115.2	0.7
280	Open Xfmr HERNDON 230/HERNDON 115 #2 :	BORDEN -STOREY 1 230.00kV Ckt#1 Sec# 1	793.23	Amps	114.5	115.2	0.7
264	Open Line LEPRINO 70-LPRNO TP 70 #1 : Open Line LPRNO TP 70-LEMOORE 70 #1 : Open Line LPRNO TP 70-CANDLEWK 70 #1 : Open Line LPRNO TP 70-HENRITTA 70 #1 : Drop Load at LEPRINO 70 #1 : 6.2 MW 4 MVAR Droppe : Drop Load at LEMOORE 70 #1 : 15.2 MW 3 MVAR Dropp : Drop Load at LEMOORE 70 #2 : 26.4 MW 5.3 MVAR Dro :	BORDEN -STOREY 1 230.00kV Ckt#1 Sec# 1	793.23	Amps	114.2	114.9	0.7

Table C-3: Category "C" Emergency Overloads

#	Outage Description	Facility	Rating	Units	PU Flow	PU Flow	% Change
2013 Summer Peak							
61	Open Line GREGG 230-HERNDON 230 #1 : Drop Generator at HELMS 3 18 #**: 404 MW Dropped : Open Line GREGG 230-HERNDON 230 #2 :	ASHLAN -FGRDN T2 230.00kV Ckt#1 Sec# 1	849.96	Amps	158.8	159.3	0.5
1	Open Line WILSON A 115-ATWATER 115 #1 : Open Line WILSON B 115-EL CAPTN 115 #1 :	ATWATR J-MERCED 115.00kV Ckt#1 Sec# 1	738	Amps	161.8	161.6	-0.3
67	Open Line GATES 230-MORROBAY 230 #1 : Open Line GATES 230-TEMPLETN 230 #1 :	BELRIDGE-MIDWAY 115.00kV Ckt#1 Sec# 1	743.02	Amps	127.6	127.6	-0.1
lbs-dlo-ns	Los Banos - Gates & Los Banos - Midway 500-kV DLO	BORDEN -STOREY 1 230.00kV Ckt#1 Sec# 1	793.23	Amps	150.0	150.6	0.6
58	Open Line PANOCHE 230-MCMULLN1 230 #1 : Open Line MCMULLN1 230-KEARNEY 230 #1 : Drop Load at MCMULLN1 230 #1 : 20.6 MW 4.1 MVAR D : Open Line HELM 230-MC CALL 230 #1 :	BORDEN -STOREY 1 230.00kV Ckt#1 Sec# 1	793.23	Amps	140.8	141.6	0.8
71	Open Line HERNDON 230-GREGG 230 #1 : Open Line HERNDON 230-KEARNEY 230 #1 : Open Xfmr HERNDON 230/HERNDN1M 115 #1 :	BORDEN -STOREY 1 230.00kV Ckt#1 Sec# 1	793.23	Amps	140.4	141.0	0.7
lbn-dlo-ns	Los Banos - Tesla & Los Banos - Tracy 500-kV DLO	BORDEN -STOREY 1 230.00kV Ckt#1 Sec# 1	793.23	Amps	138.9	139.6	0.6
16	Open Line PANOCHE 230-HELM 230 #1 : Open Line PANOCHE 230-MCMULLN1 230 #1 : Open Line MCMULLN1 230-KEARNEY 230 #1 : Drop Load at MCMULLN1 230 #1 : 20.6 MW 4.1 MVAR D :	BORDEN -STOREY 1 230.00kV Ckt#1 Sec# 1	793.23	Amps	138.3	139.0	0.8
57	Open Line PANOCHE 230-MCMULLN1 230 #1 : Open Line MCMULLN1 230-KEARNEY 230 #1 : Drop Load at MCMULLN1 230 #1 : 20.6 MW 4.1 MVAR D : Open Line PANOCHE 230-HELM 230 #1 :	BORDEN -STOREY 1 230.00kV Ckt#1 Sec# 1	793.23	Amps	138.3	139.0	0.8
70	Open Line KEARNEY 230-MCMULLN1 230 #1 : Open Line KEARNEY 230-HERNDON 230 #1 : Open Xfmr KEARNEY 230/KEARNEY 70 #2 :	BORDEN -STOREY 1 230.00kV Ckt#1 Sec# 1	793.23	Amps	137.8	138.5	0.6
62	Open Line KEARNEY 230-HERNDON 230 #1 : Open Line HERNDON 230-FGRDN T1 230 #1 : Open Line FGRDN T1 230-FIGRDN 1 230 #1 : Open	BORDEN -STOREY 1 230.00kV Ckt#1 Sec# 1	793.23	Amps	137.2	137.9	0.7

	Line FGRDN T1 230-ASHLAN 230 #1 : Drop Load at FIGRDN 1 230 #1 : 74.3 MW 15 MVAR Dr : Close Line FIGRDN 1 230-FIGRDN 2 230 #1 :						
59	Open Line HELM 230-MC CALL 230 #1 : Open Line MC CALL 230-HENTAP2 230 #1 : Open Line HENTAP2 230-GATES 230 #1 :	BORDEN -STOREY 1 230.00kV Ckt#1 Sec# 1	793.23	Amps	137.2	137.8	0.6
75	Open Line ASHLAN 230-FGRDN T1 230 #1 : Open Line ASHLAN 230-FGRDN T2 230 #1 : Drop Load at ASHLAN 230 #1 : 70 MW 13.5 MVAR Drop : Drop Load at ASHLAN 230 #2 : 65.3 MW 12.9 MVAR Dr : Drop Load at ASHLAN 230 #3 : 66.3 MW 12.6 MVAR Dr :	BORDEN -STOREY 1 230.00kV Ckt#1 Sec# 1	793.23	Amps	135.7	136.5	0.8
47	Open Line PNDLJ1 115-BULLARD 115 #1 : Open Line PNDLJ1 115-HERNDON 115 #1 : Open Line PNDLJ2 115-PNEDLE 115 #1 : Open Line PNDLJ2 115-BULLARD 115 #1 : Open Line PNDLJ2 115-HERNDON 115 #1 : Drop Load at PNEDLE 115 #2 : 31.1 MW 6.3 MVAR Dro : Drop Load at PNEDLE 115 #3 : 40.9 MW 8.2 MVAR Dro : Close Line PNDLJ1 115-PNEDLE 115 #1 :	BORDEN -STOREY 1 230.00kV Ckt#1 Sec# 1	793.23	Amps	134.5	135.2	0.8
19	Open Line PANOCHE 230-COBURN 230 #1 : Open Line PANOCHE 230-LOSBANOS 230 #1 : Open Line PANOCHE 230-LOSBANOS 230 #2 : Open Line PANOCHE 230-MCMULLN1 230 #1 : Open Line PANOCHE 230-GATES 230 #1 : Open Xfmr PANOCHE 230/PNCHE 1M 230 #1 :	BORDEN -STOREY 1 230.00kV Ckt#1 Sec# 1	793.23	Amps	134.2	135.0	0.8
17	Open Line LOSBANOS 230-WESTLEY 230 #1 : Open Line LOSBANOS 230-PANOCHE 230 #2 : Open Line LOSBANOS 230-SN LS PP 230 #1 : Open Line LOSBANOS 230-SN LS PP 230 #2 : Open Xfmr LOSBANOS 230/LOS BANS 70 #3 :	BORDEN -STOREY 1 230.00kV Ckt#1 Sec# 1	793.23	Amps	133.7	134.5	0.8
41	Open Line BORDEN 70-MADERA 70 #1 : Open Line BORDEN 70-MADERA 70 #2 : Open Line BORDEN 70-GLASS 70 #1 : Open Line BORDEN 70-CASSIDY 70 #1 : Open Xfmr BORDEN 70/BORDEN 230 #1 : Open Xfmr BORDEN 70/BORDEN 230 #2 :	BORDEN -STOREY 1 230.00kV Ckt#1 Sec# 1	793.23	Amps	131.1	131.6	0.5
104	Open Line BULLARD 115-PNDLJ2 115 #1 : Open Line BULLARD 115-PNDLJ1 115 #1 : Drop Load at BULLARD 115 #1 : 45.4 MW 9.2 MVAR Dr : Drop Load at	BORDEN -STOREY 1 230.00kV Ckt#1 Sec# 1	793.23	Amps	130.9	131.6	0.7

	BULLARD 115 #2 : 45.2 MW 9.1 MVAR Dr : Drop Load at BULLARD 115 #3 : 43 MW 8.7 MVAR Drop :						
7	Open Line LOSBANOS 230-PANOCHE 230 #2 : Open Line DS AMIGO 230-PANOCHE 230 #1 :	BORDEN -STOREY 1 230.00kV Ckt#1 Sec# 1	793.23	Amps	129.9	130.4	0.5
103	Open Line WOODWARD 115-WWARD JT 115 #1 : Open Line WOODWARD 115-CHLDHOSP 115 #1 : Drop Load at WOODWARD 115 #1 : 42.7 MW 8.6 MVAR D : Drop Load at WOODWARD 115 #2 : 53.3 MW 10.8 MVAR : Drop Load at WOODWARD 115 #3 : 44.6 MW 9 MVAR Dro :	BORDEN -STOREY 1 230.00kV Ckt#1 Sec# 1	793.23	Amps	129.5	130.2	0.7
24	Open Line LE GRAND 115-CERTAN T 115 #1 : Open Line LE GRAND 115-EXCHEQUR 115 #1 : Open Line LE GRAND 115-WILSON A 115 #1 : Open Line LE GRAND 115-DAIRYLND 115 #1 : Drop Load at LE GRAND 115 #1 : 13.6 MW 2.7 MVAR D :	BORDEN -STOREY 1 230.00kV Ckt#1 Sec# 1	793.23	Amps	129.3	129.9	0.5
76	Open Line HELM 230-PANOCHE 230 #1 : Open Line HELM 230-MC CALL 230 #1 : Open Xfmr HELM 230/HELM 70 #1 :	BORDEN -STOREY 1 230.00kV Ckt#1 Sec# 1	793.23	Amps	129.3	129.8	0.6
18	Open Line LOSBANOS 230-PANOCHE 230 #1 : Open Line LOSBANOS 230-DS AMIGO 230 #1 : Open Xfmr LOSBANOS 230/LOS BANS 70 #4 :	BORDEN -STOREY 1 230.00kV Ckt#1 Sec# 1	793.23	Amps	129.2	129.8	0.6
54	Open Line WST FRSO 115-MC CALL 115 #1 : Open Line DANISHCM 115-MC CALL 115 #1 : Open Line DANISHCM 115-CAL AVE 115 #1 : Drop Load at DANISHCM 115 #1 : 4.1 MW 3.5 MVAR Dr :	BORDEN -STOREY 1 230.00kV Ckt#1 Sec# 1	793.23	Amps	129.0	129.7	0.7
6	Open Line LOSBANOS 230-PANOCHE 230 #2 : Open Line LOSBANOS 230-DS AMIGO 230 #1 :	BORDEN -STOREY 1 230.00kV Ckt#1 Sec# 1	793.23	Amps	128.8	129.4	0.6
73	Open Line FIGRDN 1 230-FGRDN T1 230 #1 : Drop Load at FIGRDN 1 230 #1 : 74.3 MW 15 MVAR Dr :	BORDEN -STOREY 1 230.00kV Ckt#1 Sec# 1	793.23	Amps	128.5	129.2	0.7
117	Open Line KEARNEY 70-FRWWTAP 70 #1 : Open Line KEARNEY 70-OLDKERN 70 #1 : Open Line KEARNEY 70-CARUTHRS 70 #1 : Open Xfmr KEARNEY 70/KEARNEY 230 #2 :	BORDEN -STOREY 1 230.00kV Ckt#1 Sec# 1	793.23	Amps	128.5	129.0	0.5
23	Open Line EXCHEQUR 115-LE GRAND 115 #1 : Open Xfmr EXCHEQUR 115/EXCHQRTP 115 #1 :	BORDEN -STOREY 1 230.00kV Ckt#1 Sec# 1	793.23	Amps	128.3	128.9	0.5
25	Open Line WILSON A 115-LE GRAND 115 #1 : Open Line WILSON A 115-ATWATER 115 #1 : Open Line WILSON A 115-WILSON B 115 #1 : Open Line	BORDEN -STOREY 1 230.00kV Ckt#1 Sec# 1	793.23	Amps	128.0	128.8	0.8

	WILSON A 115-MERCED 115 #1 : Open Xfmr WILSON A 115/WILSON 230 #1 : Drop Load at WILSON A 115 #3 : 18.9 MW 3.8 MVAR D :						
98	Open Line BARTON 115-AIRWAYJ2 115 #1 : Open Line BARTON 115-HERNDON 115 #1 : Drop Load at BARTON 115 #1 : 43.8 MW 8.8 MVAR Dro : Drop Load at BARTON 115 #2 : 37.6 MW 7.6 MVAR Dro : Drop Load at BARTON 115 #3 : 27.3 MW 5.5 MVAR Dro :	BORDEN -STOREY 1 230.00kV Ckt#1 Sec# 1	793.23	Amps	128.0	128.7	0.7
83	Open Line GATES 230-HENTAP1 230 #1 : Open Line GATES 230-ARCO 230 #1 :	BORDEN -STOREY 1 230.00kV Ckt#1 Sec# 1	793.23	Amps	127.1	128.7	1.5
101	Open Line HERNDON 115-MANCHSTR 115 #1 : Open Line HERNDON 115-PNDLJ1 115 #1 : Open Line HERNDON 115-CHLDHOSP 115 #1 :	BORDEN -STOREY 1 230.00kV Ckt#1 Sec# 1	793.23	Amps	128.0	128.5	0.5
102	Open Line PNEDLE 115-PNDLJ2 115 #1 : Drop Load at PNEDLE 115 #2 : 31.1 MW 6.3 MVAR Dro : Drop Load at PNEDLE 115 #3 : 40.9 MW 8.2 MVAR Dro :	BORDEN -STOREY 1 230.00kV Ckt#1 Sec# 1	793.23	Amps	128.0	128.5	0.5
99	Open Line MANCHSTR 115-AIRWAYJ1 115 #1 : Open Line MANCHSTR 115-HERNDON 115 #1 : Drop Load at MANCHSTR 115 #1 : 25.6 MW 5.1 MVAR D : Drop Load at MANCHSTR 115 #2 : 25.8 MW 5.2 MVAR D : Drop Load at MANCHSTR 115 #3 : 36.6 MW 7.4 MVAR D :	BORDEN -STOREY 1 230.00kV Ckt#1 Sec# 1	793.23	Amps	127.6	128.3	0.7
30	Open Line PANOCHE 115-CHENYT 115 #1 : Open Line PANOCHE 115-PANOCHEJ 115 #1 : Open Xfmr PANOCHE 115/PANOCHE 230 #2 : Open Xfmr PANOCHE 115/DG_PAN1 13.8 #1 :	BORDEN -STOREY 1 230.00kV Ckt#1 Sec# 1	793.23	Amps	127.8	128.3	0.5
74	Open Line FIGRDN 2 230-FGRDN T2 230 #1 : Drop Load at FIGRDN 2 230 #1 : 53.2 MW 10.7 MVAR :	BORDEN -STOREY 1 230.00kV Ckt#1 Sec# 1	793.23	Amps	127.3	127.9	0.5
15	Open Line MOSSLND2 230-PANOCHE 230 #1 : Open Line COBURN 230-PANOCHE 230 #1 :	BORDEN -STOREY 1 230.00kV Ckt#1 Sec# 1	793.23	Amps	127.1	127.8	0.7
89	Open Line CLOVIS-2 115-CLOVISJ2 115 #1 : Drop Load at CLOVIS-2 115 #3 : 45.3 MW 9.1 MVAR D :	BORDEN -STOREY 1 230.00kV Ckt#1 Sec# 1	793.23	Amps	127.0	127.7	0.7
40	Open Line MADERA 70-TRIGO 70 #1 : Open Line MADERA 70-BORDEN 70 #1 : Open Line MADERA 70-BORDEN 70 #2 : Drop Load at MADERA 70 #1 : 18.2 MW 3.7 MVAR Drop : Drop Load at MADERA 70 #2 : 23.4 MW 4.7 MVAR Drop :	BORDEN -STOREY 1 230.00kV Ckt#1 Sec# 1	793.23	Amps	126.9	127.5	0.5
84	Open Line GATES 230-HENTAP2 230 #1 : Open Line GATES 230-MIDWAY 230 #1 :	BORDEN -STOREY 1 230.00kV Ckt#1 Sec# 1	793.23	Amps	126.9	127.4	0.5

86	Open Line KERCKHF2 115-K1-JCT 115 #2 : Open Line KERCKHF2 115-KERCKHF1 115 #1 : Open Line KERCKHF2 115-WWARD JT 115 #1 : Open Line KERCKHF2 115-CLOVISJ2 115 #1 : Open Xfmr KERCKHF2 115/KERCKHOF 13.8 #1 :	BORDEN -STOREY 1 230.00kV Ckt#1 Sec# 1	793.23	Amps	126.8	127.3	0.5
96	Open Line CAL AVE 115-DANISHCM 115 #1 : Open Line CAL AVE 115-WST FRSO 115 #1 : Drop Load at CAL AVE 115 #1 : 29.3 MW 5.9 MVAR Dr : Drop Load at CAL AVE 115 #2 : 31.6 MW 6.4 MVAR Dr : Drop Load at CAL AVE 115 #3 : 24.7 MW 5 MVAR Drop :	BORDEN -STOREY 1 230.00kV Ckt#1 Sec# 1	793.23	Amps	126.6	127.3	0.7
53	Open Line WST FRSO 115-MC CALL 115 #1 : Open Line CAL AVE 115-WST FRSO 115 #1 :	BORDEN -STOREY 1 230.00kV Ckt#1 Sec# 1	793.23	Amps	126.4	127.1	0.7
97	Open Line WST FRSO 115-MC CALL 115 #1 : Open Line WST FRSO 115-CAL AVE 115 #1 : Drop Load at WST FRSO 115 #1 : 38 MW 7.7 MVAR Dro : Drop Load at WST FRSO 115 #2 : 39.5 MW 8 MVAR Dro :	BORDEN -STOREY 1 230.00kV Ckt#1 Sec# 1	793.23	Amps	126.4	127.1	0.7
72	Open Line HERNDON 230-GREGG 230 #2 : Open Line HERNDON 230-FGRDN T1 230 #1 : Open Xfmr HERNDON 230/HERNDN2M 115 #2 :	BORDEN -STOREY 1 230.00kV Ckt#1 Sec# 1	793.23	Amps	126.5	127.0	0.5
100	Open Line HERNDON 115-BARTON 115 #1 : Open Line HERNDON 115-PNDLJ2 115 #1 : Open Xfmr HERNDON 115/HERNDN1M 115 #1 :	BORDEN -STOREY 1 230.00kV Ckt#1 Sec# 1	793.23	Amps	126.4	127.0	0.5
87	Open Line AIRWAYS 115-AIRWAYJ1 115 #1 : Open Line AIRWAYS 115-AIRWAYJ2 115 #1 : Drop Load at AIRWAYS 115 #1 : 38.8 MW 7.5 MVAR Dr : Drop Load at AIRWAYS 115 #2 : 12.7 MW 2.5 MVAR Dr :	BORDEN -STOREY 1 230.00kV Ckt#1 Sec# 1	793.23	Amps	126.3	126.8	0.5
45	Open Line BARTON 115-HERNDON 115 #1 : Open Line MANCHSTR 115-HERNDON 115 #1 :	BORDEN -STOREY 1 230.00kV Ckt#1 Sec# 1	793.23	Amps	126.2	126.8	0.5
106	Open Line KINGSBRG 115-CORCORAN 115 #1 : Open Line KINGSBRG 115-GAURD J1 115 #1 : Open Xfmr KINGSBRG 115/KNGLOBUS 70 #2 : Drop Load at KINGSBRG 115 #3 : 33 MW 6.6 MVAR Dro :	BORDEN -STOREY 1 230.00kV Ckt#1 Sec# 1	793.23	Amps	126.1	126.7	0.5
88	Open Line CLOVIS-1 115-CLOVISJ1 115 #1 : Drop Load at CLOVIS-1 115 #1 : 51.6 MW 10.4 MVAR :	BORDEN -STOREY 1 230.00kV Ckt#1 Sec# 1	793.23	Amps	126.0	126.6	0.5
20	Open Line PANOCHE 230-MOSSLND2 230 #1 : Open Line PANOCHE 230-PANO_EC 230 #1 : Open Line PANOCHE 230-HELM 230 #1 : Open Line PANOCHE 230-GATES 230 #2 : Open Line PANOCHE 230-DS AMIGO 230 #1 : Open Xfmr	BORDEN -STOREY 1 230.00kV Ckt#1 Sec# 1	793.23	Amps	126.0	126.6	0.5

	PANOCHE 230/PANOCHE 115 #2 :						
121	Open Line REEDLEY 70-TVY VLLY 70 #1 : Open Line REEDLEY 70-PARLIER 70 #1 : Open Line REEDLEY 70-DNUBAJCT 70 #1 : Open Line REEDLEY 70-ORSI JCT 70 #1 : Open Xfmr REEDLEY 70/REEDLEY 115 #1 : Open Xfmr REEDLEY 70/REEDLEY 115 #2 : Drop Load at REEDLEY 70 #1 : 17.6 MW 3.5 MVAR Dro :	BORDEN -STOREY 1 230.00kV Ckt#1 Sec# 1	793.23	Amps	125.7	126.3	0.5
124	Open Line LEMOORE 70-LPRNO TP 70 #1 : Drop Load at LEMOORE 70 #1 : 19.1 MW 3.8 MVAR Dro : Drop Load at LEMOORE 70 #2 : 33.2 MW 6.7 MVAR Dro :	BORDEN -STOREY 1 230.00kV Ckt#1 Sec# 1	793.23	Amps	125.7	126.2	0.5
100	Open Line HERNDON 115-BARTON 115 #1 : Open Line HERNDON 115-PNDLJ2 115 #1 : Open Xfmr HERNDON 115/HERNDN1M 115 #1 :	BULLARD -PNDLJ1 115.00kV Ckt#1 Sec# 1	743.02	Amps	148.4	148.4	-0.1
67	Open Line GATES 230-MORROBAY 230 #1 : Open Line GATES 230-TEMPLETN 230 #1 :	CARRIZO -TEMBLOR 115.00kV Ckt#1 Sec# 1	436.78	Amps	176.7	176.7	-0.1
82	Open Line GATES 230-PANOCHE 230 #2 : Open Line GATES 230-MORROBAY 230 #1 :	CARRIZO -TEMBLOR 115.00kV Ckt#1 Sec# 1	436.78	Amps	115.4	115.4	0.1
81	Open Line GATES 230-PANOCHE 230 #1 : Open Line GATES 230-TEMPLETN 230 #1 : Open Xfmr GATES 230/GATES 1M 230 #1 :	CARRIZO -TEMBLOR 115.00kV Ckt#1 Sec# 1	436.78	Amps	113.8	113.8	0.1
13	Open Line STOREY 2 230-BORDEN 230 #1 : Open Line STOREY 2 230-WILSON 230 #1 : Drop Load at STOREY 2 230 #2 : 34.3 MW 6.9 MVAR D : Open Line STOREY 1 230-WILSON 230 #1 : Open Line STOREY 1 230-BORDEN 230 #1 : Drop Load at STOREY 1 230 #1 : 38.3 MW 7.7 MVAR D :	CERTAN T-LE GRAND 115.00kV Ckt#1 Sec# 1	396.61	Amps	165.7	166.6	1.0
48	Open Line KERCKHF2 115-WWARD JT 115 #1 : Open Line WWARD JT 115-WOODWARD 115 #1 : Open Line WWARD JT 115-CLOVISJ1 115 #1 : Open Line CLOVISJ1 115-CLOVIS-1 115 #1 : Open Line CLOVISJ1 115-SANGER 115 #1 : Drop Load at CLOVIS-1 115 #1 : 51.6 MW 10.4 MVAR : Close Line CLOVIS-1 115-CLOVIS-2 115 #1 : Open Line CLOVIS-2 115-CLOVISJ2 115 #1 :	CERTAN T-LE GRAND 115.00kV Ckt#1 Sec# 1	396.61	Amps	119.4	119.4	0.0
59	Open Line HELM 230-MC CALL 230 #1 : Open Line MC CALL 230-HENTAP2 230 #1 : Open Line HENTAP2 230-GATES 230 #1 :	CERTAN T-LE GRAND 115.00kV Ckt#1 Sec# 1	396.61	Amps	110.1	110.5	0.5

90	Open Line SANGER 115-CLOVISJ1 115 #1 : Open Line SANGER 115-CLOVISJ2 115 #1 : Open Line SANGER 115-AIRWAYJ2 115 #1 : Open Line SANGER 115-LASPALMS 115 #1 : Open Line SANGER 115-MC CALL 115 #1 : Open Line SANGER 115-MC CALL 115 #2 : Open Line SANGER 115-MC CALL 115 #3 : Open Line SANGER 115-MALAGA 115 #1 : Open Line SANGER 115-RAINBWTP 115 #1 : Open Line SANGER 115-PIEDRA 2 115 #1 :	CHLDHOSP-HERNDON 115.00kV Ckt#1 Sec# 1	973.96	Amps	111.9	112.0	0.1
13	Open Line STOREY 2 230-BORDEN 230 #1 : Open Line STOREY 2 230-WILSON 230 #1 : Drop Load at STOREY 2 230 #2 : 34.3 MW 6.9 MVAR D : Open Line STOREY 1 230-WILSON 230 #1 : Open Line STOREY 1 230-BORDEN 230 #1 : Drop Load at STOREY 1 230 #1 : 38.3 MW 7.7 MVAR D :	CHWCHLLA-CERTANJ1 115.00kV Ckt#1 Sec# 1	396.61	Amps	139.4	140.5	1.0
128	Open Line GATES 70-KETTLEMN 70 #1 : Open Line GATES 70-GATS2_TP 70 #1 : Open Line GATES 70-HURON 70 #1 : Open Line GATES 70-HURON 70 #2 : Open Line GATES 70-JACALITO 70 #1 : Open Xfmr GATES 70/GATES 115 #2 :	COLNGA 2-PLSNTVLY 70.00kV Ckt#1 Sec# 1	398.37	Amps	112.0	112.1	0.1
41	Open Line BORDEN 70-MADERA 70 #1 : Open Line BORDEN 70-MADERA 70 #2 : Open Line BORDEN 70-GLASS 70 #1 : Open Line BORDEN 70-CASSIDY 70 #1 : Open Xfmr BORDEN 70/BORDEN 230 #1 : Open Xfmr BORDEN 70/BORDEN 230 #2 :	COPPRMNE-TVY VLLY 70.00kV Ckt#1 Sec# 1	297.75	Amps	105.9	105.6	-0.3
lbs-dlo-ns	Los Banos - Gates & Los Banos - Midway 500-kV DLO	COTTLE B-BELLOTA 230.00kV Ckt#1 Sec# 1	793.23	Amps	138.6	139.3	0.7
lbn-dlo-ns	Los Banos - Tesla & Los Banos - Tracy 500-kV DLO	COTTLE B-BELLOTA 230.00kV Ckt#1 Sec# 1	793.23	Amps	133.7	134.5	0.8
58	Open Line PANOCHE 230-MCMULLN1 230 #1 : Open Line MCMULLN1 230-KEARNEY 230 #1 : Drop Load at MCMULLN1 230 #1 : 20.6 MW 4.1 MVAR D : Open Line HELM 230-MC CALL 230 #1 :	COTTLE B-BELLOTA 230.00kV Ckt#1 Sec# 1	793.23	Amps	124.2	124.6	0.4
59	Open Line HELM 230-MC CALL 230 #1 : Open Line MC CALL 230-HENTAP2 230 #1 : Open Line HENTAP2 230-GATES 230 #1 :	COTTLE B-BELLOTA 230.00kV Ckt#1 Sec# 1	793.23	Amps	123.3	123.9	0.6
71	Open Line HERNDON 230-GREGG 230 #1 : Open	COTTLE B-BELLOTA 230.00kV Ckt#1 Sec# 1	793.23	Amps	123.0	123.7	0.7

	Line HERNDON 230-KEARNEY 230 #1 : Open Xfmr HERNDON 230/HERNDN1M 115 #1 :						
70	Open Line KEARNEY 230-MCMULLN1 230 #1 : Open Line KEARNEY 230-HERNDON 230 #1 : Open Xfmr KEARNEY 230/KEARNEY 70 #2 :	COTTLE B-BELLOTA 230.00kV Ckt#1 Sec# 1	793.23	Amps	123.0	123.6	0.7
75	Open Line ASHLAN 230-FGRDN T1 230 #1 : Open Line ASHLAN 230-FGRDN T2 230 #1 : Drop Load at ASHLAN 230 #1 : 70 MW 13.5 MVAR Drop : Drop Load at ASHLAN 230 #2 : 65.3 MW 12.9 MVAR Dr : Drop Load at ASHLAN 230 #3 : 66.3 MW 12.6 MVAR Dr :	COTTLE B-BELLOTA 230.00kV Ckt#1 Sec# 1	793.23	Amps	123.2	123.6	0.4
16	Open Line PANOCHE 230-HELM 230 #1 : Open Line PANOCHE 230-MCMULLN1 230 #1 : Open Line MCMULLN1 230-KEARNEY 230 #1 : Drop Load at MCMULLN1 230 #1 : 20.6 MW 4.1 MVAR D :	COTTLE B-BELLOTA 230.00kV Ckt#1 Sec# 1	793.23	Amps	123.2	123.6	0.4
57	Open Line PANOCHE 230-MCMULLN1 230 #1 : Open Line MCMULLN1 230-KEARNEY 230 #1 : Drop Load at MCMULLN1 230 #1 : 20.6 MW 4.1 MVAR D : Open Line PANOCHE 230-HELM 230 #1 :	COTTLE B-BELLOTA 230.00kV Ckt#1 Sec# 1	793.23	Amps	123.2	123.6	0.4
47	Open Line PNDLJ1 115-BULLARD 115 #1 : Open Line PNDLJ1 115-HERNDON 115 #1 : Open Line PNDLJ2 115-PNEDLE 115 #1 : Open Line PNDLJ2 115-BULLARD 115 #1 : Open Line PNDLJ2 115-HERNDON 115 #1 : Drop Load at PNEDLE 115 #2 : 31.1 MW 6.3 MVAR Dro : Drop Load at PNEDLE 115 #3 : 40.9 MW 8.2 MVAR Dro : Close Line PNDLJ1 115-PNEDLE 115 #1 :	COTTLE B-BELLOTA 230.00kV Ckt#1 Sec# 1	793.23	Amps	122.9	123.3	0.5
19	Open Line PANOCHE 230-COBURN 230 #1 : Open Line PANOCHE 230-LOSBANOS 230 #1 : Open Line PANOCHE 230-LOSBANOS 230 #2 : Open Line PANOCHE 230-MCMULLN1 230 #1 : Open Line PANOCHE 230-GATES 230 #1 : Open Xfmr PANOCHE 230/PNCHE 1M 230 #1 :	COTTLE B-BELLOTA 230.00kV Ckt#1 Sec# 1	793.23	Amps	121.8	122.6	0.8
62	Open Line KEARNEY 230-HERNDON 230 #1 : Open Line HERNDON 230-FGRDN T1 230 #1 : Open Line FGRDN T1 230-FIGRDN 1 230 #1 : Open Line FGRDN T1 230-ASHLAN 230 #1 : Drop Load at FIGRDN 1 230 #1 : 74.3 MW 15 MVAR Dr : Close Line FIGRDN 1 230-FIGRDN 2 230 #1 :	COTTLE B-BELLOTA 230.00kV Ckt#1 Sec# 1	793.23	Amps	121.6	122.3	0.7
27	Open Line EL CAPTN 115-CASTLE 115 #1 : Open	COTTLE B-BELLOTA 230.00kV Ckt#1 Sec# 1	793.23	Amps	119.7	120.4	0.7

	Line EL CAPTN 115-WILSON B 115 #1 : Drop Load at EL CAPTN 115 #1 : 19.7 MW 4 MVAR Dro : Drop Load at EL CAPTN 115 #2 : 26.2 MW 5.3 MVAR D : Drop Load at EL CAPTN 115 #3 : 33.5 MW 6.7 MVAR D :						
104	Open Line BULLARD 115-PNDLJ2 115 #1 : Open Line BULLARD 115-PNDLJ1 115 #1 : Drop Load at BULLARD 115 #1 : 45.4 MW 9.2 MVAR Dr : Drop Load at BULLARD 115 #2 : 45.2 MW 9.1 MVAR Dr : Drop Load at BULLARD 115 #3 : 43 MW 8.7 MVAR Drop :	COTTLE B-BELLOTA 230.00kV Ckt#1 Sec# 1	793.23	Amps	119.7	120.4	0.7
103	Open Line WOODWARD 115-WWARD JT 115 #1 : Open Line WOODWARD 115-CHLDHOSP 115 #1 : Drop Load at WOODWARD 115 #1 : 42.7 MW 8.6 MVAR D : Drop Load at WOODWARD 115 #2 : 53.3 MW 10.8 MVAR : Drop Load at WOODWARD 115 #3 : 44.6 MW 9 MVAR Dro :	COTTLE B-BELLOTA 230.00kV Ckt#1 Sec# 1	793.23	Amps	119.4	120.1	0.7
7	Open Line LOSBANOS 230-PANOCHE 230 #2 : Open Line DS AMIGO 230-PANOCHE 230 #1 :	COTTLE B-BELLOTA 230.00kV Ckt#1 Sec# 1	793.23	Amps	119.1	119.8	0.7
41	Open Line BORDEN 70-MADERA 70 #1 : Open Line BORDEN 70-MADERA 70 #2 : Open Line BORDEN 70-GLASS 70 #1 : Open Line BORDEN 70-CASSIDY 70 #1 : Open Xfmr BORDEN 70/BORDEN 230 #1 : Open Xfmr BORDEN 70/BORDEN 230 #2 :	COTTLE B-BELLOTA 230.00kV Ckt#1 Sec# 1	793.23	Amps	119.2	119.8	0.6
54	Open Line WST FRSO 115-MC CALL 115 #1 : Open Line DANISHCM 115-MC CALL 115 #1 : Open Line DANISHCM 115-CAL AVE 115 #1 : Drop Load at DANISHCM 115 #1 : 4.1 MW 3.5 MVAR Dr :	COTTLE B-BELLOTA 230.00kV Ckt#1 Sec# 1	793.23	Amps	118.9	119.6	0.7
22	Open Line ATWATER 115-CASTLE 115 #1 : Open Line ATWATER 115-CRESEY T 115 #1 : Open Line ATWATER 115-WILSON A 115 #1 : Drop Load at ATWATER 115 #1 : 32.8 MW 6.6 MVAR Dr : Drop Load at ATWATER 115 #2 : 28.7 MW 5.8 MVAR Dr :	COTTLE B-BELLOTA 230.00kV Ckt#1 Sec# 1	793.23	Amps	118.5	119.1	0.7
48	Open Line KERCKHF2 115-WWARD JT 115 #1 : Open Line WWARD JT 115-WOODWARD 115 #1 : Open Line WWARD JT 115-CLOVISJ1 115 #1 : Open Line CLOVISJ1 115-CLOVIS-1 115 #1 : Open Line CLOVISJ1 115-SANGER 115 #1 : Drop Load at CLOVIS-1 115 #1 : 51.6 MW 10.4 MVAR : Close Line CLOVIS-1 115-CLOVIS-2 115 #1 : Open Line CLOVIS-	COTTLE B-BELLOTA 230.00kV Ckt#1 Sec# 1	793.23	Amps	118.4	119.1	0.7

	2 115-CLOVISJ2 115 #1 :						
15	Open Line MOSSLND2 230-PANOCHE 230 #1 : Open Line COBURN 230-PANOCHE 230 #1 :	COTTLE B-BELLOTA 230.00kV Ckt#1 Sec# 1	793.23	Amps	118.3	119.0	0.7
6	Open Line LOSBANOS 230-PANOCHE 230 #2 : Open Line LOSBANOS 230-DS AMIGO 230 #1 :	COTTLE B-BELLOTA 230.00kV Ckt#1 Sec# 1	793.23	Amps	118.2	118.9	0.7
18	Open Line LOSBANOS 230-PANOCHE 230 #1 : Open Line LOSBANOS 230-DS AMIGO 230 #1 : Open Xfmr LOSBANOS 230/LOS BANS 70 #4 :	COTTLE B-BELLOTA 230.00kV Ckt#1 Sec# 1	793.23	Amps	118.2	118.9	0.7
98	Open Line BARTON 115-AIRWAYJ2 115 #1 : Open Line BARTON 115-HERNDON 115 #1 : Drop Load at BARTON 115 #1 : 43.8 MW 8.8 MVAR Dro : Drop Load at BARTON 115 #2 : 37.6 MW 7.6 MVAR Dro : Drop Load at BARTON 115 #3 : 27.3 MW 5.5 MVAR Dro :	COTTLE B-BELLOTA 230.00kV Ckt#1 Sec# 1	793.23	Amps	117.7	118.4	0.7
28	Open Line MERCED 115-ATWATR J 115 #1 : Open Line MERCED 115-WILSON A 115 #1 : Open Line MERCED 115-WILSON B 115 #2 : Open Xfmr MERCED 115/MERCED M 115 #2 : Drop Load at MERCED 115 #1 : 37.6 MW 7.6 MVAR Dro : Drop Load at MERCED 115 #3 : 19.7 MW 3.9 MVAR Dro :	COTTLE B-BELLOTA 230.00kV Ckt#1 Sec# 1	793.23	Amps	117.6	118.3	0.7
117	Open Line KEARNEY 70-FRWWTAP 70 #1 : Open Line KEARNEY 70-OLDKERN 70 #1 : Open Line KEARNEY 70-CARUTHRS 70 #1 : Open Xfmr KEARNEY 70/KEARNEY 230 #2 :	COTTLE B-BELLOTA 230.00kV Ckt#1 Sec# 1	793.23	Amps	117.6	118.2	0.6
73	Open Line FIGRDN 1 230-FGRDN T1 230 #1 : Drop Load at FIGRDN 1 230 #1 : 74.3 MW 15 MVAR Dr :	COTTLE B-BELLOTA 230.00kV Ckt#1 Sec# 1	793.23	Amps	117.3	118.0	0.7
89	Open Line CLOVIS-2 115-CLOVISJ2 115 #1 : Drop Load at CLOVIS-2 115 #3 : 45.3 MW 9.1 MVAR D :	COTTLE B-BELLOTA 230.00kV Ckt#1 Sec# 1	793.23	Amps	117.3	118.0	0.7
99	Open Line MANCHSTR 115-AIRWAYJ1 115 #1 : Open Line MANCHSTR 115-HERNDON 115 #1 : Drop Load at MANCHSTR 115 #1 : 25.6 MW 5.1 MVAR D : Drop Load at MANCHSTR 115 #2 : 25.8 MW 5.2 MVAR D : Drop Load at MANCHSTR 115 #3 : 36.6 MW 7.4 MVAR D :	COTTLE B-BELLOTA 230.00kV Ckt#1 Sec# 1	793.23	Amps	117.2	117.9	0.7
102	Open Line PNEDLE 115-PNDLJ2 115 #1 : Drop Load at PNEDLE 115 #2 : 31.1 MW 6.3 MVAR Dro : Drop Load at PNEDLE 115 #3 : 40.9 MW 8.2 MVAR Dro :	COTTLE B-BELLOTA 230.00kV Ckt#1 Sec# 1	793.23	Amps	117.2	117.8	0.6
76	Open Line HELM 230-PANOCHE 230 #1 : Open Line HELM 230-MC CALL 230 #1 : Open Xfmr HELM 230/HELM 70 #1 :	COTTLE B-BELLOTA 230.00kV Ckt#1 Sec# 1	793.23	Amps	117.0	117.7	0.7

83	Open Line GATES 230-HENTAP1 230 #1 : Open Line GATES 230-ARCO 230 #1 :	COTTLE B-BELLOTA 230.00kV Ckt#1 Sec# 1	793.23	Amps	116.1	117.5	1.3
96	Open Line CAL AVE 115-DANISHCM 115 #1 : Open Line CAL AVE 115-WST FRSO 115 #1 : Drop Load at CAL AVE 115 #1 : 29.3 MW 5.9 MVAR Dr : Drop Load at CAL AVE 115 #2 : 31.6 MW 6.4 MVAR Dr : Drop Load at CAL AVE 115 #3 : 24.7 MW 5 MVAR Drop :	COTTLE B-BELLOTA 230.00kV Ckt#1 Sec# 1	793.23	Amps	116.6	117.3	0.7
84	Open Line GATES 230-HENTAP2 230 #1 : Open Line GATES 230-MIDWAY 230 #1 :	COTTLE B-BELLOTA 230.00kV Ckt#1 Sec# 1	793.23	Amps	116.5	117.2	0.7
74	Open Line FIGRDN 2 230-FGRDN T2 230 #1 : Drop Load at FIGRDN 2 230 #1 : 53.2 MW 10.7 MVAR :	COTTLE B-BELLOTA 230.00kV Ckt#1 Sec# 1	793.23	Amps	116.6	117.1	0.5
53	Open Line WST FRSO 115-MC CALL 115 #1 : Open Line CAL AVE 115-WST FRSO 115 #1 :	COTTLE B-BELLOTA 230.00kV Ckt#1 Sec# 1	793.23	Amps	116.3	117.0	0.7
97	Open Line WST FRSO 115-MC CALL 115 #1 : Open Line WST FRSO 115-CAL AVE 115 #1 : Drop Load at WST FRSO 115 #1 : 38 MW 7.7 MVAR Dro : Drop Load at WST FRSO 115 #2 : 39.5 MW 8 MVAR Dro :	COTTLE B-BELLOTA 230.00kV Ckt#1 Sec# 1	793.23	Amps	116.3	117.0	0.7
40	Open Line MADERA 70-TRIGO 70 #1 : Open Line MADERA 70-BORDEN 70 #1 : Open Line MADERA 70-BORDEN 70 #2 : Drop Load at MADERA 70 #1 : 18.2 MW 3.7 MVAR Drop : Drop Load at MADERA 70 #2 : 23.4 MW 4.7 MVAR Drop :	COTTLE B-BELLOTA 230.00kV Ckt#1 Sec# 1	793.23	Amps	116.1	116.7	0.7
32	Open Line ORO LOMA 70-DOS PALS 70 #1 : Open Line ORO LOMA 70-MRCYSPRS 70 #1 : Open Line ORO LOMA 70-POSO J1 70 #1 : Open Xfmr ORO LOMA 70/ORO LOMA 115 #2 : Drop Load at ORO LOMA 70 #1 : 8.7 MW 1.7 MVAR Dro :	COTTLE B-BELLOTA 230.00kV Ckt#1 Sec# 1	793.23	Amps	115.9	116.7	0.8
87	Open Line AIRWAYS 115-AIRWAYJ1 115 #1 : Open Line AIRWAYS 115-AIRWAYJ2 115 #1 : Drop Load at AIRWAYS 115 #1 : 38.8 MW 7.5 MVAR Dr : Drop Load at AIRWAYS 115 #2 : 12.7 MW 2.5 MVAR Dr :	COTTLE B-BELLOTA 230.00kV Ckt#1 Sec# 1	793.23	Amps	115.9	116.6	0.7
106	Open Line KINGSBRG 115-CORCORAN 115 #1 : Open Line KINGSBRG 115-GAURD J1 115 #1 : Open Xfmr KINGSBRG 115/KNGLOBUS 70 #2 : Drop Load at KINGSBRG 115 #3 : 33 MW 6.6 MVAR Dro :	COTTLE B-BELLOTA 230.00kV Ckt#1 Sec# 1	793.23	Amps	116.0	116.6	0.5
88	Open Line CLOVIS-1 115-CLOVISJ1 115 #1 : Drop Load at CLOVIS-1 115 #1 : 51.6 MW 10.4 MVAR :	COTTLE B-BELLOTA 230.00kV Ckt#1 Sec# 1	793.23	Amps	115.9	116.6	0.7
121	Open Line REEDLEY 70-TVY VLLY 70 #1 : Open	COTTLE B-BELLOTA 230.00kV Ckt#1 Sec# 1	793.23	Amps	115.9	116.4	0.5

	Line REEDLEY 70-PARLIER 70 #1 : Open Line REEDLEY 70-DNUBAJCT 70 #1 : Open Line REEDLEY 70-ORSI JCT 70 #1 : Open Xfmr REEDLEY 70/REEDLEY 115 #1 : Open Xfmr REEDLEY 70/REEDLEY 115 #2 : Drop Load at REEDLEY 70 #1 : 17.6 MW 3.5 MVAR Dro :						
34	Open Line CANAL 70-LVNGSTNT 70 #1 : Open Line CANAL 70-SNTA RTA 70 #1 : Open Line CANAL 70-ORTIGA 70 #1 : Drop Load at CANAL 70 #1 : 30.9 MW 6.2 MVAR Dropp : Drop Load at CANAL 70 #2 : 31.7 MW 6.4 MVAR Dropp :	COTTLE B-BELLOTA 230.00kV Ckt#1 Sec# 1	793.23	Amps	115.5	116.1	0.7
49	Open Line KINGSBRG 115-CORCORAN 115 #1 : Open Line KINGSBRG 115-CORCORAN 115 #2 :	COTTLE B-BELLOTA 230.00kV Ckt#1 Sec# 1	793.23	Amps	115.3	116.0	0.7
107	Open Line CORCORAN 115-KINGSBRG 115 #1 : Open Line CORCORAN 115-KINGSBRG 115 #2 : Open Xfmr CORCORAN 115/CORCORAN 70 #2 : Drop Load at CORCORAN 115 #3 : 16.4 MW 3.3 MVAR D : Drop Load at CORCORAN 115 #4 : 18 MW 3.6 MVAR Dro :	COTTLE B-BELLOTA 230.00kV Ckt#1 Sec# 1	793.23	Amps	115.3	116.0	0.7
11	Open Line BELLOTA 230-COTTLE A 230 #1 : Open Line COTTLE A 230-MELONES 230 #1 : Drop Load at COTTLE A 230 #1 : 26.7 MW 1.2 MVAR D : Drop Generator at HELMS 3 18 #**: 404 MW Dropped : Open Line MELONES 230-WILSON 230 #1 :	COTTLE B-BELLOTA 230.00kV Ckt#1 Sec# 1	793.23	Amps	115.2	116.0	0.8
1	Open Line WILSON A 115-ATWATER 115 #1 : Open Line WILSON B 115-EL CAPTN 115 #1 :	CRESEY T-ATWATR J 115.00kV Ckt#1 Sec# 1	512.08	Amps	199.0	198.7	-0.3
13	Open Line STOREY 2 230-BORDEN 230 #1 : Open Line STOREY 2 230-WILSON 230 #1 : Drop Load at STOREY 2 230 #2 : 34.3 MW 6.9 MVAR D : Open Line STOREY 1 230-WILSON 230 #1 : Open Line STOREY 1 230-BORDEN 230 #1 : Drop Load at STOREY 1 230 #1 : 38.3 MW 7.7 MVAR D :	DFSTP -ORO LOMA 115.00kV Ckt#1 Sec# 1	607.47	Amps	114.6	114.9	0.4
23	Open Line EXCHEQUR 115-LE GRAND 115 #1 : Open Xfmr EXCHEQUR 115/EXCHQRTP 115 #1 :	EXCHEQUR-MCSWAINJ 70.00kV Ckt#1 Sec# 1	280.43	Amps	109.2	109.2	-0.1
61	Open Line GREGG 230-HERNDON 230 #1 : Drop Generator at HELMS 3 18 #**: 404 MW Dropped : Open Line GREGG 230-HERNDON 230 #2 :	FGRDN T2-GREGG 230.00kV Ckt#1 Sec# 1	849.96	Amps	174.5	175.0	0.5
13	Open Line STOREY 2 230-BORDEN 230 #1 : Open Line STOREY 2 230-WILSON 230 #1 : Drop Load at STOREY 2 230 #2 : 34.3 MW 6.9 MVAR D : Open Line	HAMMONDS-DFSTP 115.00kV Ckt#1 Sec# 1	607.47	Amps	115.7	116.0	0.4

	STOREY 1 230-WILSON 230 #1 : Open Line STOREY 1 230-BORDEN 230 #1 : Drop Load at STOREY 1 230 #1 : 38.3 MW 7.7 MVAR D :						
13	Open Line STOREY 2 230-BORDEN 230 #1 : Open Line STOREY 2 230-WILSON 230 #1 : Drop Load at STOREY 2 230 #2 : 34.3 MW 6.9 MVAR D : Open Line STOREY 1 230-WILSON 230 #1 : Open Line STOREY 1 230-BORDEN 230 #1 : Drop Load at STOREY 1 230 #1 : 38.3 MW 7.7 MVAR D :	HAMMONDS-PANOCHEJ 115.00kV Ckt#1 Sec# 1	607.47	Amps	123.8	124.2	0.4
90	Open Line SANGER 115-CLOVISJ1 115 #1 : Open Line SANGER 115-CLOVISJ2 115 #1 : Open Line SANGER 115-AIRWAYJ2 115 #1 : Open Line SANGER 115-LASPALMS 115 #1 : Open Line SANGER 115-MC CALL 115 #1 : Open Line SANGER 115-MC CALL 115 #2 : Open Line SANGER 115-MC CALL 115 #3 : Open Line SANGER 115-MALAGA 115 #1 : Open Line SANGER 115-RAINBWTP 115 #1 : Open Line SANGER 115-PIEDRA 2 115 #1 :	HELM -PANOCHE 230.00kV Ckt#1 Sec# 1	849.96	Amps	102.4	102.8	0.4
16	Open Line PANOCHE 230-HELM 230 #1 : Open Line PANOCHE 230-MCMULLN1 230 #1 : Open Line MCMULLN1 230-KEARNEY 230 #1 : Drop Load at MCMULLN1 230 #1 : 20.6 MW 4.1 MVAR D :	HELM -STRD JCT 70.00kV Ckt#1 Sec# 1	377.75	Amps	116.9	117.5	0.5
57	Open Line PANOCHE 230-MCMULLN1 230 #1 : Open Line MCMULLN1 230-KEARNEY 230 #1 : Drop Load at MCMULLN1 230 #1 : 20.6 MW 4.1 MVAR D : Open Line PANOCHE 230-HELM 230 #1 :	HELM -STRD JCT 70.00kV Ckt#1 Sec# 1	377.75	Amps	116.9	117.5	0.5
20	Open Line PANOCHE 230-MOSSLND2 230 #1 : Open Line PANOCHE 230-PANO_EC 230 #1 : Open Line PANOCHE 230-HELM 230 #1 : Open Line PANOCHE 230-GATES 230 #2 : Open Line PANOCHE 230-DS AMIGO 230 #1 : Open Xfmr PANOCHE 230/PANOCHE 115 #2 :	HELM -STRD JCT 70.00kV Ckt#1 Sec# 1	377.75	Amps	106.9	107.3	0.4
13	Open Line STOREY 2 230-BORDEN 230 #1 : Open Line STOREY 2 230-WILSON 230 #1 : Drop Load at STOREY 2 230 #2 : 34.3 MW 6.9 MVAR D : Open Line STOREY 1 230-WILSON 230 #1 : Open Line STOREY 1 230-BORDEN 230 #1 : Drop Load at STOREY 1 230 #1 : 38.3 MW 7.7 MVAR D :	K1-JCT -OAKH_JCT 115.00kV Ckt#1 Sec# 1	743.02	Amps	114.8	115.3	0.5

13	Open Line STOREY 2 230-BORDEN 230 #1 : Open Line STOREY 2 230-WILSON 230 #1 : Drop Load at STOREY 2 230 #2 : 34.3 MW 6.9 MVAR D : Open Line STOREY 1 230-WILSON 230 #1 : Open Line STOREY 1 230-BORDEN 230 #1 : Drop Load at STOREY 1 230 #1 : 38.3 MW 7.7 MVAR D :	KEARNEY -HERNDON 230.00kV Ckt#1 Sec# 1	974.97	Amps	114.7	115.5	0.7
13	Open Line STOREY 2 230-BORDEN 230 #1 : Open Line STOREY 2 230-WILSON 230 #1 : Drop Load at STOREY 2 230 #2 : 34.3 MW 6.9 MVAR D : Open Line STOREY 1 230-WILSON 230 #1 : Open Line STOREY 1 230-BORDEN 230 #1 : Drop Load at STOREY 1 230 #1 : 38.3 MW 7.7 MVAR D :	KERCKHF2-K1-JCT 115.00kV Ckt#2 Sec# 1	743.02	Amps	114.8	115.3	0.5
13	Open Line STOREY 2 230-BORDEN 230 #1 : Open Line STOREY 2 230-WILSON 230 #1 : Drop Load at STOREY 2 230 #2 : 34.3 MW 6.9 MVAR D : Open Line STOREY 1 230-WILSON 230 #1 : Open Line STOREY 1 230-BORDEN 230 #1 : Drop Load at STOREY 1 230 #1 : 38.3 MW 7.7 MVAR D :	LE GRAND-WILSON A 115.00kV Ckt#1 Sec# 1	512.08	Amps	207.1	208.0	0.9
14	Open Line BORDEN 230-GREGG 230 #1 : Drop Generator at HELMS 3 18 #**: 404 MW Dropped : Open Line BORDEN 230-GREGG 230 #2 :	LE GRAND-WILSON A 115.00kV Ckt#1 Sec# 1	512.08	Amps	122.4	122.9	0.5
48	Open Line KERCKHF2 115-WWARD JT 115 #1 : Open Line WWARD JT 115-WOODWARD 115 #1 : Open Line WWARD JT 115-CLOVISJ1 115 #1 : Open Line CLOVISJ1 115-CLOVIS-1 115 #1 : Open Line CLOVISJ1 115-SANGER 115 #1 : Drop Load at CLOVIS-1 115 #1 : 51.6 MW 10.4 MVAR : Close Line CLOVIS-1 115-CLOVIS-2 115 #1 : Open Line CLOVIS-2 115-CLOVISJ2 115 #1 :	LE GRAND-WILSON A 115.00kV Ckt#1 Sec# 1	512.08	Amps	114.4	114.4	0.0
37	Open Line MRCDFLLS 70-MERCED 70 #1 : Open Line MRCDFLLS 70-MCSWAINJ 70 #1 : Open Xfmr MRCDFLLS 70/MERCEDFL 9.11 #1 : Open Xfmr MRCDFLLS 70/MERCEDFL 9.11 #2 : Drop Load at MRCDFLLS 70 #2 : 9.1 MW 1.8 MVAR Dro :	LE GRAND-WILSON A 115.00kV Ckt#1 Sec# 1	512.08	Amps	103.6	103.6	0.0
lbs-dlo-ns	Los Banos - Gates & Los Banos - Midway 500-kV DLO	LE GRAND-WILSON A 115.00kV Ckt#1 Sec# 1	512.08	Amps	103.5	103.6	0.0
60	Open Line GREGG 230-HELMS PP 230 #1 : Drop Generator at HELMS 1 18 #**: 404 MW Dropped : Open Line GREGG 230-HELMS PP 230 #2 : Drop Generator at HELMS 3 18 #**: 404 MW Dropped :	LE GRAND-WILSON A 115.00kV Ckt#1 Sec# 1	512.08	Amps	103.0	103.1	0.1

69	Open Line HELMS PP 230-GREGG 230 #1 : Open Line HELMS PP 230-GREGG 230 #2 : Open Xfmr HELMS PP 230/HELMS 1 18 #1 : Open Xfmr HELMS PP 230/HELMS 2 18 #1 : Open Xfmr HELMS PP 230/HELMS 3 18 #1 :	LE GRAND-WILSON A 115.00kV Ckt#1 Sec# 1	512.08	Amps	103.0	103.1	0.1
33	Open Line MERCED 70-ELNIDOTP 70 #1 : Open Line MERCED 70-MRCDFLLS 70 #1 : Open Xfmr MERCED 70/MERCED M 115 #2 :	LE GRAND-WILSON A 115.00kV Ckt#1 Sec# 1	512.08	Amps	101.6	101.6	0.0
lbn-dlo-ns	Los Banos - Tesla & Los Banos - Tracy 500-kV DLO	LE GRAND-WILSON A 115.00kV Ckt#1 Sec# 1	512.08	Amps	100.9	101.1	0.1
28	Open Line MERCED 115-ATWATR J 115 #1 : Open Line MERCED 115-WILSON A 115 #1 : Open Line MERCED 115-WILSON B 115 #2 : Open Xfmr MERCED 115/MERCED M 115 #2 : Drop Load at MERCED 115 #1 : 37.6 MW 7.6 MVAR Dro : Drop Load at MERCED 115 #3 : 19.7 MW 3.9 MVAR Dro :	LE GRAND-WILSON A 115.00kV Ckt#1 Sec# 1	512.08	Amps	100.6	100.6	0.0
17	Open Line LOSBANOS 230-WESTLEY 230 #1 : Open Line LOSBANOS 230-PANOCHE 230 #2 : Open Line LOSBANOS 230-SN LS PP 230 #1 : Open Line LOSBANOS 230-SN LS PP 230 #2 : Open Xfmr LOSBANOS 230/LOS BANS 70 #3 :	LE GRAND-WILSON A 115.00kV Ckt#1 Sec# 1	512.08	Amps	100.0	100.3	0.3
44	Open Line AIRWAYJ2 115-AIRWAYS 115 #1 : Open Line AIRWAYJ2 115-BARTON 115 #1 : Open Line AIRWAYJ2 115-SANGER 115 #1 : Open Line AIRWAYJ1 115-AIRWAYS 115 #1 : Open Line AIRWAYJ1 115-LASPALMS 115 #1 : Open Line AIRWAYJ1 115-MANCHSTR 115 #1 : Open Line LASPALMS 115-SANGER 115 #1 : Drop Load at LASPALMS 115 #1 : 13.9 MW 11.8 MVAR :	LE GRAND-WILSON A 115.00kV Ckt#1 Sec# 1	512.08	Amps	100.0	100.2	0.2
13.00	Open Line STOREY 2 230-BORDEN 230 #1 : Open Line STOREY 2 230-WILSON 230 #1 : Drop Load at STOREY 2 230 #2 : 34.3 MW 6.9 MVAR D : Open Line STOREY 1 230-WILSON 230 #1 : Open Line STOREY 1 230-BORDEN 230 #1 : Drop Load at STOREY 1 230 #1 : 38.3 MW 7.7 MVAR D :	LE GRNDJ-WILSON B 115.00kV Ckt#1 Sec# 1	398.12	Amps	101.11	101.67	0.6
lbn-dlo-ns	Los Banos - Tesla & Los Banos - Tracy 500-kV DLO	LOSBANOS-WESTLEY 230.00kV Ckt#1 Sec# 1	1699.92	Amps	142.7	143.5	0.8
lbs-dlo-ns	Los Banos - Gates & Los Banos - Midway 500-kV DLO	LOSBANOS-WESTLEY 230.00kV Ckt#1 Sec# 1	1699.92	Amps	122.8	123.0	0.2
13	Open Line STOREY 2 230-BORDEN 230 #1 : Open Line STOREY 2 230-WILSON 230 #1 : Drop Load at	LOSBANOS-WESTLEY 230.00kV Ckt#1 Sec# 1	1699.92	Amps	112.9	113.5	0.6

	STOREY 2 230 #2 : 34.3 MW 6.9 MVAR D : Open Line STOREY 1 230-WILSON 230 #1 : Open Line STOREY 1 230-BORDEN 230 #1 : Drop Load at STOREY 1 230 #1 : 38.3 MW 7.7 MVAR D :						
10	Open Line BELLOTA 230-COTTLE A 230 #1 : Open Line COTTLE A 230-MELONES 230 #1 : Drop Load at COTTLE A 230 #1 : 26.7 MW 1.2 MVAR D : Drop Generator at HELMS 3 18 #**: 404 MW Dropped : Open Line WARNERVL 230-WILSON 230 #1 :	LOSBANOS-WESTLEY 230.00kV Ckt#1 Sec# 1	1699.92	Amps	108.5	109.1	0.6
12	Open Line MELONES 230-WILSON 230 #1 : Drop Generator at HELMS 3 18 #**: 404 MW Dropped : Open Line WARNERVL 230-WILSON 230 #1 :	LOSBANOS-WESTLEY 230.00kV Ckt#1 Sec# 1	1699.92	Amps	104.6	105.0	0.3
15	Open Line MOSSLND2 230-PANOCHE 230 #1 : Open Line COBURN 230-PANOCHE 230 #1 :	LOSBANOS-WESTLEY 230.00kV Ckt#1 Sec# 1	1699.92	Amps	102.8	103.4	0.6
47	Open Line PNDLJ1 115-BULLARD 115 #1 : Open Line PNDLJ1 115-HERNDON 115 #1 : Open Line PNDLJ2 115-PNEDLE 115 #1 : Open Line PNDLJ2 115-BULLARD 115 #1 : Open Line PNDLJ2 115-HERNDON 115 #1 : Drop Load at PNEDLE 115 #2 : 31.1 MW 6.3 MVAR Dro : Drop Load at PNEDLE 115 #3 : 40.9 MW 8.2 MVAR Dro : Close Line PNDLJ1 115-PNEDLE 115 #1 :	LOSBANOS-WESTLEY 230.00kV Ckt#1 Sec# 1	1699.92	Amps	100.1	100.6	0.5
75	Open Line ASHLAN 230-FGRDN T1 230 #1 : Open Line ASHLAN 230-FGRDN T2 230 #1 : Drop Load at ASHLAN 230 #1 : 70 MW 13.5 MVAR Drop : Drop Load at ASHLAN 230 #2 : 65.3 MW 12.9 MVAR Dr : Drop Load at ASHLAN 230 #3 : 66.3 MW 12.6 MVAR Dr :	LOSBANOS-WESTLEY 230.00kV Ckt#1 Sec# 1	1699.92	Amps	99.9	100.5	0.5
54	Open Line WST FRSO 115-MC CALL 115 #1 : Open Line DANISHCM 115-MC CALL 115 #1 : Open Line DANISHCM 115-CAL AVE 115 #1 : Drop Load at DANISHCM 115 #1 : 4.1 MW 3.5 MVAR Dr :	LOSBANOS-WESTLEY 230.00kV Ckt#1 Sec# 1	1699.92	Amps	99.8	100.4	0.6
90	Open Line SANGER 115-CLOVISJ1 115 #1 : Open Line SANGER 115-CLOVISJ2 115 #1 : Open Line SANGER 115-AIRWAYJ2 115 #1 : Open Line SANGER 115-LASPALMS 115 #1 : Open Line SANGER 115-MC CALL 115 #1 : Open Line SANGER 115-MC CALL 115 #2 : Open Line SANGER 115-MC CALL 115 #3 : Open Line SANGER 115-MALAGA 115 #1 : Open Line	MC CALL -HELM 230.00kV Ckt#1 Sec# 1	849.96	Amps	112.6	113.0	0.4

	SANGER 115-RAINBWTP 115 #1 : Open Line SANGER 115-PIEDRA 2 115 #1 :						
79	Open Line MC CALL 230-HELM 230 #1 : Open Line MC CALL 230-BALCH3TP 230 #1 : Open Line MC CALL 230-Q128 230 #2 : Open Xfmr MC CALL 230/MCCALL1M 115 #1 : Open Xfmr MC CALL 230/MCCALL3M 115 #3 :	MC CALL -MCCALL2M 115.00/ 115.00kV Bk#2	465	MVA	104.8	104.7	-0.1
79	Open Line MC CALL 230-HELM 230 #1 : Open Line MC CALL 230-BALCH3TP 230 #1 : Open Line MC CALL 230-Q128 230 #2 : Open Xfmr MC CALL 230/MCCALL1M 115 #1 : Open Xfmr MC CALL 230/MCCALL3M 115 #3 :	MC CALL -MCCALL2M 230.00/ 115.00kV Bk#2	465	MVA	108.5	108.3	-0.1
24	Open Line LE GRAND 115-CERTAN T 115 #1 : Open Line LE GRAND 115-EXCHEQUR 115 #1 : Open Line LE GRAND 115-WILSON A 115 #1 : Open Line LE GRAND 115-DAIRYLND 115 #1 : Drop Load at LE GRAND 115 #1 : 13.6 MW 2.7 MVAR D :	MCSWAINJ-EXCHEQUR 70.00kV Ckt#1 Sec# 1	280.43	Amps	179.4	179.3	0.0
24	Open Line LE GRAND 115-CERTAN T 115 #1 : Open Line LE GRAND 115-EXCHEQUR 115 #1 : Open Line LE GRAND 115-WILSON A 115 #1 : Open Line LE GRAND 115-DAIRYLND 115 #1 : Drop Load at LE GRAND 115 #1 : 13.6 MW 2.7 MVAR D :	MCSWAINJ-MRCDFLLS 70.00kV Ckt#1 Sec# 1	379.4	Amps	152.3	152.2	0.0
24	Open Line LE GRAND 115-CERTAN T 115 #1 : Open Line LE GRAND 115-EXCHEQUR 115 #1 : Open Line LE GRAND 115-WILSON A 115 #1 : Open Line LE GRAND 115-DAIRYLND 115 #1 : Drop Load at LE GRAND 115 #1 : 13.6 MW 2.7 MVAR D :	MERCED -MERCED M 70.00/ 115.00kV Bk#2	60	MVA	113.3	113.3	0.0
24	Open Line LE GRAND 115-CERTAN T 115 #1 : Open Line LE GRAND 115-EXCHEQUR 115 #1 : Open Line LE GRAND 115-WILSON A 115 #1 : Open Line LE GRAND 115-DAIRYLND 115 #1 : Drop Load at LE GRAND 115 #1 : 13.6 MW 2.7 MVAR D :	MERCED -MERCED M 115.00/ 115.00kV Bk#2	60	MVA	123.1	123.1	0.0
1	Open Line WILSON A 115-ATWATER 115 #1 : Open Line WILSON B 115-EL CAPTN 115 #1 :	MERCED -WILSON A 115.00kV Ckt#1 Sec# 1	471.92	Amps	149.8	149.6	-0.2
26	Open Line WILSON B 115-LE GRNDJ 115 #1 : Open Line WILSON B 115-WILSON A 115 #1 : Open Line WILSON B 115-EL CAPTN 115 #1 : Open Line WILSON B 115-MERCED 115 #2 : Open Xfmr WILSON B 115/WILSON 230 #2 :	MERCED -WILSON A 115.00kV Ckt#1 Sec# 1	471.92	Amps	123.7	123.7	0.0

1	Open Line WILSON A 115-ATWATER 115 #1 : Open Line WILSON B 115-EL CAPTN 115 #1 :	MERCED -WILSON B 115.00kV Ckt#2 Sec# 1	471.92	Amps	134.6	134.4	-0.2
25	Open Line WILSON A 115-LE GRAND 115 #1 : Open Line WILSON A 115-ATWATER 115 #1 : Open Line WILSON A 115-WILSON B 115 #1 : Open Line WILSON A 115-MERCED 115 #1 : Open Xfmr WILSON A 115/WILSON 230 #1 : Drop Load at WILSON A 115 #3 : 18.9 MW 3.8 MVAR D :	MERCED -WILSON B 115.00kV Ckt#2 Sec# 1	471.92	Amps	101.2	101.2	0.0
81	Open Line GATES 230-PANOCHE 230 #1 : Open Line GATES 230-TEMPLETN 230 #1 : Open Xfmr GATES 230/GATES 1M 230 #1 :	MORROBAY-GATES 230.00kV Ckt#1 Sec# 1	974.97	Amps	121.8	121.5	-0.2
lbs-dlo-ns	Los Banos - Gates & Los Banos - Midway 500-kV DLO	MORROBAY-GATES 230.00kV Ckt#1 Sec# 1	974.97	Amps	101.9	101.9	-0.1
24	Open Line LE GRAND 115-CERTAN T 115 #1 : Open Line LE GRAND 115-EXCHEQUR 115 #1 : Open Line LE GRAND 115-WILSON A 115 #1 : Open Line LE GRAND 115-DAIRYLND 115 #1 : Drop Load at LE GRAND 115 #1 : 13.6 MW 2.7 MVAR D :	MRCDFLLS-MERCED 70.00kV Ckt#1 Sec# 1	377.75	Amps	140.7	140.7	0.0
13	Open Line STOREY 2 230-BORDEN 230 #1 : Open Line STOREY 2 230-WILSON 230 #1 : Drop Load at STOREY 2 230 #2 : 34.3 MW 6.9 MVAR D : Open Line STOREY 1 230-WILSON 230 #1 : Open Line STOREY 1 230-BORDEN 230 #1 : Drop Load at STOREY 1 230 #1 : 38.3 MW 7.7 MVAR D :	OAKH_JCT-SHARON T 115.00kV Ckt#1 Sec# 1	396.61	Amps	146.0	147.0	1.0
18	Open Line LOSBANOS 230-PANOCHE 230 #1 : Open Line LOSBANOS 230-DS AMIGO 230 #1 : Open Xfmr LOSBANOS 230/LOS BANS 70 #4 :	ORO LOMA-DOS PALS 70.00kV Ckt#1 Sec# 1	282.08	Amps	113.4	112.9	-0.6
lbs-dlo-ns	Los Banos - Gates & Los Banos - Midway 500-kV DLO	ORO LOMA-DOS PALS 70.00kV Ckt#1 Sec# 1	282.08	Amps	107.3	106.9	-0.5
19	Open Line PANOCHE 230-COBURN 230 #1 : Open Line PANOCHE 230-LOSBANOS 230 #1 : Open Line PANOCHE 230-LOSBANOS 230 #2 : Open Line PANOCHE 230-MCMULLN1 230 #1 : Open Line PANOCHE 230-GATES 230 #1 : Open Xfmr PANOCHE 230/PNCHE 1M 230 #1 :	ORO LOMA-DOS PALS 70.00kV Ckt#1 Sec# 1	282.08	Amps	106.2	106.6	0.4
7	Open Line LOSBANOS 230-PANOCHE 230 #2 : Open Line DS AMIGO 230-PANOCHE 230 #1 :	ORO LOMA-DOS PALS 70.00kV Ckt#1 Sec# 1	282.08	Amps	107.0	106.5	-0.5
10	Open Line BELLOTA 230-COTTLE A 230 #1 : Open Line COTTLE A 230-MELONES 230 #1 : Drop Load at COTTLE A 230 #1 : 26.7 MW 1.2 MVAR D : Drop	ORO LOMA-DOS PALS 70.00kV Ckt#1 Sec# 1	282.08	Amps	105.4	105.8	0.4

	Generator at HELMS 3 18 #**: 404 MW Dropped : Open Line WARNERVL 230-WILSON 230 #1 :						
6	Open Line LOSBANOS 230-PANOCHE 230 #2 : Open Line LOSBANOS 230-DS AMIGO 230 #1 :	ORO LOMA-DOS PALS 70.00kV Ckt#1 Sec# 1	282.08	Amps	103.7	103.2	-0.5
12	Open Line MELONES 230-WILSON 230 #1 : Drop Generator at HELMS 3 18 #**: 404 MW Dropped : Open Line WARNERVL 230-WILSON 230 #1 :	ORO LOMA-DOS PALS 70.00kV Ckt#1 Sec# 1	282.08	Amps	101.0	100.6	-0.4
13	Open Line STOREY 2 230-BORDEN 230 #1 : Open Line STOREY 2 230-WILSON 230 #1 : Drop Load at STOREY 2 230 #2 : 34.3 MW 6.9 MVAR D : Open Line STOREY 1 230-WILSON 230 #1 : Open Line STOREY 1 230-BORDEN 230 #1 : Drop Load at STOREY 1 230 #1 : 38.3 MW 7.7 MVAR D :	ORO LOMA-EL NIDO 115.00kV Ckt#1 Sec# 1	512.08	Amps	103.0	103.4	0.4
42	Open Line MENDOTA 70-TOMATAK 70 #1 : Open Line MENDOTA 70-BIOMSJCT 70 #1 : Open Xfmr MENDOTA 70/MENDOTA 115 #1 :	ORO LOMA-ORO LOMA 115.00/ 70.00kV Bk#2	72	MVA	105.7	105.4	-0.4
18	Open Line LOSBANOS 230-PANOCHE 230 #1 : Open Line LOSBANOS 230-DS AMIGO 230 #1 : Open Xfmr LOSBANOS 230/LOS BANS 70 #4 :	ORO LOMA-ORO LOMA 115.00/ 70.00kV Bk#2	72	MVA	103.5	103.4	-0.2
10	Open Line BELLOTA 230-COTTLE A 230 #1 : Open Line COTTLE A 230-MELONES 230 #1 : Drop Load at COTTLE A 230 #1 : 26.7 MW 1.2 MVAR D : Drop Generator at HELMS 3 18 #**: 404 MW Dropped : Open Line WARNERVL 230-WILSON 230 #1 :	ORO LOMA-ORO LOMA 115.00/ 70.00kV Bk#2	72	MVA	102.3	102.8	0.5
19	Open Line PANOCHE 230-COBURN 230 #1 : Open Line PANOCHE 230-LOSBANOS 230 #1 : Open Line PANOCHE 230-LOSBANOS 230 #2 : Open Line PANOCHE 230-MCMULLN1 230 #1 : Open Line PANOCHE 230-GATES 230 #1 : Open Xfmr PANOCHE 230/PNCHE 1M 230 #1 :	PANOCHE -DS AMIGO 230.00kV Ckt#1 Sec# 1	849.96	Amps	123.5	124.1	0.6
lbs-dlo-ns	Los Banos - Gates & Los Banos - Midway 500-kV DLO	PANOCHE -DS AMIGO 230.00kV Ckt#1 Sec# 1	849.96	Amps	101.2	101.8	0.7
7	Open Line LOSBANOS 230-PANOCHE 230 #2 : Open Line DS AMIGO 230-PANOCHE 230 #1 :	PANOCHE -LOSBANOS 230.00kV Ckt#1 Sec# 1	974.97	Amps	107.6	108.7	1.1
6	Open Line LOSBANOS 230-PANOCHE 230 #2 : Open Line LOSBANOS 230-DS AMIGO 230 #1 :	PANOCHE -LOSBANOS 230.00kV Ckt#1 Sec# 1	974.97	Amps	99.3	100.4	1.1
18	Open Line LOSBANOS 230-PANOCHE 230 #1 : Open Line LOSBANOS 230-DS AMIGO 230 #1 : Open Xfmr LOSBANOS 230/LOS BANS 70 #4 :	PANOCHE -LOSBANOS 230.00kV Ckt#2 Sec# 1	849.96	Amps	108.2	109.4	1.3

lbs-dlo-ns	Los Banos - Gates & Los Banos - Midway 500-kV DLO	PANOCHE -LOSBANOS 230.00kV Ckt#2 Sec# 1	849.96	Amps	99.7	100.4	0.7
93	Open Line REEDLEY 115-GERAWAN 115 #1 : Open Line REEDLEY 115-PIEDRA 1 115 #1 : Open Xfmr REEDLEY 115/REEDLEY 70 #1 : Open Xfmr REEDLEY 115/REEDLEY 70 #2 : Drop Load at REEDLEY 115 #3 : 26.5 MW 5.3 MVAR Dr :	PARLIER -SNGRJCT 70.00kV Ckt#1 Sec# 1	470.13	Amps	162.6	162.6	0.0
30	Open Line PANOCHE 115-CHENYT 115 #1 : Open Line PANOCHE 115-PANOCHEJ 115 #1 : Open Xfmr PANOCHE 115/PANOCHE 230 #2 : Open Xfmr PANOCHE 115/DG_PAN1 13.8 #1 :	POSO J1 -ORO LOMA 70.00kV Ckt#1 Sec# 1	282.08	Amps	100.1	99.9	-0.3
67	Open Line GATES 230-MORROBAY 230 #1 : Open Line GATES 230-TEMPLETN 230 #1 :	PSA RBLS-SAN MIGL 70.00kV Ckt#1 Sec# 1	346.41	Amps	154.2	154.0	-0.2
67	Open Line GATES 230-MORROBAY 230 #1 : Open Line GATES 230-TEMPLETN 230 #1 :	Q166 -MIDWAY 230.00kV Ckt#1 Sec# 1	976.48	Amps	242.1	242.0	-0.1
82	Open Line GATES 230-PANOCHE 230 #2 : Open Line GATES 230-MORROBAY 230 #1 :	Q166 -MIDWAY 230.00kV Ckt#1 Sec# 1	976.48	Amps	181.9	182.0	0.1
81	Open Line GATES 230-PANOCHE 230 #1 : Open Line GATES 230-TEMPLETN 230 #1 : Open Xfmr GATES 230/GATES 1M 230 #1 :	Q166 -MIDWAY 230.00kV Ckt#1 Sec# 1	976.48	Amps	178.2	178.2	0.0
Dblo-Mdwy_dlo	Diablo - Midway #2&#33q21 500-kV DLO	Q166 -MIDWAY 230.00kV Ckt#1 Sec# 1	976.48	Amps	161.0	161.1	0.1
13	Open Line STOREY 2 230-BORDEN 230 #1 : Open Line STOREY 2 230-WILSON 230 #1 : Drop Load at STOREY 2 230 #2 : 34.3 MW 6.9 MVAR D : Open Line STOREY 1 230-WILSON 230 #1 : Open Line STOREY 1 230-BORDEN 230 #1 : Drop Load at STOREY 1 230 #1 : 38.3 MW 7.7 MVAR D :	Q166 -MIDWAY 230.00kV Ckt#1 Sec# 1	976.48	Amps	158.9	159.1	0.2
19	Open Line PANOCHE 230-COBURN 230 #1 : Open Line PANOCHE 230-LOSBANOS 230 #1 : Open Line PANOCHE 230-LOSBANOS 230 #2 : Open Line PANOCHE 230-MCMULLN1 230 #1 : Open Line PANOCHE 230-GATES 230 #1 : Open Xfmr PANOCHE 230/PNCHE 1M 230 #1 :	Q166 -MIDWAY 230.00kV Ckt#1 Sec# 1	976.48	Amps	158.0	158.2	0.2
68	Open Line GATES 230-MIDWAY 230 #1 : Open Line GATES 230-ARCO 230 #1 :	Q166 -MIDWAY 230.00kV Ckt#1 Sec# 1	976.48	Amps	157.4	157.6	0.1
7	Open Line LOSBANOS 230-PANOCHE 230 #2 : Open Line DS AMIGO 230-PANOCHE 230 #1 :	Q166 -MIDWAY 230.00kV Ckt#1 Sec# 1	976.48	Amps	157.4	157.5	0.1
5	Open Line PANOCHE 230-GATES 230 #1 : Open	Q166 -MIDWAY 230.00kV Ckt#1 Sec# 1	976.48	Amps	157.4	157.5	0.1

	Line PANOCHE 230-GATES 230 #2 :						
lbs-dlo-ns	Los Banos - Gates & Los Banos - Midway 500-kV DLO	Q166 -MIDWAY 230.00kV Ckt#1 Sec# 1	976.48	Amps	145.9	146.0	0.1
67	Open Line GATES 230-MORROBAY 230 #1 : Open Line GATES 230-TEMPLETN 230 #1 :	Q166 -Q194SWST 230.00kV Ckt#1 Sec# 1	976.48	Amps	192.3	192.3	-0.1
82	Open Line GATES 230-PANOCHE 230 #2 : Open Line GATES 230-MORROBAY 230 #1 :	Q166 -Q194SWST 230.00kV Ckt#1 Sec# 1	976.48	Amps	134.6	134.6	0.1
81	Open Line GATES 230-PANOCHE 230 #1 : Open Line GATES 230-TEMPLETN 230 #1 : Open Xfmr GATES 230/GATES 1M 230 #1 :	Q166 -Q194SWST 230.00kV Ckt#1 Sec# 1	976.48	Amps	130.9	130.9	0.1
67	Open Line GATES 230-MORROBAY 230 #1 : Open Line GATES 230-TEMPLETN 230 #1 :	Q166 -Q239SWST 230.00kV Ckt#1 Sec# 1	976.48	Amps	133.9	133.8	0.0
67	Open Line GATES 230-MORROBAY 230 #1 : Open Line GATES 230-TEMPLETN 230 #1 :	Q166 -Q239SWST 230.00kV Ckt#2 Sec# 1	976.48	Amps	133.9	133.8	0.0
67	Open Line GATES 230-MORROBAY 230 #1 : Open Line GATES 230-TEMPLETN 230 #1 :	Q194 -Q194SWST 230.00kV Ckt#1 Sec# 1	483.22	Amps	116.7	116.6	-0.1
82	Open Line GATES 230-PANOCHE 230 #2 : Open Line GATES 230-MORROBAY 230 #1 :	Q194 -Q194SWST 230.00kV Ckt#1 Sec# 1	483.22	Amps	101.5	101.5	0.0
81	Open Line GATES 230-PANOCHE 230 #1 : Open Line GATES 230-TEMPLETN 230 #1 : Open Xfmr GATES 230/GATES 1M 230 #1 :	Q194 -Q194SWST 230.00kV Ckt#1 Sec# 1	483.22	Amps	101.0	100.9	0.0
67	Open Line GATES 230-MORROBAY 230 #1 : Open Line GATES 230-TEMPLETN 230 #1 :	Q194SWST-MIDWAY 230.00kV Ckt#1 Sec# 1	976.48	Amps	243.6	243.6	-0.1
82	Open Line GATES 230-PANOCHE 230 #2 : Open Line GATES 230-MORROBAY 230 #1 :	Q194SWST-MIDWAY 230.00kV Ckt#1 Sec# 1	976.48	Amps	183.3	183.4	0.0
81	Open Line GATES 230-PANOCHE 230 #1 : Open Line GATES 230-TEMPLETN 230 #1 : Open Xfmr GATES 230/GATES 1M 230 #1 :	Q194SWST-MIDWAY 230.00kV Ckt#1 Sec# 1	976.48	Amps	179.6	179.6	0.1
Dblo-Mdwy_dlo	Diablo - Midway #2&#33q21 500-kV DLO	Q194SWST-MIDWAY 230.00kV Ckt#1 Sec# 1	976.48	Amps	162.4	162.5	0.1
13	Open Line STOREY 2 230-BORDEN 230 #1 : Open Line STOREY 2 230-WILSON 230 #1 : Drop Load at STOREY 2 230 #2 : 34.3 MW 6.9 MVAR D : Open Line STOREY 1 230-WILSON 230 #1 : Open Line STOREY 1 230-BORDEN 230 #1 : Drop Load at STOREY 1 230 #1 : 38.3 MW 7.7 MVAR D :	Q194SWST-MIDWAY 230.00kV Ckt#1 Sec# 1	976.48	Amps	160.3	160.5	0.2
19	Open Line PANOCHE 230-COBURN 230 #1 : Open Line PANOCHE 230-LOSBANOS 230 #1 : Open Line PANOCHE 230-LOSBANOS 230 #2 :	Q194SWST-MIDWAY 230.00kV Ckt#1 Sec# 1	976.48	Amps	159.4	159.6	0.2

	Open Line PANOCHE 230-MCMULLN1 230 #1 : Open Line PANOCHE 230-GATES 230 #1 : Open Xfmr PANOCHE 230/PNCHE 1M 230 #1 :							
68	Open Line GATES 230-MIDWAY 230 #1 : Open Line GATES 230-ARCO 230 #1 :	Q194SWST-MIDWAY 230.00kV Ckt#1 Sec# 1	976.48	Amps	158.8	158.9	0.1
7	Open Line LOSBANOS 230-PANOCHE 230 #2 : Open Line DS AMIGO 230-PANOCHE 230 #1 :	Q194SWST-MIDWAY 230.00kV Ckt#1 Sec# 1	976.48	Amps	158.8	158.9	0.1
5	Open Line PANOCHE 230-GATES 230 #1 : Open Line PANOCHE 230-GATES 230 #2 :	Q194SWST-MIDWAY 230.00kV Ckt#1 Sec# 1	976.48	Amps	158.8	158.9	0.1
lbs-dlo-ns	Los Banos - Gates & Los Banos - Midway 500-kV DLO	Q194SWST-MIDWAY 230.00kV Ckt#1 Sec# 1	976.48	Amps	147.3	147.4	0.1
13	Open Line STOREY 2 230-BORDEN 230 #1 : Open Line STOREY 2 230-WILSON 230 #1 : Drop Load at STOREY 2 230 #2 : 34.3 MW 6.9 MVAR D : Open Line STOREY 1 230-WILSON 230 #1 : Open Line STOREY 1 230-BORDEN 230 #1 : Drop Load at STOREY 1 230 #1 : 38.3 MW 7.7 MVAR D :	Q194SWST-Q166 230.00kV Ckt#1 Sec# 1	976.48	Amps	112.1	112.3	0.2
19	Open Line PANOCHE 230-COBURN 230 #1 : Open Line PANOCHE 230-LOSBANOS 230 #1 : Open Line PANOCHE 230-LOSBANOS 230 #2 : Open Line PANOCHE 230-MCMULLN1 230 #1 : Open Line PANOCHE 230-GATES 230 #1 : Open Xfmr PANOCHE 230/PNCHE 1M 230 #1 :	Q194SWST-Q166 230.00kV Ckt#1 Sec# 1	976.48	Amps	111.3	111.5	0.2
68	Open Line GATES 230-MIDWAY 230 #1 : Open Line GATES 230-ARCO 230 #1 :	Q194SWST-Q166 230.00kV Ckt#1 Sec# 1	976.48	Amps	110.8	110.9	0.1
7	Open Line LOSBANOS 230-PANOCHE 230 #2 : Open Line DS AMIGO 230-PANOCHE 230 #1 :	Q194SWST-Q166 230.00kV Ckt#1 Sec# 1	976.48	Amps	110.7	110.9	0.1
5	Open Line PANOCHE 230-GATES 230 #1 : Open Line PANOCHE 230-GATES 230 #2 :	Q194SWST-Q166 230.00kV Ckt#1 Sec# 1	976.48	Amps	110.7	110.8	0.1
18	Open Line LOSBANOS 230-PANOCHE 230 #1 : Open Line LOSBANOS 230-DS AMIGO 230 #1 : Open Xfmr LOSBANOS 230/LOS BANS 70 #4 :	Q194SWST-Q166 230.00kV Ckt#1 Sec# 1	976.48	Amps	110.5	110.6	0.1
6	Open Line LOSBANOS 230-PANOCHE 230 #2 : Open Line LOSBANOS 230-DS AMIGO 230 #1 :	Q194SWST-Q166 230.00kV Ckt#1 Sec# 1	976.48	Amps	110.4	110.5	0.1
17	Open Line LOSBANOS 230-WESTLEY 230 #1 : Open Line LOSBANOS 230-PANOCHE 230 #2 : Open Line LOSBANOS 230-SN LS PP 230 #1 : Open Line LOSBANOS 230-SN LS PP 230 #2 : Open Xfmr LOSBANOS 230/LOS BANS 70 #3 :	Q194SWST-Q166 230.00kV Ckt#1 Sec# 1	976.48	Amps	110.2	110.3	0.1

20	Open Line PANOCHE 230-MOSSLND2 230 #1 : Open Line PANOCHE 230-PANO_EC 230 #1 : Open Line PANOCHE 230-HELM 230 #1 : Open Line PANOCHE 230-GATES 230 #2 : Open Line PANOCHE 230-DS AMIGO 230 #1 : Open Xfmr PANOCHE 230/PANOCHE 115 #2 :	Q194SWST-Q166 230.00kV Ckt#1 Sec# 1	976.48	Amps	110.2	110.3	0.1
67	Open Line GATES 230-MORROBAY 230 #1 : Open Line GATES 230-TEMPLETN 230 #1 :	Q194SWST-Q194 230.00kV Ckt#1 Sec# 1	483.22	Amps	116.7	116.6	-0.1
82	Open Line GATES 230-PANOCHE 230 #2 : Open Line GATES 230-MORROBAY 230 #1 :	Q194SWST-Q194 230.00kV Ckt#1 Sec# 1	483.22	Amps	101.5	101.5	0.0
81	Open Line GATES 230-PANOCHE 230 #1 : Open Line GATES 230-TEMPLETN 230 #1 : Open Xfmr GATES 230/GATES 1M 230 #1 :	Q194SWST-Q194 230.00kV Ckt#1 Sec# 1	483.22	Amps	101.0	100.9	0.0
67	Open Line GATES 230-MORROBAY 230 #1 : Open Line GATES 230-TEMPLETN 230 #1 :	Q238TAP -CARRIZO 115.00kV Ckt#1 Sec# 1	436.78	Amps	177.2	177.1	-0.1
82	Open Line GATES 230-PANOCHE 230 #2 : Open Line GATES 230-MORROBAY 230 #1 :	Q238TAP -CARRIZO 115.00kV Ckt#1 Sec# 1	436.78	Amps	115.8	115.9	0.1
81	Open Line GATES 230-PANOCHE 230 #1 : Open Line GATES 230-TEMPLETN 230 #1 : Open Xfmr GATES 230/GATES 1M 230 #1 :	Q238TAP -CARRIZO 115.00kV Ckt#1 Sec# 1	436.78	Amps	114.2	114.3	0.1
93	Open Line REEDLEY 115-GERAWAN 115 #1 : Open Line REEDLEY 115-PIEDRA 1 115 #1 : Open Xfmr REEDLEY 115/REEDLEY 70 #1 : Open Xfmr REEDLEY 115/REEDLEY 70 #2 : Drop Load at REEDLEY 115 #3 : 26.5 MW 5.3 MVAR Dr :	REEDLEY -PARLIER 70.00kV Ckt#1 Sec# 1	395.9	Amps	145.6	145.5	-0.1
118	Open Line KERMAN 70-AGRCJCT 70 #1 : Drop Load at KERMAN 70 #1 : 19.7 MW 3.9 MVAR Drop : Drop Load at KERMAN 70 #2 : 11.9 MW 2.4 MVAR Drop :	SAN JOQN-SNJQJCT 70.00kV Ckt#1 Sec# 1	395.9	Amps	118.1	118.0	0.0
67	Open Line GATES 230-MORROBAY 230 #1 : Open Line GATES 230-TEMPLETN 230 #1 :	SAN MIGL-COLNGA 1 70.00kV Ckt#1 Sec# 1	346.41	Amps	136.0	135.8	-0.2
52	Open Line SANGER 115-MC CALL 115 #1 : Open Line SANGER 115-MC CALL 115 #2 :	SANGER -MC CALL 115.00kV Ckt#3 Sec# 1	973.96	Amps	123.8	123.7	-0.1
59	Open Line HELM 230-MC CALL 230 #1 : Open Line MC CALL 230-HENTAP2 230 #1 : Open Line HENTAP2 230-GATES 230 #1 :	SANGER -MC CALL 115.00kV Ckt#3 Sec# 1	973.96	Amps	105.9	106.1	0.1
13	Open Line STOREY 2 230-BORDEN 230 #1 : Open Line STOREY 2 230-WILSON 230 #1 : Drop Load at STOREY 2 230 #2 : 34.3 MW 6.9 MVAR D : Open Line	SHARON T-CERTANJ1 115.00kV Ckt#1 Sec# 1	396.61	Amps	139.7	140.7	1.0

	STOREY 1 230-WILSON 230 #1 : Open Line STOREY 1 230-BORDEN 230 #1 : Drop Load at STOREY 1 230 #1 : 38.3 MW 7.7 MVAR D :						
67	Open Line GATES 230-MORROBAY 230 #1 : Open Line GATES 230-TEMPLETN 230 #1 :	SN LS OB-Q238TAP 115.00kV Ckt#1 Sec# 1	436.78	Amps	124.0	124.0	0.0
93	Open Line REEDLEY 115-GERAWAN 115 #1 : Open Line REEDLEY 115-PIEDRA 1 115 #1 : Open Xfmr REEDLEY 115/REEDLEY 70 #1 : Open Xfmr REEDLEY 115/REEDLEY 70 #2 : Drop Load at REEDLEY 115 #3 : 26.5 MW 5.3 MVAR Dr :	SNGRJCT -SANGER 70.00kV Ckt#1 Sec# 1	395.9	Amps	109.4	109.4	0.0
lbs-dlo-ns	Los Banos - Gates & Los Banos - Midway 500-kV DLO	STOREY 1-WILSON 230.00kV Ckt#1 Sec# 1	850.96	Amps	128.4	129.0	0.5
58	Open Line PANOCHE 230-MCMULLN1 230 #1 : Open Line MCMULLN1 230-KEARNEY 230 #1 : Drop Load at MCMULLN1 230 #1 : 20.6 MW 4.1 MVAR D : Open Line HELM 230-MC CALL 230 #1 :	STOREY 1-WILSON 230.00kV Ckt#1 Sec# 1	850.96	Amps	119.8	120.5	0.7
71	Open Line HERNDON 230-GREGG 230 #1 : Open Line HERNDON 230-KEARNEY 230 #1 : Open Xfmr HERNDON 230/HERNDN1M 115 #1 :	STOREY 1-WILSON 230.00kV Ckt#1 Sec# 1	850.96	Amps	119.4	120.0	0.6
lbn-dlo-ns	Los Banos - Tesla & Los Banos - Tracy 500-kV DLO	STOREY 1-WILSON 230.00kV Ckt#1 Sec# 1	850.96	Amps	118.1	118.7	0.6
16	Open Line PANOCHE 230-HELM 230 #1 : Open Line PANOCHE 230-MCMULLN1 230 #1 : Open Line MCMULLN1 230-KEARNEY 230 #1 : Drop Load at MCMULLN1 230 #1 : 20.6 MW 4.1 MVAR D :	STOREY 1-WILSON 230.00kV Ckt#1 Sec# 1	850.96	Amps	117.4	118.2	0.7
57	Open Line PANOCHE 230-MCMULLN1 230 #1 : Open Line MCMULLN1 230-KEARNEY 230 #1 : Drop Load at MCMULLN1 230 #1 : 20.6 MW 4.1 MVAR D : Open Line PANOCHE 230-HELM 230 #1 :	STOREY 1-WILSON 230.00kV Ckt#1 Sec# 1	850.96	Amps	117.4	118.2	0.7
70	Open Line KEARNEY 230-MCMULLN1 230 #1 : Open Line KEARNEY 230-HERNDON 230 #1 : Open Xfmr KEARNEY 230/KEARNEY 70 #2 :	STOREY 1-WILSON 230.00kV Ckt#1 Sec# 1	850.96	Amps	117.1	117.7	0.6
62	Open Line KEARNEY 230-HERNDON 230 #1 : Open Line HERNDON 230-FGRDN T1 230 #1 : Open Line FGRDN T1 230-FIGRDN 1 230 #1 : Open Line FGRDN T1 230-ASHLAN 230 #1 : Drop Load at FIGRDN 1 230 #1 : 74.3 MW 15 MVAR Dr : Close Line FIGRDN 1 230-FIGRDN 2 230 #1 :	STOREY 1-WILSON 230.00kV Ckt#1 Sec# 1	850.96	Amps	116.5	117.1	0.6
59	Open Line HELM 230-MC CALL 230 #1 : Open Line MC CALL 230-HENTAP2 230 #1 : Open Line	STOREY 1-WILSON 230.00kV Ckt#1 Sec# 1	850.96	Amps	116.4	117.0	0.5

	HENTAP2 230-GATES 230 #1 :						
75	Open Line ASHLAN 230-FGRDN T1 230 #1 : Open Line ASHLAN 230-FGRDN T2 230 #1 : Drop Load at ASHLAN 230 #1 : 70 MW 13.5 MVAR Drop : Drop Load at ASHLAN 230 #2 : 65.3 MW 12.9 MVAR Dr : Drop Load at ASHLAN 230 #3 : 66.3 MW 12.6 MVAR Dr :	STOREY 1-WILSON 230.00kV Ckt#1 Sec# 1	850.96	Amps	115.1	115.8	0.7
47	Open Line PNDLJ1 115-BULLARD 115 #1 : Open Line PNDLJ1 115-HERNDON 115 #1 : Open Line PNDLJ2 115-PNEDLE 115 #1 : Open Line PNDLJ2 115-BULLARD 115 #1 : Open Line PNDLJ2 115-HERNDON 115 #1 : Drop Load at PNEDLE 115 #2 : 31.1 MW 6.3 MVAR Dro : Drop Load at PNEDLE 115 #3 : 40.9 MW 8.2 MVAR Dro : Close Line PNDLJ1 115-PNEDLE 115 #1 :	STOREY 1-WILSON 230.00kV Ckt#1 Sec# 1	850.96	Amps	114.0	114.7	0.7
19	Open Line PANOCHE 230-COBURN 230 #1 : Open Line PANOCHE 230-LOSBANOS 230 #1 : Open Line PANOCHE 230-LOSBANOS 230 #2 : Open Line PANOCHE 230-MCMULLN1 230 #1 : Open Line PANOCHE 230-GATES 230 #1 : Open Xfmr PANOCHE 230/PNCHE 1M 230 #1 :	STOREY 1-WILSON 230.00kV Ckt#1 Sec# 1	850.96	Amps	113.6	114.4	0.8
17	Open Line LOSBANOS 230-WESTLEY 230 #1 : Open Line LOSBANOS 230-PANOCHE 230 #2 : Open Line LOSBANOS 230-SN LS PP 230 #1 : Open Line LOSBANOS 230-SN LS PP 230 #2 : Open Xfmr LOSBANOS 230/LOS BANS 70 #3 :	STOREY 1-WILSON 230.00kV Ckt#1 Sec# 1	850.96	Amps	113.2	113.9	0.8
104	Open Line BULLARD 115-PNDLJ2 115 #1 : Open Line BULLARD 115-PNDLJ1 115 #1 : Drop Load at BULLARD 115 #1 : 45.4 MW 9.2 MVAR Dr : Drop Load at BULLARD 115 #2 : 45.2 MW 9.1 MVAR Dr : Drop Load at BULLARD 115 #3 : 43 MW 8.7 MVAR Drop :	STOREY 1-WILSON 230.00kV Ckt#1 Sec# 1	850.96	Amps	110.6	111.3	0.7
41	Open Line BORDEN 70-MADERA 70 #1 : Open Line BORDEN 70-MADERA 70 #2 : Open Line BORDEN 70-GLASS 70 #1 : Open Line BORDEN 70-CASSIDY 70 #1 : Open Xfmr BORDEN 70/BORDEN 230 #1 : Open Xfmr BORDEN 70/BORDEN 230 #2 :	STOREY 1-WILSON 230.00kV Ckt#1 Sec# 1	850.96	Amps	110.8	111.2	0.4
7	Open Line LOSBANOS 230-PANOCHE 230 #2 : Open Line DS AMIGO 230-PANOCHE 230 #1 :	STOREY 1-WILSON 230.00kV Ckt#1 Sec# 1	850.96	Amps	109.6	110.1	0.5

103	Open Line WOODWARD 115-WWARD JT 115 #1 : Open Line WOODWARD 115-CHLDHOSP 115 #1 : Drop Load at WOODWARD 115 #1 : 42.7 MW 8.6 MVAR D : Drop Load at WOODWARD 115 #2 : 53.3 MW 10.8 MVAR : Drop Load at WOODWARD 115 #3 : 44.6 MW 9 MVAR Dro :	STOREY 1-WILSON 230.00kV Ckt#1 Sec# 1	850.96	Amps	109.3	110.0	0.7
24	Open Line LE GRAND 115-CERTAN T 115 #1 : Open Line LE GRAND 115-EXCHEQUR 115 #1 : Open Line LE GRAND 115-WILSON A 115 #1 : Open Line LE GRAND 115-DAIRYLND 115 #1 : Drop Load at LE GRAND 115 #1 : 13.6 MW 2.7 MVAR D :	STOREY 1-WILSON 230.00kV Ckt#1 Sec# 1	850.96	Amps	109.1	109.6	0.5
76	Open Line HELM 230-PANOCHE 230 #1 : Open Line HELM 230-MC CALL 230 #1 : Open Xfmr HELM 230/HELM 70 #1 :	STOREY 1-WILSON 230.00kV Ckt#1 Sec# 1	850.96	Amps	109.0	109.6	0.5
18	Open Line LOSBANOS 230-PANOCHE 230 #1 : Open Line LOSBANOS 230-DS AMIGO 230 #1 : Open Xfmr LOSBANOS 230/LOS BANS 70 #4 :	STOREY 1-WILSON 230.00kV Ckt#1 Sec# 1	850.96	Amps	109.0	109.5	0.5
54	Open Line WST FRSO 115-MC CALL 115 #1 : Open Line DANISHCM 115-MC CALL 115 #1 : Open Line DANISHCM 115-CAL AVE 115 #1 : Drop Load at DANISHCM 115 #1 : 4.1 MW 3.5 MVAR Dr :	STOREY 1-WILSON 230.00kV Ckt#1 Sec# 1	850.96	Amps	108.8	109.4	0.6
6	Open Line LOSBANOS 230-PANOCHE 230 #2 : Open Line LOSBANOS 230-DS AMIGO 230 #1 :	STOREY 1-WILSON 230.00kV Ckt#1 Sec# 1	850.96	Amps	108.6	109.2	0.5
73	Open Line FIGRDN 1 230-FGRDN T1 230 #1 : Drop Load at FIGRDN 1 230 #1 : 74.3 MW 15 MVAR Dr :	STOREY 1-WILSON 230.00kV Ckt#1 Sec# 1	850.96	Amps	108.3	109.0	0.6
117	Open Line KEARNEY 70-FRWWTAP 70 #1 : Open Line KEARNEY 70-OLDKERN 70 #1 : Open Line KEARNEY 70-CARUTHRS 70 #1 : Open Xfmr KEARNEY 70/KEARNEY 230 #2 :	STOREY 1-WILSON 230.00kV Ckt#1 Sec# 1	850.96	Amps	108.4	108.8	0.5
25	Open Line WILSON A 115-LE GRAND 115 #1 : Open Line WILSON A 115-ATWATER 115 #1 : Open Line WILSON A 115-WILSON B 115 #1 : Open Line WILSON A 115-MERCED 115 #1 : Open Xfmr WILSON A 115/WILSON 230 #1 : Drop Load at WILSON A 115 #3 : 18.9 MW 3.8 MVAR D :	STOREY 1-WILSON 230.00kV Ckt#1 Sec# 1	850.96	Amps	108.0	108.7	0.7
23	Open Line EXCHEQUR 115-LE GRAND 115 #1 : Open Xfmr EXCHEQUR 115/EXCHQRTP 115 #1 :	STOREY 1-WILSON 230.00kV Ckt#1 Sec# 1	850.96	Amps	108.2	108.7	0.5
98	Open Line BARTON 115-AIRWAYJ2 115 #1 : Open Line BARTON 115-HERNDON 115 #1 : Drop Load	STOREY 1-WILSON 230.00kV Ckt#1 Sec# 1	850.96	Amps	107.9	108.5	0.6

	at BARTON 115 #1 : 43.8 MW 8.8 MVAR Dro : Drop Load at BARTON 115 #2 : 37.6 MW 7.6 MVAR Dro : Drop Load at BARTON 115 #3 : 27.3 MW 5.5 MVAR Dro :							
83	Open Line GATES 230-HENTAP1 230 #1 : Open Line GATES 230-ARCO 230 #1 :	STOREY 1-WILSON 230.00kV Ckt#1 Sec# 1	850.96	Amps	107.1	108.5	1.4
102	Open Line PNEDLE 115-PNDLJ2 115 #1 : Drop Load at PNEDLE 115 #2 : 31.1 MW 6.3 MVAR Dro : Drop Load at PNEDLE 115 #3 : 40.9 MW 8.2 MVAR Dro :	STOREY 1-WILSON 230.00kV Ckt#1 Sec# 1	850.96	Amps	107.9	108.4	0.5
101	Open Line HERNDON 115-MANCHSTR 115 #1 : Open Line HERNDON 115-PNDLJ1 115 #1 : Open Line HERNDON 115-CHLDHOSP 115 #1 :	STOREY 1-WILSON 230.00kV Ckt#1 Sec# 1	850.96	Amps	107.9	108.4	0.5
99	Open Line MANCHSTR 115-AIRWAYJ1 115 #1 : Open Line MANCHSTR 115-HERNDON 115 #1 : Drop Load at MANCHSTR 115 #1 : 25.6 MW 5.1 MVAR D : Drop Load at MANCHSTR 115 #2 : 25.8 MW 5.2 MVAR D : Drop Load at MANCHSTR 115 #3 : 36.6 MW 7.4 MVAR D :	STOREY 1-WILSON 230.00kV Ckt#1 Sec# 1	850.96	Amps	107.6	108.2	0.6
30	Open Line PANOCHE 115-CHENYT 115 #1 : Open Line PANOCHE 115-PANOCHEJ 115 #1 : Open Xfmr PANOCHE 115/PANOCHE 230 #2 : Open Xfmr PANOCHE 115/DG_PAN1 13.8 #1 :	STOREY 1-WILSON 230.00kV Ckt#1 Sec# 1	850.96	Amps	107.7	108.2	0.5
74	Open Line FIGRDN 2 230-FGRDN T2 230 #1 : Drop Load at FIGRDN 2 230 #1 : 53.2 MW 10.7 MVAR :	STOREY 1-WILSON 230.00kV Ckt#1 Sec# 1	850.96	Amps	107.3	107.8	0.5
15	Open Line MOSSLND2 230-PANOCHE 230 #1 : Open Line COBURN 230-PANOCHE 230 #1 :	STOREY 1-WILSON 230.00kV Ckt#1 Sec# 1	850.96	Amps	107.1	107.7	0.7
89	Open Line CLOVIS-2 115-CLOVISJ2 115 #1 : Drop Load at CLOVIS-2 115 #3 : 45.3 MW 9.1 MVAR D :	STOREY 1-WILSON 230.00kV Ckt#1 Sec# 1	850.96	Amps	107.0	107.6	0.6
40	Open Line MADERA 70-TRIGO 70 #1 : Open Line MADERA 70-BORDEN 70 #1 : Open Line MADERA 70-BORDEN 70 #2 : Drop Load at MADERA 70 #1 : 18.2 MW 3.7 MVAR Drop : Drop Load at MADERA 70 #2 : 23.4 MW 4.7 MVAR Drop :	STOREY 1-WILSON 230.00kV Ckt#1 Sec# 1	850.96	Amps	106.9	107.4	0.5
84	Open Line GATES 230-HENTAP2 230 #1 : Open Line GATES 230-MIDWAY 230 #1 :	STOREY 1-WILSON 230.00kV Ckt#1 Sec# 1	850.96	Amps	106.8	107.3	0.5
96	Open Line CAL AVE 115-DANISHCM 115 #1 : Open Line CAL AVE 115-WST FRSO 115 #1 : Drop Load at CAL AVE 115 #1 : 29.3 MW 5.9 MVAR Dr : Drop Load at CAL AVE 115 #2 : 31.6 MW 6.4 MVAR Dr : Drop Load at CAL AVE 115 #3 : 24.7 MW 5 MVAR Drop :	STOREY 1-WILSON 230.00kV Ckt#1 Sec# 1	850.96	Amps	106.6	107.3	0.7

86	Open Line KERCKHF2 115-K1-JCT 115 #2 : Open Line KERCKHF2 115-KERCKHF1 115 #1 : Open Line KERCKHF2 115-WWARD JT 115 #1 : Open Line KERCKHF2 115-CLOVISJ2 115 #1 : Open Xfmr KERCKHF2 115/KERCKHOF 13.8 #1 :	STOREY 1-WILSON 230.00kV Ckt#1 Sec# 1	850.96	Amps	106.7	107.2	0.5
53	Open Line WST FRSO 115-MC CALL 115 #1 : Open Line CAL AVE 115-WST FRSO 115 #1 :	STOREY 1-WILSON 230.00kV Ckt#1 Sec# 1	850.96	Amps	106.4	107.0	0.6
97	Open Line WST FRSO 115-MC CALL 115 #1 : Open Line WST FRSO 115-CAL AVE 115 #1 : Drop Load at WST FRSO 115 #1 : 38 MW 7.7 MVAR Dro : Drop Load at WST FRSO 115 #2 : 39.5 MW 8 MVAR Dro :	STOREY 1-WILSON 230.00kV Ckt#1 Sec# 1	850.96	Amps	106.4	107.0	0.6
72	Open Line HERNDON 230-GREGG 230 #2 : Open Line HERNDON 230-FGRDN T1 230 #1 : Open Xfmr HERNDON 230/HERNDN2M 115 #2 :	STOREY 1-WILSON 230.00kV Ckt#1 Sec# 1	850.96	Amps	106.4	106.9	0.5
100	Open Line HERNDON 115-BARTON 115 #1 : Open Line HERNDON 115-PNDLJ2 115 #1 : Open Xfmr HERNDON 115/HERNDN1M 115 #1 :	STOREY 1-WILSON 230.00kV Ckt#1 Sec# 1	850.96	Amps	106.4	106.9	0.5
87	Open Line AIRWAYS 115-AIRWAYJ1 115 #1 : Open Line AIRWAYS 115-AIRWAYJ2 115 #1 : Drop Load at AIRWAYS 115 #1 : 38.8 MW 7.5 MVAR Dr : Drop Load at AIRWAYS 115 #2 : 12.7 MW 2.5 MVAR Dr :	STOREY 1-WILSON 230.00kV Ckt#1 Sec# 1	850.96	Amps	106.3	106.8	0.5
45	Open Line BARTON 115-HERNDON 115 #1 : Open Line MANCHSTR 115-HERNDON 115 #1 :	STOREY 1-WILSON 230.00kV Ckt#1 Sec# 1	850.96	Amps	106.2	106.7	0.5
106	Open Line KINGSBRG 115-CORCORAN 115 #1 : Open Line KINGSBRG 115-GAURD J1 115 #1 : Open Xfmr KINGSBRG 115/KNGLOBUS 70 #2 : Drop Load at KINGSBRG 115 #3 : 33 MW 6.6 MVAR Dro :	STOREY 1-WILSON 230.00kV Ckt#1 Sec# 1	850.96	Amps	106.1	106.6	0.5
88	Open Line CLOVIS-1 115-CLOVISJ1 115 #1 : Drop Load at CLOVIS-1 115 #1 : 51.6 MW 10.4 MVAR :	STOREY 1-WILSON 230.00kV Ckt#1 Sec# 1	850.96	Amps	106.1	106.6	0.5
20	Open Line PANOCHE 230-MOSSLND2 230 #1 : Open Line PANOCHE 230-PANO_EC 230 #1 : Open Line PANOCHE 230-HELM 230 #1 : Open Line PANOCHE 230-GATES 230 #2 : Open Line PANOCHE 230-DS AMIGO 230 #1 : Open Xfmr PANOCHE 230/PANOCHE 115 #2 :	STOREY 1-WILSON 230.00kV Ckt#1 Sec# 1	850.96	Amps	106.0	106.5	0.5
121	Open Line REEDLEY 70-TVY VLLY 70 #1 : Open Line REEDLEY 70-PARLIER 70 #1 : Open Line REEDLEY 70-DNUBAJCT 70 #1 : Open Line REEDLEY 70-ORSI JCT 70 #1 : Open Xfmr	STOREY 1-WILSON 230.00kV Ckt#1 Sec# 1	850.96	Amps	105.8	106.3	0.5

	REEDLEY 70/REEDLEY 115 #1 : Open Xfmr REEDLEY 70/REEDLEY 115 #2 : Drop Load at REEDLEY 70 #1 : 17.6 MW 3.5 MVAR Dro :						
124	Open Line LEMOORE 70-LPRNO TP 70 #1 : Drop Load at LEMOORE 70 #1 : 19.1 MW 3.8 MVAR Dro : Drop Load at LEMOORE 70 #2 : 33.2 MW 6.7 MVAR Dro :	STOREY 1-WILSON 230.00kV Ckt#1 Sec# 1	850.96	Amps	105.7	106.2	0.5
49	Open Line KINGSBRG 115-CORCORAN 115 #1 : Open Line KINGSBRG 115-CORCORAN 115 #2 :	STOREY 1-WILSON 230.00kV Ckt#1 Sec# 1	850.96	Amps	105.6	106.1	0.5
107	Open Line CORCORAN 115-KINGSBRG 115 #1 : Open Line CORCORAN 115-KINGSBRG 115 #2 : Open Xfmr CORCORAN 115/CORCORAN 70 #2 : Drop Load at CORCORAN 115 #3 : 16.4 MW 3.3 MVAR D : Drop Load at CORCORAN 115 #4 : 18 MW 3.6 MVAR Dro :	STOREY 1-WILSON 230.00kV Ckt#1 Sec# 1	850.96	Amps	105.6	106.1	0.5
lbs-dlo-ns	Los Banos - Gates & Los Banos - Midway 500-kV DLO	STOREY 2-BORDEN 230.00kV Ckt#1 Sec# 1	793.23	Amps	128.2	128.7	0.5
58	Open Line PANOCHE 230-MCMULLN1 230 #1 : Open Line MCMULLN1 230-KEARNEY 230 #1 : Drop Load at MCMULLN1 230 #1 : 20.6 MW 4.1 MVAR D : Open Line HELM 230-MC CALL 230 #1 :	STOREY 2-BORDEN 230.00kV Ckt#1 Sec# 1	793.23	Amps	120.2	120.9	0.7
71	Open Line HERNDON 230-GREGG 230 #1 : Open Line HERNDON 230-KEARNEY 230 #1 : Open Xfmr HERNDON 230/HERNDN1M 115 #1 :	STOREY 2-BORDEN 230.00kV Ckt#1 Sec# 1	793.23	Amps	119.8	120.4	0.6
lbn-dlo-ns	Los Banos - Tesla & Los Banos - Tracy 500-kV DLO	STOREY 2-BORDEN 230.00kV Ckt#1 Sec# 1	793.23	Amps	118.7	119.2	0.5
16	Open Line PANOCHE 230-HELM 230 #1 : Open Line PANOCHE 230-MCMULLN1 230 #1 : Open Line MCMULLN1 230-KEARNEY 230 #1 : Drop Load at MCMULLN1 230 #1 : 20.6 MW 4.1 MVAR D :	STOREY 2-BORDEN 230.00kV Ckt#1 Sec# 1	793.23	Amps	118.0	118.7	0.7
57	Open Line PANOCHE 230-MCMULLN1 230 #1 : Open Line MCMULLN1 230-KEARNEY 230 #1 : Drop Load at MCMULLN1 230 #1 : 20.6 MW 4.1 MVAR D : Open Line PANOCHE 230-HELM 230 #1 :	STOREY 2-BORDEN 230.00kV Ckt#1 Sec# 1	793.23	Amps	118.0	118.7	0.7
70	Open Line KEARNEY 230-MCMULLN1 230 #1 : Open Line KEARNEY 230-HERNDON 230 #1 : Open Xfmr KEARNEY 230/KEARNEY 70 #2 :	STOREY 2-BORDEN 230.00kV Ckt#1 Sec# 1	793.23	Amps	117.7	118.2	0.5
62	Open Line KEARNEY 230-HERNDON 230 #1 : Open Line HERNDON 230-FGRDN T1 230 #1 : Open Line FGRDN T1 230-FIGRDN 1 230 #1 : Open Line FGRDN T1 230-ASHLAN 230 #1 : Drop Load at FIGRDN 1 230 #1 : 74.3 MW 15 MVAR Dr : Close Line	STOREY 2-BORDEN 230.00kV Ckt#1 Sec# 1	793.23	Amps	117.1	117.7	0.6

	FIGRDN 1 230-FIGRDN 2 230 #1 :						
59	Open Line HELM 230-MC CALL 230 #1 : Open Line MC CALL 230-HENTAP2 230 #1 : Open Line HENTAP2 230-GATES 230 #1 :	STOREY 2-BORDEN 230.00kV Ckt#1 Sec# 1	793.23	Amps	117.1	117.6	0.5
75	Open Line ASHLAN 230-FGRDN T1 230 #1 : Open Line ASHLAN 230-FGRDN T2 230 #1 : Drop Load at ASHLAN 230 #1 : 70 MW 13.5 MVAR Drop : Drop Load at ASHLAN 230 #2 : 65.3 MW 12.9 MVAR Dr : Drop Load at ASHLAN 230 #3 : 66.3 MW 12.6 MVAR Dr :	STOREY 2-BORDEN 230.00kV Ckt#1 Sec# 1	793.23	Amps	115.9	116.5	0.6
47	Open Line PNDLJ1 115-BULLARD 115 #1 : Open Line PNDLJ1 115-HERNDON 115 #1 : Open Line PNDLJ2 115-PNEDLE 115 #1 : Open Line PNDLJ2 115-BULLARD 115 #1 : Open Line PNDLJ2 115-HERNDON 115 #1 : Drop Load at PNEDLE 115 #2 : 31.1 MW 6.3 MVAR Dro : Drop Load at PNEDLE 115 #3 : 40.9 MW 8.2 MVAR Dro : Close Line PNDLJ1 115-PNEDLE 115 #1 :	STOREY 2-BORDEN 230.00kV Ckt#1 Sec# 1	793.23	Amps	114.8	115.5	0.6
19	Open Line PANOCHE 230-COBURN 230 #1 : Open Line PANOCHE 230-LOSBANOS 230 #1 : Open Line PANOCHE 230-LOSBANOS 230 #2 : Open Line PANOCHE 230-MCMULLN1 230 #1 : Open Line PANOCHE 230-GATES 230 #1 : Open Xfmr PANOCHE 230/PNCHE 1M 230 #1 :	STOREY 2-BORDEN 230.00kV Ckt#1 Sec# 1	793.23	Amps	114.5	115.3	0.7
17	Open Line LOSBANOS 230-WESTLEY 230 #1 : Open Line LOSBANOS 230-PANOCHE 230 #2 : Open Line LOSBANOS 230-SN LS PP 230 #1 : Open Line LOSBANOS 230-SN LS PP 230 #2 : Open Xfmr LOSBANOS 230/LOS BANS 70 #3 :	STOREY 2-BORDEN 230.00kV Ckt#1 Sec# 1	793.23	Amps	114.2	114.9	0.7
41	Open Line BORDEN 70-MADERA 70 #1 : Open Line BORDEN 70-MADERA 70 #2 : Open Line BORDEN 70-GLASS 70 #1 : Open Line BORDEN 70-CASSIDY 70 #1 : Open Xfmr BORDEN 70/BORDEN 230 #1 : Open Xfmr BORDEN 70/BORDEN 230 #2 :	STOREY 2-BORDEN 230.00kV Ckt#1 Sec# 1	793.23	Amps	112.0	112.4	0.5
104	Open Line BULLARD 115-PNDLJ2 115 #1 : Open Line BULLARD 115-PNDLJ1 115 #1 : Drop Load at BULLARD 115 #1 : 45.4 MW 9.2 MVAR Dr : Drop Load at BULLARD 115 #2 : 45.2 MW 9.1 MVAR Dr : Drop Load at BULLARD 115 #3 : 43 MW 8.7 MVAR Drop :	STOREY 2-BORDEN 230.00kV Ckt#1 Sec# 1	793.23	Amps	111.8	112.4	0.6

7	Open Line LOSBANOS 230-PANOCHE 230 #2 : Open Line DS AMIGO 230-PANOCHE 230 #1 :	STOREY 2-BORDEN 230.00kV Ckt#1 Sec# 1	793.23	Amps	110.9	111.4	0.5
103	Open Line WOODWARD 115-WWARD JT 115 #1 : Open Line WOODWARD 115-CHLDHOSP 115 #1 : Drop Load at WOODWARD 115 #1 : 42.7 MW 8.6 MVAR D : Drop Load at WOODWARD 115 #2 : 53.3 MW 10.8 MVAR : Drop Load at WOODWARD 115 #3 : 44.6 MW 9 MVAR Dro :	STOREY 2-BORDEN 230.00kV Ckt#1 Sec# 1	793.23	Amps	110.6	111.2	0.6
24	Open Line LE GRAND 115-CERTAN T 115 #1 : Open Line LE GRAND 115-EXCHEQUR 115 #1 : Open Line LE GRAND 115-WILSON A 115 #1 : Open Line LE GRAND 115-DAIRYLND 115 #1 : Drop Load at LE GRAND 115 #1 : 13.6 MW 2.7 MVAR D :	STOREY 2-BORDEN 230.00kV Ckt#1 Sec# 1	793.23	Amps	110.4	110.9	0.4
76	Open Line HELM 230-PANOCHE 230 #1 : Open Line HELM 230-MC CALL 230 #1 : Open Xfmr HELM 230/HELM 70 #1 :	STOREY 2-BORDEN 230.00kV Ckt#1 Sec# 1	793.23	Amps	110.4	110.8	0.5
18	Open Line LOSBANOS 230-PANOCHE 230 #1 : Open Line LOSBANOS 230-DS AMIGO 230 #1 : Open Xfmr LOSBANOS 230/LOS BANS 70 #4 :	STOREY 2-BORDEN 230.00kV Ckt#1 Sec# 1	793.23	Amps	110.3	110.8	0.5
54	Open Line WST FRSO 115-MC CALL 115 #1 : Open Line DANISHCM 115-MC CALL 115 #1 : Open Line DANISHCM 115-CAL AVE 115 #1 : Drop Load at DANISHCM 115 #1 : 4.1 MW 3.5 MVAR Dr :	STOREY 2-BORDEN 230.00kV Ckt#1 Sec# 1	793.23	Amps	110.1	110.7	0.6
6	Open Line LOSBANOS 230-PANOCHE 230 #2 : Open Line LOSBANOS 230-DS AMIGO 230 #1 :	STOREY 2-BORDEN 230.00kV Ckt#1 Sec# 1	793.23	Amps	110.0	110.5	0.5
73	Open Line FIGRDN 1 230-FGRDN T1 230 #1 : Drop Load at FIGRDN 1 230 #1 : 74.3 MW 15 MVAR Dr :	STOREY 2-BORDEN 230.00kV Ckt#1 Sec# 1	793.23	Amps	109.7	110.3	0.6
25	Open Line WILSON A 115-LE GRAND 115 #1 : Open Line WILSON A 115-ATWATER 115 #1 : Open Line WILSON A 115-WILSON B 115 #1 : Open Line WILSON A 115-MERCED 115 #1 : Open Xfmr WILSON A 115/WILSON 230 #1 : Drop Load at WILSON A 115 #3 : 18.9 MW 3.8 MVAR D :	STOREY 2-BORDEN 230.00kV Ckt#1 Sec# 1	793.23	Amps	109.5	110.2	0.6
117	Open Line KEARNEY 70-FRWWTAP 70 #1 : Open Line KEARNEY 70-OLDKERN 70 #1 : Open Line KEARNEY 70-CARUTHRS 70 #1 : Open Xfmr KEARNEY 70/KEARNEY 230 #2 :	STOREY 2-BORDEN 230.00kV Ckt#1 Sec# 1	793.23	Amps	109.7	110.1	0.4
23	Open Line EXCHEQUR 115-LE GRAND 115 #1 : Open Xfmr EXCHEQUR 115/EXCHQRTP 115 #1 :	STOREY 2-BORDEN 230.00kV Ckt#1 Sec# 1	793.23	Amps	109.6	110.0	0.4

98	Open Line BARTON 115-AIRWAYJ2 115 #1 : Open Line BARTON 115-HERNDON 115 #1 : Drop Load at BARTON 115 #1 : 43.8 MW 8.8 MVAR Dro : Drop Load at BARTON 115 #2 : 37.6 MW 7.6 MVAR Dro : Drop Load at BARTON 115 #3 : 27.3 MW 5.5 MVAR Dro :	STOREY 2-BORDEN 230.00kV Ckt#1 Sec# 1	793.23	Amps	109.3	109.9	0.6
83	Open Line GATES 230-HENTAP1 230 #1 : Open Line GATES 230-ARCO 230 #1 :	STOREY 2-BORDEN 230.00kV Ckt#1 Sec# 1	793.23	Amps	108.5	109.8	1.3
102	Open Line PNEDLE 115-PNDLJ2 115 #1 : Drop Load at PNEDLE 115 #2 : 31.1 MW 6.3 MVAR Dro : Drop Load at PNEDLE 115 #3 : 40.9 MW 8.2 MVAR Dro :	STOREY 2-BORDEN 230.00kV Ckt#1 Sec# 1	793.23	Amps	109.3	109.7	0.4
101	Open Line HERNDON 115-MANCHSTR 115 #1 : Open Line HERNDON 115-PNDLJ1 115 #1 : Open Line HERNDON 115-CHLDHOSP 115 #1 :	STOREY 2-BORDEN 230.00kV Ckt#1 Sec# 1	793.23	Amps	109.3	109.7	0.5
30	Open Line PANOCHE 115-CHENYT 115 #1 : Open Line PANOCHE 115-PANOCHEJ 115 #1 : Open Xfmr PANOCHE 115/PANOCHE 230 #2 : Open Xfmr PANOCHE 115/DG_PAN1 13.8 #1 :	STOREY 2-BORDEN 230.00kV Ckt#1 Sec# 1	793.23	Amps	109.1	109.6	0.4
99	Open Line MANCHSTR 115-AIRWAYJ1 115 #1 : Open Line MANCHSTR 115-HERNDON 115 #1 : Drop Load at MANCHSTR 115 #1 : 25.6 MW 5.1 MVAR D : Drop Load at MANCHSTR 115 #2 : 25.8 MW 5.2 MVAR D : Drop Load at MANCHSTR 115 #3 : 36.6 MW 7.4 MVAR D :	STOREY 2-BORDEN 230.00kV Ckt#1 Sec# 1	793.23	Amps	109.0	109.6	0.6
74	Open Line FIGRDN 2 230-FGRDN T2 230 #1 : Drop Load at FIGRDN 2 230 #1 : 53.2 MW 10.7 MVAR :	STOREY 2-BORDEN 230.00kV Ckt#1 Sec# 1	793.23	Amps	108.7	109.2	0.5
15	Open Line MOSSLND2 230-PANOCHE 230 #1 : Open Line COBURN 230-PANOCHE 230 #1 :	STOREY 2-BORDEN 230.00kV Ckt#1 Sec# 1	793.23	Amps	108.5	109.2	0.6
89	Open Line CLOVIS-2 115-CLOVISJ2 115 #1 : Drop Load at CLOVIS-2 115 #3 : 45.3 MW 9.1 MVAR D :	STOREY 2-BORDEN 230.00kV Ckt#1 Sec# 1	793.23	Amps	108.5	109.0	0.6
40	Open Line MADERA 70-TRIGO 70 #1 : Open Line MADERA 70-BORDEN 70 #1 : Open Line MADERA 70-BORDEN 70 #2 : Drop Load at MADERA 70 #1 : 18.2 MW 3.7 MVAR Drop : Drop Load at MADERA 70 #2 : 23.4 MW 4.7 MVAR Drop :	STOREY 2-BORDEN 230.00kV Ckt#1 Sec# 1	793.23	Amps	108.4	108.8	0.4
84	Open Line GATES 230-HENTAP2 230 #1 : Open Line GATES 230-MIDWAY 230 #1 :	STOREY 2-BORDEN 230.00kV Ckt#1 Sec# 1	793.23	Amps	108.3	108.8	0.4
96	Open Line CAL AVE 115-DANISHCM 115 #1 : Open Line CAL AVE 115-WST FRSO 115 #1 : Drop Load at CAL AVE 115 #1 : 29.3 MW 5.9 MVAR Dr : Drop	STOREY 2-BORDEN 230.00kV Ckt#1 Sec# 1	793.23	Amps	108.1	108.7	0.6

	Load at CAL AVE 115 #2 : 31.6 MW 6.4 MVAR Dr : Drop Load at CAL AVE 115 #3 : 24.7 MW 5 MVAR Drop :							
86	Open Line KERCKHF2 115-K1-JCT 115 #2 : Open Line KERCKHF2 115-KERCKHF1 115 #1 : Open Line KERCKHF2 115-WWARD JT 115 #1 : Open Line KERCKHF2 115-CLOVISJ2 115 #1 : Open Xfmr KERCKHF2 115/KERCKHOF 13.8 #1 :	STOREY 2-BORDEN 230.00kV Ckt#1 Sec# 1	793.23	Amps	108.2	108.7	0.5
53	Open Line WST FRSO 115-MC CALL 115 #1 : Open Line CAL AVE 115-WST FRSO 115 #1 :	STOREY 2-BORDEN 230.00kV Ckt#1 Sec# 1	793.23	Amps	107.9	108.5	0.6
97	Open Line WST FRSO 115-MC CALL 115 #1 : Open Line WST FRSO 115-CAL AVE 115 #1 : Drop Load at WST FRSO 115 #1 : 38 MW 7.7 MVAR Dro : Drop Load at WST FRSO 115 #2 : 39.5 MW 8 MVAR Dro :	STOREY 2-BORDEN 230.00kV Ckt#1 Sec# 1	793.23	Amps	107.9	108.5	0.6
72	Open Line HERNDON 230-GREGG 230 #2 : Open Line HERNDON 230-FGRDN T1 230 #1 : Open Xfmr HERNDON 230/HERNDN2M 115 #2 :	STOREY 2-BORDEN 230.00kV Ckt#1 Sec# 1	793.23	Amps	108.0	108.4	0.4
100	Open Line HERNDON 115-BARTON 115 #1 : Open Line HERNDON 115-PNDLJ2 115 #1 : Open Xfmr HERNDON 115/HERNDN1M 115 #1 :	STOREY 2-BORDEN 230.00kV Ckt#1 Sec# 1	793.23	Amps	107.9	108.4	0.5
87	Open Line AIRWAYS 115-AIRWAYJ1 115 #1 : Open Line AIRWAYS 115-AIRWAYJ2 115 #1 : Drop Load at AIRWAYS 115 #1 : 38.8 MW 7.5 MVAR Dr : Drop Load at AIRWAYS 115 #2 : 12.7 MW 2.5 MVAR Dr :	STOREY 2-BORDEN 230.00kV Ckt#1 Sec# 1	793.23	Amps	107.8	108.2	0.4
45	Open Line BARTON 115-HERNDON 115 #1 : Open Line MANCHSTR 115-HERNDON 115 #1 :	STOREY 2-BORDEN 230.00kV Ckt#1 Sec# 1	793.23	Amps	107.8	108.2	0.4
106	Open Line KINGSBRG 115-CORCORAN 115 #1 : Open Line KINGSBRG 115-GAURD J1 115 #1 : Open Xfmr KINGSBRG 115/KNGLOBUS 70 #2 : Drop Load at KINGSBRG 115 #3 : 33 MW 6.6 MVAR Dro :	STOREY 2-BORDEN 230.00kV Ckt#1 Sec# 1	793.23	Amps	107.7	108.1	0.5
88	Open Line CLOVIS-1 115-CLOVISJ1 115 #1 : Drop Load at CLOVIS-1 115 #1 : 51.6 MW 10.4 MVAR :	STOREY 2-BORDEN 230.00kV Ckt#1 Sec# 1	793.23	Amps	107.6	108.1	0.4
20	Open Line PANOCHE 230-MOSSLND2 230 #1 : Open Line PANOCHE 230-PANO_EC 230 #1 : Open Line PANOCHE 230-HELM 230 #1 : Open Line PANOCHE 230-GATES 230 #2 : Open Line PANOCHE 230-DS AMIGO 230 #1 : Open Xfmr PANOCHE 230/PANOCHE 115 #2 :	STOREY 2-BORDEN 230.00kV Ckt#1 Sec# 1	793.23	Amps	107.6	108.0	0.5
121	Open Line REEDLEY 70-TVY VLLY 70 #1 : Open	STOREY 2-BORDEN 230.00kV Ckt#1 Sec# 1	793.23	Amps	107.3	107.8	0.5

	Line REEDLEY 70-PARLIER 70 #1 : Open Line REEDLEY 70-DNUBAJCT 70 #1 : Open Line REEDLEY 70-ORSI JCT 70 #1 : Open Xfmr REEDLEY 70/REEDLEY 115 #1 : Open Xfmr REEDLEY 70/REEDLEY 115 #2 : Drop Load at REEDLEY 70 #1 : 17.6 MW 3.5 MVAR Dro :						
124	Open Line LEMOORE 70-LPRNO TP 70 #1 : Drop Load at LEMOORE 70 #1 : 19.1 MW 3.8 MVAR Dro : Drop Load at LEMOORE 70 #2 : 33.2 MW 6.7 MVAR Dro :	STOREY 2-BORDEN 230.00kV Ckt#1 Sec# 1	793.23	Amps	107.3	107.7	0.4
lbs-dlo-ns	Los Banos - Gates & Los Banos - Midway 500-kV DLO	STOREY 2-WILSON 230.00kV Ckt#1 Sec# 1	793.23	Amps	116.9	117.4	0.5
58	Open Line PANOCHE 230-MCMULLN1 230 #1 : Open Line MCMULLN1 230-KEARNEY 230 #1 : Drop Load at MCMULLN1 230 #1 : 20.6 MW 4.1 MVAR D : Open Line HELM 230-MC CALL 230 #1 :	STOREY 2-WILSON 230.00kV Ckt#1 Sec# 1	793.23	Amps	109.1	109.8	0.7
71	Open Line HERNDON 230-GREGG 230 #1 : Open Line HERNDON 230-KEARNEY 230 #1 : Open Xfmr HERNDON 230/HERNDN1M 115 #1 :	STOREY 2-WILSON 230.00kV Ckt#1 Sec# 1	793.23	Amps	108.8	109.3	0.6
lbn-dlo-ns	Los Banos - Tesla & Los Banos - Tracy 500-kV DLO	STOREY 2-WILSON 230.00kV Ckt#1 Sec# 1	793.23	Amps	107.6	108.1	0.5
16	Open Line PANOCHE 230-HELM 230 #1 : Open Line PANOCHE 230-MCMULLN1 230 #1 : Open Line MCMULLN1 230-KEARNEY 230 #1 : Drop Load at MCMULLN1 230 #1 : 20.6 MW 4.1 MVAR D :	STOREY 2-WILSON 230.00kV Ckt#1 Sec# 1	793.23	Amps	107.0	107.6	0.7
57	Open Line PANOCHE 230-MCMULLN1 230 #1 : Open Line MCMULLN1 230-KEARNEY 230 #1 : Drop Load at MCMULLN1 230 #1 : 20.6 MW 4.1 MVAR D : Open Line PANOCHE 230-HELM 230 #1 :	STOREY 2-WILSON 230.00kV Ckt#1 Sec# 1	793.23	Amps	107.0	107.6	0.7
70	Open Line KEARNEY 230-MCMULLN1 230 #1 : Open Line KEARNEY 230-HERNDON 230 #1 : Open Xfmr KEARNEY 230/KEARNEY 70 #2 :	STOREY 2-WILSON 230.00kV Ckt#1 Sec# 1	793.23	Amps	106.7	107.2	0.5
62	Open Line KEARNEY 230-HERNDON 230 #1 : Open Line HERNDON 230-FGRDN T1 230 #1 : Open Line FGRDN T1 230-FIGRDN 1 230 #1 : Open Line FGRDN T1 230-ASHLAN 230 #1 : Drop Load at FIGRDN 1 230 #1 : 74.3 MW 15 MVAR Dr : Close Line FIGRDN 1 230-FIGRDN 2 230 #1 :	STOREY 2-WILSON 230.00kV Ckt#1 Sec# 1	793.23	Amps	106.1	106.7	0.6
59	Open Line HELM 230-MC CALL 230 #1 : Open Line MC CALL 230-HENTAP2 230 #1 : Open Line HENTAP2 230-GATES 230 #1 :	STOREY 2-WILSON 230.00kV Ckt#1 Sec# 1	793.23	Amps	106.1	106.6	0.5

75	Open Line ASHLAN 230-FGRDN T1 230 #1 : Open Line ASHLAN 230-FGRDN T2 230 #1 : Drop Load at ASHLAN 230 #1 : 70 MW 13.5 MVAR Drop : Drop Load at ASHLAN 230 #2 : 65.3 MW 12.9 MVAR Dr : Drop Load at ASHLAN 230 #3 : 66.3 MW 12.6 MVAR Dr :	STOREY 2-WILSON 230.00kV Ckt#1 Sec# 1	793.23	Amps	104.9	105.5	0.6
47	Open Line PNDLJ1 115-BULLARD 115 #1 : Open Line PNDLJ1 115-HERNDON 115 #1 : Open Line PNDLJ2 115-PNEDLE 115 #1 : Open Line PNDLJ2 115-BULLARD 115 #1 : Open Line PNDLJ2 115-HERNDON 115 #1 : Drop Load at PNEDLE 115 #2 : 31.1 MW 6.3 MVAR Dro : Drop Load at PNEDLE 115 #3 : 40.9 MW 8.2 MVAR Dro : Close Line PNDLJ1 115-PNEDLE 115 #1 :	STOREY 2-WILSON 230.00kV Ckt#1 Sec# 1	793.23	Amps	103.8	104.5	0.6
19	Open Line PANOCHE 230-COBURN 230 #1 : Open Line PANOCHE 230-LOSBANOS 230 #1 : Open Line PANOCHE 230-LOSBANOS 230 #2 : Open Line PANOCHE 230-MCMULLN1 230 #1 : Open Line PANOCHE 230-GATES 230 #1 : Open Xfmr PANOCHE 230/PNCHE 1M 230 #1 :	STOREY 2-WILSON 230.00kV Ckt#1 Sec# 1	793.23	Amps	103.5	104.2	0.7
17	Open Line LOSBANOS 230-WESTLEY 230 #1 : Open Line LOSBANOS 230-PANOCHE 230 #2 : Open Line LOSBANOS 230-SN LS PP 230 #1 : Open Line LOSBANOS 230-SN LS PP 230 #2 : Open Xfmr LOSBANOS 230/LOS BANS 70 #3 :	STOREY 2-WILSON 230.00kV Ckt#1 Sec# 1	793.23	Amps	103.1	103.8	0.7
104	Open Line BULLARD 115-PNDLJ2 115 #1 : Open Line BULLARD 115-PNDLJ1 115 #1 : Drop Load at BULLARD 115 #1 : 45.4 MW 9.2 MVAR Dr : Drop Load at BULLARD 115 #2 : 45.2 MW 9.1 MVAR Dr : Drop Load at BULLARD 115 #3 : 43 MW 8.7 MVAR Drop :	STOREY 2-WILSON 230.00kV Ckt#1 Sec# 1	793.23	Amps	100.8	101.4	0.6
41	Open Line BORDEN 70-MADERA 70 #1 : Open Line BORDEN 70-MADERA 70 #2 : Open Line BORDEN 70-GLASS 70 #1 : Open Line BORDEN 70-CASSIDY 70 #1 : Open Xfmr BORDEN 70/BORDEN 230 #1 : Open Xfmr BORDEN 70/BORDEN 230 #2 :	STOREY 2-WILSON 230.00kV Ckt#1 Sec# 1	793.23	Amps	101.0	101.3	0.3
7	Open Line LOSBANOS 230-PANOCHE 230 #2 : Open Line DS AMIGO 230-PANOCHE 230 #1 :	STOREY 2-WILSON 230.00kV Ckt#1 Sec# 1	793.23	Amps	99.9	100.4	0.5
103	Open Line WOODWARD 115-WWARD JT 115 #1 : Open Line WOODWARD 115-CHLDHOSP 115 #1 :	STOREY 2-WILSON 230.00kV Ckt#1 Sec# 1	793.23	Amps	99.6	100.2	0.6

	Drop Load at WOODWARD 115 #1 : 42.7 MW 8.6 MVAR D : Drop Load at WOODWARD 115 #2 : 53.3 MW 10.8 MVAR : Drop Load at WOODWARD 115 #3 : 44.6 MW 9 MVAR Dro :						
67	Open Line GATES 230-MORROBAY 230 #1 : Open Line GATES 230-TEMPLETN 230 #1 :	TEMBLOR -BELRIDGE 115.00kV Ckt#1 Sec# 1	743.02	Amps	134.6	134.5	-0.1
82	Open Line GATES 230-PANOCHE 230 #2 : Open Line GATES 230-MORROBAY 230 #1 :	TEMBLOR -BELRIDGE 115.00kV Ckt#1 Sec# 1	743.02	Amps	100.7	100.7	0.0
82	Open Line GATES 230-PANOCHE 230 #2 : Open Line GATES 230-MORROBAY 230 #1 :	TEMPLETN-GATES 230.00kV Ckt#1 Sec# 1	974.97	Amps	116.9	116.7	-0.2
30	Open Line PANOCHE 115-CHENYT 115 #1 : Open Line PANOCHE 115-PANOCHEJ 115 #1 : Open Xfmr PANOCHE 115/PANOCHE 230 #2 : Open Xfmr PANOCHE 115/DG_PAN1 13.8 #1 :	TOMATAK -MENDOTA 70.00kV Ckt#1 Sec# 1	395.9	Amps	106.6	106.2	-0.4
41	Open Line BORDEN 70-MADERA 70 #1 : Open Line BORDEN 70-MADERA 70 #2 : Open Line BORDEN 70-GLASS 70 #1 : Open Line BORDEN 70-CASSIDY 70 #1 : Open Xfmr BORDEN 70/BORDEN 230 #1 : Open Xfmr BORDEN 70/BORDEN 230 #2 :	TVY VLLY-REEDLEY 70.00kV Ckt#1 Sec# 1	297.75	Amps	138.3	138.2	-0.1
lbs-dlo-ns	Los Banos - Gates & Los Banos - Midway 500-kV DLO	WARNERVL-COTTLE B 230.00kV Ckt#1 Sec# 1	793.23	Amps	148.5	149.2	0.7
lbn-dlo-ns	Los Banos - Tesla & Los Banos - Tracy 500-kV DLO	WARNERVL-COTTLE B 230.00kV Ckt#1 Sec# 1	793.23	Amps	143.5	144.3	0.8
58	Open Line PANOCHE 230-MCMULLN1 230 #1 : Open Line MCMULLN1 230-KEARNEY 230 #1 : Drop Load at MCMULLN1 230 #1 : 20.6 MW 4.1 MVAR D : Open Line HELM 230-MC CALL 230 #1 :	WARNERVL-COTTLE B 230.00kV Ckt#1 Sec# 1	793.23	Amps	133.9	134.3	0.4
59	Open Line HELM 230-MC CALL 230 #1 : Open Line MC CALL 230-HENTAP2 230 #1 : Open Line HENTAP2 230-GATES 230 #1 :	WARNERVL-COTTLE B 230.00kV Ckt#1 Sec# 1	793.23	Amps	133.0	133.6	0.6
71	Open Line HERNDON 230-GREGG 230 #1 : Open Line HERNDON 230-KEARNEY 230 #1 : Open Xfmr HERNDON 230/HERNDN1M 115 #1 :	WARNERVL-COTTLE B 230.00kV Ckt#1 Sec# 1	793.23	Amps	132.7	133.4	0.7
70	Open Line KEARNEY 230-MCMULLN1 230 #1 : Open Line KEARNEY 230-HERNDON 230 #1 : Open Xfmr KEARNEY 230/KEARNEY 70 #2 :	WARNERVL-COTTLE B 230.00kV Ckt#1 Sec# 1	793.23	Amps	132.7	133.3	0.7
75	Open Line ASHLAN 230-FGRDN T1 230 #1 : Open Line ASHLAN 230-FGRDN T2 230 #1 : Drop Load at ASHLAN 230 #1 : 70 MW 13.5 MVAR Drop : Drop Load	WARNERVL-COTTLE B 230.00kV Ckt#1 Sec# 1	793.23	Amps	132.9	133.3	0.4

	at ASHLAN 230 #2 : 65.3 MW 12.9 MVAR Dr : Drop Load at ASHLAN 230 #3 : 66.3 MW 12.6 MVAR Dr :						
16	Open Line PANOCHE 230-HELM 230 #1 : Open Line PANOCHE 230-MCMULLN1 230 #1 : Open Line MCMULLN1 230-KEARNEY 230 #1 : Drop Load at MCMULLN1 230 #1 : 20.6 MW 4.1 MVAR D :	WARNERVL-COTTLE B 230.00kV Ckt#1 Sec# 1	793.23	Amps	132.9	133.3	0.4
57	Open Line PANOCHE 230-MCMULLN1 230 #1 : Open Line MCMULLN1 230-KEARNEY 230 #1 : Drop Load at MCMULLN1 230 #1 : 20.6 MW 4.1 MVAR D : Open Line PANOCHE 230-HELM 230 #1 :	WARNERVL-COTTLE B 230.00kV Ckt#1 Sec# 1	793.23	Amps	132.9	133.3	0.4
47	Open Line PNDLJ1 115-BULLARD 115 #1 : Open Line PNDLJ1 115-HERNDON 115 #1 : Open Line PNDLJ2 115-PNEDLE 115 #1 : Open Line PNDLJ2 115-BULLARD 115 #1 : Open Line PNDLJ2 115-HERNDON 115 #1 : Drop Load at PNEDLE 115 #2 : 31.1 MW 6.3 MVAR Dro : Drop Load at PNEDLE 115 #3 : 40.9 MW 8.2 MVAR Dro : Close Line PNDLJ1 115-PNEDLE 115 #1 :	WARNERVL-COTTLE B 230.00kV Ckt#1 Sec# 1	793.23	Amps	132.6	133.0	0.4
19	Open Line PANOCHE 230-COBURN 230 #1 : Open Line PANOCHE 230-LOSBANOS 230 #1 : Open Line PANOCHE 230-LOSBANOS 230 #2 : Open Line PANOCHE 230-MCMULLN1 230 #1 : Open Line PANOCHE 230-GATES 230 #1 : Open Xfmr PANOCHE 230/PNCHE 1M 230 #1 :	WARNERVL-COTTLE B 230.00kV Ckt#1 Sec# 1	793.23	Amps	131.5	132.3	0.8
62	Open Line KEARNEY 230-HERNDON 230 #1 : Open Line HERNDON 230-FGRDN T1 230 #1 : Open Line FGRDN T1 230-FIGRDN 1 230 #1 : Open Line FGRDN T1 230-ASHLAN 230 #1 : Drop Load at FIGRDN 1 230 #1 : 74.3 MW 15 MVAR Dr : Close Line FIGRDN 1 230-FIGRDN 2 230 #1 :	WARNERVL-COTTLE B 230.00kV Ckt#1 Sec# 1	793.23	Amps	131.3	132.0	0.7
27	Open Line EL CAPTN 115-CASTLE 115 #1 : Open Line EL CAPTN 115-WILSON B 115 #1 : Drop Load at EL CAPTN 115 #1 : 19.7 MW 4 MVAR Dro : Drop Load at EL CAPTN 115 #2 : 26.2 MW 5.3 MVAR D : Drop Load at EL CAPTN 115 #3 : 33.5 MW 6.7 MVAR D :	WARNERVL-COTTLE B 230.00kV Ckt#1 Sec# 1	793.23	Amps	129.4	130.1	0.7
104	Open Line BULLARD 115-PNDLJ2 115 #1 : Open Line BULLARD 115-PNDLJ1 115 #1 : Drop Load at BULLARD 115 #1 : 45.4 MW 9.2 MVAR Dr : Drop Load at BULLARD 115 #2 : 45.2 MW 9.1 MVAR Dr : Drop Load at	WARNERVL-COTTLE B 230.00kV Ckt#1 Sec# 1	793.23	Amps	129.4	130.0	0.7

	BULLARD 115 #3 : 43 MW 8.7 MVAR Drop :						
103	Open Line WOODWARD 115-WWARD JT 115 #1 : Open Line WOODWARD 115-CHLDHOSP 115 #1 : Drop Load at WOODWARD 115 #1 : 42.7 MW 8.6 MVAR D : Drop Load at WOODWARD 115 #2 : 53.3 MW 10.8 MVAR : Drop Load at WOODWARD 115 #3 : 44.6 MW 9 MVAR Dro :	WARNERVL-COTTLE B 230.00kV Ckt#1 Sec# 1	793.23	Amps	129.1	129.8	0.7
7	Open Line LOSBANOS 230-PANOCHE 230 #2 : Open Line DS AMIGO 230-PANOCHE 230 #1 :	WARNERVL-COTTLE B 230.00kV Ckt#1 Sec# 1	793.23	Amps	128.8	129.5	0.7
41	Open Line BORDEN 70-MADERA 70 #1 : Open Line BORDEN 70-MADERA 70 #2 : Open Line BORDEN 70-GLASS 70 #1 : Open Line BORDEN 70-CASSIDY 70 #1 : Open Xfmr BORDEN 70/BORDEN 230 #1 : Open Xfmr BORDEN 70/BORDEN 230 #2 :	WARNERVL-COTTLE B 230.00kV Ckt#1 Sec# 1	793.23	Amps	128.9	129.5	0.6
54	Open Line WST FRSO 115-MC CALL 115 #1 : Open Line DANISHCM 115-MC CALL 115 #1 : Open Line DANISHCM 115-CAL AVE 115 #1 : Drop Load at DANISHCM 115 #1 : 4.1 MW 3.5 MVAR Dr :	WARNERVL-COTTLE B 230.00kV Ckt#1 Sec# 1	793.23	Amps	128.6	129.3	0.7
22	Open Line ATWATER 115-CASTLE 115 #1 : Open Line ATWATER 115-CRESEY T 115 #1 : Open Line ATWATER 115-WILSON A 115 #1 : Drop Load at ATWATER 115 #1 : 32.8 MW 6.6 MVAR Dr : Drop Load at ATWATER 115 #2 : 28.7 MW 5.8 MVAR Dr :	WARNERVL-COTTLE B 230.00kV Ckt#1 Sec# 1	793.23	Amps	128.1	128.8	0.7
48	Open Line KERCKHF2 115-WWARD JT 115 #1 : Open Line WWARD JT 115-WOODWARD 115 #1 : Open Line WWARD JT 115-CLOVISJ1 115 #1 : Open Line CLOVISJ1 115-CLOVIS-1 115 #1 : Open Line CLOVISJ1 115-SANGER 115 #1 : Drop Load at CLOVIS-1 115 #1 : 51.6 MW 10.4 MVAR : Close Line CLOVIS-1 115-CLOVIS-2 115 #1 : Open Line CLOVIS-2 115-CLOVISJ2 115 #1 :	WARNERVL-COTTLE B 230.00kV Ckt#1 Sec# 1	793.23	Amps	128.1	128.8	0.7
15	Open Line MOSSLND2 230-PANOCHE 230 #1 : Open Line COBURN 230-PANOCHE 230 #1 :	WARNERVL-COTTLE B 230.00kV Ckt#1 Sec# 1	793.23	Amps	128.0	128.7	0.7
6	Open Line LOSBANOS 230-PANOCHE 230 #2 : Open Line LOSBANOS 230-DS AMIGO 230 #1 :	WARNERVL-COTTLE B 230.00kV Ckt#1 Sec# 1	793.23	Amps	127.9	128.6	0.7
18	Open Line LOSBANOS 230-PANOCHE 230 #1 : Open Line LOSBANOS 230-DS AMIGO 230 #1 :	WARNERVL-COTTLE B 230.00kV Ckt#1 Sec# 1	793.23	Amps	127.9	128.6	0.7

	Open Xfmr LOSBANOS 230/LOS BANS 70 #4 :						
98	Open Line BARTON 115-AIRWAYJ2 115 #1 : Open Line BARTON 115-HERNDON 115 #1 : Drop Load at BARTON 115 #1 : 43.8 MW 8.8 MVAR Dro : Drop Load at BARTON 115 #2 : 37.6 MW 7.6 MVAR Dro : Drop Load at BARTON 115 #3 : 27.3 MW 5.5 MVAR Dro :	WARNERVL-COTTLE B 230.00kV Ckt#1 Sec# 1	793.23	Amps	127.4	128.1	0.7
28	Open Line MERCED 115-ATWATR J 115 #1 : Open Line MERCED 115-WILSON A 115 #1 : Open Line MERCED 115-WILSON B 115 #2 : Open Xfmr MERCED 115/MERCED M 115 #2 : Drop Load at MERCED 115 #1 : 37.6 MW 7.6 MVAR Dro : Drop Load at MERCED 115 #3 : 19.7 MW 3.9 MVAR Dro :	WARNERVL-COTTLE B 230.00kV Ckt#1 Sec# 1	793.23	Amps	127.3	128.0	0.7
117	Open Line KEARNEY 70-FRWWTAP 70 #1 : Open Line KEARNEY 70-OLDKERN 70 #1 : Open Line KEARNEY 70-CARUTHRS 70 #1 : Open Xfmr KEARNEY 70/KEARNEY 230 #2 :	WARNERVL-COTTLE B 230.00kV Ckt#1 Sec# 1	793.23	Amps	127.3	127.9	0.6
73	Open Line FIGRDN 1 230-FGRDN T1 230 #1 : Drop Load at FIGRDN 1 230 #1 : 74.3 MW 15 MVAR Dr :	WARNERVL-COTTLE B 230.00kV Ckt#1 Sec# 1	793.23	Amps	127.0	127.7	0.7
89	Open Line CLOVIS-2 115-CLOVISJ2 115 #1 : Drop Load at CLOVIS-2 115 #3 : 45.3 MW 9.1 MVAR D :	WARNERVL-COTTLE B 230.00kV Ckt#1 Sec# 1	793.23	Amps	127.0	127.7	0.7
99	Open Line MANCHSTR 115-AIRWAYJ1 115 #1 : Open Line MANCHSTR 115-HERNDON 115 #1 : Drop Load at MANCHSTR 115 #1 : 25.6 MW 5.1 MVAR D : Drop Load at MANCHSTR 115 #2 : 25.8 MW 5.2 MVAR D : Drop Load at MANCHSTR 115 #3 : 36.6 MW 7.4 MVAR D :	WARNERVL-COTTLE B 230.00kV Ckt#1 Sec# 1	793.23	Amps	126.9	127.6	0.7
102	Open Line PNEDLE 115-PNDLJ2 115 #1 : Drop Load at PNEDLE 115 #2 : 31.1 MW 6.3 MVAR Dro : Drop Load at PNEDLE 115 #3 : 40.9 MW 8.2 MVAR Dro :	WARNERVL-COTTLE B 230.00kV Ckt#1 Sec# 1	793.23	Amps	126.9	127.5	0.6
76	Open Line HELM 230-PANOCHE 230 #1 : Open Line HELM 230-MC CALL 230 #1 : Open Xfmr HELM 230/HELM 70 #1 :	WARNERVL-COTTLE B 230.00kV Ckt#1 Sec# 1	793.23	Amps	126.7	127.4	0.7
83	Open Line GATES 230-HENTAP1 230 #1 : Open Line GATES 230-ARCO 230 #1 :	WARNERVL-COTTLE B 230.00kV Ckt#1 Sec# 1	793.23	Amps	125.8	127.1	1.3
96	Open Line CAL AVE 115-DANISHCM 115 #1 : Open Line CAL AVE 115-WST FRSO 115 #1 : Drop Load at CAL AVE 115 #1 : 29.3 MW 5.9 MVAR Dr : Drop Load at CAL AVE 115 #2 : 31.6 MW 6.4 MVAR Dr : Drop Load at CAL AVE 115 #3 : 24.7 MW 5 MVAR Drop :	WARNERVL-COTTLE B 230.00kV Ckt#1 Sec# 1	793.23	Amps	126.2	126.9	0.7

84	Open Line GATES 230-HENTAP2 230 #1 : Open Line GATES 230-MIDWAY 230 #1 :	WARNERVL-COTTLE B 230.00kV Ckt#1 Sec# 1	793.23	Amps	126.2	126.8	0.7
74	Open Line FIGRDN 2 230-FGRDN T2 230 #1 : Drop Load at FIGRDN 2 230 #1 : 53.2 MW 10.7 MVAR :	WARNERVL-COTTLE B 230.00kV Ckt#1 Sec# 1	793.23	Amps	126.3	126.8	0.5
53	Open Line WST FRSO 115-MC CALL 115 #1 : Open Line CAL AVE 115-WST FRSO 115 #1 :	WARNERVL-COTTLE B 230.00kV Ckt#1 Sec# 1	793.23	Amps	126.0	126.7	0.7
97	Open Line WST FRSO 115-MC CALL 115 #1 : Open Line WST FRSO 115-CAL AVE 115 #1 : Drop Load at WST FRSO 115 #1 : 38 MW 7.7 MVAR Dro : Drop Load at WST FRSO 115 #2 : 39.5 MW 8 MVAR Dro :	WARNERVL-COTTLE B 230.00kV Ckt#1 Sec# 1	793.23	Amps	126.0	126.7	0.7
40	Open Line MADERA 70-TRIGO 70 #1 : Open Line MADERA 70-BORDEN 70 #1 : Open Line MADERA 70-BORDEN 70 #2 : Drop Load at MADERA 70 #1 : 18.2 MW 3.7 MVAR Drop : Drop Load at MADERA 70 #2 : 23.4 MW 4.7 MVAR Drop :	WARNERVL-COTTLE B 230.00kV Ckt#1 Sec# 1	793.23	Amps	125.7	126.4	0.7
32	Open Line ORO LOMA 70-DOS PALS 70 #1 : Open Line ORO LOMA 70-MRCYSPRS 70 #1 : Open Line ORO LOMA 70-POSO J1 70 #1 : Open Xfmr ORO LOMA 70/ORO LOMA 115 #2 : Drop Load at ORO LOMA 70 #1 : 8.7 MW 1.7 MVAR Dro :	WARNERVL-COTTLE B 230.00kV Ckt#1 Sec# 1	793.23	Amps	125.6	126.4	0.8
106	Open Line KINGSBRG 115-CORCORAN 115 #1 : Open Line KINGSBRG 115-GAURD J1 115 #1 : Open Xfmr KINGSBRG 115/KNGLOBUS 70 #2 : Drop Load at KINGSBRG 115 #3 : 33 MW 6.6 MVAR Dro :	WARNERVL-COTTLE B 230.00kV Ckt#1 Sec# 1	793.23	Amps	125.7	126.2	0.5
87	Open Line AIRWAYS 115-AIRWAYJ1 115 #1 : Open Line AIRWAYS 115-AIRWAYJ2 115 #1 : Drop Load at AIRWAYS 115 #1 : 38.8 MW 7.5 MVAR Dr : Drop Load at AIRWAYS 115 #2 : 12.7 MW 2.5 MVAR Dr :	WARNERVL-COTTLE B 230.00kV Ckt#1 Sec# 1	793.23	Amps	125.6	126.2	0.7
88	Open Line CLOVIS-1 115-CLOVISJ1 115 #1 : Drop Load at CLOVIS-1 115 #1 : 51.6 MW 10.4 MVAR :	WARNERVL-COTTLE B 230.00kV Ckt#1 Sec# 1	793.23	Amps	125.6	126.2	0.7
121	Open Line REEDLEY 70-TVY VLLY 70 #1 : Open Line REEDLEY 70-PARLIER 70 #1 : Open Line REEDLEY 70-DNUBAJCT 70 #1 : Open Line REEDLEY 70-ORSI JCT 70 #1 : Open Xfmr REEDLEY 70/REEDLEY 115 #1 : Open Xfmr REEDLEY 70/REEDLEY 115 #2 : Drop Load at REEDLEY 70 #1 : 17.6 MW 3.5 MVAR Dro :	WARNERVL-COTTLE B 230.00kV Ckt#1 Sec# 1	793.23	Amps	125.6	126.1	0.5
34	Open Line CANAL 70-LVNGSTNT 70 #1 : Open Line CANAL 70-SNTA RTA 70 #1 : Open Line	WARNERVL-COTTLE B 230.00kV Ckt#1 Sec# 1	793.23	Amps	125.1	125.8	0.7

	CANAL 70-ORTIGA 70 #1 : Drop Load at CANAL 70 #1 : 30.9 MW 6.2 MVAR Dropp : Drop Load at CANAL 70 #2 : 31.7 MW 6.4 MVAR Dropp :						
11	Open Line BELLOTA 230-COTTLE A 230 #1 : Open Line COTTLE A 230-MELONES 230 #1 : Drop Load at COTTLE A 230 #1 : 26.7 MW 1.2 MVAR D : Drop Generator at HELMS 3 18 #**: 404 MW Dropped : Open Line MELONES 230-WILSON 230 #1 :	WARNERVL-COTTLE B 230.00kV Ckt#1 Sec# 1	793.23	Amps	124.9	125.7	0.8
9	Open Line BELLOTA 230-COTTLE A 230 #1 : Open Line COTTLE A 230-MELONES 230 #1 : Drop Load at COTTLE A 230 #1 : 26.7 MW 1.2 MVAR D : Drop Generator at HELMS 3 18 #**: 404 MW Dropped : Open Line BELLOTA 230-COTTLE B 230 #1 : Open Line COTTLE B 230-WARNERVL 230 #1 : Drop Load at COTTLE B 230 #2 : 30.7 MW 1.3 MVAR D :	WARNERVL-WRNRVLLE 230.00/ 115.00kV Bk#1	150	MVA	130.9	131.4	0.5
9	Open Line BELLOTA 230-COTTLE A 230 #1 : Open Line COTTLE A 230-MELONES 230 #1 : Drop Load at COTTLE A 230 #1 : 26.7 MW 1.2 MVAR D : Drop Generator at HELMS 3 18 #**: 404 MW Dropped : Open Line BELLOTA 230-COTTLE B 230 #1 : Open Line COTTLE B 230-WARNERVL 230 #1 : Drop Load at COTTLE B 230 #2 : 30.7 MW 1.3 MVAR D :	WARNERVL-WRNRVLLE 230.00/ 115.00kV Bk#2	75	MVA	130.9	131.4	0.5
9	Open Line BELLOTA 230-COTTLE A 230 #1 : Open Line COTTLE A 230-MELONES 230 #1 : Drop Load at COTTLE A 230 #1 : 26.7 MW 1.2 MVAR D : Drop Generator at HELMS 3 18 #**: 404 MW Dropped : Open Line BELLOTA 230-COTTLE B 230 #1 : Open Line COTTLE B 230-WARNERVL 230 #1 : Drop Load at COTTLE B 230 #2 : 30.7 MW 1.3 MVAR D :	WARNERVL-WRNRVLLE 230.00/ 115.00kV Bk#3	75	MVA	130.9	131.4	0.5
lbs-dlo-ns	Los Banos - Gates & Los Banos - Midway 500-kV DLO	WILSON -WARNERVL 230.00kV Ckt#1 Sec# 1	793.23	Amps	148.9	149.6	0.8
lbn-dlo-ns	Los Banos - Tesla & Los Banos - Tracy 500-kV DLO	WILSON -WARNERVL 230.00kV Ckt#1 Sec# 1	793.23	Amps	135.4	136.3	0.8
17	Open Line LOSBANOS 230-WESTLEY 230 #1 : Open Line LOSBANOS 230-PANOCHE 230 #2 : Open Line LOSBANOS 230-SN LS PP 230 #1 : Open Line LOSBANOS 230-SN LS PP 230 #2 : Open Xfmr LOSBANOS 230/LOS BANS 70 #3 :	WILSON -WARNERVL 230.00kV Ckt#1 Sec# 1	793.23	Amps	130.5	131.6	1.1
58	Open Line PANOCHE 230-MCMULLN1 230 #1 : Open Line MCMULLN1 230-KEARNEY 230 #1 :	WILSON -WARNERVL 230.00kV Ckt#1 Sec# 1	793.23	Amps	127.9	129.0	1.1

	Drop Load at MCMULLN1 230 #1 : 20.6 MW 4.1 MVAR D : Open Line HELM 230-MC CALL 230 #1 :						
59	Open Line HELM 230-MC CALL 230 #1 : Open Line MC CALL 230-HENTAP2 230 #1 : Open Line HENTAP2 230-GATES 230 #1 :	WILSON -WARNERVL 230.00kV Ckt#1 Sec# 1	793.23	Amps	127.1	127.8	0.7
71	Open Line HERNDON 230-GREGG 230 #1 : Open Line HERNDON 230-KEARNEY 230 #1 : Open Xfmr HERNDON 230/HERNDN1M 115 #1 :	WILSON -WARNERVL 230.00kV Ckt#1 Sec# 1	793.23	Amps	126.5	127.3	0.8
19	Open Line PANOCHE 230-COBURN 230 #1 : Open Line PANOCHE 230-LOSBANOS 230 #1 : Open Line PANOCHE 230-LOSBANOS 230 #2 : Open Line PANOCHE 230-MCMULLN1 230 #1 : Open Line PANOCHE 230-GATES 230 #1 : Open Xfmr PANOCHE 230/PNCHE 1M 230 #1 :	WILSON -WARNERVL 230.00kV Ckt#1 Sec# 1	793.23	Amps	126.2	127.3	1.1
16	Open Line PANOCHE 230-HELM 230 #1 : Open Line PANOCHE 230-MCMULLN1 230 #1 : Open Line MCMULLN1 230-KEARNEY 230 #1 : Drop Load at MCMULLN1 230 #1 : 20.6 MW 4.1 MVAR D :	WILSON -WARNERVL 230.00kV Ckt#1 Sec# 1	793.23	Amps	126.2	127.3	1.1
57	Open Line PANOCHE 230-MCMULLN1 230 #1 : Open Line MCMULLN1 230-KEARNEY 230 #1 : Drop Load at MCMULLN1 230 #1 : 20.6 MW 4.1 MVAR D : Open Line PANOCHE 230-HELM 230 #1 :	WILSON -WARNERVL 230.00kV Ckt#1 Sec# 1	793.23	Amps	126.2	127.3	1.1
70	Open Line KEARNEY 230-MCMULLN1 230 #1 : Open Line KEARNEY 230-HERNDON 230 #1 : Open Xfmr KEARNEY 230/KEARNEY 70 #2 :	WILSON -WARNERVL 230.00kV Ckt#1 Sec# 1	793.23	Amps	125.8	126.6	0.8
75	Open Line ASHLAN 230-FGRDN T1 230 #1 : Open Line ASHLAN 230-FGRDN T2 230 #1 : Drop Load at ASHLAN 230 #1 : 70 MW 13.5 MVAR Drop : Drop Load at ASHLAN 230 #2 : 65.3 MW 12.9 MVAR Dr : Drop Load at ASHLAN 230 #3 : 66.3 MW 12.6 MVAR Dr :	WILSON -WARNERVL 230.00kV Ckt#1 Sec# 1	793.23	Amps	124.9	126.0	1.1
47	Open Line PNDLJ1 115-BULLARD 115 #1 : Open Line PNDLJ1 115-HERNDON 115 #1 : Open Line PNDLJ2 115-PNEDLE 115 #1 : Open Line PNDLJ2 115-BULLARD 115 #1 : Open Line PNDLJ2 115-HERNDON 115 #1 : Drop Load at PNEDLE 115 #2 : 31.1 MW 6.3 MVAR Dro : Drop Load at PNEDLE 115 #3 : 40.9 MW 8.2 MVAR Dro : Close Line PNDLJ1 115-PNEDLE 115 #1 :	WILSON -WARNERVL 230.00kV Ckt#1 Sec# 1	793.23	Amps	124.1	125.2	1.1

62	Open Line KEARNEY 230-HERNDON 230 #1 : Open Line HERNDON 230-FGRDN T1 230 #1 : Open Line FGRDN T1 230-FIGRDN 1 230 #1 : Open Line FGRDN T1 230-ASHLAN 230 #1 : Drop Load at FIGRDN 1 230 #1 : 74.3 MW 15 MVAR Dr : Close Line FIGRDN 1 230-FIGRDN 2 230 #1 :	WILSON -WARNERVL 230.00kV Ckt#1 Sec# 1	793.23	Amps	124.2	125.0	0.8
7	Open Line LOSBANOS 230-PANOCHE 230 #2 : Open Line DS AMIGO 230-PANOCHE 230 #1 :	WILSON -WARNERVL 230.00kV Ckt#1 Sec# 1	793.23	Amps	122.2	122.9	0.7
18	Open Line LOSBANOS 230-PANOCHE 230 #1 : Open Line LOSBANOS 230-DS AMIGO 230 #1 : Open Xfmr LOSBANOS 230/LOS BANS 70 #4 :	WILSON -WARNERVL 230.00kV Ckt#1 Sec# 1	793.23	Amps	120.5	121.2	0.7
6	Open Line LOSBANOS 230-PANOCHE 230 #2 : Open Line LOSBANOS 230-DS AMIGO 230 #1 :	WILSON -WARNERVL 230.00kV Ckt#1 Sec# 1	793.23	Amps	120.3	121.0	0.7
104	Open Line BULLARD 115-PNDLJ2 115 #1 : Open Line BULLARD 115-PNDLJ1 115 #1 : Drop Load at BULLARD 115 #1 : 45.4 MW 9.2 MVAR Dr : Drop Load at BULLARD 115 #2 : 45.2 MW 9.1 MVAR Dr : Drop Load at BULLARD 115 #3 : 43 MW 8.7 MVAR Drop :	WILSON -WARNERVL 230.00kV Ckt#1 Sec# 1	793.23	Amps	120.0	120.9	0.9
103	Open Line WOODWARD 115-WWARD JT 115 #1 : Open Line WOODWARD 115-CHLDHOSP 115 #1 : Drop Load at WOODWARD 115 #1 : 42.7 MW 8.6 MVAR D : Drop Load at WOODWARD 115 #2 : 53.3 MW 10.8 MVAR : Drop Load at WOODWARD 115 #3 : 44.6 MW 9 MVAR Dro :	WILSON -WARNERVL 230.00kV Ckt#1 Sec# 1	793.23	Amps	119.6	120.5	0.9
27	Open Line EL CAPTN 115-CASTLE 115 #1 : Open Line EL CAPTN 115-WILSON B 115 #1 : Drop Load at EL CAPTN 115 #1 : 19.7 MW 4 MVAR Dro : Drop Load at EL CAPTN 115 #2 : 26.2 MW 5.3 MVAR D : Drop Load at EL CAPTN 115 #3 : 33.5 MW 6.7 MVAR D :	WILSON -WARNERVL 230.00kV Ckt#1 Sec# 1	793.23	Amps	119.7	120.3	0.6
41	Open Line BORDEN 70-MADERA 70 #1 : Open Line BORDEN 70-MADERA 70 #2 : Open Line BORDEN 70-GLASS 70 #1 : Open Line BORDEN 70-CASSIDY 70 #1 : Open Xfmr BORDEN 70/BORDEN 230 #1 : Open Xfmr BORDEN 70/BORDEN 230 #2 :	WILSON -WARNERVL 230.00kV Ckt#1 Sec# 1	793.23	Amps	119.4	120.0	0.6
54	Open Line WST FRSO 115-MC CALL 115 #1 : Open Line DANISHCM 115-MC CALL 115 #1 : Open Line DANISHCM 115-CAL AVE 115 #1 : Drop Load at DANISHCM 115 #1 : 4.1 MW 3.5 MVAR Dr :	WILSON -WARNERVL 230.00kV Ckt#1 Sec# 1	793.23	Amps	118.8	119.7	0.9

48	Open Line KERCKHF2 115-WWARD JT 115 #1 : Open Line WWARD JT 115-WOODWARD 115 #1 : Open Line WWARD JT 115-CLOVISJ1 115 #1 : Open Line CLOVISJ1 115-CLOVIS-1 115 #1 : Open Line CLOVISJ1 115-SANGER 115 #1 : Drop Load at CLOVIS-1 115 #1 : 51.6 MW 10.4 MVAR : Close Line CLOVIS-1 115-CLOVIS-2 115 #1 : Open Line CLOVIS-2 115-CLOVISJ2 115 #1 :	WILSON -WARNERVL 230.00kV Ckt#1 Sec# 1	793.23	Amps	118.3	119.2	0.9
22	Open Line ATWATER 115-CASTLE 115 #1 : Open Line ATWATER 115-CRESEY T 115 #1 : Open Line ATWATER 115-WILSON A 115 #1 : Drop Load at ATWATER 115 #1 : 32.8 MW 6.6 MVAR Dr : Drop Load at ATWATER 115 #2 : 28.7 MW 5.8 MVAR Dr :	WILSON -WARNERVL 230.00kV Ckt#1 Sec# 1	793.23	Amps	118.0	118.6	0.6
15	Open Line MOSSLND2 230-PANOCHE 230 #1 : Open Line COBURN 230-PANOCHE 230 #1 :	WILSON -WARNERVL 230.00kV Ckt#1 Sec# 1	793.23	Amps	117.4	118.4	1.0
98	Open Line BARTON 115-AIRWAYJ2 115 #1 : Open Line BARTON 115-HERNDON 115 #1 : Drop Load at BARTON 115 #1 : 43.8 MW 8.8 MVAR Dro : Drop Load at BARTON 115 #2 : 37.6 MW 7.6 MVAR Dro : Drop Load at BARTON 115 #3 : 27.3 MW 5.5 MVAR Dro :	WILSON -WARNERVL 230.00kV Ckt#1 Sec# 1	793.23	Amps	117.1	118.0	0.9
76	Open Line HELM 230-PANOCHE 230 #1 : Open Line HELM 230-MC CALL 230 #1 : Open Xfmr HELM 230/HELM 70 #1 :	WILSON -WARNERVL 230.00kV Ckt#1 Sec# 1	793.23	Amps	117.1	117.8	0.7
28	Open Line MERCED 115-ATWATR J 115 #1 : Open Line MERCED 115-WILSON A 115 #1 : Open Line MERCED 115-WILSON B 115 #2 : Open Xfmr MERCED 115/MERCED M 115 #2 : Drop Load at MERCED 115 #1 : 37.6 MW 7.6 MVAR Dro : Drop Load at MERCED 115 #3 : 19.7 MW 3.9 MVAR Dro :	WILSON -WARNERVL 230.00kV Ckt#1 Sec# 1	793.23	Amps	117.1	117.8	0.6
73	Open Line FIGRDN 1 230-FGRDN T1 230 #1 : Drop Load at FIGRDN 1 230 #1 : 74.3 MW 15 MVAR Dr :	WILSON -WARNERVL 230.00kV Ckt#1 Sec# 1	793.23	Amps	116.8	117.7	0.9
117	Open Line KEARNEY 70-FRWWTAP 70 #1 : Open Line KEARNEY 70-OLDKERN 70 #1 : Open Line KEARNEY 70-CARUTHRS 70 #1 : Open Xfmr KEARNEY 70/KEARNEY 230 #2 :	WILSON -WARNERVL 230.00kV Ckt#1 Sec# 1	793.23	Amps	117.0	117.7	0.7
89	Open Line CLOVIS-2 115-CLOVISJ2 115 #1 : Drop Load at CLOVIS-2 115 #3 : 45.3 MW 9.1 MVAR D :	WILSON -WARNERVL 230.00kV Ckt#1 Sec# 1	793.23	Amps	116.5	117.4	0.9
99	Open Line MANCHSTR 115-AIRWAYJ1 115 #1 : Open Line MANCHSTR 115-HERNDON 115 #1 :	WILSON -WARNERVL 230.00kV Ckt#1 Sec# 1	793.23	Amps	116.4	117.3	0.9

	Drop Load at MANCHSTR 115 #1 : 25.6 MW 5.1 MVAR D : Drop Load at MANCHSTR 115 #2 : 25.8 MW 5.2 MVAR D : Drop Load at MANCHSTR 115 #3 : 36.6 MW 7.4 MVAR D :						
102	Open Line PNEDLE 115-PNDLJ2 115 #1 : Drop Load at PNEDLE 115 #2 : 31.1 MW 6.3 MVAR Dro : Drop Load at PNEDLE 115 #3 : 40.9 MW 8.2 MVAR Dro :	WILSON -WARNERVL 230.00kV Ckt#1 Sec# 1	793.23	Amps	116.5	117.2	0.7
83	Open Line GATES 230-HENTAP1 230 #1 : Open Line GATES 230-ARCO 230 #1 :	WILSON -WARNERVL 230.00kV Ckt#1 Sec# 1	793.23	Amps	115.2	117.0	1.7
84	Open Line GATES 230-HENTAP2 230 #1 : Open Line GATES 230-MIDWAY 230 #1 :	WILSON -WARNERVL 230.00kV Ckt#1 Sec# 1	793.23	Amps	115.8	116.4	0.7
96	Open Line CAL AVE 115-DANISHCM 115 #1 : Open Line CAL AVE 115-WST FRSO 115 #1 : Drop Load at CAL AVE 115 #1 : 29.3 MW 5.9 MVAR Dr : Drop Load at CAL AVE 115 #2 : 31.6 MW 6.4 MVAR Dr : Drop Load at CAL AVE 115 #3 : 24.7 MW 5 MVAR Drop :	WILSON -WARNERVL 230.00kV Ckt#1 Sec# 1	793.23	Amps	115.4	116.3	0.9
74	Open Line FIGRDN 2 230-FGRDN T2 230 #1 : Drop Load at FIGRDN 2 230 #1 : 53.2 MW 10.7 MVAR :	WILSON -WARNERVL 230.00kV Ckt#1 Sec# 1	793.23	Amps	115.5	116.2	0.8
53	Open Line WST FRSO 115-MC CALL 115 #1 : Open Line CAL AVE 115-WST FRSO 115 #1 :	WILSON -WARNERVL 230.00kV Ckt#1 Sec# 1	793.23	Amps	115.1	116.0	0.9
97	Open Line WST FRSO 115-MC CALL 115 #1 : Open Line WST FRSO 115-CAL AVE 115 #1 : Drop Load at WST FRSO 115 #1 : 38 MW 7.7 MVAR Dro : Drop Load at WST FRSO 115 #2 : 39.5 MW 8 MVAR Dro :	WILSON -WARNERVL 230.00kV Ckt#1 Sec# 1	793.23	Amps	115.1	116.0	0.9
32	Open Line ORO LOMA 70-DOS PALS 70 #1 : Open Line ORO LOMA 70-MRCYSPRS 70 #1 : Open Line ORO LOMA 70-POSO J1 70 #1 : Open Xfmr ORO LOMA 70/ORO LOMA 115 #2 : Drop Load at ORO LOMA 70 #1 : 8.7 MW 1.7 MVAR Dro :	WILSON -WARNERVL 230.00kV Ckt#1 Sec# 1	793.23	Amps	114.8	115.7	0.9
40	Open Line MADERA 70-TRIGO 70 #1 : Open Line MADERA 70-BORDEN 70 #1 : Open Line MADERA 70-BORDEN 70 #2 : Drop Load at MADERA 70 #1 : 18.2 MW 3.7 MVAR Drop : Drop Load at MADERA 70 #2 : 23.4 MW 4.7 MVAR Drop :	WILSON -WARNERVL 230.00kV Ckt#1 Sec# 1	793.23	Amps	115.0	115.7	0.7
87	Open Line AIRWAYS 115-AIRWAYJ1 115 #1 : Open Line AIRWAYS 115-AIRWAYJ2 115 #1 : Drop Load at AIRWAYS 115 #1 : 38.8 MW 7.5 MVAR Dr : Drop Load at AIRWAYS 115 #2 : 12.7 MW 2.5 MVAR Dr :	WILSON -WARNERVL 230.00kV Ckt#1 Sec# 1	793.23	Amps	114.7	115.4	0.7
88	Open Line CLOVIS-1 115-CLOVISJ1 115 #1 : Drop	WILSON -WARNERVL 230.00kV Ckt#1 Sec# 1	793.23	Amps	114.7	115.3	0.7

	Load at CLOVIS-1 115 #1 : 51.6 MW 10.4 MVAR :						
106	Open Line KINGSBRG 115-CORCORAN 115 #1 : Open Line KINGSBRG 115-GAURD J1 115 #1 : Open Xfmr KINGSBRG 115/KNGLOBUS 70 #2 : Drop Load at KINGSBRG 115 #3 : 33 MW 6.6 MVAR Dro :	WILSON -WARNERVL 230.00kV Ckt#1 Sec# 1	793.23	Amps	114.6	115.3	0.8
121	Open Line REEDLEY 70-TVY VLLY 70 #1 : Open Line REEDLEY 70-PARLIER 70 #1 : Open Line REEDLEY 70-DNUBAJCT 70 #1 : Open Line REEDLEY 70-ORSI JCT 70 #1 : Open Xfmr REEDLEY 70/REEDLEY 115 #1 : Open Xfmr REEDLEY 70/REEDLEY 115 #2 : Drop Load at REEDLEY 70 #1 : 17.6 MW 3.5 MVAR Dro :	WILSON -WARNERVL 230.00kV Ckt#1 Sec# 1	793.23	Amps	114.4	115.1	0.8
101	Open Line HERNDON 115-MANCHSTR 115 #1 : Open Line HERNDON 115-PNDLJ1 115 #1 : Open Line HERNDON 115-CHLDHOSP 115 #1 :	WILSON -WARNERVL 230.00kV Ckt#1 Sec# 1	793.23	Amps	113.9	114.6	0.6
49	Open Line KINGSBRG 115-CORCORAN 115 #1 : Open Line KINGSBRG 115-CORCORAN 115 #2 :	WILSON -WARNERVL 230.00kV Ckt#1 Sec# 1	793.23	Amps	113.9	114.6	0.7
107	Open Line CORCORAN 115-KINGSBRG 115 #1 : Open Line CORCORAN 115-KINGSBRG 115 #2 : Open Xfmr CORCORAN 115/CORCORAN 70 #2 : Drop Load at CORCORAN 115 #3 : 16.4 MW 3.3 MVAR D : Drop Load at CORCORAN 115 #4 : 18 MW 3.6 MVAR Dro :	WILSON -WARNERVL 230.00kV Ckt#1 Sec# 1	793.23	Amps	113.9	114.6	0.7
124	Open Line LEMOORE 70-LPRNO TP 70 #1 : Drop Load at LEMOORE 70 #1 : 19.1 MW 3.8 MVAR Dro : Drop Load at LEMOORE 70 #2 : 33.2 MW 6.7 MVAR Dro :	WILSON -WARNERVL 230.00kV Ckt#1 Sec# 1	793.23	Amps	113.8	114.5	0.7
34	Open Line CANAL 70-LVNGSTNT 70 #1 : Open Line CANAL 70-SNTA RTA 70 #1 : Open Line CANAL 70-ORTIGA 70 #1 : Drop Load at CANAL 70 #1 : 30.9 MW 6.2 MVAR Dropp : Drop Load at CANAL 70 #2 : 31.7 MW 6.4 MVAR Dropp :	WILSON -WARNERVL 230.00kV Ckt#1 Sec# 1	793.23	Amps	113.7	114.4	0.6
20	Open Line PANOCHE 230-MOSSLND2 230 #1 : Open Line PANOCHE 230-PANO_EC 230 #1 : Open Line PANOCHE 230-HELM 230 #1 : Open Line PANOCHE 230-GATES 230 #2 : Open Line PANOCHE 230-DS AMIGO 230 #1 : Open Xfmr PANOCHE 230/PANOCHE 115 #2 :	WILSON -WARNERVL 230.00kV Ckt#1 Sec# 1	793.23	Amps	113.6	114.3	0.7
94	Open Line WAHTOKE 115-MC CALL 115 #1 : Open Line WAHTOKE 115-GERAWAN 115 #1 :	WILSON -WARNERVL 230.00kV Ckt#1 Sec# 1	793.23	Amps	113.6	114.3	0.7

	Drop Load at WAHTOKE 115 #2 : 30.7 MW 6.2 MVAR Dr : Drop Load at WAHTOKE 115 #3 : 21.1 MW 4.2 MVAR Dr :						
45	Open Line BARTON 115-HERNDON 115 #1 : Open Line MANCHSTR 115-HERNDON 115 #1 :	WILSON -WARNERVL 230.00kV Ckt#1 Sec# 1	793.23	Amps	113.6	114.2	0.7
72	Open Line HERNDON 230-GREGG 230 #2 : Open Line HERNDON 230-FGRDN T1 230 #1 : Open Xfmr HERNDON 230/HERNDN2M 115 #2 :	WILSON -WARNERVL 230.00kV Ckt#1 Sec# 1	793.23	Amps	113.6	114.2	0.6
122	Open Line DINUBA 70-STCRRL J 70 #1 : Open Line DINUBA 70-DNUBAJCT 70 #1 : Drop Load at DINUBA 70 #1 : 19.4 MW 3.9 MVAR Drop : Drop Load at DINUBA 70 #2 : 9.4 MW 1.9 MVAR Dropp :	WILSON -WARNERVL 230.00kV Ckt#1 Sec# 1	793.23	Amps	113.5	114.1	0.7
113	Open Line BIOLA 70-OLDKERN 70 #1 : Drop Load at BIOLA 70 #1 : 22 MW 4.4 MVAR Dropped :	WILSON -WARNERVL 230.00kV Ckt#1 Sec# 1	793.23	Amps	113.4	114.1	0.6
134	Open Line KNGLOBUS 70-HRDWK TP 70 #1 : Open Line KNGLOBUS 70-CAMDEN 70 #1 : Open Xfmr KNGLOBUS 70/KINGSBRG 115 #2 :	WILSON -WARNERVL 230.00kV Ckt#1 Sec# 1	793.23	Amps	113.4	114.1	0.6
68	Open Line GATES 230-MIDWAY 230 #1 : Open Line GATES 230-ARCO 230 #1 :	WILSON -WARNERVL 230.00kV Ckt#1 Sec# 1	793.23	Amps	113.4	114.0	0.7
21	Open Line CHWCHLLA 115-CERTAN T 115 #1 : Open Line CHWCHLLA 115-CERTANJ1 115 #1 : Drop Load at CHWCHLLA 115 #1 : 10.3 MW 2 MVAR Dro : Drop Load at CHWCHLLA 115 #2 : 14 MW 2.8 MVAR Dro :	WILSON -WARNERVL 230.00kV Ckt#1 Sec# 1	793.23	Amps	113.1	113.8	0.6
90	Open Line SANGER 115-CLOVISJ1 115 #1 : Open Line SANGER 115-CLOVISJ2 115 #1 : Open Line SANGER 115-AIRWAYJ2 115 #1 : Open Line SANGER 115-LASPALMS 115 #1 : Open Line SANGER 115-MC CALL 115 #1 : Open Line SANGER 115-MC CALL 115 #2 : Open Line SANGER 115-MC CALL 115 #3 : Open Line SANGER 115-MALAGA 115 #1 : Open Line SANGER 115-RAINBWTP 115 #1 : Open Line SANGER 115-PIEDRA 2 115 #1 :	WOODWARD-CHLDHOSP 115.00kV Ckt#1 Sec# 1	973.96	Amps	109.8	109.9	0.1
9	Open Line BELLOTA 230-COTTLE A 230 #1 : Open Line COTTLE A 230-MELONES 230 #1 : Drop Load at COTTLE A 230 #1 : 26.7 MW 1.2 MVAR D : Drop Generator at HELMS 3 18 #**: 404 MW Dropped : Open Line BELLOTA 230-COTTLE B 230 #1 : Open Line COTTLE B 230-WARNERVL 230 #1 : Drop Load at	WRNRVLLE-STANDFRD 115.00kV Ckt#1 Sec# 1	938.82	Amps	105.5	105.9	0.4

	COTTLE B 230 #2 : 30.7 MW 1.3 MVAR D :						
9	Open Line BELLOTA 230-COTTLE A 230 #1 : Open Line COTTLE A 230-MELONES 230 #1 : Drop Load at COTTLE A 230 #1 : 26.7 MW 1.2 MVAR D : Drop Generator at HELMS 3 18 #**: 404 MW Dropped : Open Line BELLOTA 230-COTTLE B 230 #1 : Open Line COTTLE B 230-WARNERVL 230 #1 : Drop Load at COTTLE B 230 #2 : 30.7 MW 1.3 MVAR D :	WRNRVLLE-STANDFRD 115.00kV Ckt#2 Sec# 1	938.82	Amps	105.5	105.9	0.4
lbs-dlo-ns	Los Banos - Gates & Los Banos - Midway 500-kV DLO	LOSBANOS - DS AMIGO 230.0 Ckt#1 Sec# 1	849.96	Amps	101.0	101.7	0.7
2013 Summer Off-Peak							
59	Open Line HELM 230-MC CALL 230 #1 : Open Line MC CALL 230-HENTAP2 230 #1 : Open Line HENTAP2 230-GATES 230 #1 :	AIRWAYJ1-MANCHSTR 115.00kV Ckt#1 Sec# 1	1124.58	Amps	105.7	105.9	0.1
59	Open Line HELM 230-MC CALL 230 #1 : Open Line MC CALL 230-HENTAP2 230 #1 : Open Line HENTAP2 230-GATES 230 #1 :	AIRWAYJ2-BARTON 115.00kV Ckt#1 Sec# 1	1124.58	Amps	119.0	119.1	0.1
101	Open Line HERNDON 115-MANCHSTR 115 #1 : Open Line HERNDON 115-PNDLJ1 115 #1 : Open Line HERNDON 115-CHLDHOSP 115 #1 :	AIRWAYJ2-BARTON 115.00kV Ckt#1 Sec# 1	1124.58	Amps	111.3	111.2	-0.1
99	Open Line MANCHSTR 115-AIRWAYJ1 115 #1 : Open Line MANCHSTR 115-HERNDON 115 #1 : Drop Load at MANCHSTR 115 #1 : 11.6 MW 2.3 MVAR D : Drop Load at MANCHSTR 115 #2 : 11.7 MW 2.3 MVAR D : Drop Load at MANCHSTR 115 #3 : 16.6 MW 3.3 MVAR D :	AIRWAYJ2-BARTON 115.00kV Ckt#1 Sec# 1	1124.58	Amps	103.5	103.5	0.0
48	Open Line KERCKHF2 115-WWARD JT 115 #1 : Open Line WWARD JT 115-WOODWARD 115 #1 : Open Line WWARD JT 115-CLOVISJ1 115 #1 : Open Line CLOVISJ1 115-CLOVIS-1 115 #1 : Open Line CLOVISJ1 115-SANGER 115 #1 : Drop Load at CLOVIS-1 115 #1 : 23.4 MW 4.7 MVAR D : Close Line CLOVIS-1 115-CLOVIS-2 115 #1 : Open Line CLOVIS-2 115-CLOVISJ2 115 #1 :	AIRWAYJ2-BARTON 115.00kV Ckt#1 Sec# 1	1124.58	Amps	101.4	101.3	0.0
67	Open Line GATES 230-MORROBAY 230 #1 : Open Line GATES 230-TEMPLETN 230 #1 :	CARRIZO -TEMBLOR 115.00kV Ckt#1 Sec# 1	436.78	Amps	119.1	119.2	0.0
44	Open Line AIRWAYJ2 115-AIRWAYS 115 #1 : Open Line AIRWAYJ2 115-BARTON 115 #1 : Open Line AIRWAYJ2 115-SANGER 115 #1 : Open Line	CLOVISJ1-SANGER 115.00kV Ckt#1 Sec# 1	973.96	Amps	107.8	107.9	0.0

	AIRWAYJ1 115-AIRWAYS 115 #1 : Open Line AIRWAYJ1 115-LASPALMS 115 #1 : Open Line AIRWAYJ1 115-MANCHSTR 115 #1 : Open Line LASPALMS 115-SANGER 115 #1 : Drop Load at LASPALMS 115 #1 : 10.5 MW 8.9 MVAR D :						
44	Open Line AIRWAYJ2 115-AIRWAYS 115 #1 : Open Line AIRWAYJ2 115-BARTON 115 #1 : Open Line AIRWAYJ2 115-SANGER 115 #1 : Open Line AIRWAYJ1 115-AIRWAYS 115 #1 : Open Line AIRWAYJ1 115-LASPALMS 115 #1 : Open Line AIRWAYJ1 115-MANCHSTR 115 #1 : Open Line LASPALMS 115-SANGER 115 #1 : Drop Load at LASPALMS 115 #1 : 10.5 MW 8.9 MVAR D :	CLOVISJ1-WWARD JT 115.00kV Ckt#1 Sec# 1	743.02	Amps	126.0	126.0	0.0
46	Open Line BARTON 115-HERNDON 115 #1 : Open Line AIRWAYJ1 115-AIRWAYS 115 #1 : Open Line AIRWAYJ1 115-LASPALMS 115 #1 : Open Line AIRWAYJ1 115-MANCHSTR 115 #1 : Open Line LASPALMS 115-SANGER 115 #1 : Drop Load at LASPALMS 115 #1 : 10.5 MW 8.9 MVAR D :	CLOVISJ1-WWARD JT 115.00kV Ckt#1 Sec# 1	743.02	Amps	114.5	114.5	0.0
45	Open Line BARTON 115-HERNDON 115 #1 : Open Line MANCHSTR 115-HERNDON 115 #1 :	CLOVISJ1-WWARD JT 115.00kV Ckt#1 Sec# 1	743.02	Amps	106.1	106.1	0.0
59	Open Line HELM 230-MC CALL 230 #1 : Open Line MC CALL 230-HENTAP2 230 #1 : Open Line HENTAP2 230-GATES 230 #1 :	CLOVISJ1-WWARD JT 115.00kV Ckt#1 Sec# 1	743.02	Amps	100.0	100.1	0.2
90	Open Line SANGER 115-CLOVISJ1 115 #1 : Open Line SANGER 115-CLOVISJ2 115 #1 : Open Line SANGER 115-AIRWAYJ2 115 #1 : Open Line SANGER 115-LASPALMS 115 #1 : Open Line SANGER 115-MC CALL 115 #1 : Open Line SANGER 115-MC CALL 115 #2 : Open Line SANGER 115-MC CALL 115 #3 : Open Line SANGER 115-MALAGA 115 #1 : Open Line SANGER 115-RAINBWTP 115 #1 : Open Line SANGER 115-PIEDRA 2 115 #1 :	COPPRMNE-RIVERROC 70.00kV Ckt#1 Sec# 1	437.14	Amps	100.7	100.7	0.0
lbs_dlo_5400,	Los Banos - Gates & Los Banos - Midway 500-kV DLO w/ Path IRAS	COTTLE B-BELLOTA 230.00kV Ckt#1 Sec# 1	793.23	Amps	119.5	120.2	0.7
60	Open Line GREGG 230-HELMS PP 230 #1 : Drop Generator at HELMS 2 18 #**: -310 MW Dropped : Open Line GREGG 230-HELMS PP 230 #2 :	COTTLE B-BELLOTA 230.00kV Ckt#1 Sec# 1	793.23	Amps	117.9	118.5	0.6

69	Open Line HELMS PP 230-GREGG 230 #1 : Open Line HELMS PP 230-GREGG 230 #2 : Open Xfmr HELMS PP 230/HELMS 1 18 #1 : Open Xfmr HELMS PP 230/HELMS 2 18 #1 : Open Xfmr HELMS PP 230/HELMS 3 18 #1 :	COTTLE B-BELLOTA 230.00kV Ckt#1 Sec# 1	793.23	Amps	117.9	118.5	0.6
lbn_dlo_5400,	Los Banos - Tesla & Los Banos - Tracy 500-kV DLO w/ Path IRAS	COTTLE B-BELLOTA 230.00kV Ckt#1 Sec# 1	793.23	Amps	114.0	114.8	0.8
14	Open Line BORDEN 230-GREGG 230 #1 : Open Line BORDEN 230-GREGG 230 #2 :	COTTLE B-BELLOTA 230.00kV Ckt#1 Sec# 1	793.23	Amps	110.8	111.1	0.3
58	Open Line PANOCHE 230-MCMULLN1 230 #1 : Open Line MCMULLN1 230-KEARNEY 230 #1 : Drop Load at MCMULLN1 230 #1 : 9.3 MW 1.8 MVAR Dr : Drop Generator at HELMS 1 18 #**: -310 MW Dropped : Open Line HELM 230-MC CALL 230 #1 :	COTTLE B-BELLOTA 230.00kV Ckt#1 Sec# 1	793.23	Amps	108.0	108.7	0.7
16	Open Line PANOCHE 230-HELM 230 #1 : Open Line PANOCHE 230-MCMULLN1 230 #1 : Open Line MCMULLN1 230-KEARNEY 230 #1 : Drop Load at MCMULLN1 230 #1 : 9.3 MW 1.8 MVAR Dr : Drop Generator at HELMS 1 18 #**: -310 MW Dropped :	COTTLE B-BELLOTA 230.00kV Ckt#1 Sec# 1	793.23	Amps	106.6	107.3	0.7
57	Open Line PANOCHE 230-MCMULLN1 230 #1 : Open Line MCMULLN1 230-KEARNEY 230 #1 : Drop Load at MCMULLN1 230 #1 : 9.3 MW 1.8 MVAR Dr : Drop Generator at HELMS 1 18 #**: -310 MW Dropped : Open Line PANOCHE 230-HELM 230 #1 :	COTTLE B-BELLOTA 230.00kV Ckt#1 Sec# 1	793.23	Amps	106.6	107.3	0.7
62	Open Line KEARNEY 230-HERNDON 230 #1 : Drop Generator at HELMS 1 18 #**: -310 MW Dropped : Open Line HERNDON 230-FGRDN T1 230 #1 : Open Line FGRDN T1 230-FIGRDN 1 230 #1 : Open Line FGRDN T1 230-ASHLAN 230 #1 : Drop Load at FIGRDN 1 230 #1 : 33.6 MW 6.8 MVAR D : Close Line FIGRDN 1 230-FIGRDN 2 230 #1 :	COTTLE B-BELLOTA 230.00kV Ckt#1 Sec# 1	793.23	Amps	103.7	104.4	0.7
11	Open Line BELLOTA 230-COTTLE A 230 #1 : Open Line COTTLE A 230-MELONES 230 #1 : Drop Load at COTTLE A 230 #1 : 12.7 MW 0.5 MVAR D : Open Line MELONES 230-WILSON 230 #1 :	COTTLE B-BELLOTA 230.00kV Ckt#1 Sec# 1	793.23	Amps	101.2	102.0	0.8
20	Open Line PANOCHE 230-MOSSLND2 230 #1 : Open Line PANOCHE 230-PANO_EC 230 #1 : Open Line PANOCHE 230-HELM 230 #1 : Open Line PANOCHE 230-GATES 230 #2 : Open Line	GATES -PANOCHE 230.00kV Ckt#1 Sec# 1	849.96	Amps	103.6	104.2	0.6

	PANOCHE 230-DS AMIGO 230 #1 : Open Xfmr PANOCHE 230/PANOCHE 115 #2 :						
90	Open Line SANGER 115-CLOVISJ1 115 #1 : Open Line SANGER 115-CLOVISJ2 115 #1 : Open Line SANGER 115-AIRWAYJ2 115 #1 : Open Line SANGER 115-LASPALMS 115 #1 : Open Line SANGER 115-MC CALL 115 #1 : Open Line SANGER 115-MC CALL 115 #2 : Open Line SANGER 115-MC CALL 115 #3 : Open Line SANGER 115-MALAGA 115 #1 : Open Line SANGER 115-RAINBWTP 115 #1 : Open Line SANGER 115-PIEDRA 2 115 #1 :	HELM -PANOCHE 230.00kV Ckt#1 Sec# 1	849.96	Amps	129.6	129.9	0.4
59	Open Line HELM 230-MC CALL 230 #1 : Open Line MC CALL 230-HENTAP2 230 #1 : Open Line HENTAP2 230-GATES 230 #1 :	LASPALMS-AIRWAYJ1 115.00kV Ckt#1 Sec# 1	1124.58	Amps	115.6	115.8	0.1
13	Open Line STOREY 2 230-BORDEN 230 #1 : Open Line STOREY 2 230-WILSON 230 #1 : Drop Load at STOREY 2 230 #2 : 15 MW 3 MVAR Dropp : Open Line STOREY 1 230-WILSON 230 #1 : Open Line STOREY 1 230-BORDEN 230 #1 : Drop Load at STOREY 1 230 #1 : 16.8 MW 3.4 MVAR D :	LE GRAND-WILSON A 115.00kV Ckt#1 Sec# 1	512.08	Amps	121.7	122.5	0.8
90	Open Line SANGER 115-CLOVISJ1 115 #1 : Open Line SANGER 115-CLOVISJ2 115 #1 : Open Line SANGER 115-AIRWAYJ2 115 #1 : Open Line SANGER 115-LASPALMS 115 #1 : Open Line SANGER 115-MC CALL 115 #1 : Open Line SANGER 115-MC CALL 115 #2 : Open Line SANGER 115-MC CALL 115 #3 : Open Line SANGER 115-MALAGA 115 #1 : Open Line SANGER 115-RAINBWTP 115 #1 : Open Line SANGER 115-PIEDRA 2 115 #1 :	LEPRNOFD-GWF_HEP 115.00kV Ckt#1 Sec# 1	743.02	Amps	100.6	99.6	-0.9
lbn_dlo_5400,	Los Banos - Tesla & Los Banos - Tracy 500-kV DLO w/ Path IRAS	LOSBANOS-WESTLEY 230.00kV Ckt#1 Sec# 1	1699.92	Amps	179.0	179.9	0.9
10	Open Line BELLOTA 230-COTTLE A 230 #1 : Open Line COTTLE A 230-MELONES 230 #1 : Drop Load at COTTLE A 230 #1 : 12.7 MW 0.5 MVAR D : Open Line WARNERVL 230-WILSON 230 #1 :	LOSBANOS-WESTLEY 230.00kV Ckt#1 Sec# 1	1699.92	Amps	116.9	117.5	0.6
60	Open Line GREGG 230-HELMS PP 230 #1 : Drop Generator at HELMS 2 18 #**: -310 MW Dropped : Open	LOSBANOS-WESTLEY 230.00kV Ckt#1 Sec# 1	1699.92	Amps	115.0	115.5	0.5

	Line GREGG 230-HELMS PP 230 #2 :						
69	Open Line HELMS PP 230-GREGG 230 #1 : Open Line HELMS PP 230-GREGG 230 #2 : Open Xfmr HELMS PP 230/HELMS 1 18 #1 : Open Xfmr HELMS PP 230/HELMS 2 18 #1 : Open Xfmr HELMS PP 230/HELMS 3 18 #1 :	LOSBANOS-WESTLEY 230.00kV Ckt#1 Sec# 1	1699.92	Amps	115.0	115.5	0.5
12	Open Line MELONES 230-WILSON 230 #1 : Open Line WARNERVL 230-WILSON 230 #1 :	LOSBANOS-WESTLEY 230.00kV Ckt#1 Sec# 1	1699.92	Amps	113.2	113.8	0.6
56	Open Line PANOCHE 230-MCMULLN1 230 #1 : Open Line MCMULLN1 230-KEARNEY 230 #1 : Drop Load at MCMULLN1 230 #1 : 9.3 MW 1.8 MVAR Dr : Drop Generator at HELMS 1 18 #**: -310 MW Dropped : Open Line GREGG 230-HENTAP1 230 #1 : Open Line HENTAP1 230-HENRIETA 230 #1 : Open Line HENTAP1 230-GATES 230 #1 : Close Line HENTAP2 230-HENRIETA 230 #1 :	LOSBANOS-WESTLEY 230.00kV Ckt#1 Sec# 1	1699.92	Amps	112.3	112.8	0.5
15	Open Line MOSSLND2 230-PANOCHE 230 #1 : Open Line COBURN 230-PANOCHE 230 #1 :	LOSBANOS-WESTLEY 230.00kV Ckt#1 Sec# 1	1699.92	Amps	111.1	111.6	0.6
63	Open Line KEARNEY 230-HERNDON 230 #1 : Drop Generator at HELMS 1 18 #**: -310 MW Dropped : Open Line GREGG 230-HENTAP1 230 #1 : Open Line HENTAP1 230-HENRIETA 230 #1 : Open Line HENTAP1 230-GATES 230 #1 : Close Line HENTAP2 230-HENRIETA 230 #1 :	LOSBANOS-WESTLEY 230.00kV Ckt#1 Sec# 1	1699.92	Amps	111.0	111.5	0.5
13	Open Line STOREY 2 230-BORDEN 230 #1 : Open Line STOREY 2 230-WILSON 230 #1 : Drop Load at STOREY 2 230 #2 : 15 MW 3 MVAR Dropp : Open Line STOREY 1 230-WILSON 230 #1 : Open Line STOREY 1 230-BORDEN 230 #1 : Drop Load at STOREY 1 230 #1 : 16.8 MW 3.4 MVAR D :	LOSBANOS-WESTLEY 230.00kV Ckt#1 Sec# 1	1699.92	Amps	110.6	111.2	0.6
55	Open Line GREGG 230-HENTAP1 230 #1 : Open Line HENTAP1 230-HENRIETA 230 #1 : Open Line HENTAP1 230-GATES 230 #1 : Close Line HENTAP2 230-HENRIETA 230 #1 : Drop Generator at HELMS 1 18 #**: -310 MW Dropped : Open Line MC CALL 230-HENTAP2 230 #1 : Open Line HENTAP2 230-GATES 230 #1 :	LOSBANOS-WESTLEY 230.00kV Ckt#1 Sec# 1	1699.92	Amps	110.1	110.6	0.5
64	Open Line GREGG 230-HENTAP1 230 #1 : Open Line HENTAP1 230-HENRIETA 230 #1 : Open Line	LOSBANOS-WESTLEY 230.00kV Ckt#1 Sec# 1	1699.92	Amps	110.0	110.5	0.5

	HENTAP1 230-GATES 230 #1 : Close Line HENTAP2 230-HENRIETA 230 #1 : Drop Generator at HELMS 1 18 #**: -310 MW Dropped : Open Line GREGG 230-FGRDN T2 230 #1 : Open Line FGRDN T2 230-FIGRDN 2 230 #1 : Open Line FGRDN T2 230-ASHLAN 230 #1 : Drop Load at FIGRDN 2 230 #1 : 24.1 MW 4.8 MVAR D :						
62	Open Line KEARNEY 230-HERNDON 230 #1 : Drop Generator at HELMS 1 18 #**: -310 MW Dropped : Open Line HERNDON 230-FGRDN T1 230 #1 : Open Line FGRDN T1 230-FIGRDN 1 230 #1 : Open Line FGRDN T1 230-ASHLAN 230 #1 : Drop Load at FIGRDN 1 230 #1 : 33.6 MW 6.8 MVAR D : Close Line FIGRDN 1 230-FIGRDN 2 230 #1 :	LOSBANOS-WESTLEY 230.00kV Ckt#1 Sec# 1	1699.92	Amps	109.0	109.5	0.4
9	Open Line BELLOTA 230-COTTLE A 230 #1 : Open Line COTTLE A 230-MELONES 230 #1 : Drop Load at COTTLE A 230 #1 : 12.7 MW 0.5 MVAR D : Open Line BELLOTA 230-COTTLE B 230 #1 : Open Line COTTLE B 230-WARNERVL 230 #1 : Drop Load at COTTLE B 230 #2 : 14.6 MW 0.6 MVAR D :	LOSBANOS-WESTLEY 230.00kV Ckt#1 Sec# 1	1699.92	Amps	108.9	109.4	0.5
90	Open Line SANGER 115-CLOVISJ1 115 #1 : Open Line SANGER 115-CLOVISJ2 115 #1 : Open Line SANGER 115-AIRWAYJ2 115 #1 : Open Line SANGER 115-LASPALMS 115 #1 : Open Line SANGER 115-MC CALL 115 #1 : Open Line SANGER 115-MC CALL 115 #2 : Open Line SANGER 115-MC CALL 115 #3 : Open Line SANGER 115-MALAGA 115 #1 : Open Line SANGER 115-RAINBWTP 115 #1 : Open Line SANGER 115-PIEDRA 2 115 #1 :	LOSBANOS-WESTLEY 230.00kV Ckt#1 Sec# 1	1699.92	Amps	106.8	107.3	0.5
65	Open Line HERNDON 230-FGRDN T1 230 #1 : Open Line FGRDN T1 230-FIGRDN 1 230 #1 : Open Line FGRDN T1 230-ASHLAN 230 #1 : Drop Load at FIGRDN 1 230 #1 : 33.6 MW 6.8 MVAR D : Close Line FIGRDN 1 230-FIGRDN 2 230 #1 : Open Line GREGG 230-FGRDN T2 230 #1 : Open Line FGRDN T2 230-FIGRDN 2 230 #1 : Open Line FGRDN T2 230-ASHLAN 230 #1 : Drop Load at FIGRDN 2 230 #1 : 24.1 MW 4.8 MVAR D :	LOSBANOS-WESTLEY 230.00kV Ckt#1 Sec# 1	1699.92	Amps	106.4	106.9	0.5

16	Open Line PANOCHE 230-HELM 230 #1 : Open Line PANOCHE 230-MCMULLN1 230 #1 : Open Line MCMULLN1 230-KEARNEY 230 #1 : Drop Load at MCMULLN1 230 #1 : 9.3 MW 1.8 MVAR Dr : Drop Generator at HELMS 1 18 #**: -310 MW Dropped :	LOSBANOS-WESTLEY 230.00kV Ckt#1 Sec# 1	1699.92	Amps	106.4	106.8	0.4
57	Open Line PANOCHE 230-MCMULLN1 230 #1 : Open Line MCMULLN1 230-KEARNEY 230 #1 : Drop Load at MCMULLN1 230 #1 : 9.3 MW 1.8 MVAR Dr : Drop Generator at HELMS 1 18 #**: -310 MW Dropped : Open Line PANOCHE 230-HELM 230 #1 :	LOSBANOS-WESTLEY 230.00kV Ckt#1 Sec# 1	1699.92	Amps	106.4	106.8	0.4
70	Open Line KEARNEY 230-MCMULLN1 230 #1 : Open Line KEARNEY 230-HERNDON 230 #1 : Open Xfmr KEARNEY 230/KEARNEY 70 #2 :	LOSBANOS-WESTLEY 230.00kV Ckt#1 Sec# 1	1699.92	Amps	106.1	106.6	0.5
44	Open Line AIRWAYJ2 115-AIRWAYS 115 #1 : Open Line AIRWAYJ2 115-BARTON 115 #1 : Open Line AIRWAYJ2 115-SANGER 115 #1 : Open Line AIRWAYJ1 115-AIRWAYS 115 #1 : Open Line AIRWAYJ1 115-LASPALMS 115 #1 : Open Line AIRWAYJ1 115-MANCHSTR 115 #1 : Open Line LASPALMS 115-SANGER 115 #1 : Drop Load at LASPALMS 115 #1 : 10.5 MW 8.9 MVAR D :	LOSBANOS-WESTLEY 230.00kV Ckt#1 Sec# 1	1699.92	Amps	105.6	106.0	0.5
47	Open Line PNDLJ1 115-BULLARD 115 #1 : Open Line PNDLJ1 115-HERNDON 115 #1 : Open Line PNDLJ2 115-PNEDLE 115 #1 : Open Line PNDLJ2 115-BULLARD 115 #1 : Open Line PNDLJ2 115-HERNDON 115 #1 : Drop Load at PNEDLE 115 #2 : 14.1 MW 2.8 MVAR Dro : Drop Load at PNEDLE 115 #3 : 18.5 MW 3.7 MVAR Dro : Close Line PNDLJ1 115-PNEDLE 115 #1 :	LOSBANOS-WESTLEY 230.00kV Ckt#1 Sec# 1	1699.92	Amps	105.4	105.8	0.5
48	Open Line KERCKHF2 115-WWARD JT 115 #1 : Open Line WWARD JT 115-WOODWARD 115 #1 : Open Line WWARD JT 115-CLOVISJ1 115 #1 : Open Line CLOVISJ1 115-CLOVIS-1 115 #1 : Open Line CLOVISJ1 115-SANGER 115 #1 : Drop Load at CLOVIS-1 115 #1 : 23.4 MW 4.7 MVAR D : Close Line CLOVIS-1 115-CLOVIS-2 115 #1 : Open Line CLOVIS-2 115-CLOVISJ2 115 #1 :	LOSBANOS-WESTLEY 230.00kV Ckt#1 Sec# 1	1699.92	Amps	105.3	105.8	0.5
75	Open Line ASHLAN 230-FGRDN T1 230 #1 : Open Line ASHLAN 230-FGRDN T2 230 #1 : Drop Load	LOSBANOS-WESTLEY 230.00kV Ckt#1 Sec# 1	1699.92	Amps	105.3	105.8	0.5

	at ASHLAN 230 #1 : 31.7 MW 6.1 MVAR Dro : Drop Load at ASHLAN 230 #2 : 29.5 MW 5.8 MVAR Dro : Drop Load at ASHLAN 230 #3 : 30 MW 5.7 MVAR Dropp :						
54	Open Line WST FRSO 115-MC CALL 115 #1 : Open Line DANISHCM 115-MC CALL 115 #1 : Open Line DANISHCM 115-CAL AVE 115 #1 : Drop Load at DANISHCM 115 #1 : 3.1 MW 2.6 MVAR Dr :	LOSBANOS-WESTLEY 230.00kV Ckt#1 Sec# 1	1699.92	Amps	105.2	105.7	0.5
58	Open Line PANOCHE 230-MCMULLN1 230 #1 : Open Line MCMULLN1 230-KEARNEY 230 #1 : Drop Load at MCMULLN1 230 #1 : 9.3 MW 1.8 MVAR Dr : Drop Generator at HELMS 1 18 #**: -310 MW Dropped : Open Line HELM 230-MC CALL 230 #1 :	LOSBANOS-WESTLEY 230.00kV Ckt#1 Sec# 1	1699.92	Amps	105.3	105.7	0.4
103	Open Line WOODWARD 115-WWARD JT 115 #1 : Open Line WOODWARD 115-CHLDHOSP 115 #1 : Drop Load at WOODWARD 115 #1 : 19.3 MW 3.9 MVAR D : Drop Load at WOODWARD 115 #2 : 24.1 MW 4.8 MVAR D : Drop Load at WOODWARD 115 #3 : 20.2 MW 4 MVAR Dro :	LOSBANOS-WESTLEY 230.00kV Ckt#1 Sec# 1	1699.92	Amps	104.9	105.4	0.5
11	Open Line BELLOTA 230-COTTLE A 230 #1 : Open Line COTTLE A 230-MELONES 230 #1 : Drop Load at COTTLE A 230 #1 : 12.7 MW 0.5 MVAR D : Open Line MELONES 230-WILSON 230 #1 :	LOSBANOS-WESTLEY 230.00kV Ckt#1 Sec# 1	1699.92	Amps	104.9	105.4	0.5
46	Open Line BARTON 115-HERNDON 115 #1 : Open Line AIRWAYJ1 115-AIRWAYS 115 #1 : Open Line AIRWAYJ1 115-LASPALMS 115 #1 : Open Line AIRWAYJ1 115-MANCHSTR 115 #1 : Open Line LASPALMS 115-SANGER 115 #1 : Drop Load at LASPALMS 115 #1 : 10.5 MW 8.9 MVAR D :	LOSBANOS-WESTLEY 230.00kV Ckt#1 Sec# 1	1699.92	Amps	104.9	105.4	0.5
98	Open Line BARTON 115-AIRWAYJ2 115 #1 : Open Line BARTON 115-HERNDON 115 #1 : Drop Load at BARTON 115 #1 : 19.8 MW 4 MVAR Dropp : Drop Load at BARTON 115 #2 : 17 MW 3.4 MVAR Dropp : Drop Load at BARTON 115 #3 : 12.3 MW 2.5 MVAR Dro :	LOSBANOS-WESTLEY 230.00kV Ckt#1 Sec# 1	1699.92	Amps	104.9	105.4	0.5
71	Open Line HERNDON 230-GREGG 230 #1 : Open Line HERNDON 230-KEARNEY 230 #1 : Open Xfmr HERNDON 230/HERNDN1M 115 #1 :	LOSBANOS-WESTLEY 230.00kV Ckt#1 Sec# 1	1699.92	Amps	104.9	105.3	0.4
104	Open Line BULLARD 115-PNDLJ2 115 #1 : Open Line BULLARD 115-PNDLJ1 115 #1 : Drop Load at BULLARD 115 #1 : 20.5 MW 4.1 MVAR Dr : Drop Load at	LOSBANOS-WESTLEY 230.00kV Ckt#1 Sec# 1	1699.92	Amps	104.8	105.3	0.5

	BULLARD 115 #2 : 20.4 MW 4.1 MVAR Dr : Drop Load at BULLARD 115 #3 : 19.5 MW 3.9 MVAR Dr :						
35	Open Line LOS BANS 70-CHEVPIPE 70 #1 : Open Line LOS BANS 70-WRGHT PP 70 #1 : Open Line LOS BANS 70-PCHCO PP 70 #1 : Open Line LOS BANS 70-ONLL PMP 69 #1 : Open Xfmr LOS BANS 70/LOSBANOS 230 #3 : Open Xfmr LOS BANS 70/LOSBANOS 230 #4 :	LOSBANOS-WESTLEY 230.00kV Ckt#1 Sec# 1	1699.92	Amps	104.7	105.1	0.5
34	Open Line CANAL 70-LVNGSTNT 70 #1 : Open Line CANAL 70-SNTA RTA 70 #1 : Open Line CANAL 70-ORTIGA 70 #1 : Drop Load at CANAL 70 #1 : 13.5 MW 2.7 MVAR Dropp : Drop Load at CANAL 70 #2 : 13.8 MW 2.8 MVAR Dropp :	LOSBANOS-WESTLEY 230.00kV Ckt#1 Sec# 1	1699.92	Amps	104.6	105.1	0.5
52	Open Line SANGER 115-MC CALL 115 #1 : Open Line SANGER 115-MC CALL 115 #2 :	MALAGATP-ULTPWRJ 115.00kV Ckt#1 Sec# 1	743.02	Amps	101.9	101.9	0.0
90	Open Line SANGER 115-CLOVISJ1 115 #1 : Open Line SANGER 115-CLOVISJ2 115 #1 : Open Line SANGER 115-AIRWAYJ2 115 #1 : Open Line SANGER 115-LASPALMS 115 #1 : Open Line SANGER 115-MC CALL 115 #1 : Open Line SANGER 115-MC CALL 115 #2 : Open Line SANGER 115-MC CALL 115 #3 : Open Line SANGER 115-MALAGA 115 #1 : Open Line SANGER 115-RAINBWTP 115 #1 : Open Line SANGER 115-PIEDRA 2 115 #1 :	MC CALL -HELM 230.00kV Ckt#1 Sec# 1	849.96	Amps	147.0	147.4	0.4
55	Open Line GREGG 230-HENTAP1 230 #1 : Open Line HENTAP1 230-HENRIETA 230 #1 : Open Line HENTAP1 230-GATES 230 #1 : Close Line HENTAP2 230-HENRIETA 230 #1 : Drop Generator at HELMS 1 18 #**: -310 MW Dropped : Open Line MC CALL 230-HENTAP2 230 #1 : Open Line HENTAP2 230-GATES 230 #1 :	MC CALL -HELM 230.00kV Ckt#1 Sec# 1	849.96	Amps	106.9	110.3	3.4
44	Open Line AIRWAYJ2 115-AIRWAYS 115 #1 : Open Line AIRWAYJ2 115-BARTON 115 #1 : Open Line AIRWAYJ2 115-SANGER 115 #1 : Open Line AIRWAYJ1 115-AIRWAYS 115 #1 : Open Line AIRWAYJ1 115-LASPALMS 115 #1 : Open Line AIRWAYJ1 115-MANCHSTR 115 #1 : Open Line LASPALMS 115-SANGER 115 #1 : Drop Load at	MC CALL -HELM 230.00kV Ckt#1 Sec# 1	849.96	Amps	106.7	107.1	0.4

	LASPALMS 115 #1 : 10.5 MW 8.9 MVAR D :						
lbs_dlo_5400,	Los Banos - Gates & Los Banos - Midway 500-kV DLO w/ Path IRAS	MC CALL -HELM 230.00kV Ckt#1 Sec# 1	849.96	Amps	104.9	105.4	0.5
46	Open Line BARTON 115-HERNDON 115 #1 : Open Line AIRWAYJ1 115-AIRWAYS 115 #1 : Open Line AIRWAYJ1 115-LASPALMS 115 #1 : Open Line AIRWAYJ1 115-MANCHSTR 115 #1 : Open Line LASPALMS 115-SANGER 115 #1 : Drop Load at LASPALMS 115 #1 : 10.5 MW 8.9 MVAR D :	MC CALL -HELM 230.00kV Ckt#1 Sec# 1	849.96	Amps	101.0	101.3	0.4
79	Open Line MC CALL 230-HELM 230 #1 : Open Line MC CALL 230-BALCH3TP 230 #1 : Open Line MC CALL 230-Q128 230 #2 : Open Xfmr MC CALL 230/MCCALL1M 115 #1 : Open Xfmr MC CALL 230/MCCALL3M 115 #3 :	MC CALL -MCCALL2M 230.00/ 115.00kV Bk#2	465	MVA	117.7	117.6	-0.1
76	Open Line HELM 230-PANOCHE 230 #1 : Open Line HELM 230-MC CALL 230 #1 : Open Xfmr HELM 230/HELM 70 #1 :	MC CALL -SANGER 115.00kV Ckt#3 Sec# 1	973.96	Amps	110.1	110.2	0.1
55	Open Line GREGG 230-HENTAP1 230 #1 : Open Line HENTAP1 230-HENRIETA 230 #1 : Open Line HENTAP1 230-GATES 230 #1 : Close Line HENTAP2 230-HENRIETA 230 #1 : Drop Generator at HELMS 1 18 #**: -310 MW Dropped : Open Line MC CALL 230-HENTAP2 230 #1 : Open Line HENTAP2 230-GATES 230 #1 :	MC CALL -SANGER 115.00kV Ckt#3 Sec# 1	973.96	Amps	105.3	107.2	1.9
58	Open Line PANOCHE 230-MCMULLN1 230 #1 : Open Line MCMULLN1 230-KEARNEY 230 #1 : Drop Load at MCMULLN1 230 #1 : 9.3 MW 1.8 MVAR Dr : Drop Generator at HELMS 1 18 #**: -310 MW Dropped : Open Line HELM 230-MC CALL 230 #1 :	MC CALL -SANGER 115.00kV Ckt#3 Sec# 1	973.96	Amps	102.3	102.4	0.0
56	Open Line PANOCHE 230-MCMULLN1 230 #1 : Open Line MCMULLN1 230-KEARNEY 230 #1 : Drop Load at MCMULLN1 230 #1 : 9.3 MW 1.8 MVAR Dr : Drop Generator at HELMS 1 18 #**: -310 MW Dropped : Open Line GREGG 230-HENTAP1 230 #1 : Open Line HENTAP1 230-HENRIETA 230 #1 : Open Line HENTAP1 230-GATES 230 #1 : Close Line HENTAP2 230-HENRIETA 230 #1 :	MC CALL -SANGER 115.00kV Ckt#3 Sec# 1	973.96	Amps	101.6	102.1	0.5
91	Open Line MALAGA 115-SANGER 115 #1 : Open Line MALAGA 115-PPG 115 #1 : Open Line	MC CALL -SANGER 115.00kV Ckt#3 Sec# 1	973.96	Amps	101.8	101.8	0.0

	MALAGA 115-MALAGATP 115 #1 : Open Line MALAGA 115-KRCDP 115 #1 : Drop Load at MALAGA 115 #1 : 11.6 MW 2.3 MVAR Dro : Drop Load at MALAGA 115 #2 : 10.4 MW 2.1 MVAR Dro : Drop Load at MALAGA 115 #3 : 10.6 MW 2.1 MVAR Dro :						
94	Open Line WAHTOKE 115-MC CALL 115 #1 : Open Line WAHTOKE 115-GERAWAN 115 #1 : Drop Load at WAHTOKE 115 #2 : 13.9 MW 2.8 MVAR Dr : Drop Load at WAHTOKE 115 #3 : 9.5 MW 1.9 MVAR Dro :	MC CALL -SANGER 115.00kV Ckt#3 Sec# 1	973.96	Amps	101.4	101.4	0.0
79	Open Line MC CALL 230-HELM 230 #1 : Open Line MC CALL 230-BALCH3TP 230 #1 : Open Line MC CALL 230-Q128 230 #2 : Open Xfmr MC CALL 230/MCCALL1M 115 #1 : Open Xfmr MC CALL 230/MCCALL3M 115 #3 :	MCCALL2M-MC CALL 115.00/ 115.00kV Bk#2	465	MVA	116.5	116.4	-0.1
81	Open Line GATES 230-PANOCHE 230 #1 : Open Line GATES 230-TEMPLETN 230 #1 : Open Xfmr GATES 230/GATES 1M 230 #1 :	MORROBAY-GATES 230.00kV Ckt#1 Sec# 1	974.97	Amps	111.8	111.5	-0.2
19	Open Line PANOCHE 230-COBURN 230 #1 : Open Line PANOCHE 230-LOSBANOS 230 #1 : Open Line PANOCHE 230-LOSBANOS 230 #2 : Open Line PANOCHE 230-MCMULLN1 230 #1 : Open Line PANOCHE 230-GATES 230 #1 : Open Xfmr PANOCHE 230/PNCHE 1M 230 #1 :	PANOCHE -DS AMIGO 230.00kV Ckt#1 Sec# 1	849.96	Amps	122.1	122.7	0.6
lbs_dlo_5400,	Los Banos - Gates & Los Banos - Midway 500-kV DLO w/ Path IRAS	PANOCHE -DS AMIGO 230.00kV Ckt#1 Sec# 1	849.96	Amps	103.1	103.8	0.6
7	Open Line LOSBANOS 230-PANOCHE 230 #2 : Open Line DS AMIGO 230-PANOCHE 230 #1 :	PANOCHE -LOSBANOS 230.00kV Ckt#1 Sec# 1	974.97	Amps	101.3	102.0	0.6
18	Open Line LOSBANOS 230-PANOCHE 230 #1 : Open Line LOSBANOS 230-DS AMIGO 230 #1 : Open Xfmr LOSBANOS 230/LOS BANS 70 #4 :	PANOCHE -LOSBANOS 230.00kV Ckt#2 Sec# 1	849.96	Amps	101.9	102.6	0.7
lbs_dlo_5400,	Los Banos - Gates & Los Banos - Midway 500-kV DLO w/ Path IRAS	PANOCHE -LOSBANOS 230.00kV Ckt#2 Sec# 1	849.96	Amps	101.6	102.2	0.6
67	Open Line GATES 230-MORROBAY 230 #1 : Open Line GATES 230-TEMPLETN 230 #1 :	PSA RBLS-SAN MIGL 70.00kV Ckt#1 Sec# 1	346.41	Amps	145.6	145.5	-0.2
81	Open Line GATES 230-PANOCHE 230 #1 : Open Line GATES 230-TEMPLETN 230 #1 : Open Xfmr GATES 230/GATES 1M 230 #1 :	PSA RBLS-SAN MIGL 70.00kV Ckt#1 Sec# 1	346.41	Amps	101.8	101.8	0.1
67	Open Line GATES 230-MORROBAY 230 #1 : Open	Q166 -MIDWAY 230.00kV Ckt#1 Sec# 1	976.48	Amps	129.4	129.4	0.0

	Line GATES 230-TEMPLETN 230 #1 :						
67	Open Line GATES 230-MORROBAY 230 #1 : Open Line GATES 230-TEMPLETN 230 #1 :	Q166 -Q194SWST 230.00kV Ckt#1 Sec# 1	976.48	Amps	129.4	129.4	0.0
67	Open Line GATES 230-MORROBAY 230 #1 : Open Line GATES 230-TEMPLETN 230 #1 :	Q194SWST-MIDWAY 230.00kV Ckt#1 Sec# 1	976.48	Amps	129.4	129.4	0.0
67	Open Line GATES 230-MORROBAY 230 #1 : Open Line GATES 230-TEMPLETN 230 #1 :	Q238TAP -CARRIZO 115.00kV Ckt#1 Sec# 1	436.78	Amps	119.4	119.4	0.0
67	Open Line GATES 230-MORROBAY 230 #1 : Open Line GATES 230-TEMPLETN 230 #1 :	Q239SWST-MORROBAY 230.00kV Ckt#1 Sec# 1	976.48	Amps	129.4	129.4	0.0
67	Open Line GATES 230-MORROBAY 230 #1 : Open Line GATES 230-TEMPLETN 230 #1 :	Q239SWST-MORROBAY 230.00kV Ckt#2 Sec# 1	976.48	Amps	129.4	129.4	0.0
67	Open Line GATES 230-MORROBAY 230 #1 : Open Line GATES 230-TEMPLETN 230 #1 :	Q239SWST-Q166 230.00kV Ckt#1 Sec# 1	976.48	Amps	129.4	129.4	0.0
67	Open Line GATES 230-MORROBAY 230 #1 : Open Line GATES 230-TEMPLETN 230 #1 :	Q239SWST-Q166 230.00kV Ckt#2 Sec# 1	976.48	Amps	129.4	129.4	0.0
90	Open Line SANGER 115-CLOVISJ1 115 #1 : Open Line SANGER 115-CLOVISJ2 115 #1 : Open Line SANGER 115-AIRWAYJ2 115 #1 : Open Line SANGER 115-LASPALMS 115 #1 : Open Line SANGER 115-MC CALL 115 #1 : Open Line SANGER 115-MC CALL 115 #2 : Open Line SANGER 115-MC CALL 115 #3 : Open Line SANGER 115-MALAGA 115 #1 : Open Line SANGER 115-RAINBWTP 115 #1 : Open Line SANGER 115-PIEDRA 2 115 #1 :	REEDLEY -TVY VLLY 70.00kV Ckt#1 Sec# 1	297.75	Amps	140.2	140.2	0.0
67	Open Line GATES 230-MORROBAY 230 #1 : Open Line GATES 230-TEMPLETN 230 #1 :	SAN MIGL-COLNGA 1 70.00kV Ckt#1 Sec# 1	346.41	Amps	135.7	135.6	-0.2
59	Open Line HELM 230-MC CALL 230 #1 : Open Line MC CALL 230-HENTAP2 230 #1 : Open Line HENTAP2 230-GATES 230 #1 :	SANGER -AIRWAYJ2 115.00kV Ckt#1 Sec# 1	1124.58	Amps	118.3	118.4	0.1
48	Open Line KERCKHF2 115-WWARD JT 115 #1 : Open Line WWARD JT 115-WOODWARD 115 #1 : Open Line WWARD JT 115-CLOVISJ1 115 #1 : Open Line CLOVISJ1 115-CLOVIS-1 115 #1 : Open Line CLOVISJ1 115-SANGER 115 #1 : Drop Load at CLOVIS-1 115 #1 : 23.4 MW 4.7 MVAR D : Close Line CLOVIS-1 115-CLOVIS-2 115 #1 : Open Line CLOVIS-2 115-CLOVISJ2 115 #1 :	SANGER -AIRWAYJ2 115.00kV Ckt#1 Sec# 1	1124.58	Amps	101.5	101.4	0.0

59	Open Line HELM 230-MC CALL 230 #1 : Open Line MC CALL 230-HENTAP2 230 #1 : Open Line HENTAP2 230-GATES 230 #1 :	SANGER -LASPALMS 115.00kV Ckt#1 Sec# 1	1124.58	Amps	119.6	119.8	0.1
48	Open Line KERCKHF2 115-WWARD JT 115 #1 : Open Line WWARD JT 115-WOODWARD 115 #1 : Open Line WWARD JT 115-CLOVISJ1 115 #1 : Open Line CLOVISJ1 115-CLOVIS-1 115 #1 : Open Line CLOVISJ1 115-SANGER 115 #1 : Drop Load at CLOVIS-1 115 #1 : 23.4 MW 4.7 MVAR D : Close Line CLOVIS-1 115-CLOVIS-2 115 #1 : Open Line CLOVIS-2 115-CLOVISJ2 115 #1 :	SANGER -LASPALMS 115.00kV Ckt#1 Sec# 1	1124.58	Amps	102.7	102.7	0.0
52	Open Line SANGER 115-MC CALL 115 #1 : Open Line SANGER 115-MC CALL 115 #2 :	SANGER -MC CALL 115.00kV Ckt#3 Sec# 1	973.96	Amps	172.7	172.7	0.0
59	Open Line HELM 230-MC CALL 230 #1 : Open Line MC CALL 230-HENTAP2 230 #1 : Open Line HENTAP2 230-GATES 230 #1 :	SANGER -MC CALL 115.00kV Ckt#3 Sec# 1	973.96	Amps	134.0	134.2	0.2
20	Open Line PANOCHE 230-MOSSLND2 230 #1 : Open Line PANOCHE 230-PANO_EC 230 #1 : Open Line PANOCHE 230-HELM 230 #1 : Open Line PANOCHE 230-GATES 230 #2 : Open Line PANOCHE 230-DS AMIGO 230 #1 : Open Xfmr PANOCHE 230/PANOCHE 115 #2 :	SANGER -MC CALL 115.00kV Ckt#3 Sec# 1	973.96	Amps	106.8	106.9	0.1
14	Open Line BORDEN 230-GREGG 230 #1 : Open Line BORDEN 230-GREGG 230 #2 :	SANGER -MC CALL 115.00kV Ckt#3 Sec# 1	973.96	Amps	101.1	101.0	-0.1
67	Open Line GATES 230-MORROBAY 230 #1 : Open Line GATES 230-TEMPLETN 230 #1 :	SN LS OB-Q238TAP 115.00kV Ckt#1 Sec# 1	436.78	Amps	119.9	120.0	0.0
67	Open Line GATES 230-MORROBAY 230 #1 : Open Line GATES 230-TEMPLETN 230 #1 :	TEMBLOR -BELRIDGE 115.00kV Ckt#1 Sec# 1	743.02	Amps	103.6	103.6	0.0
82	Open Line GATES 230-PANOCHE 230 #2 : Open Line GATES 230-MORROBAY 230 #1 :	TEMPLETN-GATES 230.00kV Ckt#1 Sec# 1	974.97	Amps	109.5	109.3	-0.2
67	Open Line GATES 230-MORROBAY 230 #1 : Open Line GATES 230-TEMPLETN 230 #1 :	TORNADO -COLNGA 2 70.00kV Ckt#1 Sec# 1	377.75	Amps	103.9	103.9	0.0
90	Open Line SANGER 115-CLOVISJ1 115 #1 : Open Line SANGER 115-CLOVISJ2 115 #1 : Open Line SANGER 115-AIRWAYJ2 115 #1 : Open Line SANGER 115-LASPALMS 115 #1 : Open Line SANGER 115-MC CALL 115 #1 : Open Line SANGER 115-MC CALL 115 #2 : Open Line SANGER 115-MC CALL 115 #3 : Open Line	TVY VLLY-COPPRMNE 70.00kV Ckt#1 Sec# 1	297.75	Amps	129.1	129.1	0.0

	SANGER 115-MALAGA 115 #1 : Open Line SANGER 115-RAINBWTP 115 #1 : Open Line SANGER 115-PIEDRA 2 115 #1 :						
lbs_dlo_5400,	Los Banos - Gates & Los Banos - Midway 500-kV DLO w/ Path IRAS	WARNERVL-COTTLE B 230.00kV Ckt#1 Sec# 1	793.23	Amps	124.0	124.7	0.7
60	Open Line GREGG 230-HELMS PP 230 #1 : Drop Generator at HELMS 2 18 #**: -310 MW Dropped : Open Line GREGG 230-HELMS PP 230 #2 :	WARNERVL-COTTLE B 230.00kV Ckt#1 Sec# 1	793.23	Amps	122.4	123.0	0.6
69	Open Line HELMS PP 230-GREGG 230 #1 : Open Line HELMS PP 230-GREGG 230 #2 : Open Xfmr HELMS PP 230/HELMS 1 18 #1 : Open Xfmr HELMS PP 230/HELMS 2 18 #1 : Open Xfmr HELMS PP 230/HELMS 3 18 #1 :	WARNERVL-COTTLE B 230.00kV Ckt#1 Sec# 1	793.23	Amps	122.4	123.0	0.6
lbn_dlo_5400,	Los Banos - Tesla & Los Banos - Tracy 500-kV DLO w/ Path IRAS	WARNERVL-COTTLE B 230.00kV Ckt#1 Sec# 1	793.23	Amps	118.5	119.3	0.8
14	Open Line BORDEN 230-GREGG 230 #1 : Open Line BORDEN 230-GREGG 230 #2 :	WARNERVL-COTTLE B 230.00kV Ckt#1 Sec# 1	793.23	Amps	115.3	115.6	0.3
58	Open Line PANOCHE 230-MCMULLN1 230 #1 : Open Line MCMULLN1 230-KEARNEY 230 #1 : Drop Load at MCMULLN1 230 #1 : 9.3 MW 1.8 MVAR Dr : Drop Generator at HELMS 1 18 #**: -310 MW Dropped : Open Line HELM 230-MC CALL 230 #1 :	WARNERVL-COTTLE B 230.00kV Ckt#1 Sec# 1	793.23	Amps	112.5	113.2	0.7
16	Open Line PANOCHE 230-HELM 230 #1 : Open Line PANOCHE 230-MCMULLN1 230 #1 : Open Line MCMULLN1 230-KEARNEY 230 #1 : Drop Load at MCMULLN1 230 #1 : 9.3 MW 1.8 MVAR Dr : Drop Generator at HELMS 1 18 #**: -310 MW Dropped :	WARNERVL-COTTLE B 230.00kV Ckt#1 Sec# 1	793.23	Amps	111.1	111.7	0.7
57	Open Line PANOCHE 230-MCMULLN1 230 #1 : Open Line MCMULLN1 230-KEARNEY 230 #1 : Drop Load at MCMULLN1 230 #1 : 9.3 MW 1.8 MVAR Dr : Drop Generator at HELMS 1 18 #**: -310 MW Dropped : Open Line PANOCHE 230-HELM 230 #1 :	WARNERVL-COTTLE B 230.00kV Ckt#1 Sec# 1	793.23	Amps	111.1	111.7	0.7
62	Open Line KEARNEY 230-HERNDON 230 #1 : Drop Generator at HELMS 1 18 #**: -310 MW Dropped : Open Line HERNDON 230-FGRDN T1 230 #1 : Open Line FGRDN T1 230-FIGRDN 1 230 #1 : Open Line FGRDN T1 230-ASHLAN 230 #1 : Drop Load at FIGRDN 1 230 #1 : 33.6 MW 6.8 MVAR D : Close Line FIGRDN 1 230-FIGRDN 2 230 #1 :	WARNERVL-COTTLE B 230.00kV Ckt#1 Sec# 1	793.23	Amps	108.2	108.9	0.7

11	Open Line BELLOTA 230-COTTLE A 230 #1 : Open Line COTTLE A 230-MELONES 230 #1 : Drop Load at COTTLE A 230 #1 : 12.7 MW 0.5 MVAR D : Open Line MELONES 230-WILSON 230 #1 :	WARNERVL-COTTLE B 230.00kV Ckt#1 Sec# 1	793.23	Amps	105.7	106.4	0.8
55	Open Line GREGG 230-HENTAP1 230 #1 : Open Line HENTAP1 230-HENRIETA 230 #1 : Open Line HENTAP1 230-GATES 230 #1 : Close Line HENTAP2 230-HENRIETA 230 #1 : Drop Generator at HELMS 1 18 #**: -310 MW Dropped : Open Line MC CALL 230-HENTAP2 230 #1 : Open Line HENTAP2 230-GATES 230 #1 :	WARNERVL-COTTLE B 230.00kV Ckt#1 Sec# 1	793.23	Amps	102.8	103.8	1.0
59	Open Line HELM 230-MC CALL 230 #1 : Open Line MC CALL 230-HENTAP2 230 #1 : Open Line HENTAP2 230-GATES 230 #1 :	WARNERVL-COTTLE B 230.00kV Ckt#1 Sec# 1	793.23	Amps	101.1	101.7	0.6
65	Open Line HERNDON 230-FGRDN T1 230 #1 : Open Line FGRDN T1 230-FIGRDN 1 230 #1 : Open Line FGRDN T1 230-ASHLAN 230 #1 : Drop Load at FIGRDN 1 230 #1 : 33.6 MW 6.8 MVAR D : Close Line FIGRDN 1 230-FIGRDN 2 230 #1 : Open Line GREGG 230-FGRDN T2 230 #1 : Open Line FGRDN T2 230-FIGRDN 2 230 #1 : Open Line FGRDN T2 230-ASHLAN 230 #1 : Drop Load at FIGRDN 2 230 #1 : 24.1 MW 4.8 MVAR D :	WARNERVL-COTTLE B 230.00kV Ckt#1 Sec# 1	793.23	Amps	99.5	100.1	0.6
9	Open Line BELLOTA 230-COTTLE A 230 #1 : Open Line COTTLE A 230-MELONES 230 #1 : Drop Load at COTTLE A 230 #1 : 12.7 MW 0.5 MVAR D : Open Line BELLOTA 230-COTTLE B 230 #1 : Open Line COTTLE B 230-WARNERVL 230 #1 : Drop Load at COTTLE B 230 #2 : 14.6 MW 0.6 MVAR D :	WARNERVL-WRNRVLLE 230.00/ 115.00kV Bk#1	150	MVA	102.3	102.9	0.6
9	Open Line BELLOTA 230-COTTLE A 230 #1 : Open Line COTTLE A 230-MELONES 230 #1 : Drop Load at COTTLE A 230 #1 : 12.7 MW 0.5 MVAR D : Open Line BELLOTA 230-COTTLE B 230 #1 : Open Line COTTLE B 230-WARNERVL 230 #1 : Drop Load at COTTLE B 230 #2 : 14.6 MW 0.6 MVAR D :	WARNERVL-WRNRVLLE 230.00/ 115.00kV Bk#2	75	MVA	102.3	102.9	0.6
9	Open Line BELLOTA 230-COTTLE A 230 #1 : Open Line COTTLE A 230-MELONES 230 #1 : Drop Load at COTTLE A 230 #1 : 12.7 MW 0.5 MVAR D : Open Line BELLOTA 230-COTTLE B 230 #1 : Open Line	WARNERVL-WRNRVLLE 230.00/ 115.00kV Bk#3	75	MVA	102.3	102.9	0.6

	COTTLE B 230-WARNERVL 230 #1 : Drop Load at COTTLE B 230 #2 : 14.6 MW 0.6 MVAR D :						
lbs_dlo_5400,	Los Banos - Gates & Los Banos - Midway 500-kV DLO w/ Path IRAS	WILSON -WARNERVL 230.00kV Ckt#1 Sec# 1	793.23	Amps	102.8	103.5	0.7
44	Open Line AIRWAYJ2 115-AIRWAYS 115 #1 : Open Line AIRWAYJ2 115-BARTON 115 #1 : Open Line AIRWAYJ2 115-SANGER 115 #1 : Open Line AIRWAYJ1 115-AIRWAYS 115 #1 : Open Line AIRWAYJ1 115-LASPALMS 115 #1 : Open Line AIRWAYJ1 115-MANCHSTR 115 #1 : Open Line LASPALMS 115-SANGER 115 #1 : Drop Load at LASPALMS 115 #1 : 10.5 MW 8.9 MVAR D :	WWARD JT-WOODWARD 115.00kV Ckt#1 Sec# 1	973.96	Amps	114.7	114.6	-0.1
46	Open Line BARTON 115-HERNDON 115 #1 : Open Line AIRWAYJ1 115-AIRWAYS 115 #1 : Open Line AIRWAYJ1 115-LASPALMS 115 #1 : Open Line AIRWAYJ1 115-MANCHSTR 115 #1 : Open Line LASPALMS 115-SANGER 115 #1 : Drop Load at LASPALMS 115 #1 : 10.5 MW 8.9 MVAR D :	WWARD JT-WOODWARD 115.00kV Ckt#1 Sec# 1	973.96	Amps	104.2	104.1	-0.1
lbs_dlo_5400,	Los Banos - Gates & Los Banos - Midway 500-kV DLO w/ Path IRAS	LOSBANOS - DS AMIGO 230.0 Ckt#1 Sec# 1	849.96	Amps	102.9	103.7	0.8
2013 Spring Peak							
1	Open Line WILSON A 115-ATWATER 115 #1 : Open Line WILSON B 115-EL CAPTN 115 #1 :	ATWATR J-MERCED 115.00kV Ckt#1 Sec# 1	738	Amps	119.5	119.5	0.1
16	Open Line PANOCHE 230-HELM 230 #1 : Open Line PANOCHE 230-MCMULLN1 230 #1 : Open Line MCMULLN1 230-KEARNEY 230 #1 : Drop Load at MCMULLN1 230 #1 : 16.4 MW 3.3 MVAR D :	BIOMSJCT-MENDOTA 70.00kV Ckt#1 Sec# 1	395.9	Amps	103.0	103.4	0.5
57	Open Line PANOCHE 230-MCMULLN1 230 #1 : Open Line MCMULLN1 230-KEARNEY 230 #1 : Drop Load at MCMULLN1 230 #1 : 16.4 MW 3.3 MVAR D : Open Line PANOCHE 230-HELM 230 #1 :	BIOMSJCT-MENDOTA 70.00kV Ckt#1 Sec# 1	395.9	Amps	103.0	103.4	0.5
58	Open Line PANOCHE 230-MCMULLN1 230 #1 : Open Line MCMULLN1 230-KEARNEY 230 #1 : Drop Load at MCMULLN1 230 #1 : 16.4 MW 3.3 MVAR D : Open Line HELM 230-MC CALL 230 #1 :	BORDEN -STOREY 1 230.00kV Ckt#1 Sec# 1	793.23	Amps	135.5	136.3	0.8
16	Open Line PANOCHE 230-HELM 230 #1 : Open Line PANOCHE 230-MCMULLN1 230 #1 : Open Line MCMULLN1 230-KEARNEY 230 #1 : Drop	BORDEN -STOREY 1 230.00kV Ckt#1 Sec# 1	793.23	Amps	134.4	135.2	0.8

	Load at MCMULLN1 230 #1 : 16.4 MW 3.3 MVAR D :						
57	Open Line PANOCHE 230-MCMULLN1 230 #1 : Open Line MCMULLN1 230-KEARNEY 230 #1 : Drop Load at MCMULLN1 230 #1 : 16.4 MW 3.3 MVAR D : Open Line PANOCHE 230-HELM 230 #1 :	BORDEN -STOREY 1 230.00kV Ckt#1 Sec# 1	793.23	Amps	134.4	135.2	0.8
71	Open Line HERNDON 230-GREGG 230 #1 : Open Line HERNDON 230-KEARNEY 230 #1 : Open Xfmr HERNDON 230/HERNDN1M 115 #1 :	BORDEN -STOREY 1 230.00kV Ckt#1 Sec# 1	793.23	Amps	132.9	133.7	0.8
lbs-dlo-ns	Los Banos - Gates & Los Banos - Midway 500-kV DLO	BORDEN -STOREY 1 230.00kV Ckt#1 Sec# 1	793.23	Amps	132.3	133.1	0.9
62	Open Line KEARNEY 230-HERNDON 230 #1 : Open Line HERNDON 230-FGRDN T1 230 #1 : Open Line FGRDN T1 230-FIGRDN 1 230 #1 : Open Line FGRDN T1 230-ASHLAN 230 #1 : Drop Load at FIGRDN 1 230 #1 : 59.1 MW 11.9 MVAR : Close Line FIGRDN 1 230-FIGRDN 2 230 #1 :	BORDEN -STOREY 1 230.00kV Ckt#1 Sec# 1	793.23	Amps	129.9	130.7	0.8
70	Open Line KEARNEY 230-MCMULLN1 230 #1 : Open Line KEARNEY 230-HERNDON 230 #1 : Open Xfmr KEARNEY 230/KEARNEY 70 #2 :	BORDEN -STOREY 1 230.00kV Ckt#1 Sec# 1	793.23	Amps	129.5	130.3	0.8
59	Open Line HELM 230-MC CALL 230 #1 : Open Line MC CALL 230-HENTAP2 230 #1 : Open Line HENTAP2 230-GATES 230 #1 :	BORDEN -STOREY 1 230.00kV Ckt#1 Sec# 1	793.23	Amps	129.2	129.9	0.8
19	Open Line PANOCHE 230-COBURN 230 #1 : Open Line PANOCHE 230-LOSBANOS 230 #1 : Open Line PANOCHE 230-LOSBANOS 230 #2 : Open Line PANOCHE 230-MCMULLN1 230 #1 : Open Line PANOCHE 230-GATES 230 #1 : Open Xfmr PANOCHE 230/PNCHE 1M 230 #1 :	BORDEN -STOREY 1 230.00kV Ckt#1 Sec# 1	793.23	Amps	128.2	128.9	0.7
83	Open Line GATES 230-HENTAP1 230 #1 : Open Line GATES 230-ARCO 230 #1 :	BORDEN -STOREY 1 230.00kV Ckt#1 Sec# 1	793.23	Amps	124.4	125.9	1.6
75	Open Line ASHLAN 230-FGRDN T1 230 #1 : Open Line ASHLAN 230-FGRDN T2 230 #1 : Drop Load at ASHLAN 230 #1 : 55.7 MW 10.7 MVAR Dr : Drop Load at ASHLAN 230 #2 : 51.9 MW 10.3 MVAR Dr : Drop Load at ASHLAN 230 #3 : 52.7 MW 10 MVAR Drop :	BORDEN -STOREY 1 230.00kV Ckt#1 Sec# 1	793.23	Amps	122.0	122.7	0.7
17	Open Line LOSBANOS 230-WESTLEY 230 #1 : Open Line LOSBANOS 230-PANOCHE 230 #2 : Open Line LOSBANOS 230-SN LS PP 230 #1 : Open Line LOSBANOS 230-SN LS PP 230 #2 : Open Xfmr	BORDEN -STOREY 1 230.00kV Ckt#1 Sec# 1	793.23	Amps	121.3	122.0	0.7

	LOSBANOS 230/LOS BANS 70 #3 :						
47	Open Line PNDLJ1 115-BULLARD 115 #1 : Open Line PNDLJ1 115-HERNDON 115 #1 : Open Line PNDLJ2 115-PNEDLE 115 #1 : Open Line PNDLJ2 115-BULLARD 115 #1 : Open Line PNDLJ2 115-HERNDON 115 #1 : Drop Load at PNEDLE 115 #2 : 24.7 MW 5 MVAR Dropp : Drop Load at PNEDLE 115 #3 : 32.5 MW 6.5 MVAR Dro : Close Line PNDLJ1 115-PNEDLE 115 #1 :	BORDEN -STOREY 1 230.00kV Ckt#1 Sec# 1	793.23	Amps	120.9	121.6	0.7
lbn-dlo-ns	Los Banos - Tesla & Los Banos - Tracy 500-kV DLO	BORDEN -STOREY 1 230.00kV Ckt#1 Sec# 1	793.23	Amps	119.4	120.3	0.9
76	Open Line HELM 230-PANOCHE 230 #1 : Open Line HELM 230-MC CALL 230 #1 : Open Xfmr HELM 230/HELM 70 #1 :	BORDEN -STOREY 1 230.00kV Ckt#1 Sec# 1	793.23	Amps	118.6	119.3	0.7
41	Open Line BORDEN 70-MADERA 70 #1 : Open Line BORDEN 70-MADERA 70 #2 : Open Line BORDEN 70-GLASS 70 #1 : Open Line BORDEN 70-CASSIDY 70 #1 : Open Xfmr BORDEN 70/BORDEN 230 #1 : Open Xfmr BORDEN 70/BORDEN 230 #2 :	BORDEN -STOREY 1 230.00kV Ckt#1 Sec# 1	793.23	Amps	118.5	119.2	0.7
104	Open Line BULLARD 115-PNDLJ2 115 #1 : Open Line BULLARD 115-PNDLJ1 115 #1 : Drop Load at BULLARD 115 #1 : 36.1 MW 7.3 MVAR Dr : Drop Load at BULLARD 115 #2 : 35.9 MW 7.2 MVAR Dr : Drop Load at BULLARD 115 #3 : 34.2 MW 6.9 MVAR Dr :	BORDEN -STOREY 1 230.00kV Ckt#1 Sec# 1	793.23	Amps	118.2	118.9	0.7
7	Open Line LOSBANOS 230-PANOCHE 230 #2 : Open Line DS AMIGO 230-PANOCHE 230 #1 :	BORDEN -STOREY 1 230.00kV Ckt#1 Sec# 1	793.23	Amps	118.1	118.7	0.6
18	Open Line LOSBANOS 230-PANOCHE 230 #1 : Open Line LOSBANOS 230-DS AMIGO 230 #1 : Open Xfmr LOSBANOS 230/LOS BANS 70 #4 :	BORDEN -STOREY 1 230.00kV Ckt#1 Sec# 1	793.23	Amps	117.9	118.5	0.6
6	Open Line LOSBANOS 230-PANOCHE 230 #2 : Open Line LOSBANOS 230-DS AMIGO 230 #1 :	BORDEN -STOREY 1 230.00kV Ckt#1 Sec# 1	793.23	Amps	117.5	118.1	0.6
84	Open Line GATES 230-HENTAP2 230 #1 : Open Line GATES 230-MIDWAY 230 #1 :	BORDEN -STOREY 1 230.00kV Ckt#1 Sec# 1	793.23	Amps	117.4	118.1	0.7
103	Open Line WOODWARD 115-WWARD JT 115 #1 : Open Line WOODWARD 115-CHLDHOSP 115 #1 : Drop Load at WOODWARD 115 #1 : 34 MW 6.9 MVAR Dro : Drop Load at WOODWARD 115 #2 : 42.4 MW 8.6 MVAR D : Drop Load at WOODWARD 115 #3 : 35.5 MW	BORDEN -STOREY 1 230.00kV Ckt#1 Sec# 1	793.23	Amps	117.2	117.9	0.7

	7.2 MVAR D :						
54	Open Line WST FRSO 115-MC CALL 115 #1 : Open Line DANISHCM 115-MC CALL 115 #1 : Open Line DANISHCM 115-CAL AVE 115 #1 : Drop Load at DANISHCM 115 #1 : 3.8 MW 3.2 MVAR Dr :	BORDEN -STOREY 1 230.00kV Ckt#1 Sec# 1	793.23	Amps	116.8	117.4	0.7
23	Open Line EXCHEQUR 115-LE GRAND 115 #1 : Open Xfmr EXCHEQUR 115/EXCHQRTP 115 #1 :	BORDEN -STOREY 1 230.00kV Ckt#1 Sec# 1	793.23	Amps	116.6	117.3	0.7
15	Open Line MOSSLND2 230-PANOCHE 230 #1 : Open Line COBURN 230-PANOCHE 230 #1 :	BORDEN -STOREY 1 230.00kV Ckt#1 Sec# 1	793.23	Amps	116.5	117.2	0.7
73	Open Line FIGRDN 1 230-FGRDN T1 230 #1 : Drop Load at FIGRDN 1 230 #1 : 59.1 MW 11.9 MVAR :	BORDEN -STOREY 1 230.00kV Ckt#1 Sec# 1	793.23	Amps	116.4	117.1	0.7
20	Open Line PANOCHE 230-MOSSLND2 230 #1 : Open Line PANOCHE 230-PANO_EC 230 #1 : Open Line PANOCHE 230-HELM 230 #1 : Open Line PANOCHE 230-GATES 230 #2 : Open Line PANOCHE 230-DS AMIGO 230 #1 : Open Xfmr PANOCHE 230/PANOCHE 115 #2 :	BORDEN -STOREY 1 230.00kV Ckt#1 Sec# 1	793.23	Amps	116.3	117.0	0.7
101	Open Line HERNDON 115-MANCHSTR 115 #1 : Open Line HERNDON 115-PNDLJ1 115 #1 : Open Line HERNDON 115-CHLDHOSP 115 #1 :	BORDEN -STOREY 1 230.00kV Ckt#1 Sec# 1	793.23	Amps	116.3	116.9	0.7
98	Open Line BARTON 115-AIRWAYJ2 115 #1 : Open Line BARTON 115-HERNDON 115 #1 : Drop Load at BARTON 115 #1 : 34.8 MW 7 MVAR Dropp : Drop Load at BARTON 115 #2 : 29.9 MW 6 MVAR Dropp : Drop Load at BARTON 115 #3 : 21.7 MW 4.3 MVAR Dro :	BORDEN -STOREY 1 230.00kV Ckt#1 Sec# 1	793.23	Amps	116.2	116.9	0.7
21	Open Line CHWCHLLA 115-CERTAN T 115 #1 : Open Line CHWCHLLA 115-CERTANJ1 115 #1 : Drop Load at CHWCHLLA 115 #1 : 8.1 MW 1.6 MVAR Dr : Drop Load at CHWCHLLA 115 #2 : 11.1 MW 2.2 MVAR D :	BORDEN -STOREY 1 230.00kV Ckt#1 Sec# 1	793.23	Amps	116.0	116.7	0.7
99	Open Line MANCHSTR 115-AIRWAYJ1 115 #1 : Open Line MANCHSTR 115-HERNDON 115 #1 : Drop Load at MANCHSTR 115 #1 : 20.3 MW 4.1 MVAR D : Drop Load at MANCHSTR 115 #2 : 20.5 MW 4.1 MVAR D : Drop Load at MANCHSTR 115 #3 : 29.1 MW 5.9 MVAR D :	BORDEN -STOREY 1 230.00kV Ckt#1 Sec# 1	793.23	Amps	115.9	116.6	0.7
102	Open Line PNEDLE 115-PNDLJ2 115 #1 : Drop Load at PNEDLE 115 #2 : 24.7 MW 5 MVAR Dropp : Drop Load at PNEDLE 115 #3 : 32.5 MW 6.5 MVAR Dro :	BORDEN -STOREY 1 230.00kV Ckt#1 Sec# 1	793.23	Amps	115.8	116.5	0.7
117	Open Line KEARNEY 70-FRWWTAP 70 #1 : Open	BORDEN -STOREY 1 230.00kV Ckt#1 Sec# 1	793.23	Amps	115.7	116.4	0.7

	Line KEARNEY 70-OLDKERN 70 #1 : Open Line KEARNEY 70-CARUTHRS 70 #1 : Open Xfmr KEARNEY 70/KEARNEY 230 #2 :						
30	Open Line PANOCHE 115-CHENYT 115 #1 : Open Line PANOCHE 115-PANOCHEJ 115 #1 : Open Xfmr PANOCHE 115/PANOCHE 230 #2 : Open Xfmr PANOCHE 115/DG_PAN1 13.8 #1 :	BORDEN -STOREY 1 230.00kV Ckt#1 Sec# 1	793.23	Amps	115.5	116.2	0.7
86	Open Line KERCKHF2 115-K1-JCT 115 #2 : Open Line KERCKHF2 115-KERCKHF1 115 #1 : Open Line KERCKHF2 115-WWARD JT 115 #1 : Open Line KERCKHF2 115-CLOVISJ2 115 #1 : Open Xfmr KERCKHF2 115/KERCKHOF 13.8 #1 :	BORDEN -STOREY 1 230.00kV Ckt#1 Sec# 1	793.23	Amps	115.5	116.2	0.7
74	Open Line FIGRDN 2 230-FGRDN T2 230 #1 : Drop Load at FIGRDN 2 230 #1 : 42.3 MW 8.5 MVAR D :	BORDEN -STOREY 1 230.00kV Ckt#1 Sec# 1	793.23	Amps	115.4	116.0	0.7
45	Open Line BARTON 115-HERNDON 115 #1 : Open Line MANCHSTR 115-HERNDON 115 #1 :	BORDEN -STOREY 1 230.00kV Ckt#1 Sec# 1	793.23	Amps	115.3	115.9	0.7
89	Open Line CLOVIS-2 115-CLOVISJ2 115 #1 : Drop Load at CLOVIS-2 115 #3 : 36 MW 7.3 MVAR Dro :	BORDEN -STOREY 1 230.00kV Ckt#1 Sec# 1	793.23	Amps	115.2	115.9	0.7
40	Open Line MADERA 70-TRIGO 70 #1 : Open Line MADERA 70-BORDEN 70 #1 : Open Line MADERA 70-BORDEN 70 #2 : Drop Load at MADERA 70 #1 : 14.4 MW 2.9 MVAR Drop : Drop Load at MADERA 70 #2 : 18.5 MW 3.7 MVAR Drop :	BORDEN -STOREY 1 230.00kV Ckt#1 Sec# 1	793.23	Amps	115.0	115.7	0.7
100	Open Line HERNDON 115-BARTON 115 #1 : Open Line HERNDON 115-PNDLJ2 115 #1 : Open Xfmr HERNDON 115/HERNDN1M 115 #1 :	BORDEN -STOREY 1 230.00kV Ckt#1 Sec# 1	793.23	Amps	115.0	115.6	0.7
96	Open Line CAL AVE 115-DANISHCM 115 #1 : Open Line CAL AVE 115-WST FRSO 115 #1 : Drop Load at CAL AVE 115 #1 : 23.3 MW 4.7 MVAR Dr : Drop Load at CAL AVE 115 #2 : 25.1 MW 5.1 MVAR Dr : Drop Load at CAL AVE 115 #3 : 19.6 MW 3.9 MVAR Dr :	BORDEN -STOREY 1 230.00kV Ckt#1 Sec# 1	793.23	Amps	114.9	115.6	0.7
91	Open Line MALAGA 115-SANGER 115 #1 : Open Line MALAGA 115-PPG 115 #1 : Open Line MALAGA 115-MALAGATP 115 #1 : Open Line MALAGA 115-KRCDP 115 #1 : Drop Load at MALAGA 115 #1 : 20.3 MW 4.1 MVAR Dro : Drop Load at MALAGA 115 #2 : 18.3 MW 3.7 MVAR Dro : Drop Load at MALAGA 115 #3 : 18.6 MW 3.7 MVAR Dro :	BORDEN -STOREY 1 230.00kV Ckt#1 Sec# 1	793.23	Amps	114.8	115.5	0.7

53	Open Line WST FRSO 115-MC CALL 115 #1 : Open Line CAL AVE 115-WST FRSO 115 #1 :	BORDEN -STOREY 1 230.00kV Ckt#1 Sec# 1	793.23	Amps	114.7	115.4	0.7
97	Open Line WST FRSO 115-MC CALL 115 #1 : Open Line WST FRSO 115-CAL AVE 115 #1 : Drop Load at WST FRSO 115 #1 : 30.2 MW 6.1 MVAR D : Drop Load at WST FRSO 115 #2 : 31.4 MW 6.3 MVAR D :	BORDEN -STOREY 1 230.00kV Ckt#1 Sec# 1	793.23	Amps	114.7	115.4	0.7
72	Open Line HERNDON 230-GREGG 230 #2 : Open Line HERNDON 230-FGRDN T1 230 #1 : Open Xfmr HERNDON 230/HERNDN2M 115 #2 :	BORDEN -STOREY 1 230.00kV Ckt#1 Sec# 1	793.23	Amps	114.7	115.4	0.7
87	Open Line AIRWAYS 115-AIRWAYJ1 115 #1 : Open Line AIRWAYS 115-AIRWAYJ2 115 #1 : Drop Load at AIRWAYS 115 #1 : 30.9 MW 5.9 MVAR Dr : Drop Load at AIRWAYS 115 #2 : 10.1 MW 2 MVAR Drop :	BORDEN -STOREY 1 230.00kV Ckt#1 Sec# 1	793.23	Amps	114.5	115.2	0.7
68	Open Line GATES 230-MIDWAY 230 #1 : Open Line GATES 230-ARCO 230 #1 :	BORDEN -STOREY 1 230.00kV Ckt#1 Sec# 1	793.23	Amps	114.4	115.1	0.7
88	Open Line CLOVIS-1 115-CLOVISJ1 115 #1 : Drop Load at CLOVIS-1 115 #1 : 41 MW 8.3 MVAR Dro :	BORDEN -STOREY 1 230.00kV Ckt#1 Sec# 1	793.23	Amps	114.3	115.0	0.7
100	Open Line HERNDON 115-BARTON 115 #1 : Open Line HERNDON 115-PNDLJ2 115 #1 : Open Xfmr HERNDON 115/HERNDN1M 115 #1 :	BULLARD -PNDLJ1 115.00kV Ckt#1 Sec# 1	743.02	Amps	114.7	114.7	0.0
70	Open Line KEARNEY 230-MCMULLN1 230 #1 : Open Line KEARNEY 230-HERNDON 230 #1 : Open Xfmr KEARNEY 230/KEARNEY 70 #2 :	CAMDEN -KNGLOBUS 70.00kV Ckt#1 Sec# 1	398.37	Amps	104.3	104.7	0.4
35	Open Line LOS BANS 70-CHEVPIPE 70 #1 : Open Line LOS BANS 70-WRGHT PP 70 #1 : Open Line LOS BANS 70-PCHCO PP 70 #1 : Open Line LOS BANS 70-ONLL PMP 69 #1 : Open Xfmr LOS BANS 70/LOSBANOS 230 #3 : Open Xfmr LOS BANS 70/LOSBANOS 230 #4 :	CANAL -SNTA RTA 70.00kV Ckt#1 Sec# 1	282.08	Amps	103.9	104.0	0.1
67	Open Line GATES 230-MORROBAY 230 #1 : Open Line GATES 230-TEMPLETN 230 #1 :	CARRIZO -TEMBLOR 115.00kV Ckt#1 Sec# 1	436.78	Amps	106.3	106.3	0.0
13	Open Line STOREY 2 230-BORDEN 230 #1 : Open Line STOREY 2 230-WILSON 230 #1 : Drop Load at STOREY 2 230 #2 : 27 MW 5.4 MVAR Dro : Open Line STOREY 1 230-WILSON 230 #1 : Open Line STOREY 1 230-BORDEN 230 #1 : Drop Load at STOREY 1 230 #1 : 30.2 MW 6.1 MVAR D :	CERTAN T-CHWCHLLA 115.00kV Ckt#1 Sec# 1	512.08	Amps	102.7	103.3	0.7
13	Open Line STOREY 2 230-BORDEN 230 #1 : Open	CERTAN T-LE GRAND 115.00kV Ckt#1 Sec# 1	396.61	Amps	134.9	135.8	0.9

	Line STOREY 2 230-WILSON 230 #1 : Drop Load at STOREY 2 230 #2 : 27 MW 5.4 MVAR Dro : Open Line STOREY 1 230-WILSON 230 #1 : Open Line STOREY 1 230-BORDEN 230 #1 : Drop Load at STOREY 1 230 #1 : 30.2 MW 6.1 MVAR D :						
48	Open Line KERCKHF2 115-WWARD JT 115 #1 : Open Line WWARD JT 115-WOODWARD 115 #1 : Open Line WWARD JT 115-CLOVISJ1 115 #1 : Open Line CLOVISJ1 115-CLOVIS-1 115 #1 : Open Line CLOVISJ1 115-SANGER 115 #1 : Drop Load at CLOVIS-1 115 #1 : 41 MW 8.3 MVAR Dro : Close Line CLOVIS-1 115-CLOVIS-2 115 #1 : Open Line CLOVIS-2 115-CLOVISJ2 115 #1 :	CERTAN T-LE GRAND 115.00kV Ckt#1 Sec# 1	396.61	Amps	101.5	101.6	0.1
13	Open Line STOREY 2 230-BORDEN 230 #1 : Open Line STOREY 2 230-WILSON 230 #1 : Drop Load at STOREY 2 230 #2 : 27 MW 5.4 MVAR Dro : Open Line STOREY 1 230-WILSON 230 #1 : Open Line STOREY 1 230-BORDEN 230 #1 : Drop Load at STOREY 1 230 #1 : 30.2 MW 6.1 MVAR D :	CHWCHLLA-CERTANJ1 115.00kV Ckt#1 Sec# 1	396.61	Amps	151.3	152.2	0.9
48	Open Line KERCKHF2 115-WWARD JT 115 #1 : Open Line WWARD JT 115-WOODWARD 115 #1 : Open Line WWARD JT 115-CLOVISJ1 115 #1 : Open Line CLOVISJ1 115-CLOVIS-1 115 #1 : Open Line CLOVISJ1 115-SANGER 115 #1 : Drop Load at CLOVIS-1 115 #1 : 41 MW 8.3 MVAR Dro : Close Line CLOVIS-1 115-CLOVIS-2 115 #1 : Open Line CLOVIS-2 115-CLOVISJ2 115 #1 :	CHWCHLLA-CERTANJ1 115.00kV Ckt#1 Sec# 1	396.61	Amps	118.8	118.9	0.1
48	Open Line KERCKHF2 115-WWARD JT 115 #1 : Open Line WWARD JT 115-WOODWARD 115 #1 : Open Line WWARD JT 115-CLOVISJ1 115 #1 : Open Line CLOVISJ1 115-CLOVIS-1 115 #1 : Open Line CLOVISJ1 115-SANGER 115 #1 : Drop Load at CLOVIS-1 115 #1 : 41 MW 8.3 MVAR Dro : Close Line CLOVIS-1 115-CLOVIS-2 115 #1 : Open Line CLOVIS-2 115-CLOVISJ2 115 #1 :	CHWCHLLA-CERTANJ1 115.00kV Ckt#1 Sec# 1	396.61	Amps	118.8	118.9	0.1
59	Open Line HELM 230-MC CALL 230 #1 : Open Line MC CALL 230-HENTAP2 230 #1 : Open Line HENTAP2 230-GATES 230 #1 :	CHWCHLLA-CERTANJ1 115.00kV Ckt#1 Sec# 1	396.61	Amps	111.5	112.1	0.6
lbs-dlo-ns	Los Banos - Gates & Los Banos - Midway 500-kV DLO	COTTLE B-BELLOTA 230.00kV Ckt#1 Sec# 1	793.23	Amps	115.4	116.3	0.9

58	Open Line PANOCHE 230-MCMULLN1 230 #1 : Open Line MCMULLN1 230-KEARNEY 230 #1 : Drop Load at MCMULLN1 230 #1 : 16.4 MW 3.3 MVAR D : Open Line HELM 230-MC CALL 230 #1 :	COTTLE B-BELLOTA 230.00kV Ckt#1 Sec# 1	793.23	Amps	110.1	110.9	0.8
16	Open Line PANOCHE 230-HELM 230 #1 : Open Line PANOCHE 230-MCMULLN1 230 #1 : Open Line MCMULLN1 230-KEARNEY 230 #1 : Drop Load at MCMULLN1 230 #1 : 16.4 MW 3.3 MVAR D :	COTTLE B-BELLOTA 230.00kV Ckt#1 Sec# 1	793.23	Amps	109.9	110.7	0.8
57	Open Line PANOCHE 230-MCMULLN1 230 #1 : Open Line MCMULLN1 230-KEARNEY 230 #1 : Drop Load at MCMULLN1 230 #1 : 16.4 MW 3.3 MVAR D : Open Line PANOCHE 230-HELM 230 #1 :	COTTLE B-BELLOTA 230.00kV Ckt#1 Sec# 1	793.23	Amps	109.9	110.7	0.8
59	Open Line HELM 230-MC CALL 230 #1 : Open Line MC CALL 230-HENTAP2 230 #1 : Open Line HENTAP2 230-GATES 230 #1 :	COTTLE B-BELLOTA 230.00kV Ckt#1 Sec# 1	793.23	Amps	108.6	109.3	0.7
71	Open Line HERNDON 230-GREGG 230 #1 : Open Line HERNDON 230-KEARNEY 230 #1 : Open Xfmr HERNDON 230/HERNDN1M 115 #1 :	COTTLE B-BELLOTA 230.00kV Ckt#1 Sec# 1	793.23	Amps	107.8	108.5	0.7
19	Open Line PANOCHE 230-COBURN 230 #1 : Open Line PANOCHE 230-LOSBANOS 230 #1 : Open Line PANOCHE 230-LOSBANOS 230 #2 : Open Line PANOCHE 230-MCMULLN1 230 #1 : Open Line PANOCHE 230-GATES 230 #1 : Open Xfmr PANOCHE 230/PNCHE 1M 230 #1 :	COTTLE B-BELLOTA 230.00kV Ckt#1 Sec# 1	793.23	Amps	107.8	108.4	0.7
62	Open Line KEARNEY 230-HERNDON 230 #1 : Open Line HERNDON 230-FGRDN T1 230 #1 : Open Line FGRDN T1 230-FIGRDN 1 230 #1 : Open Line FGRDN T1 230-ASHLAN 230 #1 : Drop Load at FIGRDN 1 230 #1 : 59.1 MW 11.9 MVAR : Close Line FIGRDN 1 230-FIGRDN 2 230 #1 :	COTTLE B-BELLOTA 230.00kV Ckt#1 Sec# 1	793.23	Amps	106.3	107.0	0.7
70	Open Line KEARNEY 230-MCMULLN1 230 #1 : Open Line KEARNEY 230-HERNDON 230 #1 : Open Xfmr KEARNEY 230/KEARNEY 70 #2 :	COTTLE B-BELLOTA 230.00kV Ckt#1 Sec# 1	793.23	Amps	105.9	106.6	0.7
lbn-dlo-ns	Los Banos - Tesla & Los Banos - Tracy 500-kV DLO	COTTLE B-BELLOTA 230.00kV Ckt#1 Sec# 1	793.23	Amps	105.0	106.0	1.0
83	Open Line GATES 230-HENTAP1 230 #1 : Open Line GATES 230-ARCO 230 #1 :	COTTLE B-BELLOTA 230.00kV Ckt#1 Sec# 1	793.23	Amps	104.5	105.8	1.3
75	Open Line ASHLAN 230-FGRDN T1 230 #1 : Open Line ASHLAN 230-FGRDN T2 230 #1 : Drop Load	COTTLE B-BELLOTA 230.00kV Ckt#1 Sec# 1	793.23	Amps	103.3	103.9	0.7

	at ASHLAN 230 #1 : 55.7 MW 10.7 MVAR Dr : Drop Load at ASHLAN 230 #2 : 51.9 MW 10.3 MVAR Dr : Drop Load at ASHLAN 230 #3 : 52.7 MW 10 MVAR Drop :						
47	Open Line PNDLJ1 115-BULLARD 115 #1 : Open Line PNDLJ1 115-HERNDON 115 #1 : Open Line PNDLJ2 115-PNEDLE 115 #1 : Open Line PNDLJ2 115-BULLARD 115 #1 : Open Line PNDLJ2 115-HERNDON 115 #1 : Drop Load at PNEDLE 115 #2 : 24.7 MW 5 MVAR Dropp : Drop Load at PNEDLE 115 #3 : 32.5 MW 6.5 MVAR Dro : Close Line PNDLJ1 115-PNEDLE 115 #1 :	COTTLE B-BELLOTA 230.00kV Ckt#1 Sec# 1	793.23	Amps	102.9	103.5	0.7
15	Open Line MOSSLND2 230-PANOCHE 230 #1 : Open Line COBURN 230-PANOCHE 230 #1 :	COTTLE B-BELLOTA 230.00kV Ckt#1 Sec# 1	793.23	Amps	101.4	102.1	0.7
7	Open Line LOSBANOS 230-PANOCHE 230 #2 : Open Line DS AMIGO 230-PANOCHE 230 #1 :	COTTLE B-BELLOTA 230.00kV Ckt#1 Sec# 1	793.23	Amps	101.2	101.8	0.6
18	Open Line LOSBANOS 230-PANOCHE 230 #1 : Open Line LOSBANOS 230-DS AMIGO 230 #1 : Open Xfmr LOSBANOS 230/LOS BANS 70 #4 :	COTTLE B-BELLOTA 230.00kV Ckt#1 Sec# 1	793.23	Amps	100.7	101.3	0.6
6	Open Line LOSBANOS 230-PANOCHE 230 #2 : Open Line LOSBANOS 230-DS AMIGO 230 #1 :	COTTLE B-BELLOTA 230.00kV Ckt#1 Sec# 1	793.23	Amps	100.6	101.2	0.6
104	Open Line BULLARD 115-PNDLJ2 115 #1 : Open Line BULLARD 115-PNDLJ1 115 #1 : Drop Load at BULLARD 115 #1 : 36.1 MW 7.3 MVAR Dr : Drop Load at BULLARD 115 #2 : 35.9 MW 7.2 MVAR Dr : Drop Load at BULLARD 115 #3 : 34.2 MW 6.9 MVAR Dr :	COTTLE B-BELLOTA 230.00kV Ckt#1 Sec# 1	793.23	Amps	100.5	101.2	0.7
84	Open Line GATES 230-HENTAP2 230 #1 : Open Line GATES 230-MIDWAY 230 #1 :	COTTLE B-BELLOTA 230.00kV Ckt#1 Sec# 1	793.23	Amps	100.3	101.0	0.7
103	Open Line WOODWARD 115-WWARD JT 115 #1 : Open Line WOODWARD 115-CHLDHOSP 115 #1 : Drop Load at WOODWARD 115 #1 : 34 MW 6.9 MVAR Dro : Drop Load at WOODWARD 115 #2 : 42.4 MW 8.6 MVAR D : Drop Load at WOODWARD 115 #3 : 35.5 MW 7.2 MVAR D :	COTTLE B-BELLOTA 230.00kV Ckt#1 Sec# 1	793.23	Amps	100.3	101.0	0.7
41	Open Line BORDEN 70-MADERA 70 #1 : Open Line BORDEN 70-MADERA 70 #2 : Open Line BORDEN 70-GLASS 70 #1 : Open Line BORDEN 70-CASSIDY 70 #1 : Open Xfmr BORDEN 70/BORDEN 230 #1 : Open Xfmr BORDEN 70/BORDEN 230 #2 :	COTTLE B-BELLOTA 230.00kV Ckt#1 Sec# 1	793.23	Amps	100.3	100.9	0.7

27	Open Line EL CAPTN 115-CASTLE 115 #1 : Open Line EL CAPTN 115-WILSON B 115 #1 : Drop Load at EL CAPTN 115 #1 : 15.5 MW 3.1 MVAR D : Drop Load at EL CAPTN 115 #2 : 20.7 MW 4.1 MVAR D : Drop Load at EL CAPTN 115 #3 : 26.4 MW 5.3 MVAR D :	COTTLE B-BELLOTA 230.00kV Ckt#1 Sec# 1	793.23	Amps	100.2	100.9	0.7
48	Open Line KERCKHF2 115-WWARD JT 115 #1 : Open Line WWARD JT 115-WOODWARD 115 #1 : Open Line WWARD JT 115-CLOVISJ1 115 #1 : Open Line CLOVISJ1 115-CLOVIS-1 115 #1 : Open Line CLOVISJ1 115-SANGER 115 #1 : Drop Load at CLOVIS-1 115 #1 : 41 MW 8.3 MVAR Dro : Close Line CLOVIS-1 115-CLOVIS-2 115 #1 : Open Line CLOVIS-2 115-CLOVISJ2 115 #1 :	COTTLE B-BELLOTA 230.00kV Ckt#1 Sec# 1	793.23	Amps	100.1	100.7	0.7
54	Open Line WST FRSO 115-MC CALL 115 #1 : Open Line DANISHCM 115-MC CALL 115 #1 : Open Line DANISHCM 115-CAL AVE 115 #1 : Drop Load at DANISHCM 115 #1 : 3.8 MW 3.2 MVAR Dr :	COTTLE B-BELLOTA 230.00kV Ckt#1 Sec# 1	793.23	Amps	99.9	100.6	0.7
76	Open Line HELM 230-PANOCHE 230 #1 : Open Line HELM 230-MC CALL 230 #1 : Open Xfmr HELM 230/HELM 70 #1 :	COTTLE B-BELLOTA 230.00kV Ckt#1 Sec# 1	793.23	Amps	99.5	100.2	0.7
17	Open Line LOSBANOS 230-WESTLEY 230 #1 : Open Line LOSBANOS 230-PANOCHE 230 #2 : Open Line LOSBANOS 230-SN LS PP 230 #1 : Open Line LOSBANOS 230-SN LS PP 230 #2 : Open Xfmr LOSBANOS 230/LOS BANS 70 #3 :	COTTLE B-BELLOTA 230.00kV Ckt#1 Sec# 1	793.23	Amps	99.5	100.1	0.6
1	Open Line WILSON A 115-ATWATER 115 #1 : Open Line WILSON B 115-EL CAPTN 115 #1 :	CRESEY T-ATWATR J 115.00kV Ckt#1 Sec# 1	512.08	Amps	146.3	146.4	0.1
35	Open Line LOS BANS 70-CHEVPIPE 70 #1 : Open Line LOS BANS 70-WRGHT PP 70 #1 : Open Line LOS BANS 70-PCHCO PP 70 #1 : Open Line LOS BANS 70-ONLL PMP 69 #1 : Open Xfmr LOS BANS 70/LOSBANOS 230 #3 : Open Xfmr LOS BANS 70/LOSBANOS 230 #4 :	DOS PALS-ORO LOMA 70.00kV Ckt#1 Sec# 1	282.08	Amps	151.3	151.4	0.1
24	Open Line LE GRAND 115-CERTAN T 115 #1 : Open Line LE GRAND 115-EXCHEQUR 115 #1 : Open Line LE GRAND 115-WILSON A 115 #1 : Open Line LE GRAND 115-DAIRYLND 115 #1 : Drop Load at LE GRAND 115 #1 : 10.7 MW 2.1 MVAR D :	EXCHEQUR-MCSWAINJ 70.00kV Ckt#1 Sec# 1	280.43	Amps	183.2	183.2	0.0
61	Open Line GREGG 230-HERNDON 230 #1 : Drop	FGRDN T1-ASHLAN 230.00kV Ckt#1 Sec# 1	850.96	Amps	101.5	101.8	0.3

	Generator at HELMS 3 18 #**: 400 MW Dropped : Open Line GREGG 230-HERNDON 230 #2 :						
61	Open Line GREGG 230-HERNDON 230 #1 : Drop Generator at HELMS 3 18 #**: 400 MW Dropped : Open Line GREGG 230-HERNDON 230 #2 :	FGRDN T2-ASHLAN 230.00kV Ckt#1 Sec# 1	849.96	Amps	148.5	148.8	0.4
61	Open Line GREGG 230-HERNDON 230 #1 : Drop Generator at HELMS 3 18 #**: 400 MW Dropped : Open Line GREGG 230-HERNDON 230 #2 :	FGRDN T2-GREGG 230.00kV Ckt#1 Sec# 1	849.96	Amps	160.8	161.2	0.4
70	Open Line KEARNEY 230-MCMULLN1 230 #1 : Open Line KEARNEY 230-HERNDON 230 #1 : Open Xfmr KEARNEY 230/KEARNEY 70 #2 :	FRWWTAP -KERMAN 70.00kV Ckt#1 Sec# 1	379.4	Amps	106.9	106.8	-0.1
55	Open Line GREGG 230-HENTAP1 230 #1 : Open Line HENTAP1 230-HENRIETA 230 #1 : Open Line HENTAP1 230-GATES 230 #1 : Drop Generator at HELMS 3 18 #**: 400 MW Dropped : Close Line HENTAP2 230-HENRIETA 230 #1 : Open Line MC CALL 230-HENTAP2 230 #1 : Open Line HENTAP2 230-GATES 230 #1 :	HELM -PANOCHE 230.00kV Ckt#1 Sec# 1	849.96	Amps	98.6	101.6	3.0
16	Open Line PANOCHE 230-HELM 230 #1 : Open Line PANOCHE 230-MCMULLN1 230 #1 : Open Line MCMULLN1 230-KEARNEY 230 #1 : Drop Load at MCMULLN1 230 #1 : 16.4 MW 3.3 MVAR D :	HELM -STRD JCT 70.00kV Ckt#1 Sec# 1	377.75	Amps	146.2	146.9	0.7
57	Open Line PANOCHE 230-MCMULLN1 230 #1 : Open Line MCMULLN1 230-KEARNEY 230 #1 : Drop Load at MCMULLN1 230 #1 : 16.4 MW 3.3 MVAR D : Open Line PANOCHE 230-HELM 230 #1 :	HELM -STRD JCT 70.00kV Ckt#1 Sec# 1	377.75	Amps	146.2	146.9	0.7
20	Open Line PANOCHE 230-MOSSLND2 230 #1 : Open Line PANOCHE 230-PANO_EC 230 #1 : Open Line PANOCHE 230-HELM 230 #1 : Open Line PANOCHE 230-GATES 230 #2 : Open Line PANOCHE 230-DS AMIGO 230 #1 : Open Xfmr PANOCHE 230/PANOCHE 115 #2 :	HELM -STRD JCT 70.00kV Ckt#1 Sec# 1	377.75	Amps	122.6	123.1	0.5
59	Open Line HELM 230-MC CALL 230 #1 : Open Line MC CALL 230-HENTAP2 230 #1 : Open Line HENTAP2 230-GATES 230 #1 :	HERNDON -KEARNEY 230.00kV Ckt#1 Sec# 1	974.97	Amps	103.0	103.6	0.6
126	Open Line HENRITTA 70-MUSLSLGH 70 #1 : Open Line HENRITTA 70-LPRNO TP 70 #1 : Open Line HENRITTA 70-GWF_HENR 70 #1 : Open Line HENRITTA 70-JCBSCRNR 70 #1 : Open Xfmr	HNFRD SW-HRDWK TP 70.00kV Ckt#1 Sec# 1	379.4	Amps	140.5	140.5	0.0

	HENRITTA 70/HENRIETA 230 #2 : Open Xfmr HENRITTA 70/HENRIETA 230 #4 : Drop Load at HENRITTA 70 #1 : 6.6 MW 1.3 MVAR Dro :						
126	Open Line HENRITTA 70-MUSLSLGH 70 #1 : Open Line HENRITTA 70-LPRNO TP 70 #1 : Open Line HENRITTA 70-GWF_HENR 70 #1 : Open Line HENRITTA 70-JCBSCRNR 70 #1 : Open Xfmr HENRITTA 70/HENRIETA 230 #2 : Open Xfmr HENRITTA 70/HENRIETA 230 #4 : Drop Load at HENRITTA 70 #1 : 6.6 MW 1.3 MVAR Dro :	HRDWK TP-KNGLOBUS 70.00kV Ckt#1 Sec# 1	377.75	Amps	165.7	165.6	0.0
59	Open Line HELM 230-MC CALL 230 #1 : Open Line MC CALL 230-HENTAP2 230 #1 : Open Line HENTAP2 230-GATES 230 #1 :	HRDWK TP-KNGLOBUS 70.00kV Ckt#1 Sec# 1	377.75	Amps	119.5	115.7	-3.8
13	Open Line STOREY 2 230-BORDEN 230 #1 : Open Line STOREY 2 230-WILSON 230 #1 : Drop Load at STOREY 2 230 #2 : 27 MW 5.4 MVAR Dro : Open Line STOREY 1 230-WILSON 230 #1 : Open Line STOREY 1 230-BORDEN 230 #1 : Drop Load at STOREY 1 230 #1 : 30.2 MW 6.1 MVAR D :	K1-JCT -OAKH_JCT 115.00kV Ckt#1 Sec# 1	743.02	Amps	113.4	113.9	0.5
70	Open Line KEARNEY 230-MCMULLN1 230 #1 : Open Line KEARNEY 230-HERNDON 230 #1 : Open Xfmr KEARNEY 230/KEARNEY 70 #2 :	KEARNEY -FRWWTAP 70.00kV Ckt#1 Sec# 1	379.4	Amps	110.4	110.4	-0.1
13	Open Line STOREY 2 230-BORDEN 230 #1 : Open Line STOREY 2 230-WILSON 230 #1 : Drop Load at STOREY 2 230 #2 : 27 MW 5.4 MVAR Dro : Open Line STOREY 1 230-WILSON 230 #1 : Open Line STOREY 1 230-BORDEN 230 #1 : Drop Load at STOREY 1 230 #1 : 30.2 MW 6.1 MVAR D :	KEARNEY -HERNDON 230.00kV Ckt#1 Sec# 1	974.97	Amps	132.2	132.9	0.8
13	Open Line STOREY 2 230-BORDEN 230 #1 : Open Line STOREY 2 230-WILSON 230 #1 : Drop Load at STOREY 2 230 #2 : 27 MW 5.4 MVAR Dro : Open Line STOREY 1 230-WILSON 230 #1 : Open Line STOREY 1 230-BORDEN 230 #1 : Drop Load at STOREY 1 230 #1 : 30.2 MW 6.1 MVAR D :	KEARNEY -MCMULLN1 230.00kV Ckt#1 Sec# 1	974.97	Amps	107.4	108.2	0.7
13	Open Line STOREY 2 230-BORDEN 230 #1 : Open Line STOREY 2 230-WILSON 230 #1 : Drop Load at STOREY 2 230 #2 : 27 MW 5.4 MVAR Dro : Open Line STOREY 1 230-WILSON 230 #1 : Open Line STOREY 1 230-BORDEN 230 #1 : Drop Load at	KERCKHF2-K1-JCT 115.00kV Ckt#2 Sec# 1	743.02	Amps	113.4	113.9	0.5

	STOREY 1 230 #1 : 30.2 MW 6.1 MVAR D :						
70	Open Line KEARNEY 230-MCMULLN1 230 #1 : Open Line KEARNEY 230-HERNDON 230 #1 : Open Xfmr KEARNEY 230/KEARNEY 70 #2 :	KERMAN -AGRCJCT 70.00kV Ckt#1 Sec# 1	379.4	Amps	161.9	161.8	-0.1
59	Open Line HELM 230-MC CALL 230 #1 : Open Line MC CALL 230-HENTAP2 230 #1 : Open Line HENTAP2 230-GATES 230 #1 :	KINGS J2-KINGS J1 115.00kV Ckt#1 Sec# 1	599.98	Amps	104.6	103.8	-0.8
13	Open Line STOREY 2 230-BORDEN 230 #1 : Open Line STOREY 2 230-WILSON 230 #1 : Drop Load at STOREY 2 230 #2 : 27 MW 5.4 MVAR Dro : Open Line STOREY 1 230-WILSON 230 #1 : Open Line STOREY 1 230-BORDEN 230 #1 : Drop Load at STOREY 1 230 #1 : 30.2 MW 6.1 MVAR D :	LE GRAND-WILSON A 115.00kV Ckt#1 Sec# 1	512.08	Amps	156.8	157.6	0.8
126	Open Line HENRITTA 70-MUSLSLGH 70 #1 : Open Line HENRITTA 70-LPRNO TP 70 #1 : Open Line HENRITTA 70-GWF_HENR 70 #1 : Open Line HENRITTA 70-JCBSCRNR 70 #1 : Open Xfmr HENRITTA 70/HENRIETA 230 #2 : Open Xfmr HENRITTA 70/HENRIETA 230 #4 : Drop Load at HENRITTA 70 #1 : 6.6 MW 1.3 MVAR Dro :	LEMOORE -HNFRD SW 70.00kV Ckt#1 Sec# 1	280.43	Amps	190.2	190.2	0.0
59	Open Line HELM 230-MC CALL 230 #1 : Open Line MC CALL 230-HENTAP2 230 #1 : Open Line HENTAP2 230-GATES 230 #1 :	LEMOORE -HNFRD SW 70.00kV Ckt#1 Sec# 1	280.43	Amps	134.8	129.8	-5.0
80	Open Line HENRIETA 230-HENTAP1 230 #1 : Open Xfmr HENRIETA 230/HENRETTA 115 #3 : Open Xfmr HENRIETA 230/HENRITTA 70 #2 : Open Xfmr HENRIETA 230/HENRITTA 70 #4 :	LEMOORE -HNFRD SW 70.00kV Ckt#1 Sec# 1	280.43	Amps	<98	121.1	>23.1
59	Open Line HELM 230-MC CALL 230 #1 : Open Line MC CALL 230-HENTAP2 230 #1 : Open Line HENTAP2 230-GATES 230 #1 :	LEPRNOFD-GWF_HEP 115.00kV Ckt#1 Sec# 1	743.02	Amps	102.3	101.9	-0.4
lbn-dlo-ns	Los Banos - Tesla & Los Banos - Tracy 500-kV DLO	LOSBANOS-WESTLEY 230.00kV Ckt#1 Sec# 1	1699.92	Amps	99.6	100.8	1.2
lbs-dlo-ns	Los Banos - Gates & Los Banos - Midway 500-kV DLO	LOSBANOS-WESTLEY 230.00kV Ckt#1 Sec# 1	1699.92	Amps	100.0	100.7	0.7
55	Open Line GREGG 230-HENTAP1 230 #1 : Open Line HENTAP1 230-HENRIETA 230 #1 : Open Line HENTAP1 230-GATES 230 #1 : Drop Generator at HELMS 3 18 #**: 400 MW Dropped : Close Line HENTAP2 230-HENRIETA 230 #1 : Open Line MC CALL 230-HENTAP2 230 #1 : Open Line HENTAP2 230-	MC CALL -HELM 230.00kV Ckt#1 Sec# 1	849.96	Amps	112.3	115.6	3.3

	GATES 230 #1 :						
90	Open Line SANGER 115-CLOVISJ1 115 #1 : Open Line SANGER 115-CLOVISJ2 115 #1 : Open Line SANGER 115-AIRWAYJ2 115 #1 : Open Line SANGER 115-LASPALMS 115 #1 : Open Line SANGER 115-MC CALL 115 #1 : Open Line SANGER 115-MC CALL 115 #2 : Open Line SANGER 115-MC CALL 115 #3 : Open Line SANGER 115-MALAGA 115 #1 : Open Line SANGER 115-RAINBWTP 115 #1 : Open Line SANGER 115-PIEDRA 2 115 #1 :	MC CALL -HELM 230.00kV Ckt#1 Sec# 1	849.96	Amps	111.0	111.5	0.6
84	Open Line GATES 230-HENTAP2 230 #1 : Open Line GATES 230-MIDWAY 230 #1 :	MC CALL -HELM 230.00kV Ckt#1 Sec# 1	849.96	Amps	108.5	109.1	0.5
13	Open Line STOREY 2 230-BORDEN 230 #1 : Open Line STOREY 2 230-WILSON 230 #1 : Drop Load at STOREY 2 230 #2 : 27 MW 5.4 MVAR Dro : Open Line STOREY 1 230-WILSON 230 #1 : Open Line STOREY 1 230-BORDEN 230 #1 : Drop Load at STOREY 1 230 #1 : 30.2 MW 6.1 MVAR D :	MC CALL -HELM 230.00kV Ckt#1 Sec# 1	849.96	Amps	102.6	103.2	0.6
13	Open Line STOREY 2 230-BORDEN 230 #1 : Open Line STOREY 2 230-WILSON 230 #1 : Drop Load at STOREY 2 230 #2 : 27 MW 5.4 MVAR Dro : Open Line STOREY 1 230-WILSON 230 #1 : Open Line STOREY 1 230-BORDEN 230 #1 : Drop Load at STOREY 1 230 #1 : 30.2 MW 6.1 MVAR D :	MCMULLN1-PANOCHE 230.00kV Ckt#1 Sec# 1	974.97	Amps	103.2	103.9	0.7
24	Open Line LE GRAND 115-CERTAN T 115 #1 : Open Line LE GRAND 115-EXCHEQUR 115 #1 : Open Line LE GRAND 115-WILSON A 115 #1 : Open Line LE GRAND 115-DAIRYLND 115 #1 : Drop Load at LE GRAND 115 #1 : 10.7 MW 2.1 MVAR D :	MERCED -MERCED M 70.00/ 115.00kV Bk#2	60	MVA	117.7	117.7	0.0
24	Open Line LE GRAND 115-CERTAN T 115 #1 : Open Line LE GRAND 115-EXCHEQUR 115 #1 : Open Line LE GRAND 115-WILSON A 115 #1 : Open Line LE GRAND 115-DAIRYLND 115 #1 : Drop Load at LE GRAND 115 #1 : 10.7 MW 2.1 MVAR D :	MERCED -MERCED M 115.00/ 115.00kV Bk#2	60	MVA	129.2	129.1	0.0
1	Open Line WILSON A 115-ATWATER 115 #1 : Open Line WILSON B 115-EL CAPTN 115 #1 :	MERCED -WILSON A 115.00kV Ckt#1 Sec# 1	471.92	Amps	109.2	109.3	0.0
24	Open Line LE GRAND 115-CERTAN T 115 #1 : Open Line LE GRAND 115-EXCHEQUR 115 #1 :	MRCDFLLS-MCSWAINJ 70.00kV Ckt#1 Sec# 1	379.4	Amps	154.9	154.9	0.0

	Open Line LE GRAND 115-WILSON A 115 #1 : Open Line LE GRAND 115-DAIRYLND 115 #1 : Drop Load at LE GRAND 115 #1 : 10.7 MW 2.1 MVAR D :						
24	Open Line LE GRAND 115-CERTAN T 115 #1 : Open Line LE GRAND 115-EXCHEQUR 115 #1 : Open Line LE GRAND 115-WILSON A 115 #1 : Open Line LE GRAND 115-DAIRYLND 115 #1 : Drop Load at LE GRAND 115 #1 : 10.7 MW 2.1 MVAR D :	MRCDFLLS-MERCED 70.00kV Ckt#1 Sec# 1	377.75	Amps	146.5	146.5	0.0
35	Open Line LOS BANS 70-CHEVPIPE 70 #1 : Open Line LOS BANS 70-WRGHT PP 70 #1 : Open Line LOS BANS 70-PCHCO PP 70 #1 : Open Line LOS BANS 70-ONLL PMP 69 #1 : Open Xfmr LOS BANS 70/LOSBANOS 230 #3 : Open Xfmr LOS BANS 70/LOSBANOS 230 #4 :	MRCYSPRS-ORO LOMA 70.00kV Ckt#1 Sec# 1	511.37	Amps	114.1	114.2	0.1
13	Open Line STOREY 2 230-BORDEN 230 #1 : Open Line STOREY 2 230-WILSON 230 #1 : Drop Load at STOREY 2 230 #2 : 27 MW 5.4 MVAR Dro : Open Line STOREY 1 230-WILSON 230 #1 : Open Line STOREY 1 230-BORDEN 230 #1 : Drop Load at STOREY 1 230 #1 : 30.2 MW 6.1 MVAR D :	OAKH_JCT-SHARON T 115.00kV Ckt#1 Sec# 1	396.61	Amps	157.8	158.7	0.9
48	Open Line KERCKHF2 115-WWARD JT 115 #1 : Open Line WWARD JT 115-WOODWARD 115 #1 : Open Line WWARD JT 115-CLOVISJ1 115 #1 : Open Line CLOVISJ1 115-CLOVIS-1 115 #1 : Open Line CLOVISJ1 115-SANGER 115 #1 : Drop Load at CLOVIS-1 115 #1 : 41 MW 8.3 MVAR Dro : Close Line CLOVIS-1 115-CLOVIS-2 115 #1 : Open Line CLOVIS-2 115-CLOVISJ2 115 #1 :	OAKH_JCT-SHARON T 115.00kV Ckt#1 Sec# 1	396.61	Amps	125.7	125.7	0.0
59	Open Line HELM 230-MC CALL 230 #1 : Open Line MC CALL 230-HENTAP2 230 #1 : Open Line HENTAP2 230-GATES 230 #1 :	OAKH_JCT-SHARON T 115.00kV Ckt#1 Sec# 1	396.61	Amps	117.9	118.5	0.6
35	Open Line LOS BANS 70-CHEVPIPE 70 #1 : Open Line LOS BANS 70-WRGHT PP 70 #1 : Open Line LOS BANS 70-PCHCO PP 70 #1 : Open Line LOS BANS 70-ONLL PMP 69 #1 : Open Xfmr LOS BANS 70/LOSBANOS 230 #3 : Open Xfmr LOS BANS 70/LOSBANOS 230 #4 :	ORO LOMA-ORO LOMA 115.00/ 70.00kV Bk#2	72	MVA	141.4	141.4	0.0
19	Open Line PANOCHE 230-COBURN 230 #1 : Open Line PANOCHE 230-LOSBANOS 230 #1 :	PANOCHE -DS AMIGO 230.00kV Ckt#1 Sec# 1	849.96	Amps	113.1	113.7	0.6

	Open Line PANOCHE 230-LOSBANOS 230 #2 : Open Line PANOCHE 230-MCMULLN1 230 #1 : Open Line PANOCHE 230-GATES 230 #1 : Open Xfmr PANOCHE 230/PNCHE 1M 230 #1 :						
7	Open Line LOSBANOS 230-PANOCHE 230 #2 : Open Line DS AMIGO 230-PANOCHE 230 #1 :	PANOCHE -LOSBANOS 230.00kV Ckt#1 Sec# 1	974.97	Amps	102.7	103.3	0.6
18	Open Line LOSBANOS 230-PANOCHE 230 #1 : Open Line LOSBANOS 230-DS AMIGO 230 #1 : Open Xfmr LOSBANOS 230/LOS BANS 70 #4 :	PANOCHE -LOSBANOS 230.00kV Ckt#2 Sec# 1	849.96	Amps	107.1	107.8	0.7
93	Open Line REEDLEY 115-GERAWAN 115 #1 : Open Line REEDLEY 115-PIEDRA 1 115 #1 : Open Xfmr REEDLEY 115/REEDLEY 70 #1 : Open Xfmr REEDLEY 115/REEDLEY 70 #2 : Drop Load at REEDLEY 115 #3 : 21.1 MW 4.2 MVAR Dr :	PARLIER -SNGRJCT 70.00kV Ckt#1 Sec# 1	470.13	Amps	113.5	113.5	0.0
67	Open Line GATES 230-MORROBAY 230 #1 : Open Line GATES 230-TEMPLETN 230 #1 :	PSA RBLS-SAN MIGL 70.00kV Ckt#1 Sec# 1	346.41	Amps	103.5	103.3	-0.2
67	Open Line GATES 230-MORROBAY 230 #1 : Open Line GATES 230-TEMPLETN 230 #1 :	Q166 -MIDWAY 230.00kV Ckt#1 Sec# 1	976.48	Amps	140.2	140.3	0.0
82	Open Line GATES 230-PANOCHE 230 #2 : Open Line GATES 230-MORROBAY 230 #1 :	Q166 -MIDWAY 230.00kV Ckt#1 Sec# 1	976.48	Amps	103.8	103.9	0.1
81	Open Line GATES 230-PANOCHE 230 #1 : Open Line GATES 230-TEMPLETN 230 #1 : Open Xfmr GATES 230/GATES 1M 230 #1 :	Q166 -MIDWAY 230.00kV Ckt#1 Sec# 1	976.48	Amps	100.4	100.6	0.1
67	Open Line GATES 230-MORROBAY 230 #1 : Open Line GATES 230-TEMPLETN 230 #1 :	Q166 -Q194SWST 230.00kV Ckt#1 Sec# 1	976.48	Amps	140.2	140.3	0.0
82	Open Line GATES 230-PANOCHE 230 #2 : Open Line GATES 230-MORROBAY 230 #1 :	Q166 -Q194SWST 230.00kV Ckt#1 Sec# 1	976.48	Amps	103.8	103.9	0.1
81	Open Line GATES 230-PANOCHE 230 #1 : Open Line GATES 230-TEMPLETN 230 #1 : Open Xfmr GATES 230/GATES 1M 230 #1 :	Q166 -Q194SWST 230.00kV Ckt#1 Sec# 1	976.48	Amps	100.4	100.6	0.1
67	Open Line GATES 230-MORROBAY 230 #1 : Open Line GATES 230-TEMPLETN 230 #1 :	Q194SWST-MIDWAY 230.00kV Ckt#1 Sec# 1	976.48	Amps	140.2	140.3	0.0
82	Open Line GATES 230-PANOCHE 230 #2 : Open Line GATES 230-MORROBAY 230 #1 :	Q194SWST-MIDWAY 230.00kV Ckt#1 Sec# 1	976.48	Amps	103.8	103.9	0.1
81	Open Line GATES 230-PANOCHE 230 #1 : Open Line GATES 230-TEMPLETN 230 #1 : Open Xfmr GATES 230/GATES 1M 230 #1 :	Q194SWST-MIDWAY 230.00kV Ckt#1 Sec# 1	976.48	Amps	100.4	100.6	0.1
67	Open Line GATES 230-MORROBAY 230 #1 : Open	Q238TAP -CARRIZO 115.00kV Ckt#1 Sec# 1	436.78	Amps	106.6	106.7	0.0

	Line GATES 230-TEMPLETN 230 #1 :							
67	Open Line GATES 230-MORROBAY 230 #1 : Open Line GATES 230-TEMPLETN 230 #1 :	Q239SWST-MORROBAY 230.00kV Ckt#1 Sec# 1	976.48	Amps	106.6	106.6	0.0
67	Open Line GATES 230-MORROBAY 230 #1 : Open Line GATES 230-TEMPLETN 230 #1 :	Q239SWST-MORROBAY 230.00kV Ckt#2 Sec# 1	976.48	Amps	106.6	106.6	0.0
67	Open Line GATES 230-MORROBAY 230 #1 : Open Line GATES 230-TEMPLETN 230 #1 :	Q239SWST-Q166 230.00kV Ckt#1 Sec# 1	976.48	Amps	140.2	140.3	0.0
82	Open Line GATES 230-PANOCHE 230 #2 : Open Line GATES 230-MORROBAY 230 #1 :	Q239SWST-Q166 230.00kV Ckt#1 Sec# 1	976.48	Amps	103.8	103.9	0.1
81	Open Line GATES 230-PANOCHE 230 #1 : Open Line GATES 230-TEMPLETN 230 #1 : Open Xfmr GATES 230/GATES 1M 230 #1 :	Q239SWST-Q166 230.00kV Ckt#1 Sec# 1	976.48	Amps	100.5	100.6	0.1
67	Open Line GATES 230-MORROBAY 230 #1 : Open Line GATES 230-TEMPLETN 230 #1 :	Q239SWST-Q166 230.00kV Ckt#2 Sec# 1	976.48	Amps	140.2	140.3	0.0
82	Open Line GATES 230-PANOCHE 230 #2 : Open Line GATES 230-MORROBAY 230 #1 :	Q239SWST-Q166 230.00kV Ckt#2 Sec# 1	976.48	Amps	103.8	103.9	0.1
81	Open Line GATES 230-PANOCHE 230 #1 : Open Line GATES 230-TEMPLETN 230 #1 : Open Xfmr GATES 230/GATES 1M 230 #1 :	Q239SWST-Q166 230.00kV Ckt#2 Sec# 1	976.48	Amps	100.5	100.6	0.1
58	Open Line PANOCHE 230-MCMULLN1 230 #1 : Open Line MCMULLN1 230-KEARNEY 230 #1 : Drop Load at MCMULLN1 230 #1 : 16.4 MW 3.3 MVAR D : Open Line HELM 230-MC CALL 230 #1 :	SAN JOQN-SNJQJCT 70.00kV Ckt#1 Sec# 1	395.9	Amps	104.2	104.9	0.8
59	Open Line HELM 230-MC CALL 230 #1 : Open Line MC CALL 230-HENTAP2 230 #1 : Open Line HENTAP2 230-GATES 230 #1 :	SANGER -MC CALL 115.00kV Ckt#3 Sec# 1	973.96	Amps	99.8	100.1	0.3
13	Open Line STOREY 2 230-BORDEN 230 #1 : Open Line STOREY 2 230-WILSON 230 #1 : Drop Load at STOREY 2 230 #2 : 27 MW 5.4 MVAR Dro : Open Line STOREY 1 230-WILSON 230 #1 : Open Line STOREY 1 230-BORDEN 230 #1 : Drop Load at STOREY 1 230 #1 : 30.2 MW 6.1 MVAR D :	SHARON T-CERTANJ1 115.00kV Ckt#1 Sec# 1	396.61	Amps	151.5	152.4	0.9
48	Open Line KERCKHF2 115-WWARD JT 115 #1 : Open Line WWARD JT 115-WOODWARD 115 #1 : Open Line WWARD JT 115-CLOVISJ1 115 #1 : Open Line CLOVISJ1 115-CLOVIS-1 115 #1 : Open Line CLOVISJ1 115-SANGER 115 #1 : Drop Load at CLOVIS-1 115 #1 : 41 MW 8.3 MVAR Dro : Close Line	SHARON T-CERTANJ1 115.00kV Ckt#1 Sec# 1	396.61	Amps	119.0	119.1	0.1

	CLOVIS-1 115-CLOVIS-2 115 #1 : Open Line CLOVIS-2 115-CLOVISJ2 115 #1 :						
59	Open Line HELM 230-MC CALL 230 #1 : Open Line MC CALL 230-HENTAP2 230 #1 : Open Line HENTAP2 230-GATES 230 #1 :	SHARON T-CERTANJ1 115.00kV Ckt#1 Sec# 1	396.61	Amps	111.7	112.4	0.6
67	Open Line GATES 230-MORROBAY 230 #1 : Open Line GATES 230-TEMPLETN 230 #1 :	SN LS OB-Q238TAP 115.00kV Ckt#1 Sec# 1	436.78	Amps	110.8	110.8	0.0
35	Open Line LOS BANS 70-CHEVPIPE 70 #1 : Open Line LOS BANS 70-WRGHT PP 70 #1 : Open Line LOS BANS 70-PCHCO PP 70 #1 : Open Line LOS BANS 70-ONLL PMP 69 #1 : Open Xfmr LOS BANS 70/LOSBANOS 230 #3 : Open Xfmr LOS BANS 70/LOSBANOS 230 #4 :	SNTA RTA-DOS PALS 70.00kV Ckt#1 Sec# 1	297.75	Amps	117.8	117.9	0.1
9	Open Line BELLOTA 230-COTTLE A 230 #1 : Open Line COTTLE A 230-MELONES 230 #1 : Drop Load at COTTLE A 230 #1 : 22.2 MW 0.9 MVAR D : Drop Generator at HELMS 3 18 #**: 400 MW Dropped : Open Line BELLOTA 230-COTTLE B 230 #1 : Open Line COTTLE B 230-WARNERVL 230 #1 : Drop Load at COTTLE B 230 #2 : 25.5 MW 1.1 MVAR D :	STANDFRD-WRNRVLLE 115.00kV Ckt#1 Sec# 1	938.82	Amps	116.5	117.0	0.5
9	Open Line BELLOTA 230-COTTLE A 230 #1 : Open Line COTTLE A 230-MELONES 230 #1 : Drop Load at COTTLE A 230 #1 : 22.2 MW 0.9 MVAR D : Drop Generator at HELMS 3 18 #**: 400 MW Dropped : Open Line BELLOTA 230-COTTLE B 230 #1 : Open Line COTTLE B 230-WARNERVL 230 #1 : Drop Load at COTTLE B 230 #2 : 25.5 MW 1.1 MVAR D :	STANDFRD-WRNRVLLE 115.00kV Ckt#2 Sec# 1	938.82	Amps	116.5	117.0	0.5
58	Open Line PANOCHE 230-MCMULLN1 230 #1 : Open Line MCMULLN1 230-KEARNEY 230 #1 : Drop Load at MCMULLN1 230 #1 : 16.4 MW 3.3 MVAR D : Open Line HELM 230-MC CALL 230 #1 :	STOREY 1-WILSON 230.00kV Ckt#1 Sec# 1	850.96	Amps	117.3	118.1	0.8
16	Open Line PANOCHE 230-HELM 230 #1 : Open Line PANOCHE 230-MCMULLN1 230 #1 : Open Line MCMULLN1 230-KEARNEY 230 #1 : Drop Load at MCMULLN1 230 #1 : 16.4 MW 3.3 MVAR D :	STOREY 1-WILSON 230.00kV Ckt#1 Sec# 1	850.96	Amps	116.3	117.1	0.8
57	Open Line PANOCHE 230-MCMULLN1 230 #1 : Open Line MCMULLN1 230-KEARNEY 230 #1 : Drop Load at MCMULLN1 230 #1 : 16.4 MW 3.3 MVAR D : Open Line PANOCHE 230-HELM 230 #1 :	STOREY 1-WILSON 230.00kV Ckt#1 Sec# 1	850.96	Amps	116.3	117.1	0.8

71	Open Line HERNDON 230-GREGG 230 #1 : Open Line HERNDON 230-KEARNEY 230 #1 : Open Xfmr HERNDON 230/HERNDN1M 115 #1 :	STOREY 1-WILSON 230.00kV Ckt#1 Sec# 1	850.96	Amps	115.0	115.7	0.7
lbs-dlo-ns	Los Banos - Gates & Los Banos - Midway 500-kV DLO	STOREY 1-WILSON 230.00kV Ckt#1 Sec# 1	850.96	Amps	114.4	115.2	0.8
62	Open Line KEARNEY 230-HERNDON 230 #1 : Open Line HERNDON 230-FGRDN T1 230 #1 : Open Line FGRDN T1 230-FIGRDN 1 230 #1 : Open Line FGRDN T1 230-ASHLAN 230 #1 : Drop Load at FIGRDN 1 230 #1 : 59.1 MW 11.9 MVAR : Close Line FIGRDN 1 230-FIGRDN 2 230 #1 :	STOREY 1-WILSON 230.00kV Ckt#1 Sec# 1	850.96	Amps	112.2	112.9	0.7
70	Open Line KEARNEY 230-MCMULLN1 230 #1 : Open Line KEARNEY 230-HERNDON 230 #1 : Open Xfmr KEARNEY 230/KEARNEY 70 #2 :	STOREY 1-WILSON 230.00kV Ckt#1 Sec# 1	850.96	Amps	111.8	112.5	0.7
59	Open Line HELM 230-MC CALL 230 #1 : Open Line MC CALL 230-HENTAP2 230 #1 : Open Line HENTAP2 230-GATES 230 #1 :	STOREY 1-WILSON 230.00kV Ckt#1 Sec# 1	850.96	Amps	111.4	112.1	0.7
19	Open Line PANOCHE 230-COBURN 230 #1 : Open Line PANOCHE 230-LOSBANOS 230 #1 : Open Line PANOCHE 230-LOSBANOS 230 #2 : Open Line PANOCHE 230-MCMULLN1 230 #1 : Open Line PANOCHE 230-GATES 230 #1 : Open Xfmr PANOCHE 230/PNCHE 1M 230 #1 :	STOREY 1-WILSON 230.00kV Ckt#1 Sec# 1	850.96	Amps	110.5	111.2	0.7
83	Open Line GATES 230-HENTAP1 230 #1 : Open Line GATES 230-ARCO 230 #1 :	STOREY 1-WILSON 230.00kV Ckt#1 Sec# 1	850.96	Amps	107.0	108.4	1.5
75	Open Line ASHLAN 230-FGRDN T1 230 #1 : Open Line ASHLAN 230-FGRDN T2 230 #1 : Drop Load at ASHLAN 230 #1 : 55.7 MW 10.7 MVAR Dr : Drop Load at ASHLAN 230 #2 : 51.9 MW 10.3 MVAR Dr : Drop Load at ASHLAN 230 #3 : 52.7 MW 10 MVAR Drop :	STOREY 1-WILSON 230.00kV Ckt#1 Sec# 1	850.96	Amps	104.8	105.4	0.6
17	Open Line LOSBANOS 230-WESTLEY 230 #1 : Open Line LOSBANOS 230-PANOCHE 230 #2 : Open Line LOSBANOS 230-SN LS PP 230 #1 : Open Line LOSBANOS 230-SN LS PP 230 #2 : Open Xfmr LOSBANOS 230/LOS BANS 70 #3 :	STOREY 1-WILSON 230.00kV Ckt#1 Sec# 1	850.96	Amps	104.2	104.8	0.6
47	Open Line PNDLJ1 115-BULLARD 115 #1 : Open Line PNDLJ1 115-HERNDON 115 #1 : Open Line PNDLJ2 115-PNEDLE 115 #1 : Open Line PNDLJ2 115-BULLARD 115 #1 : Open Line PNDLJ2 115-	STOREY 1-WILSON 230.00kV Ckt#1 Sec# 1	850.96	Amps	103.8	104.5	0.6

	HERNDON 115 #1 : Drop Load at PNEDLE 115 #2 : 24.7 MW 5 MVAR Dropp : Drop Load at PNEDLE 115 #3 : 32.5 MW 6.5 MVAR Dro : Close Line PNDLJ1 115-PNEDLE 115 #1 :						
lbn-dlo-ns	Los Banos - Tesla & Los Banos - Tracy 500-kV DLO	STOREY 1-WILSON 230.00kV Ckt#1 Sec# 1	850.96	Amps	102.4	103.2	0.8
76	Open Line HELM 230-PANOCHE 230 #1 : Open Line HELM 230-MC CALL 230 #1 : Open Xfmr HELM 230/HELM 70 #1 :	STOREY 1-WILSON 230.00kV Ckt#1 Sec# 1	850.96	Amps	101.6	102.2	0.7
41	Open Line BORDEN 70-MADERA 70 #1 : Open Line BORDEN 70-MADERA 70 #2 : Open Line BORDEN 70-GLASS 70 #1 : Open Line BORDEN 70-CASSIDY 70 #1 : Open Xfmr BORDEN 70/BORDEN 230 #1 : Open Xfmr BORDEN 70/BORDEN 230 #2 :	STOREY 1-WILSON 230.00kV Ckt#1 Sec# 1	850.96	Amps	101.6	102.2	0.6
104	Open Line BULLARD 115-PNDLJ2 115 #1 : Open Line BULLARD 115-PNDLJ1 115 #1 : Drop Load at BULLARD 115 #1 : 36.1 MW 7.3 MVAR Dr : Drop Load at BULLARD 115 #2 : 35.9 MW 7.2 MVAR Dr : Drop Load at BULLARD 115 #3 : 34.2 MW 6.9 MVAR Dr :	STOREY 1-WILSON 230.00kV Ckt#1 Sec# 1	850.96	Amps	101.2	101.9	0.6
7	Open Line LOSBANOS 230-PANOCHE 230 #2 : Open Line DS AMIGO 230-PANOCHE 230 #1 :	STOREY 1-WILSON 230.00kV Ckt#1 Sec# 1	850.96	Amps	101.1	101.7	0.6
18	Open Line LOSBANOS 230-PANOCHE 230 #1 : Open Line LOSBANOS 230-DS AMIGO 230 #1 : Open Xfmr LOSBANOS 230/LOS BANS 70 #4 :	STOREY 1-WILSON 230.00kV Ckt#1 Sec# 1	850.96	Amps	100.9	101.5	0.6
6	Open Line LOSBANOS 230-PANOCHE 230 #2 : Open Line LOSBANOS 230-DS AMIGO 230 #1 :	STOREY 1-WILSON 230.00kV Ckt#1 Sec# 1	850.96	Amps	100.6	101.2	0.6
84	Open Line GATES 230-HENTAP2 230 #1 : Open Line GATES 230-MIDWAY 230 #1 :	STOREY 1-WILSON 230.00kV Ckt#1 Sec# 1	850.96	Amps	100.4	101.1	0.6
103	Open Line WOODWARD 115-WWARD JT 115 #1 : Open Line WOODWARD 115-CHLDHOSP 115 #1 : Drop Load at WOODWARD 115 #1 : 34 MW 6.9 MVAR Dro : Drop Load at WOODWARD 115 #2 : 42.4 MW 8.6 MVAR D : Drop Load at WOODWARD 115 #3 : 35.5 MW 7.2 MVAR D :	STOREY 1-WILSON 230.00kV Ckt#1 Sec# 1	850.96	Amps	100.3	100.9	0.6
54	Open Line WST FRSO 115-MC CALL 115 #1 : Open Line DANISHCM 115-MC CALL 115 #1 : Open Line DANISHCM 115-CAL AVE 115 #1 : Drop Load at DANISHCM 115 #1 : 3.8 MW 3.2 MVAR Dr :	STOREY 1-WILSON 230.00kV Ckt#1 Sec# 1	850.96	Amps	99.9	100.5	0.6

23	Open Line EXCHEQUR 115-LE GRAND 115 #1 : Open Xfmr EXCHEQUR 115/EXCHQRTP 115 #1 :	STOREY 1-WILSON 230.00kV Ckt#1 Sec# 1	850.96	Amps	99.8	100.4	0.6
15	Open Line MOSSLND2 230-PANOCHE 230 #1 : Open Line COBURN 230-PANOCHE 230 #1 :	STOREY 1-WILSON 230.00kV Ckt#1 Sec# 1	850.96	Amps	99.6	100.3	0.7
73	Open Line FIGRDN 1 230-FGRDN T1 230 #1 : Drop Load at FIGRDN 1 230 #1 : 59.1 MW 11.9 MVAR :	STOREY 1-WILSON 230.00kV Ckt#1 Sec# 1	850.96	Amps	99.5	100.1	0.6
20	Open Line PANOCHE 230-MOSSLND2 230 #1 : Open Line PANOCHE 230-PANO_EC 230 #1 : Open Line PANOCHE 230-HELM 230 #1 : Open Line PANOCHE 230-GATES 230 #2 : Open Line PANOCHE 230-DS AMIGO 230 #1 : Open Xfmr PANOCHE 230/PANOCHE 115 #2 :	STOREY 1-WILSON 230.00kV Ckt#1 Sec# 1	850.96	Amps	99.4	100.1	0.7
101	Open Line HERNDON 115-MANCHSTR 115 #1 : Open Line HERNDON 115-PNDLJ1 115 #1 : Open Line HERNDON 115-CHLDHOSP 115 #1 :	STOREY 1-WILSON 230.00kV Ckt#1 Sec# 1	850.96	Amps	99.4	100.0	0.6
98	Open Line BARTON 115-AIRWAYJ2 115 #1 : Open Line BARTON 115-HERNDON 115 #1 : Drop Load at BARTON 115 #1 : 34.8 MW 7 MVAR Dropp : Drop Load at BARTON 115 #2 : 29.9 MW 6 MVAR Dropp : Drop Load at BARTON 115 #3 : 21.7 MW 4.3 MVAR Dro :	STOREY 1-WILSON 230.00kV Ckt#1 Sec# 1	850.96	Amps	99.4	100.0	0.6
58	Open Line PANOCHE 230-MCMULLN1 230 #1 : Open Line MCMULLN1 230-KEARNEY 230 #1 : Drop Load at MCMULLN1 230 #1 : 16.4 MW 3.3 MVAR D : Open Line HELM 230-MC CALL 230 #1 :	STOREY 2-BORDEN 230.00kV Ckt#1 Sec# 1	793.23	Amps	115.5	116.3	0.7
16	Open Line PANOCHE 230-HELM 230 #1 : Open Line PANOCHE 230-MCMULLN1 230 #1 : Open Line MCMULLN1 230-KEARNEY 230 #1 : Drop Load at MCMULLN1 230 #1 : 16.4 MW 3.3 MVAR D :	STOREY 2-BORDEN 230.00kV Ckt#1 Sec# 1	793.23	Amps	114.6	115.3	0.7
57	Open Line PANOCHE 230-MCMULLN1 230 #1 : Open Line MCMULLN1 230-KEARNEY 230 #1 : Drop Load at MCMULLN1 230 #1 : 16.4 MW 3.3 MVAR D : Open Line PANOCHE 230-HELM 230 #1 :	STOREY 2-BORDEN 230.00kV Ckt#1 Sec# 1	793.23	Amps	114.6	115.3	0.7
71	Open Line HERNDON 230-GREGG 230 #1 : Open Line HERNDON 230-KEARNEY 230 #1 : Open Xfmr HERNDON 230/HERNDN1M 115 #1 :	STOREY 2-BORDEN 230.00kV Ckt#1 Sec# 1	793.23	Amps	113.4	114.0	0.7
lbs-dlo-ns	Los Banos - Gates & Los Banos - Midway 500-kV DLO	STOREY 2-BORDEN 230.00kV Ckt#1 Sec# 1	793.23	Amps	112.9	113.6	0.7
62	Open Line KEARNEY 230-HERNDON 230 #1 : Open Line HERNDON 230-FGRDN T1 230 #1 :	STOREY 2-BORDEN 230.00kV Ckt#1 Sec# 1	793.23	Amps	110.8	111.5	0.7

	Open Line FGRDN T1 230-FIGRDN 1 230 #1 : Open Line FGRDN T1 230-ASHLAN 230 #1 : Drop Load at FIGRDN 1 230 #1 : 59.1 MW 11.9 MVAR : Close Line FIGRDN 1 230-FIGRDN 2 230 #1 :							
70	Open Line KEARNEY 230-MCMULLN1 230 #1 : Open Line KEARNEY 230-HERNDON 230 #1 : Open Xfmr KEARNEY 230/KEARNEY 70 #2 :	STOREY 2-BORDEN 230.00kV Ckt#1 Sec# 1	793.23	Amps	110.4	111.1	0.7
59	Open Line HELM 230-MC CALL 230 #1 : Open Line MC CALL 230-HENTAP2 230 #1 : Open Line HENTAP2 230-GATES 230 #1 :	STOREY 2-BORDEN 230.00kV Ckt#1 Sec# 1	793.23	Amps	110.2	110.8	0.6
19	Open Line PANOCHE 230-COBURN 230 #1 : Open Line PANOCHE 230-LOSBANOS 230 #1 : Open Line PANOCHE 230-LOSBANOS 230 #2 : Open Line PANOCHE 230-MCMULLN1 230 #1 : Open Line PANOCHE 230-GATES 230 #1 : Open Xfmr PANOCHE 230/PNCHE 1M 230 #1 :	STOREY 2-BORDEN 230.00kV Ckt#1 Sec# 1	793.23	Amps	109.3	110.0	0.6
83	Open Line GATES 230-HENTAP1 230 #1 : Open Line GATES 230-ARCO 230 #1 :	STOREY 2-BORDEN 230.00kV Ckt#1 Sec# 1	793.23	Amps	106.1	107.4	1.3
75	Open Line ASHLAN 230-FGRDN T1 230 #1 : Open Line ASHLAN 230-FGRDN T2 230 #1 : Drop Load at ASHLAN 230 #1 : 55.7 MW 10.7 MVAR Dr : Drop Load at ASHLAN 230 #2 : 51.9 MW 10.3 MVAR Dr : Drop Load at ASHLAN 230 #3 : 52.7 MW 10 MVAR Drop :	STOREY 2-BORDEN 230.00kV Ckt#1 Sec# 1	793.23	Amps	104.0	104.6	0.6
17	Open Line LOSBANOS 230-WESTLEY 230 #1 : Open Line LOSBANOS 230-PANOCHE 230 #2 : Open Line LOSBANOS 230-SN LS PP 230 #1 : Open Line LOSBANOS 230-SN LS PP 230 #2 : Open Xfmr LOSBANOS 230/LOS BANS 70 #3 :	STOREY 2-BORDEN 230.00kV Ckt#1 Sec# 1	793.23	Amps	103.5	104.1	0.6
47	Open Line PNDLJ1 115-BULLARD 115 #1 : Open Line PNDLJ1 115-HERNDON 115 #1 : Open Line PNDLJ2 115-PNEDLE 115 #1 : Open Line PNDLJ2 115-BULLARD 115 #1 : Open Line PNDLJ2 115-HERNDON 115 #1 : Drop Load at PNEDLE 115 #2 : 24.7 MW 5 MVAR Dropp : Drop Load at PNEDLE 115 #3 : 32.5 MW 6.5 MVAR Dro : Close Line PNDLJ1 115-PNEDLE 115 #1 :	STOREY 2-BORDEN 230.00kV Ckt#1 Sec# 1	793.23	Amps	103.2	103.8	0.6
lbn-dlo-ns	Los Banos - Tesla & Los Banos - Tracy 500-kV DLO	STOREY 2-BORDEN 230.00kV Ckt#1 Sec# 1	793.23	Amps	101.9	102.6	0.8
76	Open Line HELM 230-PANOCHE 230 #1 : Open	STOREY 2-BORDEN 230.00kV Ckt#1 Sec# 1	793.23	Amps	101.1	101.8	0.6

	Line HELM 230-MC CALL 230 #1 : Open Xfmr HELM 230/HELM 70 #1 :						
41	Open Line BORDEN 70-MADERA 70 #1 : Open Line BORDEN 70-MADERA 70 #2 : Open Line BORDEN 70-GLASS 70 #1 : Open Line BORDEN 70-CASSIDY 70 #1 : Open Xfmr BORDEN 70/BORDEN 230 #1 : Open Xfmr BORDEN 70/BORDEN 230 #2 :	STOREY 2-BORDEN 230.00kV Ckt#1 Sec# 1	793.23	Amps	101.1	101.7	0.6
104	Open Line BULLARD 115-PNDLJ2 115 #1 : Open Line BULLARD 115-PNDLJ1 115 #1 : Drop Load at BULLARD 115 #1 : 36.1 MW 7.3 MVAR Dr : Drop Load at BULLARD 115 #2 : 35.9 MW 7.2 MVAR Dr : Drop Load at BULLARD 115 #3 : 34.2 MW 6.9 MVAR Dr :	STOREY 2-BORDEN 230.00kV Ckt#1 Sec# 1	793.23	Amps	100.8	101.4	0.6
7	Open Line LOSBANOS 230-PANOCHE 230 #2 : Open Line DS AMIGO 230-PANOCHE 230 #1 :	STOREY 2-BORDEN 230.00kV Ckt#1 Sec# 1	793.23	Amps	100.7	101.3	0.5
18	Open Line LOSBANOS 230-PANOCHE 230 #1 : Open Line LOSBANOS 230-DS AMIGO 230 #1 : Open Xfmr LOSBANOS 230/LOS BANS 70 #4 :	STOREY 2-BORDEN 230.00kV Ckt#1 Sec# 1	793.23	Amps	100.5	101.1	0.5
6	Open Line LOSBANOS 230-PANOCHE 230 #2 : Open Line LOSBANOS 230-DS AMIGO 230 #1 :	STOREY 2-BORDEN 230.00kV Ckt#1 Sec# 1	793.23	Amps	100.2	100.8	0.5
84	Open Line GATES 230-HENTAP2 230 #1 : Open Line GATES 230-MIDWAY 230 #1 :	STOREY 2-BORDEN 230.00kV Ckt#1 Sec# 1	793.23	Amps	100.1	100.7	0.6
103	Open Line WOODWARD 115-WWARD JT 115 #1 : Open Line WOODWARD 115-CHLDHOSP 115 #1 : Drop Load at WOODWARD 115 #1 : 34 MW 6.9 MVAR Dro : Drop Load at WOODWARD 115 #2 : 42.4 MW 8.6 MVAR D : Drop Load at WOODWARD 115 #3 : 35.5 MW 7.2 MVAR D :	STOREY 2-BORDEN 230.00kV Ckt#1 Sec# 1	793.23	Amps	100.0	100.5	0.6
54	Open Line WST FRSO 115-MC CALL 115 #1 : Open Line DANISHCM 115-MC CALL 115 #1 : Open Line DANISHCM 115-CAL AVE 115 #1 : Drop Load at DANISHCM 115 #1 : 3.8 MW 3.2 MVAR Dr :	STOREY 2-BORDEN 230.00kV Ckt#1 Sec# 1	793.23	Amps	99.6	100.2	0.6
23	Open Line EXCHEQUR 115-LE GRAND 115 #1 : Open Xfmr EXCHEQUR 115/EXCHQRTP 115 #1 :	STOREY 2-BORDEN 230.00kV Ckt#1 Sec# 1	793.23	Amps	99.5	100.0	0.6
58	Open Line PANOCHE 230-MCMULLN1 230 #1 : Open Line MCMULLN1 230-KEARNEY 230 #1 : Drop Load at MCMULLN1 230 #1 : 16.4 MW 3.3 MVAR D : Open Line HELM 230-MC CALL 230 #1 :	STOREY 2-WILSON 230.00kV Ckt#1 Sec# 1	793.23	Amps	106.8	107.6	0.7

16	Open Line PANOCHE 230-HELM 230 #1 : Open Line PANOCHE 230-MCMULLN1 230 #1 : Open Line MCMULLN1 230-KEARNEY 230 #1 : Drop Load at MCMULLN1 230 #1 : 16.4 MW 3.3 MVAR D :	STOREY 2-WILSON 230.00kV Ckt#1 Sec# 1	793.23	Amps	105.9	106.6	0.7
57	Open Line PANOCHE 230-MCMULLN1 230 #1 : Open Line MCMULLN1 230-KEARNEY 230 #1 : Drop Load at MCMULLN1 230 #1 : 16.4 MW 3.3 MVAR D : Open Line PANOCHE 230-HELM 230 #1 :	STOREY 2-WILSON 230.00kV Ckt#1 Sec# 1	793.23	Amps	105.9	106.6	0.7
71	Open Line HERNDON 230-GREGG 230 #1 : Open Line HERNDON 230-KEARNEY 230 #1 : Open Xfmr HERNDON 230/HERNDN1M 115 #1 :	STOREY 2-WILSON 230.00kV Ckt#1 Sec# 1	793.23	Amps	104.7	105.4	0.7
lbs-dlo-ns	Los Banos - Gates & Los Banos - Midway 500-kV DLO	STOREY 2-WILSON 230.00kV Ckt#1 Sec# 1	793.23	Amps	104.2	104.9	0.7
62	Open Line KEARNEY 230-HERNDON 230 #1 : Open Line HERNDON 230-FGRDN T1 230 #1 : Open Line FGRDN T1 230-FIGRDN 1 230 #1 : Open Line FGRDN T1 230-ASHLAN 230 #1 : Drop Load at FIGRDN 1 230 #1 : 59.1 MW 11.9 MVAR : Close Line FIGRDN 1 230-FIGRDN 2 230 #1 :	STOREY 2-WILSON 230.00kV Ckt#1 Sec# 1	793.23	Amps	102.2	102.8	0.6
70	Open Line KEARNEY 230-MCMULLN1 230 #1 : Open Line KEARNEY 230-HERNDON 230 #1 : Open Xfmr KEARNEY 230/KEARNEY 70 #2 :	STOREY 2-WILSON 230.00kV Ckt#1 Sec# 1	793.23	Amps	101.8	102.5	0.7
59	Open Line HELM 230-MC CALL 230 #1 : Open Line MC CALL 230-HENTAP2 230 #1 : Open Line HENTAP2 230-GATES 230 #1 :	STOREY 2-WILSON 230.00kV Ckt#1 Sec# 1	793.23	Amps	101.5	102.1	0.6
19	Open Line PANOCHE 230-COBURN 230 #1 : Open Line PANOCHE 230-LOSBANOS 230 #1 : Open Line PANOCHE 230-LOSBANOS 230 #2 : Open Line PANOCHE 230-MCMULLN1 230 #1 : Open Line PANOCHE 230-GATES 230 #1 : Open Xfmr PANOCHE 230/PNCHE 1M 230 #1 :	STOREY 2-WILSON 230.00kV Ckt#1 Sec# 1	793.23	Amps	100.7	101.3	0.6
16	Open Line PANOCHE 230-HELM 230 #1 : Open Line PANOCHE 230-MCMULLN1 230 #1 : Open Line MCMULLN1 230-KEARNEY 230 #1 : Drop Load at MCMULLN1 230 #1 : 16.4 MW 3.3 MVAR D :	STRD JCT-SCHLNDLR 70.00kV Ckt#1 Sec# 1	377.75	Amps	125.2	126.0	0.7
57	Open Line PANOCHE 230-MCMULLN1 230 #1 : Open Line MCMULLN1 230-KEARNEY 230 #1 : Drop Load at MCMULLN1 230 #1 : 16.4 MW 3.3 MVAR D : Open Line PANOCHE 230-HELM 230 #1 :	STRD JCT-SCHLNDLR 70.00kV Ckt#1 Sec# 1	377.75	Amps	125.2	126.0	0.7

20	Open Line PANOCHE 230-MOSSLND2 230 #1 : Open Line PANOCHE 230-PANO_EC 230 #1 : Open Line PANOCHE 230-HELM 230 #1 : Open Line PANOCHE 230-GATES 230 #2 : Open Line PANOCHE 230-DS AMIGO 230 #1 : Open Xfmr PANOCHE 230/PANOCHE 115 #2 :	STRD JCT-SCHLNDLR 70.00kV Ckt#1 Sec# 1	377.75	Amps	101.3	101.8	0.5
lbs-dlo-ns	Los Banos - Gates & Los Banos - Midway 500-kV DLO	WARNERVL-COTTLE B 230.00kV Ckt#1 Sec# 1	793.23	Amps	123.3	124.2	0.9
58	Open Line PANOCHE 230-MCMULLN1 230 #1 : Open Line MCMULLN1 230-KEARNEY 230 #1 : Drop Load at MCMULLN1 230 #1 : 16.4 MW 3.3 MVAR D : Open Line HELM 230-MC CALL 230 #1 :	WARNERVL-COTTLE B 230.00kV Ckt#1 Sec# 1	793.23	Amps	117.9	118.7	0.8
16	Open Line PANOCHE 230-HELM 230 #1 : Open Line PANOCHE 230-MCMULLN1 230 #1 : Open Line MCMULLN1 230-KEARNEY 230 #1 : Drop Load at MCMULLN1 230 #1 : 16.4 MW 3.3 MVAR D :	WARNERVL-COTTLE B 230.00kV Ckt#1 Sec# 1	793.23	Amps	117.7	118.5	0.8
57	Open Line PANOCHE 230-MCMULLN1 230 #1 : Open Line MCMULLN1 230-KEARNEY 230 #1 : Drop Load at MCMULLN1 230 #1 : 16.4 MW 3.3 MVAR D : Open Line PANOCHE 230-HELM 230 #1 :	WARNERVL-COTTLE B 230.00kV Ckt#1 Sec# 1	793.23	Amps	117.7	118.5	0.8
59	Open Line HELM 230-MC CALL 230 #1 : Open Line MC CALL 230-HENTAP2 230 #1 : Open Line HENTAP2 230-GATES 230 #1 :	WARNERVL-COTTLE B 230.00kV Ckt#1 Sec# 1	793.23	Amps	116.3	117.1	0.7
71	Open Line HERNDON 230-GREGG 230 #1 : Open Line HERNDON 230-KEARNEY 230 #1 : Open Xfmr HERNDON 230/HERNDN1M 115 #1 :	WARNERVL-COTTLE B 230.00kV Ckt#1 Sec# 1	793.23	Amps	115.6	116.3	0.7
19	Open Line PANOCHE 230-COBURN 230 #1 : Open Line PANOCHE 230-LOSBANOS 230 #1 : Open Line PANOCHE 230-LOSBANOS 230 #2 : Open Line PANOCHE 230-MCMULLN1 230 #1 : Open Line PANOCHE 230-GATES 230 #1 : Open Xfmr PANOCHE 230/PNCHE 1M 230 #1 :	WARNERVL-COTTLE B 230.00kV Ckt#1 Sec# 1	793.23	Amps	115.6	116.2	0.7
62	Open Line KEARNEY 230-HERNDON 230 #1 : Open Line HERNDON 230-FGRDN T1 230 #1 : Open Line FGRDN T1 230-FIGRDN 1 230 #1 : Open Line FGRDN T1 230-ASHLAN 230 #1 : Drop Load at FIGRDN 1 230 #1 : 59.1 MW 11.9 MVAR : Close Line FIGRDN 1 230-FIGRDN 2 230 #1 :	WARNERVL-COTTLE B 230.00kV Ckt#1 Sec# 1	793.23	Amps	114.1	114.8	0.7
70	Open Line KEARNEY 230-MCMULLN1 230 #1 :	WARNERVL-COTTLE B 230.00kV Ckt#1 Sec# 1	793.23	Amps	113.7	114.4	0.7

	Open Line KEARNEY 230-HERNDON 230 #1 : Open Xfmr KEARNEY 230/KEARNEY 70 #2 :						
lbn-dlo-ns	Los Banos - Tesla & Los Banos - Tracy 500-kV DLO	WARNERVL-COTTLE B 230.00kV Ckt#1 Sec# 1	793.23	Amps	112.8	113.8	1.0
83	Open Line GATES 230-HENTAP1 230 #1 : Open Line GATES 230-ARCO 230 #1 :	WARNERVL-COTTLE B 230.00kV Ckt#1 Sec# 1	793.23	Amps	112.3	113.6	1.3
75	Open Line ASHLAN 230-FGRDN T1 230 #1 : Open Line ASHLAN 230-FGRDN T2 230 #1 : Drop Load at ASHLAN 230 #1 : 55.7 MW 10.7 MVAR Dr : Drop Load at ASHLAN 230 #2 : 51.9 MW 10.3 MVAR Dr : Drop Load at ASHLAN 230 #3 : 52.7 MW 10 MVAR Drop :	WARNERVL-COTTLE B 230.00kV Ckt#1 Sec# 1	793.23	Amps	111.0	111.7	0.7
47	Open Line PNDLJ1 115-BULLARD 115 #1 : Open Line PNDLJ1 115-HERNDON 115 #1 : Open Line PNDLJ2 115-PNEDLE 115 #1 : Open Line PNDLJ2 115-BULLARD 115 #1 : Open Line PNDLJ2 115-HERNDON 115 #1 : Drop Load at PNEDLE 115 #2 : 24.7 MW 5 MVAR Dropp : Drop Load at PNEDLE 115 #3 : 32.5 MW 6.5 MVAR Dro : Close Line PNDLJ1 115-PNEDLE 115 #1 :	WARNERVL-COTTLE B 230.00kV Ckt#1 Sec# 1	793.23	Amps	110.6	111.3	0.7
15	Open Line MOSSLND2 230-PANOCHE 230 #1 : Open Line COBURN 230-PANOCHE 230 #1 :	WARNERVL-COTTLE B 230.00kV Ckt#1 Sec# 1	793.23	Amps	109.2	109.9	0.7
7	Open Line LOSBANOS 230-PANOCHE 230 #2 : Open Line DS AMIGO 230-PANOCHE 230 #1 :	WARNERVL-COTTLE B 230.00kV Ckt#1 Sec# 1	793.23	Amps	108.9	109.5	0.6
18	Open Line LOSBANOS 230-PANOCHE 230 #1 : Open Line LOSBANOS 230-DS AMIGO 230 #1 : Open Xfmr LOSBANOS 230/LOS BANS 70 #4 :	WARNERVL-COTTLE B 230.00kV Ckt#1 Sec# 1	793.23	Amps	108.5	109.1	0.6
6	Open Line LOSBANOS 230-PANOCHE 230 #2 : Open Line LOSBANOS 230-DS AMIGO 230 #1 :	WARNERVL-COTTLE B 230.00kV Ckt#1 Sec# 1	793.23	Amps	108.4	109.0	0.6
104	Open Line BULLARD 115-PNDLJ2 115 #1 : Open Line BULLARD 115-PNDLJ1 115 #1 : Drop Load at BULLARD 115 #1 : 36.1 MW 7.3 MVAR Dr : Drop Load at BULLARD 115 #2 : 35.9 MW 7.2 MVAR Dr : Drop Load at BULLARD 115 #3 : 34.2 MW 6.9 MVAR Dr :	WARNERVL-COTTLE B 230.00kV Ckt#1 Sec# 1	793.23	Amps	108.3	108.9	0.7
84	Open Line GATES 230-HENTAP2 230 #1 : Open Line GATES 230-MIDWAY 230 #1 :	WARNERVL-COTTLE B 230.00kV Ckt#1 Sec# 1	793.23	Amps	108.1	108.8	0.7
103	Open Line WOODWARD 115-WWARD JT 115 #1 : Open Line WOODWARD 115-CHLDHOSP 115 #1 : Drop Load at WOODWARD 115 #1 : 34 MW 6.9 MVAR Dro : Drop Load at WOODWARD 115 #2 : 42.4 MW 8.6	WARNERVL-COTTLE B 230.00kV Ckt#1 Sec# 1	793.23	Amps	108.1	108.8	0.7

	MVAR D : Drop Load at WOODWARD 115 #3 : 35.5 MW 7.2 MVAR D :						
41	Open Line BORDEN 70-MADERA 70 #1 : Open Line BORDEN 70-MADERA 70 #2 : Open Line BORDEN 70-GLASS 70 #1 : Open Line BORDEN 70-CASSIDY 70 #1 : Open Xfmr BORDEN 70/BORDEN 230 #1 : Open Xfmr BORDEN 70/BORDEN 230 #2 :	WARNERVL-COTTLE B 230.00kV Ckt#1 Sec# 1	793.23	Amps	108.1	108.7	0.7
27	Open Line EL CAPTN 115-CASTLE 115 #1 : Open Line EL CAPTN 115-WILSON B 115 #1 : Drop Load at EL CAPTN 115 #1 : 15.5 MW 3.1 MVAR D : Drop Load at EL CAPTN 115 #2 : 20.7 MW 4.1 MVAR D : Drop Load at EL CAPTN 115 #3 : 26.4 MW 5.3 MVAR D :	WARNERVL-COTTLE B 230.00kV Ckt#1 Sec# 1	793.23	Amps	108.0	108.7	0.7
48	Open Line KERCKHF2 115-WWARD JT 115 #1 : Open Line WWARD JT 115-WOODWARD 115 #1 : Open Line WWARD JT 115-CLOVISJ1 115 #1 : Open Line CLOVISJ1 115-CLOVIS-1 115 #1 : Open Line CLOVISJ1 115-SANGER 115 #1 : Drop Load at CLOVIS-1 115 #1 : 41 MW 8.3 MVAR Dro : Close Line CLOVIS-1 115-CLOVIS-2 115 #1 : Open Line CLOVIS-2 115-CLOVISJ2 115 #1 :	WARNERVL-COTTLE B 230.00kV Ckt#1 Sec# 1	793.23	Amps	107.9	108.5	0.7
54	Open Line WST FRSO 115-MC CALL 115 #1 : Open Line DANISHCM 115-MC CALL 115 #1 : Open Line DANISHCM 115-CAL AVE 115 #1 : Drop Load at DANISHCM 115 #1 : 3.8 MW 3.2 MVAR Dr :	WARNERVL-COTTLE B 230.00kV Ckt#1 Sec# 1	793.23	Amps	107.7	108.4	0.7
76	Open Line HELM 230-PANOCHE 230 #1 : Open Line HELM 230-MC CALL 230 #1 : Open Xfmr HELM 230/HELM 70 #1 :	WARNERVL-COTTLE B 230.00kV Ckt#1 Sec# 1	793.23	Amps	107.3	108.0	0.7
17	Open Line LOSBANOS 230-WESTLEY 230 #1 : Open Line LOSBANOS 230-PANOCHE 230 #2 : Open Line LOSBANOS 230-SN LS PP 230 #1 : Open Line LOSBANOS 230-SN LS PP 230 #2 : Open Xfmr LOSBANOS 230/LOS BANS 70 #3 :	WARNERVL-COTTLE B 230.00kV Ckt#1 Sec# 1	793.23	Amps	107.3	107.9	0.6
22	Open Line ATWATER 115-CASTLE 115 #1 : Open Line ATWATER 115-CRESEY T 115 #1 : Open Line ATWATER 115-WILSON A 115 #1 : Drop Load at ATWATER 115 #1 : 25.9 MW 5.2 MVAR Dr : Drop Load at ATWATER 115 #2 : 22.6 MW 4.5 MVAR Dr :	WARNERVL-COTTLE B 230.00kV Ckt#1 Sec# 1	793.23	Amps	107.1	107.7	0.7
98	Open Line BARTON 115-AIRWAYJ2 115 #1 : Open	WARNERVL-COTTLE B 230.00kV Ckt#1 Sec# 1	793.23	Amps	106.9	107.6	0.7

	Line BARTON 115-HERNDON 115 #1 : Drop Load at BARTON 115 #1 : 34.8 MW 7 MVAR Dropp : Drop Load at BARTON 115 #2 : 29.9 MW 6 MVAR Dropp : Drop Load at BARTON 115 #3 : 21.7 MW 4.3 MVAR Dro :						
73	Open Line FIGRDN 1 230-FGRDN T1 230 #1 : Drop Load at FIGRDN 1 230 #1 : 59.1 MW 11.9 MVAR :	WARNERVL-COTTLE B 230.00kV Ckt#1 Sec# 1	793.23	Amps	106.5	107.2	0.7
28	Open Line MERCED 115-ATWATR J 115 #1 : Open Line MERCED 115-WILSON A 115 #1 : Open Line MERCED 115-WILSON B 115 #2 : Open Xfmr MERCED 115/MERCED M 115 #2 : Drop Load at MERCED 115 #1 : 29.6 MW 6 MVAR Dropp : Drop Load at MERCED 115 #3 : 15.5 MW 3.1 MVAR Dro :	WARNERVL-COTTLE B 230.00kV Ckt#1 Sec# 1	793.23	Amps	106.5	107.2	0.7
99	Open Line MANCHSTR 115-AIRWAYJ1 115 #1 : Open Line MANCHSTR 115-HERNDON 115 #1 : Drop Load at MANCHSTR 115 #1 : 20.3 MW 4.1 MVAR D : Drop Load at MANCHSTR 115 #2 : 20.5 MW 4.1 MVAR D : Drop Load at MANCHSTR 115 #3 : 29.1 MW 5.9 MVAR D :	WARNERVL-COTTLE B 230.00kV Ckt#1 Sec# 1	793.23	Amps	106.5	107.1	0.7
89	Open Line CLOVIS-2 115-CLOVISJ2 115 #1 : Drop Load at CLOVIS-2 115 #3 : 36 MW 7.3 MVAR Dro :	WARNERVL-COTTLE B 230.00kV Ckt#1 Sec# 1	793.23	Amps	106.4	107.1	0.7
102	Open Line PNEDLE 115-PNDLJ2 115 #1 : Drop Load at PNEDLE 115 #2 : 24.7 MW 5 MVAR Dropp : Drop Load at PNEDLE 115 #3 : 32.5 MW 6.5 MVAR Dro :	WARNERVL-COTTLE B 230.00kV Ckt#1 Sec# 1	793.23	Amps	106.2	106.9	0.7
117	Open Line KEARNEY 70-FRWWTAP 70 #1 : Open Line KEARNEY 70-OLDKERN 70 #1 : Open Line KEARNEY 70-CARUTHRS 70 #1 : Open Xfmr KEARNEY 70/KEARNEY 230 #2 :	WARNERVL-COTTLE B 230.00kV Ckt#1 Sec# 1	793.23	Amps	106.1	106.7	0.7
96	Open Line CAL AVE 115-DANISHCM 115 #1 : Open Line CAL AVE 115-WST FRSO 115 #1 : Drop Load at CAL AVE 115 #1 : 23.3 MW 4.7 MVAR Dr : Drop Load at CAL AVE 115 #2 : 25.1 MW 5.1 MVAR Dr : Drop Load at CAL AVE 115 #3 : 19.6 MW 3.9 MVAR Dr :	WARNERVL-COTTLE B 230.00kV Ckt#1 Sec# 1	793.23	Amps	105.8	106.5	0.7
26	Open Line WILSON B 115-LE GRNDJ 115 #1 : Open Line WILSON B 115-WILSON A 115 #1 : Open Line WILSON B 115-EL CAPTN 115 #1 : Open Line WILSON B 115-MERCED 115 #2 : Open Xfmr WILSON B 115/WILSON 230 #2 :	WARNERVL-COTTLE B 230.00kV Ckt#1 Sec# 1	793.23	Amps	105.7	106.4	0.7
74	Open Line FIGRDN 2 230-FGRDN T2 230 #1 : Drop Load at FIGRDN 2 230 #1 : 42.3 MW 8.5 MVAR D :	WARNERVL-COTTLE B 230.00kV Ckt#1 Sec# 1	793.23	Amps	105.7	106.4	0.7

91	Open Line MALAGA 115-SANGER 115 #1 : Open Line MALAGA 115-PPG 115 #1 : Open Line MALAGA 115-MALAGATP 115 #1 : Open Line MALAGA 115-KRCDP 115 #1 : Drop Load at MALAGA 115 #1 : 20.3 MW 4.1 MVAR Dro : Drop Load at MALAGA 115 #2 : 18.3 MW 3.7 MVAR Dro : Drop Load at MALAGA 115 #3 : 18.6 MW 3.7 MVAR Dro :	WARNERVL-COTTLE B 230.00kV Ckt#1 Sec# 1	793.23	Amps	105.7	106.3	0.7
53	Open Line WST FRSO 115-MC CALL 115 #1 : Open Line CAL AVE 115-WST FRSO 115 #1 :	WARNERVL-COTTLE B 230.00kV Ckt#1 Sec# 1	793.23	Amps	105.6	106.3	0.7
97	Open Line WST FRSO 115-MC CALL 115 #1 : Open Line WST FRSO 115-CAL AVE 115 #1 : Drop Load at WST FRSO 115 #1 : 30.2 MW 6.1 MVAR D : Drop Load at WST FRSO 115 #2 : 31.4 MW 6.3 MVAR D :	WARNERVL-COTTLE B 230.00kV Ckt#1 Sec# 1	793.23	Amps	105.6	106.3	0.7
32	Open Line ORO LOMA 70-DOS PALS 70 #1 : Open Line ORO LOMA 70-MRCYSPRS 70 #1 : Open Line ORO LOMA 70-POSO J1 70 #1 : Open Xfmr ORO LOMA 70/ORO LOMA 115 #2 : Drop Load at ORO LOMA 70 #1 : 6.9 MW 1.3 MVAR Dro :	WARNERVL-COTTLE B 230.00kV Ckt#1 Sec# 1	793.23	Amps	105.5	106.2	0.7
3	Open Line WILSON A 115-MERCED 115 #1 : Open Line LE GRNDJ 115-WILSON B 115 #1 : Open Line LE GRNDJ 115-EL NIDO 115 #1 : Open Line EL NIDO 115-ORO LOMA 115 #1 : Drop Load at EL NIDO 115 #1 : 10 MW 2 MVAR Droppe : Drop Load at EL NIDO 115 #2 : 12 MW 2.4 MVAR Drop :	WARNERVL-COTTLE B 230.00kV Ckt#1 Sec# 1	793.23	Amps	105.5	106.2	0.7
29	Open Line DAIRYLND 115-LE GRAND 115 #1 : Open Line DAIRYLND 115-NEWHALL 115 #1 : Drop Load at DAIRYLND 115 #1 : 20.6 MW 4.1 MVAR D :	WARNERVL-COTTLE B 230.00kV Ckt#1 Sec# 1	793.23	Amps	105.5	106.2	0.7
40	Open Line MADERA 70-TRIGO 70 #1 : Open Line MADERA 70-BORDEN 70 #1 : Open Line MADERA 70-BORDEN 70 #2 : Drop Load at MADERA 70 #1 : 14.4 MW 2.9 MVAR Drop : Drop Load at MADERA 70 #2 : 18.5 MW 3.7 MVAR Drop :	WARNERVL-COTTLE B 230.00kV Ckt#1 Sec# 1	793.23	Amps	105.4	106.1	0.7
68	Open Line GATES 230-MIDWAY 230 #1 : Open Line GATES 230-ARCO 230 #1 :	WARNERVL-COTTLE B 230.00kV Ckt#1 Sec# 1	793.23	Amps	105.2	105.9	0.7
88	Open Line CLOVIS-1 115-CLOVISJ1 115 #1 : Drop Load at CLOVIS-1 115 #1 : 41 MW 8.3 MVAR Dro :	WARNERVL-COTTLE B 230.00kV Ckt#1 Sec# 1	793.23	Amps	105.2	105.9	0.7
87	Open Line AIRWAYS 115-AIRWAYJ1 115 #1 : Open Line AIRWAYS 115-AIRWAYJ2 115 #1 : Drop Load at AIRWAYS 115 #1 : 30.9 MW 5.9 MVAR Dr : Drop Load	WARNERVL-COTTLE B 230.00kV Ckt#1 Sec# 1	793.23	Amps	105.2	105.9	0.7

	at AIRWAYS 115 #2 : 10.1 MW 2 MVAR Drop :						
121	Open Line REEDLEY 70-TVY VLLY 70 #1 : Open Line REEDLEY 70-PARLIER 70 #1 : Open Line REEDLEY 70-DNUBAJCT 70 #1 : Open Line REEDLEY 70-ORSI JCT 70 #1 : Open Xfmr REEDLEY 70/REEDLEY 115 #1 : Open Xfmr REEDLEY 70/REEDLEY 115 #2 : Drop Load at REEDLEY 70 #1 : 14 MW 2.8 MVAR Dropp :	WARNERVL-COTTLE B 230.00kV Ckt#1 Sec# 1	793.23	Amps	105.1	105.8	0.7
45	Open Line BARTON 115-HERNDON 115 #1 : Open Line MANCHSTR 115-HERNDON 115 #1 :	WARNERVL-COTTLE B 230.00kV Ckt#1 Sec# 1	793.23	Amps	105.0	105.7	0.7
101	Open Line HERNDON 115-MANCHSTR 115 #1 : Open Line HERNDON 115-PNDLJ1 115 #1 : Open Line HERNDON 115-CHLDHOSP 115 #1 :	WARNERVL-COTTLE B 230.00kV Ckt#1 Sec# 1	793.23	Amps	105.0	105.6	0.7
34	Open Line CANAL 70-LVNGSTNT 70 #1 : Open Line CANAL 70-SNTA RTA 70 #1 : Open Line CANAL 70-ORTIGA 70 #1 : Drop Load at CANAL 70 #1 : 24.4 MW 4.9 MVAR Dropp : Drop Load at CANAL 70 #2 : 25 MW 5 MVAR Dropped :	WARNERVL-COTTLE B 230.00kV Ckt#1 Sec# 1	793.23	Amps	104.9	105.6	0.7
9	Open Line BELLOTA 230-COTTLE A 230 #1 : Open Line COTTLE A 230-MELONES 230 #1 : Drop Load at COTTLE A 230 #1 : 22.2 MW 0.9 MVAR D : Drop Generator at HELMS 3 18 #**: 400 MW Dropped : Open Line BELLOTA 230-COTTLE B 230 #1 : Open Line COTTLE B 230-WARNERVL 230 #1 : Drop Load at COTTLE B 230 #2 : 25.5 MW 1.1 MVAR D :	WARNERVL-WRNRVLLE 230.00/ 115.00kV Bk#1	150	MVA	139.2	139.7	0.5
17	Open Line LOSBANOS 230-WESTLEY 230 #1 : Open Line LOSBANOS 230-PANOCHE 230 #2 : Open Line LOSBANOS 230-SN LS PP 230 #1 : Open Line LOSBANOS 230-SN LS PP 230 #2 : Open Xfmr LOSBANOS 230/LOS BANS 70 #3 :	WARNERVL-WRNRVLLE 230.00/ 115.00kV Bk#1	150	MVA	102.2	102.4	0.2
9	Open Line BELLOTA 230-COTTLE A 230 #1 : Open Line COTTLE A 230-MELONES 230 #1 : Drop Load at COTTLE A 230 #1 : 22.2 MW 0.9 MVAR D : Drop Generator at HELMS 3 18 #**: 400 MW Dropped : Open Line BELLOTA 230-COTTLE B 230 #1 : Open Line COTTLE B 230-WARNERVL 230 #1 : Drop Load at COTTLE B 230 #2 : 25.5 MW 1.1 MVAR D :	WARNERVL-WRNRVLLE 230.00/ 115.00kV Bk#2	75	MVA	139.2	139.7	0.5
17	Open Line LOSBANOS 230-WESTLEY 230 #1 : Open Line LOSBANOS 230-PANOCHE 230 #2 :	WARNERVL-WRNRVLLE 230.00/ 115.00kV Bk#2	75	MVA	102.2	102.4	0.2

	Open Line LOSBANOS 230-SN LS PP 230 #1 : Open Line LOSBANOS 230-SN LS PP 230 #2 : Open Xfmr LOSBANOS 230/LOS BANS 70 #3 :						
9	Open Line BELLOTA 230-COTTLE A 230 #1 : Open Line COTTLE A 230-MELONES 230 #1 : Drop Load at COTTLE A 230 #1 : 22.2 MW 0.9 MVAR D : Drop Generator at HELMS 3 18 #**: 400 MW Dropped : Open Line BELLOTA 230-COTTLE B 230 #1 : Open Line COTTLE B 230-WARNERVL 230 #1 : Drop Load at COTTLE B 230 #2 : 25.5 MW 1.1 MVAR D :	WARNERVL-WRNRVLLE 230.00/ 115.00kV Bk#3	75	MVA	139.2	139.7	0.5
17	Open Line LOSBANOS 230-WESTLEY 230 #1 : Open Line LOSBANOS 230-PANOCHE 230 #2 : Open Line LOSBANOS 230-SN LS PP 230 #1 : Open Line LOSBANOS 230-SN LS PP 230 #2 : Open Xfmr LOSBANOS 230/LOS BANS 70 #3 :	WARNERVL-WRNRVLLE 230.00/ 115.00kV Bk#3	75	MVA	102.2	102.4	0.2
lbs-dlo-ns	Los Banos - Gates & Los Banos - Midway 500-kV DLO	WILSON -WARNERVL 230.00kV Ckt#1 Sec# 1	793.23	Amps	132.0	133.2	1.2
58	Open Line PANOCHE 230-MCMULLN1 230 #1 : Open Line MCMULLN1 230-KEARNEY 230 #1 : Drop Load at MCMULLN1 230 #1 : 16.4 MW 3.3 MVAR D : Open Line HELM 230-MC CALL 230 #1 :	WILSON -WARNERVL 230.00kV Ckt#1 Sec# 1	793.23	Amps	125.6	126.6	1.0
16	Open Line PANOCHE 230-HELM 230 #1 : Open Line PANOCHE 230-MCMULLN1 230 #1 : Open Line MCMULLN1 230-KEARNEY 230 #1 : Drop Load at MCMULLN1 230 #1 : 16.4 MW 3.3 MVAR D :	WILSON -WARNERVL 230.00kV Ckt#1 Sec# 1	793.23	Amps	125.3	126.3	1.0
57	Open Line PANOCHE 230-MCMULLN1 230 #1 : Open Line MCMULLN1 230-KEARNEY 230 #1 : Drop Load at MCMULLN1 230 #1 : 16.4 MW 3.3 MVAR D : Open Line PANOCHE 230-HELM 230 #1 :	WILSON -WARNERVL 230.00kV Ckt#1 Sec# 1	793.23	Amps	125.3	126.3	1.0
19	Open Line PANOCHE 230-COBURN 230 #1 : Open Line PANOCHE 230-LOSBANOS 230 #1 : Open Line PANOCHE 230-LOSBANOS 230 #2 : Open Line PANOCHE 230-MCMULLN1 230 #1 : Open Line PANOCHE 230-GATES 230 #1 : Open Xfmr PANOCHE 230/PNCHE 1M 230 #1 :	WILSON -WARNERVL 230.00kV Ckt#1 Sec# 1	793.23	Amps	123.1	124.1	0.9
59	Open Line HELM 230-MC CALL 230 #1 : Open Line MC CALL 230-HENTAP2 230 #1 : Open Line HENTAP2 230-GATES 230 #1 :	WILSON -WARNERVL 230.00kV Ckt#1 Sec# 1	793.23	Amps	122.9	123.8	1.0
71	Open Line HERNDON 230-GREGG 230 #1 : Open	WILSON -WARNERVL 230.00kV Ckt#1 Sec# 1	793.23	Amps	121.9	122.9	1.0

	Line HERNDON 230-KEARNEY 230 #1 : Open Xfmr HERNDON 230/HERNDN1M 115 #1 :						
17	Open Line LOSBANOS 230-WESTLEY 230 #1 : Open Line LOSBANOS 230-PANOCHE 230 #2 : Open Line LOSBANOS 230-SN LS PP 230 #1 : Open Line LOSBANOS 230-SN LS PP 230 #2 : Open Xfmr LOSBANOS 230/LOS BANS 70 #3 :	WILSON -WARNERVL 230.00kV Ckt#1 Sec# 1	793.23	Amps	120.6	121.4	0.9
62	Open Line KEARNEY 230-HERNDON 230 #1 : Open Line HERNDON 230-FGRDN T1 230 #1 : Open Line FGRDN T1 230-FIGRDN 1 230 #1 : Open Line FGRDN T1 230-ASHLAN 230 #1 : Drop Load at FIGRDN 1 230 #1 : 59.1 MW 11.9 MVAR : Close Line FIGRDN 1 230-FIGRDN 2 230 #1 :	WILSON -WARNERVL 230.00kV Ckt#1 Sec# 1	793.23	Amps	119.7	120.7	1.0
70	Open Line KEARNEY 230-MCMULLN1 230 #1 : Open Line KEARNEY 230-HERNDON 230 #1 : Open Xfmr KEARNEY 230/KEARNEY 70 #2 :	WILSON -WARNERVL 230.00kV Ckt#1 Sec# 1	793.23	Amps	119.0	120.0	1.0
83	Open Line GATES 230-HENTAP1 230 #1 : Open Line GATES 230-ARCO 230 #1 :	WILSON -WARNERVL 230.00kV Ckt#1 Sec# 1	793.23	Amps	116.4	118.2	1.8
lbn-dlo-ns	Los Banos - Tesla & Los Banos - Tracy 500-kV DLO	WILSON -WARNERVL 230.00kV Ckt#1 Sec# 1	793.23	Amps	114.5	115.7	1.2
75	Open Line ASHLAN 230-FGRDN T1 230 #1 : Open Line ASHLAN 230-FGRDN T2 230 #1 : Drop Load at ASHLAN 230 #1 : 55.7 MW 10.7 MVAR Dr : Drop Load at ASHLAN 230 #2 : 51.9 MW 10.3 MVAR Dr : Drop Load at ASHLAN 230 #3 : 52.7 MW 10 MVAR Drop :	WILSON -WARNERVL 230.00kV Ckt#1 Sec# 1	793.23	Amps	114.3	115.2	0.9
47	Open Line PNDLJ1 115-BULLARD 115 #1 : Open Line PNDLJ1 115-HERNDON 115 #1 : Open Line PNDLJ2 115-PNEDLE 115 #1 : Open Line PNDLJ2 115-BULLARD 115 #1 : Open Line PNDLJ2 115-HERNDON 115 #1 : Drop Load at PNEDLE 115 #2 : 24.7 MW 5 MVAR Dropp : Drop Load at PNEDLE 115 #3 : 32.5 MW 6.5 MVAR Dro : Close Line PNDLJ1 115-PNEDLE 115 #1 :	WILSON -WARNERVL 230.00kV Ckt#1 Sec# 1	793.23	Amps	113.8	114.6	0.9
7	Open Line LOSBANOS 230-PANOCHE 230 #2 : Open Line DS AMIGO 230-PANOCHE 230 #1 :	WILSON -WARNERVL 230.00kV Ckt#1 Sec# 1	793.23	Amps	113.4	114.3	0.8
18	Open Line LOSBANOS 230-PANOCHE 230 #1 : Open Line LOSBANOS 230-DS AMIGO 230 #1 : Open Xfmr LOSBANOS 230/LOS BANS 70 #4 :	WILSON -WARNERVL 230.00kV Ckt#1 Sec# 1	793.23	Amps	112.6	113.5	0.8
6	Open Line LOSBANOS 230-PANOCHE 230 #2 :	WILSON -WARNERVL 230.00kV Ckt#1 Sec# 1	793.23	Amps	112.4	113.2	0.8

	Open Line LOSBANOS 230-DS AMIGO 230 #1 :						
15	Open Line MOSSLND2 230-PANOCHE 230 #1 : Open Line COBURN 230-PANOCHE 230 #1 :	WILSON -WARNERVL 230.00kV Ckt#1 Sec# 1	793.23	Amps	110.9	111.8	0.9
104	Open Line BULLARD 115-PNDLJ2 115 #1 : Open Line BULLARD 115-PNDLJ1 115 #1 : Drop Load at BULLARD 115 #1 : 36.1 MW 7.3 MVAR Dr : Drop Load at BULLARD 115 #2 : 35.9 MW 7.2 MVAR Dr : Drop Load at BULLARD 115 #3 : 34.2 MW 6.9 MVAR Dr :	WILSON -WARNERVL 230.00kV Ckt#1 Sec# 1	793.23	Amps	110.4	111.3	0.9
27	Open Line EL CAPTN 115-CASTLE 115 #1 : Open Line EL CAPTN 115-WILSON B 115 #1 : Drop Load at EL CAPTN 115 #1 : 15.5 MW 3.1 MVAR D : Drop Load at EL CAPTN 115 #2 : 20.7 MW 4.1 MVAR D : Drop Load at EL CAPTN 115 #3 : 26.4 MW 5.3 MVAR D :	WILSON -WARNERVL 230.00kV Ckt#1 Sec# 1	793.23	Amps	110.4	111.3	0.9
84	Open Line GATES 230-HENTAP2 230 #1 : Open Line GATES 230-MIDWAY 230 #1 :	WILSON -WARNERVL 230.00kV Ckt#1 Sec# 1	793.23	Amps	110.3	111.2	0.9
41	Open Line BORDEN 70-MADERA 70 #1 : Open Line BORDEN 70-MADERA 70 #2 : Open Line BORDEN 70-GLASS 70 #1 : Open Line BORDEN 70-CASSIDY 70 #1 : Open Xfmr BORDEN 70/BORDEN 230 #1 : Open Xfmr BORDEN 70/BORDEN 230 #2 :	WILSON -WARNERVL 230.00kV Ckt#1 Sec# 1	793.23	Amps	110.2	111.1	0.9
103	Open Line WOODWARD 115-WWARD JT 115 #1 : Open Line WOODWARD 115-CHLDHOSP 115 #1 : Drop Load at WOODWARD 115 #1 : 34 MW 6.9 MVAR Dro : Drop Load at WOODWARD 115 #2 : 42.4 MW 8.6 MVAR D : Drop Load at WOODWARD 115 #3 : 35.5 MW 7.2 MVAR D :	WILSON -WARNERVL 230.00kV Ckt#1 Sec# 1	793.23	Amps	110.2	111.1	0.9
48	Open Line KERCKHF2 115-WWARD JT 115 #1 : Open Line WWARD JT 115-WOODWARD 115 #1 : Open Line WWARD JT 115-CLOVISJ1 115 #1 : Open Line CLOVISJ1 115-CLOVIS-1 115 #1 : Open Line CLOVISJ1 115-SANGER 115 #1 : Drop Load at CLOVIS-1 115 #1 : 41 MW 8.3 MVAR Dro : Close Line CLOVIS-1 115-CLOVIS-2 115 #1 : Open Line CLOVIS-2 115-CLOVISJ2 115 #1 :	WILSON -WARNERVL 230.00kV Ckt#1 Sec# 1	793.23	Amps	109.8	110.7	0.9
76	Open Line HELM 230-PANOCHE 230 #1 : Open Line HELM 230-MC CALL 230 #1 : Open Xfmr HELM 230/HELM 70 #1 :	WILSON -WARNERVL 230.00kV Ckt#1 Sec# 1	793.23	Amps	109.7	110.6	0.9

54	Open Line WST FRSO 115-MC CALL 115 #1 : Open Line DANISHCM 115-MC CALL 115 #1 : Open Line DANISHCM 115-CAL AVE 115 #1 : Drop Load at DANISHCM 115 #1 : 3.8 MW 3.2 MVAR Dr :	WILSON -WARNERVL 230.00kV Ckt#1 Sec# 1	793.23	Amps	109.5	110.4	0.9
22	Open Line ATWATER 115-CASTLE 115 #1 : Open Line ATWATER 115-CRESEY T 115 #1 : Open Line ATWATER 115-WILSON A 115 #1 : Drop Load at ATWATER 115 #1 : 25.9 MW 5.2 MVAR Dr : Drop Load at ATWATER 115 #2 : 22.6 MW 4.5 MVAR Dr :	WILSON -WARNERVL 230.00kV Ckt#1 Sec# 1	793.23	Amps	109.0	109.9	0.9
98	Open Line BARTON 115-AIRWAYJ2 115 #1 : Open Line BARTON 115-HERNDON 115 #1 : Drop Load at BARTON 115 #1 : 34.8 MW 7 MVAR Dropp : Drop Load at BARTON 115 #2 : 29.9 MW 6 MVAR Dropp : Drop Load at BARTON 115 #3 : 21.7 MW 4.3 MVAR Dro :	WILSON -WARNERVL 230.00kV Ckt#1 Sec# 1	793.23	Amps	108.5	109.3	0.9
28	Open Line MERCED 115-ATWATR J 115 #1 : Open Line MERCED 115-WILSON A 115 #1 : Open Line MERCED 115-WILSON B 115 #2 : Open Xfmr MERCED 115/MERCED M 115 #2 : Drop Load at MERCED 115 #1 : 29.6 MW 6 MVAR Dropp : Drop Load at MERCED 115 #3 : 15.5 MW 3.1 MVAR Dro :	WILSON -WARNERVL 230.00kV Ckt#1 Sec# 1	793.23	Amps	108.1	108.9	0.9
73	Open Line FIGRDN 1 230-FGRDN T1 230 #1 : Drop Load at FIGRDN 1 230 #1 : 59.1 MW 11.9 MVAR :	WILSON -WARNERVL 230.00kV Ckt#1 Sec# 1	793.23	Amps	108.0	108.8	0.9
99	Open Line MANCHSTR 115-AIRWAYJ1 115 #1 : Open Line MANCHSTR 115-HERNDON 115 #1 : Drop Load at MANCHSTR 115 #1 : 20.3 MW 4.1 MVAR D : Drop Load at MANCHSTR 115 #2 : 20.5 MW 4.1 MVAR D : Drop Load at MANCHSTR 115 #3 : 29.1 MW 5.9 MVAR D :	WILSON -WARNERVL 230.00kV Ckt#1 Sec# 1	793.23	Amps	107.9	108.8	0.9
89	Open Line CLOVIS-2 115-CLOVISJ2 115 #1 : Drop Load at CLOVIS-2 115 #3 : 36 MW 7.3 MVAR Dro :	WILSON -WARNERVL 230.00kV Ckt#1 Sec# 1	793.23	Amps	107.8	108.7	0.9
102	Open Line PNEDLE 115-PNDLJ2 115 #1 : Drop Load at PNEDLE 115 #2 : 24.7 MW 5 MVAR Dropp : Drop Load at PNEDLE 115 #3 : 32.5 MW 6.5 MVAR Dro :	WILSON -WARNERVL 230.00kV Ckt#1 Sec# 1	793.23	Amps	107.6	108.4	0.9
117	Open Line KEARNEY 70-FRWWTAP 70 #1 : Open Line KEARNEY 70-OLDKERN 70 #1 : Open Line KEARNEY 70-CARUTHRS 70 #1 : Open Xfmr KEARNEY 70/KEARNEY 230 #2 :	WILSON -WARNERVL 230.00kV Ckt#1 Sec# 1	793.23	Amps	107.4	108.2	0.9
26	Open Line WILSON B 115-LE GRNDJ 115 #1 : Open Line WILSON B 115-WILSON A 115 #1 : Open Line WILSON B 115-EL CAPTN 115 #1 : Open Line	WILSON -WARNERVL 230.00kV Ckt#1 Sec# 1	793.23	Amps	107.0	107.9	0.9

	WILSON B 115-MERCED 115 #2 : Open Xfmr WILSON B 115/WILSON 230 #2 :						
32	Open Line ORO LOMA 70-DOS PALS 70 #1 : Open Line ORO LOMA 70-MRCYSPRS 70 #1 : Open Line ORO LOMA 70-POSO J1 70 #1 : Open Xfmr ORO LOMA 70/ORO LOMA 115 #2 : Drop Load at ORO LOMA 70 #1 : 6.9 MW 1.3 MVAR Dro :	WILSON -WARNERVL 230.00kV Ckt#1 Sec# 1	793.23	Amps	106.9	107.8	0.9
96	Open Line CAL AVE 115-DANISHCM 115 #1 : Open Line CAL AVE 115-WST FRSO 115 #1 : Drop Load at CAL AVE 115 #1 : 23.3 MW 4.7 MVAR Dr : Drop Load at CAL AVE 115 #2 : 25.1 MW 5.1 MVAR Dr : Drop Load at CAL AVE 115 #3 : 19.6 MW 3.9 MVAR Dr :	WILSON -WARNERVL 230.00kV Ckt#1 Sec# 1	793.23	Amps	106.9	107.8	0.9
74	Open Line FIGRDN 2 230-FGRDN T2 230 #1 : Drop Load at FIGRDN 2 230 #1 : 42.3 MW 8.5 MVAR D :	WILSON -WARNERVL 230.00kV Ckt#1 Sec# 1	793.23	Amps	106.9	107.7	0.9
20	Open Line PANOCHE 230-MOSSLND2 230 #1 : Open Line PANOCHE 230-PANO_EC 230 #1 : Open Line PANOCHE 230-HELM 230 #1 : Open Line PANOCHE 230-GATES 230 #2 : Open Line PANOCHE 230-DS AMIGO 230 #1 : Open Xfmr PANOCHE 230/PANOCHE 115 #2 :	WILSON -WARNERVL 230.00kV Ckt#1 Sec# 1	793.23	Amps	106.7	107.7	1.0
91	Open Line MALAGA 115-SANGER 115 #1 : Open Line MALAGA 115-PPG 115 #1 : Open Line MALAGA 115-MALAGATP 115 #1 : Open Line MALAGA 115-KRCDP 115 #1 : Drop Load at MALAGA 115 #1 : 20.3 MW 4.1 MVAR Dro : Drop Load at MALAGA 115 #2 : 18.3 MW 3.7 MVAR Dro : Drop Load at MALAGA 115 #3 : 18.6 MW 3.7 MVAR Dro :	WILSON -WARNERVL 230.00kV Ckt#1 Sec# 1	793.23	Amps	106.7	107.6	0.9
3	Open Line WILSON A 115-MERCED 115 #1 : Open Line LE GRNDJ 115-WILSON B 115 #1 : Open Line LE GRNDJ 115-EL NIDO 115 #1 : Open Line EL NIDO 115-ORO LOMA 115 #1 : Drop Load at EL NIDO 115 #1 : 10 MW 2 MVAR Droppe : Drop Load at EL NIDO 115 #2 : 12 MW 2.4 MVAR Drop :	WILSON -WARNERVL 230.00kV Ckt#1 Sec# 1	793.23	Amps	106.7	107.6	0.9
53	Open Line WST FRSO 115-MC CALL 115 #1 : Open Line CAL AVE 115-WST FRSO 115 #1 :	WILSON -WARNERVL 230.00kV Ckt#1 Sec# 1	793.23	Amps	106.7	107.5	0.9
97	Open Line WST FRSO 115-MC CALL 115 #1 : Open Line WST FRSO 115-CAL AVE 115 #1 : Drop Load at WST FRSO 115 #1 : 30.2 MW 6.1 MVAR D : Drop Load at WST FRSO 115 #2 : 31.4 MW 6.3 MVAR D :	WILSON -WARNERVL 230.00kV Ckt#1 Sec# 1	793.23	Amps	106.7	107.5	0.9

29	Open Line DAIRYLND 115-LE GRAND 115 #1 : Open Line DAIRYLND 115-NEWHALL 115 #1 : Drop Load at DAIRYLND 115 #1 : 20.6 MW 4.1 MVAR D :	WILSON -WARNERVL 230.00kV Ckt#1 Sec# 1	793.23	Amps	106.6	107.5	0.9
40	Open Line MADERA 70-TRIGO 70 #1 : Open Line MADERA 70-BORDEN 70 #1 : Open Line MADERA 70-BORDEN 70 #2 : Drop Load at MADERA 70 #1 : 14.4 MW 2.9 MVAR Drop : Drop Load at MADERA 70 #2 : 18.5 MW 3.7 MVAR Drop :	WILSON -WARNERVL 230.00kV Ckt#1 Sec# 1	793.23	Amps	106.4	107.3	0.9
87	Open Line AIRWAYS 115-AIRWAYJ1 115 #1 : Open Line AIRWAYS 115-AIRWAYJ2 115 #1 : Drop Load at AIRWAYS 115 #1 : 30.9 MW 5.9 MVAR Dr : Drop Load at AIRWAYS 115 #2 : 10.1 MW 2 MVAR Drop :	WILSON -WARNERVL 230.00kV Ckt#1 Sec# 1	793.23	Amps	106.2	107.1	0.9
88	Open Line CLOVIS-1 115-CLOVISJ1 115 #1 : Drop Load at CLOVIS-1 115 #1 : 41 MW 8.3 MVAR Dro :	WILSON -WARNERVL 230.00kV Ckt#1 Sec# 1	793.23	Amps	106.2	107.1	0.9
68	Open Line GATES 230-MIDWAY 230 #1 : Open Line GATES 230-ARCO 230 #1 :	WILSON -WARNERVL 230.00kV Ckt#1 Sec# 1	793.23	Amps	106.1	107.0	0.9
121	Open Line REEDLEY 70-TVY VLLY 70 #1 : Open Line REEDLEY 70-PARLIER 70 #1 : Open Line REEDLEY 70-DNUBAJCT 70 #1 : Open Line REEDLEY 70-ORSI JCT 70 #1 : Open Xfmr REEDLEY 70/REEDLEY 115 #1 : Open Xfmr REEDLEY 70/REEDLEY 115 #2 : Drop Load at REEDLEY 70 #1 : 14 MW 2.8 MVAR Dropp :	WILSON -WARNERVL 230.00kV Ckt#1 Sec# 1	793.23	Amps	106.0	106.8	0.9
45	Open Line BARTON 115-HERNDON 115 #1 : Open Line MANCHSTR 115-HERNDON 115 #1 :	WILSON -WARNERVL 230.00kV Ckt#1 Sec# 1	793.23	Amps	106.0	106.8	0.9
101	Open Line HERNDON 115-MANCHSTR 115 #1 : Open Line HERNDON 115-PNDLJ1 115 #1 : Open Line HERNDON 115-CHLDHOSP 115 #1 :	WILSON -WARNERVL 230.00kV Ckt#1 Sec# 1	793.23	Amps	105.9	106.8	0.9
107	Open Line CORCORAN 115-KINGSBRG 115 #1 : Open Line CORCORAN 115-KINGSBRG 115 #2 : Open Xfmr CORCORAN 115/CORCORAN 70 #2 : Drop Load at CORCORAN 115 #3 : 13 MW 2.6 MVAR Dro : Drop Load at CORCORAN 115 #4 : 14.3 MW 2.9 MVAR D :	WILSON -WARNERVL 230.00kV Ckt#1 Sec# 1	793.23	Amps	105.6	106.5	0.9
49	Open Line KINGSBRG 115-CORCORAN 115 #1 : Open Line KINGSBRG 115-CORCORAN 115 #2 :	WILSON -WARNERVL 230.00kV Ckt#1 Sec# 1	793.23	Amps	105.6	106.5	0.9
124	Open Line LEMOORE 70-LPRNO TP 70 #1 : Open Line LEMOORE 70-HNFRD SW 70 #1 : Drop Load at LEMOORE 70 #1 : 15.2 MW 3 MVAR Dropp : Drop Load at LEMOORE 70 #2 : 26.4 MW 5.3 MVAR Dro :	WILSON -WARNERVL 230.00kV Ckt#1 Sec# 1	793.23	Amps	105.6	106.5	0.9

34	Open Line CANAL 70-LVNGSTNT 70 #1 : Open Line CANAL 70-SNTA RTA 70 #1 : Open Line CANAL 70-ORTIGA 70 #1 : Drop Load at CANAL 70 #1 : 24.4 MW 4.9 MVAR Dropp : Drop Load at CANAL 70 #2 : 25 MW 5 MVAR Dropped :	WILSON -WARNERVL 230.00kV Ckt#1 Sec# 1	793.23	Amps	105.5	106.4	0.9
94	Open Line WAHTOKE 115-MC CALL 115 #1 : Open Line WAHTOKE 115-GERAWAN 115 #1 : Drop Load at WAHTOKE 115 #2 : 24.4 MW 4.9 MVAR Dr : Drop Load at WAHTOKE 115 #3 : 16.8 MW 3.4 MVAR Dr :	WILSON -WARNERVL 230.00kV Ckt#1 Sec# 1	793.23	Amps	105.5	106.3	0.9
100	Open Line HERNDON 115-BARTON 115 #1 : Open Line HERNDON 115-PNDLJ2 115 #1 : Open Xfmr HERNDON 115/HERNDN1M 115 #1 :	WILSON -WARNERVL 230.00kV Ckt#1 Sec# 1	793.23	Amps	105.5	106.3	0.9
72	Open Line HERNDON 230-GREGG 230 #2 : Open Line HERNDON 230-FGRDN T1 230 #1 : Open Xfmr HERNDON 230/HERNDN2M 115 #2 :	WILSON -WARNERVL 230.00kV Ckt#1 Sec# 1	793.23	Amps	105.4	106.2	0.9

Appendix D
Powerflow Plots of New and Significant Increased Overloads

2013 Summer Peak Conditions		
Plot #	**Descriptions**	**Plot Area**
Category A		
Plot #1	2013 Summer Peak - Pre-Project : Normal Conditions (MW/MVAr)	Henrietta 70-kV
Plot #2	2013 Summer Peak - Pre-Project : Normal Conditions (Amps/Pct)	Henrietta 70-kV
Plot #3	2013 Summer Peak - Post-Project : Normal Conditions (MW/MVAr)	Henrietta 70-kV
Plot #4	2013 Summer Peak - Post-Project : Normal Conditions (Amps/Pct)	Henrietta 70-kV
New and Significant Increased Category B Overloads		
Plot #5	2013 Summer Peak - Pre-Project : Gates-Gregg 230kV and Melones 1 (MW/MVAr)	Greater Fresno 115-kV
Plot #6	2013 Summer Peak - Pre-Project : Gates-Gregg 230kV and Melones 1 (Amps/Pct)	Greater Fresno 115-kV
Plot #7	2013 Summer Peak - Post-Project : Gates-Gregg 230kV and Melones 1 (MW/MVAr)	Greater Fresno 115-kV
Plot #8	2013 Summer Peak - Post-Project : Gates-Gregg 230kV and Melones 1 (Amps/Pct)	Greater Fresno 115-kV
Plot #9	2013 Summer Peak - Pre-Project : Wilson-Borden #2 230kV (MW/MVAr)	Greater Fresno 500 & 230-kV
Plot #10	2013 Summer Peak - Pre-Project : Wilson-Borden #2 230kV (Amps/Pct)	Greater Fresno 500 & 230-kV
Plot #11	2013 Summer Peak - Post-Project : Wilson-Borden #2 230kV (MW/MVAr)	Greater Fresno 500 & 230-kV
Plot #12	2013 Summer Peak - Post-Project : Wilson-Borden #2 230kV (Amps/Pct)	Greater Fresno 500 & 230-kV
Plot #13	2013 Summer Peak - Pre-Project : Dos Amigos-Panoche 230kV and Exchequer (MW/MVAr)	Greater Fresno 500 & 230-kV
Plot #14	2013 Summer Peak - Pre-Project : Dos Amigos-Panoche 230kV and Exchequer (Amps/Pct)	Greater Fresno 500 & 230-kV
Plot #15	2013 Summer Peak - Post-Project : Dos Amigos-Panoche 230kV and Exchequer (MW/MVAr)	Greater Fresno 500 & 230-kV
Plot #16	2013 Summer Peak - Post-Project : Dos Amigos-Panoche 230kV and Exchequer (Amps/Pct)	Greater Fresno 500 & 230-kV
New and Significant Increased Category C Overloads		
Plot #17	2013 Summer Peak - Pre-Project : Los Banos-Panoche #2 & Dos Amigos 230kV Lines (MW/MVAr)	Greater Fresno 500 & 230-kV
Plot #18	2013 Summer Peak - Pre-Project : Los Banos-Panoche #2 & Dos Amigos 230kV Lines (Amps/Pct)	Greater Fresno 500 & 230-kV
Plot #19	2013 Summer Peak - Post-Project : Los Banos-Panoche #2 & Dos Amigos 230kV Lines (MW/MVAr)	Greater Fresno 500 & 230-kV
Plot #20	2013 Summer Peak - Post-Project : Los Banos-Panoche #2 & Dos Amigos 230kV Lines (Amps/Pct)	Greater Fresno 500 & 230-kV
Plot #21	2013 Summer Peak - Pre-Project : Panoche-Los Banos #2 & Dos Amigos 230kV Lines (MW/MVAr)	Greater Fresno 500 & 230-kV
Plot #22	2013 Summer Peak - Pre-Project : Panoche-Los Banos #2 & Dos Amigos 230kV Lines (Amps/Pct)	Greater Fresno 500 & 230-kV
Plot #23	2013 Summer Peak - Post-Project : Panoche-Los Banos #2 & Dos Amigos 230kV Lines (MW/MVAr)	Greater Fresno 500 & 230-kV
Plot #24	2013 Summer Peak - Post-Project : Panoche-Los Banos #2 & Dos Amigos 230kV Lines (Amps/Pct)	Greater Fresno 500 & 230-kV
Plot #25	2013 Summer Peak - Pre-Project : Los Banos Bus Section 1 (MW/MVAr)	Greater Fresno 115-kV
Plot #26	2013 Summer Peak - Pre-Project : Los Banos Bus Section 1 (Amps/Pct)	Greater Fresno 115-kV
Plot #27	2013 Summer Peak - Post-Project : Los Banos Bus Section 1 (MW/MVAr)	Greater Fresno 115-kV
Plot #28	2013 Summer Peak - Post-Project : Los Banos Bus Section 1 (Amps/Pct)	Greater Fresno 115-kV
Plot #29	2013 Summer Peak - Pre-Project : Ashlan Bus (MW/MVAr)	Greater Fresno 500 & 230-kV
Plot #30	2013 Summer Peak - Pre-Project : Ashlan Bus (Amps/Pct)	Greater Fresno 500 & 230-kV
Plot #31	2013 Summer Peak - Post-Project : Ashlan Bus (MW/MVAr)	Greater Fresno 500 & 230-kV
Plot #32	2013 Summer Peak - Post-Project : Ashlan Bus (Amps/Pct)	Greater Fresno 500 & 230-kV

Plot #33	2013 Summer Peak - Pre-Project : Gates 230kV Bus 1E (MW/MVAr)	Greater Fresno 500 & 230-kV
Plot #34	2013 Summer Peak - Pre-Project : Gates 230kV Bus 1E (Amps/Pct)	Greater Fresno 500 & 230-kV
Plot #35	2013 Summer Peak - Post-Project : Gates 230kV Bus 1E (MW/MVAr)	Greater Fresno 500 & 230-kV
Plot #36	2013 Summer Peak - Post-Project : Gates 230kV Bus 1E (Amps/Pct)	Greater Fresno 500 & 230-kV
Plot #37	2013 Summer Peak - Pre-Project : Los Banos South DLO (MW/MVAr)	Greater Fresno 500 & 230-kV
Plot #38	2013 Summer Peak - Pre-Project : Los Banos South DLO (Amps/Pct)	Greater Fresno 500 & 230-kV
Plot #39	2013 Summer Peak - Post-Project : Los Banos South DLO (MW/MVAr)	Greater Fresno 500 & 230-kV
Plot #40	2013 Summer Peak - Post-Project : Los Banos South DLO (Amps/Pct)	Greater Fresno 500 & 230-kV
2013 Summer Off-Peak Conditions		
Plot #	**Descriptions**	**Plot Area**
Category A		
Plot #41	2013 Summer Off-Peak - Pre-Project : Normal Conditions (MW/MVAr)	Henrietta 70-kV
Plot #42	2013 Summer Off-Peak - Pre-Project : Normal Conditions (Amps/Pct)	Henrietta 70-kV
Plot #43	2013 Summer Off-Peak - Post-Project : Normal Conditions (MW/MVAr)	Henrietta 70-kV
Plot #44	2013 Summer Off-Peak - Post-Project : Normal Conditions (Amps/Pct)	Henrietta 70-kV
New and Significant Increased Category B Overloads		
Plot #45	2013 Summer Off-Peak - Pre-Project : Wilson-Borden #2 230kV & Helms 1 (MW/MVAr)	Greater Fresno 500 & 230-kV
Plot #46	2013 Summer Off-Peak - Pre-Project : Wilson-Borden #2 230kV & Helms 1 (Amps/Pct)	Greater Fresno 500 & 230-kV
Plot #47	2013 Summer Off-Peak - Post-Project : Wilson-Borden #2 230kV & Helms 1 (MW/MVAr)	Greater Fresno 500 & 230-kV
Plot #48	2013 Summer Off-Peak - Post-Project : Wilson-Borden #2 230kV & Helms 1 (Amps/Pct)	Greater Fresno 500 & 230-kV
Plot #49	2013 Summer Off-Peak - Pre-Project : Panoche-Kearney 230kV & Kerckhoff (MW/MVAr)	Greater Fresno 500 & 230-kV
Plot #50	2013 Summer Off-Peak - Pre-Project : Panoche-Kearney 230kV & Kerckhoff (Amps/Pct)	Greater Fresno 500 & 230-kV
Plot #51	2013 Summer Off-Peak - Post-Project : Panoche-Kearney 230kV & Kerckhoff (MW/MVAr)	Greater Fresno 500 & 230-kV
Plot #52	2013 Summer Off-Peak - Post-Project : Panoche-Kearney 230kV & Kerckhoff (Amps/Pct)	Greater Fresno 500 & 230-kV
New and Significant Increased Category C Overloads		
Plot #53	2013 Summer Off-Peak - Pre-Project : Gates-Gregg & McCall 230kV Lines (MW/MVAr)	Greater Fresno 500 & 230-kV
Plot #54	2013 Summer Off-Peak - Pre-Project : Gates-Gregg & McCall 230kV Lines (Amps/Pct)	Greater Fresno 500 & 230-kV
Plot #55	2013 Summer Off-Peak - Post-Project : Gates-Gregg & McCall 230kV Lines (MW/MVAr)	Greater Fresno 500 & 230-kV
Plot #56	2013 Summer Off-Peak - Post-Project : Gates-Gregg & McCall 230kV Lines (Amps/Pct)	Greater Fresno 500 & 230-kV
Plot #57	2013 Summer Off-Peak - Pre-Project : Gates-Gregg & McCall 230kV Lines (MW/MVAr)	Fresno South 115-kV
Plot #58	2013 Summer Off-Peak - Pre-Project : Gates-Gregg & McCall 230kV Lines (Amps/Pct)	Fresno South 115-kV
Plot #59	2013 Summer Off-Peak - Post-Project : Gates-Gregg & McCall 230kV Lines (MW/MVAr)	Fresno South 115-kV
Plot #60	2013 Summer Off-Peak - Post-Project : Gates-Gregg & McCall 230kV Lines (Amps/Pct)	Fresno South 115-kV
Plot #61	2013 Summer Off-Peak - Pre-Project : Helm-McCall & Gates-McCall 230kV Lines (MW/MVAr)	Greater Fresno 115-kV
Plot #62	2013 Summer Off-Peak - Pre-Project : Helm-McCall & Gates-McCall 230kV Lines (Amps/Pct)	Greater Fresno 115-kV
Plot #63	2013 Summer Off-Peak - Post-Project : Helm-McCall & Gates-McCall 230kV Lines (MW/MVAr)	Greater Fresno 115-kV
Plot #64	2013 Summer Off-Peak - Post-Project : Helm-McCall & Gates-McCall 230kV Lines (Amps/Pct)	Greater Fresno 115-kV
Plot #65	2013 Summer Off-Peak - Pre-Project : Herndon-Ashlan & Gregg-Ashlan 230kV Lines (MW/MVAr)	Greater Fresno 500 & 230-kV
Plot #66	2013 Summer Off-Peak - Pre-Project : Herndon-Ashlan & Gregg-Ashlan 230kV Lines (Amps/Pct)	Greater Fresno 500 & 230-kV
Plot #67	2013 Summer Off-Peak - Post-Project : Herndon-Ashlan & Gregg-Ashlan 230kV Lines	Greater Fresno 500 & 230-kV

	(MW/MVAr)	
Plot #68	2013 Summer Off-Peak - Post-Project : Herndon-Ashlan & Gregg-Ashlan 230kV Lines (Amps/Pct)	Greater Fresno 500 & 230-kV
2013 Spring Peak Conditions		
Plot #	**Descriptions**	**Plot Area**
Category A		
Plot #69	2013 Spring Peak - Pre-Project : Normal Conditions (MW/MVAr)	Henrietta 70-kV
Plot #70	2013 Spring Peak - Pre-Project : Normal Conditions (Amps/Pct)	Henrietta 70-kV
Plot #71	2013 Spring Peak - Post-Project : Normal Conditions (MW/MVAr)	Henrietta 70-kV
Plot #72	2013 Spring Peak - Post-Project : Normal Conditions (Amps/Pct)	Henrietta 70-kV
New and Significant Increased Category B Overloads		
Plot #73	2013 Spring Peak - Pre-Project : Wilson-Borden 230kV & Exchequer (MW/MVAr)	Greater Fresno 115-kV
Plot #74	2013 Spring Peak - Pre-Project : Wilson-Borden 230kV & Exchequer (Amps/Pct)	Greater Fresno 115-kV
Plot #75	2013 Spring Peak - Post-Project : Wilson-Borden 230kV & Exchequer (MW/MVAr)	Greater Fresno 115-kV
Plot #76	2013 Spring Peak - Post-Project : Wilson-Borden 230kV & Exchequer (Amps/Pct)	Greater Fresno 115-kV
Plot #77	2013 Spring Peak - Pre-Project : Gates-McCall 230kV (MW/MVAr)	Greater Fresno 500 & 230-kV
Plot #78	2013 Spring Peak - Pre-Project : Gates-McCall 230kV (Amps/Pct)	Greater Fresno 500 & 230-kV
Plot #79	2013 Spring Peak - Post-Project : Gates-McCall 230kV (MW/MVAr)	Greater Fresno 500 & 230-kV
Plot #80	2013 Spring Peak - Post-Project : Gates-McCall 230kV (Amps/Pct)	Greater Fresno 500 & 230-kV
Plot #81	2013 Spring Peak - Pre-Project : Gates-Templeton 230kV & Melones (MW/MVAr)	Greater Fresno 500 & 230-kV
Plot #82	2013 Spring Peak - Pre-Project : Gates-Templeton 230kV & Melones (Amps/Pct)	Greater Fresno 500 & 230-kV
Plot #83	2013 Spring Peak - Post-Project : Gates-Templeton 230kV & Melones (MW/MVAr)	Greater Fresno 500 & 230-kV
Plot #84	2013 Spring Peak - Post-Project : Gates-Templeton 230kV & Melones (Amps/Pct)	Greater Fresno 500 & 230-kV
Plot #85	2013 Spring Peak - Pre-Project : Coburn-Panoche 230 kV & Exchequer (MW/MVAr)	Greater Fresno 500 & 230-kV
Plot #86	2013 Spring Peak - Pre-Project : Coburn-Panoche 230 kV & Exchequer (Amps/Pct)	Greater Fresno 500 & 230-kV
Plot #87	2013 Spring Peak - Post-Project : Coburn-Panoche 230 kV & Exchequer (MW/MVAr)	Greater Fresno 500 & 230-kV
Plot #88	2013 Spring Peak - Post-Project : Coburn-Panoche 230 kV & Exchequer (Amps/Pct)	Greater Fresno 500 & 230-kV
Plot #89	2013 Spring Peak - Pre-Project : Dairyland-Mendota 115kV & Exchequer (MW/MVAr)	Greater Fresno 500 & 230-kV
Plot #90	2013 Spring Peak - Pre-Project : Dairyland-Mendota 115kV & Exchequer (Amps/Pct)	Greater Fresno 500 & 230-kV
Plot #91	2013 Spring Peak - Post-Project : Dairyland-Mendota 115kV & Exchequer (MW/MVAr)	Greater Fresno 500 & 230-kV
Plot #92	2013 Spring Peak - Post-Project : Dairyland-Mendota 115kV & Exchequer (Amps/Pct)	Greater Fresno 500 & 230-kV
Plot #93	2013 Spring Peak - Pre-Project : Westley-Los Banos 230kV & Kerckhoff (MW/MVAr)	Greater Fresno 500 & 230-kV
Plot #94	2013 Spring Peak - Pre-Project : Westley-Los Banos 230kV & Kerckhoff (Amps/Pct)	Greater Fresno 500 & 230-kV
Plot #95	2013 Spring Peak - Post-Project : Westley-Los Banos 230kV & Kerckhoff (MW/MVAr)	Greater Fresno 500 & 230-kV
Plot #96	2013 Spring Peak - Post-Project : Westley-Los Banos 230kV & Kerckhoff (Amps/Pct)	Greater Fresno 500 & 230-kV
New and Significant Increased Category C Overloads		
Plot #97	2013 Spring Peak - Pre-Project : McCall-West Fresno & Cal Ave.-McCall 115kV Lines (MW/MVAr)	Greater Fresno 500 & 230-kV
Plot #98	2013 Spring Peak - Pre-Project : McCall-West Fresno & Cal Ave.-McCall 115kV Lines (Amps/Pct)	Greater Fresno 500 & 230-kV
Plot #99	2013 Spring Peak - Post-Project : McCall-West Fresno & Cal Ave.-McCall 115kV Lines (MW/MVAr)	Greater Fresno 500 & 230-kV
Plot #100	2013 Spring Peak - Post-Project : McCall-West Fresno & Cal Ave.-McCall 115kV Lines (Amps/Pct)	Greater Fresno 500 & 230-kV

Plot #101	2013 Spring Peak - Pre-Project : Gates-Gregg & Gates-McCall 230kV Lines (MW/MVAr)	Greater Fresno 500 & 230-kV
Plot #102	2013 Spring Peak - Pre-Project : Gates-Gregg & Gates-McCall 230kV Lines (Amps/Pct)	Greater Fresno 500 & 230-kV
Plot #103	2013 Spring Peak - Post-Project : Gates-Gregg & Gates-McCall 230kV Lines (MW/MVAr)	Greater Fresno 500 & 230-kV
Plot #104	2013 Spring Peak - Post-Project : Gates-Gregg & Gates-McCall 230kV Lines (Amps/Pct)	Greater Fresno 500 & 230-kV
Plot #105	2013 Spring Peak - Pre-Project : Helm-McCall & Gates-McCall 230kV Lines (MW/MVAr)	Fresno South 115-kV
Plot #106	2013 Spring Peak - Pre-Project : Helm-McCall & Gates-McCall 230kV Lines (Amps/Pct)	Fresno South 115-kV
Plot #107	2013 Spring Peak - Post-Project : Helm-McCall & Gates-McCall 230kV Lines (MW/MVAr)	Fresno South 115-kV
Plot #108	2013 Spring Peak - Post-Project : Helm-McCall & Gates-McCall 230kV Lines (Amps/Pct)	Fresno South 115-kV
Plot #109	2013 Spring Peak - Pre-Project : Henrietta 230kV Bus (MW/MVAr)	Henrietta 70-kV
Plot #110	2013 Spring Peak - Pre-Project : Henrietta 230kV Bus (Amps/Pct)	Henrietta 70-kV
Plot #111	2013 Spring Peak - Post-Project : Henrietta 230kV Bus (MW/MVAr)	Henrietta 70-kV
Plot #112	2013 Spring Peak - Post-Project : Henrietta 230kV Bus (Amps/Pct)	Henrietta 70-kV
Plot #113	2013 Spring Peak - Pre-Project : Gates 230kV Bus 1E (MW/MVAr)	Greater Fresno 500 & 230-kV
Plot #114	2013 Spring Peak - Pre-Project : Gates 230kV Bus 1E (Amps/Pct)	Greater Fresno 500 & 230-kV
Plot #115	2013 Spring Peak - Post-Project : Gates 230kV Bus 1E (MW/MVAr)	Greater Fresno 500 & 230-kV
Plot #116	2013 Spring Peak - Post-Project : Gates 230kV Bus 1E (Amps/Pct)	Greater Fresno 500 & 230-kV
Plot #117	2013 Spring Peak - Pre-Project : Woodward 115kV Bus (MW/MVAr)	Greater Fresno 500 & 230-kV
Plot #118	2013 Spring Peak - Pre-Project : Woodward 115kV Bus (Amps/Pct)	Greater Fresno 500 & 230-kV
Plot #119	2013 Spring Peak - Post-Project : Woodward 115kV Bus (MW/MVAr)	Greater Fresno 500 & 230-kV
Plot #120	2013 Spring Peak - Post-Project : Woodward 115kV Bus (Amps/Pct)	Greater Fresno 500 & 230-kV
Plot #121	2013 Spring Peak - Pre-Project : Los Banos North DLO (MW/MVAr)	Greater Fresno 500 & 230-kV
Plot #122	2013 Spring Peak - Pre-Project : Los Banos North DLO (Amps/Pct)	Greater Fresno 500 & 230-kV
Plot #123	2013 Spring Peak - Post-Project : Los Banos North DLO (MW/MVAr)	Greater Fresno 500 & 230-kV
Plot #124	2013 Spring Peak - Post-Project : Los Banos North DLO (Amps/Pct)	Greater Fresno 500 & 230-kV

Henrietta 70 kV system

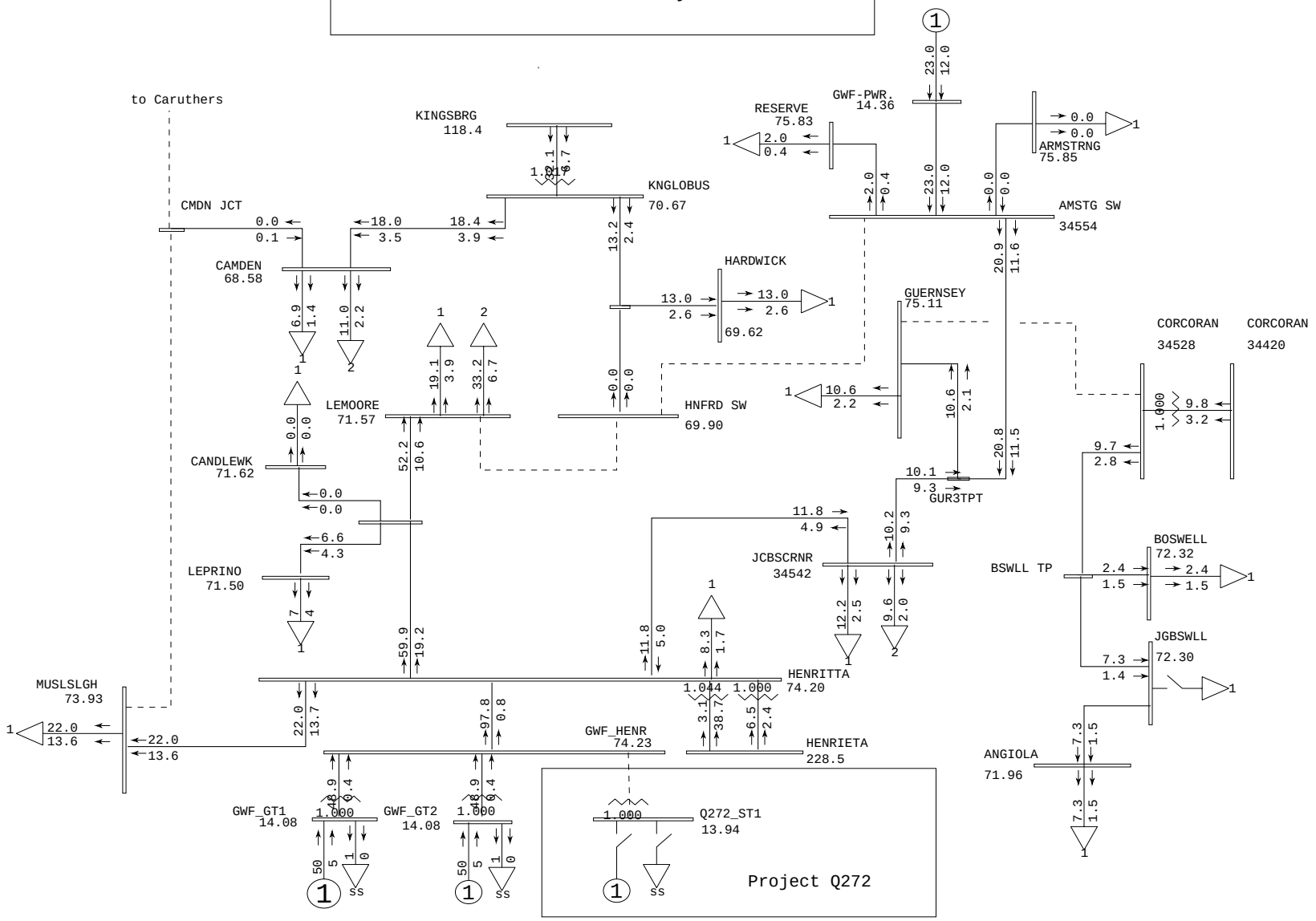

General Electric International, Inc. PSLF Program Wed Oct 01 08:22:46 2008 2013sumpk_q272_pre.sav

	PG&E 2007 CASE SERIES: 2013 San Joaquin Valley Summer Peak Pre-Project Case	Plot 1 - No Outage	MW/MVAR
	PATH15= 1964 MW(S-N) PATH26= 3996 MW(N-S) PDCI= 2500 MW(N-S) COI= 4790 MW(N-S)		hen_70.drw
	Q272 150 MW GWF Henrietta 70 kV IFS - 2013 Summer Peak Pre-Project FY		Rating = 1

Henrietta 70 kV system

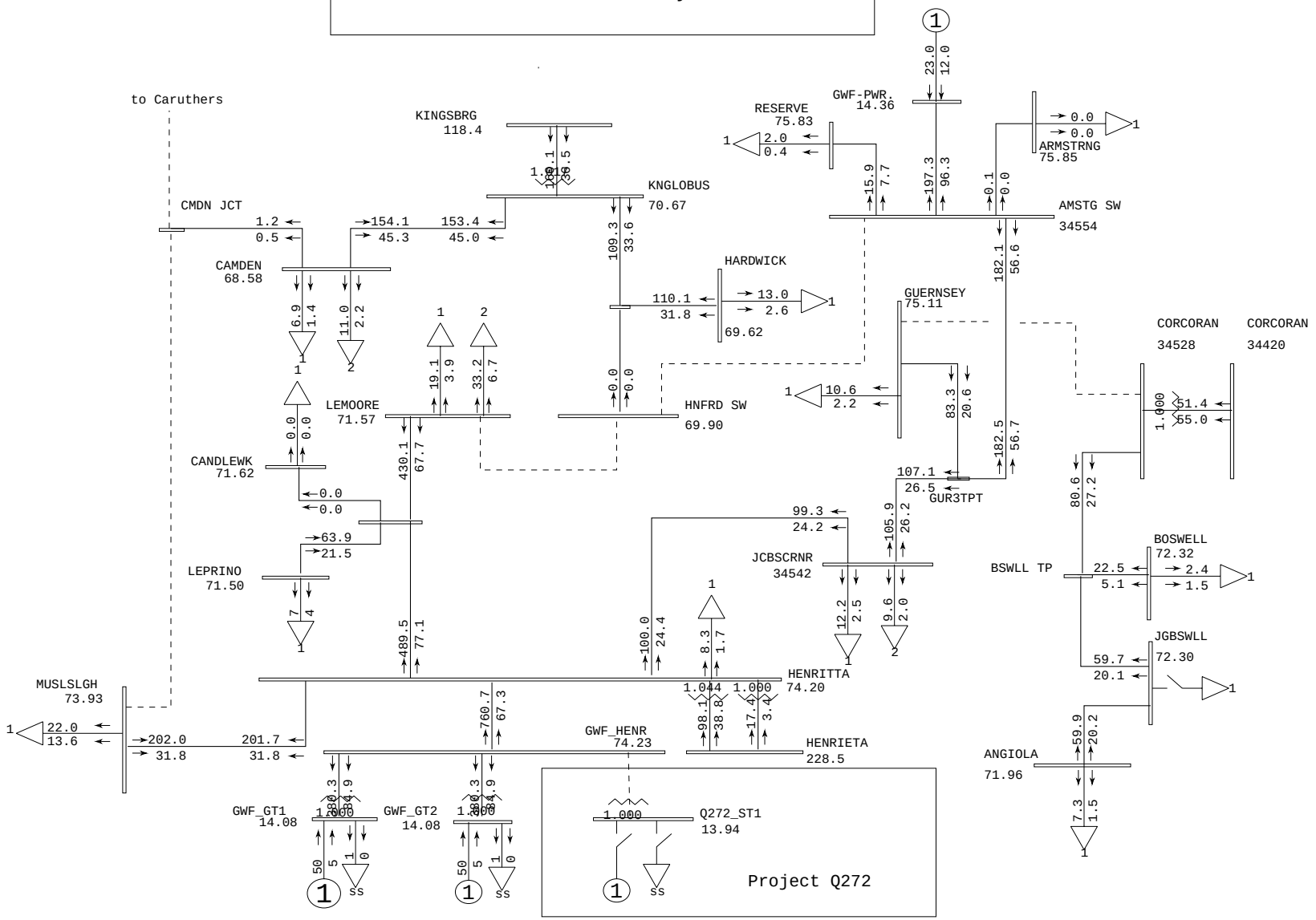

General Electric International, Inc. PSLF Program Wed Oct 01 08:22:47 2008 2013sumpk_q272_pre.sav

PG&E 2007 CASE SERIES: 2013 San Joaquin Valley Summer Peak Pre-Project Case PATH15= 1964 MW(S-N) PATH26= 3996 MW(N-S) PDCI= 2500 MW(N-S) COI= 4790 MW(N-S) Q272 150 MW GWF Henrietta 70 kV IFS - 2013 Summer Peak Pre-Project FY	Plot 2 - No Outage	amps/rate hen_70.drw Rating = 1

Henrietta 70 kV system

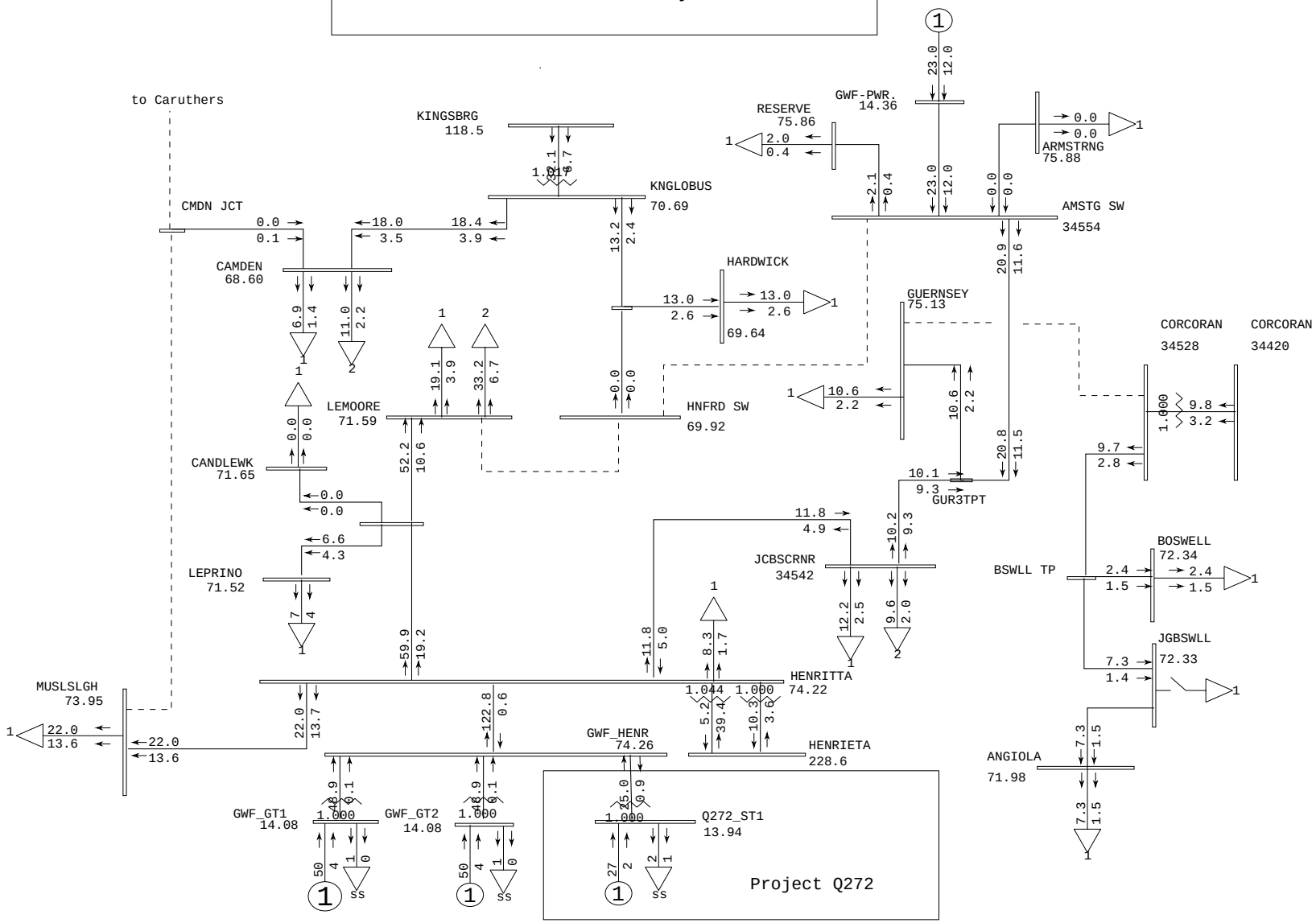

General Electric International, Inc. PSLF Program Wed Oct 01 08:22:48 2008 2013sumpk_q272_pst_v2.sav

	PG&E 2007 CASE SERIES: 2013 San Joaquin Valley Summer Peak Post-Project Case PATH15= 1955 MW(S-N) PATH26= 4001 MW(N-S) PDCI= 2500 MW(N-S) COI= 4795 MW(N-S) Q272 150 MW at GWF Henrietta 70 kV IFS - 2013 Summer Peak Post-Project FY	Plot 3 - No Outage	MW/MVAR hen_70.drw Rating = 1

Henrietta 70 kV system

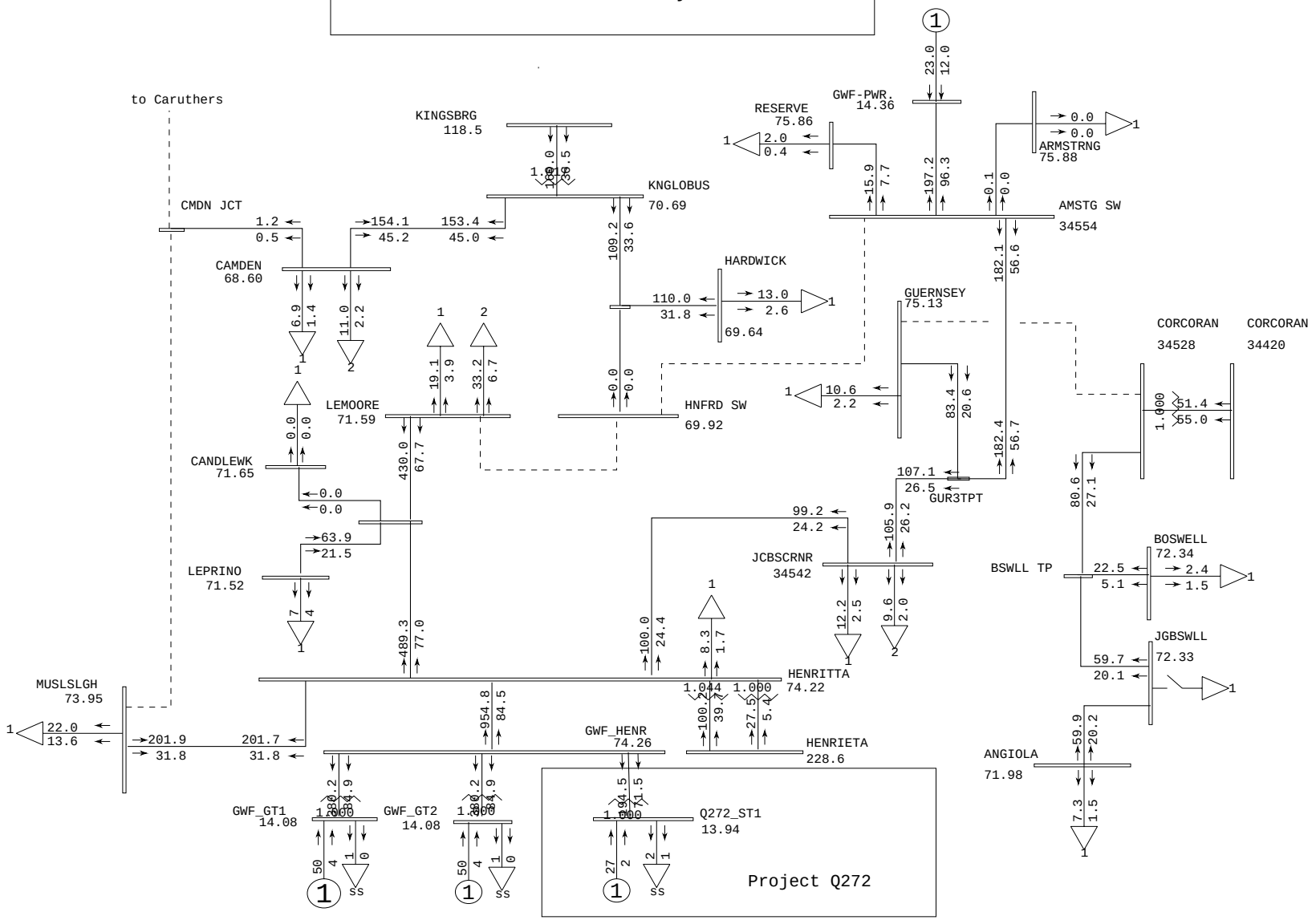

General Electric International, Inc. PSLF Program Wed Oct 01 08:22:48 2008 2013sumpk_q272_pst_v2.sav

	PG&E 2007 CASE SERIES: 2013 San Joaquin Valley Summer Peak Post-Project Case PATH15= 1955 MW(S-N) PATH26= 4001 MW(N-S) PDCI= 2500 MW(N-S) COI= 4795 MW(N-S) Q272 150 MW at GWF Henrietta 70 kV IFS - 2013 Summer Peak Post-Project FY	Plot 4 - No Outage	amps/rate hen_70.drw Rating = 1

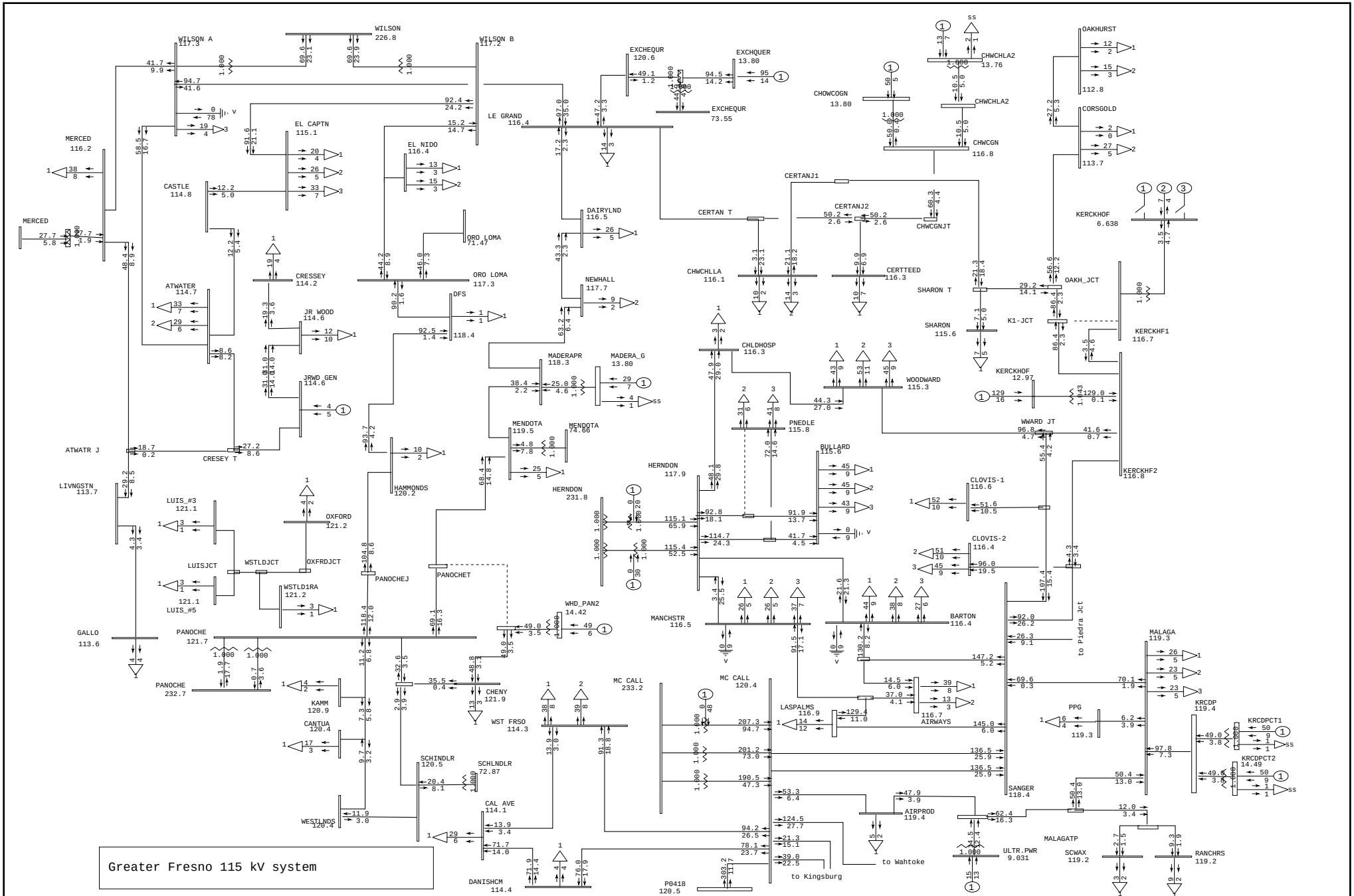

Greater Fresno 115 kV system

General Electric International, Inc. PSLF Program Wed Oct 01 08:22:50 2008 2013sumpk_q272_pre.sav

	PG&E 2007 CASE SERIES: 2013 San Joaquin Valley Summer Peak Pre-Project Case PATH15= 1964 MW(S-N) PATH26= 3996 MW(N-S) PDCI= 2500 MW(N-S) COI= 4790 MW(N-S) Q272 150 MW GWF Henrietta 70 kV IFS - 2013 Summer Peak Pre-Project FY	Plot 5-Outage: Gates-Gregg 230kV and Melones 1	MW/MVAR gfres115.drw Rating = 2

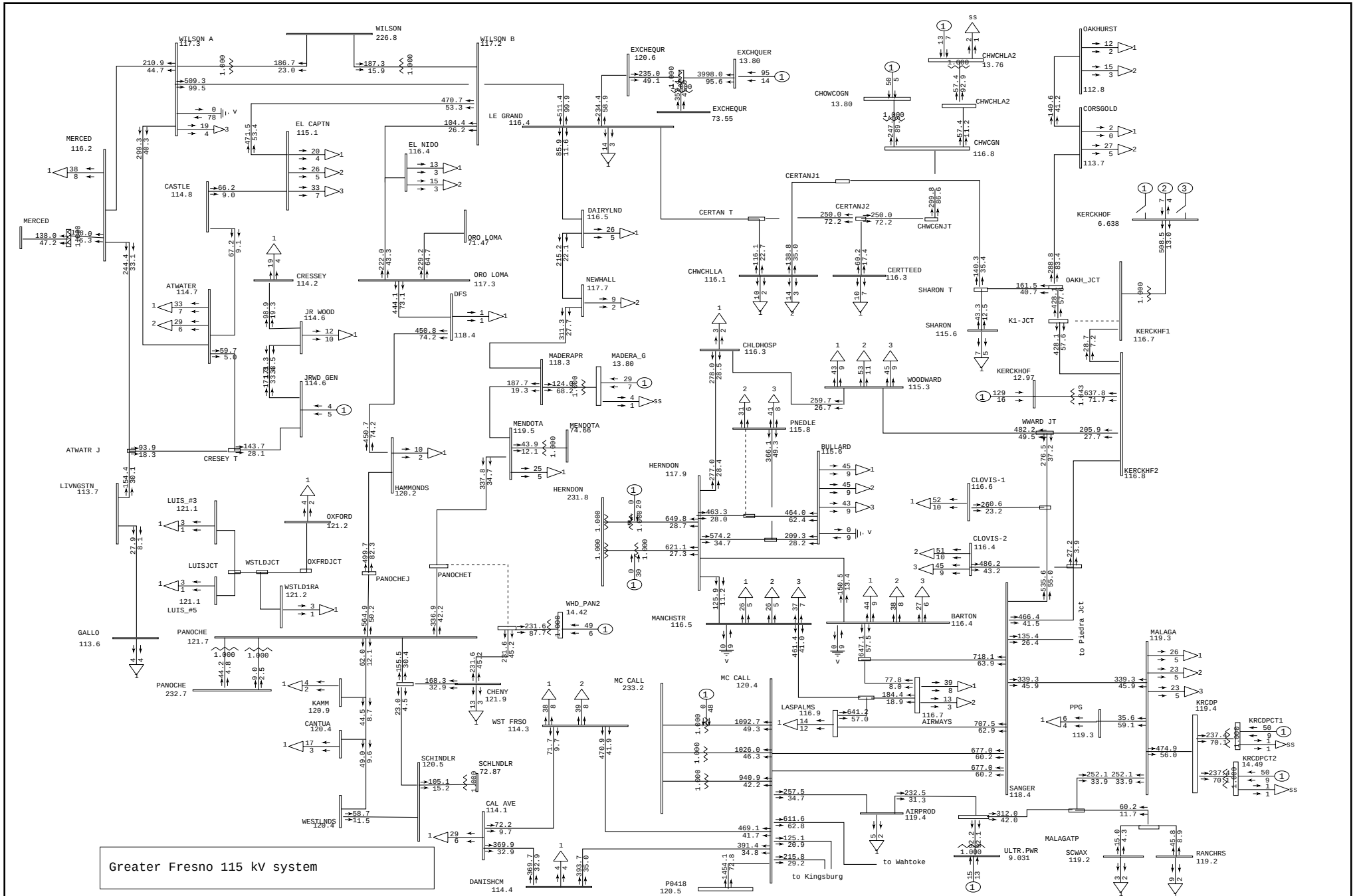

Greater Fresno 115 kV system

General Electric International, Inc. PSLF Program Wed Oct 01 08:22:52 2008 2013sumpk_q272_pre.sav

	PG&E 2007 CASE SERIES: 2013 San Joaquin Valley Summer Peak Pre-Project Case PATH15= 1964 MW(S-N) PATH26= 3996 MW(N-S) PDCI= 2500 MW(N-S) COI= 4790 MW(N-S) Q272 150 MW GWF Henrietta 70 kV IFS - 2013 Summer Peak Pre-Project FY	Plot 6-Outage: Gates-Gregg 230kV and Melones 1	amps/rate gfres115.drw Rating = 2

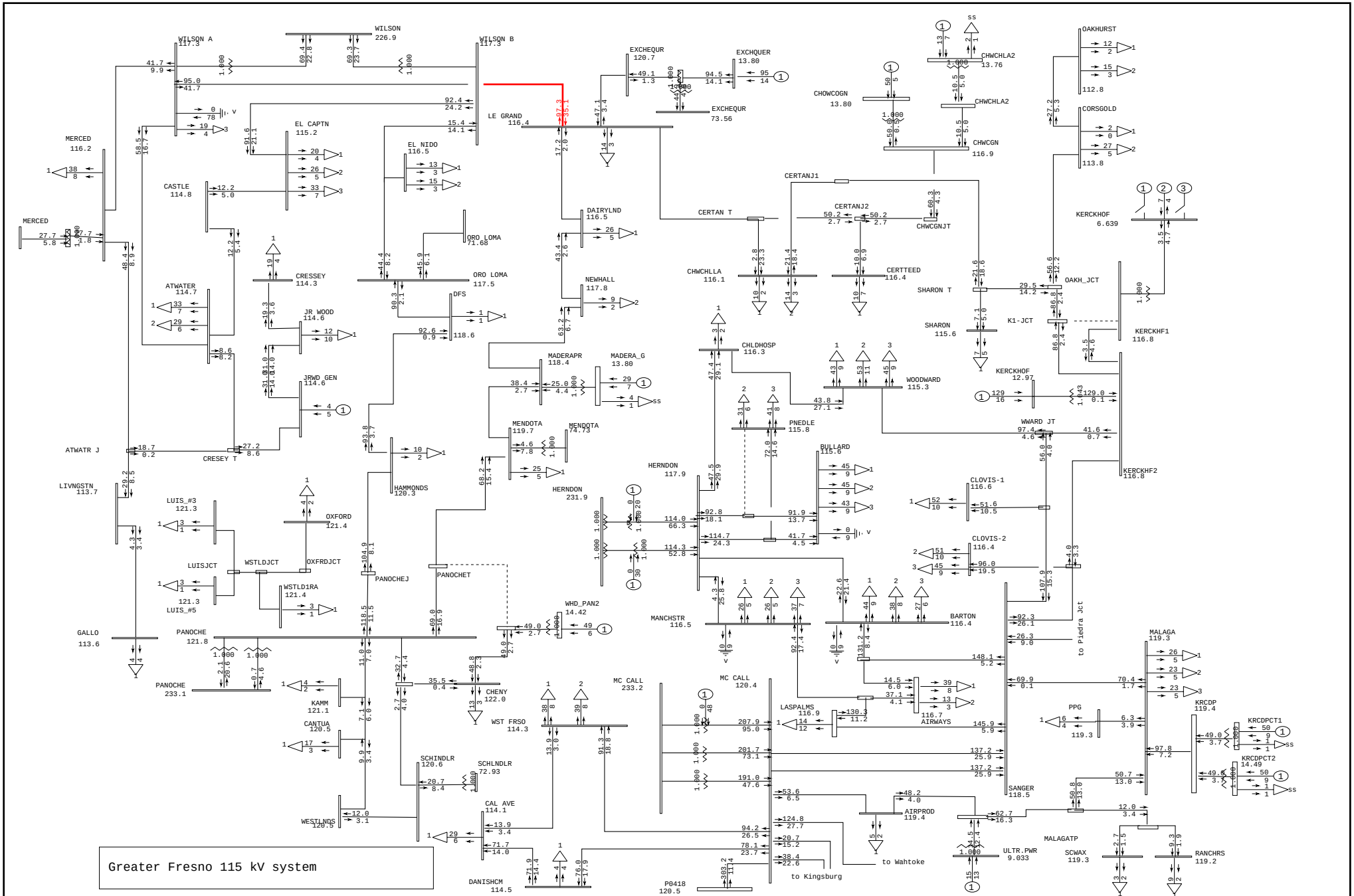

Greater Fresno 115 kV system

General Electric International, Inc. PSLF Program Wed Oct 01 08:22:54 2008 2013sumpk_q272_pst_v2.sav

	PG&E 2007 CASE SERIES: 2013 San Joaquin Valley Summer Peak Post-Project Case PATH15= 1955 MW(S-N) PATH26= 4001 MW(N-S) PDCI= 2500 MW(N-S) COI= 4795 MW(N-S) Q272 150 MW at GWF Henrietta 70 kV IFS - 2013 Summer Peak Post-Project FY	Plot 7-Outage: Gates-Gregg 230kV and Melones 1	MW/MVAR gfres115.drw Rating = 2

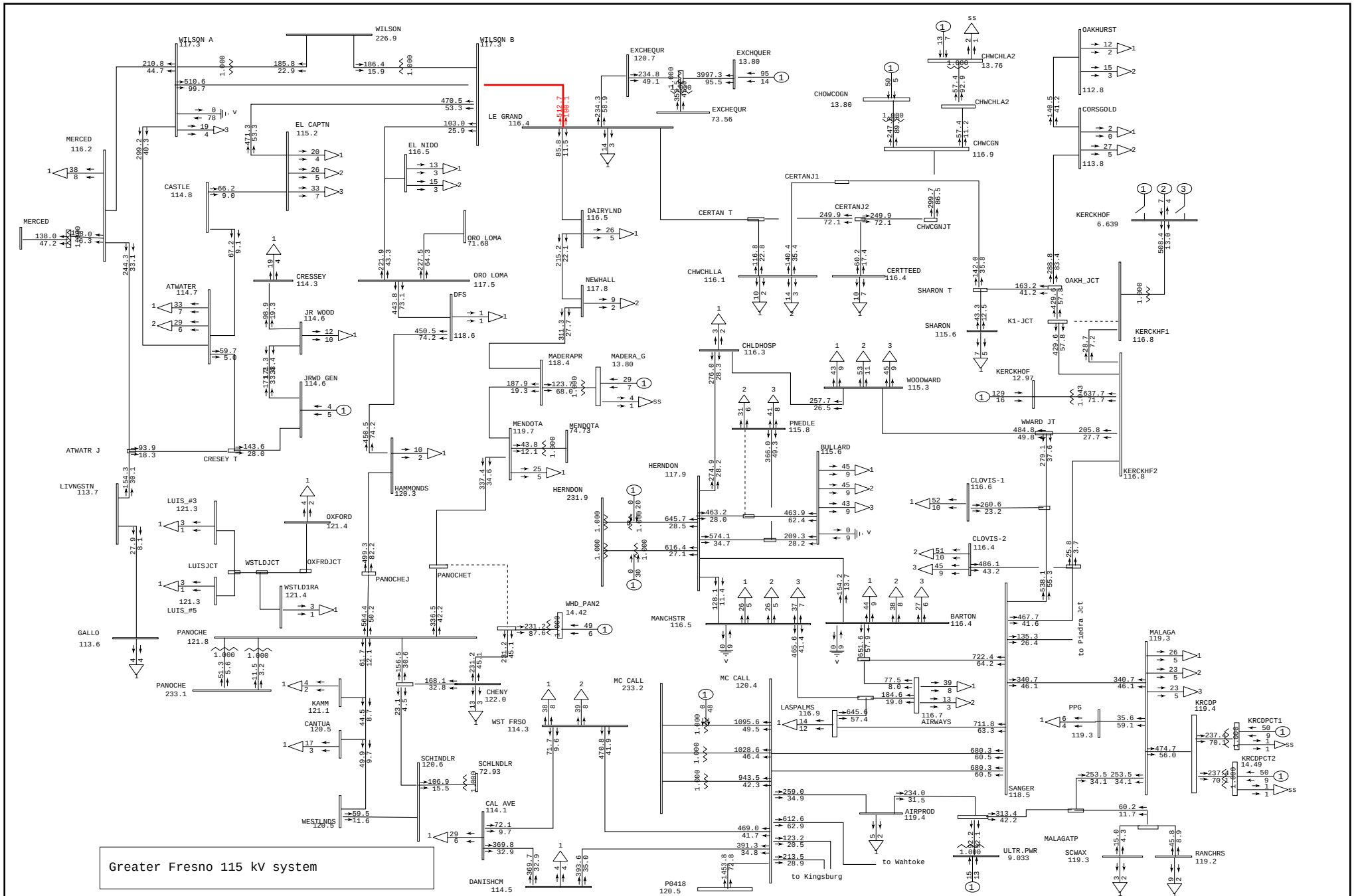

Greater Fresno 115 kV system

General Electric International, Inc. PSLF Program Wed Oct 01 08:22:56 2008 2013sumpk_q272_pst_v2.sav

	PG&E 2007 CASE SERIES: 2013 San Joaquin Valley Summer Peak Post-Project Case PATH15= 1955 MW(S-N) PATH26= 4001 MW(N-S) PDCI= 2500 MW(N-S) COI= 4795 MW(N-S) Q272 150 MW at GWF Henrietta 70 kV IFS - 2013 Summer Peak Post-Project FY	Plot 8-Outage: Gates-Gregg 230kV and Melones 1	amps/rate gfres115.drw Rating = 2

Greater Fresno
500-kV & 230-kV System

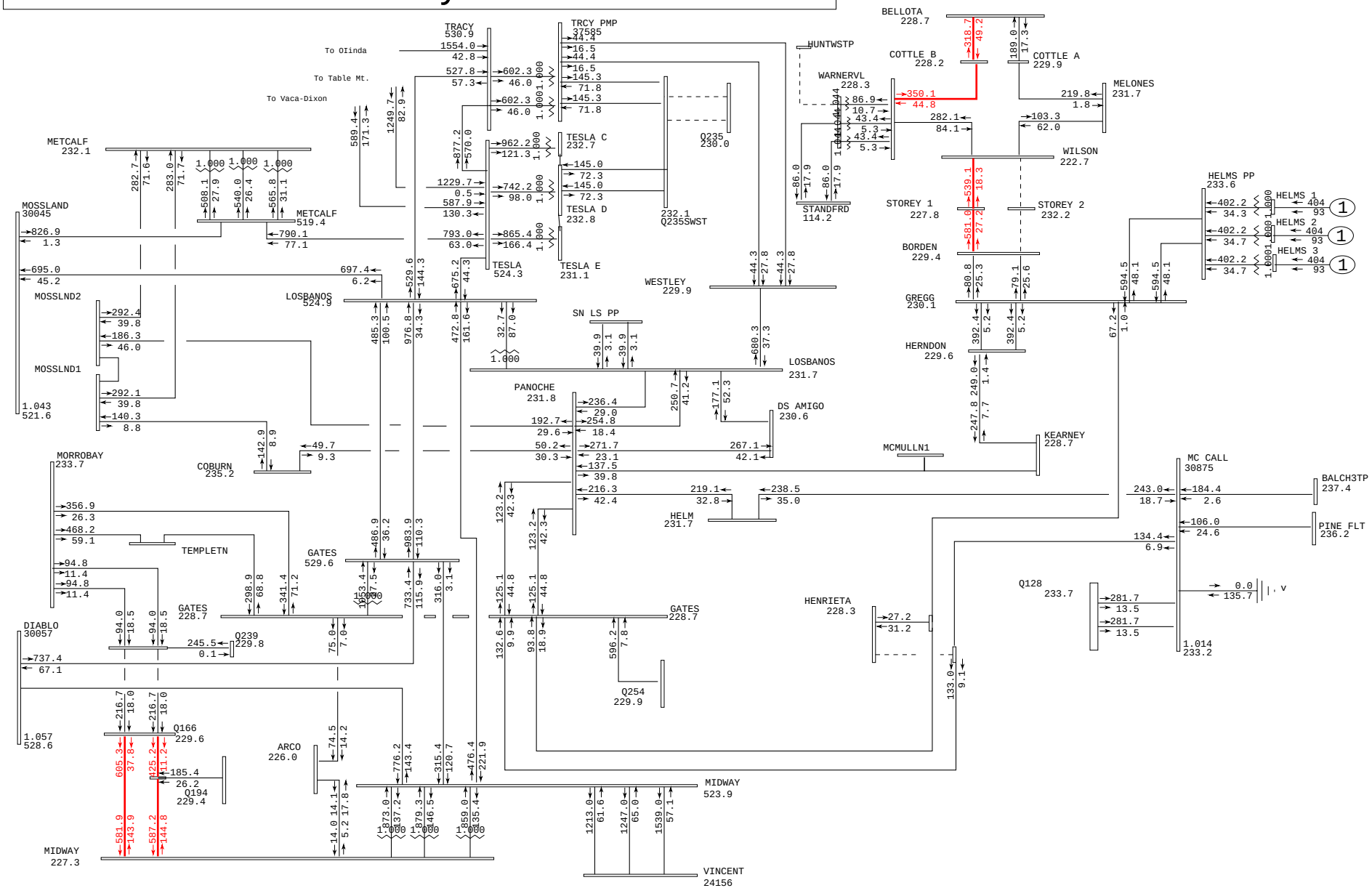

General Electric International, Inc. PSLF Program Wed Oct 01 08:22:58 2008 2013sumpk_q272_pre.sav

	PG&E 2007 CASE SERIES: 2013 San Joaquin Valley Summer Peak Pre-Project Case PATH15= 1964 MW(S-N) PATH26= 3996 MW(N-S) PDCI= 2500 MW(N-S) COI= 4790 MW(N-S) Q272 150 MW GWF Henrietta 70 kV IFS - 2013 Summer Peak Pre-Project FY	Plot 9-Outage: Wilson-Borden #2 230kV	MW/MVAR gfres2.drw Rating = 2

Greater Fresno
500-kV & 230-kV System

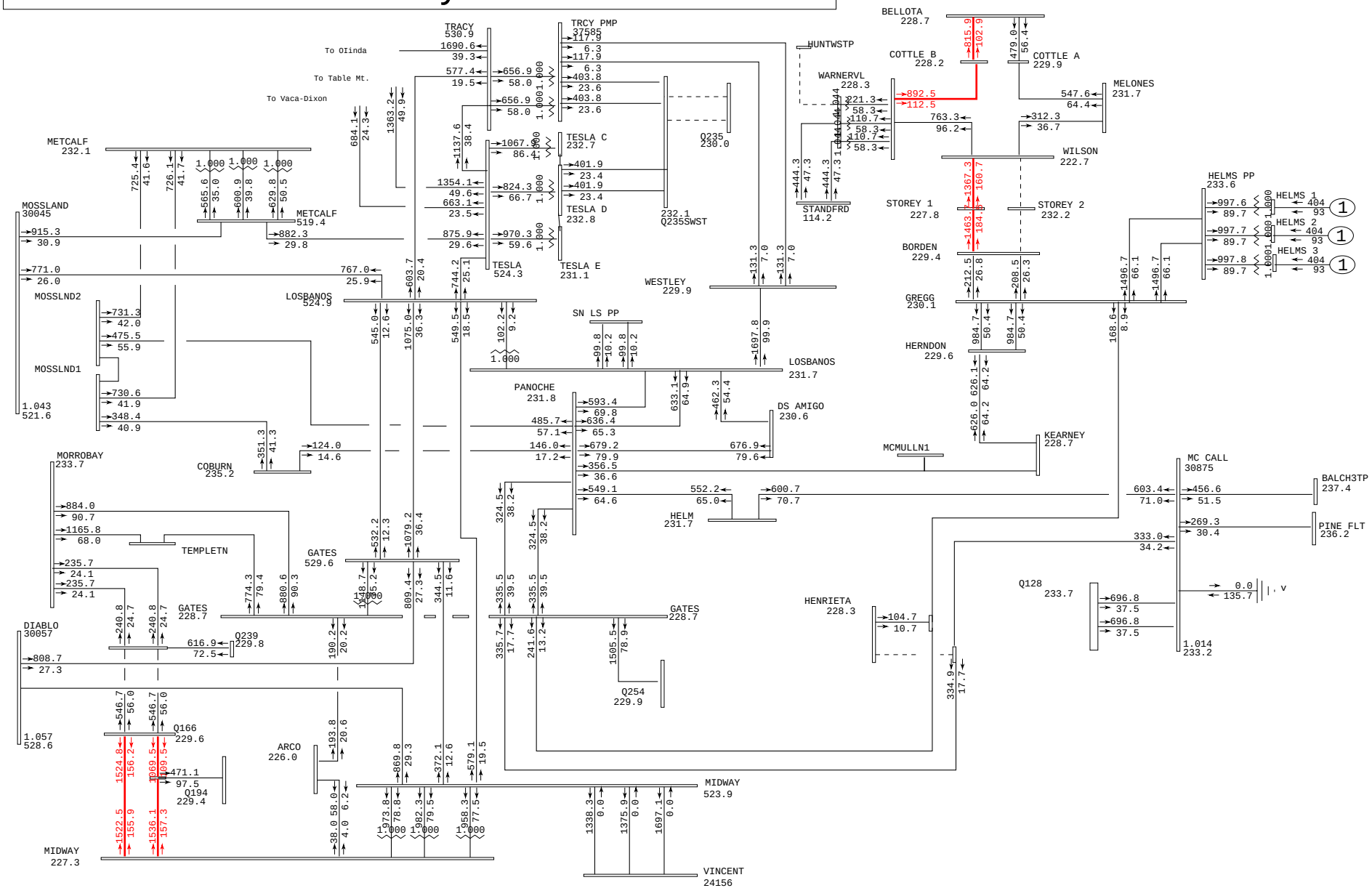

General Electric International, Inc. PSLF Program Wed Oct 01 08:22:59 2008 2013sumpk_q272_pre.sav

	PG&E 2007 CASE SERIES: 2013 San Joaquin Valley Summer Peak Pre-Project Case	Plot 10-Outage: Wilson-Borden #2 230kV	amps/rate
	PATH15= 1964 MW(S-N) PATH26= 3996 MW(N-S) PDCI= 2500 MW(N-S) COI= 4790 MW(N-S)		gfres2.drw
	Q272 150 MW GWF Henrietta 70 kV IFS - 2013 Summer Peak Pre-Project FY		Rating = 2

Greater Fresno
500-kV & 230-kV System

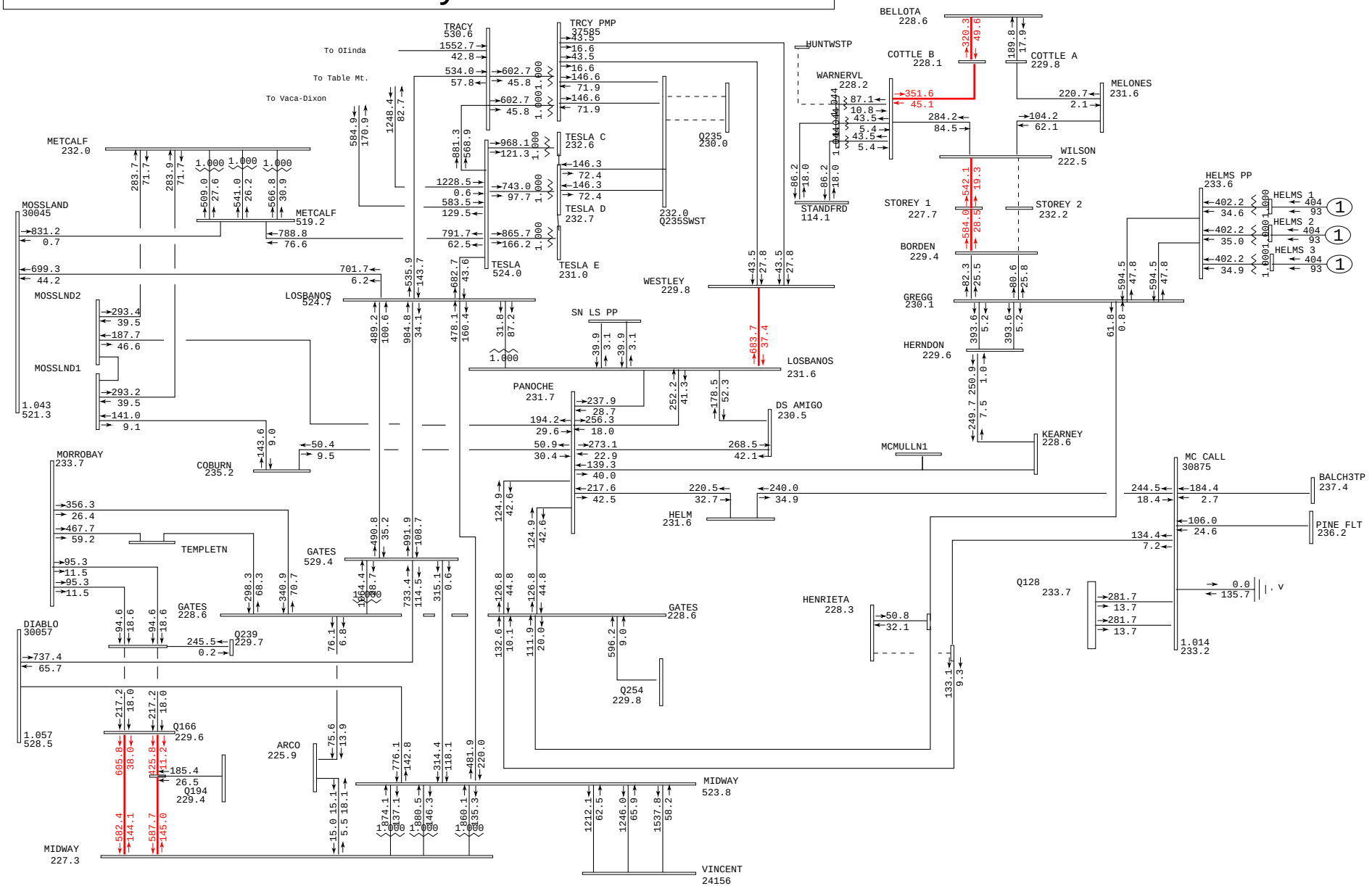

General Electric International, Inc. PSLF Program Wed Oct 01 08:23:01 2008 2013sumpk_q272_pst_v2.sav

	PG&E 2007 CASE SERIES: 2013 San Joaquin Valley Summer Peak Post-Project Case PATH15= 1955 MW(S-N) PATH26= 4001 MW(N-S) PDCI= 2500 MW(N-S) COI= 4795 MW(N-S) Q272 150 MW at GWF Henrietta 70 kV IFS - 2013 Summer Peak Post-Project FY	Plot 11-Outage: Wilson-Borden #2 230kV	MW/MVAR gfres2.drw Rating = 2

Greater Fresno
500-kV & 230-kV System

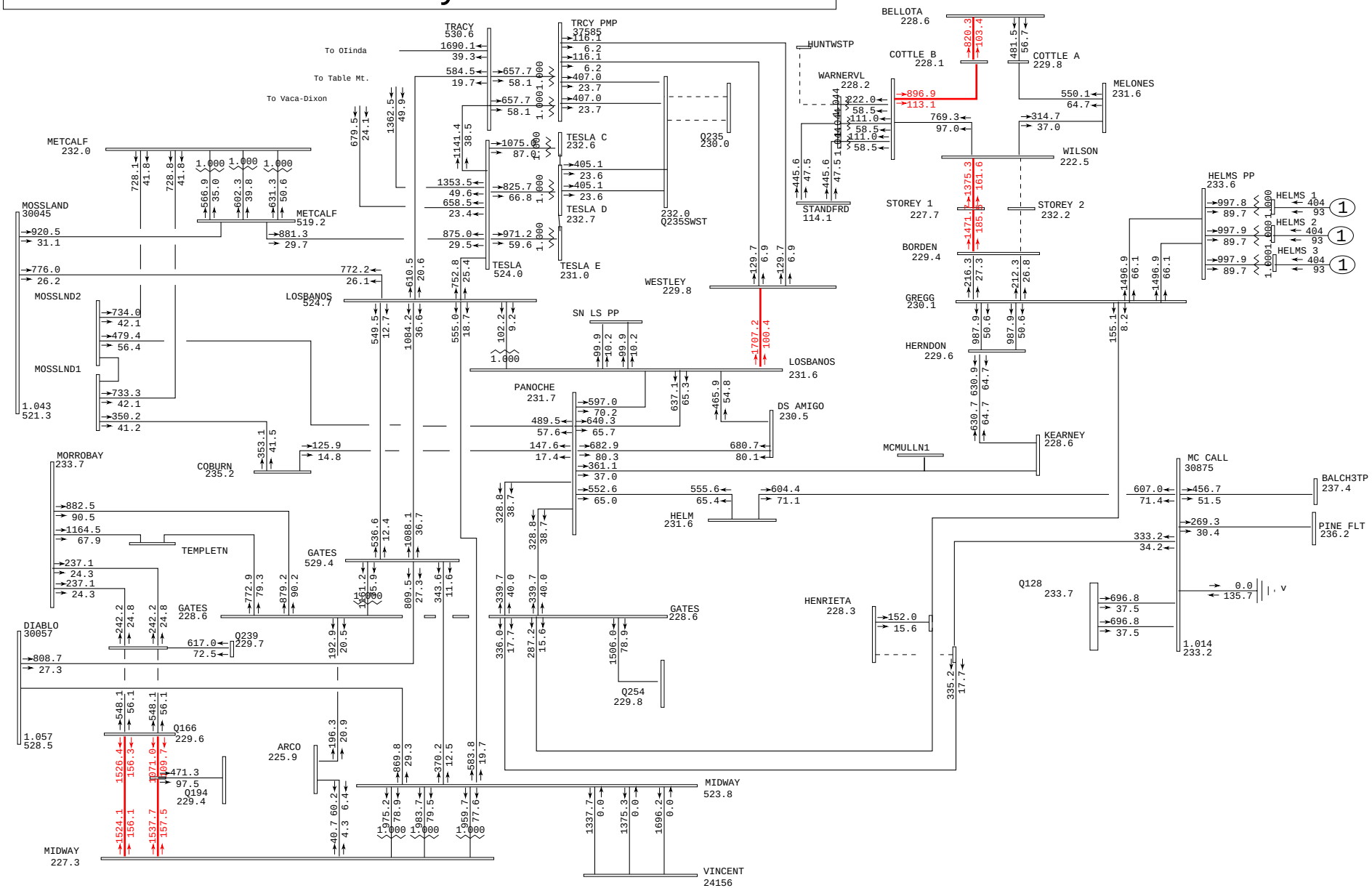

General Electric International, Inc. PSLF Program Wed Oct 01 08:23:03 2008 2013sumpk_q272_pst_v2.sav

	PG&E 2007 CASE SERIES: 2013 San Joaquin Valley Summer Peak Post-Project Case PATH15= 1955 MW(S-N) PATH26= 4001 MW(N-S) PDCI= 2500 MW(N-S) COI= 4795 MW(N-S) Q272 150 MW at GWF Henrietta 70 kV IFS - 2013 Summer Peak Post-Project FY	Plot 12-Outage: Wilson-Borden #2 230kV	amps/rate gfres2.drw Rating = 2

Greater Fresno
500-kV & 230-kV System

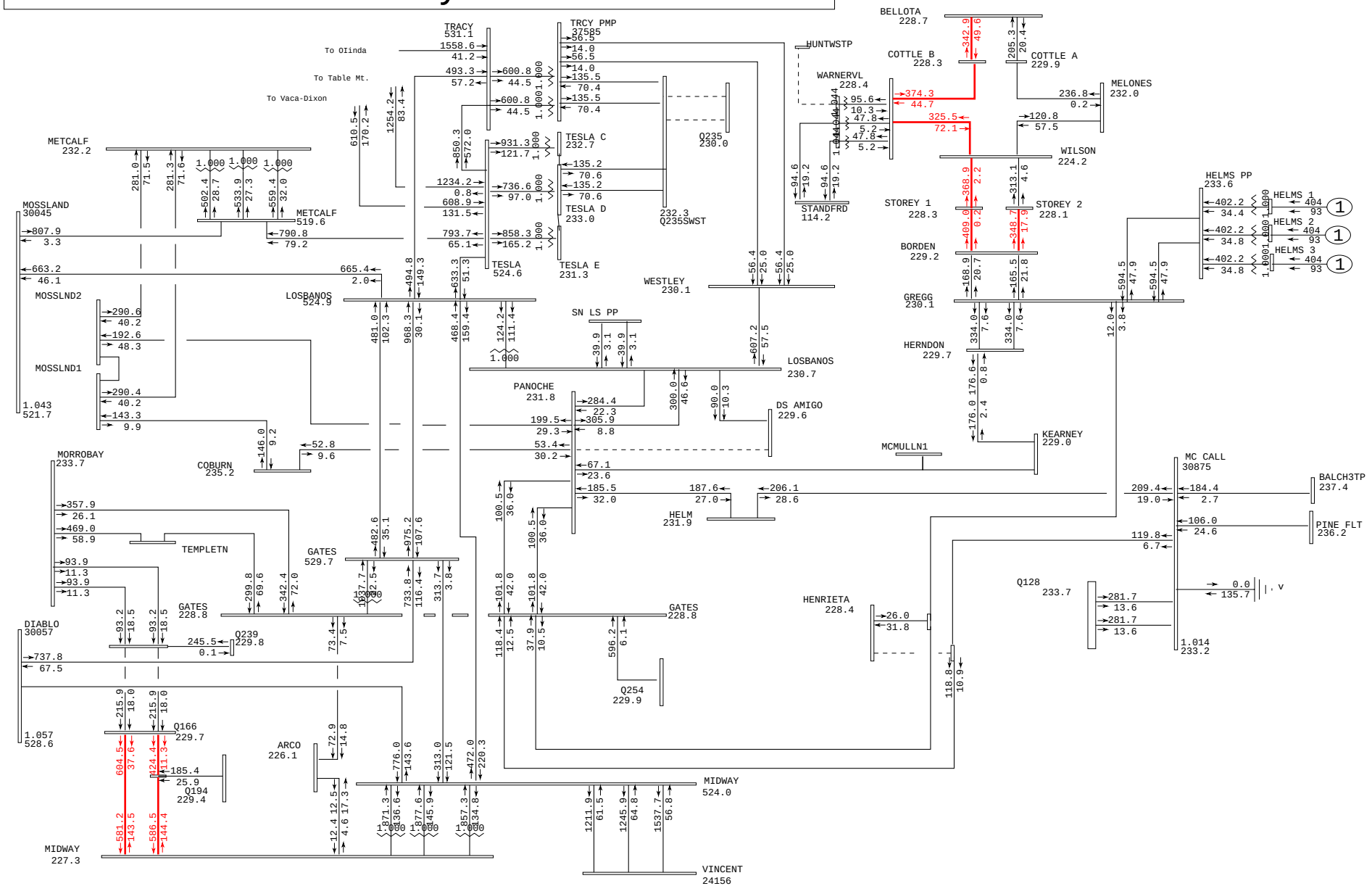

General Electric International, Inc. PSLF Program Wed Oct 01 08:23:04 2008 2013sumpk_q272_pre.sav

	PG&E 2007 CASE SERIES: 2013 San Joaquin Valley Summer Peak Pre-Project Case PATH15= 1964 MW(S-N) PATH26= 3996 MW(N-S) PDCI= 2500 MW(N-S) COI= 4790 MW(N-S) Q272 150 MW GWF Henrietta 70 kV IFS - 2013 Summer Peak Pre-Project FY	Plot 13-Outage: Dos Amigos-Panoche 230kV and Exchequer	MW/MVAR gfres2.drw Rating = 2

Greater Fresno
500-kV & 230-kV System

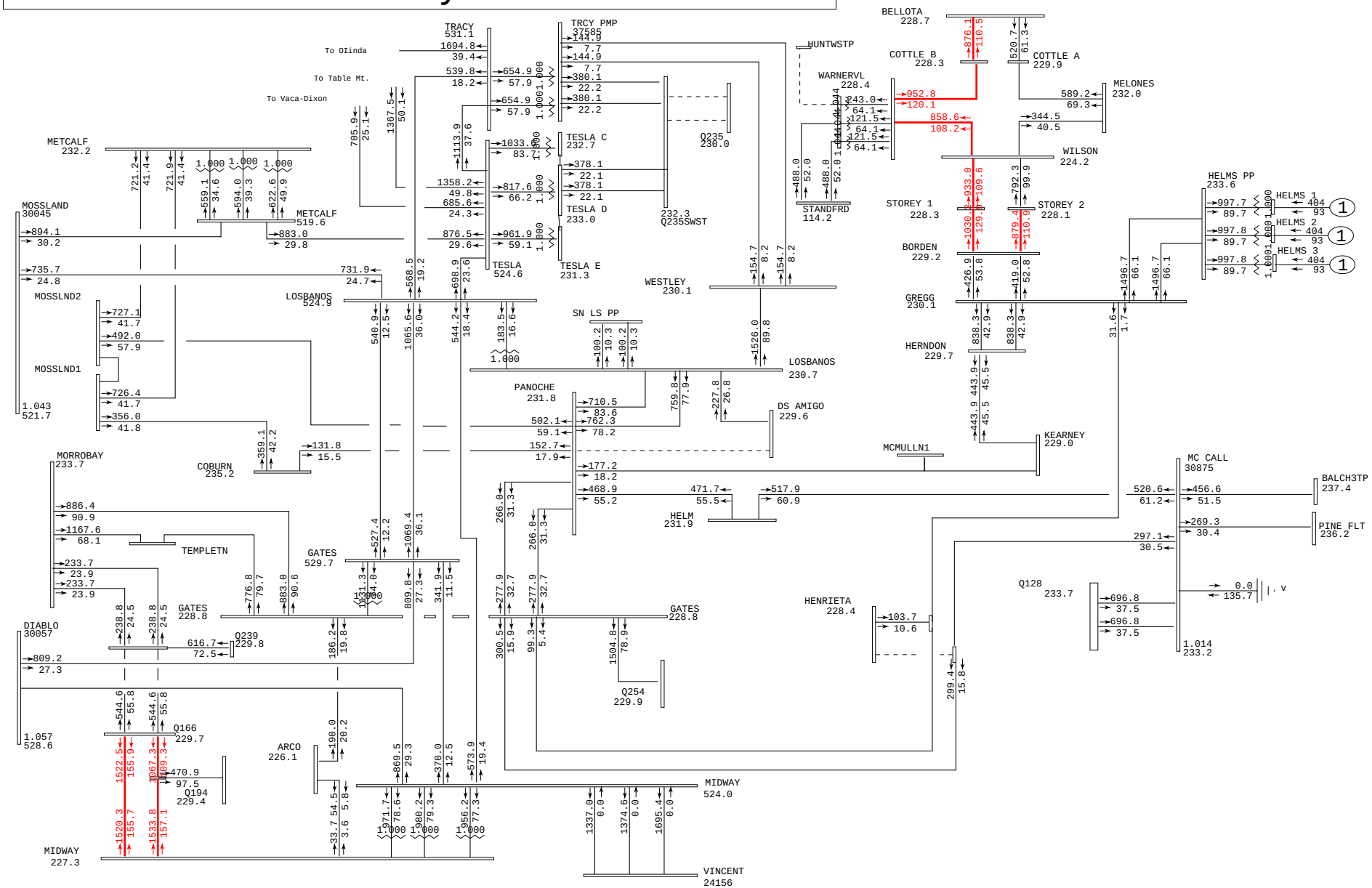

General Electric International, Inc. PSLF Program Wed Oct 01 08:23:05 2008 2013sumpk_q272_pre.sav

	PG&E 2007 CASE SERIES: 2013 San Joaquin Valley Summer Peak Pre-Project Case PATH15= 1964 MW(S-N) PATH26= 3996 MW(N-S) PDCI= 2500 MW(N-S) COI= 4790 MW(N-S) Q272 150 MW GWF Henrietta 70 kV IFS - 2013 Summer Peak Pre-Project FY	Plot 14-Outage: Dos Amigos-Panoche 230kV and Exchequer	amps/rate gfres2.drw Rating = 2

Greater Fresno
500-kV & 230-kV System

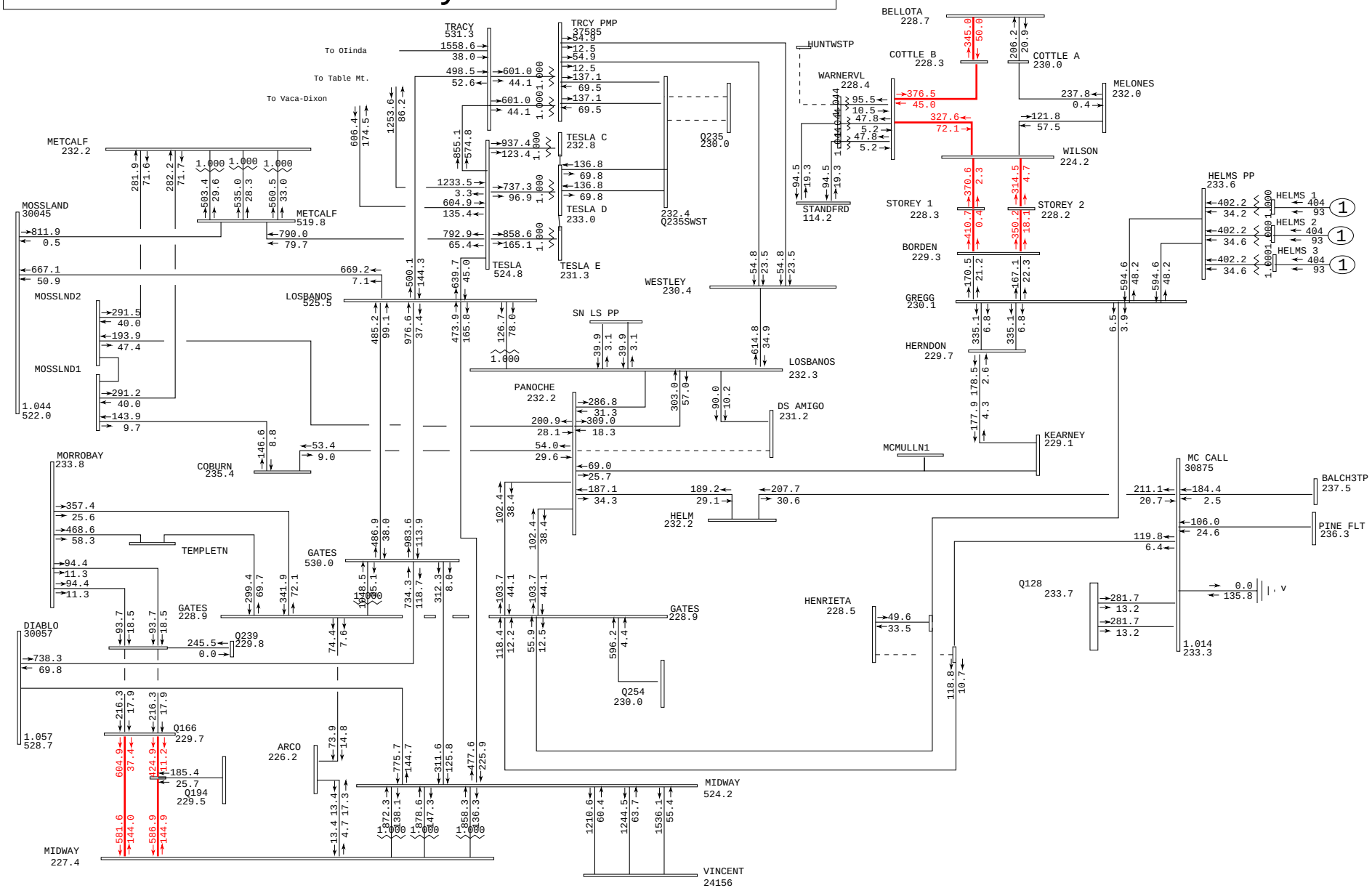

General Electric International, Inc. PSLF Program Wed Oct 01 08:23:07 2008 2013sumpk_q272_pst_v2.sav

	PG&E 2007 CASE SERIES: 2013 San Joaquin Valley Summer Peak Post-Project Case PATH15= 1955 MW(S-N) PATH26= 4001 MW(N-S) PDCI= 2500 MW(N-S) COI= 4795 MW(N-S) Q272 150 MW at GWF Henrietta 70 kV IFS - 2013 Summer Peak Post-Project FY	Plot 15-Outage: Dos Amigos-Panoche 230kV and Exchequer	MW/MVAR gfres2.drw Rating = 2

Greater Fresno
500-kV & 230-kV System

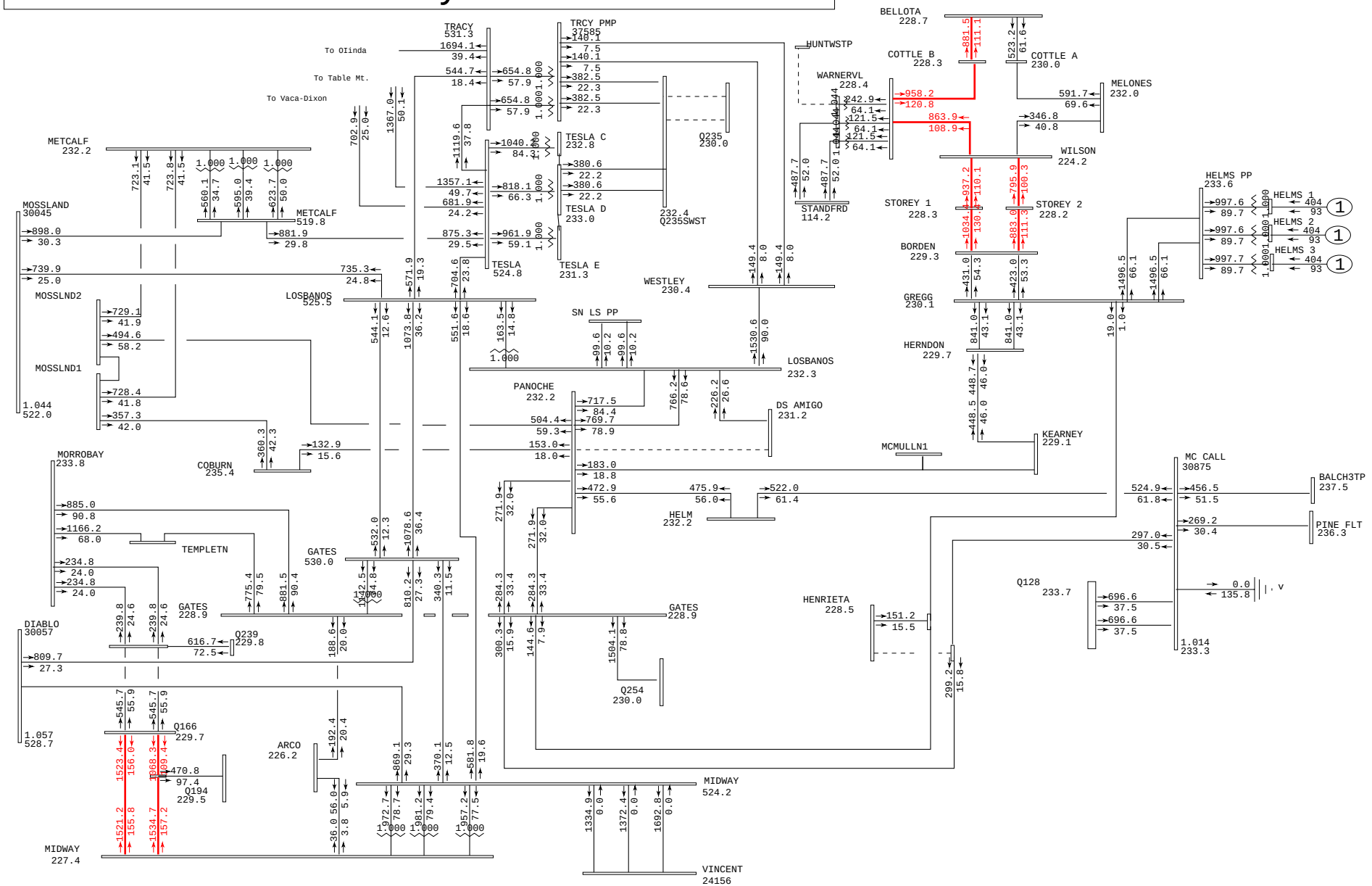

General Electric International, Inc. PSLF Program Wed Oct 01 08:23:08 2008 2013sumpk_q272_pst_v2.sav

	PG&E 2007 CASE SERIES: 2013 San Joaquin Valley Summer Peak Post-Project Case PATH15= 1955 MW(S-N) PATH26= 4001 MW(N-S) PDCI= 2500 MW(N-S) COI= 4795 MW(N-S) Q272 150 MW at GWF Henrietta 70 kV IFS - 2013 Summer Peak Post-Project FY	Plot 16-Outage: Dos Amigos-Panoche 230kV and Exchequer	amps/rate gfres2.drw Rating = 2

Greater Fresno
500-kV & 230-kV System

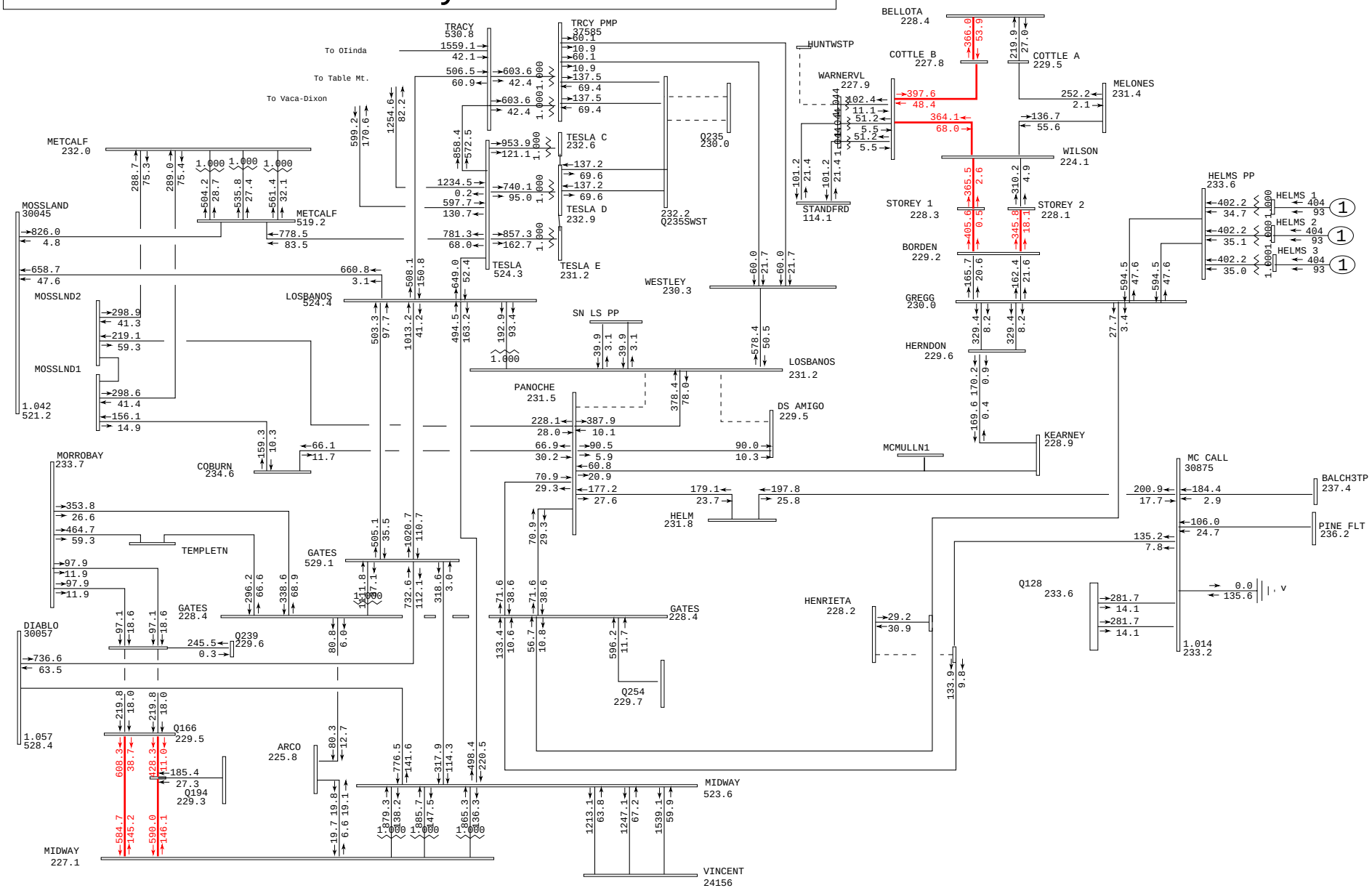

General Electric International, Inc. PSLF Program Wed Oct 01 08:23:10 2008 2013sumpk_q272_pre.sav

	PG&E 2007 CASE SERIES: 2013 San Joaquin Valley Summer Peak Pre-Project Case	Plot 17-Outage: Los Banos-Panoche #2 & Dos Amigos 230kV Lines	MW/MVAR
	PATH15= 1964 MW(S-N) PATH26= 3996 MW(N-S) PDCI= 2500 MW(N-S) COI= 4790 MW(N-S)		gfres2.drw
	Q272 150 MW GWF Henrietta 70 kV IFS - 2013 Summer Peak Pre-Project FY		Rating = 2

Greater Fresno
500-kV & 230-kV System

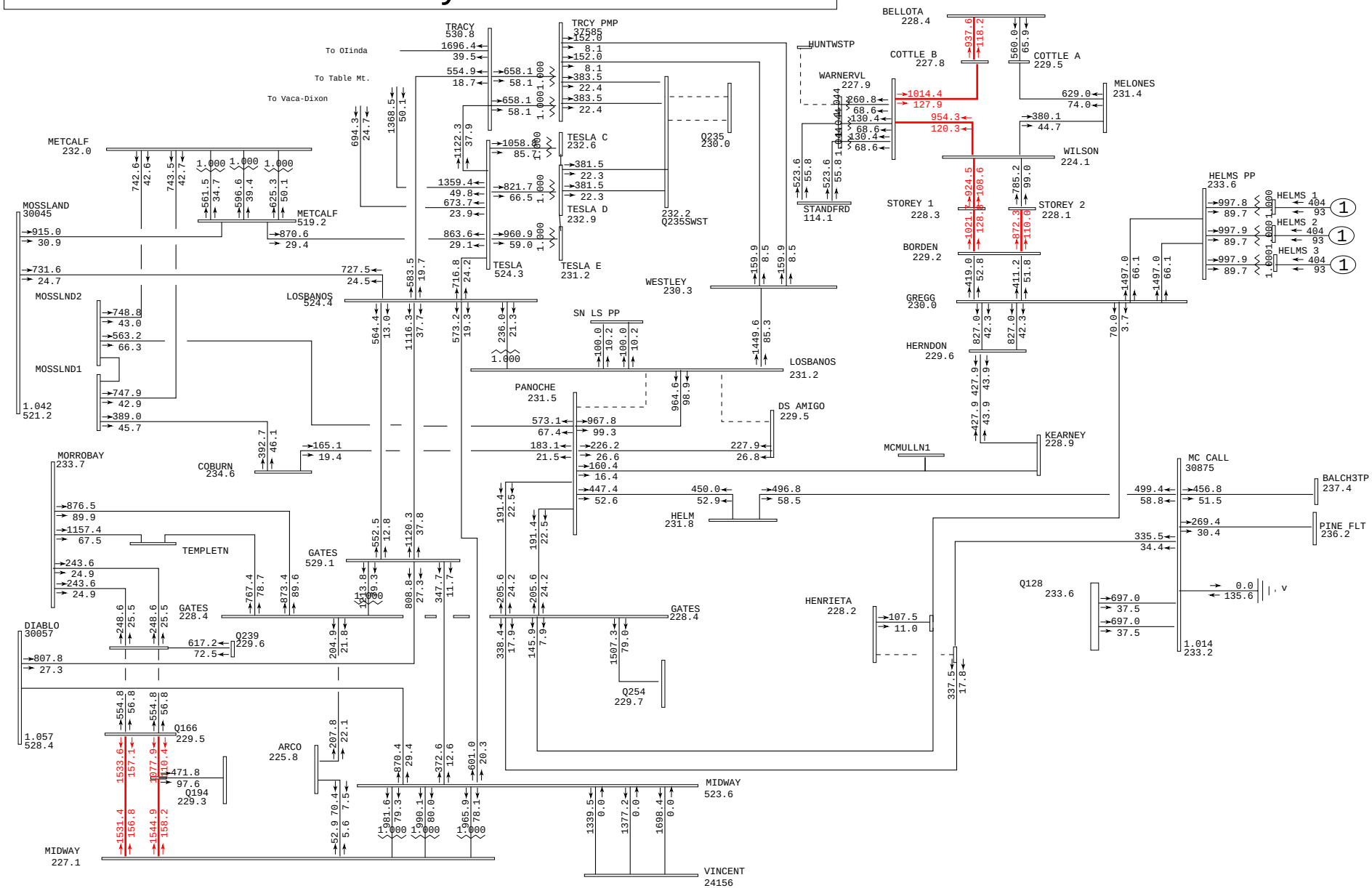

General Electric International, Inc. PSLF Program Wed Oct 01 08:23:11 2008 2013sumpk_q272_pre.sav

PG&E 2007 CASE SERIES: 2013 San Joaquin Valley Summer Peak Pre-Project Case PATH15= 1964 MW(S-N) PATH26= 3996 MW(N-S) PDCI= 2500 MW(N-S) COI= 4790 MW(N-S) Q272 150 MW GWF Henrietta 70 kV IFS - 2013 Summer Peak Pre-Project FY	Plot 18-Outage: Los Banos-Panoche #2 & Dos Amigos 230kV Lines	amps/rate gfres2.drw Rating = 2

Greater Fresno
500-kV & 230-kV System

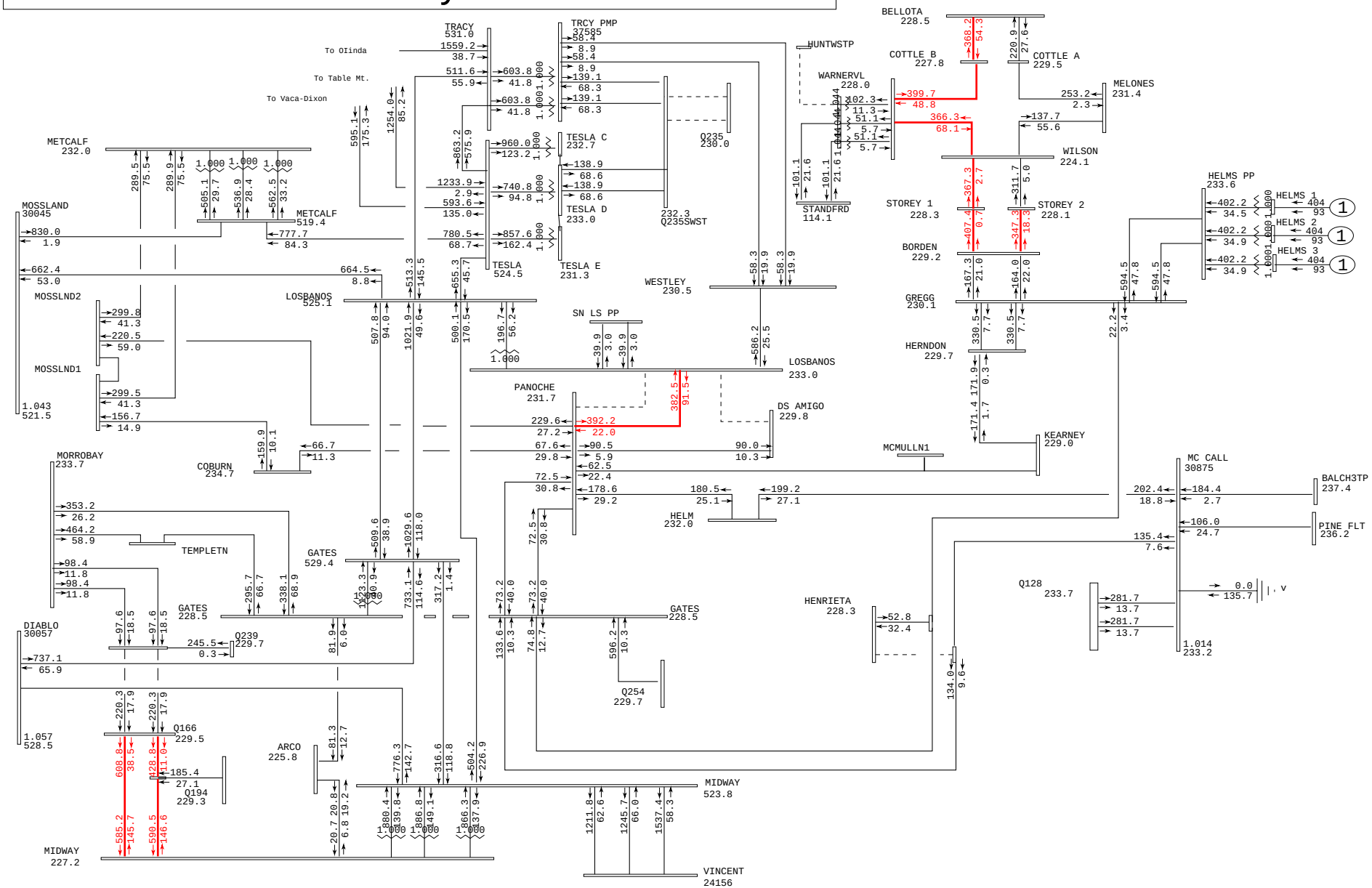

General Electric International, Inc. PSLF Program Wed Oct 01 08:23:13 2008 2013sumpk_q272_pst_v2.sav

	PG&E 2007 CASE SERIES: 2013 San Joaquin Valley Summer Peak Post-Project Case PATH15= 1955 MW(S-N) PATH26= 4001 MW(N-S) PDCI= 2500 MW(N-S) COI= 4795 MW(N-S) Q272 150 MW at GWF Henrietta 70 kV IFS - 2013 Summer Peak Post-Project FY	Plot 19-Outage: Los Banos-Panoche #2 & Dos Amigos 230kV Lines	MW/MVAR gfres2.drw Rating = 2

Greater Fresno
500-kV & 230-kV System

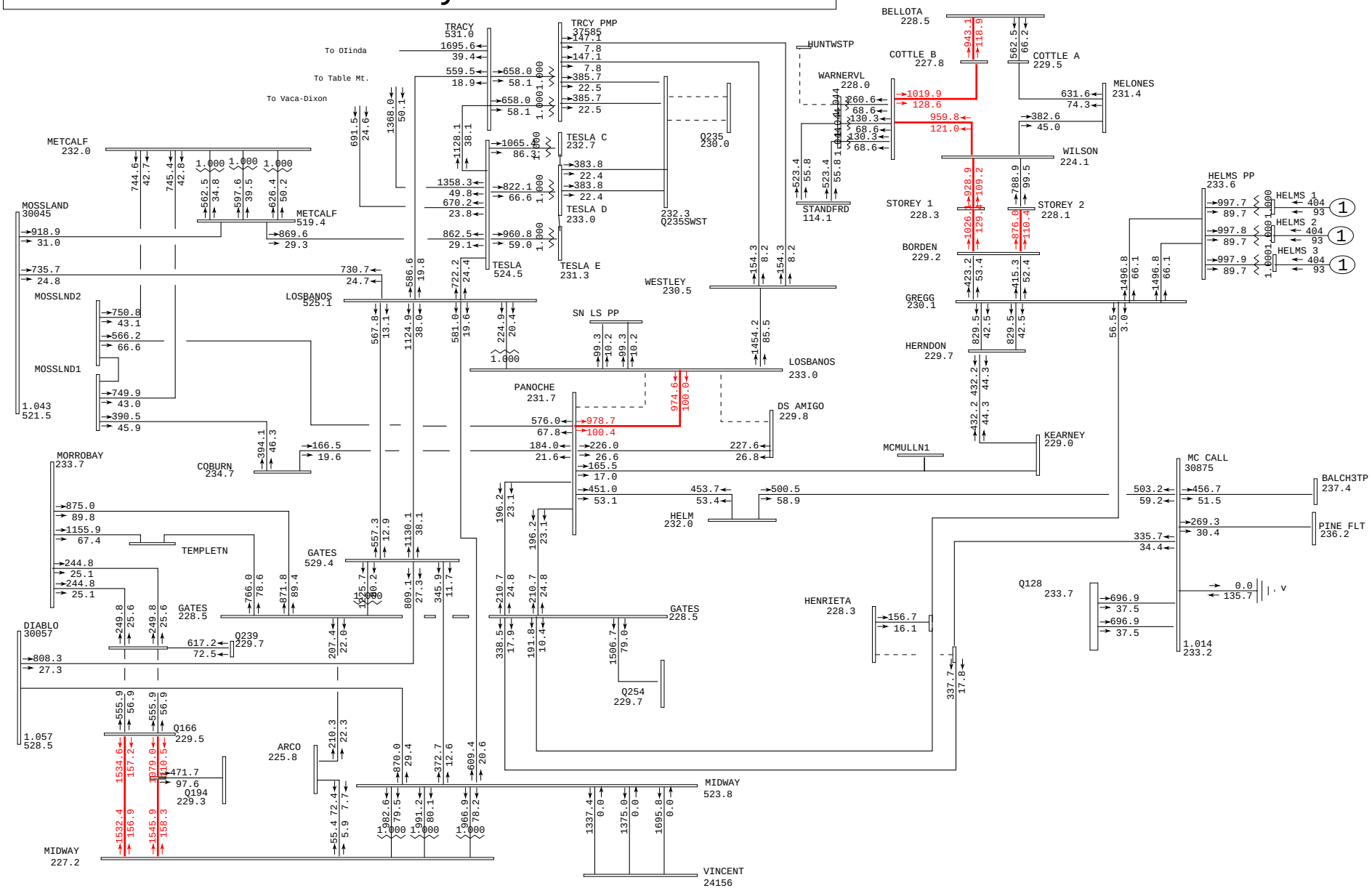

General Electric International, Inc. PSLF Program Wed Oct 01 08:23:14 2008 2013sumpk_q272_pst_v2.sav

PG&E 2007 CASE SERIES: 2013 San Joaquin Valley Summer Peak Post-Project Case PATH15= 1955 MW(S-N) PATH26= 4001 MW(N-S) PDCI= 2500 MW(N-S) COI= 4795 MW(N-S) Q272 150 MW at GWF Henrietta 70 kV IFS - 2013 Summer Peak Post-Project FY	Plot 20-Outage: Los Banos-Panoche #2 & Dos Amigos 230kV Lines	amps/rate gfres2.drw Rating = 2

Greater Fresno
500-kV & 230-kV System

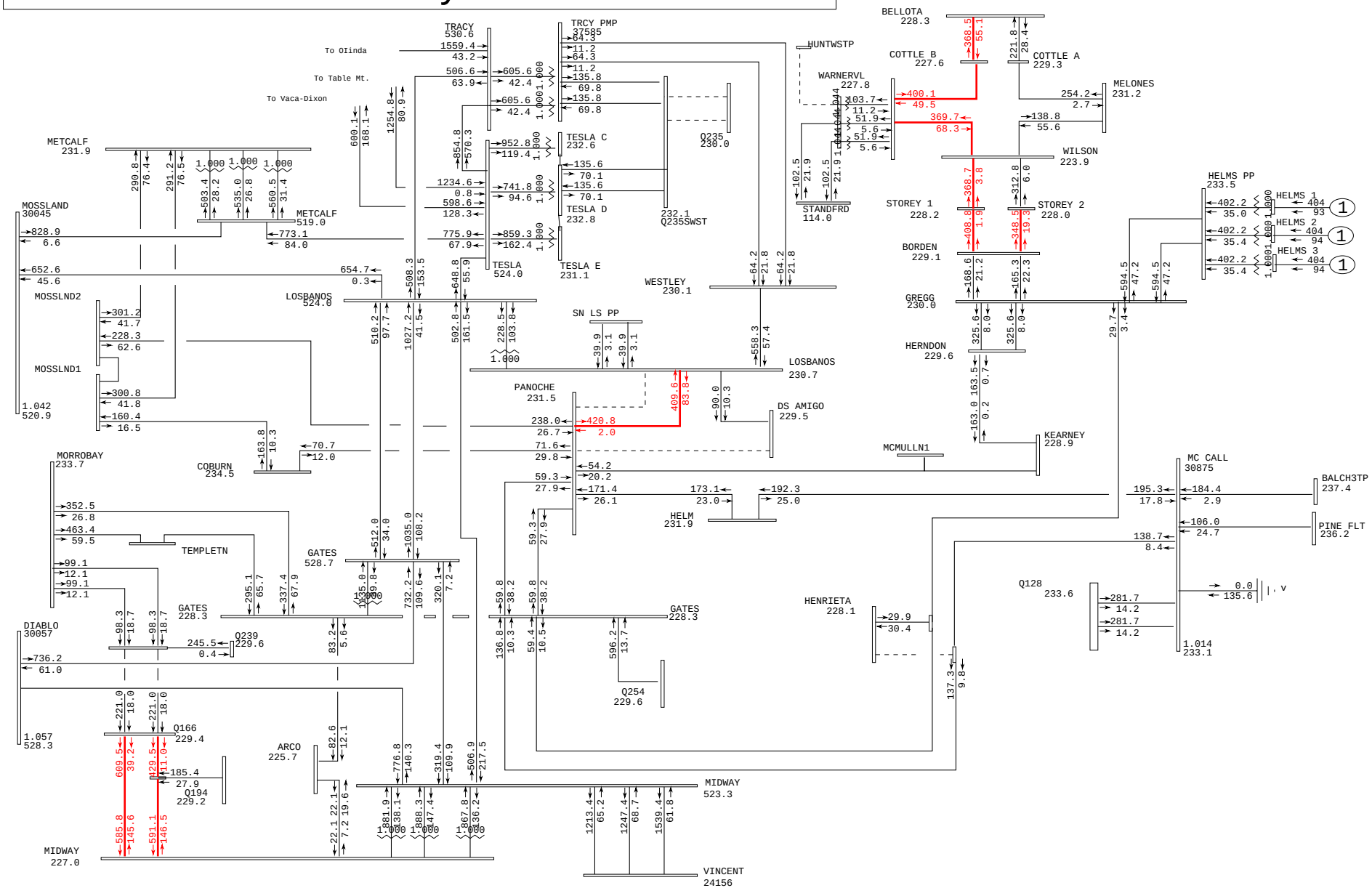

General Electric International, Inc. PSLF Program Wed Oct 01 08:23:16 2008 2013sumpk_q272_pre.sav

	PG&E 2007 CASE SERIES: 2013 San Joaquin Valley Summer Peak Pre-Project Case PATH15= 1964 MW(S-N) PATH26= 3996 MW(N-S) PDCI= 2500 MW(N-S) COI= 4790 MW(N-S) Q272 150 MW GWF Henrietta 70 kV IFS - 2013 Summer Peak Pre-Project FY	Plot 21-Outage: Panoche-Los Banos #2 & Dos Amigos 230kV Lines	MW/MVAR gfres2.drw Rating = 2

Greater Fresno
500-kV & 230-kV System

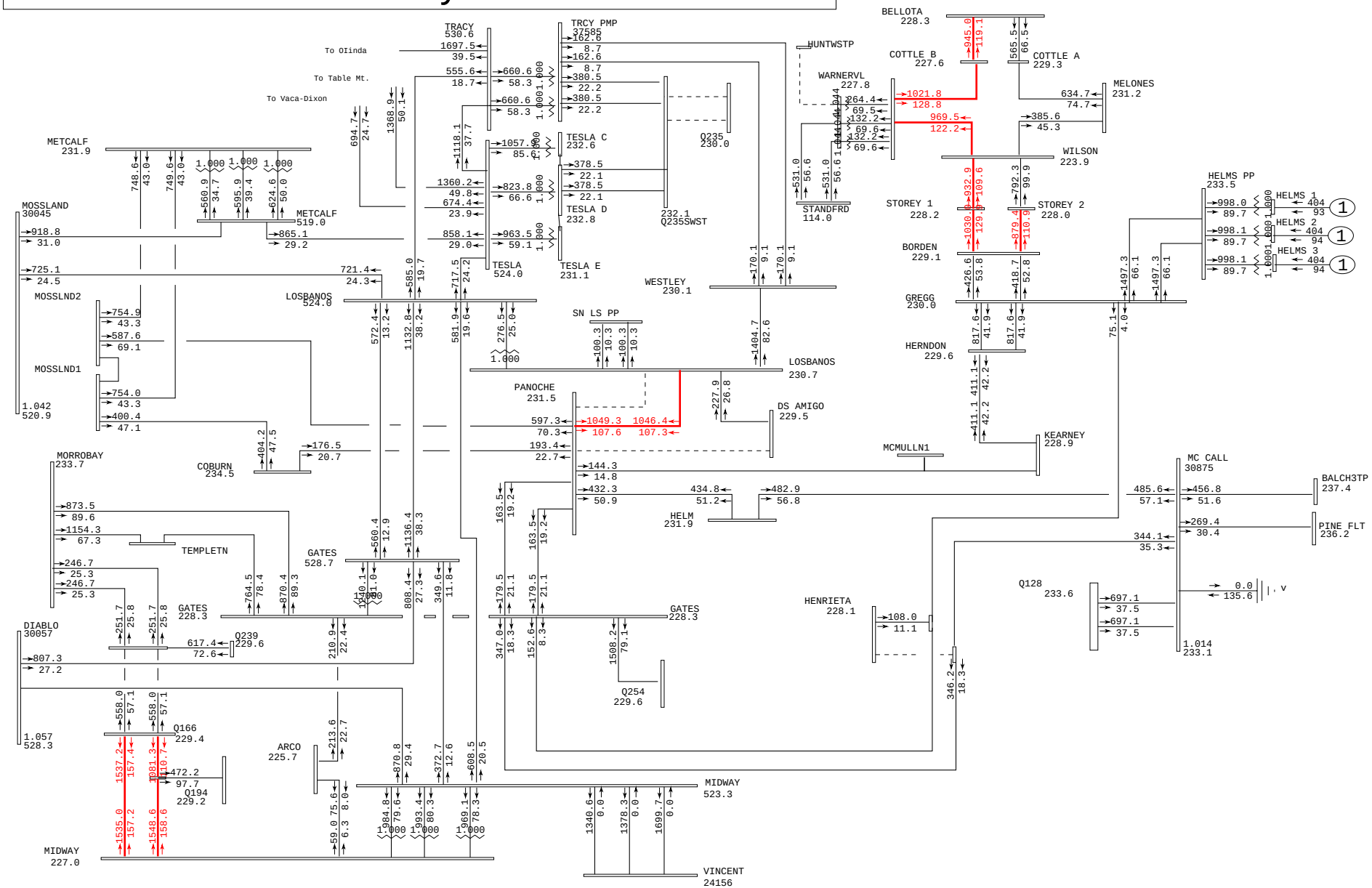

General Electric International, Inc. PSLF Program Wed Oct 01 08:23:17 2008 2013sumpk_q272_pre.sav

	PG&E 2007 CASE SERIES: 2013 San Joaquin Valley Summer Peak Pre-Project Case PATH15= 1964 MW(S-N) PATH26= 3996 MW(N-S) PDCI= 2500 MW(N-S) COI= 4790 MW(N-S) Q272 150 MW GWF Henrietta 70 kV IFS - 2013 Summer Peak Pre-Project FY	Plot 22-Outage: Panoche-Los Banos #2 & Dos Amigos 230kV Lines	amps/rate gfres2.drw Rating = 2

Greater Fresno
500-kV & 230-kV System

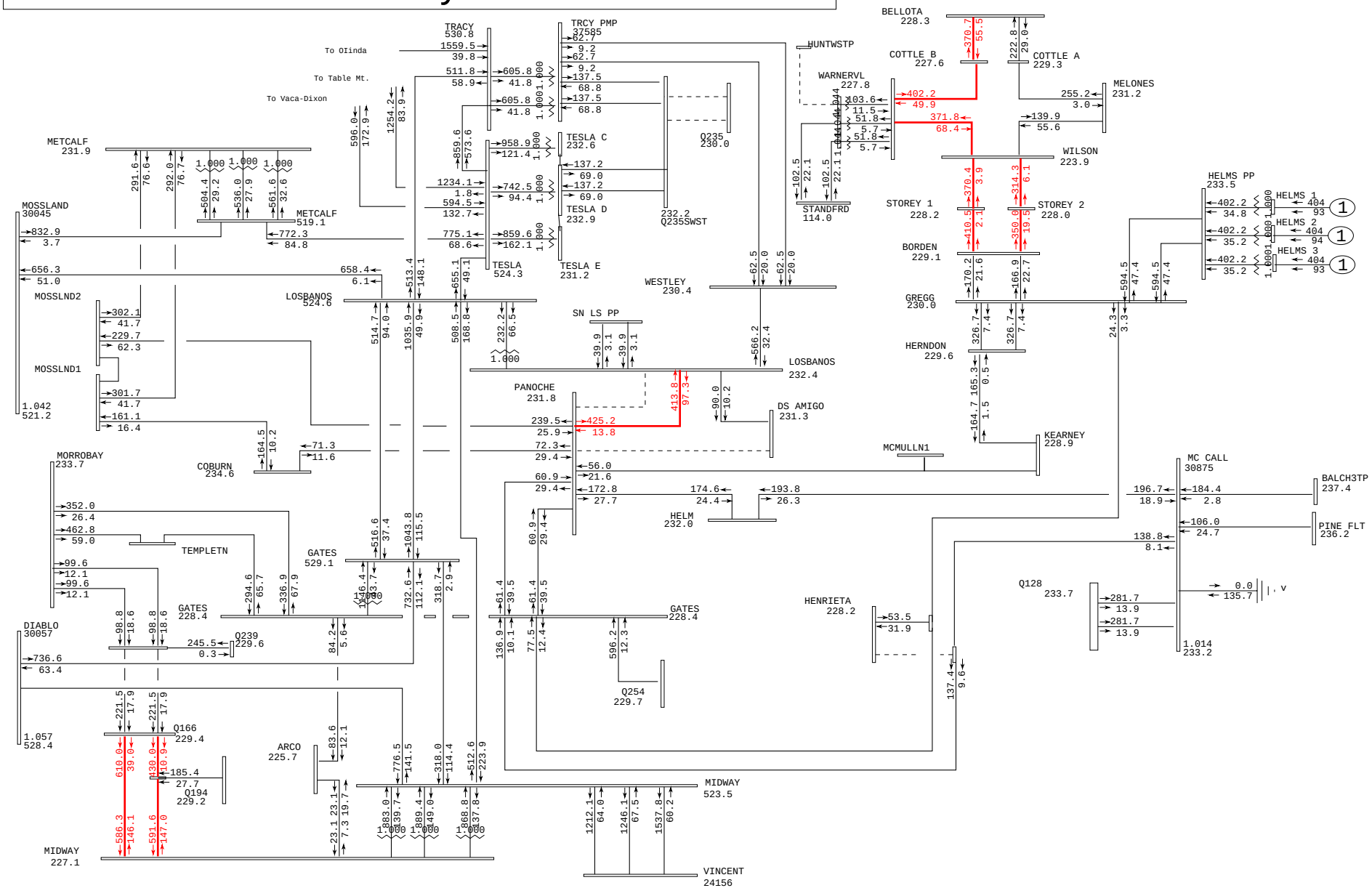

General Electric International, Inc. PSLF Program Wed Oct 01 08:23:19 2008 2013sumpk_q272_pst_v2.sav

	PG&E 2007 CASE SERIES: 2013 San Joaquin Valley Summer Peak Post-Project Case PATH15= 1955 MW(S-N) PATH26= 4001 MW(N-S) PDCI= 2500 MW(N-S) COI= 4795 MW(N-S) Q272 150 MW at GWF Henrietta 70 kV IFS - 2013 Summer Peak Post-Project FY	Plot 23-Outage: Panoche-Los Banos #2 & Dos Amigos 230kV Lines	MW/MVAR gfres2.drw Rating = 2

Greater Fresno
500-kV & 230-kV System

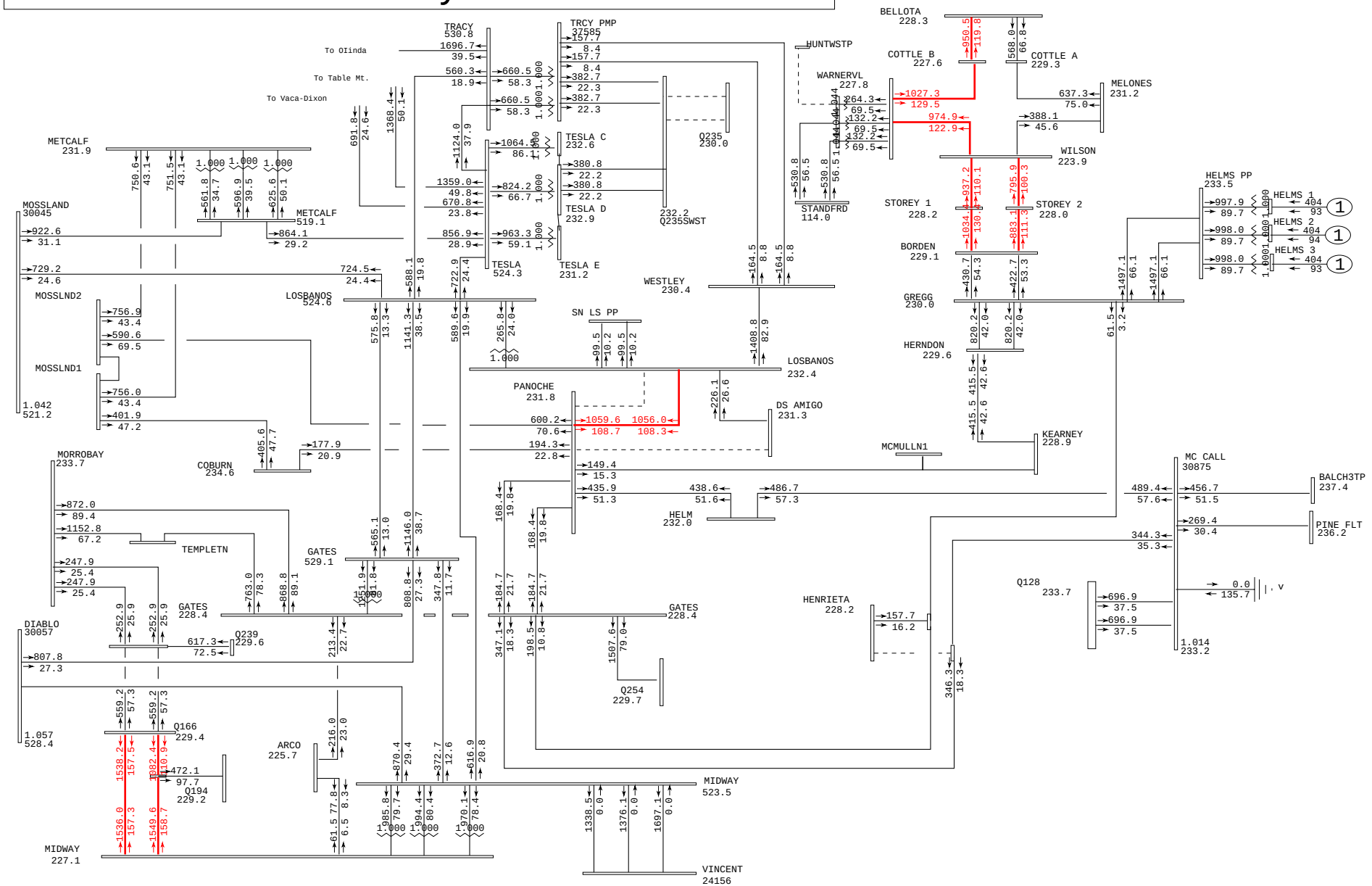

General Electric International, Inc. PSLF Program Wed Oct 01 08:23:20 2008 2013sumpk_q272_pst_v2.sav

	PG&E 2007 CASE SERIES: 2013 San Joaquin Valley Summer Peak Post-Project Case PATH15= 1955 MW(S-N) PATH26= 4001 MW(N-S) PDCI= 2500 MW(N-S) COI= 4795 MW(N-S) Q272 150 MW at GWF Henrietta 70 kV IFS - 2013 Summer Peak Post-Project FY	Plot 24-Outage: Panoche-Los Banos #2 & Dos Amigos 230kV Lines	amps/rate gfres2.drw Rating = 2

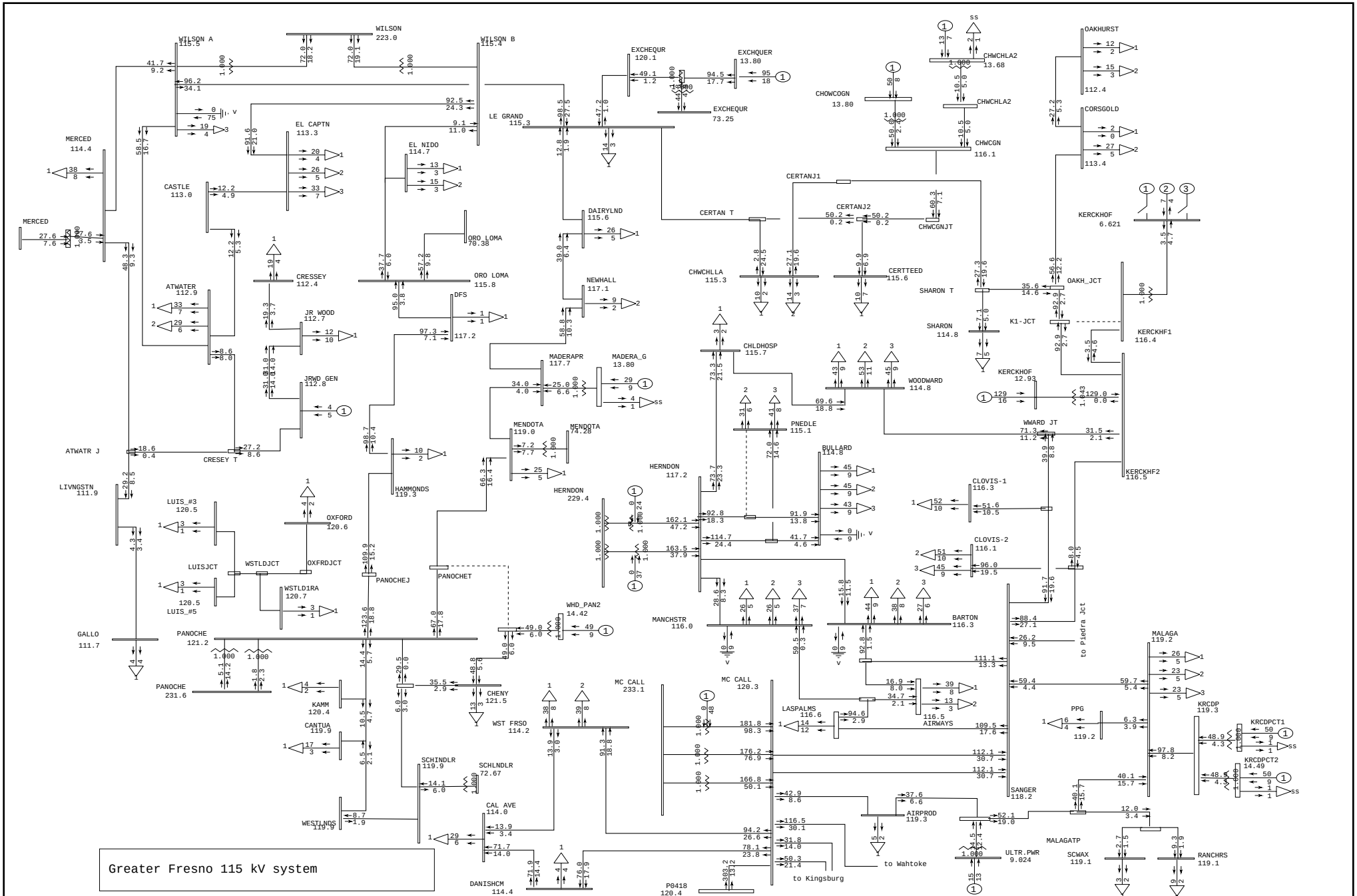

Greater Fresno 115 kV system

General Electric International, Inc. PSLF Program Wed Oct 01 08:23:22 2008 2013sumpk_q272_pre.sav

PG&E 2007 CASE SERIES: 2013 San Joaquin Valley Summer Peak Pre-Project Case PATH15= 1964 MW(S-N) PATH26= 3996 MW(N-S) PDCI= 2500 MW(N-S) COI= 4790 MW(N-S) Q272 150 MW GWF Henrietta 70 kV IFS - 2013 Summer Peak Pre-Project FY	Plot 25-Outage: Los Banos Bus Section 1	MW/MVAR gfres115.drw Rating = 2

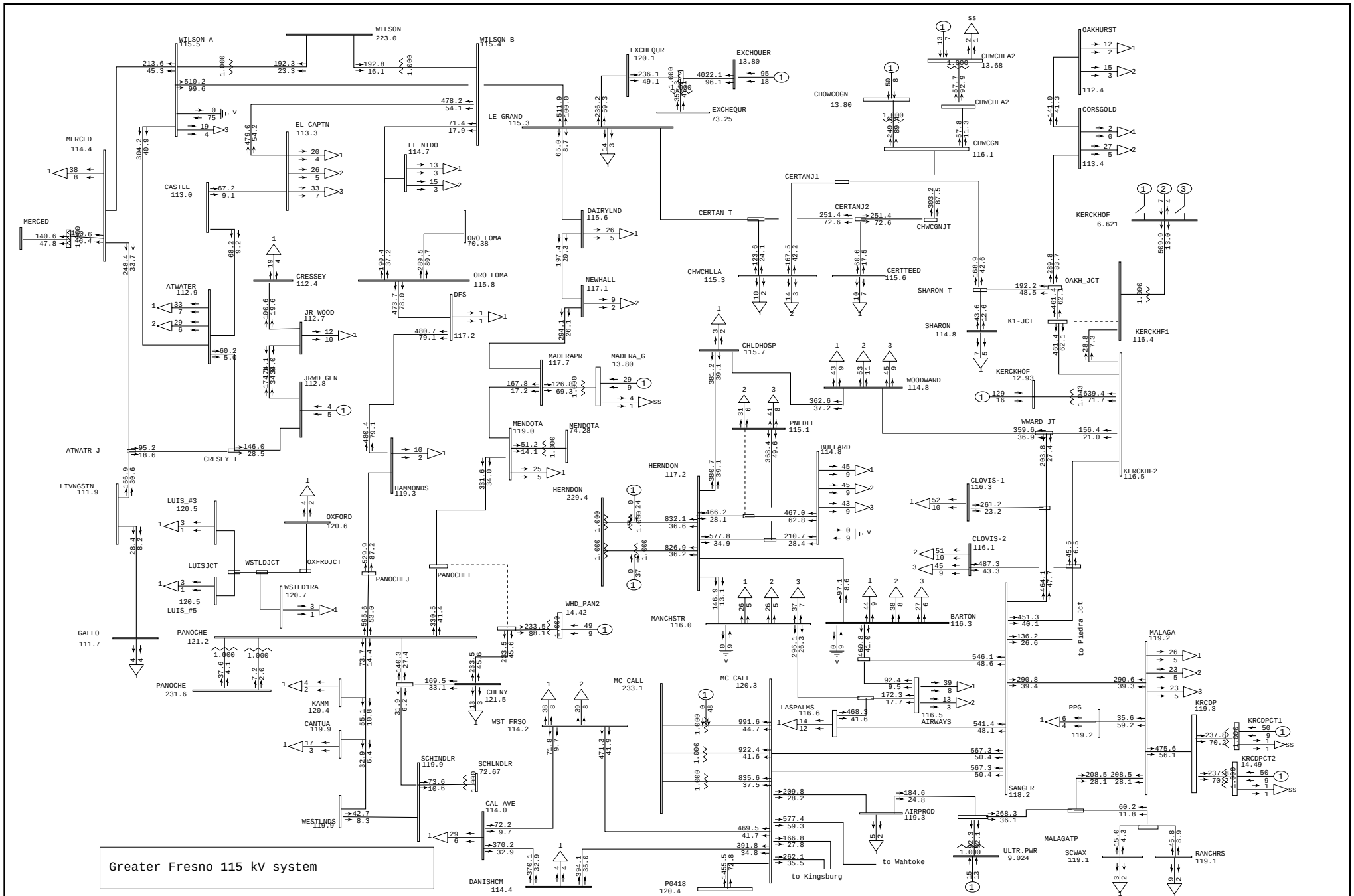

Greater Fresno 115 kV system

General Electric International, Inc. PSLF Program Wed Oct 01 08:23:24 2008 2013sumpk_q272_pre.sav

	PG&E 2007 CASE SERIES: 2013 San Joaquin Valley Summer Peak Pre-Project Case PATH15= 1964 MW(S-N) PATH26= 3996 MW(N-S) PDCI= 2500 MW(N-S) COI= 4790 MW(N-S) Q272 150 MW GWF Henrietta 70 kV IFS - 2013 Summer Peak Pre-Project FY	Plot 26-Outage: Los Banos Bus Section 1	amps/rate gfres115.drw Rating = 2

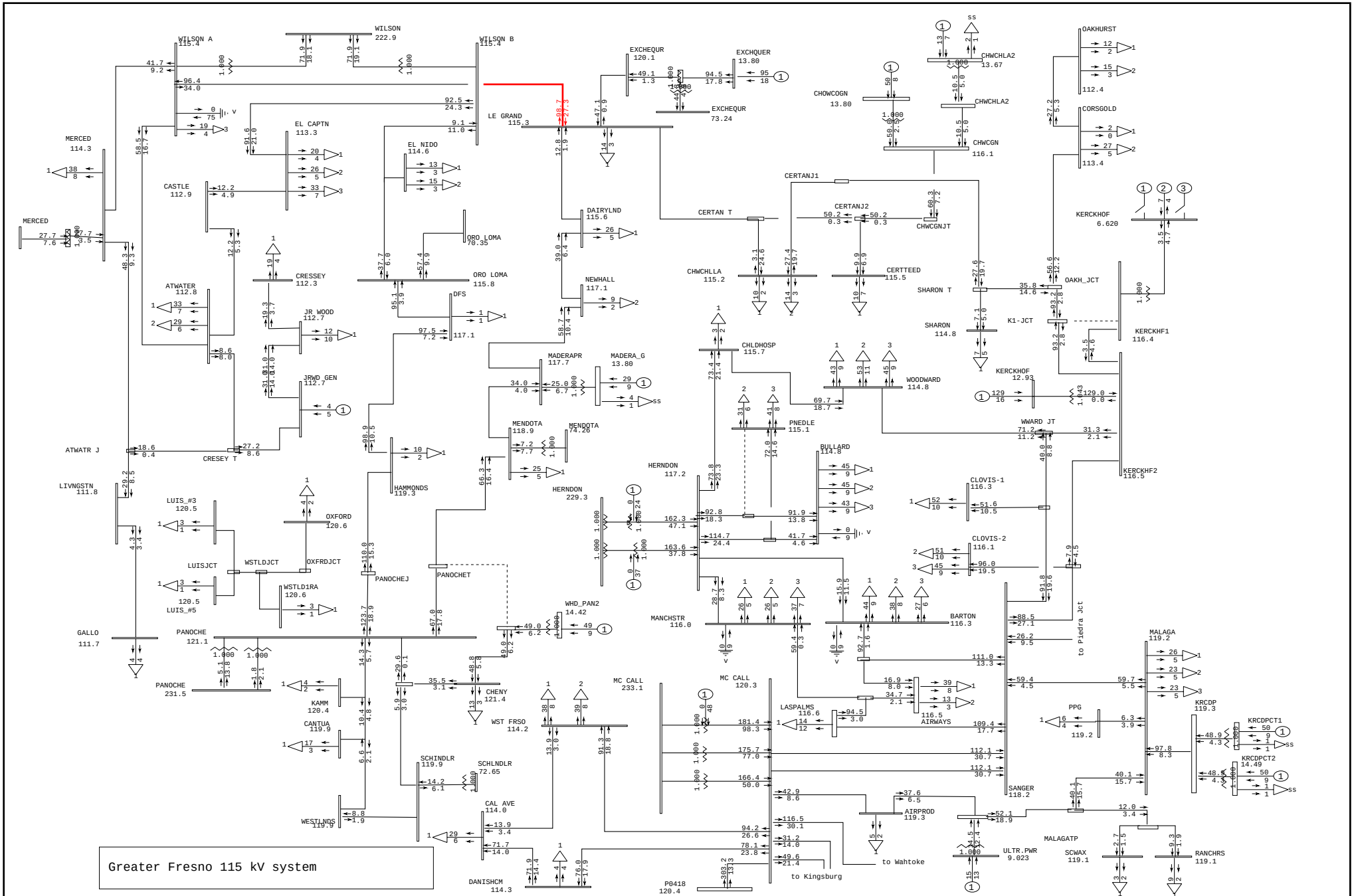

Greater Fresno 115 kV system

General Electric International, Inc. PSLF Program Wed Oct 01 08:23:26 2008 2013sumpk_q272_pst_v2.sav

PG&E 2007 CASE SERIES: 2013 San Joaquin Valley Summer Peak Post-Project Case PATH15= 1955 MW(S-N) PATH26= 4001 MW(N-S) PDCI= 2500 MW(N-S) COI= 4795 MW(N-S) Q272 150 MW at GWF Henrietta 70 kV IFS - 2013 Summer Peak Post-Project FY	Plot 27-Outage: Los Banos Bus Section 1	MW/MVAR gfres115.drw Rating = 2

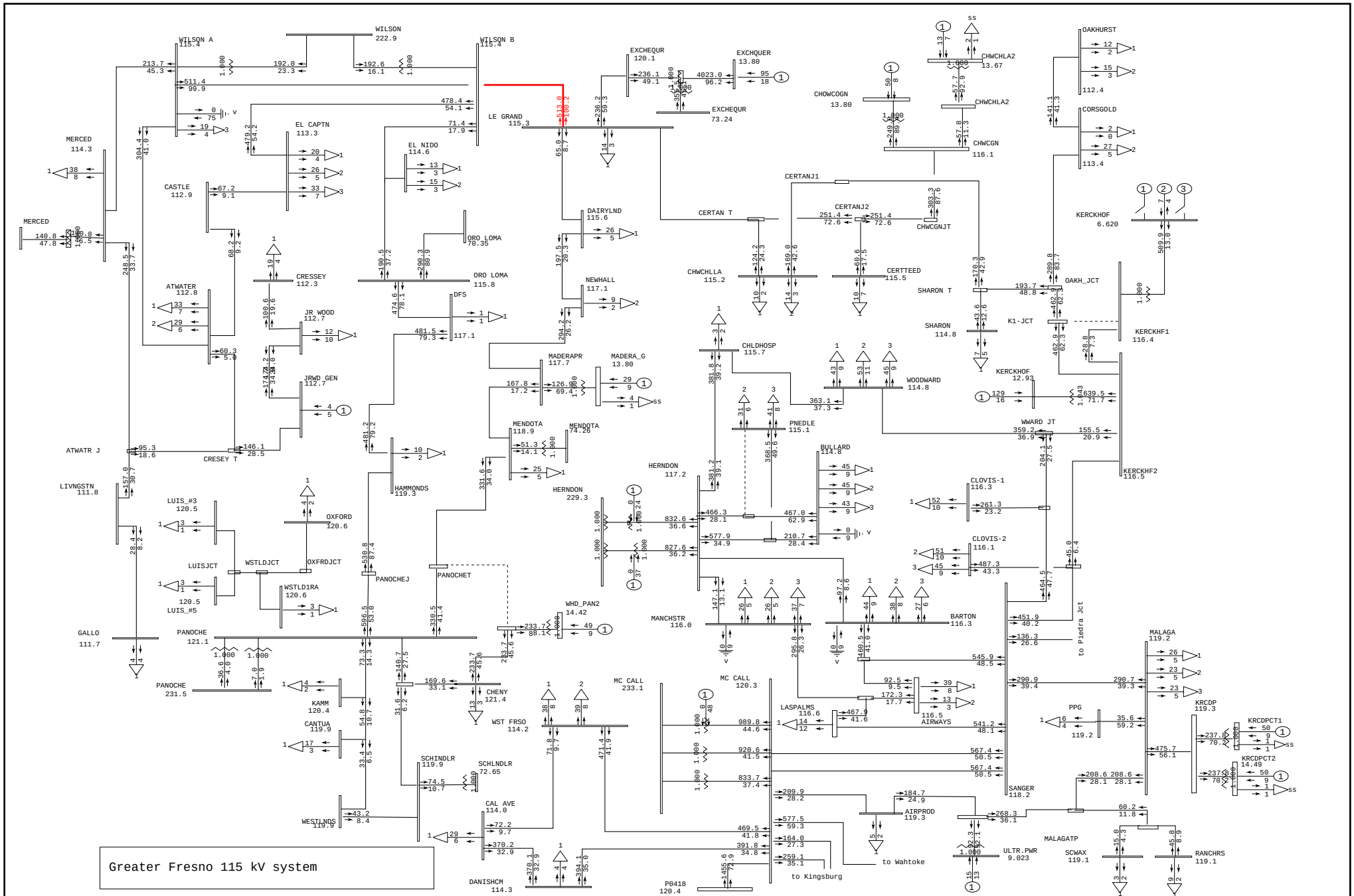

Greater Fresno 115 kV system

General Electric International, Inc. PSLF Program Wed Oct 01 08:23:28 2008 2013sumpk_q272_pst_v2.sav

	PG&E 2007 CASE SERIES: 2013 San Joaquin Valley Summer Peak Post-Project Case PATH15= 1955 MW(S-N) PATH26= 4001 MW(N-S) PDCI= 2500 MW(N-S) COI= 4795 MW(N-S) Q272 150 MW at GWF Henrietta 70 kV IFS - 2013 Summer Peak Post-Project FY	Plot 28-Outage: Los Banos Bus Section 1	amps/rate gfres115.drw Rating = 2

Greater Fresno
500-kV & 230-kV System

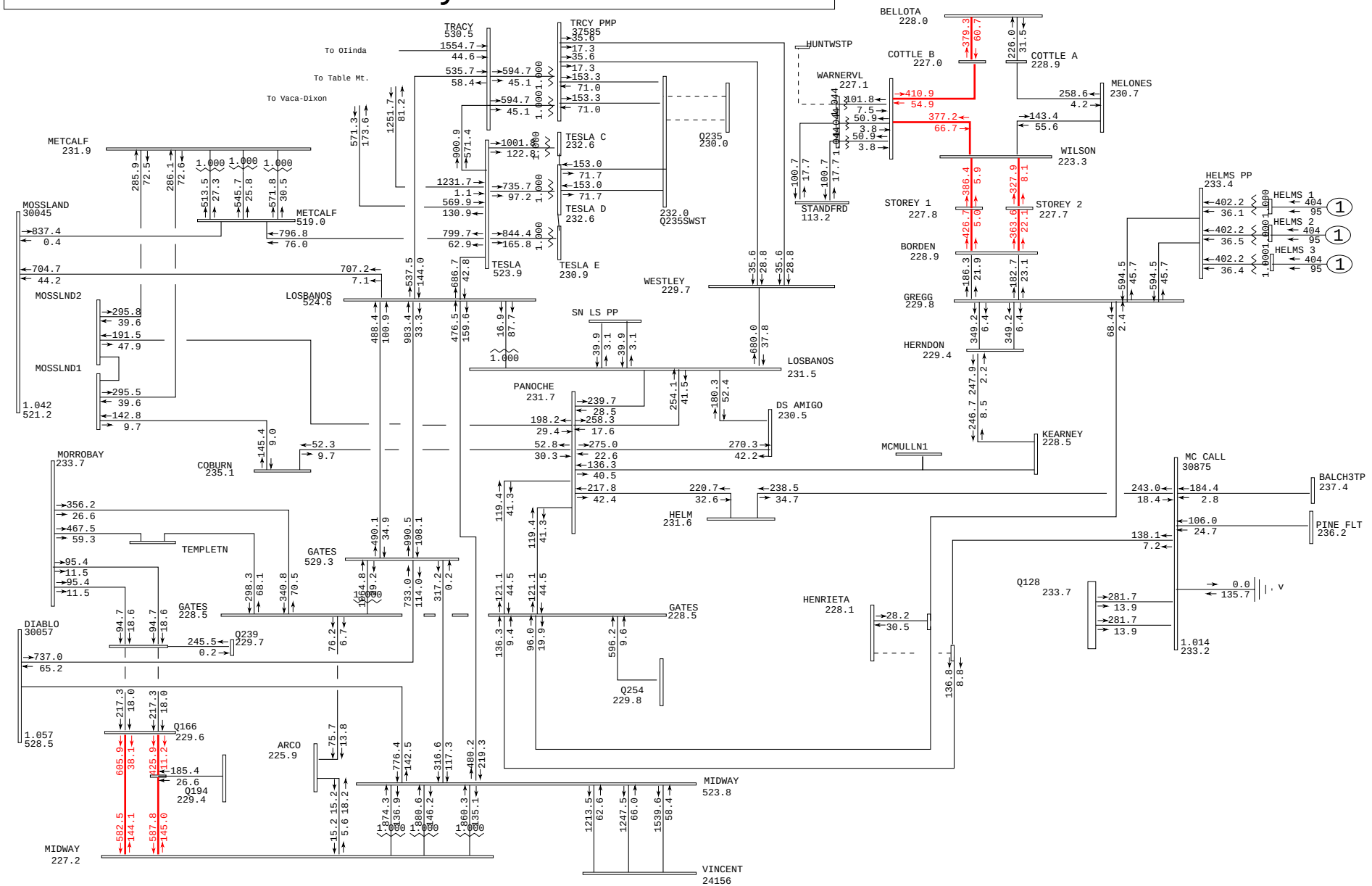

General Electric International, Inc. PSLF Program Wed Oct 01 08:23:29 2008 2013sumpk_q272_pre.sav

	PG&E 2007 CASE SERIES: 2013 San Joaquin Valley Summer Peak Pre-Project Case PATH15= 1964 MW(S-N) PATH26= 3996 MW(N-S) PDCI= 2500 MW(N-S) COI= 4790 MW(N-S) Q272 150 MW GWF Henrietta 70 kV IFS - 2013 Summer Peak Pre-Project FY	Plot 29-Outage: Ashlan Bus	MW/MVAR gfres2.drw Rating = 2

Greater Fresno
500-kV & 230-kV System

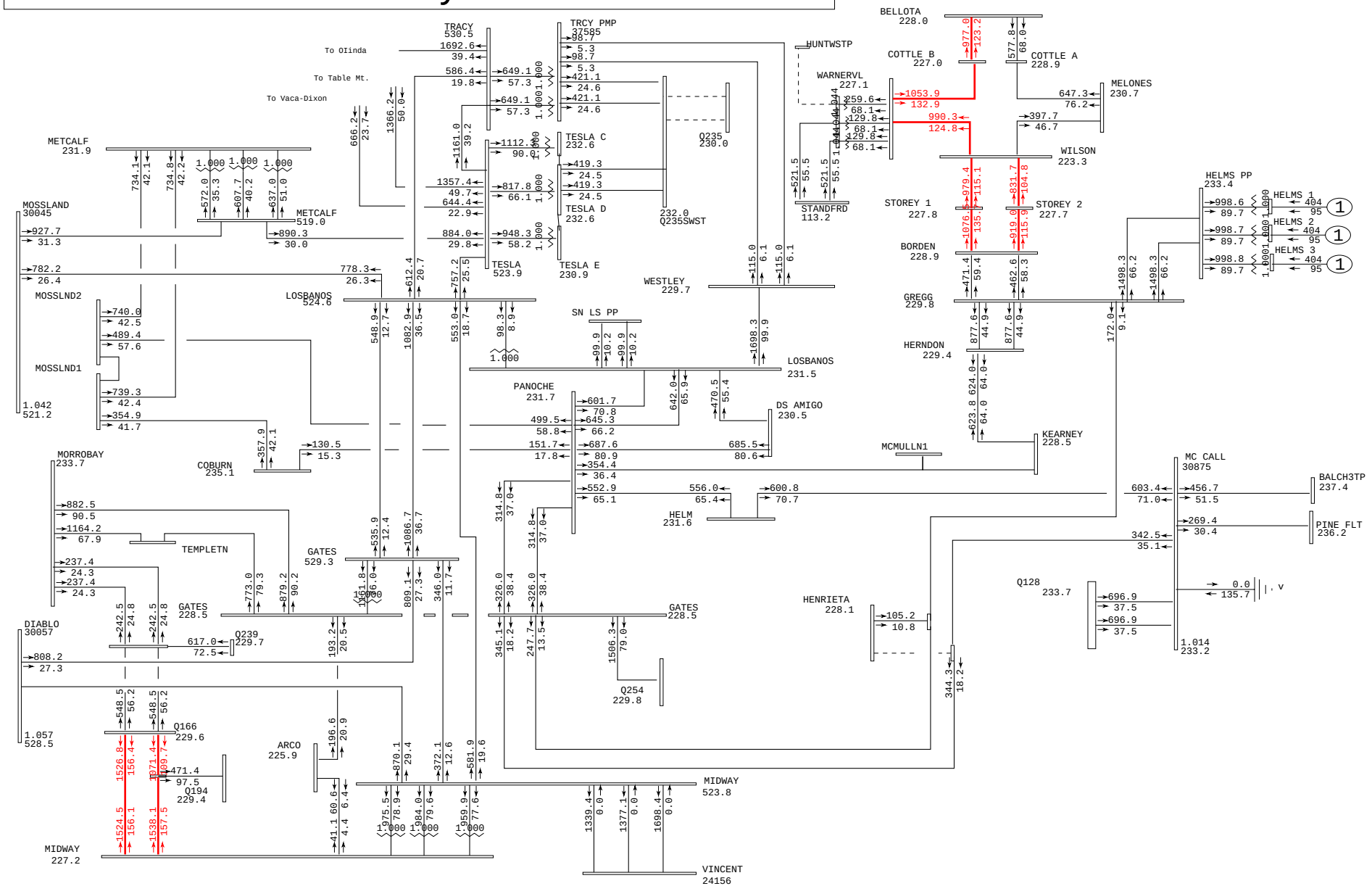

General Electric International, Inc. PSLF Program Wed Oct 01 08:23:31 2008 2013sumpk_q272_pre.sav

	PG&E 2007 CASE SERIES: 2013 San Joaquin Valley Summer Peak Pre-Project Case PATH15= 1964 MW(S-N) PATH26= 3996 MW(N-S) PDCI= 2500 MW(N-S) COI= 4790 MW(N-S) Q272 150 MW GWF Henrietta 70 kV IFS - 2013 Summer Peak Pre-Project FY	Plot 30-Outage: Ashlan Bus	amps/rate gfres2.drw Rating = 2

Greater Fresno
500-kV & 230-kV System

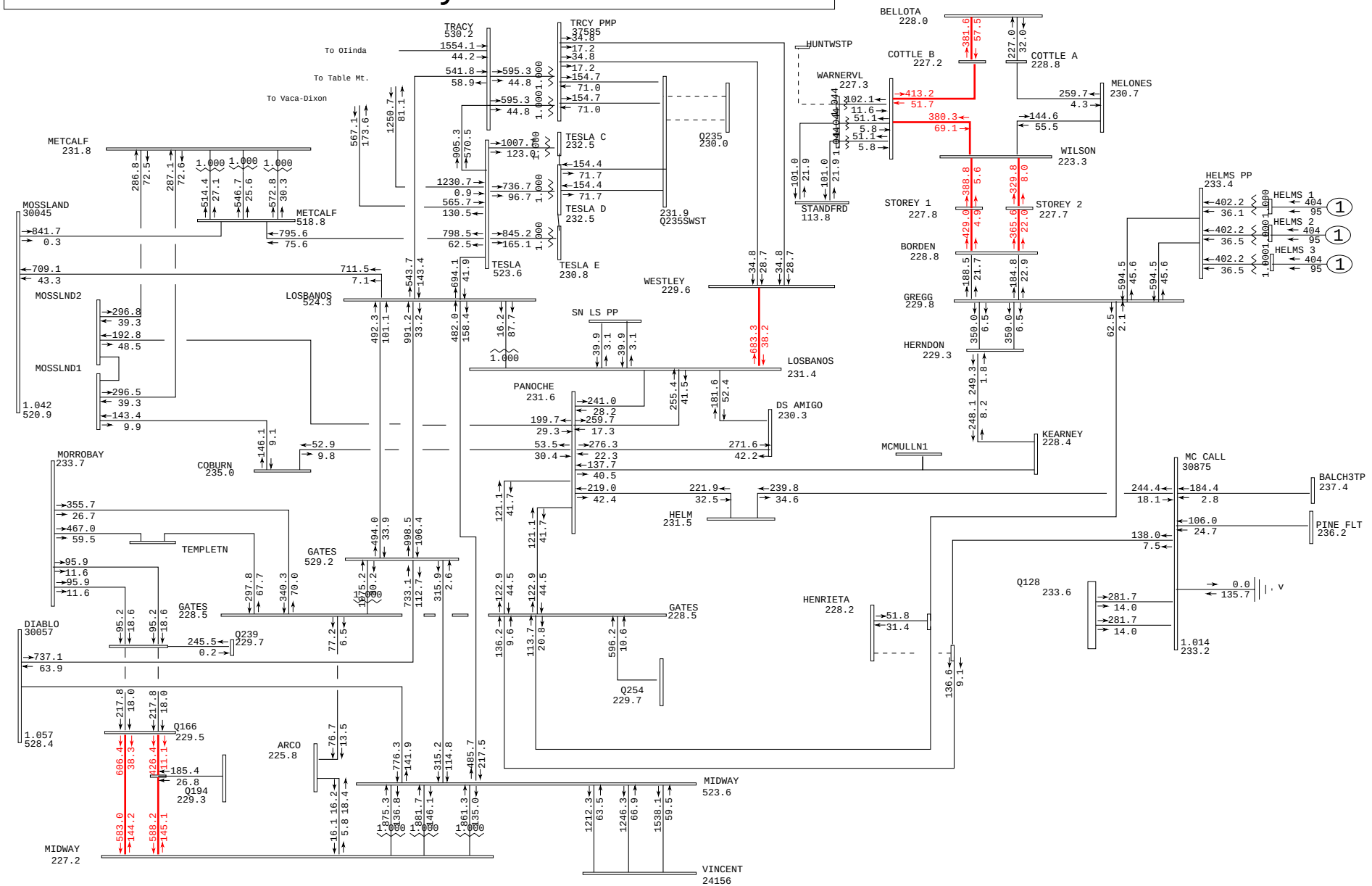

General Electric International, Inc. PSLF Program Wed Oct 01 08:23:33 2008 2013sumpk_q272_pst_v2.sav

	PG&E 2007 CASE SERIES: 2013 San Joaquin Valley Summer Peak Post-Project Case PATH15= 1955 MW(S-N) PATH26= 4001 MW(N-S) PDCI= 2500 MW(N-S) COI= 4795 MW(N-S) Q272 150 MW at GWF Henrietta 70 kV IFS - 2013 Summer Peak Post-Project FY	Plot 31-Outage: Ashlan Bus	MW/MVAR gfres2.drw Rating = 2

Greater Fresno
500-kV & 230-kV System

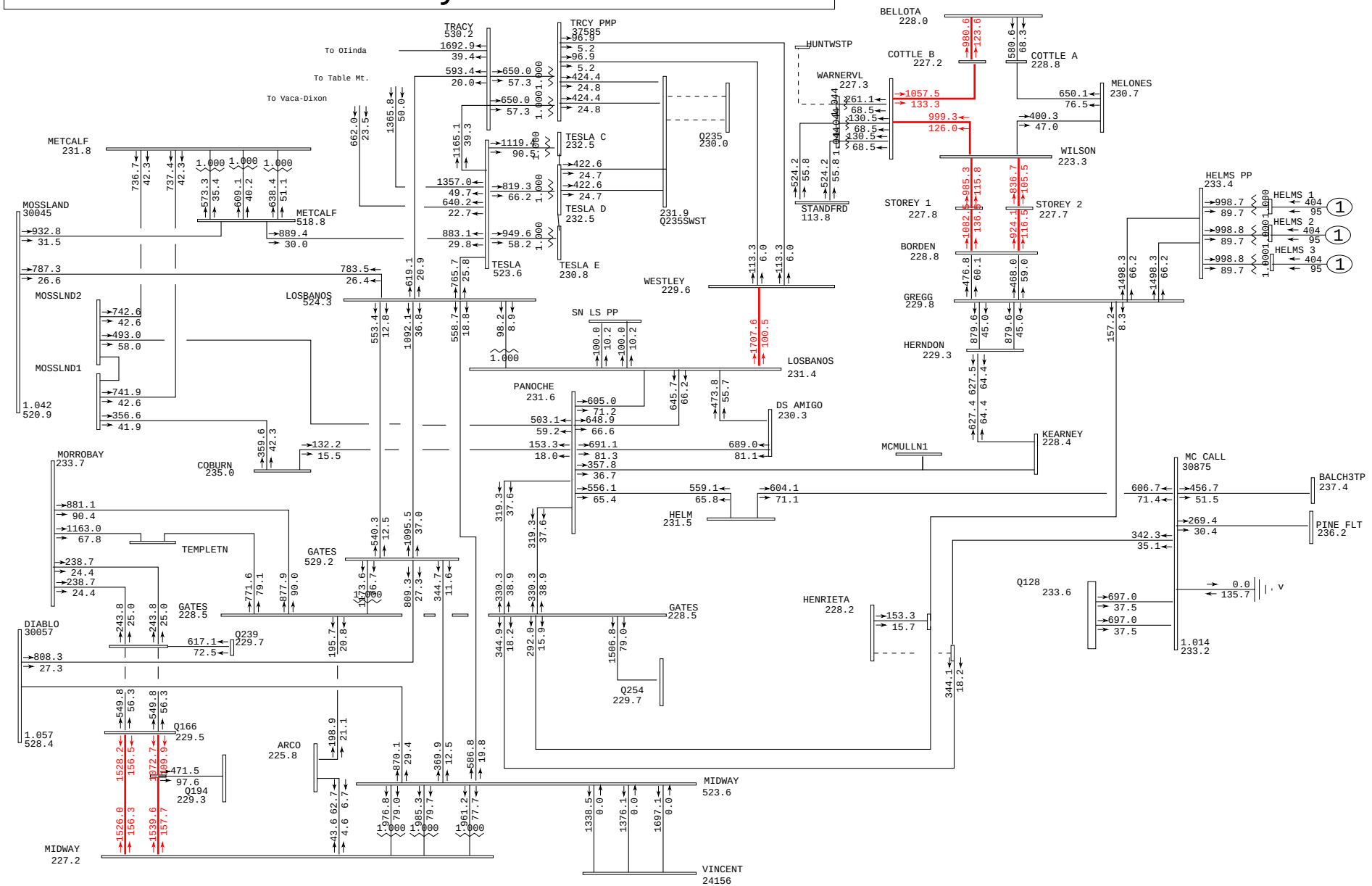

General Electric International, Inc. PSLF Program Wed Oct 01 08:23:34 2008 2013sumpk_q272_pst_v2.sav

	PG&E 2007 CASE SERIES: 2013 San Joaquin Valley Summer Peak Post-Project Case PATH15= 1955 MW(S-N) PATH26= 4001 MW(N-S) PDCI= 2500 MW(N-S) COI= 4795 MW(N-S) Q272 150 MW at GWF Henrietta 70 kV IFS - 2013 Summer Peak Post-Project FY	Plot 32-Outage: Ashlan Bus	amps/rate gfres2.drw Rating = 2

Greater Fresno
500-kV & 230-kV System

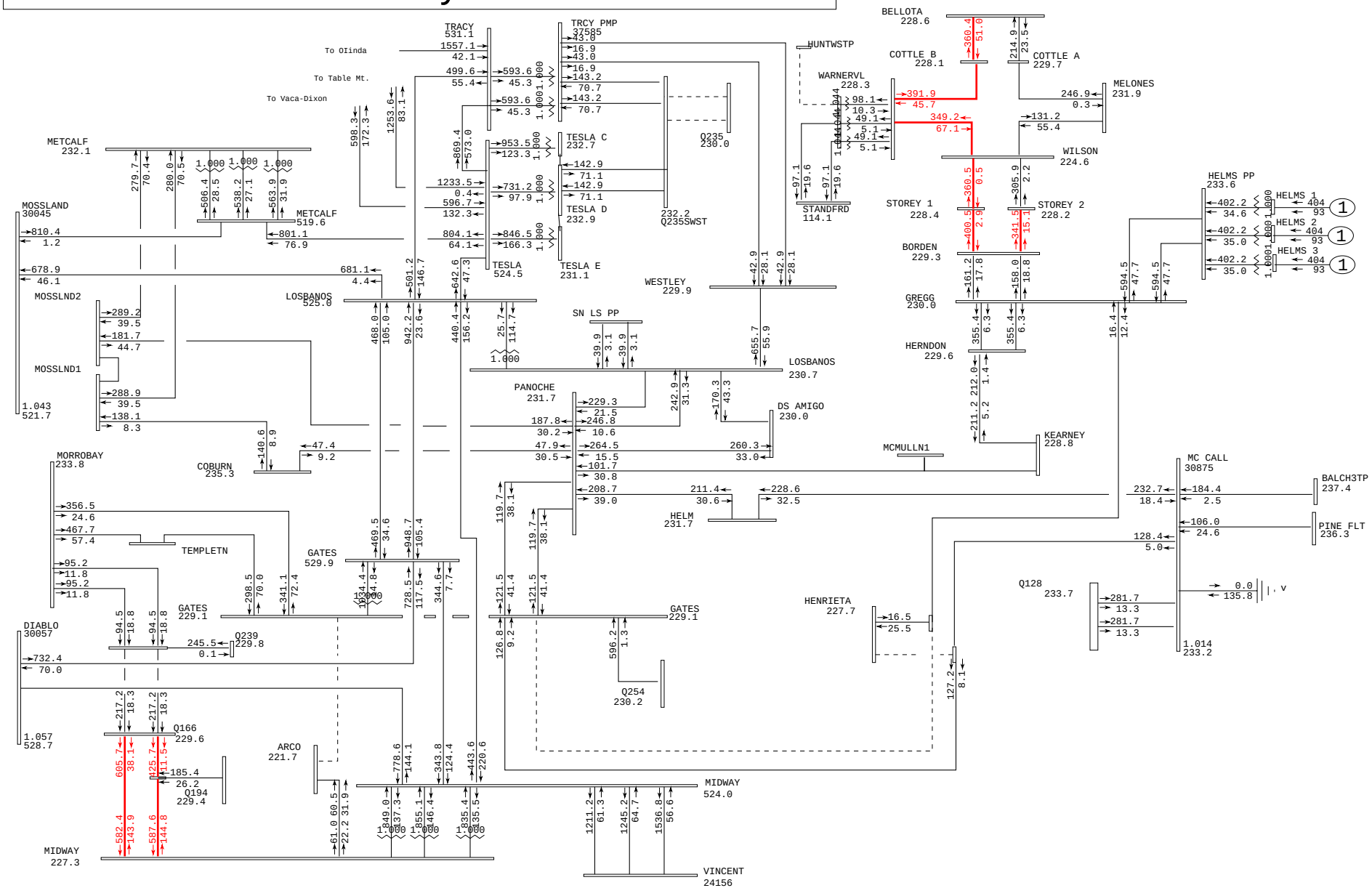

General Electric International, Inc. PSLF Program Wed Oct 01 08:23:36 2008 2013sumpk_q272_pre.sav

PG&E 2007 CASE SERIES: 2013 San Joaquin Valley Summer Peak Pre-Project Case PATH15= 1964 MW(S-N) PATH26= 3996 MW(N-S) PDCI= 2500 MW(N-S) COI= 4790 MW(N-S) Q272 150 MW GWF Henrietta 70 kV IFS - 2013 Summer Peak Pre-Project FY	Plot 33-Outage: Gates 230kV Bus 1E	MW/MVAR gfres2.drw Rating = 2

Greater Fresno
500-kV & 230-kV System

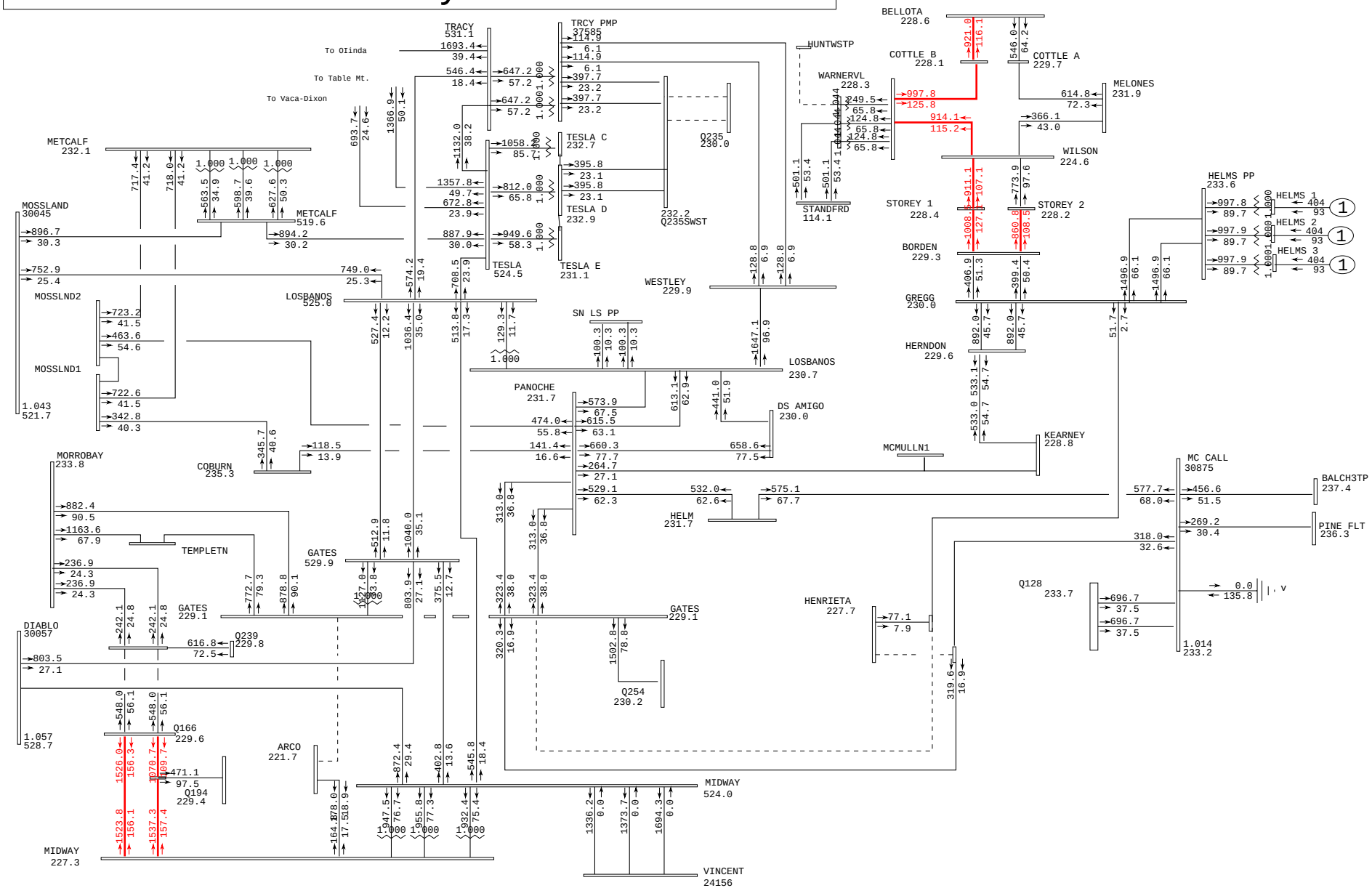

General Electric International, Inc. PSLF Program Wed Oct 01 08:23:37 2008 2013sumpk_q272_pre.sav

	PG&E 2007 CASE SERIES: 2013 San Joaquin Valley Summer Peak Pre-Project Case	Plot 34-Outage: Gates 230kV Bus 1E	amps/rate
	PATH15= 1964 MW(S-N) PATH26= 3996 MW(N-S) PDCI= 2500 MW(N-S) COI= 4790 MW(N-S)		gfres2.drw
	Q272 150 MW GWF Henrietta 70 kV IFS - 2013 Summer Peak Pre-Project FY		Rating = 2

Greater Fresno
500-kV & 230-kV System

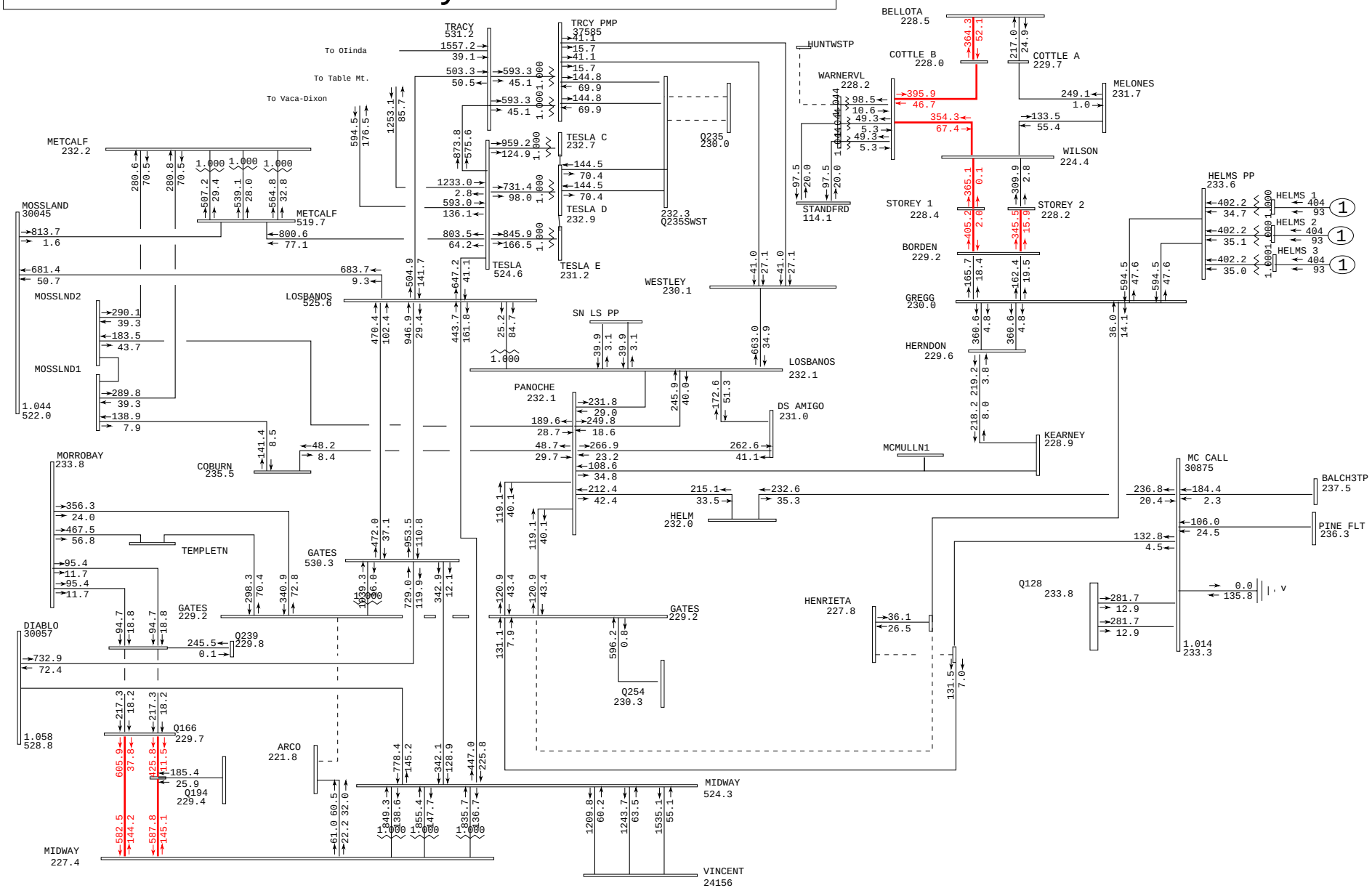

General Electric International, Inc. PSLF Program Wed Oct 01 08:23:39 2008 2013sumpk_q272_pst_v2.sav

	PG&E 2007 CASE SERIES: 2013 San Joaquin Valley Summer Peak Post-Project Case PATH15= 1955 MW(S-N) PATH26= 4001 MW(N-S) PDCI= 2500 MW(N-S) COI= 4795 MW(N-S) Q272 150 MW at GWF Henrietta 70 kV IFS - 2013 Summer Peak Post-Project FY	Plot 35-Outage: Gates 230kV Bus 1E	MW/MVAR gfres2.drw Rating = 2

Greater Fresno
500-kV & 230-kV System

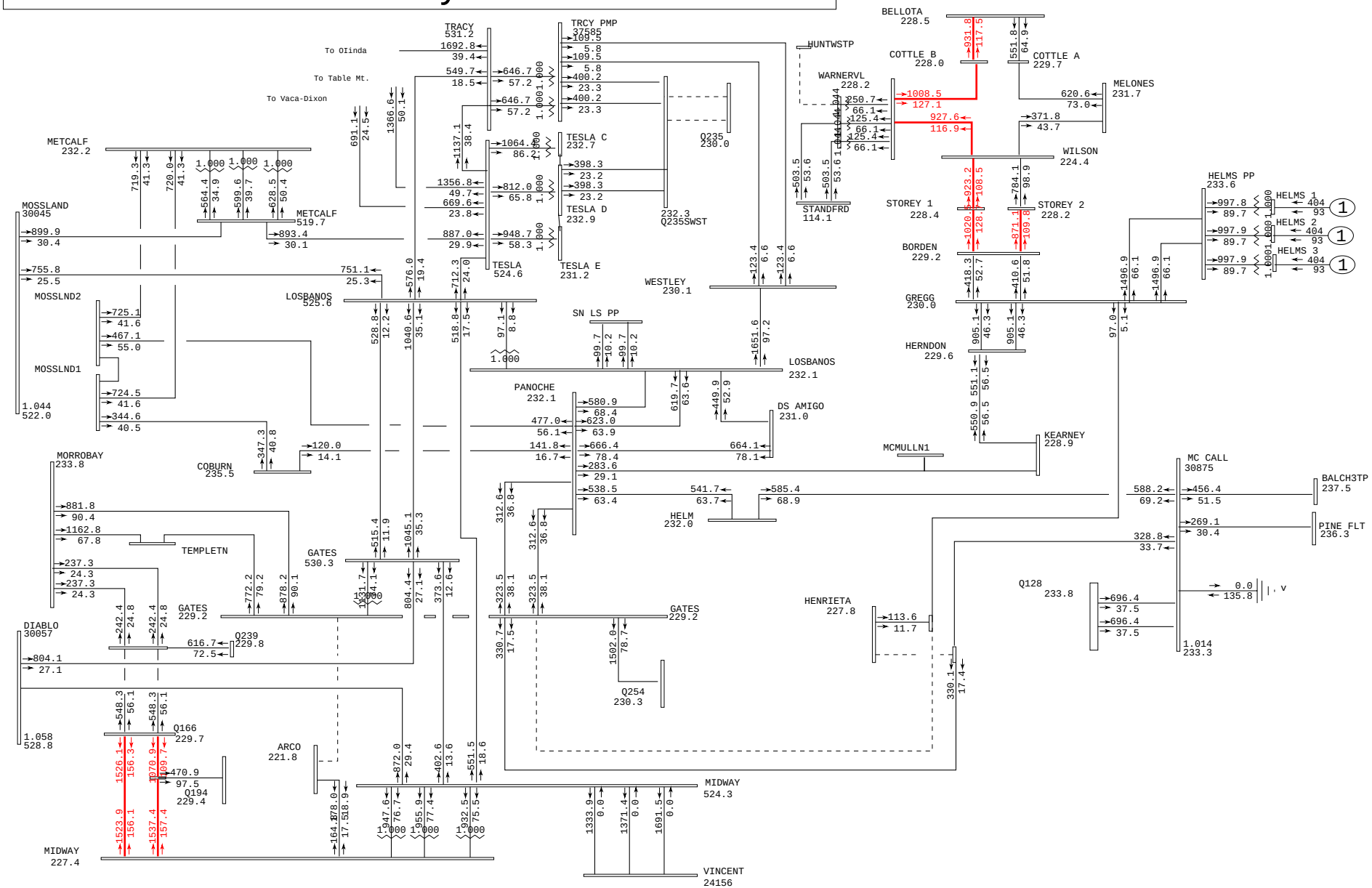

General Electric International, Inc. PSLF Program Wed Oct 01 08:23:40 2008 2013sumpk_q272_pst_v2.sav

	PG&E 2007 CASE SERIES: 2013 San Joaquin Valley Summer Peak Post-Project Case	Plot 36-Outage: Gates 230kV Bus 1E	amps/rate
	PATH15= 1955 MW(S-N) PATH26= 4001 MW(N-S) PDCI= 2500 MW(N-S) COI= 4795 MW(N-S)		gfres2.drw
	Q272 150 MW at GWF Henrietta 70 kV IFS - 2013 Summer Peak Post-Project FY		Rating = 2

Greater Fresno
500-kV & 230-kV System

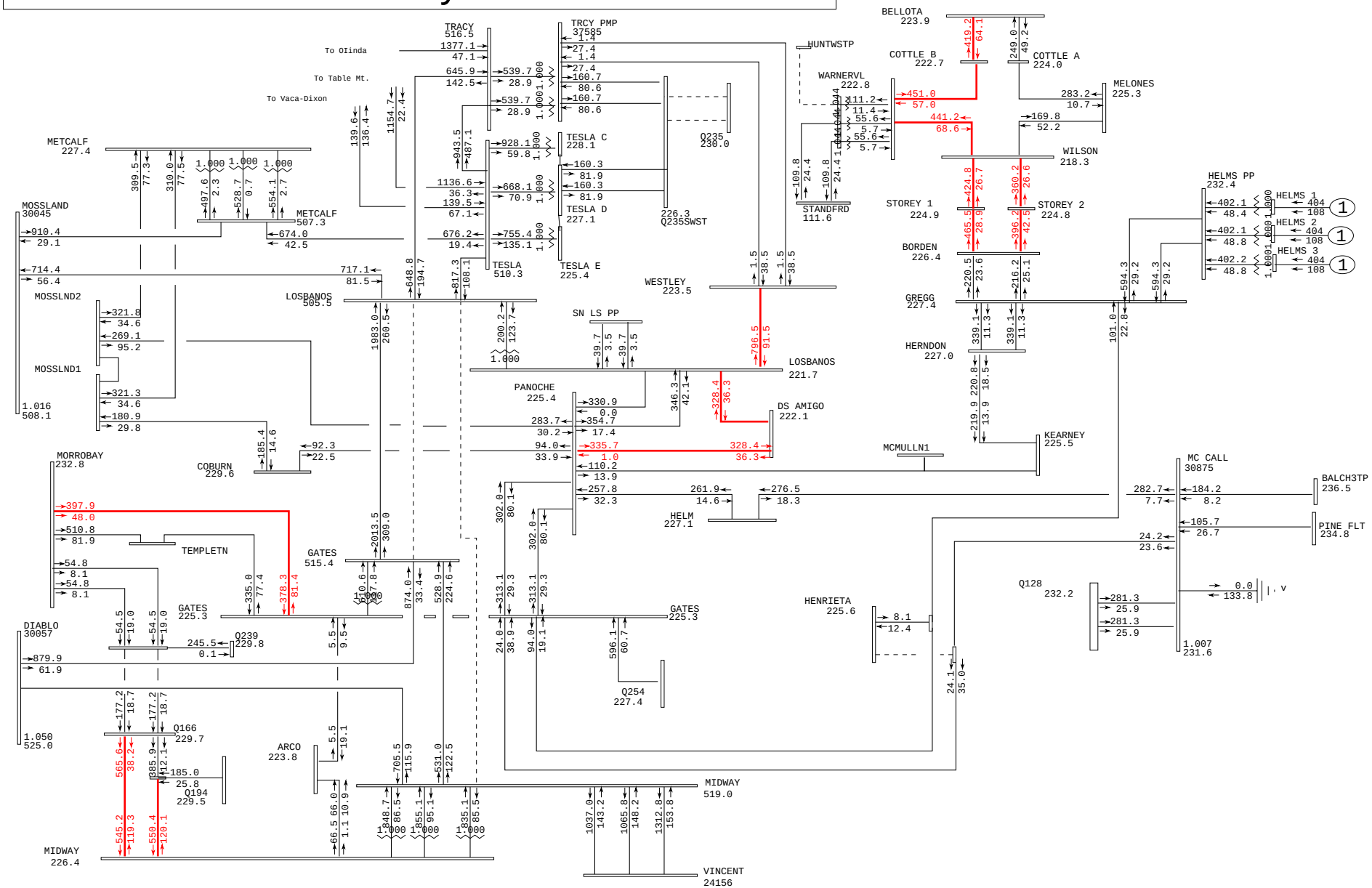

General Electric International, Inc. PSLF Program Wed Oct 01 08:23:42 2008 post-2013sumpk_q272_pre_lbs-dlo-ns.sav

	PG&E 2007 CASE SERIES: 2013 San Joaquin Valley Summer Peak Pre-Project Case	Plot 37-Outage: Los Banos South DLO	MW/MVAR
	PATH15= 1964 MW(S-N) PATH26= 3996 MW(N-S) PDCI= 2500 MW(N-S) COI= 4790 MW(N-S)	Los Banos - Gates, Los Banos - Midway Double Line Out	gfres2.drw
	Q272 150 MW GWF Henrietta 70 kV IFS - 2013 Summer Peak Pre-Project FY		Rating = 2

Greater Fresno
500-kV & 230-kV System

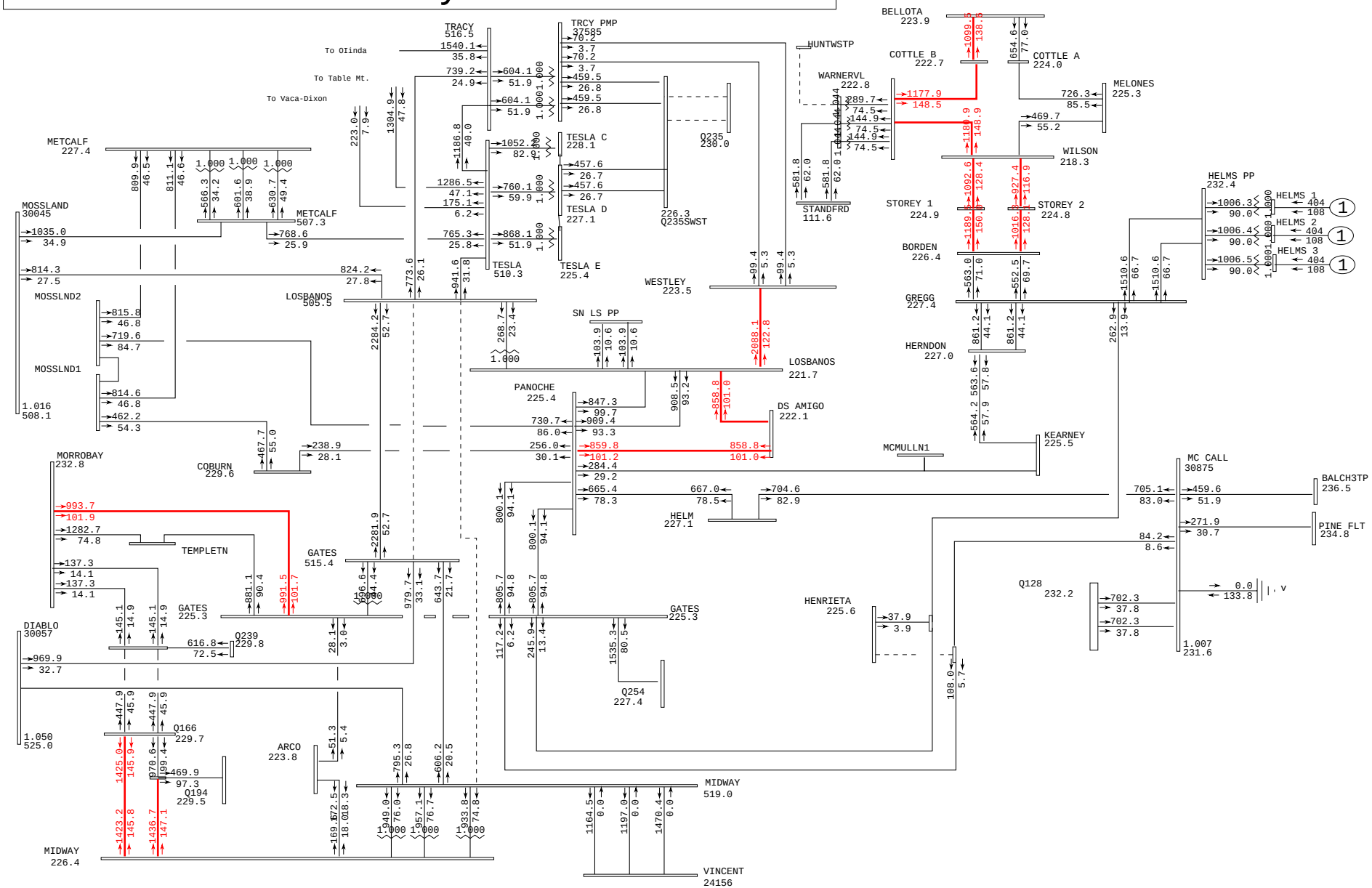

General Electric International, Inc. PSLF Program Wed Oct 01 08:23:42 2008 post-2013sumpk_q272_pre_lbs-dlo-ns.sav

	PG&E 2007 CASE SERIES: 2013 San Joaquin Valley Summer Peak Pre-Project Case	Plot 38-Outage: Los Banos South DLO	amps/rate
	PATH15= 1964 MW(S-N) PATH26= 3996 MW(N-S) PDCI= 2500 MW(N-S) COI= 4790 MW(N-S)	Los Banos - Gates, Los Banos - Midway Double Line Out	gfres2.drw
	Q272 150 MW GWF Henrietta 70 kV IFS - 2013 Summer Peak Pre-Project FY		Rating = 2

Greater Fresno
500-kV & 230-kV System

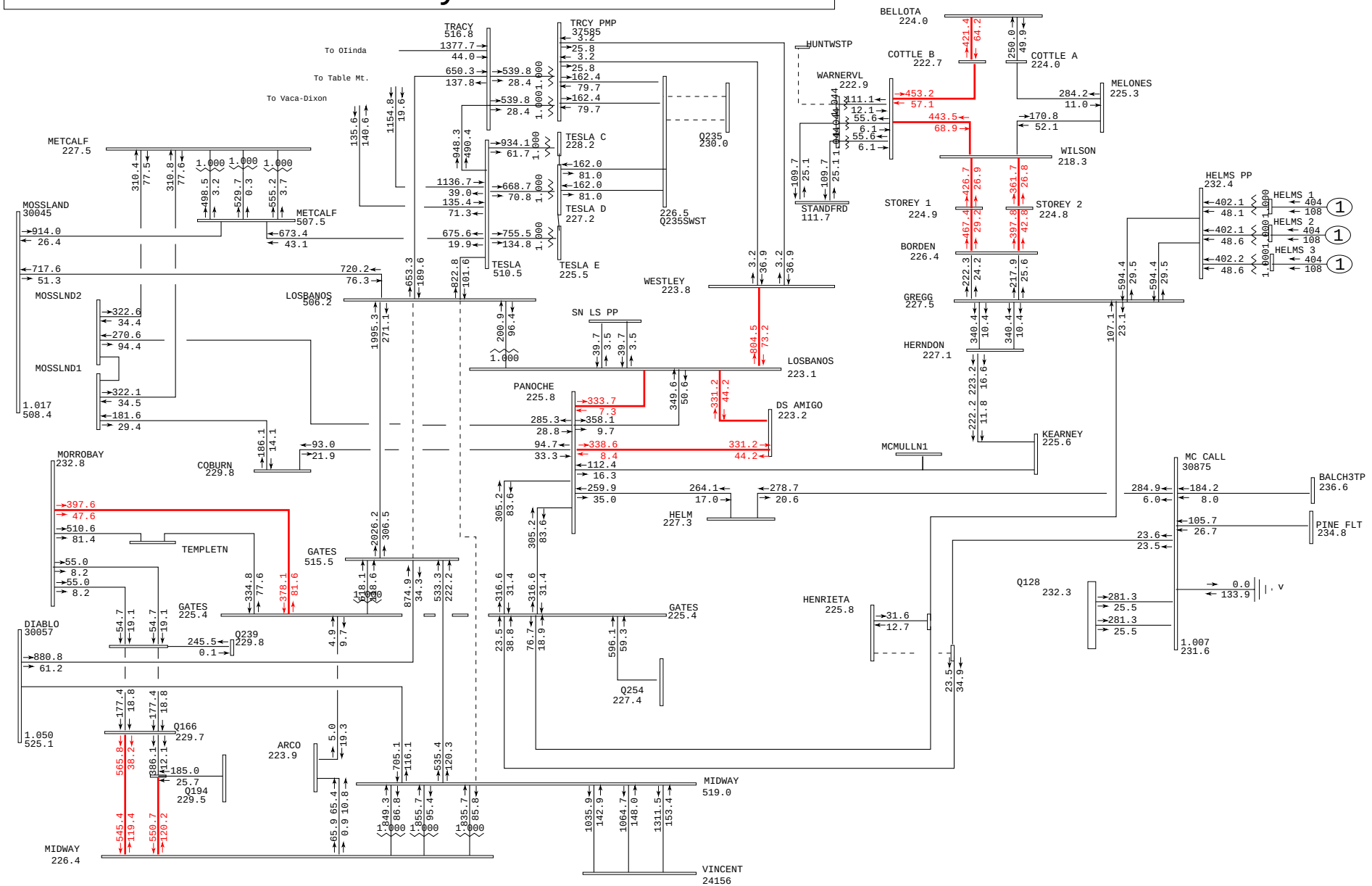

General Electric International, Inc. PSLF Program Wed Oct 01 08:23:43 2008 post-2013sumpk_q272_pst_v2_lbs-dlo-ns.sav

PG&E 2007 CASE SERIES: 2013 San Joaquin Valley Summer Peak Post-Project Case PATH15= 1955 MW(S-N) PATH26= 4001 MW(N-S) PDCI= 2500 MW(N-S) COI= 4795 MW(N-S) Q272 150 MW at GWF Henrietta 70 kV IFS - 2013 Summer Peak Post-Project FY	Plot 39-Outage: Los Banos South DLO Los Banos - Gates, Los Banos - Midway Double Line Out	MW/MVAR gfres2.drw Rating = 2

Greater Fresno
500-kV & 230-kV System

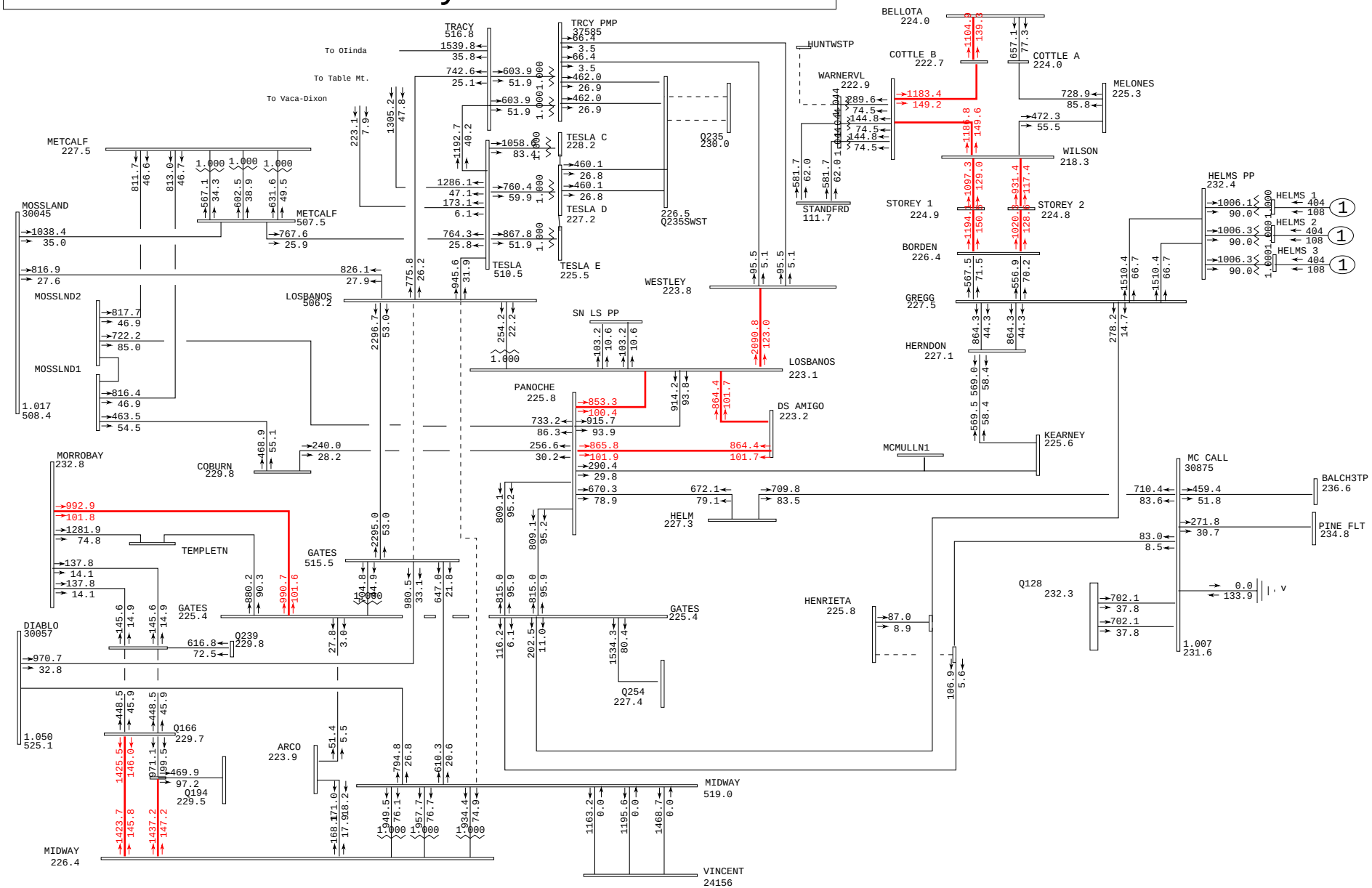

General Electric International, Inc. PSLF Program Wed Oct 01 08:23:44 2008 post-2013sumpk_q272_pst_v2_lbs-dlo-ns.sav

PG&E 2007 CASE SERIES: 2013 San Joaquin Valley Summer Peak Post-Project Case	Plot 40-Outage: Los Banos South DLO	amps/rate
PATH15= 1955 MW(S-N) PATH26= 4001 MW(N-S) PDCI= 2500 MW(N-S) COI= 4795 MW(N-S)	Los Banos - Gates, Los Banos - Midway Double Line Out	gfres2.drw
Q272 150 MW at GWF Henrietta 70 kV IFS - 2013 Summer Peak Post-Project FY		Rating = 2

Henrietta 70 kV system

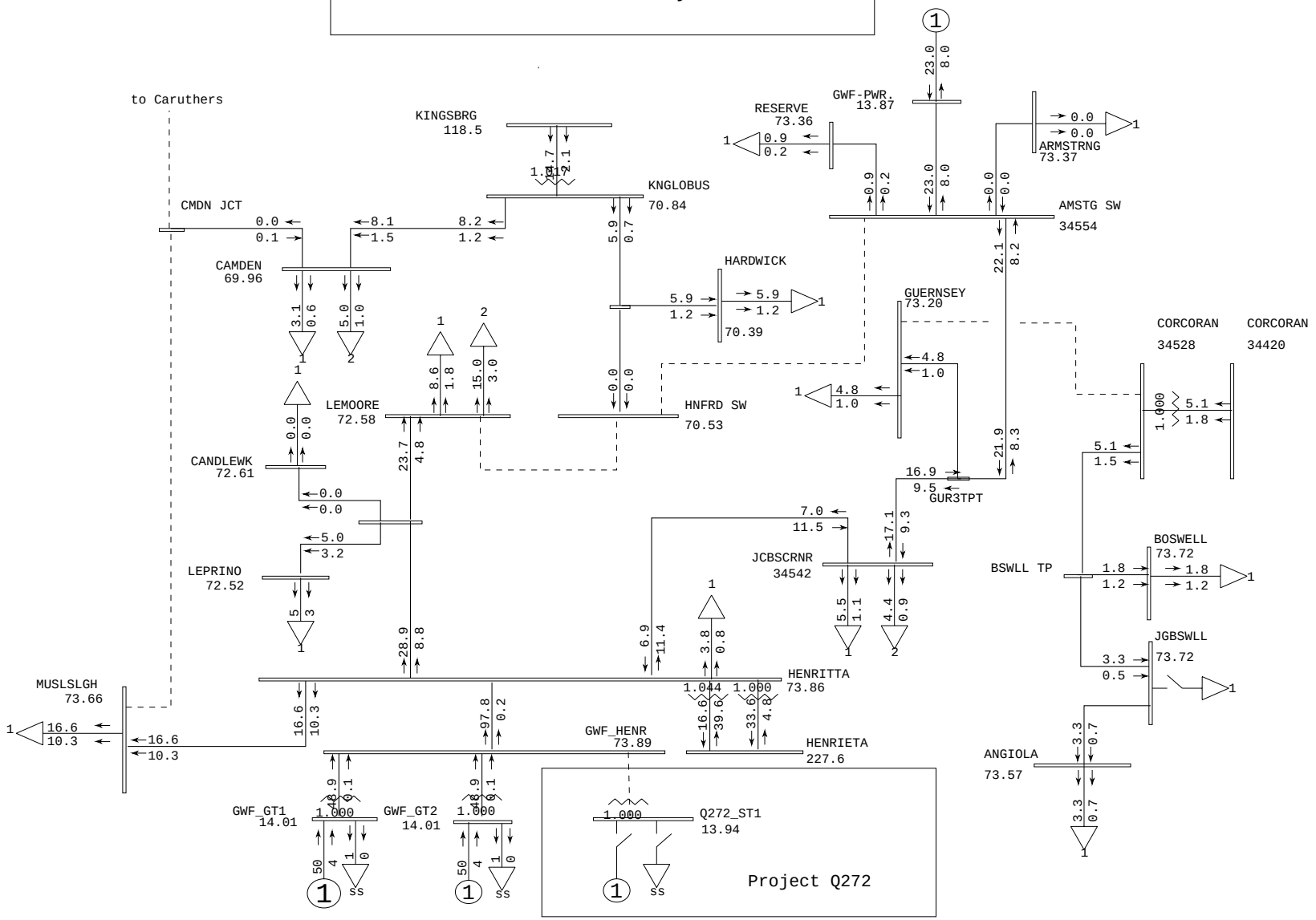

General Electric International, Inc. PSLF Program Wed Oct 01 08:23:45 2008 2013sumop_q272_pre.sav

	PG&E 2007 CASE SERIES: 2013 Summer Off Peak Pre-Project Case	Plot 41 - No Outage	MW/MVAR
	PATH15= 5001 MW(S-N) PATH26= 253 MW(N-S) PDCI=-1846 MW(N-S) COI=-3647 MW(N-S)		hen_70.drw
	Q272 150 MW GWF Henrietta 70 kV IFS - 2013 Summer Off Peak Pre-Project FY		Rating = 1

Henrietta 70 kV system

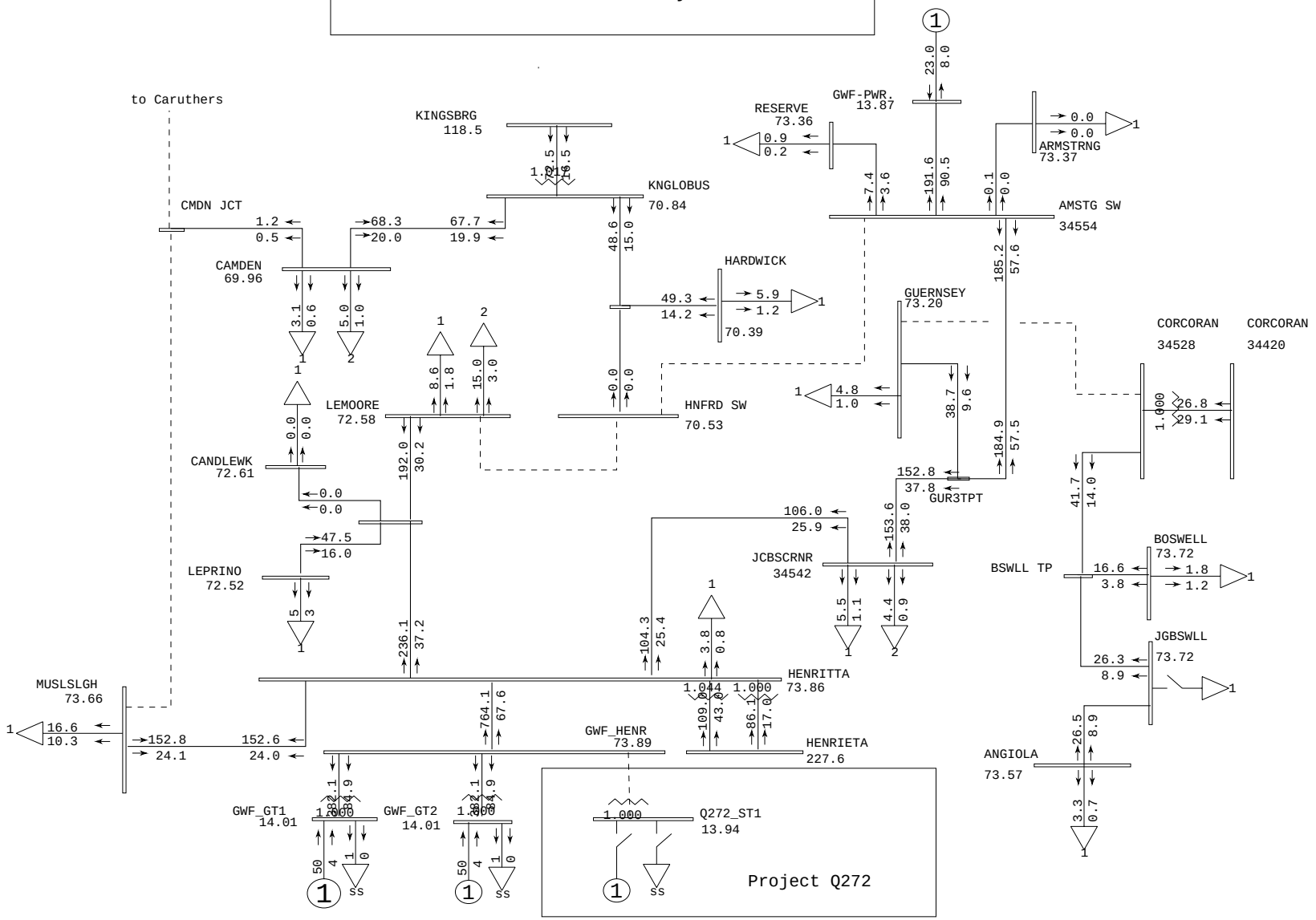

General Electric International, Inc. PSLF Program Wed Oct 01 08:23:45 2008 2013sumop_q272_pre.sav

	PG&E 2007 CASE SERIES: 2013 Summer Off Peak Pre-Project Case	Plot 42 - No Outage	amps/rate
	PATH15= 5001 MW(S-N) PATH26= 253 MW(N-S) PDCI=-1846 MW(N-S) COI=-3647 MW(N-S)		hen_70.drw
	Q272 150 MW GWF Henrietta 70 kV IFS - 2013 Summer Off Peak Pre-Project FY		Rating = 1

Henrietta 70 kV system

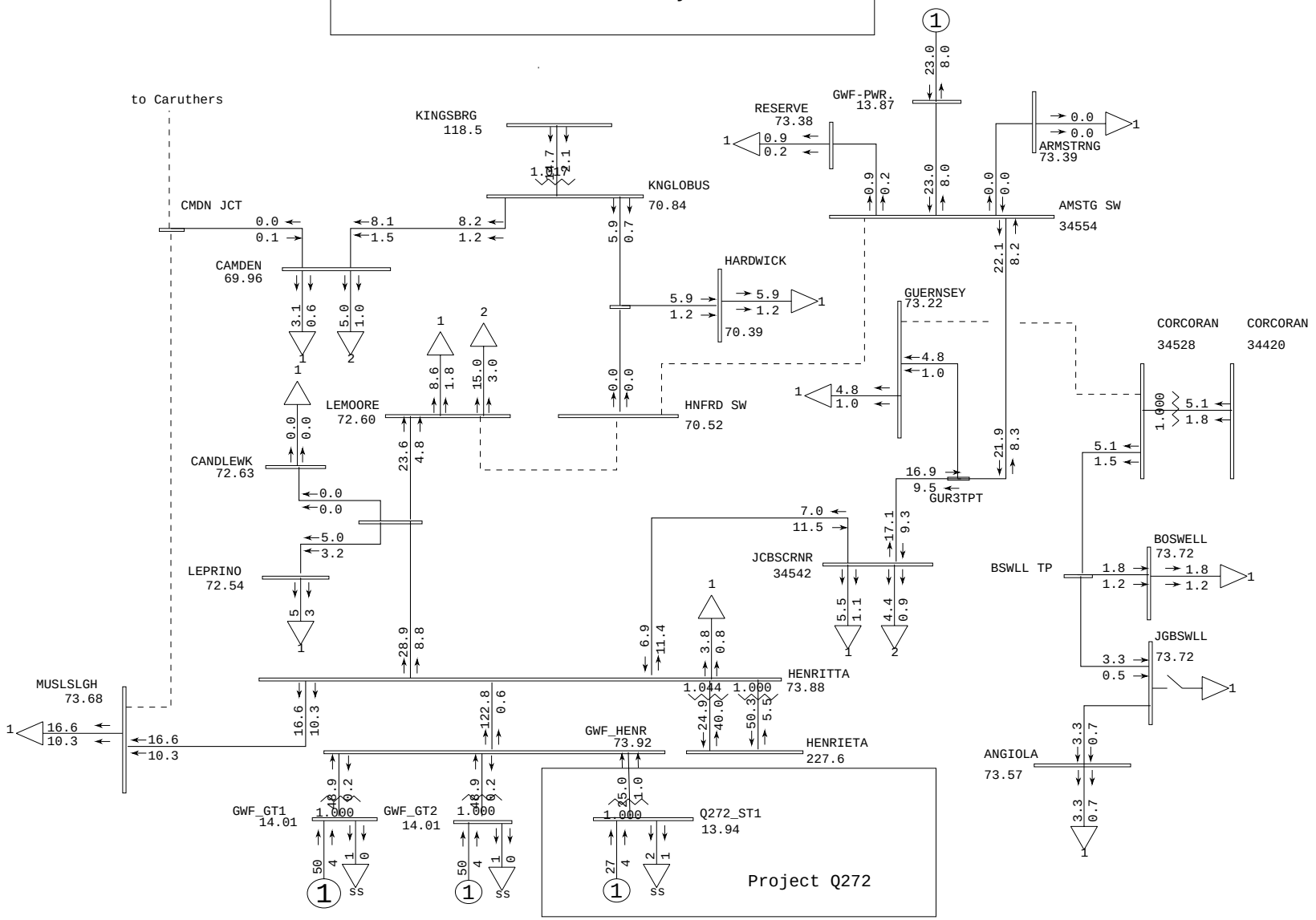

General Electric International, Inc. PSLF Program Wed Oct 01 08:23:47 2008 2013sumop_q272_pst.sav

	PG&E 2007 CASE SERIES: 2013 Summer Off Peak Post-Project Case	Plot 43 - No Outage	MW/MVAR
	PATH15= 4999 MW(S-N) PATH26= 254 MW(N-S) PDCI=-1846 MW(N-S) COI=-3646 MW(N-S)		hen_70.drw
	Q272 150 MW at GWF Henrietta 70 kV IFS - 2013 Summer Off Peak Post-Project FY		Rating = 1

Henrietta 70 kV system

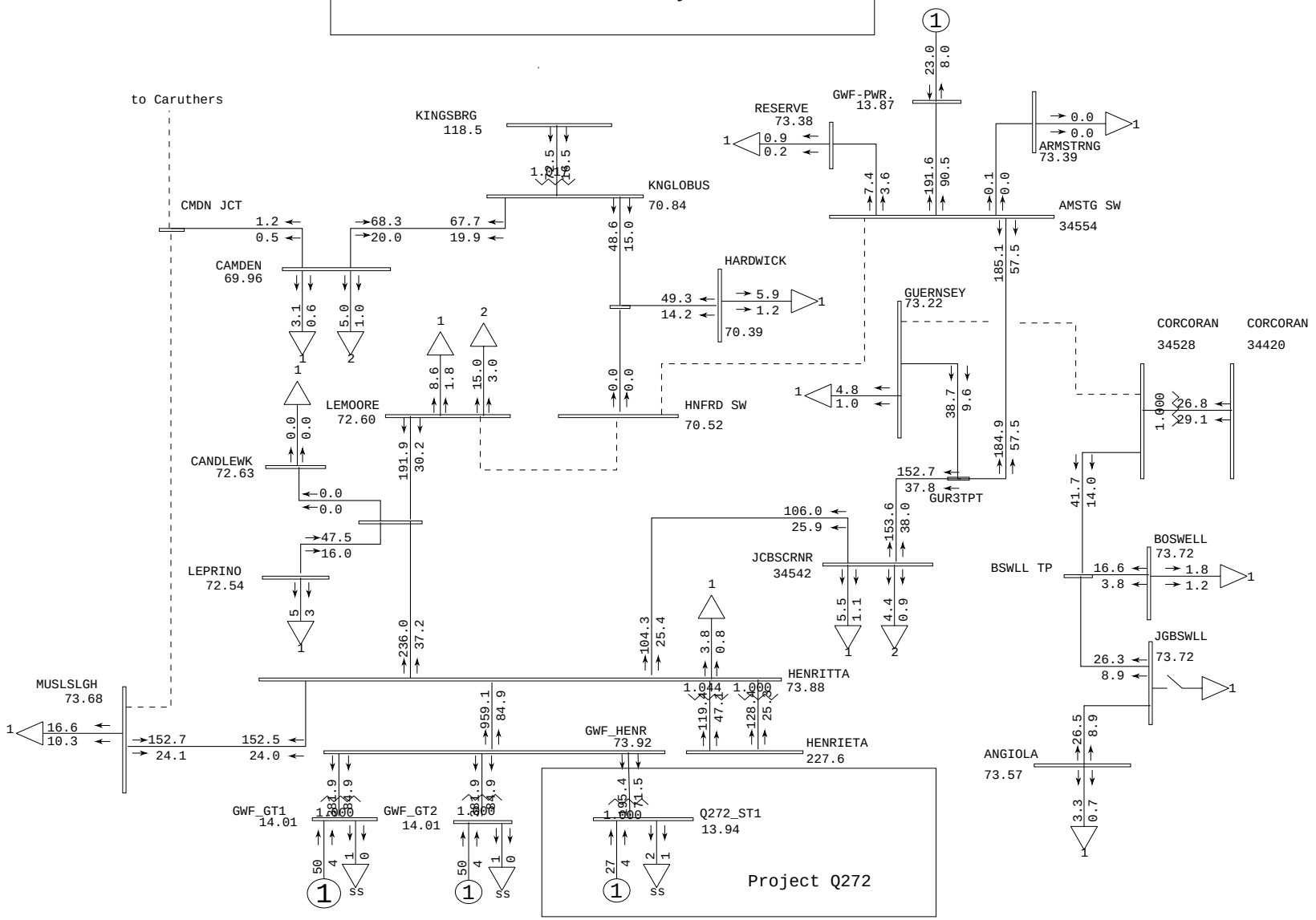

General Electric International, Inc. PSLF Program Wed Oct 01 08:23:47 2008 2013sumop_q272_pst.sav

PG&E 2007 CASE SERIES: 2013 Summer Off Peak Post-Project Case PATH15= 4999 MW(S-N) PATH26= 254 MW(N-S) PDCI=-1846 MW(N-S) COI=-3646 MW(N-S) Q272 150 MW at GWF Henrietta 70 kV IFS - 2013 Summer Off Peak Post-Project FY	Plot 44 - No Outage	amps/rate hen_70.drw Rating = 1

Greater Fresno
500-kV & 230-kV System

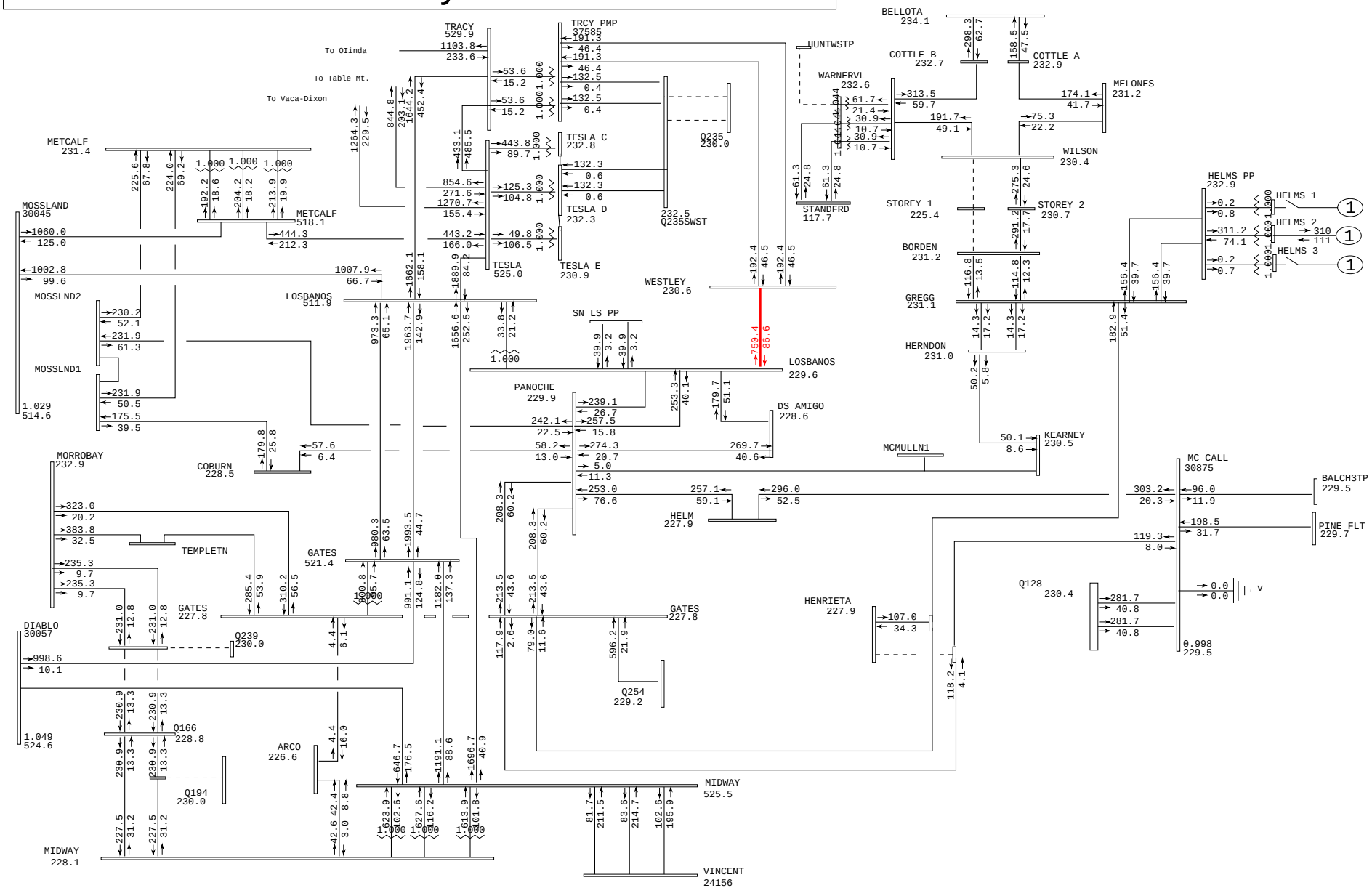

General Electric International, Inc. PSLF Program Wed Oct 01 08:23:49 2008 2013sumop_q272_pre.sav

	PG&E 2007 CASE SERIES: 2013 Summer Off Peak Pre-Project Case	Plot 45-Outage: Wilson-Borden #2 230kV & Helms 1	MW/MVAR
	PATH15= 5001 MW(S-N) PATH26= 253 MW(N-S) PDCI=-1846 MW(N-S) COI=-3647 MW(N-S)		gfres2.drw
	Q272 150 MW GWF Henrietta 70 kV IFS - 2013 Summer Off Peak Pre-Project FY		Rating = 2

Greater Fresno
500-kV & 230-kV System

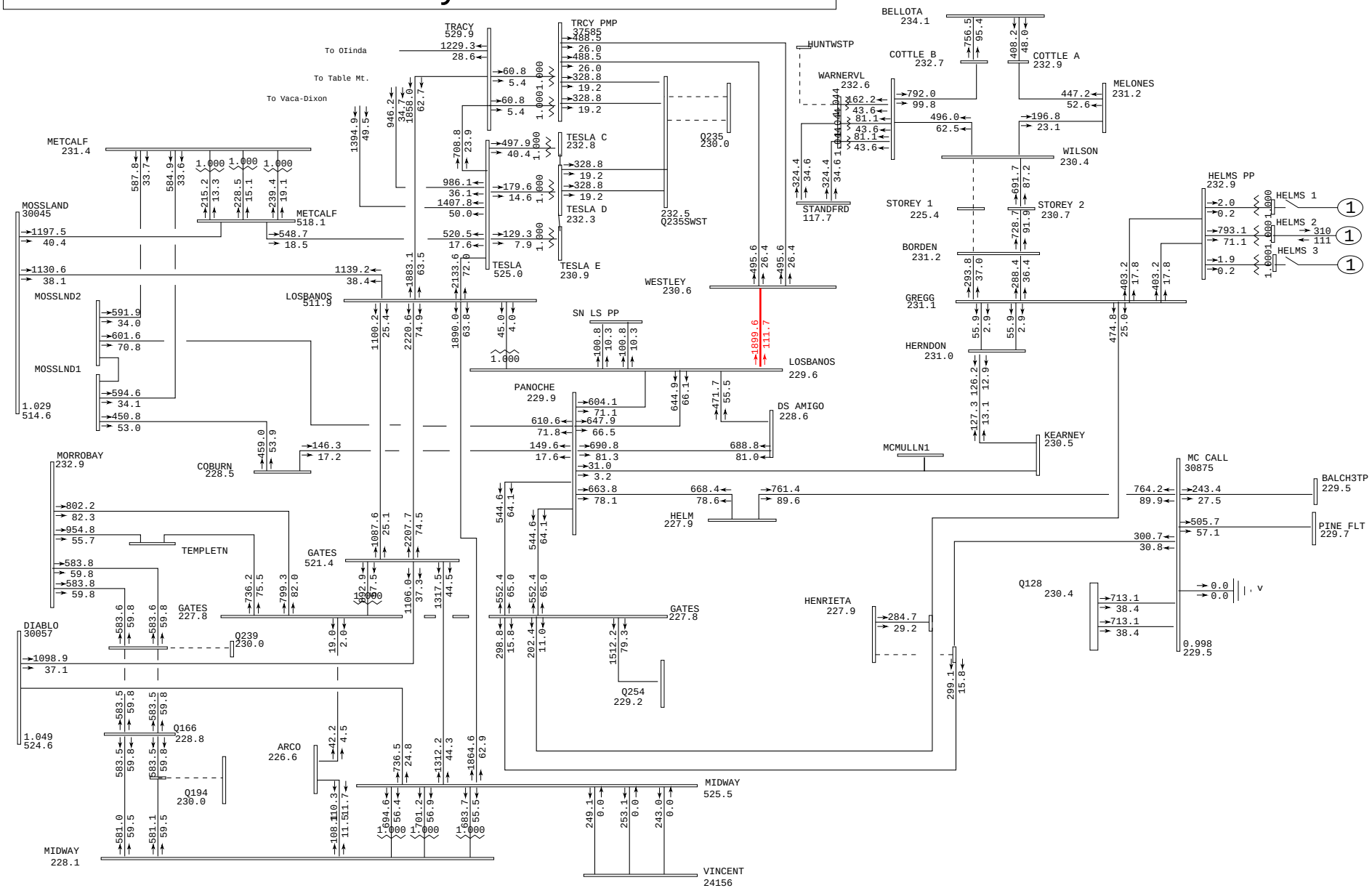

General Electric International, Inc. PSLF Program Wed Oct 01 08:23:51 2008 2013sumop_q272_pre.sav

PG&E 2007 CASE SERIES: 2013 Summer Off Peak Pre-Project Case	Plot 46-Outage: Wilson-Borden #2 230kV & Helms 1	amps/rate
PATH15= 5001 MW(S-N) PATH26= 253 MW(N-S) PDCI=-1846 MW(N-S) COI=-3647 MW(N-S)		gfres2.drw
Q272 150 MW GWF Henrietta 70 kV IFS - 2013 Summer Off Peak Pre-Project FY		Rating = 2

Greater Fresno
500-kV & 230-kV System

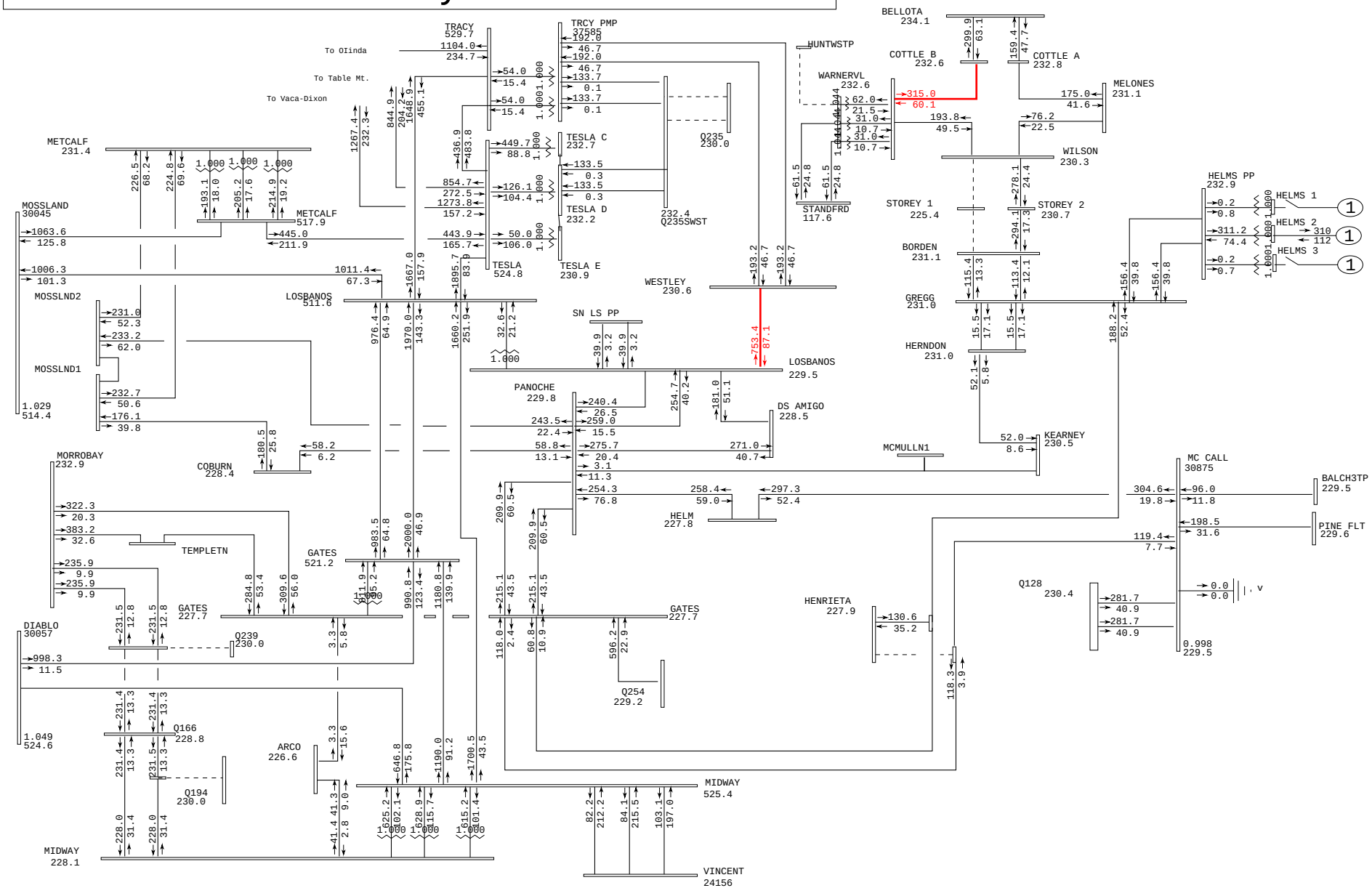

General Electric International, Inc. PSLF Program Wed Oct 01 08:23:53 2008 2013sumop_q272_pst.sav

	PG&E 2007 CASE SERIES: 2013 Summer Off Peak Post-Project Case	Plot 47-Outage: Wilson-Borden #2 230kV & Helms 1	MW/MVAR
	PATH15= 4999 MW(S-N) PATH26= 254 MW(N-S) PDCI=-1846 MW(N-S) COI=-3646 MW(N-S)		gfres2.drw
	Q272 150 MW at GWF Henrietta 70 kV IFS - 2013 Summer Off Peak Post-Project FY		Rating = 2

Greater Fresno
500-kV & 230-kV System

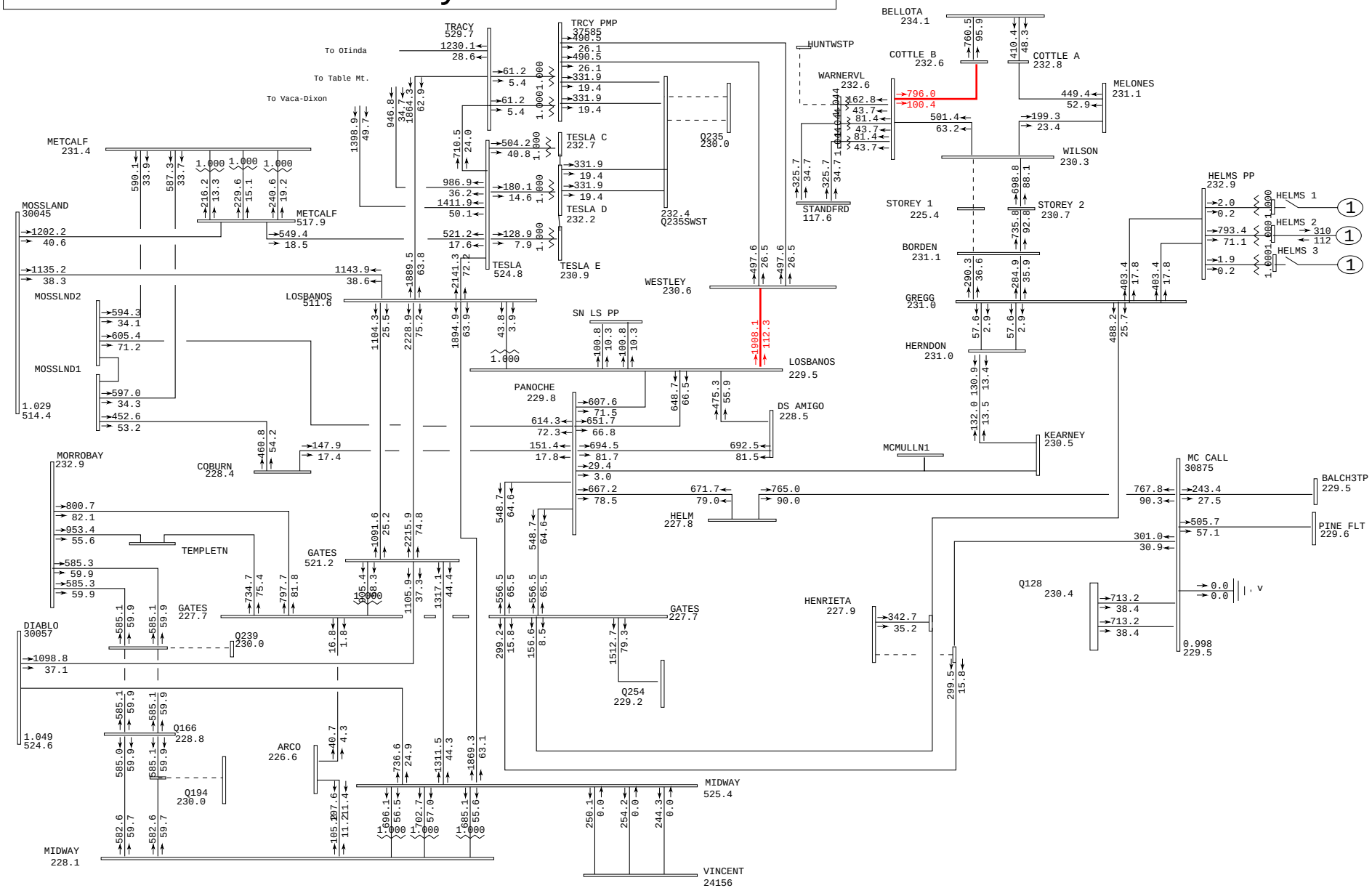

General Electric International, Inc. PSLF Program Wed Oct 01 08:23:54 2008 2013sumop_q272_pst.sav

	PG&E 2007 CASE SERIES: 2013 Summer Off Peak Post-Project Case	Plot 48-Outage: Wilson-Borden #2 230kV & Helms 1	amps/rate
	PATH15= 4999 MW(S-N) PATH26= 254 MW(N-S) PDCI=-1846 MW(N-S) COI=-3646 MW(N-S)		gfres2.drw
	Q272 150 MW at GWF Henrietta 70 kV IFS - 2013 Summer Off Peak Post-Project FY		Rating = 2

Greater Fresno
500-kV & 230-kV System

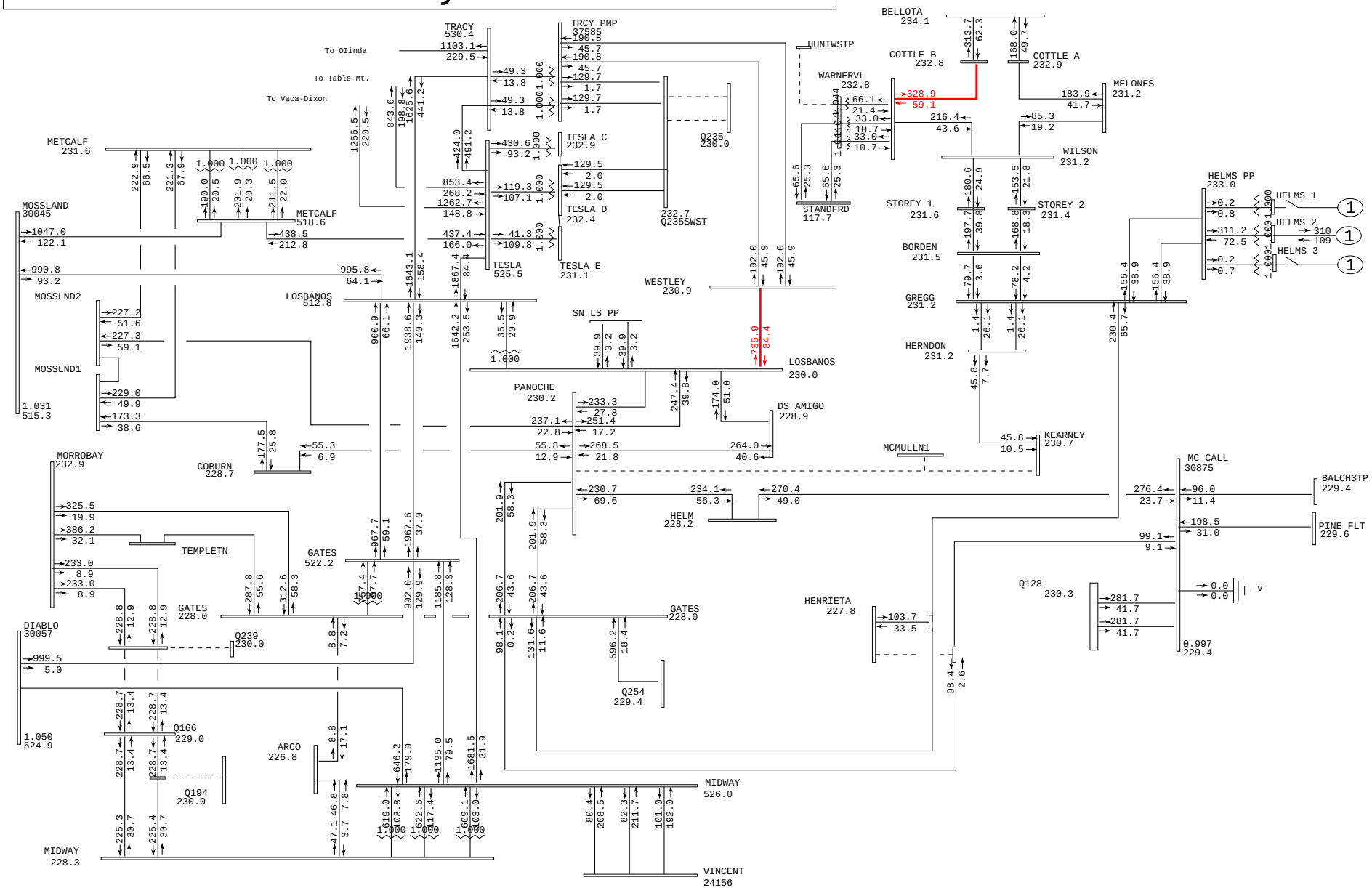

General Electric International, Inc. PSLF Program Wed Oct 01 08:23:56 2008 2013sumop_q272_pre.sav

	PG&E 2007 CASE SERIES: 2013 Summer Off Peak Pre-Project Case	Plot 49-Outage: Panoche-Kearney 230kV & Kerckhoff	MW/MVAR
	PATH15= 5001 MW(S-N) PATH26= 253 MW(N-S) PDCI=-1846 MW(N-S) COI=-3647 MW(N-S)		gfres2.drw
	Q272 150 MW GWF Henrietta 70 kV IFS - 2013 Summer Off Peak Pre-Project FY		Rating = 2

Greater Fresno
500-kV & 230-kV System

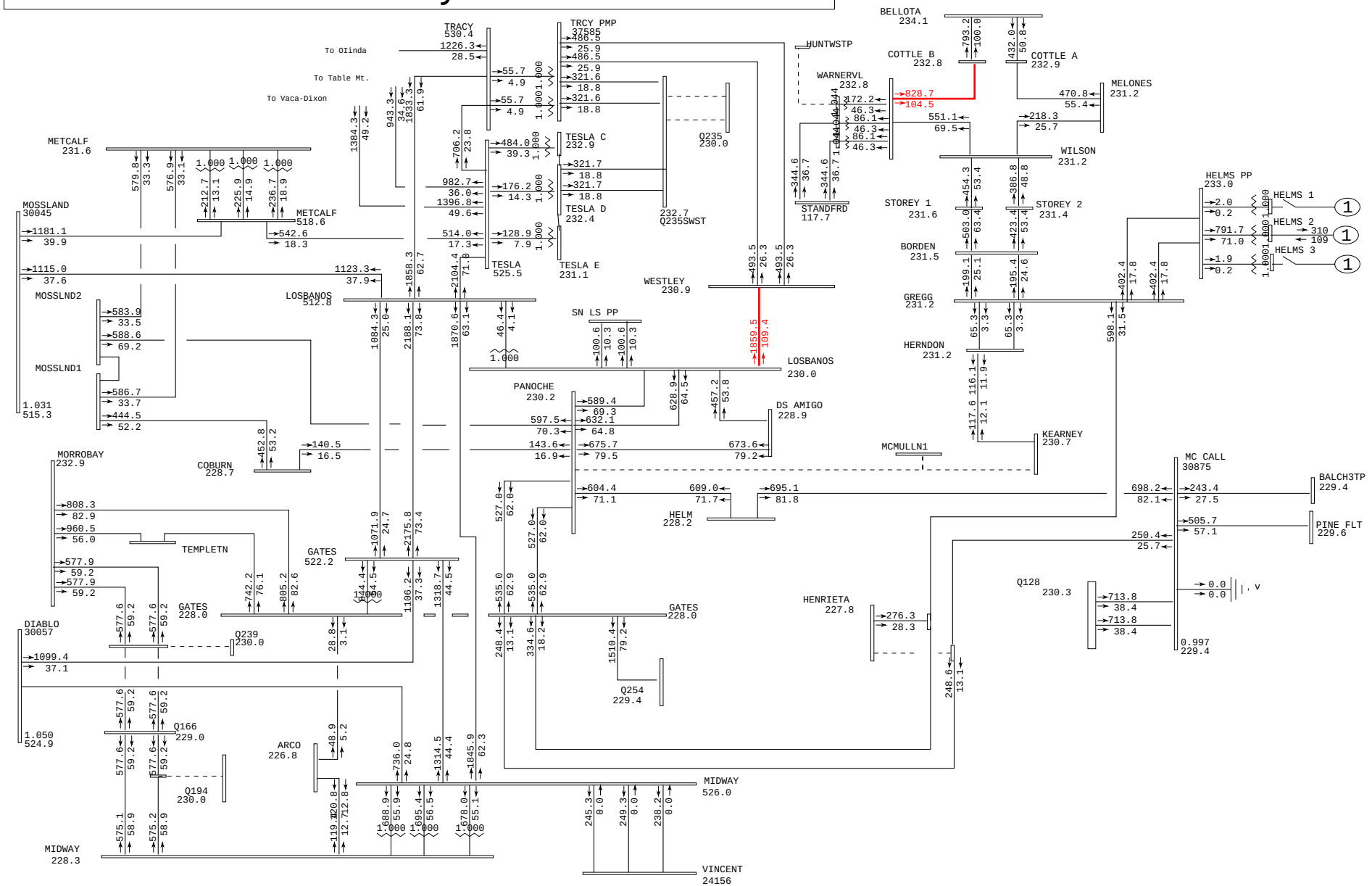

General Electric International, Inc. PSLF Program Wed Oct 01 08:23:58 2008 2013sumop_q272_pre.sav

PG&E 2007 CASE SERIES: 2013 Summer Off Peak Pre-Project Case PATH15= 5001 MW(S-N) PATH26= 253 MW(N-S) PDCI=-1846 MW(N-S) COI=-3647 MW(N-S) Q272 150 MW GWF Henrietta 70 kV IFS - 2013 Summer Off Peak Pre-Project FY	Plot 50-Outage: Panoche-Kearney 230kV & Kerckhoff	amps/rate gfres2.drw Rating = 2

Greater Fresno
500-kV & 230-kV System

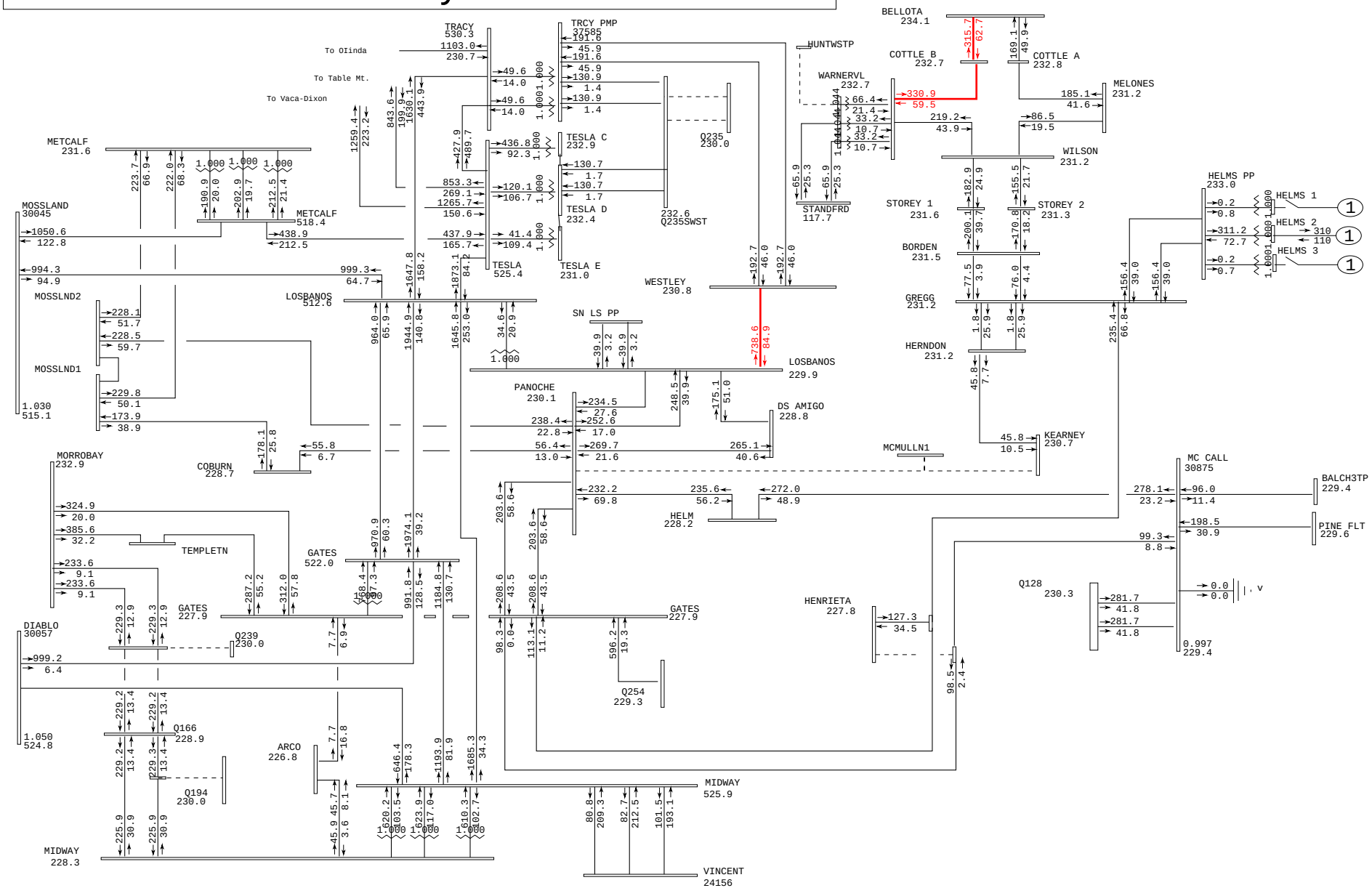

General Electric International, Inc. PSLF Program Wed Oct 01 08:23:59 2008 2013sumop_q272_pst.sav

	PG&E 2007 CASE SERIES: 2013 Summer Off Peak Post-Project Case	Plot 51-Outage: Panoche-Kearney 230kV & Kerckhoff	MW/MVAR
	PATH15= 4999 MW(S-N) PATH26= 254 MW(N-S) PDCI=-1846 MW(N-S) COI=-3646 MW(N-S)		gfres2.drw
	Q272 150 MW at GWF Henrietta 70 kV IFS - 2013 Summer Off Peak Post-Project FY		Rating = 2

Greater Fresno
500-kV & 230-kV System

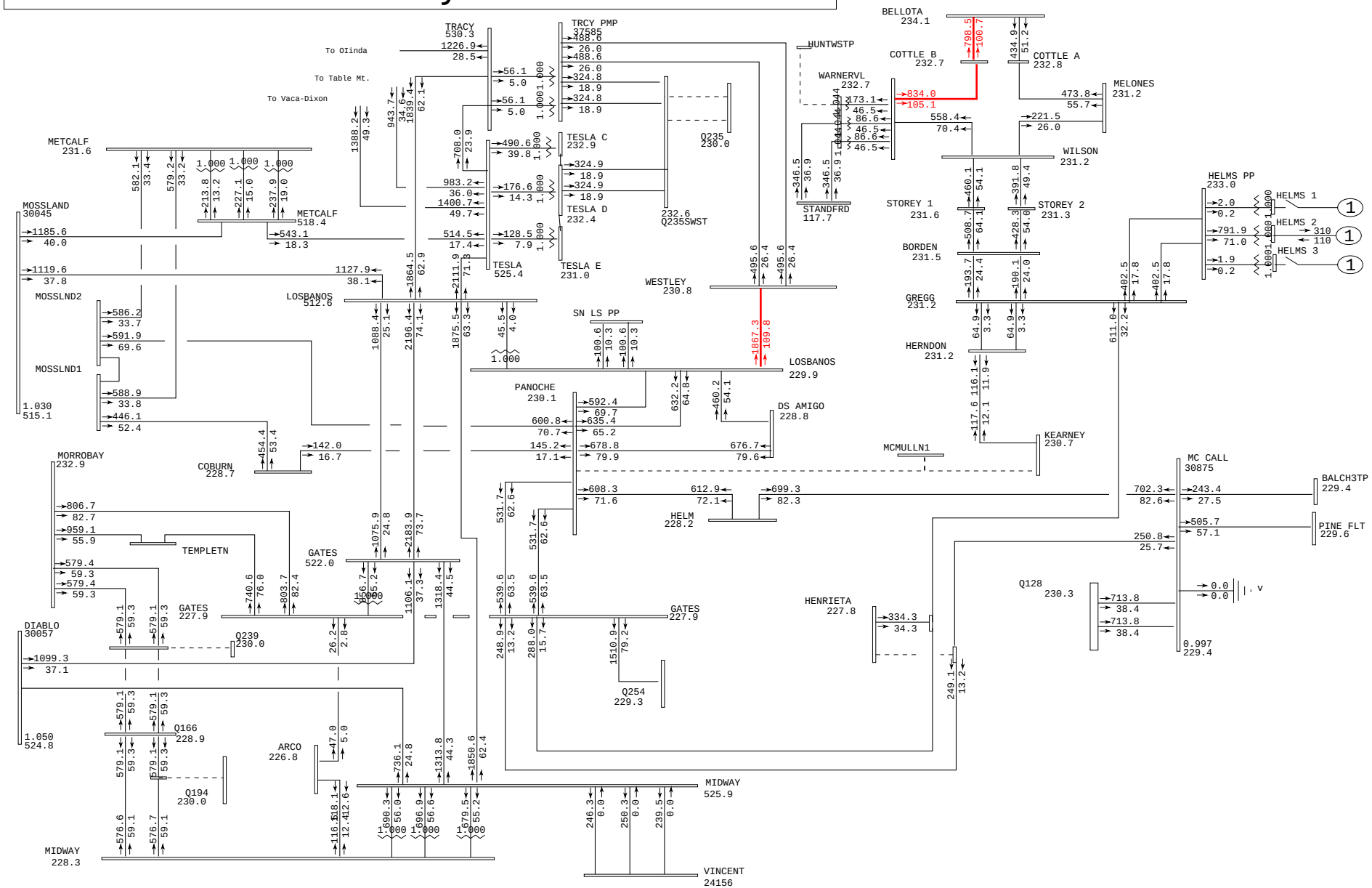

General Electric International, Inc. PSLF Program Wed Oct 01 08:24:01 2008 2013sumop_q272_pst.sav

	PG&E 2007 CASE SERIES: 2013 Summer Off Peak Post-Project Case	Plot 52-Outage: Panoche-Kearney 230kV & Kerckhoff	amps/rate
	PATH15= 4999 MW(S-N) PATH26= 254 MW(N-S) PDCI=-1846 MW(N-S) COI=-3646 MW(N-S)		gfres2.drw
	Q272 150 MW at GWF Henrietta 70 kV IFS - 2013 Summer Off Peak Post-Project FY		Rating = 2

Greater Fresno
500-kV & 230-kV System

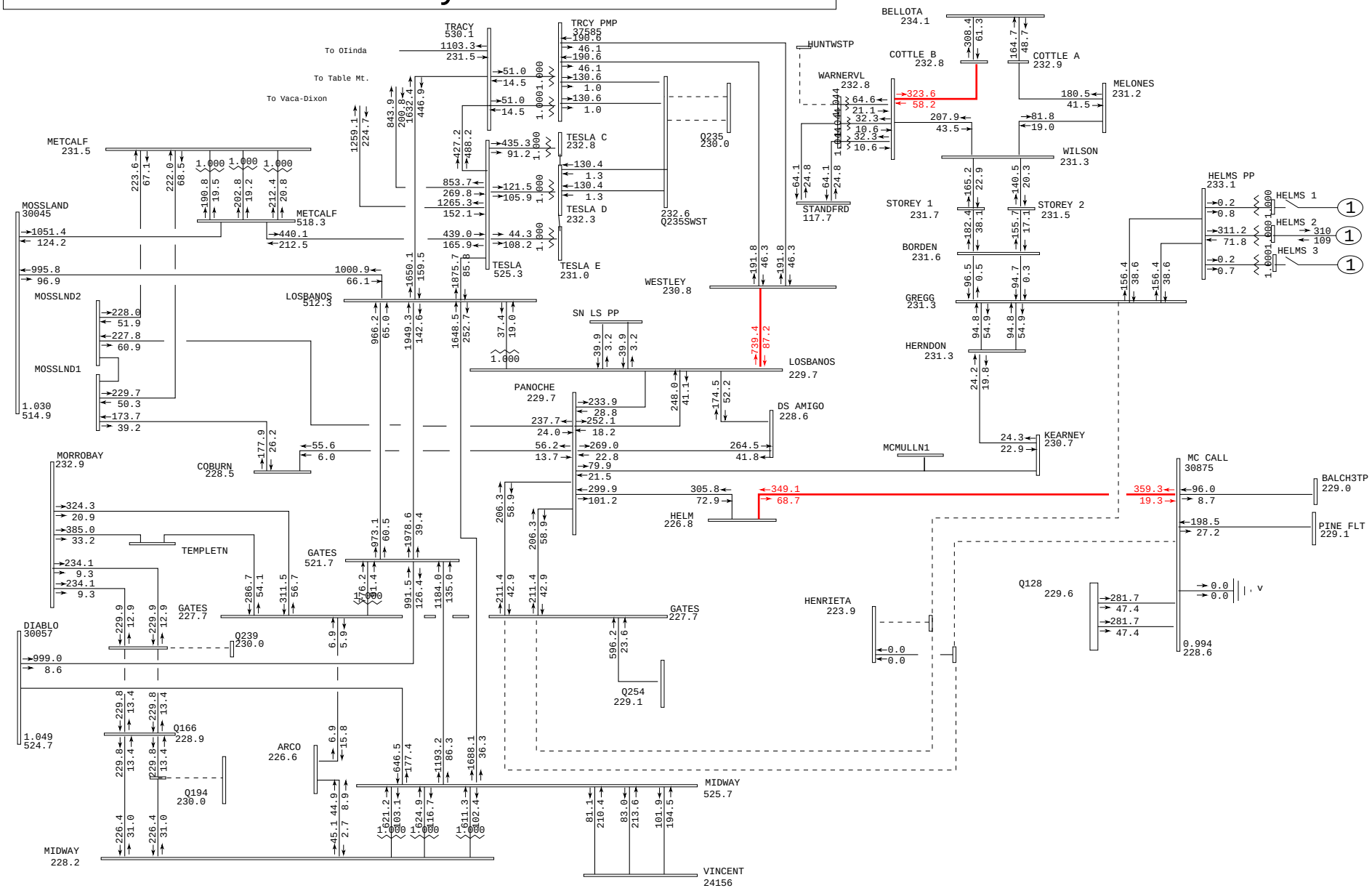

General Electric International, Inc. PSLF Program Wed Oct 01 08:24:03 2008 2013sumop_q272_pre.sav

	PG&E 2007 CASE SERIES: 2013 Summer Off Peak Pre-Project Case	Plot 53-Outage: Gates-Gregg & McCall 230kV Lines	MW/MVAR
	PATH15= 5001 MW(S-N) PATH26= 253 MW(N-S) PDCI=-1846 MW(N-S) COI=-3647 MW(N-S)		gfres2.drw
	Q272 150 MW GWF Henrietta 70 kV IFS - 2013 Summer Off Peak Pre-Project FY		Rating = 2

Greater Fresno
500-kV & 230-kV System

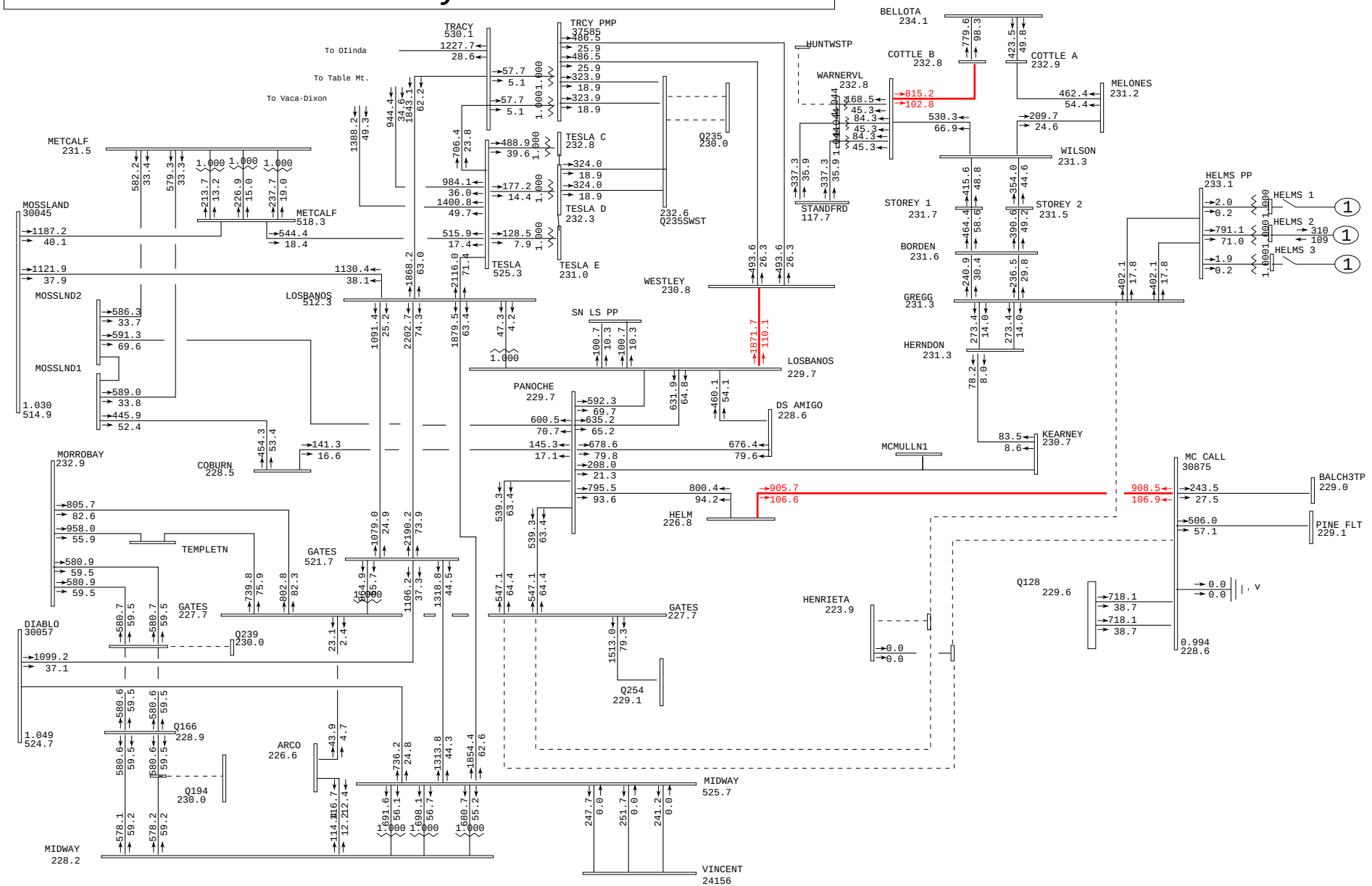

General Electric International, Inc. PSLF Program Wed Oct 01 08:24:05 2008 2013sumop_q272_pre.sav

PG&E 2007 CASE SERIES: 2013 Summer Off Peak Pre-Project Case PATH15= 5001 MW(S-N) PATH26= 253 MW(N-S) PDCI=-1846 MW(N-S) COI=-3647 MW(N-S) Q272 150 MW GWF Henrietta 70 kV IFS - 2013 Summer Off Peak Pre-Project FY	Plot 54-Outage: Gates-Gregg & McCall 230kV Lines	amps/rate gfres2.drw Rating = 2

Greater Fresno
500-kV & 230-kV System

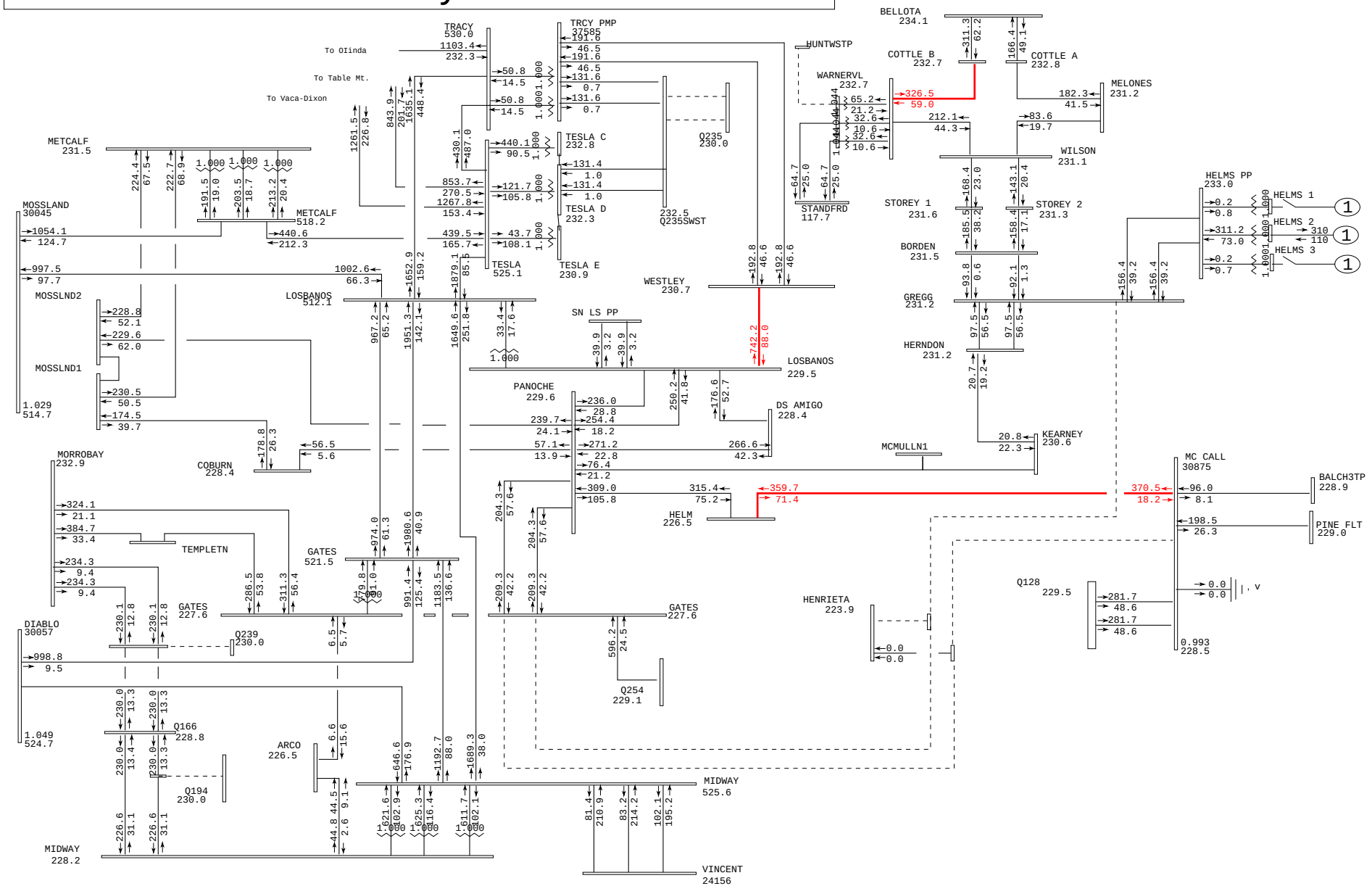

General Electric International, Inc. PSLF Program Wed Oct 01 08:24:06 2008 2013sumop_q272_pst.sav

	PG&E 2007 CASE SERIES: 2013 Summer Off Peak Post-Project Case	Plot 55-Outage: Gates-Gregg & McCall 230kV Lines	MW/MVAR
	PATH15= 4999 MW(S-N) PATH26= 254 MW(N-S) PDCI=-1846 MW(N-S) COI=-3646 MW(N-S)		gfres2.drw
	Q272 150 MW at GWF Henrietta 70 kV IFS - 2013 Summer Off Peak Post-Project FY		Rating = 2

Greater Fresno
500-kV & 230-kV System

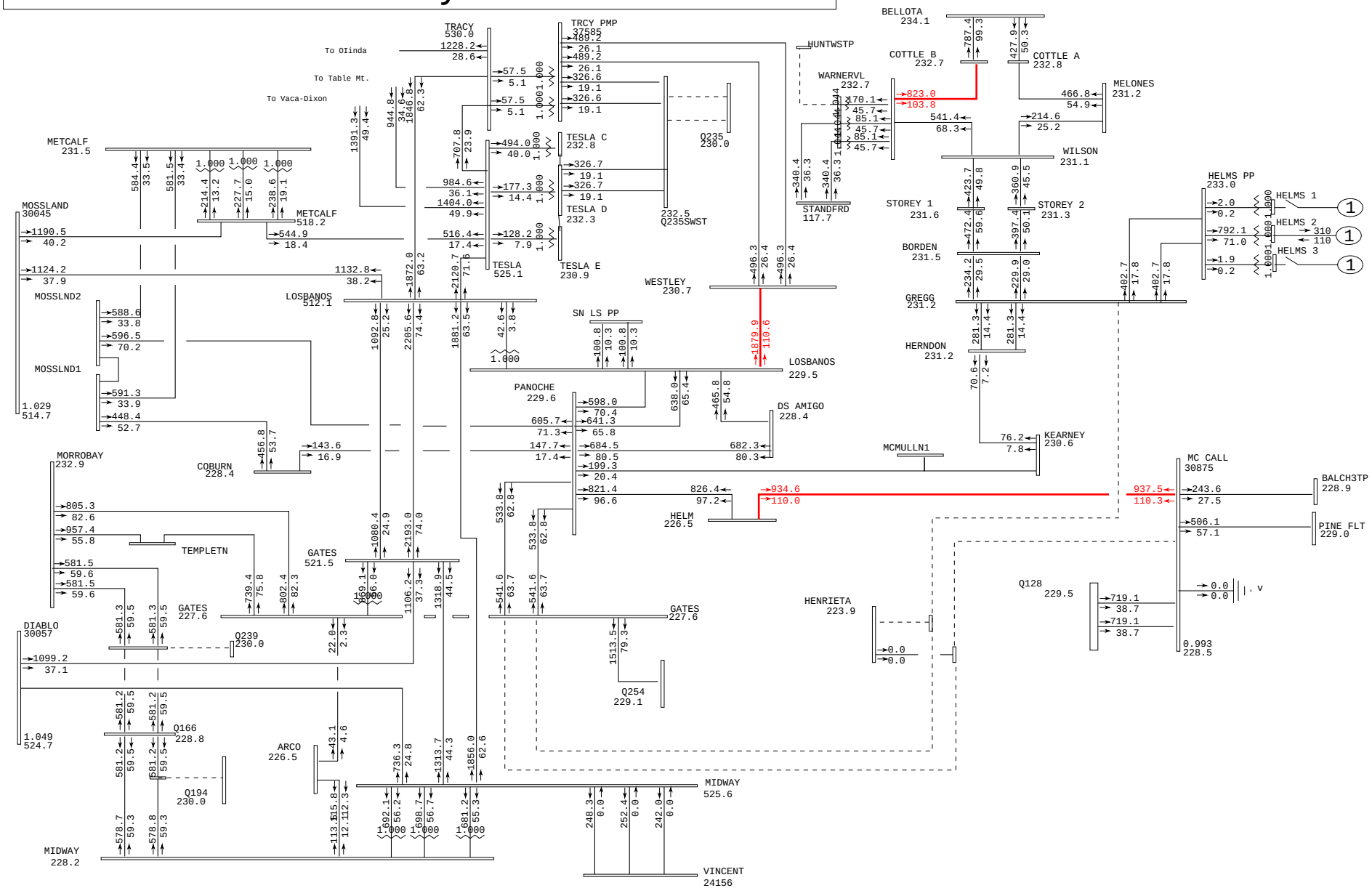

General Electric International, Inc. PSLF Program Wed Oct 01 08:24:08 2008 2013sumop_q272_pst.sav

	PG&E 2007 CASE SERIES: 2013 Summer Off Peak Post-Project Case PATH15= 4999 MW(S-N) PATH26= 254 MW(N-S) PDCI=-1846 MW(N-S) COI=-3646 MW(N-S) Q272 150 MW at GWF Henrietta 70 kV IFS - 2013 Summer Off Peak Post-Project FY	Plot 56-Outage: Gates-Gregg & McCall 230kV Lines	amps/rate gfres2.drw Rating = 2

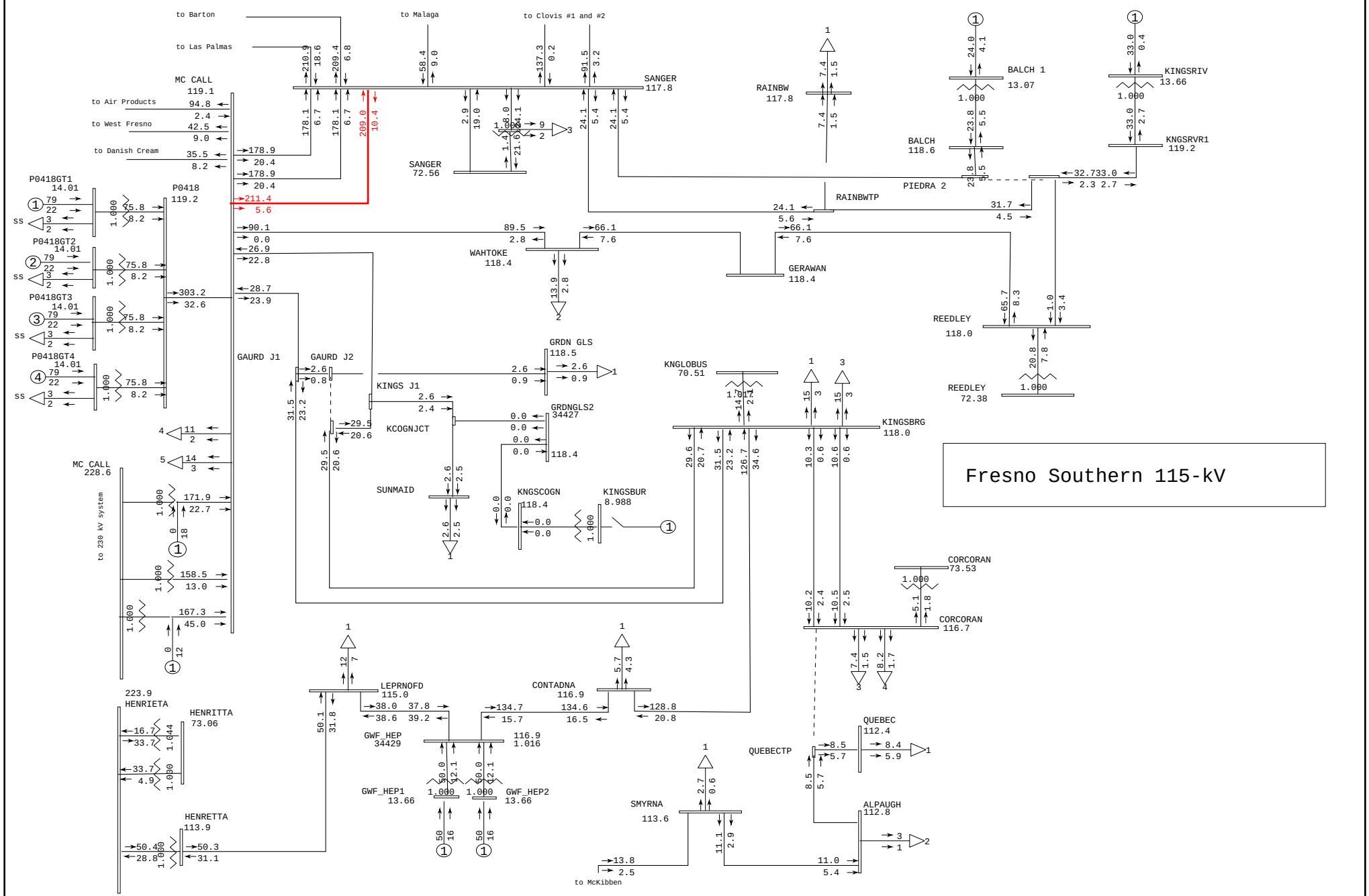

General Electric International, Inc. PSLF Program Wed Oct 01 08:24:10 2008 2013sumop_q272_pre.sav

PG&E 2007 CASE SERIES: 2013 Summer Off Peak Pre-Project Case PATH15= 5001 MW(S-N) PATH26= 253 MW(N-S) PDCI=-1846 MW(N-S) COI=-3647 MW(N-S) Q272 150 MW GWF Henrietta 70 kV IFS - 2013 Summer Off Peak Pre-Project FY	Plot 57-Outage: Gates-Gregg & McCall 230kV Lines	MW/MVAR fres_so_115.drw Rating = 2

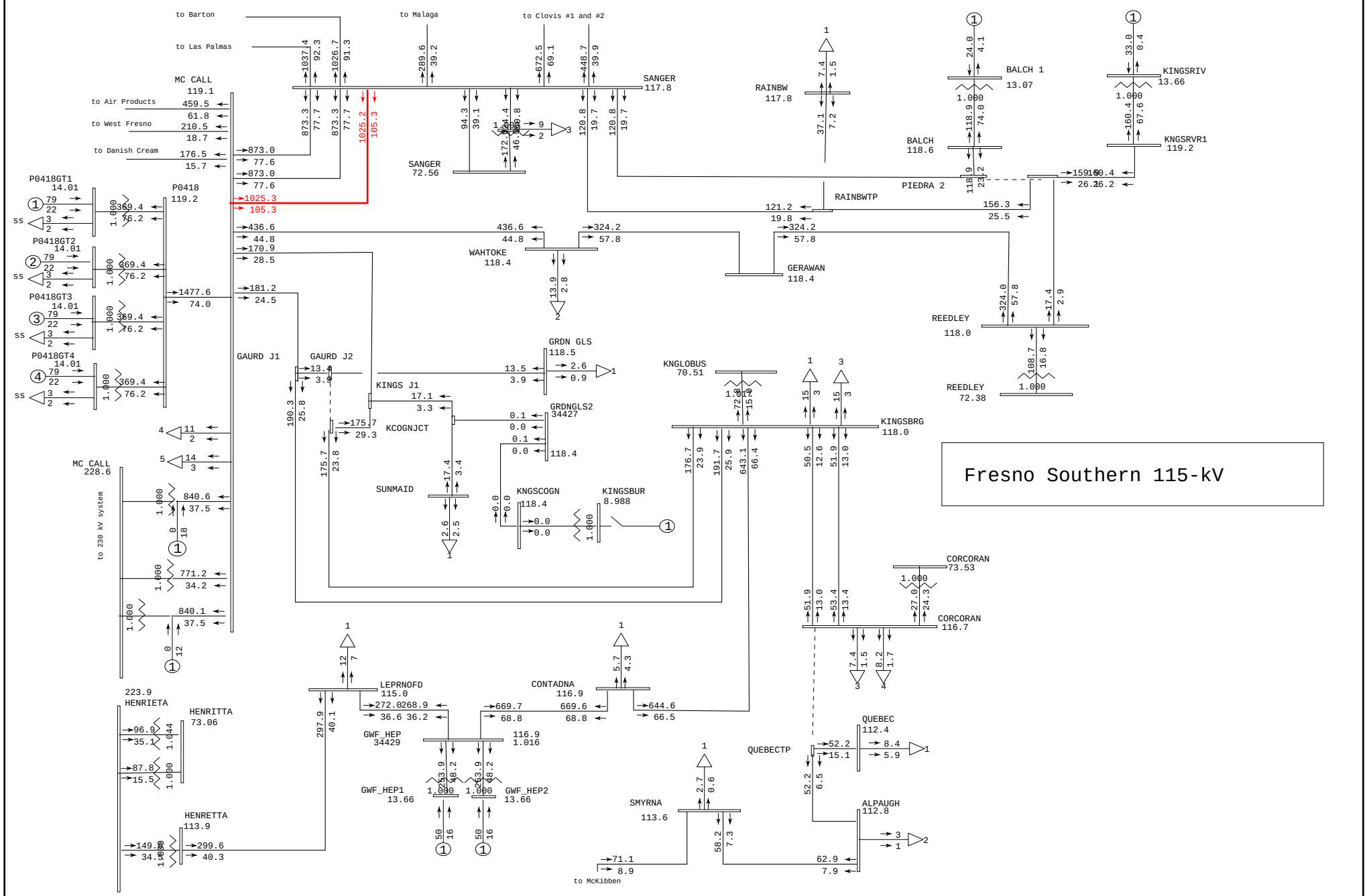

General Electric International, Inc. PSLF Program Wed Oct 01 08:24:12 2008 2013sumop_q272_pre.sav

PG&E 2007 CASE SERIES: 2013 Summer Off Peak Pre-Project Case PATH15= 5001 MW(S-N) PATH26= 253 MW(N-S) PDCI=-1846 MW(N-S) COI=-3647 MW(N-S) Q272 150 MW GWF Henrietta 70 kV IFS - 2013 Summer Off Peak Pre-Project FY	Plot 58-Outage: Gates-Gregg & McCall 230kV Lines	amps/rate fres_so_115.drw Rating = 2

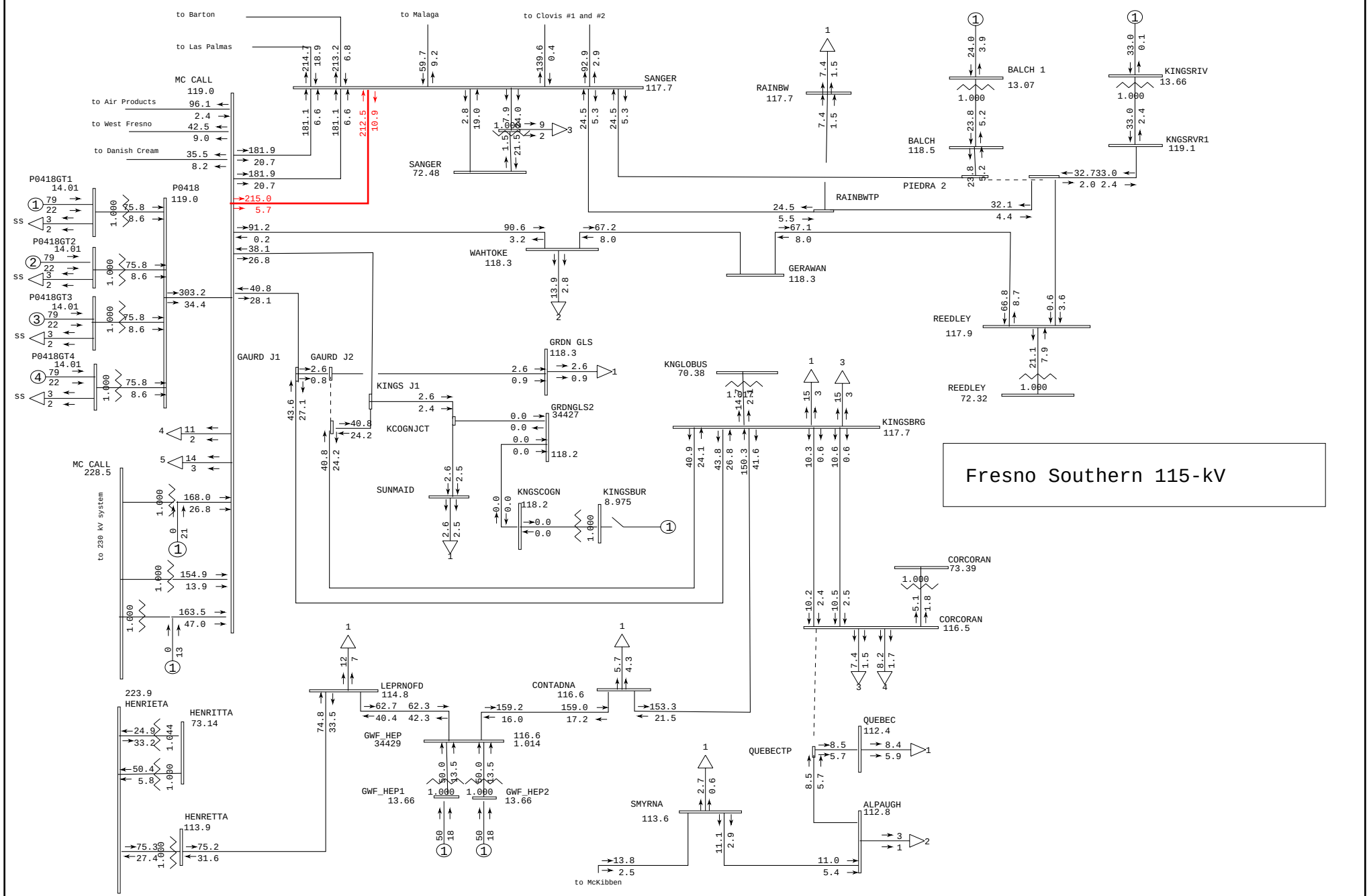

General Electric International, Inc. PSLF Program Wed Oct 01 08:24:13 2008 2013sumop_q272_pst.sav

PG&E 2007 CASE SERIES: 2013 Summer Off Peak Post-Project Case PATH15= 4999 MW(S-N) PATH26= 254 MW(N-S) PDCI=-1846 MW(N-S) COI=-3646 MW(N-S) Q272 150 MW at GWF Henrietta 70 kV IFS - 2013 Summer Off Peak Post-Project FY	Plot 59-Outage: Gates-Gregg & McCall 230kV Lines	MW/MVAR fres_so_115.drw Rating = 2

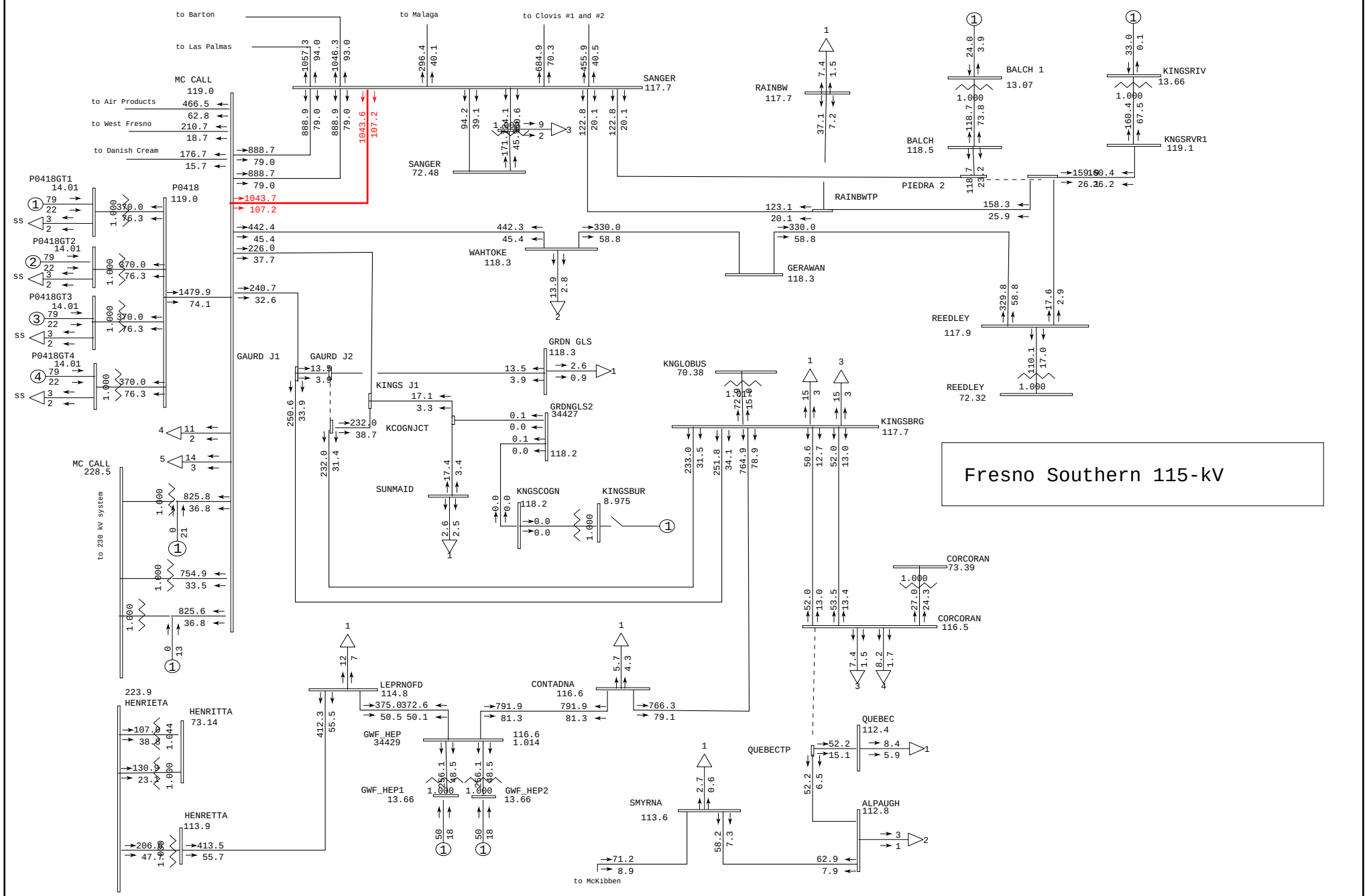

General Electric International, Inc. PSLF Program Wed Oct 01 08:24:15 2008 2013sumop_q272_pst.sav

PG&E 2007 CASE SERIES: 2013 Summer Off Peak Post-Project Case PATH15= 4999 MW(S-N) PATH26= 254 MW(N-S) PDCI=-1846 MW(N-S) COI=-3646 MW(N-S) Q272 150 MW at GWF Henrietta 70 kV IFS - 2013 Summer Off Peak Post-Project FY	Plot 60-Outage: Gates-Gregg & McCall 230kV Lines	amps/rate fres_so_115.drw Rating = 2

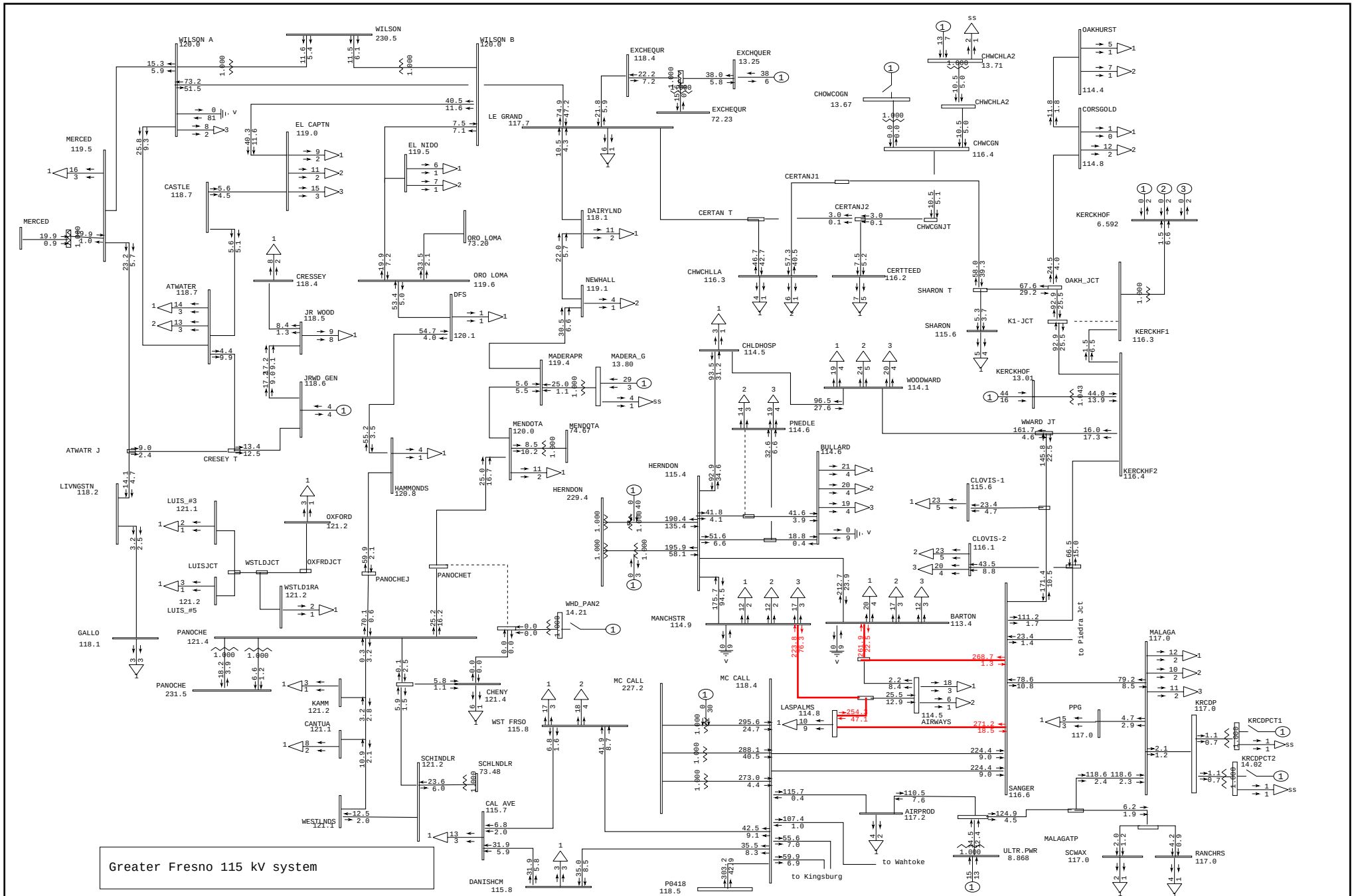

General Electric International, Inc. PSLF Program Wed Oct 01 08:24:17 2008 2013sumop_q272_pre.sav

PG&E 2007 CASE SERIES: 2013 Summer Off Peak Pre-Project Case PATH15= 5001 MW(S-N) PATH26= 253 MW(N-S) PDCI=-1846 MW(N-S) COI=-3647 MW(N-S) Q272 150 MW GWF Henrietta 70 kV IFS - 2013 Summer Off Peak Pre-Project FY	Plot 61-Outage: Helm-McCall & Gates-McCall 230kV Lines	MW/MVAR gfres115.drw Rating = 2

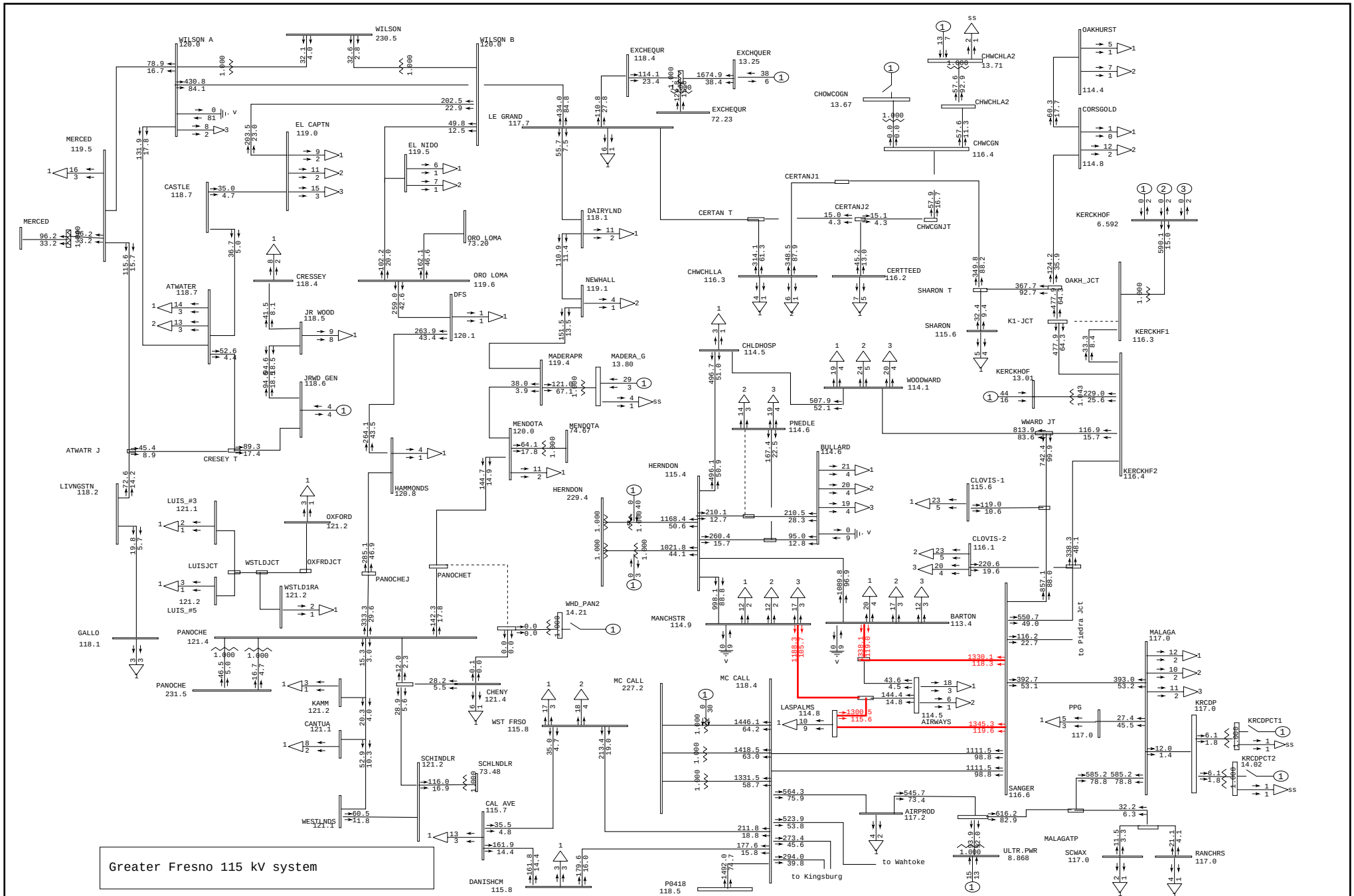

General Electric International, Inc. PSLF Program Wed Oct 01 08:24:18 2008 2013sumop_q272_pre.sav

	PG&E 2007 CASE SERIES: 2013 Summer Off Peak Pre-Project Case	Plot 62-Outage: Helm-McCall & Gates-McCall 230kV Lines	amps/rate
	PATH15= 5001 MW(S-N) PATH26= 253 MW(N-S) PDCI=-1846 MW(N-S) COI=-3647 MW(N-S)		gfres115.drw
	Q272 150 MW GWF Henrietta 70 kV IFS - 2013 Summer Off Peak Pre-Project FY		Rating = 2

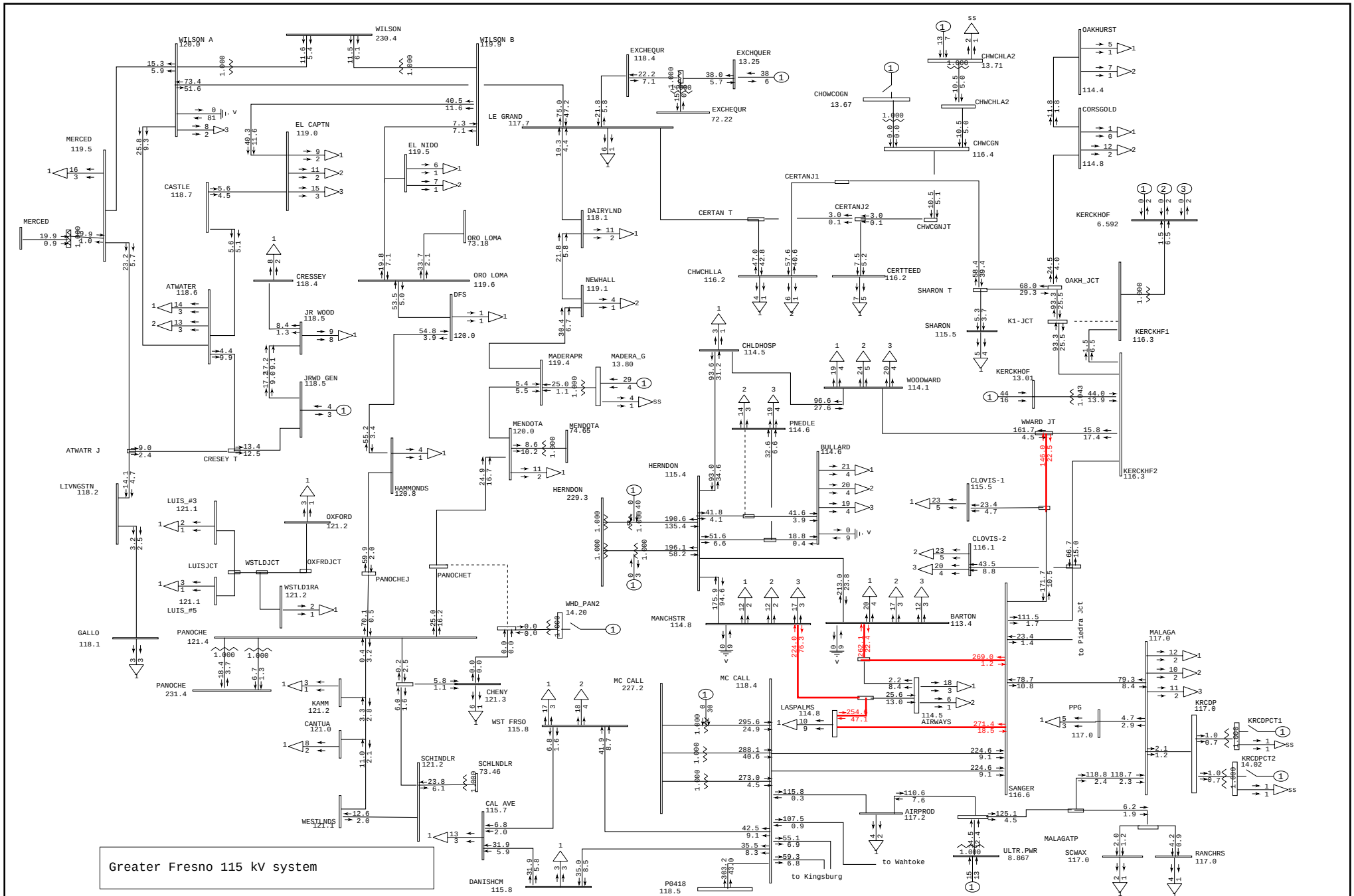

General Electric International, Inc. PSLF Program Wed Oct 01 08:24:20 2008 2013sumop_q272_pst.sav

PG&E 2007 CASE SERIES: 2013 Summer Off Peak Post-Project Case PATH15= 4999 MW(S-N) PATH26= 254 MW(N-S) PDCI=-1846 MW(N-S) COI=-3646 MW(N-S) Q272 150 MW at GWF Henrietta 70 kV IFS - 2013 Summer Off Peak Post-Project FY	Plot 63-Outage: Helm-McCall & Gates-McCall 230kV Lines	MW/MVAR gfres115.drw Rating = 2

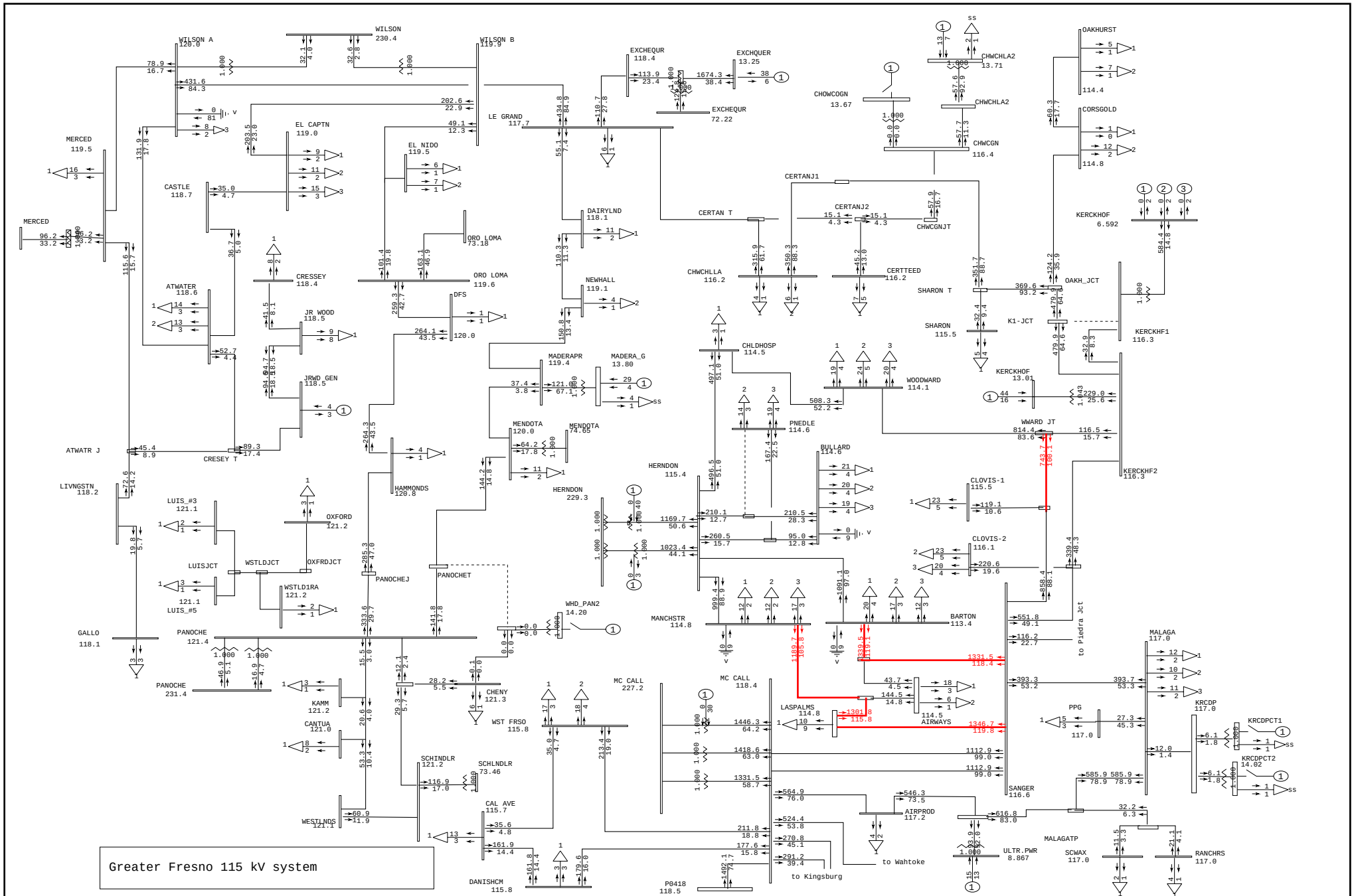

General Electric International, Inc. PSLF Program Wed Oct 01 08:24:22 2008 2013sumop_q272_pst.sav

	PG&E 2007 CASE SERIES: 2013 Summer Off Peak Post-Project Case PATH15= 4999 MW(S-N) PATH26= 254 MW(N-S) PDCI=-1846 MW(N-S) COI=-3646 MW(N-S) Q272 150 MW at GWF Henrietta 70 kV IFS - 2013 Summer Off Peak Post-Project FY	Plot 64-Outage: Helm-McCall & Gates-McCall 230kV Lines	amps/rate gfres115.drw Rating = 2

Greater Fresno
500-kV & 230-kV System

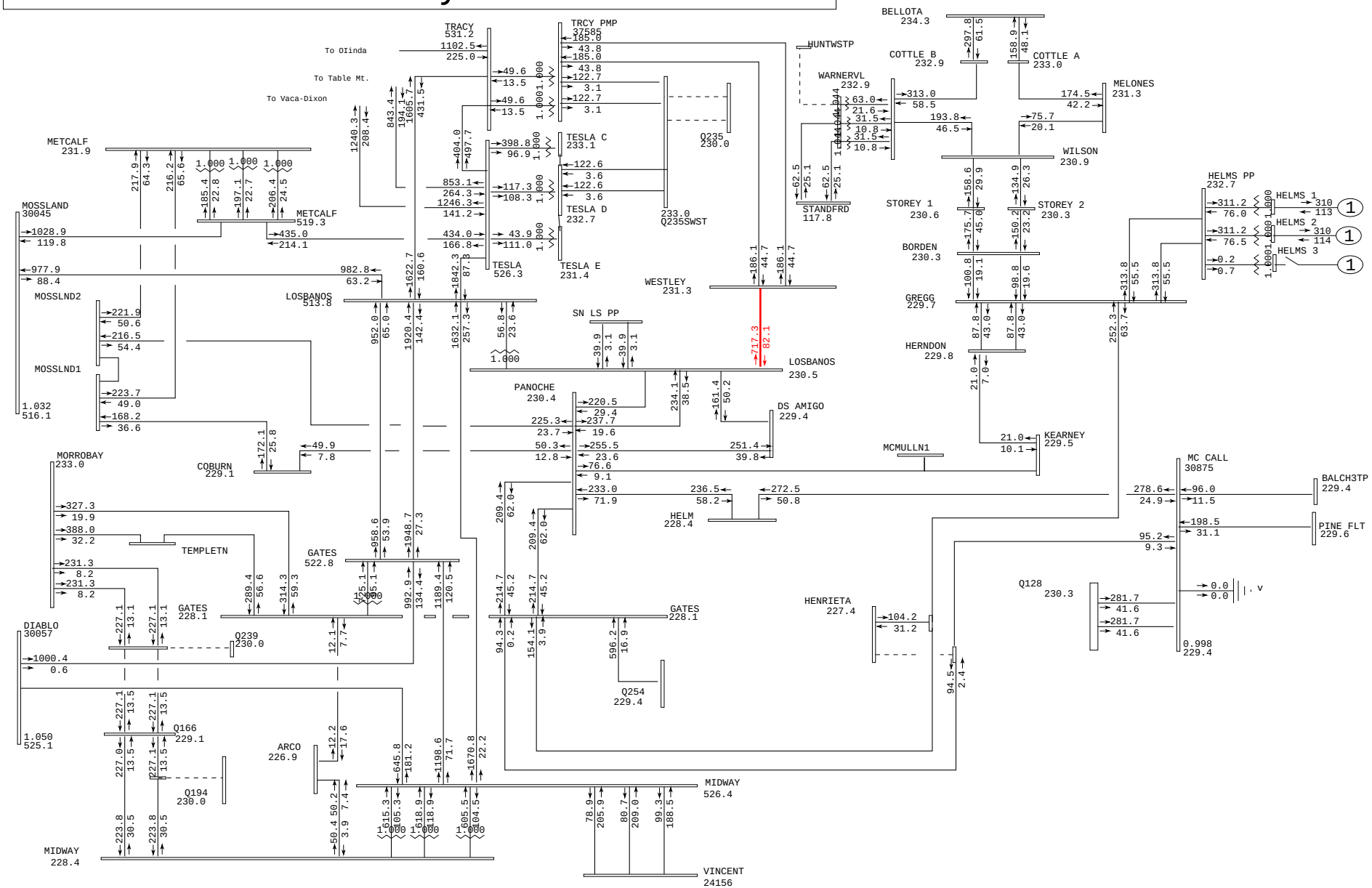

General Electric International, Inc. PSLF Program Wed Oct 01 08:24:23 2008 2013sumop_q272_pre.sav

	PG&E 2007 CASE SERIES: 2013 Summer Off Peak Pre-Project Case	Plot 65-Herndon-Ashlan & Gregg-Ashlan 230kV Lines	MW/MVAR
	PATH15= 5001 MW(S-N) PATH26= 253 MW(N-S) PDCI=-1846 MW(N-S) COI=-3647 MW(N-S)		gfres2.drw
	Q272 150 MW GWF Henrietta 70 kV IFS - 2013 Summer Off Peak Pre-Project FY		Rating = 2

Greater Fresno
500-kV & 230-kV System

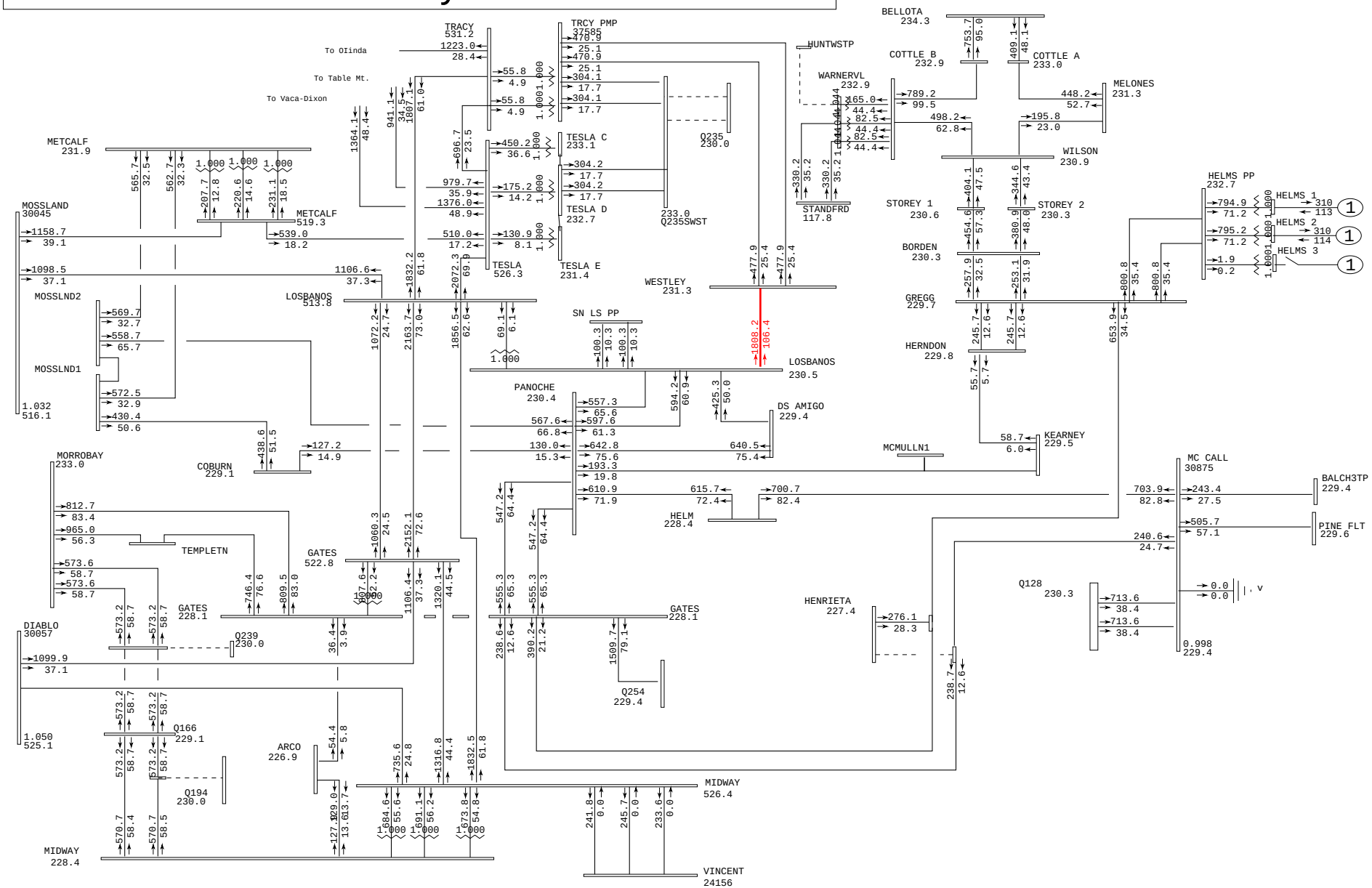

General Electric International, Inc. PSLF Program Wed Oct 01 08:24:25 2008 2013sumop_q272_pre.sav

	PG&E 2007 CASE SERIES: 2013 Summer Off Peak Pre-Project Case	Plot 66-Herndon-Ashlan & Gregg-Ashlan 230kV Lines	amps/rate
	PATH15= 5001 MW(S-N) PATH26= 253 MW(N-S) PDCI=-1846 MW(N-S) COI=-3647 MW(N-S)		gfres2.drw
	Q272 150 MW GWF Henrietta 70 kV IFS - 2013 Summer Off Peak Pre-Project FY		Rating = 2

Greater Fresno
500-kV & 230-kV System

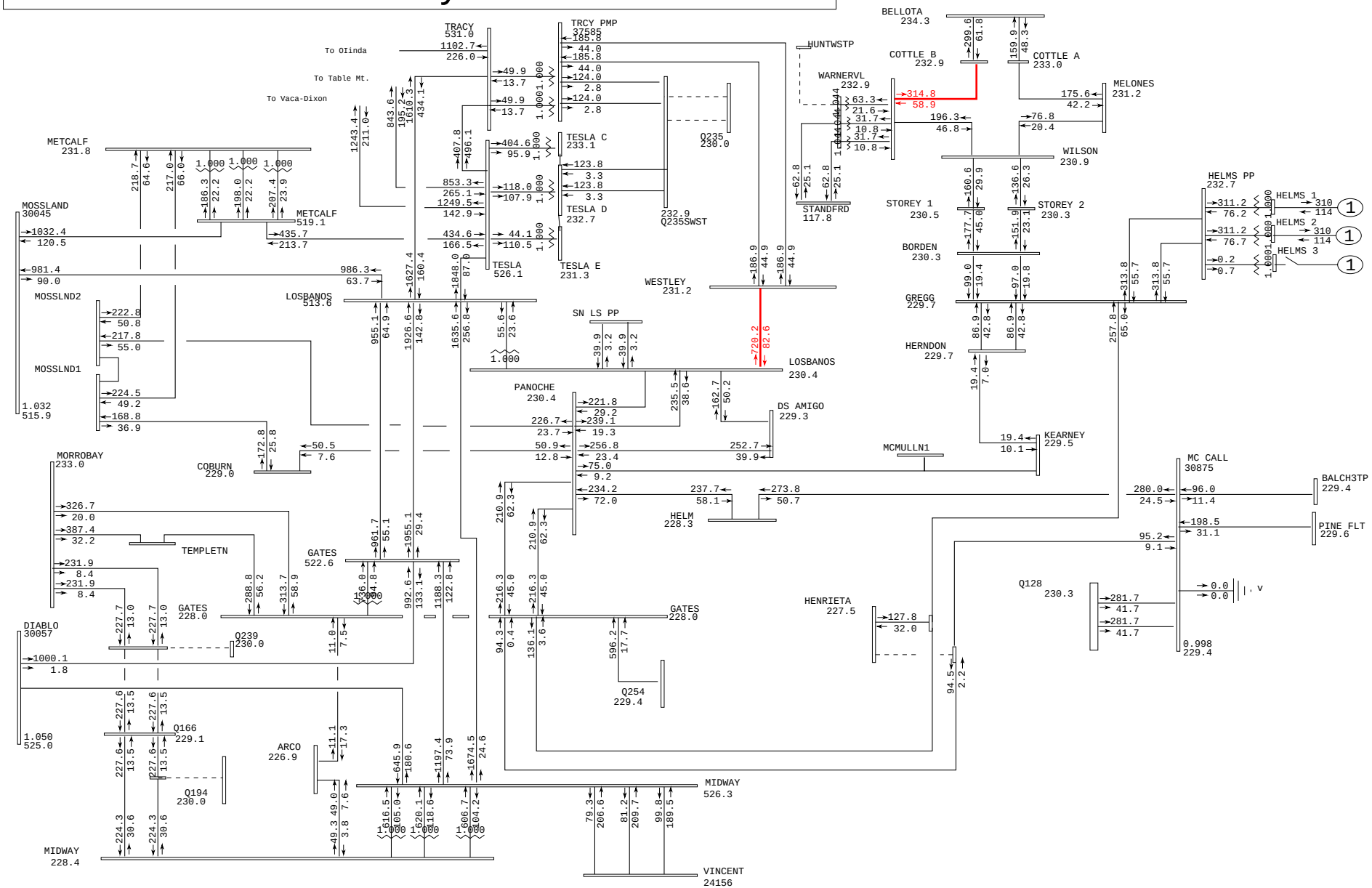

General Electric International, Inc. PSLF Program Wed Oct 01 08:24:26 2008 2013sumop_q272_pst.sav

	PG&E 2007 CASE SERIES: 2013 Summer Off Peak Post-Project Case	Plot 67-Herndon-Ashlan & Gregg-Ashlan 230kV Lines	MW/MVAR
	PATH15= 4999 MW(S-N) PATH26= 254 MW(N-S) PDCI=-1846 MW(N-S) COI=-3646 MW(N-S)		gfres2.drw
	Q272 150 MW at GWF Henrietta 70 kV IFS - 2013 Summer Off Peak Post-Project FY		Rating = 2

Greater Fresno
500-kV & 230-kV System

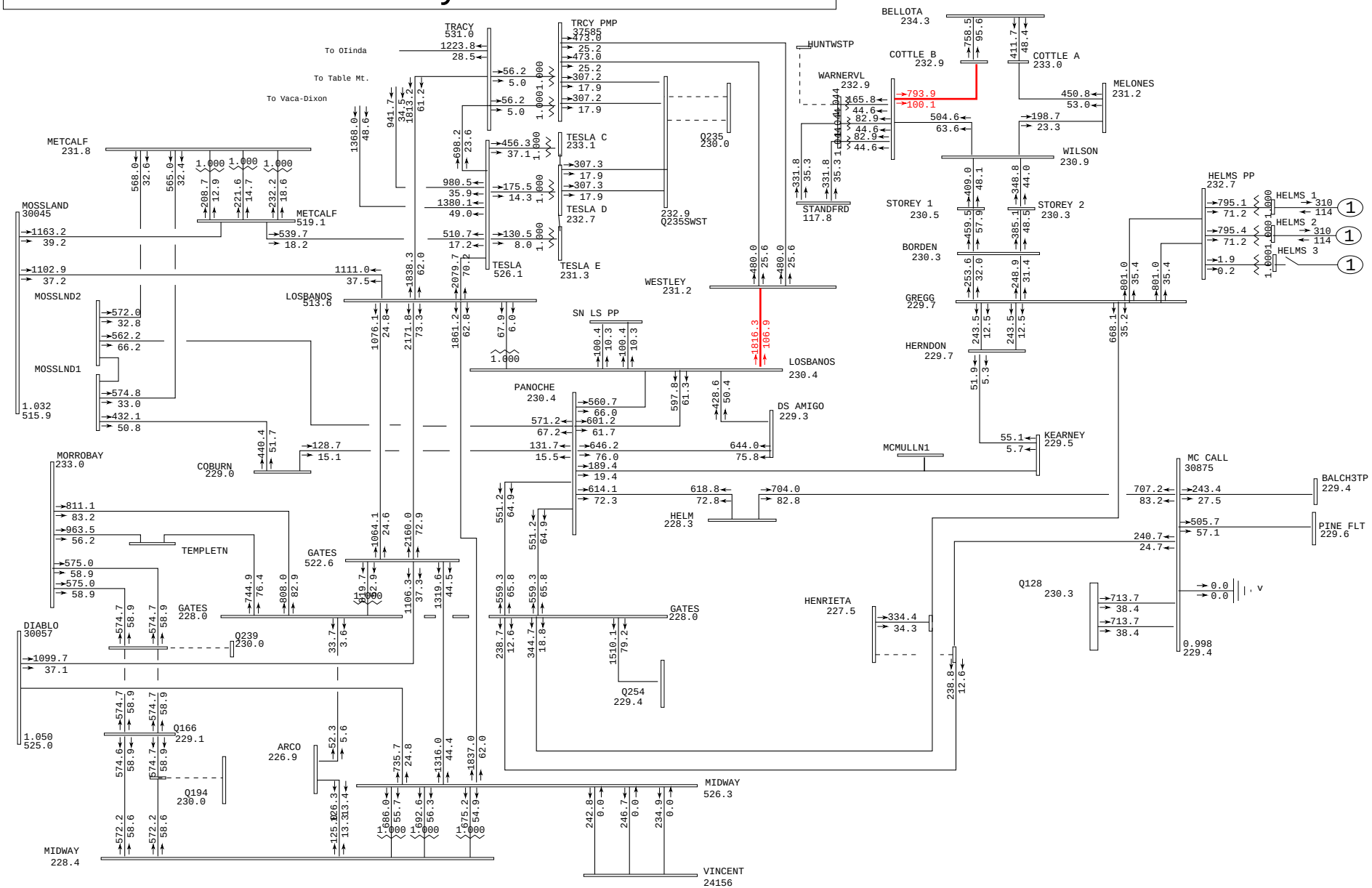

General Electric International, Inc. PSLF Program Wed Oct 01 08:24:28 2008 2013sumop_q272_pst.sav

	PG&E 2007 CASE SERIES: 2013 Summer Off Peak Post-Project Case	Plot 68-Herndon-Ashlan & Gregg-Ashlan 230kV Lines	amps/rate
	PATH15= 4999 MW(S-N) PATH26= 254 MW(N-S) PDCI=-1846 MW(N-S) COI=-3646 MW(N-S)		gfres2.drw
	Q272 150 MW at GWF Henrietta 70 kV IFS - 2013 Summer Off Peak Post-Project FY		Rating = 2

Henrietta 70 kV system

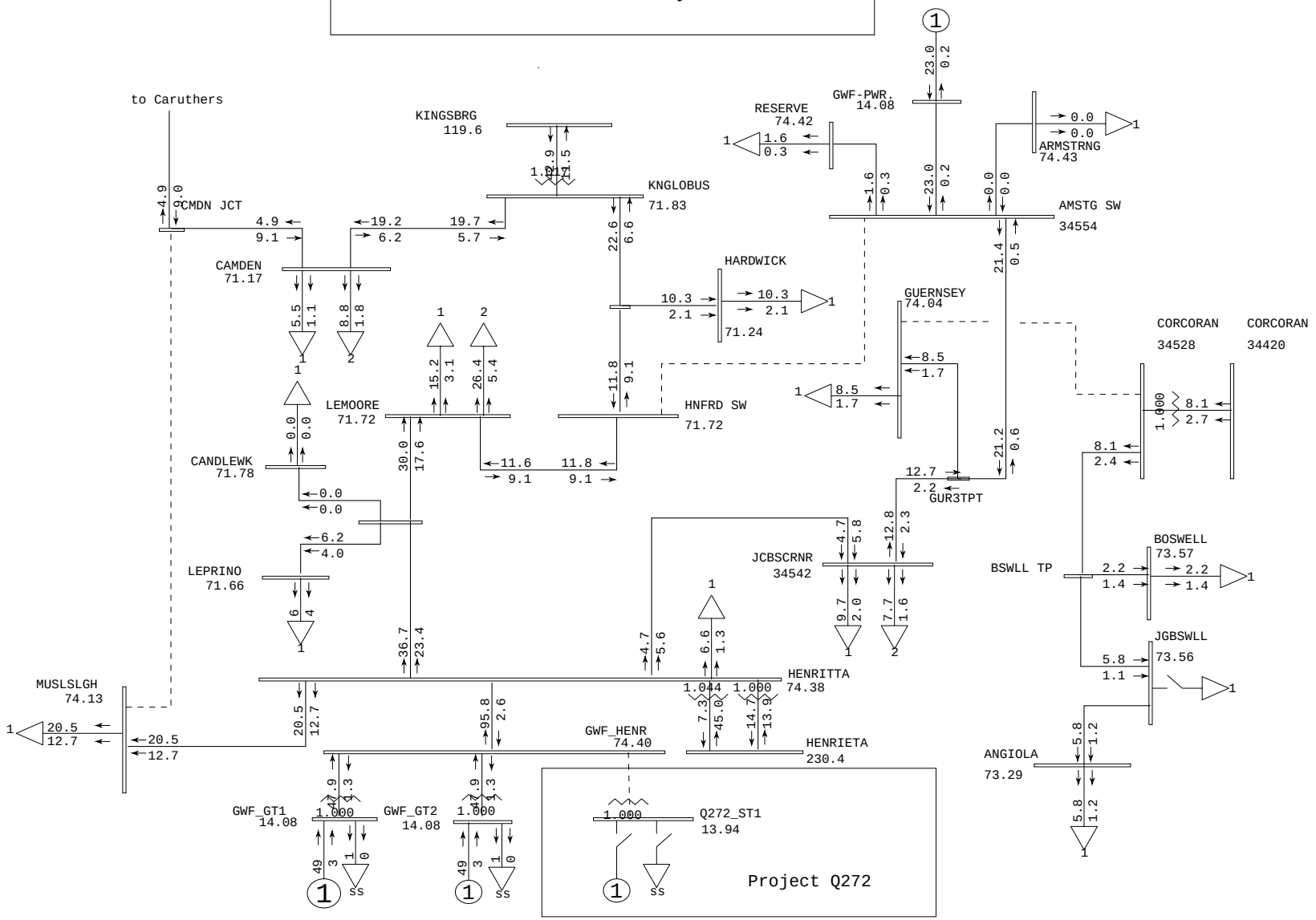

General Electric International, Inc. PSLF Program Wed Oct 01 08:24:29 2008 2013sprpk_q272_pre.sav

PG&E 2007 CASE SERIES: 2013 Spring Peak Pre-Project Case	Plot 69 - No Outage	MW/MVAR
PATH15= 966 MW(S-N) PATH26= 2889 MW(N-S) PDCI= 3092 MW(N-S) COI= 4501 MW(N-S)		hen_70.drw
Q272 150 MW GWF Henrietta 70 kV IFS - 2013 Spring Peak Pre-Project FY		Rating = 1

Henrietta 70 kV system

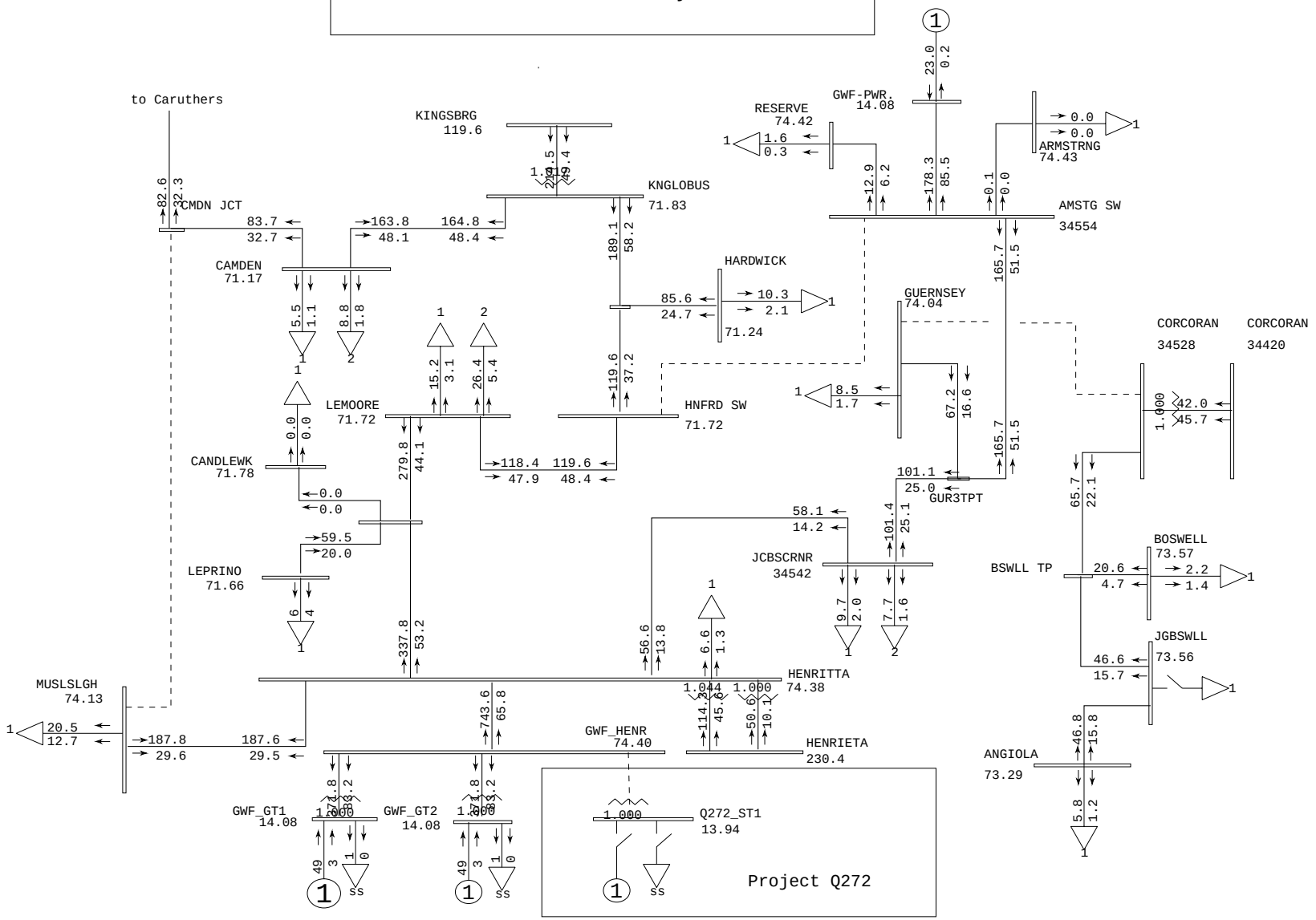

General Electric International, Inc. PSLF Program Wed Oct 01 08:24:29 2008 2013sprpk_q272_pre.sav

	PG&E 2007 CASE SERIES: 2013 Spring Peak Pre-Project Case	Plot 70 - No Outage	amps/rate
	PATH15= 966 MW(S-N) PATH26= 2889 MW(N-S) PDCI= 3092 MW(N-S) COI= 4501 MW(N-S)		hen_70.drw
	Q272 150 MW GWF Henrietta 70 kV IFS - 2013 Spring Peak Pre-Project FY		Rating = 1

Henrietta 70 kV system

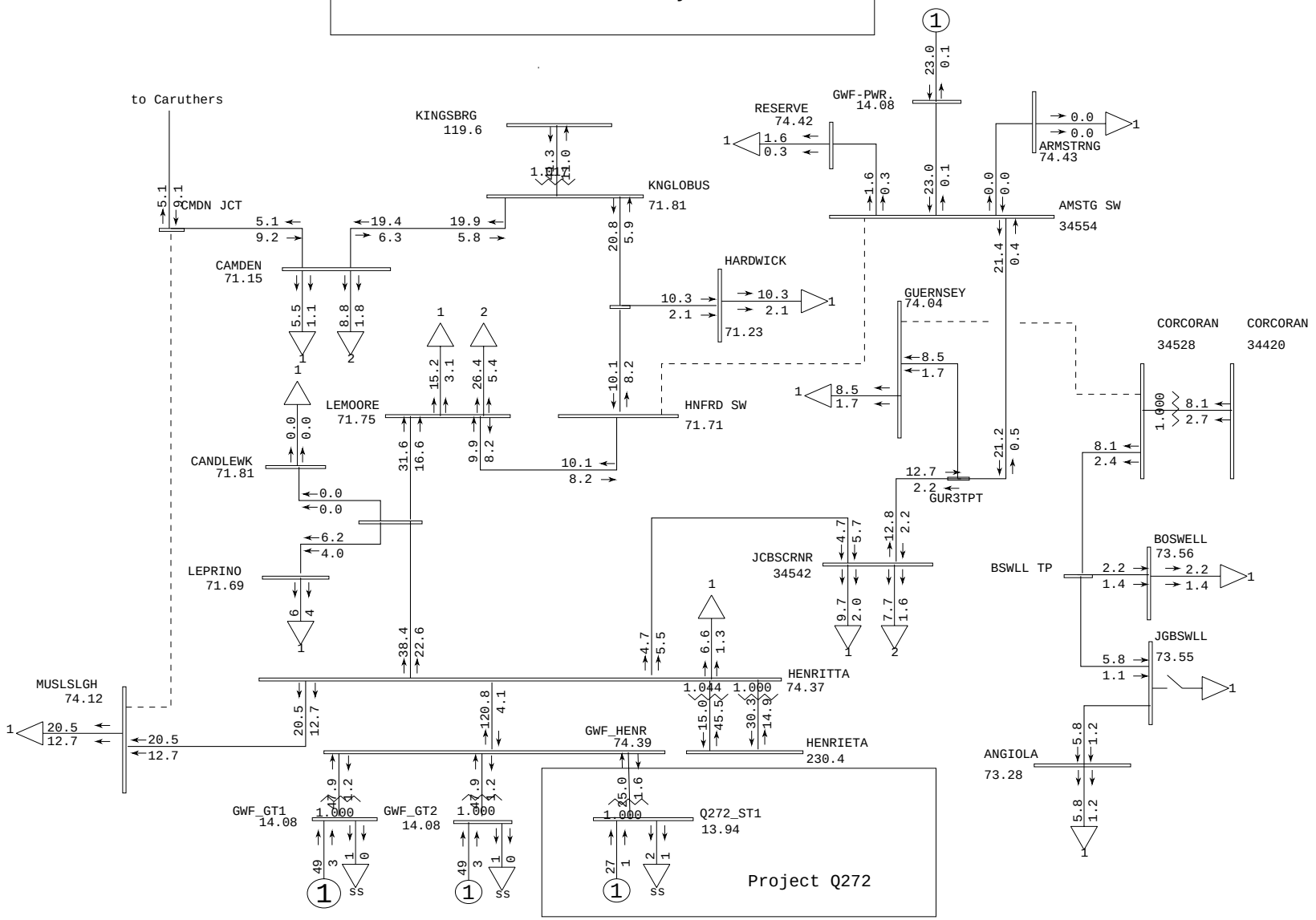

General Electric International, Inc. PSLF Program Wed Oct 01 08:24:30 2008 2013sprpk_q272_pst_v2.sav

	PG&E 2007 CASE SERIES: 2013 Spring Peak Post-Project Case	Plot 71 - No Outage	MW/MVAR
	PATH15= 958 MW(S-N) PATH26= 2895 MW(N-S) PDCI= 3091 MW(N-S) COI= 4507 MW(N-S)		hen_70.drw
	Q272 150 MW at GWF Henrietta 70 kV IFS - 2013 Spring Peak Post-Project FY		Rating = 1

Henrietta 70 kV system

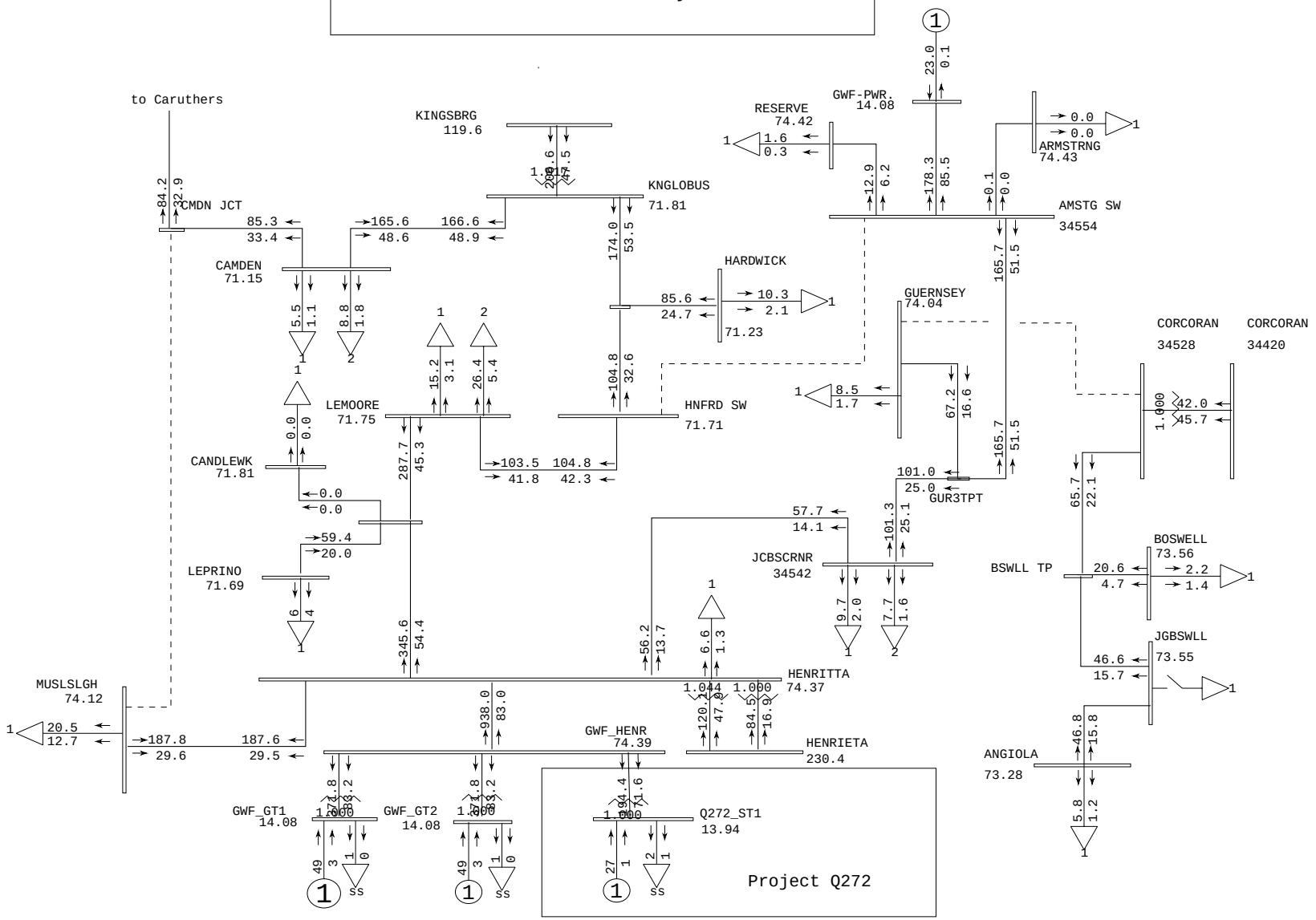

General Electric International, Inc. PSLF Program Wed Oct 01 08:24:31 2008 2013sprpk_q272_pst_v2.sav

	PG&E 2007 CASE SERIES: 2013 Spring Peak Post-Project Case	Plot 72 - No Outage	amps/rate
	PATH15= 958 MW(S-N) PATH26= 2895 MW(N-S) PDCI= 3091 MW(N-S) COI= 4507 MW(N-S)		hen_70.drw
	Q272 150 MW at GWF Henrietta 70 kV IFS - 2013 Spring Peak Post-Project FY		Rating = 1

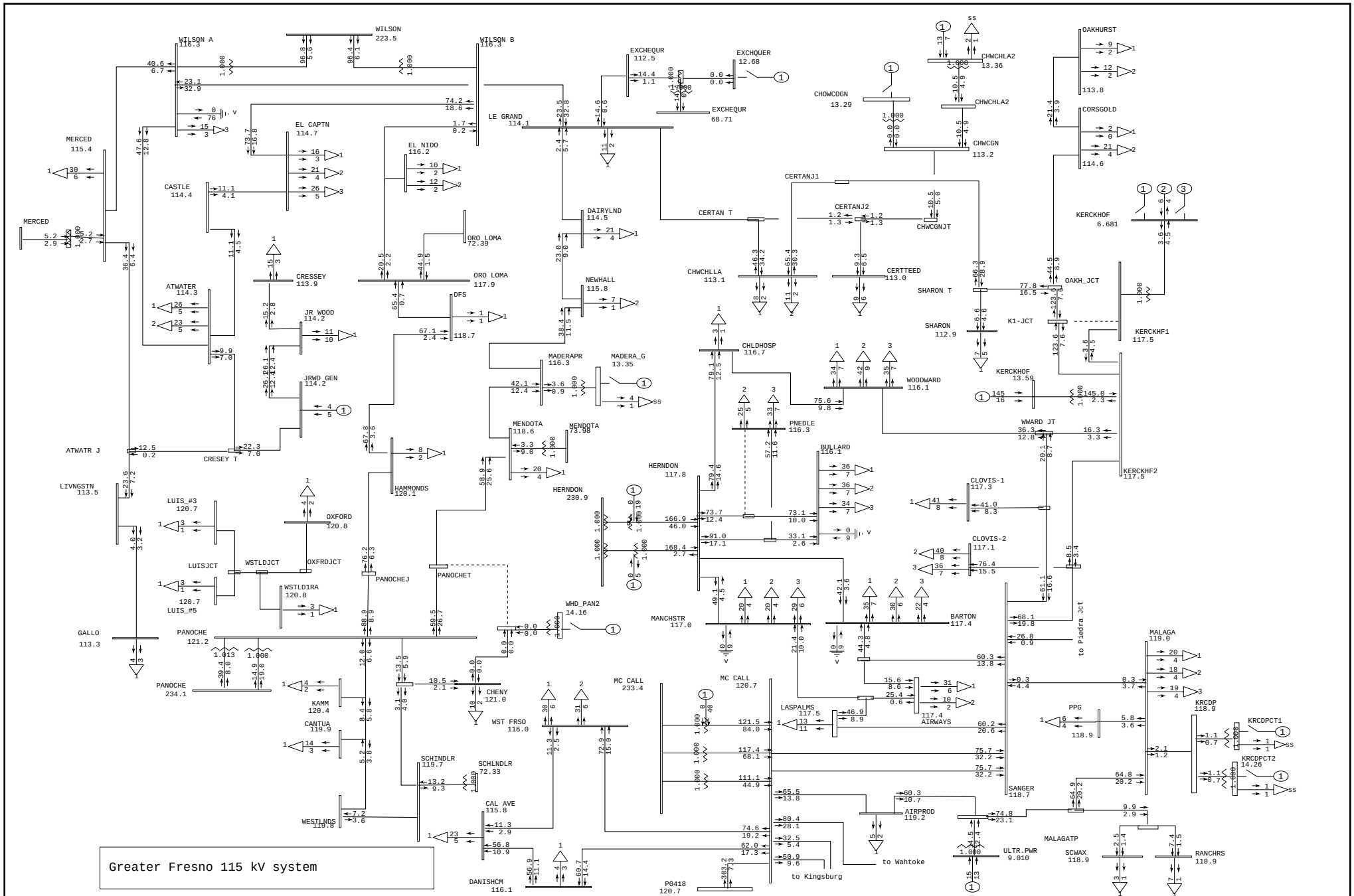

General Electric International, Inc. PSLF Program Wed Oct 01 08:24:32 2008 2013sprpk_q272_pre.sav

	PG&E 2007 CASE SERIES: 2013 Spring Peak Pre-Project Case PATH15= 966 MW(S-N) PATH26= 2889 MW(N-S) PDCI= 3092 MW(N-S) COI= 4501 MW(N-S) Q272 150 MW GWF Henrietta 70 kV IFS - 2013 Spring Peak Pre-Project FY	Plot 73- Wilson-Borden 230kV & Exchequer	MW/MVAR gfres115.drw Rating = 2

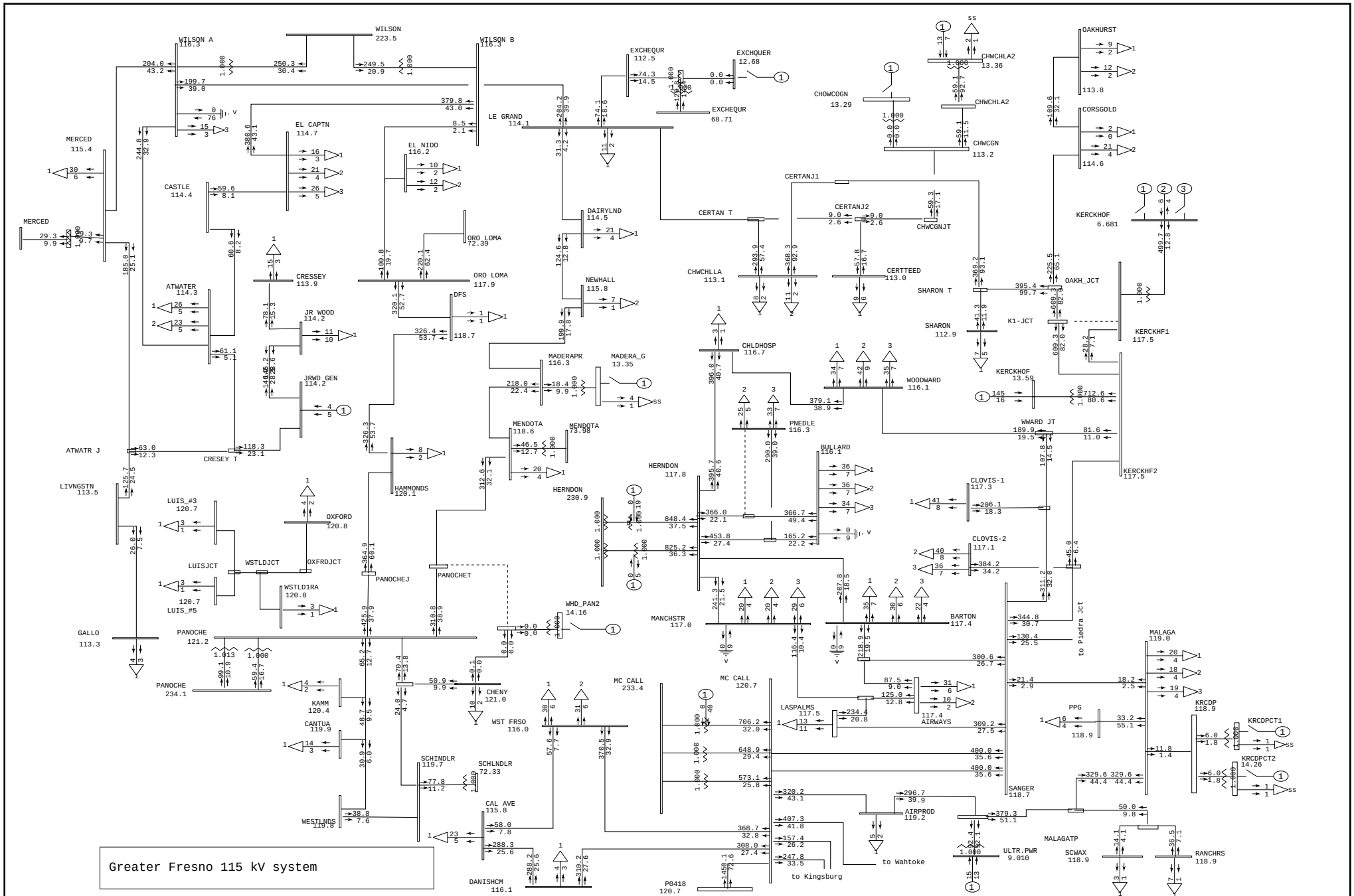

General Electric International, Inc. PSLF Program Wed Oct 01 08:24:34 2008 2013sprpk_q272_pre.sav

	PG&E 2007 CASE SERIES: 2013 Spring Peak Pre-Project Case PATH15= 966 MW(S-N) PATH26= 2889 MW(N-S) PDCI= 3092 MW(N-S) COI= 4501 MW(N-S) Q272 150 MW GWF Henrietta 70 kV IFS - 2013 Spring Peak Pre-Project FY	Plot 74- Wilson-Borden 230kV & Exchequer	amps/rate gfres115.drw Rating = 2

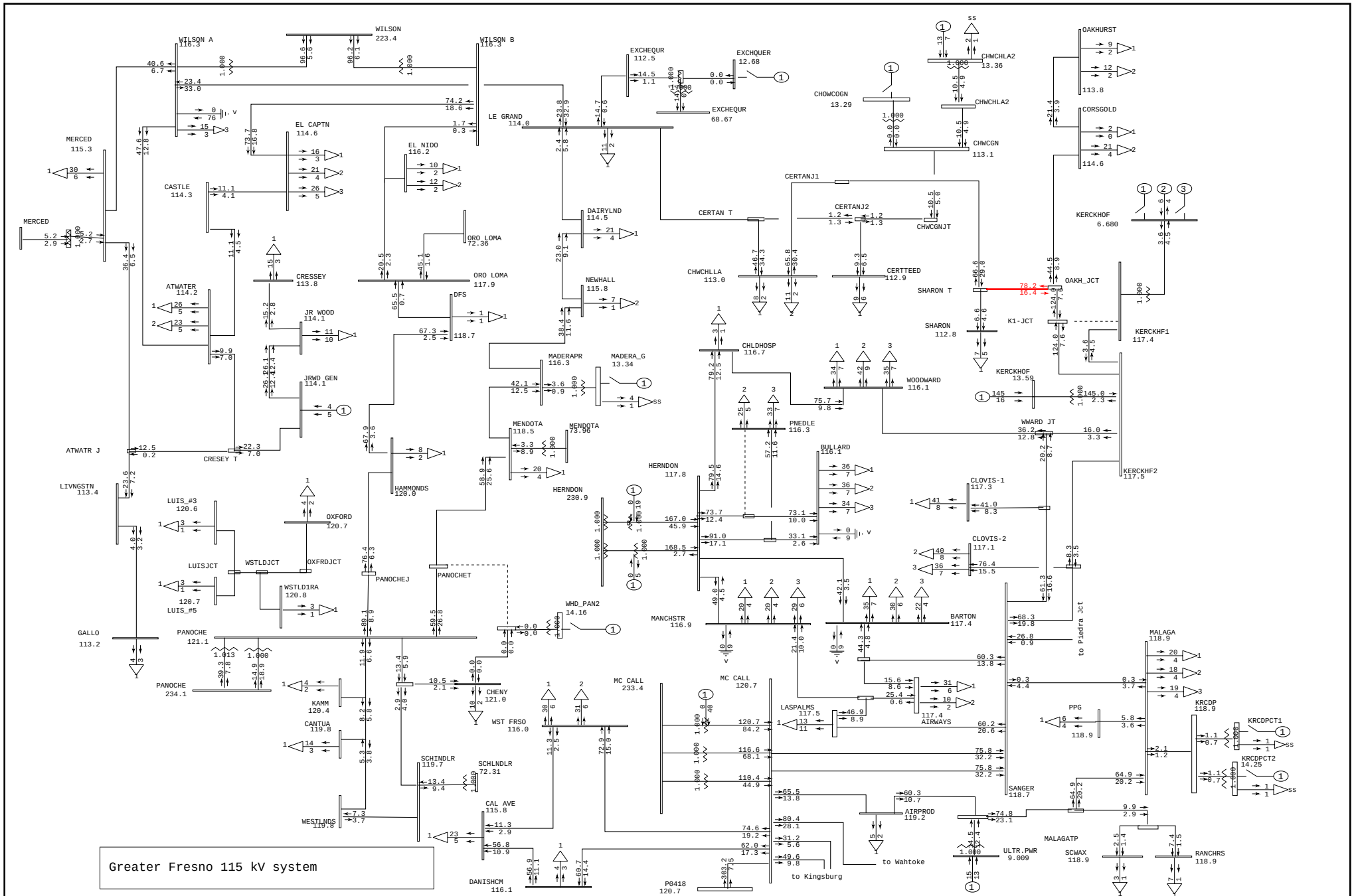

General Electric International, Inc. PSLF Program Wed Oct 01 08:24:36 2008 2013sprpk_q272_pst_v2.sav

	PG&E 2007 CASE SERIES: 2013 Spring Peak Post-Project Case PATH15= 958 MW(S-N) PATH26= 2895 MW(N-S) PDCI= 3091 MW(N-S) COI= 4507 MW(N-S) Q272 150 MW at GWF Henrietta 70 kV IFS - 2013 Spring Peak Post-Project FY	Plot 75- Wilson-Borden 230kV & Exchequer	MW/MVAR gfres115.drw Rating = 2

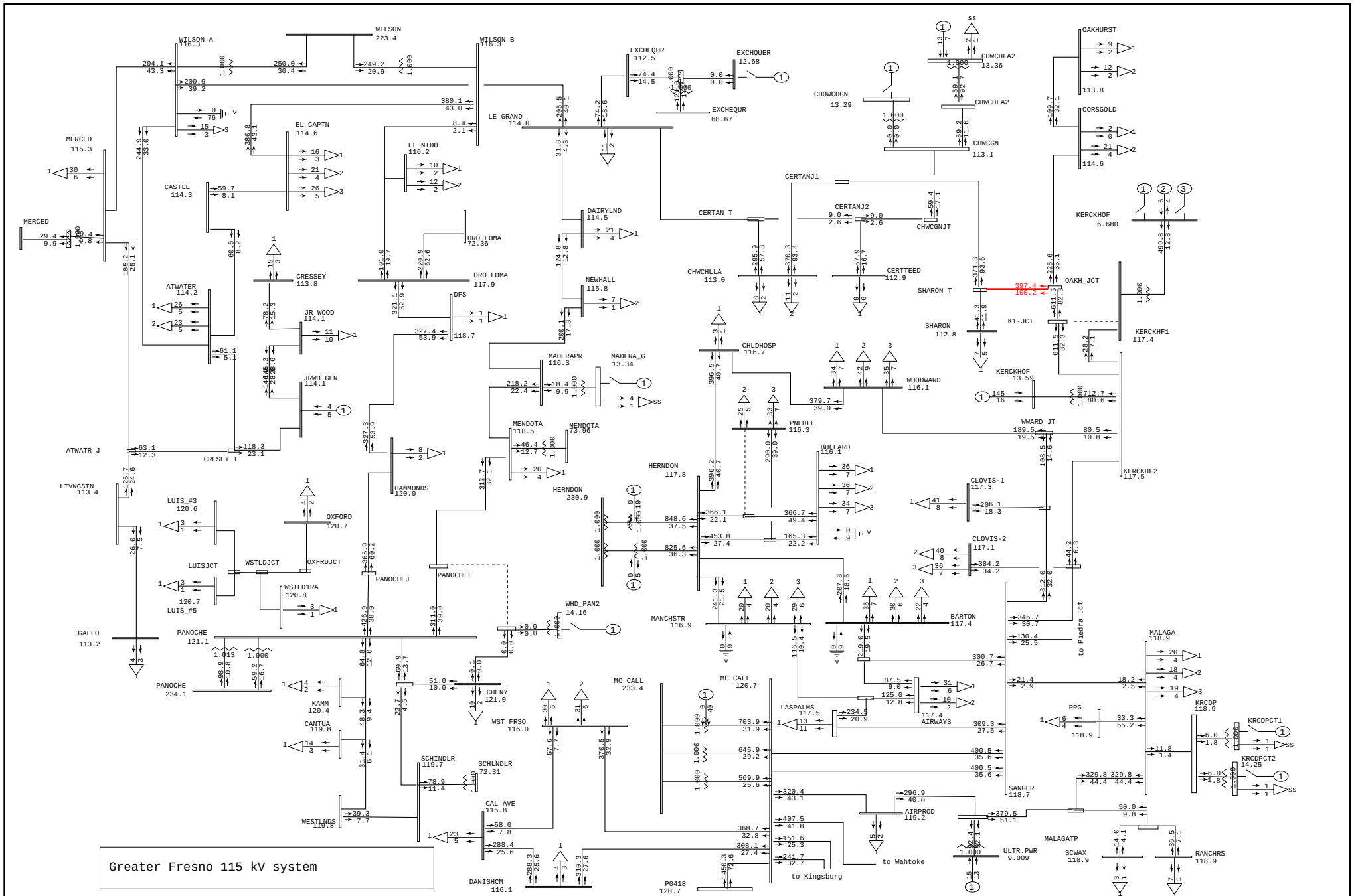

Greater Fresno 115 kV system

General Electric International, Inc. PSLF Program Wed Oct 01 08:24:38 2008 2013sprpk_q272_pst_v2.sav

	PG&E 2007 CASE SERIES: 2013 Spring Peak Post-Project Case	Plot 76- Wilson-Borden 230kV & Exchequer	amps/rate
	PATH15= 958 MW(S-N) PATH26= 2895 MW(N-S) PDCI= 3091 MW(N-S) COI= 4507 MW(N-S)		gfres115.drw
	Q272 150 MW at GWF Henrietta 70 kV IFS - 2013 Spring Peak Post-Project FY		Rating = 2

Greater Fresno
500-kV & 230-kV System

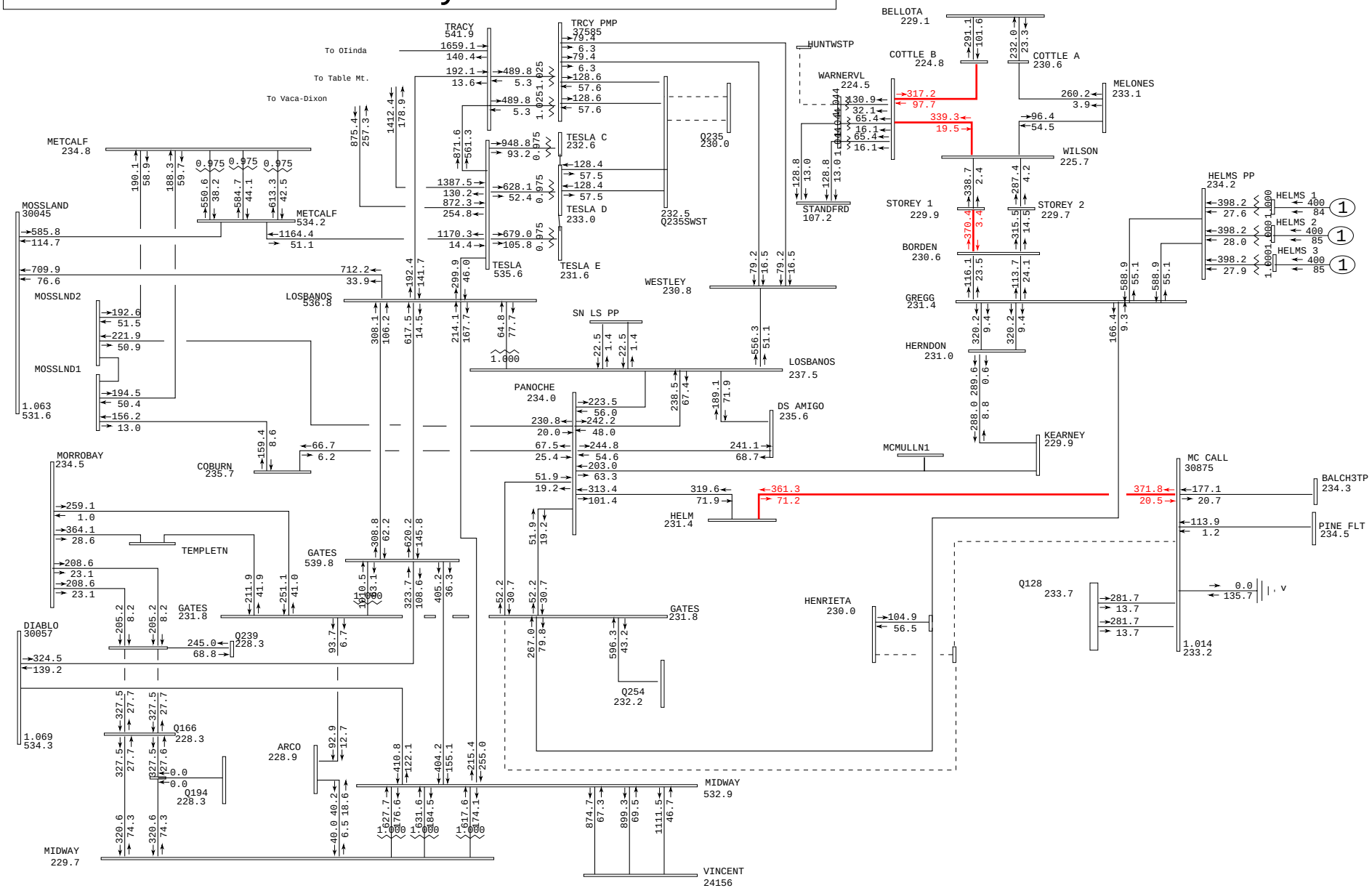

General Electric International, Inc. PSLF Program Wed Oct 01 08:24:39 2008 2013sprpk_q272_pre.sav

PG&E 2007 CASE SERIES: 2013 Spring Peak Pre-Project Case PATH15= 966 MW(S-N) PATH26= 2889 MW(N-S) PDCI= 3092 MW(N-S) COI= 4501 MW(N-S) Q272 150 MW GWF Henrietta 70 kV IFS - 2013 Spring Peak Pre-Project FY	Plot 77- Gates-McCall 230kV	MW/MVAR gfres2.drw Rating = 2

Greater Fresno
500-kV & 230-kV System

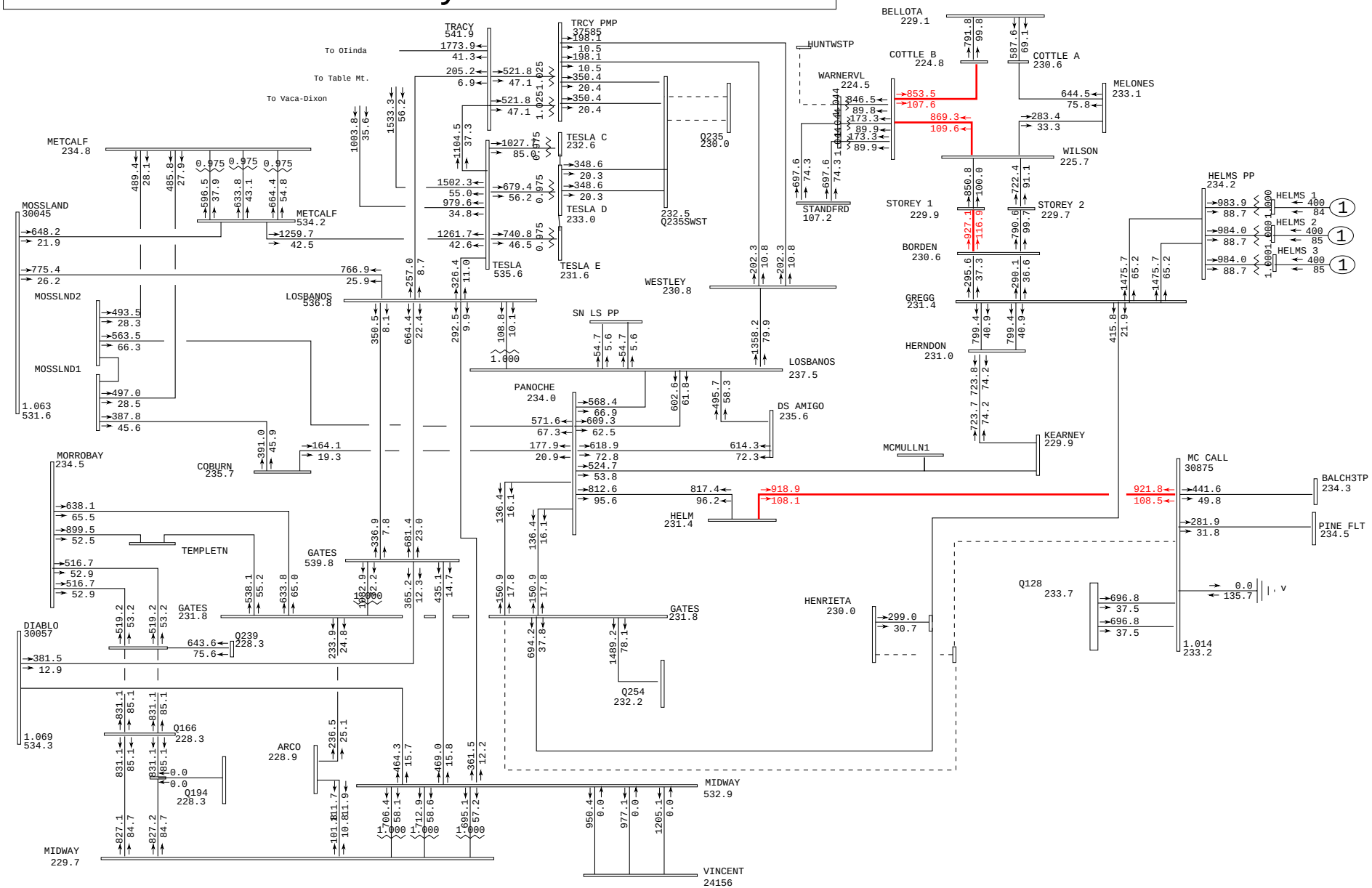

General Electric International, Inc. PSLF Program Wed Oct 01 08:24:41 2008 2013sprpk_q272_pre.sav

	PG&E 2007 CASE SERIES: 2013 Spring Peak Pre-Project Case	Plot 78- Gates-McCall 230kV	amps/rate
	PATH15= 966 MW(S-N) PATH26= 2889 MW(N-S) PDCI= 3092 MW(N-S) COI= 4501 MW(N-S)		gfres2.drw
	Q272 150 MW GWF Henrietta 70 kV IFS - 2013 Spring Peak Pre-Project FY		Rating = 2

Greater Fresno
500-kV & 230-kV System

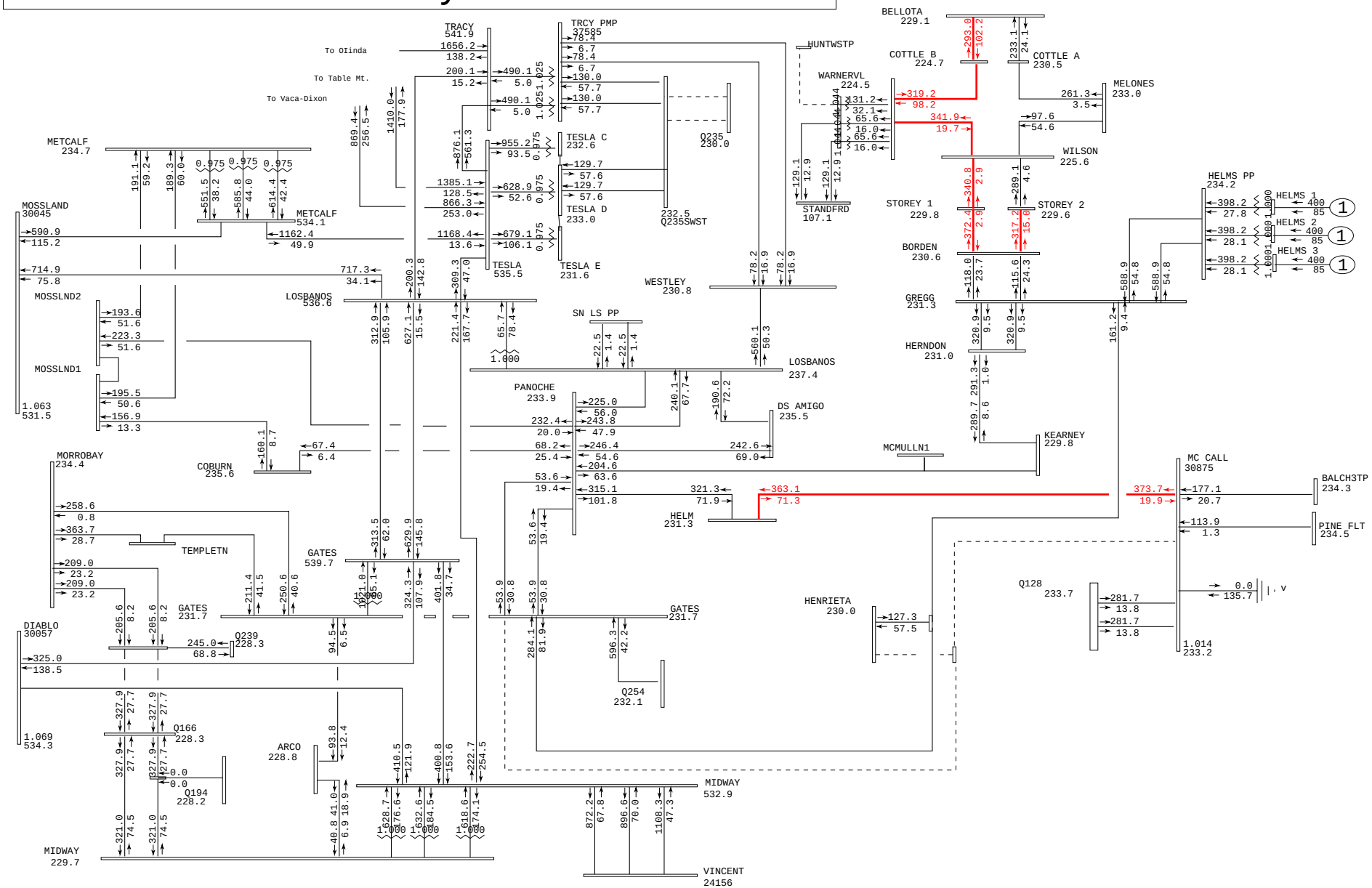

General Electric International, Inc. PSLF Program Wed Oct 01 08:24:42 2008 2013sprpk_q272_pst_v2.sav

	PG&E 2007 CASE SERIES: 2013 Spring Peak Post-Project Case	Plot 79- Gates-McCall 230kV	MW/MVAR
	PATH15= 958 MW(S-N) PATH26= 2895 MW(N-S) PDCI= 3091 MW(N-S) COI= 4507 MW(N-S)		gfres2.drw
	Q272 150 MW at GWF Henrietta 70 kV IFS - 2013 Spring Peak Post-Project FY		Rating = 2

Greater Fresno
500-kV & 230-kV System

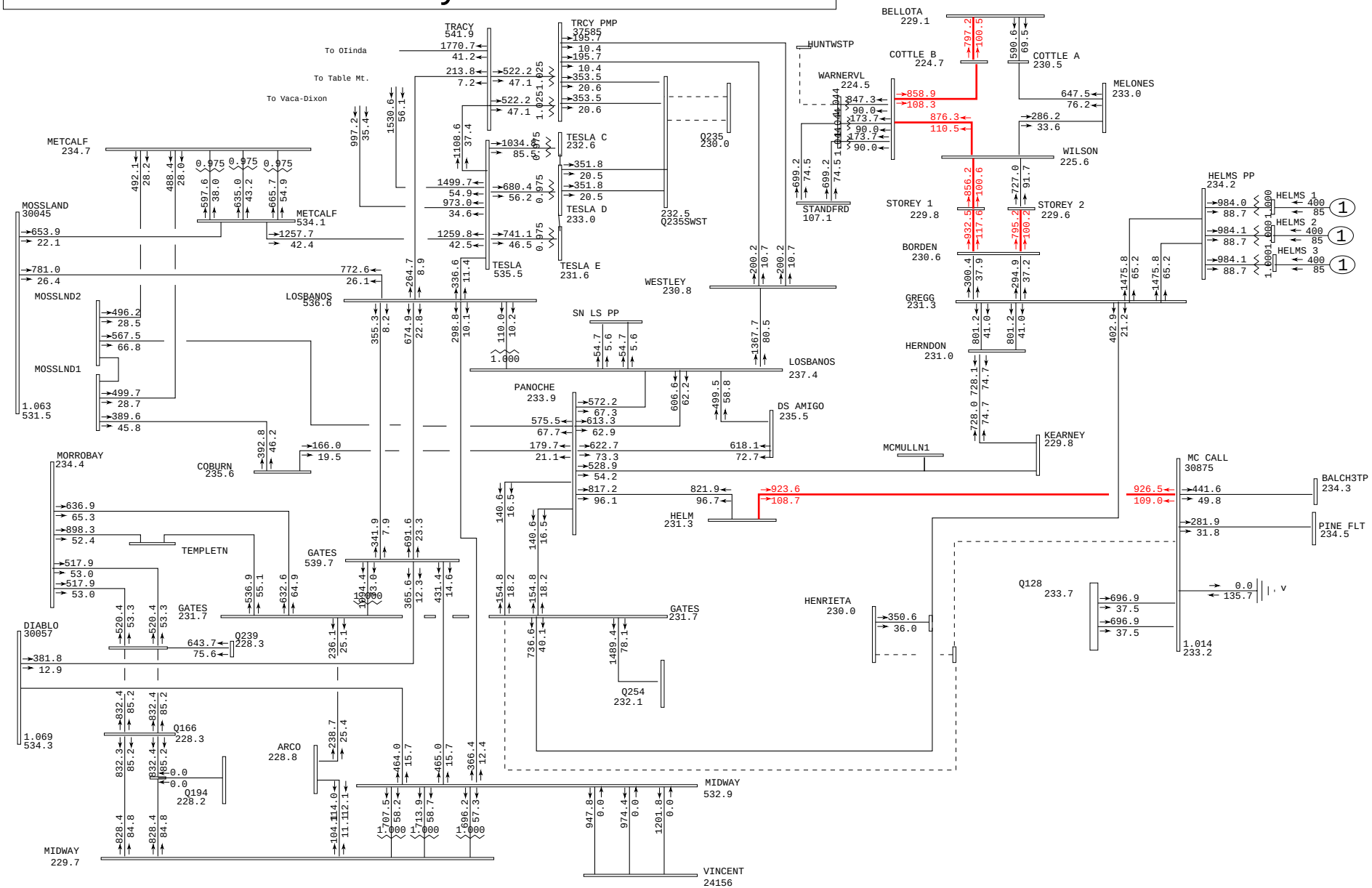

General Electric International, Inc. PSLF Program Wed Oct 01 08:24:44 2008 2013sprpk_q272_pst_v2.sav

	PG&E 2007 CASE SERIES: 2013 Spring Peak Post-Project Case	Plot 80- Gates-McCall 230kV	amps/rate
	PATH15= 958 MW(S-N) PATH26= 2895 MW(N-S) PDCI= 3091 MW(N-S) COI= 4507 MW(N-S)		gfres2.drw
	Q272 150 MW at GWF Henrietta 70 kV IFS - 2013 Spring Peak Post-Project FY		Rating = 2

Greater Fresno
500-kV & 230-kV System

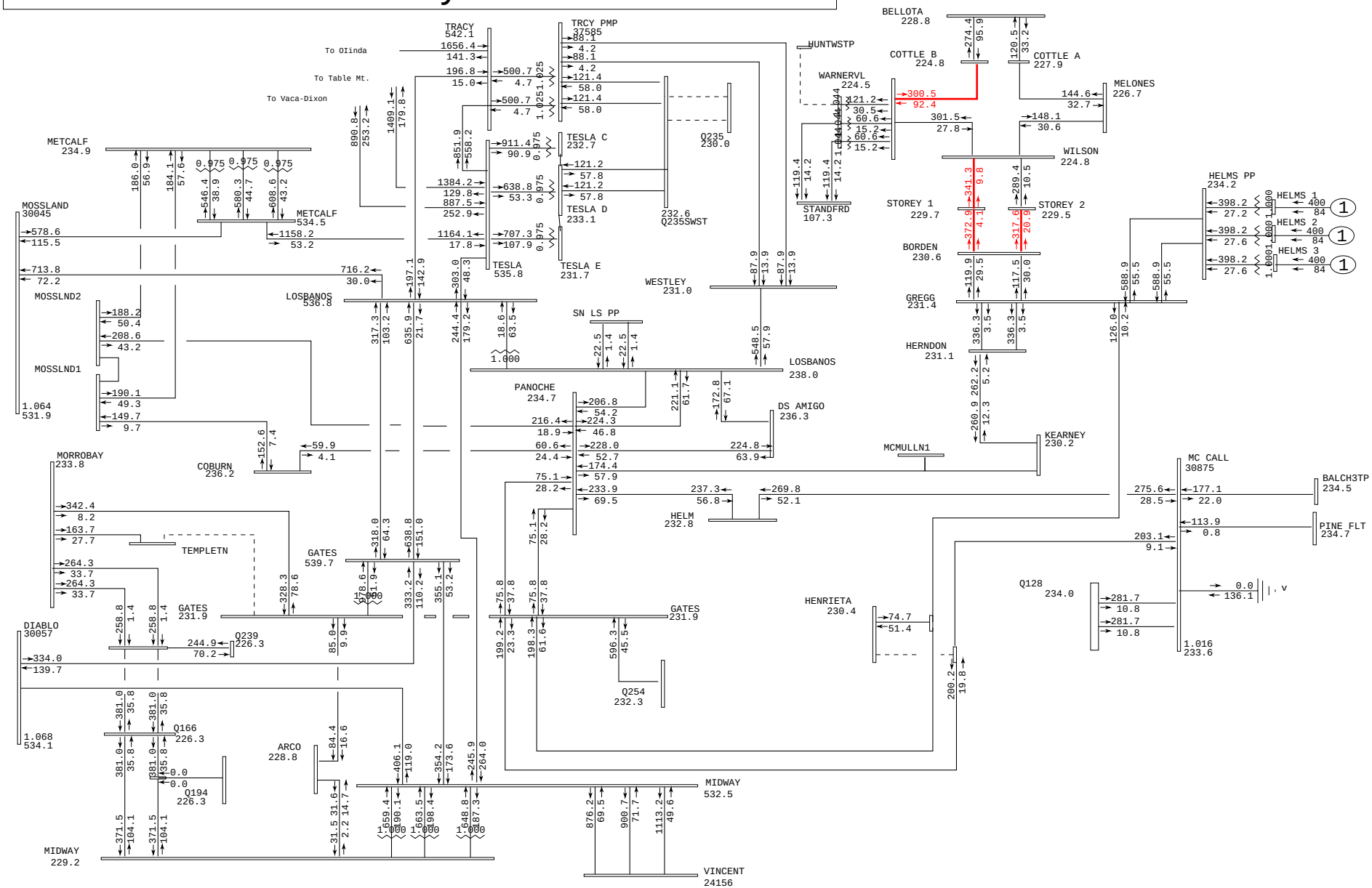

General Electric International, Inc. PSLF Program Wed Oct 01 08:24:45 2008 2013sprpk_q272_pre.sav

	PG&E 2007 CASE SERIES: 2013 Spring Peak Pre-Project Case	Plot 81- Gates-Templeton 230kV & Melones	MW/MVAR
	PATH15= 966 MW(S-N) PATH26= 2889 MW(N-S) PDCI= 3092 MW(N-S) COI= 4501 MW(N-S)		gfres2.drw
	Q272 150 MW GWF Henrietta 70 kV IFS - 2013 Spring Peak Pre-Project FY		Rating = 2

Greater Fresno
500-kV & 230-kV System

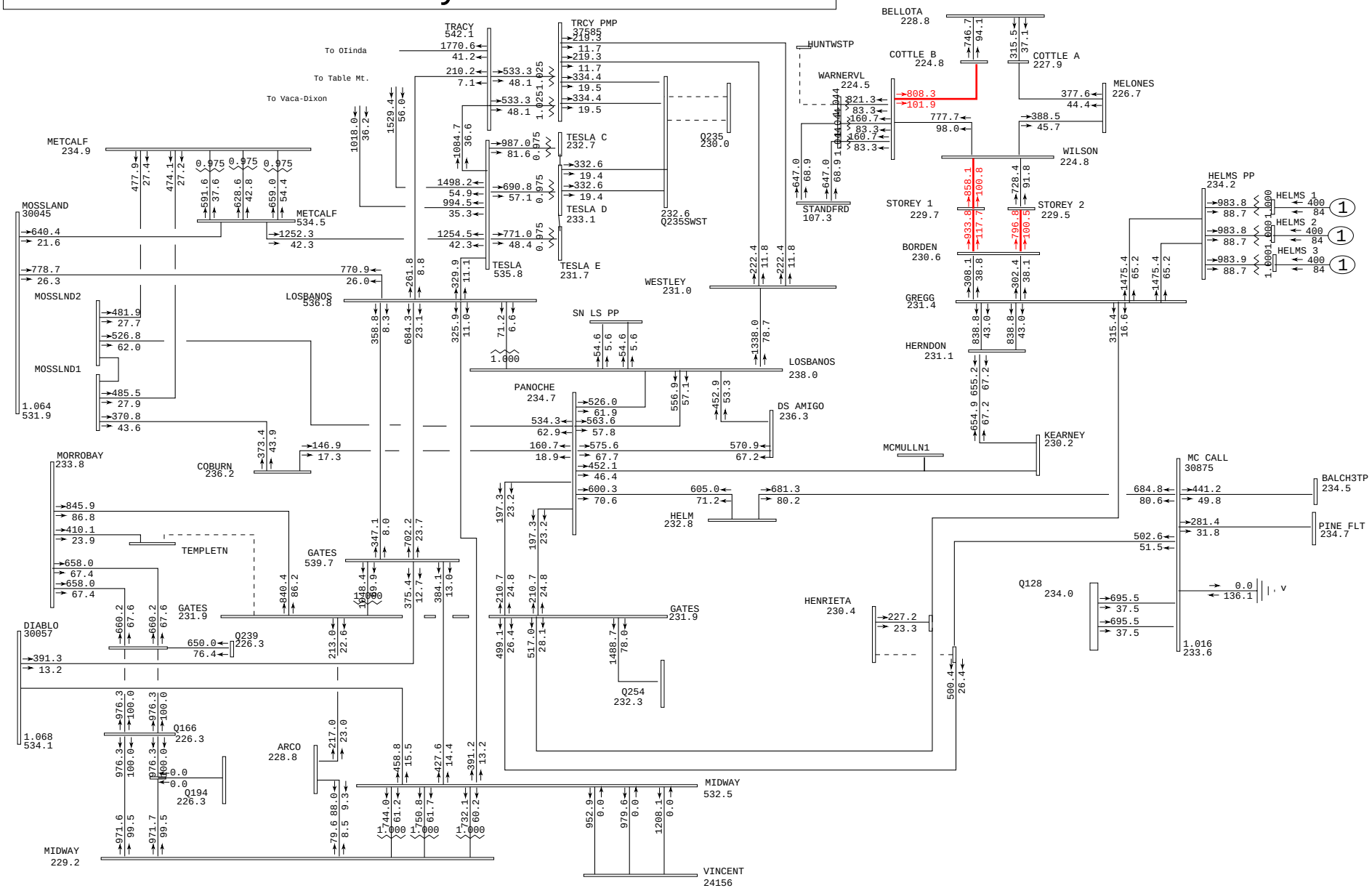

General Electric International, Inc. PSLF Program Wed Oct 01 08:24:47 2008 2013sprpk_q272_pre.sav

	PG&E 2007 CASE SERIES: 2013 Spring Peak Pre-Project Case	Plot 82- Gates-Templeton 230kV & Melones	amps/rate
	PATH15= 966 MW(S-N) PATH26= 2889 MW(N-S) PDCI= 3092 MW(N-S) COI= 4501 MW(N-S)		gfres2.drw
	Q272 150 MW GWF Henrietta 70 kV IFS - 2013 Spring Peak Pre-Project FY		Rating = 2

Greater Fresno
500-kV & 230-kV System

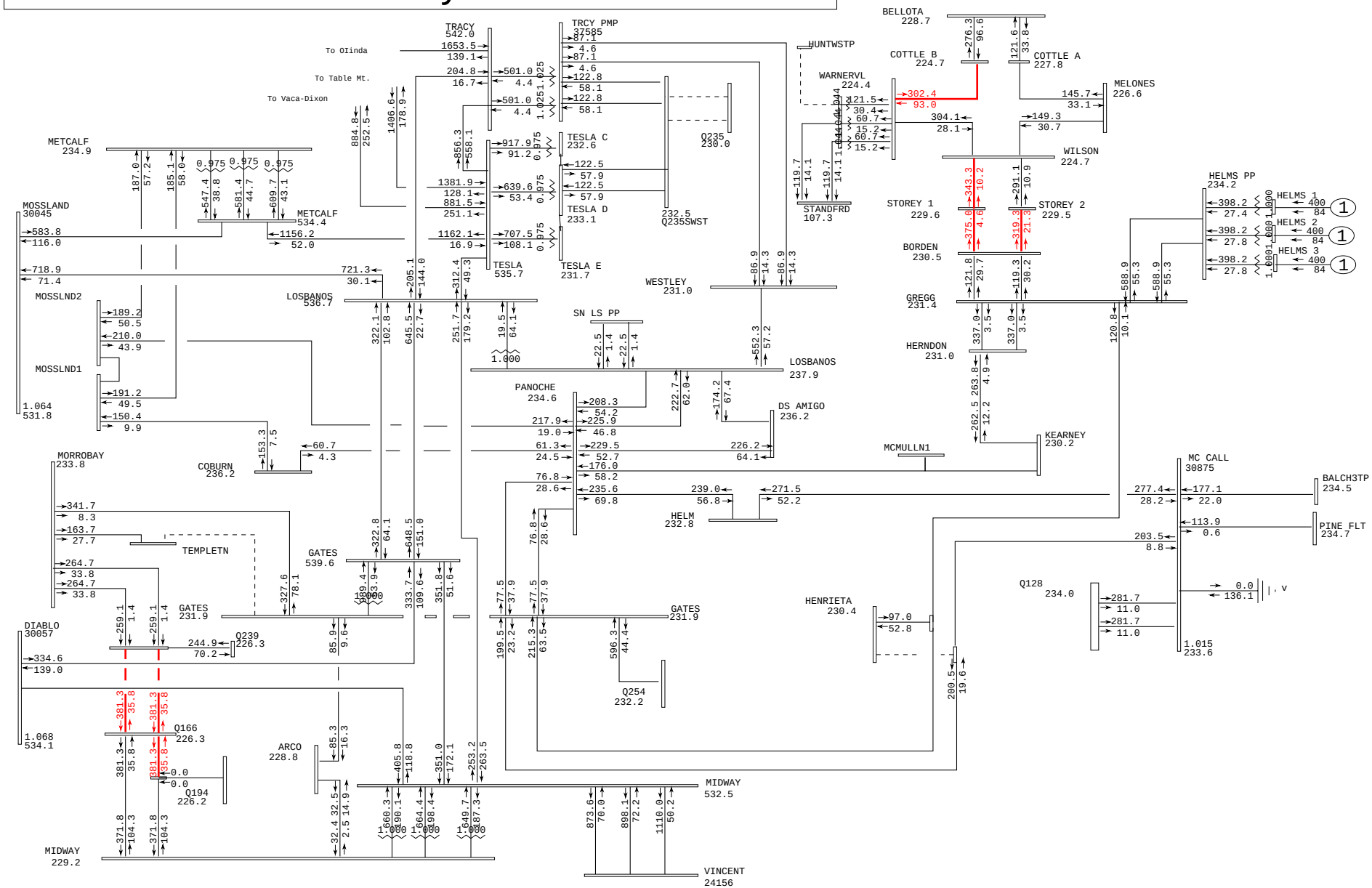

General Electric International, Inc. PSLF Program Wed Oct 01 08:24:49 2008 2013sprpk_q272_pst_v2.sav

	PG&E 2007 CASE SERIES: 2013 Spring Peak Post-Project Case	Plot 83- Gates-Templeton 230kV & Melones	MW/MVAR
	PATH15= 958 MW(S-N) PATH26= 2895 MW(N-S) PDCI= 3091 MW(N-S) COI= 4507 MW(N-S)		gfres2.drw
	Q272 150 MW at GWF Henrietta 70 kV IFS - 2013 Spring Peak Post-Project FY		Rating = 2

Greater Fresno
500-kV & 230-kV System

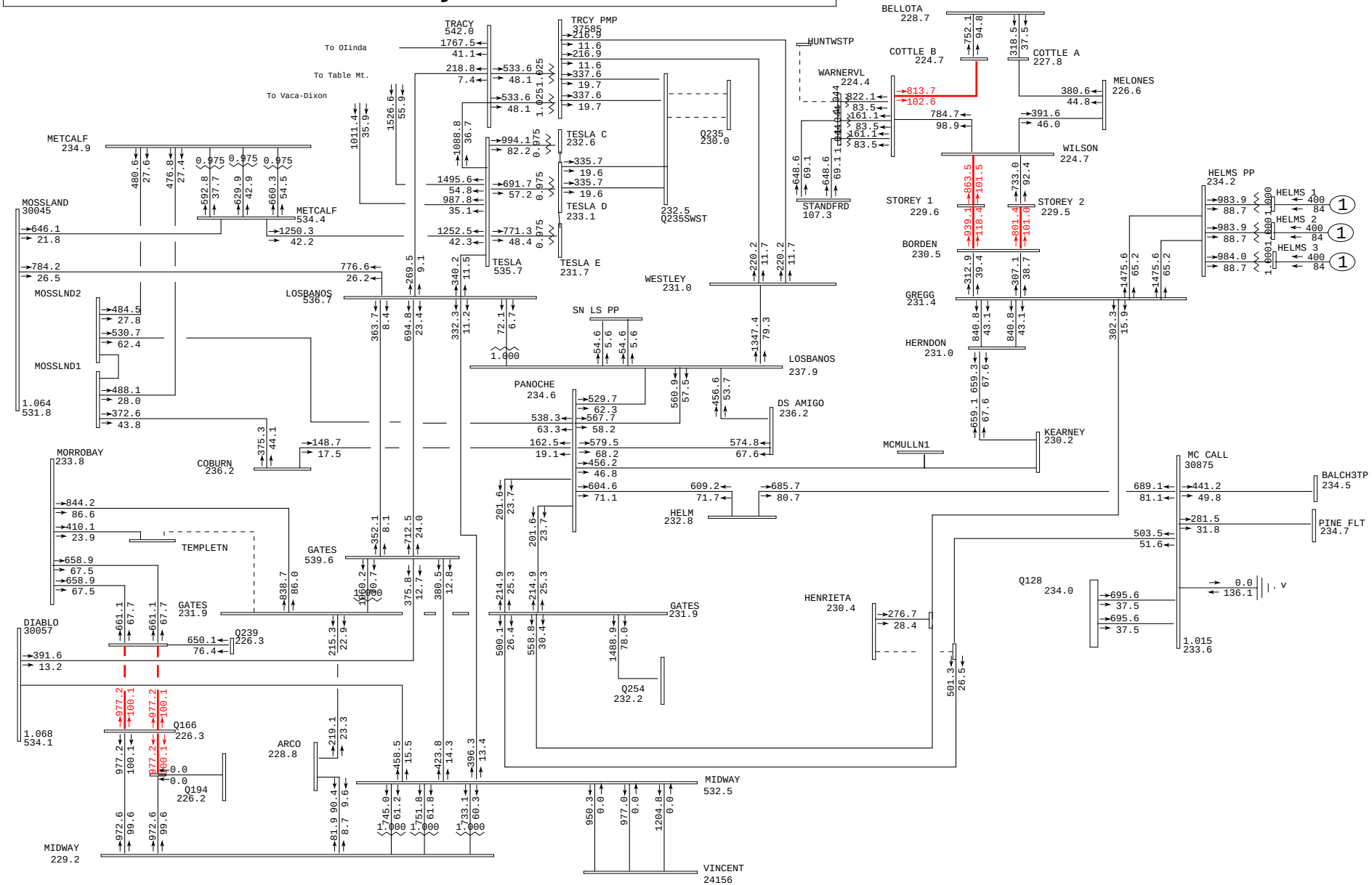

General Electric International, Inc. PSLF Program Wed Oct 01 08:24:50 2008 2013sprpk_q272_pst_v2.sav

PG&E 2007 CASE SERIES: 2013 Spring Peak Post-Project Case PATH15= 958 MW(S-N) PATH26= 2895 MW(N-S) PDCI= 3091 MW(N-S) COI= 4507 MW(N-S) Q272 150 MW at GWF Henrietta 70 kV IFS - 2013 Spring Peak Post-Project FY	Plot 84- Gates-Templeton 230kV & Melones	amps/rate gfres2.drw Rating = 2

Greater Fresno
500-kV & 230-kV System

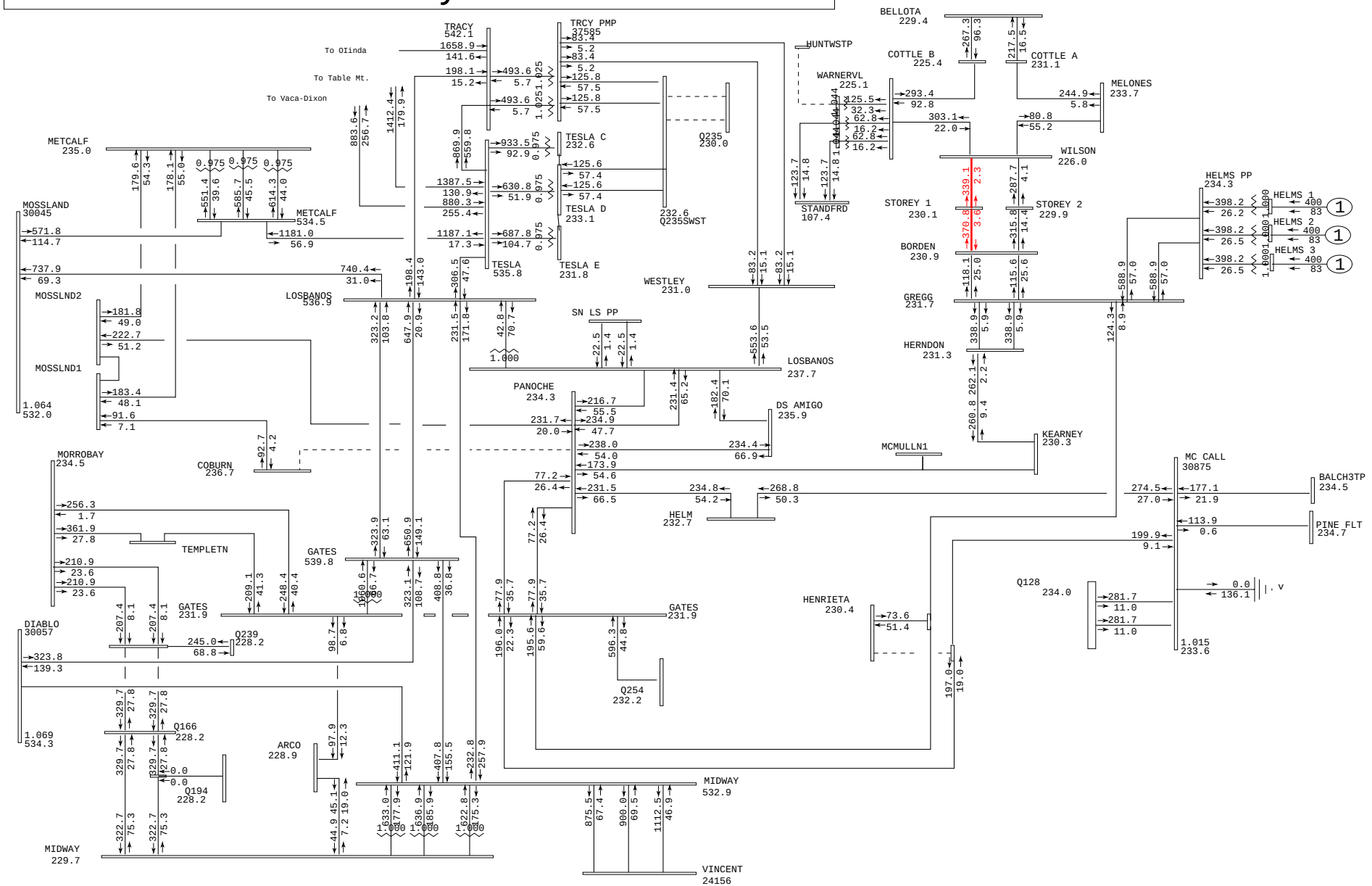

General Electric International, Inc. PSLF Program Wed Oct 01 08:24:52 2008 2013sprpk_q272_pre.sav

	PG&E 2007 CASE SERIES: 2013 Spring Peak Pre-Project Case PATH15= 966 MW(S-N) PATH26= 2889 MW(N-S) PDCI= 3092 MW(N-S) COI= 4501 MW(N-S) Q272 150 MW GWF Henrietta 70 kV IFS - 2013 Spring Peak Pre-Project FY	Plot 85- Coburn-Panoche 230 kV & Exchequer	MW/MVAR gfres2.drw Rating = 2

Greater Fresno
500-kV & 230-kV System

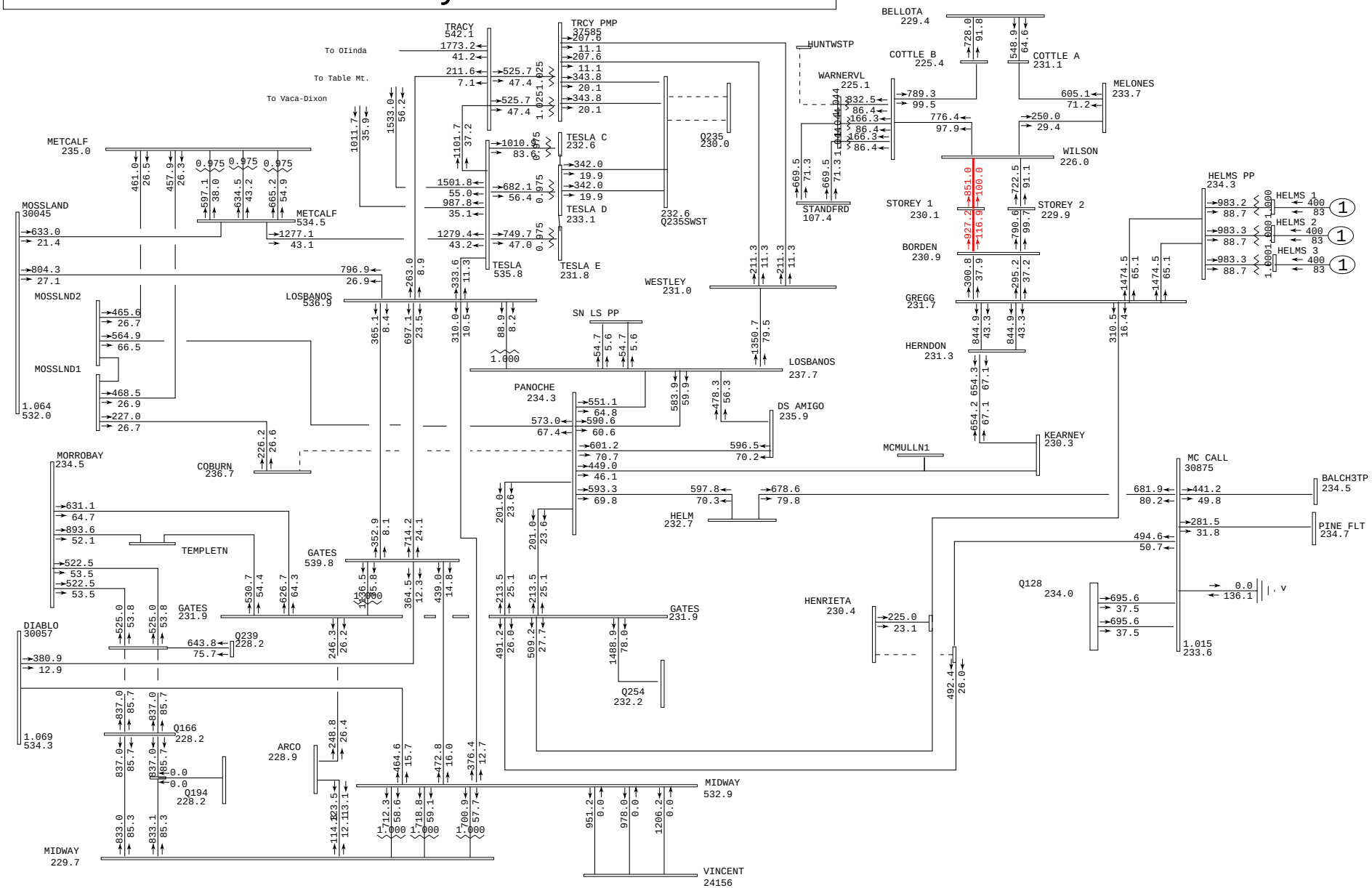

General Electric International, Inc. PSLF Program Wed Oct 01 08:24:53 2008 2013sprpk_q272_pre.sav

	PG&E 2007 CASE SERIES: 2013 Spring Peak Pre-Project Case PATH15= 966 MW(S-N) PATH26= 2889 MW(N-S) PDCI= 3092 MW(N-S) COI= 4501 MW(N-S) Q272 150 MW GWF Henrietta 70 kV IFS - 2013 Spring Peak Pre-Project FY	Plot 86- Coburn-Panoche 230 kV & Exchequer	amps/rate gfres2.drw Rating = 2

Greater Fresno
500-kV & 230-kV System

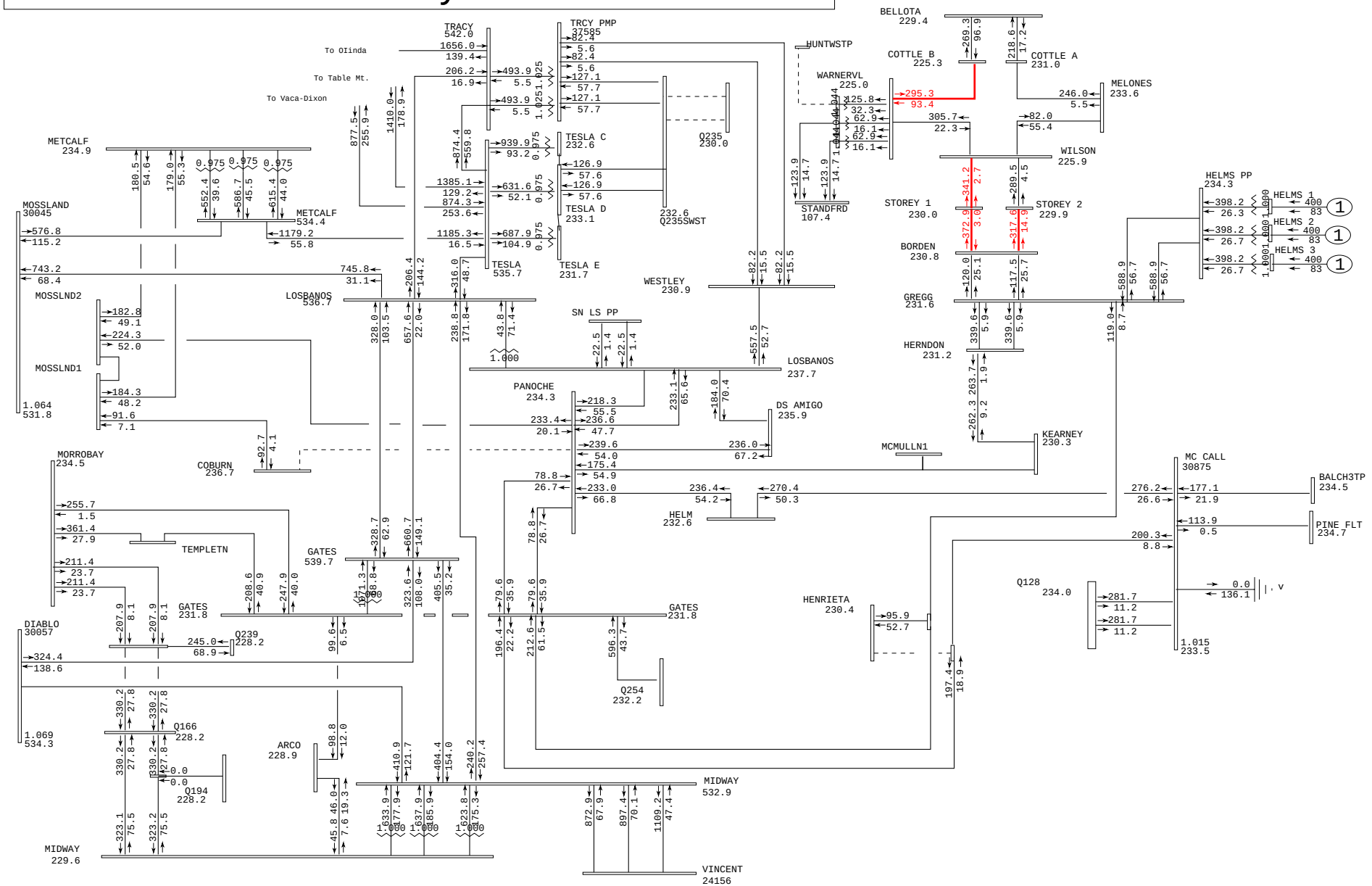

General Electric International, Inc. PSLF Program Wed Oct 01 08:24:55 2008 2013sprpk_q272_pst_v2.sav

	PG&E 2007 CASE SERIES: 2013 Spring Peak Post-Project Case	Plot 87- Coburn-Panoche 230 kV & Exchequer	MW/MVAR
	PATH15= 958 MW(S-N) PATH26= 2895 MW(N-S) PDCI= 3091 MW(N-S) COI= 4507 MW(N-S)		gfres2.drw
	Q272 150 MW at GWF Henrietta 70 kV IFS - 2013 Spring Peak Post-Project FY		Rating = 2

Greater Fresno
500-kV & 230-kV System

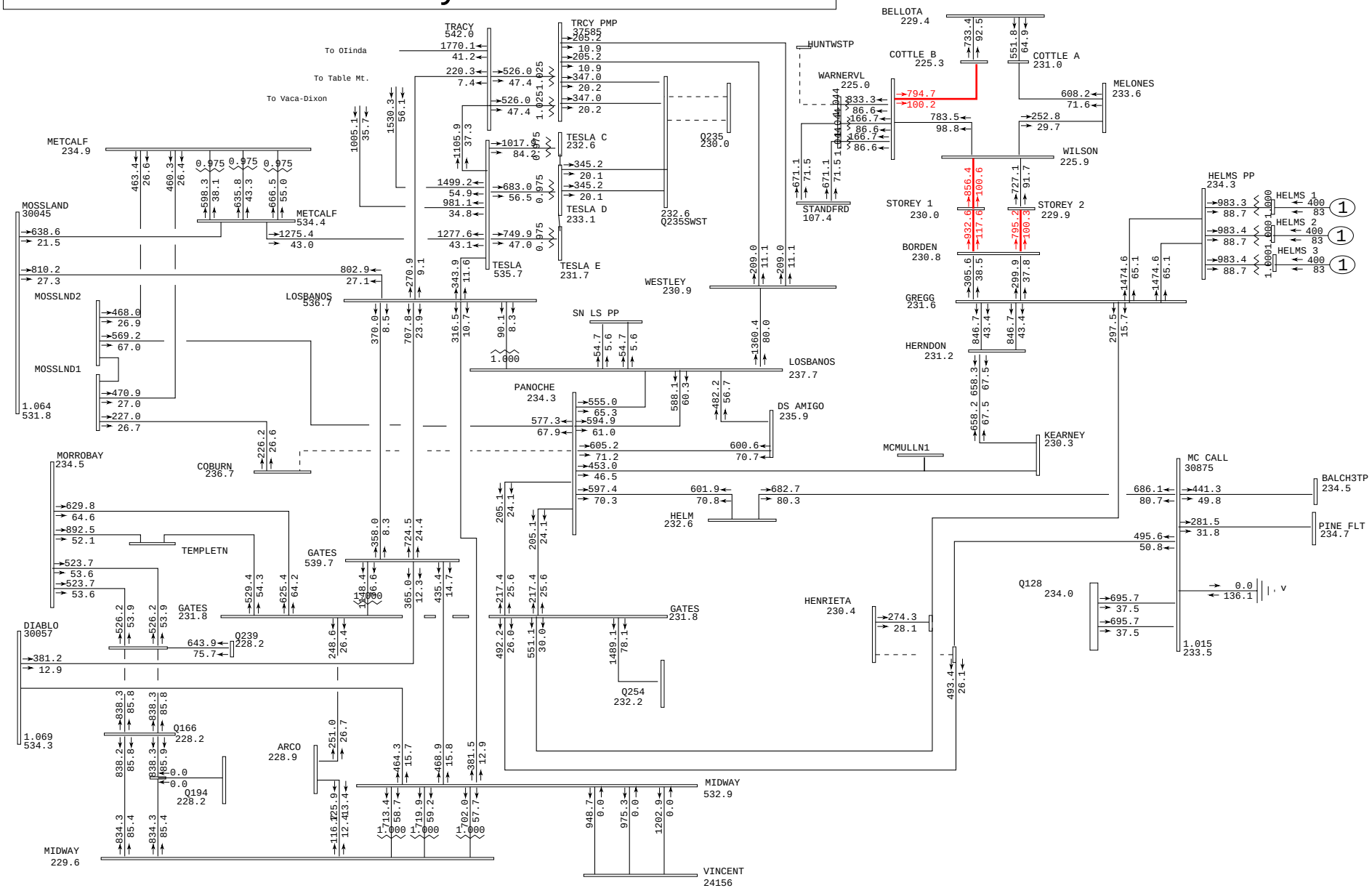

General Electric International, Inc. PSLF Program Wed Oct 01 08:24:56 2008 2013sprpk_q272_pst_v2.sav

PG&E 2007 CASE SERIES: 2013 Spring Peak Post-Project Case PATH15= 958 MW(S-N) PATH26= 2895 MW(N-S) PDCI= 3091 MW(N-S) COI= 4507 MW(N-S) Q272 150 MW at GWF Henrietta 70 kV IFS - 2013 Spring Peak Post-Project FY	Plot 88- Coburn-Panoche 230 kV & Exchequer	amps/rate gfres2.drw Rating = 2

Greater Fresno
500-kV & 230-kV System

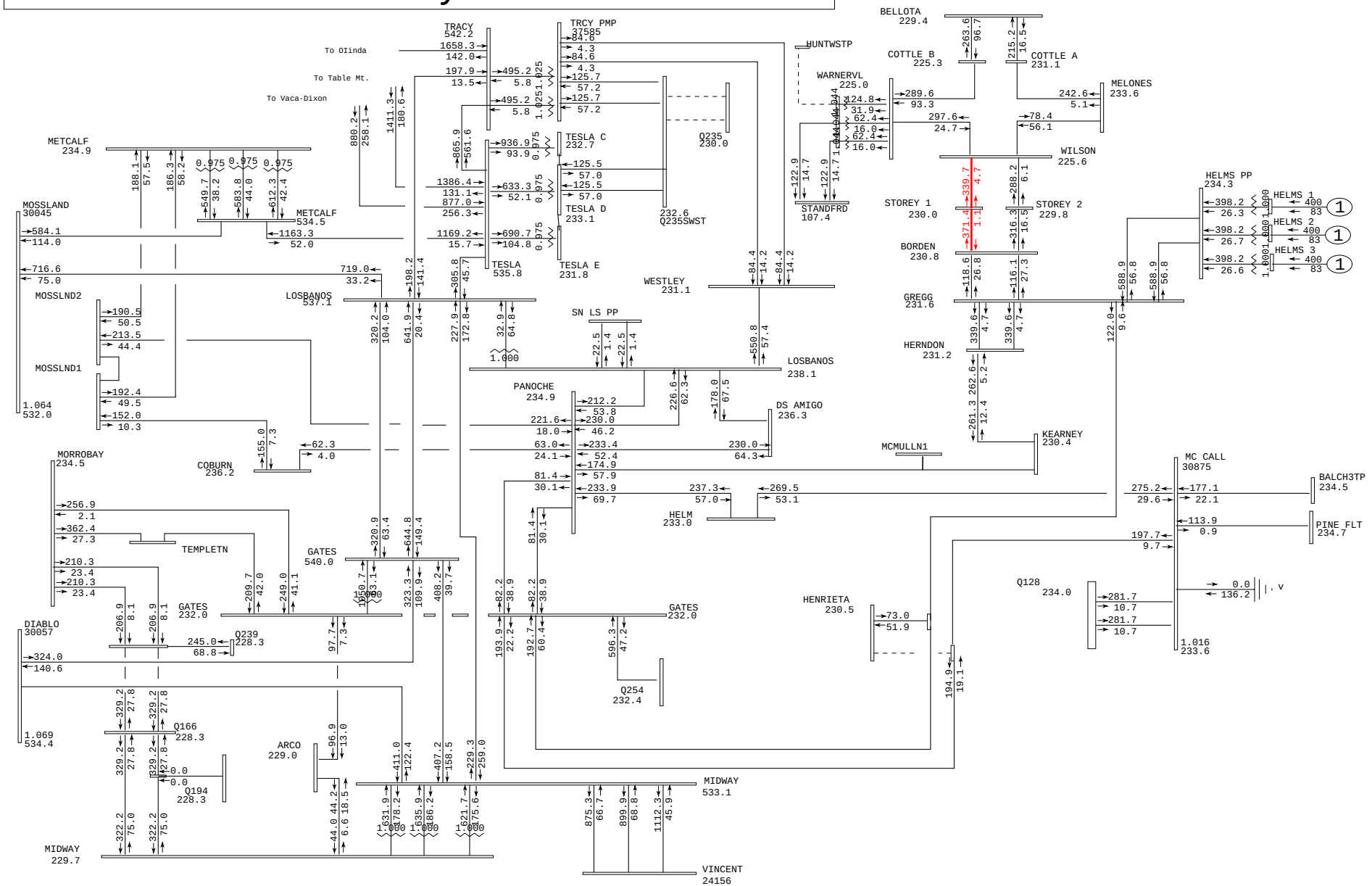

General Electric International, Inc. PSLF Program Wed Oct 01 08:24:58 2008 2013sprpk_q272_pre.sav

	PG&E 2007 CASE SERIES: 2013 Spring Peak Pre-Project Case	Plot 89- Dairyland-Mendota 115kV & Exchequer	MW/MVAR
	PATH15= 966 MW(S-N) PATH26= 2889 MW(N-S) PDCI= 3092 MW(N-S) COI= 4501 MW(N-S)		gfres2.drw
	Q272 150 MW GWF Henrietta 70 kV IFS - 2013 Spring Peak Pre-Project FY		Rating = 2

Greater Fresno
500-kV & 230-kV System

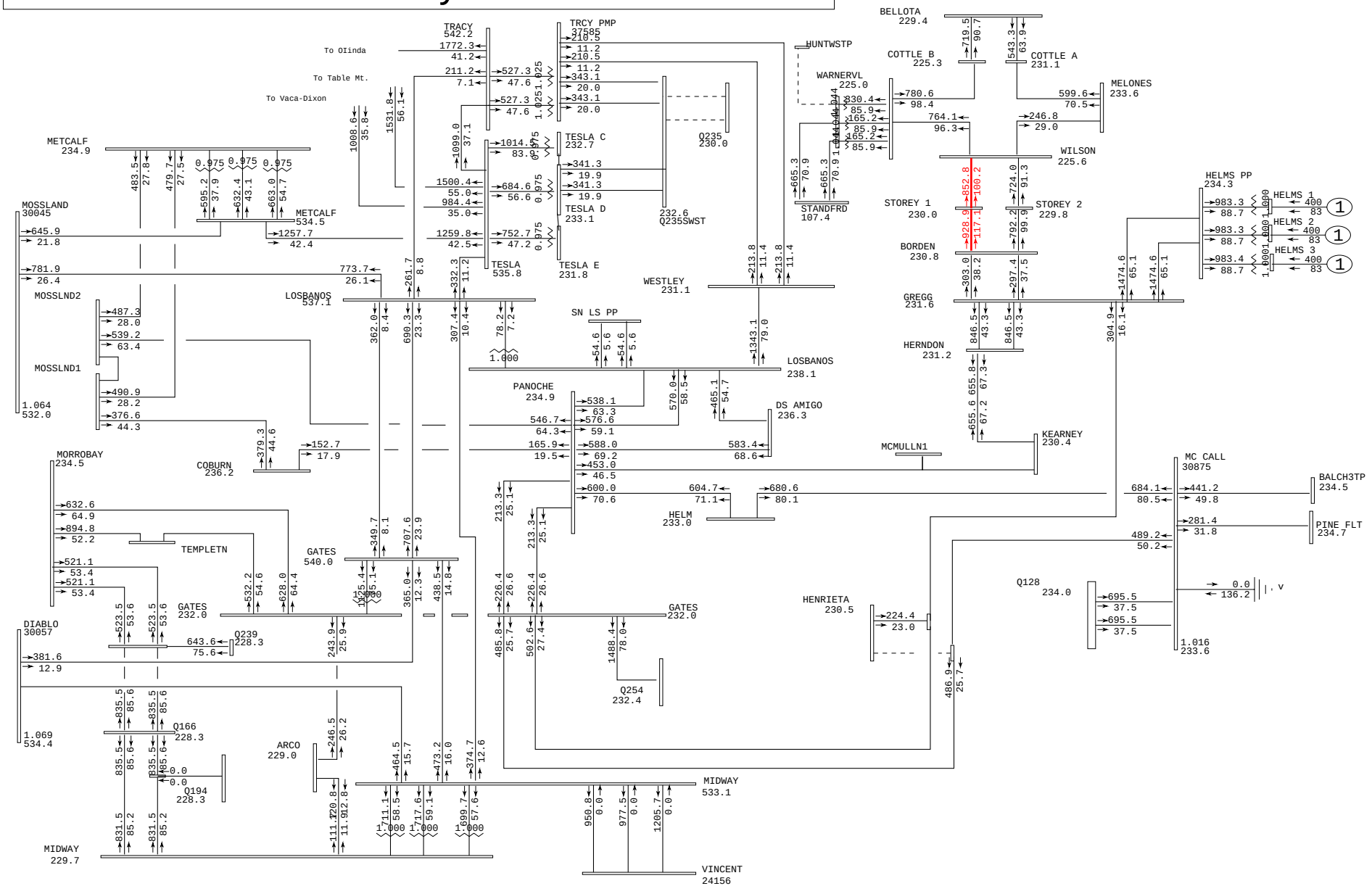

General Electric International, Inc. PSLF Program Wed Oct 01 08:24:59 2008 2013sprpk_q272_pre.sav

	PG&E 2007 CASE SERIES: 2013 Spring Peak Pre-Project Case PATH15= 966 MW(S-N) PATH26= 2889 MW(N-S) PDCI= 3092 MW(N-S) COI= 4501 MW(N-S) Q272 150 MW GWF Henrietta 70 kV IFS - 2013 Spring Peak Pre-Project FY	Plot 90- Dairyland-Mendota 115kV & Exchequer	amps/rate gfres2.drw Rating = 2

Greater Fresno
500-kV & 230-kV System

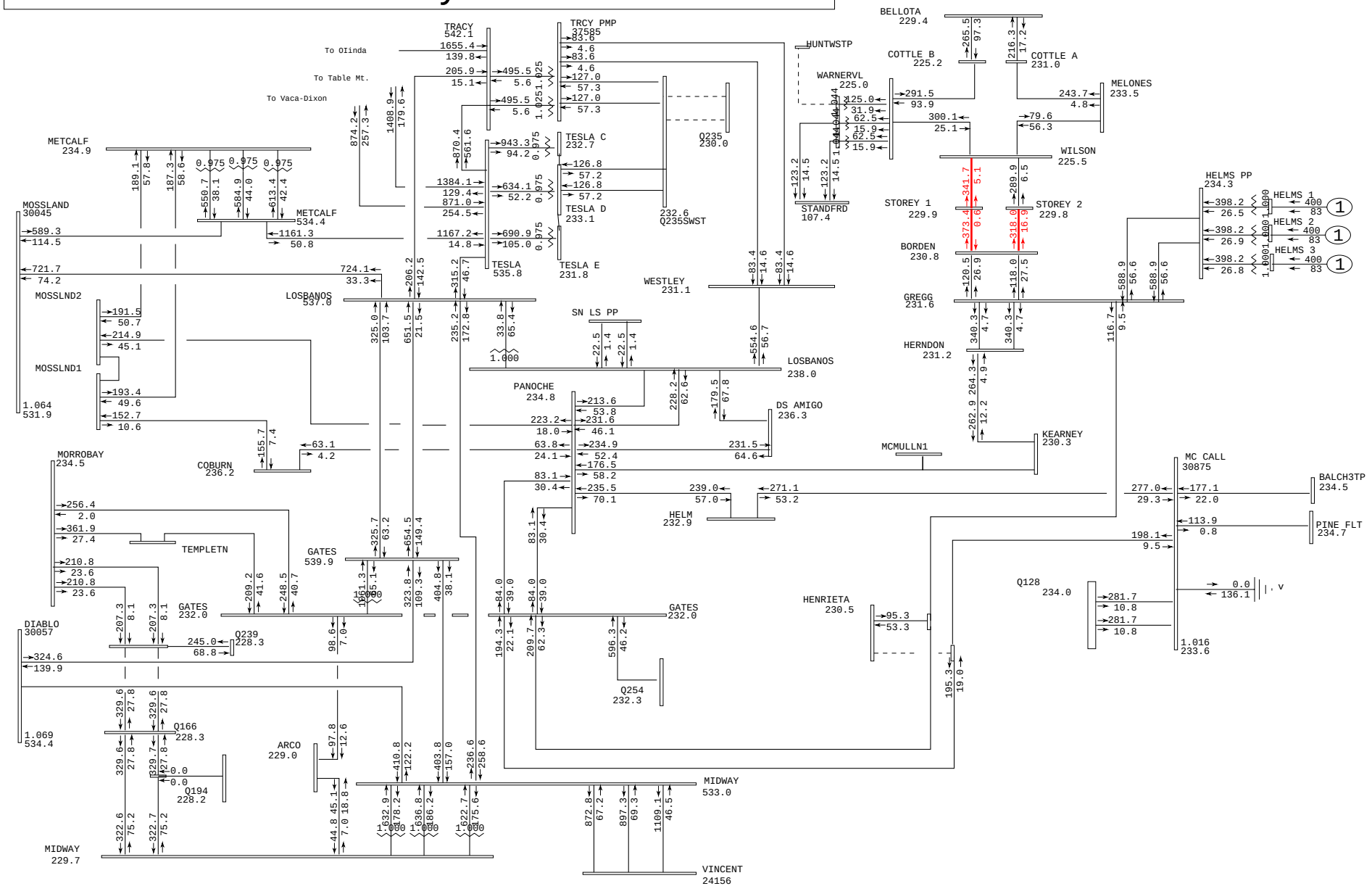

General Electric International, Inc. PSLF Program Wed Oct 01 08:25:01 2008 2013sprpk_q272_pst_v2.sav

	PG&E 2007 CASE SERIES: 2013 Spring Peak Post-Project Case	Plot 91- Dairyland-Mendota 115kV & Exchequer	MW/MVAR
	PATH15= 958 MW(S-N) PATH26= 2895 MW(N-S) PDCI= 3091 MW(N-S) COI= 4507 MW(N-S)		gfres2.drw
	Q272 150 MW at GWF Henrietta 70 kV IFS - 2013 Spring Peak Post-Project FY		Rating = 2

Greater Fresno
500-kV & 230-kV System

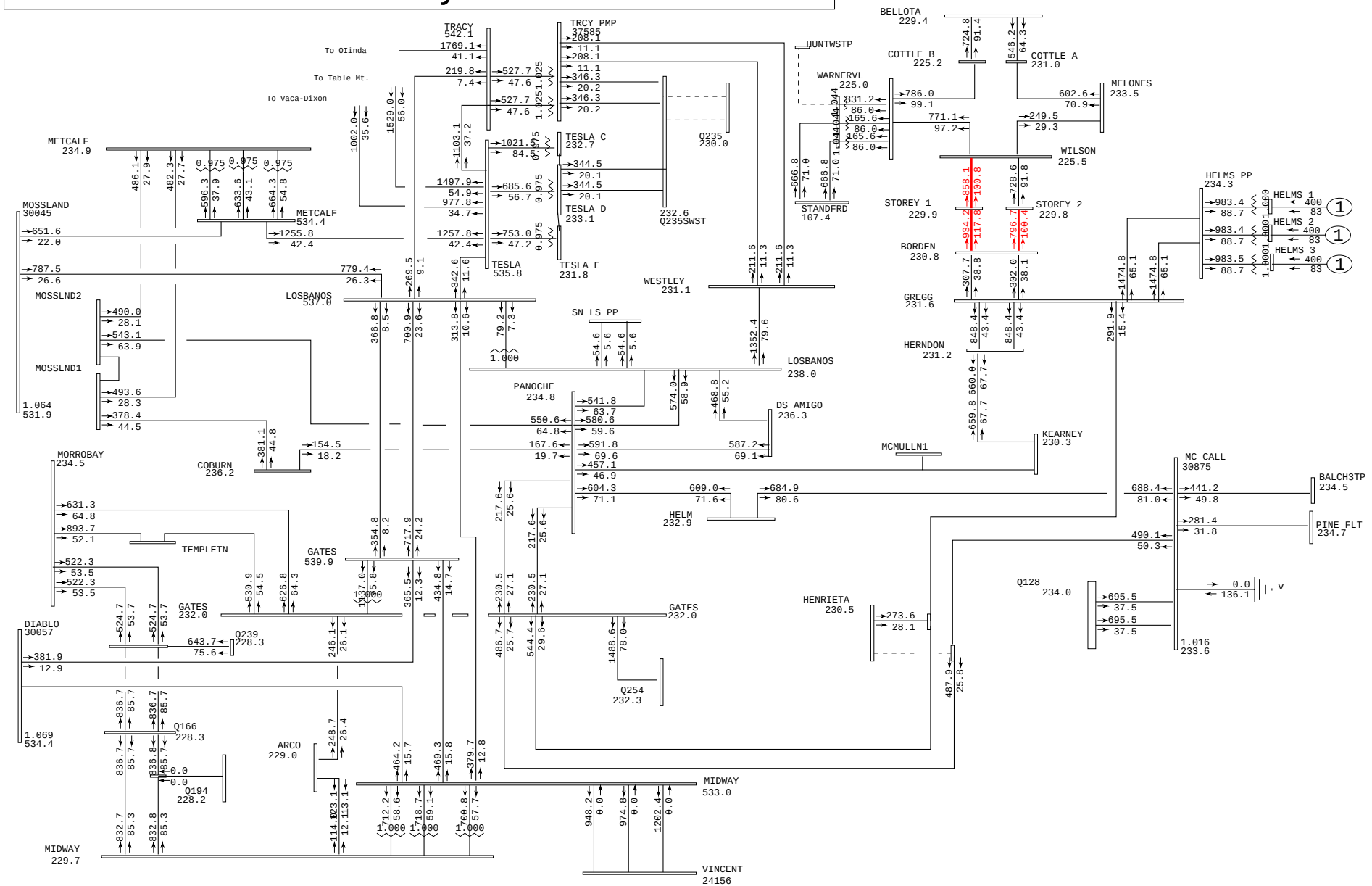

General Electric International, Inc. PSLF Program Wed Oct 01 08:25:02 2008 2013sprpk_q272_pst_v2.sav

PG&E 2007 CASE SERIES: 2013 Spring Peak Post-Project Case PATH15= 958 MW(S-N) PATH26= 2895 MW(N-S) PDCI= 3091 MW(N-S) COI= 4507 MW(N-S) Q272 150 MW at GWF Henrietta 70 kV IFS - 2013 Spring Peak Post-Project FY	Plot 92- Dairyland-Mendota 115kV & Exchequer	amps/rate gfres2.drw Rating = 2

Greater Fresno
500-kV & 230-kV System

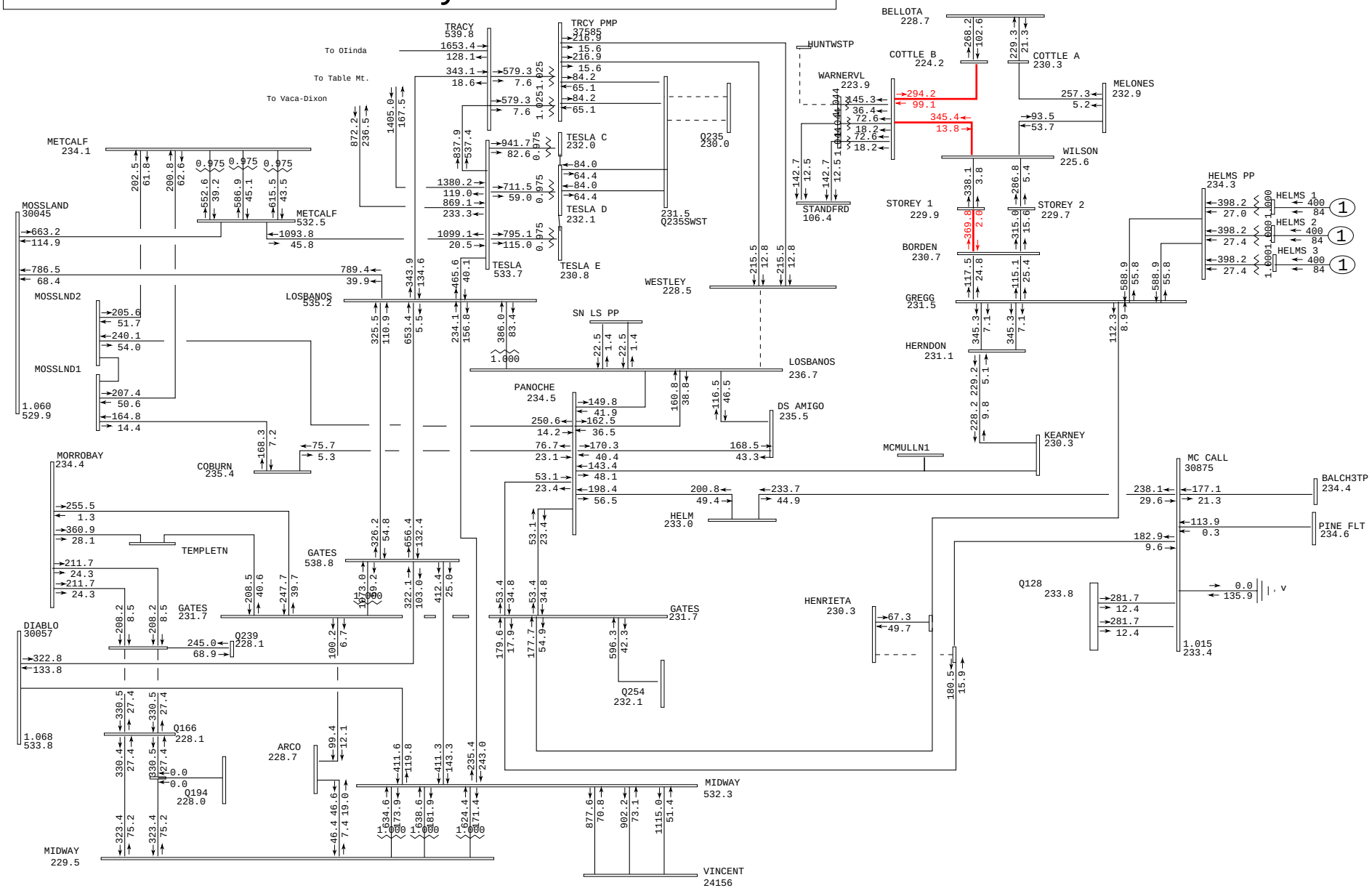

General Electric International, Inc. PSLF Program Wed Oct 01 08:25:04 2008 2013sprpk_q272_pre.sav

	PG&E 2007 CASE SERIES: 2013 Spring Peak Pre-Project Case	Plot 93- Westley-Los Banos 230kV & Kerckhoff	MW/MVAR
	PATH15= 966 MW(S-N) PATH26= 2889 MW(N-S) PDCI= 3092 MW(N-S) COI= 4501 MW(N-S)		gfres2.drw
	Q272 150 MW GWF Henrietta 70 kV IFS - 2013 Spring Peak Pre-Project FY		Rating = 2

Greater Fresno
500-kV & 230-kV System

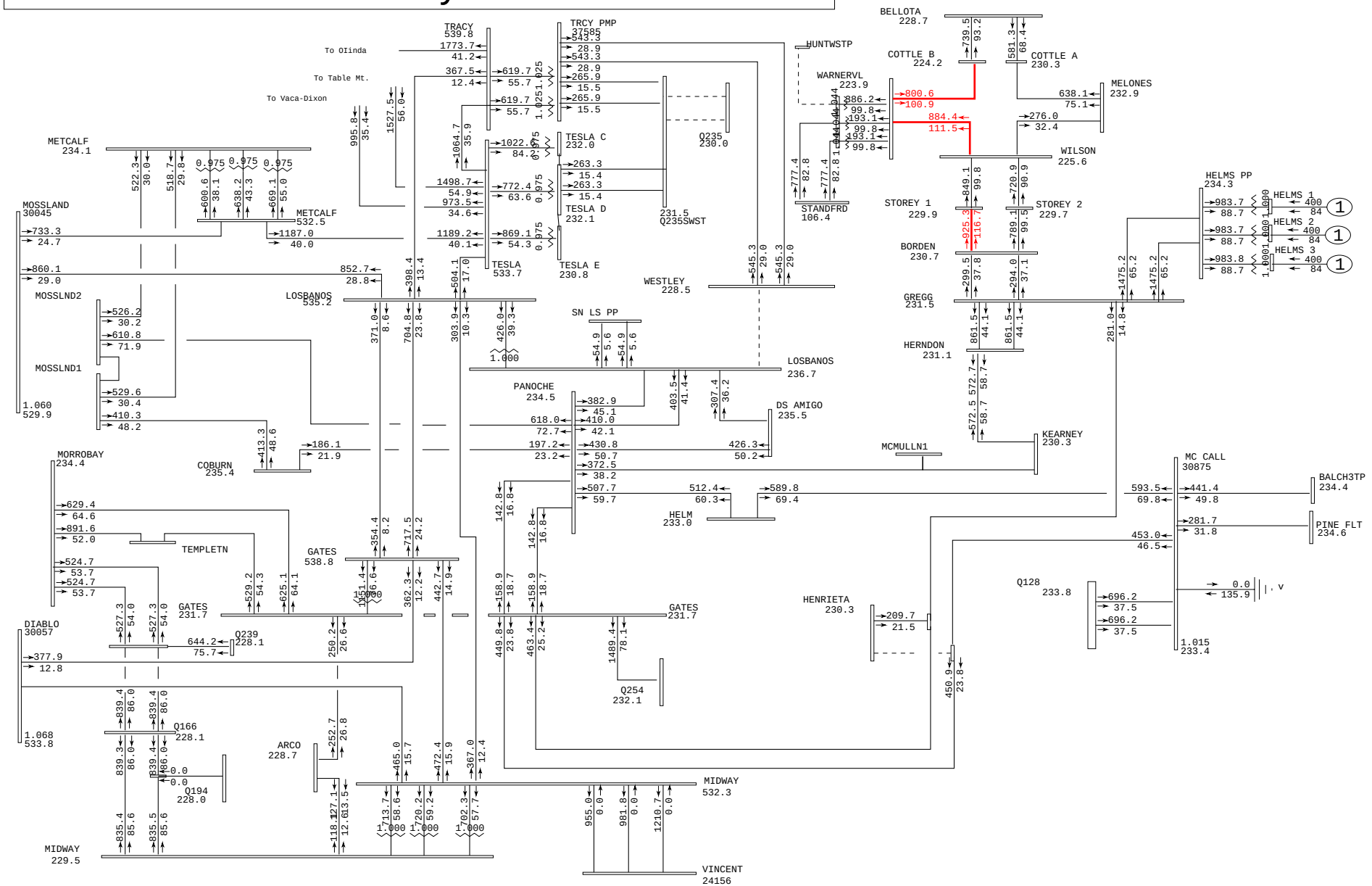

General Electric International, Inc. PSLF Program Wed Oct 01 08:25:06 2008 2013sprpk_q272_pre.sav

	PG&E 2007 CASE SERIES: 2013 Spring Peak Pre-Project Case	Plot 94- Westley-Los Banos 230kV & Kerckhoff	amps/rate
	PATH15= 966 MW(S-N) PATH26= 2889 MW(N-S) PDCI= 3092 MW(N-S) COI= 4501 MW(N-S)		gfres2.drw
	Q272 150 MW GWF Henrietta 70 kV IFS - 2013 Spring Peak Pre-Project FY		Rating = 2

Greater Fresno
500-kV & 230-kV System

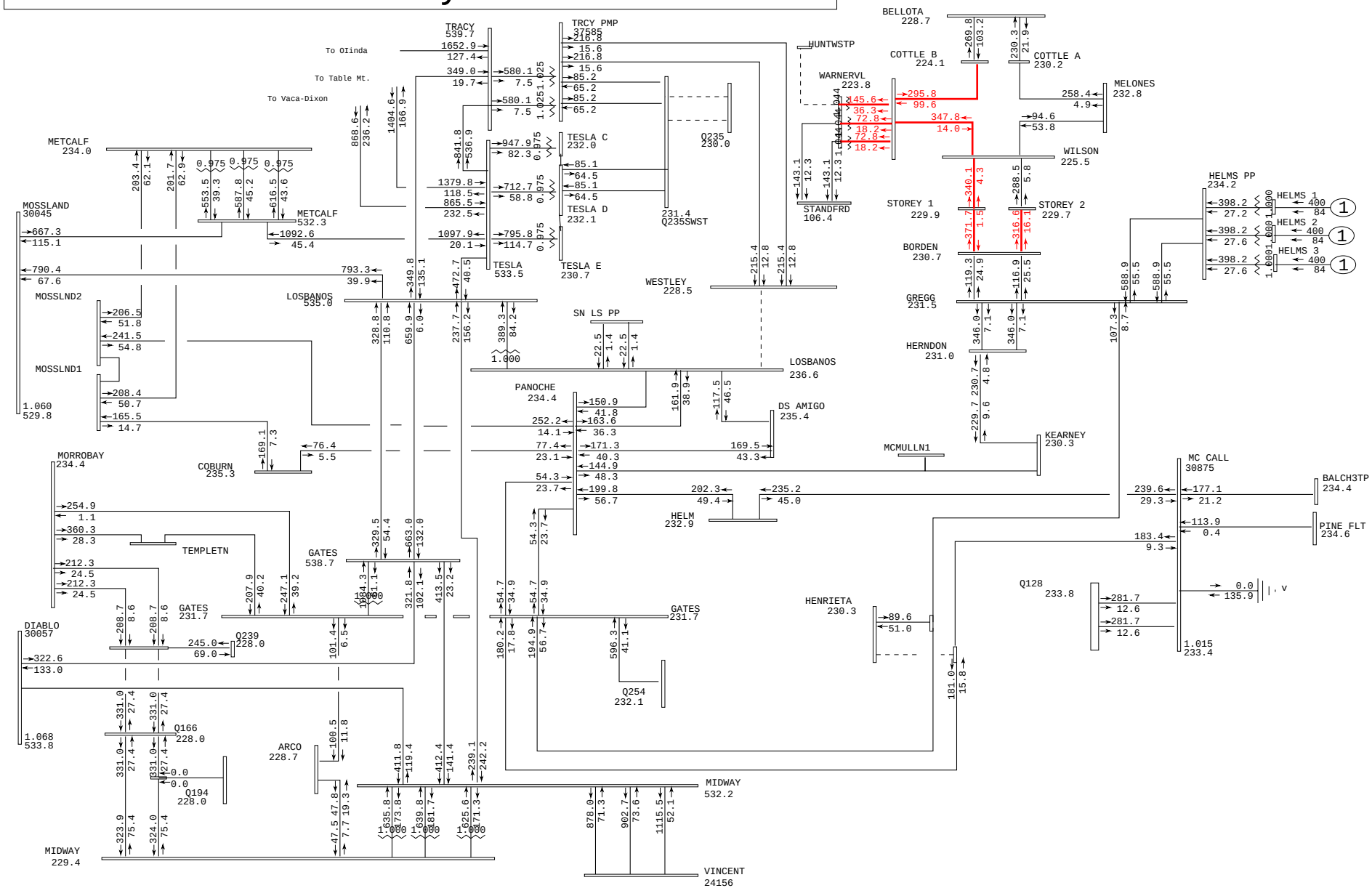

General Electric International, Inc. PSLF Program Wed Oct 01 08:25:08 2008 2013sprpk_q272_pst_v2.sav

	PG&E 2007 CASE SERIES: 2013 Spring Peak Post-Project Case	Plot 95- Westley-Los Banos 230kV & Kerckhoff	MW/MVAR
	PATH15= 958 MW(S-N) PATH26= 2895 MW(N-S) PDCI= 3091 MW(N-S) COI= 4507 MW(N-S)		gfres2.drw
	Q272 150 MW at GWF Henrietta 70 kV IFS - 2013 Spring Peak Post-Project FY		Rating = 2

Greater Fresno
500-kV & 230-kV System

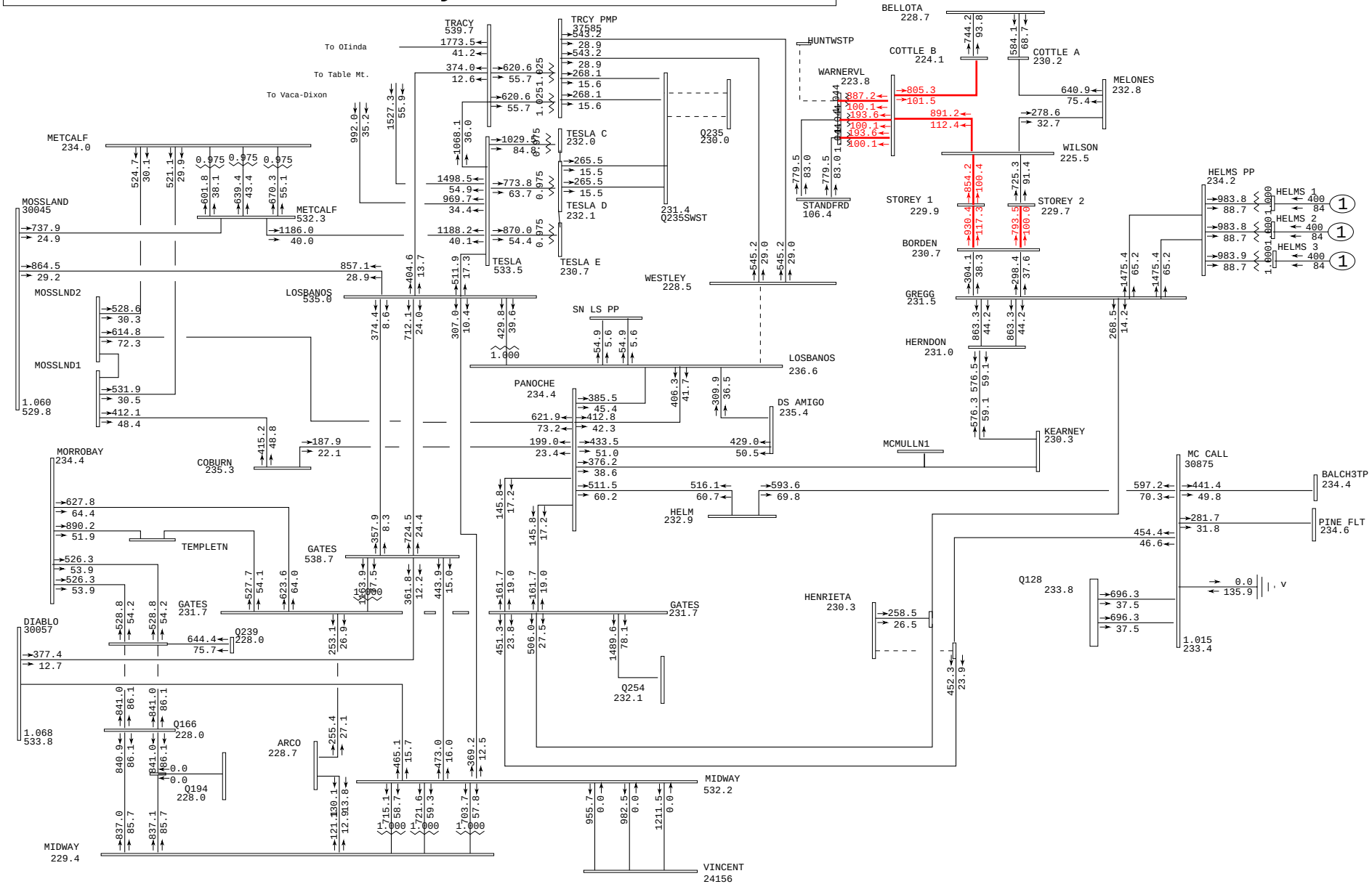

General Electric International, Inc. PSLF Program Wed Oct 01 08:25:09 2008 2013sprpk_q272_pst_v2.sav

PG&E 2007 CASE SERIES: 2013 Spring Peak Post-Project Case PATH15= 958 MW(S-N) PATH26= 2895 MW(N-S) PDCI= 3091 MW(N-S) COI= 4507 MW(N-S) Q272 150 MW at GWF Henrietta 70 kV IFS - 2013 Spring Peak Post-Project FY	Plot 96- Westley-Los Banos 230kV & Kerckhoff	amps/rate gfres2.drw Rating = 2

Greater Fresno
500-kV & 230-kV System

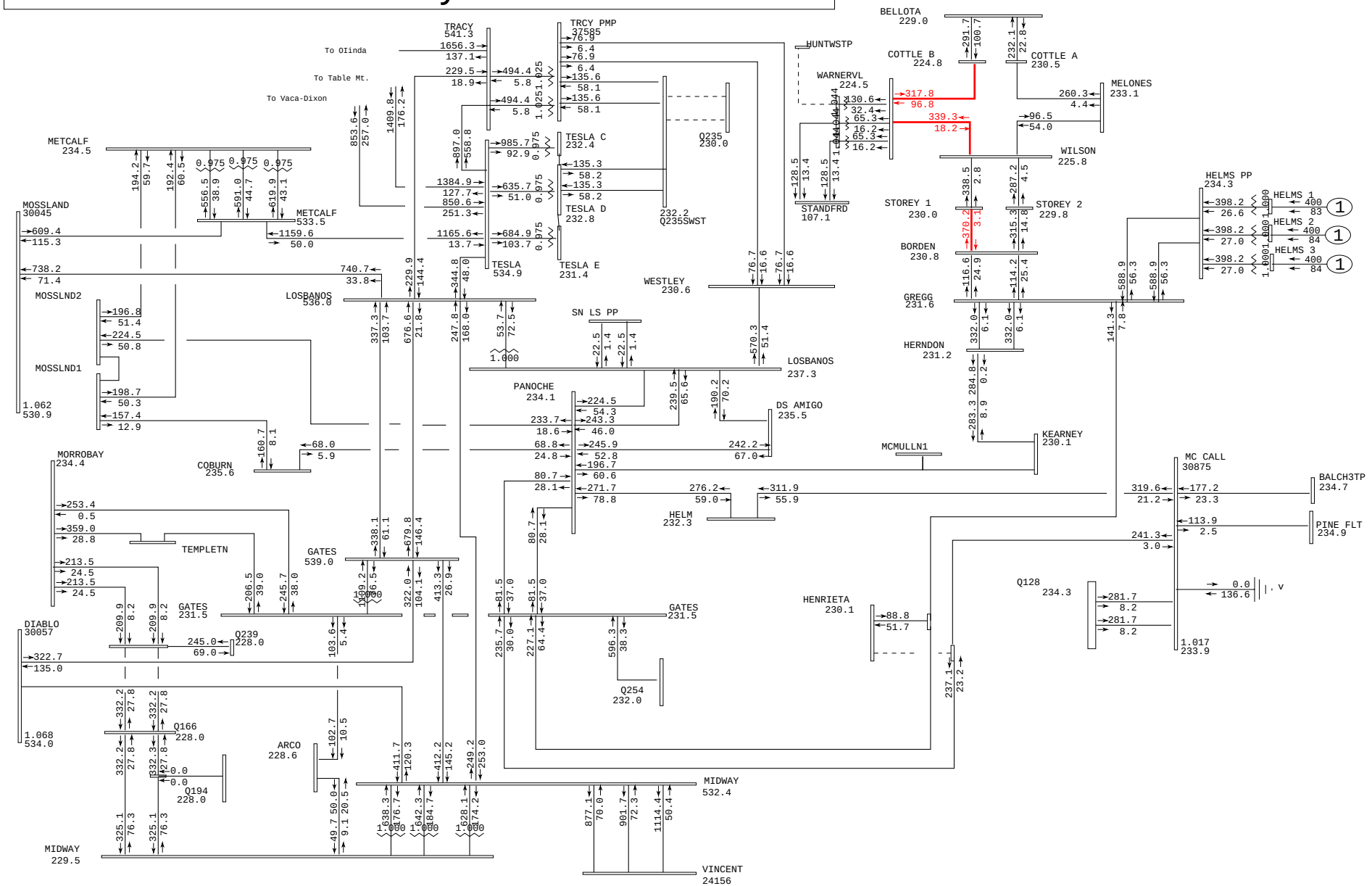

General Electric International, Inc. PSLF Program Wed Oct 01 08:25:11 2008 2013sprpk_q272_pre.sav

PG&E 2007 CASE SERIES: 2013 Spring Peak Pre-Project Case PATH15= 966 MW(S-N) PATH26= 2889 MW(N-S) PDCI= 3092 MW(N-S) COI= 4501 MW(N-S) Q272 150 MW GWF Henrietta 70 kV IFS - 2013 Spring Peak Pre-Project FY	Plot 97- McCall-West Fresno & Cal Ave.-McCall 115kV Lines	MW/MVAR gfres2.drw Rating = 2

Greater Fresno
500-kV & 230-kV System

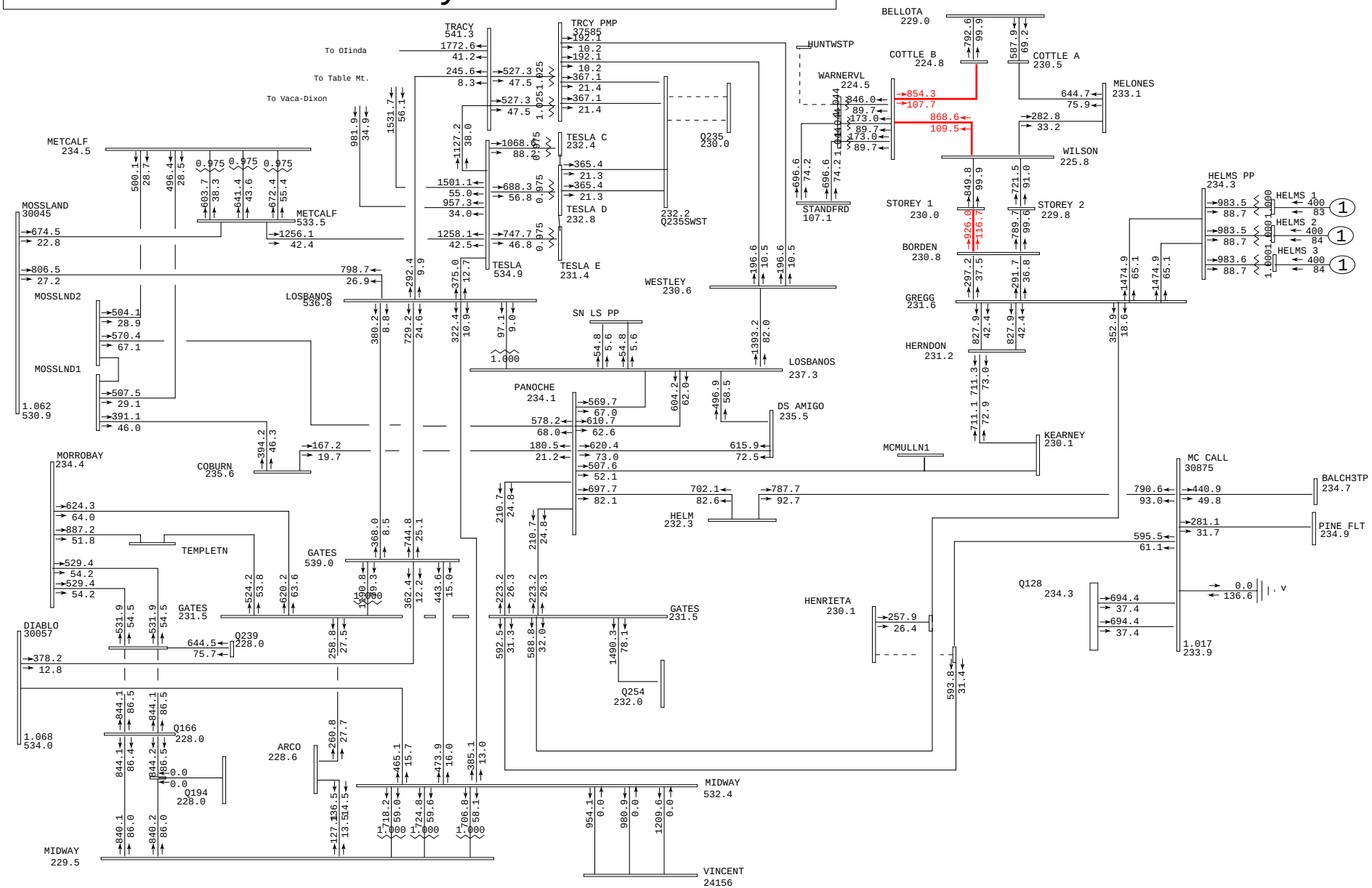

General Electric International, Inc. PSLF Program Wed Oct 01 08:25:13 2008 2013sprpk_q272_pre.sav

	PG&E 2007 CASE SERIES: 2013 Spring Peak Pre-Project Case	Plot 98- McCall-West Fresno & Cal Ave.-McCall 115kV Lines	amps/rate
	PATH15= 966 MW(S-N) PATH26= 2889 MW(N-S) PDCI= 3092 MW(N-S) COI= 4501 MW(N-S)		gfres2.drw
	Q272 150 MW GWF Henrietta 70 kV IFS - 2013 Spring Peak Pre-Project FY		Rating = 2

Greater Fresno
500-kV & 230-kV System

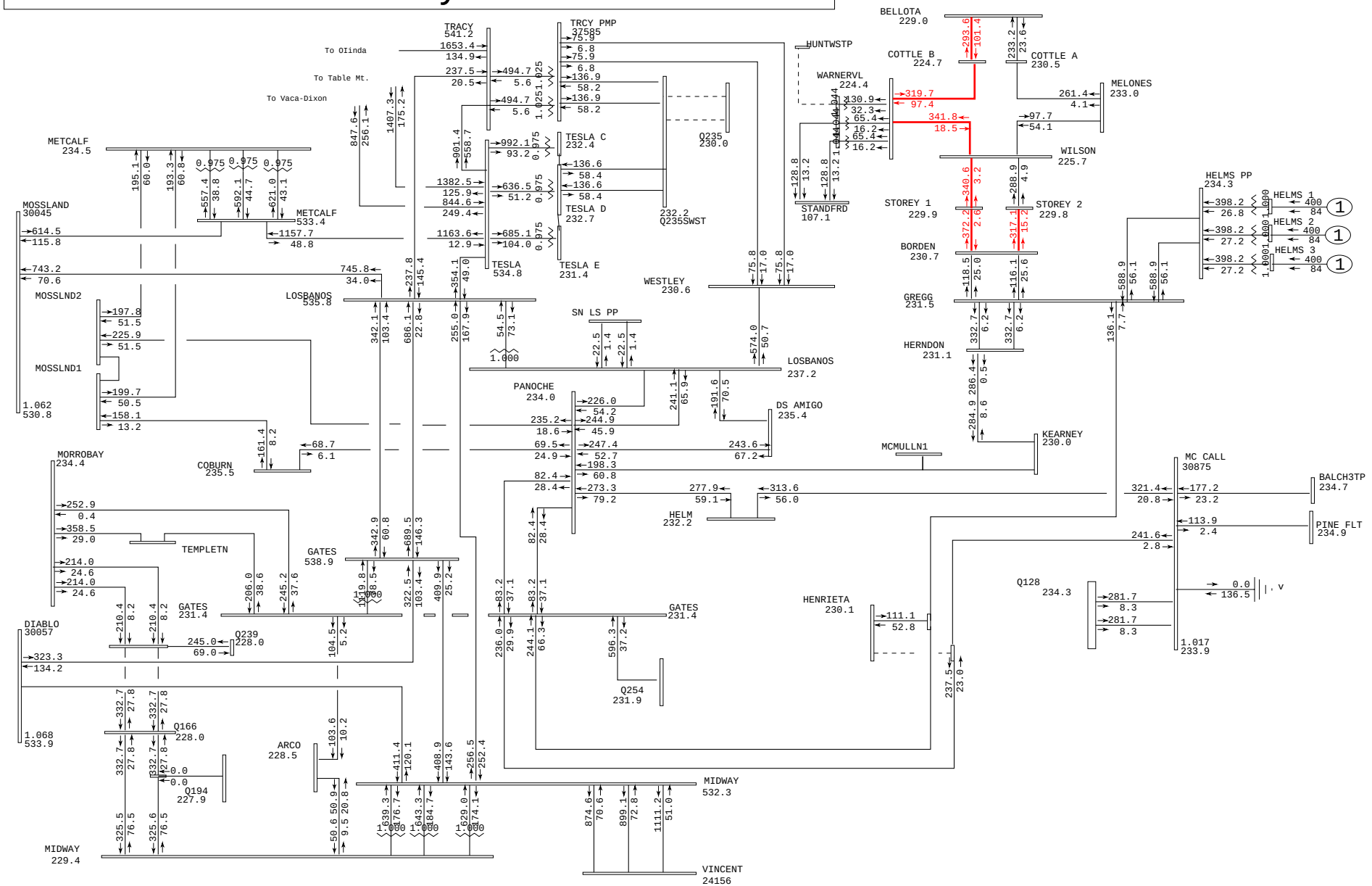

General Electric International, Inc. PSLF Program Wed Oct 01 08:25:14 2008 2013sprpk_q272_pst_v2.sav

	PG&E 2007 CASE SERIES: 2013 Spring Peak Post-Project Case	Plot 99- McCall-West Fresno & Cal Ave.-McCall 115kV Lines	MW/MVAR
	PATH15= 958 MW(S-N) PATH26= 2895 MW(N-S) PDCI= 3091 MW(N-S) COI= 4507 MW(N-S)		gfres2.drw
	Q272 150 MW at GWF Henrietta 70 kV IFS - 2013 Spring Peak Post-Project FY		Rating = 2

Greater Fresno
500-kV & 230-kV System

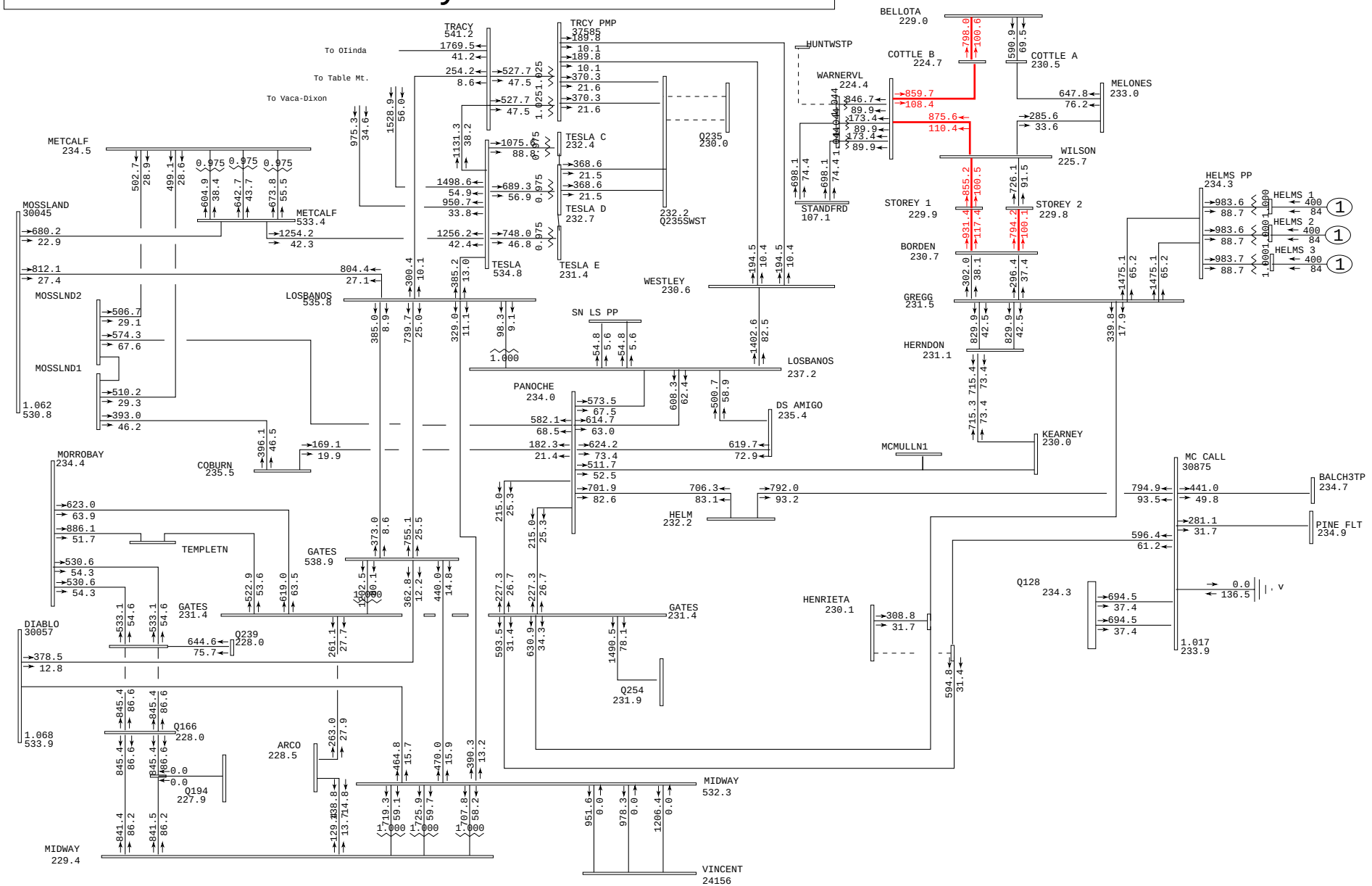

General Electric International, Inc. PSLF Program Wed Oct 01 08:25:16 2008 2013sprpk_q272_pst_v2.sav

PG&E 2007 CASE SERIES: 2013 Spring Peak Post-Project Case PATH15= 958 MW(S-N) PATH26= 2895 MW(N-S) PDCI= 3091 MW(N-S) COI= 4507 MW(N-S) Q272 150 MW at GWF Henrietta 70 kV IFS - 2013 Spring Peak Post-Project FY	Plot 100- McCall-West Fresno & Cal Ave.-McCall 115kV Lines	amps/rate gfres2.drw Rating = 2

Greater Fresno
500-kV & 230-kV System

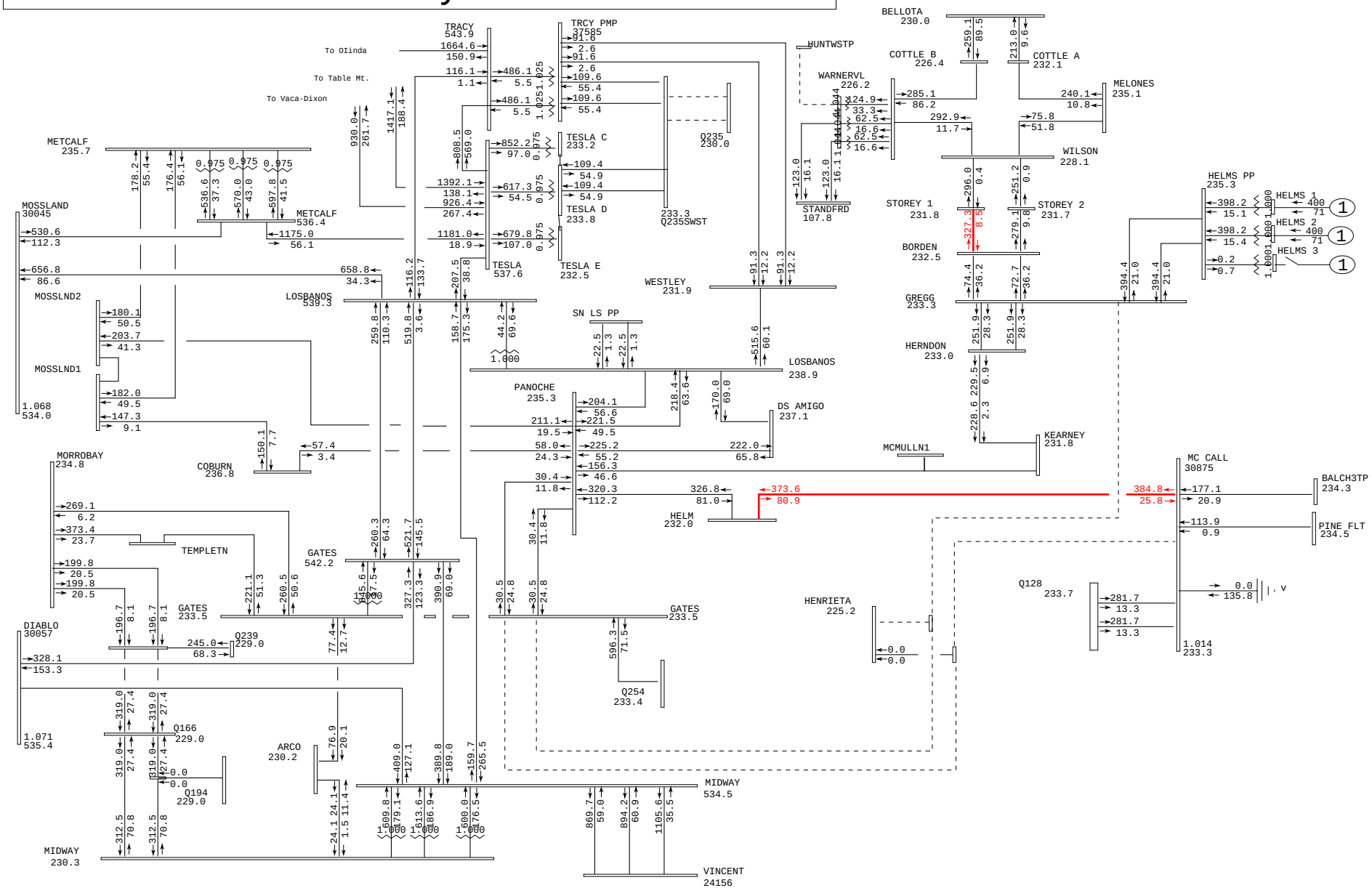

General Electric International, Inc. PSLF Program Wed Oct 01 08:25:18 2008 2013sprpk_q272_pre.sav

	PG&E 2007 CASE SERIES: 2013 Spring Peak Pre-Project Case	Plot 101- Gates-Gregg & Gates-McCall 230kV Lines	MW/MVAR
	PATH15= 966 MW(S-N) PATH26= 2889 MW(N-S) PDCI= 3092 MW(N-S) COI= 4501 MW(N-S)		gfres2.drw
	Q272 150 MW GWF Henrietta 70 kV IFS - 2013 Spring Peak Pre-Project FY		Rating = 2

Greater Fresno
500-kV & 230-kV System

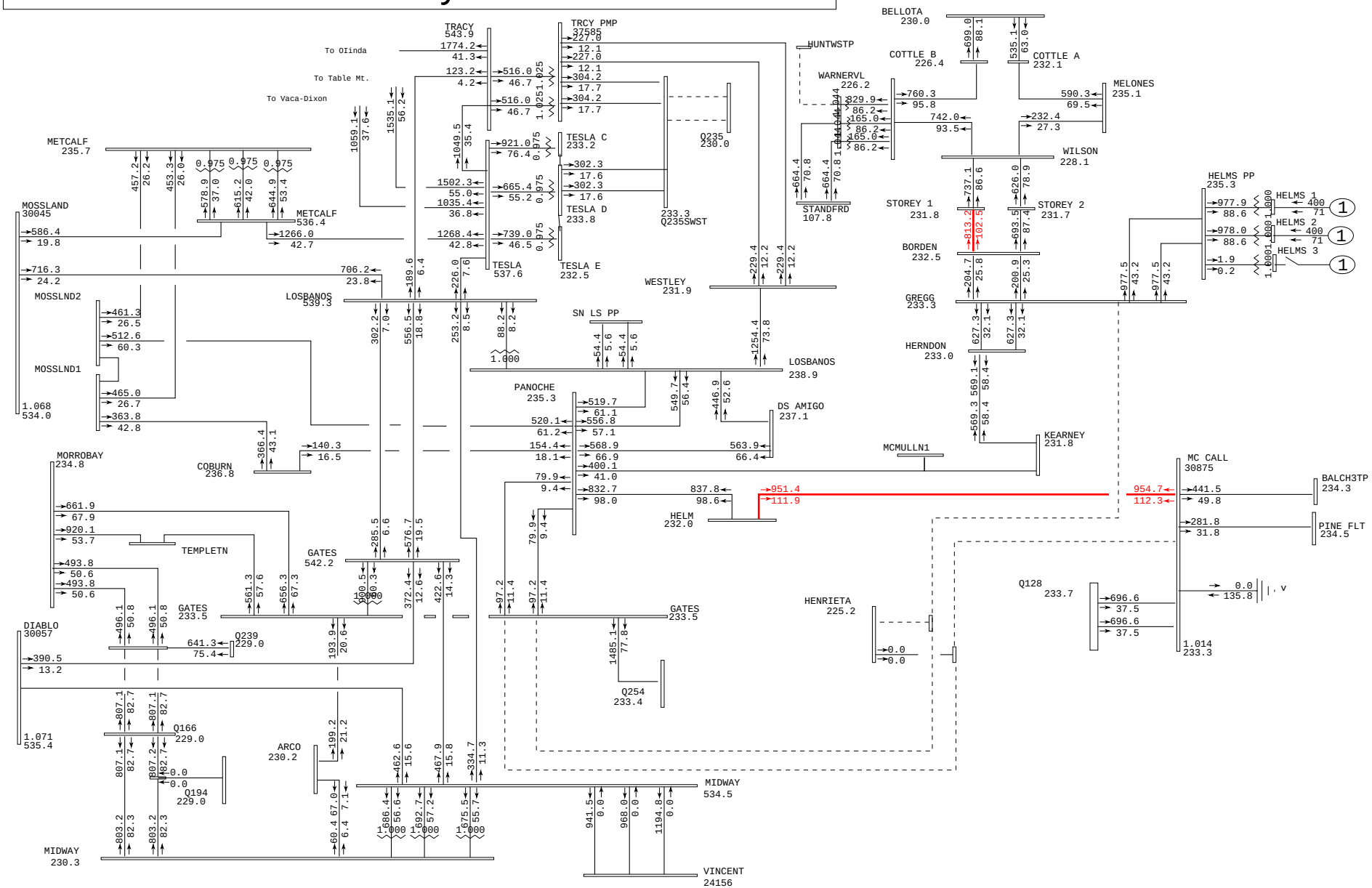

General Electric International, Inc. PSLF Program Wed Oct 01 08:25:19 2008 2013sprpk_q272_pre.sav

	PG&E 2007 CASE SERIES: 2013 Spring Peak Pre-Project Case	Plot 102- Gates-Gregg & Gates-McCall 230kV Lines	amps/rate
	PATH15= 966 MW(S-N) PATH26= 2889 MW(N-S) PDCI= 3092 MW(N-S) COI= 4501 MW(N-S)		gfres2.drw
	Q272 150 MW GWF Henrietta 70 kV IFS - 2013 Spring Peak Pre-Project FY		Rating = 2

Greater Fresno
500-kV & 230-kV System

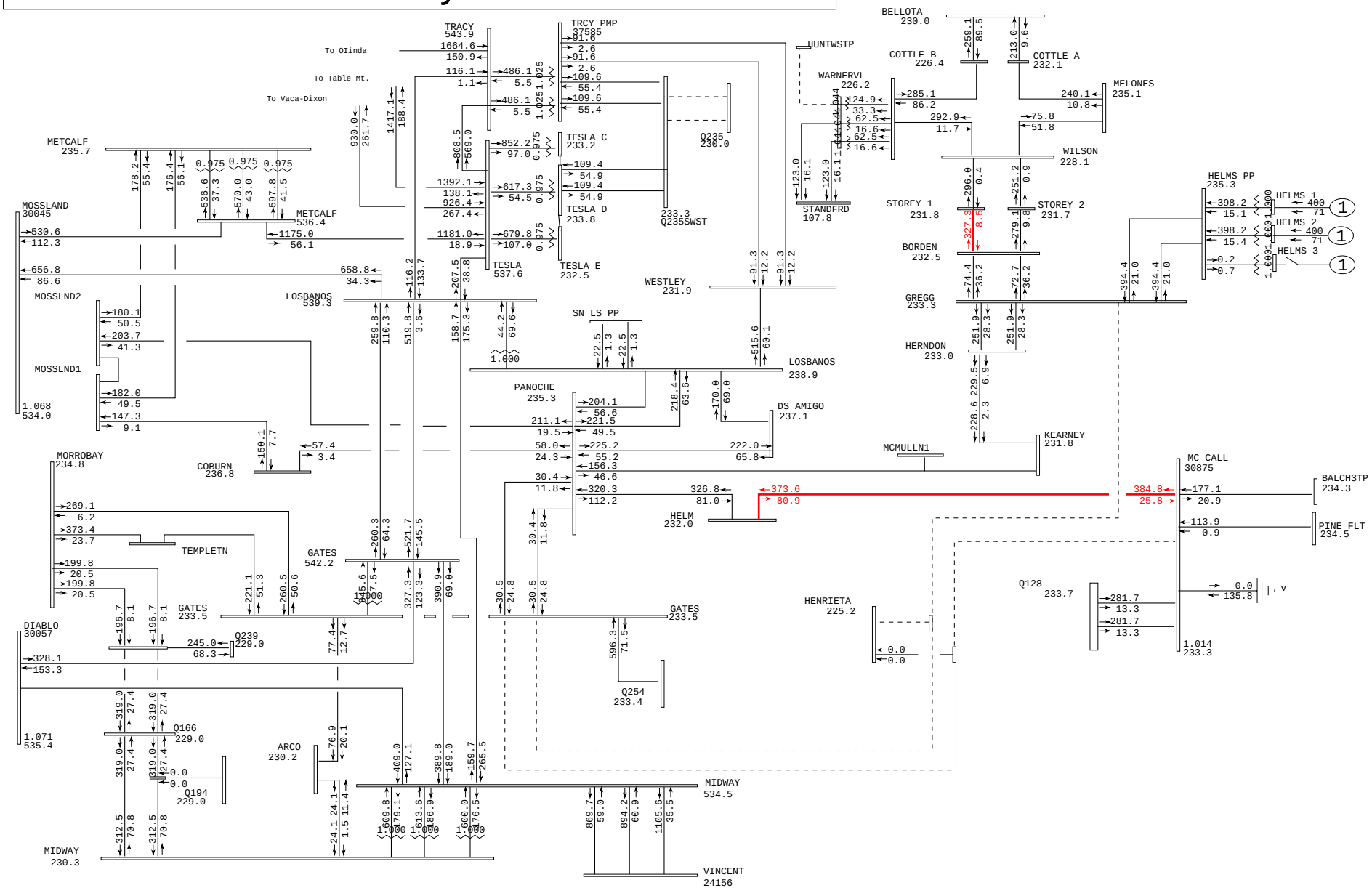

General Electric International, Inc. PSLF Program Wed Oct 01 08:25:21 2008 2013sprpk_q272_pre.sav

	PG&E 2007 CASE SERIES: 2013 Spring Peak Pre-Project Case	Plot 103- Gates-Gregg & Gates-McCall 230kV Lines	MW/MVAR
	PATH15= 966 MW(S-N) PATH26= 2889 MW(N-S) PDCI= 3092 MW(N-S) COI= 4501 MW(N-S)		gfres2.drw
	Q272 150 MW GWF Henrietta 70 kV IFS - 2013 Spring Peak Pre-Project FY		Rating = 2

Greater Fresno
500-kV & 230-kV System

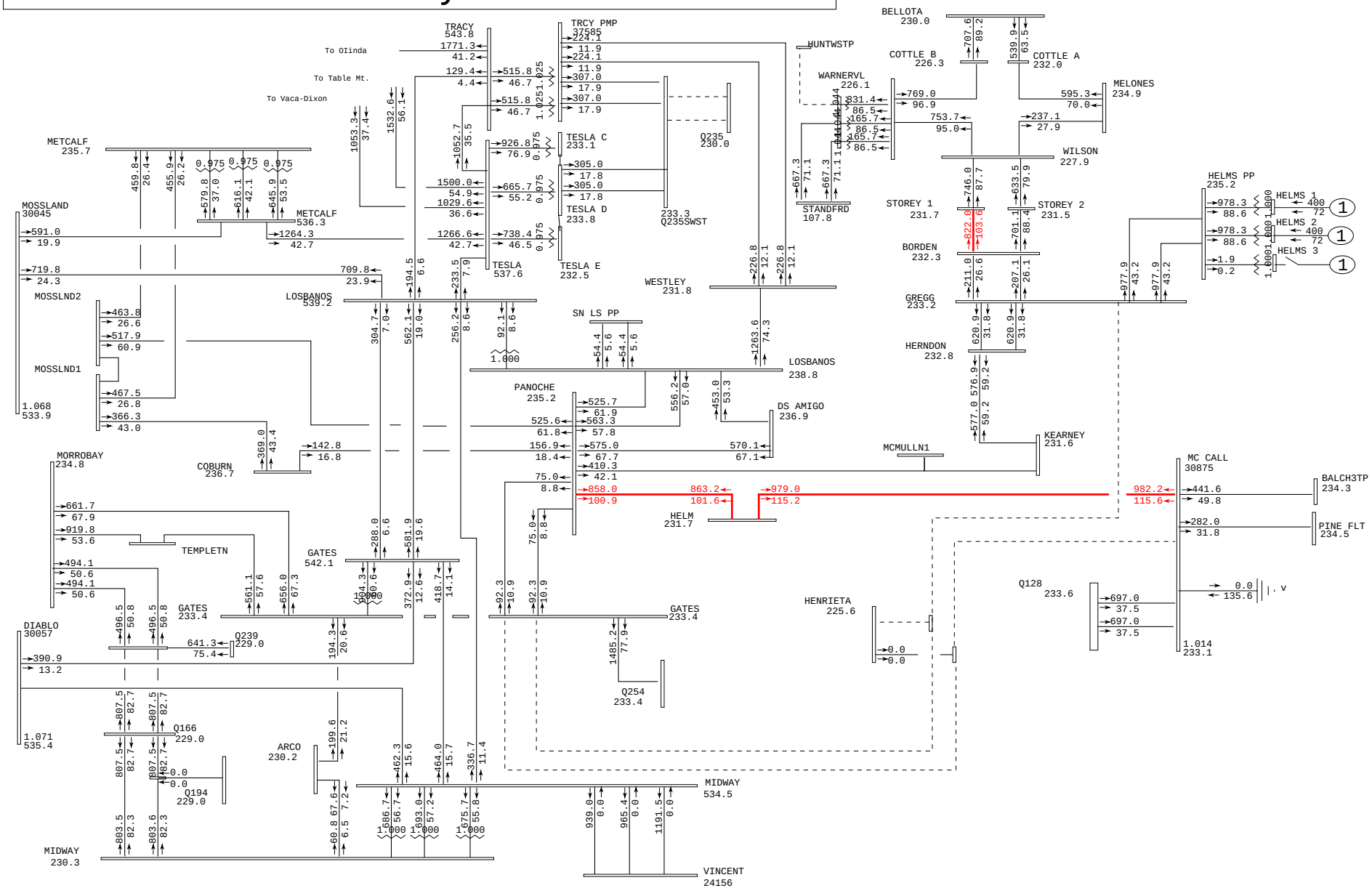

General Electric International, Inc. PSLF Program Wed Oct 01 08:25:22 2008 2013sprpk_q272_pst_v2.sav

PG&E 2007 CASE SERIES: 2013 Spring Peak Post-Project Case

PATH15= 958 MW(S-N) PATH26= 2895 MW(N-S) PDCI= 3091 MW(N-S) COI= 4507 MW(N-S)

Q272 150 MW at GWF Henrietta 70 kV IFS - 2013 Spring Peak Post-Project FY

Plot 104- Gates-Gregg & Gates-McCall 230kV Lines

amps/rate

gfres2.drw

Rating = 2

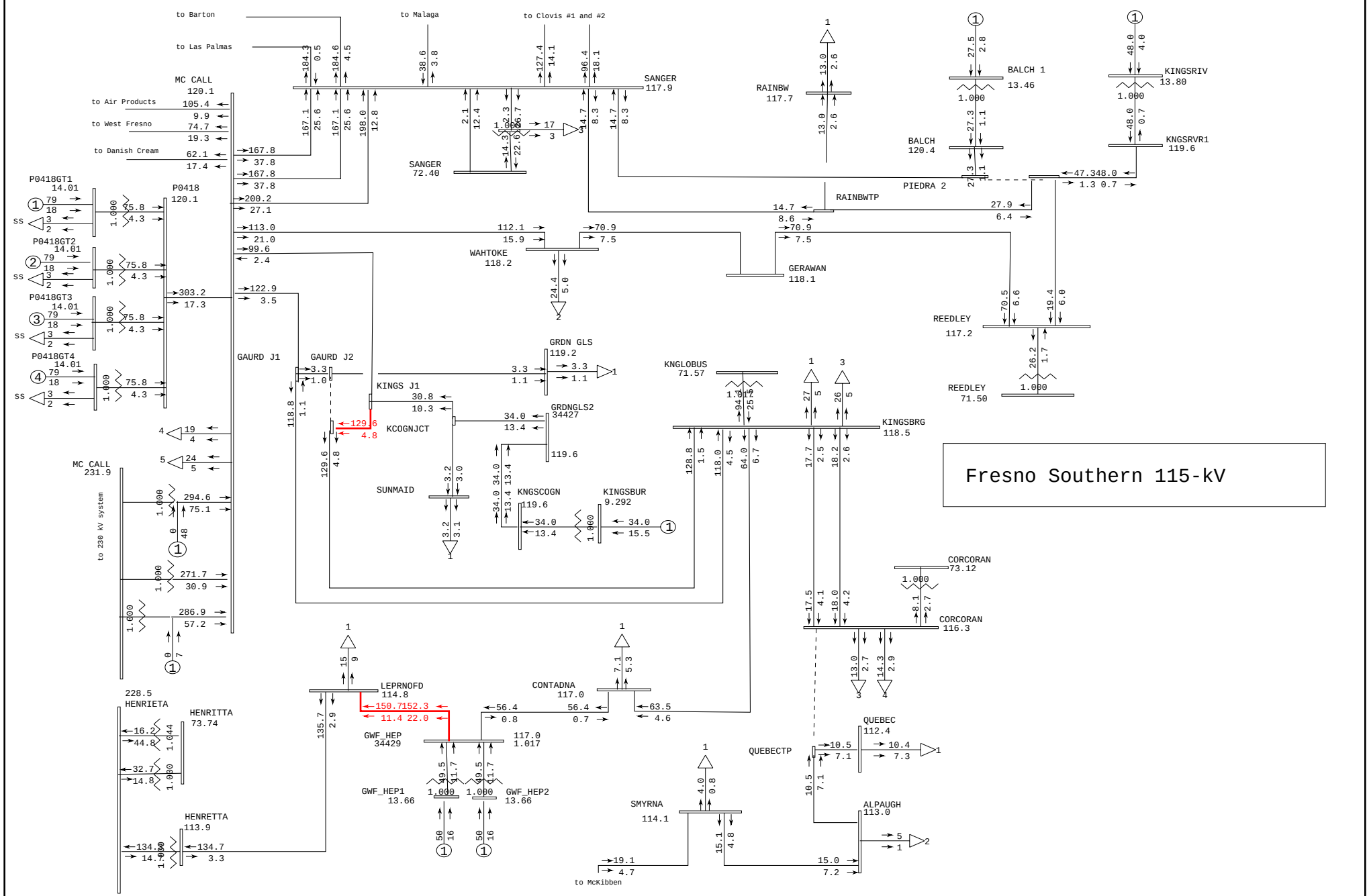

General Electric International, Inc. PSLF Program Wed Oct 01 08:25:24 2008 2013sprpk_q272_pre.sav

PG&E 2007 CASE SERIES: 2013 Spring Peak Pre-Project Case PATH15= 966 MW(S-N) PATH26= 2889 MW(N-S) PDCI= 3092 MW(N-S) COI= 4501 MW(N-S) Q272 150 MW GWF Henrietta 70 kV IFS - 2013 Spring Peak Pre-Project FY	Plot 105- Helm-McCall & Gates-McCall 230kV Lines	MW/MVAR fres_so_115.drw Rating = 2

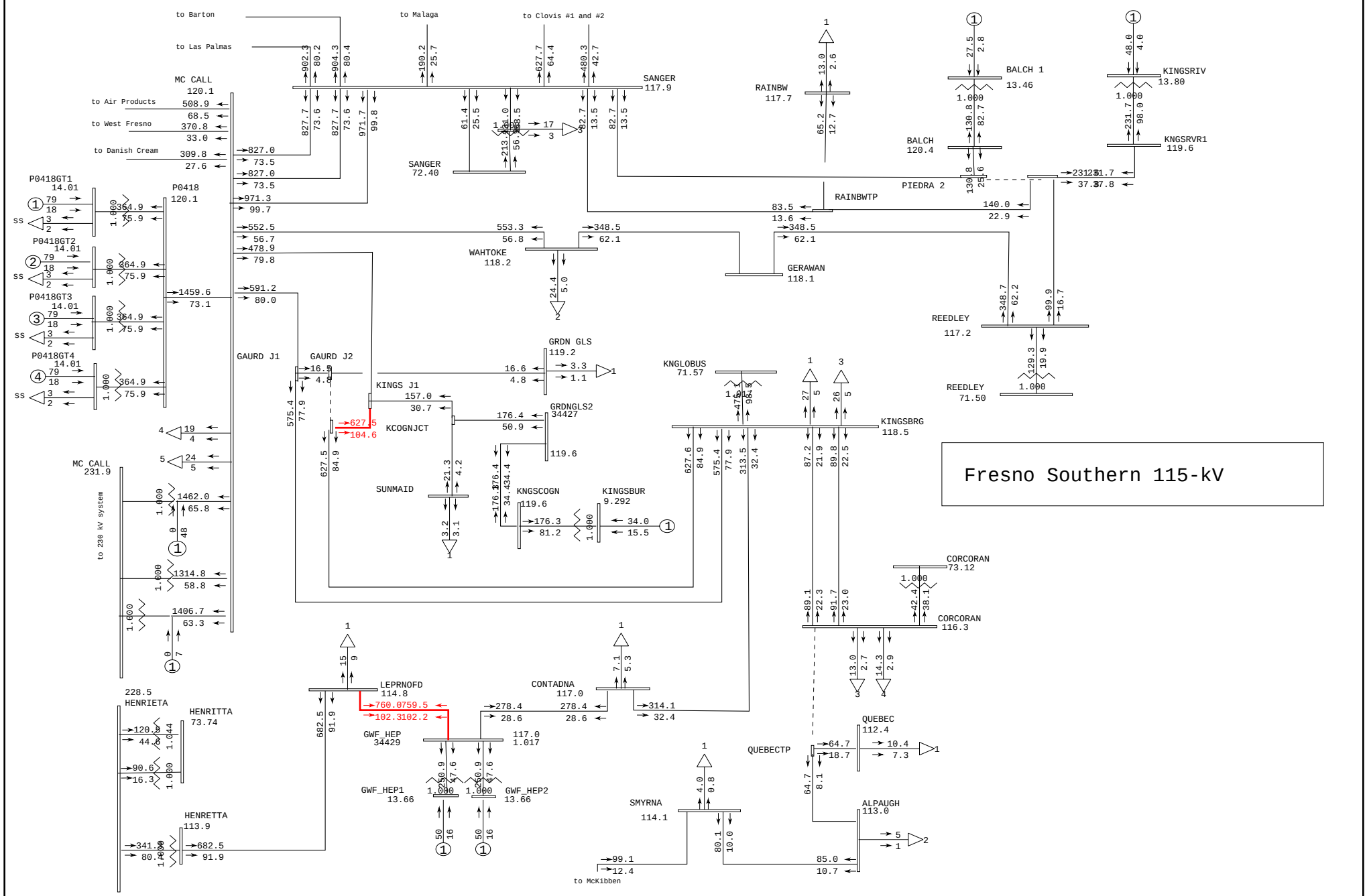

General Electric International, Inc. PSLF Program Wed Oct 01 08:25:25 2008 2013sprpk_q272_pre.sav

PG&E 2007 CASE SERIES: 2013 Spring Peak Pre-Project Case PATH15= 966 MW(S-N) PATH26= 2889 MW(N-S) PDCI= 3092 MW(N-S) COI= 4501 MW(N-S) Q272 150 MW GWF Henrietta 70 kV IFS - 2013 Spring Peak Pre-Project FY	Plot 106- Helm-McCall & Gates-McCall 230kV Lines	amps/rate fres_so_115.drw Rating = 2

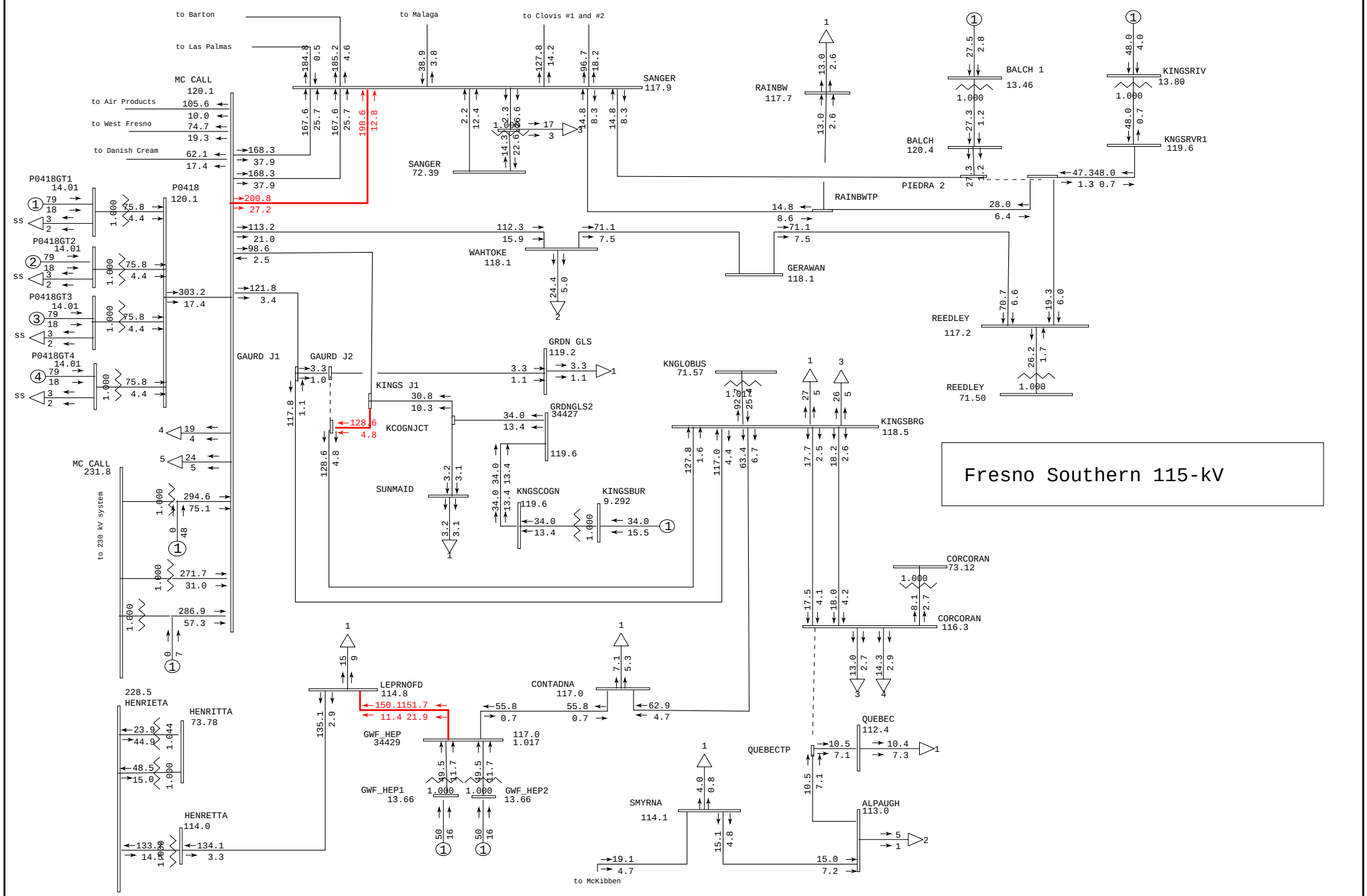

General Electric International, Inc. PSLF Program Wed Oct 01 08:25:27 2008 2013sprpk_q272_pst_v2.sav

PG&E 2007 CASE SERIES: 2013 Spring Peak Post-Project Case PATH15= 958 MW(S-N) PATH26= 2895 MW(N-S) PDCI= 3091 MW(N-S) COI= 4507 MW(N-S) Q272 150 MW at GWF Henrietta 70 kV IFS - 2013 Spring Peak Post-Project FY	Plot 107- Helm-McCall & Gates-McCall 230kV Lines	MW/MVAR fres_so_115.drw Rating = 2

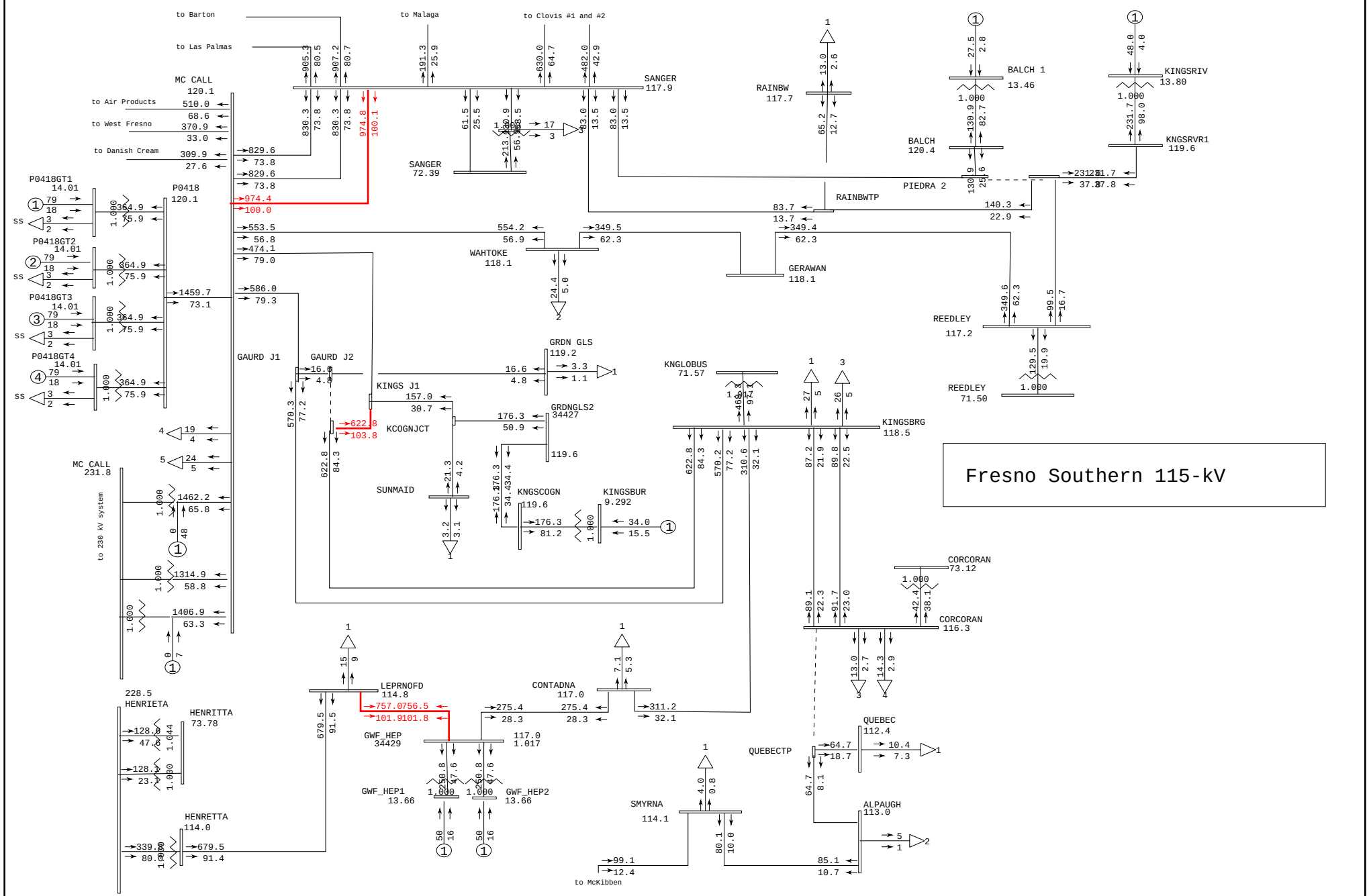

General Electric International, Inc. PSLF Program Wed Oct 01 08:25:28 2008 2013sprpk_q272_pst_v2.sav

PG&E 2007 CASE SERIES: 2013 Spring Peak Post-Project Case PATH15= 958 MW(S-N) PATH26= 2895 MW(N-S) PDCI= 3091 MW(N-S) COI= 4507 MW(N-S) Q272 150 MW at GWF Henrietta 70 kV IFS - 2013 Spring Peak Post-Project FY	Plot 108- Helm-McCall & Gates-McCall 230kV Lines	amps/rate fres_so_115.drw Rating = 2

Henrietta 70 kV system

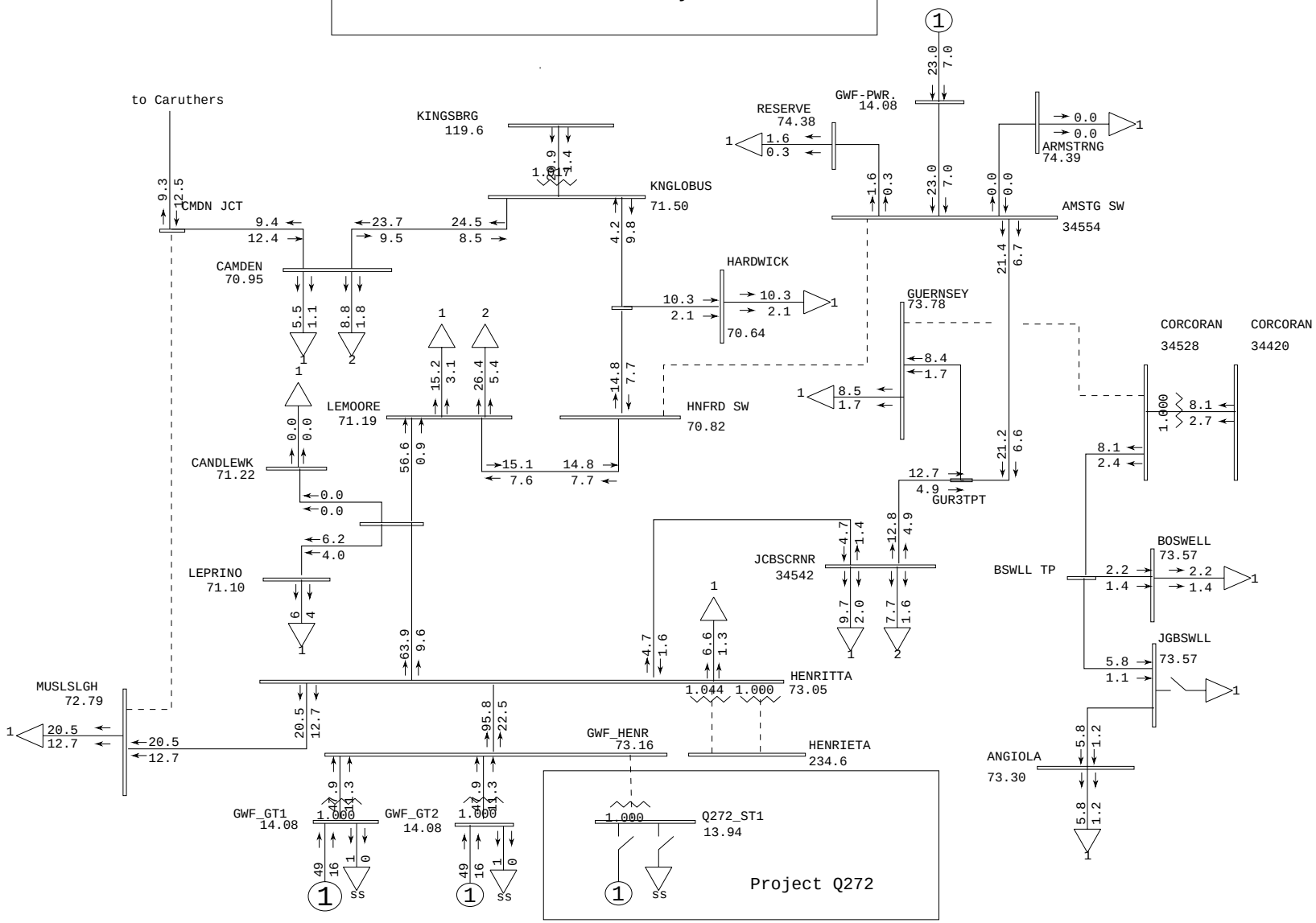

General Electric International, Inc. PSLF Program Wed Oct 01 08:25:29 2008 2013sprpk_q272_pre.sav

PG&E 2007 CASE SERIES: 2013 Spring Peak Pre-Project Case PATH15= 966 MW(S-N) PATH26= 2889 MW(N-S) PDCI= 3092 MW(N-S) COI= 4501 MW(N-S) Q272 150 MW GWF Henrietta 70 kV IFS - 2013 Spring Peak Pre-Project FY	Plot 109- Henrietta 230kV Bus	MW/MVAR hen_70.drw Rating = 2

Henrietta 70 kV system

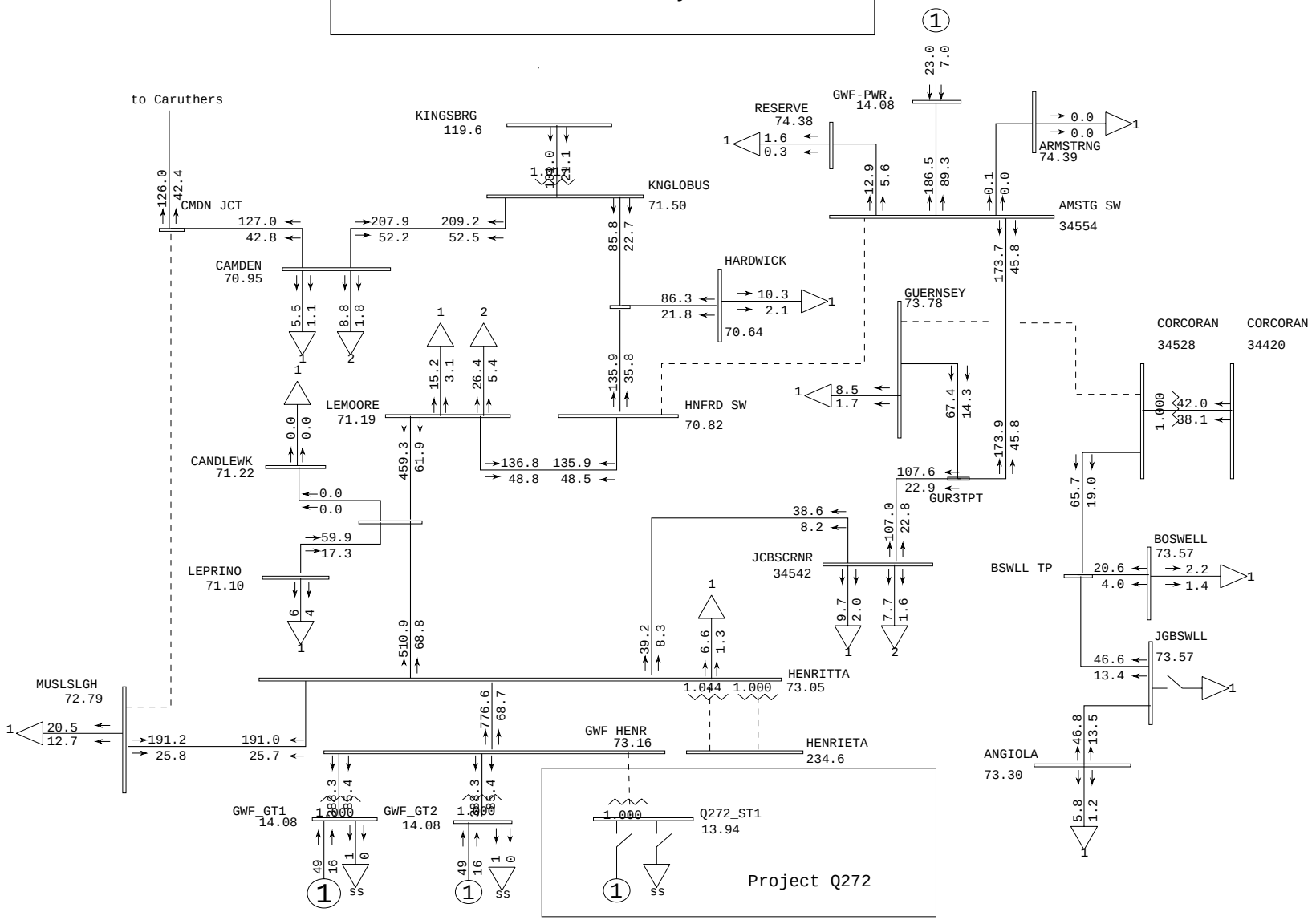

General Electric International, Inc. PSLF Program Wed Oct 01 08:25:31 2008 2013sprpk_q272_pre.sav

PG&E 2007 CASE SERIES: 2013 Spring Peak Pre-Project Case	Plot 110- Henrietta 230kV Bus	amps/rate
PATH15= 966 MW(S-N) PATH26= 2889 MW(N-S) PDCI= 3092 MW(N-S) COI= 4501 MW(N-S)		hen_70.drw
Q272 150 MW GWF Henrietta 70 kV IFS - 2013 Spring Peak Pre-Project FY		Rating = 2

Henrietta 70 kV system

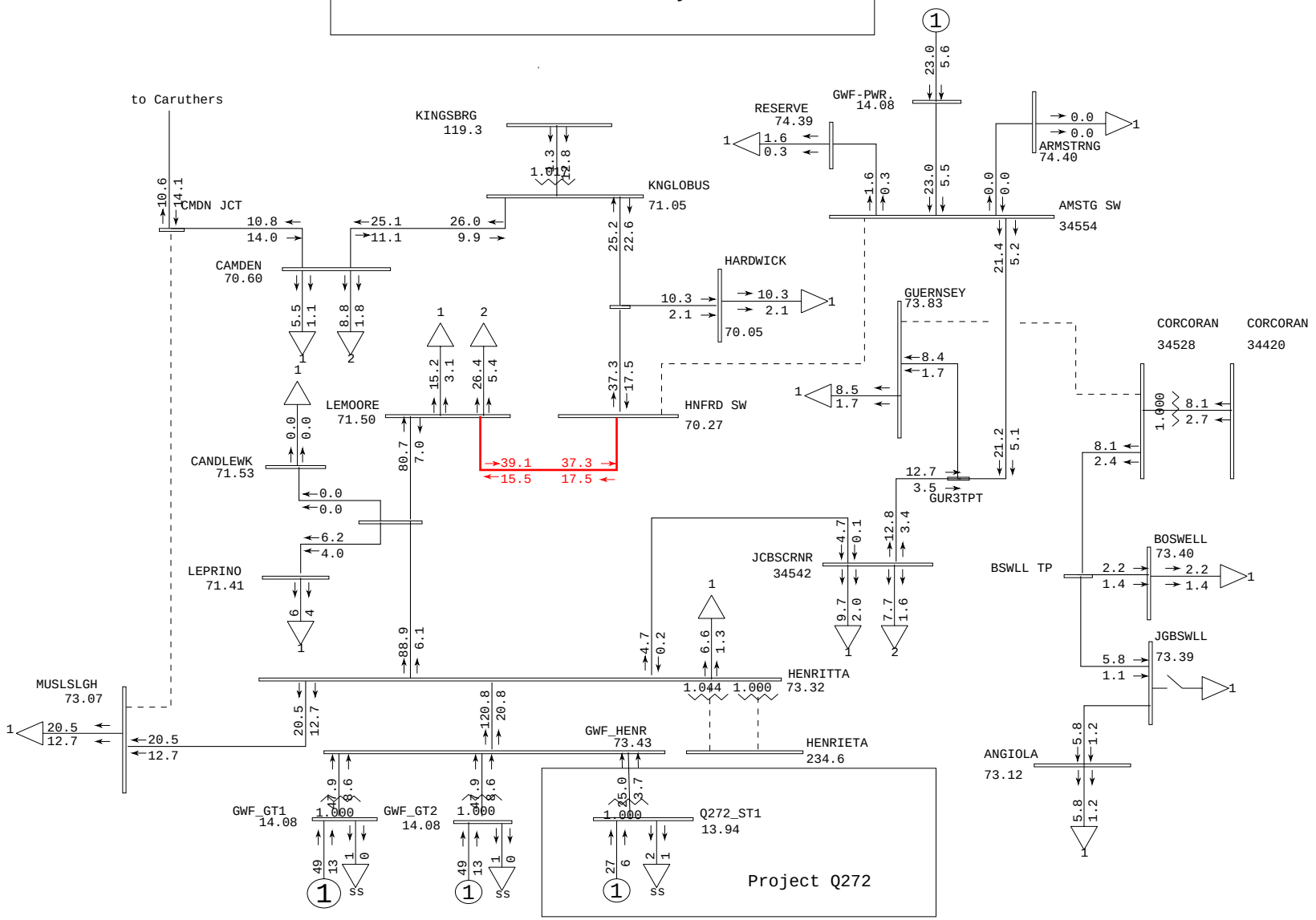

General Electric International, Inc. PSLF Program Wed Oct 01 08:25:32 2008 2013sprpk_q272_pst_v2.sav

	PG&E 2007 CASE SERIES: 2013 Spring Peak Post-Project Case PATH15= 958 MW(S-N) PATH26= 2895 MW(N-S) PDCI= 3091 MW(N-S) COI= 4507 MW(N-S) Q272 150 MW at GWF Henrietta 70 kV IFS - 2013 Spring Peak Post-Project FY	Plot 111- Henrietta 230kV Bus	MW/MVAR hen_70.drw Rating = 2

Henrietta 70 kV system

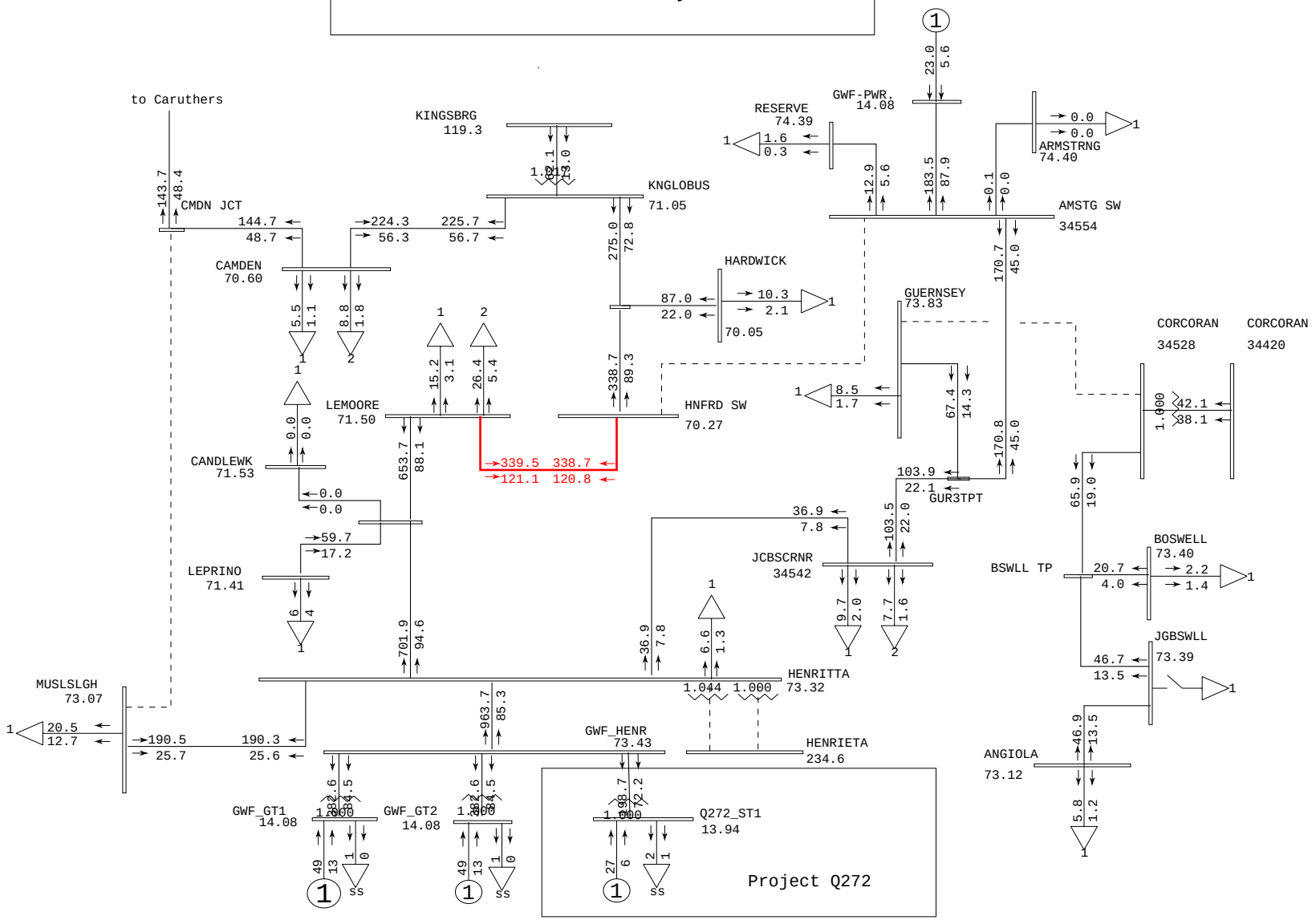

General Electric International, Inc. PSLF Program Wed Oct 01 08:25:33 2008 2013sprpk_q272_pst_v2.sav

PG&E 2007 CASE SERIES: 2013 Spring Peak Post-Project Case PATH15= 958 MW(S-N) PATH26= 2895 MW(N-S) PDCI= 3091 MW(N-S) COI= 4507 MW(N-S) Q272 150 MW at GWF Henrietta 70 kV IFS - 2013 Spring Peak Post-Project FY	Plot 112- Henrietta 230kV Bus	amps/rate hen_70.drw Rating = 2

Greater Fresno
500-kV & 230-kV System

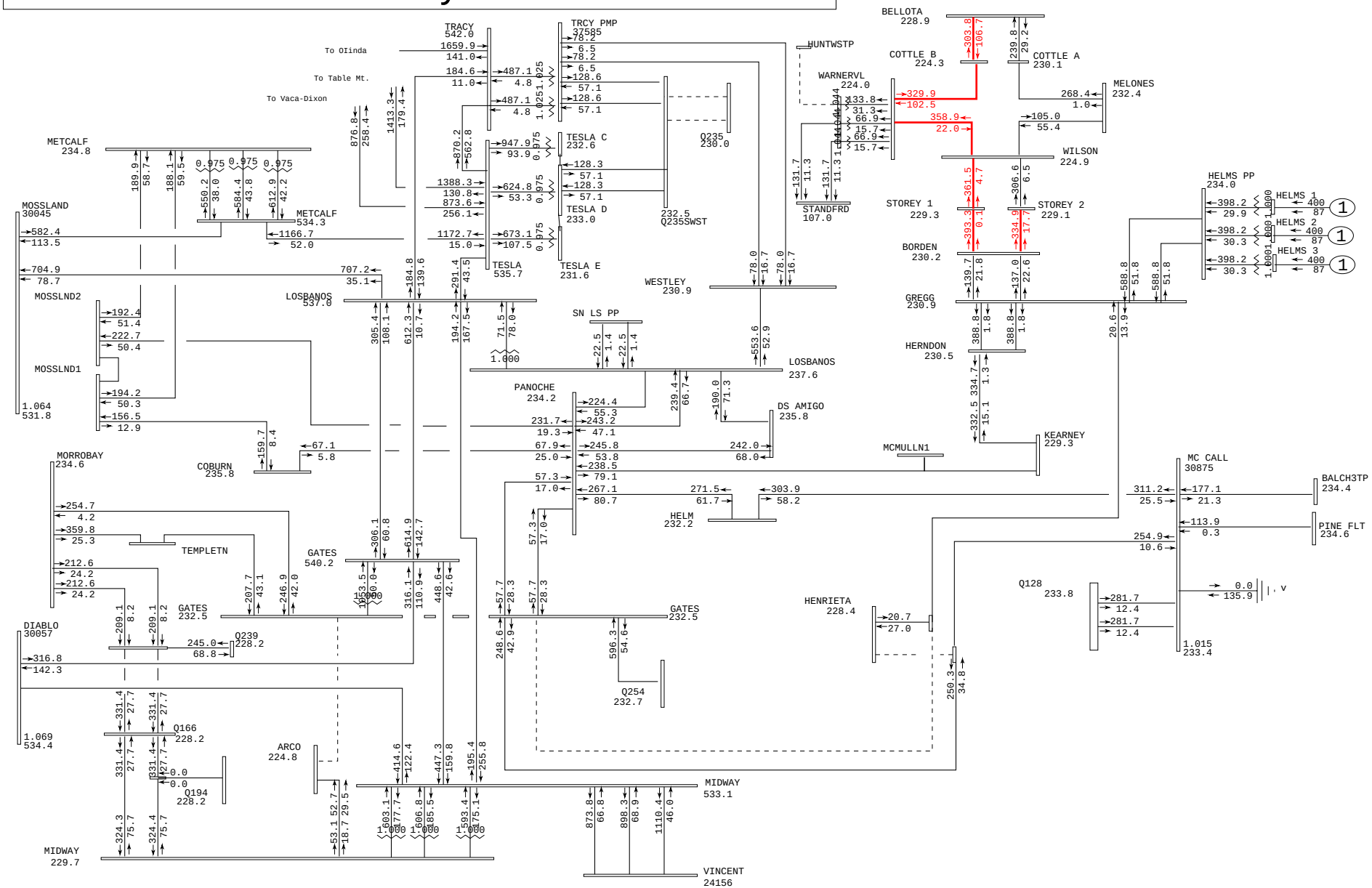

General Electric International, Inc. PSLF Program Wed Oct 01 08:25:35 2008 2013sprpk_q272_pre.sav

PG&E 2007 CASE SERIES: 2013 Spring Peak Pre-Project Case PATH15= 966 MW(S-N) PATH26= 2889 MW(N-S) PDCI= 3092 MW(N-S) COI= 4501 MW(N-S) Q272 150 MW GWF Henrietta 70 kV IFS - 2013 Spring Peak Pre-Project FY	Plot 113- Gates 230kV Bus 1E	MW/MVAR gfres2.drw Rating = 2

Greater Fresno
500-kV & 230-kV System

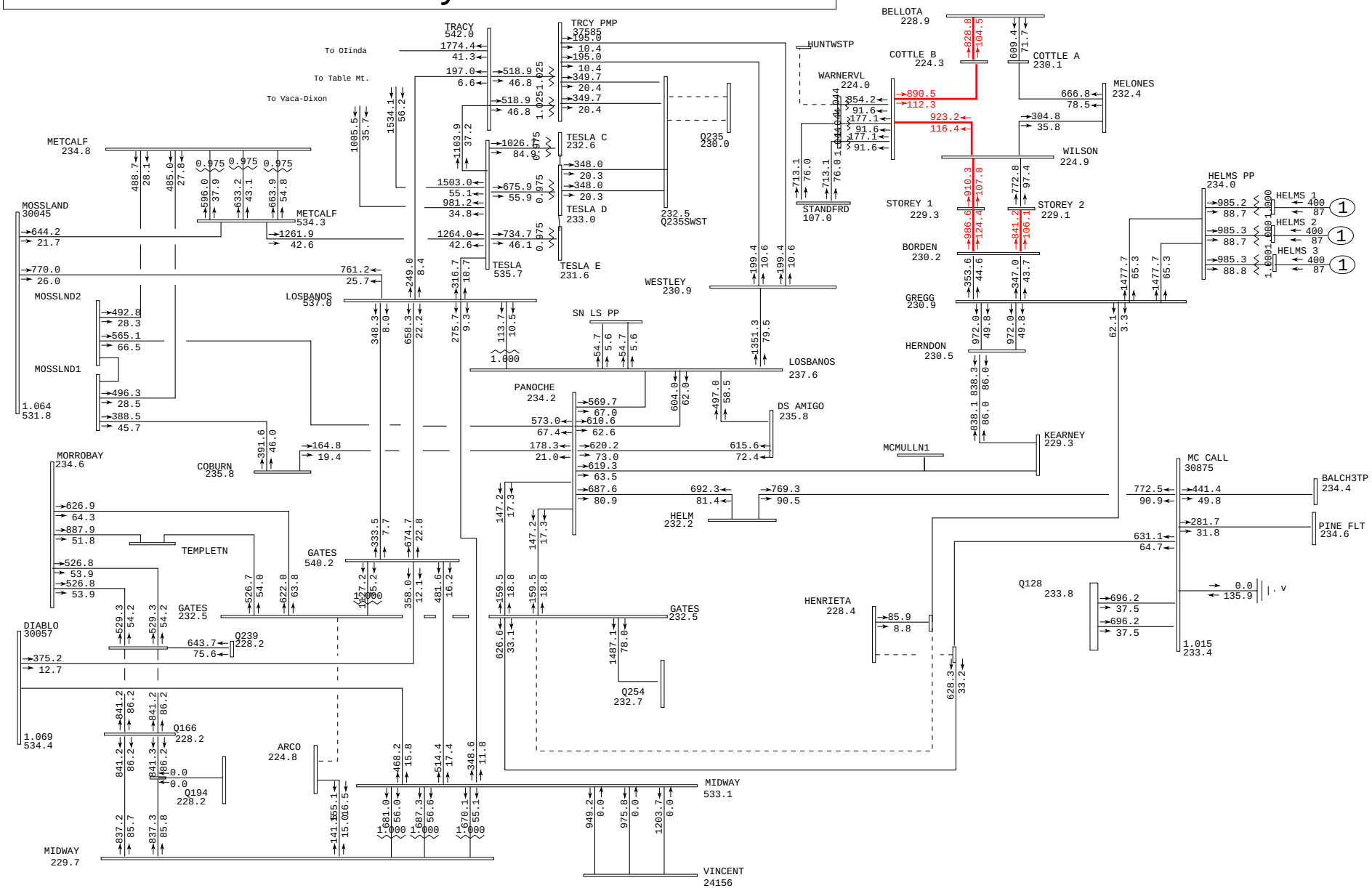

General Electric International, Inc. PSLF Program Wed Oct 01 08:25:36 2008 2013sprpk_q272_pre.sav

PG&E 2007 CASE SERIES: 2013 Spring Peak Pre-Project Case	Plot 114- Gates 230kV Bus 1E	amps/rate
PATH15= 966 MW(S-N) PATH26= 2889 MW(N-S) PDCI= 3092 MW(N-S) COI= 4501 MW(N-S)		gfres2.drw
Q272 150 MW GWF Henrietta 70 kV IFS - 2013 Spring Peak Pre-Project FY		Rating = 2

Greater Fresno
500-kV & 230-kV System

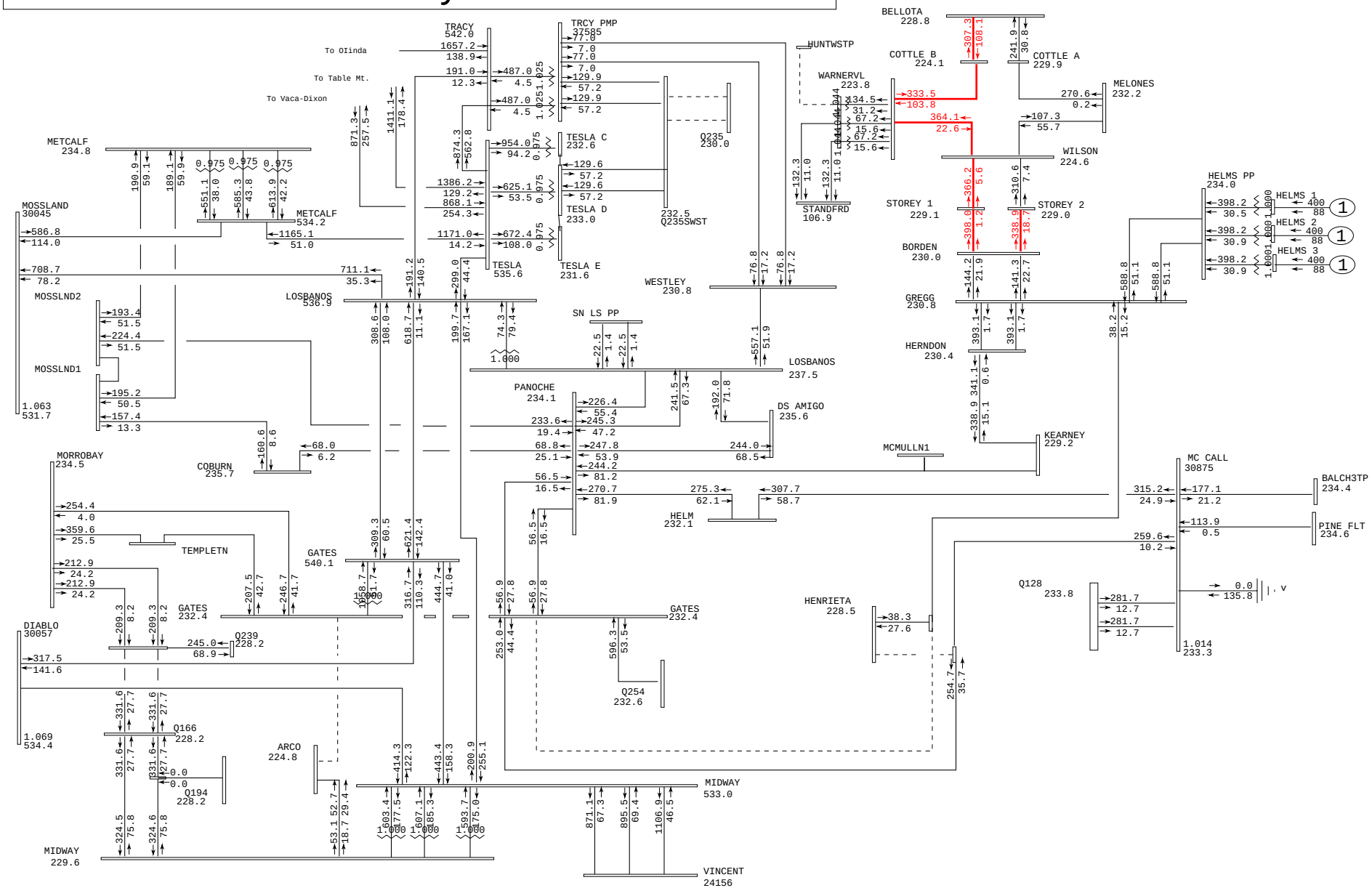

General Electric International, Inc. PSLF Program Wed Oct 01 08:25:38 2008 2013sprpk_q272_pst_v2.sav

	PG&E 2007 CASE SERIES: 2013 Spring Peak Post-Project Case	Plot 115- Gates 230kV Bus 1E	MW/MVAR
	PATH15= 958 MW(S-N) PATH26= 2895 MW(N-S) PDCI= 3091 MW(N-S) COI= 4507 MW(N-S)		gfres2.drw
	Q272 150 MW at GWF Henrietta 70 kV IFS - 2013 Spring Peak Post-Project FY		Rating = 2

Greater Fresno
500-kV & 230-kV System

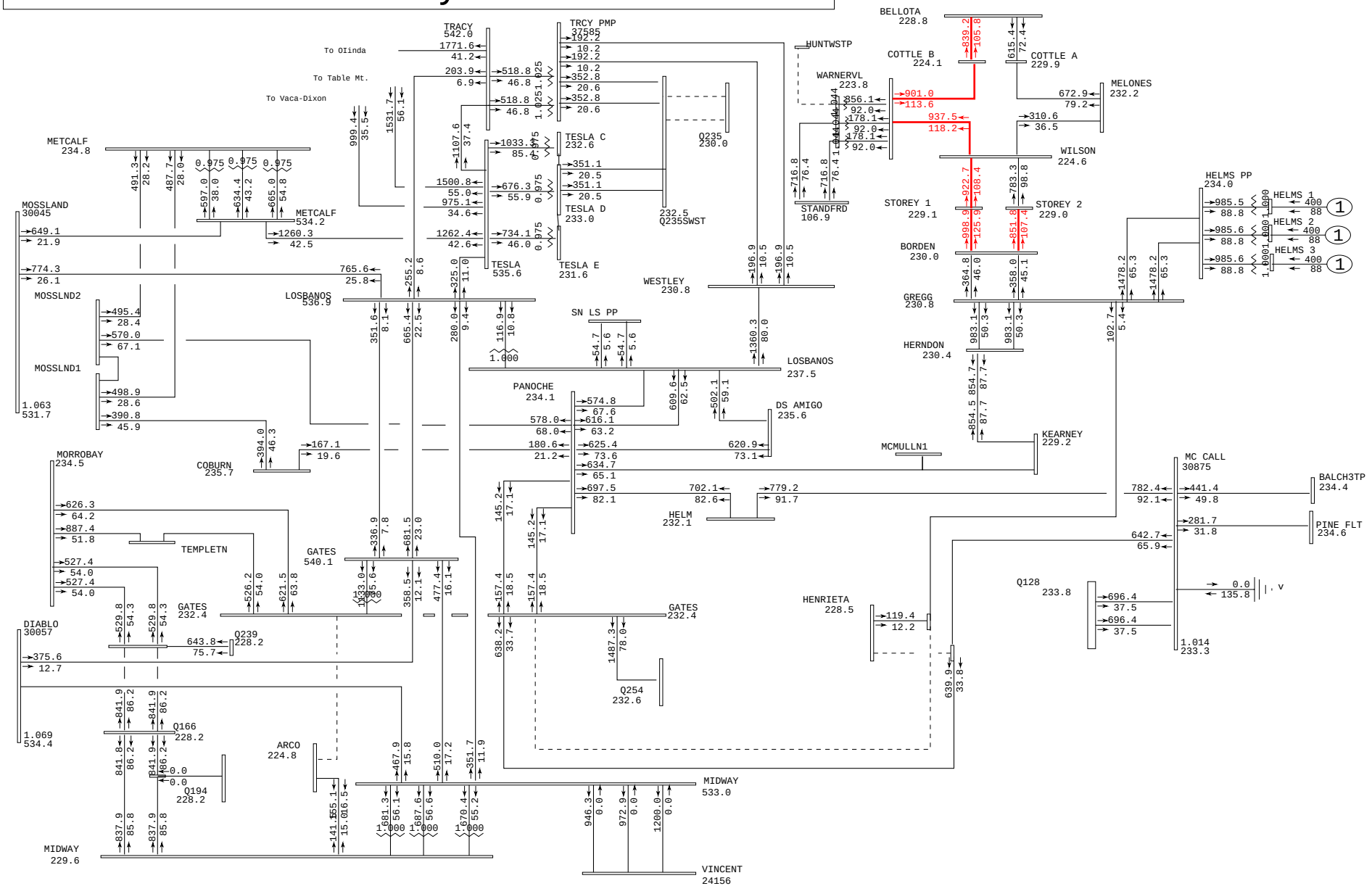

General Electric International, Inc. PSLF Program Wed Oct 01 08:25:39 2008 2013sprpk_q272_pst_v2.sav

	PG&E 2007 CASE SERIES: 2013 Spring Peak Post-Project Case	Plot 116- Gates 230kV Bus 1E	amps/rate
	PATH15= 958 MW(S-N) PATH26= 2895 MW(N-S) PDCI= 3091 MW(N-S) COI= 4507 MW(N-S)		gfres2.drw
	Q272 150 MW at GWF Henrietta 70 kV IFS - 2013 Spring Peak Post-Project FY		Rating = 2

Greater Fresno
500-kV & 230-kV System

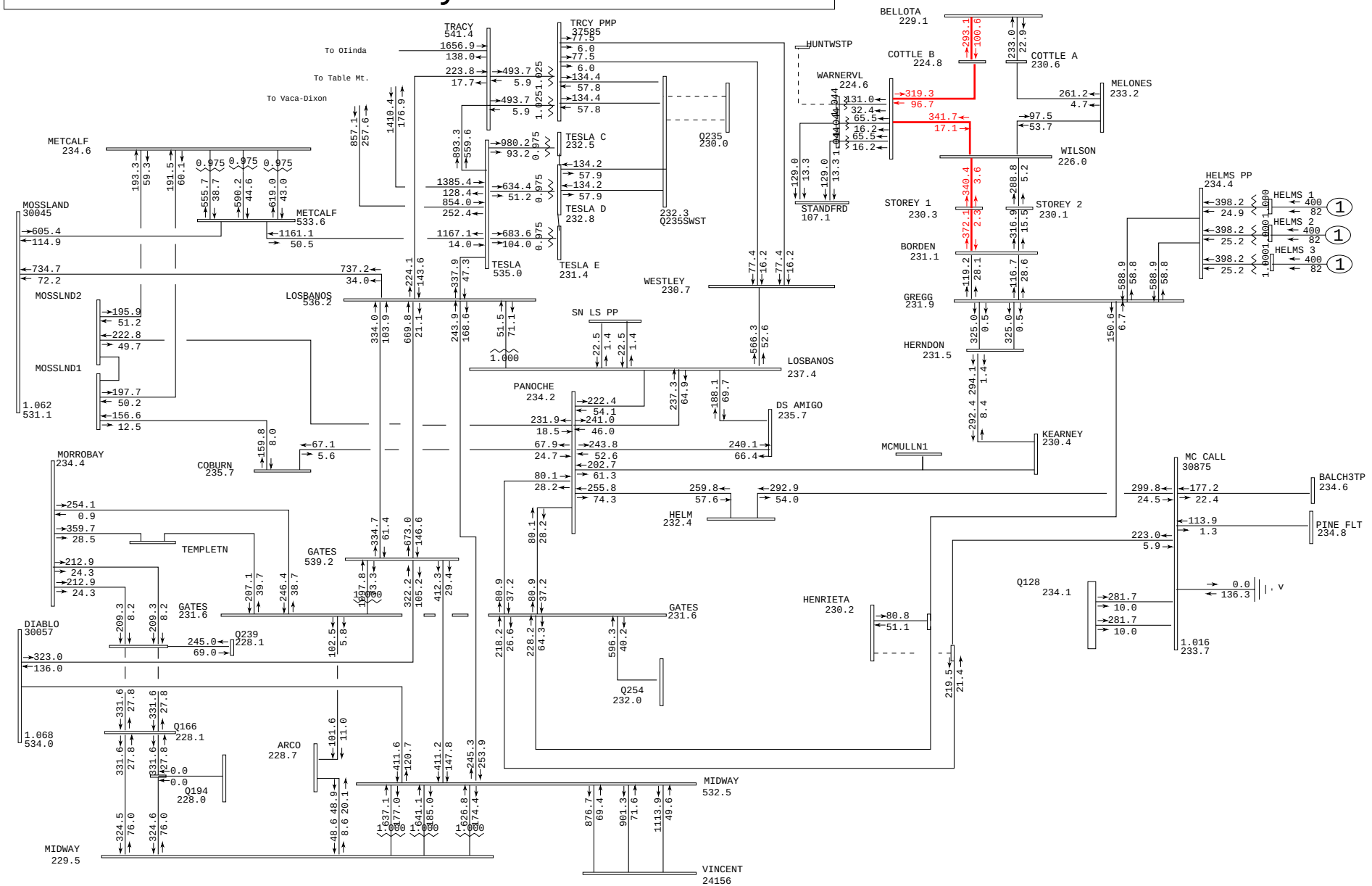

General Electric International, Inc. PSLF Program Wed Oct 01 08:25:41 2008 2013sprpk_q272_pre.sav

	PG&E 2007 CASE SERIES: 2013 Spring Peak Pre-Project Case	Plot 117- Woodward 115kV Bus	MW/MVAR
	PATH15= 966 MW(S-N) PATH26= 2889 MW(N-S) PDCI= 3092 MW(N-S) COI= 4501 MW(N-S)		gfres2.drw
	Q272 150 MW GWF Henrietta 70 kV IFS - 2013 Spring Peak Pre-Project FY		Rating = 2

Greater Fresno
500-kV & 230-kV System

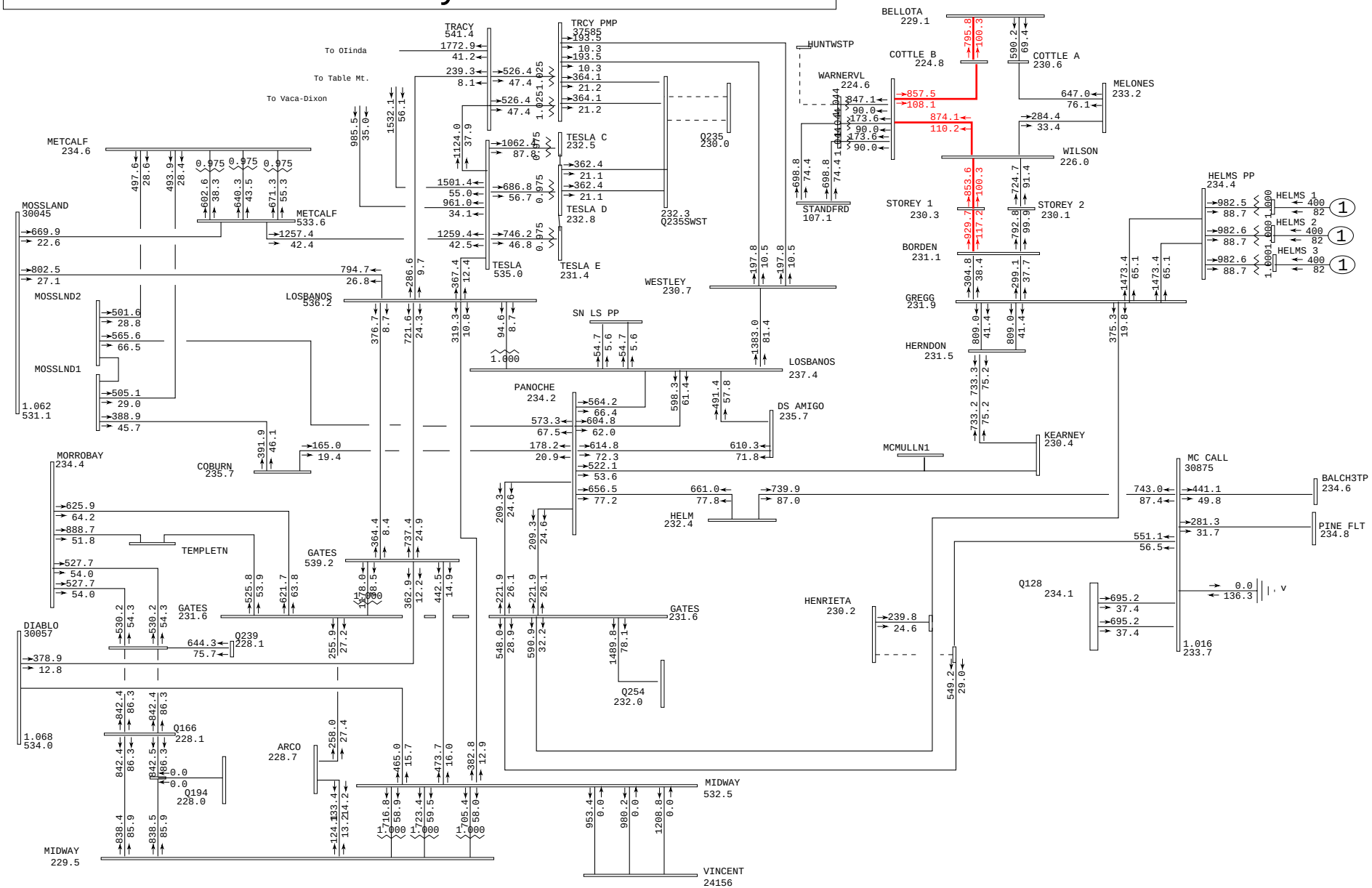

General Electric International, Inc. PSLF Program Wed Oct 01 08:25:42 2008 2013sprpk_q272_pre.sav

	PG&E 2007 CASE SERIES: 2013 Spring Peak Pre-Project Case	Plot 118- Woodward 115kV Bus	amps/rate
	PATH15= 966 MW(S-N) PATH26= 2889 MW(N-S) PDCI= 3092 MW(N-S) COI= 4501 MW(N-S)		gfres2.drw
	Q272 150 MW GWF Henrietta 70 kV IFS - 2013 Spring Peak Pre-Project FY		Rating = 2

Greater Fresno
500-kV & 230-kV System

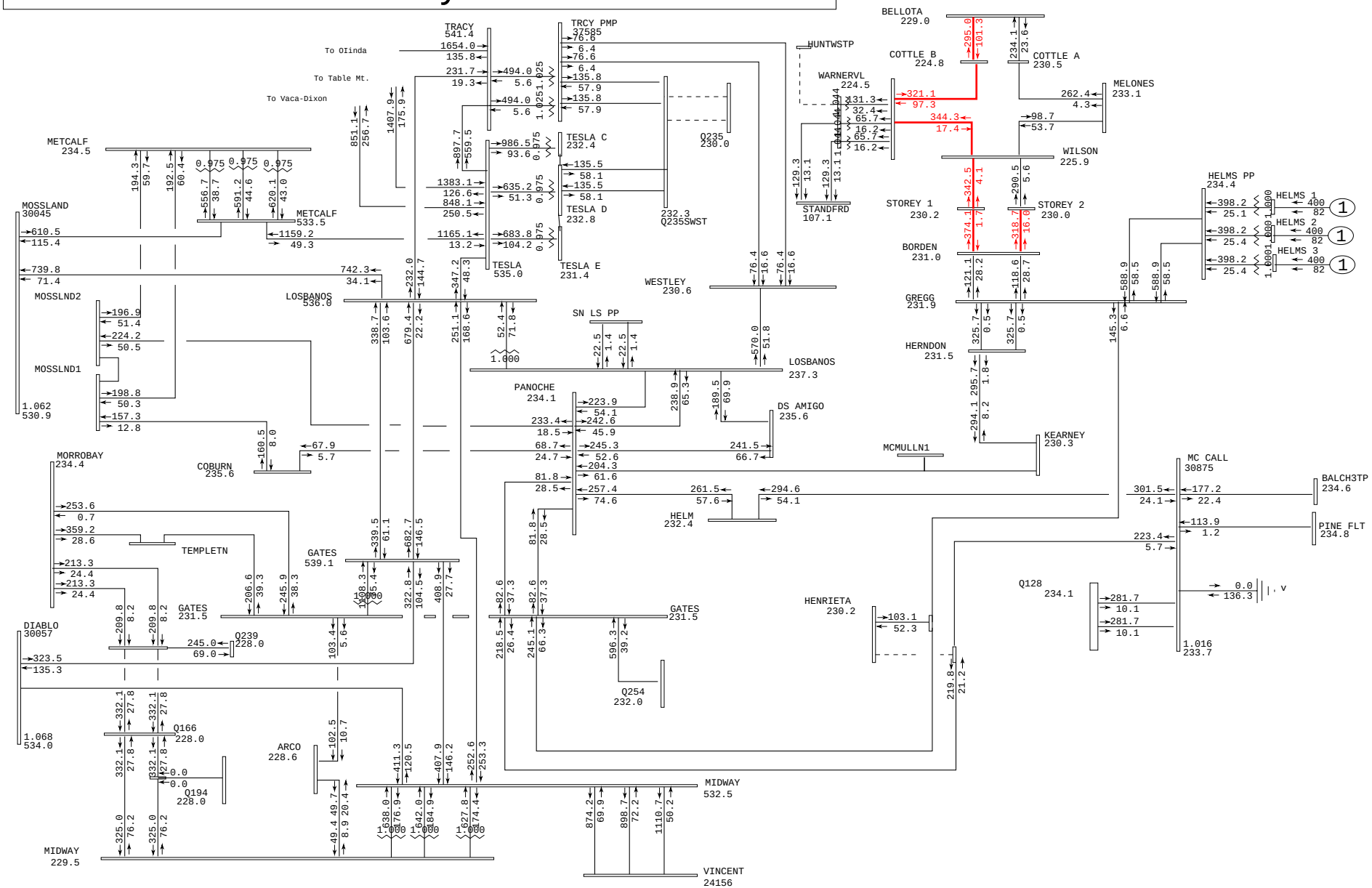

General Electric International, Inc. PSLF Program Wed Oct 01 08:25:44 2008 2013sprpk_q272_pst_v2.sav

	PG&E 2007 CASE SERIES: 2013 Spring Peak Post-Project Case	Plot 119- Woodward 115kV Bus	MW/MVAR
	PATH15= 958 MW(S-N) PATH26= 2895 MW(N-S) PDCI= 3091 MW(N-S) COI= 4507 MW(N-S)		gfres2.drw
	Q272 150 MW at GWF Henrietta 70 kV IFS - 2013 Spring Peak Post-Project FY		Rating = 2

Greater Fresno
500-kV & 230-kV System

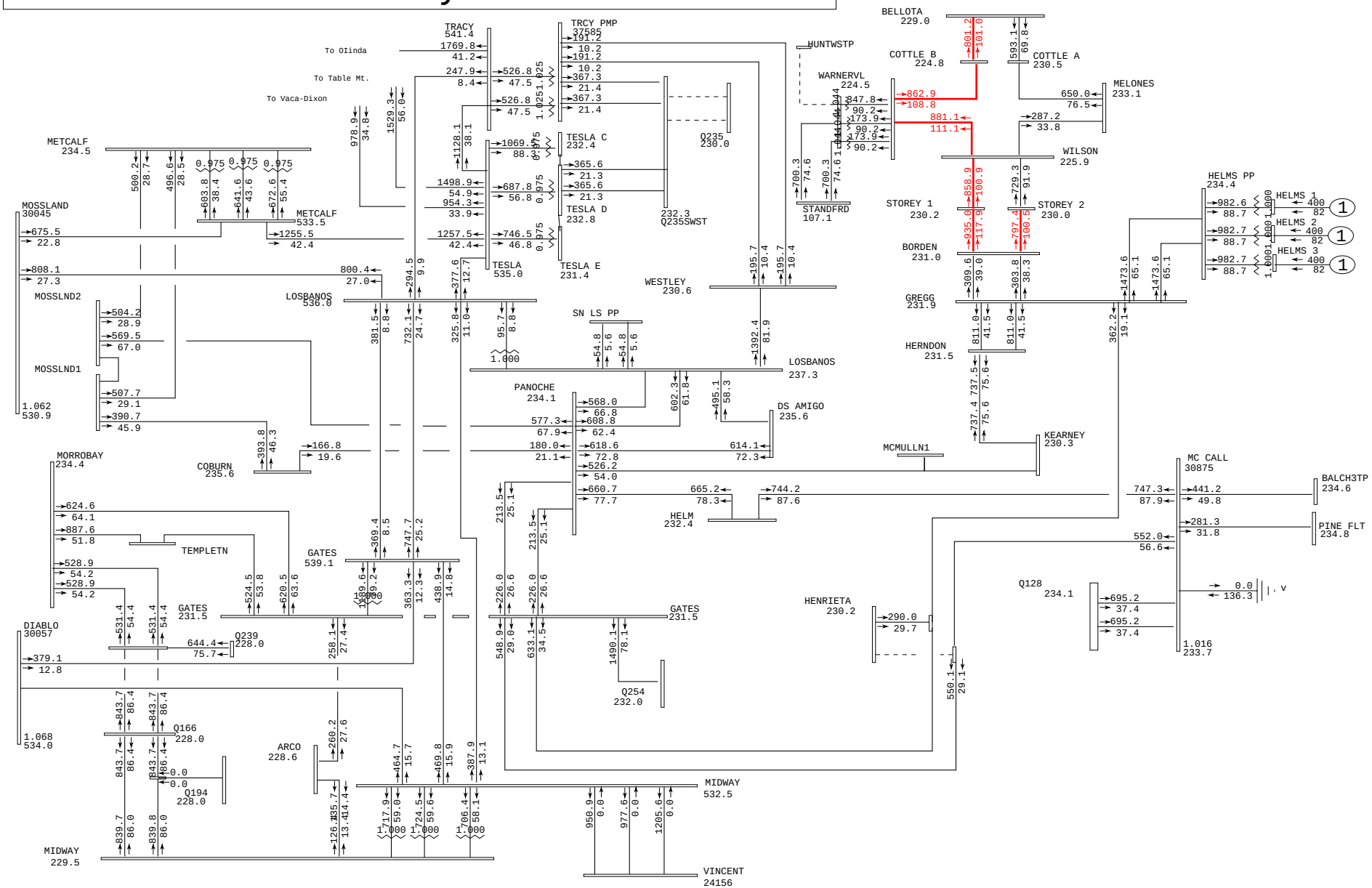

General Electric International, Inc. PSLF Program Wed Oct 01 08:25:46 2008 2013sprpk_q272_pst_v2.sav

	PG&E 2007 CASE SERIES: 2013 Spring Peak Post-Project Case	Plot 120- Woodward 115kV Bus	amps/rate
	PATH15= 958 MW(S-N) PATH26= 2895 MW(N-S) PDCI= 3091 MW(N-S) COI= 4507 MW(N-S)		gfres2.drw
	Q272 150 MW at GWF Henrietta 70 kV IFS - 2013 Spring Peak Post-Project FY		Rating = 2

Greater Fresno
500-kV & 230-kV System

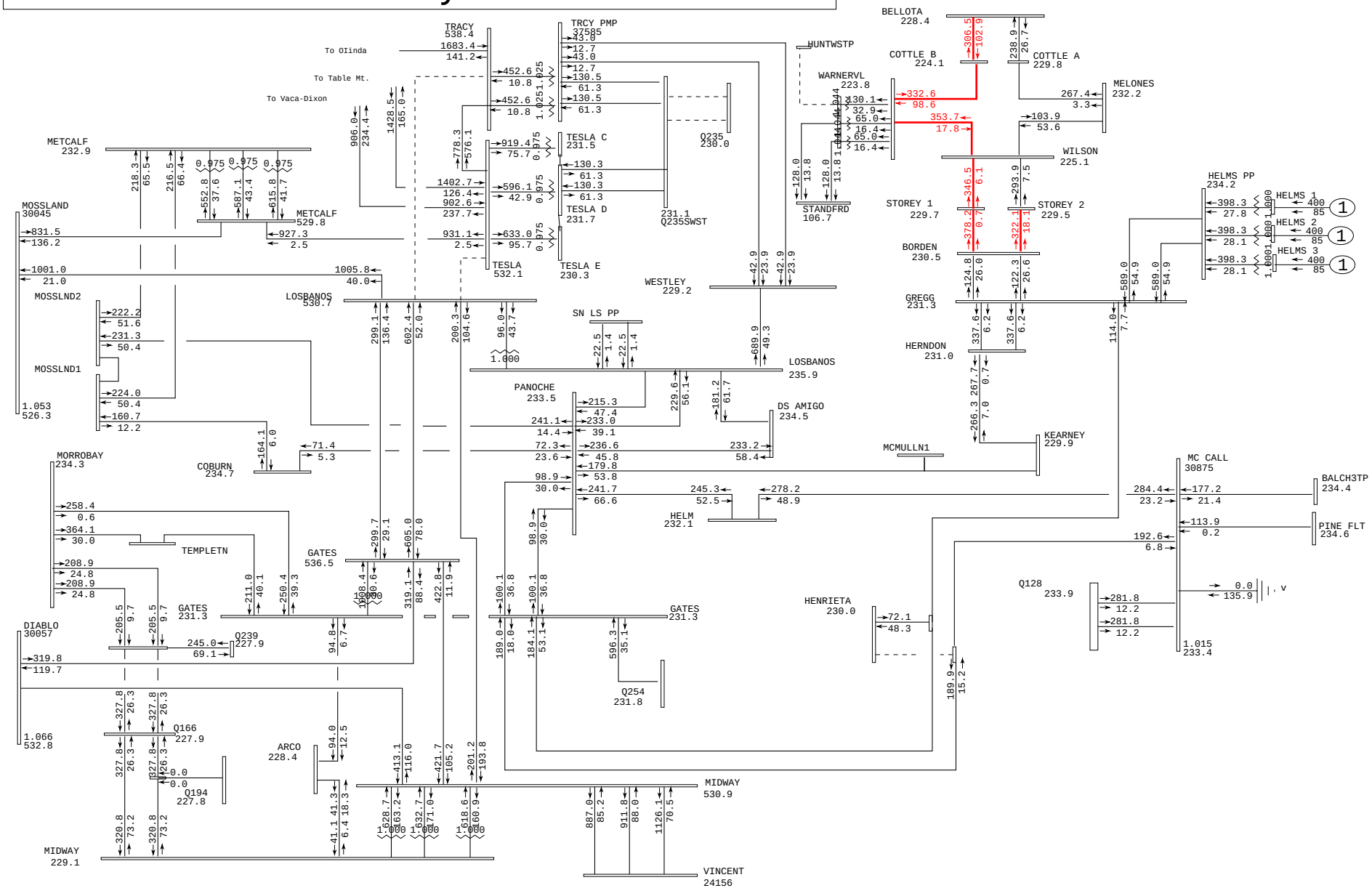

General Electric International, Inc. PSLF Program Wed Oct 01 08:25:47 2008 post-2013sprpk_q272_pre_lbn-dlo-ns.sav

PG&E 2007 CASE SERIES: 2013 Spring Peak Pre-Project Case	Plot 121-Outage: Los Banos North DLO	MW/MVAR
PATH15= 966 MW(S-N) PATH26= 2889 MW(N-S) PDCI= 3092 MW(N-S) COI= 4501 MW(N-S)	Tesla - Los Banos and Tracy - Los Banos Double Line Out	gfres2.drw
Q272 150 MW GWF Henrietta 70 kV IFS - 2013 Spring Peak Pre-Project FY		Rating = 2

Greater Fresno
500-kV & 230-kV System

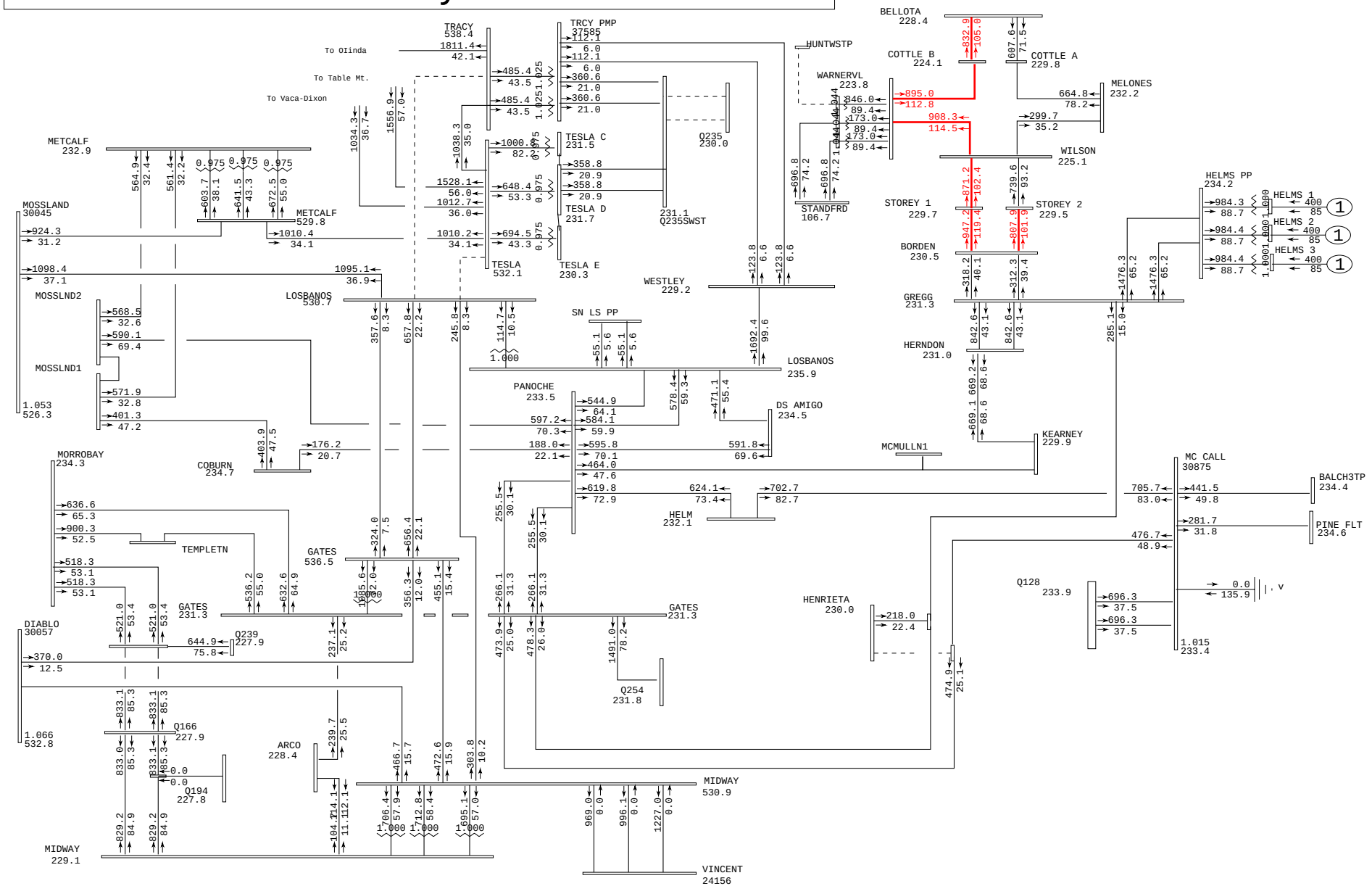

General Electric International, Inc. PSLF Program Wed Oct 01 08:25:47 2008 post-2013sprpk_q272_pre_lbn-dlo-ns.sav

PG&E 2007 CASE SERIES: 2013 Spring Peak Pre-Project Case	Plot 122-Outage: Los Banos North DLO	amps/rate
PATH15= 966 MW(S-N) PATH26= 2889 MW(N-S) PDCI= 3092 MW(N-S) COI= 4501 MW(N-S)	Tesla - Los Banos and Tracy - Los Banos Double Line Out	gfres2.drw
Q272 150 MW GWF Henrietta 70 kV IFS - 2013 Spring Peak Pre-Project FY		Rating = 2

Greater Fresno
500-kV & 230-kV System

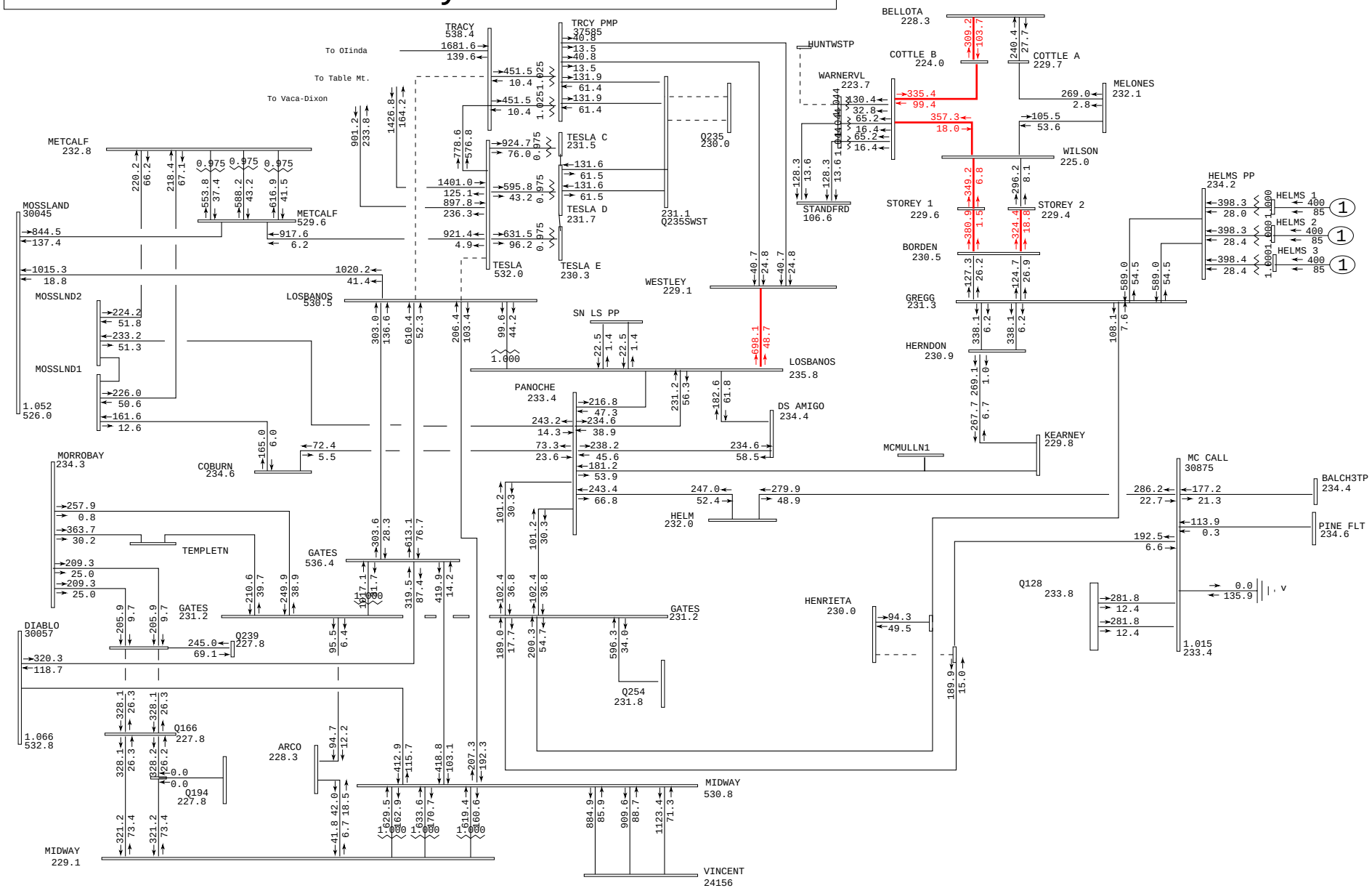

General Electric International, Inc. PSLF Program Wed Oct 01 08:25:49 2008 post-2013sprpk_q272_pst_v2_lbn-dlo-ns.sav

PG&E 2007 CASE SERIES: 2013 Spring Peak Post-Project Case	Plot 123-Outage: Los Banos North DLO	MW/MVAR
PATH15= 958 MW(S-N) PATH26= 2895 MW(N-S) PDCI= 3091 MW(N-S) COI= 4507 MW(N-S)	Tesla - Los Banos and Tracy - Los Banos Double Line Out	gfres2.drw
Q272 150 MW at GWF Henrietta 70 kV IFS - 2013 Spring Peak Post-Project FY		Rating = 2

Greater Fresno
500-kV & 230-kV System

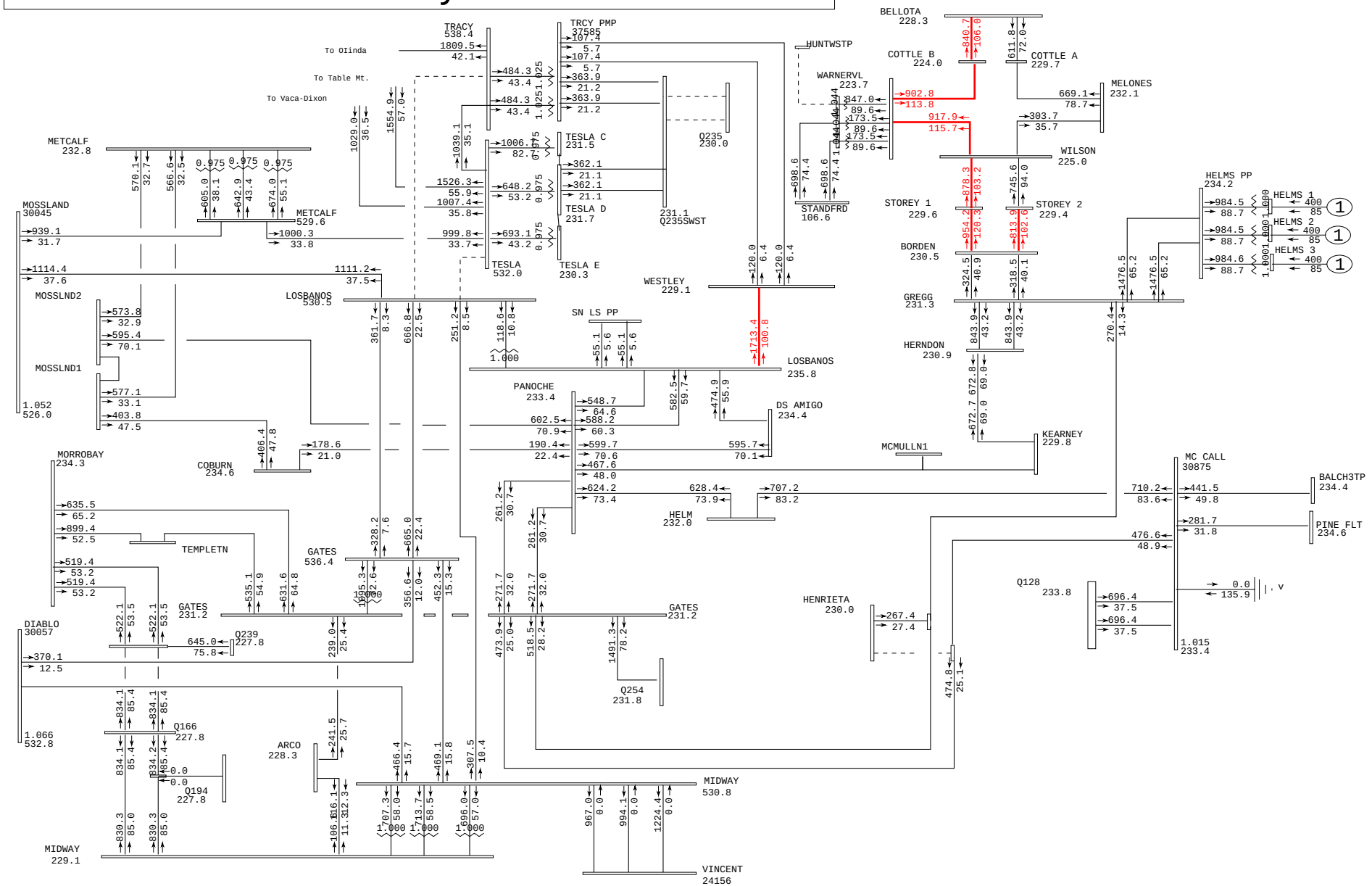

General Electric International, Inc. PSLF Program Wed Oct 01 08:25:49 2008 post-2013sprpk_q272_pst_v2_lbn-dlo-ns.sav

	PG&E 2007 CASE SERIES: 2013 Spring Peak Post-Project Case	Plot 124-Outage: Los Banos North DLO	amps/rate
	PATH15= 958 MW(S-N) PATH26= 2895 MW(N-S) PDCI= 3091 MW(N-S) COI= 4507 MW(N-S)	Tesla - Los Banos and Tracy - Los Banos Double Line Out	gfres2.drw
	Q272 150 MW at GWF Henrietta 70 kV IFS - 2013 Spring Peak Post-Project FY		Rating = 2

Appendix E
Transient Stability Plots

Full load rejection (127 MW) of Project and GWF Henrietta

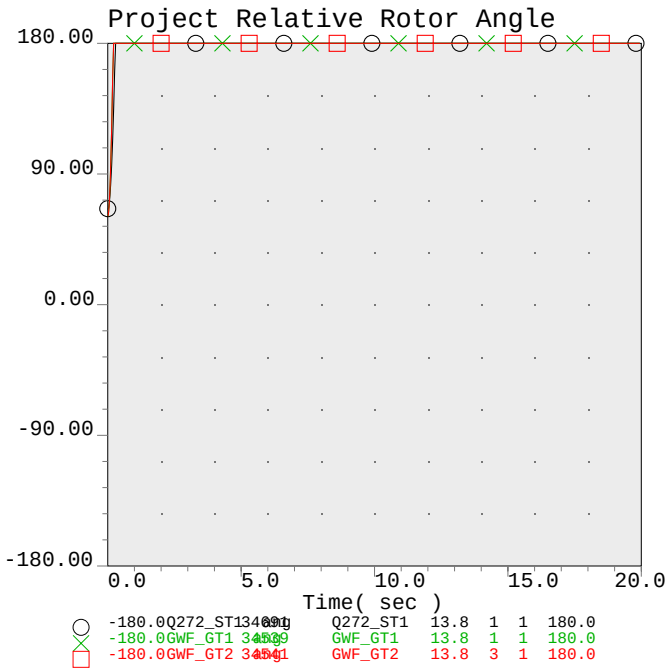

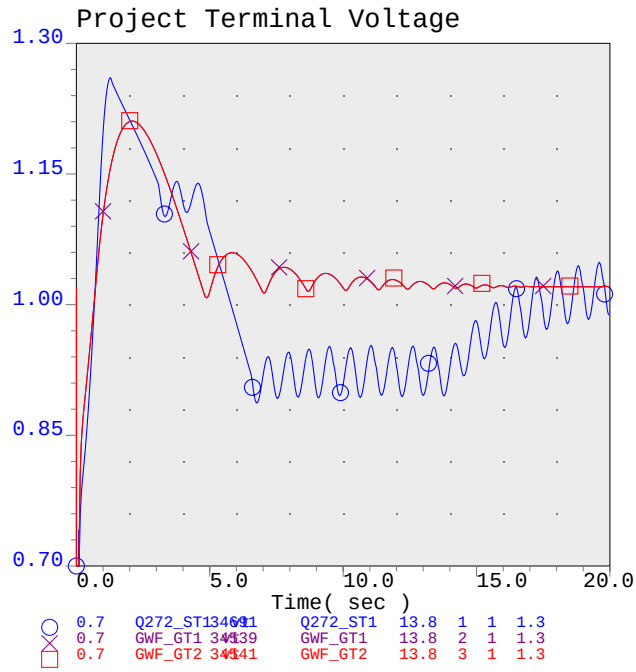

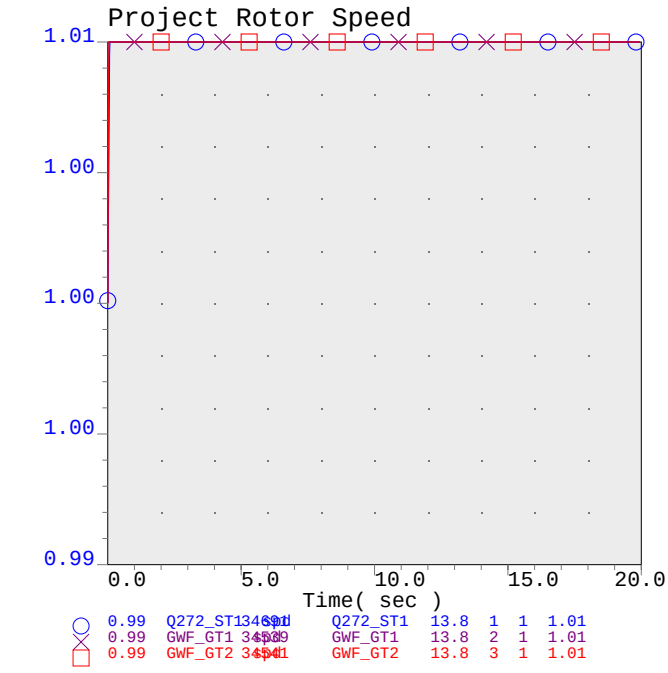

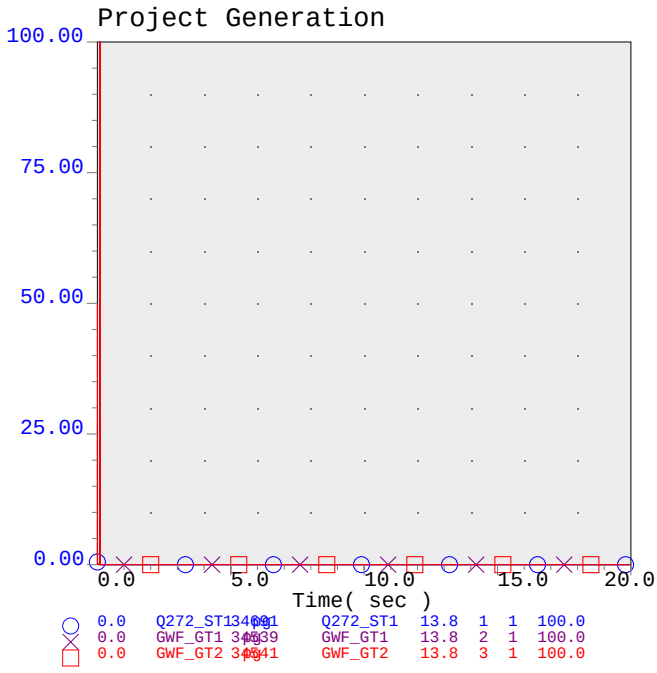

PG&E 2007 CASE SERIES: 2013 San Joaquin Valley Summer Peak Post-Project Case
PATH15= 1955 MW(S-N) PATH26= 4001 MW(N-S) PDCI= 2500 MW(N-S) COI= 4795 MW(N-S)
Q272 150 MW at GWF Henrietta 70 kV IFS - 2013 Summer Peak Post-Project FY
Project Q272 and GWF Henrietta Full Load Rejection

2013sumpk_q272_pst_tr_Q272_Reject.chf

.

Wed Oct 08 10:32:11 2008

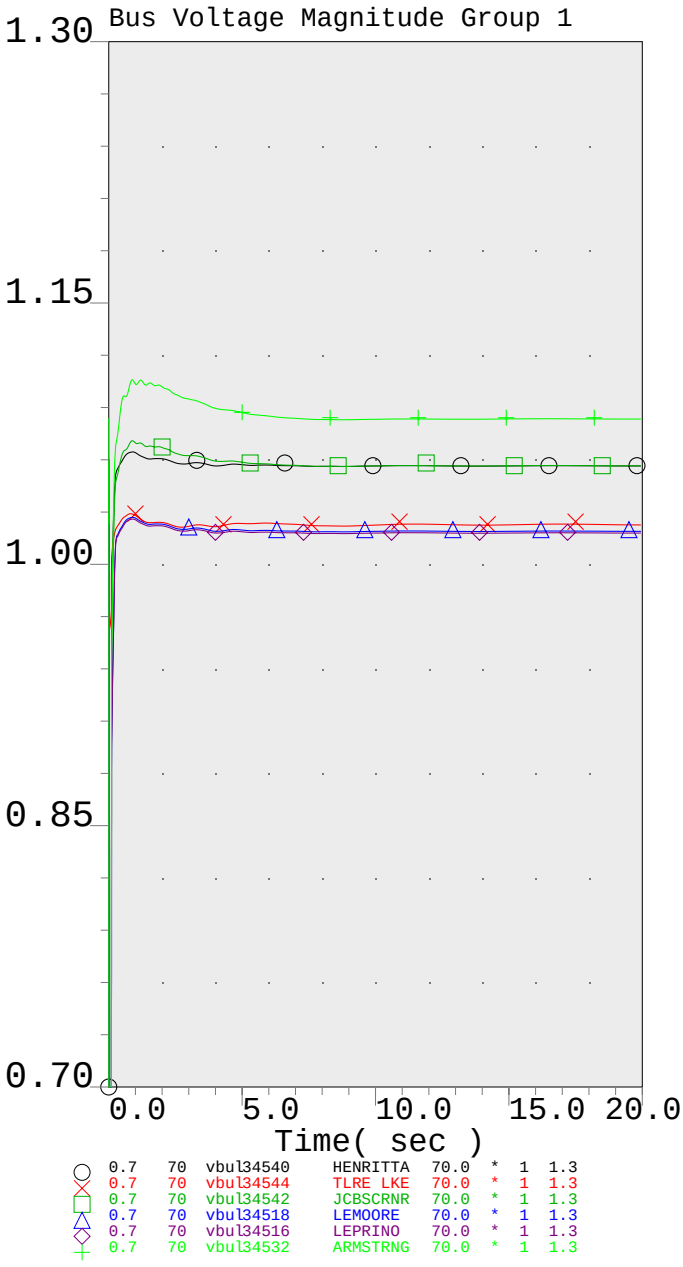

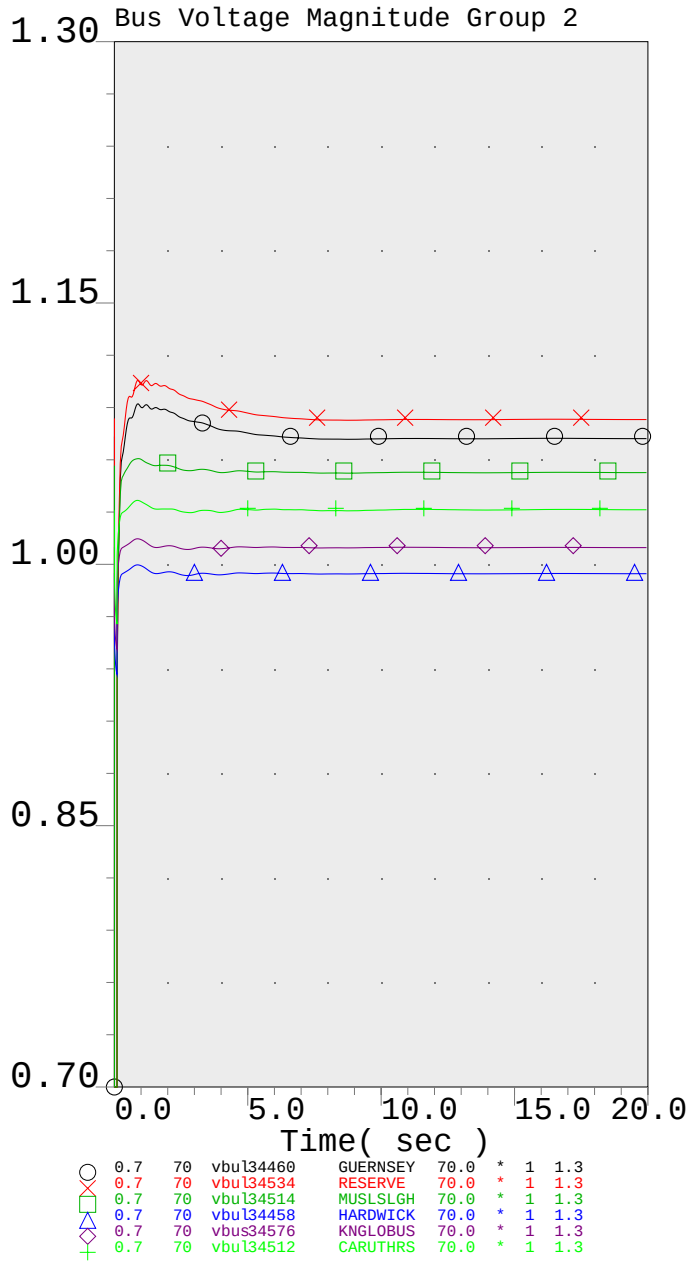

PG&E 2007 CASE SERIES: 2013 San Joaquin Valley Summer Peak Post-Project Case
PATH15= 1955 MW(S-N) PATH26= 4001 MW(N-S) PDCI= 2500 MW(N-S) COI= 4795 MW(N-S)
Q272 150 MW at GWF Henrietta 70 kV IFS - 2013 Summer Peak Post-Project FY
Project Q272 and GWF Henrietta Full Load Rejection

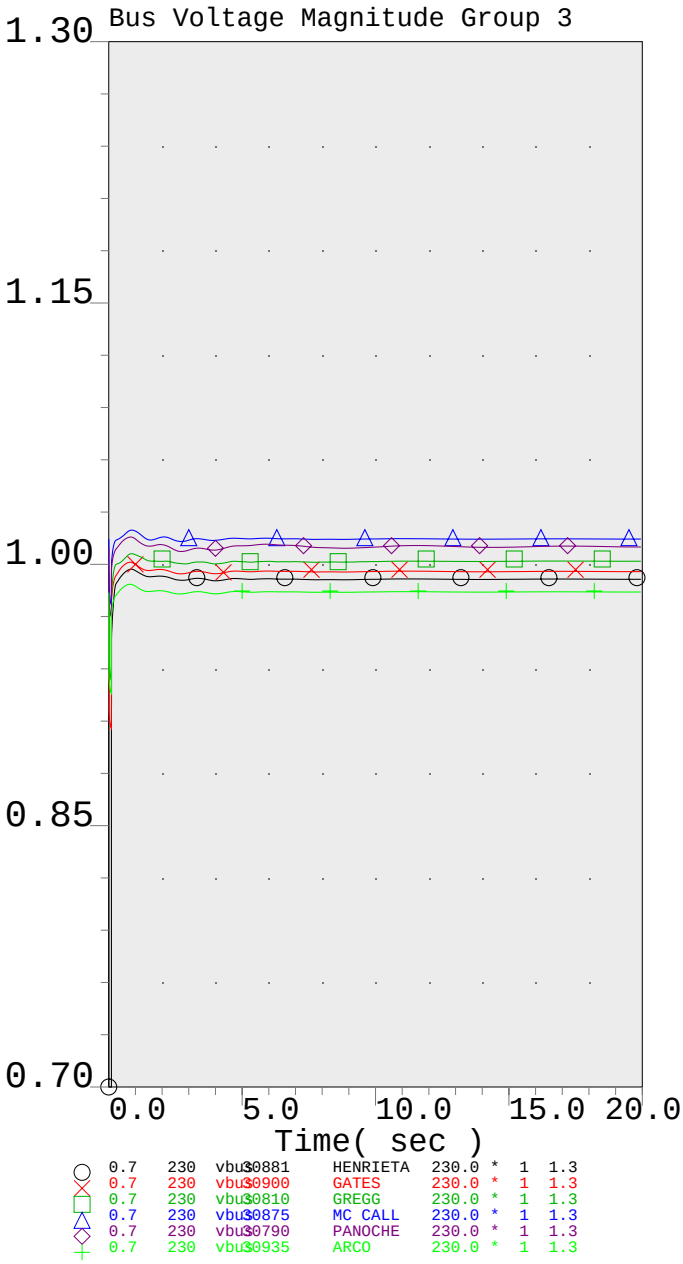

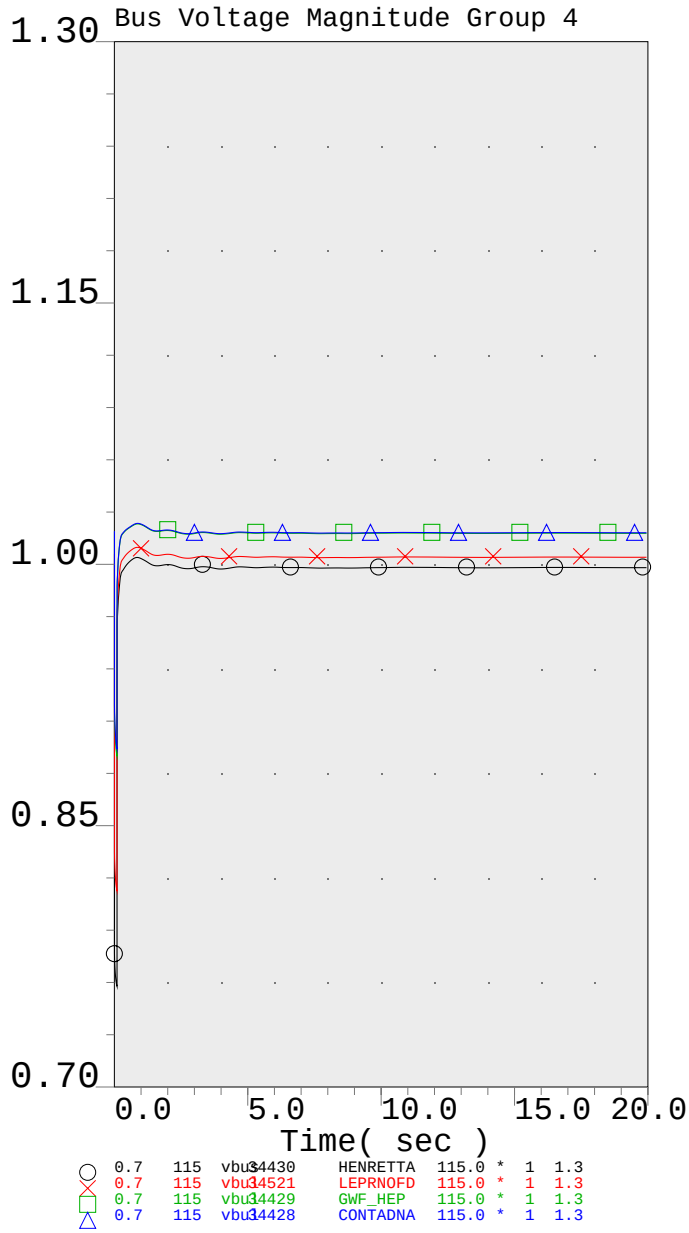

PG&E 2007 CASE SERIES: 2013 San Joaquin Valley Summer Peak Post-Project Case
PATH15= 1955 MW(S-N) PATH26= 4001 MW(N-S) PDCI= 2500 MW(N-S) COI= 4795 MW(N-S)
Q272 150 MW at GWF Henrietta 70 kV IFS - 2013 Summer Peak Post-Project FY
Project Q272 and GWF Henrietta Full Load Rejection

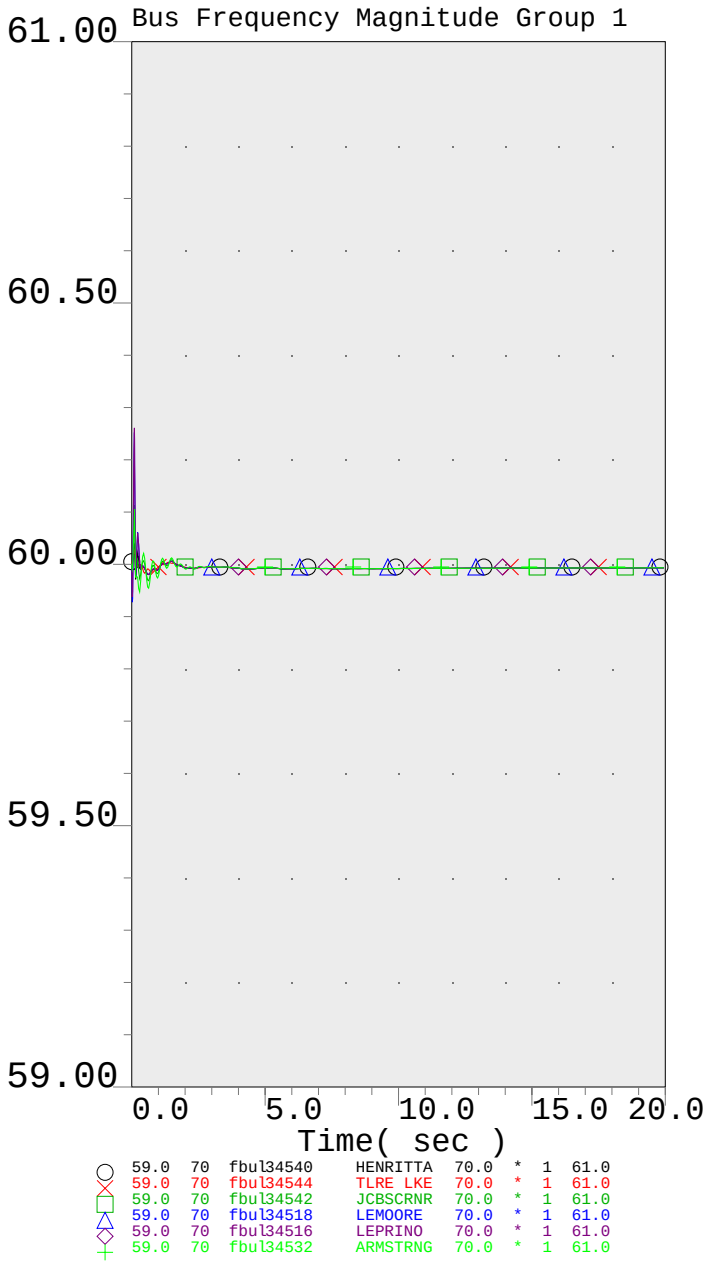

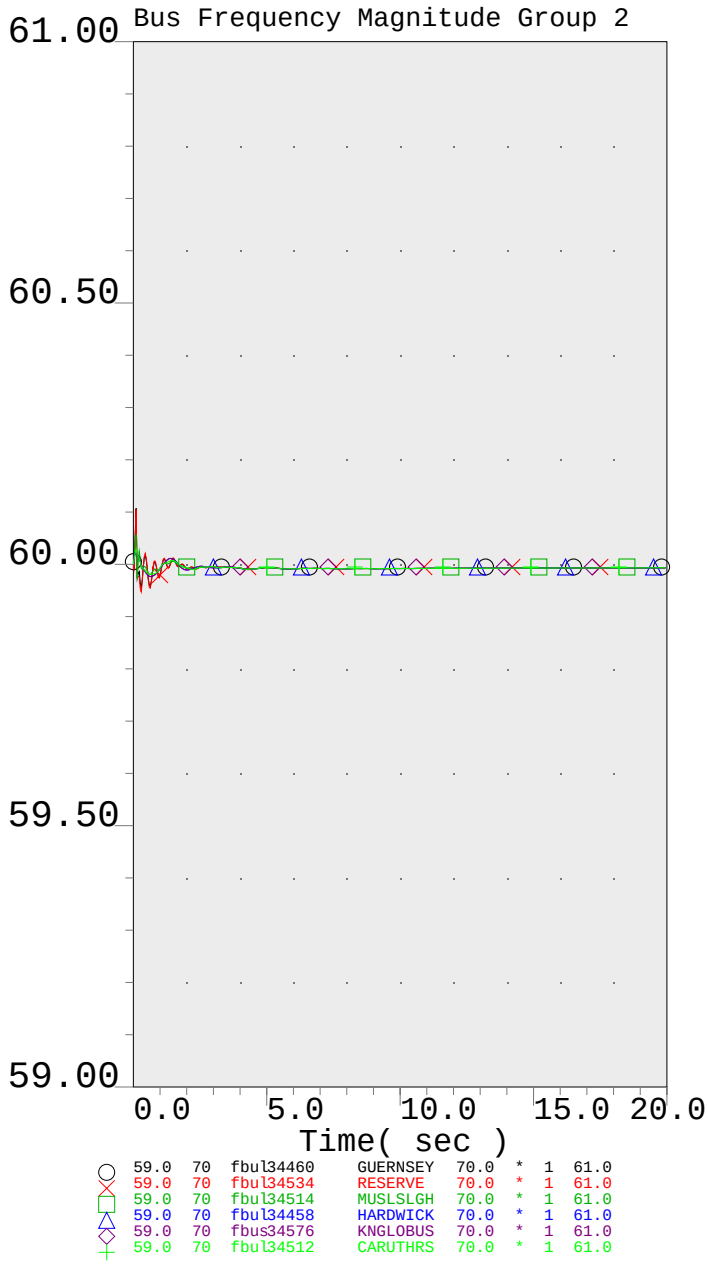

PG&E 2007 CASE SERIES: 2013 San Joaquin Valley Summer Peak Post-Project Case
PATH15= 1955 MW(S-N) PATH26= 4001 MW(N-S) PDCI= 2500 MW(N-S) COI= 4795 MW(N-S)
Q272 150 MW at GWF Henrietta 70 kV IFS - 2013 Summer Peak Post-Project FY
Project Q272 and GWF Henrietta Full Load Rejection

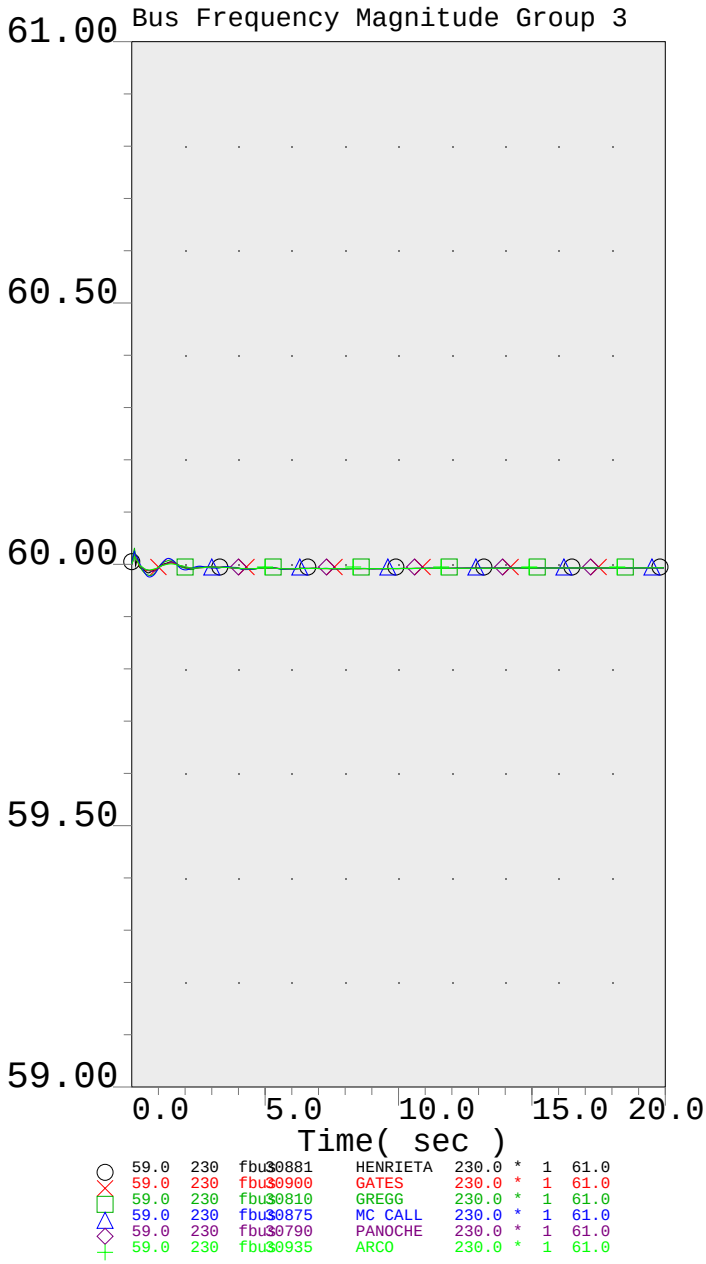

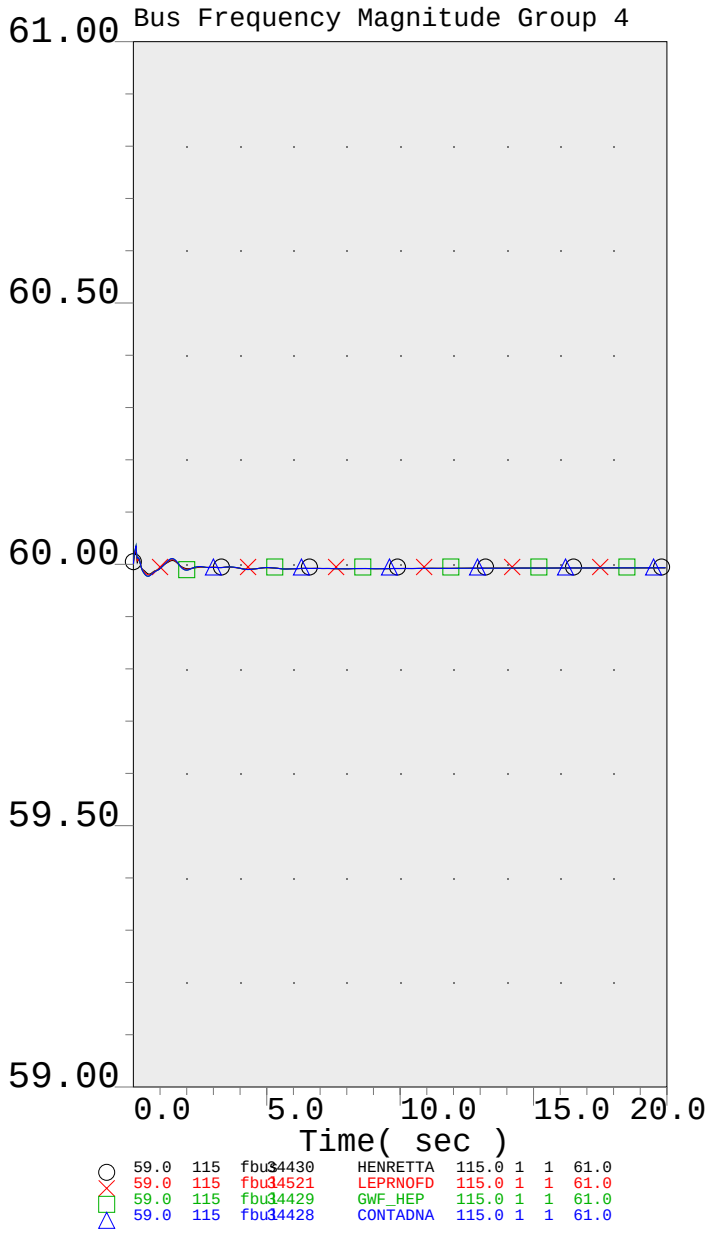

PG&E 2007 CASE SERIES: 2013 San Joaquin Valley Summer Peak Post-Project Case
PATH15= 1955 MW(S-N) PATH26= 4001 MW(N-S) PDCI= 2500 MW(N-S) COI= 4795 MW(N-S)
Q272 150 MW at GWF Henrietta 70 kV IFS - 2013 Summer Peak Post-Project FY
Project Q272 and GWF Henrietta Full Load Rejection

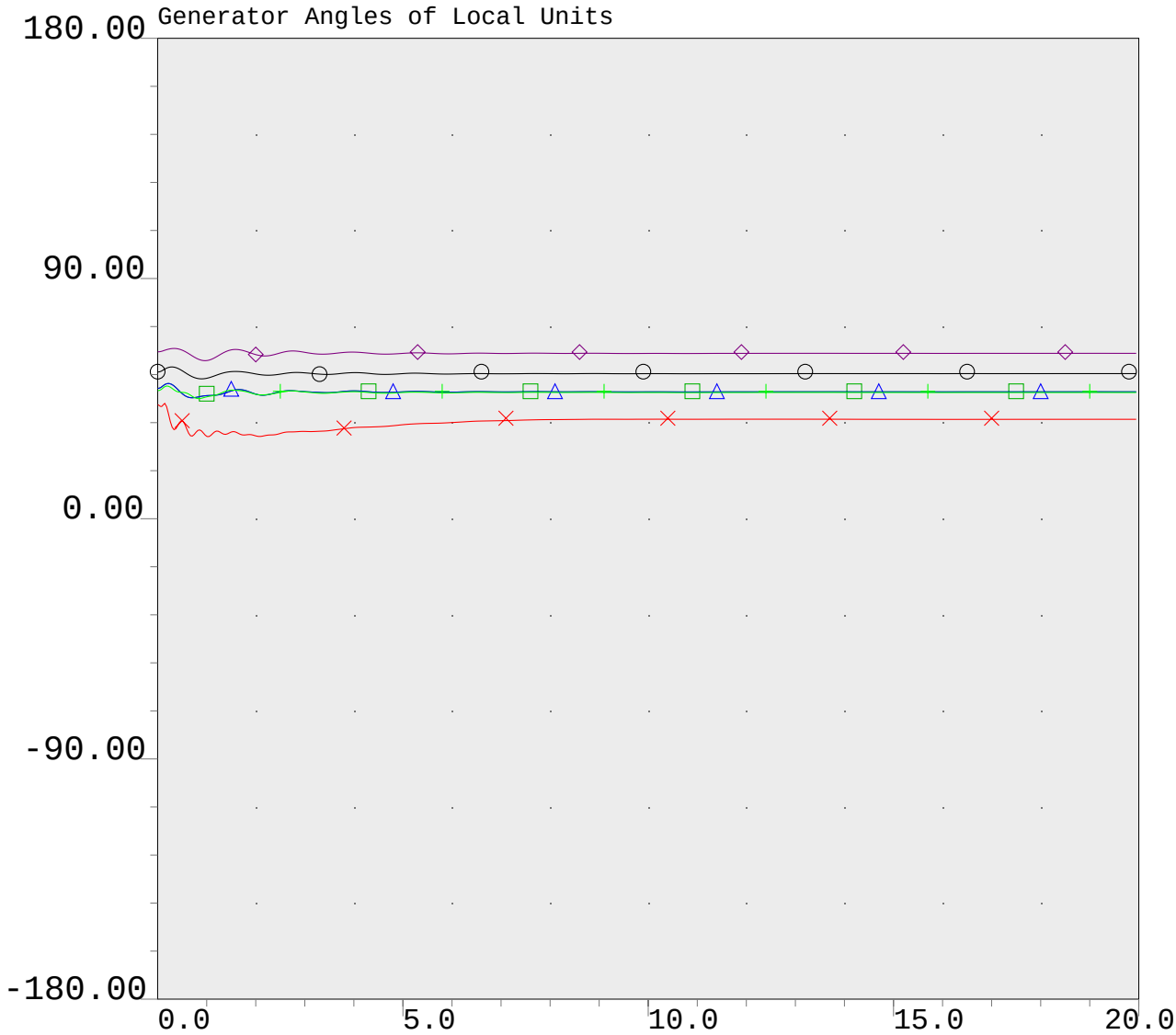

○	-180.0	#1 ang	34600	HELMS 1	18.0	*	1	180.0
×	-180.0	GWF-PWR ang	34650	GWF-PWR.	13.8	*	1	180.0
□	-180.0	1 ang	34431	GWF_HEP1	13.8	*	1	180.0
△	-180.0	2 ang	34433	GWF_HEP2	13.8	*	1	180.0
◇	-180.0	GT1 ang	34661	P0418GT1	13.8	*	1	180.0
+	-180.0	Cogen ang	34642	KINGSBUR	9.1	*	1	180.0

PG&E 2007 CASE SERIES: 2013 San Joaquin Valley Summer Peak Post-Project Case
PATH15= 1955 MW(S-N) PATH26= 4001 MW(N-S) PDCI= 2500 MW(N-S) COI= 4795 MW(N-S)
Q272 150 MW at GWF Henrietta 70 kV IFS - 2013 Summer Peak Post-Project FY
Project Q272 and GWF Henrietta Full Load Rejection

Three-phase close-in fault on the Henrietta-Guernsey 70-kV line at the Henrietta 70-kV bus with normal clearing time followed by the loss of the Henrietta-Guernsey 70-kV line.

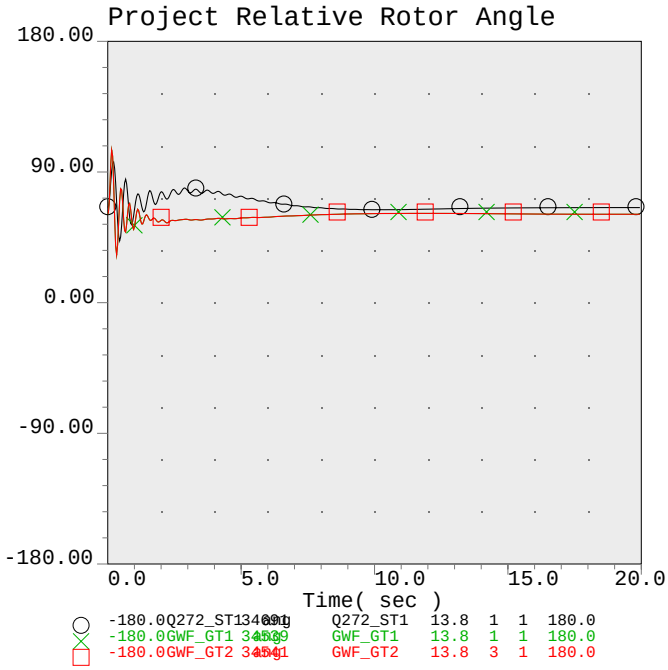

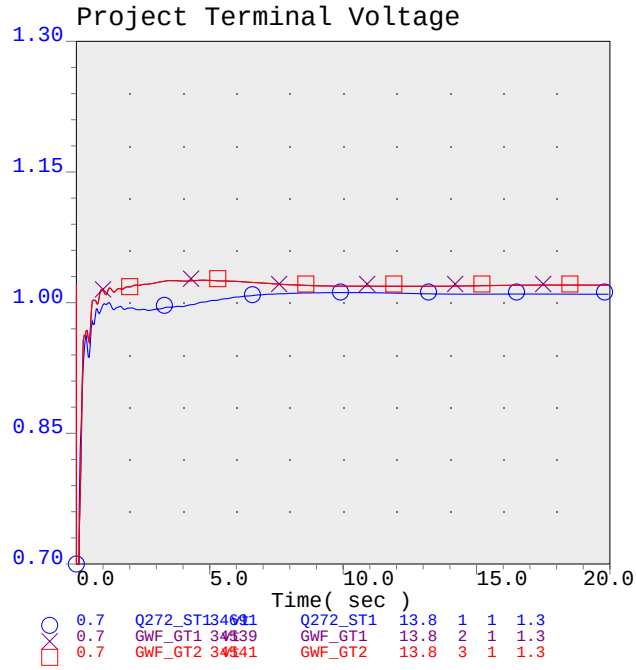

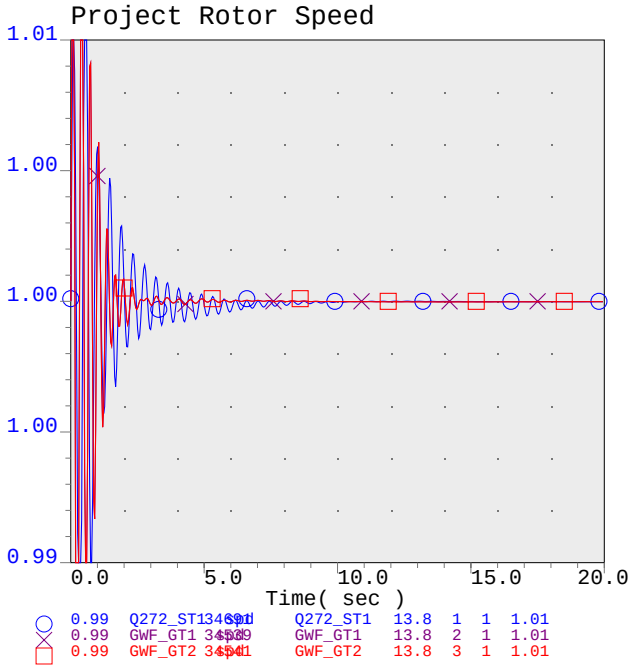

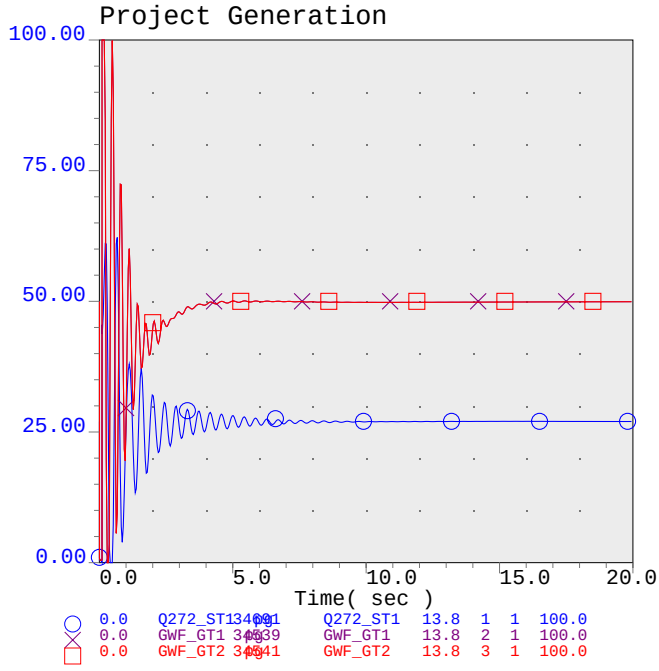

PG&E 2007 CASE SERIES: 2013 San Joaquin Valley Summer Peak Post-Project Case
PATH15= 1955 MW(S-N) PATH26= 4001 MW(N-S) PDCI= 2500 MW(N-S) COI= 4795 MW(N-S)
Q272 150 MW at GWF Henrietta 70 kV IFS - 2013 Summer Peak Post-Project FY
Henrietta-Guernsey 70-kV Single Line Out

2013sumpk_q272_pst_tr_hen-guernsey.chf

.

Wed Oct 08 09:50:42 2008

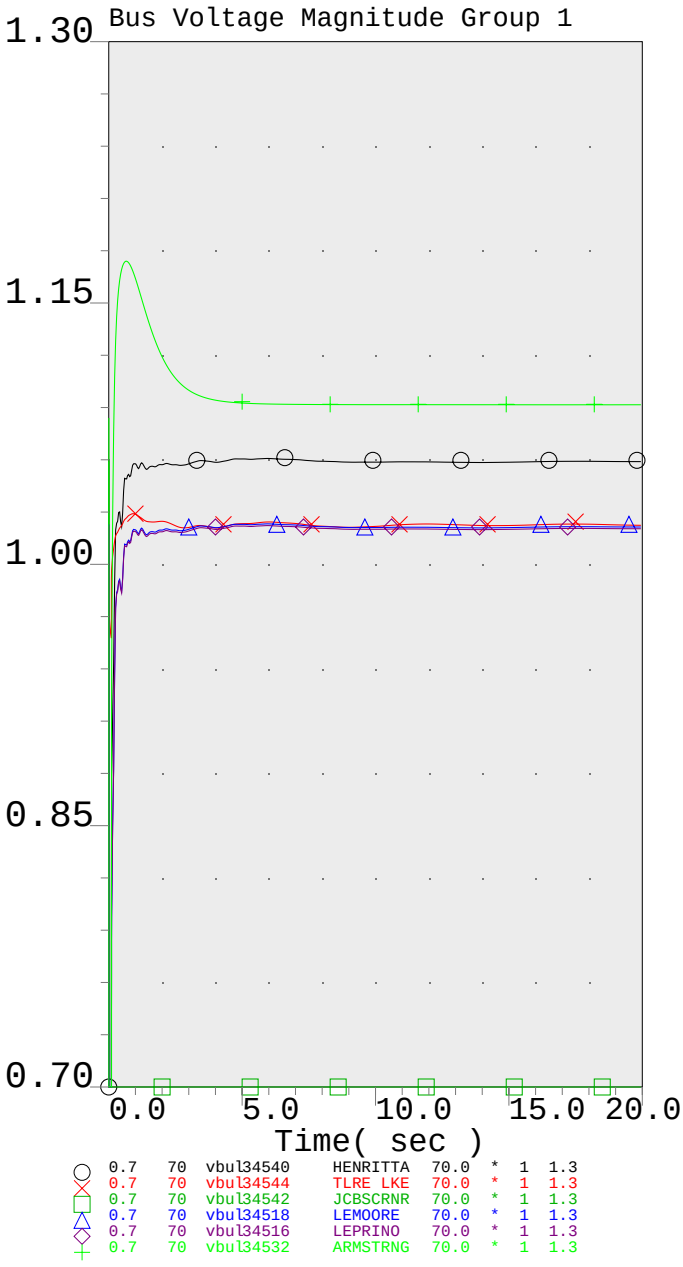

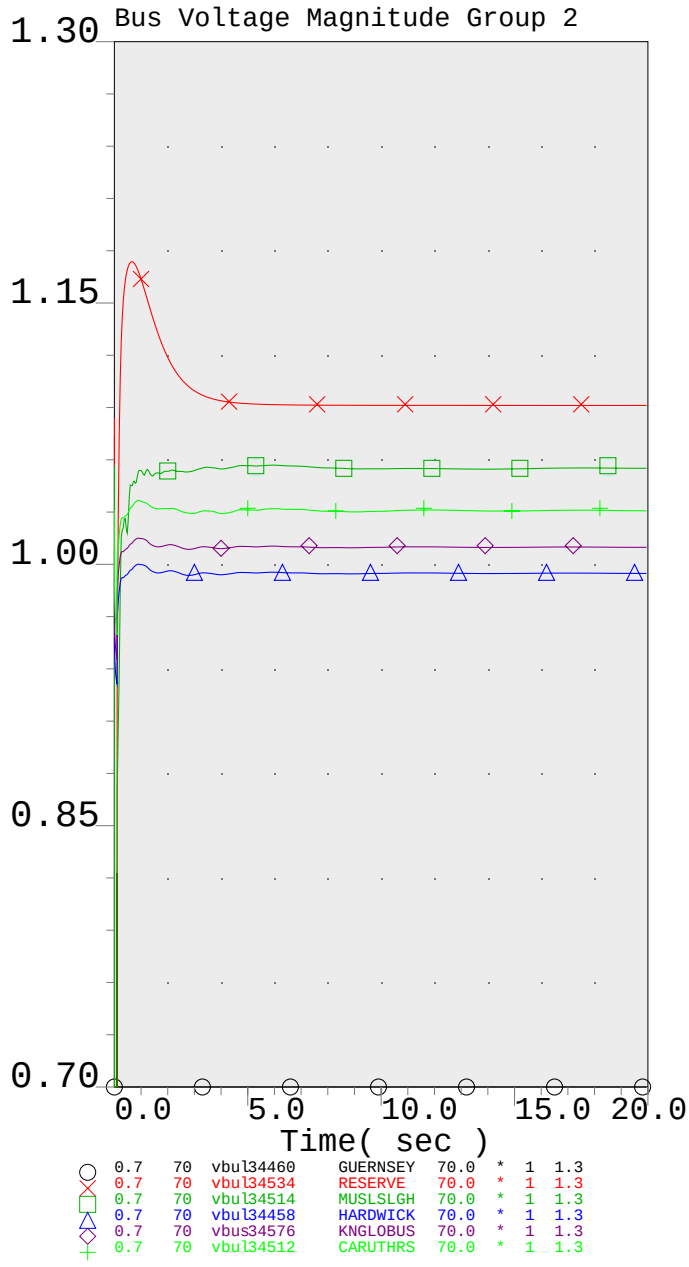

PG&E 2007 CASE SERIES: 2013 San Joaquin Valley Summer Peak Post-Project Case
PATH15= 1955 MW(S-N) PATH26= 4001 MW(N-S) PDCI= 2500 MW(N-S) COI= 4795 MW(N-S)
Q272 150 MW at GWF Henrietta 70 kV IFS - 2013 Summer Peak Post-Project FY
Henrietta-Guernsey 70-kV Single Line Out

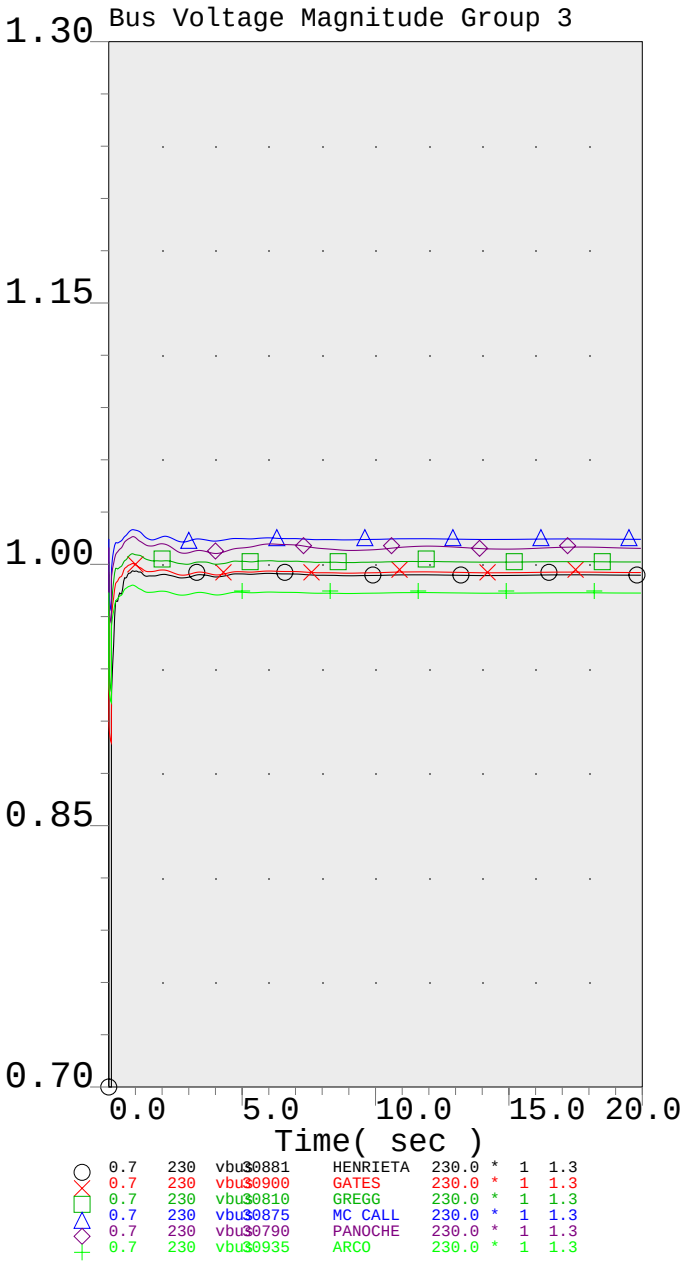

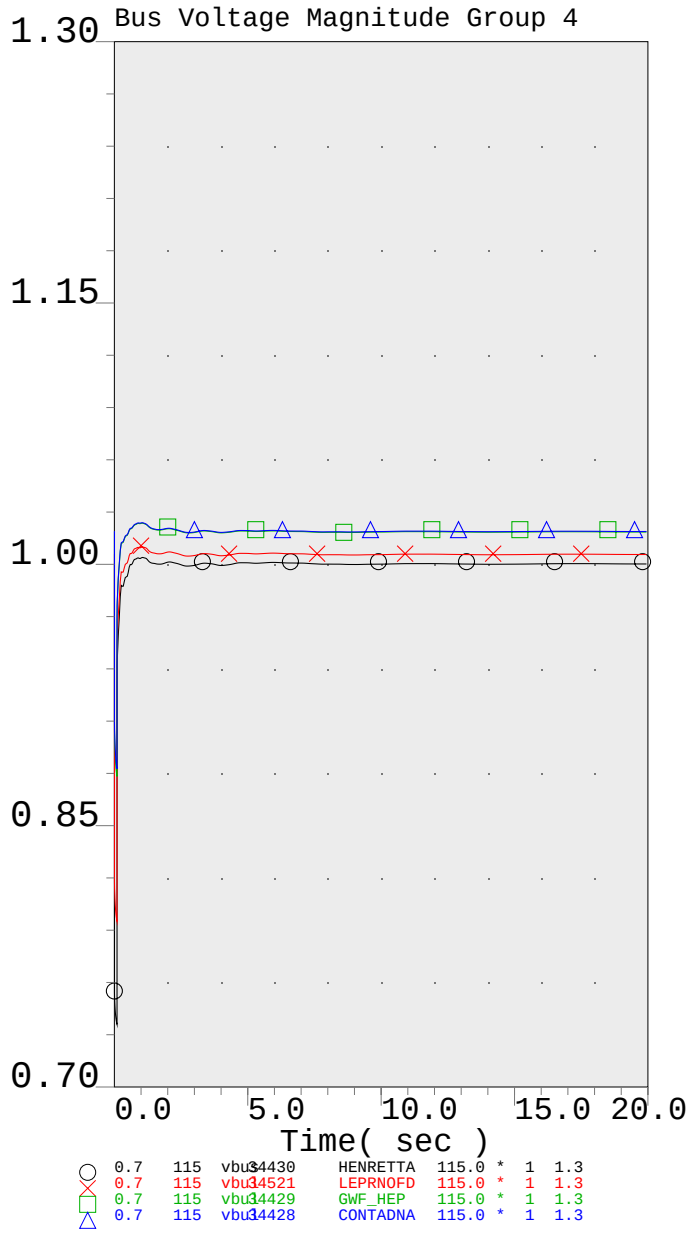

PG&E 2007 CASE SERIES: 2013 San Joaquin Valley Summer Peak Post-Project Case
PATH15= 1955 MW(S-N) PATH26= 4001 MW(N-S) PDCI= 2500 MW(N-S) COI= 4795 MW(N-S)
Q272 150 MW at GWF Henrietta 70 kV IFS - 2013 Summer Peak Post-Project FY
Henrietta-Guernsey 70-kV Single Line Out

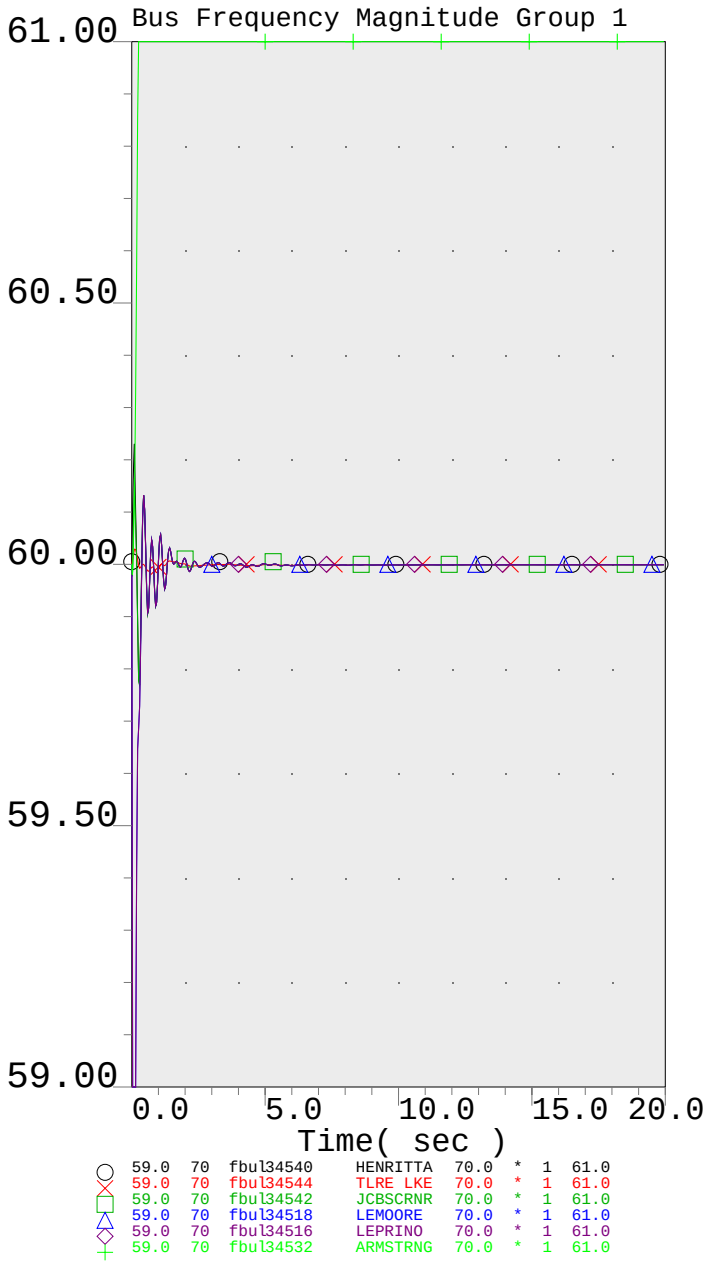

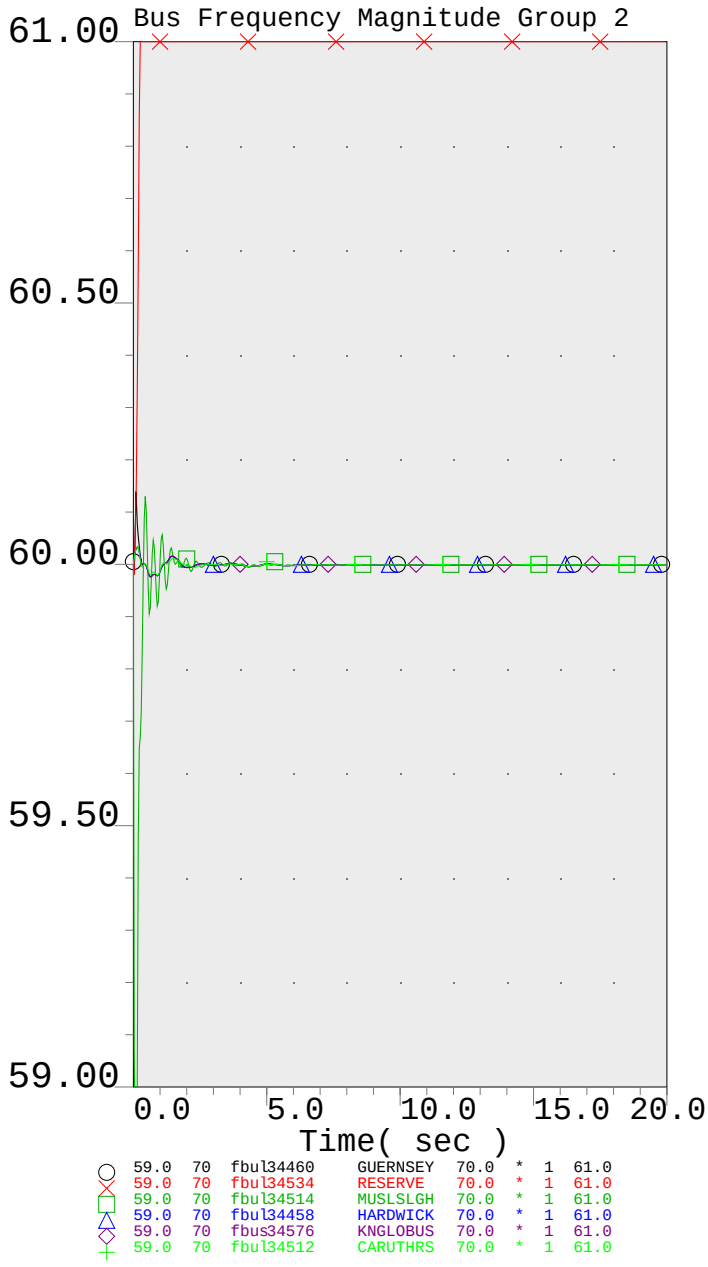

PG&E 2007 CASE SERIES: 2013 San Joaquin Valley Summer Peak Post-Project Case
PATH15= 1955 MW(S-N) PATH26= 4001 MW(N-S) PDCI= 2500 MW(N-S) COI= 4795 MW(N-S)
Q272 150 MW at GWF Henrietta 70 kV IFS - 2013 Summer Peak Post-Project FY
Henrietta-Guernsey 70-kV Single Line Out

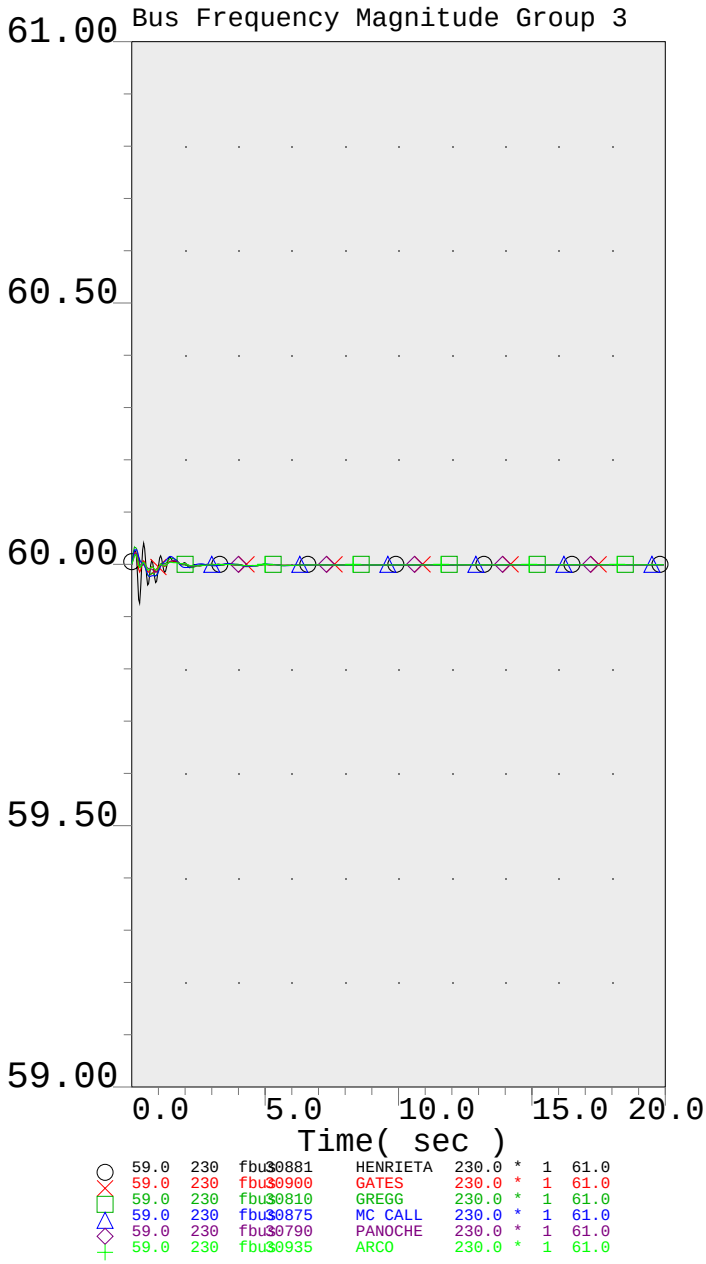

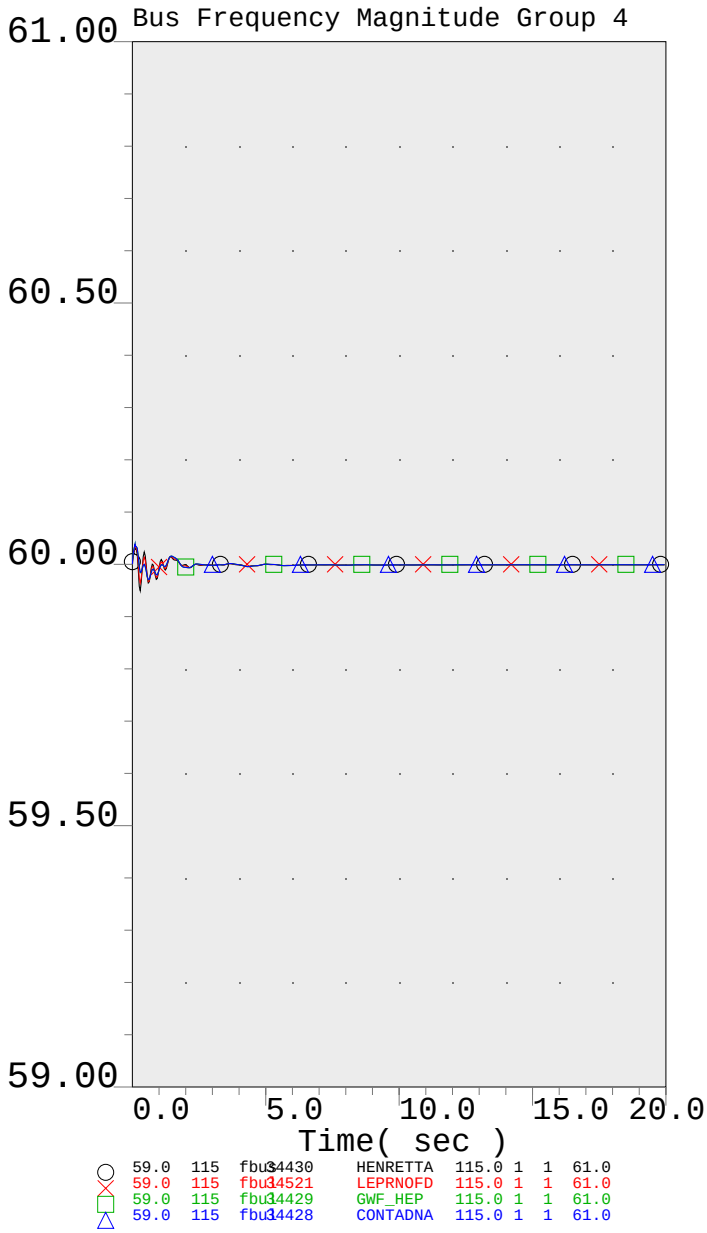

PG&E 2007 CASE SERIES: 2013 San Joaquin Valley Summer Peak Post-Project Case
PATH15= 1955 MW(S-N) PATH26= 4001 MW(N-S) PDCI= 2500 MW(N-S) COI= 4795 MW(N-S)
Q272 150 MW at GWF Henrietta 70 kV IFS - 2013 Summer Peak Post-Project FY
Henrietta-Guernsey 70-kV Single Line Out

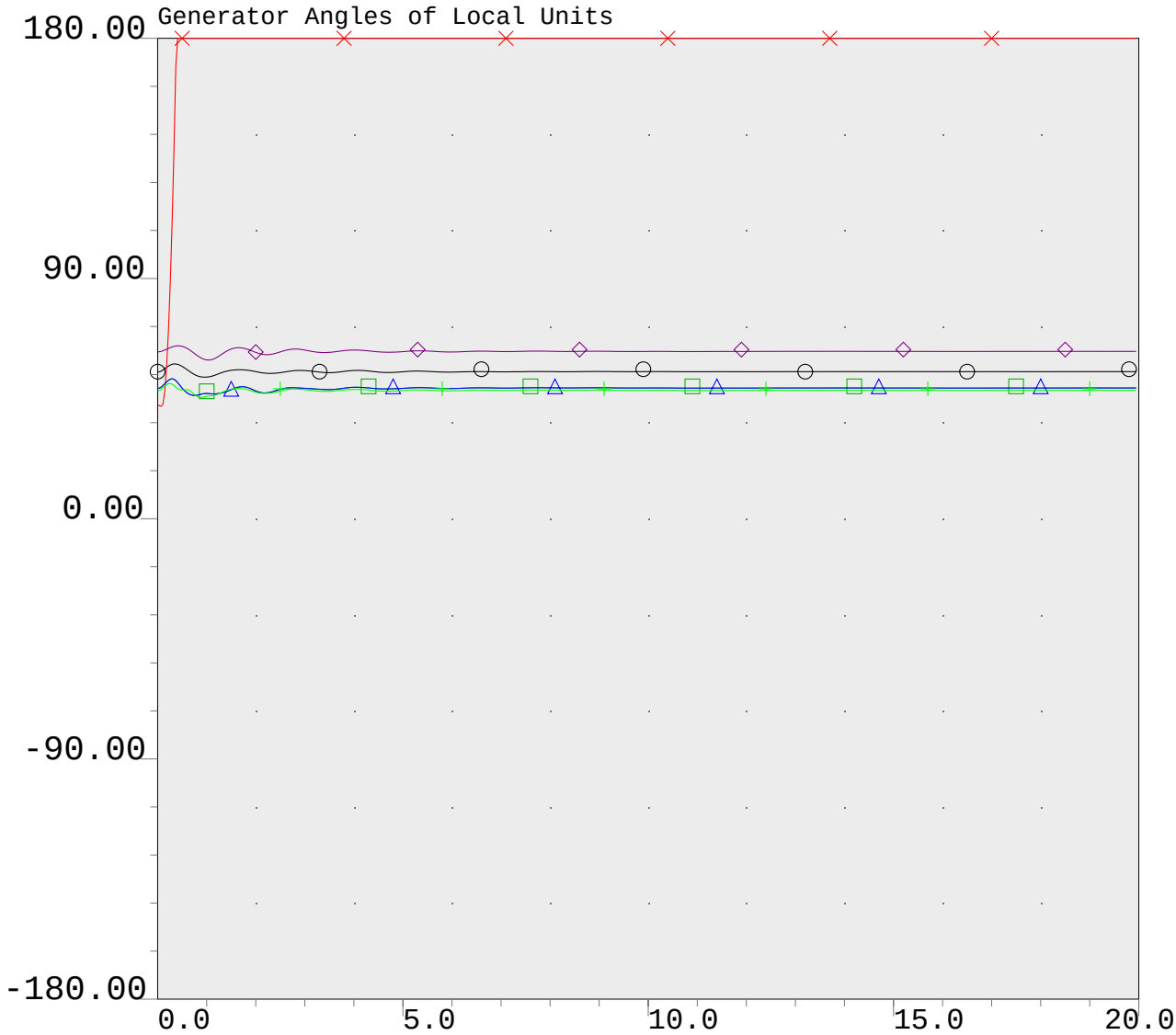

○	-180.0	#1 ang	34600	HELMS 1	18.0	*	1	180.0
×	-180.0	GWF-PWR ang	34650	GWF-PWR.	13.8	*	1	180.0
□	-180.0	1 ang	34431	GWF_HEP1	13.8	*	1	180.0
△	-180.0	2 ang	34433	GWF_HEP2	13.8	*	1	180.0
◇	-180.0	GT1 ang	34661	P0418GT1	13.8	*	1	180.0
+	-180.0	Cogen ang	34642	KINGSBUR	9.1	*	1	180.0

PG&E 2007 CASE SERIES: 2013 San Joaquin Valley Summer Peak Post-Project Case
PATH15= 1955 MW(S-N) PATH26= 4001 MW(N-S) PDCI= 2500 MW(N-S) COI= 4795 MW(N-S)
Q272 150 MW at GWF Henrietta 70 kV IFS - 2013 Summer Peak Post-Project FY
Henrietta-Guernsey 70-kV Single Line Out

Three-phase close-in fault on the Henrietta-Lemoore NAS 70-kV line at the Henrietta 70-kV bus with normal clearing time followed by the loss of the Henrietta-Lemoore NAS 70-kV line.

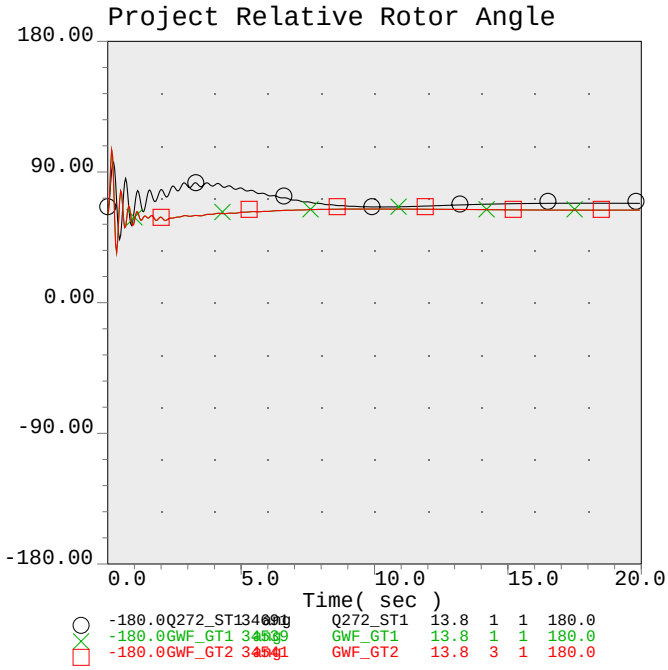

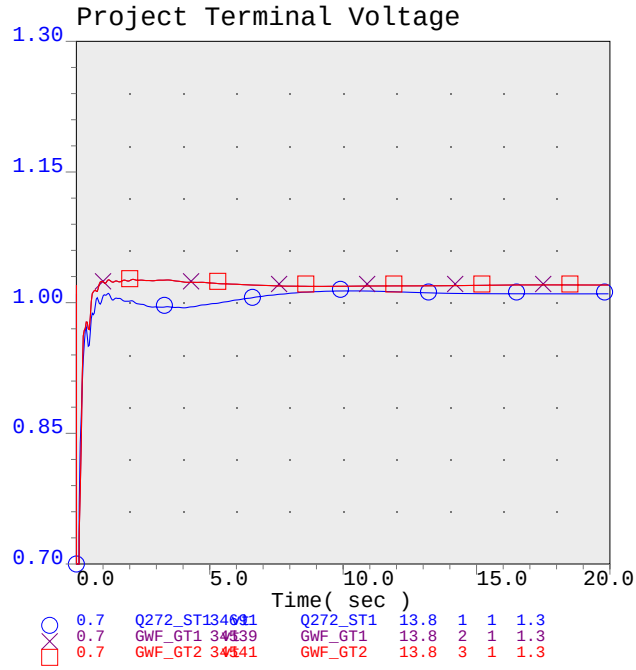

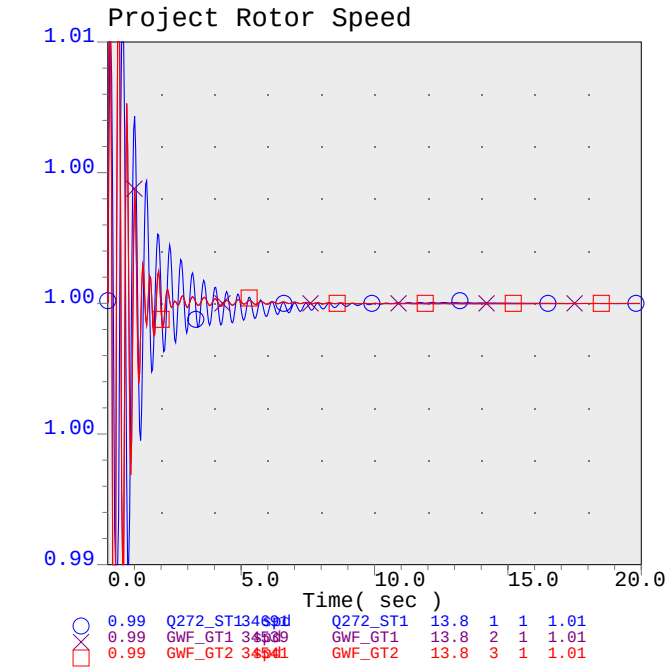

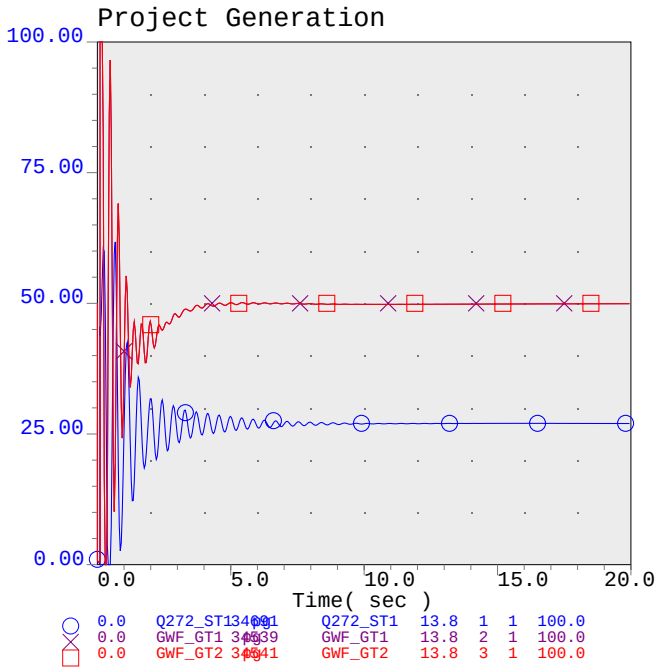

PG&E 2007 CASE SERIES: 2013 San Joaquin Valley Summer Peak Post-Project Case
PATH15= 1955 MW(S-N) PATH26= 4001 MW(N-S) PDCI= 2500 MW(N-S) COI= 4795 MW(N-S)
Q272 150 MW at GWF Henrietta 70 kV IFS - 2013 Summer Peak Post-Project FY
Henrietta-Lemoore NAS 70-kV Single Line Out

2013sumpk_q272_pst_tr_hen-LemNAS.chf

.

Wed Oct 08 09:58:39 2008

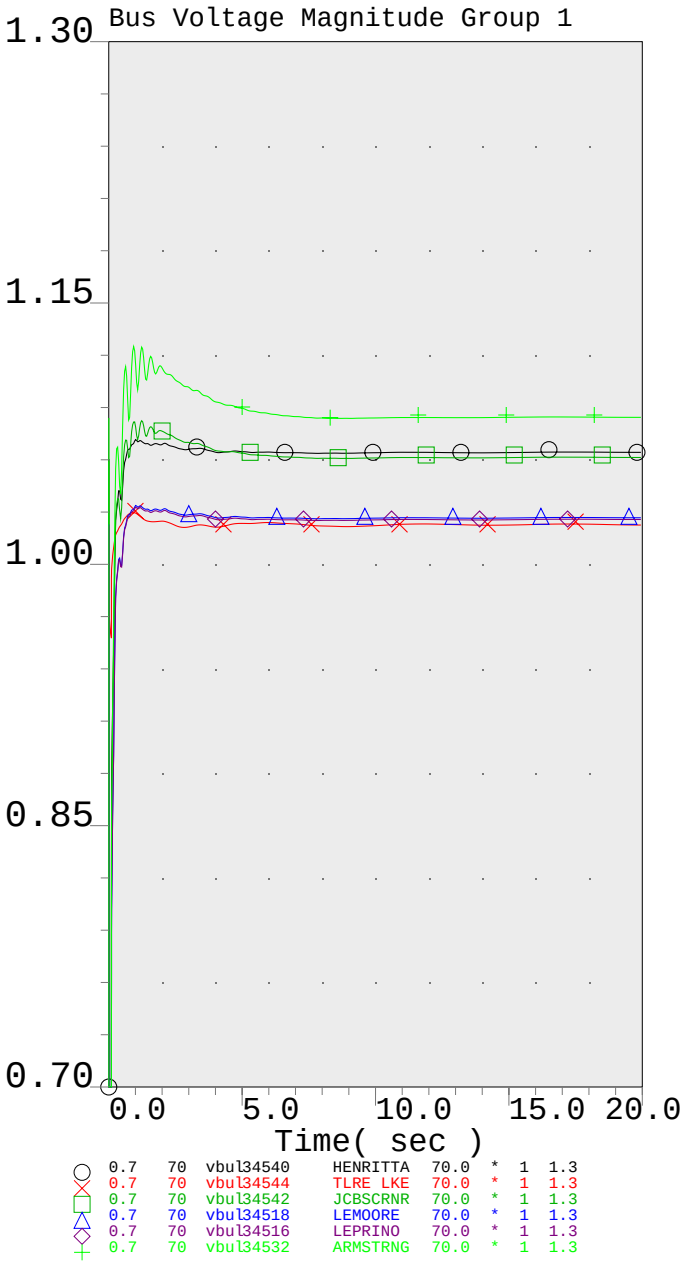

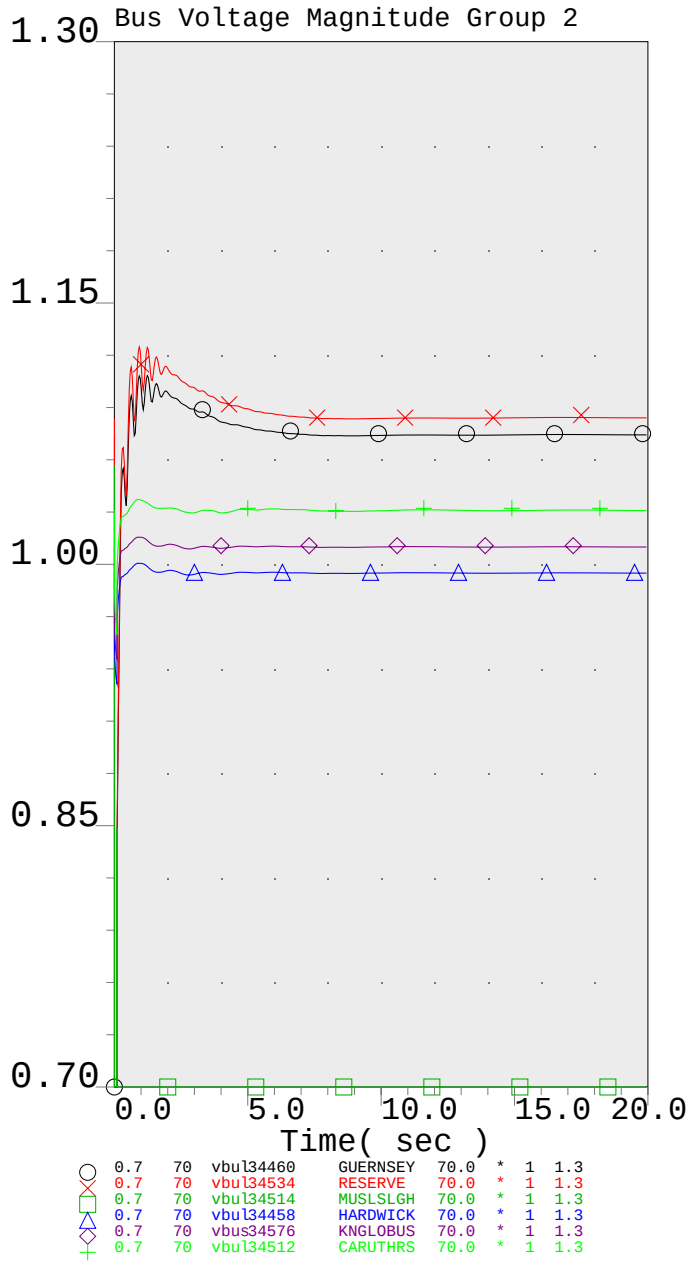

PG&E 2007 CASE SERIES: 2013 San Joaquin Valley Summer Peak Post-Project Case
PATH15= 1955 MW(S-N) PATH26= 4001 MW(N-S) PDCI= 2500 MW(N-S) COI= 4795 MW(N-S)
Q272 150 MW at GWF Henrietta 70 kV IFS - 2013 Summer Peak Post-Project FY
Henrietta-Lemoore NAS 70-kV Single Line Out

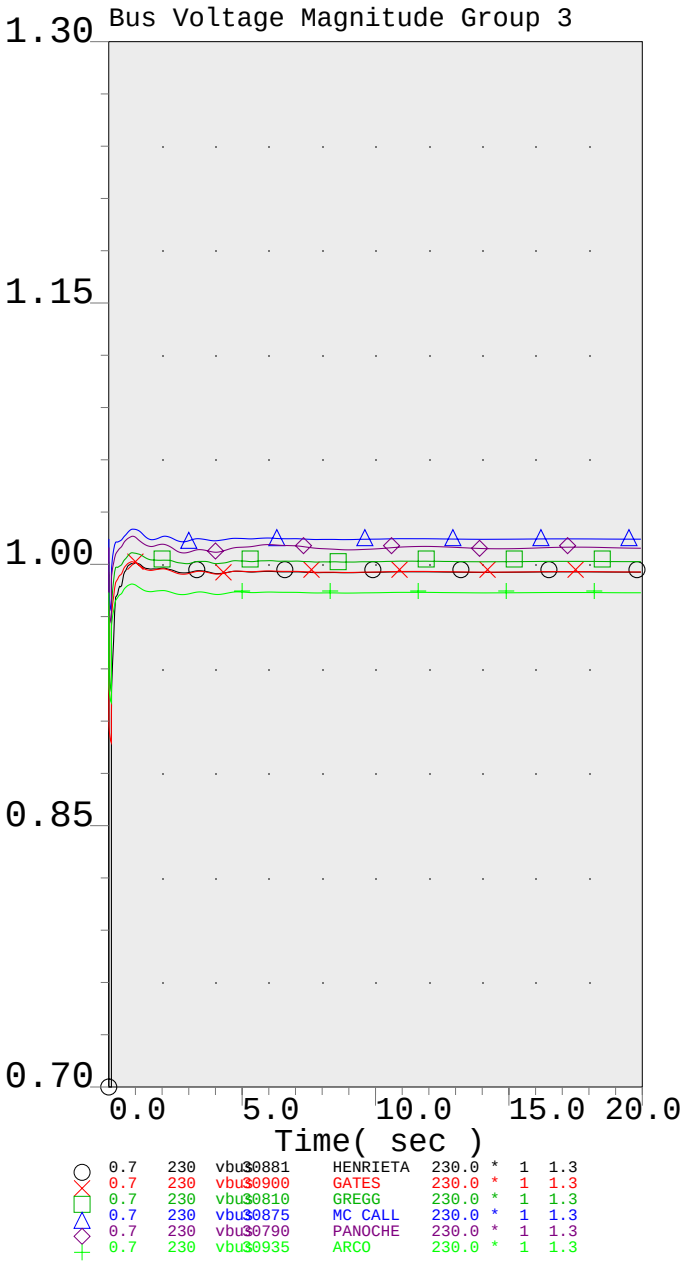

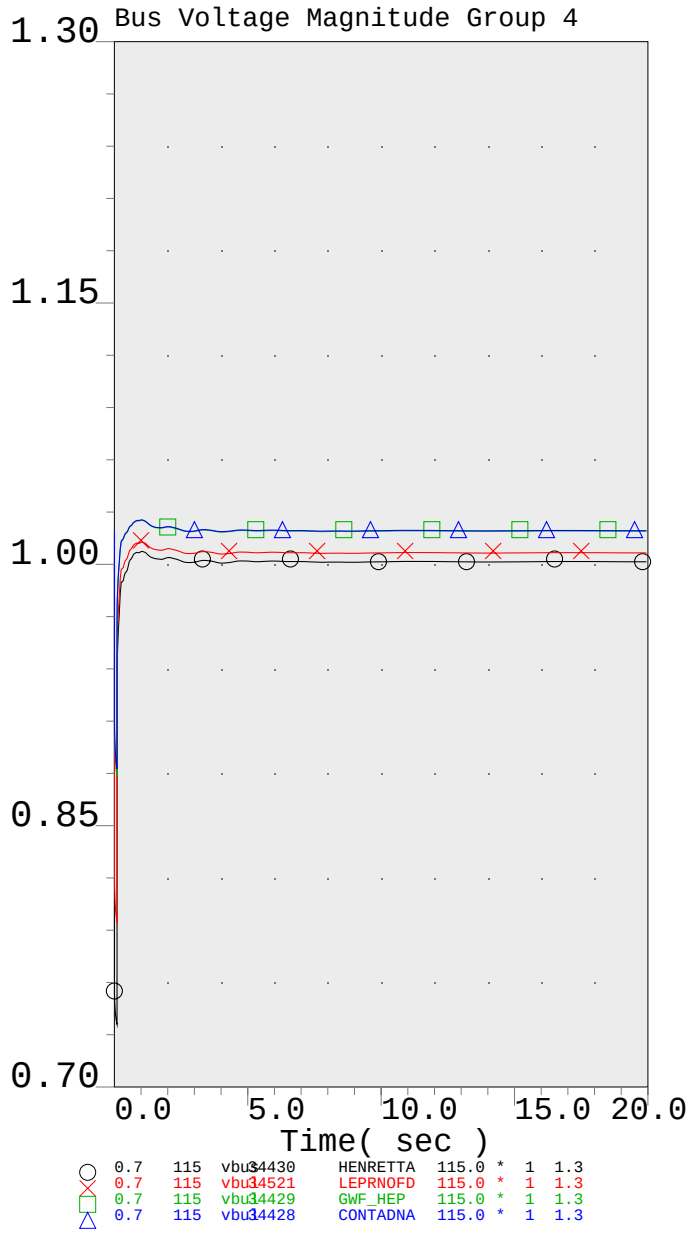

PG&E 2007 CASE SERIES: 2013 San Joaquin Valley Summer Peak Post-Project Case
PATH15= 1955 MW(S-N) PATH26= 4001 MW(N-S) PDCI= 2500 MW(N-S) COI= 4795 MW(N-S)
Q272 150 MW at GWF Henrietta 70 kV IFS - 2013 Summer Peak Post-Project FY
Henrietta-Lemoore NAS 70-kV Single Line Out

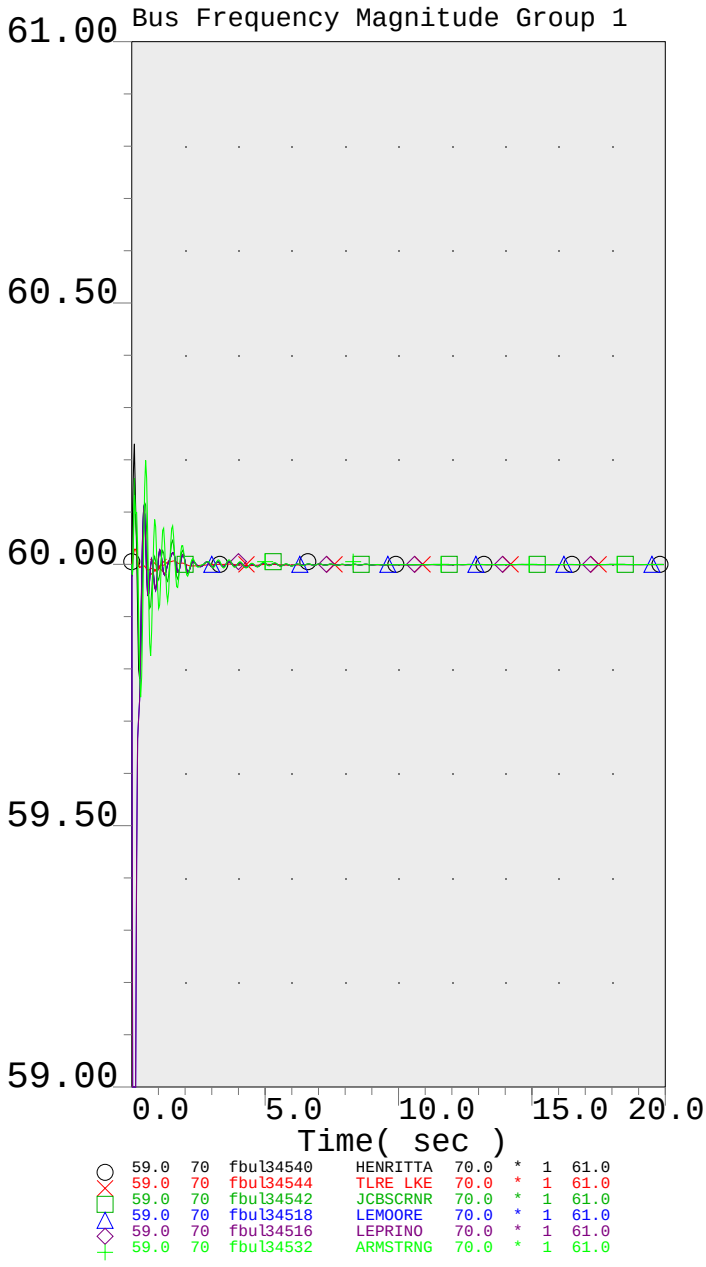

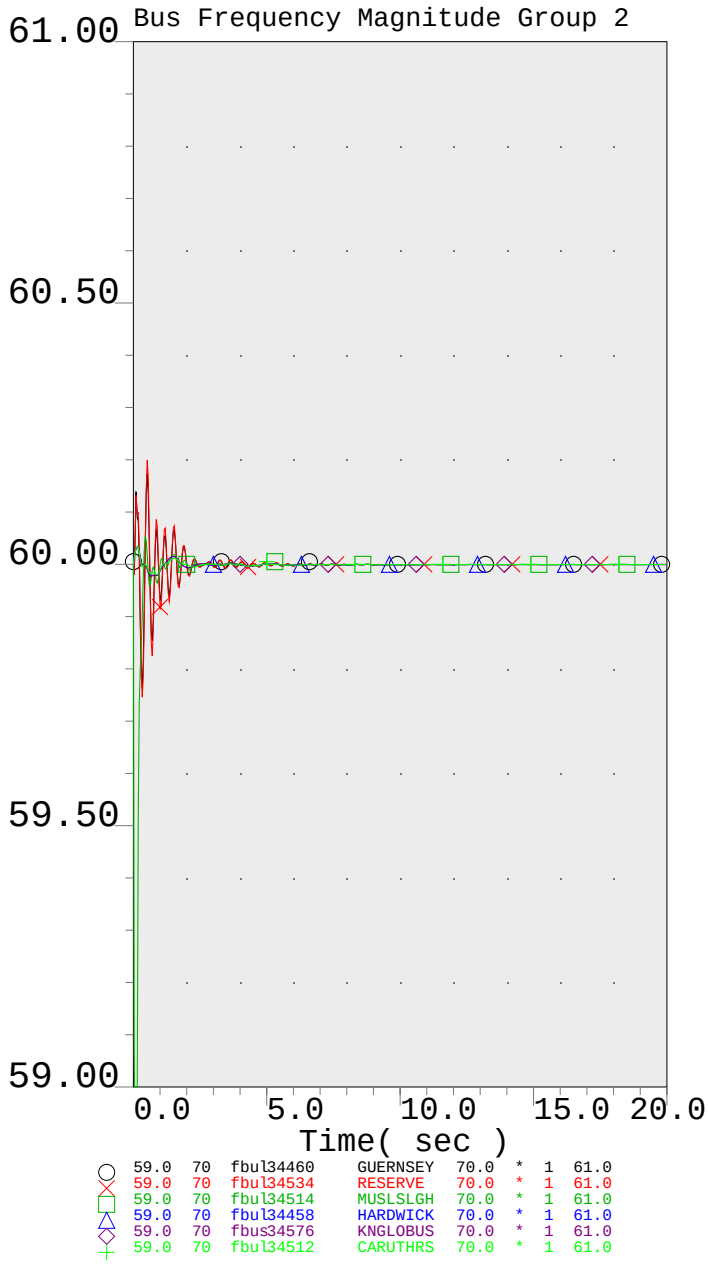

PG&E 2007 CASE SERIES: 2013 San Joaquin Valley Summer Peak Post-Project Case
PATH15= 1955 MW(S-N) PATH26= 4001 MW(N-S) PDCI= 2500 MW(N-S) COI= 4795 MW(N-S)
Q272 150 MW at GWF Henrietta 70 kV IFS - 2013 Summer Peak Post-Project FY
Henrietta-Lemoore NAS 70-kV Single Line Out

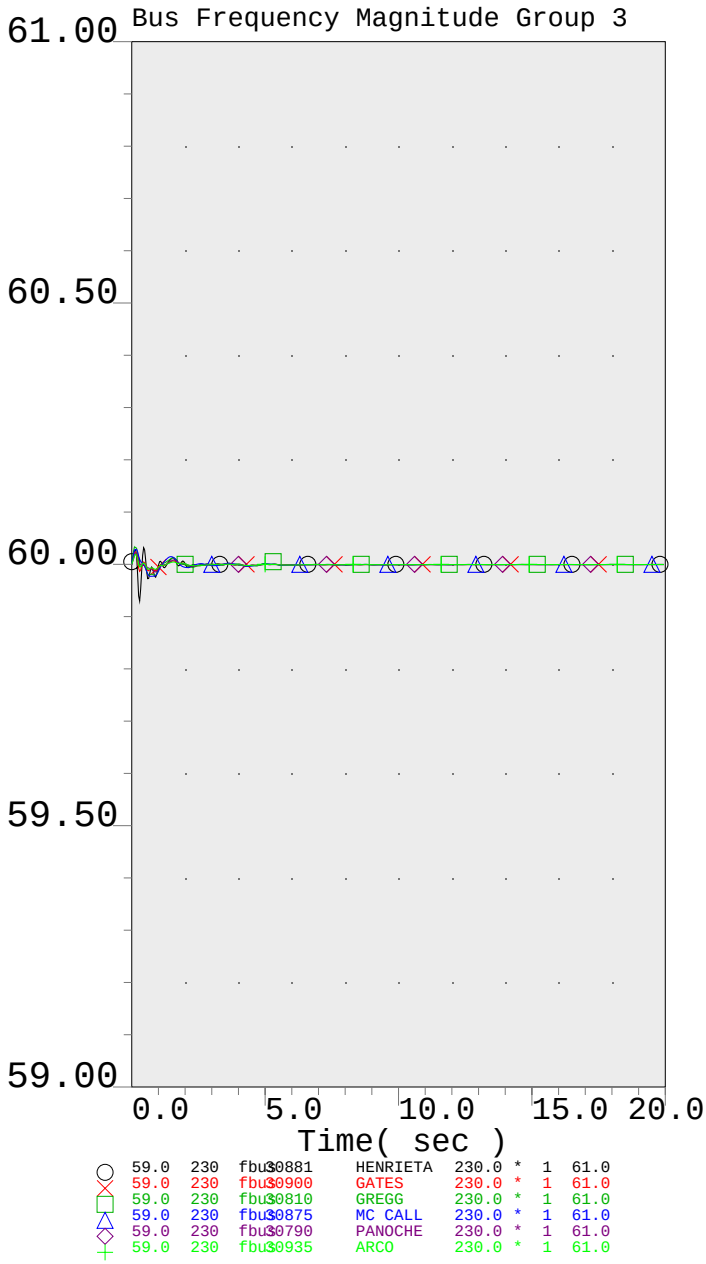

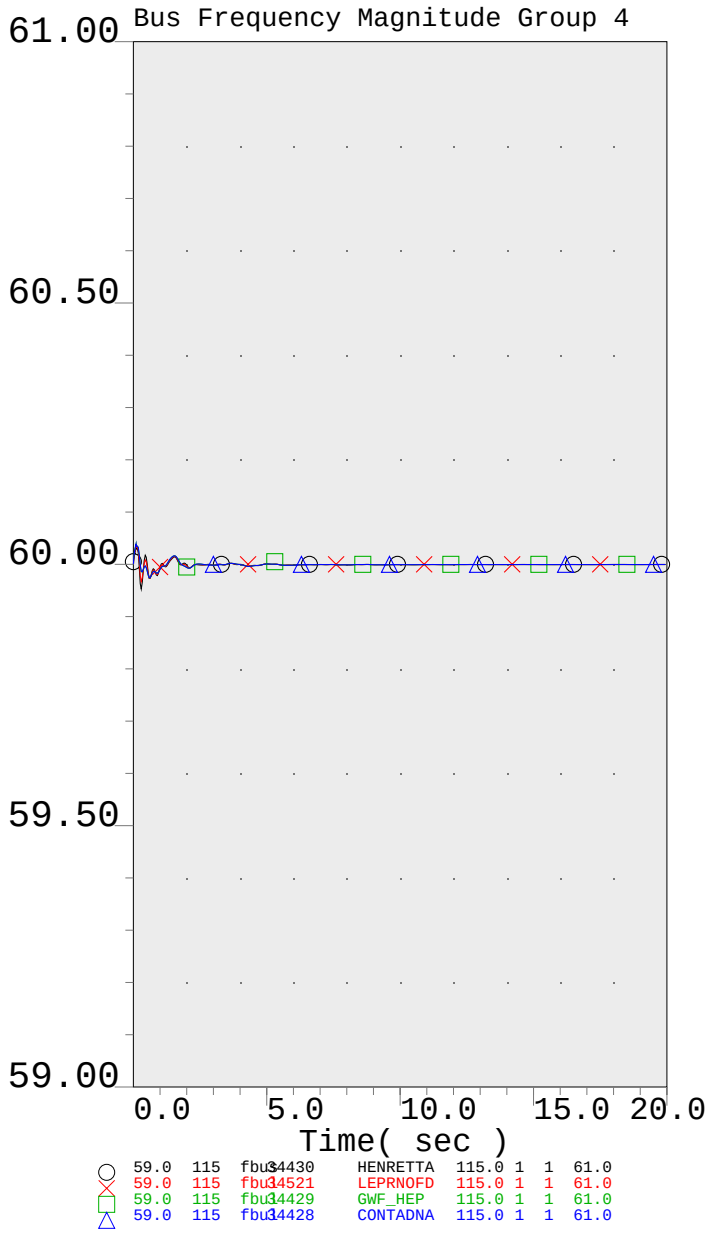

PG&E 2007 CASE SERIES: 2013 San Joaquin Valley Summer Peak Post-Project Case
PATH15= 1955 MW(S-N) PATH26= 4001 MW(N-S) PDCI= 2500 MW(N-S) COI= 4795 MW(N-S)
Q272 150 MW at GWF Henrietta 70 kV IFS - 2013 Summer Peak Post-Project FY
Henrietta-Lemoore NAS 70-kV Single Line Out

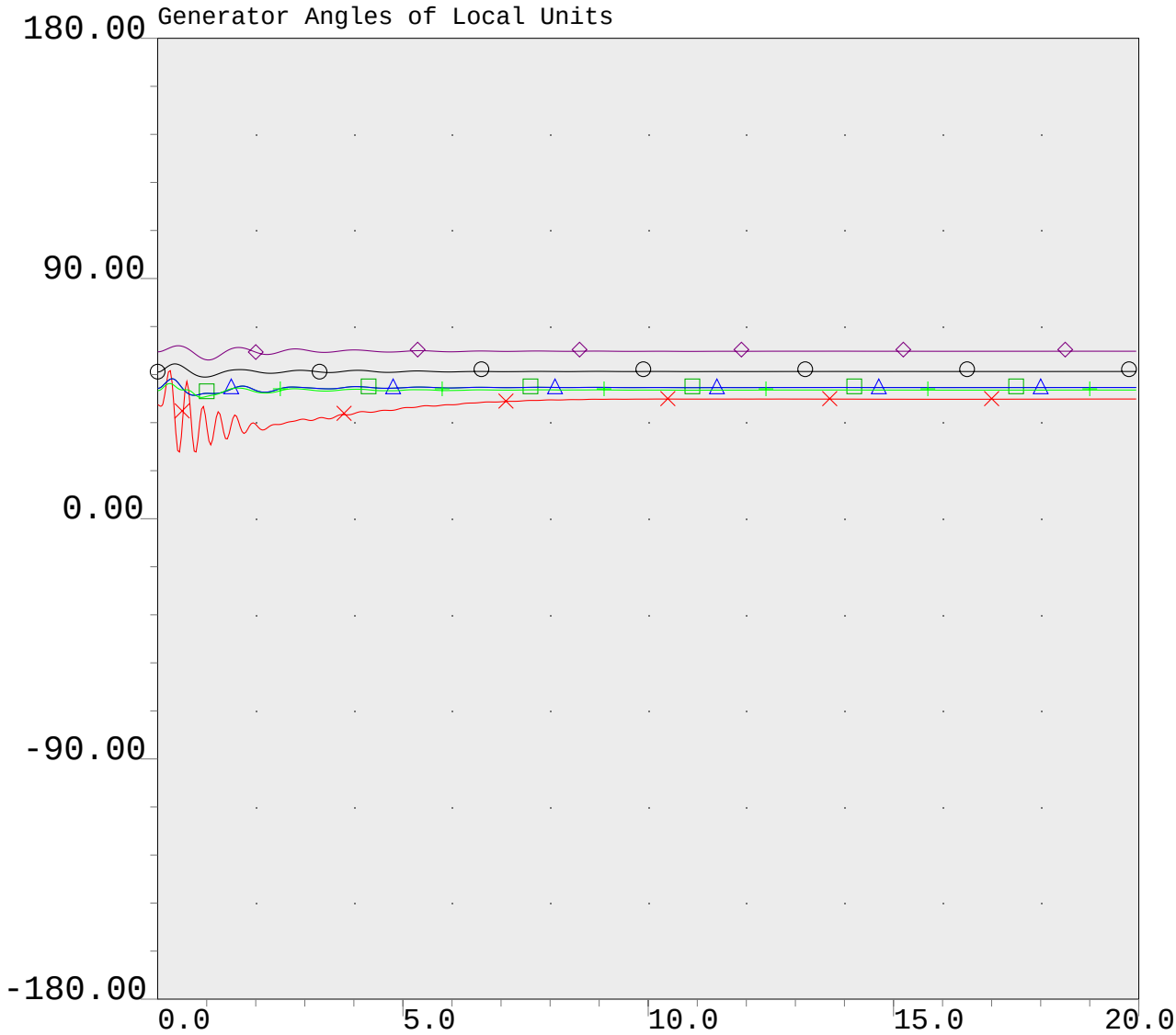

○	-180.0	#1 ang	34600	HELMS 1	18.0	*	1	180.0
×	-180.0	GWF-PWR ang	34650	GWF-PWR.	13.8	*	1	180.0
□	-180.0	1 ang	34431	GWF_HEP1	13.8	*	1	180.0
△	-180.0	2 ang	34433	GWF_HEP2	13.8	*	1	180.0
◇	-180.0	GT1 ang	34661	P0418GT1	13.8	*	1	180.0
+	-180.0	Cogen ang	34642	KINGSBUR	9.1	*	1	180.0

PG&E 2007 CASE SERIES: 2013 San Joaquin Valley Summer Peak Post-Project Case
PATH15= 1955 MW(S-N) PATH26= 4001 MW(N-S) PDCI= 2500 MW(N-S) COI= 4795 MW(N-S)
Q272 150 MW at GWF Henrietta 70 kV IFS - 2013 Summer Peak Post-Project FY
Henrietta-Lemoore NAS 70-kV Single Line Out

Three-phase close-in fault on the Henrietta-Lemoore 70-kV line at the Henrietta 70-kV bus with normal clearing time followed by the loss of the Henrietta-Lemoore 70-kV line.

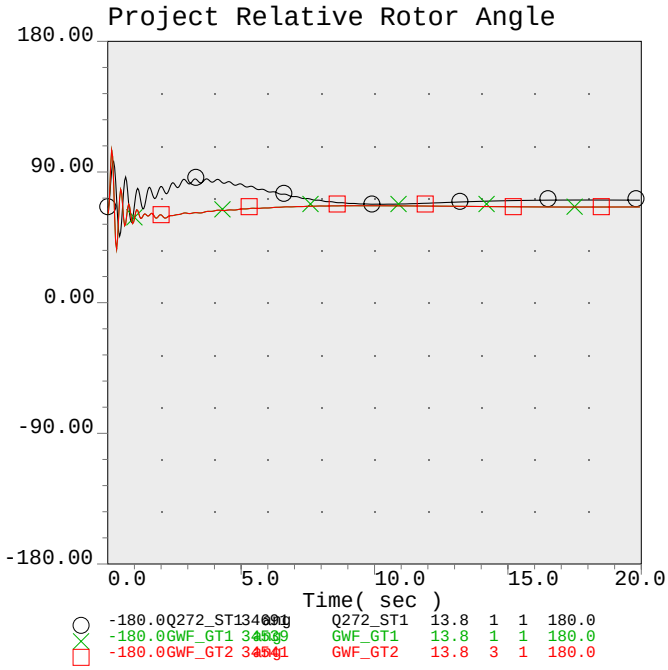

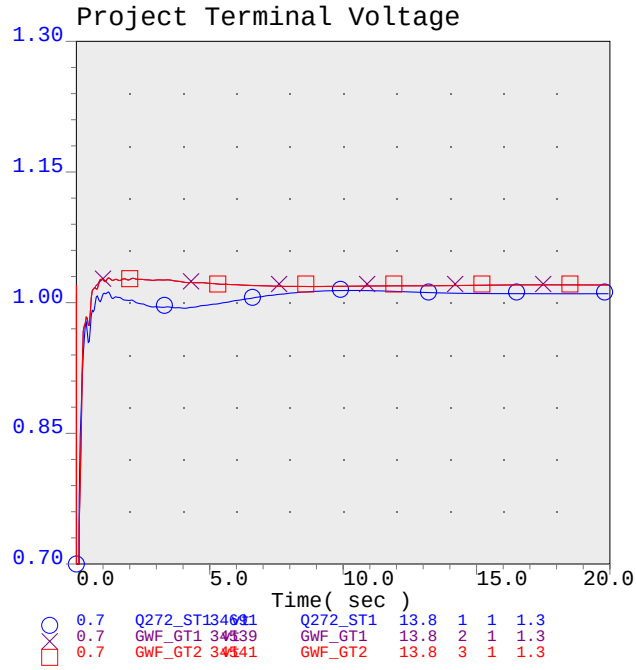

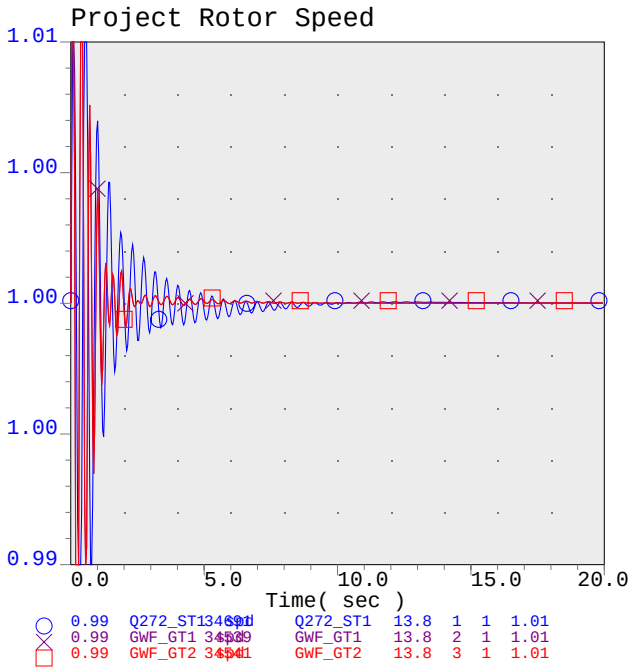

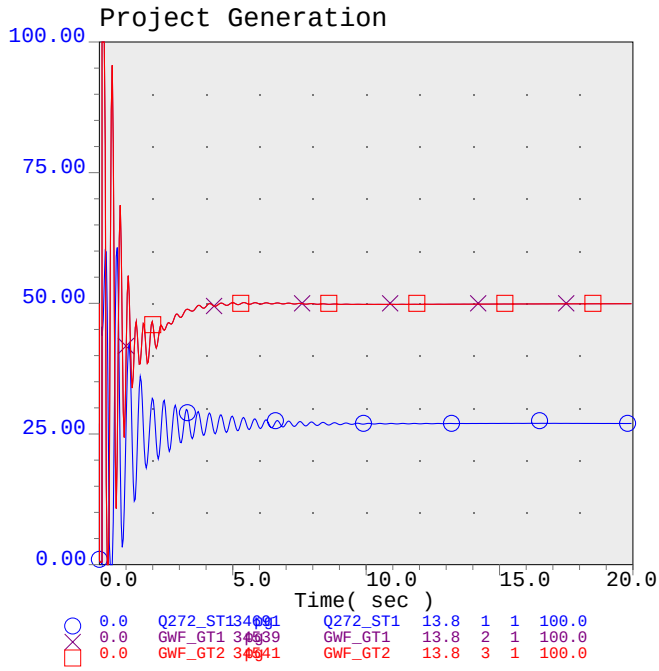

PG&E 2007 CASE SERIES: 2013 San Joaquin Valley Summer Peak Post-Project Case
PATH15= 1955 MW(S-N) PATH26= 4001 MW(N-S) PDCI= 2500 MW(N-S) COI= 4795 MW(N-S)
Q272 150 MW at GWF Henrietta 70 kV IFS - 2013 Summer Peak Post-Project FY
Henrietta-Lemoore 70-kV Single Line Out

2013sumpk_q272_pst_tr_hen-lemoore.chf

.

Wed Oct 08 10:06:44 2008

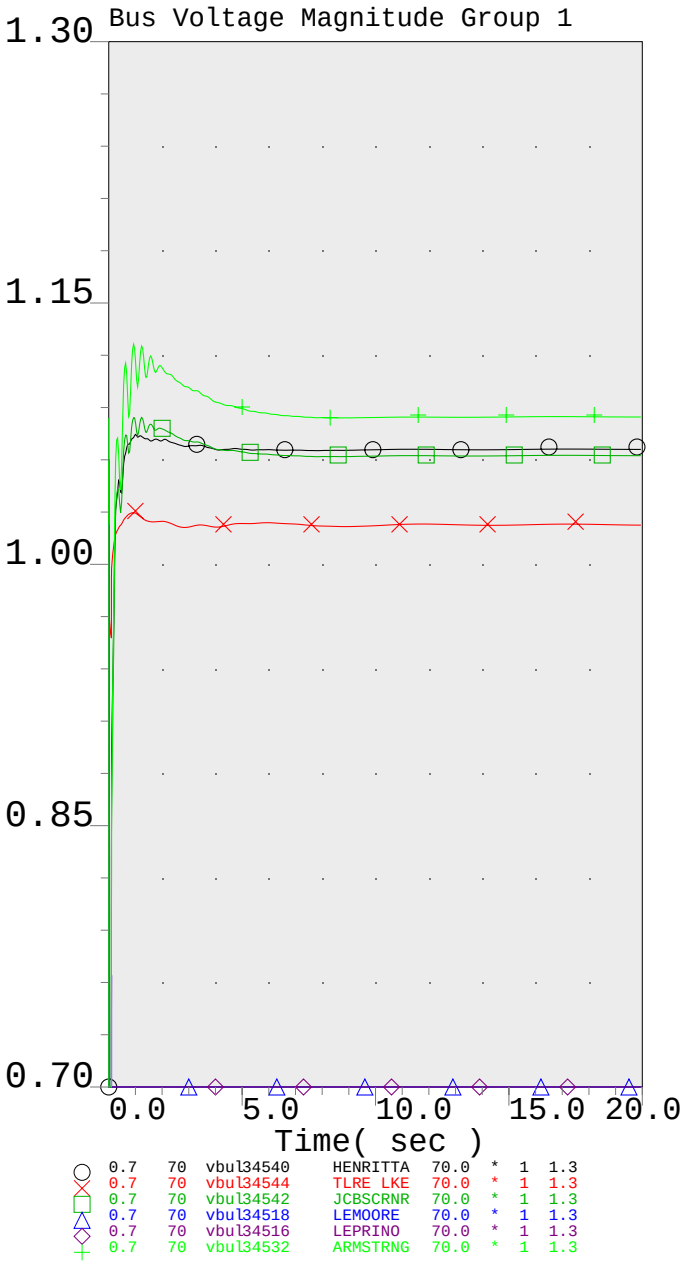

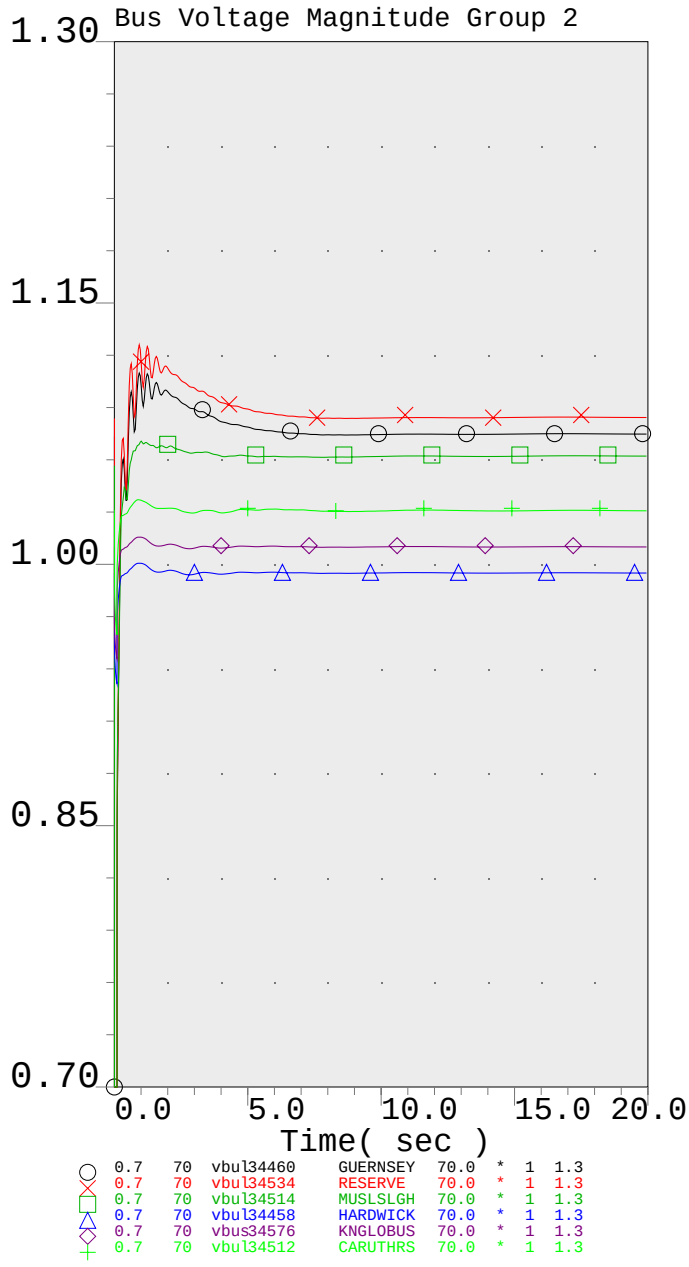

PG&E 2007 CASE SERIES: 2013 San Joaquin Valley Summer Peak Post-Project Case
PATH15= 1955 MW(S-N) PATH26= 4001 MW(N-S) PDCI= 2500 MW(N-S) COI= 4795 MW(N-S)
Q272 150 MW at GWF Henrietta 70 kV IFS - 2013 Summer Peak Post-Project FY
Henrietta-Lemoore 70-kV Single Line Out

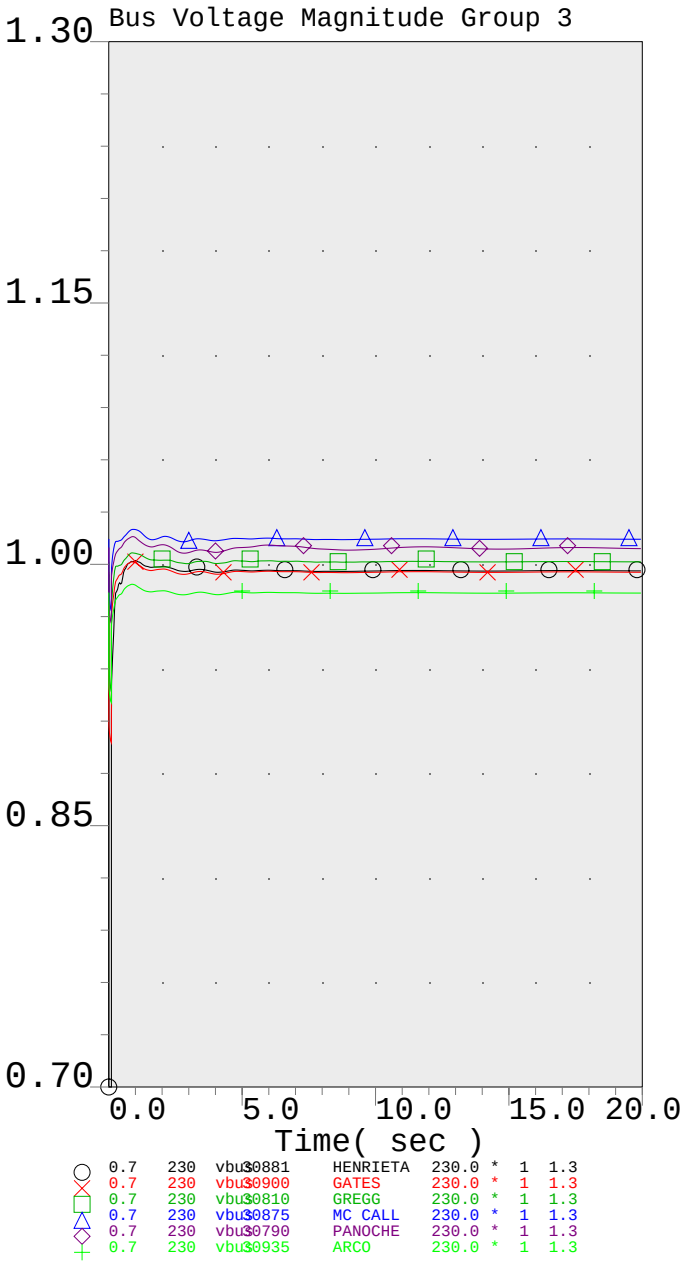

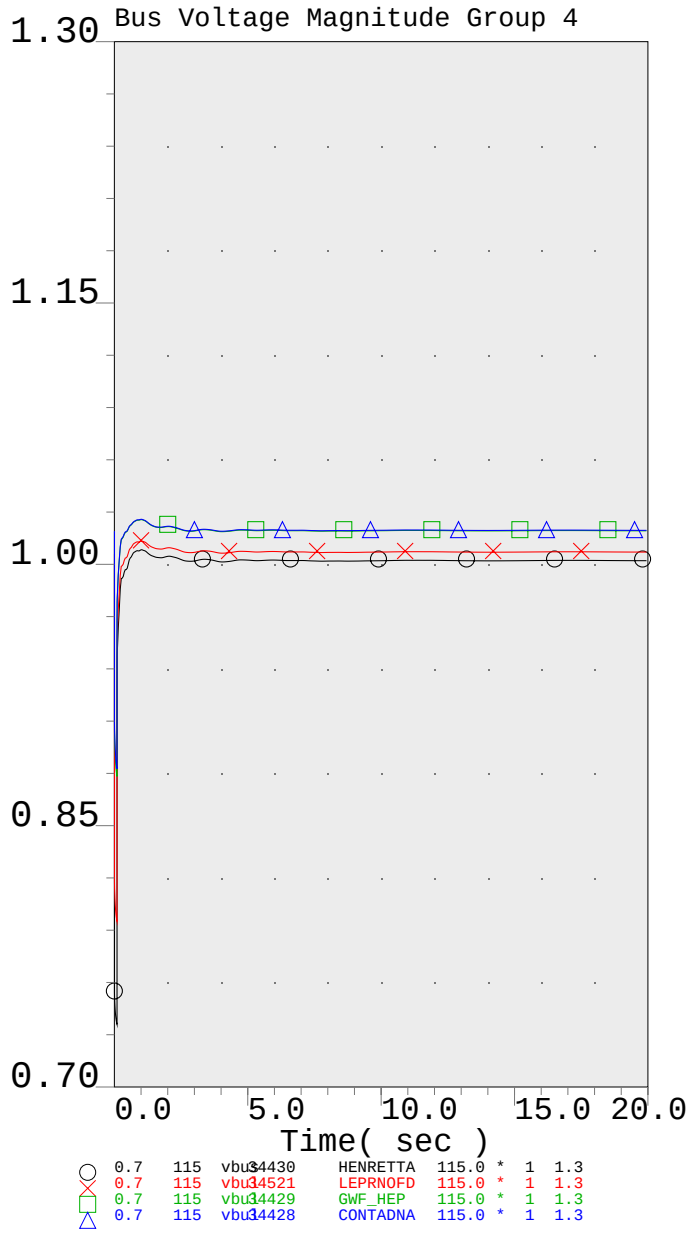

PG&E 2007 CASE SERIES: 2013 San Joaquin Valley Summer Peak Post-Project Case
PATH15= 1955 MW(S-N) PATH26= 4001 MW(N-S) PDCI= 2500 MW(N-S) COI= 4795 MW(N-S)
Q272 150 MW at GWF Henrietta 70 kV IFS - 2013 Summer Peak Post-Project FY
Henrietta-Lemoore 70-kV Single Line Out

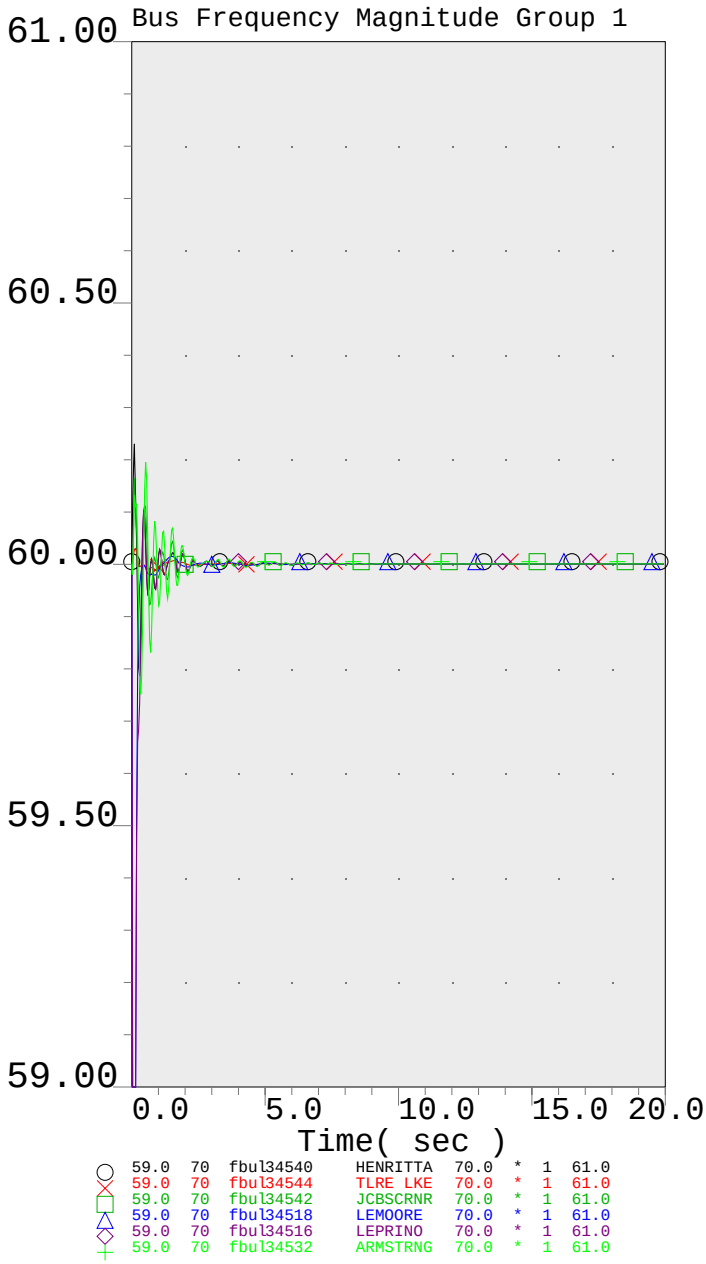

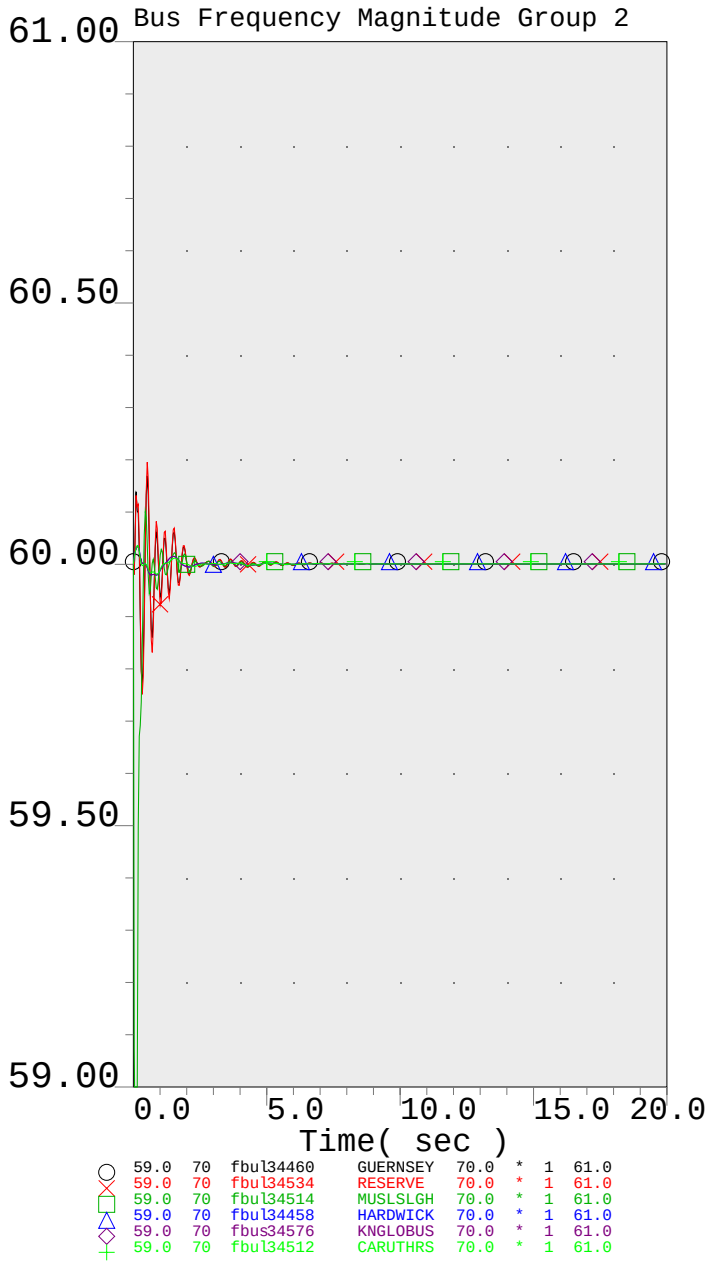

PG&E 2007 CASE SERIES: 2013 San Joaquin Valley Summer Peak Post-Project Case
PATH15= 1955 MW(S-N) PATH26= 4001 MW(N-S) PDCI= 2500 MW(N-S) COI= 4795 MW(N-S)
Q272 150 MW at GWF Henrietta 70 kV IFS - 2013 Summer Peak Post-Project FY
Henrietta-Lemoore 70-kV Single Line Out

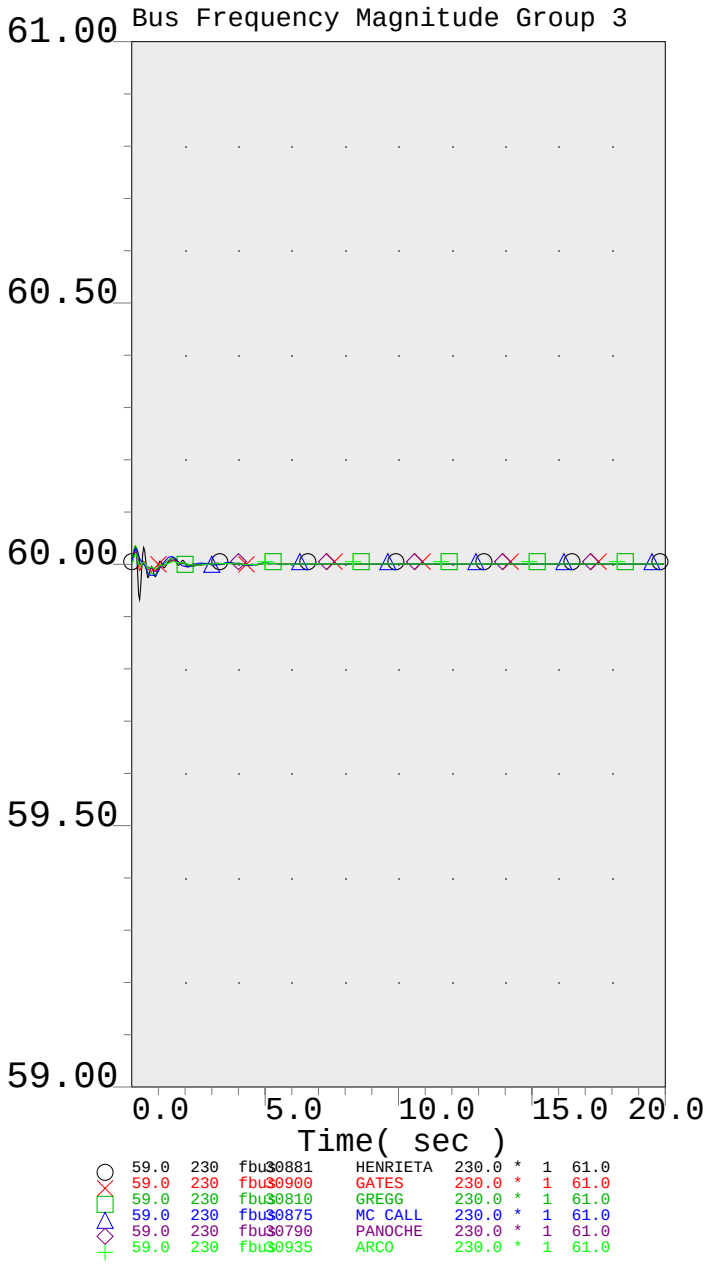

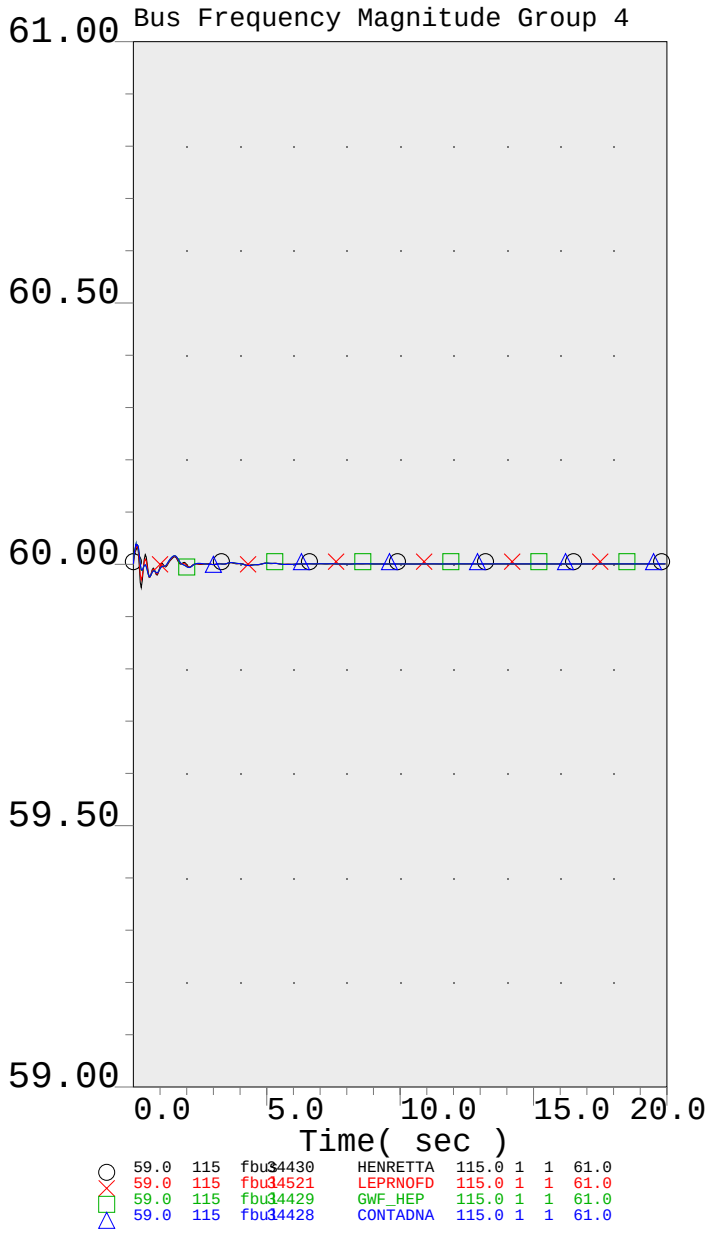

PG&E 2007 CASE SERIES: 2013 San Joaquin Valley Summer Peak Post-Project Case
PATH15= 1955 MW(S-N) PATH26= 4001 MW(N-S) PDCI= 2500 MW(N-S) COI= 4795 MW(N-S)
Q272 150 MW at GWF Henrietta 70 kV IFS - 2013 Summer Peak Post-Project FY
Henrietta-Lemoore 70-kV Single Line Out

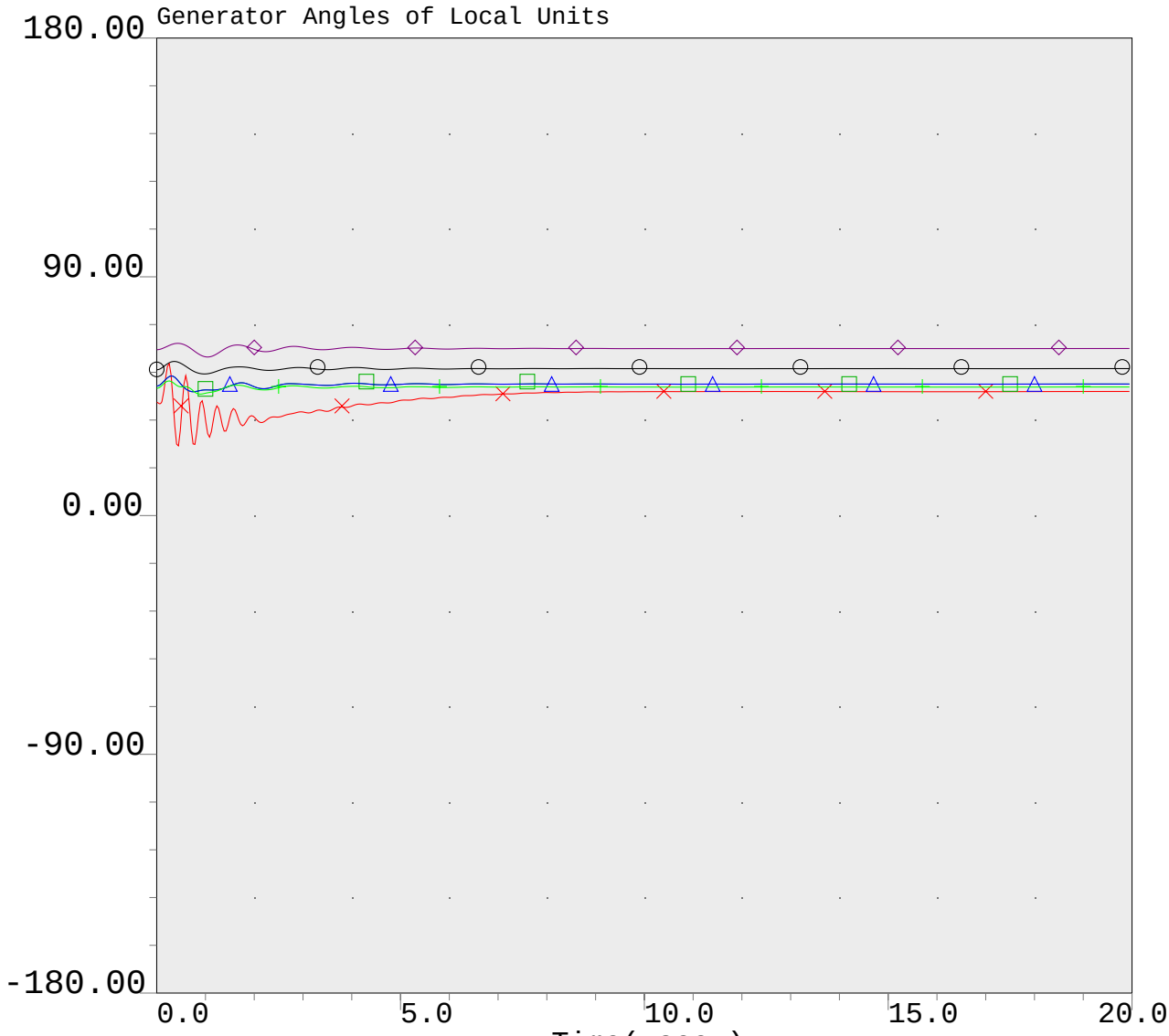

○	-180.0	#1 ang	34600	HELMS 1	18.0	*	1	180.0
×	-180.0	GWF-PWR ang	34650	GWF-PWR.	13.8	*	1	180.0
□	-180.0	1 ang	34431	GWF_HEP1	13.8	*	1	180.0
△	-180.0	2 ang	34433	GWF_HEP2	13.8	*	1	180.0
◇	-180.0	GT1 ang	34661	P0418GT1	13.8	*	1	180.0
+	-180.0	Cogen ang	34642	KINGSBUR	9.1	*	1	180.0

PG&E 2007 CASE SERIES: 2013 San Joaquin Valley Summer Peak Post-Project Case
PATH15= 1955 MW(S-N) PATH26= 4001 MW(N-S) PDCI= 2500 MW(N-S) COI= 4795 MW(N-S)
Q272 150 MW at GWF Henrietta 70 kV IFS - 2013 Summer Peak Post-Project FY
Henrietta-Lemoore 70-kV Single Line Out

Three-phase close-in fault on the Henrietta 230/70-kV Transformer #2 at the Henrietta 70-kV bus with normal clearing time followed by the loss of the Henrietta 230/70-kV Transformer #2.

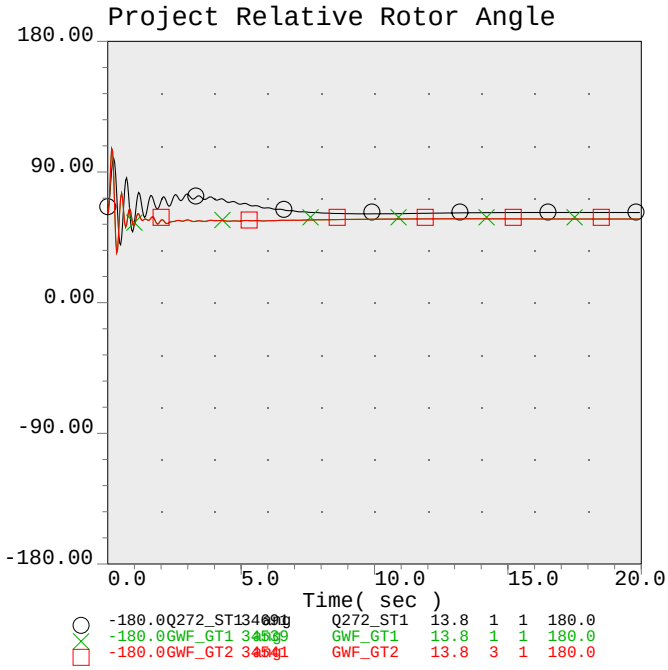

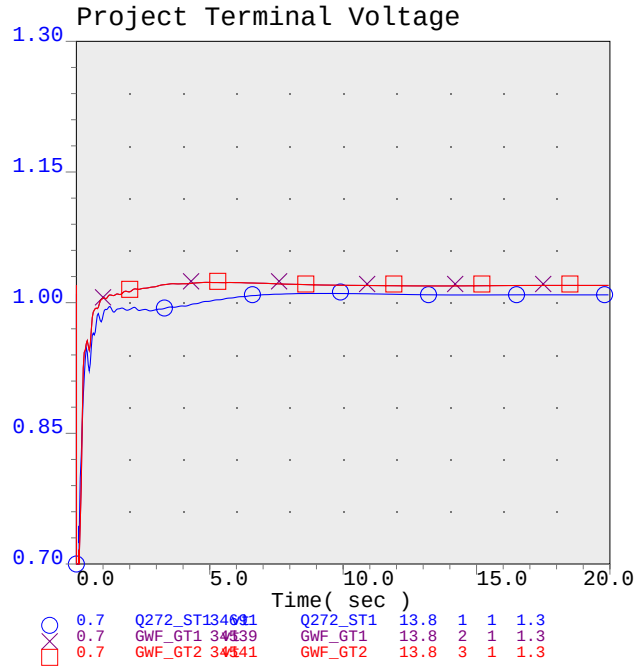

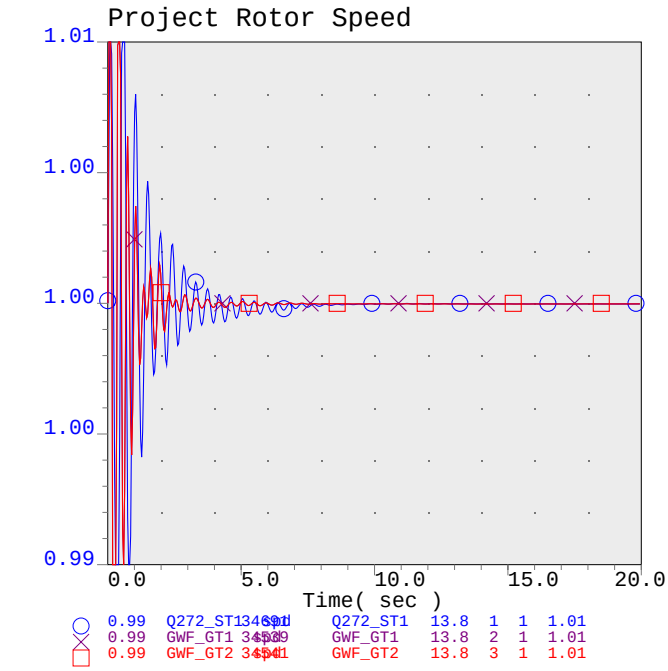

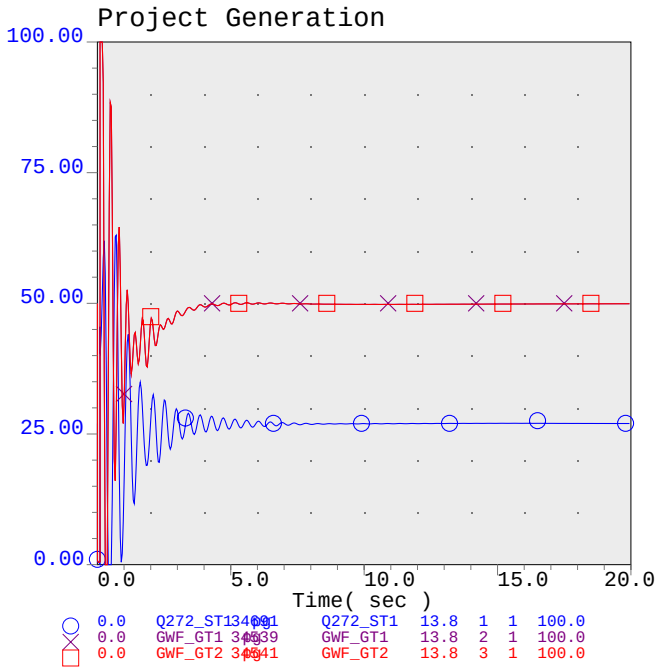

PG&E 2007 CASE SERIES: 2013 San Joaquin Valley Summer Peak Post-Project Case
PATH15= 1955 MW(S-N) PATH26= 4001 MW(N-S) PDCI= 2500 MW(N-S) COI= 4795 MW(N-S)
Q272 150 MW at GWF Henrietta 70 kV IFS - 2013 Summer Peak Post-Project FY
Henrietta 230/70-kV Bk#2

2013sumpk_q272_pst_tr_HenBk#2.chf

.

Wed Oct 08 10:24:17 2008

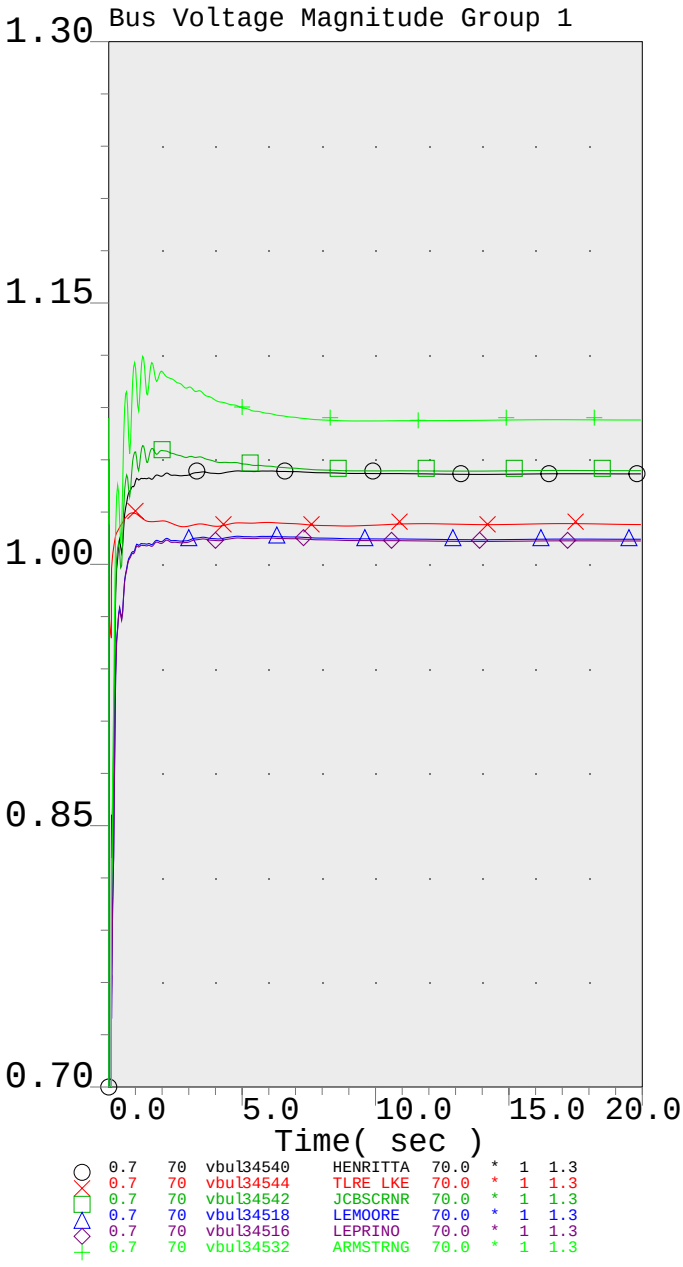

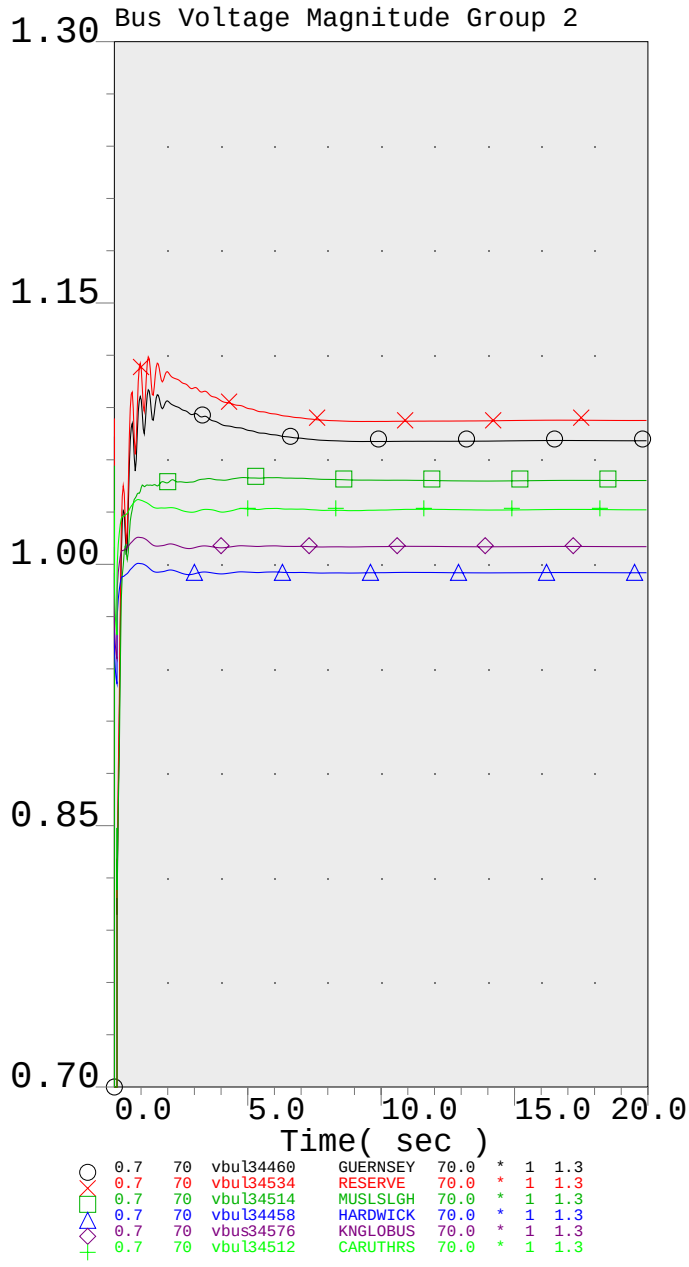

PG&E 2007 CASE SERIES: 2013 San Joaquin Valley Summer Peak Post-Project Case
PATH15= 1955 MW(S-N) PATH26= 4001 MW(N-S) PDCI= 2500 MW(N-S) COI= 4795 MW(N-S)
Q272 150 MW at GWF Henrietta 70 kV IFS - 2013 Summer Peak Post-Project FY
Henrietta 230/70-kV Bk#2

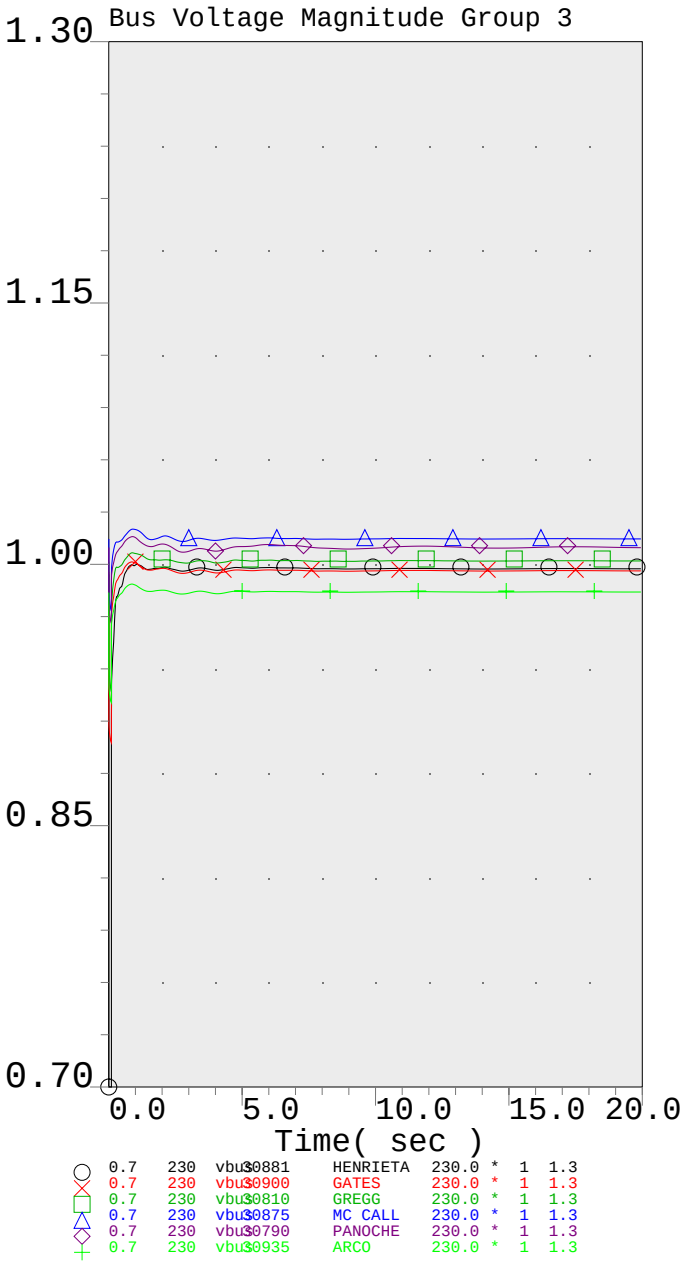

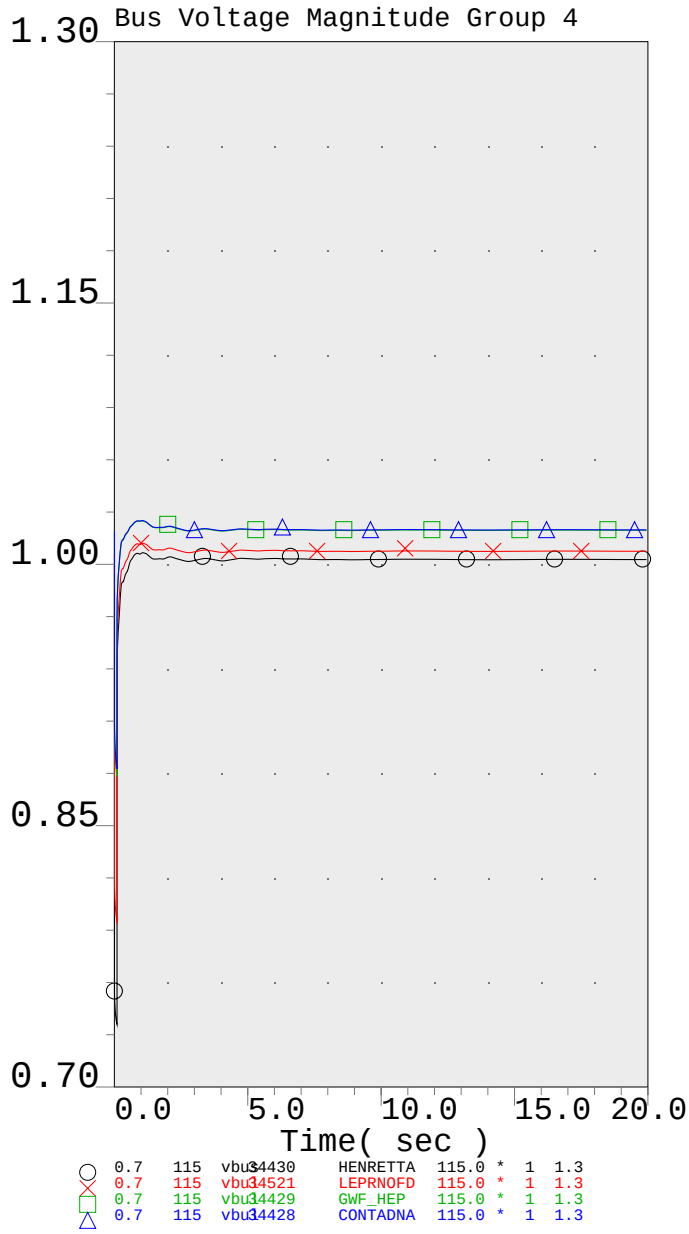

PG&E 2007 CASE SERIES: 2013 San Joaquin Valley Summer Peak Post-Project Case
PATH15= 1955 MW(S-N) PATH26= 4001 MW(N-S) PDCI= 2500 MW(N-S) COI= 4795 MW(N-S)
Q272 150 MW at GWF Henrietta 70 kV IFS - 2013 Summer Peak Post-Project FY
Henrietta 230/70-kV Bk#2

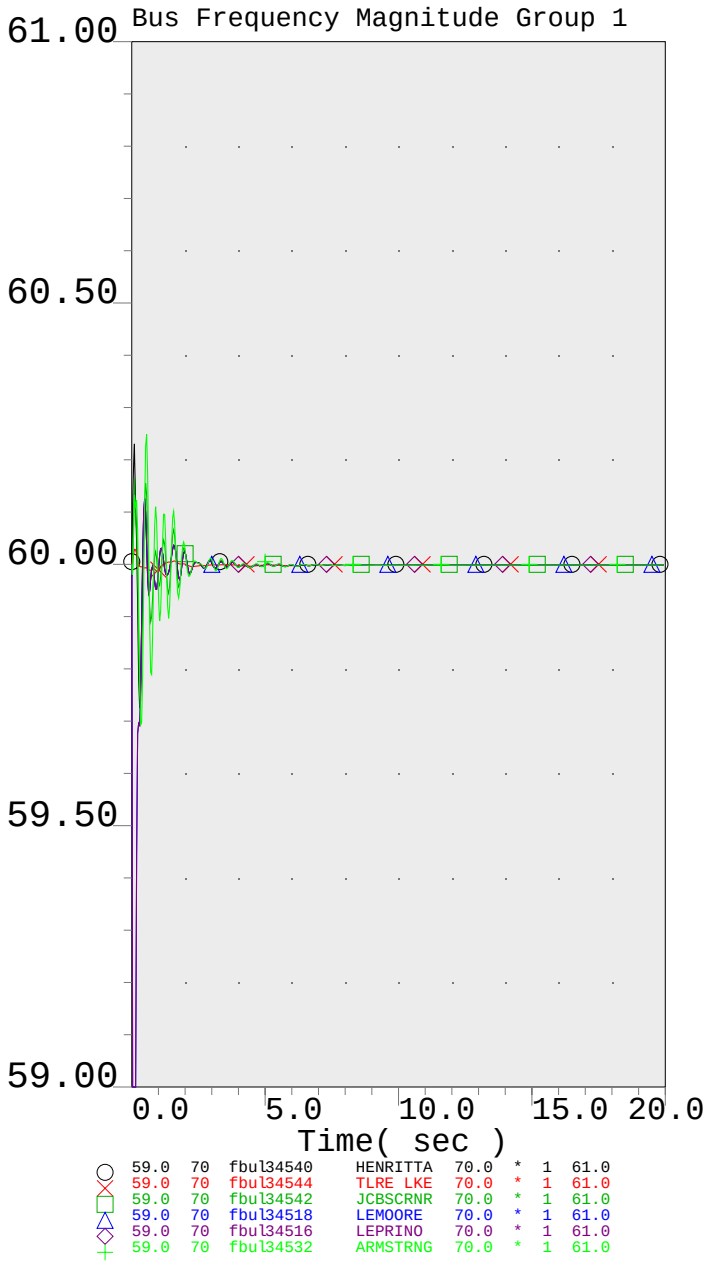

PG&E 2007 CASE SERIES: 2013 San Joaquin Valley Summer Peak Post-Project Case
PATH15= 1955 MW(S-N) PATH26= 4001 MW(N-S) PDCI= 2500 MW(N-S) COI= 4795 MW(N-S)
Q272 150 MW at GWF Henrietta 70 kV IFS - 2013 Summer Peak Post-Project FY
Henrietta 230/70-kV Bk#2

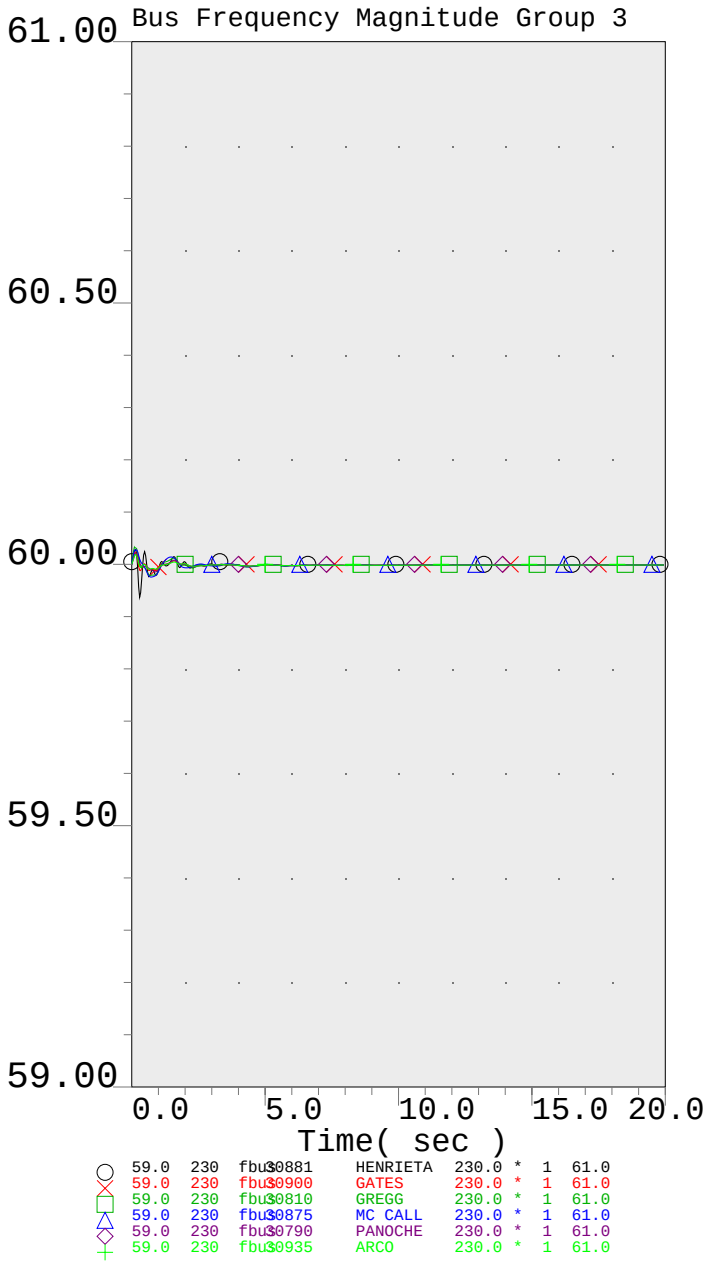

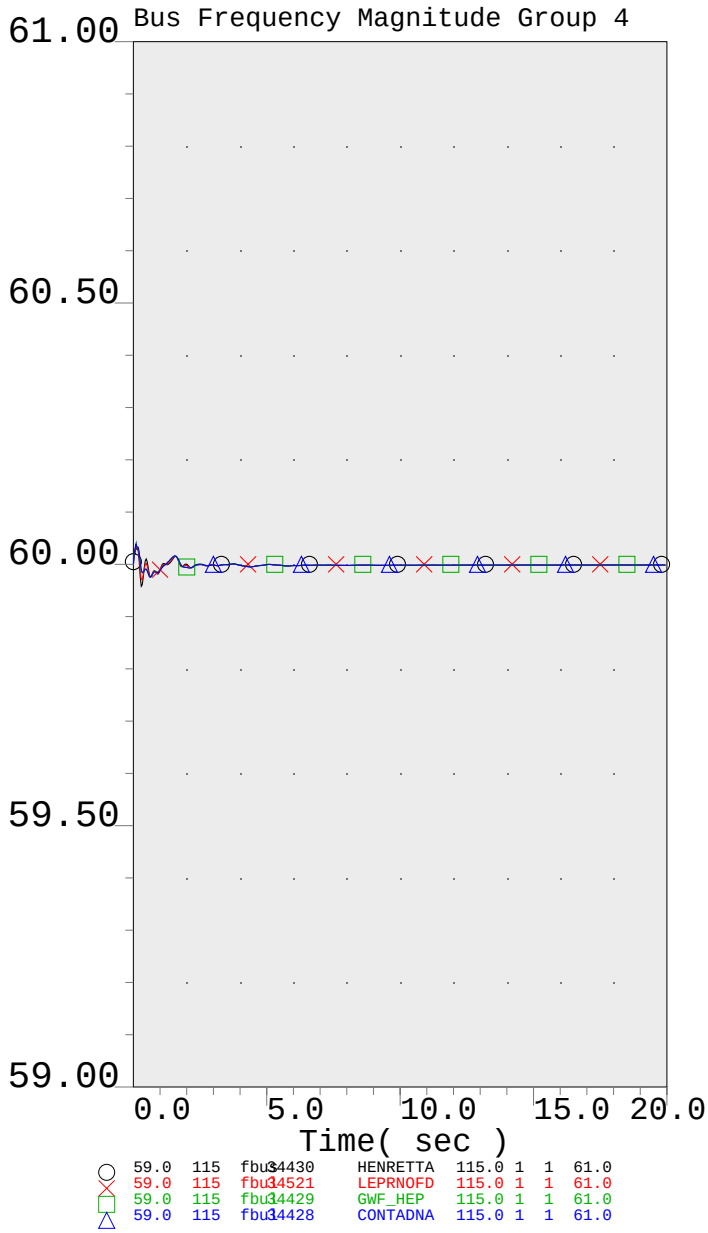

PG&E 2007 CASE SERIES: 2013 San Joaquin Valley Summer Peak Post-Project Case
PATH15= 1955 MW(S-N) PATH26= 4001 MW(N-S) PDCI= 2500 MW(N-S) COI= 4795 MW(N-S)
Q272 150 MW at GWF Henrietta 70 kV IFS - 2013 Summer Peak Post-Project FY
Henrietta 230/70-kV Bk#2

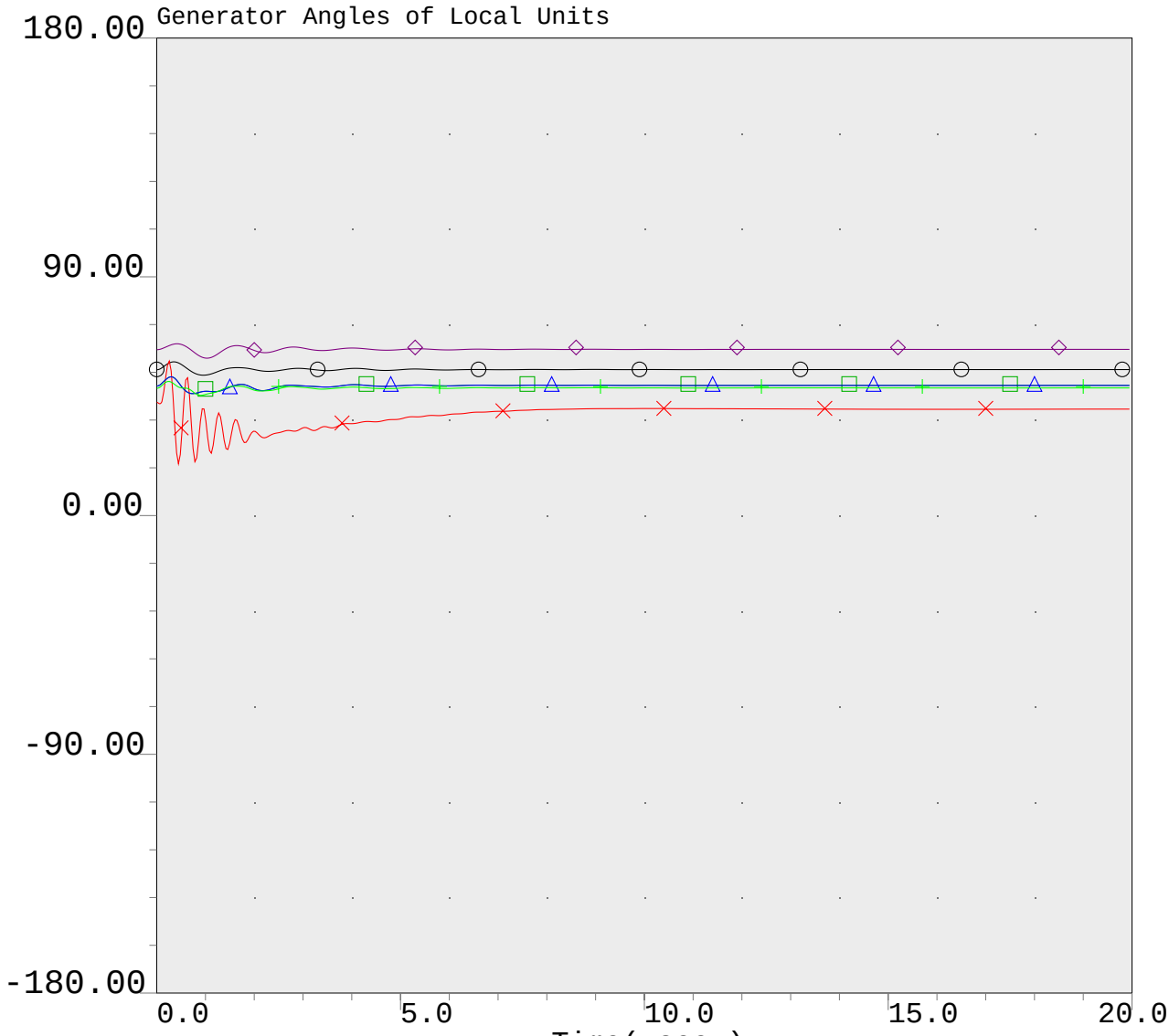

○	-180.0	#1 ang	34600	HELMS 1	18.0	*	1	180.0
×	-180.0	GWF-PWR ang	34650	GWF-PWR.	13.8	*	1	180.0
□	-180.0	1 ang	34431	GWF_HEP1	13.8	*	1	180.0
△	-180.0	2 ang	34433	GWF_HEP2	13.8	*	1	180.0
◇	-180.0	GT1 ang	34661	P0418GT1	13.8	*	1	180.0
+	-180.0	Cogen ang	34642	KINGSBUR	9.1	*	1	180.0

PG&E 2007 CASE SERIES: 2013 San Joaquin Valley Summer Peak Post-Project Case
PATH15= 1955 MW(S-N) PATH26= 4001 MW(N-S) PDCI= 2500 MW(N-S) COI= 4795 MW(N-S)
Q272 150 MW at GWF Henrietta 70 kV IFS - 2013 Summer Peak Post-Project FY
Henrietta 230/70-kV Bk#2

Three-phase close-in fault on the Henrietta 230/70-kV Transformer #4 at the Henrietta 70-kV bus with normal clearing time followed by the loss of the Henrietta 230/70-kV Transformer #4.

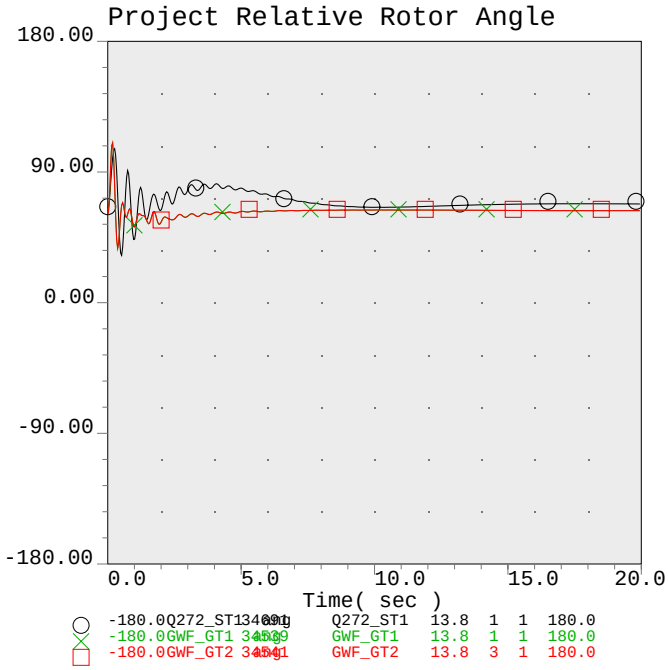

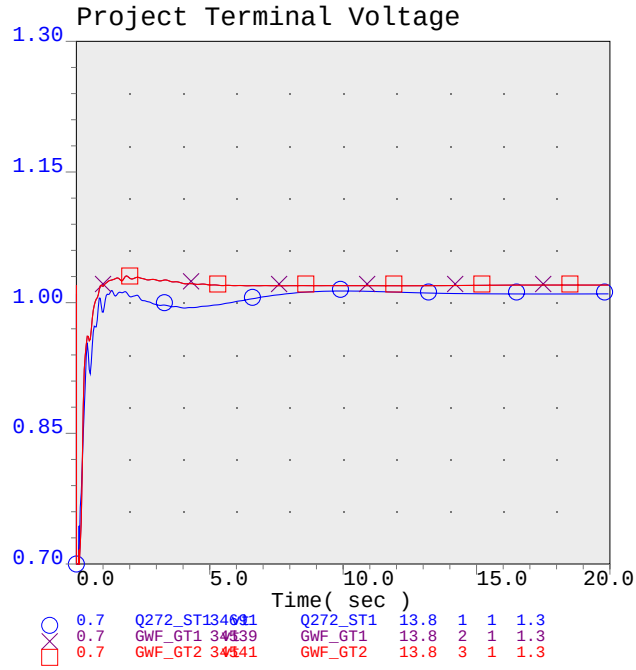

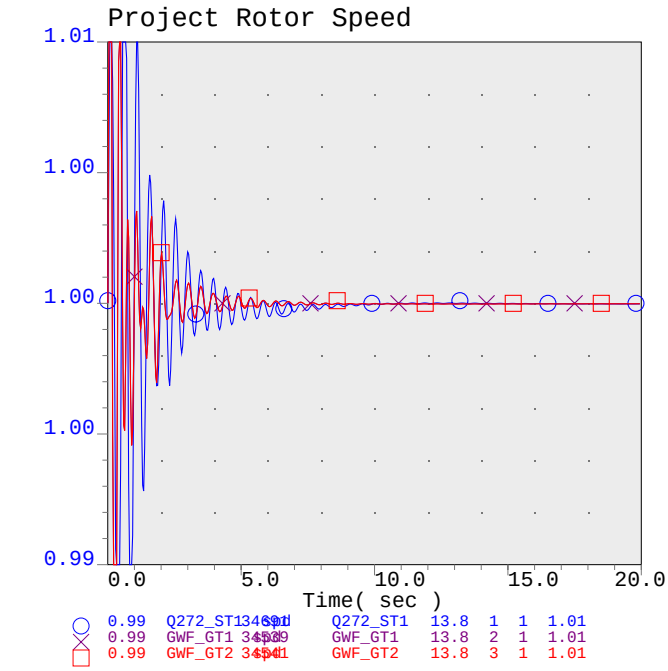

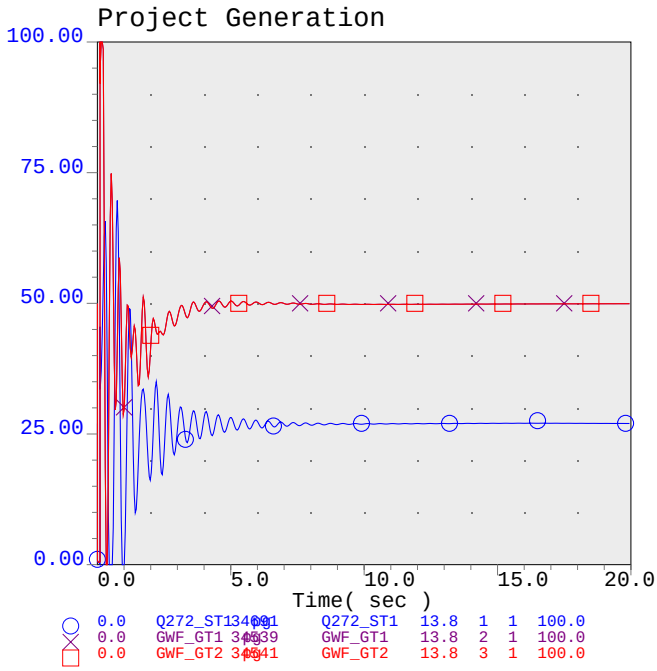

PG&E 2007 CASE SERIES: 2013 San Joaquin Valley Summer Peak Post-Project Case
PATH15= 1955 MW(S-N) PATH26= 4001 MW(N-S) PDCI= 2500 MW(N-S) COI= 4795 MW(N-S)
Q272 150 MW at GWF Henrietta 70 kV IFS - 2013 Summer Peak Post-Project FY
Henrietta 230/70-kV Bk#4

2013sumpk_q272_pst_tr_HenBk#4.chf

.

Wed Oct 08 10:15:29 2008

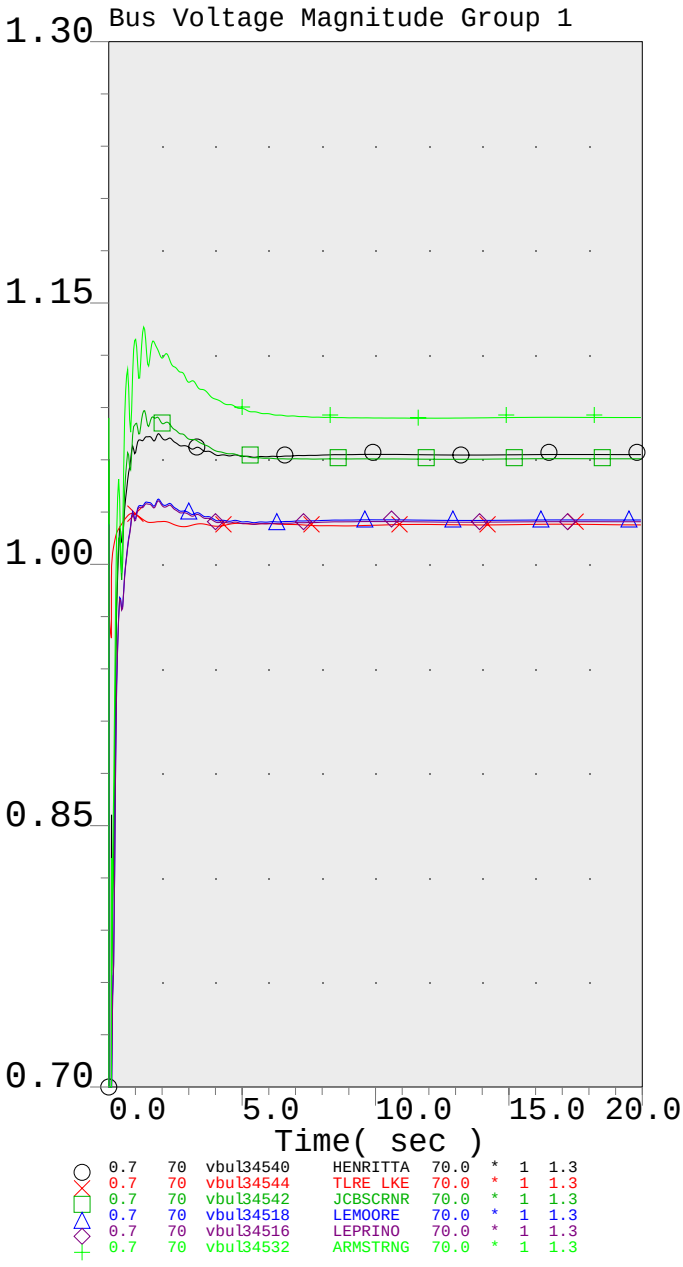

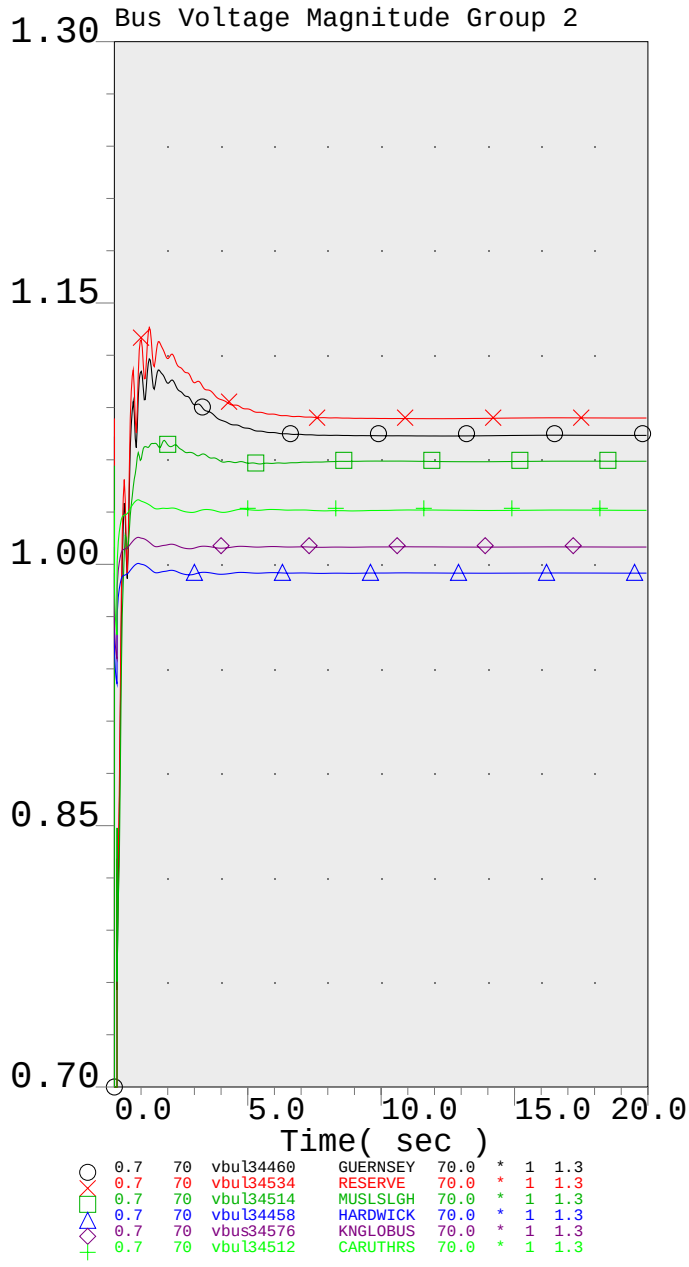

PG&E 2007 CASE SERIES: 2013 San Joaquin Valley Summer Peak Post-Project Case
PATH15= 1955 MW(S-N) PATH26= 4001 MW(N-S) PDCI= 2500 MW(N-S) COI= 4795 MW(N-S)
Q272 150 MW at GWF Henrietta 70 kV IFS - 2013 Summer Peak Post-Project FY
Henrietta 230/70-kV Bk#4

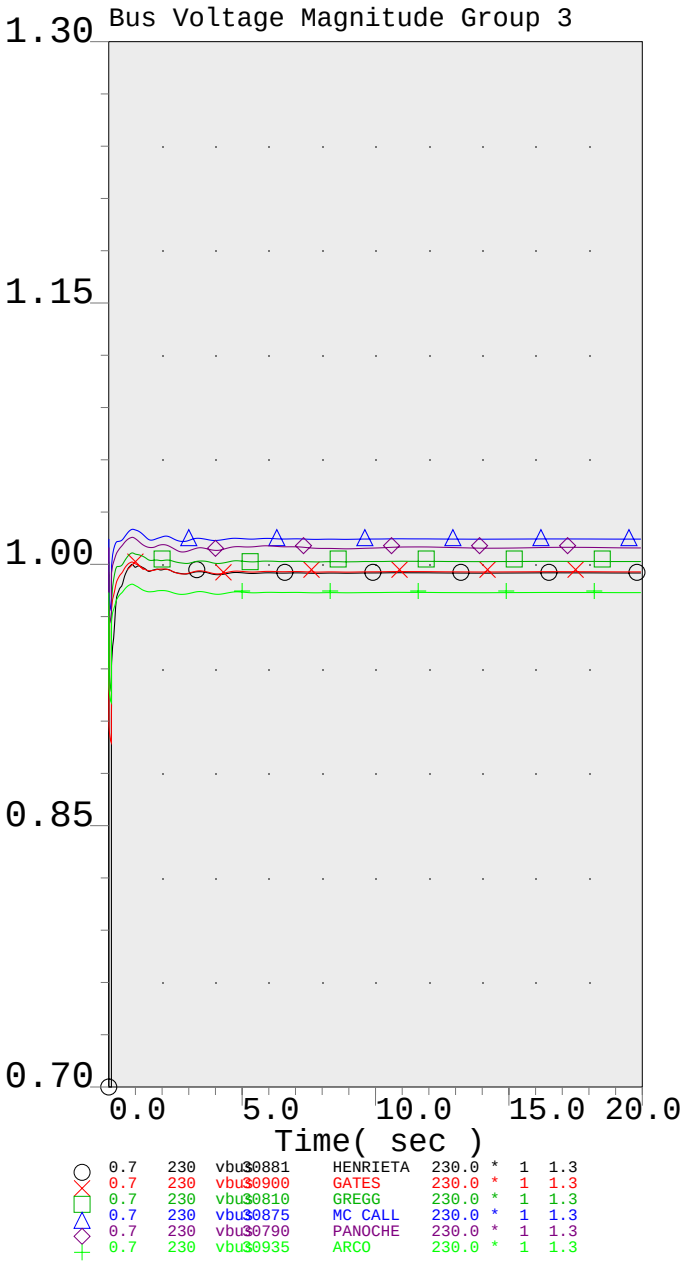

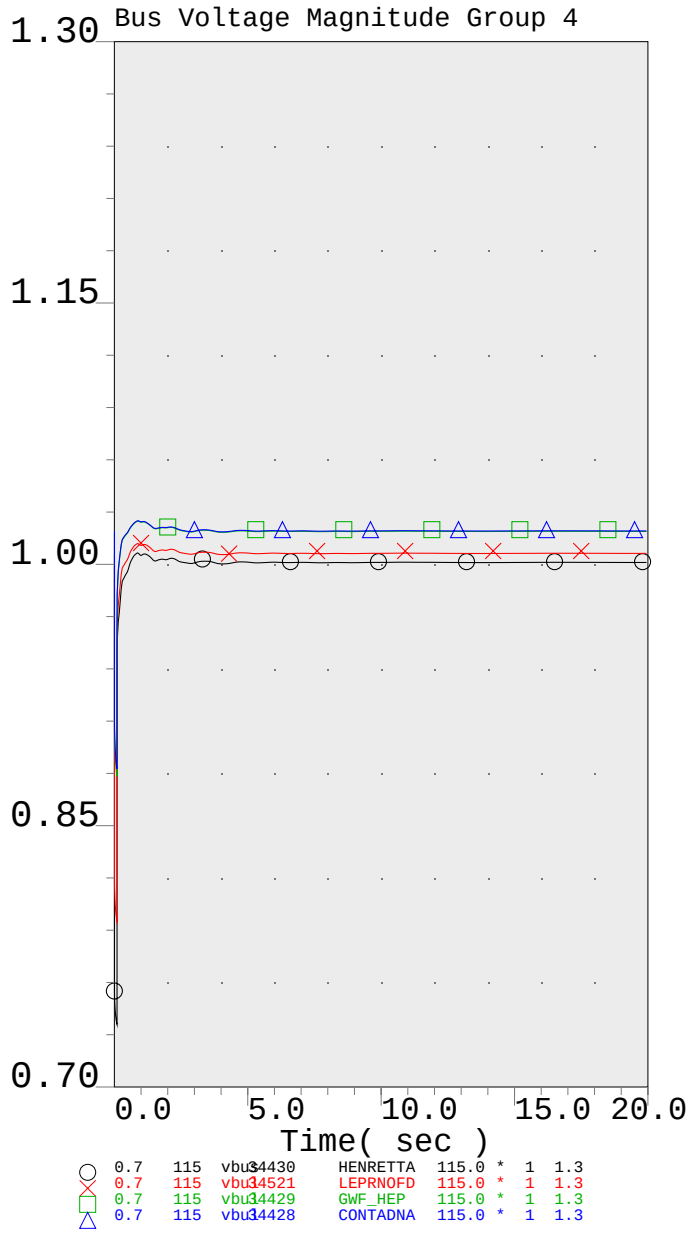

PG&E 2007 CASE SERIES: 2013 San Joaquin Valley Summer Peak Post-Project Case
PATH15= 1955 MW(S-N) PATH26= 4001 MW(N-S) PDCI= 2500 MW(N-S) COI= 4795 MW(N-S)
Q272 150 MW at GWF Henrietta 70 kV IFS - 2013 Summer Peak Post-Project FY
Henrietta 230/70-kV Bk#4

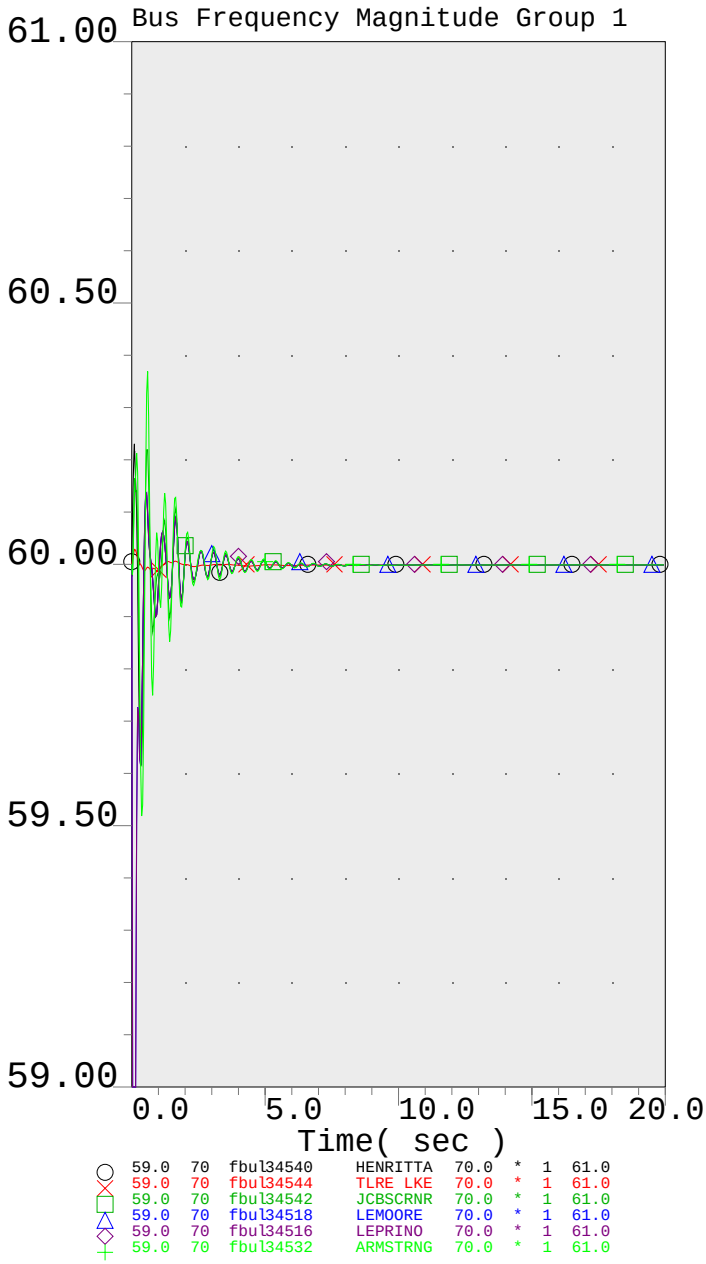

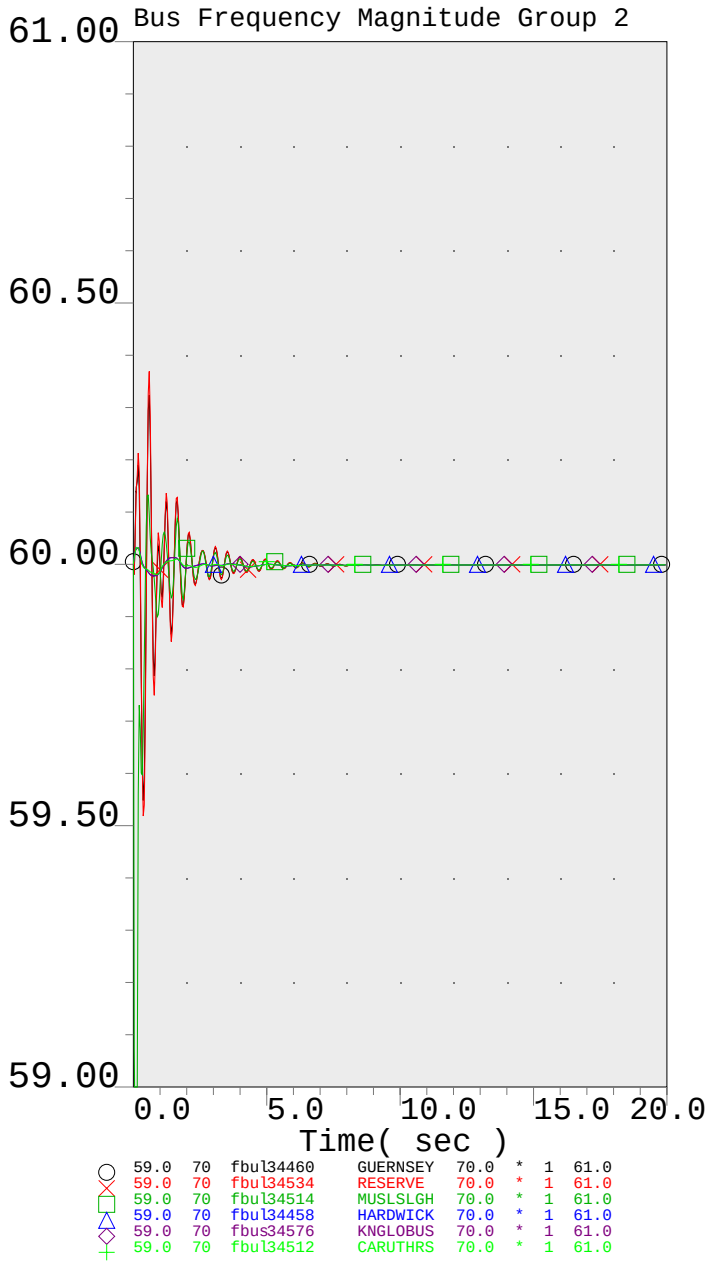

PG&E 2007 CASE SERIES: 2013 San Joaquin Valley Summer Peak Post-Project Case
PATH15= 1955 MW(S-N) PATH26= 4001 MW(N-S) PDCI= 2500 MW(N-S) COI= 4795 MW(N-S)
Q272 150 MW at GWF Henrietta 70 kV IFS - 2013 Summer Peak Post-Project FY
Henrietta 230/70-kV Bk#4

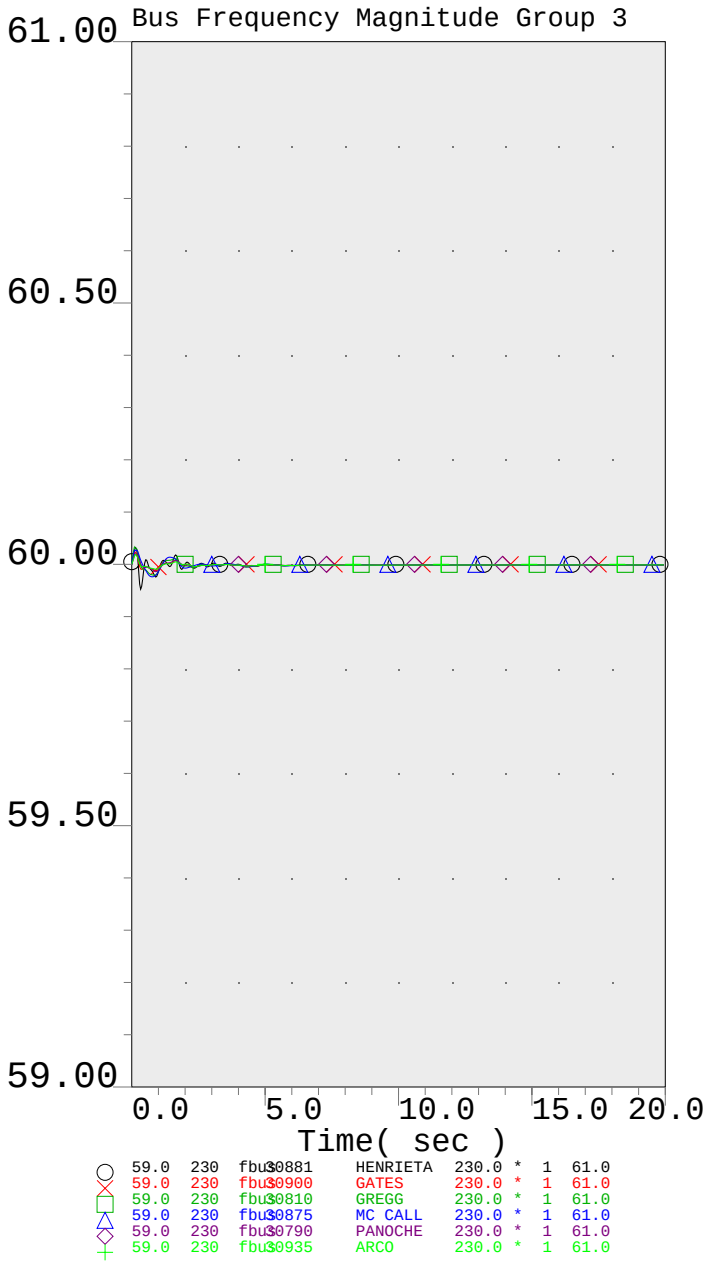

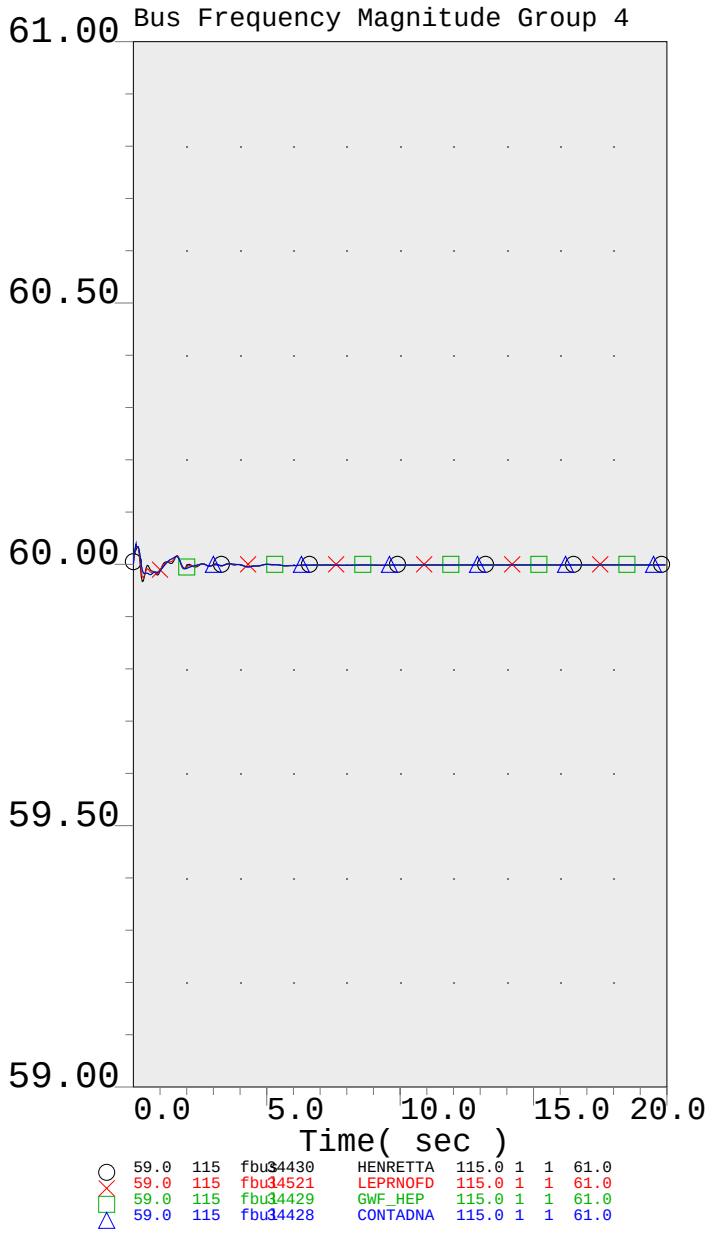

PG&E 2007 CASE SERIES: 2013 San Joaquin Valley Summer Peak Post-Project Case
PATH15= 1955 MW(S-N) PATH26= 4001 MW(N-S) PDCI= 2500 MW(N-S) COI= 4795 MW(N-S)
Q272 150 MW at GWF Henrietta 70 kV IFS - 2013 Summer Peak Post-Project FY
Henrietta 230/70-kV Bk#4

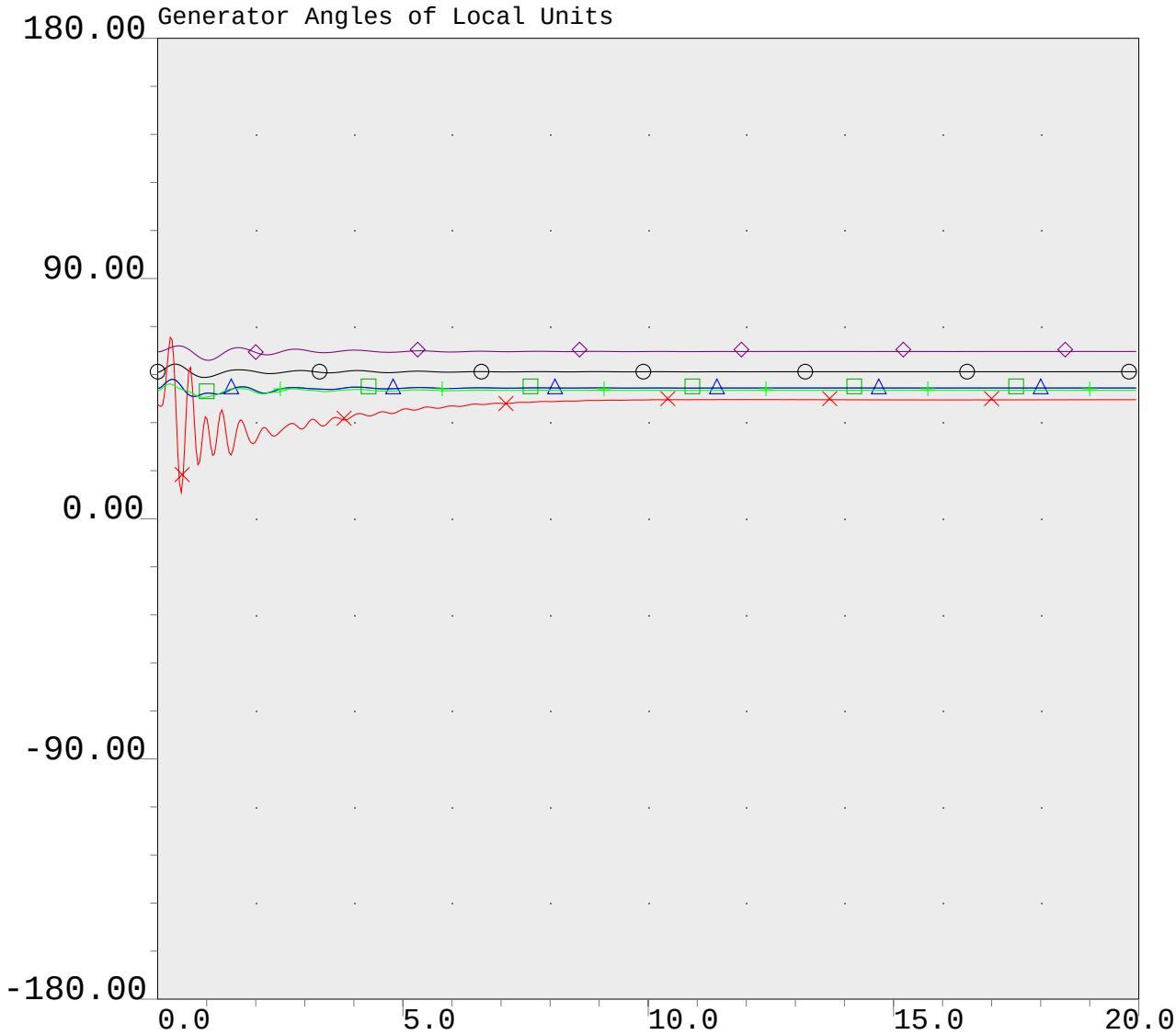

○	-180.0	#1 ang	34600	HELMS 1	18.0	*	1	180.0
×	-180.0	GWF-PWR ang	34650	GWF-PWR.	13.8	*	1	180.0
□	-180.0	1 ang	34431	GWF_HEP1	13.8	*	1	180.0
△	-180.0	2 ang	34433	GWF_HEP2	13.8	*	1	180.0
◇	-180.0	GT1 ang	34661	P0418GT1	13.8	*	1	180.0
+	-180.0	Cogen ang	34642	KINGSBUR	9.1	*	1	180.0

PG&E 2007 CASE SERIES: 2013 San Joaquin Valley Summer Peak Post-Project Case
PATH15= 1955 MW(S-N) PATH26= 4001 MW(N-S) PDCI= 2500 MW(N-S) COI= 4795 MW(N-S)
Q272 150 MW at GWF Henrietta 70 kV IFS - 2013 Summer Peak Post-Project FY
Henrietta 230/70-kV Bk#4

Three-phase fault on the Gates-Gregg and Gates-McCall 230-kV lines at the Henrietta 230-kV bus with normal clearing time followed by the loss of the Gates-Gregg and Gates-McCall 230-kV lines.

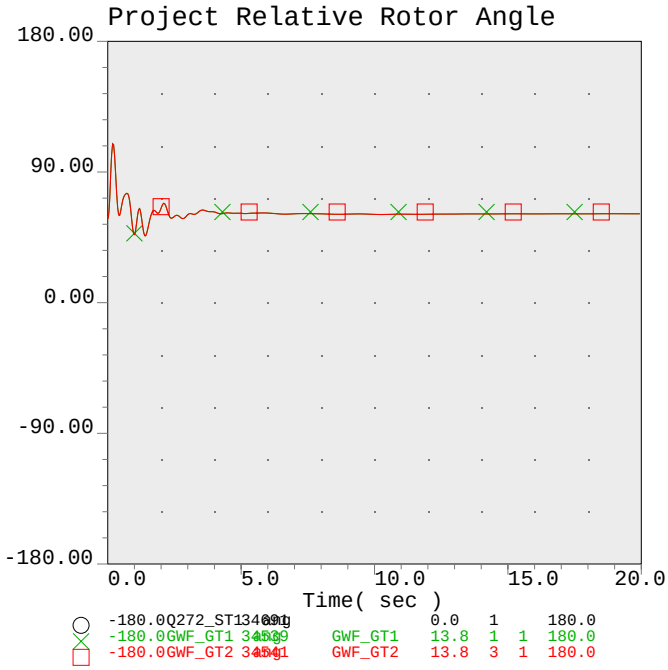

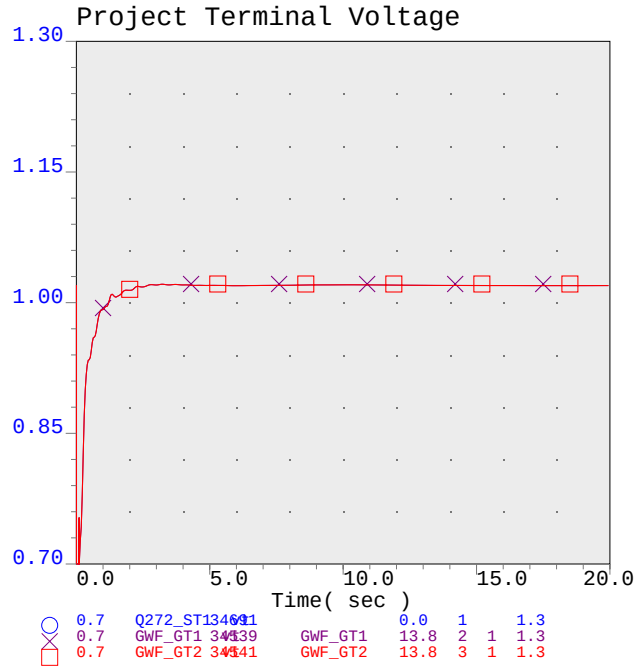

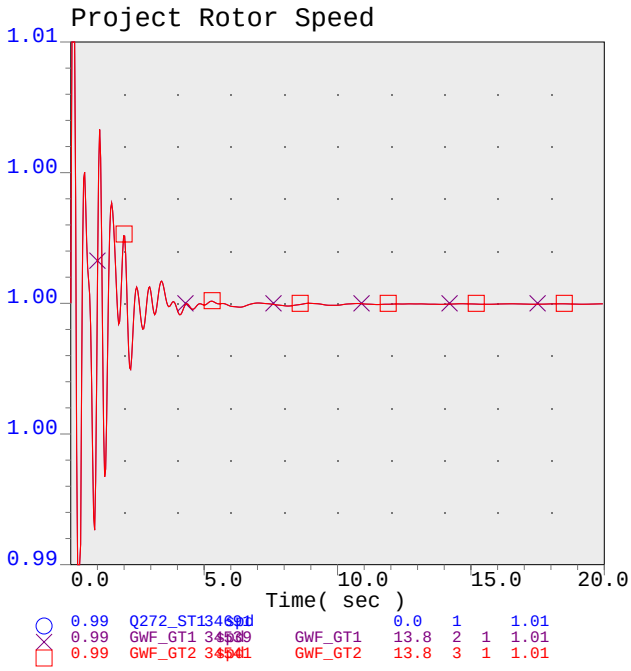

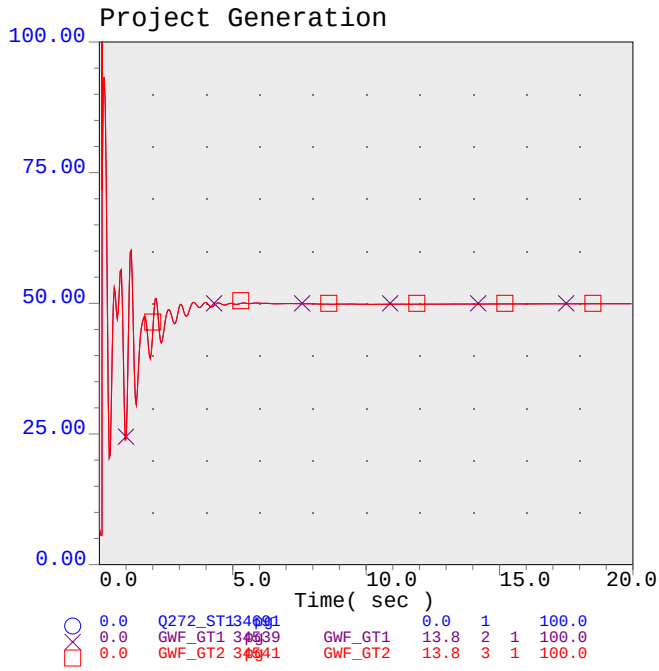

PG&E 2007 CASE SERIES: 2013 San Joaquin Valley Summer Peak Pre-Project Case
PATH15= 1964 MW(S-N) PATH26= 3996 MW(N-S) PDCI= 2500 MW(N-S) COI= 4790 MW(N-S)
Q272 150 MW GWF Henrietta 70 kV IFS - 2013 Summer Peak Pre-Project FY
Henrietta 230-kV Bus Outage

2013sumpk_q272_pre_tr_gts-gregg_mccall.chf

.

Fri Oct 03 14:35:58 2008

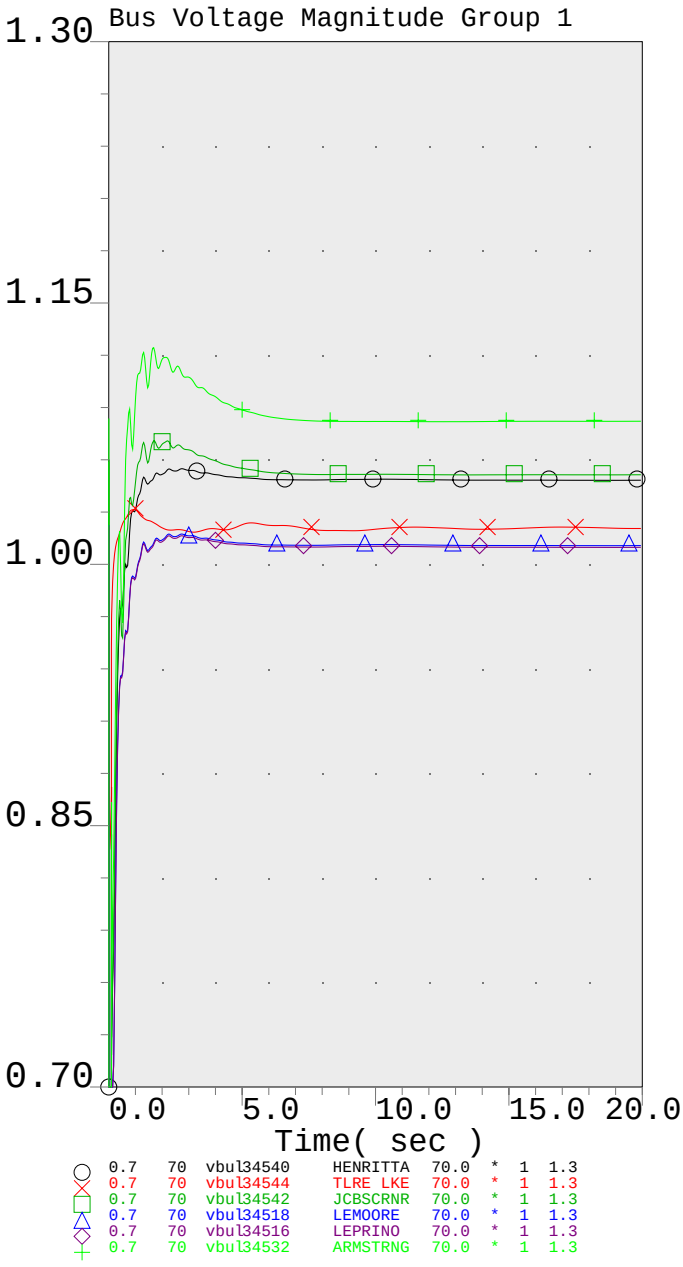

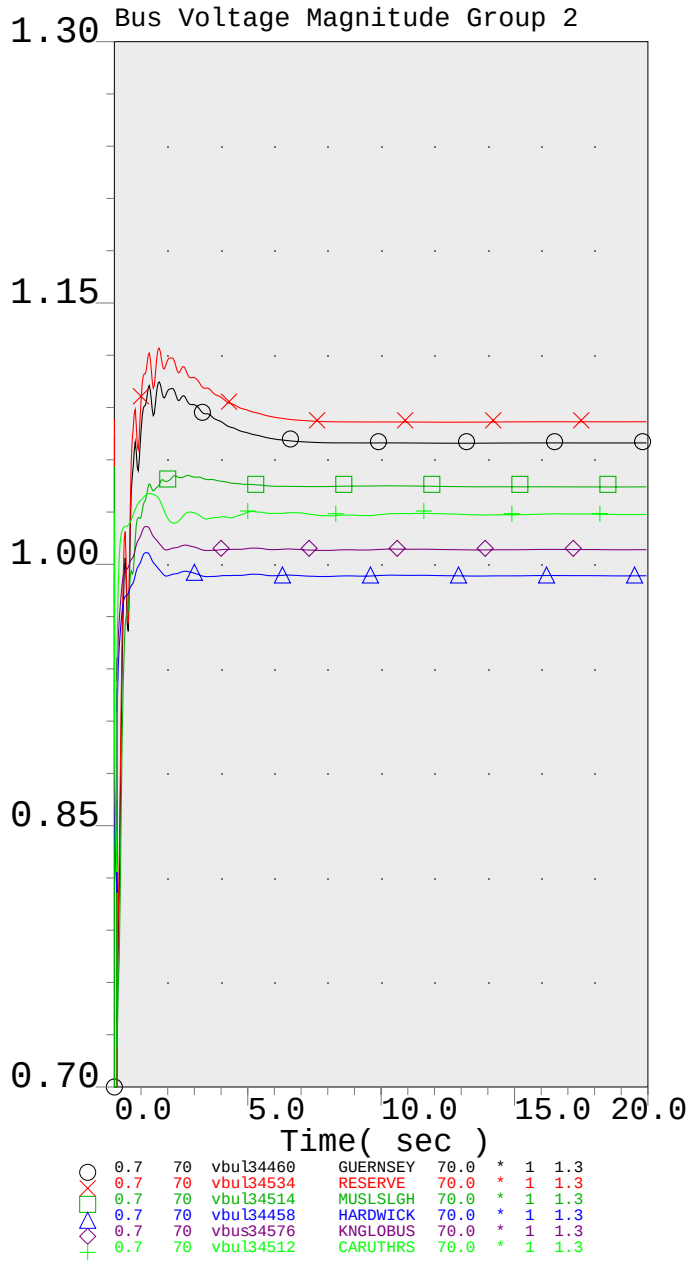

PG&E 2007 CASE SERIES: 2013 San Joaquin Valley Summer Peak Pre-Project Case
PATH15= 1964 MW(S-N) PATH26= 3996 MW(N-S) PDCI= 2500 MW(N-S) COI= 4790 MW(N-S)
Q272 150 MW GWF Henrietta 70 kV IFS - 2013 Summer Peak Pre-Project FY
Henrietta 230-kV Bus Outage

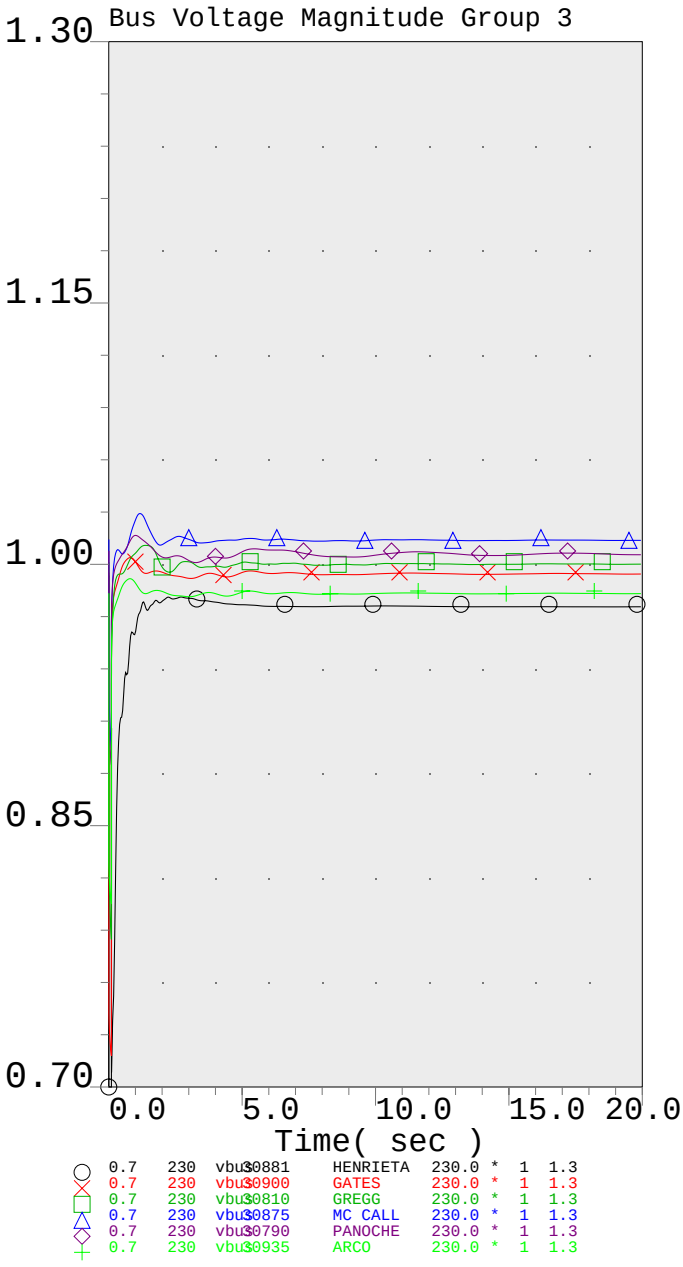

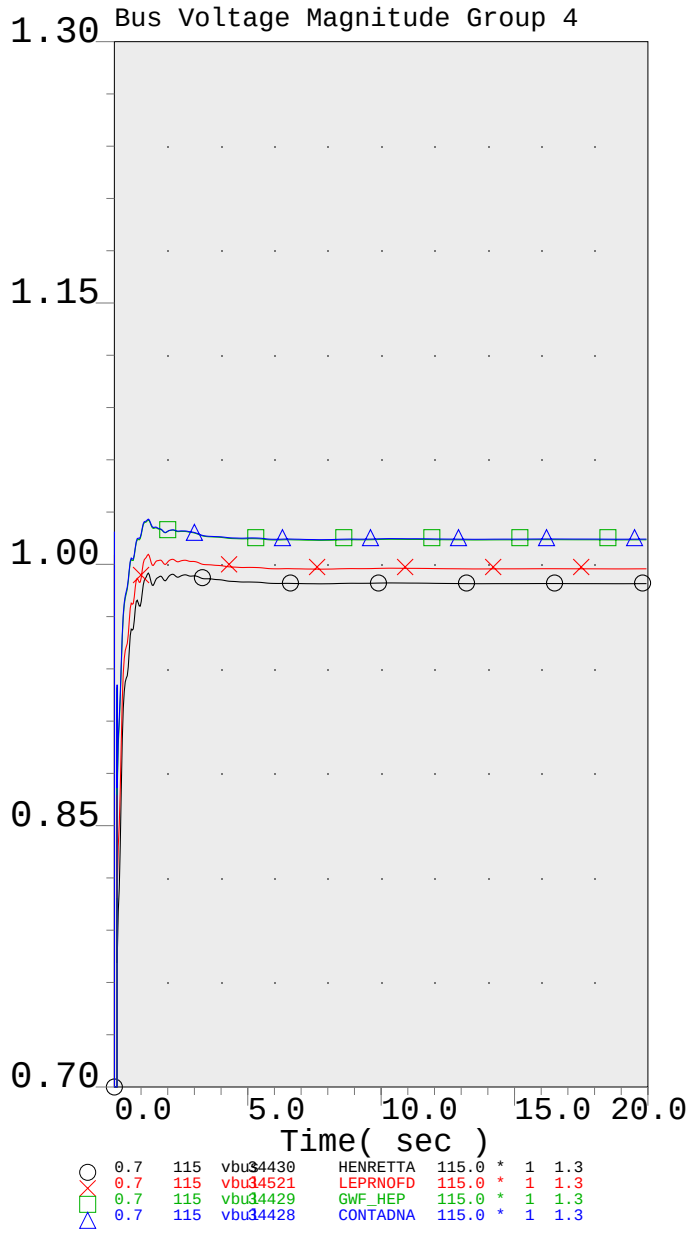

PG&E 2007 CASE SERIES: 2013 San Joaquin Valley Summer Peak Pre-Project Case
PATH15= 1964 MW(S-N) PATH26= 3996 MW(N-S) PDCI= 2500 MW(N-S) COI= 4790 MW(N-S)
Q272 150 MW GWF Henrietta 70 kV IFS - 2013 Summer Peak Pre-Project FY
Henrietta 230-kV Bus Outage

PG&E 2007 CASE SERIES: 2013 San Joaquin Valley Summer Peak Pre-Project Case
PATH15= 1964 MW(S-N) PATH26= 3996 MW(N-S) PDCI= 2500 MW(N-S) COI= 4790 MW(N-S)
Q272 150 MW GWF Henrietta 70 kV IFS - 2013 Summer Peak Pre-Project FY
Henrietta 230-kV Bus Outage

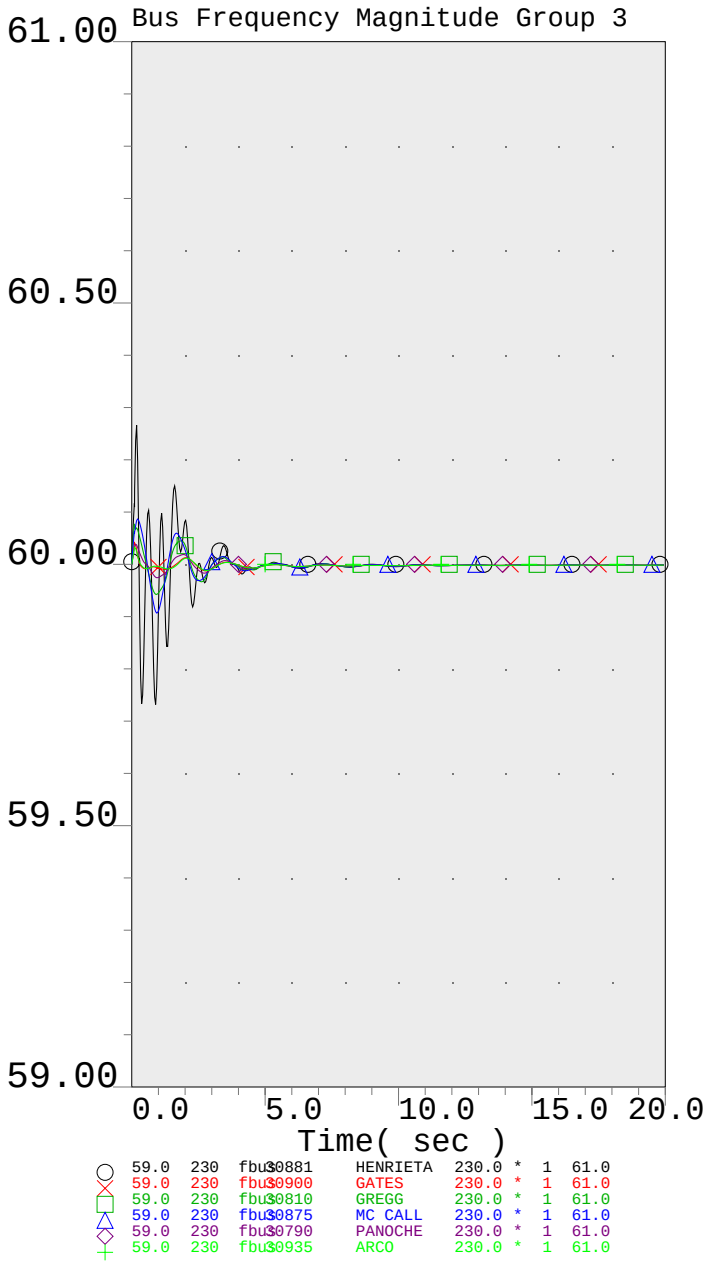

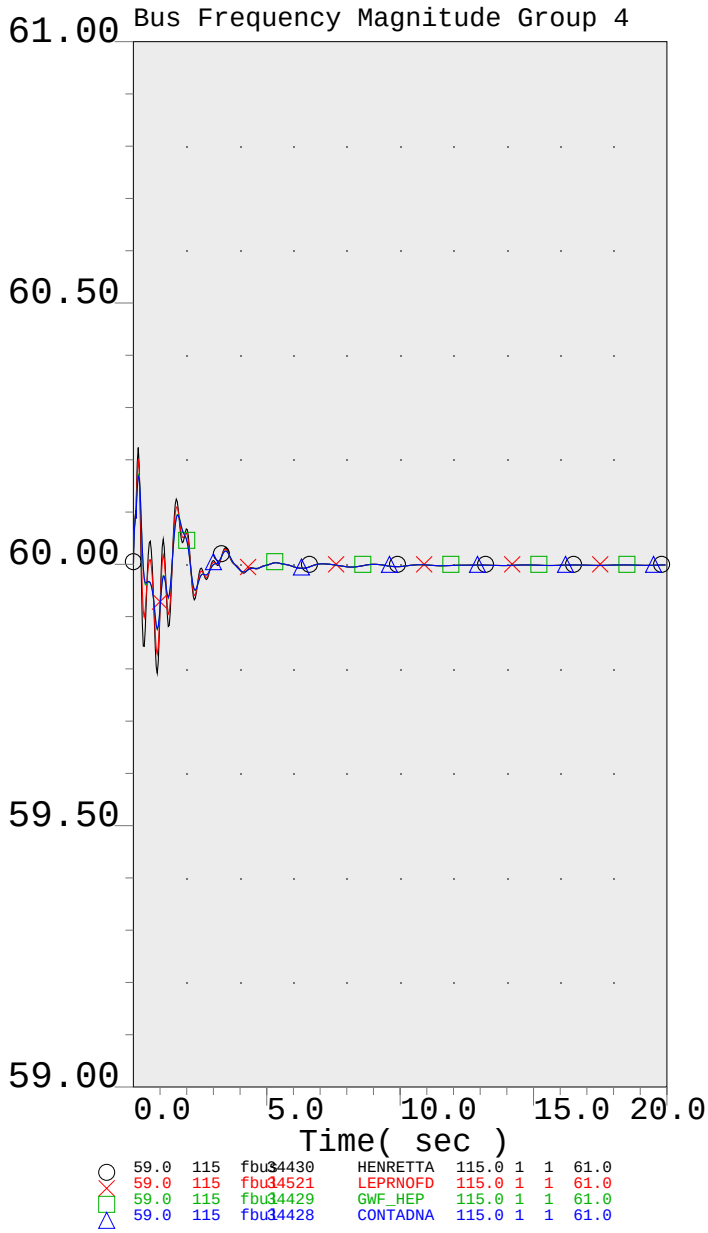

PG&E 2007 CASE SERIES: 2013 San Joaquin Valley Summer Peak Pre-Project Case
PATH15= 1964 MW(S-N) PATH26= 3996 MW(N-S) PDCI= 2500 MW(N-S) COI= 4790 MW(N-S)
Q272 150 MW GWF Henrietta 70 kV IFS - 2013 Summer Peak Pre-Project FY
Henrietta 230-kV Bus Outage

2013sumpk_q272_pre_tr_gts-gregg_mccall.chf

.

Fri Oct 03 14:35:58 2008

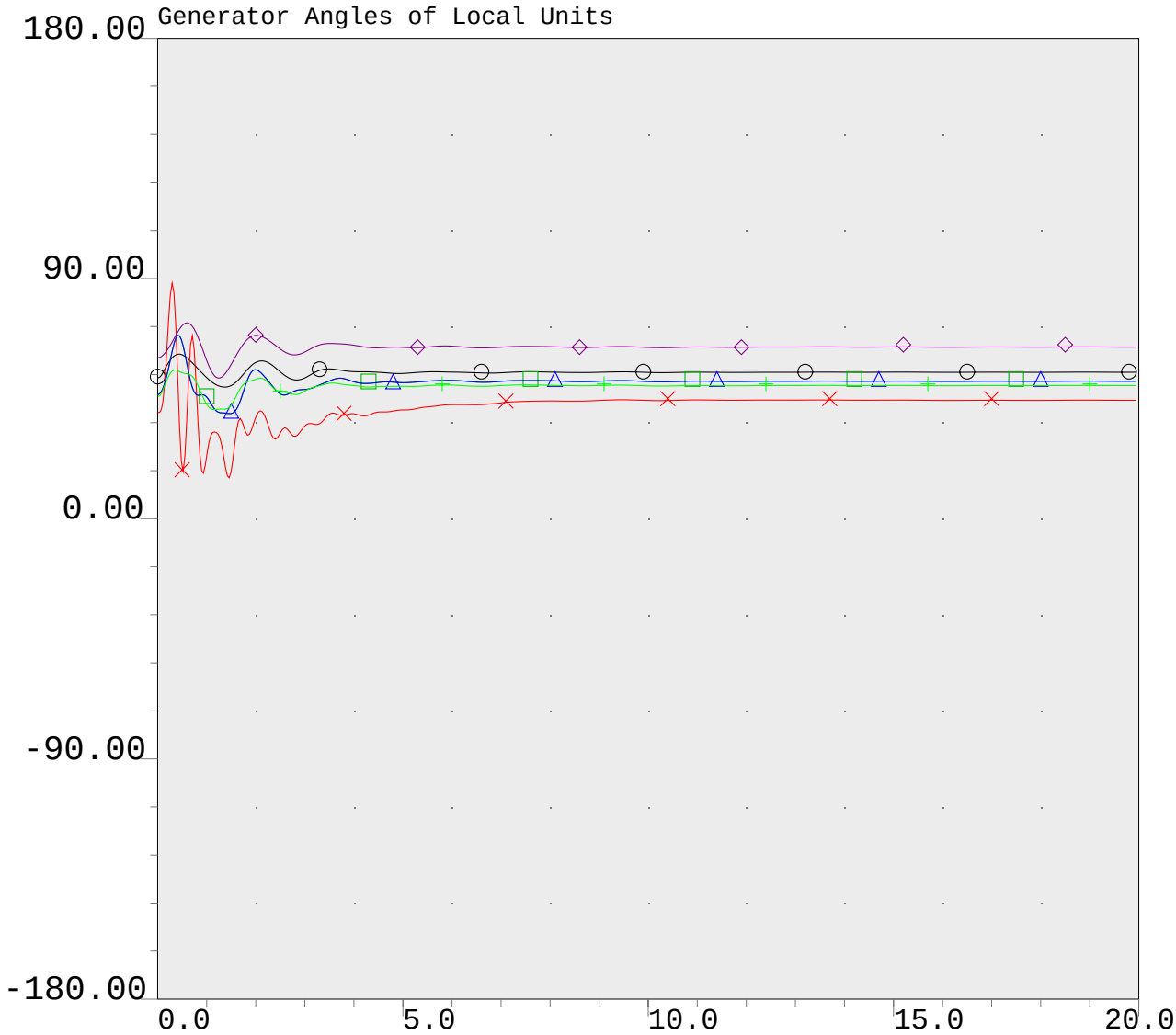

○	-180.0	#1 ang	34600	HELMS 1	18.0	*	1	180.0
×	-180.0	GWF-PWR ang	34650	GWF-PWR.	13.8	*	1	180.0
□	-180.0	1 ang	34431	GWF_HEP1	13.8	*	1	180.0
△	-180.0	2 ang	34433	GWF_HEP2	13.8	*	1	180.0
◇	-180.0	GT1 ang	34661	P0418GT1	13.8	*	1	180.0
+	-180.0	Cogen ang	34642	KINGSBUR	9.1	*	1	180.0

PG&E 2007 CASE SERIES: 2013 San Joaquin Valley Summer Peak Pre-Project Case
PATH15= 1964 MW(S-N) PATH26= 3996 MW(N-S) PDCI= 2500 MW(N-S) COI= 4790 MW(N-S)
Q272 150 MW GWF Henrietta 70 kV IFS - 2013 Summer Peak Pre-Project FY
Henrietta 230-kV Bus Outage

Appendix F
Governor Machine Dynamic Data

Table of Content

Machine Data for ST Unit 1
Excitation Data for ST Unit: 2
Governor Data for ST Unit 3
PSS Data for ST Unit 5

Machine Data for ST Unit: Model: genrou

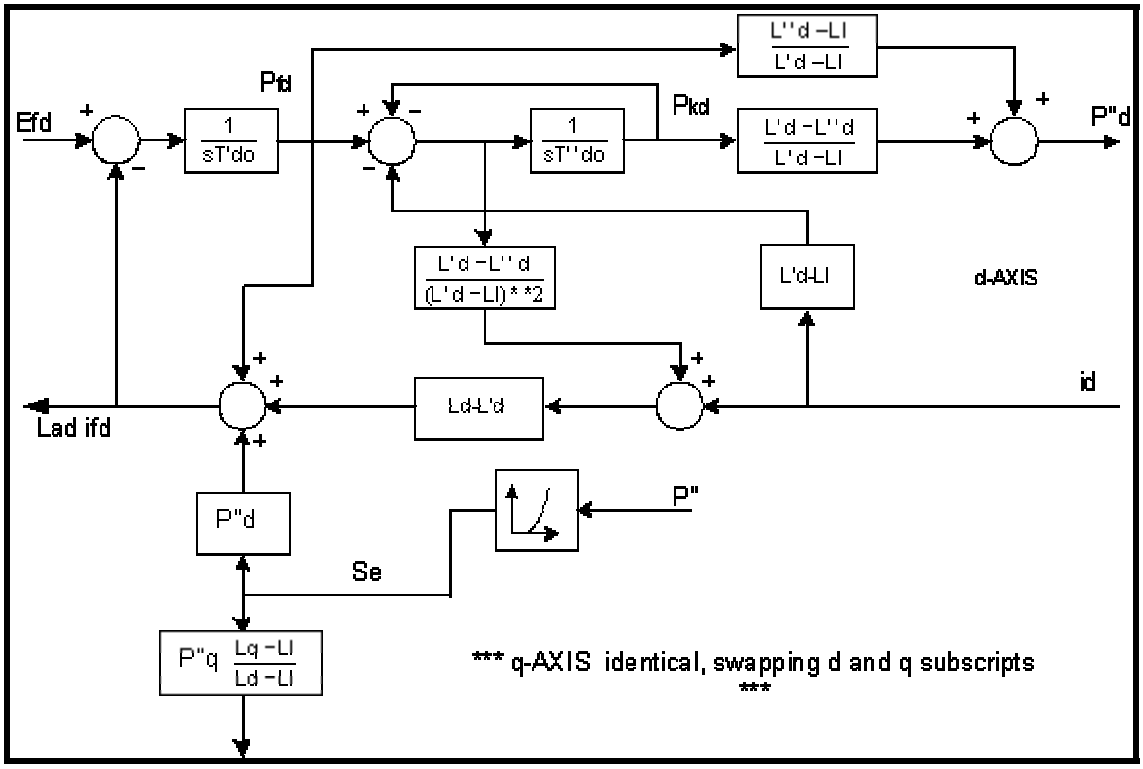

MVA	S Base	31.93
Tpdo	D-axis transient rotor time constant	7
Tppdo	D-axis sub-transient rotor time constant	0.03
Tpqo	Q-axis transient rotor time constant	0.75
Tppqo	Q-axis sub-transient rotor time constant	0.05
H	Inertia constant, sec	3
D	Damping factor, pu	0
Ld	D-axis synchronous reactance	2.1
Lq	Q-axis synchronous reactance	2
Lpd	D-axis transient reactance	0.2
Lpq	Q-axis transient reactance	0.5
Lppd	D-axis transient reactance	0.18
Ll	Stator leakage reactance, pu	0.15
S1	Saturation factor at 1 pu flux	0.05
S12	Saturation factor at 1.2 pu flux	0.3
Ra	Stator resistance, pu	0
Rcomp	Compounding resistance for voltage control, pu	0
Xcomp	Compounding reactance for voltage control, pu	0

Excitation Data for ST Unit: Model: exac1

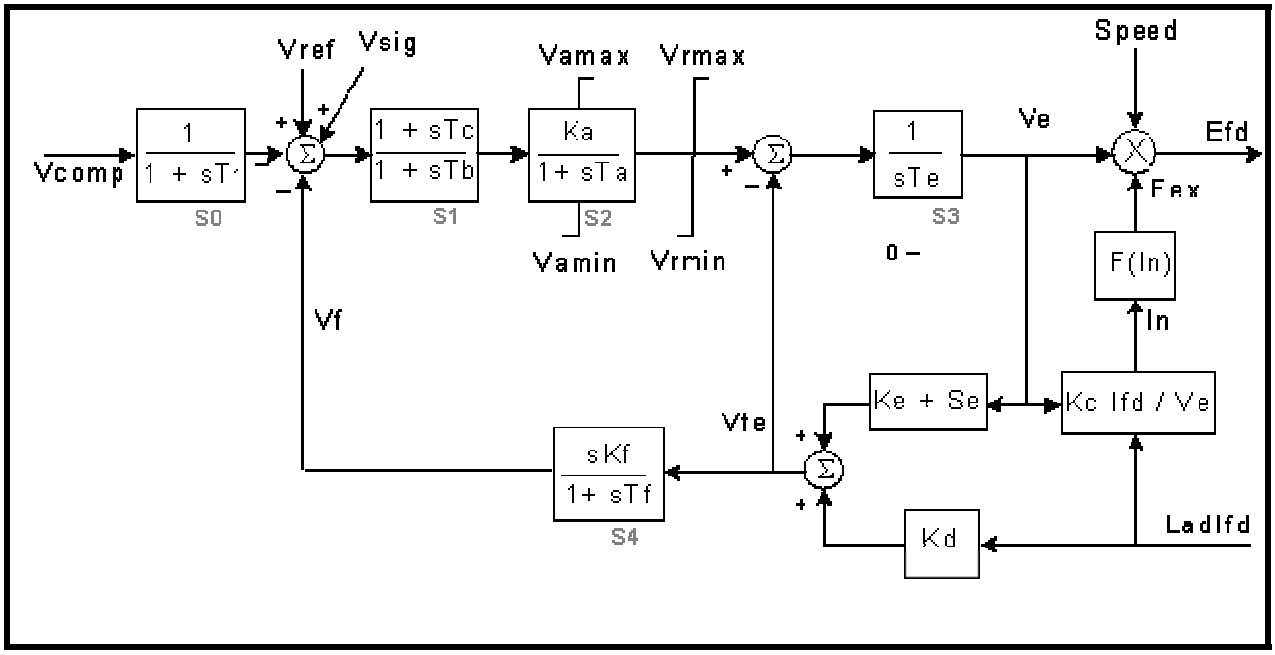

Tr	Filter time constant, sec.	0
Tb	Time constant, sec.	1
Tc	Time constant, sec.	1
Ka	Voltage regulator gain	200
Ta	Time constant, sec.	0.1
Vamax	Maximum control element output, p.u.	7.5
Vamin	Minimum control element output, p.u.	-7.5
Te	Exciter time constant, sec.	1
Kf	Rate feedback gain, p.u.	0.03
Tf	Rate feedback time constant, sec	1
Kc	Rectifier regulation factor, p.u.	0.5
Kd	Exciter internal reactance, p.u.	0.3
Ke	Exciter field resistance constant, p.u.	1
E1	Field voltage value, 1	3
S(E1)	Saturation factor at E1	0.03
E2	Field voltage value, 2	4
S(E2)	Saturation factor at E2	0.1
Vrmax	Voltage regulator maximum output, p.u.	7.5
Vrmin	Voltage regulator minimum output, p.u.	-7.5

Governor Data for ST Unit: Model: ggov1

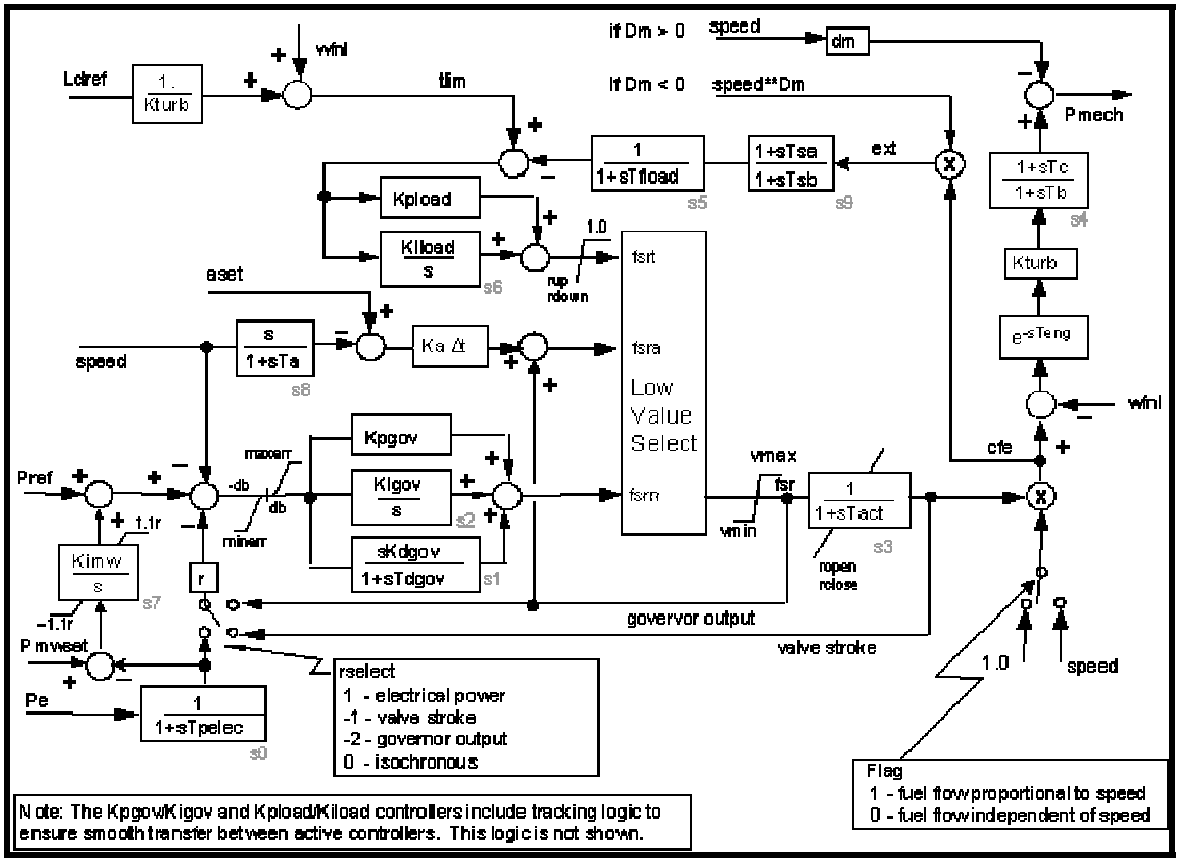

r	Permanent droop, p.u.	0.04
rselect	Feedback signal for droop	1
Tpelec	Electrical power transducer time constant, sec.	1.0
maxerr	Maximum value for speed error signal	0.05
minerr	Minimum value for speed error signal	-0.05
Kpgov	Governor proportional gain	10.0
Kigov	Governor integral gain	2.0
Kdgov	Governor derivative gain	0.0
Tdgov	Governor derivative controller time constant	1.0
vmax	Maximum valve position limit	1.0
vmin	Minimum valve position limit	0.15
Tact	Actuator time constant	0.5
Kturb	Turbine gain	1.5
wfnl	No load fuel flow, p.u	0.2
Tb	Turbine lag time constant	0.5

Tc	Turbine lead time constant	0.0
Flag	Switch for fuel source characteristic	1.0
Teng	Transport lag time constant for diesel engine	0.0
Tfload	Load Limiter time constant	3.0
Kpload	Load limiter proportional gain for PI controller	2.0
Kiload	Load limiter integral gain for PI controller	0.67
Ldref	Load limiter reference value p.u.	1.0
Dm	Speed sensitivity coefficient, p.u.	0.0
ropen	Maximum valve opening rate, p.u./sec.	.10
rclose	Minimum valve closing rate, p.u./sec.	-0.1
Kimw	Power controller (reset) gain	0.002
Pmwset	Power controller setpoint, MW	80.0
aset	Acceleration limiter setpoint, p.u./sec.	0.01
Ka	Acceleration limiter Gain	10.0
Ta	Acceleration limiter time constant, sec.	0.1
db	Speed governor dead band	0.0
Tsa	Temperature detection lead time constant, sec.	4.0
Tsb	Temperature detection lag time constant, sec.	5.0
rup	Maximum rate of load limit increase	99.0
rdown	Maximum rate of load limit decrease	-99.0

PSS Data for ST Unit: Model: pss2a

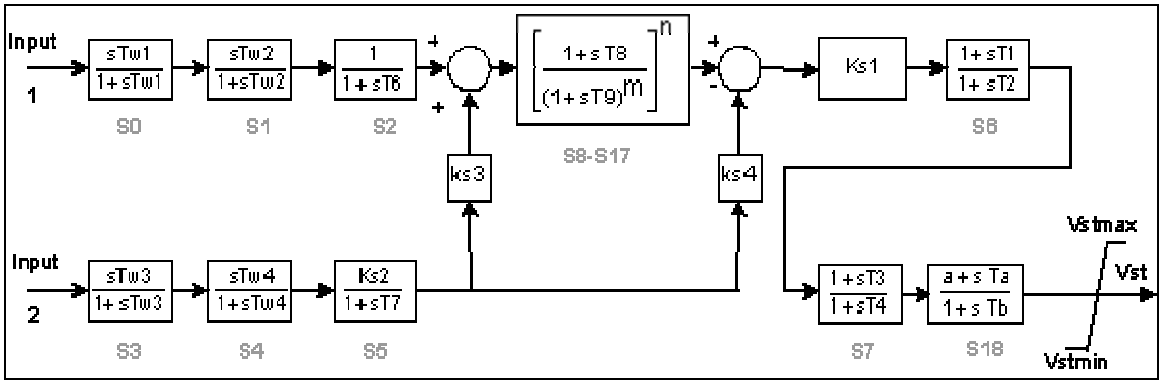

J1	Input signal #1 code	1
K1	Input signal #1 remote bus number	0
J2	Input signal #2 code	3
K2	Input signal #2 remote bus number	0
Tw1	First washout on signal #1, sec.	2
Tw2	Second washout on signal #1, sec.	2
Tw3	First washout on signal #2, sec.	2
Tw4	Second washout on signal #2, sec.	0
T6	Time constant on signal #1, sec.	0
T7	Time constant on signal #2, sec.	2
Ks2	Gain on signal #2	0.2
Ks3	Gain on signal #2	1
Ks4	Gain on signal #2	1
T8	Lead of ramp tracking filter	0.5
T9	Lag of ramp tracking filter	0.1
n	Order of ramp tracking filter	1
m	Order of ramp tracking filter	5
Ks1	Stabilizer gain	10
T1	Lead/lag time constant, sec.	0.25
T2	Lead/lag time constant, sec.	0.04
T3	Lead/lag time constant, sec.	0.20
T4	Lead/lag time constant, sec.	0.03
Vstmax	Stabilizer output max limit, p.u.	0.1
Vstmin	Stabilizer output min limit, p.u.	-0.1