Procter & Gamble Cogeneration Project

Application for Certification
Volume 1

September 1993

Submitted to

California Energy Commission

Submitted by

Sacramento Cogeneration Authority

Contents

Volume 1

List of Acronyms

1.0 Executive Summary 1-1
1.1 Project Description 1-1
1.2 Project Need 1-4
1.3 Project Reliability 1-4
1.4 Environmental Considerations 1-5
1.5 Conclusion 1-7

2.0 Project Need 2-1
2.1 Introduction 2-1
2.2 Project Objectives 2-1
2.3 Need for the Proposed Facility 2-2
2.4 References 2-3

3.0 Project Description and Engineering 3-1
3.1 Introduction 3-1
3.2 Project Location 3-9
3.3 Site Description 3-9
3.4 Combustion Turbine Generators 3-17
3.5 Heat Recovery Steam Generators 3-20
3.6 Steam Turbine Generator 3-21
3.7 Major Electrical Equipment 3-22
3.8 Fuel Gas System 3-25
3.9 Water Supply and Treatment Facilities 3-26
3.10 Wastewater Collection and Treatment Facilities 3-34
3.11 Waste Disposal and Management 3-37
3.12 Emissions Control and Monitoring Equipment 3-40
3.13 Auxiliary Systems 3-43
3.14 Roads 3-48
3.15 Transmission Line Engineering 3-48
3.16 Gas Pipeline 3-88
3.17 Engineering Design Criteria 3-88
3.18 Facility Construction 3-90

Contents (Continued)

Volume 1 (Continued)

3.19 Facility Operation and Maintenance 3-96
3.20 Schedule 3-102

4.0 Project Schedule 4-1
4.1 Construction Schedule 4-1
4.2 Estimated Operating Life and Facility Closure 4-1

5.0 Reliability 5-1
5.1 Plant Availability 5-1
5.2 Equipment Redundancy 5-3
5.3 Fuel Availability 5-9
5.4 Water Availability 5-10
5.5 Project Quality Control 5-10

6.0 Environmental Setting, Impacts, and Mitigation 6.1-1
6.1 Air Quality (To Be Issued Separately) 6.1-1
6.2 Geology and Soils 6.2-1
6.3 Water Resources 6.3-1
6.4 Biological Resources 6.4-1

Tables

Table 3.3-1 Active and Potentially Active Faults Within a 60 Mile Radius of the Project Boundaries 3-16
Table 3.9-1 Estimated Average Daily Water Requirements--Cogeneration Facilities 3-29
Table 3.9-2 Estimated Peak Daily Water Requirements--Cogeneration Facilities 3-30
Table 3.9.3 Cycle Heat Rejection Design Criteria 3-33
Table 3.10-1 Wastewater Quality--Discharge to City Sewer 3-35
Table 3.11-1 Power Project Plant Chemicals 3-38
Table 3.15-1 Existing Transmission Facilities Information 3-53

Table 3.15-2	1992 Construction Cost Summary For SMUD Interconnection Alternatives--Two Plant Terminations	3-63
Table 3.15-3	Construction Cost to Interconnect With PG&E or WAPA	3-64
Table 3.15-4	PG&E and WAPA Wheeling Charges	3-65
Table 3.15-5	Net Change in 1996 SMUD System Capacity and Energy Losses	3-67
Table 3.15-6	Loss Comparisons of Alternatives	3-68
Table 3.15-7	1996 Capacity and Energy Losses For Conductor Sizing	3-80
Table 3.18-1	Procter & Gamble Cogeneration Project Equipment Onsite Monthly	3-93
Table 3.18-2	Rail Delivery of Major Equipment Components for Procter & Gamble Cogeneration Project	3-94
Table 3.18-3	Procter & Gamble Cogeneration Project Truck Deliveries Per Month	3-95
Table 3.18-4	Number of Craft Persons Per Month	3-97
Table 3.19-1	Projected Full-Time Operating and Maintenance Staff for Procter & Gamble Cogeneration Project	3-99
Table 3.19-2	Projected Hours of Operation for Procter & Gamble Cogeneration Project	3-100
Table 5.2-1	Major Equipment Redundancy Proctor & Gamble Cogeneration Project	5-4
Table 5.3-1	30 Year Forecast SMUD Delivered Weighted Average Cost of Gas	5-11
Table 6.2-1		6.2-6
Table 6.3-1	Source of Water for Local Water Agencies in Sacramento County	6.3-2
Table 6.3-2	Water Quality Data Averages City of Sacramento Water Treatment Plants and Well System 1991-1992	6.3-10
Table 6.4-1	Plants Observed on the Procter & Gamble Cogeneration Project Study Area, Sacramento, California	6.4-8
Table 6.4-2	Plant Species of Special Concern Occurring in Sacramento County, California	6.4-18

Table 6.4-3 Sensitive Terrestrial Wildlife Species Potentially Occurring in the Procter & Gamble Cogeneration Project Area, Sacramento County, California 6.4-20

Figures

Figure 1-1 Representative View of the Project Site 1-3
Figure 3.0-1 Combined Cycle Diagram 3-2
Figure 3.0-2 Simple Cycle Diagram 3-3
Figure 3.0-3 Cogeneration Process Diagram 3-4
Figure 3.1-1 Combined Cycle Baseload Operation 3-6
Figure 3.1-2 Combined Cycle Peak Load Operation 3-7
Figure 3.1-3 Simple Cycle Baseload Operation 3-8
Figure 3.2-1 Regional Location Map 3-10
Figure 3.3-1 Site Arrangement 3-12
Figure 3.3-2 Typical Elevations 3-13
Figure 3.3-3 Site Grading and Drainage 3-14
Figure 3.7-1 Overall One-Line Diagram 3-23
Figure 3.9-1 Daily Average Water Mass Balance 3-27
Figure 3.9-2 Peak Average Water Mass Balance 3-28
Figure 3.15-1 Transmission Routing Existing Facilities 3-49
Figure 3.15-2 SMUD's Existing Hedge Substation 3-50
Figure 3.15-3 SMUD's Existing Hurley Substation 3-51
Figure 3.15-4 Existing Tower Configuration Hedge/Hurley 230 kV Line and East City/Hedge 115 kV Line 3-52
Figure 3.15-5 Transmission Routing 115 kV Alternatives 3-54
Figure 3.15-6 Transmission Routing 230 kV Alternatives 3-55
Figure 3.15-7 SMUD Transmission System With No Project Generation 3-69
Figure 3.15-8 SMUD Transmission System With Project Generating 177 MW 3-70
Figure 3.15-9 SMUD Transmission System During Construction of Project Interconnection 3-71
Figure 3.15-10 Existing Transmission Facilities and Proposed Interconnection Route 3-74

Figure 3.15-11 Transmission Line Schedule 3-75
Figure 3.15-12 Procter & Gamble Project Interconnection Plan of Service 3-76
Figure 3.15-13 Proposed Pole Configuration Hedge/Hurley 230 kV Loop-In 3-78
Figure 3.15-14 Local Airports 3-82
Figure 3.16-1 SMUD Cogeneration Pipeline Project 3-89
Figure 3.18-1 Total Manpower by Month 3-98
Figure 6.2-1 Fault and Epicenter Map 6.2-2
Figure 6.3-1 Sacramento County Ground Water Contour Map Fall 1991 . . . . . 6.3-6
Figure 6.3-2 Sacramento County 3-D Ground Water Surface Plot Spring 1990 . . . . . 6.3-7
Figure 6.4-1 Representative View of the Project Site 6.4-2
Figure 6.4-2 Plant Communities and Wetlands in the Study Area 6.4-7
Figure 6.4-3 Locations of Fairy Shrimp in the Study Area 6.4-15

Volume 2

6.5 Transportation 6.5-1
6.6 Land Use 6.6-1
6.7 Socioeconomics 6.7-1
6.8 Cultural and Paleontological Resources 6.8-1
6.9 Aesthetics/Visual Resources 6.9-1
6.10 Noise 6.10-1
6.11 Waste Management 6.11-1
6.12 Public Health/Hazardous Material Handling 6.12-1
6.13 Worker Safety 6.13-1

7.0 Financial Impacts 7-1
7.1 Capital Cost Estimate 7-1
7.2 Fuel Costs 7-1
7.3 Operating and Maintenance Costs 7-1

Contents (Continued)

Volume 2 (Continued)

8.0 Alternatives 8-1
8.1 Introduction 8-1
8.2 Alternative Site Evaluation 8-1
8.3 Alternative Plant Configurations 8-5
8.4 Transmission Connection Alternatives 8-7
8.5 Applicable Laws, Ordinances, Regulations, and Standards . 8-7

9.0 List of Preparers 9-1

Tables

Table 6.5-1 Mileage of Maintained Public Roads in the Sacramento MSA (1980, 1985, and 1989) 6.5-2
Table 6.5-2 Segments of Major Highways at or Reaching Capacity in Sacramento County 6.5-5
Table 6.5-3 Interpretation of Level of Service (LOS) Ratings for Various Road Classifications 6.5-16
Table 6.5-4 Existing 1993 Level of Service (LOS) at Selected Intersections Along Primary Commuter Routes 6.5-18
Table 6.5-5 Expected Equipment Deliveries by Rail to the Procter & Gamble Cogeneration Site During Construction 6.5-23
Table 6.5-6 Peak Hour Level of Service Under Baseline and Project Conditions at Selected Locations During Peak Construction 6.5-27
Table 6.5-7 Projected Level of Service Under Baseline and Project Conditions at Selected Locations During Operation 6.5-31
Table 6.6-1 Zoning Categories in the Project Vicinity 6.6-12
Table 6.7-1 Population Estimates for California, the Sacramento MSA, and Selected Cities (1980-1992) 6.7-2
Table 6.7-2 Population Projections for California and the Sacramento MSA Counties (1995-2005) 6.7-5
Table 6.7-3 Civilian Labor Force, Employment, and Unemployment for the State and Sacramento MSA (1985-1992) 6.7-6

Table 6.7-4	Nonagricultural Wage and Salary Employment by Industry in the Sacramento MSA in Thousands (1980-1992)	6.7-9
Table 6.7-5	Nonagricultural Wage and Salary Employment Distribution in the Sacramento MSA and in California (1980 and 1992)	6.7-11
Table 6.7-6	Historical and Projected Nonagricultural Wage and Salary Employment for the Sacramento MSA	6.7-12
Table 6.7-7	Per Capita Income for the State and Sacramento MSA (1970-1990)	6.7-15
Table 6.7-8	Total Personal Income for the State and Sacramento MSA (1970-1990)	6.7-17
Table 6.7-9	Nonagricultural Personal Income by Major Industry for the Sacramento MSA (1980 and 1990)	6.7-18
Table 6.7-10	Average Hours and Earnings of Production Workers, by Selected Industry for California (1991)	6.7-19
Table 6.7-11	Housing Characteristics for the Sacramento MSA Area Counties and the State (1980 and 1992)	6.7-20
Table 6.7-12	Annual Median Resale Home Price in Sacramento County, California and the US (1980-1991)	6.7-22
Table 6.7-13	Number of Districts and Schools in California and the Sacramento MSA (1990-1991)	6.7-26
Table 6.7-14	Enrollment in Public School Grades by County, State, and the Sacramento MSA (1990-1991)	6.7-27
Table 6.7-15	Fall Enrollment for Selected Colleges in the Sacramento MSA (1985-1991)	6.7-29
Table 6.7-16	City of Sacramento Approved Budget Resources and Appropriations 1991-1992 and 1992-1993	6.7-31
Table 6.7-17	County of Sacramento Approved Budget Requirements and Financing Sources 1991-1992 and 1992-1993	6.7-32
Table 6.7-18	Estimated Procter & Gamble Cogeneration Project Construction Workforce by Major Craft/Occupation	6.7-36
Table 6.9-1	Cooling Tower Modeling Parameters	6.9-27
Table 6.10-1	Applicable Noise Limits	6.10-3
Table 6.10-2	Summary of Ambient Noise Data (dBA)	6.10-7
Table 6.10-3	Hourly L_{eq} Values	6.10-8

Table 6.10-4	Ambient Noise Survey Octave Band Levels	6.10-9
Table 6.10-5	Future Noise Producing Developments	6.10-12
Table 6.10-6	Construction Equipment Noise Emissions	6.10-15
Table 6.10-7	Cogeneration Facility Equipment Noise Emissions	6.10-20
Table 6.12-1	Census Tract Populations Within 3 Miles of the Project Site	6.12-6
Table 6.12-2	Characterization of the Air Toxic Health Risks	6.12-7
Table 6.12-3	Emission Factors and Emission Rates for the LM6000 Combined Cycles	6.12-8
Table 6.12-4	Emission Factors and Emission Rates for the LM6000 Simple Cycle	6.12-9
Table 6.12-5	Source Parameters	6.12-10
Table 6.12-6	Sensitive Receptors	6.12-11
Table 6.12-7	Maximum Annual Impacts for Carcinogenic Air Toxics	6.12-14
Table 6.12-8	Cancer Risk Assessment	6.12-15
Table 6.12-9	Comparison of Acute and Chronic Exposure Levels to the Adopted OEHHA and EPA AELs	6.12-16
Table 6.12-10	Vulnerable Zones for Hazardous Materials	6.12-22
Table 6.13-1	Locations of Potential Worker Hazards	6.13-2
Table 6.13-2	Basic Protective Equipment Guide	6.13-5
Table 6.13-3	Sample Emergency Response Plan Outline	6.13-13

Figures

Figure 6.5-1	Regional Transportation	6.5-4
Figure 6.5-2	Proposed Capital Improvements	6.5-8
Figure 6.5-3	HOV Segments Within and Near the City of Sacramento	6.5-9
Figure 6.5-4	Average Daily Traffic and Level of Service Locations on Local Transportation Network	6.5-13
Figure 6.5-5	Peak A.M. Project Worker Vehicle Projections on the Local Transportation Network	6.5-25
Figure 6.6-1	City of Sacramento	6.6-2

Figure 6.6-2	Aerial Photograph of the Project Vicinity	6.6-4
Figure 6.6-3	Existing Land Use in the Project Vicinity	6.6-5
Figure 6.6-4	Recreational Parks and Open Space in the Project Vicinity	6.6-6
Figure 6.6-5	Public and Private Land Ownership in the Project Vicinity	6.6-10
Figure 6.6-6	Zoning Designation in the Project Vicinity	6.6-11
Figure 6.6-7	General Land Use Element Designations in the Project Vicinity	6.6-16
Figure 6.6-8	County of Sacramento Urban Service Area	6.6-18
Figure 6.6-9	City of Sacramento New Growth Areas	6.6-21
Figure 6.6-10	New Growth Area Designations in the Project Study Area	6.6-22
Figure 6.6-11	Major Industrial Areas in the City of Sacramento	6.6-23
Figure 6.6-12	Specific Land Use Plan Designations in the Project Area	6.6-25
Figure 6.6-13	Community of South Sacramento Florin-Perkins Industrial Land Use Map	6.6-27
Figure 6.7-1	Total Man-Months of Employment During the Construction Period	6.7-35
Figure 6.8-1	Sacramento County Map	6.8-3
Figure 6.8-2	Procter & Gamble Cogeneration Project Site Location	6.8-11
Figure 6.8-3	Transmission Line Cultural Resources	6.8-16
Figure 6.9-1	Project Viewshed	6.9-4
Figure 6.9-2	Typical View from Fruitridge Road	6.9-10
Figure 6.9-3a	KOP 1--Existing Setting	6.9-14
Figure 6.9-3b	KOP 1--Project Simulation (Northern Portion of View)	6.9-16
Figure 6.9-4a	KOP 2--Existing Setting	6.9-19
Figure 6.9-4b	KOP 2--Project Simulation	6.9-20
Figure 6.9-5a	KOP 3--Existing Setting	6.9-21
Figure 6.9-5b	KOP 3--Project Simulation	6.9-22
Figure 6.10-1	Noise Monitoring Locations (NMLs)	6.10-6
Figure 6.10-2	Potential Construction Impacts	6.10-18

Figure 6.10-3	Potential Operation Impacts	6.10-21
Figure 6.12-1	Sensitive Receptors	6.12-3
Figure 6.12-2	Census Tracts Within 3 Miles of the Project Site	6.12-5
Figure 6.12-3	Storage Locations of Hazardous Materials	6.12-18
Figure 6.12-4	Maximum VZ and IDLH Areas	6.12-23
Figure 6.13-1	Locations of Fire Suppression and Fire Fighting Equipment	6.13-15

Volume 3

Appendix A1	Western Systems Coordinating Council Existing Generation and Changes to System Facilities
Appendix A2	SMUD's Reliability Criteria for Transmission System Planning
Appendix A3	Procter & Gamble Project Interconnection Study
Appendix A4	Transmission Alternatives Cost Estimates
Appendix A5	Loss Analysis
Appendix A6	Power Flow Analysis
Appendix A7	Short-Circuit Analysis
Appendix B	Mechanical Engineering Design Criteria
Appendix C	Civil Engineering Design Criteria
Appendix C1	Geotechnical Engineering Study
Appendix D	Structural/Seismic Engineering Design Criteria
Appendix E	Chemical Engineering Design Criteria
Appendix F	Electrical Engineering Design Criteria
Appendix G	Control Engineering Design Criteria

Volume 4

Appendix H	Letter from City of Sacramento
Appendix I	Traffic Counts at Level of Service Locations
Appendix J	Land Ownership by Parcel Number
Appendix K	Cultural and Paleontological Resources Correspondence
Appendix L	Phase I Archeological Survey

Appendix M Material Safety Data Sheets
Appendix N Injury and Illness Prevention Program
Appendix O Plant Maintenance Program

List of Acronyms

A--amps
AASHO--American Association of State Highway Officials
AC--Advisory Circular
ADT--Average daily traffic
AEL--Acceptable Exposure Level
AEMC--American Environmental Corporation
AFC--Application for Certification
AGA--American Gas Association
AHM--acutely hazardous materials
AISC--American Institute of Steel Construction
ANL--Argonne National Laboratory
ANSI--American National Standards Institute
AOD--Acceptable Oral Dose
API--American Petroleum Institute
AQIA--Air Quality Impact Assessment
ASHRAE--American Society of Heating, Refrigeration, and Air Conditioning Engineers
ASME--American Society of Mechanical Engineers
ASTM--American Society for Testing Materials
AWS--American Welding Society
BACT--Best Available Control Technology
BEA--Bureau of Economic Analysis
BIL--Basic impulse level
BLM--Bureau of Land Management
BTEX--xylene
CAA--Clean Air Act
CAI--California Archaeological Inventory
Cal/OSHA--State of California Division of Occupational Safety and Health Association
CAPCOA--California Air Pollution Control Officers Association
CARB--California Air Resources Board
CCAA--California Clean Air Act
CCR--California Code of Regulations
CEC--California Energy Commission
CEQA--California Environmental Quality Act
CERCLA--Comprehensive Environmental Response, Compensation, and Liability Act of 1980
CFG--California Department of Fish and Game
CFR--Code of Federal Regulations
CNEL--Community Noise Equivalent Level
CO--Carbon monoxide
COE--US Army Corps of Engineers
COTP--California-Oregon Transmission Project
CPUC--California Public Utilities Commission

CTG--Combustion Turbine Generator
dB--Decibel
dBA--A-weighted decibel
DCIS--Distributed Control and Information System
DCS--Distributed control system
DOT--Department of Transportation
DTSC--Department of Toxic Substances Control
DWR--Department of Water Resources
EAF--Equivalent availability factor
EDD--Employment Development Department
EFOR--Equivalent forced outage rate
EMF--Electric and magnetic fields
EPA--Environmental Protection Agency
EPRI--Electric Power Research Institute
ER--*Electricity Report*
FAA--Federal Aviation Administration
FAC--Facultative wetland plants
FAR--Federal Aviation Regulations
FEMA--Federal Emergency Management Agency
FHPS--Fired hours per start
GE--General Electric
GO--General Order
H&SC--Health & Safety Code
HC--Hydrocarbons
Hcl--Hydrochloric acid
HOV--High occupancy vehicle
HP--High-pressure
HRSG--Heat recovery steam generator
IDLH--Immediately dangerous to life and health
IEEE--Institute of Electrical and Electronic Engineers
IIPP--Injury and Illness Prevention Program
IP--Intermediate-pressure
IPCEA--Insulated Power Cable Engineers Association
ISA-- Instrument Socity of America
kcmills--thousand circular mills
KOP--Key observation point
LAER--Lowest Achievable Emission Rate
LOC--Level of concern
LORS--Laws, Ordinances, Regulations, and Standards
LOS--Level of service
LP--Low-pressure
LRT--Light rail transit
MCC--Motor control center
MEK--Methyl ethyl ketone
mG--Milligrams
mph--Miles per hour

MSA--Metropolitan Statistical Area
MVA--Megavolt ampere
NAAQS/SAAQA--National and/or state ambient air quality standards
NEC--National Electric Code
NESC--National Electrical Safety Code
NESHAPs--National Emission Standards for Hazardous Air Pollutants
NFPA--National Fire Protection Agency
NH_3--Aqueous ammonia
NML--Noise monitoring location
NO_2--Nitrogen dioxide
NOAA--National Oceanic and Atmospheric Administration
NO_x--Nitrous oxides
NPCA--Notice of Proposed Construction or Alteration
NPDES--National Pollutant Discharge Elimination System
NSPS--New Source Performance Standards
NSR--New Source Review
NWS--National Weather Service
O&M--Operations and maintenance
OEHHA--Office of Environmental Health Hazard Assessment
O_3--Ozone
OSHA--Occupational Safety and Health Administration
P&G--Procter & Gamble
Pb--Lead
PCB--polychlorinated biphenyls
PCR--Primary commuter route
PG&E--Pacific Gas & Electric
PM--Particulate matter
ppb--Parts per billion
ppmvd--Parts per million volumetric dry
psia--Pounds per square inch absolute
psig--Pound per square inch gauge
PRC--Public Resources Code
PSD--Prevention of Significant Deterioration
RCRA--Resource, Conservation, and Recovery Act
RFP--Request for Proposal
RI/TVI--Radio interference/television interference
RIMS II--Regional Input-Output Modeling System
RMPP--Risk Management and Prevention Program
ROC--Reactive organic compounds
SACOG--Sacramento Area Council of Governments
SACTI--Seasonal/Annual Cooling Tower Plume Impact
SARA--Superfund Amendments and Reauthorization Act
SC--Clayey silt soils
SCA--Sacramento Cogeneration Authority
SCR--Selective Catalytic Reduction
SMAQMD--Sacramento Metropolitan Air Quality Management District

SMUD--Sacramento Municipal Utility District
SNT-TC-1A--American Society of Nondestructive Testing
SO_2--Sulfur dioxide
SO_4--Suspended sulfates
SPCC--Spill Prevention, Control, and Countermeasures Plan
SSPC--Steel Structures Painting Council
SSPD--South Sacramento Planning District
SUS--Secondary unit substation
TCA--trichloroethane
TCE--trichloroethylene
TEMA--Tubular Exhcanger Manufacturers Association
THPg--Total petroleum hydrocarbons as gasoline
TMP--Transportation Management Plan
TPH--total petroleum hydrocarbons
TRB--Transportation Research Board
TSM--City of Sacramento's Transportation Systems Management
TSP--Total Suspended Particulate
TV--Television
UC--University of California
UFC--Uniform Fire Code
UIC--Underground Injection Control
UL--Underwriters Laboratories
UPC--Uniform Plumbing Code
USC--United States Code
USDA--US Department of Agriculture
USEPA--United States Environmental Protection Agency
USFWS--US Fish and Wildlife Service
V--volt
VRM--Visual Resource Management System
WACOG--Weighted average cost of gas
WAPA--Western Area Power Authority
WSCC--Western States Coordinating Council

1.0 Executive Summary

This document constitutes the Application for Certification (AFC) for the construction and operation of the Procter & Gamble Cogeneration Project. The AFC has been prepared in conformance with Title 20 - Site Certification Regulations Power Plant Siting Guidelines included in the California Energy Commission's (CEC) "Instructions to the California Energy Commission Staff - The Review of and Information Requirements for an Application for Certification." The purpose of the AFC is to provide the CEC and other interested parties with information regarding the scope of and need for the proposed action, the existing environmental setting of the project area, the anticipated environmental impacts associated with the project, and the proposed measures for mitigating potential adverse impacts resulting from project development. This information is summarized in the following paragraphs, and addressed in more detail in subsequent sections of the AFC.

1.1 Project Description

The Sacramento Cogeneration Authority (SCA), composed of the Sacramento Municipal Utility District (SMUD) and Sacramento Municipal Utility District Financing Authority (SMUDFA), proposes to construct and operate the Procter & Gamble Cogeneration Project, featuring a 171 megawatts (MW) (nominal gross capacity) power plant to be located in Sacramento, California. The cogeneration project will produce process steam for the adjacent Procter & Gamble facility while simultaneously generating electricity for sale to SMUD.

The project will consist of the following:

- A combined cycle power block including two natural gas fired combustion turbine generators, two heat recovery steam generators (HRSG) with natural gas fired duct burners, and one steam turbine. Each of the two combined cycle combustion turbine generators will be rated at a nominal capacity of 42 MW. The steam turbine will be rated at 45 MW (nominal gross).
- One simple cycle, natural gas fired combustion turbine generator rated at 42 MW (nominal).
- Transmission line loop-in and fiber-optic cable.

Natural gas will be used for the combustion turbines and a new auxiliary boiler. The auxiliary boiler will be used as a backup for the process steam supply in the event that steam from the combined cycle facility is unavailable for delivery to Procter & Gamble. Natural gas will be procured from a combination of sources.

The water source for the project will be the City of Sacramento's water supply system.

Wastewater from the project, which will include blowdown (from the circulating water system, the evaporative cooler, and the HRSGs), area washdown, sanitary wastes, and neutralized chemical wastes, will be collected by the wastewater collection system and discharged to the County of Sacramento's sanitary sewer system. Storm water runoff will be collected by the storm drains collection system and discharged to the City of Sacramento's storm drains system. Heat rejection will be by a wet surface condenser, a mechanical draft cooling tower, and a circulating water system.

The operation of the Procter & Gamble Cogeneration Project will require the development of a reliable electric interconnection. The project will be interconnected with SMUD's existing transmission system by looping into the existing Hedge to Hurley 230 kV transmission line. The Hedge to Hurley transmission line runs generally southeast to northwest approximately 1.2 miles east of the project site. The proposed transmission route for this loop-in briefly heads north out of the site before turning east to intersect and tie into the Hedge to Hurley 230 kV transmission line.

The switchyard will consist of a "ring" bus with two transformer positions and two line positions, an arrangement that will provide two generation outlets to the SMUD system. A fiber-optic cable will be installed on the proposed poles between the Procter & Gamble Cogeneration Project and the Hedge Substation. The fiber-optic cable will be used for system protection and communication.

The project site will be located on a 10 acre site in Section 23, Township 8N, Range 5E, Sacramento, Sacramento County, approximately 5 miles east of Sacramento Executive Airport. The Central California Traction Company rail line borders the site on the north, and 83rd Street borders the site on the east. Power Inn Road is approximately 0.4 mile to the west, and Fruitridge Road is approximately 0.35 mile to the south. The site consists of disturbed grassland which is routinely disced for fire control. In addition to the 10 acres that will be permanently occupied by the power plant, approximately 5 acres of land immediately west of the site will be used for temporary construction laydown and parking. The transmission line right-of-way will comprise between 8 and 14 acres, depending on the final width of the right-of-way (60 or 100 feet). Figure 1-1 is a photograph of the project site as it currently exists.



View looking west from the southeast corner of the project site.

REPRESENTATIVE VIEW OF THE PROJECT SITE

Figure 1-1

1.2 Project Need

The Procter & Gamble Cogeneration Project has already been deemed needed by the CEC. As a result of an open and competitive resource planning process in 1990-91, the District decided to add up to 600 MW of local gas fired cogeneration projects (referred to as "Block 1" plants) and a 50 MW wind project in Solano County by the year 2000. The CEC adopted an order ruling that any combination of five of SMUD's local cogeneration projects conforms with the findings and policies of both the 1990 and 1992 Electricity Reports (ER 90 and ER 92, respectively), and are therefore exempt from case-specific need determinations, so long as SMUD does not significantly change the plants' sizes, attributes, or timing (see ER 92, p. 6-26, Docket No. 90-ER-2; and COMMISSION DECISION Re SMUD'S RESOURCE SELECTION PROCESS, Docket No. 88-ER-8S, Order No. 92-0513-02.)

The Procter & Gamble plant is one of the five plants deemed needed by the CEC. Three of the other four local cogeneration projects deemed needed are the following:

- The 95 MW Carson Ice Cogeneration Project, which received a small power plant exemption (SPPE) in June 1993.
- The 149 MW SEPCO rice to ethanol cogeneration project, which has an AFC currently pending before the CEC.
- The Campbell Soup Cogeneration Project in Sacramento, for which an AFC will be filed in September or October 1993.

ER 92 expanded SMUD's discretion by allowing SMUD to "substitute any one of the five initially proposed cogeneration projects (the original group) with another local project provided the resulting combination does not exceed the original group's capacity, but provides the same overall economic, environmental, and system benefits" (ER 92, p. 6-26).

1.3 Project Reliability

The Procter & Gamble Cogeneration Project will be designed for an operating life of 30 years. Operation and maintenance procedures will be consistent with industry standard practices to maintain the useful status of plant components. The combined cycle power block will be designed to be a reliable baseloaded power generation unit. On the basis of historical data from the North American Electric Reliability Council, simple cycle combustion turbine generators have an overall equivalent availability factor of approximately 90 percent.

To obtain a highly reliable supply of natural gas, SCA will employ a broad diversification in supply source, supply contracts, transport systems, and transport service agreements. Most of the annual fuel requirements will be transported according to firm interstate and firm intrastate transportation agreements. The remainder will be transported according to interruptible interstate and firm intrastate transmission agreements.

As indicated previously, the source of water for the project will be from the City of Sacramento's water system. The City of Sacramento has indicated that the City is able and willing to provide an adequate water supply over the life of the project. Procter & Gamble (P&G) is currently using well water from P&G wells for makeup to the P&G boilers. The existing P&G boilers will not be used once the cogeneration project is placed in commercial operation. Therefore, well water usage by P&G will be reduced after the cogeneration project is placed in operation.

1.4 Environmental Considerations

The first step in the environmental assessment process for the Procter & Gamble Cogeneration Project consisted of characterizing the existing environmental resources. This was done by using existing data as well as data obtained during site-specific field studies. Specialized studies were conducted to collect information on local aquatic and terrestrial flora and fauna, threatened and endangered species, traffic patterns and volumes, cultural resources, noise levels, geotechnical resources, and aesthetic resources. The site was also evaluated for potential contamination by hazardous materials.

Site characterization was followed by an evaluation of the effects of project construction and operation on each resource. The potential impacts of project construction are summarized below. None of these effects is expected to be significant:

- Fugitive dust and vehicle emissions may affect air quality in the area during construction, but should not occur at significant levels because of the wetting of onsite soils and maintenance of vehicles to minimize emissions.
- Site clearing will result in the permanent loss of approximately 10 acres of terrestrial habitat. An additional 5 acres will be temporarily disturbed by construction parking and laydown. Because of the low quality of this habitat, however, these disturbances are not considered significant.

- Site clearing will also result in the elimination of an onsite non-vernal pool habitat in which fairy shrimp were found (in a tire track). If deemed necessary, however, SCA will participate in an offsite mitigation program to offset these effects.
- Temporary increases in noise and traffic levels may occur, but are not expected to significantly affect the existing local aesthetic character or traffic patterns.
- No significant cultural or paleontological resources were found. Consequently, neither project construction nor operation will affect local cultural or paleontological resources.
- Socioeconomic benefits associated with project construction will include additional jobs, wages, local purchases, and sales tax revenues associated with the local purchases.
- Wastes generated by construction activities are not expected to occur in volumes that would significantly affect the capacities of local disposal facilities.
- Because of the limited amount of land disturbance that will be required to construct the project's transmission line, no significant effects on local resources are expected due to transmission line construction. The fiber-optic communication line is of small size and will be installed on the proposed and existing transmission lines. No additional impacts will result from the installation of the fiber-optic communication line.

The effects of project operation are summarized below. As with the construction impacts, operation-related impacts are not expected to be significant:

- Plant emissions resulting from fuel combustion will contain various pollutants. However, by burning natural gas, applying the appropriate air quality control technologies, and obtaining emissions offsets, the project will ensure that air pollutant emissions and impacts are minimized and that there will be no net increase in criteria pollutant emissions.
- Wastewater discharges will be collected and routed to the County of Sacramento's sanitary sewer system. Storm water runoff will be collected by the storm drains collection system and discharged to the City of Sacramento's storm drains system. Consequently, the project will not affect local water resources.
- Traffic and noise volumes will not increase to unacceptable levels.

- The visual setting of the area may be affected somewhat by the presence of the project facilities such as the HRSG stacks and the transmission line towers. Considering the prominence of other industrial developments in the area, however, the project will not significantly affect local aesthetic resources.
- Socioeconomic benefits associated with project construction and operation will include additional jobs and wages, local purchases, and sales tax revenues associated with project-related local purchases.
- Wastes generated by operation activities will not occur in volumes that would significantly affect the capacities of local disposal facilities.

1.5 Conclusion

The AFC demonstrates that the construction and operation of the Procter & Gamble Cogeneration Project will provide a clean, reliable source of energy with a minimum of environmental consequences. The design of the project will facilitate the use of domestic natural gas, a relatively clean energy source, and provide a reliable source of process steam for Procter & Gamble, thereby helping to retain one of the largest employment centers in the Sacramento area. The project will result in short- and long-term economic benefits without requiring large scale improvements in community services and/or facilities. These factors establish the Procter & Gamble Cogeneration Project as a preferred source for both present and future energy needs.

2.0 Project Need

The following sections describe the need for the project.

2.1 Introduction

The Sacramento Municipal Utility District (SMUD) has conducted extensive evaluations of the need for electric power in the Sacramento area for the next 20 years and beyond. After the closure of the Rancho Seco Nuclear Generating Station by a vote of the people in 1989, SMUD explored various options for meeting future energy demands. SMUD decided to add up to 600 MW of local gas fired cogeneration projects (referred to as "Block 1" plants) and a 50 MW wind project in Solano County by the year 2000. SMUD engaged in exhaustive proposal and negotiation activities with a number of electric power developers. SMUD selected the Sacramento Cogeneration Authority (SCA) proposal to construct a cogeneration project located near an existing Procter & Gamble facility in southern Sacramento, California, as one of the four cogeneration plants needed to go on-line by January 1, 1997.

The project will consist of two natural gas fired combustion turbines, each exhausting to its own heat recovery steam generator (HRSG), which will provide steam to a steam turbine and process steam for the Procter & Gamble facility. One natural gas fired, simple cycle peaking gas combustion turbine also will be included in the project. A detailed description of the project is given in Section 3.0 of this document.

2.2 Project Objectives

The proposed project objectives are to construct and operate a cogeneration facility which will provide additional generating capacity as well as process steam for the adjacent Procter & Gamble plant. The project also will provide power supply diversification to SMUD and power at a reasonable cost from a reliable and efficient facility.

Other objectives include the location of a power generating facility near SMUD's high load center in Sacramento, the creation of new employment in the area, and sales tax revenue and socioeconomic benefits for the county.

2.3 Need for the Proposed Facility

The Procter & Gamble Cogeneration Project was developed from responses to a Request for Proposal (RFP) issued by SMUD in March 1990 for new electric generation projects. The CEC reviews municipal utility RFPs to determine if they are sufficiently similar to CEC policies to waive the need conformance assessment for resulting projects in siting cases.

An ER 90 Need Conformance Submittal was filed by SMUD in March 1991 requesting a determination that five local gas fired projects selected as a result of its RFP process were in conformance with need. On April 8, 1992, the CEC filed the "Staff Findings and Recommendations" on SMUD's "ER 90 Need Conformation Submittal." The CEC staff's findings concluded that SMUD's RFP process and resulting selections were in conformance with ER 90 provisions and findings and, thus, were in conformance with need. A staff workshop was conducted on April 17, 1992, and an ER 90 Standing Committee hearing was held on April 21, 1992, concerning the staff report. No significant issues of concern were advanced at either the workshop or the hearing. The CEC staff recommended approval of SMUD's need conformance submittal, and the recommendation was accepted by the ER 90 Standing Committee on April 21, 1992.

The Standing Committee subsequently presented its recommendation for approval before the CEC on May 13, 1992. On the basis of the May 13, 1992, hearing and the Standing Committee's recommendations, the Commission adopted the Standing Committee's decision.

The Procter & Gamble Cogeneration Project is one of the five local area projects included in the procurement process originally approved in the CEC order of May 13, 1992. The five proposed projects were approved for a total capacity of approximately 600 MW. The Commission also has found that the five proposed cogeneration projects described in ER 90 and selected through the RFP process remain in conformance with the findings and policies of ER 92.

ER 92 states that any combination of five of the cogeneration projects selected through [SMUD's] RFP remain in conformance with the findings and policies of ER 90 and ER 92 and is exempt from case-specific need determinations so long as SMUD does not significantly change the plants' sizes, attributes or timing (refer to ER 92, p. 6-26, Docket No. 90-ER-2; and Commission Decision Re SMUD's Resource Selection Process, Docket No. 88-ER-8S, Order No. 92-0513-02). The

Procter & Gamble plant is one of the five plants deemed needed by the CEC. Three of the other four local cogeneration projects deemed needed are:

(1) The 95 MW Carson Ice cogeneration project, which received a small power plant exemption (SPPE) in June 1993;

(2) The 149 MW SEPCO rice to ethanol cogeneration project, which has an AFC currently pending before the CEC; and

(3) The Campbell Soup cogeneration project in Sacramento, for which an AFC will be filed in September or October 1993.

Under ER 92, SMUD may substitute any one of the five initially proposed cogeneration projects (the original group) with another local project, provided the resulting combination does not exceed the original group's capacity, but provides the same overall economic, environmental, and system benefits (ER 92, p. 6-26).

The proposed Procter & Gamble facility will have a generating capacity of less than 200 MW. The remaining approved capacity will be provided by the other four planned cogeneration projects. There are no specific restrictions on the capacity of the individual approved projects. As indicated previously, however, the total capacity of the five proposed projects is limited to a total of approximately 600 MW.

The project description in this Application is essentially the same as described in Chapters IV and V of the May 13, 1992, submittal to the CEC. Because of these considerations, no further need tests are necessary.

2.4 References

California Energy Commission, December 1992, *1992 Electricity Report*, Sacramento, California.

California Energy Resources Conservation and Development Commission, May 4, 1992, *ER 90 Standing Committee's Proposed Decision on SMUD's ER 90 Need Conformance Submittal*, Sacramento, California.

California Energy Resources Conservation and Development Commission, May 13, 1992, *Commission Decision re SMUD's Resource Selection Process*, Sacramento, California.

3.0 Project Description and Engineering

3.1 Introduction

The Procter & Gamble Cogeneration Project consists of a combined cycle power block (two General Electric LM6000 combustion turbine generators (CTGs) exhausting to two supplementary fired heat recovery steam generators (HRSGs) which produce steam for admission to a steam turbine generator), a simple cycle General Electric LM6000 combustion turbine generator, and required auxiliary equipment. The project is located in the City of Sacramento, California, adjacent to an existing Procter & Gamble facility. The cogeneration project will burn natural gas to produce process steam for the adjacent Procter & Gamble facility while simultaneously generating electricity for the Sacramento Municipal Utility District (SMUD). Figures 3.0-1 and 3.0-2 indicate the combined cycle and simple cycle combustion turbine processes. Figure 3.0-3 indicates the cogeneration process.

The Sacramento Cogeneration Authority (SCA) will develop, design, construct, operate, and maintain the Procter & Gamble Cogeneration Project. The cogeneration project will provide process steam to the adjacent Procter & Gamble facility under a steam sales agreement with SMUD, who will in turn sell the process steam to Procter & Gamble. The Sacramento Cogeneration Authority will sell electricity to SMUD under a power sales agreement.

Natural gas will be procured from a combination of sources. The anticipated combination of supply source and supply contract will be part long-term contracts allocated among suppliers in the Southwest, Rocky Mountains, Canada, and California; part short-term contracts from these same supply regions; and part SMUD-owned gas reserves located in the Southwest, Rocky Mountains, and California. Over time, the percent SMUD-owned reserves will be increased and the percent short-term contracts will be reduced, thereby enhancing supply reliability.

The natural gas will be transported to the site by a new pipeline system. The new 64 mile pipeline system, identified as the SMUD Cogeneration Pipeline System, will transport natural gas from Pacific Gas & Electric's existing transmission pipelines to the Procter & Gamble Cogeneration Project. In addition, the proposed SMUD Cogeneration Pipeline System will transport natural gas to several other SMUD affiliated cogeneration projects (SEPCO, Campbell Soup, and Carson Ice-Gen) in the Sacramento area. The SMUD Cogeneration Pipeline Project, which includes the gas transmission line to the Procter & Gamble Cogeneration Project, is a separate AFC

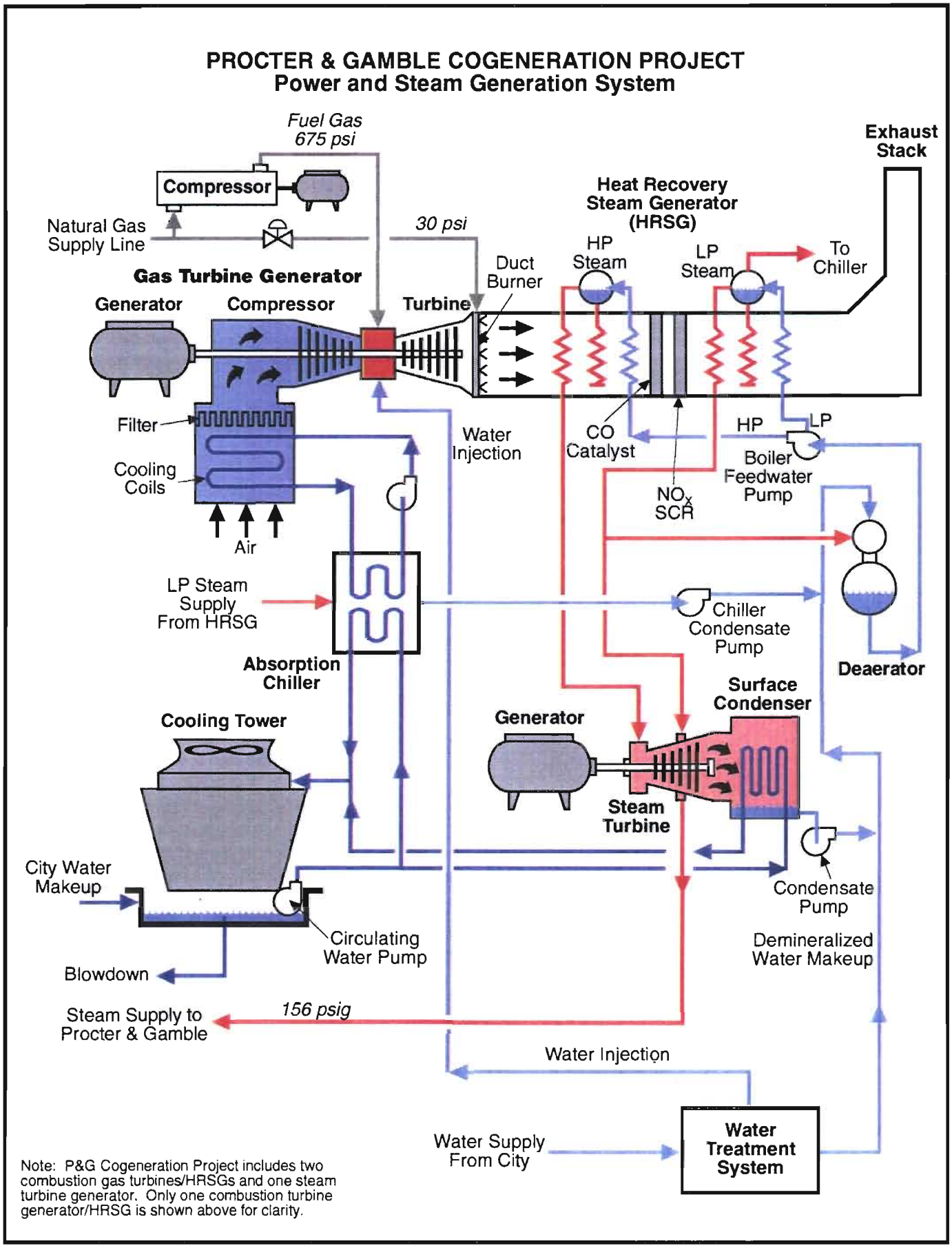

COMBINED CYCLE

Figure 3.0-1

PROCTER & GAMBLE COGENERATION PROJECT
Simple Cycle Combustion Turbine Schematic

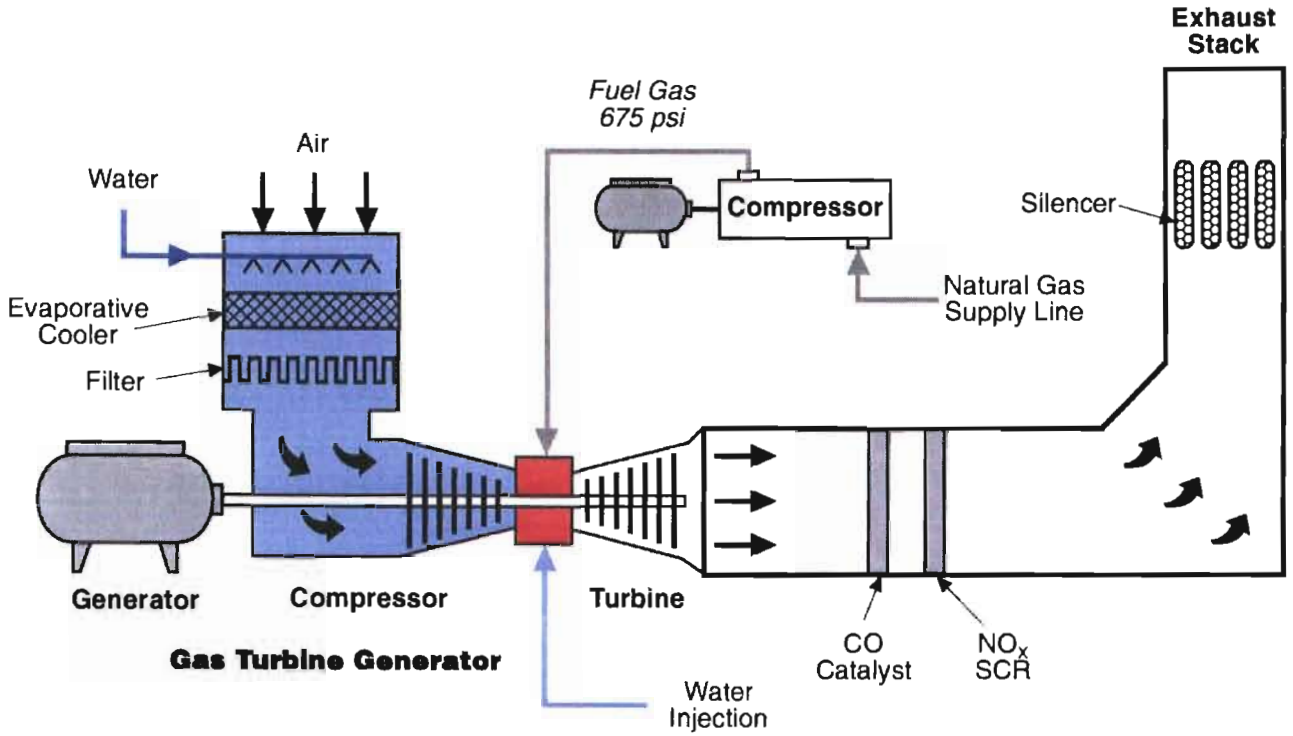

SIMPLE CYCLE COMBUSTION TURBINE

Figure 3.0-2

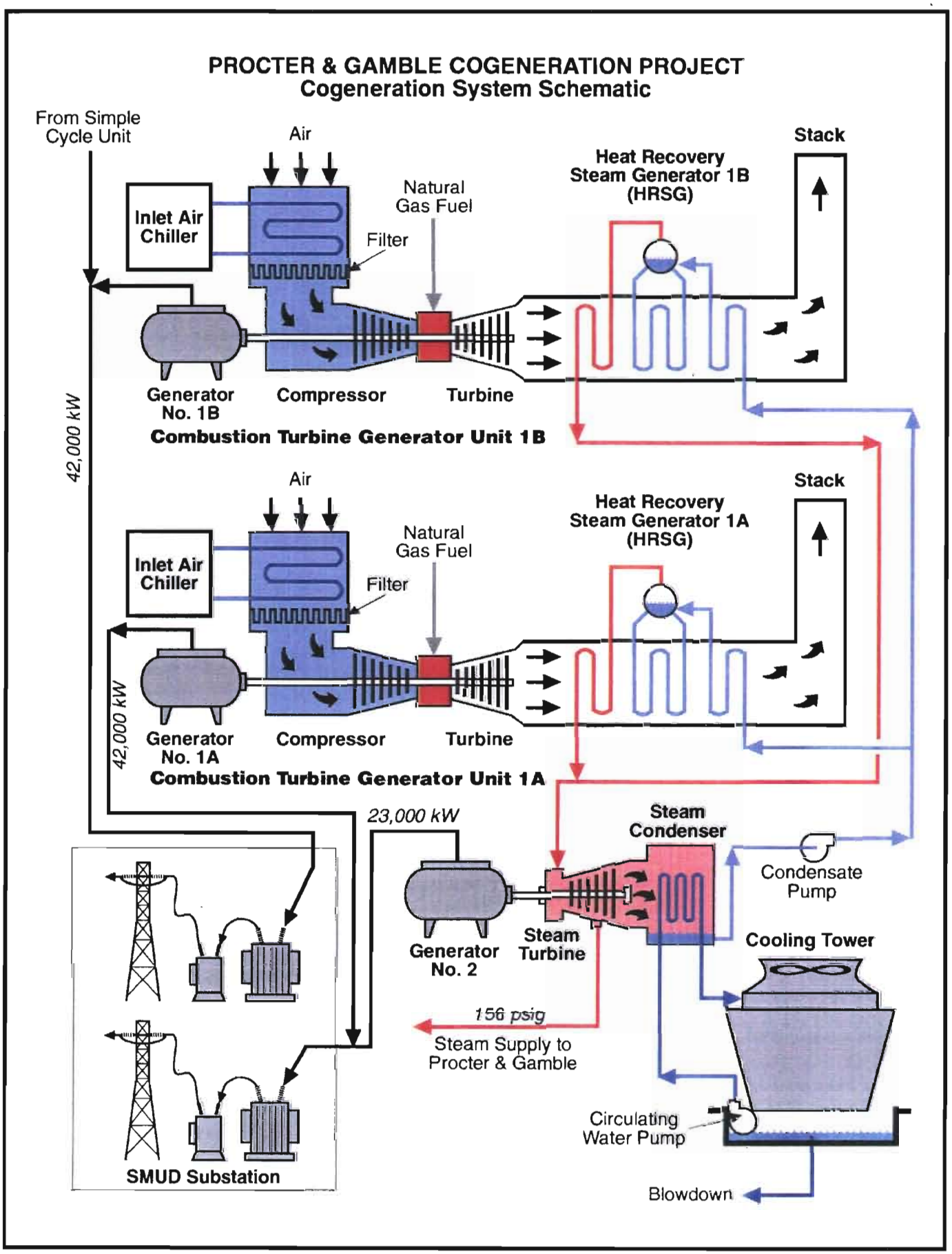

COGENERATION PROCESS

Figure 3.0-3

proceeding before the California Energy Commission (Docket No. 92-AFC-2C). Therefore, all information pertaining to the natural gas pipeline for the Procter & Gamble Cogeneration Project is contained in the gas pipeline AFC. (The underground gas transport pipeline will terminate at a gas meter station on the east side of the project site as shown on the site arrangement, Figure 3.3-1.)

3.1.1 Power Cycle Overview

The Procter & Gamble Cogeneration Project consists of the following major power blocks, totaling 171 MW gross (nominal) capacity:

- Combined cycle power block configured with two natural gas fired combustion turbine generators, two heat recovery steam generators with natural gas fired duct burners, and one steam turbine generator (two-on-one configuration). Each of the two combined cycle combustion turbine generators will be rated 42 MW (nominal). The steam turbine generator will be rated 45 MW (nominal).
- One simple cycle, natural gas fired combustion turbine generator rated 42 MW (nominal).

Each combined cycle CTG will exhaust to a dedicated, supplementary fired HRSG. The hot CTG exhaust gas will be used to generate steam in the HRSG. Supplementary heat input to each HRSG will be provided from natural gas fired duct burners in the HRSG inlet ductwork. Steam from the two HRSGs will be admitted to a condensing steam turbine generator which will produce electrical power. Process steam will be supplied to Procter & Gamble from an extraction point on the steam turbine.

The combined cycle power block baseload operation is shown on the Figure 3.1-1 heat balance. This heat balance reflects no HRSG duct firing and supplying 65,000 pounds per hour of process steam to the adjacent Procter & Gamble facility. The combined cycle peak load operation is shown on Figure 3.1-2. This heat balance reflects HRSG duct firing and no process steam required by the Procter & Gamble facility.

The simple cycle combustion turbine generator operation is shown by the Figure 3.1-3 heat balance.

Combustion gas turbine NO_x emissions will be controlled by injection of water in the combustion process and by selective catalytic reduction (SCR). Also, an oxidation catalyst system will be used to control CO emissions from the combustion turbine generators.

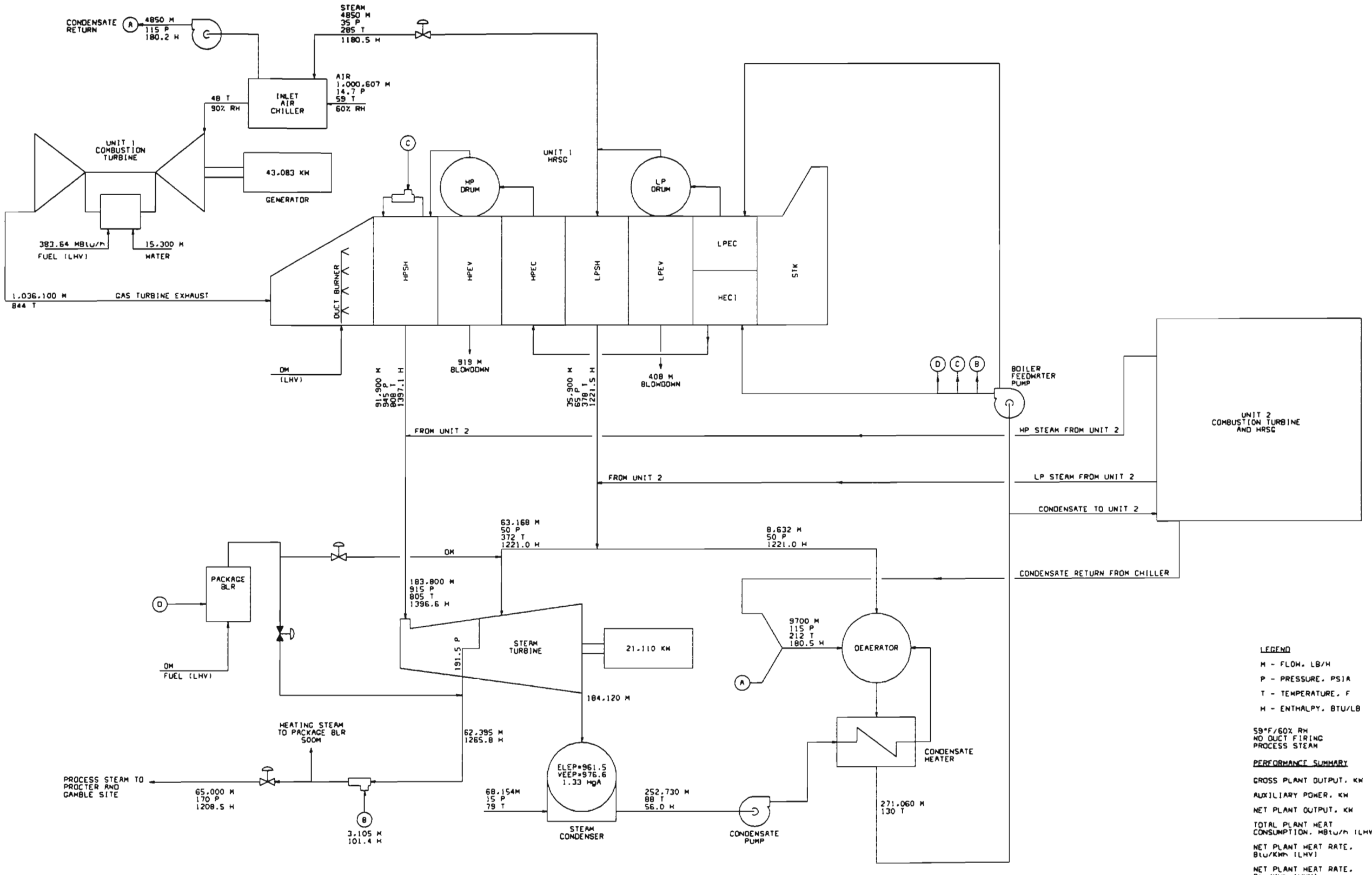

LEGEND

M - FLOW, LB/H

P - PRESSURE, PSIA

T - TEMPERATURE, F

H - ENTHALPY, BTU/LB

59°F/60% RH
NO DUCT FIRING
PROCESS STEAM

PERFORMANCE SUMMARY

GROSS PLANT OUTPUT, KW	107,275
AUXILIARY POWER, KW	4,642
NET PLANT OUTPUT, KW	102,633
TOTAL PLANT HEAT CONSUMPTION, MBtu/h (LHV)	767.32
NET PLANT HEAT RATE, Btu/KWh (LHV)	7,476
NET PLANT HEAT RATE, Btu/KWh (HHV)	8,274

NO	DATE	REVISIONS AND RECORD OF ISSUE	BY	CHK	APP	FLM

BLACK & VEATCH

ENGINEER | DRAWN DAJ
CHECKED | DATE

SACRAMENTO COGENERATION AUTHORITY
PROCTER & GAMBLE COGENERATION PROJECT

COMBINED CYCLE BASELOAD OPERATION
CASE 2

PROJECT | DRAWING NUMBER: 23933-031-HB-1 | REV

CODE | AREA

FIGURE 3.1-1

13915BENNETT ACAD 12.cl
A015L006 01 1=1
09/08/93 08:33:13

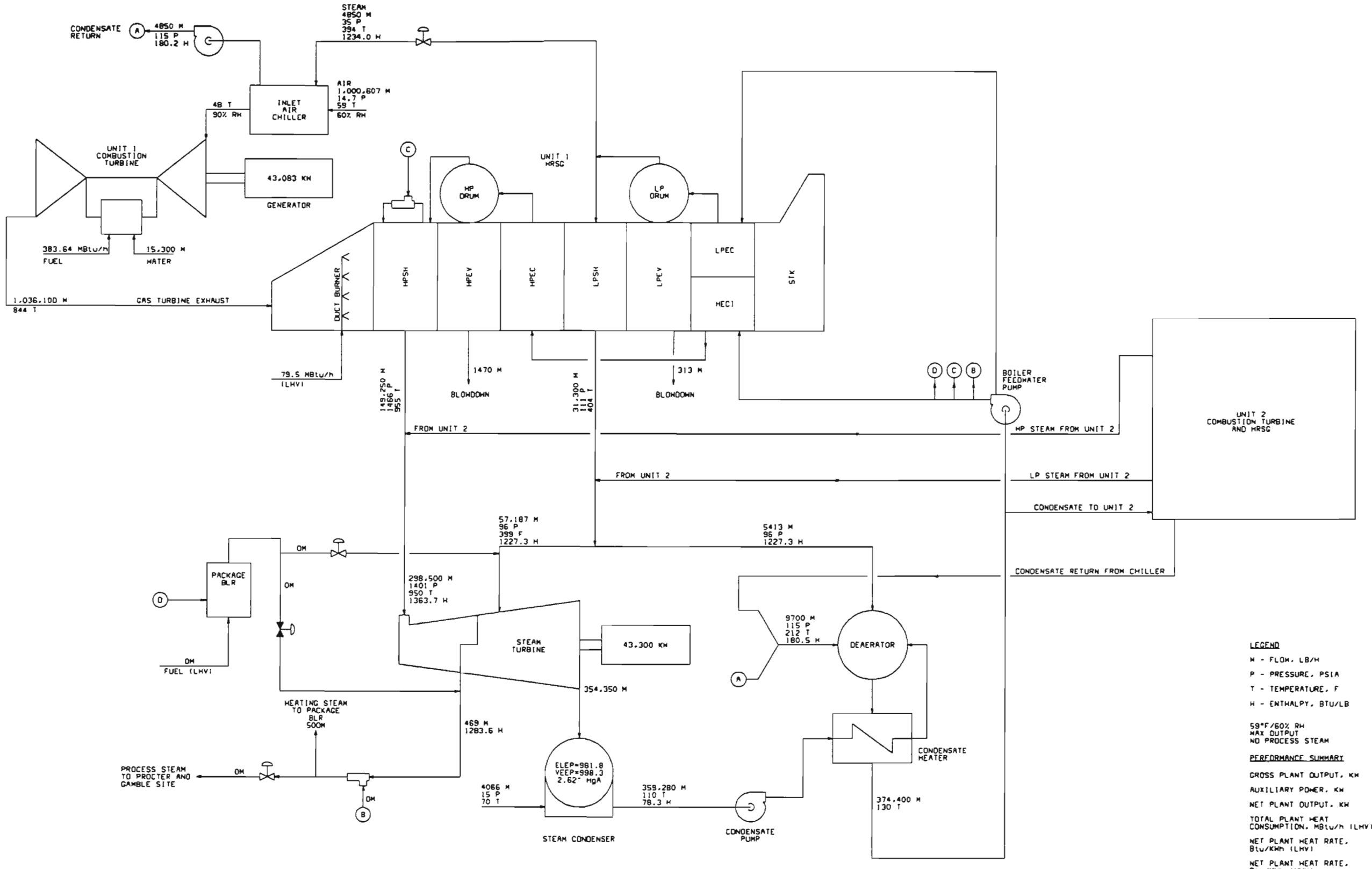

LEGEND

M - FLOW, LB/H

P - PRESSURE, PSIA

T - TEMPERATURE, F

H - ENTHALPY, BTU/LB

59°F/60% RH
MAX OUTPUT
NO PROCESS STEAM

PERFORMANCE SUMMARY

GROSS PLANT OUTPUT, KW	129,466
AUXILIARY POWER, KW	5,007
NET PLANT OUTPUT, KW	124,459
TOTAL PLANT HEAT CONSUMPTION, MBtu/h (LHV)	926.28
NET PLANT HEAT RATE, Btu/KWh (LHV)	7,442
NET PLANT HEAT RATE, Btu/KWh (HHV)	8,237

NO	DATE	REVISIONS AND RECORD OF ISSUE	BY	CHK	APP	FLM

BLACK & VEATCH

ENGINEER | DRAWN ELH | CHECKED | DATE

SACRAMENTO COGENERATION AUTHORITY
PROCTER & GAMBLE COGENERATION PROJECT

COMBINED CYCLE PEAK LOAD OPERATION
CASE 3

PROJECT | DRAWING NUMBER: 18040-031-HB-3 | REV

CODE | AREA

FIGURE 3.1-2

13915BENNETT ACAD 12.cl
A015L006 01 1=1
09/08/93 08:35:37

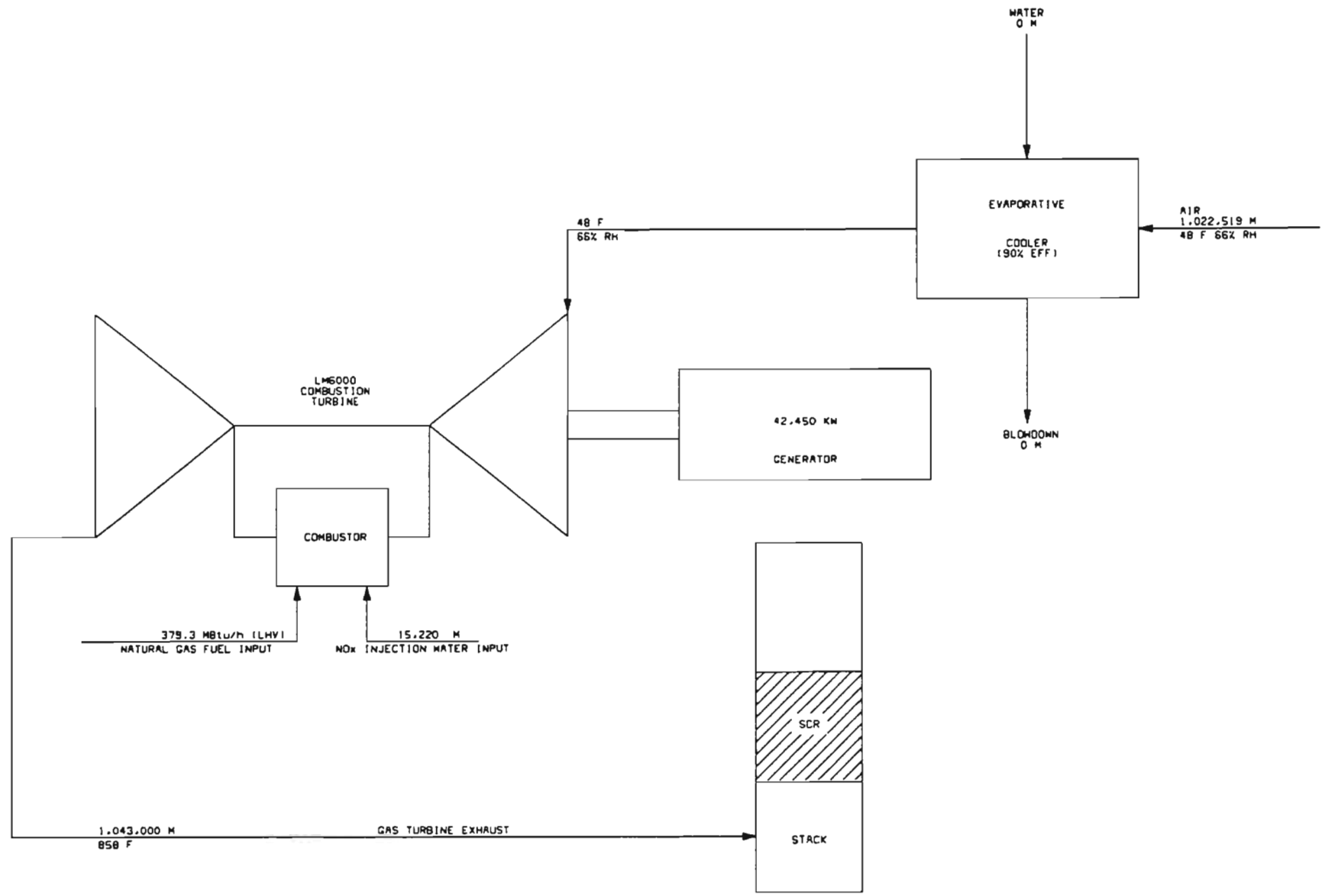

LEGEND

M - FLOW, LB/H

P - PRESSURE, PSIA

T - TEMPERATURE, F

H - ENTHALPY, BTU/LB

PERFORMANCE SUMMARY

GROSS PLANT OUTPUT, KW	42,450
AUXILIARY POWER, KW	410
NET PLANT OUTPUT, KW	42,040
NET PLANT HEAT RATE, Btu/KWh (LHV)	9,022
NET PLANT HEAT RATE, Btu/KWh (HHV)	9,985

NO	DATE	REVISIONS AND RECORD OF ISSUE	BY	CHK	APP	FLM

BLACK & VEATCH

ENGINEER | DRAWN DAJ | CHECKED | DATE

SACRAMENTO MUNICIPAL UTILITY DISTRICT
PROCTER & GAMBLE COGENERATION PROJECT

SIMPLE CYCLE BASELOAD OPERATION

PROJECT | DRAWING NUMBER | REV
23933-031-SCHB-1

CODE | AREA

FIGURE 3.1-3

13915BENNETT ACAD 12.c1
A01SL006 01 1x1
09/08/93 08:30:02

The project is expected to have an overall availability of 90 percent or higher, and may operate and produce electricity up to 8,760 hours per year. SMUD's electrical load conditions will vary throughout the year and will require various combinations of operating the combined cycle power block and simple cycle combustion turbine generator.

3.1.2 Process Steam Supply Overview

During combined cycle power block operation, process steam to Procter & Gamble will be extracted from the steam turbine. Process steam flow to Procter & Gamble will vary with Procter & Gamble's process requirements. The Procter & Gamble process steam demand is expected to be 65,000 pounds per hour approximately 85 percent of the year, with a peak expected demand of 80,000 pounds per hour. The process steam supply to the Procter & Gamble facility from the steam turbine extraction will be designed for a maximum process steam supply of 120,000 pounds per hour. Procter & Gamble will require process steam over a 24 hour period. When the combined cycle power block is not operating, process steam to Procter & Gamble will be supplied by a new natural gas fired auxiliary boiler.

3.2 Project Location

The Procter & Gamble Cogeneration Project will be located on a 10 acre site (City of Sacramento Assessor map, County of Sacramento, California identification number 061-0010-022-0000) in Section 23, Township 8N, Range 5E, Sacramento, Sacramento County, approximately 5 miles east of Sacramento Executive Airport (Figure 3.2-1). The project site is bordered by the Central California Traction rail line to the north and 83rd Street to the east. Power Inn Road is approximately 0.4 mile west of the site. Fruitridge Road is approximately 0.35 mile south of the site.

3.3 Site Description

The following subsections describe the site layout, topography, geological setting, and hydrological setting of the cogeneration project site.

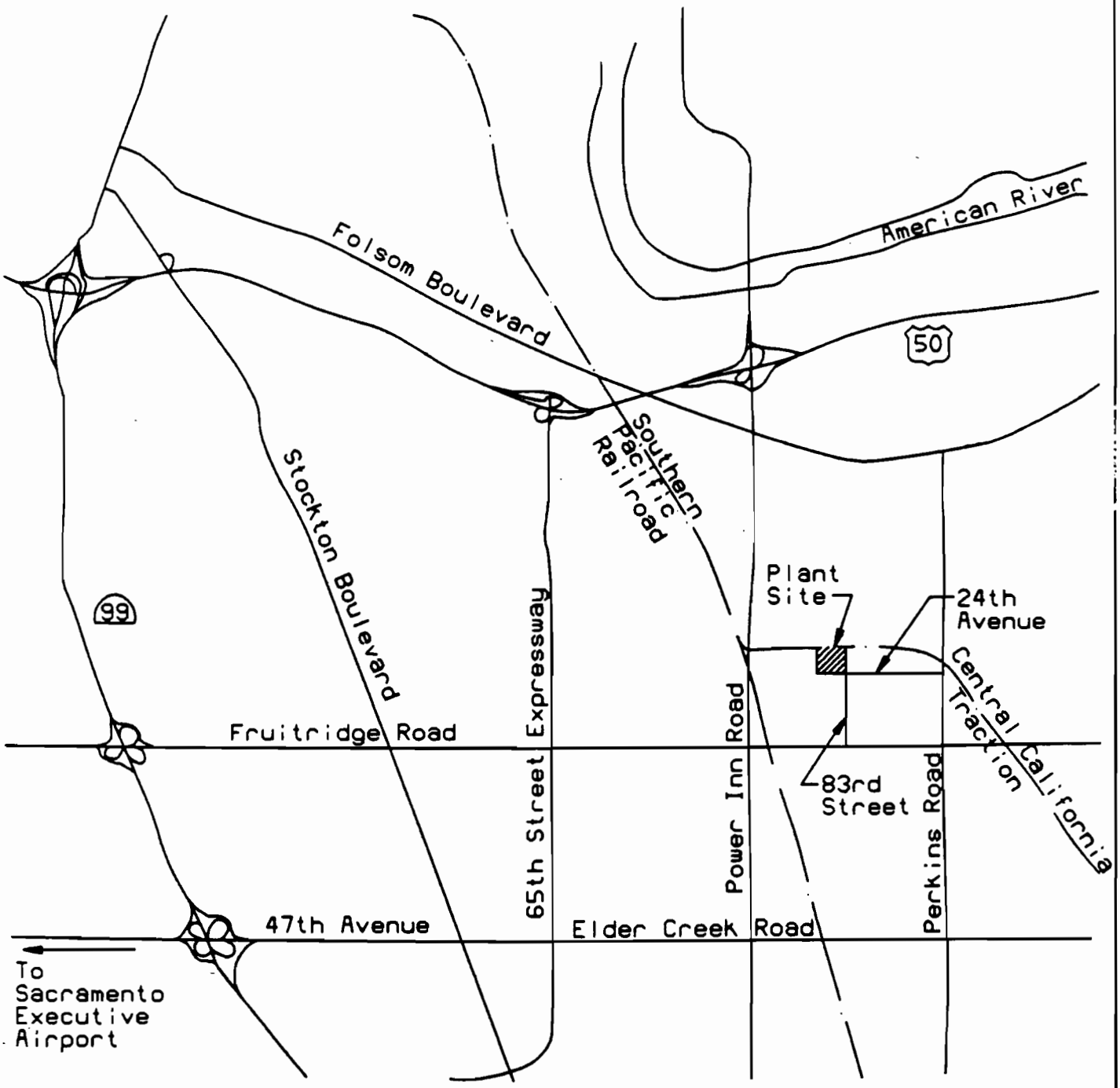

Sacramento Cogeneration Authority
Procter and Gamble Cogeneration Facility

Regional Location Map
Figure 3.2-1

3.3.1 Site Layout

The site arrangement on Figure 3.3-1 and typical elevation on Figure 3.3-2 illustrate the location and size of the proposed project facilities.

Approximately 10 fenced acres of SCA owned land will be required to accommodate the project facilities, including the storage tanks, parking area, control/ administration building, chiller building, water treatment building, warehouse/ machine shop, switchyard, emission control equipment, cooling tower, natural gas compression equipment, and generation equipment. A small area outside the fence will be provided for visitor parking.

Studies have been conducted to define the specific facility equipment requirements and the suitability of the proposed project site to accommodate these facilities. Site evaluation studies include site surveys, biological studies, geotechnical drilling and sampling, monitoring ambient noise levels, and cultural resource investigations. The findings of these studies were used to develop the site arrangement illustrated on Figure 3.3-1.

3.3.2 Topography

The plant site is relatively flat with topographic relief across the site generally ranging between 40 feet and 42 feet above mean sea level (msl). Shallow drainage swales running north and south connect with an east-west swale near the center of the property. The east-west swale slopes gradually to the west.

Because of the relatively flat nature of the site, little grading of the site will be necessary. A grading plan of the site is shown on Figure 3.3-3. The overall site will be raised somewhat because of onsite spoiling of excavation material resulting from foundation installation and the aggregate surfacing finish that will be added to the site. Since the site is located in the 100 year floodway fringe and not the floodway, this small rise in elevation will not have a detrimental effect on surrounding areas. Plant structures on the site will be constructed 1 foot above the 100 year flood plain elevation.

3.3.3 Geologic Setting

The following subsection of the AFC describes the geology, seismic setting, and soil conditions of the Procter & Gamble Cogeneration Project.

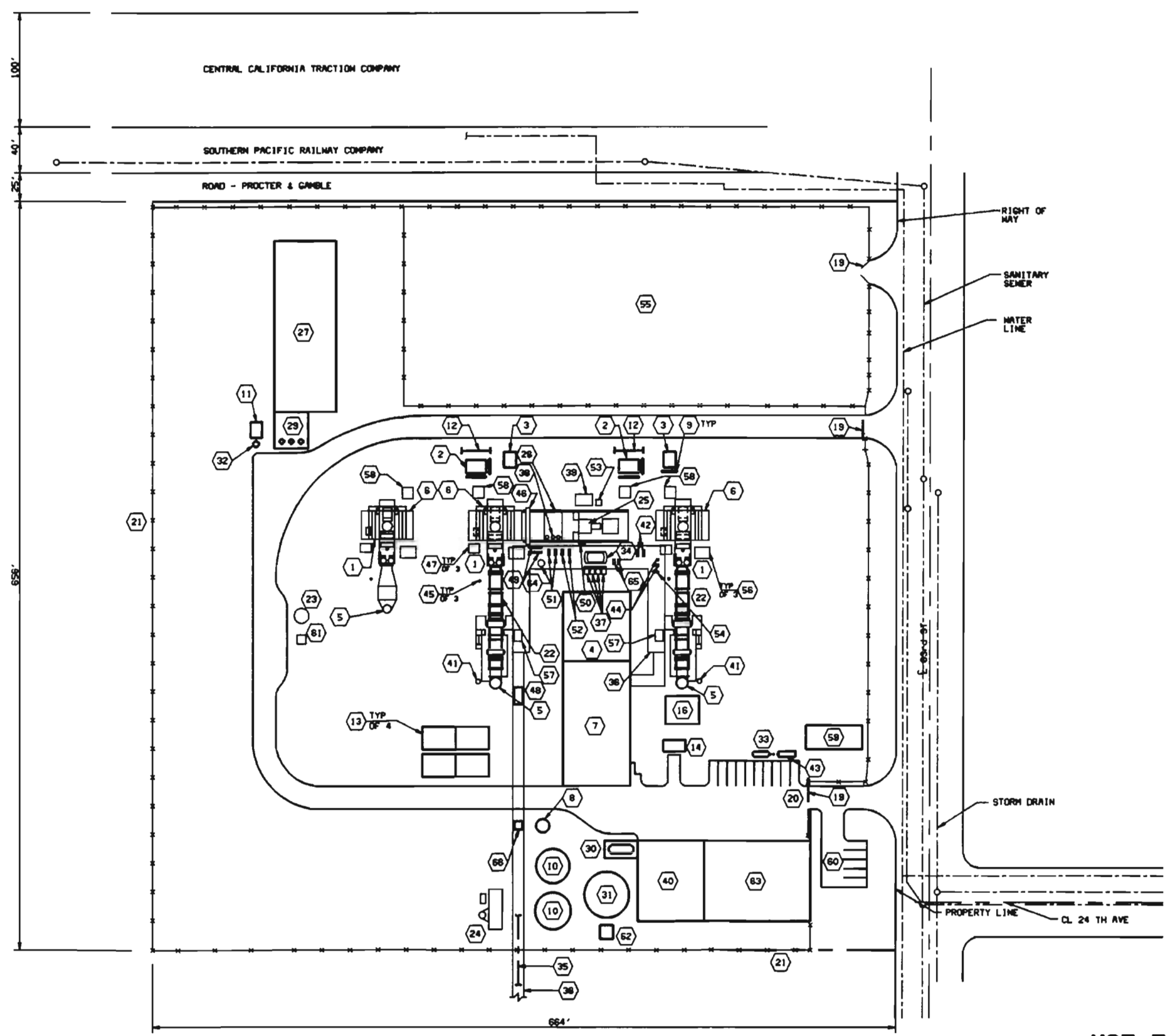

LEGEND

1. COMBUSTION TURBINE (3)
2. GENERATOR TRANSFORMER (2)
3. AUXILIARY TRANSFORMER (2)
4. CHILLER BUILDING
5. STACK (3)
6. INLET FILTER (3)
7. CONTROL/ADMIN BUILDING
8. CONDENSATE STORAGE TANK
9. TRANSFORMER FIREWALL (5)
10. DEMINERALIZED WATER STORAGE TANK (2)
11. CIRC WATER CHEMICAL FEED
12. COMBINATION TAKEOFF TOWER AND DISCONNECT SWITCH (2)
13. GAS COMPRESSORS (4)
14. STANDBY GENERATOR
15.
16. CYCLE CHEMICAL FEED
17.
18.
19. GATE (3)
20. PAVED SITE ACCESS ROAD
21. SITE FENCE
22. HEAT RECOVERY STEAM GENERATOR (2)
23. AMMONIA STORAGE TANK
24. AUXILIARY BOILER
25. STEAM TURBINE
26. CONDENSER
27. COOLING TOWER
28.
29. CIRCULATING WATER PUMP STRUCTURE
30. ACID STORAGE TANK
31. NEUTRALIZATION TANK
32. SODIUM HYPOCHLORITE TANK
33. OIL/WATER SEPARATOR
34. DEAERATOR
35. STEAM LINE TO PROCTER & GAMBLE
36. PIPE RACK
37. BOILER FEED PUMPS (4)
38. CONDENSATE PUMPS (3)
39. TURBINE LUBE OIL UNIT
40. WATER TREATMENT BUILDING
41. BOILER BLOWDOWN TANK (2)
42. AIR COMPRESSORS (2)
43. SANITARY DISCHARGE FLOWMETER AND SAMPLE STATION
44. DESICCANT AIR DRYERS (2)
45. INLET GAS SCRUBBERS (3)
46. ST MAINTENANCE CRANE
47. NOX WATER INJECTION SKID (3)
48. CT WASH SKID (2)
49. AUX COOLING WATER HEAT EXCHANGERS (2)
50. CONDENSER AIR EJECTOR
51. CLOSED CYCLE COOLING WATER PUMPS (2)
52. CONDENSER VACUUM PUMPS (2)
53. LUBE OIL CONDITIONER
54. AIR RECEIVER
55. OWNER'S SUBSTATION
56. AUXILIARY SKID (3)
57. AMMONIA FLOW CONTROL SKID (2)
58. GENERATOR BREAKER ENCLOSURE (4)
59. GAS METER STATION
60. VISITOR PARKING
61. AMMONIA TRANSFER PUMPS
62. NEUTRALIZATION BASIN PUMPS
63. WAREHOUSE AND MAINTENANCE SHOP BUILDING
64. CLOSED COOLING WATER HEAD TANK
65. AUX BOILER FEED PUMPS (2)
66. CONDENSATE MAKEUP PUMPS

NOT TO BE USED FOR CONSTRUCTION

DATE OF ISSUE _____

50' 25' 0 50' 100'
1"=50'

NO	DATE	REVISIONS AND RECORD OF ISSUE	BY	CHK	APP	FLM
B	9-9-93	ISSUED FOR PRELIMINARY AFC REVIEW				
A	9-3-93	ISSUED FOR PRELIMINARY AFC REVIEW				

I HEREBY CERTIFY THAT THIS DOCUMENT WAS PREPARED BY ME OR UNDER MY DIRECT SUPERVISION AND THAT I AM A DULY REGISTERED PROFESSIONAL ENGINEER UNDER THE LAWS OF THE STATE OF CALIFORNIA

SIGNED _____
DATE _____ REG NO. _____

BLACK & VEATCH
ENGINEER VBD DRAWN JMD
CHECKED DATE

SACRAMENTO COGENERATION AUTHORITY
PROCTER & GAMBLE COGENERATION PROJECT

SITE ARRANGEMENT

PROJECT DRAWING NUMBER 23933-CSTU-S1010 REV B
CODE
AREA

FIGURE 3.3-1

03580SAILOR ACAD 10 o10e
A01SL006 D1 PLOT SCALE: 1"=50', 1=600
8-31-93 1:38 P

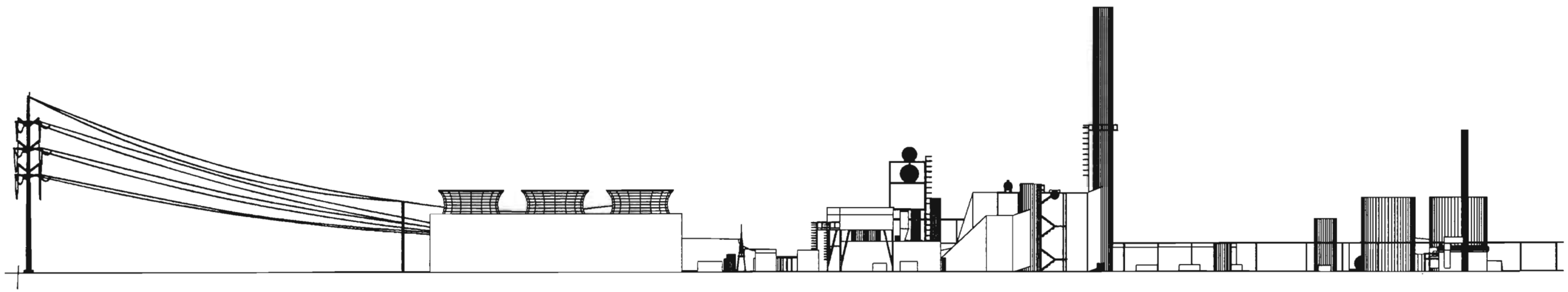

ELEVATION LOOKING EAST

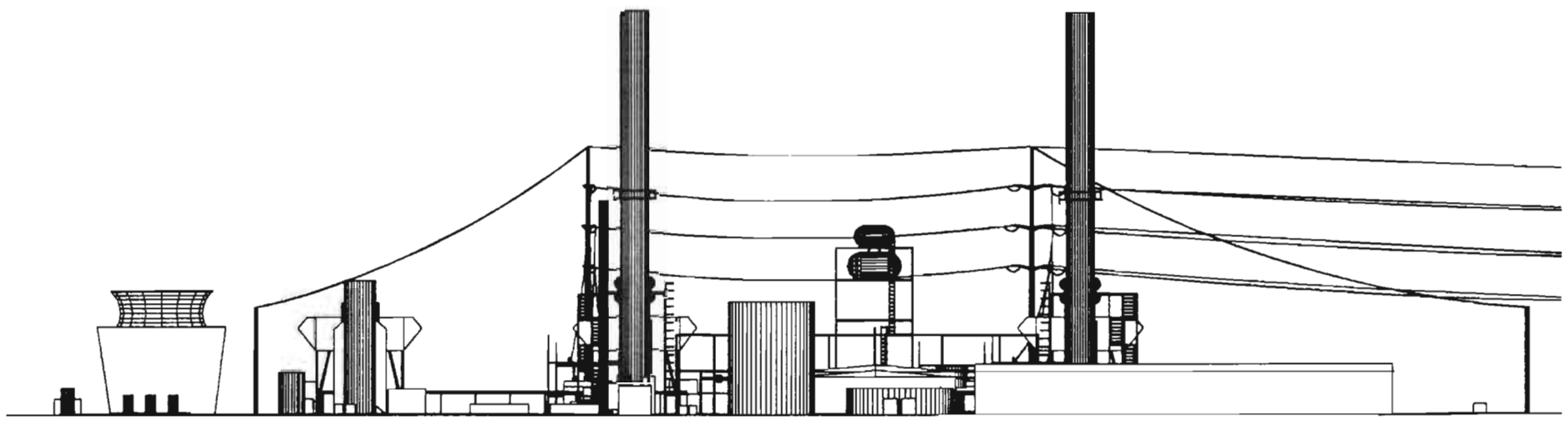

ELEVATION LOOKING NORTH

NO	DATE	REVISIONS AND RECORD OF ISSUE	BY	CHK	APP	FLM

BLACK & VEATCH

ENGINEER | DRAWN

CHECKED | DATE

SACRAMENTO COGENERATION AUTHORITY
PROCTER & GAMBLE COGENERATION PROJECT

TYPICAL ELEVATIONS

PROJECT 23933 | DRAWING NUMBER 031-ELEVATIONS | REV

CODE

AREA

FIGURE 3.3-2

A01SL003 B1 1=1
06-22-93 15:45:00

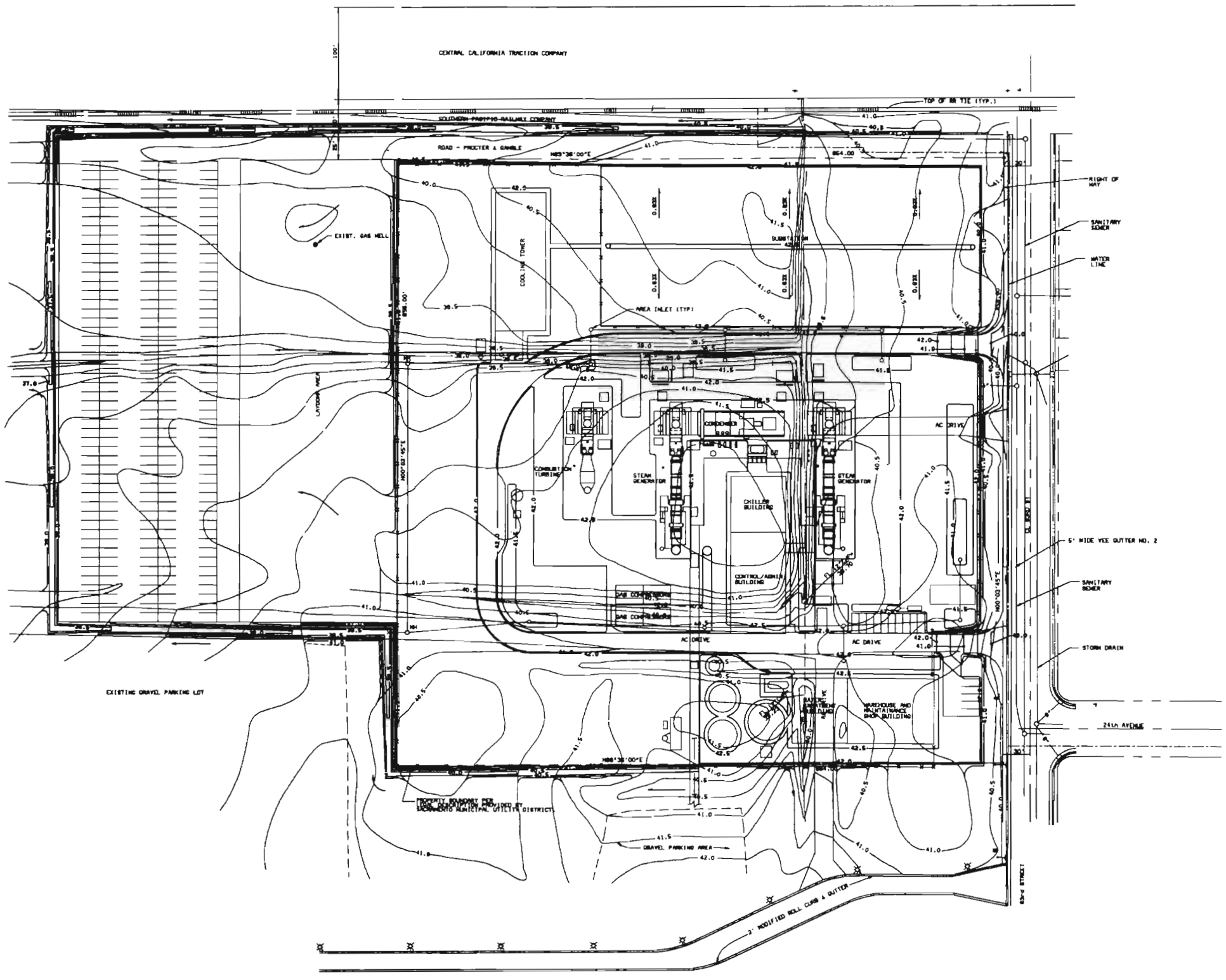

NOT TO BE USED FOR CONSTRUCTION

DATE OF ISSUE _____

NO	DATE	REVISIONS AND ISSUING OF ISSUE	BY	CHK	APP'D
B	02/09/00	ADDITIONAL REVISIONS			
A	01/05/00	ISSUED FOR DPC			

BLACK & VEATCH

SACRAMENTO COGENERATION AUTHORITY
PROCTER & GAMBLE COGENERATION PROJECT

SITE GRADING & DRAINAGE

PROJECT 23933-SS-0001 REV B

Figure 3.3-3

3.3.3.1 Geology. The Procter & Gamble Cogeneration Project is located in Sacramento, on the east central portion of the Great Valley geomorphic province of California. The Great Valley geomorphic province is a large, northwestward trending asymmetric structural trough that has been filled with as much as 6 vertical miles of sediment in the Sacramento - San Joaquin Valley (USGS 1986). According to the Sacramento Quadrangle Geologic Map contained within the California Division of Mines and Geology (CDMG), Map No. 5A, (CDMG 1991), the site is underlain by undifferentiated alluvial materials of the Riverbank Formation, of Quaternary age.

3.3.3.2 Seismic Setting. According to the Fault Map of California (Jennings 1992), and the Geologic Map of the Sacramento Quadrangle, California, (Wagner 1981), no Special Study Zones active faults are located within the project area. The nearest active fault to Sacramento County is the Marsh Creek/Greenville fault. There are several active and other potentially active faults within a 60 mile radius of the site. The major faults mapped in the region (Mualchin 1992) are listed in Table 3.3-1 along with their reported Maximum Credible Earthquake magnitude.

3.3.3.3 Soil Conditions. Recent soil borings on the site encountered, silts, sands, and gravels known collectively as the Riverbank Formation. The near surface soils consisted of silts, clayey silts, sandy clayey silts, and gravelly silts in a damp and medium dense condition, except for surface discing. These silts extend to a depth of 33 to 37 feet. However, a hard clay layer with calcium carbonate cementation was generally encountered at a depth of 5 to 9 feet.

The silts were underlain by a sandy gravel layer which extends to a depth of between 55 and 57 feet. The gravel layer is in a dense to very dense condition. Dense silts extend below the gravel layer to the termination of the investigation at 70 feet below grade. Consolidation tests indicate that the underlying silts are preconsolidated.

3.3.4 Hydrological Setting

The hydrological conditions of the Procter & Gamble Cogeneration Project are described in the following subsections.

3.3.4.1 Surface Hydrology. The American River, approximately 2 miles north of the project site, flows generally to the west and discharges into the Sacramento River. The project site is identified as being in Zone A99 on the Federal Emergency Management Agency (FEMA) flood plain map. Zone A99 is defined "to be protected from a 100 year flood by Federal flood protection under construction; no base

Table 3.3-1
Active and Potentially Active Faults Within a 60 Mile Radius of the Project Boundaries (Mualchin and Jones 1992)

Fault	Fault Classification	Maximum Credible Earthquake (Richter Mag.)	Site Maximum Ground Accelerations	Distance and Direction from County Boundary (miles)
Bear Mountains, West	Potentially Active	6-1/2	0.10 g	21, E
Bear Mountains, East	Potentially Active	6-1/2	0.10 g	23, E
Midland	Potentially Active	6-1/4	0.10 g	24, SW
Melones	Potentially Active	6-1/2	0.10 g	28, E
Vaca	Potentially Active	7	0.10 g	35, SW
Antioch	Potentially Active	6-3/4	<0.1 g	27, SW
Concord	Potentially Active	6-1/2	<0.1 g	38, SW
Green Valley	Potentially Active	6-3/4	<0.1 g	42, SW
Napa	Potentially Active	6-1/2	<0.1 g	48, SW
Soda Creek	Potentially Active	6-1/4	<0.1 g	42, SW
Cordelia	Potentially Active	6-1/2	<0.1 g	39, SW
Dunnigan Hills	Potentially Active	6-1/2	<0.1 g	20, NW
Rogers Creek	Active	7	<0.1 g	57, SW

elevations determined." The 100 year flood elevation at the intersection of 83rd Street and 24th Avenue has been determined to be approximately 41.7 feet above mean sea level (Sibilsky 1993).

As shown on Figure 3.3-3, offsite drainage from property north of the site will be rerouted to the west along the north property line. Once past the construction parking area, this offsite drainage will be directed back to the existing drainage path.

3.3.4.2 Ground Water. Ground water in the area of the site has been mapped at a depth of approximately 75 feet. No springs or seeps nor free ground water were encountered during the subsurface investigation down to elevation 70 feet below grade.

3.3.5 References

Jennings, C.W., 1992, Preliminary Fault Activity Map of California, California Department of Conservation, Division of Mines and Geology, Open File Report 92-03.

Mualchin, L. and Jones, A., 1992, Peak Acceleration from Maximum Credible Earthquakes in California, California Division of Mines and Geology, Open File Report 92-1.

Sibilsky, John, 1993, US Army Corps of Engineers, in personal communication to Jon Bakker, Black & Veatch.

Wagner, D.L., Jennings, C.W., Bedrossian, T.L. and Bortugno, E.J., 1981, Geologic Map of the Sacramento Quadrangle, California, California Division of Mines and Geology, Map Sheet 1A.

3.4 Combustion Turbine Generators

Electrical power will be produced by the following natural gas fired combustion turbine generators (CTGs):

- Two GE LM6000 CTGs in combined cycle, each rated 42 MW (nominal).
- One CTG in simple cycle, rated 42 MW (nominal).

Each of the CTGs produces thermal energy through the combustion of natural gas and converts the thermal energy into mechanical energy required to drive the CTG compressor and electric generator.

Each CTG consists of a stationary combustion turbine generator, supporting systems, and associated auxiliary equipment. Each CTG is designed to fire only natural gas.

Air is supplied to each CTG through a dedicated inlet air filter, inlet air cooling system, and associated air inlet ductwork. Downstream of the inlet air filter/cooling section, the air pressure is increased in the compressor section of the combustion turbine and then exits through the compressor discharge casing to the combustion chambers. Fuel is supplied to the combustion chambers where it is mixed with the compressed air and the mixture is ignited and burned. The high temperature, pressurized gas produced by the compressor and combustion section expands through the turbine blades, rotating the shaft and thereby driving the CTG compressor and electric generator.

The following subsections describe each of the combustion turbine generators.

3.4.1 Combined Cycle Combustion Turbine Generators

Two combustion turbine generators will be provided for operation in combined cycle. The hot exhaust from each combined cycle combustion turbine is directed through ductwork to an associated heat recovery steam generator (HRSG). Heat absorbed in each HRSG is used to produce steam. Steam generated in the HRSG will be admitted to the steam turbine for electric power generation. Steam will also be extracted from the turbine for process steam supply to Procter & Gamble.

Each of the two combined cycle combustion turbine generators will be General Electric Model LM 6000 aeroderivative combustion turbine generators. At design conditions, each CTG will provide approximately 1,036,000 lb/h of 844° F exhaust gas to the associated HRSG.

The combined cycle combustion turbine generator systems will be designed as follows:

- Combustion turbine generators rated 42 MW (nominal) each.
- NO_x emissions at the CTG exhaust, upstream of the HRSG, will be controlled to 40 parts per million, volumetric dry (ppmvd) at 15 percent O_2 and site rating conditions by injection of water into the combustion process.
- A standby generator will be provided to keep both CTGs available for restart after a plant electrical system trip.
- A steam turbine bypass arrangement will be provided so that both combustion turbines can be operated at full power with the steam turbine out of service. (With a combustion turbine generator in service and the steam turbine out of service, the steam turbine bypass arrangement will allow steam from the HRSG to bypass the steam turbine and be directed to the condenser.)

Each combined cycle combustion turbine generator will be equipped with auxiliary equipment to provide safe and reliable operation. Auxiliary equipment will include the following:

- Inlet air filter with anti-icing system.
- Inlet air cooling system. Chilled water will be provided to cooling coils in the air inlet filter housing.
- Acoustical enclosures.
- Duplex lube oil coolers.
- NO_x water injection system.
- Compressor wash system (on-line and off-line capability).
- Fire protection systems.
- Emission reduction and monitoring systems at each HRSG.
  - -- NO_x Selective Catalytic Reduction (SCR) including Ammonia Injection System.
  - -- CO Catalytic Converter (90 percent effective).
  - -- Continuous Emissions Monitoring System.

3.4.2 Simple Cycle Combustion Turbine Generator

The cogeneration project will include a simple cycle combustion turbine generator. The simple cycle combustion turbine generator will be a General Electric Model LM6000 aeroderivative combustion turbine generator.

The simple cycle combustion turbine generator will be designed as follows:

- Combustion turbine generator rated 42 MW (nominal).
- NO_x emissions at the simple cycle CTG exhaust upstream of the high temperature NO_x selective catalytic reduction system and CO catalyst system will be controlled to 40 ppmvd at 15 percent O_2 and site rating conditions by injection of water into the combustion process.

The simple cycle combustion turbine generator will include auxiliary equipment to provide safe and reliable operation. The auxiliary equipment will include the following:

- Inlet air filters with anti-icing system.
- NO_x water injection system.
- Evaporative inlet air cooling system.
- Acoustical enclosures.
- Compressor wash system.

- Emission reduction systems.
  - -- High temperature Selective Catalytic Reduction (SCR) System including Ammonia Injection System.
  - -- CO Catalytic Converter (90 percent effective).
- Fire protection systems.
- Continuous emission monitoring system.

3.5 Heat Recovery Steam Generators (HRSGs)

The heat recovery steam generators (HRSGs) will provide for the transfer of heat from the exhaust gases of the CTGs to the feedwater to produce steam for process, steam turbine operation, or inlet air chilling. Each HRSG will be a dual pressure, natural circulation unit equipped with inlet and outlet ductwork, insulation, lagging, emission reduction system, stack damper, and exhaust stack. Special duct burner provisions will be incorporated in the HRSG design to assist in steam production for peak plant output. Duct burners will be designed for low NO_x emissions with natural gas fuel.

Major components of the HRSG include a low-pressure economizer, low-pressure evaporator, two high-pressure economizers, high-pressure evaporator, high-pressure drum, and two high-pressure superheaters with an interstage attemperator. The low-pressure economizer is the final heat transfer section to receive heat from the combustion gases prior to exhausting to atmosphere.

Feedwater for the HRSGs will be deaerated in a common external deaerator. Four dual pressure boiler feed pumps will provide feedwater from the deaerator to the HRSG economizer inlets. Each feedwater pump will provide high-pressure feedwater and also low-pressure feedwater from an interstage bleed point.

High-pressure (HP) feedwater from the deaerator will be sent to the HP section of each HRSG. High-pressure feedwater will flow through the sequential high-pressure economizers to the high-pressure steam drum where a saturated liquid state will be maintained. The saturated water will next flow from the steam drum through downcomers to the inlet headers of the high-pressure evaporator. The saturated water flows upward through the high-pressure evaporator tubes by natural circulation. Saturated steam will form in the tubes as energy from the combustion turbine exhaust gas is absorbed. The high-pressure saturated liquid/vapor mixture will then return to the steam drum where the two phases will be separated by the steam separators in the drum. The saturated water will return to the high-pressure evaporator, while the vapor passes to the high-pressure superheater inlet. The

saturated steam (vapor) will subsequently pass through the high-pressure superheaters to the high-pressure steam turbine entrance.

Low-pressure (LP) feedwater from the deaerator will be sent to the LP section of each HRSG by an interstage bleed from the boiler feed pumps. This intermediate-pressure feedwater will flow through a LP economizer to the LP steam drum where a saturated liquid state will be maintained. The saturated water will next flow from the steam drum through downcomers to the inlet headers of the LP evaporator. The saturated water flows upward through the LP evaporator tubes by natural circulation. Saturated steam will form in the tubes as energy from the combustion turbine exhaust gas is absorbed. The LP saturated liquid vapor mixture will then return to the steam drum where the two phases will be separated by the steam separators in the drum. The saturated water will return to the LP evaporator, while the vapor passes to the LP superheater inlet. The saturated steam (vapor) will pass through the LP superheater to the LP steam turbine entrance.

Each HRSG will be equipped with emission reduction and monitoring systems as follows:

- NO_x Selective Catalytic Reduction (SCR) System including Ammonia Injection System.
- CO Catalytic Converter (90 percent effective).
- Continuous Emissions Monitoring System.

3.6 Steam Turbine Generator

The steam turbine generator system consists of a high-pressure steam turbine generator, gland steam system, lube oil system, hydraulic control system, and inlet steam system.

A General Electric, 3,600 rpm, single shell, axial exhaust, condensing steam turbine will be provided. With maximum HRSG duct firing, the steam turbine is designed for an output of 43.3 MW with inlet throttle steam conditions of 1,385 psig and 950° F.

Without HRSG duct firing, the inlet throttle steam conditions are 900 psig, 805° F. At this steam condition, with an uncontrolled admission at 35 psig and while providing a controlled extraction steam flow of 65,500 lb/h, the steam turbine generator is designed to provide 21,110 kW. The steam turbine will exhaust into a water cooled surface condenser at 1.33 inches HgA.

The controlled extraction will provide process steam to the thermal host and warming steam to the auxiliary boiler. Low-pressure steam from the HRSG will be provided to the uncontrolled admission.

3.7 Major Electrical Equipment

3.7.1 AC Power Transmission

An overall one-line diagram of the cogeneration facility electrical distribution system is shown on Figure 3.7-1. Power is produced at the facility by the combustion turbine and steam turbine generators at 13.8 kV. The outputs of the two combined cycle combustion turbine generators, the steam turbine generator, and the simple cycle combustion turbine generator are connected by nonsegregated phase bus duct through individual generator breakers to 2 three-winding, oil-filled generator step-up transformers rated 230-13.8/13.8 kV. Surge arrestors will be provided at the high voltage bushings to protect the transformer from surges on the 230 kV system resulting from lightning strikes or other system disturbances. The transformers will be set on concrete pads with oil containment provided. Fire detection and prevention systems will be provided. The high side of each step-up transformer is terminated on the 230 kV project bus in the SMUD switchyard located onsite.

3.7.2 AC Power Distribution

Auxiliary power to the combined cycle power block and the simple cycle combustion turbine generator will be supplied at 4160 volts ac by two 4160 volt switchgear buses through normally closed main breakers. A normally open tie breaker is supplied to allow both buses to be powered by one transformer if the second is unavailable. Primary power to the switchgear will be supplied by oil-filled unit auxiliary transformers rated 13.8 kV to 4160 volts. The high voltage side of the unit auxiliary transformers are connected to combustion turbine generator nonsegregated phase bus duct between the generator breaker and generator step-up transformer. This connection allows the switchgear to be powered from the combustion turbine if the unit is on line or backfed from the SMUD system when the unit is off-line.

The 4160 volt switchgear lineup supplies power to the various 4160 volt motors and to the secondary unit substation (SUS) transformers rated 4160 to 480 volts for 480 volt power distribution. The switchgear will have vacuum breakers for the main feeds and vacuum breakers or fused contactors for power distribution. The 4160 volt system is resistance grounded to limit the maximum ground fault current.

OWNERS 230KV SYSTEM

FURNISHED BY OTHERS

GEN STEP-UP XMFR 1
230-13.8KV/13.8KV
H: 60/80/100 MVA @ 55°C
112 MVA MAX @ 65°C
OA/FA/FA
X: 30/40/50 MVA @ 55°C
56 MVA MAX @ 65°C
OA/FA/FA
Y: 30/40/50 MVA @ 55°C
56 MVA MAX @ 65°C
OA/FA/FA

GEN STEP-UP XMFR 2
230-13.8KV/13.8KV
H: 60/80/100 MVA @ 55°C
112 MVA MAX @ 65°C
OA/FA/FA
X: 30/40/50 MVA @ 55°C
56 MVA MAX @ 65°C
OA/FA/FA
Y: 30/40/50 MVA @ 55°C
56 MVA MAX @ 65°C
OA/FA/FA

3000A
42MW @ 0.90 PF
13.8KV
SC CTG

3000A
42MW @ 0.90 PF
13.8KV
CC CTG

UNIT AUX XFMR 1
13.8-4.16KV
7.5 MVA 55°C
8.4 MVA MAX 65°C
OA

2000A

3000A
42MW @ 0.90 PF
13.8KV
STG

3000A
42MW @ 0.90 PF
13.8KV
CC CTG

UNIT AUX XFMR 2
13.8-4.16KV
7.5 MVA 55°C
8.4 MVA MAX 65°C
OA

2000A

4160V BUS 1

1200A

4160V BUS 2

600 CIRC WTR P #3

450 HP BOILER FEED P #1

SUS XFMR 1
4160-480V
2000 KVA 55°C
RA

600 GAS COMP #1

600 GAS COMP #2

600 CIRC WTR P #1

450 HP BLR FEED P #2

450 HP BLR FEED P #3

600 CIRC WTR P #2

600 GAS COMP #3

SUS XFMR 2
4160-480V
2000 KVA 55°C
RA

450 HP BOILER FEED P #4

600 GAS COMP #4

2500A

480V SUS BUS 1

1600A

480V SUS BUS 2

2500A

SPARE

125 CLOSED CYCLE CLG WTR PUMP #1

125 AIR CPRSR #1

BALANCE OF PLANT MCC #3

CLG TWR MCC 1

CTG 1 MCC

BALANCE OF PLANT MCC #1

WTP MCC 1

STANDBY GENERATOR 750 KW

WTP MCC 2

BALANCE OF PLANT MCC #2

CTG 2 MCC

CLG TWR MCC 2

125 CLOSED CYCLE CLG WTR PUMP #2

BALANCE OF PLANT MCC #4

CTG 3 MCC

125 AIR CPRSR #2

EQUIPPED SPACE

NOT TO BE USED FOR CONSTRUCTION

DATE OF ISSUE _____

NO	DATE	REVISIONS AND RECORD OF ISSUE	BY	CHK	APP	FLM
D	09-03-93	GENERAL REVISIONS	MWS			
C	06-12-93	GENERAL REVISIONS	MWS			
B	12-14-92	GENERAL REVISIONS				

13907ARVIN ACAD 12.c1
A01SL005 C1 1=1
09/03/93 10:45:39

BLACK & VEATCH

ENGINEER MWS DRAWN RDA
CHECKED DATE

SACRAMENTO MUNICIPAL UTILITY DISTRICT
PROCTER AND GAMBLE COGEN FACILITY

OVERALL ONE LINE DIAGRAM

PROJECT 18040-031-E1001
DRAWING NUMBER
REV D
CODE
AREA

Figure 3.7-1

The SUS transformers will be dry type and will each supply 480 volt, 3-phase to the two SUS buses through normally closed SUS main breakers. A normally open tie breaker is supplied to allow both SUS buses to be powered by one transformer if the second transformer is unavailable. The 480 volt system is solidly grounded with individual feeder ground fault detection.

The SUSs will provide power through feeder breakers to the various large 480 volt motors and to motor control centers (MCCs). The MCCs will distribute power to smaller 480 volt motors, to 480 volt power panels, and to other intermediate 480 volt loads. The MCCs will distribute power to 480-480/277 volt transformers when 277 volt, single-phase lighting loads are to be served. The 480 volt power panels will distribute power to small 480 volt loads.

Power for the ac power supply (120/208 V) system will be provided by the 480 volt MCCs and 480 volt power panels. Transformation of 480 volt power to 120/208 volt power will be provided by 480-120/208 volt dry type transformers.

3.7.3 DC Power Supply

The dc power supply system for balance-of-plant loads consists of one 125 volt dc battery, a 125 volt dc full-capacity battery charger, metering, ground detectors, and distribution panels. Additional 125 volt dc systems will also be supplied as part of the combustion turbine equipment.

Under normal operating conditions, the battery chargers supply dc power to the dc loads. The battery chargers receive 480 volts, 3-phase ac power from the ac power supply (480 V) system and continuously load charge the battery while supplying power to the dc loads. The ground detection scheme detects grounds on the dc power supply system.

Under abnormal or emergency conditions when power from the ac power supply (480 V) system is unavailable, the battery supplies dc power to the dc power supply system loads. Recharging of a discharged battery occurs whenever 480 volt power returns from the ac power supply (480 V) system. The rate of charge is dependent on the characteristics of the battery, battery charger, and the connected dc load during charging; however, the maximum recharge time will be 8 hours.

The balance-of-plant 125 volt dc system will be used to provide control power to the 4160 volt switchgear, the 480 volt SUSs, and to critical control circuits. The system also provides power to the emergency dc motors.

3.7.4 Essential Service AC

The combustion turbine and steam turbine power block will also have an essential service 120 volt ac, single-phase, 60 hertz power source to supply ac power to essential instrumentation, to critical equipment loads, and to unit protection and safety systems that require uninterruptible ac power. The essential service ac system and the dc power supply system are both designed to ensure that all critical safety and unit protection control circuits always have power and can take the correct action on a unit trip or loss of plant ac power.

The essential service ac system consists of one full-capacity inverter, one dedicated 125 volt dc battery system, a solid-state transfer switch, a manual bypass switch, an alternate source transformer and voltage regulator, and ac panelboards.

The normal source of power to the system will be from the dedicated 125 volt dc battery through the inverter to the panelboards. A solid-state static transfer switch will continuously monitor both the inverter output and the alternate ac source. The transfer switch will automatically transfer essential ac loads without interruption from the inverter output to the alternate source upon loss of the inverter output.

A manual bypass switch is also included to enable isolation of the inverter-static transfer switch for testing and maintenance without interruption to the essential service ac loads.

3.7.5 Standby Generator-AC Power

A standby generator rated at approximately 750 kW will be provided to supply 480 volt power to the combined cycle combustion turbines after a plant electrical system trip. If the combustion turbines cannot be restarted within 10 minutes after a plant trip, the combustion turbine rotors must be rotated above 200 rpm to avoid a mandatory 6 hour lockout period required by the combustion turbine manufacturer. The standby generator will provide 480 volt to keep the combined cycle combustion turbines rotating at the required speed.

3.8 Fuel Gas System

The CTGs, HRSG duct burners, and auxiliary boiler will be designed to burn natural gas. Maximum natural gas requirements during peak load operation are approximately 61,820 lb/h or 23,100 scfm.

The natural gas supply pressure will be 350 psia. The natural gas will flow through gas filtering equipment to the gas compressors where the gas pressure will be increased to maintain the 675 psia combustion turbine fuel gas inlet pressure.

The gas will then flow through a gas pressure control station and a flow metering nozzle prior to entering the combustion turbine. Natural gas compression will not be required for the HRSG duct burner system or auxiliary boiler.

Four electric motor driven, reciprocating natural gas compressors will be provided, each with the capacity to operate one combined cycle combustion turbine at baseload conditions. The piping will be arranged to allow any of the four compressors to supply gas to either of the combined cycle combustion turbines or the simple cycle combustion turbine. A compressor bypass system will be incorporated to bypass the compressors if the incoming line pressure is high enough to operate the combustion turbines without the compressors in operation.

3.9 Water Supply and Treatment Facilities

This section provides a description of the water supply source, treatment requirements, and water quantity requirements for the cogeneration project. Water balance diagrams showing the various water requirements and estimated flow rates for the cogeneration project are presented on Figure 3.9-1 and Figure 3.9-2.

3.9.1 Water Requirements

A breakdown of estimated water requirements for the cogeneration project is presented in Table 3.9-1 and Table 3.9-2. The daily water requirements shown are estimated requirements, based on the combined cycle cogeneration plant operating at full load with process steam provided to Procter & Gamble and the simple cycle combustion turbine generator at full load.

In addition to combined cycle cogeneration plant operating load, water requirements will also depend on the frequency of evaporative cooler use for the simple cycle CTG and the productivity of the demineralization system. The estimated water volumes in Tables 3.9-1 and 3.9-2 are based on continuous use of the evaporative coolers when the simple cycle CTG is in service and 85 percent demineralizer net productivity.

3.9.2 Water Supply

The source of water for the cogeneration plant will be from the City of Sacramento's water supply system. Condensate from the process steam supplied to Procter & Gamble is not available for return to the cogeneration project.

23933-031-WMB-1B
11345WISEMAN ACAD 12_cl
OUTLINE 1=1
09/02/93 13:57:39

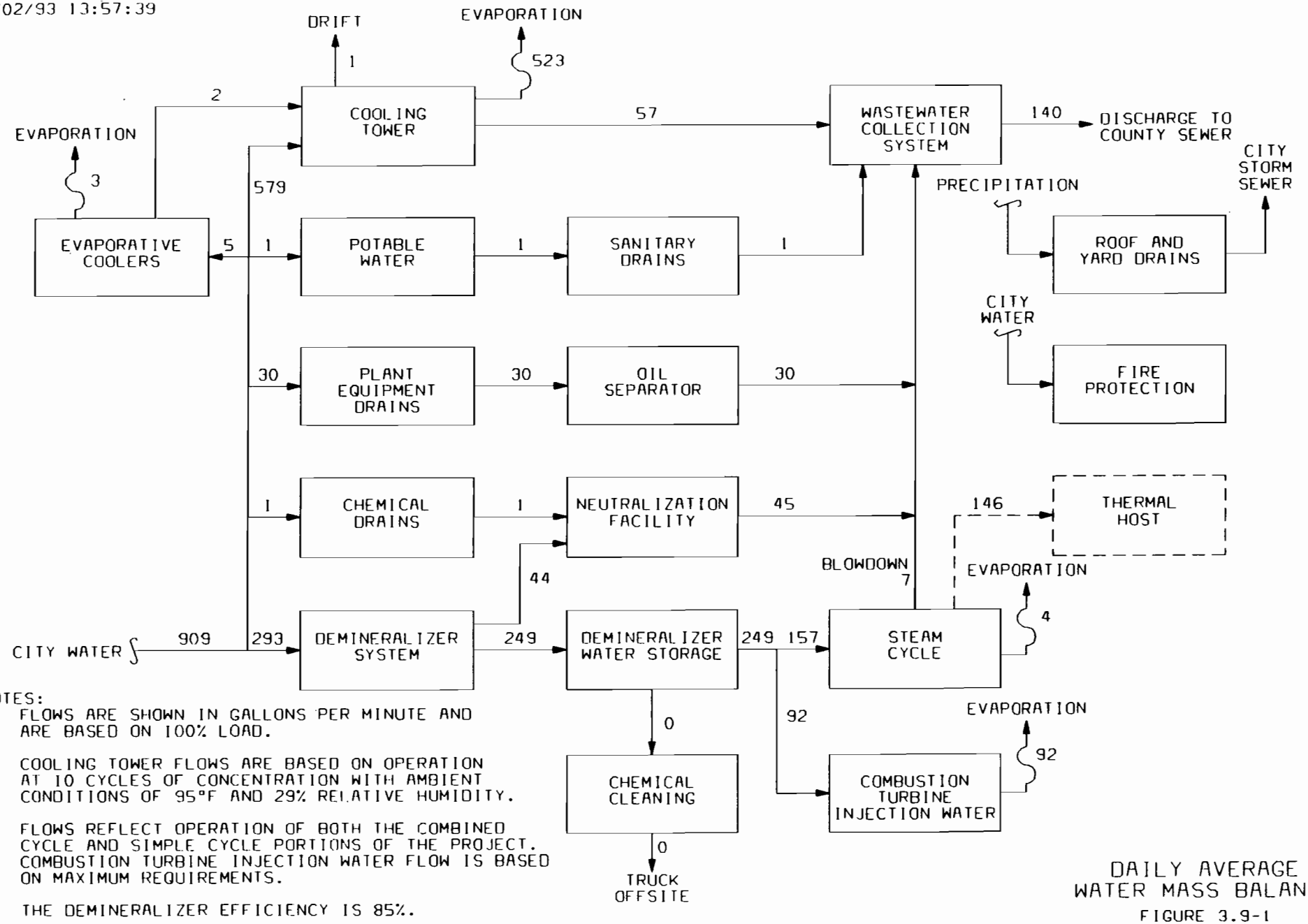

NOTES:
1. FLOWS ARE SHOWN IN GALLONS PER MINUTE AND ARE BASED ON 100% LOAD.
2. COOLING TOWER FLOWS ARE BASED ON OPERATION AT 10 CYCLES OF CONCENTRATION WITH AMBIENT CONDITIONS OF 95°F AND 29% RELATIVE HUMIDITY.
3. FLOWS REFLECT OPERATION OF BOTH THE COMBINED CYCLE AND SIMPLE CYCLE PORTIONS OF THE PROJECT. COMBUSTION TURBINE INJECTION WATER FLOW IS BASED ON MAXIMUM REQUIREMENTS.
4. THE DEMINERALIZER EFFICIENCY IS 85%.
5. COGENERATION STEAM FLOW IS BASED ON AVERAGE REQUIREMENTS.

DAILY AVERAGE
WATER MASS BALANCE
FIGURE 3.9-1

23933-031[illegible]-1A
11345WISEMAN ACAD 12.c1
OUTLINE 1=1
09/02/93 13:56:08

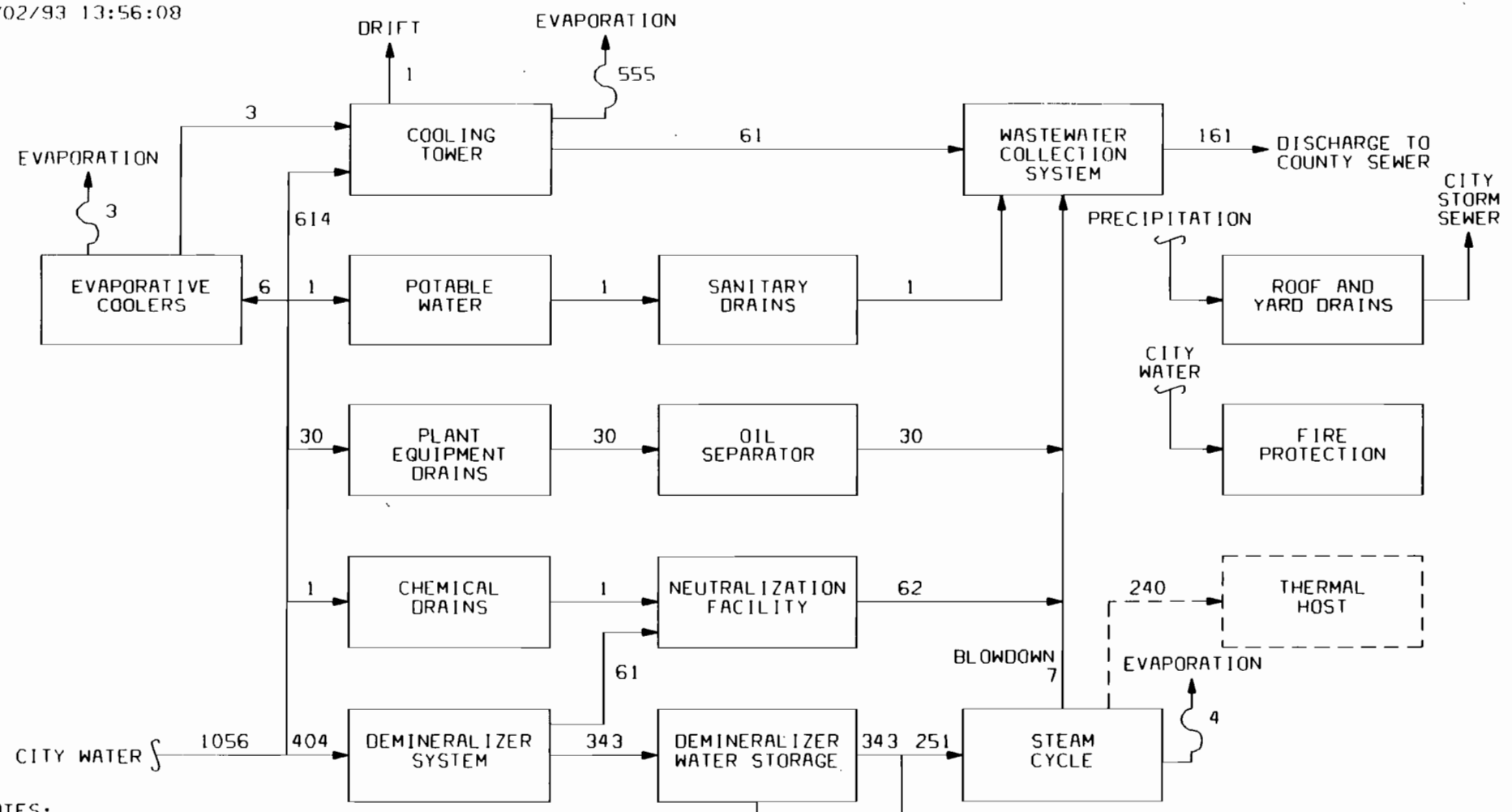

NOTES:
1. FLOWS ARE SHOWN IN GALLONS PER MINUTE AND ARE BASED ON 100% LOAD.
2. COOLING TOWER FLOWS ARE BASED ON OPERATION AT 10 CYCLES OF CONCENTRATION WITH AMBIENT CONDITIONS OF 105°F AND 20% RELATIVE HUMIDITY.
3. FLOWS REFLECT OPERATION OF BOTH THE COMBINED CYCLE AND SIMPLE CYCLE PORTIONS OF THE PROJECT. COMBUSTION TURBINE INJECTION WATER FLOW IS BASED ON MAXIMUM REQUIREMENTS.
4. THE DEMINERALIZER EFFICIENCY IS 85%.
5. COGENERATION STEAM FLOW IS BASED ON PEAK REQUIREMENTS.

PEAK
WATER MASS BALANCE
FIGURE 3.9-2

Table 3.9-1
Estimated Average Daily Water Requirements--
Cogeneration Facilities

Water Use	City Water Daily Requirements (gpm)
Cogeneration Plant	
Makeup to Circulating Water System	579
Demineralizer	293
Plant Service/Domestic	37
Total	909

Note: Ambient conditions at 95° F and 29 percent relative humidity.

Table 3.9-2
Estimated Peak Daily Water Requirements--
Cogeneration Facilities

Water Use	City Water Daily Requirements (gpm)
Cogeneration Plant	
Makeup to Circulating Water System	604
Demineralizer	404
Plant Service/Domestic	38
Total	1,056

Note: Ambient conditions at 95° F and 29 percent relative humidity.

3.9.2.1 Water Usage. City water will supply makeup to the circulating (cooling) water system and additional noncooling water for plant process needs. Noncooling water requirements will include makeup to the heat recovery steam generators, makeup to the simple cycle combustion turbine evaporative cooler, general service water, and potable water. City water will also supply water to the cogeneration project's fire water system.

3.9.2.2 Water Quality. A typical analysis for the city water in the area of the project site is provided in Appendix E, Chemical Engineering Design Criteria.

3.9.3 Water Treatment

Water will be used at the quality levels (process water, circulating water, and demineralized water) described in the following sections.

3.9.3.1 Process Water. City water without treatment will be used for plant process requirements. Plant process requirements include potable water demands, circulating water makeup, demineralization system influent supply, general plant demands, washdown, and fire water supply.

3.9.3.2 Circulating Water System. City water will be used for direct makeup to the circulating water system. No storage will be required for this water which will come directly from the city water supply.

3.9.3.2.1 Circulating water chemical feed system. The circulating water chemical feed system will supply water conditioning chemicals to the circulating water system to minimize corrosion and to control the formation of mineral scale and biofouling.

Sulfuric acid will be fed into the circulating water system in proportion to makeup water flow for alkalinity reduction in order to control the scaling tendency of the circulating water within an acceptable range. The acid feed equipment will consist of a bulk sulfuric acid storage tank and two full-capacity, piston-diaphragm sulfuric acid metering pumps.

A scale inhibitor solution will be fed into the circulating water system as a sequestering agent in an amount proportional to the circulating water blowdown flow to further inhibit scale formation. The inhibitor feed equipment will consist of a solution tank and two full-capacity, piston-diaphragm inhibitor metering pumps.

To prevent biofouling in the circulating water system, sodium hypochlorite will be shock fed into the system as a biocide. The hypochlorite feed equipment will consist of a bulk storage tank and two full-capacity, piston-diaphragm hypochlorite metering pumps.

3.9.3.3 Demineralized Water. Treatment of the city water will be required prior to use as makeup to the HRSG and for NO_x injection water for the CTGs. The expected treatment methods include demineralization to reduce dissolved solids and produce high purity water. City water will be treated in the demineralizer and demineralized water will be stored in two 250,000 gallon storage tanks. This provides demineralized water supply in case of interruption of the water supply or interruption of the demineralization system treatment process.

3.9.3.3.1 Cycle chemical feed system. The cycle chemical feed system will supply water conditioning chemicals to the HRSG/steam turbine cycle to minimize corrosion and scale formation. The system will feed hydrazine to the feedwater for dissolved oxygen control and aqueous ammonia to the feedwater for pH control. The design will provide for automatic feed of the oxygen scavenger in proportion to condensate flow and the amine in proportion to condensate flow.

The system will feed sodium phosphate to the boiler to control pH and minimize scale formation. The system will be designed for operation of the HRSG using the low solids, congruent phosphate method of boiler water treatment. The design will provide for feeding sodium phosphates to the steam generator to react with any hardness present. For congruent phosphate treatment, a dilute solution of a disodium phosphate and trisodium phosphate mixture will be manually prepared in the phosphate solution tank. Feed of phosphate to the HRSG steam drum will be manually initiated based on boiler water phosphate residual and pH.

3.9.3.4 HRSG Steam Cycle Sampling and Analysis System. The system will monitor the water quality at various points in the HRSG steam cycle and provide sufficient data to operating personnel for detection of deviations from control limits so that corrective action can be taken.

The samples will be routed to a sample panel where pressure and temperature will be reduced as required. At the sample panel, samples will be directed to automatic analyzers for continuous monitoring and grab samples will be provided for wet chemical analysis. All monitored values will be recorded at the sample panel.

Automatic analyzers will monitor cation conductivity, pH, and specific conductance.

3.9.4 Cycle Heat Rejection System

The cycle heat rejection system will consist of a wet surface condenser, cooling tower, and circulating water system. The heat rejection system design parameters are summarized in Table 3.9-3.

Table 3.9-3
Cycle Heat Rejection Design Criteria

Condenser	
Condenser Duty, million Btu/h	268
Back Pressure, inches HgA	2.4
Condenser Cooling Water Flow Rate, gpm	35,900
Inlet Water Temperature, °F	86
Outlet Water Temperature, °F	101
Cooling Tower	
Circulating Water Flow Rate, gpm	46,450
Total Plant Cooling System Heat Load, million Btu/h	348
Design Inlet Water Temperature, °F	101
Design Outlet Water Temperature, °F	86
Maximum Drift Loss, Percent of Circulating Water Flow	0.002
Maximum Evaporation Rate, Percent of Circulating Water Flow	1.6

The single shell, two-pass deaerating surface condenser will collect and condense exhaust steam from the steam turbine and other condensate sources within the plant. The condenser will be designed to condense approximately 292,000 lb/h steam (100 percent baseload with duct firing) to maintain a maximum of 2.4 inches HgA condensation pressure at an ambient temperature of 105° F. Condenser air removal will be accomplished with liquid ring mechanical vacuum pumps.

The condenser is designed to accept steam turbine bypass flow during unit startup.

The circulating water system will provide cooling water for rejection of heat from the condenser, the auxiliary cooling water heat exchangers, and the combustion turbine inlet air chillers. Three 60 percent capacity, wet pit, vertical mixed flow pumps will be provided to convey the cooling water from the cooling tower basin, through underground piping to the plant heat loads, then back to the distribution piping in the cooling tower.

The cooling tower will be a three cell, counterflow, mechanical draft, wood cooling tower, sized for a maximum heat load of approximately 350,000,000 Btu/h. Maximum drift will be limited to 0.002 percent of circulating water flow or approximately 0.93 gallon per minute.

3.10 Wastewater Collection and Treatment Facilities

The wastewater collection system provides for the collection, treatment, and disposal of all station wastewaters produced from the cogeneration project equipment and facilities.

The water balance diagrams, Figures 3.9-1 and 3.9-2, show the expected waste streams and flow rates for the cogeneration plant. The flow rates shown are based on expected meteorological conditions and combined cycle cogeneration plant operation. The projected quality of the waste streams is provided in Table 3.10-1.

Sanitary drains and plant process drains will be collected by the wastewater collection system and discharged to the County of Sacramento's sanitary sewer system.

Storm runoff water will be collected by the storm drains collection system and discharged to the City of Sacramento's storm drains system.

Table 3.10-1
Wastewater Quality--Discharge to City Sewer

	Average Daily Values	
	Based on Figure 3.9-1 Water Mass Balance	Based on Figure 3.9-2 Water Mass Balance
Flow, gpm	140	161
Ca, mg/l as $CaCO_3$	218	220
Mg, mg/l as $CaCO_3$	153	156
Na, mg/l as $CaCO_3$	1,322	1,566
M alkalinity, mg/l as $CaCO_3$	177	192
SO_4, mg/l as $CaCO_3$	1,511	1,760
Cl, mg/l as $CaCO_3$	83	84
SiO_2, mg/l as such	89	91
TDS, mg/l as such	2,551	2,925

3.10.1 Circulating Water System Blowdown

This is the largest wastewater stream and consists of treated city water which is circulated through the system approximately ten cycles before entering the wastewater collection system.

3.10.2 Plant Drains

Miscellaneous general plant drains will consist of area washdown, sample drains, equipment leakage, and drainage from the combustion turbine and HRSG areas. These drains will be collected in a system of floor drains, sumps, and piping and routed to the wastewater collection system for disposal. Drains that are subject to oil or grease contamination will be routed to an oil/water separator.

3.10.3 Neutralization Basin

The demineralizer regeneration wastes and chemical feed area drains will be collected and treated onsite. The demineralizer regeneration wastes will contain various amounts of unreacted sulfuric acid and sodium hydroxide along with the salts removed from the demineralizer ion exchange resins by the regeneration process. The chemical feed area drains will consist of spillage, tank overflows, maintenance operations, and area washdowns. Due to the corrosive nature of these wastes, they will be collected in corrosion-resistant piping systems separate from other plant drains. The separate piping system will prevent corrosion of normal plant drains and provide control of fumes and objectionable odors. The collected chemical drains will be routed to a neutralization facility for adjustment of pH from approximately 6 to 9. Effluent from the neutralization facility will be routed to the wastewater collection system for disposal.

3.10.4 Simple Cycle Combustion Turbine Generator Evaporative Cooler Blowdown

Simple cycle CTG evaporative cooler blowdown consists of service water which was recirculated in the evaporative cooler system approximately two cycles, then discharged to the cooling tower. Blowdown is used to maintain dissolved solids levels within acceptable ranges.

3.10.5 HRSG Blowdown

HRSG blowdown consists of boiler water discharged to the wastewater collection system to control the concentration of boiler water impurities within acceptable ranges.

3.11 Waste Disposal and Management

3.11.1 Solid Wastes

The cogeneration plant will generate maintenance and plant wastes typical of such operations. Such cogeneration plant wastes include oily rags, broken/rusted metal and machine parts, defective/broken electrical materials, empty containers, and other miscellaneous solid wastes. These materials will be disposed of at the Sacramento County Landfill in accordance with applicable regulatory requirements. Proper management of these wastes will minimize any safety and reliability risks.

3.11.2 Chemical Management

There will be a variety of chemicals stored and used during construction and operation of the cogeneration project. A list of the chemicals anticipated to be used in the cogeneration plant is provided in Table 3.11-1. The table identifies the chemical by type, intended use, and estimated quantity to be stored onsite.

The storage, handling, and use of chemicals for the project will be conducted in accordance with applicable laws, ordinances, regulations, and standards. Chemicals will be stored in appropriate chemical storage facilities. Bulk chemicals will be stored in storage tanks; other chemicals will be stored in their delivery containers. Chemical storage and chemical feed areas will be surrounded by curbing to contain leaks and spills. The curbed areas will be sized to hold the full contents of the largest single tank. Drains from the chemical storage and feed areas will be directed to the neutralization facility. Drain piping for volatile chemicals will be trapped and isolated from other drains to eliminate offensive vapors. After neutralization, wastewater collected from the chemical storage areas will be directed to the wastewater collection system.

Safety showers and eyewash stations will be provided adjacent to or in the area of chemical storage and use areas. Hose connections will be provided near the chemical storage and feed areas to flush spills and leaks to the neutralization facility. Safety gear will be provided for plant personnel for use during chemical spill containment and cleanup activities. Personnel will be trained in the handling of these chemicals and what to do in cases of chemical spills or accidental releases. Supplies of absorbent material will be stored onsite for spill cleanup.

Table 3.11-1
Power Project Plant Chemicals

Chemical	Use	Quantity Stored Onsite	Form/Type
Ammonium hydroxide (NH_4OH)	Selective catalytic reduction	10,000 gallon bulk storage tanks (Approximately 7 days storage)	Liquid aqueous ammonia, 30 percent NH_3
Sodium hydroxide (NaOH)	Demineralizer resin regeneration and neutralization, boiler pH control	6,000 gallon bulk storage tank (Approximately 30 days storage)	Liquid, 50 percent NaOH
Sulfuric acid (H_2SO_4)	Demineralizer resin regeneration and neutralization, circulating water pH control	6,000 gallon bulk storage tank (Approximately 30 days storage)	Liquid, 93 percent H_2SO_4
Disodium phosphate (Na_2HPO_4)	Boiler water pH and scale control	500 pounds (Approximately 30 days storage)	Granular
Trisodium phosphate (Na_3HPO_4)	Boiler water pH and scale control	500 pounds (Approximately 30 days storage)	Granular
Aqueous ammonia	Feedwater pH control	200 gallons (55 gallon drums) (Approximately 30 days storage)	Liquid, 35 percent solution
Sodium hypochlorite (NaOCL)	Biocide for condenser cooling water system	7,000 gallons (estimated maximum) (Approximately 30 days storage)	Liquid, 10 percent NaOCl
Hydrazine	Feedwater oxygen scavenger	200 gallons (55 gallon drums) (Approximately 30 days storage)	Liquid
Laboratory reagents	Various	Small amounts, generally less than 5 pounds	Liquid and granular
Hydrochloric acid (HCL)* (Temporarily onsite)	Chemical cleaning of HRSG (Acid cleaning)	10,000 pounds (used for initial chemical cleaning and may be used for future chemical cleaning approximately every 3 to 5 years)	Liquid, 30 percent HCl
Ammonium bifluoride (NH_4HF_2)* (Temporarily onsite)	Chemical cleaning of HRSG (Acid cleaning)	200 pounds (used for initial chemical cleaning and may be used for future chemical cleaning approximately every 3 to 5 years)	Crystals

Table 3.11-1 (Continued)
Power Project Plant Chemicals

Chemical	Use	Quantity Stored Onsite	Form/Type
Citric acid* (Temporarily onsite)	Chemical cleaning of HRSG (Acid cleaning)	100 pounds (used for initial chemical cleaning and may be used for future chemical cleaning approximately every 3 to 5 years)	Powder
Hydroxyacetic acid* (Temporarily onsite)	Chemical cleaning of HRSG feedwater system (Acid cleaning)	1,000 pounds (used for initial chemical cleaning)	Crystals
Formic acid* (Temporarily onsite)	Chemical cleaning of HRSG feedwater system (Acid cleaning)	600 pounds (used for initial chemical cleaning)	Liquid
Sodium carbonate Na_2CO_3* (Temporarily onsite)	Chemical cleaning of HRSG (Neutralization)	500 pounds (used for initial chemical cleaning and may be used for future chemical cleaning approximately every 3 to 5 years)	Powder
Sodium nitrite $NaNO_3$* (Temporarily onsite)	Chemical cleaning of HRSG (Passivation)	500 pounds (used for initial chemical cleaning and may be used for future chemical cleaning approximately every 3 to 5 years)	Crystals
Scale inhibitors, various	Reduce scale formation in the circulating water system	200 gallons (55 gallon drums) (Approximately 30 day storage)	Liquid
Mineral insulating oil	Transformer systems	39,000 gallons	Insulating fluid
Lubrication oil	Rotating equipment	4,000 gallons	Gas turbine bearing lubricating oil for 500° F bearing conditions
Diesel fuel	Fuel for standby generator	500 gallons (manufacturer's standard tank size--approximately 8 hour operating time for standby generator)	No. 2 fuel oil
Various detergents	Combustion turbine compressor cleaning	900 pounds (for periodic cleaning)	Liquid or granular

*Chemical cleaning chemicals shown are those typically used. Other alternatives may become available in the future.

3.11.3 Hazardous Wastes

All electric equipment insulating materials will be specified to be free of PCBs.

Several methods will be used to properly manage and dispose of hazardous wastes generated by the cogeneration project. Items such as spent lubrication oil filters, activated carbon water treatment filters, cartridge filters, and spent demineralizer resins will be disposed of in a Class I landfill. Spent SCR reduction catalysts will be recycled by the supplier or disposed of in a Class I landfill. Carbon monoxide reduction catalyst will be recycled to the supplier. Spent lubricating oil will be recovered and recycled by a waste oil recycling contractor. Disposed of properly, these wastes will not cause significant health and safety impacts.

Chemical cleaning wastes will consist of alkaline and possibly acid cleaning solutions used during preoperational chemical cleaning of the boiler and preboiler systems of the HRSG, acid cleaning solutions used for chemical cleaning of the HRSG, after the unit is put into service, and turbine wash and HRSG fireside wash waters. These wastes, which are subject to high metal concentrations, will be temporarily stored onsite in portable tankage and disposed offsite by the chemical cleaning contractor to a licensed landfill.

3.12 Emissions Control and Monitoring Equipment

This section describes the emissions controls and continuous emission monitoring equipment for the combined cycle power block and the simple cycle CTG. Best available control technology (BACT) has been incorporated in the design of emissions control and monitoring equipment for the cogeneration project.

3.12.1 Combined Cycle Emission Controls

The following subsections describe the emission controls for the combined cycle power block.

3.12.1.1 NO_x Emissions. Injection of water in the combustion process will be used to control NO_x formation to 40 ppmvd at the combined cycle CTG outlet prior to exhausting to the HRSG.

Selective catalytic reduction (SCR) located in the HRSG will be used to control NO_x emissions to 5 ppmvd. The SCRs will require aqueous ammonia solution of approximately 30 percent ammonia in water. Ammonia slip will be limited to 10 ppmvd. The SCR equipment will include a reactor chamber, catalyst modules, ammonia storage system, ammonia injection system, and monitoring equipment and sensors. The reactor chamber will contain the catalyst modules and be located

downstream of the HP evaporator zone of the HRSGs where the catalyst will be the most effective at all loads. The ammonia injection nozzles will be located upstream of the SCR NO_x reactor. Injection of ammonia for each combustion turbine will be approximately 80 lb/h (10 gpm) for NO_x control when operating at baseload. Aqueous ammonia storage suitable for 7 days operation at 24 hours per day will be provided onsite.

3.12.1.2 CO and ROC Emissions. Emissions of carbon monoxide (CO) will be reduced using a CO catalytic converter with a removal efficiency of 90 percent when firing natural gas. The catalyst system will be located between the HP evaporator and HP economizer portions of the HRSGs upstream of the SCR.

ROCs are reactive organic compounds, which include all unburned hydrocarbons except methane. The oxidation catalysts provided in the HRSGs to reduce CO emissions will also reduce emissions of ROCs.

3.12.1.3 Particulates. Particulate emissions will be controlled by inlet air filtration and use of natural gas. Inlet air filtration minimizes airborne particulate introduced in the combustion turbine which minimizes combustion turbine wear due to erosion and particulate in the combustion turbine exhaust. The use of only natural gas for combustion turbine fuel results in less particulate emission than the use of other fossil fuels.

3.12.1.4 SO_x Emissions. SO_x emissions result from the combustion of any sulfur bearing fuel. Emission of SO_x from the combined cycle combustion turbines and duct burners will be controlled by burning only natural gas, which typically contains only a trace of sulfur. The SO_x emissions are expected to be negligible.

3.12.2 Simple Cycle CTG Emissions Controls

The following subsections describe the emission controls for the simple cycle CTG.

3.12.2.1 NO_x Emissions. Injection of water in the combustion process will be used to control NO_x formation to 40 ppmvd at the outlet of the simple cycle CTG. A downstream high temperature selective catalytic reduction (SCR) system will be used to control NO_x emissions to 5 ppmvd for the simple cycle CTG. The SCR will require an aqueous ammonia solution of approximately 30 percent ammonia in water. Ammonia slip will be limited to 10 ppmvd. The SCR equipment will include catalyst modules, ammonia storage system, ammonia injection system, and monitoring equipment and sensors. The catalyst modules will be located in the CTG exhaust

ductwork. The ammonia injection nozzles will be located immediately upstream of the SCR modules. Injection of ammonia will be approximately 96 lb/h (12 gpm) for NO_x control when operating at baseload. (The ammonia usage rate for the simple cycle CTG is larger than the combined cycle CTG usage rate due to the higher exhaust gas temperature and the type of catalyst (high temperature) used for the simple cycle.) Aqueous ammonia storage equipment for the simple cycle CTG will be common to the combined cycle ammonia storage equipment. Aqueous ammonia storage suitable for approximately 7 days simple cycle CTG operation at 24 hours per day will be provided.

3.12.2.2 CO and ROC Emissions. Emissions of CO for the simple cycle CTG, will be reduced using a CO catalytic converter with a removal efficiency of 90 percent. The catalyst system will be located in the CTG exhaust ductwork.

ROCs are reactive organic compounds, which include all unburned hydrocarbons except methane. The oxidation catalyst provided in the exhaust ductwork to reduce CO emissions will also reduce emissions of ROCs.

3.12.2.3 Particulate. Particulate emissions for the future simple cycle CTG will be controlled by inlet air filtration equipment and use of natural gas as fuel. Inlet air filtration minimizes airborne particulate introduced in the combustion turbine which minimizes combustion turbine wear due to erosion and particulate in the combustion turbine exhaust. The use of only natural gas for combustion turbine fuel results in less particulate than the use of other fossil fuels.

3.12.2.4 SO_x Emissions. SO_x emissions result from the combustion of any sulfur bearing fuel. Emission of SO_x from the simple cycle combustion turbine will be controlled by burning only natural gas, which typically contains only a trace of sulfur. The SO_x emissions are expected to be negligible.

3.12.3 Emission Monitoring

Each of the following sources will be provided with a continuous emissions monitoring system at the associated stack:

- Each of two combined cycle CTG/HRSGs.
- Simple cycle CTG.

The continuous emission monitoring will be in accordance with applicable laws, ordinances, regulations, and standards.

Each continuous emissions monitoring system will sample, analyze, and record gas flow rate, carbon monoxide, oxides of nitrogen, and oxygen or CO_2 of the flue gas in the exhaust stack. This system will generate a log of emissions data and will

send alarm signals to the control room when the level of emissions exceeds the preselected limits. The system will directly measure or calculate carbon dioxide emission levels using the measured values for gas flow rate and oxygen level.

3.13 Auxiliary Systems

3.13.1 Auxiliary Boiler

A single auxiliary boiler will be provided as a part of the cogeneration plant. The auxiliary boiler will supply process steam to the Procter & Gamble facility when the normal process steam from the cogeneration plant combined cycle power block needs to be supplemented or is not available. The natural gas fired auxiliary boiler will be a shop assembled packaged water tube steam generator, with a rated heat input of 97.5 MBtu/h (based on fuel higher heating value) capable of 80,000 lb/h saturated steam generation at 195 psig. The combustion system will be designed to minimize NO_x and CO emissions by special low NO_x burner design and flue gas recirculation. NO_x emissions will be limited to 25 ppmvd (at 3 percent oxygen). Feedwater to the auxiliary boiler will be provided from the combined cycle deaerator. Auxiliary boiler feedwater pumps will convey water to the auxiliary boiler drum to maintain water level. The auxiliary boiler will include heating coils and other special provisions to permit quick startup in the event the combustion turbine operation is interrupted. Auxiliary boiler controls will be provided to permit automatic operation and minimize operator supervision.

3.13.2 Standby Generator

A standby generator set will be provided to keep the combined cycle combustion turbines available following a plant electrical system trip. If the combustion turbines cannot be restarted within 10 minutes after a plant trip, the combustion turbines cannot be operated for a 6 hour period as mandated by the combustion turbine manufacturer. To avoid the mandatory 6 hour lockout period required by the combustion turbine manufacturer, the combustion turbine rotors must be kept rotating above 200 rpm for a minimum period of 20 minutes after a plant trip. The standby generator set will be sized to provide sufficient power to keep the combustion turbines rotating at the required speed.

The standby generator set will consist of a watercooled, reciprocating 1,000 horsepower diesel engine, close-coupled to a single bearing, brushless generator. The engine-generator set will be rated for 750 kW at 0.85 power factor. The standby generator will be designed to burn low sulfur No. 2 fuel oil (0.05 percent

sulfur). Fuel oil will be delivered to the cogeneration project site by truck. The No. 2 fuel oil tank capacity will provide approximately 8 hours of operation by the standby diesel generator. The tank capacity will be approximately 500 gallons.

3.13.3 Fire Protection

The fire protection system will limit personnel injury, loss of life, property loss, and plant downtime due to fire. Dedicated fire suppression systems will be installed for hazards such as the transformers and turbine lube oil equipment. Sprinkler systems will be installed in the Control/ Administration and Warehouse Buildings in accordance with local codes and NFPA recommendations.

City water will be the primary fire water supply to the cogeneration project. An electric motor driven fire water pump will be provided to boost the pressure of the city water supply. A secondary fire water supply will be from the cooling tower water basin. A second electric motor driven fire water pump will take suction from the cooling tower basin to provide the secondary source of fire water at satisfactory pressure.

The CTG units will be protected by a CO_2 fire protection system. Hand held fire extinguishers of the appropriate size and rating will be located at code approved intervals throughout the facility.

3.13.4 Lighting

The lighting system provides personnel with illumination for operation under normal conditions, for egress under emergency conditions, and emergency lighting to perform manual operations during an outage of the normal power source. The system also provides 120 volt convenience outlets for portable lamps and tools.

3.13.5 Grounding

The electrical system is susceptible to ground faults, lightning, and switching surges which result in high potentials that constitute a hazard to site personnel and electrical equipment. The grounding system provides an adequate path to permit the dissipation of ground fault currents.

The station grounding grid will be designed for adequate capacity to dissipate heat from ground current under the most severe conditions in areas of high ground fault current concentration. The grid spacing will be such that safe voltage gradients are maintained.

Bare conductors will be installed below grade in a grid pattern. Each junction of the grid will be bonded together by an exothermal welding process.

Ground resistivity readings performed as part of the subsurface investigations will be used to determine the necessary numbers of ground rods and grid spacing to ensure safe step and touch potentials under severe fault conditions.

Grounding stingers will be brought from the ground grid to connect to building steel and nonenergized metallic parts of electrical equipment. The ground system resistance will be measured to verify a safe level of resistance between the grid and ground.

3.13.6 Distributed Control and Information System

The Distributed Control and Information System (DCIS) provides modulating control, digital control, monitoring, and indicating functions for the plant power block systems. The following functions will be provided:

- Control of the steam turbine generator, combustion turbine generator, and other systems in a coordinated manner.
- Control of the balance-of-plant systems in response to plant demands.
- Monitoring of controlled plant equipment and controlled process parameters and provide this information to the plant operators.
- Control displays (printed logs, CRTs) for signals generated within the system or received from input/output (I/O).
- Consolidated plant process status information through displays presented in a timely and meaningful manner.
- Out-of-limit parameters or parameter trends will be automatically alarmed, displayed on alarm CRT(s), and recorded on the alarm log printer.
- Historical data storage and retrieval.

The DCIS will be a redundant microprocessor-based system and will consist of the following major components:

- CRT-based operator consoles.
- Engineer work station.
- Distributed processing units.
- Input/output cabinets.
- Historical data unit.
- Printers.
- Data links to the combustion turbine generator and steam turbine generator control systems.

The DCIS will have functionally distributed architecture made up of a group of similar redundant processing units linked to a group of operator consoles and the engineer work station by redundant data highways. Each processor will be programmed to perform specific dedicated tasks for control information, data acquisition, annunciation, and historical purposes. By being redundant, no single processor failure can cause or prevent a unit trip.

The DCIS will be data-linked to the control systems furnished by the combustion turbine and steam turbine suppliers to provide remote control capabilities, as well as data acquisition, annunciation, and historical storage of turbine and generator operating information.

The system will be designed with sufficient redundancy to preclude a single device failure from significantly impacting overall plant control and operation. This also allows critical control and safety systems to have redundancy of controls, as well as an uninterruptible power source.

As part of the quality control program, daily operator logs will be available for review to determine status of the operating equipment.

3.13.7 Cathodic Protection

The cathodic protection system will be designed to control the electrochemical corrosion of designated metal structures and metal piping that are buried in earth.

3.13.8 Freeze Protection

The freeze protection system will provide heating to protect various outdoor piping, gauges, pressure switches, storage vessels, and other devices from freezing. All freeze protection circuits will be controlled with an ambient thermostat. The ac power supply (120/208 V) system will supply power to heating cables provided on individual piping systems. The heating circuits will be de-energized when freezing conditions no longer exist.

3.13.9 Service Air

The service air system supplies compressed air to the control air dryers and to hose connections for general plant use. The service air system will include two 100 percent capacity, oil free, positive displacement air compressors, service air headers, distribution piping, and hose connections.

The air compressors will each be sized to provide the required instrument air capacity plus an additional 250 scfm of 125 psig service air for hose stations.

3.13.10 Control Air

The control air system provides dry air to pneumatic operators and devices. A control air header will be routed to locations within the combustion turbine and HRSG areas and within the Water Treatment Building where pneumatic operators and devices are located.

The control air system will include two 100 percent capacity air dryers with prefilters and afterfilters, an air receiver, control air headers, and distribution piping.

The control air capacity will be based on the total quantity of air users, the capacity of each air user, an average load factor of 25 percent, plus an additional 50 percent margin to account for air leakage and plant modifications. The air receiver will be sized to allow the compressors to run unloaded a minimum of 85 percent of their operating time, and to allow sufficient surge time during a compressor failure to allow the spare compressor to be brought up to speed.

3.13.11 Heating, Ventilating, and Air Conditioning (HVAC)

The HVAC system provides an acceptable environment for personnel comfort and equipment operation within the plant buildings.

A redundant heating and cooling system will be provided for the control center area. A separate single unit will be provided for heating and cooling the administrative area and the battery room. Induct humidifiers for winter humidification will be provided in all air conditioned areas. All other indoor facilities will be heated and ventilated. The battery room and the toilet/locker areas will be mechanically exhausted to the outside.

Heating, ventilating, and air conditioning will be designed in accordance with the criteria outlined in Appendix B.

3.13.12 Plumbing

The plumbing system collects and conveys waste fluids to relevant waste collection systems and supplies potable water to all fixtures.

Waste flows will be segregated based on the ultimate discharge point. Sanitary wastes, floor drains, and process wastewater will be discharged to the sanitary sewer system. Applicable floor drains and process wastewater will be directed to an oil/water separator prior to discharge offsite. Chemical wastes will be directed to the neutralization basin and then discharged to the sanitary sewer system.

Storm water flows with potential for oil contamination will be directed to an oil/water separator prior to being discharged to the storm water sewer system.

3.14 Roads

Permanent access to the facility will be from 83rd Street. A 20 foot wide concrete loop road with controlled gates at 83rd Street will provide internal access to all project facilities and onsite buildings. A separate road from 83rd Street will provide access to the onsite substation.

Design criteria for onsite roads are provided in Appendix C, Civil Engineering Design Criteria.

3.15 Transmission Line Engineering

3.15.1 Existing Transmission Facilities

The Sacramento Municipal Utility District (SMUD) has several transmission lines and a bulk substation located near the proposed project as shown on Figure 3.15-1. SMUD's existing Hedge/Hurley 230 kV and East City/Hedge 115 kV lines are approximately 1.2 miles east of the proposed project. SMUD's existing South City/Hedge 115 kV line is approximately 2.2 miles south of the proposed project, and SMUD's Hedge 230 kV/115 kV/69 kV Substation is approximately 3 miles southeast of the project site. SMUD also has several 69 kV/12 kV distribution substations and overhead lines located in the vicinity.

Detailed one-line diagrams for Hedge and Hurley Substations are shown on Figures 3.15-2 and 3.15-3. Hedge Substation is an existing 230 kV/115 kV/69 kV substation with a 230 kV ring bus. Hurley Substation is an existing 230 kV/115 kV/69 kV substation with a 230 kV main and transfer bus. The tower configurations for the existing Hedge/Hurley 230 kV transmission lines are shown on Figure 3.15-4. The line lengths and conductor types for each SMUD circuit in the vicinity of the project are included in Table 3.15-1.

Pacific Gas and Electric (PG&E) and Western Area Power Authority (WAPA) transmission facilities are also located in the vicinity of the proposed project as shown on Figure 3.15-1. All planned or anticipated changes to the Western System, including SMUD, PG&E, and WAPA transmission systems in the greater Sacramento area are summarized in the data collection for the Western States Coordinating Council (WSCC). These data are included in Appendix A1.

3.15.2 Evaluation of Transmission Alternatives

SMUD analyzed a number of interconnection alternatives to incorporate the Procter & Gamble Cogeneration Project into the transmission system. These alternatives are described below. Figures 3.15-5 and 3.15-6 are aerial photographs depicting

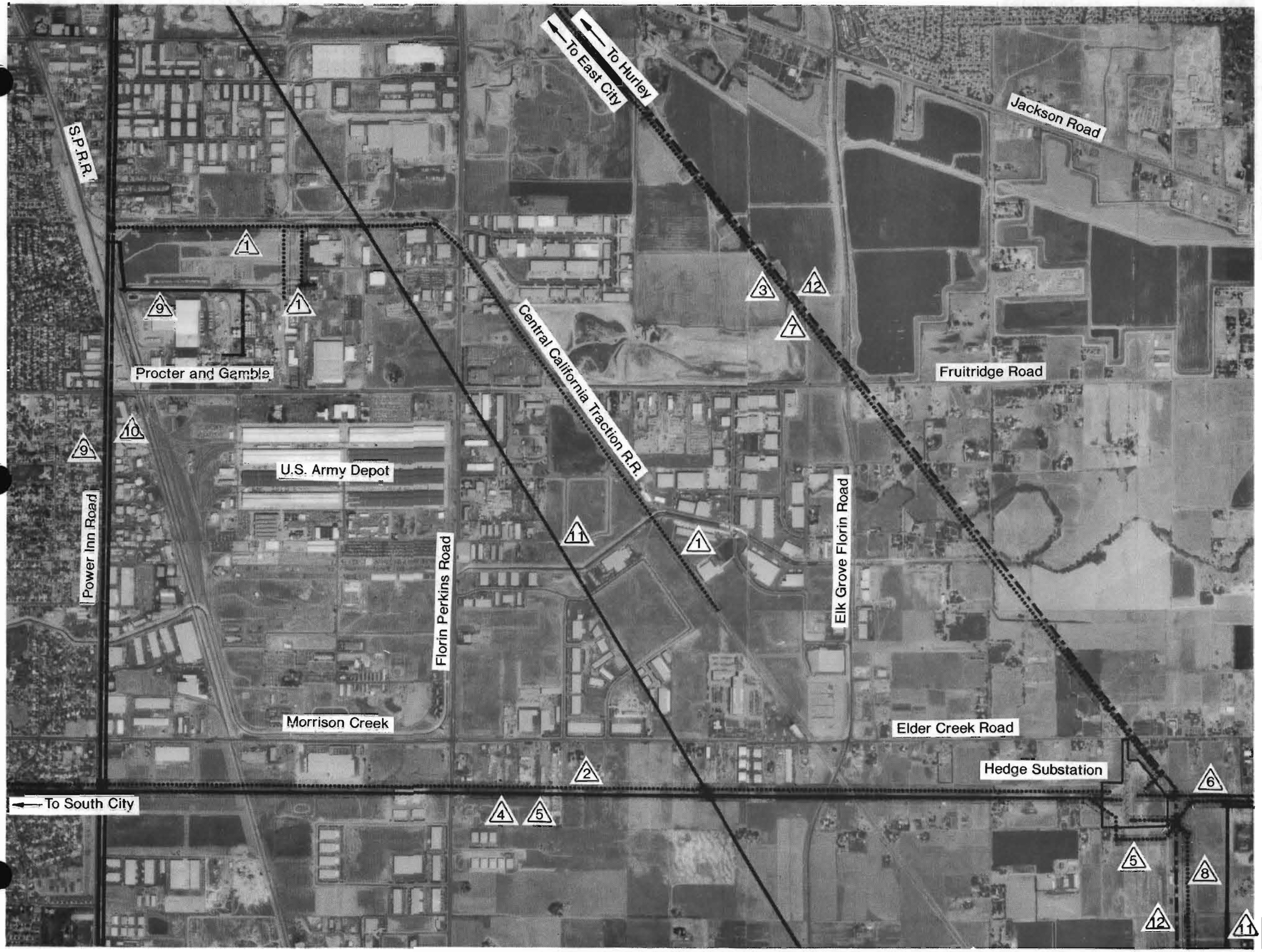

EXISTING SMUD FACILITIES

1. 69kv Distribution Line
2. 115kv Hedge / South City #1 & #2 T/L
3. 115kv Hedge / East City T/L
4. 230kv Hedge / Pocket T/L
5. 230kv Lake / Pocket T/L
6. 230kv Hedge / White Rock T/L
7. 230kv Hedge / Hurley T/L
8. 230kv Hedge / Rancho Seco T/L

OTHER EXISTING FACILITIES

9. P.G.&E. 115kv T/L
10. P.G.&E. 115kv T/L
11. P.G.&E. 230kv T/L
12. WAPA 230kv T/L

Scale: 1" = 1500 Ft

N

0 750 1500 3000

Procter & Gamble Co-Gen Project

Transmission Routing

Existing Facilities

SMUD
SACRAMENTO MUNICIPAL UTILITY DISTRICT

Figure 3.15-1

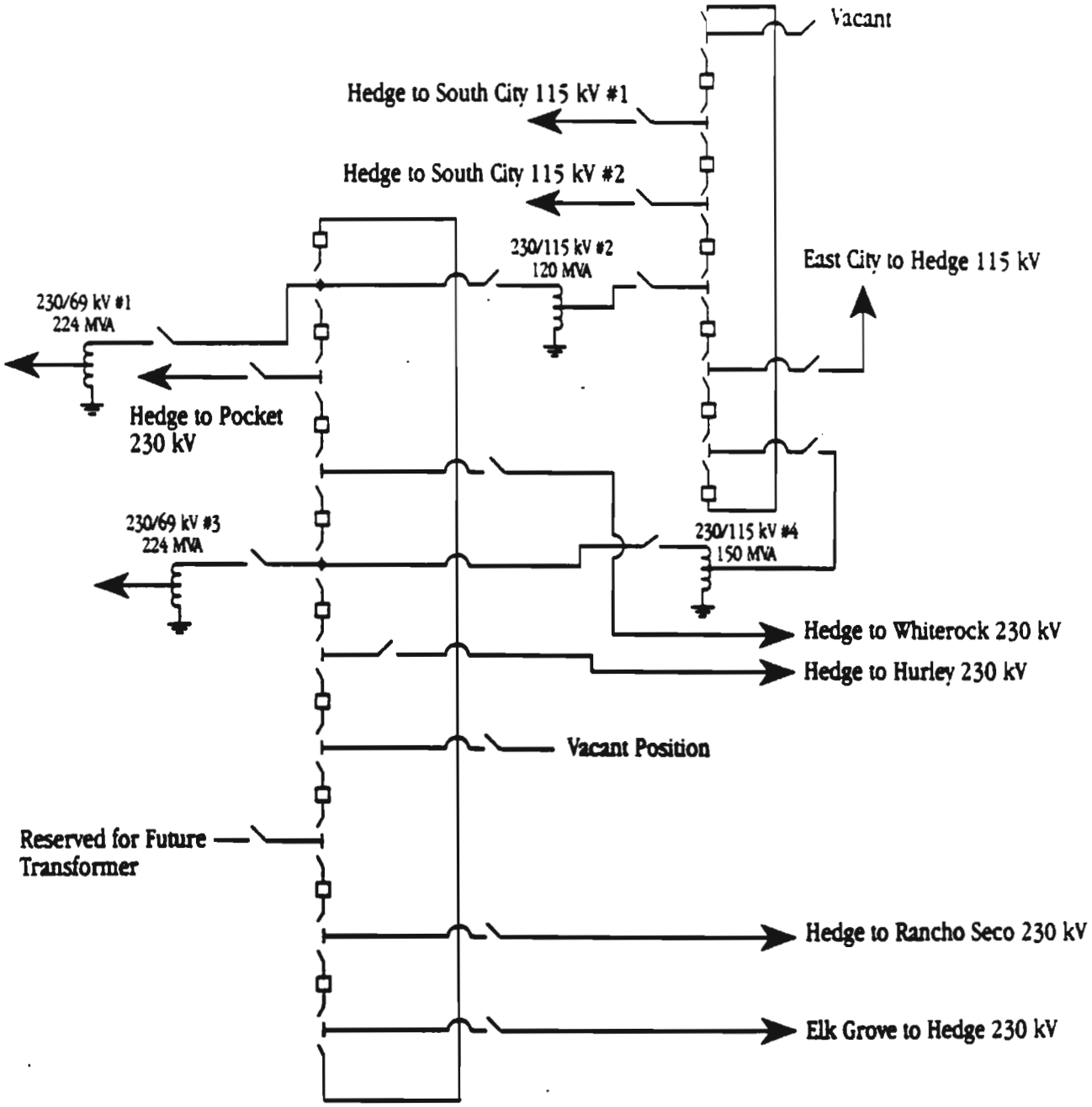

SMUD's Existing Hedge Substation
Figure 3.15-2

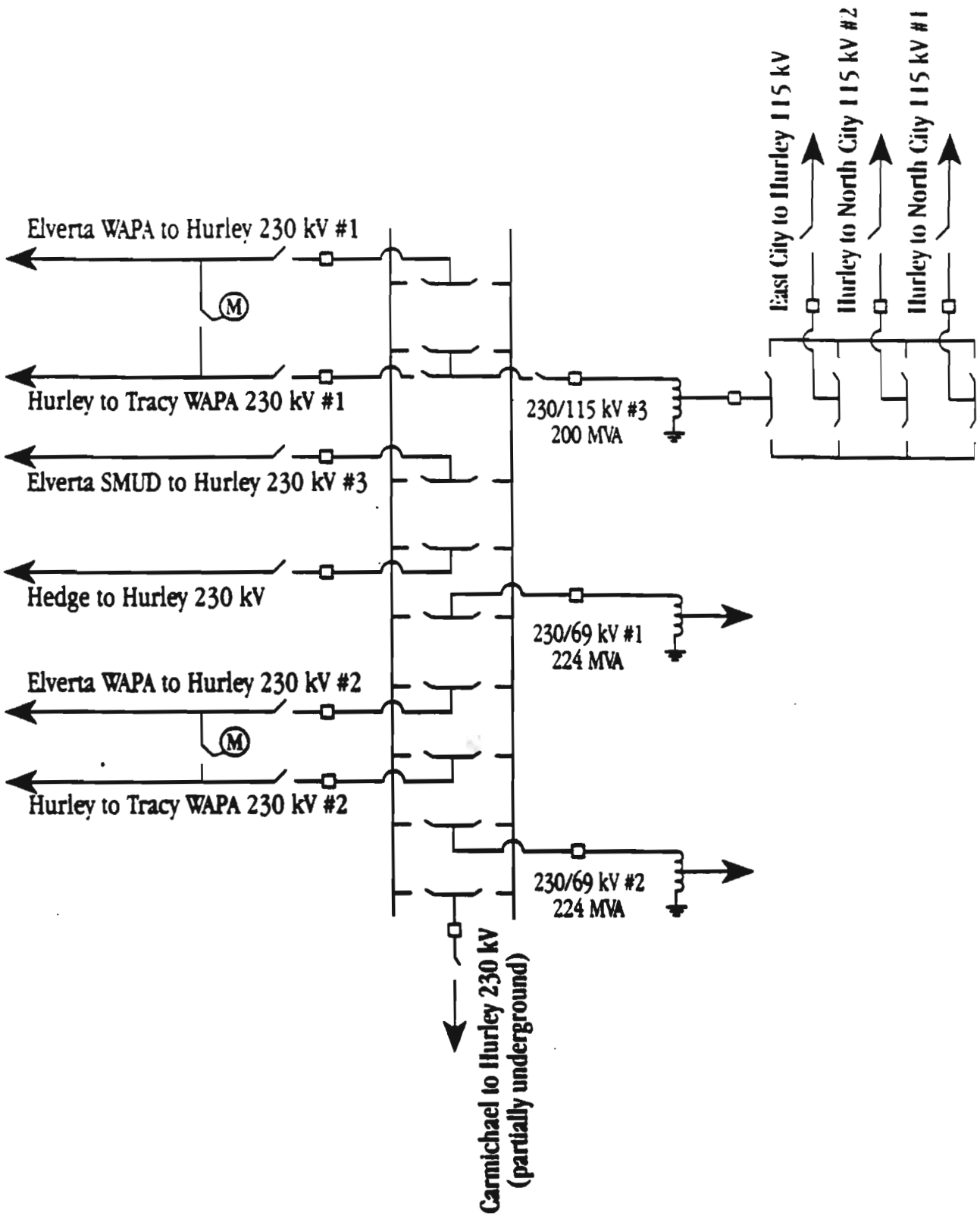

SMUD's Existing Hurley Substation
Figure 3.15-3

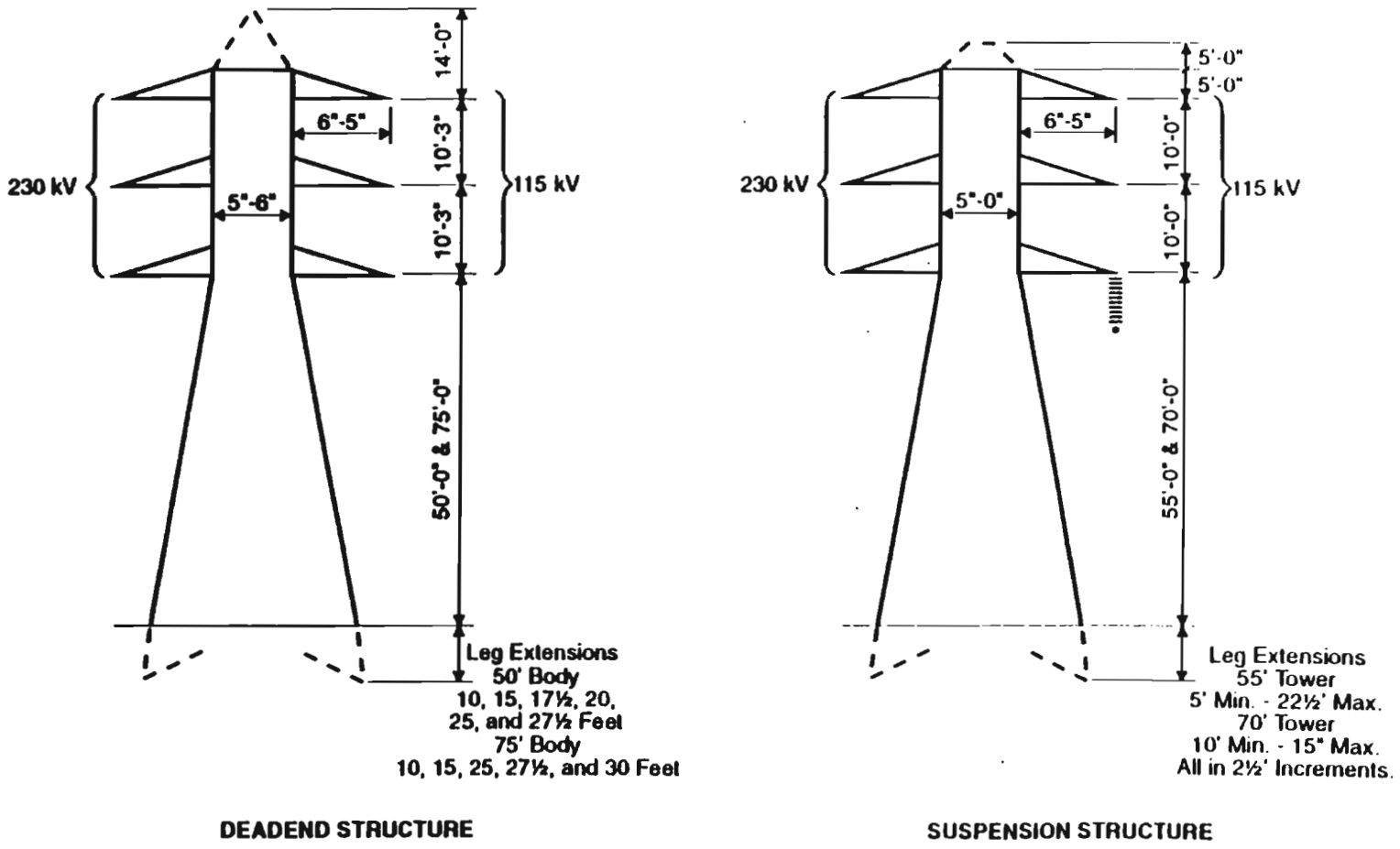

Existing Tower Configuration
Hedge/Hurley 230 kV Line
and East City/Hedge 115 kV Line
Figure 3.15-4

092793-2

Table 3.15-1
Existing Transmission Facilities Information

Transmission Facilities	Length (miles)	Type of Tower	Conductor Size/Type	Number of Circuits	Summer/Winter Ratings (A)	
					Normal	Emergency
230 kV Hedge to Hurley	7.12	30 DSD	954 AAC	2	760/1,070	880/1,190
230 kV Hedge to Pocket	7.71	14 DSD	2-636 AAC	2	1,200/1,660	1,380/1,860
230 kV Lake to Pocket	23.32	1 DSS	954 AAC	2	760/1,070	880/1,190
115 kV East City to Hedge	5.65	32 DSS	954 AAC	2	760/1,070	880/1,190
115 kV East City to Hurley	5.16	32 DSS	954 AAC	2	760/1,070	880/1,190
115 kV (2) Hurley to South City	5.78	STL LAT	477 AAC	2	500/690	580/770

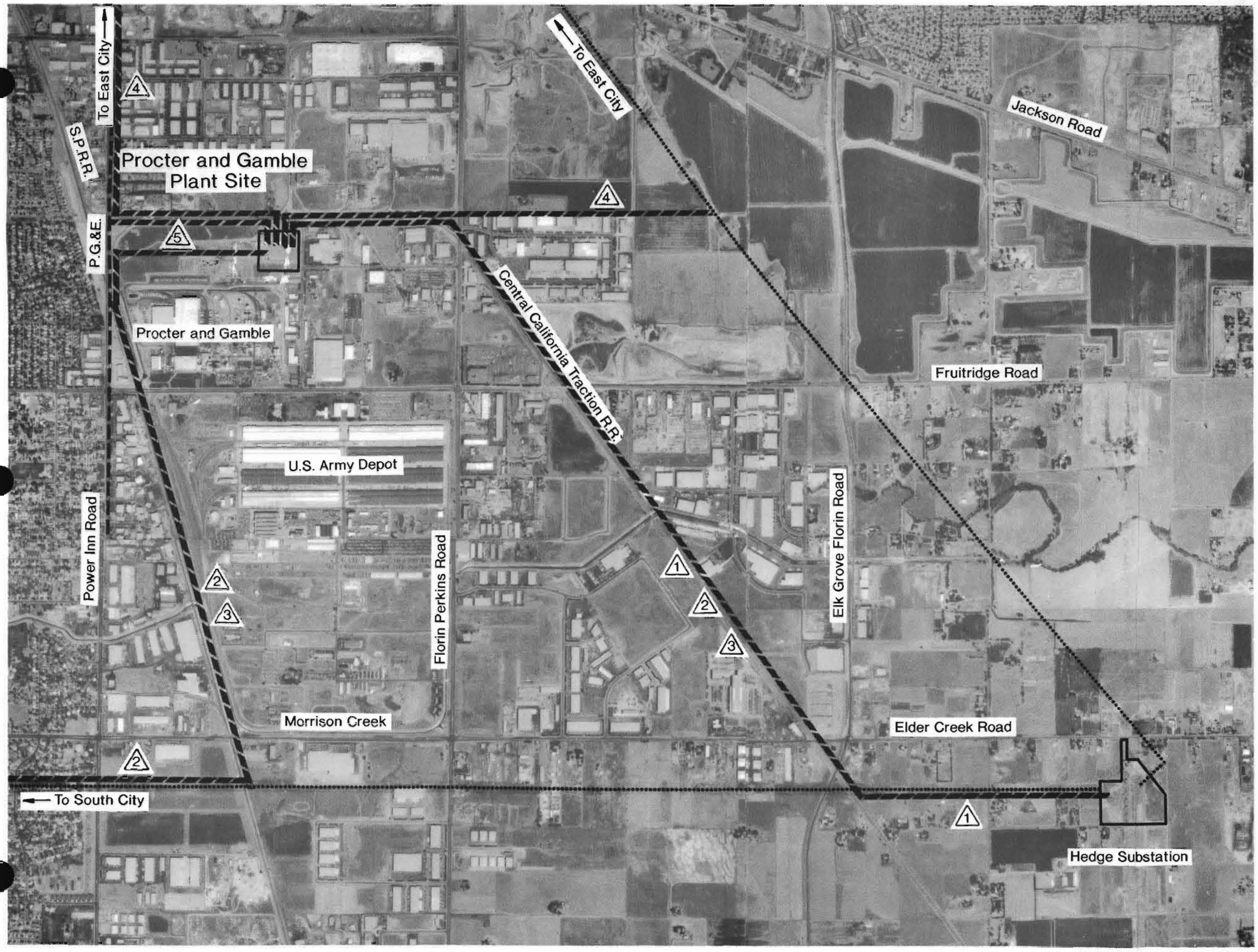

115KV ALTERNATIVES

1. Procter & Gamble / Hedge T/L
2. Hedge / South City Loop-in T/L plus Procter & Gamble / South City T/L
3. South City / Hedge #1 & #2 Loop-in T/L
4. East City / Hedge Loop-in T/L plus Procter & Gamble / East City T/L

WHEELING ALTERNATIVE

5. P.G.&E. 115kv Interconnect

Scale: 1" = 1500 Ft

N

0 750 1500 3000

Procter & Gamble Co-Gen Project

Transmission Routing

115kv Alternatives

SMUD
SACRAMENTO MUNICIPAL UTILITY DISTRICT

Figure 3.15-5

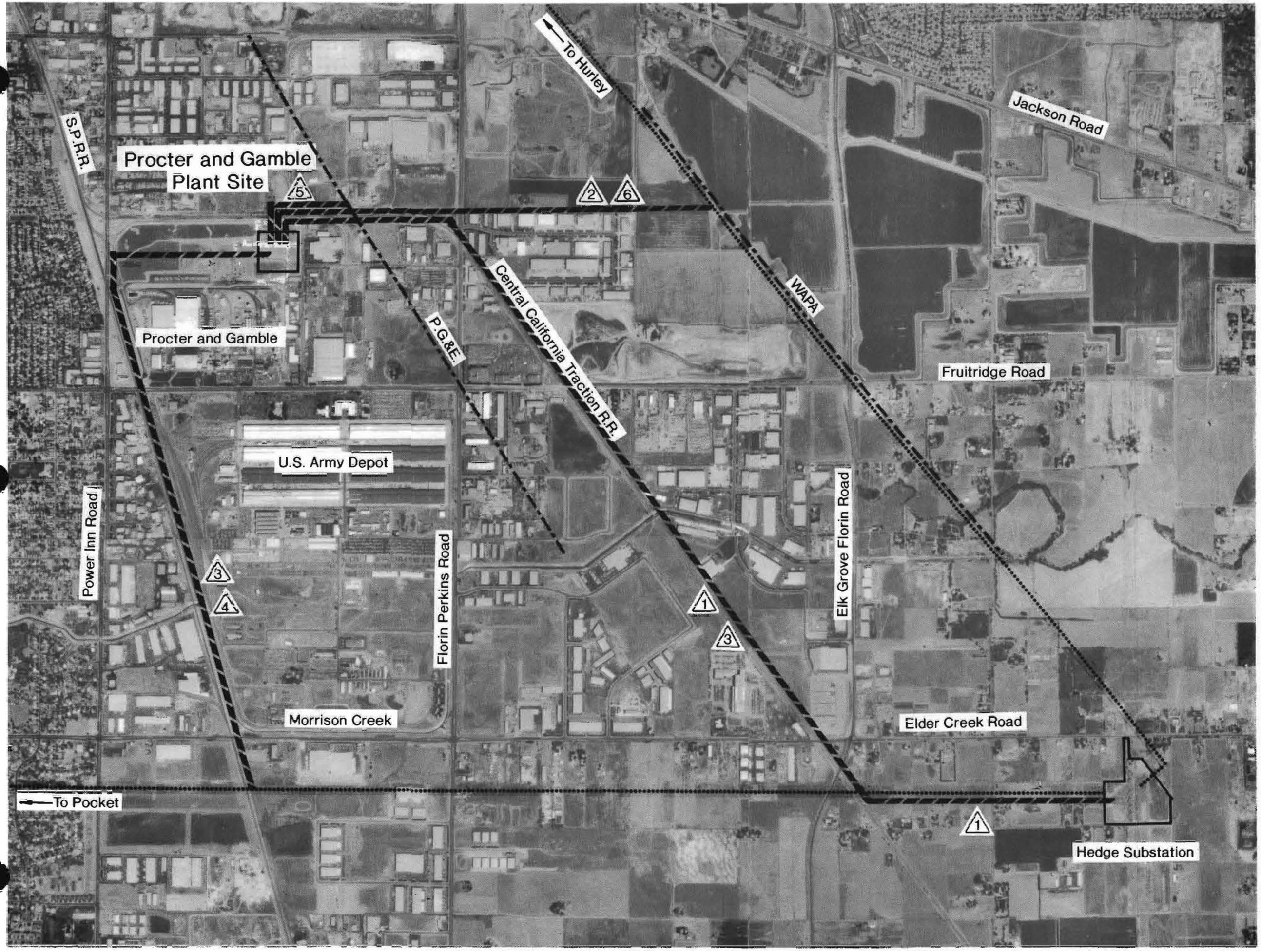

230KV ALTERNATIVES

1. Procter & Gamble / Hedge T/L
2. Hedge to Hurley Loop-in T/L
3. Hedge to Pocket Loop-in T/L
4. Lake to Pocket Loop-in T/L

WHEELING ALTERNATIVES

5. P.G.&E. 230kv Interconnect
6. WAPA 230kv Interconnect

Scale: 1" = 1500 Ft

N

0 750 1500 3000

Procter & Gamble Co-Gen Project

Transmission Routing

230kv Alternatives

SMUD
SACRAMENTO MUNICIPAL UTILITY DISTRICT

Figure 3.15-6

the 115 kV transmission alternatives and 230 kV transmission alternatives, respectively. These evaluations considered system performance, construction cost, cost of losses, and reliability. For the purpose of ensuring adequate transmission capacity, each alternative was evaluated to handle 175 MW. Mitigation measures were considered as required for an alternative to demonstrate adequate system performance. The Reliability Criteria for Transmission System Planning are included in Appendix A2. Appendix A3 is the Procter & Gamble Project Interconnection Study.

3.15.2.1 69 kV Radial Tie (Alternative 1). Because existing 69 kV circuitry with sufficient capacity is lacking in the area, new double-circuit line construction of undetermined length would be required to carry the Procter & Gamble Project output. Sufficient capacity is questionable, with high losses expected. For these reasons, the 69 kV interconnection alternative was eliminated, and no further analysis is provided.

3.15.2.2 115 kV Single-Circuit Radial Generation Tie to Hedge (Alternative 2). The 3.4 mile route heads slightly north out of Procter & Gamble, turning east to the Central California Traction Railroad tracks, and following the tracks southeast to the existing SMUD rights-of-way south of Elder Creek Road. A spare 115 kV bay is available for the new line termination. Use of SMUD's standard 954 kcmil AAC conductor would not accommodate the maximum project output during system normal conditions. With larger or bundled conductor, system performance is marginal. The lower construction cost of the 115 kV radial generation tie, as compared to the preferred Hedge to Hurley 230 kV loop-in, is offset by the additional cost for increased system losses, resulting in a higher overall cost including losses. In addition, a single-circuit radial transmission tie offers the least plant reliability and flexibility during routine maintenance and testing. For the reasons stated, this alternative was not selected. (*Estimated cost of construction: $4.1 million*)

3.15.2.3 115 kV Double-Circuit Radial Generation Tie to Hedge (Alternative 2A). Double-circuiting the 115 kV radial generation tie improves its reliability and flexibility, but does not provide the benefit of two independent remote line terminations and routing on separate towers over most of the line, as a loop-in configuration does. System performance is marginal, and the construction cost and overall cost including losses are both higher than the cost for the preferred Hedge to Hurley 230 kV loop-in. This alternative was not selected. (*Estimated cost of construction: $6.4 million*)

3.15.2.4 Hedge to South City 115 kV Line Loop-in (Alternative 3). This alternative calls for opening one of the Hedge to South City 115 kV lines to tie into the

Procter & Gamble Project with a new 2.6 mile double-circuit line of 477 kcmil AAC to match the existing conductor. The route heads north out of Procter & Gamble, turning east to the Central California Traction Railroad tracks, then crossing and following the tracks southeast to intersect and tie into one of the Hedge to South City 115 kV lines near Elk Grove-Florin Road south of Elder Creek Road. An alternate 1.9 mile route exits the northwest corner of Procter & Gamble, follows the SPT Co. Railroad tracks southeast to intersect and tie into one of the Hedge to South City 115 kV lines near the southwest corner of the Army Depot. Power flow analysis indicates unacceptable system performance, as limited by the emergency rating of the Procter to South City 115 kV line during an outage of the East City to Hedge 115 kV line. Further consideration is in conjunction with mitigation measures described by Alternatives 3A, 3B, and 3C. (*Estimated cost of construction: $5.3 million*)

3.15.2.5 Alternative 3 and Second Procter to South City 115 kV Line (Alternative 3A). In addition to the loop-in of Alternative 3, this alternative calls for constructing a second line from Procter to South City Substation. The route exits the northwest corner of the project site, follows the SPT Co. Railroad southeast to Elder Creek Road, and goes underground west down Elder Creek Road/47th Avenue to terminate on the South City 115 kV bus. Because of the lack of rights-of-way for overhead construction, the entire circuit would require undergrounding. If PG&E's single-circuit along Power Inn Road could be upgraded to double-circuit, then the route would head south along Power Inn Road to Elder Creek Road, thereby reducing the required undergrounding to the section along Elder Creek Road/ 47th Avenue, and into South City Substation. For either route, expansion of the South City control building is required to accommodate an additional line termination. Power flow analysis indicates unacceptable system performance, as limited by the emergency rating of each Procter to South City 115 kV line during an outage of the other. In addition, the cost of construction is prohibitively high. (*Estimated cost of construction: $18.3 million*)

3.15.2.6 Loop-in of Both Hedge to South City 115 kV Lines (Alternative 3B). This alternative calls for opening both existing Hedge to South City 115 kV lines, and tying into the Procter & Gamble Project with two new double-circuit lines with 477 kcmil AAC to match the existing conductor. This alternative requires both 115 kV double-circuit routes, and substantial bus work at the project substation for four line terminations. Power flow analysis demonstrates unacceptable system performance, as limited by an overload of each Procter to South City 115 kV line during an outage of the other. The construction cost and overall cost including losses are

both higher than for the preferred Hedge to Hurley 230 kV loop-in. This alternative was not selected. (*Estimated cost of construction: $7.4 million*)

3.15.2.7 Reconductor Hedge to South City 115 kV Line (Alternative 3C). This alternative calls for reconductoring and looping in the existing Hedge to South City 115 kV line. Using the existing towers would require the conductor to be about the same size as the existing (477 AAC), but with substantially increased capacity. Based on power flow analysis and a cursory review of 477 SSAC conductor, system performance may be acceptable. However, a detailed design analysis would be required to determine that the reconductoring successfully eliminates the very limiting overloads on the Hedge to Procter and Procter to South City 115 kV lines associated with Alternative 3. The construction cost approaches that of the preferred Hedge to Hurley 230 kV loop-in, with a higher overall cost due to a substantial additional cost for increased system losses. Alternative 3C was not selected. (*Estimated cost of construction: $5.8 million*)

3.15.2.8 East City to Hedge 115 kV Line Loop-in (Alternative 4). The East City to Hedge 115 kV line would be opened to loop into the Procter & Gamble Project with a 1.2 mile double-circuit line of 954 kcmil AAC to match the existing conductor. The proposed transmission route heads north out of the project, turning east to intersect and tie into the East City to Hedge 115 kV line. Power flow analysis indicated unacceptable system performance, due to an overload of the East City to Procter 115 kV line during an outage of the South City to Station B 115 kV line. Further consideration was given only in conjunction with mitigation measures as described by Alternatives 4A and 4B. (*Estimated cost of construction: $4.9 million*)

3.15.2.9 Alternative 4 and Second East City to Procter 115 kV Line (Alternative 4A). This alternative calls for constructing a second 2.6 mile East City to Procter 115 kV line. The route exits the northwest corner of the project, following Power Inn Road north to the Metro Light Rail Line, then west to cross under Highway 50 and terminate at the East City 115 kV bus. The circuit would likely require undergrounding, though reconstruction of approximately 1.5 miles of PG&E single-circuit along Power Inn Road to double-circuit could reduce the required undergrounding to the Highway 50 crossing. Expansion of East City Substation could be required to accommodate a new transmission line position. Power flow analysis indicates acceptable system performance; however, the high construction cost eliminates this alternative. (*Estimated cost of construction: $13.4 million*)

3.15.2.10 Alternative 4 and Reconductor East City to Hedge 115 kV Line (Alternative 4B). This alternative calls for reconductoring and looping in the existing East City to Hedge 115 kV line. Using the existing towers would require the new conductor to be approximately the same size as the existing (954 AAC), but with an increased ampacity rating. Based on power flow analysis and a cursory review of 954 SSAC conductor, system performance may be acceptable. However, a detailed design analysis would be required. This alternative has a lower construction cost but higher overall cost including losses, as compared to the preferred Hedge to Hurley 230 kV loop-in, which provides solid system performance. This alternative was not selected. (*Estimated cost of construction: $5.65 million*)

3.15.2.11 230 kV Radial Generation Tie to Hedge (Alternative 5). The 3.4 mile route is the same as for the 115 kV radial tie: north out of Procter & Gamble, turning east to the Central California Railroad tracks, then following the tracks southeast to the existing SMUD rights-of-way south of Elder Creek Road, and then approximately 1/2 mile east to terminate on the Hedge 230 kV bus. Although a spare 230 kV bay is available at Hedge Substation to accommodate the new line termination, some line rearrangement may be required within the substation. The single-circuit 230 kV radial generation tie of standard 954 AAC conductor demonstrated solid system performance, with a lower construction cost and overall cost including losses as compared to the preferred Hedge to Hurley 230 kV loop-in. However, a single-circuit radial tie offers the least plant reliability and flexibility, especially for the multiple unit plant proposed at Procter & Gamble. This alternative was not selected. (*Estimated cost of construction: $4.8 million*)

3.15.2.12 230 kV Double-Circuit Radial Tie to Hedge (Alternative 5A). Double-circuiting the 230 kV radial generation tie improves its reliability, but increases the construction cost and overall cost including losses over the preferred Hedge to Hurley 230 kV loop-in, which has the benefit of two independent remote line terminations and routing on separate towers over most of the line. Because only one spare bay is available on the Hedge 230 kV bus, this double-circuit alternative would require expansion of the existing bay. (*Estimated cost of construction: $8.2 million*)

3.15.2.13 Hedge to Hurley 230 kV Line Loop-in (Alternative 6). This alternative calls for the Hedge to Hurley 230 kV line to be opened to tie into the Procter & Gamble Project with a 1.2 mile double-circuit line of 954 kcmil AAC to match the existing line. The proposed route heads north out of Procter & Gamble, turning east to intersect and tie into the Hedge to Hurley 230 kV line. Power flow analysis

indicates solid system performance. In addition, a significant cost benefit for reduced SMUD system losses offsets the moderate cost of construction, and this alternative follows the shortest route through an industrial area. Finally, this alternative offers high plant reliability due to a loop-in interconnection. A loop-in of the 230 kV Hedge to Hurley line was selected as the preferred interconnection alternative. (*Estimated cost of construction: $5.95 million*)

3.15.2.14 Hedge to Pocket 230 kV Line Loop-in (Alternative 7). This alternative calls for the Hedge to Pocket 230 kV line to be opened to tie into the Procter & Gamble Project with a 1.9 to 2.6 mile double-circuit line of bundled 636 kcmil AAC to match the existing conductor. One potential 2.6 mile route heads north out of Procter & Gamble, turning east to the railroad tracks, and following the Central California Railroad tracks southeast to intersect and tie into the Hedge to Pocket 230 kV Line near Elk Grove-Florin Road south of Elder Creek Road. An alternate 1.9 mile route exits the northwest corner of the Procter & Gamble Project, following the SPT Co. Railroad tracks southeast to intersect the transmission corridor and the Hedge to Pocket 230 kV line near the southwest corner of the Army Depot. This route allows more clearance to go over SMUD's existing 115 kV circuitry.

Power flow analysis indicates solid system performance. In addition, this alternative offers high plant reliability due to a loop-in interconnection. As compared to the preferred Hedge to Hurley 230 kV loop-in, this alternative has an increased line length and higher construction cost offset by a greater reduction in SMUD system losses. The Hedge to Pocket 230 kV line is 0.5 mile from the proposed SPAC Project and has been selected as its preferred interconnection. The loop-in of any two high magnitude generation facilities into the same line is not desirable because of increased risk of impact to the integrity of the 230 kV system. Because of the strong merits of a Hedge to Hurley 230 kV loop-in and the factors discussed above, this alternative was not selected. (*Estimated cost of construction: $6.25-6.6 million*)

3.15.2.15 Lake to Pocket 230 kV Line Loop-in (Alternative 8). This alternative calls for the Lake to Pocket 230 kV line to be opened to tie into the Procter & Gamble Project with a 1.9 to 2.6 mile double-circuit line of bundled 636 kcmil AAC conductor to match the existing line section conductor. The two potential routes are identical to those for Alternative 7. Power flow analysis indicates unacceptable system performance, as limited by the emergency rating of the Lake to Orangevale 230 kV line during a Pocket to Procter 230 kV line outage. This alternative was not selected. (*Estimated cost of construction: $6.25-6.6 million*)

3.15.3 PG&E or WAPA Wheeling Alternatives

Although the Procter & Gamble Project is centrally located to SMUD's load center, it is also within proximity to existing PG&E and WAPA transmission facilities, and the following interconnection alternatives were identified for the purpose of wheeling. The availability of designated routing has not been confirmed, and the system performance associated with each interconnection has not been examined beyond the extent described. A joint study with PG&E or WAPA would be required if any of the following interconnection alternatives are pursued further. Transmission service for Procter & Gamble generation through PG&E or WAPA would entail charges for wheeling, in addition to the cost of construction.

3.15.3.1 115 kV Radial Generation Tie to Brighton Substation (Alternative 9A). The transmission line would exit the northwest corner of Procter & Gamble, and follow the PG&E corridor along Power Inn Road north into Brighton Substation. Undergrounding is required unless PG&E would upgrade their single-circuit line to double-circuit for SMUD's use. In addition to the cost of line construction, the cost for a bus extension at Brighton Substation to accommodate a new bay, or the value attributable to use of an existing 115 kV bay if available, would be required. This alternative was not pursued because of a slightly higher construction cost as compared to the SMUD interconnection of a 115 kV radial tie to Hedge.

3.15.3.2 115 kV Loop-In to PG&E Transmission Corridor (Alternative 9B). This alternative calls for a loop into one of the 115 kV lines heading south from Brighton Substation in the PG&E transmission corridor on the west side of the project. A cursory review of the ampacity ratings for these lines indicated insufficient capacity to support the plant output during emergency conditions. In the event of a failure of the Procter to Brighton 115 kV line, the remaining Procter to Grand Island (or Davis) 115 kV line appears to be insufficiently sized to serve as a radial feed to the plant. A PG&E line upgrade is not considered reasonable in light of the feasibility of available SMUD interconnections. This alternative was not pursued.

3.15.3.3 230 kV Radial Generation Tie to Brighton Substation (Alternative 9C). The route exits the northeast corner of the project, and follows the PG&E 230 kV transmission corridor northwest into Brighton Substation. The cost of new line construction is minimal; however, a 230 kV bus extension to accommodate a new line termination at Brighton Substation, or the value for use of an existing 230 kV bay if available, would be significant. No economic advantage was found as compared to

the similar SMUD alternative of a 230 kV radial tie to Hedge, and this alternative was not pursued.

3.15.3.4 230 kV Loop-In to PG&E Transmission Corridor (Alternative 9D). This alternative follows the same route as the 230 kV WAPA loop-in: north out of the project, and turning east to intersect the PG&E 230 kV lines west of the Central California Railroad tracks. This alternative saves approximately 1.0 mile of double-circuit line construction, as compared to a 230 kV loop into the SMUD system. However, on the basis of an examination of wheeling charges (summarized in Table 3.15-4), this alternative was not pursued.

3.15.3.5 230 kV Loop-In to WAPA Transmission Corridor (Alternative 9E). The route heads north out of the project, turning east to cross the PG&E 230 kV transmission corridor and tie into the WAPA 230 kV lines, which are in the same transmission corridor and on the far side of SMUD's Hedge to Hurley 230 kV line. With no savings in construction cost, this alternative was not pursued.

3.15.4 Cost of Construction

The costs for each transmission interconnection, assuming two plant terminations on the high voltage project bus, are provided in Table 3.15-2. More complete cost information is provided in Appendix A4, Transmission Alternatives Cost Estimates. Appendix A4 includes the costs for one, two, or three plant terminations, and a breakdown of costs between line construction, project substation (from the high side of the generation step-up transformers), and any remote substation cost.

For the PG&E/WAPA interconnection alternatives, Table 3.15-3 provides the construction costs, and Table 3.15-4 provides the wheeling costs with the detailed spreadsheets provided in Appendix A4, Transmission Alternatives Cost Estimates. Line construction costs were approximated by adjustment of the SMUD line construction costs based on the distance from the Procter & Gamble Cogeneration Project to the PG&E or WAPA transmission facility. The project substation cost at Procter & Gamble is the same as for a similar SMUD interconnection. For a radial tie into PG&E's Brighton Substation, the feasibility and cost of a new breaker position, or the value attributed to an existing spare position if available, has been estimated. System performance, including the need for system upgrades, and construction issues associated with interconnection to PG&E or WAPA's system are unknown. When the total cost of construction and wheeling charges with losses are

Table 3.15-2
1992 Construction Cost Summary For SMUD Interconnection Alternatives
Two Plant Terminations

Alternative	Interconnection Alternative	Million $ With 20 Percent Contingency
2	115 kV Single-Circuit Radial Tie to Hedge	4.1
2A	115 kV Double-Circuit Radial Tie to Hedge	6.4
3	Hedge-South City 115 kV Loop-In	5.3
3A	Alternative 3 and Second Procter-South City 115 kV Line	18.3
3B	Loop-In Both Hedge-South City 115 kV Lines	7.4
3C	Alternative 3 and Reconductor Procter-South City and Hedge-Procter 115 kV Lines	5.8
4	East City-Hedge 115 kV Loop-In	4.9
4A	Alternative 4 and Second East City-Procter 115 kV Line	13.4
4B	Alternative 4 and Reconductor East City-Procter and Hedge-Procter 115 kV Lines	5.65
5	230 kV Single-Circuit Radial Tie to Hedge	4.8
5A	230 kV Double-Circuit Radial Tie to Hedge	8.2
6	Hedge to Hurley 230 kV Loop-In (954 kcm AAC conductor)	5.95
7	Hedge to Pocket 230 kV Loop-In	6.25 - 6.6
8	Lake to Pocket 230 kV Loop-In	6.25 - 6.6

Table 3.15-3
Construction Cost to Interconnect With PG&E or WAPA

Alternative	Interconnection Alternative	Million $ (Includes 20 Percent Contingency) Required Construction		Total Cost
A	115 kV Radial Tie to Brighton Substation	1.0 Mile Single-Circuit Line Construction Procter Substation Brighton Substation	0.4 2.9 1.1	4.4
B	115 kV Line Loop-In to Brighton Line West of Procter	0.4 Mile Double-Circuit Line Construction Procter Substation	0.1 4.5	4.6
C	230 kV Radial Tie to Brighton	1.0 Mile Single-Circuit Line Construction Procter Substation Brighton Substation	0.4 3.6 1.5	5.5
D	230 kV Loop-In to PG&E Transmission Corridor	0.2 Miles Double-Circuit Line Construction Procter Substation	0.1 5.4	5.5
E	230 kV Loop-In to WAPA Transmission Corridor	1.2 Miles Double-Circuit Line Construction Procter Substation	0.55 5.4	5.95

Table 3 Assumptions:
Two plant terminations on the high voltage project bus.
PG&E line construction cost proportional, based on line length to line construction for similar SMUD interconnection alternatives.
Available rights-of-way.
Acceptable system performance.

092793-2

Table 3.15-4
PG&E and WAPA Wheeling Charges

Wheeling charges are based on 175 MW of Reserved Transmission Service; and would increase for increase plant size and required transmission capacity. A wheeling rate near the expected low-end was assumed for PG&E and for WAPA, with 1.5 percent annual escalation.	
PG&E Wheeling	WAPA Wheeling
Assume $0.63/kW a month with 3.6 percent losses 20 Year Present Worth (1992 $): $49.9 million	Assume $0.481/kW a month with 2 percent losses 20 Year Present Worth (1992 $): $30.1 million

considered, a PG&E or WAPA interconnection is not economically feasible or competitive with the cost for a direct SMUD interconnection, and were given no further consideration.

3.15.5 Cost of Losses

For each transmission interconnection alternative, the 1996 SMUD system capacity and energy losses with the Procter & Gamble Cogeneration Project interconnected and on-line were compared to the 1996 SMUD system capacity and energy losses prior to the project. Table 3.15-5 summarizes the net change in losses for each transmission alternative investigated. Loss analysis was performed for a 175 MW plant output. The change in annual energy losses was computed using the Time-Load Coefficients Method for Evaluating System Energy Losses and Incremental Costs of Losses. Appendix A5, Loss Analysis, provides the detailed backup for this method of loss analysis.

3.15.6 Present Value Comparison

Table 3.15-6 summarizes the 1992 net present value of the change in losses for each of the transmission alternatives, based on the marginal cost of replacement capacity and energy. The preferred Hedge to Hurley 230 kV loop-in interconnection provides a reduction of 0.75 MW in capacity losses as compared to 1996 base case peak losses, and a reduction in energy losses of 627 MWh in 1996. The result of the increased system efficiency is a cost savings of $1.01 million over 20 years as compared to the 1996 base case system. Appendix A5 includes a cost of loss analysis spreadsheet for each alternative.

3.15.7 Power Transfer Capability of Alternatives

SMUD analyzed the power transfer capability of the alternatives. Alternatives which did not provide adequate transfer capability were eliminated or given further consideration in conjunction with mitigating measures. Figure 3.15-7 represents a load flow diagram of the 1996 base case with no project generation. Figure 3.15-8 represents a load flow with the project generating 175 MW. Additional load flows for other areas of California transmission prior to and following the Procter & Gamble Cogeneration Project are provided as Appendix A6.

Figure 3.15-9 is a power flow diagram of SMUD's transmission system during construction of the project interconnection with outage of the Hedge/Hurley 230 kV

Table 3.15-5
Net Change in 1996 SMUD System Capacity and Energy Losses

Alternative	Transmission Interconnection Alternative	Capacity Losses (MW)	Energy Losses (MWh)
2	115 kV Single-Circuit to Hedge	-0.21	+3,848
2A	115 kV Double-Circuit to Hedge	-0.42	+2,336
3	115 kV Hedge to South City Loop-In	-0.03	+6,300
3A	Alternate 3 and 2nd Procter to South City Line	-1.02	+1,145
3B	Loop-In of Both Hedge to South City Lines	-0.72	+1,695
3C	Alternate 3 with Reconductor*	-0.03	+6,300
4	115 kV East City to Hedge Loop-In	-0.83	+1,097
4A	Alternate 4 and 2nd East City to Procter Line	-1.45	-1,660
4B	Alternate 4 with Reconductor*	-0.83	+1,097
5	230 kV Single-Circuit to Hedge	-0.79	-381
5A	230 kV Double-Circuit to Hedge	-0.90	-1,220
6	230 kV Hedge-Hurley Loop-In	-0.75	-627
7	230 kV Hedge-Pocket Loop-In	-0.93	-1,438
8	230 kV Lake-Pocket Loop-In	-0.64	+3,023

*The magnitude of losses for the reconductoring Alternatives 3B and 4B are the same as for Alternatives 3 and 4, respectively. It was assumed that the SSAC conductor has the same impedance characteristics as the existing AAC conductor. In actuality, the resistance of the reconductored line (SSAC conductor) is expected to increase over that of the existing AAC conductor during high levels of line loading. The specific impedance characteristics of the conductor would be determined during the detailed design analysis.

Table 3.15-6
Loss Comparisons of Alternatives

Alternative	Interconnection Alternative	Magnitude Change in Area Losses		1992 Net Present Value Over 20 Years (Million$)
		Capacity (MW)	Energy - 1996 (MWh)	
2	115 kV Single-Circuit Radial Tie to Hedge	-0.21	+3,848	+2.13
2A	115 kV Double-Circuit Radial Tie to Hedge	-0.42	+2,336	+1.04
3	Hedge-South City 115 kV Loop-In	-0.03	+6,300	+3.75
3A	Alternate 3 and Second Procter-South City 115 kV Line	-1.02	+1,145	-0.19
3B	Loop-In both Hedge-South City 115 kV Lines	-0.72	+1,695	+0.40
3C	Alternate 3 and Reconductor Procter-South City and Hedge-Procter 115 kV Lines	-0.03	+6,300	+3.75
4	East City-Hedge 115 kV Loop-In	-0.83	+1,097	-0.06
4A	Alternate 4 and Second East City-Procter 115 kV Line	-1.45	-1,660	-2.23
4B	Alternate 4 and Reconductor East City-Procter and Hedge-Procter 115 kV Lines	-0.83	+1,097	-0.06
5	230 kV Single-Circuit Radial Tie to Hedge	-0.79	-381	-0.89
5A	230 kV Double-Circuit Radial Tie to Hedge	-0.90	-1,220	-1.49
6	Hedge to Hurley 230 kV Loop-In (954 AAC Conductor)	-0.75	-627	-1.01
7	Hedge to Pocket 230 kV Loop-In	-0.93	-1,438	-1.65
8	Lake to Pocket 230 kV Loop-In	-0.64	+3,023	+1.28

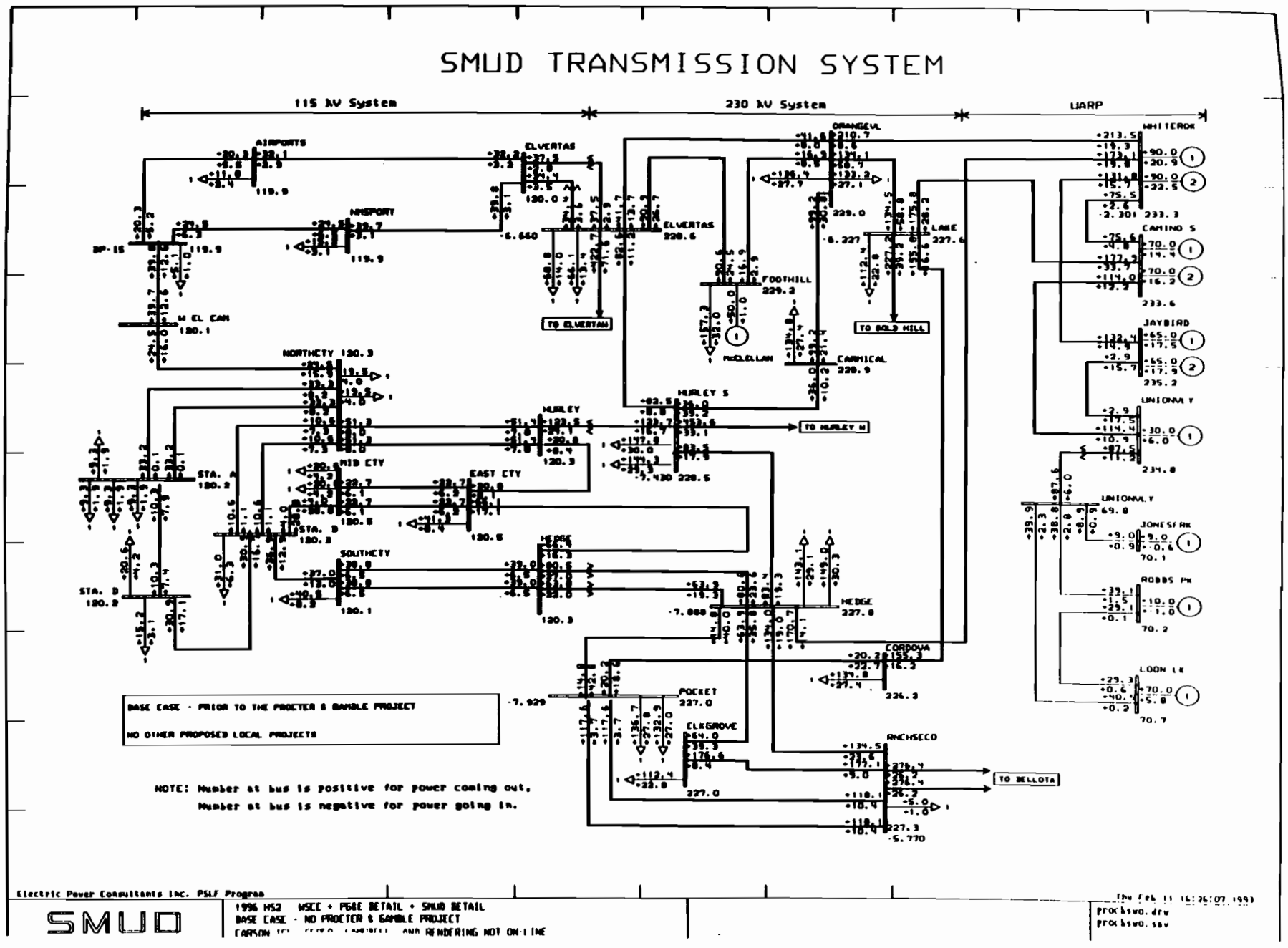

SMUD Transmission System
With No Project Generation
Figure 3.15-7

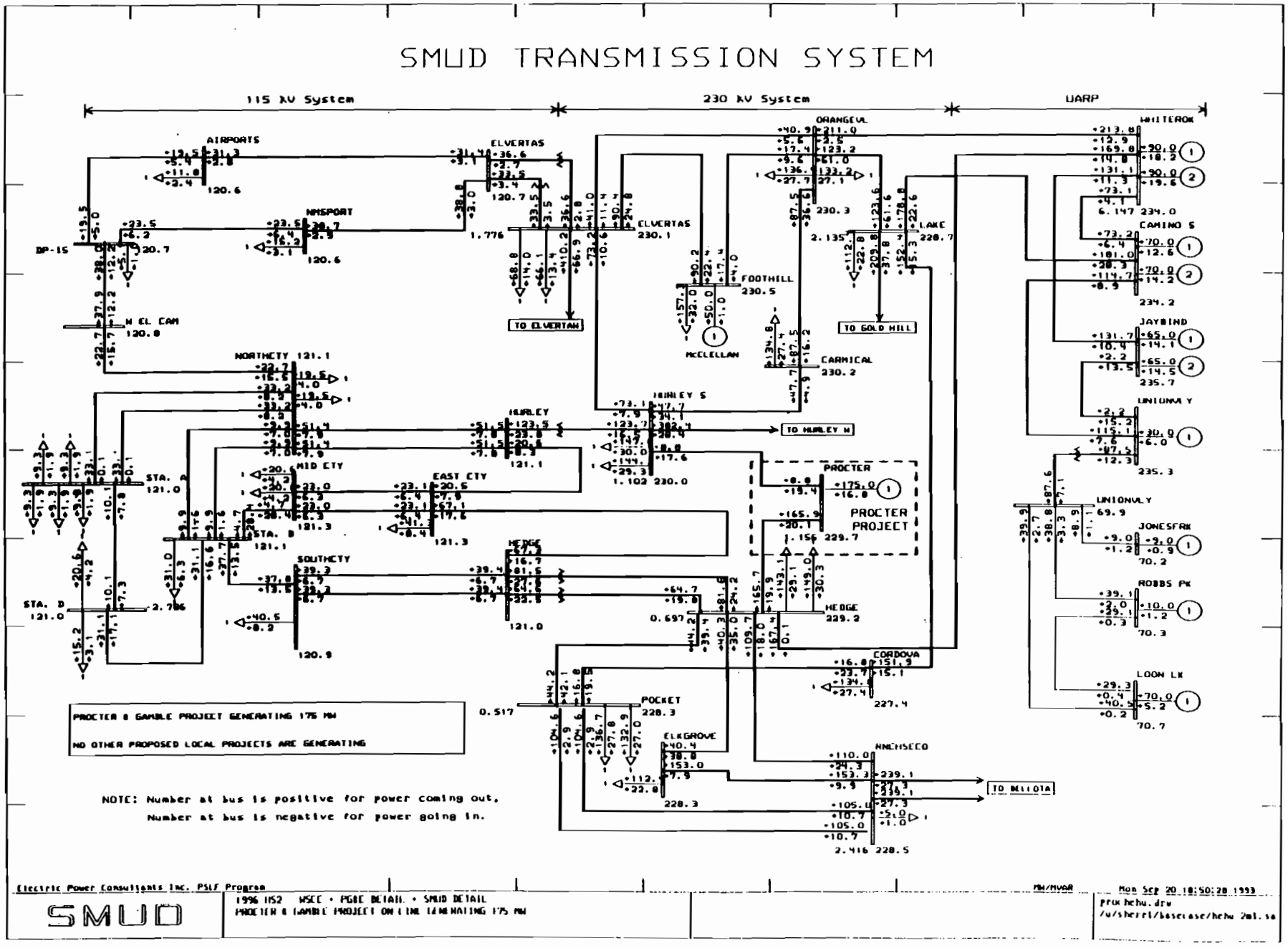

SMUD Transmission System
With Project Generating 177 MW
Figure 3.15-8

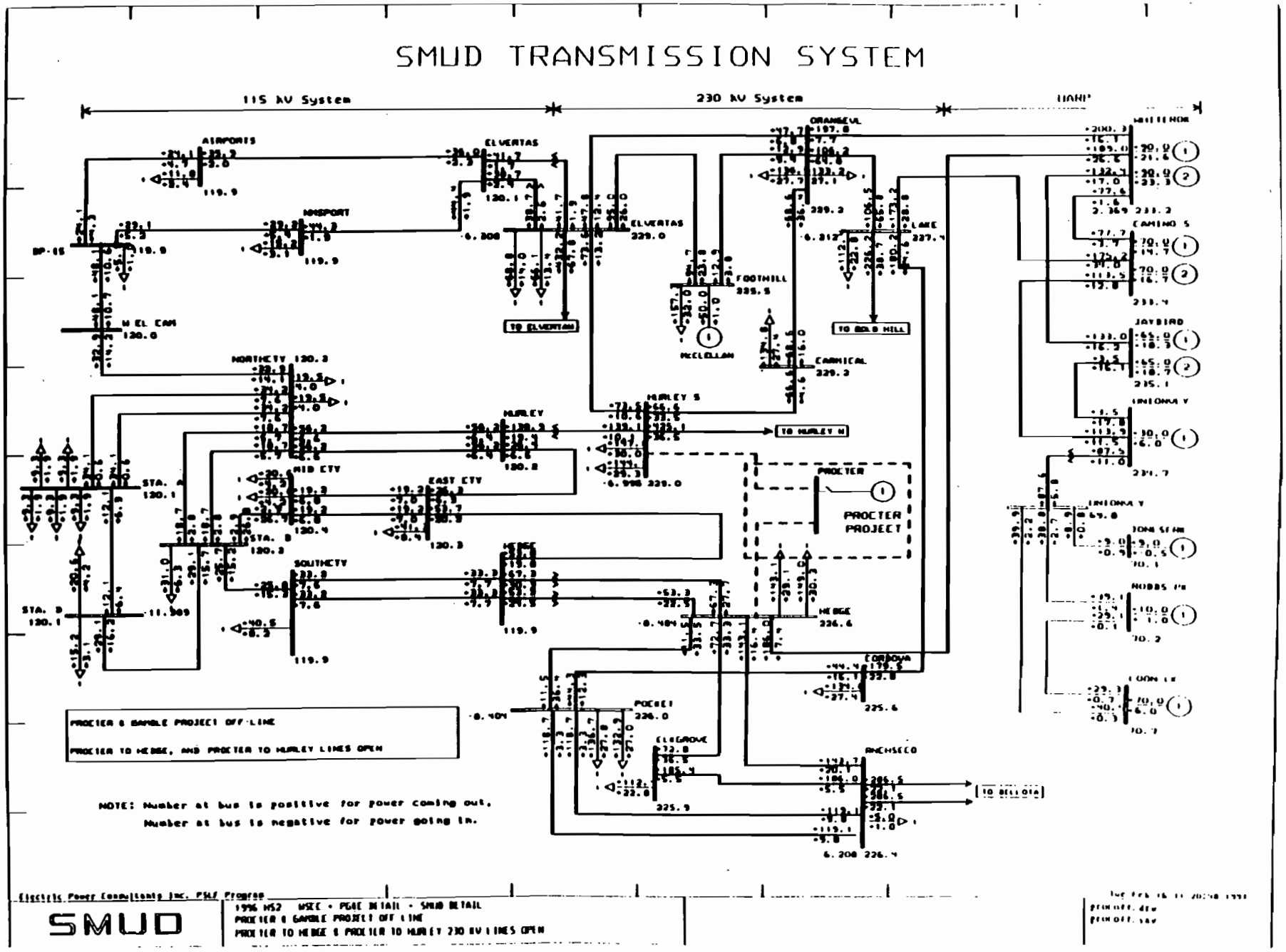

SMUD Transmission System
During Construction of Project Interconnection
Figure 3.15-9

transmission line. The power flow demonstrates that there are no transmission facility overloads. While peak system load conditions have been assumed, it is anticipated that effort will be made to schedule the required line outage during off-peak conditions. No scheduled outage of utility customers is expected.

A joint study between SMUD, PG&E, and WAPA to address the cumulative impacts of the proposed local generation additions was performed. The study includes the cumulative impacts of the Carson Ice Cogeneration Project, Procter & Gamble Cogeneration Project, Sacramento Power Authority at Campbell Soup (SPAC), and the Sacramento Ethanol and Power Cogeneration Project (SEPCO). After its completion in November 1992, the Cumulative Impacts Report was forwarded to the CEC.

3.15.8 Reliability and Maintenance

The Hedge to Hurley 230 kV loop-in alternative offers high plant reliability and flexibility for maintenance and testing as compared to a single-circuit or double-circuit radial tie. Forced line outages are expected to be minimal because of the high reliability of the existing transmission line and the short 1.2 mile additional line proposed for this project.

The Procter & Gamble Cogeneration Project high voltage ring bus is designed to prevent a plant outage from impacting the SMUD transmission system. In addition, two generation outlets allow continued output of the plant to the transmission system in the event that either of the two lines terminating at the switchyard is out-of-service.

Scheduled outages for line or switchyard maintenance will be performed during plant shutdowns. The service life of the proposed transmission line is expected to be beyond the life of the plant.

3.15.9 Selection Rationale

The Hedge to Hurley 230 kV loop-in was selected as the preferred interconnection alternative for the Procter & Gamble Cogeneration Project. Power flow analysis demonstrates solid system performance. The construction cost is moderate and offset by the cost benefit for reduced SMUD system losses. In addition, this alternative offers high plant reliability due to a loop-in interconnection.

3.15.10 SMUD System Improvements

Sacramento Municipal Utility District (SMUD) system improvements will consist of the following:

- Installation of a Procter & Gamble 230 kV switchyard adjoining the Procter & Gamble Cogeneration Project.
- Installation of a double-circuit 230 kV transmission line from SMUD's existing Hedge/Hurley 230 kV transmission line to the switchyard, as shown on Figure 3.15-10.

The proposed construction schedule for the SMUD system improvements is shown on Figure 3.15-11. The system improvements will be completed before the cogeneration plant is ready for startup.

3.15.10.1 Procter & Gamble 230 kV Switchyard. The Procter & Gamble 230 kV switchyard will include installation of a 4-circuit breaker "ring" bus at the proposed cogeneration project site. As shown in the project one-line, Figure 3.15-12, the ring bus has two transformer positions and two line positions for the proposed Hedge and Hurley line terminations. The proposed "ring" bus switchyard provides two reliable outlets for generation while maintaining the existing transmission system reliability.

A preliminary short circuit study prepared by SMUD is included in Appendix A7. With the Procter & Gamble Project, the three-phase short circuit duties at Hedge and Hurley Substations are 17,300 amps and 18,100 amps, respectively. The existing 230 kV circuit breakers at these substations have an interruption rating of 40,000 amps and a continuous rating of 1,200 amps. Existing 230 kV disconnect switches at both substations have a continuous rating of 1,200 amps. Therefore, the existing equipment at SMUD's Hedge and Hurley 230 kV substations are adequately rated for the proposed project.

The switchyard components at the Procter & Gamble Cogeneration Project 230 kV switchyard will have sufficient ratings for normal and emergency conditions. The continuous current capacity of all circuit breakers and switches will tentatively be 1,200 amps which will exceed the plant output.

The 230 kV major switchyard components at the Procter & Gamble Cogeneration Project are listed below. The estimated cost of the switchyard and associated system modifications is $5.4 million:

- Four 230 kV power circuit breakers.
- Fourteen 230 kV 3-pole disconnect switches.
- Two revenue metering sets, 3-phase.

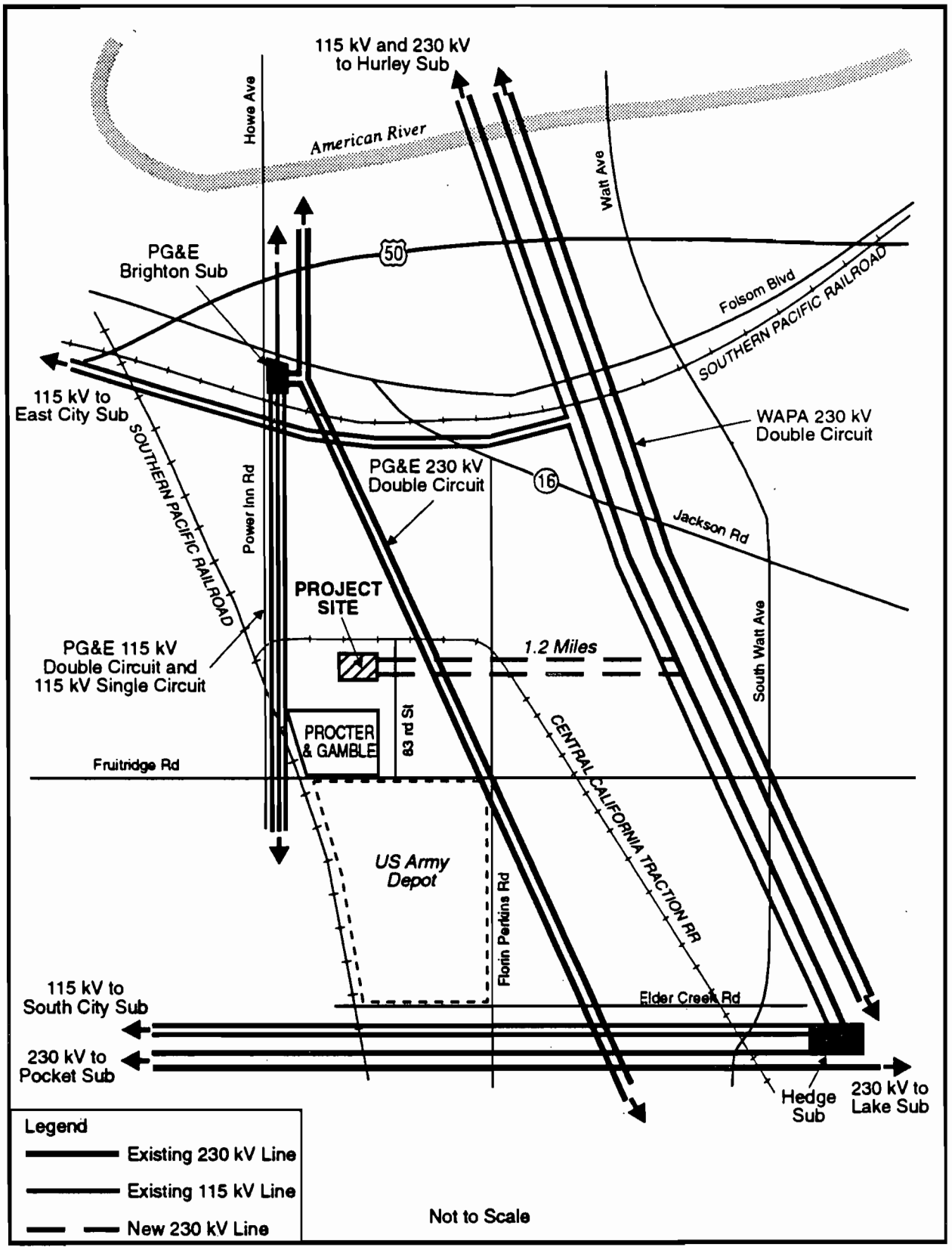

Existing Transmission Facilities
and Proposed Interconnection Route
Figure 3.15-10

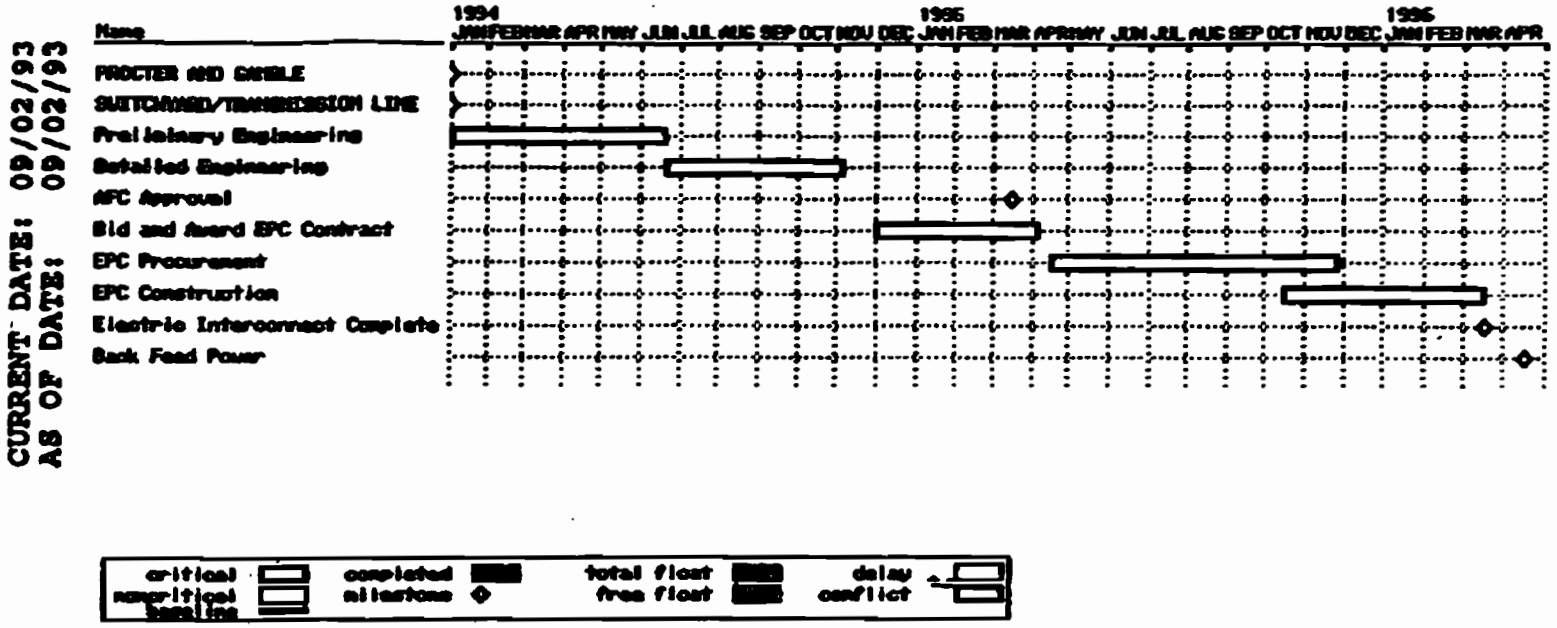

Transmission Line Schedule
Figure 3.15-11

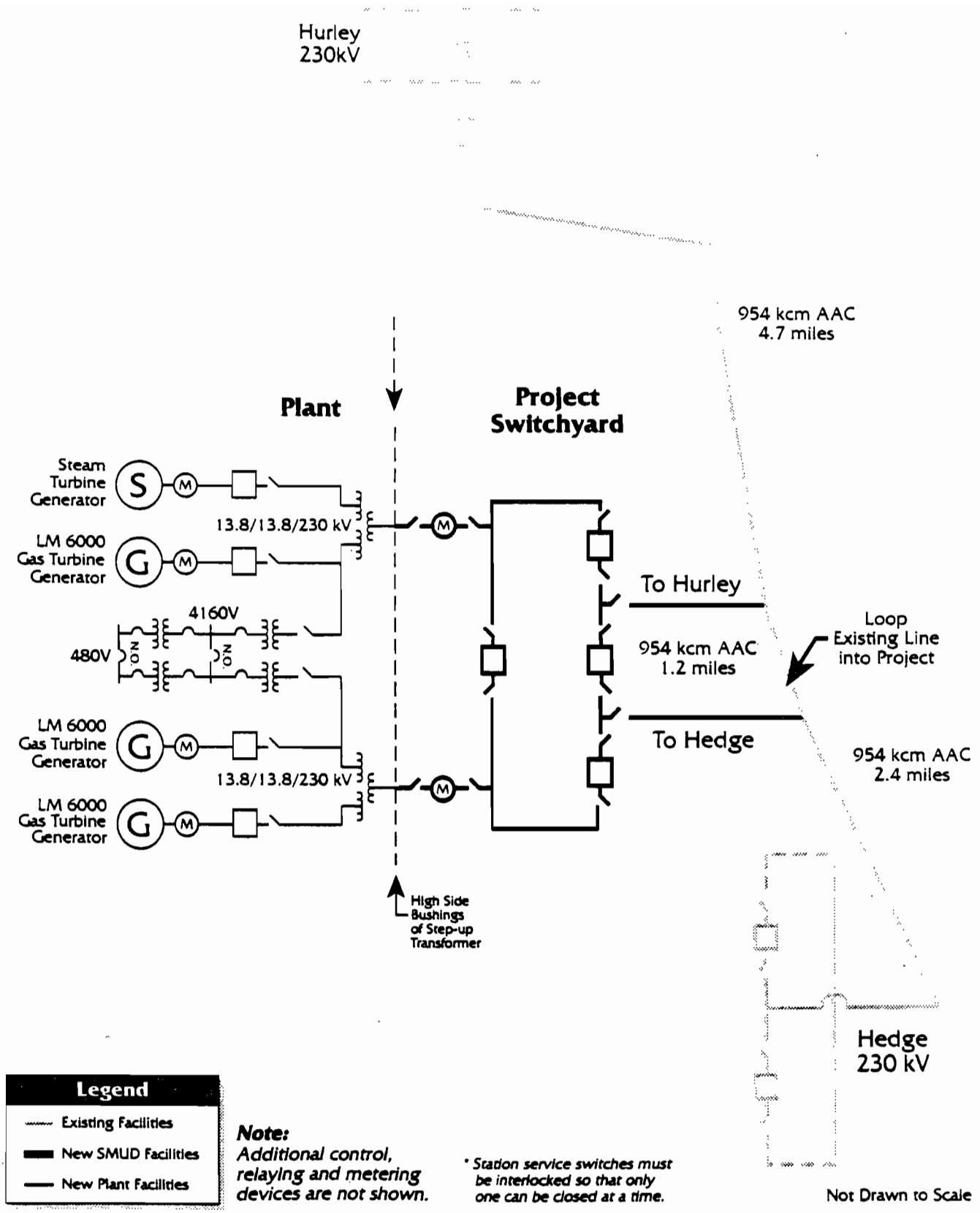

Procter & Gamble Project Interconnection Plan of Service
Figure 3.15-12

- Control and protection equipment.
- Bus, structures, and miscellaneous equipment.

During construction, outages of the existing line positions at Hedge and Hurley substations will be required. However, scheduling these outages during lightly loaded times of the year will prevent customer service interruption. There will be no curtailment costs during construction.

3.15.10.2 Hedge/Hurley 230 kV Transmission Line Loop-In. SMUD's preferred alternative consists of installation of a 1.2-mile 230 kV double-circuit transmission line from the 230 kV switchyard to SMUD's existing Hedge/Hurley 230 kV transmission line. The transmission line will exit north from the proposed switchyard which is located on the north end of the proposed project. The line will cross over the Central California Traction Railroad tracks and turn east and connect to the existing Hedge/Hurley line located approximately 1.2 miles to the east of the proposed project.

The transmission line will require approximately 12 steel poles. In general, the ruling span will be approximately 600 to 800 feet. The proposed line will include a shield wire. Although the project is located in a low keraunic area, less than five thunderstorm days per year, SMUD's practice is to install a shield wire on high voltage lines within 1-1/2 miles from a substation or switchyard. A fiber-optic line will be installed between Procter & Gamble and Hedge Substation. This line will be used for system protection and communication. The fiber-optic line will tie the proposed project to SMUD's existing communication system at Hedge Substation. It will be installed on the proposed poles inside the shield wire located at the top of the pole or below the conductor level. The fiber optic will be installed on the existing lattice tower in the shield wire or below the conductor level. Installing the fiber optic in the shield wire on the existing structures will require replacement of the existing conventional shield wire.

The basic tangent structure will be three post insulators per circuit in the configuration shown on Figure 3.15-13. The deadend structures will be "arm" type construction as shown on Figure 3.15-13. The conductor will be 954 kcmil AAC "Magnolia." The SMUD normal/emergency current rating for the conductor is 760/880 amps. At 230 kV, the power transfer capability is 303/351 MVA. The normal conductor rating is based on a maximum conductor temperature of 75°C with a 40°C ambient. The emergency rating is based on a maximum summer conductor temperature of 90°C with a 40°C ambient.

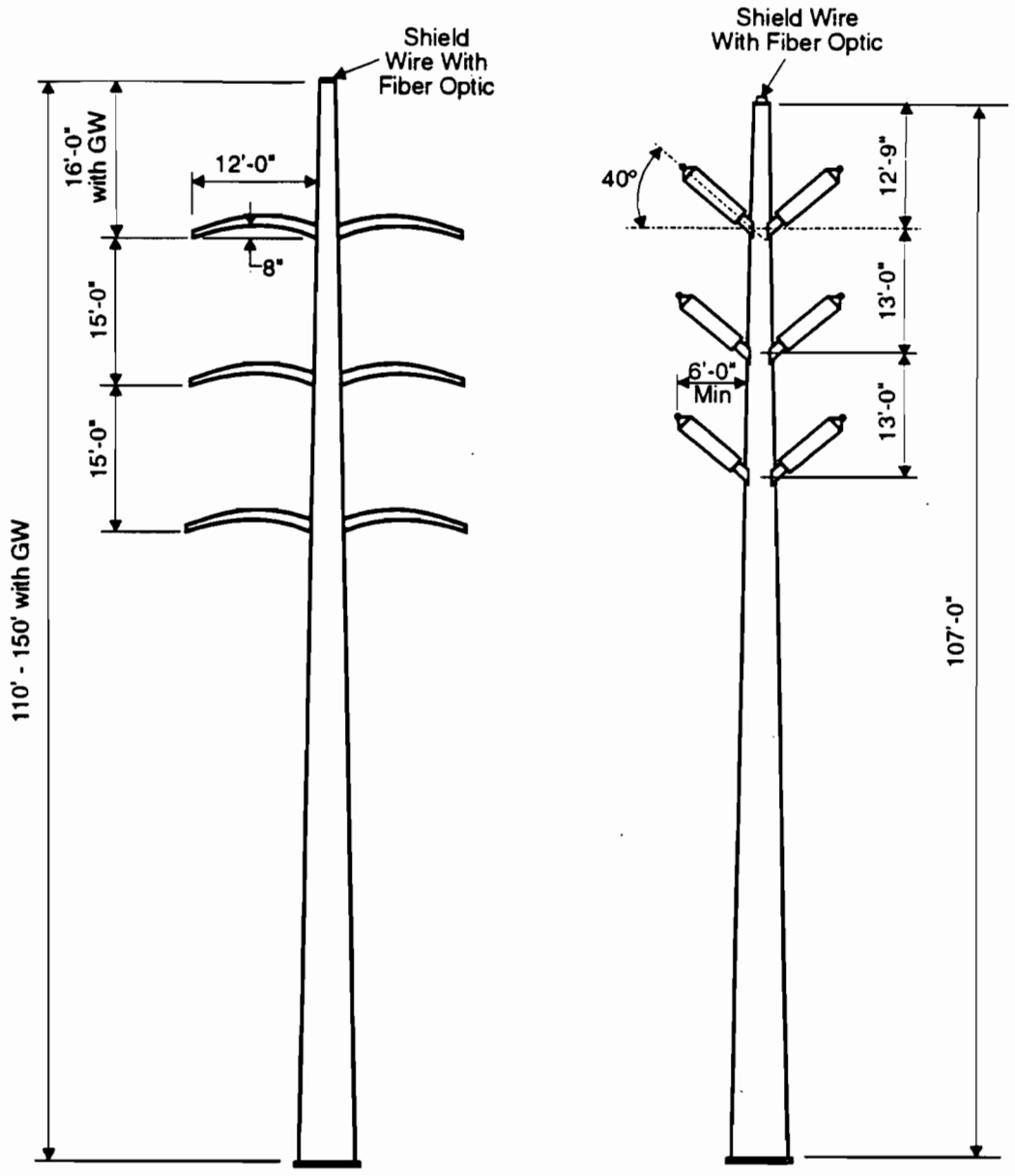

Proposed Pole Configuration
Hedge/Hurley 230 kV Loop-In
Figure 3.15-13

The basic impulse level (BIL) for the proposed line will be determined as part of detailed design. SMUD's standard 230 kV insulator has a "positive impulse flashover" value of 1,025 kV. It is expected that this will be adequate for the proposed line. However, SMUD will conduct an insulation study to confirm the choice of insulator.

The right-of-way width will vary from approximately 60 to 100 feet depending on structure type and span length.

The transmission line design and construction will be in accordance with California Public Utility Commission General Order 95, "Rules for Overhead Electric Line Construction."

The double-circuit 230 kV transmission line required to loop-in the existing Hedge/Hurley transmission line is estimated to cost $550 thousand.

The existing Hedge/Hurley 230 kV transmission line is conductored with 954 kcmil AAC "Magnolia," and the proposed line will be conductored to match the existing. The existing conductor will provide the power transfer capability necessary for the proposed project. In addition to 954 kcmil AAC, bundled 636 kcmil AAC was considered with reconductor of the existing line back to Hedge and Hurley Substations. The increased cost benefit for reduced system losses associated with the larger bundled 636 kcmil AAC conductor will be significantly less than the cost to reconductor the existing Hedge/Hurley 230 kV line (Table 3.15-7). The method of loss analysis is described in Appendix A4 with detailed spreadsheets provided for alternatives identified as 6 and 6R.

No unusual operation or maintenance practices will be required for the proposed facilities.

3.15.10.3 Modifications to Miscellaneous Facilities. A 12 kV distribution line with "secondary" is located east of Florin-Perkins Road in the proposed corridor for the new 230 kV line. This line will be underground or installed on the new poles below the transmission conductor level. The cost for this relocation is approximately $100,000.

An existing 69 kV line is currently located on the proposed Procter and Gamble Cogeneration Project site. This line will be relocated west of the site. The cost for this relocation is approximately $60,000.

The distribution line design and construction will be in accordance with California Public Utility Commission General Order 95, "Rules for Overhead Electric Line Construction," and General Order 128, "Rules for Construction of Underground Electric Supply and Communication Systems."

Table 3.15-7
1996 Capacity and Energy Losses for Conductor Sizing
(Procter & Gamble Project Generating 175 MW)

Conductor Size	Capacity Losses (MW)	Energy Losses (MWH)	Net Present Value (Million $)
954 kcmil AAC (Same as Existing Line)	-0.75	-627	-$1.01
Bundled 636 kcmil AAC with Reconductor	-0.80	-940	-$1.24

3.15.11 Transmission Line Safety and Nuisance

This AFC section discusses aviation safety, induced electric and magnetic fields and shocks, audible noise and radio/TV interference, fire hazards, and LORS associated with the interconnection facilities.

3.15.11.1 Aviation Safety. The proposed 230 kV transmission line extension to the existing Hedge Hurley 230 kV line will have no impact on airplane flights in the area. There are three major airports in the vicinity of the project (see Figure 3.15-14):

- McClellan Air Force Base, approximately 8.3 miles north of the project site.
- Mather Air Force Base, approximately 4 miles east of the project site.
- Sacramento City Executive Airport, approximately 4.8 miles west of the project site.

There are three lesser facilities in the vicinity:

- A helipad, approximately 1.6 miles to the northeast at the Teichert & Sons, Inc. facility (north side Kiefer Boulevard, west of South Watt Avenue).
- Borges-Clarksburg Airport, approximately 9 miles away.
- Franklin Airport, over 15 miles away.

No known flight paths cross over the site. A straight line off of Mather's runway would pass south of the site; most Mather flights turn even farther to the south.

The project site and the related transmission lines are far enough away from all the airports so as not to cause any interference with aircraft approach or departure paths. New steel transmission line poles will be approximately 110 feet, similar to the height of the existing Hedge/Hurley 230 kV steel lattice tower. Mather is east of the existing line, and the proposed project is west of the existing line. Therefore, a Notice of Construction or Alteration for potential obstruction hazards will not be required.

In accordance with the aviation regulations cited in Subsection 4.2.2, a Notice of Construction should be filed with the Federal Aviation Administration (FAA) if there is any structure rising 200 feet (500 feet in uncongested area) above the average ground level in the vicinity of the construction site. A notice is also required if any structure protrudes above an imaginary surface extending from the end of any runway at a slope of 50:1 for 10,000 feet, if the runway length is 3,200 feet or less; or a slope of 100:1 for 20,000 feet, if the runway is longer than 3,200 feet. For the Procter & Gamble Cogeneration Project, the transmission line supports do not extend above the imaginary surface in either case; therefore, a Notice of Construction or Alteration will not be required.

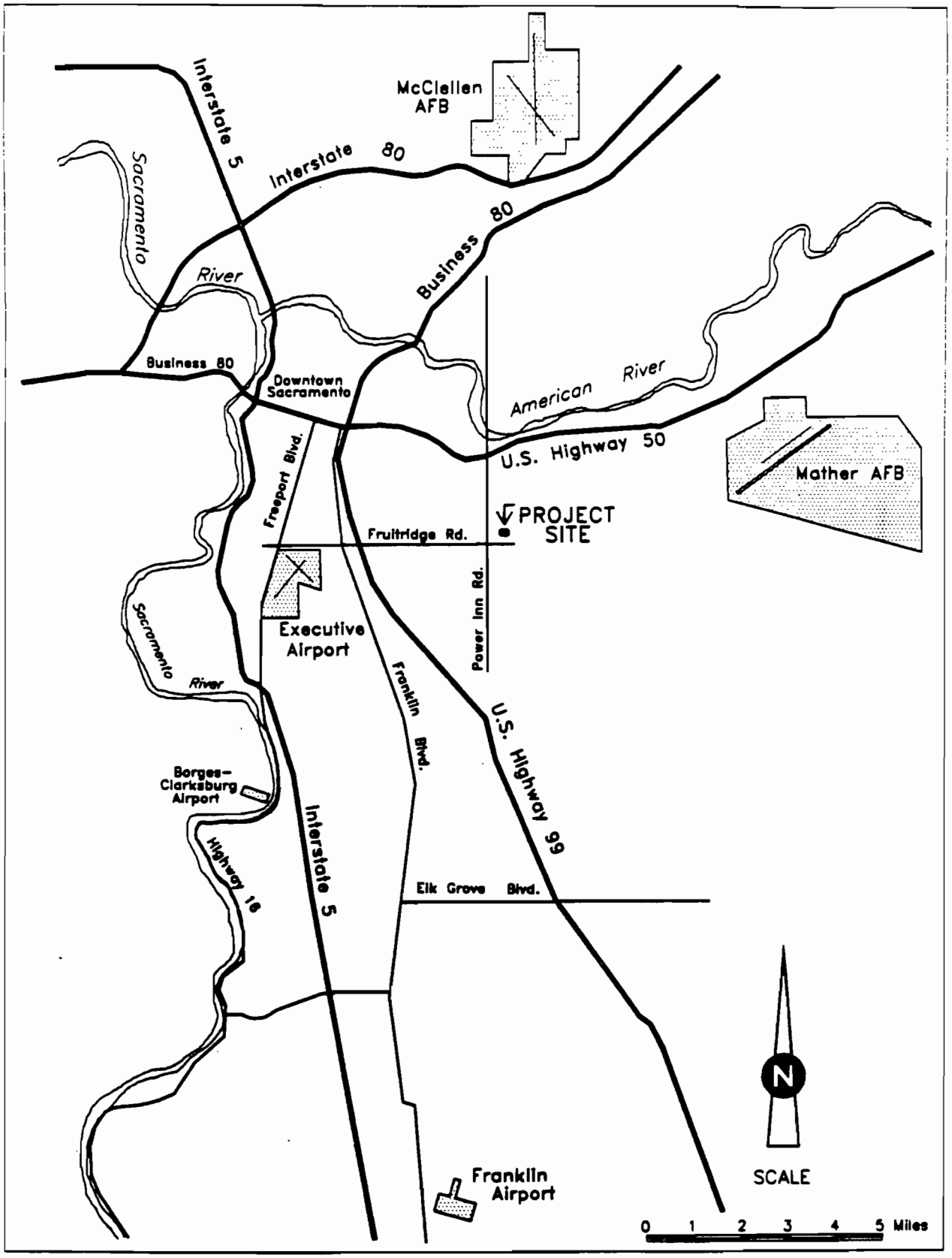

Local Airports
Figure 3.15-14

3.15.11.2 Induced Electric and Magnetic Fields and Shocks. Whenever electricity is used or transmitted, electric and magnetic fields are created by the electric charges. Electric charges of opposite sign attract each other, while those of the same charge repel each other. These forces of attraction and repulsion, when electric charges are not moving, create electric fields. The strength of these fields is related to the voltage in the circuit. Once electric charges are in motion they create magnetic fields. The strength of the magnetic field is proportional to the magnitude of the current in the circuit. The strength of the electric and magnetic fields generally fall off rapidly with distance from the source. Fields from compact sources (coils or magnets) decrease rapidly with distance (r), by a factor of $1/r^3$. Transmission line related fields decrease at a rate of $1/r^2$, if currents are balanced and conductors are closely spaced. Magnetic fields associated with unbalanced phase currents will fall off inversely proportional from the distance to the source (conductor), at a rate of 1/r. Therefore, if the distance from the source is doubled and the transmission line current is balanced in all three phases, the magnetic field would drop off by a factor of four. However, if the phase current is unbalanced and the distance from the source is doubled, the field would decrease to only half of the original intensity.

SMUD has calculated the average year-round magnetic fields for the Procter & Gamble transmission line at 2.1 milligauss (mG) under center line and 1.5 mG at the edge of an 80 foot wide right-of-way. While California does not have a regulatory level, these values are well below the levels established by those states that do have regulatory limits. States with regulations have ranges from 150 mG to 250 mG at the edge of the right-of-way, depending on the line voltage. The California Energy Commission (CEC) does not presently specify limits on magnetic fields, but does require measurement and reporting of levels along rights-of-way for 230 kV lines licensed by the CEC. Average values reported have been less than 100 mG (CEC 1992).

SMUD has calculated the average year-round electric field strengths for the Procter & Gamble transmission line at 0.35 kilovolt per meter (kV/m) under center line and 0.29 kV/mG at the edge of an 80 foot wide right-of-way. While California does not have a regulatory level, these values are well below the levels established by those states that do have regulatory limits. States with regulations have ranges from 1.0 kV/m to 2.0 kV/m at the edge of the right-of-way, depending on the line voltage. The CEC does not presently specify limits on electric fields but continues to recommend a safety limit not to exceed 1.6 kV/m (CEC 1992).

SMUD is developing an EMF program which will include monitoring EMF data and making data available to the public. Design concepts for electrical facilities are also being implemented in order to minimize EMF where feasible.

In January 1991, the California Public Utilities Commission (CPUC) issued an Order Instituting Investigation (I.91-01-012) into the potential health effects from electrical and magnetic fields emitted by electric power lines and cellular telephone facilities. In September 1991, the assigned CPUC administrative law judge issued a ruling which created the California EMF Consensus Group. This group of representatives from utilities, industry, government, private and public research groups, and labor organizations submitted their *Issues and Recommendations for Interim Response and Policy Regarding Power Frequency EMF's* on March 20, 1992. In the relevant policy consensus recommendation titled "Facility Siting," the group stated that the CPUC should recommend that utilities take public concern about EMFs into account when siting new electric facilities. Although this group could not conclude that there is a relationship between EMF and human health impacts, they also could not conclude that this relationship does not exist to any extent; therefore, they recommended that the CPUC authorize further research.

According to the EMF Consensus Group, the three most important characteristics of electric and magnetic fields are frequency, waveform, and intensity. The 60 hertz (cycles per second) fields differ significantly from other types of common electromagnetic energy sources, such as x-rays, microwaves, and solar insolation. Sixty hertz fields do not contain enough energy to break chemical bonds or heat body tissues beyond a trivial amount.

In summary, there is scientific uncertainty and general public concern about the potential public health risks from the power-frequency electric and magnetic fields resulting from the generation and transmission of electricity.

Hazardous shocks could be caused by touching ungrounded metallic objects under or near a transmission line if it is not properly constructed. The 230 kV tie line constructed for this project will be built in conformance with General Order-95 and Title 8 CCR 2700 requirements; therefore, hazardous shocks are unlikely to occur as a result of the project construction and operation.

Nuisance shocks can be caused by touching ungrounded metallic objects under or near a transmission line. Conformance with General Order-95 and Title 8 CCR 2700 requirements should prevent occurrences of nuisance shocks. If complaints are received, the complaint will be investigated and, if necessary, mitigated. Assuming a large object remains under the 230 kV tie line for a lengthy period of

time (a parked school bus or other ungrounded platform) and also assuming the maximum value of electric field, the impacts of induced voltages would be negligible.

3.15.11.3 Audible Noise and Radio/TV Interference. When a transmission line is in operation, an electric field is generated in the air surrounding the conductor. When the intensity of the electric field at the conductor surface exceeds the break-down strength of the surrounding air, a corona discharge occurs at the conductor surface (California Public Utilities Commission 1980). During this process, electrical energy from the conductors is released, known as corona losses, and is manifested as audible noise and radio/television interference.

Energized electric transmission lines can generate audible noise by a process called corona discharge, most often perceived as a buzz or hum. This condition is usually worse when the conductors are wet. The Electric Power Research Institute has conducted several transmission line studies. The following are some of the measured sound levels and power line sizes with wet conductors:

- 138 kV--33.5 adjusted decibels (dBA).
- 240 kV--40.4 dBA.
- 356 kV--51.0 dBA.

Attenuation of the sound is usually 3 dB or greater for each doubling of the distance from the source (EPRI 1978; EPRI 1980).

SMUD has an extensive transmission and subtransmission system in service, and has had very few problems with radio or television (TV) interference. The SMUD transmission system consists of over 480 circuit miles of 230 kV and 115 kV lines and there have been few complaints; all have been resolved. Radio and TV interference, known as gap type noise, is caused by an oxidized film on the surface of two hard-ware pieces in contact. The film acts as an insulator between the surfaces, and small electric arcs, which produce noise and interference, are created. This type of noise is not a problem in well maintained transmission lines.

SMUD has well trained transmission line maintenance crews. If any problem should occur, it can be readily pinpointed and corrected. Therefore, it is unlikely that a 230 kV line would have any effect on radio or television reception, particularly noting the distance to residential development.

The transmission line will cross the Central California Traction Railroad line at the project site's north boundary. The transmission line will parallel the north side of the rail line from the project site to Florin-Perkins Road, where the rail line turns to the southeast and away from the transmission line. The transmission line will cross three railroad spurs that serve warehouses north of the line.

There are no residences adjacent to the line and no adverse impacts are expected. The line will be within City Noise Ordinance levels (50 dBA 7 a.m. to 11 p.m. and 45 dBA thereafter) at the edge of the right-of-way. Any noise or radio/TV interference complaints will be logged, investigated, and mitigated.

3.15.11.4 Fire Hazards. The vegetation along the transmission line right-of-way consists of grassland, commercial/industrial uses, and agricultural uses. All have a minimal potential of sustaining a fire created by either a spark from the transmission line or a lightning strike. The transmission line will be designed and built in accordance with GO-95 requirements. Title 14, CCR, Section 1250, Article 4 establishes fire prevention standards for electrical utilities. SMUD plans to comply with these standards. SMUD has well trained maintenance crews, which will keep the right-of-way cleared of excessive grass and brush. Therefore, no significant impacts from fire will occur.

3.15.11.5 Laws, Ordinances, Regulations, and Standards. A list of applicable laws, ordinances, regulations, and standards (LORS), which may apply to the Procter & Gamble Cogeneration Project are presented in this subsection.

3.15.11.5.1 General. LORS Title 20, California Code of Regulations (CCR), Appendix B, Information Requirements for a Nongeothermal Application, Subdivision (a), (d), (g), and Subdivision (a), (h), Sections 1741 through 1744 and 1752 define the basis for staff review of safety and reliability, compliance with applicable laws, and the recommendations for proposed conditions.

3.15.11.5.2 Aviation safety. Title 14, Code of Federal Regulations (CFR), Part 77, "Objects Affecting Navigable Airspace," describes the criteria used to determine whether a "Notice of Proposed Construction or Alteration" (NPCA, Federal Aviation Administration (FAA) Form 7460-1) is required for potential obstruction hazards.

Advisory Circular (AC) No. 70/7460-IG, "Obstruction Marking and Lighting," describes the FAA standards for marking and lighting of obstructions as identified by Federal Aviation Regulations (FAR) Part 77.

AC 70/7460-2H, "Proposed Construction or Alteration of Objects That May Affect the Navigable Airspace," informs individuals proposing to erect or alter an object which may affect the navigable airspace regarding the need to notify the FAA prior to such construction.

3.15.11.5.3 Hazardous shock. Title 8 CCR Section 2700 *et seq.*, "High Voltage Electrical Safety Orders," establishes essential requirements and minimum standards for installation, operation, and maintenance of electrical equipment to provide practical safety and freedom from danger.

3.15.11.5.4 Nuisance shock. National Electrical Safety Code (NESC), ANSI C2, Section 9, Article 92, Paragraph E; Article 93, Paragraph C, No. 6 covers grounding methods for electrical supply and communication facilities.

3.15.11.5.5 Communications interference. Title 47 CFR, Section 15.25, "Operating Requirements, Incidental Radiation," prohibits operation of any device emitting incidental radiation that causes harmful interference to communications. The regulation also requires mitigation for any device which causes interference.

General Order 52 (GO-52) California Public Utilities Commission (CPUC) governs the "Construction and Operation of Power and Communications Lines" and applies to the prevention or mitigation of inductive interference.

California Energy Commission (CEC), Radio Interference and Television Interference (RI/TVI) Criteria (82-AFC-2, Final Decision, Compliance Plan Condition 13-7) prescribes the CEC's RI/TVI mitigation requirements, developed and adopted by the CEC in past siting cases.

3.15.11.5.6 Noise. Applicable local (city and county) noise regulations for operation of a transmission line normally provide maximum noise levels which are contained in most general plans and will vary from area to area. These regulations establish acceptable noise limits for various types of land uses.

3.15.11.5.7 Design and construction. GO-95 CPUC, "Rules for Overhead Electric Line Construction," covers clearances, grounding, maintenance, and inspection.

Title 8 CCR Section 2700 *et seq.*, "High Voltage Electrical Safety Orders," establishes essential requirements and minimum standards for installation, operation, and maintenance of electrical installation and equipment to provide practical safety and freedom from danger.

3.15.11.5.8 Fire hazard. Title 14 CCR Sections 1250-1258, "Fire Prevention Standards for Electric Utilities," provides specific exemptions from electric pole and tower firebreak and electric conductor clearance standards and specifies when and where standards apply.

3.15.12 References

California Energy Commission (CEC), July 1992, *High-Voltage Transmission Lines.*

General Order 52 (GO-52) CPUC governs the "Construction and Operation of Power and Communications Lines." Applies to the prevention or mitigation of inductive interference.

3.16 Gas Pipeline

On May 3, 1993, SMUD submitted an amendment to the SEPCO AFC (92-AFC-2) to add the SMUD Cogeneration Pipeline Project. This project consists of a 64 mile pipeline system, which will transport natural gas to the Procter & Gamble, SEPCO, Campbell Soup, and Carson Ice-Gen cogeneration projects (Figure 3.16-1).

The gas pipeline will originate 5 miles north of Winters, California, Yolo County, where it connects with Pacific Gas & Electric's existing gas Lines 400 and 401. This main segment of the pipeline then extends 25 miles through Yolo County, generally paralleling County Road 29. The main line then separates into a northern and southern segment immediately north of Interstate 80, as it enters the Yolo Bypass. The northern segment will parallel an existing electric transmission line, cross the Sacramento River into Sacramento County, continue along El Centro and Del Paso Roads and follow a power line into the proposed SEPCO site near Elverta Road. Extending southerly into the Yolo Bypass, the southern segment will traverse the Sacramento Deep Water Ship Channel, the Sacramento River, and Interstate 5 to the Carson Ice-Gen Project. From here, the route will continue northerly to the Campbell Project and then easterly to terminate at the Procter & Gamble Project.

All information pertaining to the natural gas pipeline is contained in the SEPCO AFC amendment. Therefore, approval for the gas transmission line for the Procter & Gamble Project will be accomplished separately through the CEC approval of the entire pipeline system. As a result, the Procter & Gamble AFC does not contain specific information regarding SMUD's natural gas pipeline.

3.17 Engineering Design Criteria

In conjunction with Section 3.0, Project Description, engineering design criteria such as laws, ordinances, codes, and standards which will govern the detail design of the cogeneration project is provided in the following appendices:

- Appendix B--Mechanical Engineering Design Criteria.
- Appendix C--Civil Engineering Design Criteria.
- Appendix D--Structural/Seismic Engineering Design Criteria.

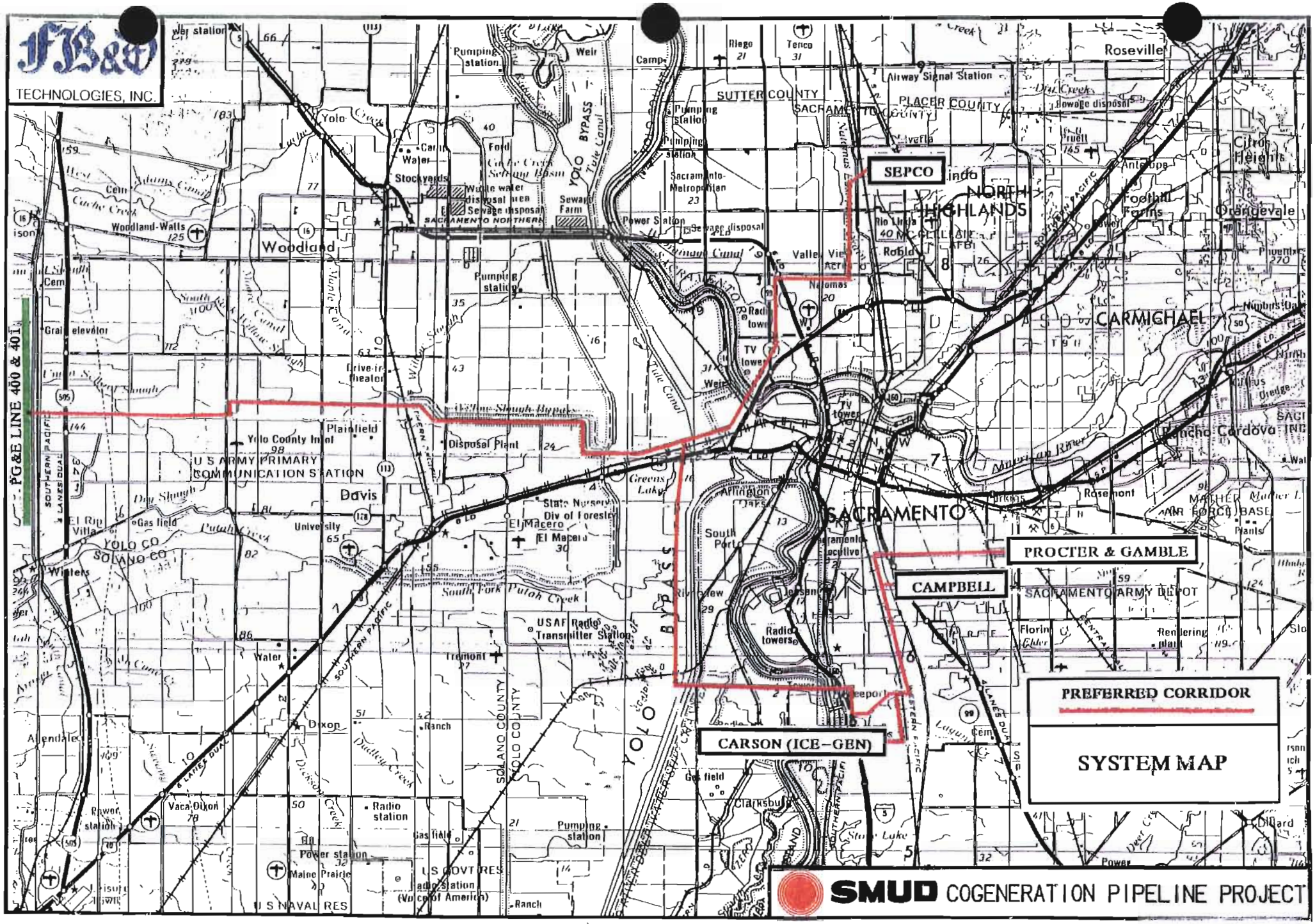
FB&W
TECHNOLOGIES, INC.
PG&E LINE 400 & 401
SBPCO
PROCTER & GAMBLE
CAMPBELL
CARSON (ICE-GEN)
PREFERRED CORRIDOR
SYSTEM MAP
SMUD COGENERATION PIPELINE PROJECT
SACRAMENTO
Woodland
Davis
Roseville
CARMICHAEL
Rancho Cordova
SUTTER COUNTY
PLACER COUNTY
YOLO BYPASS
U S ARMY PRIMARY COMMUNICATION STATION
SACRAMENTO ARMY DEPOT
Yolo County Intnl
Disposal Plant
Plainfield
Winters
Dixon
Vaca Dixon
Clarksburg
Elmira
Meiners Oaks
Oildale
Bakersfield
Arvin
Lamont
Weedpatch
Edison
Maricopa
Taft
Fellows
Derby Acres
Lost Hills
Kettleman City
Avenal
Coalinga
Huron
Lemoore
Hanford
Corcoran
Tulare
Visalia
Exeter
Lindsay
Porterville
Delano
Wasco
Shafter
Famoso
Bakersfield
Arvin
Lamont
Weedpatch
Edison
Maricopa
Taft
Fellows
Derby Acres
Lost Hills
Kettleman City
Avenal
Coalinga
Huron
Lemoore
Hanford
Corcoran
Tulare
Visalia
Exeter
Lindsay
Porterville
Delano
Wasco
Shafter
Famoso

Figure 3.16-1

- Appendix E--Chemical Engineering Design Criteria.
- Appendix F--Electrical Engineering Design Criteria.
- Appendix G--Control Engineering Design Criteria.

3.18 Facility Construction

Construction of the Procter & Gamble Cogeneration Project will take 23 months from financial closing to the completion of performance testing. The entire project is planned to be completed by March of 1997.

3.18.1 Construction Plans

A single contractor has been selected for the permitting design, procurement, and construction of the facility. Subcontractors will be selected as needed for mechanical, electrical, and other specialty work portions of the work.

3.18.1.1 Construction Office Facilities. Mobile construction office trailers will be used for Owner and Contractor personnel. One 10 foot by 40 foot trailer and three 12 foot by 60 foot trailers are expected to be required for the Owner and General Contractor's personnel. Subcontractors with significant amounts of work onsite will also require mobile office trailers. A maximum of eight 12 foot by 60 foot office trailers for subcontractors is expected. An area of 120 feet by 200 feet in the southwest corner of the site, inside the permanent fence boundary, has been designated for the construction office trailers. A maximum of 15 office trailers could be located in this area.

3.18.1.2 Construction Parking. An area approximately 500 feet by 175 feet west of the site will be used for construction parking. This area will provide 250 parking spaces for project personnel during construction. Fourteen spaces will be designated for visitors. The remaining spaces will be adequate for the maximum personnel expected onsite for construction, which is less than 185. The area will be aggregate surfaced for stability and lighted for security. The area is also in view of the construction offices for monitoring of access.

3.18.1.3 Laydown and Storage. An area directly west of the site boundary will be the primary laydown area and offloading area for the project. This area will be approximately 500 feet long by 175 feet wide. A temporary fence will enclose part of this area.

3.18.1.4 Emergency Facilities. Emergency Services will be coordinated with the local Fire Department and Hospital. An urgent care facility will be contacted in advance to set up nonemergency physician referrals. First aid kits will be provided

around the site and maintained on a regular basis. At least one person trained in first aid will be part of the construction staff. In addition, all foremen and supervisors will be given first aid training.

Fire extinguishers will be located throughout the project at strategic locations at all times during construction. No other fire fighting equipment will be maintained onsite as the response time from local fire departments is approximately 15 minutes.

3.18.1.5 Utilities. During construction, temporary utilities will be provided for the construction office, construction parking, laydown area, and the project site. Temporary construction power will be provided from an existing 480 volt panel and will be distributed to areas throughout the plant site. Area lighting will be provided in the parking and laydown areas for safety and security. Construction water will be provided by the city main and will be piped to the construction office. Drinking water will be distributed daily. The average daily usage for construction water is approximately 20,000 gallons. During hydrotest, water usage is estimated at 50,000 to 75,000 gallons per day. Portable toilets will be provided throughout the site and servicing will be on a bi-weekly basis. Compressed air and other gases will be supplied by the individual subcontractors.

3.18.1.6 Mobilization. The general contractor will mobilize in April 1995. Site development will include general site grading and soil stabilization using aggregate surfacing. A gravel road will be constructed to provide access to the parking and laydown area west of the plant site.

3.18.1.7 Site Services. The following site services will be provided by the general contractor:

- Trash collection and disposal.
- Road and parking lot maintenance.
- Weed and vegetation control.
- Janitorial services.
- Disposal of all hazardous materials and wastes in accordance with local, state, and federal regulations.
- Site fence maintenance and relocation.
- Furnishing and servicing sanitary facilities.
- Construction lighting.
- Construction water and distribution.
- Construction cleanup.
- Dust abatement.
- Onsite fire protection and extinguisher maintenance.

- Construction building maintenance.
- Construction electrical power and distribution.

3.18.1.8 Interface with Existing Procter & Gamble Operations. Impact to Procter & Gamble operations will be minimal. The installation of the process steam line onto Procter & Gamble facilities will be scheduled so as not to significantly interfere with truck or rail traffic in the area.

3.18.2 Construction Materials and Equipment

Construction equipment planned for use in the construction of the Procter & Gamble Cogeneration Project is listed in Table 3.18-1.

Truck deliveries will occur between 8:00 a.m. and 4:30 p.m. on the weekdays. Most of the heavy equipment items will be transported by rail. Most of the equipment will be offloaded directly onto its respective foundation thus precluding any double handling. The heavier equipment will be offloaded by crane and smaller equipment or materials will be handled by a forklift. In addition to equipment, materials such as concrete, pipe, wire, fuels, structural steel rebar, and consumables will be procured locally and delivered to the site. Construction deliveries will begin in April 1995, peak between August 1995 and April 1996, and end in December 1996. Table 3.18-2 indicates the projected delivery of major equipment components to the site by rail. Table 3.18-3 indicates the projected delivery of equipment and materials to the site by truck.

Rail deliveries will be offloaded at the adjacent Procter & Gamble facility rail spur and trailered over Procter & Gamble property to the project site.

Truck deliveries will be routed off of 83rd Street to the west boundary of the plant where the equipment/material will be inspected prior to offloading. The shipment will either by offloaded in the laydown area which is an area of 500 feet by 175 feet directly west of the plant boundary or offloaded on the selected foundation.

Site access will be strictly controlled for both vehicles and personnel. A security fence will be installed early in the job around the site boundary as well as around part of the laydown area.

3.18.3 Construction Labor Workforce

The normal project working hours will be between 7:00 a.m. and 6:00 p.m. Overtime or second shift work may be necessary to meet schedule requirements. An

092793-2

Table 3.18-1
Procter & Gamble Cogeneration Project
Equipment Onsite Monthly

DESCRIPTION	TOTAL	4/95	5/95	6/95	7/95	8/95	9/95	10/95	11/95	12/95	1/96	2/96	3/96	4/96	5/96	6/96	7/96	8/96	9/96	10/96	11/96	12/96
AIR COMPRESSORS	15				1	1	1	1	1	1	1	1	1	1	1	1	1	1	1			
COMPACTORS	10			2	2	2	2	2														
CONCRETE BUCKETS	7				1	1	1	1	1	1	1											
CONCRETE VIBRATORS	40			5	7	7	7	5	5	2	2											
CONCRETE TEST EQUIPMENT	7				1	1	1	1	1	1	1											
CRANES 100-200 TON	6												1	1	1	1	1	1				
CRANES LESS THAN 100 TON	25						1	1	2	2	2	3	3	4	4	2	1					
CRANES MOBILE	29	1	1	2	2	2	2	2	2	2	2	2	1	1	1	1	1	1	1	1	1	
DIESEL GENERATORS	19		1	1	1	1	1	1	1	1	1	1	1	1	1	1	1	1	1	1	1	
DOZERS	5	1	2	1	1																	
DRILLS	21	1	1	1	1	1	1	1	1	1	1	1	1	1	1	1	1	1	1	1	1	1
EXCAVATOR, BACKHOE	24	1	1	1	2	2	2	2	2	2	2	2	1	1	1	1	1					
EXCAVATOR, LOADER	9	1	2	2	2	2																
EXCAVATOR, MOTOR GRADER	4		1	1																1	1	
EXCAVATOR, TRENCHER	16			1	1	1	1	1	1	1	1	1	1	1	1	1	1	1	1			
FORKLIFT	11											1	1	1	1	1	1	1	1	1	1	1
LINETRUCKS	11							3	3	3	1	1										
MISC. PUMPS	84	6	6	6	6	6	6	6	3	3	3	3	3	3	3	3	3	3	3	3	3	3
PAVING EQUIPMENT	2																		1	1		
PORTABLE COMPACTION EQUIP	100	5	5	5	5	5	5	5	5	5	5	5	5	5	5	5	5	5	5	5	5	
RADIOS	241	4	4	5	8	10	10	10	10	15	15	15	20	20	20	15	10	10	10	10	10	10
SAWS, TABLE & RADIAL ARM	12				2	2	2	2	2	2												
TRUCKS, BOOM	26	1	1	1	1	1	1	2	2	2	2	2	1	1	1	1	1	1	1	1	1	1
TRUCKS, FUEL/LUBE	5	1	1	1	1	1																
TRUCKS, LARGE	84	4	4	4	4	4	4	4	4	4	4	4	4	4	4	4	4	4	4	4	4	4
TRUCKS, PICKUP	168	4	4	6	6	8	8	12	12	14	13	13	12	10	10	8	6	6	4	4	4	4
TRUCK, WATER	6	1	1	1	1	1	1															
WELDERS	112					1	1	5	5	10	10	10	10	10	10	10	10	5	5	5	5	
TORQUE WRENCHES	85								2	2	5	5	8	8	10	10	10	5	5	5	5	5
TOTALS	1184	31	35	46	56	60	58	67	65	74	72	70	74	73	75	66	58	46	44	43	42	29

DATE: 19MAY93

Table 3.18-2
Rail Delivery of Major Equipment Components
for Procter & Gamble Cogeneration Project

Major Equipment Component Description	Number of Deliveries	Projected Delivery
Combined Cycle CTGs		
Turbine	2	5/96
Generator	2	5/96
Simple Cycle CTG		
Turbine	1	6/96
Generator	1	6/96
Steam Turbine Generator		
Turbine	1	6/96
Generator	1	6/96
HRSG		
HP Economizer--Front	2	6/96
NP Economizer--Rear	2	6/96
LP Superheater	2	6/96
Exhaust Stack	2	
Main Transformer	2	2/96

092793-2

Table 3.18-3
Procter & Gamble Cogeneration Project
Truck Deliveries Per Month

DESCRIPTION	TOTAL	4/95	5/95	6/95	7/95	8/95	9/95	10/95	11/95	12/95	1/96	2/96	3/96	4/96	5/96	6/96	7/96	8/96	9/96	10/96	11/96	12/96
AIR COMPRESSOR	2											2										
AIRE DRYERS	1												1									
GAS COMPRESSORS	4													2	1	1						
INLET GAS SCRUBBER	1												1									
COOLING TOWER	16											2	4	7	3							
STEAM TURBINE GENERATOR	46														4	7	10	12	8	3	2	
GAS TURBINE GENERATORS	118										2	7	12	19	30	15	12	8	8	3	2	
CONDENSER	20													3	3	5	6	3				
BOILER FEED PUMPS	14												5	7	2							
AUX BOILER FEED PUMPS	5										2	3										
CIRCULATING WATER PUMPS	17								2	5	8	2										
CONDENSATE PUMPS	13										3	5	5									
MISCELLANEOUS PUMPS	21							2	1	3	1	5	2	1	2	1	3					
STRAINERS	2								2													
ABSORPTION CHILLERS	10										3	4	2	1								
HEAT RECOVERY STEAM GENERATOR	121										5	15	22	20	16	12	11	10	8	2		
CO CATALYST	9											3	4	2								
DEAERATOR	11								4	5	2											
AUXILLARY BOILER	12									4	6	2										
CONDENSATE STORAGE TANK	17								2	11	4											
DEMINERALIZED WATER TANKS	28								2	12	9	5										
NEUTRALIZATION TANK	18								5	8	5											
CAUSTIC STORAGE TANK	2						2															
HRSG BLOWDOWN TANKS	3							3														
AIR RECEIVER	3								3													
AMMONIA STORAGE TANK	3									3												
ACID STORAGE TANK	2						2															
CONTROL VALVES	56							3	5	4	8	5	10	11	8	2						
MANUAL VALVES	83					2	4	8	15	18	12	9	6	5	4	2						
PIPE SPOOLS	129									5	20	16	19	16	21	16	11	5				
PIPE SUPPORTS	94								3	5	7	10	15	22	14	11	5	2				
NON SEG. PHASE BUS	9												4	5								
PROTECTIVE RELAY PANEL	5												3	2								
125DC SYSTEM	3								3													
UPS SYSTEM	6											4	2									
480 VOLT MOTOR CONTROL CTR.	23										4	6	9	4								
4160 VOLT SWITCHGEAR	14											5	7	2								
MAIN STEPUP TRANSFORMERS	6												4	2								
AUXILLARY TRANSFORMERS	3													3								
DCIS	15													5	6	4						
EMISSION MONITORING SYSTEM	12													4	6	2						
INSTRUMENTATION	58								2	4	10	15	11	9	5	2						
CHEMICAL FEED EQUIPMENT	11												4	5	2							
CHLORINATION EQUIPMENT	5													3	2							
DEMIN. WATER TREATMENT	9											2	2	1	4							
CLOSED COOLING WTR. HEAT EXCHANGER	2							2														
PRE ENGINEERED BUILDING	23							4	5	8	2	4										
STRUCTURAL STEEL	24									3	5	8	4	2	2							
CONCRETE/REBAR	1176				120	200	224	240	208	120	64											
WIRE/CABLE/TRAY	102										2	11	24	15	20	12	15	3				
CONTRACTOR MOBILIZATION	39	22	15	2																		
OFFICE SUPPLIES	86		5	12	10	5	5	5	5	5	5	5	5	5	2	2	2	2	2	2	2	
CONSUMABLES	620	10	15	20	25	20	25	35	35	40	40	40	45	45	45	40	40	30	30	20	10	10
CONTRACTOR EQUIPMENT OFF LOAD/LOAD	111	5	15	10	5	1	2	10	2	5	5	5	2	2	1	8	10	15	4	2	2	
MISC. PARTS DELIVERIES	0																					
TOTALS	3243	37	50	44	160	228	264	310	304	268	234	200	234	230	203	142	125	90	60	32	18	10

DATE: 19MAY93

estimated average of 65 craft personnel per day will be onsite for approximately 23 months during construction and startup. In addition, six supervisory personnel and 10 construction management personnel will be onsite at this time.

An estimated peak of 181 craft personnel is anticipated during the months of July and August 1996.

Table 3.18-4 and Figure 3.18-1 indicate the projected craft manpower by month.

3.18.4 Construction Traffic

There are two access streets to the site. The site can be accessed from the south off of Fruitridge Boulevard using 83rd Street and from the east off of Florin-Perkins Road using 24th Avenue to 83rd Street.

Access to the parking area will be located beyond the north boundary of the site where 83rd Street dead ends.

Deliveries and visitor access will be controlled by sign-in checklist. This will control the access to the project.

3.19 Facility Operation and Maintenance

The following section discusses the planned operation and maintenance after construction and startup of the cogeneration are completed.

The operation and maintenance of the cogeneration project will be performed by an Operation and Maintenance (O&M) Contractor under contract to the Sacramento Cogeneration Authority. The O&M contractor will be experienced in the operation and maintenance of combined cycle power plants. The projected full-time operating and maintenance staff for the cogeneration project is indicated in Table 3.19-1.

3.19.1 Operation

The cogeneration plant is expected to have an overall availability of 90 percent or higher and may operate and produce electricity up to 8,760 hours per year. SMUD's electrical load conditions will vary throughout the year and will require various combinations of operating the combined cycle power block and simple cycle combustion turbine generator. When the combined cycle power block is not operating, process steam to Procter & Gamble will be supplied from the auxiliary boiler. The projected hours of operation of the combined cycle CTGs, HRSG duct burners, relocated simple cycle CTG, future simple cycle CTG, auxiliary boiler, and standby generator are listed in Table 3.19-2.

Table 3.18-4
Number of Craft Persons Per Month

RESOURCE	RESOURCE DESCRIPTION	MAR 1995	APR 1995	MAY 1995	JUN 1995	JUL 1995	AUG 1995	SEP 1995	OCT 1995	NOV 1995	DEC 1995	JAN 1996	FEB 1996	MAR 1996	APR 1996	MAY 1996	JUN 1996
BM	BOILERMAKER												9	19	21	21	16
CA	CARPENTER					9	18	15	17	18	11	11	7	15	14	11	2
EE	ELECTRICIAN			1	4	2	15	26	20	16	14	16	20	26	24	40	37
EL	INSTRUMENT PF/EL																
INS	INSULATOR																
IW	IRONWORKER					3	7	7	8	9	5	11	15	15	8	5	6
LA	LABORER			5	5	4	7	7	8	9	6	5	4	5	4	4	2
MW	MILLWRIGHT												2	2	3	11	15
OE	OPERATING ENGINEER			7	6	4	2								1	3	3
PA	PAINTER													1	3	3	3
PF	PIPEFITTER			1	4	0					3	1	6	10	24	54	45
PL	PLUMBER								1	1	1		1	3	3	2	1
STAFF	STAFF			6	6	10	16	14	16	16	15	18	17	17	20	28	25
	REPORT TOTAL			21	26	32	65	69	71	68	54	62	81	111	124	181	155

RESOURCE	RESOURCE DESCRIPTION	JUL 1996	AUG 1996	SEP 1996	OCT 1996	NOV 1996	DEC 1996	JAN 1997	FEB 1997	MAR 1997	APR 1997	MAY 1997	JUN 1997	JUL 1997	AUG 1997
BM	BOILERMAKER	17	10	4											
CA	CARPENTER														
EE	ELECTRICIAN	39	30	29	36	25	7	6	5	2	3	0			
EL	INSTRUMENT PF/EL	4	5	6	9	5	2	0	0	1	1	1			
INS	INSULATOR					3	8	8	4						
IW	IRONWORKER	7	9	8	7	12	3		0						
LA	LABORER	4	4	5	8	4	2	2	2	2	2	0			
MW	MILLWRIGHT	16	18	12	7	5	1								
OE	OPERATING ENGINEER	3	2	3	6	3	1	1	1						
PA	PAINTER	8	8	4											
PF	PIPEFITTER	45	48	57	53	31	18	15	11	1	2	0			
PL	PLUMBER														
STAFF	STAFF	30	24	22	25	25	23	33	30	24	18	2			
	REPORT TOTAL	172	159	150	151	112	64	67	54	30	26	4			

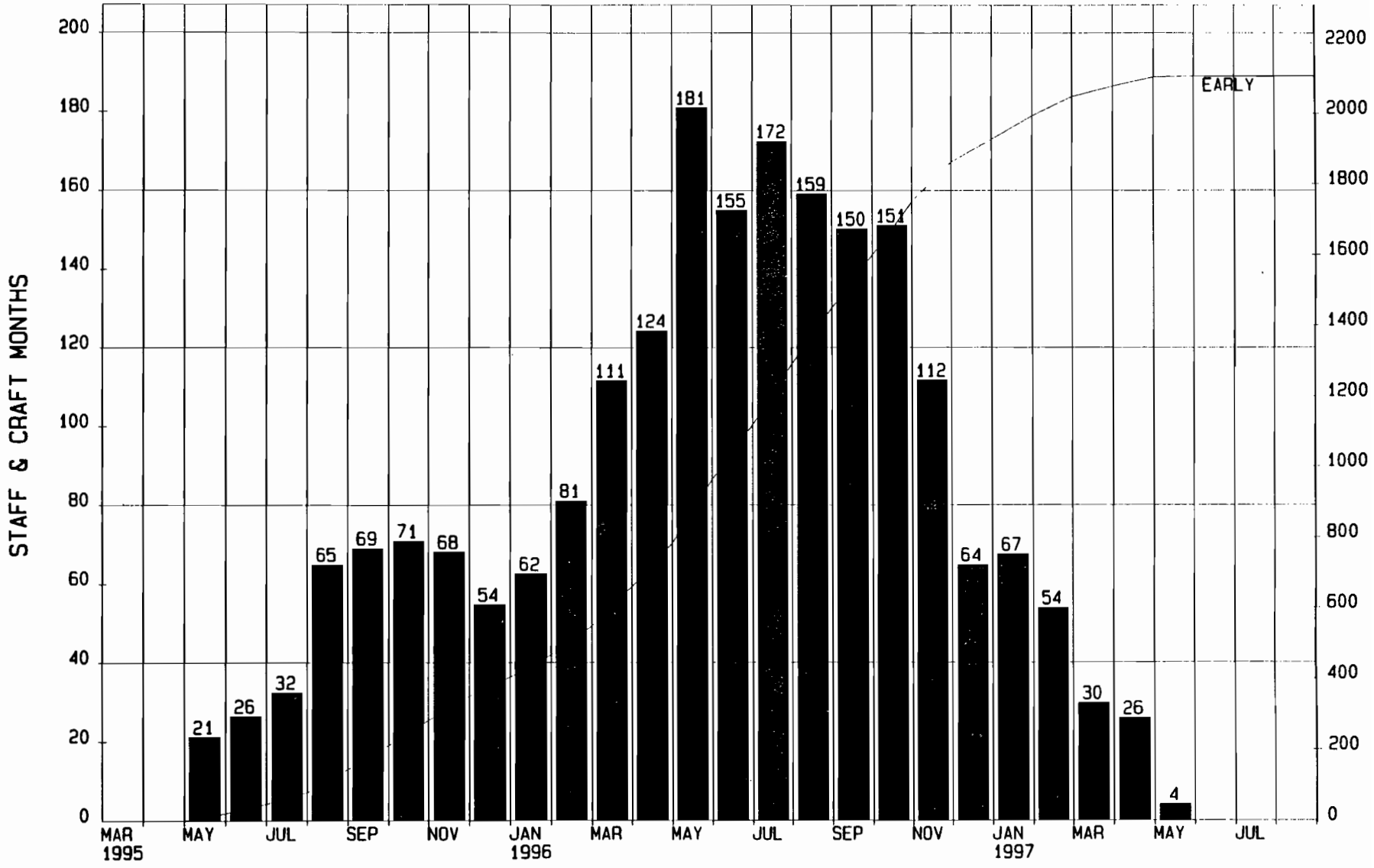

Total Manpower by Month
Figure 3.18-1

Table 3.19-1
Projected Full-Time Operating and Maintenance
Staff for Procter & Gamble Cogeneration Project

Staff	Number of Personnel
Plant Manager	1
Operations Manager	1
Maintenance Technician	3
Operations Personnel	15
Administrative	1
Total	21

Table 3.19-2
Projected Hours of Operation for
Procter & Gamble Cogeneration Project

Equipment	Maximum Hours of Operation Each Year			
	1st Quarter	2nd Quarter	3rd Quarter	4th Quarter
Combined Cycle CTGs (each)	2,081	2,081	2,081	2,081
HRSG Duct Burners (each)	1,095	1,095	1,095	1,095
Simple Cycle CTG	1,095	1,095	1,095	1,095
Auxiliary Boiler	1,095	1,095	1,095	1,095
Standby Generator	24	24	24	24

The cogeneration project will serve to supply electricity to SMUD and process steam to Procter & Gamble. The cogeneration project will be dispatchable by SMUD. Normally, the combined cycle power block will be baseloaded which will allow process steam to Procter & Gamble to be supplied from the steam turbine extraction. Operation of the HRSG duct burners will increase HRSG steam production, resulting in additional steam admission to the steam turbine and increased steam turbine generator output. Operation of the simple cycle CTG will increase power output from the cogeneration project to meet variations in SMUD power demands.

3.19.1.1 Control System. A Distributed Control and Information System (DCIS) as defined under Subsection 3.13.6 of the Project Description will provide modulating control, digital control, and monitoring and indicating functions for operation of the plant power block systems.

The control equipment is located in two areas. These are the control room and the plant. The plant area is all locations other than the control room, including the local CTG control facilities.

Plant operation will be controlled from the operator's panel which will be located in the control room. The operator's panel will consist of three individual CRT/keyboard consoles and one engineering work station. Each CRT/keyboard console will be an independent electronic package so that failure of a single package does not disable more than one CRT/keyboard. The engineering work station will allow the control system operator interface to be revised by authorized personnel.

The DCIS processors, mass data storage unit, and some of the I/O cabinets are located in the control room. Other I/O cabinets will be located locally in the plant areas near the equipment they serve.

3.19.2 Maintenance

Routine plant maintenance will be performed by the O&M contractor's permanent maintenance staff. Major overhauls will be performed by the O&M subcontractor using approved subcontractors and contract personnel to supplement the permanent maintenance staff. A plant maintenance program, typical for a project of this size, is included in Appendix O. The O&M contractor will develop a maintenance program subject to the SCA's approval which is specific to the cogeneration project.

3.20 Schedule

As described in Section 4.0 of this AFC, project development has been scheduled under two phases. The first phase (Phase I) entails AFC preparation, review, data adequacy confirmation, and approval. The second phase (Phase II) entails engineering, procurement, construction, and startup of the cogeneration project. Projected Phase II milestone dates are as follows:

Milestone	
Notice to Proceed with Phase II (contingent on AFC approval)	April 15, 1995
Start Construction	April 16, 1995
Energize Switchyard	April 15, 1996
Gas Interconnection	August 15, 1996
Start of Acceptance Testing	January 15, 1997
Commercial Operation	
Combined Cycle Power Block	February 15, 1997
Simple Cycle Power Block	March 15, 1997

The projected operating life of the cogeneration project is 30 years after start of commercial operation.

4.0 Project Schedule

The expected schedule for the project's construction and operation is discussed in the paragraphs below.

4.1 Construction Schedule

The project schedule for the Procter & Gamble Cogeneration Facility is divided into two phases. Major milestones are as follows:

Phase I: Project Development

- Notice to Proceed--April 15, 1993.
- AFC Submittal--September 30, 1993.
- Start AFC Review Process--September 30, 1993.
- Data Adequacy--December 1993.
- AFC Approval--December 1994.
- Financing--January-March 1995.

Phase II: Engineering, Procurement, Construction and Startup

- Notice to Proceed--April 15, 1995.
- Start of Construction--April 16, 1995.
- Energize Switchyard--April 15, 1996.
- Gas Interconnection--August 15, 1996.
- Start of Acceptance Testing--January 15, 1997.
- Commercial Operation.
  - -- Combined Cycle Power Block--February 15, 1997.
  - -- Simple Cycle Power Block--March 15, 1997.

4.2 Estimated Operating Life and Facility Closure

The expected life of the project is 30 years. However, the plant may be operated beyond this period to avoid higher replacement costs and environmental impacts that may result from the construction of a new facility. Facility closure may include site abandonment and/or ceasing of commercial operations. At present, the exact time and method of closing the facility is unknown. When the details are known, they will be submitted in a timely manner to the CEC and the City of Sacramento.

The facility closure plan will include a discussion of the proposed closure for the project and all appurtenant facilities as related to all applicable laws, ordinances,

regulations, and standards (LORS). If all equipment and appurtenant facilities are to be removed, the discussion will include any activities that will be necessary to restore the site. The costs and funds associated with the proposed facility closure will be discussed.

The facility closure will involve disposing of any unused chemicals by selling them to potential users or by selling them back to suppliers. All storage tanks and equipment containing chemicals will be drained. All hazardous materials and wastes will be disposed of according to applicable LORS. All nonhazardous wastes will be disposed of at appropriate landfills. The project site will be secured 24 hours per day during the facility closure.

In the unlikely event of an unforseen interruption that causes cessation of commercial operations, the site will be secured on a 24-hour basis and the CEC will be notified immediately. Depending on the length of shutdown time, a contingency plan for temporary shutdown of the facility will be instituted. The contingency plan will include interim measures to assure site security, facility maintenance, environmental protection, and public health and safety. Depending on the length of shutdown, the plan may include the draining of chemical storage tanks and the safe shutdown of all equipment. All hazardous and nonhazardous wastes will be disposed of according to applicable LORS.

5.0 Reliability

This section discusses the expected plant availability, equipment redundancy, fuel availability, water availability, and project quality control measures.

5.1 Plant Availability

The proposed facility will be designed for an operating life of 30 years. Reliability and availability projections are based on this operating life. Operation and maintenance procedures will be consistent with industry standard practices to maintain the useful life status of plant components.

The Procter & Gamble Cogeneration Project will consist of the following major power blocks:

- Combined cycle power block configured with two natural gas fired combustion turbine generators, two heat recovery steam generators with natural gas fired duct burners, and one steam turbine generator (two-on-one combined cycle configuration). Each of the two combined cycle combustion turbine generators will be rated 42 MW (nominal). The steam turbine generator will be rated 45 MW (nominal).
- One simple cycle, natural gas fired combustion turbine generator rated 42 MW (nominal).

The combined cycle power block will be baseloaded and is projected to operate approximately 95 percent of the time each year. The HRSG duct burners are projected to operate approximately 50 percent of the time each year. The percent of time that the combined cycle power block (and the HRSG duct burners) is projected to operate is defined as the "service factor." The service factor considers the amount of time that a unit is operating and generating power, whether at full or partial load. The projected service factor for the combined cycle power block (and the HRSG duct burners) which considers projected percent of time of operation differs from the "equivalent availability factor" which is defined later in this section and considers the projected percent of energy production capacity achievable.

The combined cycle power block was computer modeled to project availability. The computer model used is one which was developed by Black & Veatch to assess power plant availability. Data used in the computer model were based on published data and Black & Veatch in-house data. The combined cycle availability analysis was

performed based on the combined cycle power block operating under baseload conditions. The analysis considered a full planned outage with 0 percent availability for 300 hours per year.

The August 1982 EPRI Report *Reliability and Availability of Selected Domestic Combined-Cycle Power Generating Plants* (EPRI AP-2536) studied reliability data for 15 high service and 11 low service combustion turbine systems. Results of their analysis showed that failure rates were most strongly affected by service factor (SF) and fired hours per start (FHPS), with FHPS having the strongest effect and highest correlation (86 percent). Although advances in combustion turbine technology have somewhat mitigated these effects in the last 10 years, it is still true that cycling of combined cycle and combustion turbine units will increase the equivalent forced outage rate. Since the Procter & Gamble cogeneration project combined cycle power block will be baseloaded, the availability will be relatively higher than if the combined cycle power block was operated in a cyclic mode.

Results of analysis are generally measured in terms of the "equivalent availability factor" and the "equivalent forced outage rate."

The North American Electric Reliability Council (NERC) definitions of these two terms are stated as follows:

$$EFOR = \frac{(FOH + EFDH)}{(FOH + SH + EFDHRS)} \times 100.$$

and

$$EAF = \frac{AH - (EUDH + EPDH + ESEDH)}{PH} \times 100.$$

where

FOH	=	forced outage hours,
EFDH	=	equivalent forced derated hours,
SH	=	service hours,
EFDHRS	=	equivalent forced derated hours during reserve shutdown,
AH	=	available hour,
EUDH	=	equivalent unplanned derated hours,
EPDH	=	equivalent planned derated hours,
ESEDH	=	equivalent seasonal derated hours, and
PH	=	period hours (8,760 hours per year).

The analysis model used has no method of distinguishing between the various forms of unplanned outage. Therefore, equivalent forced outages include any unplanned outage or derate. Also, the model considers partial planned outages as

a partial forced outage. The net effect of these model parameters is a conservative analysis with EFOR and EAF defined as follows.

Equivalent forced outage rate (EFOR) may be defined as the percentage of energy production lost to full, unplanned outages, or any partial outage during time classified as nonreserve shutdown and assuming a 100 percent demand.

Equivalent availability factor (EAF) may be defined as a weighted average of the percent of full energy production capacity achievable, assuming 100 percent demand, and using the following availabilities for the various production and nonproduction times of the year:

Time	Availability, percent
Scheduled production hours	(100 - EFOR)
Reserve shutdown hours	100
Scheduled maintenance hours	0

Summary of projected availability factors for the combined cycle power block are as shown below:

	Equivalent Availability Factor, percent	Equivalent Forced Outage* Rate, percent
Baseload	90.3	6.5

*Includes forced, maintenance, and scheduled derating outages.

The "equivalent availability factor," which is a weighted average of the percent of energy production capacity achievable, differs from the "availability of a unit," which is the percent of time that a unit is available for operation, whether at full load, partial load, or standby.

The simple cycle CTG is projected to operate up to approximately 50 percent of the time each year. Based on historical data from the North American Energy Reliability Council, existing simple CTGs have shown an overall equivalent availability factor of approximately 90 percent. The simple cycle CTG is expected to have a relatively higher equivalent availability factor because of advances in combustion turbine technology.

5.2 Equipment Redundancy

The following subsections identify equipment redundancy as it applies to project availability. A summary of equipment redundancy is shown on Table 5.2-1.

Table 5.2-1
Major Equipment Redundancy
Procter & Gamble Cogeneration Project

Description	Number	Note
Combined cycle CTGs and HRSGs	Two trains	Steam turbine bypass system allows either or both combined cycle CTG/HRSG trains to operate with steam turbine out-of-service.
Combined cycle CTG air inlet chillers	Two - 100% capacity	Based on capacity of one CTG.
Steam turbine generator	One	See note above pertaining to combined cycle CTGs and HRSGs.
Boiler feed pumps	Four - 100% capacity	Based on capacity of one HRSG.
Condensate pumps	Three - 60% capacity	
Condensate preheater	One	Heater can be bypassed.
Condenser	One	Condenser must be in operation for combined cycle operation or operation of CTG in steam turbine bypass mode.
Circulating water pumps	Three - 60% capacity	
Cooling tower	One	Cooling tower is three cell mechanical draft design.
Closed cycle cooling water pumps	Two - 100% capacity	
Closed cycle cooling water heat exchangers	Two - 100% capacity	
Air compressor	Two - 100% capacity	
Gas compressors		
Combined cycle CTGs and single cycle CTG	Four - 100% capacity	Based on capacity of one CTG. Three gas compressors will be operating, with one compressor in standby when both combined cycle CTGs and the simple cycle CTG are operated simultaneously.
Demineralizer	Two - 100% trains	
Demineralized water storage tank	Two - 250,000 gallon tanks	

5.2.1 Combined Cycle Power Block

Two separate combustion turbine/HRSG power generation trains operate in parallel within the combined cycle power block. Each train is powered by a combustion turbine. Each combustion turbine provides approximately 33 to 40 percent of total combined cycle power block output. The heat input from the exhaust gas from each combustion turbine is used in the steam generation system to produce high-pressure and low-pressure steam. Heat input to each HRSG can be supplemented by firing the HRSG duct burners which will increase steam flow from the HRSG. Failure of the combustion turbine or HRSG will cause the entire train to fail (serial connection). Thermal energy in the steam from the steam generation system is converted to mechanical, and then electrical energy in the steam turbine generator subsystem. A portion of the steam is extracted from the steam turbine and delivered to the Procter & Gamble plant for process use. The remaining expanded steam is condensed and recycled by the feedwater system. Power from the steam turbine generator subsystem contributes approximately 20 to 34 percent of total combined cycle power block output.

If a problem develops in the steam turbine generator subsystem, the two combined cycle combustion turbine generator/HRSG trains can be operated by passing steam from the HRSG directly to the condenser. This steam turbine bypass system allows the combined cycle combustion turbine generator/HRSG trains to produce full power when the steam turbine generator subsystem is out-of-service.

The major components of the combined cycle power block consist of the following subsystems:

- CTG Subsystems--The combustion turbine subsystems include the combustion turbine, inlet air cooling system, generator and excitation systems, and turbine control and instrumentation. The combustion turbine produces thermal energy through the combustion of natural gas and converts that thermal energy into mechanical energy required to drive the combustion turbine compressor and generator. Exhaust gas from the combustion turbine is used to produce steam in the associated heat recovery steam generator (HRSG). The combustion turbine generator is a 60 hertz machine of the totally enclosed water-to-air cooled design. The excitation is a solid-state static system. Combustion turbine control and instrumentation (interfaced with the DCIS) covers the turbine governing system, the protective system, and sequence logic.

- HRSG subsystems--The steam generation system consists of the HRSG and blowdown systems. The HRSG system provides for the transfer of heat from the exhaust of a combustion turbine and from HRSG duct burner for the production of steam. This heat transfer produces high-pressure (HP) and low-pressure (LP) steam at the pressure and temperature required by the steam turbine. Each system consists of an HP and IP steam section and a selective catalytic reduction system. The blowdown system provides vents and drains for each HRSG. It includes safety and power relief valves, and processing of continuous blowdown drains.
- STG subsystems--The steam turbine converts the thermal energy in the main steam to mechanical energy to drive the steam turbine generator. The basic subsystem includes the steam turbine and auxiliary systems, the turbine lube oil system, and the generator/exciter system.

The combined cycle power block is served by the following common balance-of-plant systems:

- DCIS--The distributed control and information system (DCIS) will be a redundant microprocessor based system which will provide control, monitoring, and alarm functions for plant systems and equipment. The following functions will be provided:
  - -- Control the heat recovery steam generators, steam turbine generator, combustion turbine generators, and other systems in response to unit load demands (coordinated control).
  - -- Provide control room operator interface.
  - -- Monitor plant equipment and process parameters and provide this information to the plant operators in a meaningful format.
  - -- Provide visual and audible alarms for abnormal events based on field signals or software generated signals from plant systems, processes, or equipment.

  The DCIS will have functionally distributed architecture comprised of a group of similar redundant processing units linked to a group of operator consoles and a engineer work station by redundant data highways. Each processor will be programmed to perform specific dedicated tasks for control information, data acquisition, annunciation, and historical purposes. By being redundant, no single processor failure can cause or prevent a unit trip.

  The DCIS will be data-linked to the control systems furnished by the combustion turbine and steam turbine suppliers to provide remote control

capabilities, as well as data acquisition, annunciation, and historical storage of turbine and generator operating information.

The system will be designed with sufficient redundancy to preclude a single device failure from significantly impacting overall plant control and operation.

Considerations will be given to the action performed by the control and safety devices in the event of control circuit failure. Controls and controlled devices will move to the safest operating condition upon failure.

Plant operation will be controlled from the operator's panel which will be located in the control room. The operator's panel will consist of three individual CRT/keyboard consoles and one engineering work station. Each CRT/keyboard console will be an independent electronic package so that failure of a single package does not disable more than one CRT/keyboard. The engineering work station will allow the control system operator interface to be revised by authorized personnel.

- Boiler Feed System--The boiler feed system transfers feedwater from the deaerator to the high-pressure (HP) and low-pressure (LP) sections of the HRSGs. The system consists of four 100 percent capacity (capacity of one HRSG), multistage, horizontal, motor-driven boiler feed pumps with intermediate bleed-off, and includes regulating control valves, minimum flow recirculation control, and other associated piping and valves.
- Condensate System--The condensate system provides a flow path for condensate from the condensing system, through the condensate preheater to the deaerator. The condensate system includes three 60 percent capacity multistage, vertical, motor-driven condensate pumps.
- Demineralized Water System--Makeup to the demineralized water system will be from the city water supply. The demineralized water system will consist of two 100 percent demineralizer trains. Failure of the demineralizer system will not have an immediate impact to plant output because of the storage capacity of the demineralized water tanks (two at 250,000 gallons each.)
- Cycle Makeup and Storage System--The cycle makeup and storage subsystem provides water storage and pumping capabilities to supply high purity water for system cycle makeup and chemical cleaning operations. The system also provides demineralizer regeneration water and NO_x injection water. Major

components of the system are condensate and demineralized water storage tanks and full-capacity, horizontal, centrifugal, cycle makeup water pumps.

- Circulating Water System--The circulating water system provides cooling water to the condenser for condensing steam turbine exhaust and steam turbine bypass steam. In addition, the system supplies cooling water to the CTG inlet air chillers and closed cycle cooling water heat exchangers. Major components for this subsystem are three 60 percent, motor-driven, vertical pumps; and associated piping and valves, as required.
- Closed Cycle Cooling Water System--The closed cycle cooling water system transfers heat from various plant equipment heat exchangers to the circulating water system through the cooling water heat exchangers. Major components for this subsystem are two 100 percent, motor-driven, centrifugal pumps, and two cooling water heat exchangers.
- Compressed Air--The compressed air system is comprised of the control air and service air subsystems. The service air system supplies compressed air to the control air dryers and to hose connections for general plant use. The service air system will include two 100 percent capacity, oil free, positive displacement air compressors, service air headers, distribution piping and hose connections. The control air system supplies dry compressed air at the required pressure and capacity for all control air demands, including pneumatic controls, transmitters, instruments, and valve operators. The control air system will include two 100 percent capacity air dryers with prefilters and after filters, an air receiver, control air headers, and distribution piping.
- Service Water--The service water system will supply city water to the various plant demands. The service water piping system will be pressurized directly from the city water mains.

5.2.2 Simple Cycle Combustion Turbine Generator

The simple cycle CTG will share the following common balance-of-plant systems with the combined cycle power block:

- DCIS--The DCIS for the combined cycle power block will be configured to allow expansion to accommodate the future simple cycle CTG.
- Gas Compressors--Four 100 percent capacity gas compressors (based on the capacity of one CTG) will be provided for the two combined cycle CTGs and the future simple cycle CTG, resulting in three operating compressors

and one standby compressor when the two combined cycle CTGs and the future simple cycle CTG are operated simultaneously.

- Cycle Makeup and Storage--Demineralized water for NO_x injection water for the future simple cycle CTG will be supplied from the balance-of-plant demineralized water system.
- Service Water--Service water (city water) for evaporative cooling makeup for the future simple cycle CTG will be supplied from the balance-of-plant service water system.
- Compressed Air--Service air and control air for the future simple cycle CTG will be supplied from the balance-of-plant service air system and control air system.
- Electrical--The future simple cycle CTG will share a three winding main transformer with one of the two combined cycle CTGs.

5.3 Fuel Availability

Natural gas will be the fuel source for the Procter & Gamble Cogeneration Project.

To obtain a highly reliable supply of natural gas, SCA will employ a broad diversification in supply source, supply contracts, transport systems utilized, and transport service agreements, while obtaining secure gas storage capability for system balancing and fuel backup supply.

The anticipated combination of supply source and supply contract will be part long-term contracts allocated among suppliers in the Southwest, Rocky Mountains, Canada and California, part short-term contracts from these same supply regions, and part SMUD-owned gas reserves located in the Southwest, Rocky Mountains and California. Over time, the percent SMUD-owned reserves will be increased and the percent short term contracts will be reduced, thereby enhancing supply reliability.

Most of the annual fuel requirements will be transported via firm interstate and firm intrastate transportation agreements. The remainder will be transported via interruptible interstate and firm intrastate transmission agreements. SMUD has already signed long-term, firm contracts with PGT and Mojave.

This strategy maximizes system reliability by providing redundancy across the entire supply and transport system.

Acquiring reasonably priced fuel gas for delivery to the cogeneration projects over the next 30 years is a reasonable goal due to (1) abundant gas supplies in the

United States and Canada, (2) the forecasted glut of interstate transport capacity into California, and (3) a multitude of depleted gas reservoirs that might be converted to gas storage in the Sacramento area.

Table 5.3-1 shows a 30 year weighted average cost of gas (WACOG) forecast delivered to the Sacramento cogeneration projects. The forecast includes a "Most Likely Case" and a pessimistic or "High Cost Case" that are used for SMUD's long range financial planning and forecasting. The costs are split between fixed and variable and include all items required to deliver the gas, including the commodity price, transportation, and SMUD's local gas distribution system.

5.4 Water Availability

The source of makeup water for the Procter & Gamble Cogeneration Project will be from the City of Sacramento's water system. The City of Sacramento Department of Utilities' "will serve letter" dated June 9, 1993, indicates that the city is able and willing to provide an adequate water supply over the life of the project.

If the city water supply is temporarily interrupted, the operation of the cogeneration project will be limited by the lack of the water supply for circulating water system (cooling tower) makeup.

Interruption of the city water supply would also impact the primary fire water supply to the project site. A secondary source of fire water will be supplied from the cooling tower basin to provide system redundancy.

5.5 Project Quality Control

This section summarizes the Quality Control Program that will be applied to the Procter & Gamble Cogeneration Project. The objective of the Quality Control Program is to assure that all systems and components have the appropriate quality measures applied (during design, procurement, fabrication, construction, and operation) to achieve safety, reliability, availability, operability, constructibility, and maintainability for the generation of electricity.

Assurance of the required quality for a system is obtained by applying controls to various activities, depending on the activity being performed. For example, the appropriate controls for design work are checking and review, and the appropriate controls for manufacturing and construction are inspection and testing. Appropriate controls will be applied to each of the various activities for the project.

Table 5.3-1
30 Year Forecast
SMUD Delivered Weighted Average Cost of Gas (WACOG)

Year	Most Likely Case WACOG to Sacramento			High Case WACOG to Sacramento		
	Fixed Cost ($/MMBtu)	Variable Cost ($/MMBtu)	Total Cost ($/MMBtu)	Fixed Cost ($/MMBtu)	Variable Cost ($/MMBtu)	Total Cost ($/MMBtu)
1995	1.38	1.40	2.78	1.66	1.46	3.12
1996	1.47	1.46	2.93	1.75	1.53	3.28
1997	1.51	1.55	3.06	1.80	1.62	3.42
1998	1.53	1.62	3.15	1.83	1.69	3.53
1999	1.57	1.71	3.28	1.88	1.79	3.67
2000	1.65	1.78	3.44	1.97	1.86	3.83
2001	1.67	1.85	3.52	2.00	1.93	3.93
2002	1.70	1.92	3.61	2.03	2.00	4.04
2003	1.73	1.99	3.71	2.08	2.07	4.15
2004	1.75	2.06	3.81	2.11	2.15	4.26
2005	1.78	2.13	3.92	2.16	2.23	4.38
2006	1.81	2.21	4.02	2.19	2.31	4.50
2007	1.85	2.29	4.14	2.24	2.39	4.63
2008	1.87	2.38	4.25	2.28	2.48	4.75
2009	1.90	2.46	4.36	2.32	2.57	4.88
2010	1.77	2.51	4.28	2.37	2.66	5.03
2011	1.81	2.60	4.41	2.42	2.76	5.18
2012	1.85	2.70	4.55	2.48	2.86	5.34
2013	1.89	2.80	4.69	2.53	2.96	5.50
2014	1.93	2.91	4.84	2.59	3.07	5.66
2015	1.98	3.01	4.99	2.65	3.18	5.83
2016	2.02	3.13	5.15	2.71	3.30	6.01
2017	2.07	3.24	5.31	2.78	3.42	6.20
2018	2.12	3.36	5.48	2.84	3.55	6.39
2019	2.17	3.49	5.66	2.91	3.68	6.59
2020	2.22	3.62	5.84	2.98	3.81	6.79
2021	2.28	3.76	6.03	3.05	3.95	7.00
2022	2.33	3.90	6.23	3.13	4.10	7.22
2023	2.39	4.05	6.44	3.20	4.25	7.45
2024	2.45	4.20	6.65	3.28	4.41	7.69

5.5.1 Project Stages

For quality assurance planning purposes, the project activities have been divided into nine stages which apply to specific periods of time during the project.

The project stages are defined as follows:

- Conceptual Design Criteria--Activities such as definition of requirements and engineering analyses.
- Detail Design--Activities such as the preparation of calculations, drawings, and lists needed to describe, illustrate, or define systems, structures, or components of the power plant.
- Procurement Specification Preparation--Activities necessary to compile and document the contractual, technical, and quality provisions for procurement specifications for plant systems, components, or services.
- Manufacturer's Control and Surveillance--Activities necessary to assure that the manufacturers conform to the provisions of the procurement specifications.
- Manufacturer Data Review--Activities required to review manufacturers' drawings, data, instructions, procedures, plans, and other documents to assure coordination of plant systems and components, and conformance to procurement specifications.
- Receipt Inspection--Inspection and review of product at the time of delivery to the construction site.
- Construction/Installation--Inspection and review of storage, installation, cleaning, and initial testing of systems or components at the plant site.
- System/Component Testing--Actual operation of plant components in a system in a controlled manner to assure that the performance of systems and components conform to specified requirements.
- Plant Operation--The actual operation of plant system.

As the project progresses, the design, procurement, fabrication, erection, and checkout of each plant system will progress through the nine stages defined above.

5.5.2 Quality Control Records

The following quality control records will be maintained for review and reference:

- Project Instructions Manual.
- Design Calculations.
- Project Design Manual.

- Quality Assurance Audit Reports.
- Piping and Instrument Diagrams.
- One-Line and Three-Line Diagrams.
- Conformance to Construction Records Drawings.
- Procurement Specifications (Contract Issue and Change Orders).
- Purchase Orders and Change Orders.
- Manufacturer's Quality Assurance Program Manuals.
- Correspondence and Conference Memoranda.

For procured component purchase orders, a list of qualified suppliers and subcontractors will be developed. Before contracts are awarded, the subcontractors' capabilities will be evaluated. The evaluation will consider the subcontractors' personnel, production capability, past performance, and quality assurance program.

The subcontractors' quality assurance capabilities will be reviewed with special consideration given to the program description and implementing procedures and review of the subcontractors' quality performance history. Before contracts are awarded, the contractors' facilities may be surveyed to verify that their quality assurance program is effective and applicable to the materials, equipment, and services supplied.

Each procured component will have adequate contractual requirements to ensure quality assurance.

During construction, field activities are accomplished during the last four stages of the project: receipt inspection, construction/installation, system/component testing, and plant operations. The construction contractor(s) will be contractually responsible for performing the work in accordance with the quality requirements specified by contract.

The subcontractors' quality compliance will be surveyed through inspections, audits, and administration of independent testing contracts.

A plant maintenance program, typical of a project this size, is included in Appendix O. The Operations and Maintenance contractor will develop a maintenance program subject to the SCA's approval which is specific to the cogeneration project.

6.0 Environmental Setting, Impacts, and Mitigation

Section 6.1 Air Quality will be issued as a separate document.

6.2 Geology and Soils

This section discusses the existing soil and geologic conditions, potential impacts, and proposed mitigation measures concerning the proposed Procter & Gamble Cogeneration Facility site.

6.2.1 Existing Conditions

The site is essentially flat and has been used in the past for growing grain crops. It is bound by 83rd Street on the east, a spur for the Central California Traction Company on the north, a plowed field on the west, and the Procter & Gamble complex on the south. Two shallow unlined drainage ditches and an overhead electrical easement cross the site.

6.2.1.1 Geology. The geological setting of the region and the project site; the geologic hazards; and the geologic, soil, and geotechnical concerns of the Procter & Gamble Cogeneration Facility site are discussed within the following subsections.

6.2.1.1.1 Regional geologic setting. This subsection describes the regional geologic setting of the Procter & Gamble Cogeneration Facility.

6.2.1.1.1.1 Physiographic setting. The Procter & Gamble Cogeneration Facility site is located within the Great Valley geomorphic province of California. This relatively flat elongated valley extends from about Redding in the north to the Transverse Ranges in the south, a distance of approximately 370 miles, and is bound on the west by the Sierra Nevada Mountains and on the east by the Coast Ranges. The rocks are almost all sedimentary in origin, except for the Sutter Buttes volcanic piercement. The northern portion of the valley is drained by the Sacramento River, which flows into San Francisco Bay.

6.2.1.1.1.2 Structure. The geologic structure of the Great Valley province is exemplified as a westward sloping wedge of sedimentary rocks underlain by Mesozoic age crystalline and metamorphic rocks. The wedge of sedimentary rocks and basement is abruptly faulted by the Coast Range Boundary fault on the east. The Coast Range Boundary and associated faults are potentially active with local segments classified as active. To the east near the foothills of the Sierra Nevada lies the potentially active Foothills Fault system. Recent studies have shown the Foothills Fault system to have a recurrence interval of approximately 65,000 years. The inactive Willows Fault may pass near or beneath the site within the basement complex (Harwood and Helley 1982) (Figure 6.2-1).

6.2.1.1.1.3 Stratigraphy. The Sierran granitic and metamorphic rocks form the Basement Complex upon which the younger sedimentary succession rests. Marine

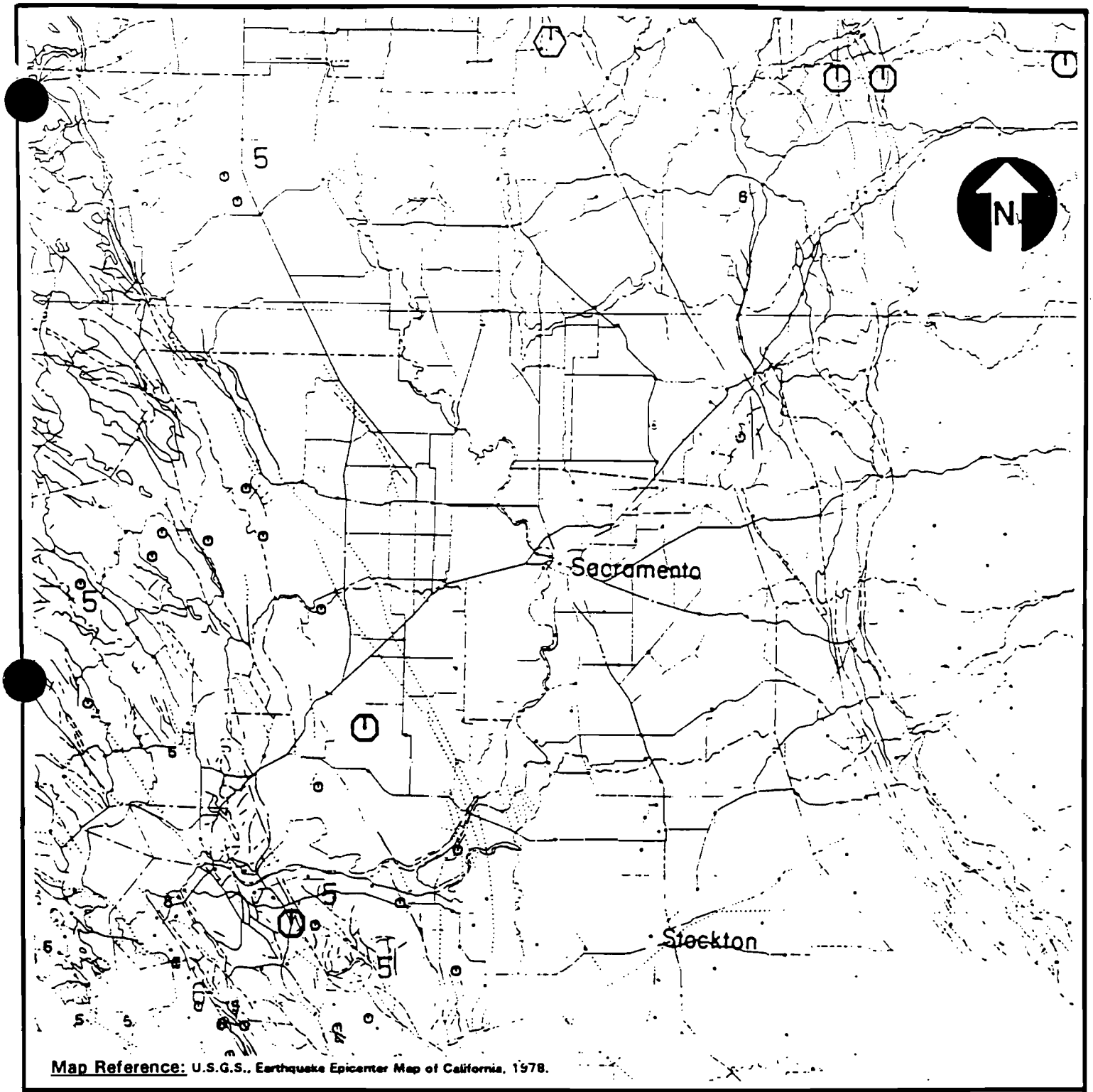

Fault and Epicenter Map
Figure 6.2-1

sediments derived from the rising Sierra Nevada Mountains, were deposited on the continental shelf and slope, as the Sacramento Valley basin began to be formed. A thick sequence of upper Cretaceous shale, sandstone, and conglomerate lies on top of the Sierran basement rocks below the site. These deposits thin rapidly to the east, where they approach the old shore lines along the western base of the Sierra. To the west they thicken, and west of Sacramento overly Lower Cretaceous shale and limestone.

Early Tertiary marine and continental sedimentary rocks, many derived from long deep weathering of the lowlands of the Sierra Nevada and deposited on alluvial floodplains and in shallow lakes and lagoons, overly the Upper Cretaceous deposits. These deposits vary from white quartz sands and sand clay mixtures to coarse grained continental sandstones and conglomerates.

During the Pliocene, eruptions of the Mehrten Formation andesitic volcanics, blanketed the western slopes of the Sierra from their source near the crest westward well beyond the Sacramento area. The deposits consisted predominately of mudflows, conglomerates, and sandstones.

Overlying the Mehrten Formation is a layer of Quaternary alluvial deposits, of varying thickness. The deposits range from clay to gravel, and include stream terrace, alluvium, and beach deposits.

6.2.1.1.1.4 Tectonic history. Approximately 150 million years ago, as the Sierra Nevada Mountains began to rise, a thick sequence of Knoxville Shale was being deposited on the continental shelf and slope as the valley basin was just beginning to form. As the Sierra continued to rise, the thick Cretaceous marine deposits were deposited in the valley basin. While the marine sediments of the Great Valley Sequence were being deposited in the valley area on Sierra Nevada basement rock, other marine sediments and related volcanics of the Late Jurassic and Cretaceous age Franciscan Complex were being deposited in a subduction trench at the foot of the continental slope where the Coast Ranges now stand. Large faults on the western side of the valley separate the Great Valley Sequence from the Franciscan rocks. It is probable that the rocks of the Great Valley Sequence have been thrust westward over Franciscan rocks in the Coast Range. Those compressive forces were probably instrumental in the formation of the Great Valley.

Paleocene and early Eocene seas spread through the Sacramento Valley and were separated from similar seas in the San Joaquin Valley by the rising Stockton Arch, a faulted ridge extending from the Sierra Nevada to the northern part of the Diablo Range. Margins of the Great Valley were uplifted at the end of the early

Eocene age and the seas receded. In the late Eocene, the valley broadly subsided and the seas became more extensive again.

During much of Tertiary time, a long narrow trough crossing the present Sacramento Delta to the San Francisco Bay area, made the principal sea connection from the southern Sacramento Valley. Oligocene seas occupied smaller parts of the basin until early Miocene time, when they had for the most part disappeared from the Sacramento Valley.

During the Pliocene, initiated by the rising of the Sierra Nevada, along the eastern Sierra fault, the volcanic episodes which spread the Mehrten volcanics over the region, took place. The rising of the Sierra Nevada continued and is still continuing today. This has created the river complex that feeds the Great Valley and has been the source of the alluvial deposits which cover most of the valley.

6.2.1.1.2 Site geologic conditions. Geologic conditions at the proposed Procter & Gamble Cogeneration Facility are based on subsurface exploration and published mapping by the United States Geological Survey (Helley and Harwood 1985).

6.2.1.1.2.1 Geomorphology. The Procter & Gamble Cogeneration Facility site is within a valley area with little to no relief. Pleistocene to Holocene age alluvial sediments were deposited by ancestral traces of the American River.

6.2.1.1.2.2 Stratigraphy. Stratigraphy at the Procter & Gamble Cogeneration Facility site consists of interbedded silts, clays (a hard calcareous zone is present at depths of from 3 to 5 feet) and sands to a depth of approximately 35 feet where dense gravels are encountered. The gravels are about 20 feet thick and are underlain by interbedded silts and clays (see Appendix C1, Geotechnical Engineering Study for a more detailed description of the individual stratigraphic units). These sediments are collectively known as the Lower Member of the Riverbank Formation of Pleistocene age.

6.2.1.2 Soil Resources. This subsection describes the soils at the Procter & Gamble Cogeneration Facility site.

6.2.1.2.1 Soil classification. Soil information for the Procter & Gamble Cogeneration Facility site is based on the Soil Survey of Sacramento County, California (USDA 1991). Soils of the Sacramento area have developed within a fluvial environment within a broad valley. The soil series existing at the site is used for rangeland and dryland crops such as wheat. The entire site is classified as San Joaquin silt loam, 0 to 3 percent slopes. This soil is formed in alluvium from dominantly granitic rock underlain by indurated hardpan. Permeability is slow, water perches on the claypan. The hazard of water erosion is slight.

6.2.1.3 Seismicity, Geologic Hazards, and Resources. This subsection describes the seismicity, geologic hazards, and resources of the project area.

6.2.1.3.1 Historic seismicity. The historic pattern of seismic activity within the Sacramento area since the early 1800s has been generally characterized by epicenters to the east associated with the Coast Range Boundary fault, to the north the Cleveland Hill fault produced a swarm of earthquakes associated with the 1975, 5.7 Richter Magnitude Oroville earthquake, and to the east associated with the active faults of the eastern flank of the Sierra Nevada Mountains. The Sacramento area itself is not considered to be within a seismically active area, only a few small epicenters are scattered through the Sacramento Valley.

6.2.1.3.2 Faulting. The Foothills Fault System is the closest major fault zone to the site, located about 19 miles to the east. The Cleveland Hill fault which produced the 1975 Oroville earthquake measuring 5.7 Richter Magnitude is associated with the Foothills Fault System. The recurrence interval is thought to be 65,000 years which places this fault within the potentially active category.

The inactive Willows fault is mapped through the Sacramento area. This fault is best known from exposures, geophysical, and Petroleum Company data north of the Sutter Buttes and has been extended as far south as Stockton (Harwood and Helley 1982). The active Dunnigan Hills fault is located about 24 miles to the northwest and the potentially active coast Range Boundary fault is about 32 miles to the west.

6.2.1.3.3 Geologic hazards. The following is a list of potential geologic hazards.

6.2.1.3.4 Ground shaking. Table 6.2-1 lists the known potentially active and active faults within a 100 kilometer radius of the site and their anticipated Maximum Credible Earthquakes and peak ground accelerations (Mualchin and Jones 1992). Any of the listed faults could produce strong ground shaking at the site.

6.2.1.3.5 Liquefaction. The six geotechnical borings drilled on the site, two of which were drilled to 70 feet, did not encounter liquefiable deposits of loose, clean sand. Groundwater was not encountered in any of the borings. This suggests a low likelihood for liquefaction to occur on the site.

6.2.1.3.6 Landslides. The site is essentially flat and no free faces are present other than adjacent to the drainage ditches. Therefore, the likelihood of landsliding on the site is very low.

6.2.1.3.7 Subsidence. Subsidence results from the extraction of pore space fluids such as water, oil, or gas. No extraction wells are planned for the site. The area is

Table 6.2-1

Fault	Estimated Distance and Direction from Site (miles)	Maximum Credible Earthquake (MCE) (Richter Magnitude)	Peak Ground Acceleration (Mualchin)
Foothills	19, E	6-1/2	0.20g
Dunnigan Hills	24, NW	6-1/2	0.15g
Coast Range	32, W	7	0.15g
Melones	35, NE	6-1/2	0.14g
Antioch	40, SW	6-3/4	0.10g
Cordelia	43, SW	6-1/2	0.07g
Green Valley	46, SW	6-3/4	0.09g
Hunting Creek	48, W	6-3/4	0.08g
Soda Creek	48, SW	6-1/4	0.06g
West Napa	53, SW	6-1/2	0.05g
Greenville	53, SW	7-1/4	0.10g
Concord	53, SW	6-1/2	0.05g
Calaveras	60, SW	7-1/2	0.07g
Rodgers Creek	60, SW	7	0.06g

not known to have a subsidence problem; therefore, subsidence is not considered to present a problem to the site.

6.2.1.3.8 Tsunamis. Tsunamis are seismically induced sea waves. The site is approximately 93 miles from the coast, thus eliminating the Tsunami hazard.

6.2.1.3.9 Other geologic hazards. Other geologic hazards such as cavities, lurching, seiches, and volcanic activity are not considered to be hazards for the site.

6.2.1.3.10 Geologic resources. Geologic resources within the vicinity of the Procter & Gamble Cogeneration Facility are described below.

6.2.1.3.10.1 Energy. A gas well was drilled about 200 feet to the west of the proposed cogeneration facility. The well did not produce productive amounts of oil or gas and was abandoned. This indicates that energy production at the site will not be an impact.

6.2.1.3.10.2 Minerals. Significant mineral resources at the cogeneration facility site are limited to gravel deposits found at depths of approximately 35 feet and the potential for the gravels to be auriferous. The site is within Mineral Resources Zone MRZ-3, which is the class for areas containing mineral deposits, the significance of which cannot be determined from available data. Aggregate mining has occurred within surrounding areas and locally these gravels have contained auriferous deposits.

6.2.1.3.11 Unique geologic features. No unique geologic features of historical, scientific, or recreational interests have been identified within a 1 mile radius of the proposed cogeneration facility using USGS topographic maps and previous studies (Olmstead and Davis 1961; Wagner et al. 1981).

6.2.1.4 Agricultural Lands. This section describes the agricultural land usage of the site.

6.2.1.4.1 Setting. The project is within an area that in the past was used for dryland farming, although currently it and the surrounding area are not being used for that purpose. The USDA Storie Index for the agricultural suitability of the San Joaquin series soils is poor based on their fertility. The predominant character of the surrounding area is industrial.

6.2.2 Potential Construction Impacts

6.2.2.1 Unstable Cut and Fill Slopes. The project site is generally of low topographic relief and no significant impacts are anticipated from site improvements.

6.2.2.2 Collapsible and Expansive Soil. Collapsible soil such as silt may be present within fluvial environments like those of the project area. Soil collapse may cause damage to site structures. Expansive soil contains large percentages of clay

minerals, which shrink and swell in response to seasonal drying and wetting. If present, shrinking and swelling action may have an adverse effect on foundations, structures, and ancillary features. It is estimated that losses in California due to expansive soils will total $150 million between 1970 and the year 2000, if present practices are continued. Expansion is most often caused by clay minerals, primarily montmorillonite and illite, present in the soil. The granular fluvial deposits within the project area of Sacramento County have a low expansive potential.

6.2.2.3 Trench-Wall Stability. In general, competent and firm native material is anticipated within the upper 5 feet below ground surface. Trench wall stability is anticipated to have a low potential impact.

6.2.2.4 Erosion of Graded Areas. Sandy silt is anticipated to be encountered within portions of the project area. When excavated and exposed to the weather, the surface soil may be subject to erosion; these areas have a moderate potential for erosion.

6.2.2.5 Alteration of Runoff. Development activities including grading, paving, and building increase impervious surfaces and can result in less infiltration of rainwater into the soil; however, leveling of surfaces can increase infiltration into the soil. Increased surface water runoff could aggravate pre-existing conditions and lead to soil erosion, landsliding, or mudflows. A moderate potential exists for flooding to occur within the project area.

6.2.2.6 Extraction of Groundwater, Gas, Oil, Geothermal Energy. According to the 1991 Data Base of the California Division of Oil and Gas, no oil or gas wells exist within the project boundary. Excessive groundwater extraction occurred from 1950 through 1984 within the area, causing a steep depression in the regional groundwater levels. No land subsidence was recorded during this period of groundwater extraction. No deposits of peat are known to exist in the County. A low to moderate potential for land subsidence exists due to groundwater extraction in the project area.

Volcanic Hazards. Under present conditions, it is estimated that losses due to future volcanic eruptions in California could amount to $50 million between the year 1970 and the year 2000. Damage is most likely to occur in the vicinity of Mt. Shasta, Lassen Peak, Medicine Lake Highland, Long Valley Caldera at Mono Lake, and the Cima volcanic field in San Bernardino County (active volcanic zones) and less likely at other Quaternary volcanic hazard zones in California. Volcanic hazards zones portray potential zones from: (1) flowage phenomena that include lava flows,

pyroclastic flows, mudflows, and floods; (2) from surge, including base surge, eruptions; and (3) from falling ash (tephra) (Miller 1981).

6.2.2.7 Lava Flow. Floods resulting from lava flow at an active California volcano are anticipated to have the highest potential impact in the project area. Other flowage phenomena are anticipated to impact the immediate vicinity (<20 km) of the source volcanic event and do not pose a high hazard to the project.

6.2.2.8 Ash Fall. Tephra from the May 18, 1980 Mount St. Helens ejecta was thickly accumulated within 60 km of the eruption. However, air-fall ejecta was deposited up to 40 mm thick some 300 km downwind of the eruption. If an upwind volcanic event were to produce air-fall ejecta, the greatest impact would be upon the crops in the vicinity. If the wind was blowing in southerly direction, an eruption from Lassen Peak, located about 130 miles to the north, could deposit tephra in the project area. The project lies downwind from Lassen Peak approximately 5 percent of the time; the probability is low for tephra impacts on the project.

6.2.2.9 Loss of Mineral Resources. Raw or manufactured mineral products are used every day in developed nations. Unlike most natural resources, minerals are not renewable. A mineral resource is a concentration of elements in a particular location in such a form that a usable mineral commodity can be extracted from the deposit. The most common gold mining technique utilized in the project vicinity has been dredging. The loss of mineral resources due to urbanization between 1970 and the year 2000 is estimated to total $17 billion if current practices are continued. The mineral resources under greatest urbanization pressure are construction materials, especially sand, gravel, and crushed stone. Increasing urbanization in the San Francisco Bay and Sacramento areas has resulted in the depletion or obliteration of local aggregate sources and these areas are looking to remote markets to meet their resource requirements.

6.2.2.10 Loss of Access. The loss of resources could amount to the costliest impact to the County. Planning should be undertaken to ensure access to the mineral resources present in the project vicinity. Specifically, the American River gravel deposits have been studied and had their mineral resources have been zoned by the California Division of Mines and Geology. The American River gravel deposit north of the site is classified as a Mineral Resource Zone 2 area, where significant Portland Cement Concrete grade aggregate deposits are present. The MRZ-2 deposits consist of four types: (1) natural stream channel and floodplain alluvium, (2) hydraulic wash deposits from upstream monitor workings, (3) dredge

tailings, and (4) recent stream channel alluvium in the present channel of the American River.

6.2.2.11 Deposits Covered by Changed Land-Use Conditions. Urban expansion of the Sacramento region threatens the supply of construction materials, a vital resource to Sacramento County.

6.2.3 Potential Operation Impacts

Project operation impact is not expected to significantly affect local soils and geological resources. The implementation of the appropriate grading, seeding, and the routing of storm water flows will ensure that soil erosion effects will be minimized.

6.2.4 Mitigation

The project site is developed and no significant impacts on geologic resources are expected from plant construction or operation.

6.2.4.1 Unstable Cut and Fill Slopes. Cut slope angles should reflect the materials in which they are excavated. In general, cut and fill soil slopes will be constructed at a gradient no steeper than 2:1 (horizontal to vertical) without site-specific study conducted by a qualified professional.

6.2.4.2 Collapsible and Expansive Soil. Subsurface exploration performed at the site did not indicate the presence of collapsible soils; therefore, no mitigation measures are anticipated. The granular fluvial deposits within the project area of Sacramento County have a low expansive potential and no mitigation measures are anticipated.

6.2.4.3 Trench-Wall Stability. Trenches greater than 5 feet in depth will be shored or sloped back at a 1:1 slope in accordance with the Occupational Safety and Health Administration regulations, if personnel are to enter the excavation.

6.2.4.4 Erosion of Graded Areas. Erosion control measures will be implemented during construction that conform to the National Pollution Discharge Elimination System, Storm Drain Standards, and Sacramento County standards.

6.2.4.5 Alteration of Runoff. Erosion control measures will be implemented during construction that conform to the National Pollution Discharge Elimination System, Storm Drain Standards, and Sacramento County standards.

6.2.4.6 Extraction of Groundwater, Gas, Oil, Geothermal Energy. No mitigation measures are anticipated to be required for extraction and subsidence at the project site.

6.2.4.7 Lava Flow. Due to the low probability for flow-impact upon Sacramento County, no mitigation measures are anticipated.

6.2.4.8 Ash Fall. Due to the low probability for tephra-impact upon the site, no mitigation measures are anticipated.

6.2.4.9 Loss of Mineral Resources. Mineral resources present in project area include precious metals (gold and silver), sand, gravel, and crushed stone. The existence of these commodities in commercial quantities is not known to exist on the site. Because of the lack of previous mining activity that would indicate commercial quantities, the potential impact from the loss of mineral resources is considered to be low. In addition, mining is not conducive to current land use, which is industrial.

6.2.4.10 Loss of Access. The loss of access to resources is considered to have a low impact to the project.

6.2.4.11 Deposits Covered by Changed Land-Use Conditions. Because commercial quantities of mineral resources are not known to exist on the site, impacts due to changed land-use conditions are expected to be low.

6.2.5 Compliance With Laws, Ordinances, Regulations and Standards

The site development activities will require certification during and following construction. The Geotechnical Engineer and Engineering Geologist will certify the placement of fills and the adequacy of the site for structural improvements in accordance with the Uniform Building Code (UBC), Chapter 70.

> The Geotechnical Engineer will address Sections 7006 (Grading Plans), 7009 (Cuts), 7010 (Fills), 7011 (Setbacks), 7012 (Terraces), 7013 (Erosion Control), and 7015 (Final Reports) of UBC, Chapter 70.
>
> The Engineering Geologist will address Sections 7006 (Grading Plans), 7009 (Cuts), 7012 (Terraces), 7013 (Erosion Control), and 7015 (Final Reports) of UBC, Chapter 70. Additionally, the Engineering Geologist will present findings and conclusions pursuant to PRC, Section 25523(a) and (c); and 20 CCR, Section 1752(b) and (c).

6.2.6 References

Bateman, P.C., and C. Wahrhaftig, 1966, Geology of the Sierra Nevada in Northern California, California Division of Mines and Geology, Bulletin 190.

Bertoldi, G.L., R.H. Johnston, and K.D. Evanson, 1991, Groundwater in the Central Valley California - A Summary Report, United States Geological Survey, Professional Paper 1401.A.

California Department of Conservation, 1981, Status of Volcanic Prediction and Emergency Response Capabilities in Volcanic Hazard Zones in California, Division of Mines and Geology, Special Publication 63.

California Department of Water Resources, 1978, Evaluation of Ground Water Resources: Sacramento Valley, Bulletin 118-80.

California Department of Water Resources, 1979, The August 1, 1975 Oroville Earthquake Investigation, Bulletin 203-78.

California Division of Mines and Geology, 182, Guidelines for Geologic/Seismic Considerations in Environmental Impact Reports, California Department of Conservation, Division of Mines and Geology Note 46.

Clark, L.D., 1960, Foothills Fault System, Western Sierra Nevada, California, Geological Society of America Bulletin, Vol. 71.

Clark, L.D., 1978, Seismicity of the Foothills Fault System Between Folsom and Oroville, California, Geology, August 1978.

Goter, S.K., 1988, Seismicity of California, 1808-1987, United States Geological Survey, Open File Report 88-286.

Greensfelder, R.W., 1974, Maximum Credible Rock Acceleration from Earthquakes in California, Map Sheet 23, California Department of Conservation, Division of Mines and Geology.

Hackel, O., 1966, Summary of the Geology of the Great Valley, in Geology of Northern California, California Division of Mines and Geology, Bulletin 190.

Hart, E.W., W.A. Bryant, and T.C. Smith, 1984, Summary Report: Fault Evaluation Program, 1983 Area - Sierra Nevada Region, California.

Harwood, D.S., and E.J. Helley, 1982, Preliminary Structure Contour Map of the Sacramento Valley, California Showing Major Late Cenozoic Structural Features and Depth to Basement, United States Geological Survey, Open File Report 82-737.

Helley, E.J., and D.S. Harwood, 1985, Geologic Map of the Late Cenozoic Deposits of the Sacramento Valley and Northern Sierran Foothills, California, United States Geological Survey, Map MF 1790.

Jennings, C.W., 1992, Preliminary Fault Activity Map of California, California Department of Conservation, Division of Mines and Geology, Open File Report 92:03.

Miller, C.D., D.R. Mullineaux, D.R. Crandell, and R.A. Bailey, 1982, Potential Hazards from Future Volcanic Eruptions in the Long Valley-Mono Lake Area, East Central California and Southwest Nevada - A Preliminary Assessment, United States Geological Survey, Circular 877.

Mualchin, L., and Jones, A., 1992, Peak Acceleration from Maximum Credible Earthquakes in California, California Division of Mines and Geology, Open File Report 92-1.

Page, R.W., 1986, Geology of the Fresh Ground-Water Basin of the Central Valley, California with Texture Maps and Sections, United States Geological Survey Professional Paper 1401-C.

Real, C.R., T.R. Toppozada, and D.L. Parke, 1978, Earthquake Epicenter Map of California, California Division of Mines and Geology Map Sheet 39.

Seed, H.B., and I.M. Idriss, 1982, Ground Motions and Soil Liquefaction During Earthquakes, Engineering Monographs on Earthquake Criteria, Structural Design and Strong Motion Records, Earthquake Engineering Research Institute, Vol. 5.

State of California, 1988, Mineral Land Classification: Portland Cement Concrete Grade Aggregate in the Sacramento-Fairfield Production-Consumption Region, California Division of Mines and Geology, Special Report 156.

Toppozada, T.R., C.R. Real, and D.L. Parke, 1981, Preparation of Isosiesmal Maps and summaries of Reported Effects for Pre-1900 California Earthquakes, California Division of Mines and Geology, Open File Report 81-11 SAC.

United States Department of Agriculture, 1991, Soil Survey of Sacramento County, Soil Conservation Service.

United States Department of the Interior, 1977, Earthquake Evaluation Stations of the Auburn Dam Area, Bureau of Reclamation.

Wagner, D.L., C.W. Jennings, T.L. Bedrossian, and E.J. Bortugno, 1981, Geologic Map of the Sacramento Quadrangle, California, California Division of Mines and Geology, Map Sheet 1A.

Wesnouski, S.G., 1986, Earthquakes, Quaternary Faults, and Seismic Hazard in California, Journal of Geophysical Research, v. 91, n. B-12.

Woodward-Clyde Consultants, 1977, Earthquake Evaluation Studies of the Auburn Dam Area, United States Bureau of Reclamation, Open File Report, Vol. 1-8.

6.3 Water Resources

This section of the AFC discusses the existing environmental conditions, potential impacts, proposed mitigation measures; and laws, ordinances, regulations, and standards applicable to the water resources in the vicinity of the cogeneration project.

6.3.1 Existing Water Resources

The following subsections describe the existing water resources of the project.

6.3.1.1 Climate and Precipitation. The City of Sacramento is part of the lower Sacramento Valley, which exhibits a relatively mild and temperate climate with abundant sunshine most of the year. The summers are dry, with warm to hot afternoons and mild nights. The average annual temperature is 60.6° F (NOAA 1991).

The rainy season generally occurs from November through March. The Sierra Nevada snow fields, only 70 miles east of Sacramento, usually provide an adequate water supply during the dry season. Heavy snows and torrential rains frequently fall on the Sierra slopes and occasionally result in flooding along the Sacramento River and its tributaries (NOAA 1991).

The mean annual precipitation for the period 1962 to 1991 was 17.3 inches (NOAA 1991). Average monthly precipitation totals are shown in Table 6.1-6 of the Air Quality section of this AFC, and extreme monthly and 24 hour precipitation totals are listed in Table 6.1-7 of the Air Quality section of the AFC. The greatest 24 hour rainfall and snowfall on record were 5.59 inches (October 1962) and 2.0 inches (February 1976), respectively. Maximum recorded precipitation totals for time periods ranging from 5 minutes to 24 hours are provided in Table 6.1-8. Table 6.1-9 lists estimated precipitation amounts and intensities for time periods ranging from 30 minutes to 24 hours, and for return periods ranging from 2 to 100 years. Average annual pan evaporation rates range from 70 to 75 inches; this indicates that evaporation rates significantly exceed precipitation.

6.3.1.2 Local Water Supply. Water supply is provided by both surface water and ground water in the Central Valley region of California, where the City of Sacramento is located. Historically, most of the water used in the area has been from the surface waters of the Sacramento, American, San Joaquin rivers, and their tributaries, which drain the snow melt from the Sierra Nevada.

In Sacramento County, water agencies use ground water, surface water, or both for their water supply. Table 6.3-1 lists the water agencies in Sacramento County and

Table 6.3-1
Source of Water for Local Water Agencies in Sacramento County

Ground Water Only	Surface Water Only	Ground Water and Surface Water
Citizens Utilities Company of California	Clay Water District	Arcade Water District
Del Paso Manor County Water District	City of Folsom	Arden-Cordova Water Service
Elk Grove Water Works	Natomas Central Mutual Water Company	Carmichael Water District
Florin County Water District	Omochumnes-Hartnell Water District	Citrus Heights Irrigation District
Fruitridge Vista Water Company	Rancho Murieta Community Services District	City of Sacramento
City of Galt	San Juan Suburban Water District	Fair Oaks Water District
Northridge Water District		Orangevale Mutual Water Company
Rio Linda Water District		Sacramento County Water Maintenance District
Tokay Park Water Company		

Source: *Historical Ground Water Levels in Sacramento County*, Dept. of Water Resources, Central District, November 1990.

their type of water supply. Five other water purveyors (Galt Irrigation District, Mather Air Force Base, McClellan Air Force Base, Sacramento County Water District, and Sacramento Municipal Utility District) also are located in the county. In addition to these water purveyors, uncontrolled agricultural and domestic water supply wells provide individual water supplies.

The City of Sacramento, the local water purveyor for the project, uses both surface water (85 percent) and ground water (15 percent) for its water supply.

In recent years, increased demands associated with reclaimed agricultural land and urbanization have shifted much of the water supply usage to ground water. Prolonged droughts and below normal annual precipitation have forced usage to ground water, which is not immediately affected by seasonal variations. In 1987, ground water use accounted for 60 percent of the total water required by Sacramento County. However, ground water extraction usually exceeds recharge and the ground water table in Sacramento County currently is in a state of overdraft (County of Sacramento 1992).

The proposed project will be receiving its primary water supply from the City of Sacramento. Another source of water that may be used is an existing well system that already is being used by Procter & Gamble.

6.3.1.3 Surface Water. No perennial surface water bodies occur onsite. However, depressions and a drainage ditch onsite retain water during the rainy season. The nearest drainage is Morrison Creek, approximately 1.5 miles south of the site. Morrison Creek flows westward and empties into the Sacramento River.

6.3.1.3.1 Topography and drainage. The site is a disturbed vacant lot that is nearly level. The soils onsite are San Joaquin soils, which are moderately deep and moderately well drained. The surface layer is silt loam; the subsoil is a claypan underlain by a strongly cemented hardpan. Permeability is very slow, and the soil has low or moderate available water capacity (USDA 1991). Shallow depressions in the topography function as evaporative microbasins due to the presence of hardpan. Runoff from the site occurs when the surface soils become fully saturated above the hardpan and when surface flows exceed the capacity of the onsite depressions and ditches.

6.3.1.3.2 Flood plain. The project site is shown as being in Zone A99 on the Flood Insurance Rate Map Community-Panel Number 060266-0015-E prepared by the Federal Emergency Management Agency (FEMA) (map revised November 15, 1989). Zone A99 is defined as "to be protected from 100 year flood by Federal flood protection system under construction; no base elevations determined."

Design and flood protection for the plant are discussed in Section 3.3 (Site Layout) of the AFC.

6.3.1.3.3 Surface water quality. The only surface water onsite is rainwater, which is of good quality.

6.3.1.4 Ground Water. The following subsections describe the ground water of the project area.

6.3.1.4.1 Ground water geology. The ground water of Sacramento County is described in the California Department of Water Resources Bulletin 118-3 (DWR 1974). The project site is in the City of Sacramento, which is in the Great Valley geomorphic province of California. The Great Valley is an asymmetrical, alluvial-filled trough between the Sierra Nevada Mountains to the east and the Coast Ranges to the west. Many aquifers of varying capacity and water quality are found beneath the valley.

The site occurs on the alluvial plains subunit of the Great Valley province. This alluvial plain is a part of the larger Victor Alluvial Plain. The alluvial plain is underlain by older soils that contain extensive layers of hardpan. The plain underlies much of the City of Sacramento, where it is has an average surface elevation of about 20 feet (DWR 1974).

The nonwater-bearing sediments, approximately 1,500 feet beneath the site, contain poor quality water. This water is highly saline. The geologic formations above these sediments (from oldest to youngest) are the Mehrten Formation, Laguna Formation, Arroyo Seco Formation, and the Victor Formation (DWR 1974).

The Mehrten Formation is a major water-bearing aquifer in Sacramento County and is the source of municipal water. This formation provides large quantities of ground water to many wells in the county. Water quality is good to excellent. Wells average 50 gallons per minute per foot (gpm/ft) of drawdown, and range from 0.5 gpm/ft to 100 gpm/ft of drawdown. The formation is wedgelike, dips and thickens to the west, and is covered by younger alluvial sediments. In the east where it outcrops, the formation is approximately 200 feet thick and thickens to over 1,000 feet under the Sacramento-San Joaquin Delta area (DWR 1974).

The Mehrten Formation is composed of a sedimentary unit referred to as "black sand" and a hard, gray tuff-breccia unit known as "lava." The black sands were formed as fluvial deposits that were derived from andesitic detritus washed down the slopes of the Sierra Nevada Mountains. The tuff-breccia was derived from andesitic volcanic eruptions to the east in the Sierra Nevada Mountains. Wells that derive

their supply from the black sands yield high amounts of water, whereas those derived from the tuff-breccia yield little water (DWR 1974).

The strikingly different Laguna Formation overlies the Mehrten. The Laguna is non-volcanic and is composed of silt, clay, and lenticles deposited by meandering streams. Where fine grained, the Laguna Formation yields only moderate amounts of water to wells; in areas with soft, well-sorted granitic sands, yields are high and can be as high as 50 gpm/ft of drawdown (DWR 1974). The Arroyo Seco Gravels occur as a thin veneer that overlies the Laguna Formation. These gravels are relatively unimportant as a ground water source (DWR 1974).

The Victor Formation underlies the Victor Alluvial Plain, which covers the central portion of Sacramento County between the Sacramento River and the foothills. The City of Sacramento is located on the Victor Plain. This formation is composed of interbedded sand, silt, and clay with lenses of gravel. Included in this formation are buried meandering stream channel deposits composed of poorly sorted cobbles, gravel, and sand. The upper surface is gently rolling, with local variation in relief as much as 15 feet (DWR 1974). The surface soils typically contain a layer of hardpan at depths of 20 to 40 inches (USDA 1991) that reduces infiltration to the aquifer below. When buried stream channels are tapped, the wells provide large quantities of water. Otherwise, wells yield little water (DWR 1974).

6.3.1.4.2 Aquifer characteristics. The water-bearing sequence beneath Sacramento County can be divided into two main saturation zones. The lower zone, referred to as the deep aquifer system, includes the black volcanic sands of the Mehrten Formation and those water-bearing sediments underlying it (Valley Springs and Ione Formations). The upper zone, referred to as the shallow aquifer system, includes the now-buried stream channel deposits of the Laguna and Victor Formations (DWR 1974).

The ground water level beneath the site is approximately 30 feet below mean sea level (County of Sacramento 1991). Figure 6.3-1 presents a ground water contour map of Sacramento County (Fall 1991), which shows the location of the site and three areas of significant drawdown as a result of ground water pumping (areas appear as circular contours). The three areas of significant drawdown are located near Galt, Elk Grove, and Del Paso Heights; none of these is close to the Project site. Ground water levels seasonally fluctuate from 10 to 20 feet. Figure 6.3-2 shows a three-dimensional diagram of the water table surface in Spring 1990; the view is from the southwest.

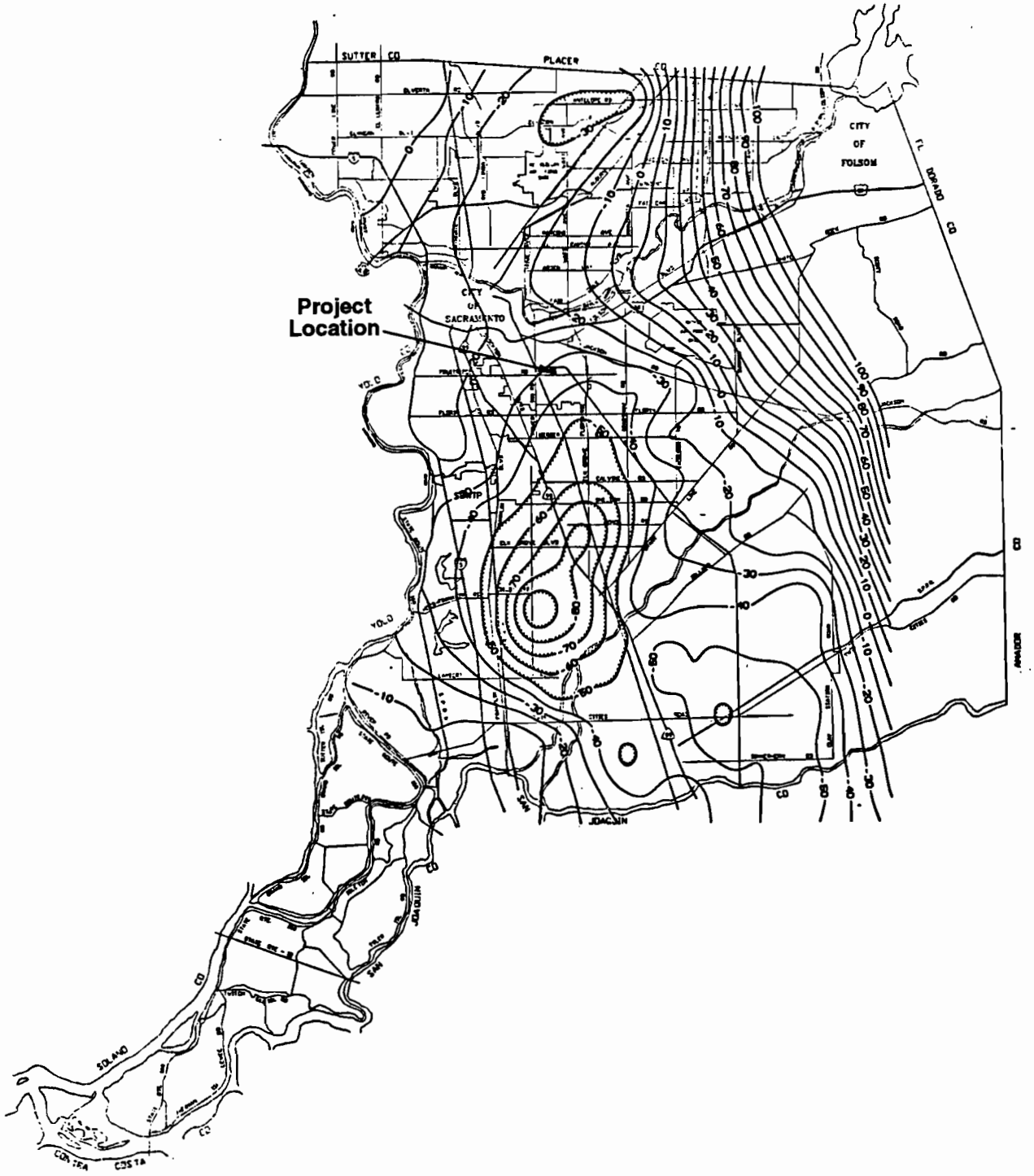

Note: The groundwater contour map is for general comparison only. Specific information should be obtained by independent investigation.

Source: County of Sacramento, Department of Public Works, Water Resources Division.

SACRAMENTO COUNTY GROUNDWATER CONTOUR MAP FALL 1991

Figure 6.3-1

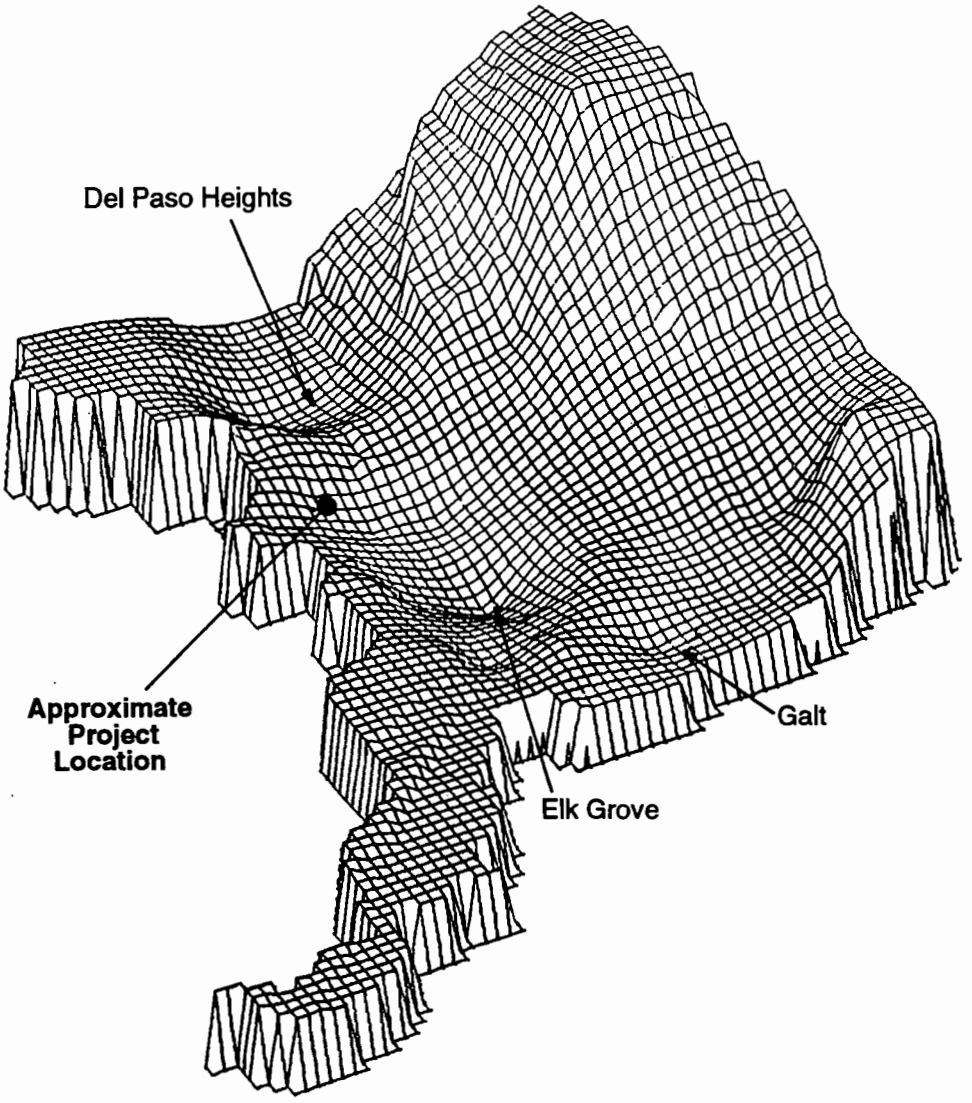

Source: California Department of Water Resources

SACRAMENTO COUNTY
3-D GROUNDWATER SURFACE PLOT
SPRING 1990

Figure 6.3-2

Only a small portion of Sacramento County is underlain by sediments with sufficient infiltration capability to provide natural recharge to the ground water body. The Victor Plain is underlain by soils containing hardpan or organic clays, whose permeability inhibits infiltration. The Sacramento South Area, where the project site is located, has an average ground water recharge of 15,200 acre-feet (ac ft) per year from rain and applied water. The American River has an average annual recharge of 40,900 ac ft per year. Other significant inflows into the ground water basin are streamflow recharge and subsurface inflows, which are estimated to average about 81,600 ac ft per year for the project area. The estimated sustained yield for this area averages 41,900 ac ft per year. Current use of ground water in the county exceeds estimated sustained yields for ground water. The total current use is 380,000 ac ft per year, whereas the safe yield is 357,000 ac ft per year. This results in an overdraft for the county of 23,000 ac ft per year (County of Sacramento 1992).

6.3.1.4.3 Ground water use. Ground water is the primary source of water supply for domestic, municipal, and agricultural uses in Sacramento County. In 1987, ground water use was estimated to be approximately 450,000 ac ft per year, accounting for 60 percent of the county's total need (County of Sacramento 1992).

6.3.1.4.4 Ground water quality. The ground water contained in the water-bearing sediments underlying most of Sacramento County is of excellent quality for irrigation and domestic use. The ground water contains mainly calcium, magnesium, and calcium-sodium bicarbonate. Underlying the main ground water body is water of poorer quality containing sodium sulfate, which occurs beneath the Mehrten Formation (DWR 1974). The concentration of total dissolved solids is normally less than 300 milligrams per liter (mg/l).

6.3.1.5 Water Supply. The source of water for the project will be the City of Sacramento water system. The City uses both surface water (85 percent) and ground water (15 percent) for its water supply. In the project area, the distribution of water from the City is 94,100 ac ft of surface water per year and 32,395 ac ft of ground water per year. The City has water rights to approximately 245,000 ac ft of surface water per year from the American River; this is the diversion limit for the year 2030. Only about 57,000 ac ft per year are required to meet the existing demand. The City also has water rights to 81,800 ac ft per year from the Sacramento River. In 1989, the City's total demand was about 90,000 ac ft per year (County of Sacramento 1992). Ground water is pumped from 40 city wells.

The City of Sacramento, letter dated June 9, 1993, has indicated that it is able and willing to provide adequate supplies for the life of the project (Appendix H). If the primary water supply is interrupted for any length of time, water makeup demands could not be met, and the plant would soon have to stop operation.

Two alternatives to using city water as the primary water source were considered. The Procter & Gamble well system as well as wastewater from the Procter & Gamble facility were considered as sources for cooling water makeup. Neither of these alternatives proved to be feasible.

City water will be supplied for most of the year by the E. A. Fairbairn Water Treatment Plant. When this treatment plant is out of service every year from mid-October through mid-January, water will be supplied by the Sacramento River Water Treatment Plant. Water quality data for these treatment plants, for the City's well system (based on the analysis of 23 wells) are presented in Table 6.3-2. No regulated/unregulated organic chemicals were detected in either the City's surface or ground water system.

Water quality requirements for specific plant processes, such as cooling and boiler makeup, are discussed in the Chemical Engineering Design Criteria in Appendix E of this AFC.

6.3.2 Potential Construction Impacts

Potential construction impacts to surface waters will be minimal for the project. Construction is not expected to have an impact on the ground water. Nonhazardous wastes from the project will be taken to the county landfill; hazardous wastes will be removed from the site by a licensed contractor to an approved site.

6.3.2.1 Surface Water Impacts. No permanent water bodies exist on or near the project site. Consequently, no significant impacts to surface waters are expected. Some erosion of newly excavated or placed soils may occur. However, the relatively level nature of the site will minimize the intensity of these temporary erosion episodes.

Wastewaters generated during construction due to activities such as concrete batching or truck washdown will be confined to the construction area or receive appropriate treatment (e.g., filtered through straw bales) prior to discharge, leaving surficial residues. Hydrotesting and chemical cleaning of the heat recovery steam generator (HRSG) during preoperation will generate wastewaters. Chemical cleaning wastes will consist of alkaline and possibly acid cleaning solutions. These wastes,

Table 6.3-2
Water Quality Data Averages
City of Sacramento Water Treatment Plants and Well System
1991-1992

Parameter	E.A. Fairbairn Water Treatment Plant (mg/l unless otherwise noted)	Sacramento River Water Treatment Plant (mg/l unless otherwise noted)	City of Sacramento Well System (mg/l unless otherwise noted)
General Minerals			
Bicarbonate Alkalinity	20 as $CaCO_3$	37 as $CaCO_3$	101 as $CaCO_3$
Carbonate Alkalinity	1 as $CaCO_3$	1 as $CaCO_3$	0 as $CaCO_3$
Total Alkalinity	27 as $CaCO_3$	50 as $CaCO_3$	134 as $CaCO_3$
Calcium	8.9	13.0	25
Chloride	4.2	7.9	*
Copper	≤ 0.01	≤ 0.01	≤ 0.01
Iron	< 0.01	≤ 0.01	≤ 0.03
Magnesium	2.3	5.6	18
Manganese	< 0.01	< 0.01	≤ 0.01
pH	8.4 units	8.3 units	7.5 units
Silica	7	14	*
Sodium	5	10	30
Specific Conductance	90 umhos/cm	166 umhos/cm	405 umhos/cm
Sulfate	8.4	15	13.0
Total Dissolved Solids	61	107	302
Total Hardness	32 as $CaCO_3$	55 as $CaCO_3$	139 as $CaCO_3$

Table 6.3-2 (Continued)
Water Quality Data Averages
City of Sacramento Water Treatment Plants and Well System
1991-1992

Parameter	E.A. Fairbairn Water Treatment Plant (mg/l unless otherwise noted)	Sacramento River Water Treatment Plant (mg/l unless otherwise noted)	City of Sacramento Well System (mg/l unless otherwise noted)
Zinc	≤0.02	≤0.01	≤0.01
General Physical			
Color	1 unit	1 unit	1 unit
Odor	≤1 threshold	≤1 threshold	<1 threshold
Temperature	17.7° C	18.3° C	*
Turbidity	0.05 NTU**	0.05 NTU**	0.40 NTU**
Inorganic Chemicals			
Aluminum	<0.10	≤0.10	*
Arsenic	<0.005	<0.005	*
Barium	<0.10	<0.10	*
Cadmium	<0.001	<0.001	*
Chromium	<0.01	<0.01	*
Fluoride	≤0.10	≤0.10	*
Lead	<0.005	<0.005	*
Mercury	<0.001	<0.001	*
Nitrate	0.27	0.59	*
Selenium	<0.005	<0.005	*
Silver	<0.01	<0.01	*

*Not tested.

**Nephelometric Turbidity Units.

Source: City of Sacramento, Department of Utilities, Water System, 1991-92 Operational Data.

which are subject to high metal concentrations, will be temporarily stored onsite in portable tanks and disposed offsite by the chemical cleaning contractor.

6.3.2.2 Ground Water Impacts. Construction is not expected to have an impact on the quality or quantity of the ground water, which is at a depth of about 75 feet below the project site. Excavation activities will extend only to a depth of approximately 15 feet at the project site. No ground water drawdown will occur during construction, since water supply needs will be minimal.

6.3.3 Potential Operation Impacts

Potential operation impacts to both surface and ground waters will be minimal for the project. The water supply for the project will be supplied by municipal water from the City of Sacramento. The water balance diagram, Figure 3.9-1, shows the expected water supply streams, waste streams, and flow rates for the project. Water demand for the project is also discussed in Section 3.9.

Nonhazardous wastes from the project will be taken to the county landfill; any hazardous wastes generated during project operation will be removed from the site by a licensed contractor. Consequently, waste materials generated during project operation will not affect local water resources.

6.3.3.1 Surface Water Impacts. Operation impacts to surface water will be minimal. Potential impacts may include site runoff and drainage and wastewater disposal. The project operation will not significantly affect local surface water supplies, water purveyors, or other water sources.

6.3.3.1.1 Site runoff and drainage. Site development may increase the amount of impervious area, thus slightly increasing the volume of storm water runoff. However, such impacts will be negligible because of the small size and level nature of the project site. Overall site runoff characteristics are not expected to be impacted significantly by the project.

6.3.3.1.2 Wastewater disposal. Wastewaters produced by the project will include circulating water system blowdown, evaporative cooler blowdown, miscellaneous plant drains, and neutralized chemical wastes. These wastewaters will be collected from floor drains, piping, and sumps and routed to the wastewater collection system for disposal before being discharged to the Sacramento County's sanitary sewer system. Wastewater treatment and disposal procedures will conform to applicable standards. Therefore, Sacramento County's sanitary sewer system will not be adversely altered.

Chemical cleaning wastes will consist of acid solutions used for cleaning of the HRSG and turbine wash and HRSG fireside wash waters. These wastes, which are

subject to high metal concentrations, will be temporarily stored onsite in portable tanks and disposed of offsite by the chemical cleaning contractor.

6.3.3.2 Ground Water Impacts. Project operation will not affect the quality or quantity of local ground water resources.

6.3.4 Water Resources Cumulative Impacts

The project will have minimal effect on water resources in the project vicinity. No perennial surface water occurs onsite. Construction and operation surface waters will be discharged to either Sacramento County's sanitary sewer system or to the City of Sacramento's storm drains system. No additional demand will be placed on the local ground water resources.

The City of Sacramento has indicated that the city has satisfactory water entitlements and that water is available for the cogeneration project without impacting development in the project area. The County of Sacramento has determined that the project will be able to discharge to the county's sewer system and have its wastewater treated by the sewage treatment plant.

The section of the City of Sacramento where the project is to be located is zoned for industrial development. Redevelopment of the nearby US Army Depot may contribute to continued impacts of the ground and surface waters in the project area. However, any impacts should be minimal.

The US Army Depot has a 10 year plan to clean contaminated ground water. As part of this plan, the Army is withdrawing 300 gpm of ground water, treating the water, and then discharging the water to the county sewer system. The project will not impact the existing ground water withdrawals or add any additional ground water contamination to the ground water that the Army is already mitigating.

The project will not affect the flood hazard potential for the project site or the project vicinity.

6.3.5 Mitigation

The following subsections discuss mitigation measures during construction and operation of the project. Each measure will be monitored by project personnel to ensure that its design objectives are met.

6.3.5.1 Construction. Under the Clean Water Act, as amended, new projects that disturb five or more acres are required to obtain a National Pollutant Discharge Elimination System (NPDES) permit. The permit requires the project to reduce, to the maximum extent practicable, discharges of pollutants to the waters of the US

during construction and operation. In order to comply, the SCA will file a Notice of Intent with the California Regional Water Quality Board - Central Valley Region to be covered by the State's General Permit for the Discharge of Storm Water Associated with Construction Activity. This permit will require the developer to write a Pollution Prevention Plan and a Monitoring Program for the project. The Pollution Prevention Plan will incorporate Best Management Practices and Structural Controls to reduce discharges of storm water, sediment, and pollutants to the municipal storm sewer system.

The project also will obtain a permit from the Sacramento City/County Municipal Storm Water Permit Program, which will establish the specific standards and practices to be implemented by the project. The permit holder (City of Sacramento) will inspect, approve, and enforce the permit requirements. The primary function of the permit will be to prevent erosion and sediment production during construction. In addition, the permit will require implementing practices to prevent the discharge of "significant materials" either liquid or solid, hazardous or nonhazardous, from the site. All significant materials will be prevented from contacting rainfall or surface runoff.

If deemed necessary, the developer will prepare a hydrologic plan that will demonstrate how the project will avoid increasing the peak levels or total volumes of storm waters discharged from the site during and after construction. In planning for construction and for storm water monitoring required by the permit, the developer will consult the guidance provided in The State of California/American Public Works Association Storm Water Task Force's *Manual of Best Management for Construction Activity*.

6.3.5.2 Operation. The proposed mitigation measures during operation are discussed in the following subsections. These measures will be adequately effective in minimizing operation-related impacts to water resources.

6.3.5.2.1 Site runoff and drainage. In compliance with the Clean Water Act, as amended, and subsequent State of California implementing regulations, the SCA will file a Notice of Intent with the California Regional Water Quality Board - Central Valley Region in order to be covered by the State's General Permit for the Discharge of Storm Water Associated with Industrial Activity. This permit will require the SCA to prepare a Storm Water Pollution Prevention Plan, using Best Management Practices and Structural Controls to reduce discharges of pollutants to the

municipal storm sewer system to the maximum extent practicable. The permit also will require the SCA to develop and implement a Storm Water Monitoring Program.

Best Management Practices required by this permit will include source controls, waste reduction, site cleaning, education of personnel, covering stored materials, avoiding dumping, and proper storage and handling of significant materials, as well as providing secondary containment around areas/containers of liquid pollutants. The State of California/American Public Works Association Storm Water Task Force's *Manual of Best Management for Industrial Activities* will be used to provide general guidance in planning for the permit.

6.3.5.2.2 Wastewater disposal. The wastewater system will collect and process all equipment drainage, spills, drips, floor washdowns, and fire protection discharges. Section 3.10 discusses wastewaters that will be generated by the project. Table 3.10-1 contains data on the expected quality of the project's waste streams. The domestic sewage system will collect wastewater from toilets, sinks, and showers. The domestic sewer system and the treated wastewater will be discharged to Sacramento County's sewer system and then to the Sacramento County Regional Wastewater Treatment System before discharge to the Sacramento River. The storm drains will collect storm water runoffs from the plant site for discharge to the City of Sacramento's storm drains system.

The equipment and miscellaneous plant drain system will collect and treat wastewater from plant and equipment drains. The system will remove materials, such as oil, grease, suspended solids, and emulsified oil. The floor drains shall consist of trenches and under-floor piping. The drainage will be designed for gravity flow to the treatment system where possible, or to sumps for pumping. Drains that potentially could contain oil or grease will be routed to an oil/water separator. The demineralizer regeneration wastes and chemical feed area drains will be collected and treated onsite in the neutralization basin.

6.3.5.2.3 Oil spill containment. Oil spill containment measures will be provided, as needed, for all nonwater storage vessels, liquid-filled equipment (e.g., transformers and breakers), and equipment with high lubricant use (gas turbine generator skids, fuel gas compressors, lube oils storage area). Chemical and diesel fuel unloading areas will be designed to contain spills. Storm water contained in these areas will be routed through an oil/water separator and/or neutralization basin and then drained to the wastewater collection system. Detailed designs of the appropriate spill containment systems will be developed during the project's final design process.

6.3.6 Laws, Ordinances, Regulations, and Standards

The following federal, state, and local laws, ordinances, regulations, and standards are applicable, depending on the water resources of the project area.

6.3.6.1 Federal LORS. Several federal laws are applicable to the water resources of the project area:

- The Resource, Conservation, and Recovery Act (RCRA) of 1976, Title 40, Code of Federal Regulations (CFR), Part 260 et seq. (40 CFR Part 260 et seq.). Identifies the procedure for determining hazardous wastes and establishes proper methods for handling and disposal of hazardous and nonhazardous wastes to prevent surface and ground water contamination.
- The Comprehensive Environmental Response, Compensation, and Liabilities Act of 1980 (CERCLA) (40 CFR Parts 300 to 355). Establishes industrial and governmental responsibilities for the release or threatened release of hazardous substances. Under the Superfund Amendments and Reauthorization Act (SARA) of 1986, several new programs were established, including an underground storage tank leak-testing program and an Emergency Planning and Community Right-to-Know requirement for those businesses handling large quantities of hazardous chemicals.
- The Clean Water Act, as amended (40 CFR Parts 112, 122, and 125). Provides for the restoration and maintenance of the chemical, physical, and biological integrity of the nation's waters. To achieve these objectives, the act authorizes the Environmental Protection Agency (EPA) to regulate discharges of wastewater and storm water into surface waters by the use of NPDES permits and pretreatment standards. These regulations also establish requirements for Spill Prevention, Control, and Countermeasures (SPCC) Plans and Oil Pollution Prevention Response Plans for Nontransportation-Related Facilities that handle large quantities of oil.
- The Safe Drinking Water Act of 1974 (40 CFR Parts 122, 123, 146, and 147). Establishes requirements for Underground Injection Control (UIC) program wells to prevent degradation of ground water supplies.

Many of these federal regulations are implemented at the state level by the California Department of Health Services, the various California Regional Water Quality Control Boards, the California Division of Oil and Gas, or on a local level by designated county agencies.

6.3.6.2 State LORS. The State of California has established controls in the areas of erosion and sedimentation, water quality, water supply, and flood hazards. These

controls vary from the very general to the very specific and appear as state codes, regulations, California Environmental Quality Act Guidelines Special Policy Statements, and adopted standards and criteria:

- California statutes and regulations for the protection of water quality are implemented by a variety of public agencies. The Porter-Cologne Water Quality Act of 1972 established the jurisdiction of the Regional Water Quality Control Boards to control pollutant discharges to surface and ground waters. The Porter-Cologne Act is implemented by Title 23 of the California Code of Regulations (23 CCR). Under the California Health and Safety Code, Sections 22500-22508, businesses must prepare an inventory of all hazardous materials stored onsite and develop an emergency response plan for chemical spills and fires. These regulations commonly are implemented by city and county fire or health departments.
- State Water Resources Control Board, Water Quality Order No. 92-08-DWQ; General Permit No. CAS000002, authorizes a general permit for storm water discharges associated with construction activity of 5 acres or more.
- State Water Resources Control Board, Water Quality Order No. 91-13-DWQ (as amended by Water Quality Order No. 92-12-DWQ); General Permit No. CAS000001, authorizes implementation of a general permit to regulate industrial storm water discharges. All industrial facilities are required to obtain this permit.
- The Safe Drinking Water and Toxic Enforcement Act (Proposition 65) prohibits the discharge into sources of drinking water any quantity of a substance known to cause cancer or birth defects. Title 22 CCR Section 66001, et seq., implement Proposition 65.
- California Water Code Section 461 and State Board Resolution No. 77-1 encourage conservation of water resources and maximum reuse of wastewaters, particularly in water-short areas.
- The State Water Resources Control Board Resolution No. 75-58 encourages the use of wastewater for power plant cooling and recommends conducting alternative feasibility analyses for utilizing the following sources for cooling water: wastewater being discharged to the ocean, ocean water, brackish water or irrigation return flow, inland wastewaters of low total dissolved solids, and other inland waters.

- The Cobey-Alquist Flood Plain Management Act, as implemented by the provisions of Title 23 CCR, Chapter 1.5, empowers the California Department of Water Resources and the Reclamation Board to coordinate the adoption of flood plain regulations by local public agencies. Such regulations typically include (a) flood plain zoning ordinances; (b) grading or setback ordinances; (c) ordinances controlling subdivision development; and (d) ownership by the public agency of necessary flood control rights-of-way within designated floodways.
- California State Planning Law, Government Code Section 65302, requires each city and county to adopt a general plan to guide its physical development. Section 65302(d) requires that a conservation element be included in the general plan to provide for conservation, development, and use of natural resources such as water, rivers, lakes, and harbors.

6.3.6.3 Local LORS. Ordinances established by cities, counties, and special districts typically address water-related issues such as storm drainage and flood management, erosion and sediment control, septic tank and leachfield siting requirements, hazardous materials spill control, restrictions on siting facilities in flood hazard zones, and limitations on wastewaters discharged to sewer systems.

The Sacramento/County Municipal Storm Water Permit Program establishes the specific standards and practices to be implemented by the project. The permit holder (the City of Sacramento) will inspect, approve, and enforce the permit requirements. The primary emphasis of the permit will be to prevent erosion and sediment production during construction. The permit also requires implementing practices to prevent the discharge of hazardous and nonhazardous material from the site.

Many local ordinances require septic tanks/leachfield systems to be designed according to Appendix I of the Uniform Plumbing Code (1982).

6.3.7 Compliance with Laws, Ordinances, Regulations, and Standards

All necessary and prudent actions have been taken to ensure that the project is in compliance with federal, state, and local laws, regulations, and ordinances governing water resources. The water source for the project is the City of Sacramento water system. The potential for using the discharge wastewater streams of the host facility in the cogeneration plant was investigated and proved not feasible. The domestic sewer system and the treated wastewater and storm water will be discharged to the City of Sacramento sewer system.

All appropriate NPDES permits will be obtained for the project. A Pollution Prevention Plan and a Monitoring Program will be implemented for both construction and operation. Best Management Practices for storm water discharges during construction and operation as required by the State will be adopted.

6.3.8 References

California Department of Water Resources (DWR), 1974, *Evaluation of Ground Water Resources: Sacramento County*, Department of Water Resources Bulletin 118-3, Department of Water Resources, Sacramento, California.

California Department of Water Resources (DWR), Central District, 1990, *Historical Ground Water Levels in Sacramento County*, Department of Water Resources, Sacramento, Central District, California.

County of Sacramento, 1991, *Sacramento County Ground Water Contour Map-Fall 1991*, Department of Public Works, Water Resources Division.

County of Sacramento, Planning and Community Development Department, December 9, 1992, *Water Resources Background Report, Section VII, Conservation Element of the County of Sacramento General Plan*, revised draft.

National Oceanic and Atmospheric Administration (NOAA), 1991, *Local Climatological Data--Annual Summaries for 1991, Part IV--Western Region*, Asheville, North Carolina.

U.S. Department of Agriculture (USDA), June 1991, Soil Conservation Service, *Soil Survey of Sacramento County California*, preliminary draft.

6.4 Biological Resources

This AFC section describes the environmental setting of the region surrounding the project site and its associated transmission line and fiber optic communication line as they relate to biological resources. Anticipated impacts due to construction and operational activities are estimated, and proposed mitigation measures are identified. Figure 6.4-1 provides a close-up of the proposed project site.

6.4.1 Regional Resources

The proposed project site is in the Sacramento Valley, which forms the northern half of the Great Central Valley of California (Hickman 1993). According to Hickman (1993), the Sacramento Valley today has been largely converted to agricultural and urban lands where bunchgrass prairies once existed. Projects aimed at restoring the environment are not common in the region, but a few do exist. The Jepson Prairie and Stone Lake Projects are two such examples. The Jepson Prairie Project is aimed primarily at restoring and maintaining a native grassland that includes numerous vernal pools. The Stone Lake Project focus is on restoring habitat for waterfowl.

The study area consisted entirely of a highly disturbed annual grassland containing several vernal pools, a drainage ditch, a small unvegetated artificial pond, and several minor, unvegetated depressions that were created as a result of previous construction activities in the area. The project site includes only disturbed annual grassland and portion of the drainage ditch and the unvegetated artificial pond (Figure 6.4-1).

The Sacramento Valley of California has historically supported a vast and diverse assemblage of wildlife habitat, including various wetlands, oak woodlands, and grasslands. Agriculture, grazing, and continued population growth and urban development have limited all but small vestiges of these habitats to select locations within Sacramento County. The Sacramento, American, and Consumnes Rivers and the Sacramento Delta support the majority of the remaining marsh and riparian areas in Sacramento County (Sacramento County 1992). These areas are used annually by thousands of waterfowl migrating along the Central Valley leg of the Pacific Flyway. The American and Consumnes Rivers are about 2 miles north and 7 miles south of the project site, respectively. Vernal pools, once common throughout the Sacramento Central Valley, are now concentrated in the southern portion of the county. These small, ephemeral pools typically support a variety of flora and fauna (Zedler

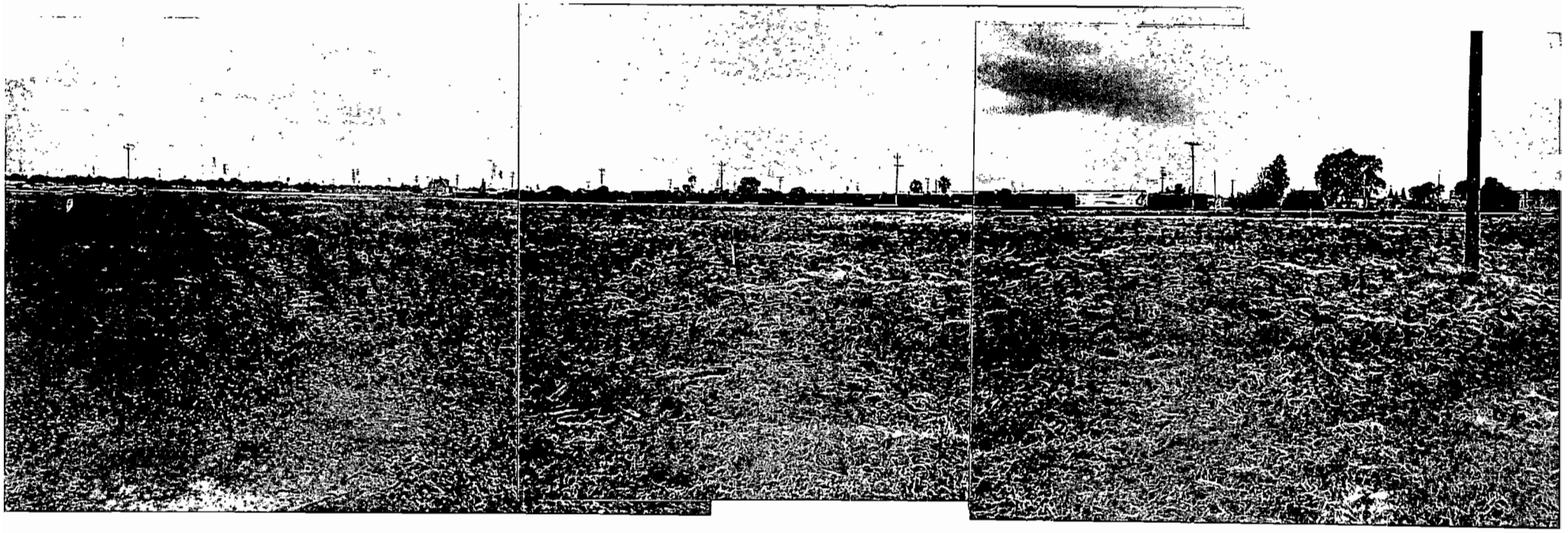

View looking west from the southeast corner of the project site.

REPRESENTATIVE VIEW OF THE PROJECT SITE

Figure 6.4-1

1987). Sacramento County, as well as other foothill counties serve as major breeding and wintering grounds for a number of raptor species, but the oak woodland and associated grasslands of the eastern portion of Sacramento County are the prime habitat area for species such as the golden eagle (*Aquila chrysaetos*), red-tailed hawk (*Buteo jamaicensis*), and red-shouldered hawk (*Buteo lineatus*) (County of Sacramento 1992). Several state protected species or species of special concern, such as the northern harrier (*Circus cyaneus*), Swainson's hawk (*Buteo swainsoni*), and burrowing owl (*Speotyto cunicularia*) occur throughout the county where sufficient grassland habitat and (in the case of the Swainson's hawk) associated trees are present for nesting and foraging.

Characteristic of the City of Sacramento, most of the native natural habitat in the project vicinity has given way to urban sprawl and industrial development. Habitat types in the area, using categories described by Mayer and Laudenslayer (1988), consist mostly of urban habitat, some cropland, and nonnative annual grassland. Some open grassland and cropland habitats occur over 1 mile east and south of the site. The area immediately surrounding the project consists of residential areas, heavy industry, and light commercial land uses. Active aggregate mining operations and mined out land currently used for agriculture and landfilling occur to the north and east of the project site.

Urban habitat in the project area is of little value to wildlife because of the existing levels of human activity and habitat disturbance. Buildings, pavement, and landscaping have replaced native grasslands. In general, this urban habitat provides very little vegetation for foraging and nesting. Wildlife species adapted to the urban environment such as starlings (*Sturnus vulgaris*) and house finches (*Carpodacus mexicanus*) are common.

Cropland is limited in the project vicinity. Vegetation consists mostly of annuals such as corn (*Zea mays*), alfalfa (*Medicago sativa*), and row crops. This habitat provides some structure and food for birds such as blackbird and starling (*Sturnus vulgaris*), and mammals such as California vole (*Microtus californicus*), deer mouse (*Peromyscus maniculatus*), and harvest mouse (*Reithrodontomys fulvescens*). The small mammals are also food for some predators, such as red-tailed and Swainson's hawks and grey fox (*Urocyon cinereoargenteus*).

Annual grassland habitats are open areas composed mostly of annual herbaceous species, many of which are exotics. Vegetation within these areas is typically low in stature until spring when temperatures stimulate growth. Because these habitats occur in a very urbanized environment, they are of somewhat limited value to

wildlife. They do have some value to foraging raptors and burrowing rodents. Black-tailed jackrabbit (*Lepus californicus*), common crow (*Corvus brachyrhynchos*), western meadowlark (*Sturnella neglecta*), and California quail (*Callipepla californica*) are common species of this habitat.

Areas of critical concern are special or unique habitats or biological communities that include, but are not limited to, wildlife refuges, ecological reserves, riparian habitats, and wetlands. They are often identified by the California Natural Diversity Data Base (CNDDB) and other state, federal, and local agencies having responsibility in the area or by educational institutions, museums, and special interest groups that might have specific knowledge of the project area resources. No state designated or recognized areas of critical concern, high biodiversity, or regionally rare natural communities occur within about 3 miles of the project site. Northern hardpan vernal pools are on the Mather Air Force Base about 3 miles east of the project (CNDDB). Sacramento County (1992) has identified natural areas of special significance in the Conservation Element of the County of Sacramento General Plan. Most of these areas are associated with vernal pools and wetlands and their riparian communities. The closest area is along the American River Parkway about 4 miles north of the project. This area contains a mix of riparian, freshwater marsh, oak woodland, and grassland that supports a variety of plant and wildlife species (Sacramento County 1992). The project site does not contain any vernal pools; however, the vernal pools on the parcel adjacent to the site may be considered an area of critical concern.

No state or federal wildlife refuges occur near the project site. However, the Stone Lake area (over 10 miles southwest of the project site) is being considered as a possible site for a new national wildlife refuge (Sacramento County 1992). This area has extremely high fish and wildlife values because of its large area (about 3,000 acres) and diverse assemblage of habitats and wildlife.

6.4.2 Existing Project Site

The plant site, including parking and lay-down areas, comprises about 15 acres (10 acres for the plant and 5 acres for laydown and parking) of annual grassland, some barren ground, and a portion of an unvegetated artificial pond and a drainage ditch. Development surrounds all sides of the 50 acre vacant lot on which the project site is located. Vegetation composition within these habitats is described in Subsection 6.4.2.1.

6.4.2.1 Existing Botanical Resources. Botanical field investigations were carried out on March 30, 1992, by Dames & Moore and on May 11-12, 1993, by Black & Veatch biologists. Ebasco Environmental (1993a) biologists also performed surveys in conjunction with the project's transmission line and fiber optic line between April 23 and May 11, 1993.

The plant site study area included the undeveloped area between Power Inn Road and 83rd Street south of the California Central Traction Railroad tracks and north of the Procter & Gamble plant. The plant site and construction parking and lay-down areas include approximately the eastern third of the study area. Areas beyond the project study area were not considered in depth, since they are industrial, residential, or otherwise developed and are essentially void of botanical resources. During the site visits, the plant communities were characterized, and searches were made for species of special concern that could have potentially occurred onsite. The results of these efforts are presented below.

The proposed site for the Procter & Gamble Cogeneration facility is characterized by plant species typical of disturbed habitats in the Central Valley and possesses low overall species diversity. Most of the site's original native species and naturally occurring plant communities appear to have been displaced by regular discing, filling, and grading that have occurred the site's history. The existing site vegetation is dominated by nonnative annual species that are tolerant of frequent disturbance.

Physical evidence at the site suggests that portions of the site have been used for the disposal of construction debris, aggregate, and other unregulated activities. Discing and grading of the site has eliminated or greatly modified most of the site's original microtopography and has probably enhanced the soil's permeability. An increase in soil permeability would have changed the capacity of the soil to absorb surface water by creating a more friable and less massive soil matrix. Increased permeability would reduce overall surface runoff, but discing also causes the soil to lose soil moisture more rapidly to evaporation. The final ecological equation for the site has been the elimination of naturally occurring plant communities, the successful dominance of a few aggressive "ruderal" nonnative plant species, and the disruption of normal soil morphological and hydrological characteristics.

Vegetation in the study area occurs in two types of herbaceous communities, according to the classification of the California Department of Fish and Game (Holland 1986): (1) Nonnative Grasslands Community and (2) Northern Hardpan Vernal Pool Community. In addition, some areas are void of vegetation. The

distribution of these communities at the study area is illustrated on Figure 6.4-2, and each is described in the following subsections. The project site includes only the Nonnative Grasslands Community. No wetland communities occur on the proposed project site; however, vernal pools were found elsewhere in the study area. Table 6.4-1 provides a list of the species observed during the 1992 Dames & Moore and 1993 Black & Veatch site visits and indicates in which habitat the species typically occur. The names of the plants used herein follow the nomenclature provided in *The Jepson Manual: Higher Plants of California* (Hickman 1993).

Nonnative Grasslands Community. This plant community is characterized by a dense to sparse cover of annual grasses with the cover generally not much more than 0.5 m in height. Seed germination occurs in late fall with the onset of late season rains. Flowering and seed production are completed in the spring.

The community in the study area is dominated by introduced (nonnative) annual grasses, including soft brome (*Bromus hordeaceus*), slender wild oat (*Avena barbata*), and rat-tail fescue (*Vulpia myuros*). Dominant annual forbs in the area include storksbill (*Erodium botrys*), yellow star thistle (*Centaurea solstitialis*), Russian thistle (*Salsola sp.*), common tarweed (*Hemizonia pungens*), and California burclover (*Medicago polymorpha*). A variety of other species occur in the grassland, but the majority are not native to the area. No woody species or native perennial grasses were observed on the site.

The plant community present today is the result of repeated disturbance. The land is disced or plowed at least once a year toward the end of the spring growing season. For the last 50 years this area has been disced to prevent potential brush fires during the dry season. This practice is required by the City of Sacramento Fire Department (pers. commun., City of Sacramento Planning and Development, August 24, 1993). The entire area was disced most recently in May 1993. Consequently, the appearance of the area is usually that of a disced field (Figure 6.4-1). The plant site and construction parking/lay-down areas include approximately 15 acres; 13 acres (93 percent) are nonnative grassland with the remaining 2 acres being ditches or roads. The entire 50 acre study area is 94 percent (47 acres) nonnative grassland.

Northern Hardpan Vernal Pool Community. Holland (1986) describes the Northern Hardpan Vernal Pool Community as a "low, amphibious, herbaceous community dominated by annual herbs and grasses." The life cycle of most plants in this community is initiated by winter rains collecting in depressions. Vegetation encircles the water collected by these depressions in concentric bands. As the pools evaporate

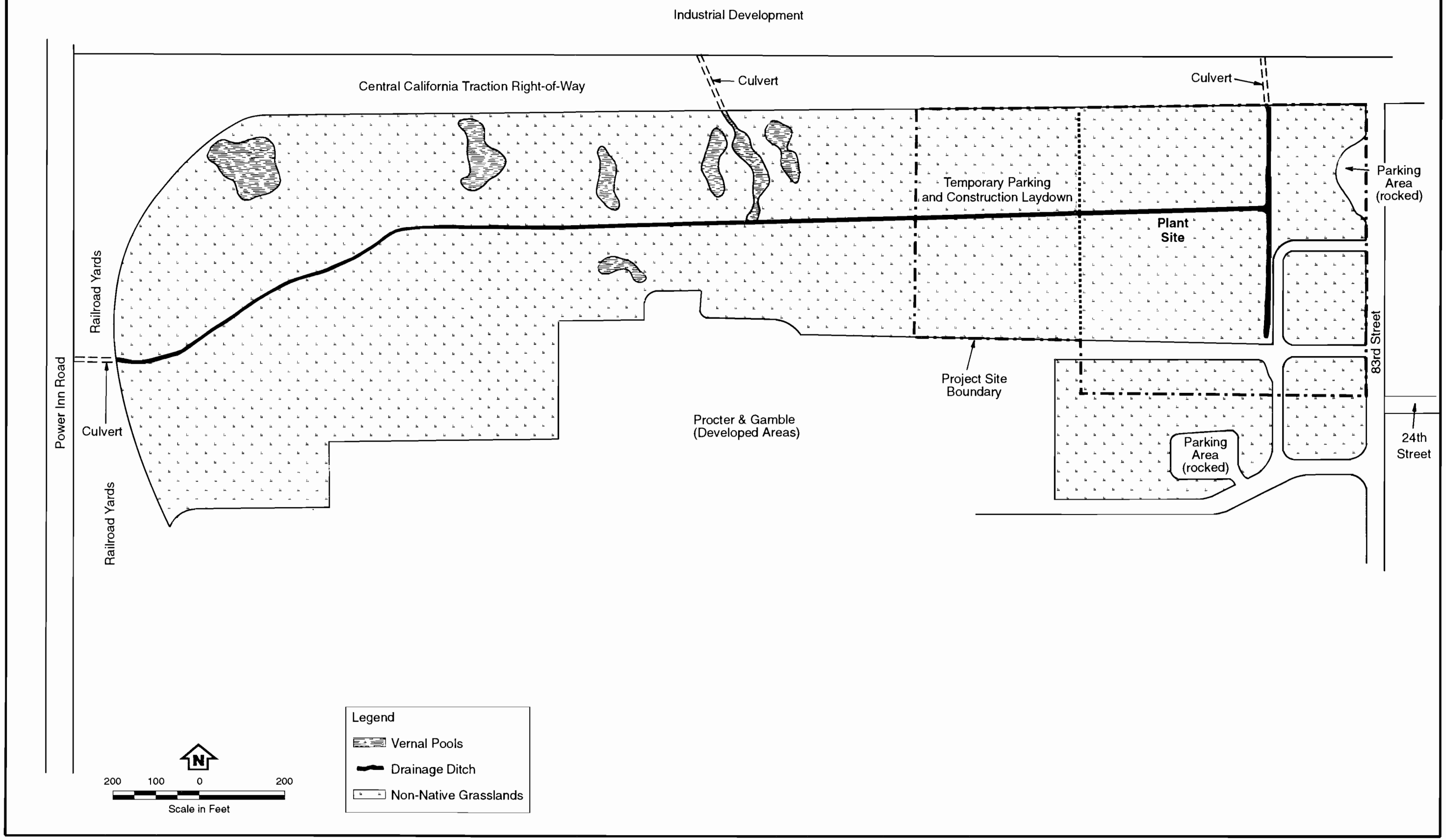

PLANT COMMUNITIES AND WETLANDS IN THE STUDY AREA

Figure 6.4-2

Table 6.4-1
Plants Observed on the Procter & Gamble Cogeneration Project Study Area, Sacramento, California[a]

Scientific Name[b]	Common Name[c]	USFWS Wetland Status[d]	Habitat	
			Northern Hardpan Vernal Pools	Nonnative Grasslands
Amsinckia menziecii (lehm.) Nels. & Macbr. var. intermedia (Fisch. & Mey.) Ganders	Rancher's fireweed	NL	X	X
Anagallis arvensis L.	Scarlet pimpernel	FAC	X	X
Avena barbata Link	Slender wild oat	NL		X
Brizia minor L.	Little quaking grass	FACW-	X	
Bromus hordeaceus L. (synonym: B. mollis)	Soft brome	FACU-		X
Calandrinia ciliata (R. & P.) DC.	Red maids	FACU*	X	X
Capsella bursa-pastoris (L.) Medic.	Shepard's purse	FAC-		X
Crassula aquatica (L.) Schonl.	Water pygmyweed	OBL	X	
Centaurea solstitialis L.	Yellow star-thistle	NL		X
Collinsia sparsiflora Fischer & Mey.		NL	X	
Convolvulus arvensis L.	Field bindweed	NL		X
Dichelostemma capitatum Wood. (synonym: Brodiaea pulchella)	Blue dicks	NL	X	
Downingia pulchella (Lindley) Torr.	Flat-face downingia	OBL	X	
Erodium botrys (Cav.) Bertol.	Storksbill	FACU	X	X
Galium aparine L.	Catchweed bedstraw	FAC		X
Hemizonia pungens (H. & A.) T. & G. ssp. pungens	Common tarweed	NL	X	X
Hordeum leporinum Link	Barley	NI	X	X
Hordeum murinum Hudson	Barley	NL	X	X

Table 6.4-1 (Continued)
Plants Observed on the Procter & Gamble Cogeneration Project Study Area, Sacramento, California[a]

Scientific Name[b]	Common Name[c]	USFWS Wetland Status[d]	Habitat	
			Northern Hardpan Vernal Pools	Nonnative Grasslands
Juncus bufonius L.	Toad rush	FACW+	X	
Juncus capitatus Weigel	Capped rush	FACU	X	
Lepidium densiflorum Schrad.	Pepper-grass	FAC		X
Lilaea Scilloides (Poir.) Haum.	Flowering quillwort	OBL	X	
Limnathes douglassii R. Br. ssp. rosea (Benth.) C. Mason	White meadowfoam	OBL*	X	
Limnanthes douglassii R. Br. ssp. rosea (Benth.) C. Mason	Douglas' meadowfoam	OBL	X	
Lolium multiflorum Lam.	Italian ryegrass	NL		X
Lupinus bicolor Linkley	Miniature lupine	NL		X
Lythrum hyssopifolia L.	Hyssop loosestrife	FACW	X	
Lythrum tribractatum Spreng.	Three-bract loosestrife	OBL	X	
Madia elegans Don	Tarweed	NL	X	X
Medicago polymorpha L.	California burclover	NL		X
Mimulus tricolor Loud.	Tricolor monkeyflower	OBL	X	
Plagiobotrys stipitatus (Greene) Johnson var. micranthus (Piper) Johnson	Slender popcorn flower	OBL	X	
Psilocarphus oregonus Nutt.	Oregon woolly-heads	FAC	X	
Psilocarphus tenellus Nutt.	Slender woolly-heads	OBL	X	
Ranunculus bonariensis Poir. var. trisepalus (Gill) Lourt.	Carter's buttercup	OBL	X	
Ranunculus muricatus L.	Spring-fruiting buttercup	FACW+	X	

Table 6.4-1 (Continued)
Plants Observed on the Procter & Gamble Cogeneration Project Study Area, Sacramento, California[a]

Scientific Name[b]	Common Name[c]	USFWS Wetland Status[d]	Habitat	
			Northern Hardpan Vernal Pools	Nonnative Grasslands
Raphanus sativus L.	Wild radish	NL		X
Salsola sp.	Russian thistle	--		X
Senecio vulgaris L.	Common groundsel	NI*	X	X
Sidalcea calycosa M. E. Jones ssp. calycosa	Annual checker mallow	OBL	X	
Triphysaria eriantha (Benth) Chuang & Heckard (synonym: Orthocarpus e.)	Butter and eggs	NL	X	
Triteleia hyacinthina (Lindley) Greene (synonym: Brodiaea h.)	White brodiaea	FACW*	X	
Veronica peregrina L. ssp. xalapensis (Kunth) Pennell	Purselane speedwell	OBL	X	
Vicia sativa L.	Common Vetch	FACU		X
Vulpia myuros (L.) Gmel.	Rat-tail fescue	FACU*		X

[a]No plants found on the project site are currently listed or proposed for listing as protected under federal, state, or other legislation.

[b]Scientific nomenclature follows The Jepson Manual: Higher Plants of California (Hickman et al., 1993).

[c]Common names are taken from the National List of Plant Species that Occur in Wetlands: California (Region O) (Reed 1988).

[d]Categories are taken from the National List of Plant Species that Occur in Wetlands: California (Region O) (Reed 1988). Acronyms are the following: OBL = obligate wetland plant; FACW = facultative wetland plant; FAC = facultative plant; FACU = facultative upland plant; NL = not listed, usually presumed to be upland; NI = insufficient data for listing. A positive sign (+) indicates a frequency toward the higher end of the category, and a negative sign (-) indicates a frequency toward the lower end of the category. An asterisk (*) indicates that the species may belong in another category and that more information is needed.

in the spring, the vegetation follows the receding waterline. By early summer, the vernal pools are usually completely dry and the vegetation withered and brown. The vernal pools are variable in size and shape. The depths of the pools vary, but are usually no more than a few feet lower than the surrounding landscape. In dry years, the pools may not contain any water.

The outermost vegetation zone around the vernal pools is similar to the nonnative grassland described above, since the pool areas have been regularly plowed to reduce fire risk in the vicinity. The pool areas hold open water for a short period (several weeks to several months), but soon become covered by vegetation able to survive for a time with submerged roots. Flat-face downingia (*Downingia pulchella*), loosestrife (*Lythrum* spp.), and toad rush (*Juncus bufonius*) are usually abundant. As the pools dry, plants such as woolly-heads (*Psilocarphus* spp.), slender popcorn flower (*Plagiobotrys stipitatus*), and purselane speedwell (*Veronica peregrina*) begin to grow vigorously as ground is exposed by evaporating water. Most of the species observed in and around the vernal pools are annuals. However, a few perennial species were present, including white brodiaea (*Triteleia hyacinthina*) and blue dicks (*Dichelostemma capitatum*).

No Northern Hardpan Vernal Pool Community is found on the proposed project site. In the western portion of the study area are seven small vernal pools totaling 1.2 acres. The closest is about 300 feet west of the proposed parking/lay-down area. These areas are identified on Figure 6.4-2.

Areas Void of Vegetation. Several small areas on the project site contain areas that are bare of vegetation. Most notable is a shallow (1 to 3 feet deep), narrow (5 to 15 feet wide) drainage ditch that drains surface water to the west across the center of the project site. At the east end of the site a small ditch from the south and one from the north join to form the larger west drainage ditch.

At the east end of the proposed plant site are several minuscule depressions that may have resulted from the construction of the adjacent railroad or road. The areas remain clear of vegetation because they are regularly traversed by vehicles or are incidentally cleared because of their proximity to areas maintained as railroad right-of-way.

6.4.2.2 Existing Aquatic Resources. No perennial water bodies occur onsite. No fish or other major aquatic resources are present. However, depressions, an artificial pond, a drainage ditch, and roadside ditches onsite may contain water during the rainy season (November through March).

6.4.2.2.1 Wetlands. Wetlands are special environmental features that are considered to be important habitat for a variety of plants, waterfowl, and other wildlife. In addition, wetlands function to slow surface water runoff, contribute to groundwater recharge, aid in the removal of some pollutants from surface waters, and provide for a variety of recreational activities. Because wetlands provide such a wide range of functional values, federal and sometimes state regulations have been legislated to minimize the impacts to these areas.

Wetlands receive no statewide legislated protection in California and, although several state and local laws exist that provide varying levels of protection to wetlands in specified areas, none of these affect the proposed project site. Consequently, the only wetlands regulations affecting the project site are administered by the Environmental Protection Agency under the Clean Water Act and regulated and authorized by the US Army Corps of Engineers (COE).

At this time no permits have been submitted to the COE to authorize construction activities at the project site.

Wetlands survey methods. The project site was assessed for the presence of federal jurisdictional wetlands following the guidelines provided in the *Corps of Engineers Wetlands Delineation Manual* (Environmental Laboratory, 1987; hereafter referred to as the 1987 Manual). A field survey of the study area was conducted May 10-12, 1993, toward the end of the spring growing season. While the area was being evaluated for wetlands, as is outlined in the 1987 Manual, the characteristics of vegetation, soils, and hydrology were examined.

Vegetation. Vegetation at the study area is essentially distributed in two communities according to Holland (1986): (1) Nonnative Grasslands and (2) Northern Hardpan Vernal Pools. The components of these communities are discussed in Subsection 6.4.2.1; the species observed are listed in Table 6.4-1. Table 6.4-1 also lists the wetland status of each species according to the US Fish and Wildlife Service in the *National List of Plant Species that Occur in Wetlands: Region 0* (Reed 1988). Vegetation in an area is considered hydrophytic if under normal circumstances more than 50 percent of the dominant species are categorized as facultative plants (FAC) or wetter categories according to Reed (1988).

Soils. Soils considered hydric (of a wetland type) for the purpose of wetlands determination are primarily those listed by the Soil Conservation Service in *Hydric Soils of the United States* (National Technical Committee for Hydric Soils 1991). Some exceptions are made for sandy soils and other special cases. Soils were

examined by using both soil pits and a 1 inch diameter hand soil coring device. Munsell charts were used to determine soil colors (Munsell Color 1990).

The Soil Conservation Service maps only one soil type for the study area, San Joaquin silt loam (USDA 1991). This soil is not considered a hydric soil by the National Technical Committee for Hydric Soils (1991). The soil is fine textured (silt loam), medium colored (10YR 6/4 to 4/4), and has very slow permeability. The typical profile of the San Joaquin silt loam includes a shallow, almost impermeable hardpan. In the vernal pool areas, the hardpan is usually less than 10 inches below the surface; whereas, on the more elevated areas, the hardpan was often in excess of 20 inches below the surface. No other soils were observed during the wetlands survey.

Hydrology. Hydrology requirements are typically satisfied by specified periods of inundation, dependent on an array of local conditions. On the study area, no areas are so consistently inundated as to meet the requirements outlined by the 1987 Manual.

Surface water drainage on the study area is facilitated by two small ditches at the east end of the area, one draining to the south and the other draining to the north. These two ditches meet and drain to the west across the center of the study area (Figure 6.4-2). These ditches are constructed across lands that are otherwise upland and, therefore, are not expected to be subject to COE permitting. In addition to the ditches, several small depressions border the roads and railroad on the east side of the project site. These features are considered the result of past construction activities. They do not in any fashion meet the 1987 Manual wetland criteria and would not appear to meet the intent for which the regulations were legislated.

Descriptions and distribution of jurisdictional wetlands. The 1987 Manual specifies that for wetlands to be considered jurisdictional under normal conditions, all three criteria (vegetation, soils, and hydrology) must be met. At the study area, no points exist where all three criteria can be satisfied. The soils criterion, for instance, cannot be met anywhere on the study area. The hydrology criteria can be met in some years (1992-1993 because of the wet winter season), but not in others because of extremes in weather conditions. However, the 1987 Manual makes exceptions for wetlands that are referred to as "Problem Areas." Problem Area wetlands are ones in which one (or more) criterion may be periodically lacking because of normal seasonal or annual variation in environmental conditions that result from causes other than human activities or catastrophic natural events. Vernal pools that are found in the

study area fall into this Problem Area category and are subject to COE regulation, despite the fact that they do not meet all three wetland criteria.

Seven vernal pools were found in the study area, but none is located on the proposed plant site or in the construction parking/lay-down area. The locations of these vernal pools are identified on Figure 6.4-2, and the area of each is equivalent to the areas identified as Northern Hardpan Vernal Pool Community. The largest vernal pool covers an area of 0.39 acre and the smallest 0.08 acre. Together, the seven pools cover an area of 1.2 acres.

The vernal pool areas are dominated by herbaceous annual plants that initiate growth during the late fall wet season and complete their life cycle by late spring as the areas dry. A description of the plant community found in the vernal pools is included in Subsection 6.4.2.1.

6.4.2.2.2 Invertebrates. In California the most characteristic and conspicuous animals of temporary waters are vernal pool invertebrates, such as freshwater shrimp. Freshwater shrimp are large, non-cladoceran, freshwater branchiopods (phyllopods). These invertebrates hatch in ephemeral pools during the rainy season. They grow, mate, and lay eggs, which encyst as the pools dry up. These encysted eggs will persist until the following season.

From January through April 1993, Ebasco Environmental performed field surveys for vernal pool invertebrates on the project site, the field west of the site, and along accessible portions of the transmission line corridor (Ebasco Environmental 1993b). Any pools of water encountered were sampled using a handheld dipnet of 27 cm diameter and 1 mm mesh size. Sampled areas included ditches, tire tracks, or any depression containing water. The field surveys found the vernal pool invertebrates in a variety of nonvernal pool habitats including roadside ditches, bulldozer scrapes, and muddy tire tracks.

Two species of freshwater shrimp were found in the project area. The vernal pool fairy shrimp (*Branchinecta lynchi)* and the California linderiella (*Linderiella occidentalis*) were found at several localities on the proposed plant site. No freshwater shrimp were found in the drainage ditch crossing the site, or in the pond east of the existing parking lot (Figure 6.4-3). *B. lynchi* were found in two roadside ditches east side of the proposed plant site and in five pools along the railroad tracks on the northern boundary of the site (Figure 6.4-3). *B. lynchi* also were found in vernal pools north of the drainage ditch in the field west of the project site. No freshwater shrimp were found during the March and April 1993 surveys (E. J. Koford 1993a).

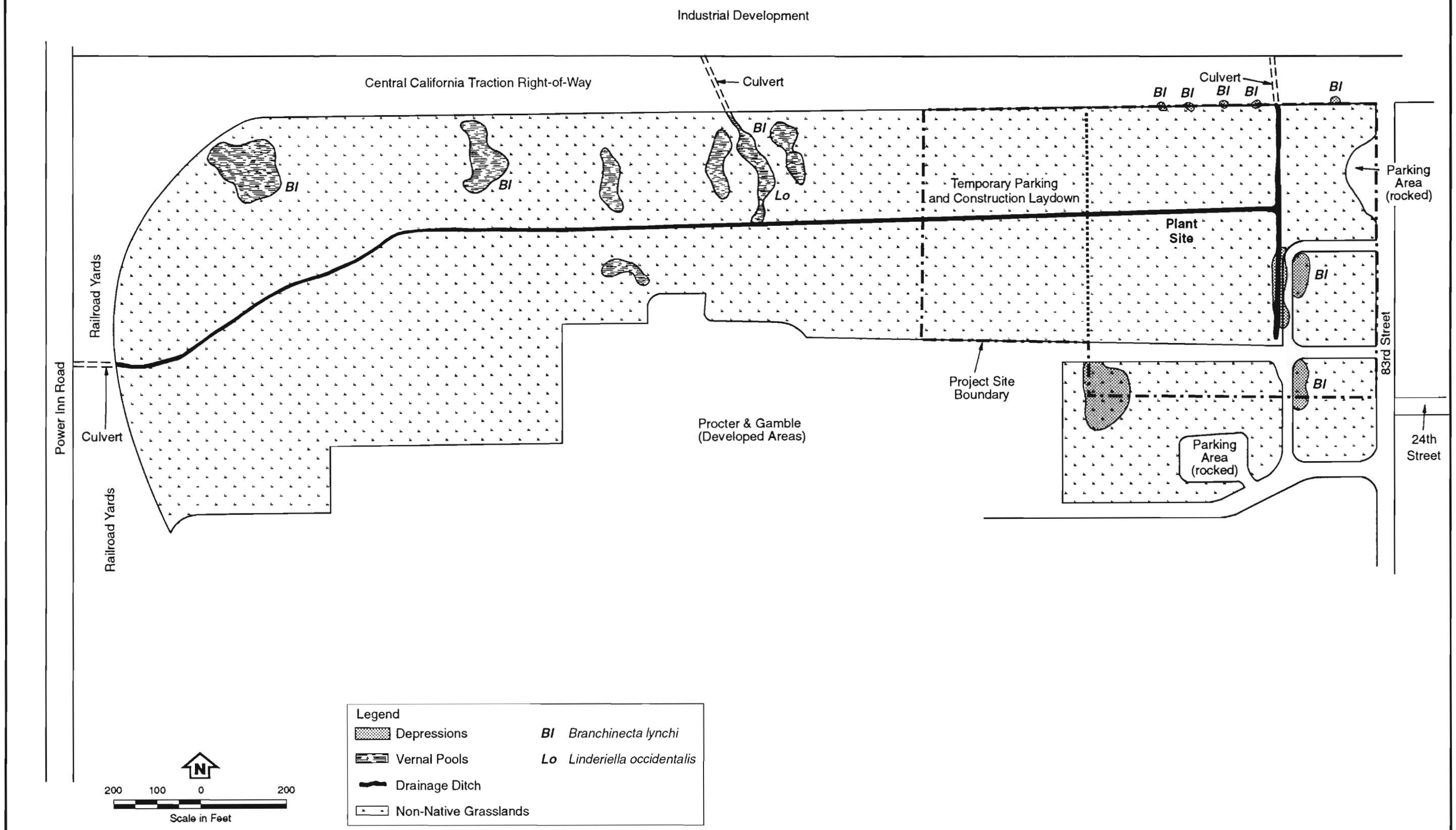

LOCATIONS OF FAIRY SHRIMP IN THE STUDY AREA

Figure 6.4-3

6.4.2.3 Existing Wildlife Resources. Data from onsite wildlife surveys and the available literature were used to characterize regional and project site wildlife. Dames & Moore (1992) completed a field survey on March 11, 1992, for nesting raptors within 0.25 mile of the proposed project and completed an onsite spring breeding bird survey on May 20, 1992. General wildlife observations, including observations of foraging raptors, were also recorded during botanical/wetland investigations conducted March 30 and September 29, 1992. Black & Veatch biologists conducted additional field surveys of the site from May 10 to May 12, 1993, to supplement the Dames & Moore (1992) investigation. In addition, Ebasco Environmental (1993c) performed additional field surveys on May 11, 1993 to confirm and update the information provided in the 1992 Dames & Moore report.

The focus of the literature review and field surveys was to identify the potential occurrence of sensitive wildlife resources, such as state and federally listed threatened and endangered species, candidate species for threatened and endangered status, and state species of special concern. A search of the California Natural Diversity Data Base (CNDDB) for the Sacramento East topographic map, which is maintained by the California Department of Fish and Game (CDFG), was completed in 1992 (Dames & Moore 1992) and for the Sacramento East and Carmichael topographic quadrangles in May 1993. The US Fish and Wildlife Service (USFWS), CDFG, and CEC staff were also consulted on the potential occurrence of protected species in the area.

The grassland and vernal pool habitats found in the study area are of limited value to wildlife because of the small area involved and the industrial and commercial activities that occur locally. The land has been previously disturbed and is frequently disced for fire control. Free-roaming domestic dogs (*Canis familiaris*) and cats (*Felis catus*), common in urban settings such as the project vicinity, pose additional problems of predation and harassment for urban wildlife. Wildlife observed in the study area included species adapted to human disturbances and are common to annual grassland habitats in the Sacramento Valley. Species observed or potentially occurring in the project area are identified in Dames & Moore (1992) and include California quail, western meadowlark, blacktailed jackrabbit, and opossum (*Didelphis marsupialis*).

Although vernal pools typically attract and support a variety of wildlife, no vertebrate species are restricted to these habitats (Zedler 1987). Several species of migrating waterfowl and shorebirds are generally attracted to vernal pools and other wetland habitats for foraging, but the extensive urban development surrounding the

project makes the pools and drainage ditch less desirable to these birds that use it infrequently. Dames & Moore (1992) reported a greater yellowlegs (*Tringa melanoleuca*) onsite during their March 30, 1992 survey.

6.4.2.4 Species of Special Concern. The following describes the species of special concern that occur in the study area and the project site.

6.4.2.4.1 Botanical species of special concern. Botanical species of special concern include plants that are (1) federal and state listed as rare, threatened, or endangered, (2) federal and state candidates for listing, (3) California Native Plant Society (CNPS) listed species, (4) qualified as "rare" in the California Environmental Quality Act (Section 15380), and (5) important commercial or recreational species.

Before any field surveys were conducted, a literature search for records of the occurrence of plants of special concern either on the project site or in the vicinity was conducted in 1992 by Dames & Moore and again in 1993 by Black & Veatch biologists. A search was made of the Sacramento East Quadrangle (U.S.G.S 1:24,000 topographic series) in the CNDDB and the CNPS *Inventory of Rare and Endangered Plants* (1988). The species of special concern that could potentially occur on the project site are listed in Table 6.4-2.

Upon completing the literature search, Dames & Moore (1992) conducted a field survey of the project site on March 30, 1992, and Black & Veatch conducted a similar survey May 10 to 12, 1993. The species encountered during these surveys are listed in Table 6.4-1. No species were encountered which are considered species of special concern as defined above. However, this was not surprising, given the highly degraded condition of the habitat present on the project site.

6.4.2.4.2 Aquatic species of special concern. Four species of fairy shrimp (*Branchinecta lynchi, B. conservatio, B. longiantennae*, and *Linderiella occidentalis*) and the vernal pool tadpole shrimp (*Lepidurus packardi*) were proposed for federal endangered status on May 8, 1992. Only *Lepidurus packardi* is not endemic to California.

These freshwater shrimp were originally observed in vernal pool habitats, where a high degree of endemism is common among plants and insects. Such waters are often very small and because the freshwater shrimp are seasonal, they are often overlooked. Freshwater shrimp are found in a diversity of habitats. Two factors seem to be important in controlling their distribution: (1) the chemical nature of the habitat, and (2) the thermal variations resulting from pools filling at different seasons and from the distribution of pools along altitudinal and latitudinal gradients (Belk 1977).

Table 6.4-2
Plant Species of Special Concern Occurring in Sacramento County, California*

Species	Federal Status**	California Code of Regulations	California Native Plant Society***
Aster chilensis var. lentus	Category 2	None	List 1B
Cuscuta howelliana	Category 3C	None	List 4
Dichelostemma lacuna-vernalis	Category 3C	None	List 4
Downingia humilis	Category 3C	None	List 1B
Eryngium pinnatisectum	Category 2	None	List 4
Gratiola heterosepala	Category 2	Endangered	List 1B
Hibiscus californicus	Category 2	None	List 1B
Juglans hindsii	Category 2	None	List 1B
Lathyrus jepsonii ssp jepsonii	Category 2	None	List 1B
Legenere limosa	Category 2	None	List 1B
Lilaeopsis masonii	Category 2	Rare	List 1B
Navarretia eriocephala	None	None	List 4
Oenothera deltoides ssp. howellii	Endangered	Endangered	List 1B
Orcuttia tenuis	Category 1	Endangered	List 1B
Orcuttia viscida	Category 1	Endangered	List 1B
Plagiobothrys hystriculus	Category 2	None	List 1B
Quercus lobatus	None	None	List 4
Sagittaria sanfordii	Category 2	None	List 3

*No Species of Special Concern were found in the study area or project site.

**Federal Status

Category 1 = Currently listed.

Category 2 = Federal status, threat and/or distribution data are insufficient to support federal listing.

Category 3 = Federal status: withdrawn from federal listing; too widespread and/or not threatened.

***California Native Plant Society

List 1B = Rare, threatened, or endangered in California and elsewhere.

List 3 = More information is needed about plant; under review.

List 4 = Limited distribution; watch list.

Branchinecta conservatio, B. longiantennae, and *Lepidurus packardi* were not found onsite. The former two species are not known to occur in the project area. In 1992, *Lepidurus packardi* was found approximately 0.5 mile south of the project site. Both *B. lynchi* and *Linderiella occidentalis* were found in nonvernal pool habitats (roadside ditches, bulldozer scrapes, and muddy tire tracks) even though vernal pools occur in the project area. Only *B. lynchi* was found onsite; *L. occidentalis* was found in the transmission line corridor. *B. lynchi* is found rather widely in grassland habitats in California; it is not abundant anywhere and often is found with *L. occidentalis.* Both species occur at temperatures between 6 and 20° C in soft, poorly buffered waters with an average pH of 7 (Eng et al. 1990). The project area occurs in the Central Valley region where both species of fairy shrimp predominantly occur. There is nothing unique about the habitat characteristic of the site.

No wetland plant species of special concern were found during onsite surveys conducted in 1992 and 1993. Wetland plant species of special concern are discussed in more detail with the other botanical resources of special concern in Subsection 6.4.2.4.1.

6.4.2.4.3 Wildlife species of special concern. Wildlife species of special concern include sensitive species and important commercial and recreational species. Sensitive species include those animals that are (1) federal and state listed as rare threatened, endangered, or species of special concern, (2) fully protected species, and (3) federal and state candidates for listing.

Sensitive species that could potentially occur on the project site (Table 6.4-3) were identified through a search of the CNDDB, consultations with the CEC, CDFG, and USFWS, and evaluation of onsite habitats. Dames & Moore (1992) completed several field surveys (March 11 and 30, May 29, and September 29,1992). A field survey was performed on March 11, 1992, for nesting raptors within 0.25 mile of the proposed project. An onsite spring breeding bird survey was completed on May 20, 1992. General wildlife observations, including observations of foraging raptors, were also recorded during botanical/wetland investigations conducted March 30 and September 29, 1992. Black & Veatch biologists conducted additional field surveys of the site from May 10 to May 12, 1993, to supplement the Dames & Moore (1992) investigation. In addition, Ebasco Environmental (1993c) performed additional field surveys on May 11, 1993 to confirm and update the information provided in the 1992 Dames & Moore report.

Table 6.4-3
Sensitive Terrestrial Wildlife Species Potentially Occurring in the Procter & Gamble Cogeneration Project Area, Sacramento County, California*

Species	Federal Status**	California Status***
Invertebrates		
Valley elderberry longhorn beetle (Desmocerus californicus dimorphus)	T	None
Amphibians		
California tiger salamander (Ambystoma californiense)	Category 2	CSC
Western spadefoot toad (Caphiopus hammondi hammondi)	Category 2	CSC
Reptiles		
Northwestern pond turtle (Clemmys marmorata marmorata)	Category 2	CSC
Birds		
Swainson's hawk (Buteo swainsoni)	None	ST
Northern harrier (Circus cyaneus)	None	CSC
Cooper's hawk (Accipiter cooperi)	None	CSC
Burrowing owl (Speotyto cunicularia)	None	CSC
Bank swallow (nesting colony) (Riparia riparia)	None	ST
Tri-colored blackbird (Agelaius tricolor)	Category 2	CSC
Mammals		
Pacific western big-eared bat (Plecotus townsendii townsendii)	Category 2	CSC

*No Species of Special Concern were found in the study area or project site.

**Federal status.

T = Threatened.

Category 2 = Federal status, threat and/or distribution data are insufficient to support federal listing.

***California status.

ST = Threatened.

CSC = California Department of Fish and Game Species of Special Concern.

On the basis of an analysis of available habitats, the Swainson's hawk (state threatened) and the burrowing owl (species of special concern) are the only vertebrate species of special concern that may find potentially suitable habitat onsite. The Swainson's hawk once occurred throughout the Sacramento Valley of California, but agriculture and urban development has resulted in significant losses to available foraging and nesting habitat. The Swainson's hawk forages over open grasslands and agricultural areas typically within about 10 miles of an active nest site (Estep 1989) for small mammals, birds, and insects (Palmer 1988). They nest in large trees typically in the vicinity of water, but nesting sites can include lone trees, oak groves, and roadside trees (Bloom 1980; Estep 1989). Information on Swainson's hawk nests within 10 miles of the site has been requested from the CDFG (Koford 1993b); no formal response has been received. The CDFG has indicated that since the project is in the midst of extensive urban development and surrounded on all sides by industry and other buildings, the project site is not likely to be desirable foraging habitat, nor is there likely to be any appropriate nesting habitat in the immediate project area (pers. commun., CDFG, June 20, 1993). No Swainson's hawk nests were found within 0.25 mile of the project site, nor were any individuals observed in the area during any of the surveys.

The burrowing owl is also an inhabitant of open grasslands and was once relatively common throughout the valley. The burrowing owl depends on open grassland to produce small mammals and insects upon which it feeds. The owl is also dependent on burrows created by small mammals, such as the California ground squirrel, for nesting habitat. Although they are known to use noisy, disturbed areas such as roadways and railroad rights-of-way, agriculture and urban development as well as control of burrowing rodents has caused localized extirpations of this species.

Although California ground squirrels were observed in the study area by Dames & Moore (1992) and CEC staff (Anderson 1993) in 1992, no burrowing owls or their burrows were observed on the project site or in the study area by Dames & Moore, Ebasco Environmental, or Black & Veatch biologists during surveys conducted in 1992 and 1993. An unconfirmed sighting of a burrowing owl perched on the Procter & Gamble fence near the south end of the site has been reported by a Procter & Gamble security guard to the CEC staff (Anderson 1993). In 1990, Koford reported to the CNDDB six burrowing owl burrows and at least 14 individuals along the artificial berms and levees edging the periphery of the Sacramento Army Depot near the junction of Fruitridge Road and Power Inn Road. Considering that the quality (the area is regularly disced and is surrounded by development) and quantity

of the project site habitat for burrowing owls is marginal at best, it is unlikely that the project site is used as nesting or foraging habitat by burrowing owls. However, their occurrence in the surrounding area and general tolerance for disturbance and disturbed habitats (Bent 1938; Zarn 1974; Thomsen 1971), suggest that it may be possible for burrowing owls to use the study area for foraging and possibly nesting if frequent habitat disturbances were curtailed and the vegetative community allowed to rejuvenate.

The northern harrier (CDFG species of special concern) was observed by Dames & Moore during its May 30, 1992, investigation along the project's transmission line corridor. Similar to the Swainson's hawk, the northern harrier is a raptor of open country habitats, but nests on the ground in sparse, shrubby open land or (more typically) marshy habitats. The northern harrier is not likely to use the project site for reasons similar to those for the Swainson's hawk.

Wayne White of the USFWS, by letter dated June 10, 1993, indicated that the following listed and candidate threatened and endangered species may occur in the project area: valley elderberry longhorn beetle (*Desmocerus californicus dimorphus*), California tiger salamander (*Ambystoma californiense*), western spadefoot toad (*Scaphiopus hammondi hammondi*), northwestern pond turtle (*Clemmys marmorata marmorata*), and Pacific western big-eared bat (*Plecotus townsendii townsendii*). Three species of freshwater shrimp also were identified and are discussed in Subsection 6.4.4.2.

None of the vertebrate species identified by the USFWS is expected to occur onsite because of lack of habitat and the general rarity of the species, nor were they observed during field investigations in 1992 and 1993. The valley elderberry longhorn beetle (federal threatened) is an obligate dependent on elderberry (*Sambucus* sp.) which is absent from the project area. This species is known to occur along the American River at a location which is over 4 miles north of the project site (CNDDB). Both the California tiger salamander and western spadefoot toad are fossorial species found in grasslands and open woodlands in areas that have large temporary ponds, such as vernal pools, on which they are dependent for breeding (Zedler 1987; Behler and King 1989). The California tiger salamander is extremely rare and may be extinct. Habitat in the project study area is likely to be too disturbed from frequent discing, and the temporary wetlands too small, to support these species. The northwestern pond turtle may be extinct, but its historical habitats include areas of permanent water such as streams, rivers, ponds, and lakes with abundant vegetation (Behler and King 1989). This habitat is absent from the project

site. The closest area containing these habitats is the American River. The Pacific western big-eared bat occupies a variety of habitat types including coastal conifer and broad-leaf forests, oak and conifer woodlands, and arid grasslands (Barbour and Davis 1969; Williams 1986). However, it is most common in mesic sites (Kunz and Martin 1982) in areas that contain undisturbed roosting, maternity, and hibernacula sites. Roosting sites in California primarily include caves, lava tubes, and mine tunnels; but, like many other western species, they have been found to regularly use buildings and other man-made structures as night roosts (Barbour and Davis 1969, Williams 1986). No bats were reported by Dames & Moore or observed by Black & Veatch or Ebasco Environmental biologists. The site does not support any appropriate roosting sites and, because of the high degree of disturbance, is considered to be of limited value as foraging habitat if any are present in the area.

The CNDDB files contained records of three other species of special concern in the Sacramento East and Carmichael quadrangle search area: Cooper's hawk (*Accipiter cooperi*), bank swallow (*Riparia riparia*), and tri-colored blackbird (*Agelaius tricolor*). None of these species is expected to occur onsite because of the lack of suitable habitat. Cooper's hawk (California species of special concern) is a woodland species that nests mainly in wooded riparian habitats. Tri-colored blackbird (California species of special concern) nests colonially in the vicinity of freshwater marshes and prefers dense growths of cattails and tules. Bank swallow (California state threatened) nests on silty vertical stream and river banks, cut and cleaned by flowing water. None of the above habitats is present onsite or in the immediate project area. The closest areas that might support these habitats and these species are along the American River, more than 2 miles north of the site.

No fully protected species have been observed onsite. Mourning dove (*Zenaida macroura*) and California quail occur on the project site. These species offer no real recreational value because hunting within the city limits would be dangerous and probably prohibited. In addition, the numbers of animals supported by the site are very low.

6.4.2.5 Construction Impacts. The following describes anticipated project-related construction impacts on biological resources.

6.4.2.5.1 Botanical resources. The plant site and temporary parking/lay-down area include approximately 15 acres of nonnative grassland that is regularly disced to reduce the fire hazard in the area, and control the growth of certain undesirable weeds, such as yellow star thistle. Although construction activity will effectively eliminate this plant community from the plant site, the loss should be considered

locally and regionally insignificant from a botanical resources viewpoint. All natural botanical attributes of the project site were lost in the past. Vegetation on the temporary parking/lay-down area would be disturbed during project construction, but would be expected to return after construction is completed.

6.4.2.5.2 Aquatic resources. Construction of the project will permanently impact about 10 acres of a highly disturbed grassland containing a portion of a drainage ditch and an artificial pond and roadside ditches. An additional 5 acres of disturbed grassland immediately west of the project site will be used for temporary construction laydown and parking. The vernal pools west of the lay-down/parking area will be avoided. No wetland communities occur on the project site.

6.4.2.5.3 Wildlife resources. As indicated above, construction of the project will disturb about 15 acres (10 acres for the plant and 5 acres for laydown and parking) of annual grassland habitat and a drainage ditch. Disturbance of these habitats will displace resident wildlife species, including black-tailed jackrabbit, western meadowlark, and California quail. These species are common in the area and the loss of habitat is not considered significant.

Although the permanent loss of 10 acres and the temporary loss of 5 acres of annual grassland would reduce available foraging habitat for several species of raptors, including the red-tailed hawk and potentially the burrowing owl (discussed in greater detail below), the loss is not considered significant for several reasons: the quality of habitat is very low because of the surrounding industrial and commercial development, the quantity of habitat lost is very small, and more suitable foraging habitat is available to the east and south of the project. In addition, site surveys did not indicate any significant use of the project site by raptors.

Increased construction traffic may result in an increase in wildlife mortality from road kills. Noise and other human disturbance may discourage the use of adjacent areas for foraging or nesting by species such as the western meadowlark and California quail; however, these impacts will be localized and will not affect regional populations.

6.4.2.5.4 Rare, threatened, and endangered species, and species of special concern. The plants found on the project site do not include any species that are rare, threatened, endangered, of special concern, or otherwise protected; therefore, no adverse impacts to protected plants are expected. No wetland plant species of special concern occur on the project site; consequently, none will be impacted by construction.

None of the vernal pools in which the freshwater shrimp were found occur onsite. Vernal pools lie west of the project site; one of these pools is about 300 feet west of the proposed parking/lay-down area. These pools are not expected to be impacted by construction. Two roadside depressions in which the freshwater shrimp were found onsite will be permanently impacted.

No listed wildlife are expected to be significantly affected by project construction. Given the disturbed, low quality nature of the project site and surrounding habitat, Swainson's hawk is not expected to use the project site for foraging or nesting. Thus, loss of onsite habitat is not expected to adversely impact Swainson's hawk. No other state or federally listed threatened, endangered, or candidate vertebrate wildlife species would be affected by the project.

Although no burrowing owls or their burrows were observed during site surveys, they are known to nest on the Sacramento US Army Depot. This proximity to the project and an unconfirmed sighting on Procter & Gamble property near the project suggest that burrowing owls may use the project site for foraging. If they occur onsite, project construction would disturb about 15 acres (10 acres for the plant and 5 acres for laydown and parking) of available foraging habitat; however, historical disturbances and urban growth pressures in the project vicinity limit the value of onsite habitat for foraging. In addition, the rarity of ground squirrel (a primary source of burrows for the burrowing owl) onsite also minimize the project site's value as nesting habitat.

6.4.2.6 Operation Impacts. This subsection describes anticipated operational impacts on the biological resources on the project site.

6.4.2.6.1 Botanical resources. Project-related impacts on botanical resources will be limited to the construction period as previously described. Operation of the facility is not expected to have any significant local or regional effects on vegetation in the project study area and surrounding vicinity.

6.4.2.6.2 Aquatic resources. No additional impacts will occur during operation. No significant impacts to local aquatic ecosystems are expected to result from project-related stack or vehicle emissions, cooling tower blowdown and drift, waste-water discharges, or storm water runoff. No known future developments will result from locating the project at the proposed site.

6.4.2.6.3 Wildlife resources. Most impacts on wildlife result from the loss of habitat which occurs during construction. Project operation could result in increases in noise levels from the project turbines and disturb wildlife using lands adjacent to the project. Given the industrial nature of the surrounding land uses, however,

species occurring in the area are generally expected to adapt to the new development. Buildings and other structures associated with the plant will provide additional habitat for wildlife characteristic of urban habitats such as Norway rats (*Rattus norvegicus*) and house sparrows rather than wildlife characteristic of annual grasslands.

6.4.2.6.4 Rare, threatened, and endangered species, and species of special concern. No protected or otherwise important plant species were identified on the project site or in the vicinity. Therefore, operational activities will have no impact on such plants.

No listed aquatic species are expected to be significantly affected by project operation. Any project impacts on the freshwater shrimp will occur with the initiation of construction.

No listed wildlife species are expected to be significantly affected by project operation. Most project effects on wildlife are the result of habitat loss which occurs with the initiation of construction. The Swainson's hawk is not expected to occur on the project site and thus will not be affected by project operation.

The burrowing owl is relatively adaptable to a variety of degraded habitat conditions and can tolerate many urban and industrial noises and disturbances. For instance, individuals have been found along railroad rights-of-way and road corridors. Considering these factors, the burrowing owl is not expected to be significantly affected by project operation.

6.4.2.7 Biological Resources Cumulative Impacts. No wetlands or perennial water bodies occur onsite. Consequently, no cumulative impacts on wetlands or perennial water bodies are expected. No fish or other major aquatic resources are present onsite. The only species of concern are the freshwater shrimp.

Much of the freshwater shrimp habitat in California has been lost through urbanization and agricultural, water, and energy development. All of the endemic species of freshwater shrimp occurring in the Central Valley region are threatened because of extreme rarity and ongoing habitat loss. The three species of freshwater shrimp that were found in the project area are threatened, because rapid urbanization and agricultural conversion is occurring where historical use was limited to grazing. The natural habitat of these freshwater shrimp in the project vicinity was destroyed prior to the project by industrial development. This project will not affect the survival of these species, which were found in roadside ditches, tire tracks, and bulldozer scrapes onsite. No known future developments will result from locating the project at the proposed site.

Most, if not all, of the available wildlife habitat and the associated native flora onsite and in the project vicinity generally has been lost to residential and industrial developments to a point where only a small vestige of available habitat remains. Development in the vicinity is likely to occur with or without the proposed power plant. Redevelopment of the US Army Depot may contribute to the loss of open land habitats in the project vicinity. Considering the relatively small quantity, marginal quality, and limited wildlife use of onsite terrestrial habitat, it is not likely that project construction and operation will contribute significantly to the cumulative effects of local development on terrestrial resources.

6.4.2.8 Mitigation. This subsection discusses mitigation for project construction and operation impacts.

6.4.2.8.1 Botanical resources. The plant community on the project site is highly disturbed and composed primarily of nonnative species. In addition, no protected or otherwise significant species occur on the site. Under these circumstances, mitigation for botanical resources is not necessary.

6.4.2.8.2 Aquatic resources. Construction and operation personnel will avoid areas where vernal pool invertebrates are known or expected to occur. Various soil erosion control practices will be implemented during construction to minimize impacts to the pools. A temporary fence which will be installed around the project site will protect the vernal pools west of the project site and the depressions along the railroad tracks. Mitigation may be required for the loss of freshwater invertebrate habitats onsite. If deemed necessary, SCA will participate in an offsite mitigation program.

6.4.2.8.3 Wildlife resources. Because the value of onsite habitat is low and the species that use the site are primarily common species present throughout the area, no mitigation for most wildlife species is required.

The burrowing owl, however, which is a California species of special concern, may be affected by project construction and operation through the unavoidable loss of 10 acres of potential habitat. If deemed necessary, SCA will participate in an offsite mitigation program.

6.4.3 Transmission Line

The project will be interconnected with SMUD's existing transmission system by looping into the existing 230 kV Hedge to Hurley transmission line, which generally runs southeast to northwest approximately 1.2 miles east of the project site (Figure 3.15-1). The proposed route for this loop-in briefly heads north out of the site

before turning east to intersect and tie into the 230 kV Hedge to Hurley transmission line.

On March 30, 1992, Dames & Moore conducted a field survey along a 200 foot wide corridor of the transmission line to identify potential biological resources. Ebasco Environmental (1993a,b) also performed surveys in conjunction with vernal pool invertebrate investigations on January 27, February 1 and 3, March 3 and 19, and April 23, 1993. In addition, Ebasco Environmental (1993c) performed field surveys on May 10 and 11, 1993 to confirm and update the information provided in the Dames & Moore (1992) report.

6.4.3.1 Existing Botanical Resources. The transmission line corridor is in an area that includes existing heavy industrial facilities and light commercial activities. Most of the land previously has been disturbed and supports little, if any, native vegetation. Many areas have been disced several times to control yellow star thistle. Introduced exotic tree and grass species also are present along the corridor.

On March 30, 1992, Dames & Moore conducted a field survey along a 200 foot wide corridor of the route to identify potential wetland areas, rare plants, and oak trees greater than 6 inches diameter (at breast height; dbh). Due to access problems, surveys were not conducted on the last 40 percent of the transmission line corridor.

The existing vegetation/habitat types along the corridor consist of cropland, urban, and annual grassland. The cropland vegetation includes a variety of plants, including field corn, alfalfa, and strawberries. In combination with barren areas, the urban vegetation can be found in five types of vegetative structure: tree grove, street strip, shade tree/lawn, lawn, and shrub cover. The annual grassland habitats are composed primarily of nonnative herbaceous plant species as described in Subsection 6.4.2.1. Eucalyptus trees occur along the corridor adjacent to these grasslands (Dames & Moore 1992).

Several valley oaks (*Quercus lobata*) were observed approximately 200 feet north of the western end of the proposed transmission route. Because they were outside of the transmission line corridor, they were not counted or measured (Dames & Moore 1992). A list of plant species can be found in the Dames & Moore (1992) survey.

6.4.3.2 Existing Aquatic Ecology Resources. The following describes the aquatic ecology resources that occur along the transmission line corridor.

6.4.3.2.1 Wetlands. On March 30, 1992 Dames & Moore conducted a field study along a 200 foot corridor of the transmission line to identify potential wetland areas. A short drainage ditch that intermittently fills with water is present along the

transmission corridor. Approximately 6 feet of fill has been added to the original ground surface immediately adjacent to the ditch. This additional soil may have contributed to the creation of the small vegetated wetland area or could have eliminated a larger, previously existing wetland (Dames & Moore 1992). No other wetlands were confirmed along the proposed transmission line corridor (Ebasco Environmental 1993a,b).

The dominant species of hydrophytic vegetation in the wetlands area included toad rush (*Juncus bufonius*), Italian ryegrass (*Lolium multiflorum*), and three obligate wetland plants: buttercup (*Ranunculus bonariensis* var. *trisepalus*), flowering quillwort (*Lilaea scilloides*), and slender popcorn flower (*Plagiobothrys stipitatus* var. *micranthus*) (Dames & Moore 1992).

6.4.3.2.2 Invertebrates. Ebasco Environmental (1993b) on January 27 and February 1 and 3, 1993, walked the accessible portions of the transmission line corridor. Any pools of water encountered were sampled using a handheld dipnet of 27 cm dipnet and 1 mm mesh size. Between the site and Florin-Perkins Road, *Branchinecta lynchi* and *Linderiella occidentalis* were found in 13 of 21 depressions alongside and between the railroad tracks. (These railroad depressions are not considered jurisdictional wetlands.) A survey of the corridor on April 21-23 found only *Lepidurus packardi* (Ebasco Environmental 1993a). *B. lynchi* and *L. occidentalis* complete their life cycles by March or early April, while *L. packardi* can be found as long as pools last into late April or May.

6.4.3.3 Existing Wildlife Resources. Dames & Moore conducted several field surveys (March 11 and 30, May 29, and September 29, 1992) along the transmission corridor to identify and map the location of raptor nests, including Swainson's hawks (State threatened) and burrowing owl (CDFG Species of Special Concern) burrows. General wildlife use of the area was noted during the surveys. Due to access problems, surveys were not conducted on the last 40 percent of the transmission line corridor.

During the spring bird survey, a single inactive bird nest was identified near the corridor. The nest most likely had been used in the past by yellow magpies. A list of birds observed during the spring survey can be found in Dames & Moore (1992). No raptors were seen during the spring bird survey. No raptor foraging activity was observed during any of the surveys (Dames & Moore 1992). Amphibians and mammals were noted; no significant species occurred in the area. Subsection 6.4.2.3 and Dames & Moore (1992) contain discussions of the species of wildlife that occur along the transmission line corridor.

Ebasco Environmental (1993a,b) also performed wildlife surveys along the corridor on January 27, February 1 and 3, March 3 and 19, and April 23. In addition, Ebasco Environmental (1993c) performed field surveys on May 10, 1993 to confirm and update the information provided in the 1992 Dames & Moore report. These surveys confirmed the bird species reported by Dames & Moore (1992). The reported magpie nest was not found, but magpies were seen in the vicinity. No nests of Swainson's hawk or burrowing owl were found during field surveys.

6.4.3.4 Species of Special Concern. Eighteen known rare plants occur within Sacramento County. Only Sanford's arrowhead (*Sagittaria sanfordii*) has been found within the boundaries of the Sacramento East quadrangle map where the proposed project would be located (CNPS 1988). This species was not observed in the survey by Dames & Moore (1992). Valley oak is listed as a watch list species (List 4) in the CNPS Inventory, but is not listed or a candidate for listing by any state or federal agency. This species was observed outside of the transmission line corridor.

Ebasco Environmental (1993a,c) also surveyed the corridor for sensitive plant species. No rare, threatened, or endangered plant species was found.

No threatened or endangered species of aquatic species occur along the corridor. Among proposed endangered species, three species of freshwater shrimp are considered likely to occur (Ebasco Environmental 1993a,b).

No threatened or endangered wildlife species was identified by either Dames & Moore (1992) or Ebasco Environmental (1993a,c).

6.4.3.5 Impacts. The transmission line will be constructed in an area that includes heavy industrial facilities and light commercial activities. Most of the land previously has been disturbed and supports primarily exotic grasses and trees. Due to the noise of industrial/commercial activities and the predominance of nonnative vegetation, the value of wildlife habitat is low.

Construction of the transmission line will include the installation of power poles and the connection of the transmission line between the poles and the existing SMUD 230 kV line. Construction activities will be short-term and temporary and will require less than 5 days of activity in any single area. These activities will include temporary disturbance of existing vegetation, soil compaction by equipment, and increased noise.

Long-term operational impacts may include raptor collisions with the transmission line. A positive impact from the transmission line and towers may include additional perching areas for birds (Ebasco Environmental 1993a).

6.4.3.6 Mitigation. Wetland areas and vernal pools will be avoided during construction. Construction will occur during the dry portion of the year to ensure that wetlands/pools are impacted minimally. Transmission line poles will be placed appropriately to avoid wetlands and vernal pools.

A survey of the last 40 percent of the transmission line corridor will be initiated after property access rights are obtained and before construction activities begin. The west side of the property will be surveyed for potential burrowing owl habitat. The transmission tower islands will be surveyed for rare plants.

The temporary disturbances to raptors during construction can be timed to avoid their critical nesting seasons. Possible mitigation for transmission line impacts may include monitoring for collisions or installation of antidampening devices.

6.4.4 Fiber Optic Line

A fiber optic line, approximately 3.9 miles long, will be installed between the project site and the Hedge Substation on the proposed transmission poles. The fiber optic line will tie the proposed project to SMUD's existing communication system at the Hedge Substation. The fiber optic line will be supported by both the proposed transmission line and SMUD's existing transmission line to the Hedge Substation (Figure 3.15-1).

Ebasco Environmental (1993a) performed a biological survey along the proposed fiber optic communication line. Wildlife and vernal pool invertebrate surveys were performed on April 21 to 23, 1993. Wetland delineations and sensitive plant surveys were performed between April 23 and May 11, 1993. The survey area was a corridor 100 feet on each side of the fiber optic corridor center line for wetlands, threatened and endangered species and vegetation. The survey area was expanded to 0.25 mile on each side of the center line for raptors, particularly Swainson's hawks. The survey area overlapped in part with the area surveyed for the proposed transmission line corridor.

The information provided in Subsection 6.4.3 for the transmission line also applies to the section of the fiber optic line corridor from the plant site to the tie-in with the existing 230 kV Hedge to Hurley transmission line. Additional information also is provided in the Dames & Moore (1992) and Ebasco Environmental (1993a,b,c) studies.

6.4.4.1 Existing Botanical Resources. The fiber optic line corridor is in an area that includes existing heavy industrial facilities and light commercial activities. Most of the land previously has been disturbed and supports little, if any, native vegetation.

Many areas have been disced several times to control yellow star thistle. Introduced exotic tree and grass species also are present along the corridor.

On March 30, 1992, Dames & Moore conducted a field survey along a 200 foot wide corridor from the plant site to the existing 230 kV Hedge to Hurley transmission line to identify potential wetland areas, rare plants, and oak trees greater than 6 inches diameter (at breast height; dbh). Due to access problems, surveys were not conducted on the last 40 percent of the Procter & Gamble Cogeneration Project transmission line portion of the fiber optic communication line. Subsection 6.4.3.1 contains a description of the plant communities of the section of the fiber optic line corridor surveyed.

6.4.4.2 Existing Aquatic Ecology Resources. This subsection discusses the aquatic ecology resources along the fiber optic cable corridor.

6.4.4.2.1 Wetlands. On March 30, 1992 Dames & Moore conducted a field study along a 200 foot corridor from the plant site to the existing 230 kV Hedge to Hurley transmission line to identify potential wetland areas. A short drainage ditch that intermittently fills with water is present along the corridor. Approximately 6 feet of fill has been added to the original ground surface immediately adjacent to the ditch. This additional soil may have contributed to the creation of the small vegetated wetland area or could have eliminated a larger, previously existing wetland (Dames & Moore 1992).

Ebasco Environmental (1993a) delineated wetlands within 100 feet of the proposed fiber optic cable center line from April 26 through May 6, 1993. Wetlands were delineated according to the currently authorized manual for wetlands delineation (Environmental Laboratory 1987). The wetland indicator status was determined using the National List of Plant Species that occur in Wetlands: California (Region 0) (Reed 1988). Wetland types present in the survey area include: open water wetlands (primarily created farm ponds), emergent wetlands (created wetlands from road and railroad construction), vernal pools (natural depressions or created as a result of soil borrow or construction), stream corridors (Morrison Creek), and drainage features (primarily man-made ditches along fencelines).

Nineteen wetlands were identified along the proposed fiber optic line corridor. The wetlands included eight vernal pools, five drainage features, two stream corridors, three open water wetlands, and one emergent wetland. These nineteen wetlands were located along the existing 230 kV Hedge to Hurley transmission line corridor. No other wetlands occur in areas where new poles will be constructed (Ebasco Environmental 1993a).

Wetlands within the fiber optic cable corridor are generally low quality. Most of the delineated vernal pools were degraded due to discing, grazing, application of herbicides, or other land management activities. In addition, many of the vernal pools have been created by soil borrowing or other construction activities. As a result, wetland plant species diversity is relatively low, and considerable invasion of exotic weed and upland species into wetlands has occurred (Ebasco Environmental 1993a).

Wetland plant species characteristic of pristine vernal pools were absent or poorly represented (Ebasco Environmental 1993a). The dominant species of hydrophytic vegetation in the wetlands included spiny buttercup (*Ranunculus muricatus*), slender popcorn flower (*Plagiobothrys stipitatus),* Mediterranean barley (*Hordeum hystrix*), Italian ryegrass (*Lolium multiflorum*), and perennial ryegrass (*L. perenne*). Obligate wetland species such as goldfields (*Lasthenia glabrata*), field owl's clover (*Orthocarpus campestris*), and tidy tips (*Layia* spp.) were present only in relatively undisturbed vernal pools, while downingia (*Downingia bicornuta, D. pulchella*) were present in most of the vernal pools in the survey area (Ebasco Environmental 1993a).

6.4.4.2.2 Invertebrates. Ebasco Environmental (1993b) on January 27 and February 1 and 3, 1993, walked the accessible portions of the transmission/fiber optic line corridor. Any pools of water encountered were sampled using a handheld dipnet of 27 cm dipnet and 1 mm mesh size. Between the site and Florin-Perkins Road, *Branchinecta lynchi* and *Linderiella occidentalis* were found in 13 of 21 depressions alongside and between the railroad tracks. (These railroad depressions are not considered jurisdictional wetlands.) A survey of the corridor on April 21-23 found only the vernal pool tadpole shrimp (*Lepidurus packardi)* (Ebasco Environmental 1993a). *B. lynchi* and *L. occidentalis* complete their life cycles by March or early April, while *L. packardi* can be found as long as pools last into late April or May.

6.4.4.3 Existing Wildlife Resources. Dames & Moore conducted several field surveys (March 11 and 30, May 29, and September 29, 1992) along a portion of the proposed transmission/fiber optic line corridor to identify and map the location of raptor nests, including Swainson's hawks (State threatened) and burrowing owl (CDFG Species of Special Concern) burrows. General wildlife use of the area was noted during the surveys. Due to access problems, surveys were not conducted on the last 40 percent of the Procter & Gamble Cogeneration Project transmission line portion of the fiber optic communication line.

During the spring bird survey, a single inactive bird nest was identified near the corridor. The nest most likely had been used in the past by yellow magpies. A list

of birds observed during the spring survey can be found in Dames & Moore 1992. No raptors were seen during the spring bird survey. No raptor foraging activity was observed during any of the surveys (Dames & Moore 1992). Amphibians and mammals were noted; no significant species occurred in the area. Subsection 6.4.2 and Dames & Moore (1992) contain discussions of the species of wildlife that occur along the proposed transmission/fiber optic communication line corridor.

Ebasco Environmental (1993a,b) also performed wildlife surveys along the fiber optic communication line corridor on January 27, February 1 and 3, March 3 and 19, and April 23. In addition, Ebasco Environmental (1993c) performed field surveys on May 10, 1993 to confirm and update the information provided in the 1992 Dames & Moore report. These surveys confirmed the bird species reported by Dames & Moore (1992). The reported magpie nest was not found, but magpies were seen in the vicinity. No nests of Swainson's hawk or burrowing owl were found during field surveys. No Swainson's hawks were seen during surveys, and no records of Swainson's hawks are known from within 0.25 mile of the survey area.

6.4.4.4 Species of Special Concern. Eighteen known rare plants occur within Sacramento County. Only Sanford's arrowhead (*Sagittaria sanfordii*) has been found within the boundaries of the Sacramento East quadrangle map where the proposed project would be located (CNPS 1988). This species was not observed in the survey by Dames & Moore (1992) or by Ebasco Environmental (1993a).

Ebasco Environmental (1993a) also surveyed the fiber optic communication line corridor for sensitive plant species. No rare, threatened, or endangered plant species was found.

No threatened or endangered species of aquatic species occur along the corridor. Among proposed endangered species, three species of freshwater shrimp are considered likely to occur (Ebasco Environmental a,b,c).

No threatened or endangered wildlife species was identified by either Dames & Moore (1992) or Ebasco Environmental (1993a,c).

6.4.4.5 Impacts. The fiber optic communication line will be constructed in an area that includes heavy industrial facilities and light commercial activities. Most of the land previously has been disturbed and supports primarily exotic grasses and trees. Due to the noise of industrial/commercial activities and the predominance of nonnative vegetation, the value of wildlife habitat is low.

Construction of the fiber optic communication line along existing and proposed transmission line poles will result in only minor disturbance to wetlands and a temporary disturbance of wildlife resources. Construction activities will be temporary

and will require less than 5 days of activity in any single area. These activities will include temporary disturbance of existing vegetation, soil compaction by equipment, and increased noise. Vernal pool invertebrate populations will not be endangered by the passage of a few construction vehicles during the dry season.

No impacts will result from the operation of the fiber optic communication line.

6.4.4.6 Mitigation. Wetland areas and vernal pools will be avoided during construction. Construction will occur between April and October to ensure that wetlands will not be impacted.

6.4.5 Laws, Ordinances, Regulations, and Standards

Laws, ordinances, regulations, and standards (LORS) applicable to the protection of biological resources in the Sacramento vicinity are listed and briefly summarized below. No local ordinances were found that affect biological resources on the proposed project site.

6.4.5.1 Federal LORS. Federal LORS applicable to the project are the following:

- Endangered Species Act of 1973 and implementing regulation, Title 16 United States Code (USC) Section 1531 et seq., and Title 50 Code of Federal Regulations (CFR) Section 17.1 et seq., designate and protect federally threatened and endangered plants and animals and their critical habitats.
- Section 7 of Fish and Wildlife Coordination Act (16 USC 742 et seq., 16 USC 1531 et seq., and 50 CFR 17) mandates agency consultation if any aspects of a project jeopardize the continued existence of an endangered or threatened species. However, applicability depends on federal jurisdiction over some aspect of the project.
- Section 404 of the Clean Water Act of 1977 (33 USC 1251 et seq., 33 CFR 320 and 323) gives the US Army Corps of Engineers authority to regulate discharges of dredge or fill material into waters of the United States, including wetlands. General conditions of permitting include addressing protected species issues.
- Section 401 of the Clean Water Act (33 USC 1341) requires any applicant for a federal license or permit planning to conduct any activity that may result in a discharge of a pollutant into waters of the United States to obtain a water quality certification from the state in which the discharge originates. Section 404 Permits will be denied without prejudice without a water quality certification from the state.

6.4.5.2 State LORS. State LORS applicable to the project are the following:

- California Endangered Species Act of 1984, Fish and Game Code, Sections 2050 to 2098 provides legal protection for California state listed endangered and threatened species.
- Title 14, California Code of Regulations (CCR) Section 670.5 lists animals and plants of California declared to be threatened, endangered, or rare.
- Native Plant Protection Act of 1977, Fish and Game Code, Section 1900 et seq., provides a list of state rare and endangered plants and provides specific guidelines for the protection of populations.
- Fish and Game Code. Fully protected species. Prohibits the taking of listed plants and animals that are fully protected in California.
- Title 23, California Water Resources Control Board, Porter-Cologne Water Quality Control Act (Chapt. 3, Art. 4, Section 13160) requires certification of water quality standards prior to receiving Federal Clean Water Act 404 or nationwide permits.
- Native Plant Protection Act of 1977, Fish and Game Code, Section 1900 et seq. designates rare and endangered plants and provides specific protection measures for identified populations.

6.4.5.3 Compliance with LORS. All necessary and prudent actions have been taken to ensure that the project and its associated transmission line and fiber optic communication line are in compliance with federal and state laws and regulations governing protected plants and animals. The USFWS and the CDFG have been contacted to identify any federal or state protected species in the project area. Site surveys have been conducted at appropriate times of the year to determine if any federal and state threatened, endangered, or species of special concern are present. No state or federal listed threatened or endangered plant or animal species was found onsite or expected to be impacted by the project. Appropriate mitigation has been proposed to minimize impacts on the federally proposed species of freshwater shrimp and the burrowing owl, a state species of special concern. Final mitigation measures will be developed in consultation with the CEC, USFWS, and CDFG.

6.4.6 References

Anderson, R. L., May 11, 1993, Wildlife Biologist, California Energy Commission, in personal communication to David Turner, Black & Veatch.

Atchley, G., August 24, 1993, City of Sacramento Planning and Development, in personal communication to Robin Goldman, Black & Veatch.

Barbour, R. W., and W. H. Davis., 1969, *Bats of America*, The University Press of Kentucky, Lexington, Kentucky.

Behler, J. L., and F. W. King, 1989, *The Audubon Society Field Guide to North American Reptiles & Amphibians*, Alfred A. Knopf. Inc., New York.

Belk, D., 1977, "Zoogeography of the Arizona Fairy Shrimps (Crustacea: Anostraca)," *Journal of the Arizona Academy of Science* 12: 70-78.

Bent, A. C., 1938, "Life Histories of North American Birds of Prey," Vol 2, US Nat. Mus. Bull. 170: 1-482.

Bloom, P. H., 1980, *The Status of the Swainson's Hawk in California*, 1979, Federal Aid in Wildlife Restoration, Project W-54-R-12, Nongame Wildlife Investigation Job Final Report 11-8.0, California Department of Fish and Game, Sacramento, California.

California Native Plant Society (CNPS), 1988, *Inventory of Rare and Endangered Vascular Plants of California*, Special Publication No. 1 (4th ed.).

California Natural Diversity Data Base (CNDDB), maintained by the California Department of Fish and Game, Sacramento, California.

Dames & Moore, 1992, *Biological Assessment Report, Procter & Gamble Cogeneration Plant, SMUD Ancillary Facilities, Sacramento, California*, (DMBAR) a report prepared for Ebasco Environmental.

Ebasco Environmental, 1993a, *Biological Surveys Along Fiber Optic Communications Lines From Campbell Soup and Procter & Gamble Cogeneration Sites*, draft prepared June 17, 1993, for Sacramento Municipal Utility District.

Ebasco Environmental, 1993b, *Vernal Pool Fairy Shrimp Surveys at Procter & Gamble Cogeneration Plant Site and SMUD Transmission Line Corridor*, prepared March 26, 1993, for Sacramento Municipal Utility District.

Ebasco Environmental, 1993c, *Verification of Dames and Moore's Biological Assessment Report for Procter & Gamble Cogeneration Plant SMUD Ancillary Facilities*, undated draft, prepared for Sacramento Municipal Utility District.

Eng, L. L., D. Belk, and C. H. Eriksen, 1990, "Californian Anostraca: Distribution, Habitat, and Status," *Journal of Crustacean Biology* 10(2): 247-277.

Environmental Laboratory, 1987, *Corps of Engineers Wetlands Delineation Manual,* Technical Report Y-87-1, US Army Corps of Engineer Waterways Experiment Station, Vicksburg, Mississippi.

Estep, J., 1989, *Biology, Movements and Habitat Relationships of the Swainson's Hawk in the Central Valley of California, 1986-87*, California Department of Fish and Game, Nongame Bird and Mammal Section Report, Sacramento, California.

Hickman, J. C. (editor), 1993, *The Jepson Manual, Higher Plants of California*, University of California Press, Berkeley, California.

Holland, R. F., 1986, *Preliminary Descriptions of Terrestrial Natural Communities of California*, The Resources Agency, California Department of Fish and Game.

Koford, E. J., April 29, 1993a, Wildlife Biologist, Ebasco Environmental, in personal communication to Michele Stern, Black & Veatch.

Koford, E. J., June 2, 1993b, Wildlife Biologist, Ebasco Environmental, letter to R. Schlorff, CDFG 4/29/93, letter to Dave Zezulak, CDFG 5/2/93.

Kunz, T. H., and R. A. Martin, 1982, *Plecotus townsendii Mammalian Species* 175:1-6.

Mayer, K. E., and W. F. Laudenslayer, Jr., 1988, *A Guide to Wildlife Habitats of California*, California Department of Forestry and Fire Protection.

Munsell Color, 1990, *Munsell Soil Color Charts,* Munsell Color, McBeth Division of Kollmorgen Instruments Corporation, Baltimore, Maryland.

National Technical Committee for Hydric Soils, 1991, *Hydric Soils of the United States,* US Department of Agriculture, Soil Conservation Service, Miscellaneous Publication 1491.

Palmer, R. S., 1988, *Handbook of North American Birds: Raptors*, Vol. II, Smithsonian Institution, Washington, D.C.

Reed, P. B., 1988, *National List of Plant Species that Occur in Wetlands: California (Region 0)*, US Fish and Wildlife Service Biological Report 88(26.10).

Sacramento County, California, 1990, *Sacramento County Vernal Pools; Their Distribution, Classification, Ecology, and Management.*

Sacramento County, California, December 9, 1992, *Conservation Element of the County of Sacramento General Plan.*

Schlorff, Ron, June 20, 1993, Wildlife Biologist, California Department of Fish and Game, in personal communication to David Turner, Black & Veatch.

Thomsen, L., 1971, "Behavior and Ecology of Owls on the Oakland Municipal Airport," *Condor* 73:177-192.

US Department of Agriculture (USDA), Soil Conservation Service, 1991, *Soil Survey of Sacramento County California,* preliminary draft, June 1991.

Williams, D. F., 1986, *Mammalian Species of Special Concern in California*, California Department of Fish and Game, Wildlife Management Division Administrative Report 86-1.

Zarn, M., 1974, Burrowing Owl, *Speotyto cunicularia hypugaea*, Report No. 11, Habitat Management Series for Unique and Endangered Species, Bureau of Land Management, Denver, Colorado, 25 pp.

Zedler, P. H., 1987, *The Ecology of Southern California Vernal Pools: A Community Profile*, US Fish and Wildlife Service Biological Report 85 (7.11), 136 pp.

Procter & Gamble Cogeneration Project

Application for Certification
Volume 2

September 1993

Submitted to

California Energy Commission

Submitted by

Sacramento Cogeneration Authority

Contents

Volume 1

List of Acronyms

1.0 Executive Summary 1-1
- 1.1 Project Description 1-1
- 1.2 Project Need 1-4
- 1.3 Project Reliability 1-4
- 1.4 Environmental Considerations 1-5
- 1.5 Conclusion 1-7

2.0 Project Need 2-1
- 2.1 Introduction 2-1
- 2.2 Project Objectives 2-1
- 2.3 Need for the Proposed Facility 2-2
- 2.4 References 2-3

3.0 Project Description and Engineering 3-1
- 3.1 Introduction 3-1
- 3.2 Project Location 3-9
- 3.3 Site Description 3-9
- 3.4 Combustion Turbine Generators 3-17
- 3.5 Heat Recovery Steam Generators 3-20
- 3.6 Steam Turbine Generator 3-21
- 3.7 Major Electrical Equipment 3-22
- 3.8 Fuel Gas System 3-25
- 3.9 Water Supply and Treatment Facilities 3-26
- 3.10 Wastewater Collection and Treatment Facilities 3-34
- 3.11 Waste Disposal and Management 3-37
- 3.12 Emissions Control and Monitoring Equipment 3-40
- 3.13 Auxiliary Systems 3-43
- 3.14 Roads 3-48
- 3.15 Transmission Line Engineering 3-48
- 3.16 Gas Pipeline 3-88
- 3.17 Engineering Design Criteria 3-88
- 3.18 Facility Construction 3-90

3.19 Facility Operation and Maintenance 3-96
3.20 Schedule 3-102

4.0 Project Schedule 4-1
4.1 Construction Schedule 4-1
4.2 Estimated Operating Life and Facility Closure 4-1

5.0 Reliability 5-1
5.1 Plant Availability 5-1
5.2 Equipment Redundancy 5-3
5.3 Fuel Availability 5-9
5.4 Water Availability 5-10
5.5 Project Quality Control 5-10

6.0 Environmental Setting, Impacts, and Mitigation 6.1-1
6.1 Air Quality (To Be Issued Separately) 6.1-1
6.2 Geology and Soils 6.2-1
6.3 Water Resources 6.3-1
6.4 Biological Resources 6.4-1

Tables

Table 3.3-1 Active and Potentially Active Faults Within a 60 Mile Radius of the Project Boundaries 3-16
Table 3.9-1 Estimated Average Daily Water Requirements--Cogeneration Facilities 3-29
Table 3.9-2 Estimated Peak Daily Water Requirements--Cogeneration Facilities 3-30
Table 3.9.3 Cycle Heat Rejection Design Criteria 3-33
Table 3.10-1 Wastewater Quality--Discharge to City Sewer 3-35
Table 3.11-1 Power Project Plant Chemicals 3-38
Table 3.15-1 Existing Transmission Facilities Information 3-53

Contents (Continued)
Tables (Continued)

Table 3.15-2	1992 Construction Cost Summary For SMUD Interconnection Alternatives--Two Plant Terminations	3-63
Table 3.15-3	Construction Cost to Interconnect With PG&E or WAPA	3-64
Table 3.15-4	PG&E and WAPA Wheeling Charges	3-65
Table 3.15-5	Net Change in 1996 SMUD System Capacity and Energy Losses	3-67
Table 3.15-6	Loss Comparisons of Alternatives	3-68
Table 3.15-7	1996 Capacity and Energy Losses For Conductor Sizing	3-80
Table 3.18-1	Procter & Gamble Cogeneration Project Equipment Onsite Monthly	3-93
Table 3.18-2	Rail Delivery of Major Equipment Components for Procter & Gamble Cogeneration Project	3-94
Table 3.18-3	Procter & Gamble Cogeneration Project Truck Deliveries Per Month	3-95
Table 3.18-4	Number of Craft Persons Per Month	3-97
Table 3.19-1	Projected Full-Time Operating and Maintenance Staff for Procter & Gamble Cogeneration Project	3-99
Table 3.19-2	Projected Hours of Operation for Procter & Gamble Cogeneration Project	3-100
Table 5.2-1	Major Equipment Redundancy Proctor & Gamble Cogeneration Project	5-4
Table 5.3-1	30 Year Forecast SMUD Delivered Weighted Average Cost of Gas	5-11
Table 6.2-1		6.2-6
Table 6.3-1	Source of Water for Local Water Agencies in Sacramento County	6.3-2
Table 6.3-2	Water Quality Data Averages City of Sacramento Water Treatment Plants and Well System 1991-1992	6.3-10
Table 6.4-1	Plants Observed on the Procter & Gamble Cogeneration Project Study Area, Sacramento, California	6.4-8
Table 6.4-2	Plant Species of Special Concern Occurring in Sacramento County, California	6.4-18

Table 6.4-3 Sensitive Terrestrial Wildlife Species Potentially Occurring in the Procter & Gamble Cogeneration Project Area, Sacramento County, California 6.4-20

Figures

Figure 1-1 Representative View of the Project Site 1-3
Figure 3.0-1 Combined Cycle Diagram 3-2
Figure 3.0-2 Simple Cycle Diagram 3-3
Figure 3.0-3 Cogeneration Process Diagram 3-4
Figure 3.1-1 Combined Cycle Baseload Operation 3-6
Figure 3.1-2 Combined Cycle Peak Load Operation 3-7
Figure 3.1-3 Simple Cycle Baseload Operation 3-8
Figure 3.2-1 Regional Location Map 3-10
Figure 3.3-1 Site Arrangement 3-12
Figure 3.3-2 Typical Elevations 3-13
Figure 3.3-3 Site Grading and Drainage 3-14
Figure 3.7-1 Overall One-Line Diagram 3-23
Figure 3.9-1 Daily Average Water Mass Balance 3-27
Figure 3.9-2 Peak Average Water Mass Balance 3-28
Figure 3.15-1 Transmission Routing Existing Facilities 3-49
Figure 3.15-2 SMUD's Existing Hedge Substation 3-50
Figure 3.15-3 SMUD's Existing Hurley Substation 3-51
Figure 3.15-4 Existing Tower Configuration Hedge/Hurley 230 kV Line and East City/Hedge 115 kV Line 3-52
Figure 3.15-5 Transmission Routing 115 kV Alternatives 3-54
Figure 3.15-6 Transmission Routing 230 kV Alternatives 3-55
Figure 3.15-7 SMUD Transmission System With No Project Generation 3-69
Figure 3.15-8 SMUD Transmission System With Project Generating 177 MW 3-70
Figure 3.15-9 SMUD Transmission System During Construction of Project Interconnection 3-71
Figure 3.15-10 Existing Transmission Facilities and Proposed Interconnection Route 3-74

Figure 3.15-11 Transmission Line Schedule 3-75
Figure 3.15-12 Procter & Gamble Project Interconnection Plan of Service 3-76
Figure 3.15-13 Proposed Pole Configuration Hedge/Hurley 230 kV Loop-In 3-78
Figure 3.15-14 Local Airports 3-82
Figure 3.16-1 SMUD Cogeneration Pipeline Project 3-89
Figure 3.18-1 Total Manpower by Month 3-98
Figure 6.2-1 Fault and Epicenter Map 6.2-2
Figure 6.3-1 Sacramento County Ground Water Contour Map Fall 1991 . . . . . 6.3-6
Figure 6.3-2 Sacramento County 3-D Ground Water Surface Plot Spring 1990 . . . . . 6.3-7
Figure 6.4-1 Representative View of the Project Site 6.4-2
Figure 6.4-2 Plant Communities and Wetlands in the Study Area 6.4-7
Figure 6.4-3 Locations of Fairy Shrimp in the Study Area 6.4-15

Volume 2

6.5 Transportation 6.5-1
6.6 Land Use 6.6-1
6.7 Socioeconomics 6.7-1
6.8 Cultural and Paleontological Resources 6.8-1
6.9 Aesthetics/Visual Resources 6.9-1
6.10 Noise 6.10-1
6.11 Waste Management 6.11-1
6.12 Public Health/Hazardous Material Handling 6.12-1
6.13 Worker Safety 6.13-1

7.0 Financial Impacts 7-1
7.1 Capital Cost Estimate 7-1
7.2 Fuel Costs 7-1
7.3 Operating and Maintenance Costs 7-1

Contents (Continued)

Volume 2 (Continued)

8.0 Alternatives 8-1
8.1 Introduction 8-1
8.2 Alternative Site Evaluation 8-1
8.3 Alternative Plant Configurations 8-5
8.4 Transmission Connection Alternatives 8-7
8.5 Applicable Laws, Ordinances, Regulations, and Standards . 8-7

9.0 List of Preparers 9-1

Tables

Table 6.5-1 Mileage of Maintained Public Roads in the Sacramento MSA (1980, 1985, and 1989) 6.5-2
Table 6.5-2 Segments of Major Highways at or Reaching Capacity in Sacramento County 6.5-5
Table 6.5-3 Interpretation of Level of Service (LOS) Ratings for Various Road Classifications 6.5-16
Table 6.5-4 Existing 1993 Level of Service (LOS) at Selected Intersections Along Primary Commuter Routes 6.5-18
Table 6.5-5 Expected Equipment Deliveries by Rail to the Procter & Gamble Cogeneration Site During Construction 6.5-23
Table 6.5-6 Peak Hour Level of Service Under Baseline and Project Conditions at Selected Locations During Peak Construction 6.5-27
Table 6.5-7 Projected Level of Service Under Baseline and Project Conditions at Selected Locations During Operation 6.5-31
Table 6.6-1 Zoning Categories in the Project Vicinity 6.6-12
Table 6.7-1 Population Estimates for California, the Sacramento MSA, and Selected Cities (1980-1992) 6.7-2
Table 6.7-2 Population Projections for California and the Sacramento MSA Counties (1995-2005) 6.7-5
Table 6.7-3 Civilian Labor Force, Employment, and Unemployment for the State and Sacramento MSA (1985-1992) 6.7-6

Table 6.7-4	Nonagricultural Wage and Salary Employment by Industry in the Sacramento MSA in Thousands (1980-1992)	6.7-9
Table 6.7-5	Nonagricultural Wage and Salary Employment Distribution in the Sacramento MSA and in California (1980 and 1992)	6.7-11
Table 6.7-6	Historical and Projected Nonagricultural Wage and Salary Employment for the Sacramento MSA	6.7-12
Table 6.7-7	Per Capita Income for the State and Sacramento MSA (1970-1990)	6.7-15
Table 6.7-8	Total Personal Income for the State and Sacramento MSA (1970-1990)	6.7-17
Table 6.7-9	Nonagricultural Personal Income by Major Industry for the Sacramento MSA (1980 and 1990)	6.7-18
Table 6.7-10	Average Hours and Earnings of Production Workers, by Selected Industry for California (1991)	6.7-19
Table 6.7-11	Housing Characteristics for the Sacramento MSA Area Counties and the State (1980 and 1992)	6.7-20
Table 6.7-12	Annual Median Resale Home Price in Sacramento County, California and the US (1980-1991)	6.7-22
Table 6.7-13	Number of Districts and Schools in California and the Sacramento MSA (1990-1991)	6.7-26
Table 6.7-14	Enrollment in Public School Grades by County, State, and the Sacramento MSA (1990-1991)	6.7-27
Table 6.7-15	Fall Enrollment for Selected Colleges in the Sacramento MSA (1985-1991)	6.7-29
Table 6.7-16	City of Sacramento Approved Budget Resources and Appropriations 1991-1992 and 1992-1993	6.7-31
Table 6.7-17	County of Sacramento Approved Budget Requirements and Financing Sources 1991-1992 and 1992-1993	6.7-32
Table 6.7-18	Estimated Procter & Gamble Cogeneration Project Construction Workforce by Major Craft/Occupation	6.7-36
Table 6.9-1	Cooling Tower Modeling Parameters	6.9-27
Table 6.10-1	Applicable Noise Limits	6.10-3
Table 6.10-2	Summary of Ambient Noise Data (dBA)	6.10-7
Table 6.10-3	Hourly L_{eq} Values	6.10-8

Table 6.10-4	Ambient Noise Survey Octave Band Levels	6.10-9
Table 6.10-5	Future Noise Producing Developments	6.10-12
Table 6.10-6	Construction Equipment Noise Emissions	6.10-15
Table 6.10-7	Cogeneration Facility Equipment Noise Emissions	6.10-20
Table 6.12-1	Census Tract Populations Within 3 Miles of the Project Site	6.12-6
Table 6.12-2	Characterization of the Air Toxic Health Risks	6.12-7
Table 6.12-3	Emission Factors and Emission Rates for the LM6000 Combined Cycles	6.12-8
Table 6.12-4	Emission Factors and Emission Rates for the LM6000 Simple Cycle	6.12-9
Table 6.12-5	Source Parameters	6.12-10
Table 6.12-6	Sensitive Receptors	6.12-11
Table 6.12-7	Maximum Annual Impacts for Carcinogenic Air Toxics	6.12-14
Table 6.12-8	Cancer Risk Assessment	6.12-15
Table 6.12-9	Comparison of Acute and Chronic Exposure Levels to the Adopted OEHHA and EPA AELs	6.12-16
Table 6.12-10	Vulnerable Zones for Hazardous Materials	6.12-22
Table 6.13-1	Locations of Potential Worker Hazards	6.13-2
Table 6.13-2	Basic Protective Equipment Guide	6.13-5
Table 6.13-3	Sample Emergency Response Plan Outline	6.13-13

Figures

Figure 6.5-1	Regional Transportation	6.5-4
Figure 6.5-2	Proposed Capital Improvements	6.5-8
Figure 6.5-3	HOV Segments Within and Near the City of Sacramento	6.5-9
Figure 6.5-4	Average Daily Traffic and Level of Service Locations on Local Transportation Network	6.5-13
Figure 6.5-5	Peak A.M. Project Worker Vehicle Projections on the Local Transportation Network	6.5-25
Figure 6.6-1	City of Sacramento	6.6-2

Figure 6.6-2	Aerial Photograph of the Project Vicinity	6.6-4
Figure 6.6-3	Existing Land Use in the Project Vicinity	6.6-5
Figure 6.6-4	Recreational Parks and Open Space in the Project Vicinity	6.6-6
Figure 6.6-5	Public and Private Land Ownership in the Project Vicinity	6.6-10
Figure 6.6-6	Zoning Designation in the Project Vicinity	6.6-11
Figure 6.6-7	General Land Use Element Designations in the Project Vicinity	6.6-16
Figure 6.6-8	County of Sacramento Urban Service Area	6.6-18
Figure 6.6-9	City of Sacramento New Growth Areas	6.6-21
Figure 6.6-10	New Growth Area Designations in the Project Study Area	6.6-22
Figure 6.6-11	Major Industrial Areas in the City of Sacramento	6.6-23
Figure 6.6-12	Specific Land Use Plan Designations in the Project Area	6.6-25
Figure 6.6-13	Community of South Sacramento Florin-Perkins Industrial Land Use Map	6.6-27
Figure 6.7-1	Total Man-Months of Employment During the Construction Period	6.7-35
Figure 6.8-1	Sacramento County Map	6.8-3
Figure 6.8-2	Procter & Gamble Cogeneration Project Site Location	6.8-11
Figure 6.8-3	Transmission Line Cultural Resources	6.8-16
Figure 6.9-1	Project Viewshed	6.9-4
Figure 6.9-2	Typical View from Fruitridge Road	6.9-10
Figure 6.9-3a	KOP 1--Existing Setting	6.9-14
Figure 6.9-3b	KOP 1--Project Simulation (Northern Portion of View)	6.9-16
Figure 6.9-4a	KOP 2--Existing Setting	6.9-19
Figure 6.9-4b	KOP 2--Project Simulation	6.9-20
Figure 6.9-5a	KOP 3--Existing Setting	6.9-21
Figure 6.9-5b	KOP 3--Project Simulation	6.9-22
Figure 6.10-1	Noise Monitoring Locations (NMLs)	6.10-6
Figure 6.10-2	Potential Construction Impacts	6.10-18

Contents (Continued)
Figures (Continued)

Figure 6.10-3	Potential Operation Impacts	6.10-21
Figure 6.12-1	Sensitive Receptors	6.12-3
Figure 6.12-2	Census Tracts Within 3 Miles of the Project Site	6.12-5
Figure 6.12-3	Storage Locations of Hazardous Materials	6.12-18
Figure 6.12-4	Maximum VZ and IDLH Areas	6.12-23
Figure 6.13-1	Locations of Fire Suppression and Fire Fighting Equipment	6.13-15

Volume 3

Appendix A1	Western Systems Coordinating Council Existing Generation and Changes to System Facilities
Appendix A2	SMUD's Reliability Criteria for Transmission System Planning
Appendix A3	Procter & Gamble Project Interconnection Study
Appendix A4	Transmission Alternatives Cost Estimates
Appendix A5	Loss Analysis
Appendix A6	Power Flow Analysis
Appendix A7	Short-Circuit Analysis
Appendix B	Mechanical Engineering Design Criteria
Appendix C	Civil Engineering Design Criteria
Appendix C1	Geotechnical Engineering Study
Appendix D	Structural/Seismic Engineering Design Criteria
Appendix E	Chemical Engineering Design Criteria
Appendix F	Electrical Engineering Design Criteria
Appendix G	Control Engineering Design Criteria

Volume 4

Appendix H	Letter from City of Sacramento
Appendix I	Traffic Counts at Level of Service Locations
Appendix J	Land Ownership by Parcel Number
Appendix K	Cultural and Paleontological Resources Correspondence
Appendix L	Phase I Archeological Survey

Appendix M Material Safety Data Sheets
Appendix N Injury and Illness Prevention Program
Appendix O Plant Maintenance Program

6.5 Transportation

The Greater Sacramento Area has an extensive transportation network. Interstate freeways, continental railways, a deep-water shipping channel, and a major airport give the Greater Sacramento Area easy access to many major markets. These transportation systems are discussed in this section.

6.5.1 Existing Transportation Network and Conditions

This section describes the existing transportation network and conditions in the Sacramento region and also describes the network in place near the project site. The emphasis is placed on the highway network, given the project's potential for impacts on this mode of transportation.

6.5.1.1 Regional Roadways and Traffic. The Sacramento region has a well developed network of state, federal, and local highways. Table 6.5-1 indicates that in Sacramento County alone, there was a total of 4,006 miles of public roads in 1989. In the four Sacramento metropolitan statistical area (MSA) counties of El Dorado, Placer, Sacramento, and Yolo, the total mileage of maintained roads was 9,258 miles in 1989, or 5.63 percent of the 1989 state total.

Four major highways traverse the Sacramento region and allow quick access to other California locations and beyond. Figure 6.5-1 is a regional transportation map indicating the major highways in the Sacramento region.

Major highways include Interstate 80, Highway 50, Interstate 5, and Highway 99. Use of these highways by local and regional traffic has resulted in high levels of traffic volume as measured by the average daily traffic (ADT) counts. For example, within Sacramento County, Highway 80 has a 174,000 ADT on its most heavily traveled segment, which is between the junction of Route 244 and the Madison Avenue interchange (Caltrans 1992). Highway 50 has a maximum ADT of 193,000 (at the 15th and 16th Street interchange); Highway 99 has a maximum ADT of 161,600 (at the north junction with Highway 50); and Highway 5 has a 114,000 ADT at the I Street interchange (Caltrans 1992). All figures are 1991 ADT counts.

The high levels of traffic volume over the region's roadway network has resulted in congestion in several areas during periods of peak use, and the problems are expected to intensify in the future. By the year 2000, each of the four major highways through Sacramento is projected to be at or near its rated vehicle volume capacity near downtown Sacramento (SACOG 1990) as shown in Table 6.5-2. In addition to these highways, segments of Route 160, Route 51, and Route 16 in Sacramento County are projected to reach peak hour capacity levels by 2000.

Table 6.5-1
Mileage of Maintained Public Roads in the Sacramento MSA (1980, 1985, and 1989)

Location and Year	Total	State Highways	County Roads	City Streets	Other State Roads	National Roads
El Dorado County						
1980	2,685	173	1,055	161	173	1,123
1985	1,651	173	998	159	175	146
1989	2,029	173	1,019	164	159	515
Placer County						
1980	2,066	158	1,011	239	7	651
1985	1,973	158	982	279	9	545
1989	1,856	161	132	29	994	397
Sacramento County						
1980	3,656	222	2,274	1,154	6	--
1985	3,806	224	2,373	1,204	6	--
1989	4,006	226	2,508	1,266	6	--
Yolo County						
1980	1,341	190	935	200	--	16
1985	1,337	179	936	221	--	--
1989	1,367	179	828	343	--	--

Table 6.5-1 (Continued)
Mileage of Maintained Public Roads in the Sacramento MSA (1980, 1985, and 1989)

Location and Year	Total	State Highways	County Roads	City Streets	Other State Roads	National Roads
California						
1980	178,706	15,200	71,259	50,967	2,517	38,763
1985	174,082	15,182	69,614	55,397	3,024	30,864
1989	164,298	15,217	67,473	60,688	3,089	17,831

Source: Sacramento Metropolitan Chamber of Commerce, *Greater Sacramento Area Statistical Abstract*, 1992 Page 9-6.

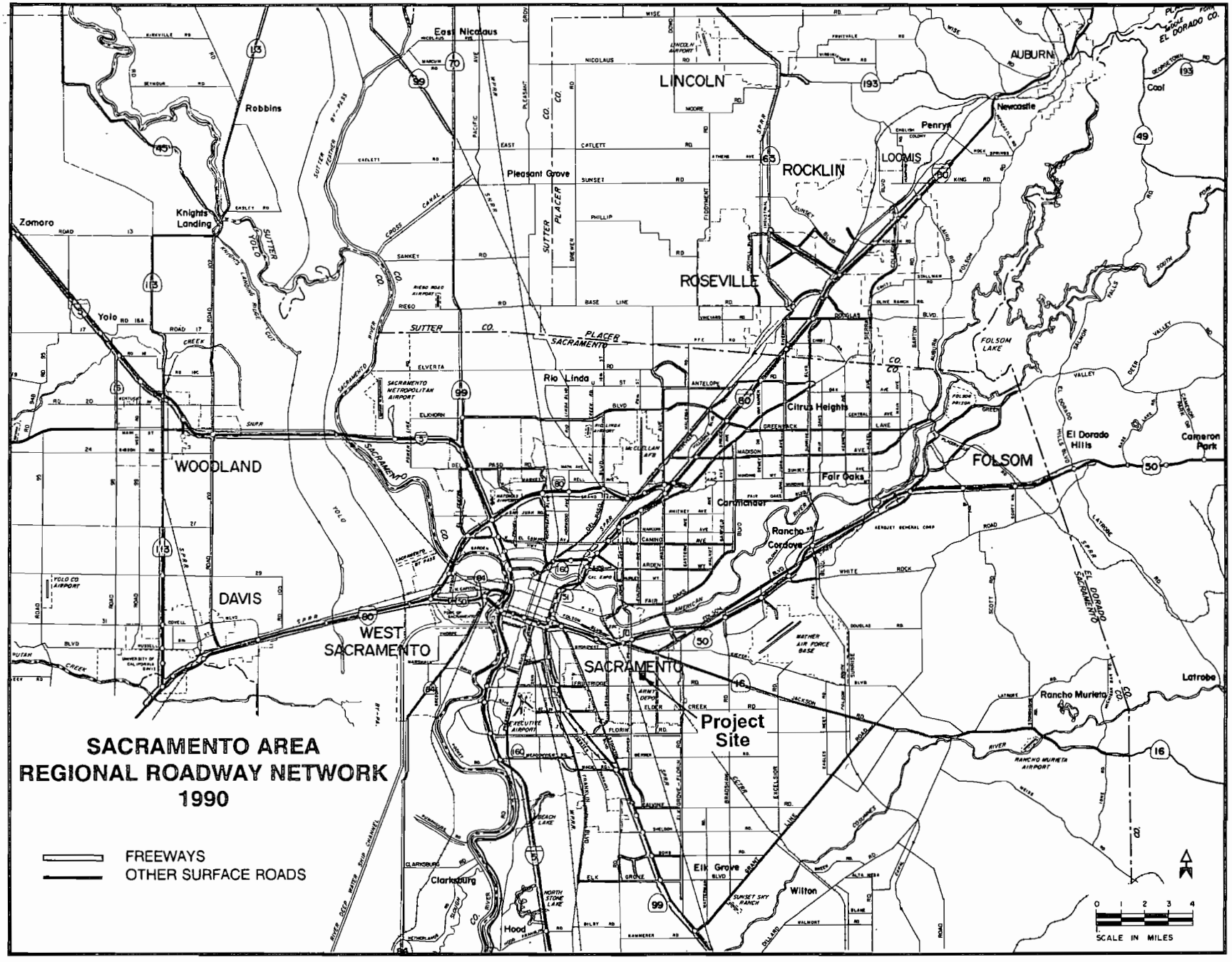

Source: Sacramento Area Council of Governments,
1992 Regional Transportation Plan.

REGIONAL TRANSPORTATION

Figure 6.5-1

Table 6.5-2
Segments of Major Highways at or Reaching Capacity in Sacramento County

Route	Segment	Date Expected to Reach Capacity During Peak Period
Interstate 5	Hood-Franklin Road Interchange to Sacramento City Limit	1995
	Meadowview/Pocket Road to I-80	Current
	I-80 to Route 99	Current
Interstate 80	I-5 to Watt Ave.	Current
	Watt Ave. to Placer County Line	Current
Route 50	Yolo-Sacramento County Line to Route 160	Current
	Route 160 to Route 50/99/51 Divide	Current
	Junction Routes 50, 99, 51 to Watt Ave.	2005
	Watt Ave. to Sunrise Blvd.	Current
	Sunrise Blvd. to Hazel Ave.	1995
	Hazel Ave. to Folsom Blvd. overcrossing	1995
Route 99	Elk Grove Blvd. to Mack Road	2000
	Mack Road to Route 50/51 Divide	Current

Source: SACOG, *1992 Regional Transportation Plan Working Paper No. 4*, 1990, Table 3-1.

6.5.1.1.1 Adverse public safety impacts. Generally, the multilane design of the highways and primary roads in the vicinity of the project is conducive to public safety. Nevertheless, the high volume of traffic carried by these roadways during peak hours may be considered a safety hazard. This is especially true on Highway 99 and Highway 50 where stop and go traffic or traffic flow significantly below the speed limit is common.

Another feature of the local roadway network that could affect public safety is the light rail transit (LRT) crossing of Power Inn Road near the intersection of Power Inn Road and Folsom Boulevard. The City has identified this crossing as a high priority for transportation improvement (SACOG 1990). In addition to the LRT crossing, the local railroad crossings at Fruitridge Road and Power Inn Road have the potential for adverse public safety impacts.

6.5.1.1.2 Programs to improve traffic circulation. The Sacramento Council of Governments (SACOG) and other area governments have been very active in implementing studies and programs in an attempt to maintain acceptable levels of service on area roadways and to develop a long-term transportation strategy. As a result of these efforts, several programs have been proposed or implemented to encourage more efficient use of the transportation network, including the designation of high occupancy vehicle (HOV) lanes on the major highways in the vicinity of downtown Sacramento and limited access roadways (Sacramento County Planning Department 1992).

Another major program which contributes toward a more efficient use of the transportation network is the City of Sacramento's Transportation Systems Management (TSM) program which is intended to encourage 35 percent of the peak period commuters to use alternative commute modes through mandated employer programs for businesses.

Businesses affected by the City's TSM ordinance are those which employ 25 or more workers. Businesses that employ between 25 and 99 people are designated as Minor Projects; those with 100 or more are Major Projects. Minor Projects are required to post information regarding available transit service in the vicinity of the work site; carpool, vanpool, and bicycle facilities available at the site; and where to obtain additional information about ridesharing and transit (Department of Public Works 1989).

Major Project employers are required to submit a Transportation Management Plan (TMP) to the City Traffic Engineer, and this TMP must be approved and a certificate obtained before an Occupancy Permit is issued. Approval is based on

whether the TMP adequately contributes toward meeting the 35 percent alternative commute mode goal. The City may require modifications to a proposed TMP. A wide variety of programs may qualify as an alternative commute mode program. These programs include offering transportation coordinator services; providing carpool/vanpool matching services; offering priority parking assignments to carpools or vanpools; providing current transit information; discounting parking costs for car/vanpools; providing transit shelters; providing subsidies for transit passes, carpools, and vanpools; providing showers and lockers for walkers and bicyclers; posting information regarding the use of alternative commute modes; offering flex time; and providing subsidies for TSM capital improvements (Department of Public Works, Transportation Division 1992).

The projected levels of congestion on the local roadway network have resulted in numerous identified needed capital improvements to the regional highway network. Figure 6.5-2 is a map indicating the proposed capital improvements as identified in the SACOG 1992 Regional Transportation Plan. As seen in the figure, these proposed roadway facilities include a number of modified or proposed interchanges on the major highways, a proposed extension of Highway 99, and proposed arterials. The total estimated cost of these improvements to the regional roadways is approximately $2 billion in 1991 dollars (SACOG 1992). In addition, the 1992 regional transportation plan includes the proposed addition of numerous HOV segments within and near the City of Sacramento. These HOV lanes, shown on Figure 6.5-3, are estimated to cost approximately $436 million in 1991 dollars (SACOG 1992).

6.5.1.1.3 Bus and rail service. In addition to the programs implemented to improve occupancy levels of automobiles, opportunities for utilization of bus service and passenger light rail transit (LRT) service are numerous. Bus lines offering intercity as well as local service include Greyhound, Trailways, and Sacramento Regional Transit. Regional Transit operates more than 200 buses throughout Sacramento County. Routes and schedules are designed to mesh with the LRT system which has operated since 1988 (Sacramento Metropolitan Chamber of Commerce 1992).

The 1992 Regional Transportation Plan identifies a long range need for additional express bus service to downtown Sacramento during peak hours at 15 minute intervals from Elk Grove, Folsom, Rocklin, Roseville, Metro Airport, Woodland, and Davis. The estimated cost is $10 million in 1991 dollars (SACOG).

The LRT system currently has 18 miles of track which generally follow the Business 80 and Highway 50 freeways out of downtown Sacramento to the northeast and east, respectively. The LRT has nearly 3,700 parking spaces at remote locations

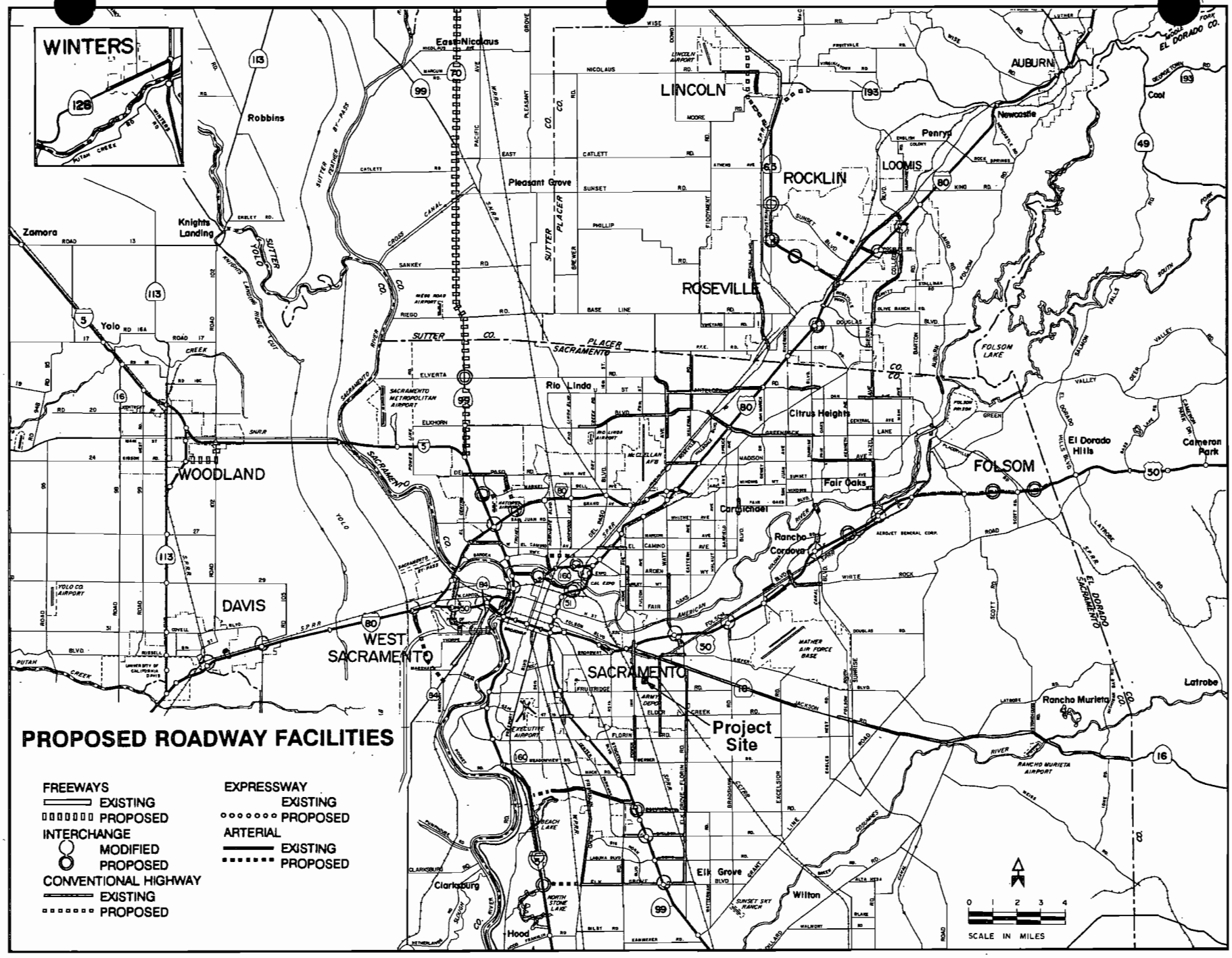

Source: Sacramento Area Council of Governments, 1992 Regional Transportation Plan.

PROPOSED CAPITAL IMPROVEMENTS

Figure 6.5-2

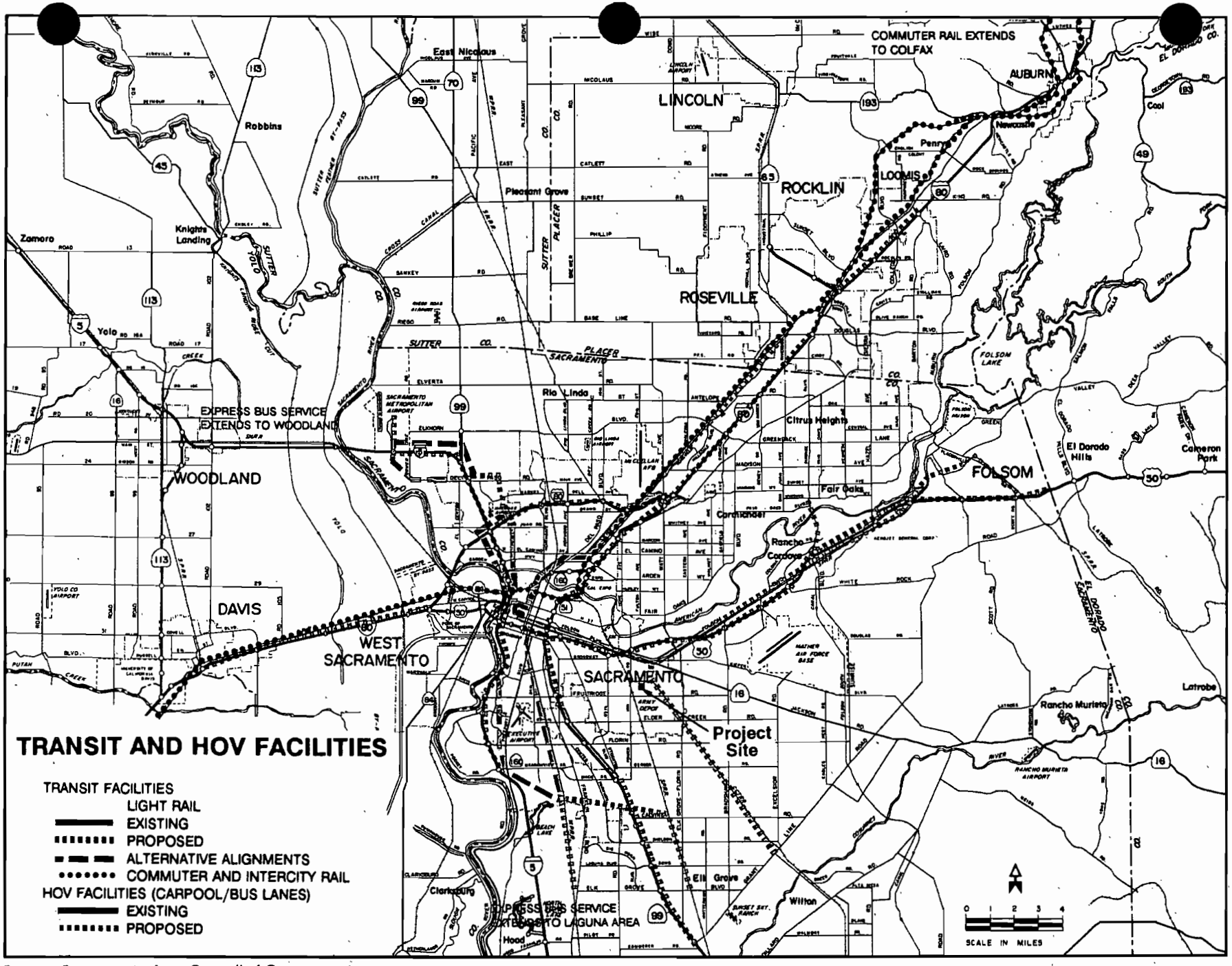

Source: Sacramento Area Council of Governments, 1992 Regional Transportation Plan.

HOV SEGMENTS WITHIN AND NEAR THE CITY OF SACRAMENTO

Figure 6.5-3

to allow for easy commuter access. The existing light rail network, which tracks Highway 50, lies approximately 2.5 miles north of the site by car, and there are LRT stations near the site adjacent to Power Inn Road and another near the intersection of Kiefer Boulevard and Folsom Boulevard. Regional Transit plans to expand the system to some 100 miles of track during the next 20 years (Sacramento Metropolitan Chamber of Commerce 1992). These expansions will enable transport between downtown, Metro Airport, Davis, Elk Grove, Folsom, and Roseville. During the 1990s, existing lines are expected to be extended by about 6 miles, and a new 10 mile line to the south is scheduled.

The LRT expansion plans are consistent with the 1992 Regional Transportation Plan, which identified approximately 65 miles of LRT addition needs, 36.5 miles of which were classified as short-term projects. The LRT additions identified in the 1992 Regional Transportation Plan are shown on Figure 6.5-3 with the HOV network proposed for the region. The estimated cost of these additions is approximately $1.2 billion in 1991 dollars (SACOG 1992).

Interregional passenger rail service is provided by Amtrak, which serves Sacramento with five trains a day from the Southern Pacific depot downtown west to the San Francisco Bay area. One of the five continues to Los Angeles. There are also four departures daily south into the Central Valley, and one train a day north to Seattle and east to Chicago. Amtrak can also be boarded in the cities of Roseville and Davis (Sacramento Metropolitan Chamber of Commerce 1992).

Transcontinental and interstate rail freight service is provided by the Southern Pacific and Union Pacific Railroads. Both railways have enough track, terminal, and repair facilities to meet demand for the next 20 years (County of Sacramento 1992). In 1992, the Union Pacific hauled between 10 and 20 million tons of freight and the Southern Pacific hauled over 20 million tons of freight (County of Sacramento 1992). The Sacramento Northern Railroad also serves the area. This railroad is a short line owned by the Union Pacific Railroad which offers rail service to Sacramento Valley markets. The Central California is another short line serving the area. This line runs from Stockton to Sacramento and is jointly owned by the Santa Fe, Southern Pacific, and Union Pacific Railroads (Webb 1993). The Central California is one of the proposed LRT corridors designated in the 1992 Regional Transportation Plan (SACOG 1992). The project site is just east of the Southern Pacific rail line, separated by an open field, and lies immediately south of the Central California rail line.

Nonpassenger rail freight through Sacramento occurs on a "run extra" basis, which means that freight shipments do not occur according to a regularly scheduled timetable. It is estimated that the Southern Pacific averages roughly 24 through trips per day, the Union Pacific averages roughly 12 through trips per day, and the Central California averages no more than one train per day (Webb 1993). Each of these lines has capacity for a significant increase in the volume of trains with proper scheduling and signalization (Webb 1993).

The Port of Sacramento (Port) is owned and operated by the Port Authority which includes Yolo County, Sacramento County, and the City of Sacramento (County of Sacramento 1992). The Port provides direct ocean freight service to all major ports in the US and to world ports. It is a deepwater ship channel located 79 nautical miles northeast of San Francisco and has a five docked ship capacity. The three major rail links serving Sacramento connect with the Port. Interstates 80 and 5 are immediately adjacent to the Port. The Port plays a major role in economic development in the County, particularly in the area of agricultural and timber product exports. In 1990, the Port handled 1.27 million short tons of cargo; nearly 1 million of this was outbound tonnage and the remainder was inbound tonnage (Sacramento Metropolitan Chamber of Commerce 1992). The Port is undertaking the dredging of the channel from the existing 30 feet to a modified depth of 35 feet, expanding its capacity to service bulk cargo vessels which currently are unable to use the Port's facilities. Plans are underway to further diversify shipping through container operations. The plan for expansion will take three to four years and cost an estimated $45 million (Sacramento Metropolitan Chamber of Commerce 1992). The funding will come from local government and private sector financing. These improvements are expected to result in a 3 percent annual growth rate in use of the Port (County of Sacramento 1992).

Two major public airports serve the Greater Sacramento Area. The larger is the Sacramento Metropolitan Airport, the other is the Sacramento Executive Airport. The Sacramento Metropolitan Airport is a modern facility 12 miles north of downtown Sacramento, off Interstate 5. Built in 1967, the Metropolitan Airport now comprises 4,800 acres, with additional land purchases underway. In 1990, more than 3.6 million passengers used the airport, and continued growth is expected as more passengers recognize Metropolitan Airport's convenience, availability of flights, and competitive air fares (Sacramento Metropolitan Chamber of Commerce 1992). Current expansions will enable the airport to accommodate more than 8,000,000 passengers annually. The airport's rural location will allow for additional future

expansion without the problems of encroachment and incompatible land use often associated with airports in other metropolitan areas. Eight major airlines and several commuter carriers serve the airport.

Executive Airport, in Sacramento, is a full-service, 680 acre facility serving general aviation. Franklin Field is another County-operated airport serving general aviation. In addition to the above primary airports, there are numerous private airports within the Sacramento area, and South Lake Tahoe has its own commercial airport. Two large military air force bases are located in Sacramento: Mather Air Force Base and McClellan Air Force Base. Mather Air Force Base is proposed for closure by the US military (Sacramento County 1992).

6.5.1.2 Local Roadways and Traffic. The local transportation network in the project vicinity is shown on Figure 6.5-4. The site is in the southeast portion of the City of Sacramento, just west of and at the end of 83rd street, north of Fruitridge Road. Fruitridge Road is an east-west four lane roadway having a center turn lane in proximity to the site. Access to the site is facilitated by its proximity to Highway 50, an east-west multilane state highway approximately 3 miles north of the site by car, and Highway 99, a north-south multilane state highway approximately 4 miles west of the site by car.

From the east, on Highway 50, the site can be reached by exiting on South Watt Avenue (a designated truck route), proceeding south to Fruitridge Road, then west to 83rd Street, and north to the site. An alternative is to take Watt Avenue south to westbound Kiefer Boulevard, turning south on Florin Perkins Road, then west on 24th Avenue to the site.

The Howe Avenue/Power Inn Road exit also provides quick access to the site from Highway 50. One option is to go south on Power Inn Road to Fruitridge Road, then turn east to 83rd Street. Another alternative is to turn east on Folsom Boulevard as it intersects with Howe Avenue/Power Inn Road, then proceed on Jackson Road to Florin Perkins Road south, turning west on 24th Avenue to the site.

From the west on Highway 50, the 65th Street Expressway provides access south to Fruitridge Road, then east to 83rd Street, and north to the site. From the south, Highway 99 provides access to Fruitridge Road via Martin Luther King Boulevard. There is also an exit ramp onto Fruitridge Road from southbound Highway 99.

The local streets in the project vicinity are within the city limits and under the City of Sacramento's jurisdiction, with the exception of a small strip of Fruitridge Road and South Watt Avenue south of Folsom Boulevard. On the aforementioned

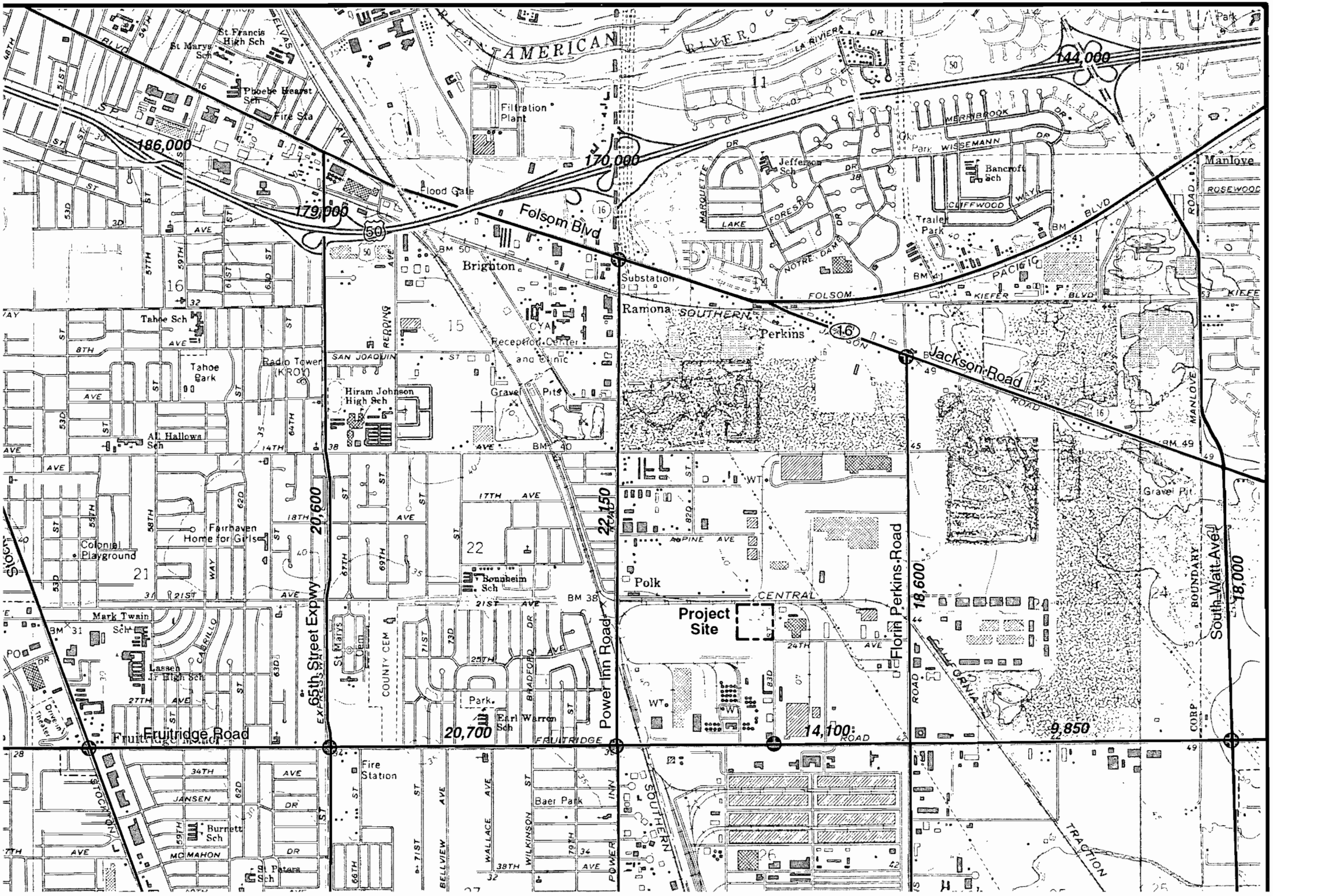

AMERICAN
RIVER
Filtration Plant
Flood Gate
Folsom Blvd
Brighton
Substation
Ramona
SOUTHERN
Perkins
Jackson Road
Manlove
Tahoe Sch
Tahoe Park
Radio Tower (KROY)
Hiram Johnson High Sch
Gravel Pits
Reception Center and Clinic
All Hallows Sch
Fairhaven Home for Girls
Colonial Playground
Bonnheim Sch
Mark Twain Sch
Lassen Jr High Sch
Fruitridge Road
Fire Station
Burnett Sch
St Peters Sch
Baer Park
Earl Warren Sch
Park
Polk
Project Site
Florin Perkins Road
South Watt Ave
65th Street Expwy
Power Inn Road
Stockton
Gravel Pit
Jefferson Sch
Bancroft Sch
Trailer Park
Phoebe Hearst Sch
St Francis High Sch
St Marys Sch
186,000
179,000
170,000
144,000
20,600
22,150
20,700
14,100
18,600
9,850
18,000

city streets, the load limit for tractor trailers is 20,000 pounds per two axles. With permits, the legal load can be increased to 60,000 pounds per two axles (City of Sacramento 1993). Permits are also required for a load in excess of 8 feet 6 inches wide (City of Sacramento 1993). For South Watt Avenue between Folsom Boulevard and Fruitridge Road, the weight limits without permit vary with the distance between axles, but for most truck loads, these limits are between 34,000 and 39,000 pounds per axle and can be exceeded with a permit (Nakaga 1993). Permits are also required along this stretch for loads in excess of 8 feet wide (Nakaga 1993).

The City of Sacramento General Plan classifies each of the streets identified above as a part of the City's major street system. Highway 99 and Highway 50 are classified as freeways; Fruitridge Road, Power Inn Road, Stockton Boulevard, and what is now South Watt Avenue are classified as arterials. Florin Perkins Road, Jackson Road, and Folsom Boulevard are classified as minor arterials; and 65th Street is classified as an expressway (City of Sacramento 1986).

An arterial is defined as a facility that provides intracity transportation and interregion transportation for large volumes of vehicles, and provides access to abutting properties. A minor arterial is a roadway that connects major facilities, but has more access than a principal arterial. Parking is allowed, but may be limited. The General Plan defines an expressway as a roadway with limited access, few cross streets, limited driveway access and no on-street parking. A freeway is a grade separated roadway with limited access (City of Sacramento 1986).

6.5.1.2.1 Local traffic volumes. Existing average daily traffic volumes (ADT) for local roadways are presented on Figure 6.5-4. Fruitridge Road is a major carrier of eastbound and westbound traffic. The heaviest traffic flow on Fruitridge Road occurs west of Power Inn Road where the ADT is 20,700 vehicles (all volumes for city streets are from the City of Sacramento 1993). Between Power Inn Road and Florin Perkins Road, the ADT on Fruitridge Road is approximately 14,100 vehicles and declines to approximately 9,850 vehicles between Florin Perkins Road and South Watt Avenue.

The ADT volume on 65th Street Expressway, between Fruitridge Road and 14th Avenue is 20,600 vehicles. On Power Inn Road, the ADT is approximately 23,150 vehicles between Fruitridge Road and 14th Avenue. The ADT on Florin Perkins Road between Fruitridge Road and 14th Avenue is 18,600. This compares to an ADT of approximately 18,000 vehicles on South Watt Avenue between Fruitridge Road and Jackson Road.

Highway 50 near the vicinity of the project moves high volumes of traffic, and these volumes generally are the highest near the central business district. In 1991, the ADT on Highway 50 at the Watt Avenue Interchange was 144,000 vehicles per day. This figure increased to 170,000 vehicles per day at the Howe Avenue Interchange and 179,000 at the 65th Street Interchange. The ADT volume increased to 186,000 at the 59th Street Interchange and to 184,000 at the Stockton Boulevard Interchange. The ADT is 187,000 at the junction of Highway 99, and reached a maximum of 193,000 vehicles at the 15th/16th Streets Interchange (Caltrans 1992).

The 1991 ADTs along Highway 99 in the project vicinity are not as high as those on Highway 50, but significant, nevertheless. The 1991 ADT on Highway 99 at the Florin Road Interchange was 130,000. This number increased to 146,000 at the 47th Avenue Interchange, and to 146,000 at the Martin Luther King Jr. Boulevard Interchange. At the Fruitridge Road Interchange, the ADT was 140,000 in 1991. The maximum ADT volumes in 1991 on Highway 99 occurred at the 12th Avenue Interchange (148,000) and at the junction of Route 51 and Route 50 (161,000) (Caltrans 1992).

6.5.1.2.2 Levels of service on local roads. Subsection 6.5.1.2 discussed the routes that would most likely be taken to the site, based on current usage and capacities, distance and time of travel, and discussion with the City of Sacramento and CEC staff. These routes are called the expected primary commuter routes (PCRs).

Given the expected concentration of project traffic on the PCRs, an analysis was undertaken to determine the current level of service (LOS) on these area roadways. Once the LOS is determined, project traffic can be added to determine the impacts, if any, of project traffic. A computer model developed by the Transportation Research Board (TRB) was used to estimate the LOS along the primary commuter routes. LOS is a qualitative measure describing operational conditions within a traffic stream (Transportation Research Board 1985). The TRB model has six LOS ratings, A through F, which are defined in Table 6.5-3 for signalized and unsignalized intersections. Generally, an LOS of A is indicative of free traffic flow, no delays, and no driver discomfort due to the presence of other drivers. The LOS deteriorates with lower ratings. An LOS of F represents a breakdown of traffic flow, significant delays, and extreme driver discomfort due to traffic congestion. For signalized intersections, when the volume to capacity ratio exceeds 1.2, the TRB model does not assign an LOS but rather indicates by an asterisk (*) that an LOS is not meaningful. The asterisk may be interpreted as causing even greater delay than under an LOS of F.

Table 6.5-3
Interpretation of Level of Service (LOS) Ratings for Various Road Classifications

LOS Rating	Signalized Intersection	Unsignalized Intersection
A	Average delay: < 5.0 seconds.	Little or no delay
B	Average delay: 5.1 to 15.0 seconds.	Short traffic delay
C	Average delay: 15.1 to 25.0 seconds.	Average traffic delay
D	Average delay: 25.1 to 40.0 seconds.	Long traffic delay
E	Average delay: 40.0 to 60.0 seconds	Very long traffic delay
F	Average delay: > 60.0 seconds.	Extreme traffic delay

Source: Transportation Research Board, *Highway Capacity Manual, Special Report 209*, 1985, Page 10-9 and 9-4.

The LOS analysis measured the May 1993 LOS at eight intersections along the PCRs. These LOS locations are identified by a red circle on Figure 6.5-4. These locations along the primary commuter routes were selected for the LOS analysis because areas of interrupted traffic flow, such as an intersection, are most affected by an increase in traffic volume. Included are the following intersections:

- Folsom Boulevard at Power Inn Road.
- Jackson Road at Florin Perkins Road.
- Fruitridge Road at M. L. King Jr. Boulevard.
- Fruitridge Road at Stockton Boulevard.
- Fruitridge Road at 65th Street Expressway.
- Fruitridge Road at Power Inn Road.
- Fruitridge Road at 83rd Street.
- Fruitridge Road at S. Watt Avenue.

At each of these LOS locations, morning (6:00 to 9:00 a.m.) and afternoon (3:30 to 6:00 p.m.) traffic counts were taken, and information on signalization and geometric conditions were collected for input into the TRB model. These traffic counts are included as Appendix I. The results of the 1993 a.m. and p.m. peak hour LOS analysis are presented in Table 6.5-4.

Table 6.5-4 indicates that the existing level of service at the LOS intersections can generally be characterized as low. This is indicated by the presence of an LOS of D or lower for one or more approaches at each LOS location other than for the Fruitridge Road and 83rd Street location. As may be expected by the high volumes of traffic moving through the LOS location, the intersections of Power Inn Road/Folsom Boulevard and Power Inn Road/Fruitridge Road are particularly low LOS intersections. Both of these intersections have F or an asterisk rating in the a.m. and p.m. peak hour.

6.5.1.2.3 Project vicinity bus and passenger rail service. The project area is served by the Sacramento bus system. As of May 1993, Bus Route 51 stopped at Fruitridge and Power Inn Roads every 25 minutes during peak traffic periods (6:00 a.m. to 9:00 a.m., Monday through Friday). Stops are 30 minutes apart during mid-day flow (9:00 a.m. to 3:30 p.m., Monday through Friday). Saturday stops are also every 30 minutes. Stops on Sundays, holidays, and evenings occur at 60 minute intervals.

Table 6.5-4
Existing 1993 Level of Service (LOS) at Selected Intersections Along Primary Commuter Routes

LOS Location/Peak Hour	Eastbound	Westbound	Northbound	Southbound
Folsom Blvd. at Power Inn Road				
Peak hour a.m.--7:30-8:30	D	F	*	E
Peak hour p.m.--3:45-4:45	*	*	D	D
Jackson Road at Florin Perkins Road				
Peak hour a.m.--7:15-8:15	B	E	D	C
Peak hour p.m.--4:15-5:15	B	C	D	C
Fruitridge Road at M. L. King Jr. Blvd.				
Peak hour a.m.--7:30-8:30	D	D	D	D
Peak hour p.m.--3:30-4:30	D	D	D	D
Fruitridge Road at Stockton Blvd.				
Peak hour a.m.--7:30-8:30	D	D	D	D
Peak hour p.m.--3:30-4:30	D	D	D	D
Fruitridge Road at 65th St. Expwy.				
Peak hour a.m.--7:30-8:30	C	C	C	B
Peak hour p.m.--3:30-4:30	D	C	C	B

Table 6.5-4 (Continued)
Existing 1993 Level of Service (LOS) at Selected Intersections Along Primary Commuter Routes

LOS Location/Peak Hour	Eastbound	Westbound	Northbound	Southbound
Fruitridge Road at Power Inn Road				
Peak hour a.m.--7:15-8:15	C	C	F	C
Peak hour p.m.--3:45-4:45	F	*	D	C
Fruitridge Road at 83rd St.[a]	Southbound	Eastbound Left	--	--
Peak hour a.m.--7:15-8:15	B	A	--	--
Peak hour p.m.--3:30-4:30	D	A	--	--
Fruitridge Road at S. Watt Avenue[b]	Intersection	--	--	--
Peak hour a.m.--7:15-8:15	E	--	--	--
Peak hour p.m.--4:15-5:15	E	--	--	--

[a]For T-intersections, the TRB model only estimates the LOS for the minor street and for the conflicting left turn traffic on the major street.

[b]The TRB computer model does not compute LOS for 4-way stops. This LOS is based on estimates from the City of Sacramento (February 1993).

*The asterisk indicates that traffic delays may be greater than an LOS of F.

Source: B&V simulations based on metro Design & Technical counts taken May 1993.

6.5.2 Project Significance Criteria

The remainder of Section 6.5 evaluates the probable impact of the Procter & Gamble Cogeneration Project on the regional transportation network. No significant increase in the demand for air and water transportation services are expected; therefore, the focus will be on whether the project will result in a significant impact on the roadway network during construction or operation. Ultimately, conclusions regarding the significance of project impacts depends on the significance criteria used by the City of Sacramento since the project and roadways near the project are within the city limits.

The City of Sacramento General Plan, Transportation Element, Goal D, states that the City will work toward achieving an overall level of service of C on the City's local and major street systems. This goal is somewhat ambiguous as it does not specify the meaning of what is "working toward" or the "overall" level of service of C. The goal does not explicitly state that a level of service below C is now allowed and, in fact, many of the roadways in the project vicinity are not currently at a level of service of C and are not projected to be at a level of service C with or without the project.

The City of Sacramento Transportation Division was contacted for clarification regarding the level of service standards and acceptable project impacts. The City Transportation Division interprets the goal as meaning that for those locations at a level of service of C or above, a significant impact requiring mitigation occurs when a project results in a decrease in the level of service rating. For locations with an existing level of service below C, a significant project impact, one requiring mitigation, occurs when the project results in an increase in the peak volume to capacity ratio of more than two-one hundredths to a location (0.02) (Clark 1993). However, these standards are not applied to the construction phase of a project, only the operational phase (Clark 1993). Likewise, the City's TSM ordinance, a primary program designed to "work toward" acceptable levels of service, does not require temporary construction activities to conform to the ordinance (City of Sacramento Transportation Division 1991).

6.5.3 Construction Impacts

Construction of the Procter & Gamble Cogeneration Project will have an insignificant impact on the Sacramento MSA regional transportation network. Due to the relatively small size of the peak construction workforce (181 workers at peak) the only noticeable impact will be localized near the construction site. The local impact

will be the increased use of roadways by construction workers' vehicles and material deliveries by rail and truck. These impacts comprise deliveries and worker vehicle movements.

6.5.3.1 Deliveries. Increased transportation due to the construction of the Procter & Gamble Cogeneration Project will include deliveries of plant equipment and construction materials by rail and truck. Most construction materials such as concrete, steel, and lumber will be delivered by truck. Truck deliveries will occur between 8:00 a.m. and 4:30 p.m. on weekdays. In total, approximately 3,220 truck deliveries of materials and supplies are expected between April 1995 and December 1996, an average of about seven deliveries per weekday. It is expected that truck deliveries of concrete and rebar will account for more than one-third of all deliveries to the site, and delivery of consumables are expected to comprise roughly 20 percent of the total number of deliveries. Deliveries will begin in April 1995, with approximately 37 monthly deliveries. The number of deliveries will escalate until October 1995, when an estimated 310 deliveries will be made to the site during the month; or about 14 deliveries per weekday. Peak deliveries will occur well before the peak construction employment period. When construction employment is at its peak, about 200 monthly deliveries, or about nine deliveries per weekday will be made to the site. All deliveries will be routed either from Highway 50, south on Power Inn Road, to Fruitridge Road and 83rd Street, or from Highway 99, east on Fruitridge Road, north on 83rd Street.

The heaviest truck deliveries will be the delivery of the three gas compressors in August of 1995. Each of these weighs approximately 110,000 pounds and is approximately 7 feet 5 inches wide. The two chillers (75,000 pounds) and the deaerator (50,000 pounds) are the next heaviest components expected to be delivered by truck. Appropriate permits will be obtained for all deliveries to comply with local laws and ordinances.

6.5.3.1.1 Traffic composition. Although there are projected to be approximately 3,220 truck deliveries over the construction period, any noticeable impact in traffic composition will likely be limited to a relatively few days when concentrated truck deliveries of concrete will be made to the site for pouring. Other deliveries will be spread out over the construction period and will not significantly affect the traffic composition. To illustrate, based on the traffic counts taken at the LOS locations identified on Figure 6.5-4, the average composition of the truck traffic in the vicinity of the site in May 1993, was approximately 4.9 percent. Applied to the ADT of 14,100 on Fruitridge Road between Power Inn Road and Florin Perkins Road, this

implies that an average of approximately 690 trucks travel this segment each day. With the addition of project traffic, this average composition will not significantly change. For example, at the time of peak truck deliveries to the site in October 1995, an average of 14 deliveries per weekday will occur. If all 14 deliveries were routed over Fruitridge Road to 83rd Street, the truck composition would be approximately 5.0 percent, or about one-tenth of a percent above the current truck composition level.

6.5.3.1.2 Transportation of hazardous materials. During construction, there will only be a limited number of hazardous materials deliveries. It is expected that there will be a total of four deliveries of ammonia, two deliveries of acid, four deliveries of oil, and two deliveries of caustic. Delivery of these materials will occur over the routes described in Subsection 6.5.3.1 and will be in compliance with all laws, ordinances, regulations, and standards governing the safe transportation of hazardous materials.

6.5.3.1.3 Rail service impacts. The largest plant and equipment components will be hauled by rail. As indicated on Figure 6.5-4, both the Central California Traction line and the Southern Pacific line are in close proximity to the site. All rail deliveries of plant equipment will be unloaded by crane and moved directly to the site. Rail deliveries and the expected date of these deliveries are listed in Table 6.5-5. As noted in the table, all rail deliveries will occur in 1995 and will not coincide with the period of peak construction employment. It is expected that rail deliveries will not significantly impact the flow of traffic in the project area given the number of shipments required.

6.5.3.1.4 Transmission line and fiber optic cable construction. Construction of the transmission line and fiber optic cable will occur over a 12 week span beginning in October 1995. The deliveries and workers associated with this phase of the project are included in the analysis in Subsection 6.5.3.3.

The proposed 1.2 mile route of the transmission line is shown on Figure 3.5-10. The only major street crossed by the transmission line will be Florin-Perkins Road, east of the site. Construction of the transmission line facilities will have very little impact on traffic flow, and should be limited to equipment delivery to the corridor and stringing of the conductor and fiber optic cable. This will involve the use of a single line tensioner vehicle and should impact traffic on Florin-Perkins Road for less than a few hours. No encroachment permits are anticipated to be needed given the

Table 6.5-5
Expected Equipment Deliveries by Rail to the
Procter & Gamble Cogeneration Site During Construction

Rail Deliveries	Quantity	Date	Weight (lbs)	Size
Gas Turbine Generator	1	June 1995	200,000	10'5" x 23'5"
Gas Turbine	1	June 1995	160,000	13'6" x 56'6
Steam Turbine	1	August 1995	194,000	23' x 40'
STG Generator	1	August 1995	200,000	22' x 11'
Main Transformer	2	July 1995	160,000	10' x 12'
HP Economizer - Front	2	July 1995	125,000	8' x 40'
HP Economizer - Rear	2	July 1995	190,000	10' x 40'
LP Superheater	2	August 1995	175,000	11' x 40'
Feedwater Preheater	2	September 1995	120,000	9' x 40'
Exhaust Stack	2	October 1995	120,000	10' diameter x 150'

Source: Memorandum from Walsh Construction Company to Rich Chapman, B&V, May 19, 1993.

placement of the poles around existing facilities and roadways. The SCA will coordinate with the City as necessary to ensure safety during these minor disruptions to traffic flow.

6.5.3.2 Construction Worker Traffic Patterns. To quantify the traffic impacts associated with project construction, it was necessary to project the origin of project workers, to determine the number of worker vehicle trips to the site, and to identify specific commuting routes.

It was assumed that project construction workers will be hired from the Sacramento MSA in a pattern which reflects each MSA county's percent of total MSA employment. Based on information obtained from the local building trades, it was also assumed that there will be an average of two workers per vehicle. Therefore, when construction employment peaks at an estimated 181 workers in May 1996, there will be approximately 90 worker vehicle round trips made during the a.m. and p.m. commute to the site which will occur based on a 7:00 a.m. to 3:30 p.m. workday, Monday through Friday.

Primary commuting routes were identified based on the expected county of origin for workers, discussions with City of Sacramento Transportation Division personnel, and observation of commuting distance and times to the site over each route. These vehicle volumes and primary commuter routes are shown on Figure 6.5-5 for the a.m. rush hour during peak employment. Construction worker vehicle volumes by route are listed in red on Figure 6.5-5 and projected vehicle movements at intersections are indicated by red arrows. It was assumed that the p.m. construction worker vehicle flow over primary commuter routes would be in the opposite direction of the a.m. traffic flow.

Figure 6.5-5 indicates that commuter traffic is projected to be relatively dispersed. This dispersion is attributed to the origin of workers from four counties, the high volume capacity of each commuter route, and the expected avoidance of the relatively high volume areas by workers having an alternative route to the site.

6.5.3.3 Traffic Analysis. Once the projected construction traffic volumes over primary commuter routes were quantified, a baseline (without the project) and "with project" analysis were performed for the peak employment period of May 1996. The basis for the traffic analysis was the traffic count data and design information collected at several locations in the site vicinity by personnel from Metro Design & Tech., a local transportation consultant, in May 1993. Traffic counts collected by these personnel and used in the analysis are presented in Appendix I.



Folsom Blvd
Jackson Road
Fruitridge Road
65th Street Expwy
Power Inn Road
Flora Perkins Road
South Watt Ave
Project Site
186,000
179,000
170,000
144,000
20,600
22,150
20,700
14,100
9,850
18,600
18,000
Brighton
Ramona
Perkins
Polk
Manlove
Filtration Plant
Flood Gate
Substation
Tahoe Sch
Tahoe Park
Radio Tower (KROY)
Hiram Johnson High Sch
All Hallows Sch
Fairhaven Home for Girls
Colonial Playground
Mark Twain Sch
Lassen Jr High Sch
Bonnheim Sch
Earl Warren Sch
Fire Station
Baer Park
Burnett Sch
St Peters Sch
Jefferson Sch
Bancroft Sch
Trailer Park
Gravel Pit
Gravel Pits
Park
Stockton

The level of service (LOS) at the eight LOS locations identified on Figure 6.5-4 during the peak construction period was estimated using the Transportation Research Board model described in Subsection 6.5.1.2.2. The approach taken was to escalate the existing peak a.m. and p.m. traffic counts to derive the baseline conditions in May 1996. Construction traffic and deliveries were then added to determine the project impacts. The City of Sacramento Transportation Division was contacted for input regarding an appropriate escalation rate for application to the 1993 counts which accounted for cumulative changes in land uses in the vicinity of the project, including the proposed land use changes at the US Army Depot. Based upon the City's long-term traffic growth rate projections for the project vicinity, using the SACMET model, it was determined that the traffic volumes over primary commuter routes will realize an annual average growth rate of approximately 3.3 percent through the project construction and initial operation period (City of Sacramento 1993). This rate was applied to the 1993 traffic count volumes to derive the baseline conditions in the analysis and represents the cumulative increase in traffic in the project vicinity including all known changes in land uses and traffic patterns.

6.5.3.3.1 Level of service results. Level of service results are indicated in Table 6.5-6. The first two columns with LOS ratings indicate the LOS expected under May 1996 baseline conditions, when project employment is at its peak. As seen in the table, many LOS locations are projected to have a low LOS rating, particularly the intersection of Folsom Boulevard and Power Inn Road. The intersection of Fruitridge Road and Power Inn Road is also expected to realize low LOS ratings during the p.m. peak hour, as is the intersection of Fruitridge Road and South Watt Avenue.

Once the 1996 baseline LOS ratings were derived, construction volumes were added to derive project impacts. As indicated in Table 6.5-6, project impacts on the peak LOS are expected to be insignificant. During the a.m. peak hour, no impacts are expected since, based on working hours of 7:00 a.m. to 3:30 p.m., all project traffic passes through the LOS locations before the a.m. peak. During the p.m. rush hour, project traffic passes through six LOS locations coincident with their p.m. peak hour, but only southbound traffic on 83rd Street is projected to experience a decrease in LOS (from D to E).

Because the a.m. construction traffic will pass through all LOS locations between 6:00 a.m. and 7:00 a.m., a prepeak period, a separate analysis was performed for this time period. Results are presented in the final two columns in Table 6.5-6. As

Table 6.5-6
Peak Hour Level of Service Under Baseline and Project Conditions at Selected Locations During Peak Construction

Location	Peak Hour 1996 Baseline LOS		Peak Hour LOS 1996 with Project		6:00 a.m. to 7:00 a.m. 1996 LOS	
	a.m.	p.m.	a.m.	p.m.	Without Project	With Project
Folsom at Power Inn						
Eastbound	D	*	No Impact	No Impact	D	No Impact
Westbound	F	*	No Impact	No Impact	C	No Impact
Northbound	*	E	No Impact	No Impact	D	No Impact
Southbound	F	E	No Impact	No Impact	D	E
Jackson at Florin Perkins						
Eastbound	B	B	No Impact	No Impact	B	No Impact
Westbound	F	C	No Impact	No Impact	D	No Impact
Northbound	D	E	No Impact	No Impact	C	No Impact
Southbound	C	C	No Impact	No Impact	D	No Impact
Fruitridge at M. L. King						
Eastbound	D	E	No Impact	No Impact	C	No Impact
Westbound	D	E	No Impact	No Impact	C	No Impact
Northbound	D	D	No Impact	No Impact	C	No Impact
Southbound	D	D	No Impact	No Impact	D	No Impact
Fruitridge at Stockton						
Eastbound	D	D	No Impact	No Impact	D	No Impact
Westbound	D	E	No Impact	No Impact	D	No Impact
Northbound	D	E	No Impact	No Impact	D	No Impact
Southbound	D	D	No Impact	No Impact	D	No Impact

Table 6.5-6 (Continued)
Peak Hour Level of Service Under Baseline and
Project Conditions at Selected Locations During Peak Construction

Location	Peak Hour 1996 Baseline LOS		Peak Hour LOS 1996 with Project		6:00 a.m. to 7:00 a.m. 1996 LOS	
	a.m.	p.m.	a.m.	p.m.	Without Project	With Project
Fruitridge at 65th Street						
Eastbound	C	D	No Impact	No Impact	D	No Impact
Westbound	C	D	No Impact	No Impact	C	No Impact
Northbound	C	D	No Impact	No Impact	C	No Impact
Southbound	B	C	No Impact	No Impact	B	No Impact
Fruitridge at Power Inn						
Eastbound	C	*	No Impact	No Impact	C	No Impact
Westbound	C	*	No Impact	No Impact	C	No Impact
Northbound	F	D	No Impact	No Impact	C	No Impact
Southbound	C	D	No Impact	No Impact	C	No Impact
Fruitridge at 83rd Street						
83rd Street	B	D	No Impact	E	B	C
Fruitridge	A	A	No Impact	No Impact	A	No Impact
Fruitridge at South Watt						
Fruitridge	F[1]	F[1]	No Impact[1]	No Impact[1]	E[1]	No Impact[1]
South Watt	F[1]	F[1]	No Impact[1]	No Impact[1]	E[1]	No Impact[1]

[1]The City has designated this 4-way stop as in need of signalization. If signals are installed, the LOS will improve significantly.

*The asterisk indicates that traffic delays may be greater than an LOS of F.

expected, the LOS is more favorable during the 6:00 a.m. to 7:00 a.m. period compared to the LOS during the peak hour. Nevertheless, many approaches have an LOS of below C; this is reflective of the area's concentration of industrial facilities which generate significant truck traffic before 7:00 a.m. When project traffic is added, only two approaches experience an LOS decrease; southbound 83rd Street at Fruitridge Road decreases from B to C, and southbound Power Inn Road at Folsom decreases from D to E.

According to the City's evaluation criteria described in Subsection 6.5.2, these impacts during construction are not considered significant.

6.5.4 Operation Impacts

Operation of the Procter & Gamble Cogeneration Project will not have a significant impact on the local transportation network. This lack of an impact is primarily due to the small permanent plant staff of 21 persons. This number of operations personnel will remain unchanged with the addition of the generic simple cycle combustion turbine. Deliveries to the plant will also be minimal. Routine truck deliveries will generally be limited to the following:

- Water Treatment Chemicals--One delivery per month.
- Waste Pickup--One pickup per week.
- Boiler Chemicals--One delivery per month.
- Acid--Two delivery trucks per month.
- Aqueous Ammonia--Four delivery trucks per month.
- Caustic--One delivery truck per month.
- Fuel Oil--One delivery truck per month.

The largest volumes of deliveries will be the approximate 6,000 gallons of acid and caustic per delivery.

As during project construction, all shipments of hazardous materials and wastes will be in accordance with applicable transportation laws, ordinances, regulations, and standards. From Highway 50, shipments of hazardous materials will be over Power Inn Road, east on Fruitridge Road to 83rd Street. From Highway 99, deliveries will be routed east on Fruitridge Road to 83rd Street. There are not expected to be any increased demands for other modes of transportation including rail, water, or air transportation.

An LOS analysis was undertaken to determine the potential for impact on traffic flows from project traffic. As indicated in Table 6.5-7, the baseline LOS is projected to be of concern at several area locations especially at Folsom Boulevard and Power

Inn Road, at Fruitridge Road and Power Inn Road, and at Fruitridge Road and South Watt Avenue. It is noted, however, that the 4-way stop at the intersection of Fruitridge Road and South Watt Avenue has been identified as an intersection warranting signalization by transportation consultants hired by the City (K. D. Anderson Transportation Engineers 1993). If this occurs, the LOS will improve significantly. For modeling purposes, traffic was routed over the primary commuter routes in the same proportion as in the construction LOS analysis. The analysis assumed one worker per vehicle and working hours of 8:00 a.m. to 5:00 p.m. LOS modeling results are presented in Table 6.5-7. Because of the small volume of traffic and passage through the LOS locations in the evening during a non-peak hour, no location is expected to experience a decrease in peak LOS due to project operation. The analysis also indicated that the volume to capacity ratio, a measure of the ability of a road to accommodate additional traffic, did not decrease by 0.02 percent or more for any intersection with an LOS rating of below C. Based on the City's evaluation criteria discussed in Subsection 6.5.2, plant operation will not significantly impact the transportation network.

6.5.5 Traffic Cumulative Impacts

The LOS analyses performed for the construction and operational periods were based on the City of Sacramento's estimate of cumulative traffic levels in the project vicinity. These estimates included expected and proposed changes to the land uses in the vicinity of the project and therefore, no additional analyses are warranted.

6.5.6 Mitigation

6.5.6.1 Construction. As discussed in Subsection 6.5.3.3.1, construction of the Procter & Gamble Cogeneration Project will have some impacts on area roadways in the vicinity of the site. However, these marginal impacts are expected to be insignificant and temporary. These insignificant impacts are attributed to the relatively small workforce; and the encouragement of carpooling. Based on the City's evaluation criteria, no further mitigation is required to reduce project traffic volumes during construction.

Other mitigation activities include those associated with delivery of hazardous materials, wide loads, and increased rail traffic. All shipments of hazardous materials will comply with all applicable laws, ordinances, regulations, and standards for the safe transportation of these materials. Wide loads and loads in excess of normal weight limits will be properly permitted, marked and, if necessary, escorted. Any restrictions requiring daytime transportation will also be observed. Although some

Table 6.5-7
Projected Level of Service Under Baseline and
Project Conditions at Selected Locations During Operation

Location	1998 Baseline Peak LOS		1998 Peak LOS with Project	
	a.m.	p.m.	a.m.	p.m.
Folsom at Power Inn				
Eastbound	D	*	No Impact	No Impact
Westbound	F	*	No Impact	No Impact
Northbound	*	F	No Impact	No Impact
Southbound	F	F	No Impact	No Impact
Jackson at Florin Perkins				
Eastbound	B	B	No Impact	No Impact
Westbound	*	C	No Impact	No Impact
Northbound	E	F	No Impact	No Impact
Southbound	C	C	No Impact	No Impact
Fruitridge at M. L. King				
Eastbound	D	F	No Impact	No Impact
Westbound	D	F	No Impact	No Impact
Northbound	E	D	No Impact	No Impact
Southbound	D	E	No Impact	No Impact
Fruitridge at Stockton				
Eastbound	D	D	No Impact	No Impact
Westbound	E	F	No Impact	No Impact
Northbound	D	*	No Impact	No Impact
Southbound	D	E	No Impact	No Impact

Table 6.5-7 (Continued)
Projected Level of Service Under Baseline and
Project Conditions at Selected Locations During Operation

Location	1998 Baseline Peak LOS		1998 Peak LOS with Project	
	a.m.	p.m.	a.m.	p.m.
Fruitridge at 65th Street				
Eastbound	D	D	No Impact	No Impact
Westbound	C	E	No Impact	No Impact
Northbound	D	B	No Impact	No Impact
Southbound	C	C	No Impact	No Impact
Fruitridge at Power Inn				
Eastbound	C	*	No Impact	No Impact
Westbound	C	*	No Impact	No Impact
Northbound	F	*	No Impact	No Impact
Southbound	C	E	No Impact	No Impact
Fruitridge at 83rd Street				
83rd Street	C	E	No Impact	No Impact
Fruitridge	B	C	No Impact	No Impact
Fruitridge at South Watt				
Fruitridge	F[1]	F[1]	No Impact[1]	No Impact[1]
South Watt	F[1]	F[1]	No Impact[1]	No Impact[1]

[1]The City has designated this 4-way stop as in need of signalization. If signals are installed, the LOS will improve significantly.

*The asterisk indicates that traffic delays may be greater than an LOS of F.

equipment will be delivered to the site by rail, these will be a relatively small number of deliveries which will not exceed the capacity of the railways, and should cause little or no additional delay to traffic flows.

6.5.6.2 Operation. Given the small number of staff and deliveries expected onsite, there will be no significant negative impacts on the level of service in the project vicinity. As required by City ordinance, the project will comply with the City's TSM requirements and thus, contribute toward minimizing a further decrease in the level of service in the project area. The LOS analysis also indicates that according to the City's impact criteria, the project will not result in significant impacts during operation. No further mitigation is recommended.

6.5.7 Laws, Ordinances, Regulations, and Standards

This section is a summary of applicable laws, ordinances, regulations, and standards (LORS) that apply to the transportation sections of the Application for Certification (AFC).

6.5.7.1 Federal LORS. Hazardous materials transportation is addressed in the following federal LORS:

- The Hazardous Materials Transportation Act of 1974 which directs the Department of Transportation to establish criteria and regulations for the safe transportation of hazardous materials.
- Title 49 Code of Federal Regulations (CFR), Subtitle B, Chapter I, Subchapter C, Hazardous Material Regulations, addresses the transportation of hazardous materials, the types of materials defined as hazardous, and the marking of the transportation vehicles.
- Title 49 CFR, Subtitle B, Chapter II, Subchapter B, Federal Motor Carrier Safety Regulations, addresses safety considerations for the transport of goods, materials, and substances over public highways.

6.5.7.2 State. The transportation of hazardous and flammable materials and requirements for excessive loads are addressed in the following state LORS:

- California Vehicle Code Division 13, Chapter 5, Article 1 Hazardous Materials, Sections 31300, 31303 et seq. address the transportation of hazardous materials, the routes used, and restrictions thereon.
- California Vehicle Code Division 14.7 Flammable and Combustible Liquids, Sections 34000 et seq. address the transportation of flammable and combustible liquids over pubic roads and highways.

- California Vehicle Code Division 14.8 Safety Regulations, Section 34500, 34501, 34501.3, 34502-7, 34510-11 address the safe operation of vehicles, including those which are used for the transportation of hazardous materials including explosives.
- California Vehicle Code Sections 2500-2505 address the issuances of licenses by the Commissioner of the California Highway Patrol for the transportation of hazardous materials including explosives.
- California Vehicle Code Sections 12804-12804.5 address the licensing of drivers and the classifications of licenses required for the operation of particular types of vehicles. In addition, it requires the possession of certificates permitting the operation of vehicles transporting hazardous materials.
- California Vehicle Code Section 35780; Streets and Highways Code 660-711; and Title 21 CCR Sections 1411.1-1411.6 state that overload approvals from the State Department of Transportation are required for transportation of excessive loads over state highways.

6.5.7.3 Local LORS. Efforts to control high volumes of traffic in the Sacramento area are addressed in the following:

- The City of Sacramento General Plan, Transportation Element, Goal D, states as a goal to work towards achieving an overall Level of Service C on the City's local and major street systems.
- The City of Sacramento Ordinance No. 88-082 adds Chapter 77 to the Sacramento City Code. Chapter 77 establishes Transportation System Management (TSM) requirements on City employers in order to reduce peak traffic congestion.

6.5.7.4 Compliance. There will be an estimated eight deliveries of hazardous materials during construction. These will consist of four deliveries of ammonia, and two deliveries of acid and caustic. Deliveries of these materials will comply with applicable federal and state regulations regarding the transportation of hazardous materials. In addition, all deliveries of wide or overweight equipment and materials will conform to state law.

The City's level of service goal of working toward an overall level of service of C is somewhat ambiguous. It does not prohibit an LOS rating below C, and, in fact, many roadways within the City are currently below the goal of a C LOS. In practice, the City Transportation Department interprets the standard as meaning that for those locations at C or above, a significant impact requiring mitigation occurs when a

project results in a decrease in the LOS rating. For locations with an existing LOS below C, a significant impact is defined as that in which the project results in an increase in the peak volume to capacity ratio of more than 0.02. The City considers these impacts only for operating conditions and does not apply these evaluation standards to the construction period (Clark 1993). On the basis of the City's evaluation criteria, the project will comply with the level of service criteria.

The City has chosen to work toward a level of service of C through a number of transportation programs, including the TSM ordinance in which employers are required to encourage and promote alternative transportation modes. The project will comply with the TSM ordinance.

6.5.8 References

City of Sacramento, 1993, *Circulation Element, Sacramento Army Depot Site Planning and Environmental Assessment*, preliminary.

City of Sacramento, July 1991, Transportation Division, *TSM Employer Guidelines*.

City of Sacramento, March 1989, Transportation Division, *Developer Transportation Systems Management Handbook*.

Clark, Pelle, City of Sacramento, May 11, 1993, Transportation Division, in personal communication with John Wynne, Black & Veatch.

County of Sacramento, December 9, 1992, *Planning and Community Development Department, Revised Draft Circulation Element of the County of Sacramento General Plan*.

Evans, Bud, City of Sacramento, California, May 11, 1993, Transportation Division, in personal communication with John Wynne, Black & Veatch.

K. D. Anderson Transportation Engineers, February 15, 1993, *Sacramento Army Depot Site Planning and Environmental Assessment*.

Metro Design & Tech, May 27, 1993, traffic counts collected for Black & Veatch.

Nakaga, Dennis, June 10, 1993, County Transportation Department, in personal communication with John Wynne, Black & Veatch.

Sacramento Area Council of Governments, January 1990, *Hazardous Waste Management Plan for the SACOG Region*.

Sacramento Area Council of Governments, December 1989, *Sacramento Metropolitan Area Transportation Study, Technical Report.*

Sacramento Area Council of Governments, February 1992, *1992 Regional Transportation Plan Technical Appendix.*

Sacramento Area Council of Governments, December 1990, *1992 Regional Transportation Plan, Working Paper #3: Existing Condition and Projections.*

Sacramento Area Council of Governments, December 1990, *1992 Regional Transportation Plan, Working Paper #4: Definition of Regional Mobility Problems.*

Sacramento Area Council of Governments, 1985, *Year 2010 Report.*

Sacramento Area Council of Governments, 1988, *Metro Study Summary Report.*

Sacramento Area Council of Governments, June 1, 1989, *Strategic Transportation Planning Study, Summary Report.*

Sacramento Area Council of Governments, April 1992, *Transportation Development Act Guidelines.*

Sacramento Area Council of Governments, February 1992, *Sacramento Area Planning and Implementation Guidelines for Shuttle Services.*

Sacramento Area Council of Governments, 1992, *Suburban Mobility Project, Getting From Here to There... Unsnarling Sacramento's Suburban Traffic.*

Sacramento Metropolitan Chamber of Commerce, 1992, *Greater Sacramento Area Statistical Abstract.*

Sacramento Metropolitan Chamber of Commerce, 1992, *Welcome to Sacramento Newcomer's Map.*

Sacramento Metropolitan Chamber of Commerce, 1991, *All About Business in Sacramento, 1991/1992.*

Sacramento Metropolitan Chamber of Commerce, 1992, *All About Living in Sacramento, 1992-1993.*

Sacramento Regional Transit District, April 4, 1993, *Bus and Light Rail Timetables.*

State of California, June 1992, Transportation and Housing Agency, Department of Transportation, Division of Traffic Operations, *1991 Traffic Volumes on the California State Highway System.*

State of California, 1982, Caltrans Division of Mass Transportation, *California State Railroad Map*.

Transportation Research Board, 1985, *Highway Capacity Manual, Special Report 209*, Washington, D.C.

Webb, Robert, June 10, 1993, California Public Utilities Commission, in personal communications with John Wynne, Black & Veatch.

Williamson, Bonnie, May 11, 1993, City of Sacramento Transportation Division, in personal communications with John Wynne, Black & Veatch.

6.6 Land Use

Any new facility will, to a varying degree, impact land uses in the project vicinity. Therefore, it is important to evaluate current conditions and predict how they will be affected by construction and operation of a new facility. This section addresses existing land use patterns and trends, applicable specific Community and General Plans, and potential land use impacts of the cogeneration facility, associated transmission line, and fiber-optic communication line. Subsection 6.6.2 discusses project consistency with applicable plans. As further discussed below, no adverse land use impacts are expected and, as a result, no mitigation measures will be proposed.

6.6.1 Existing Environment

The following subsections provide a general overview of land use patterns within the City of Sacramento, the project vicinity, and the project site.

6.6.1.1 City of Sacramento Characteristics. Sacramento is a moderate sized city of 97 square miles and a 1991 approximate population of 374,600 (State of California Department of Finance 1992). Figure 6.6-1 shows the City of Sacramento, which is located in north central California.

Sacramento contains a diverse distribution of land uses, including a central business district in the western central part of the City; additional commercial centers are scattered throughout the City. Industrial land uses are concentrated in the northern and southeastern sectors of the City. The US Army Depot is located in the southeastern part of the City, directly south of the Procter & Gamble facility.

Mather Air Force Base is east of the City limits, and McClellan Air Force Base is north of the City limits. Although not directly part of the project study area, these bases represent a significant land use category and, consequently, affect the manner in which the City functions. Mather Air Force Base is scheduled to close October 1, 1993 (Kowalski 1993). McClellan Air Force Base will remain open but it has not yet been determined if the current level of service at the Base will continue (Dobbs 1993).

The Sacramento Metropolitan Airport is near the intersection of Highways 99 and I-5 and the Sacramento Executive Airport is at I-5 and Florin Road. Railroad tracks providing train service by Southern Pacific, Union Pacific, Western Pacific, and Central California Traction Railroad Companies connect Sacramento to other areas of the state and country.

Sacramento, like many other metropolitan areas, has experienced widespread suburban sprawl. Several suburban satellite communities that are not within the

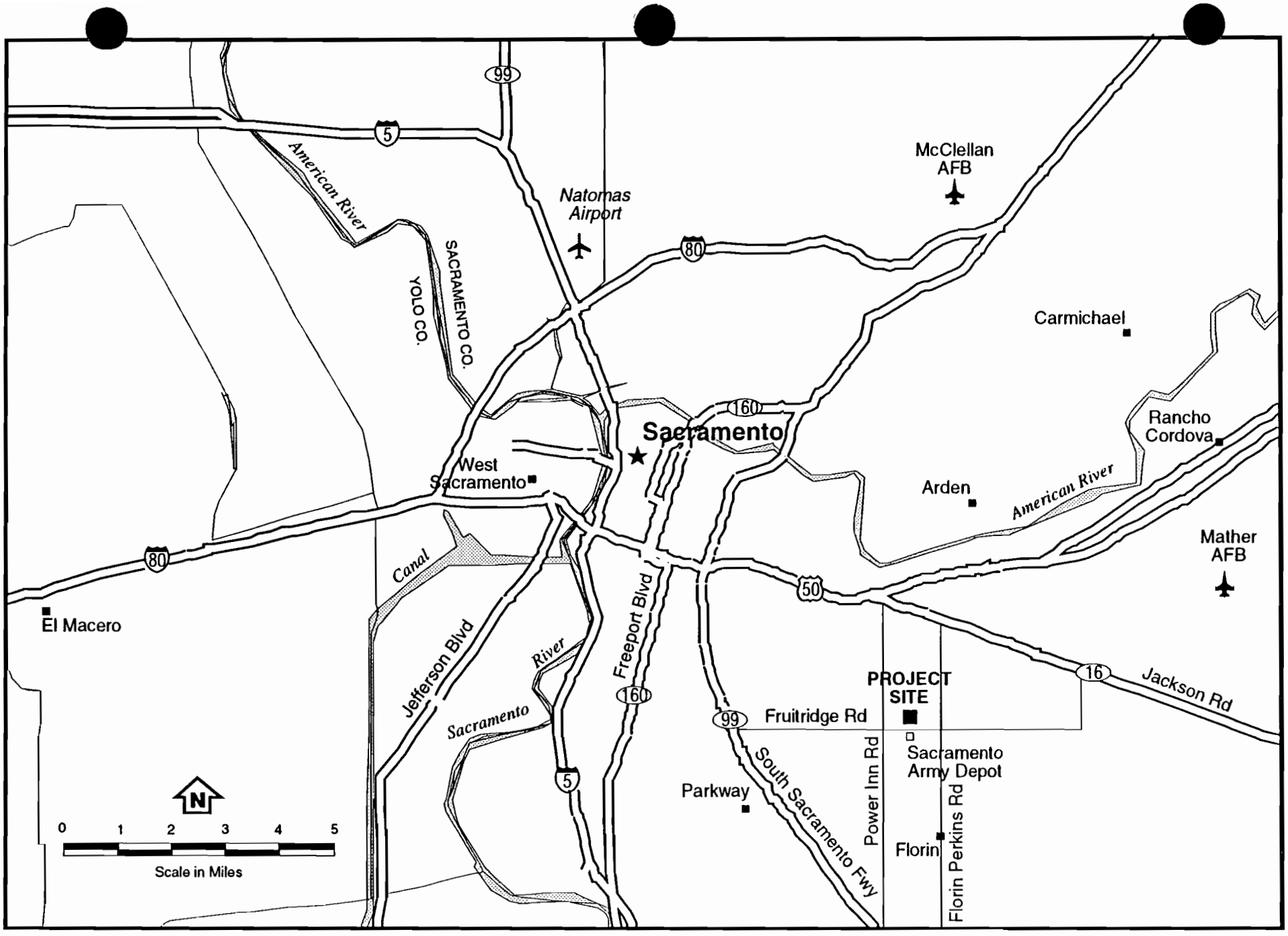

Map Source: DeLorme Mapping's MapExpert, Freeport, Maine.

CITY OF SACRAMENTO

Figure 6.6-1

incorporated city limits are located around the City. Some of the neighborhoods within the City limits include Florin, South Natomas, and Del Paso Heights *(Sacramento Metropolitan Chamber of Commerce 1992/1993)*.

6.6.1.2 Project Vicinity Characteristics. The project site is within the jurisdiction of the Sacramento Area Regional Planning Council, the County of Sacramento, and the City of Sacramento. An aerial photograph of the project vicinity is presented on Figure 6.6-2. Figure 6.6-3 provides existing land use within 1 mile of the project site and associated transmission line.

The proposed project will be located at the corner of 24th Avenue and 83rd Street in southern Sacramento. Land use in the project vicinity consists primarily of industrial/commercial and residential. Industrial developments occur to the north and east, and the Procter & Gamble facility, the project's steam host, is directly south of the site. Residential developments are to the west. The US Army Depot is immediately south of the Procter & Gamble facility.

Decommissioning activities for the US Army Depot have already been initiated. A Re-Use Commission has been appointed the task of determining the best and most appropriate land uses for the Army Depot site. On September 20, the City Planning and Development Department made a presentation to the Re-Use Commission regarding preferred uses of the Army Depot site. Although there were some disagreements concerning the percentage of open space required, the concept of using the land for an "employment center" was well accepted. A maximum of 15,000 people are expected to be employed onsite. Land uses are anticipated to include Industrial Labor Intensive (35 people per acre) and Office/Commercial (50 people per acre) (Holmen 1993).

Several recreational parks are within the project vicinity, including Baer Park, Warren Park, and Sim Park. Warren Park is approximately 4,800 feet west of the project site and Baer Park is roughly 4,800 feet southwest of the site. Undeveloped parcels, previously used for aggregate mining, lie to the northeast and north of the site. The land north of the site has been slated by the City's General Plan Land Use Map as open space. Figure 6.6-4 provides locations of parks and open space within 1 mile of the project facility and associated transmission line. The land to the northeast has been designated part of the City's new growth area.

The City of Sacramento Chamber of Commerce designates the residential area west of the site as part of the Florin neighborhood. These residential developments

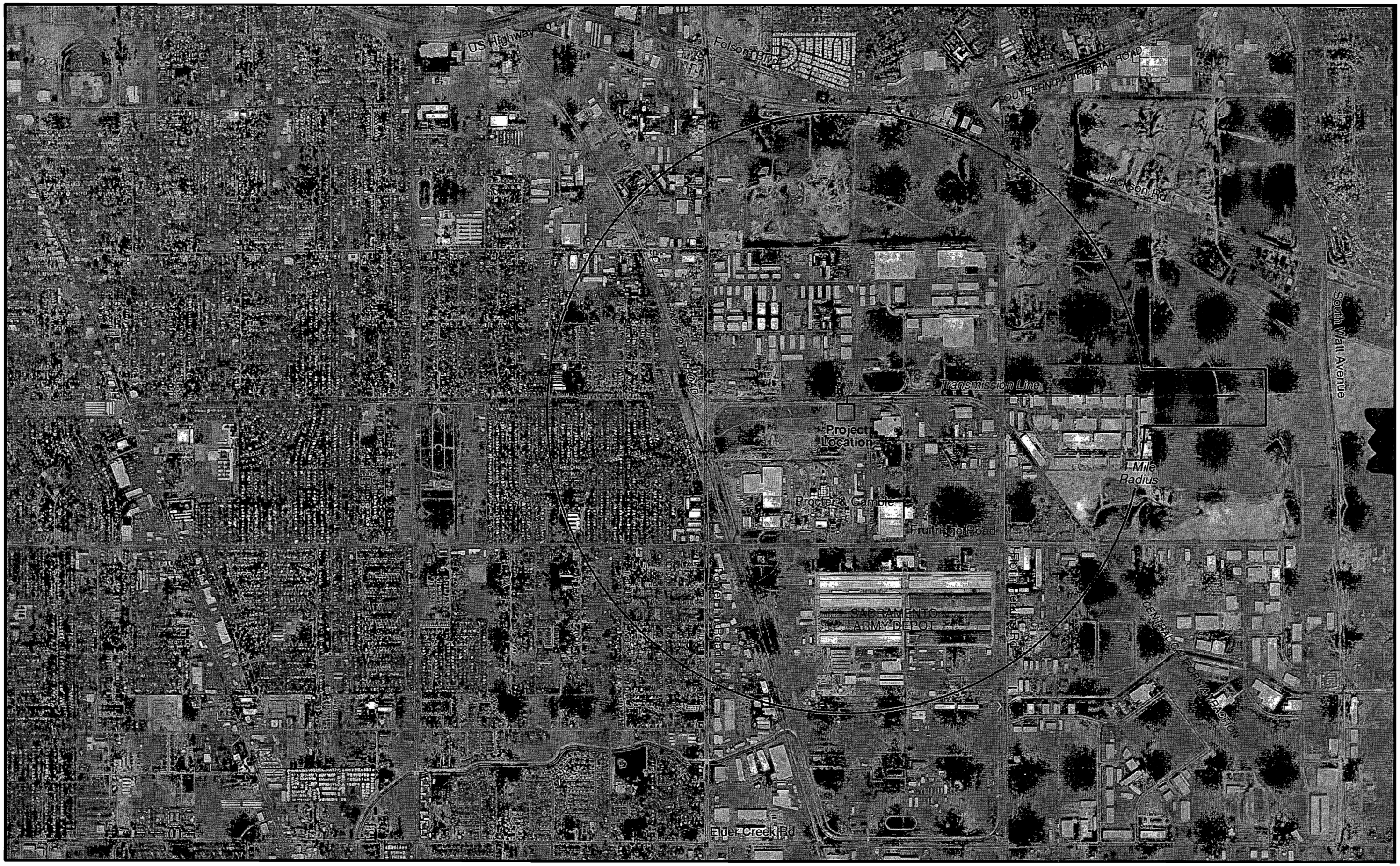

AERIAL PHOTOGRAPH OF THE PROJECT VICINITY

Figure 6.6-2

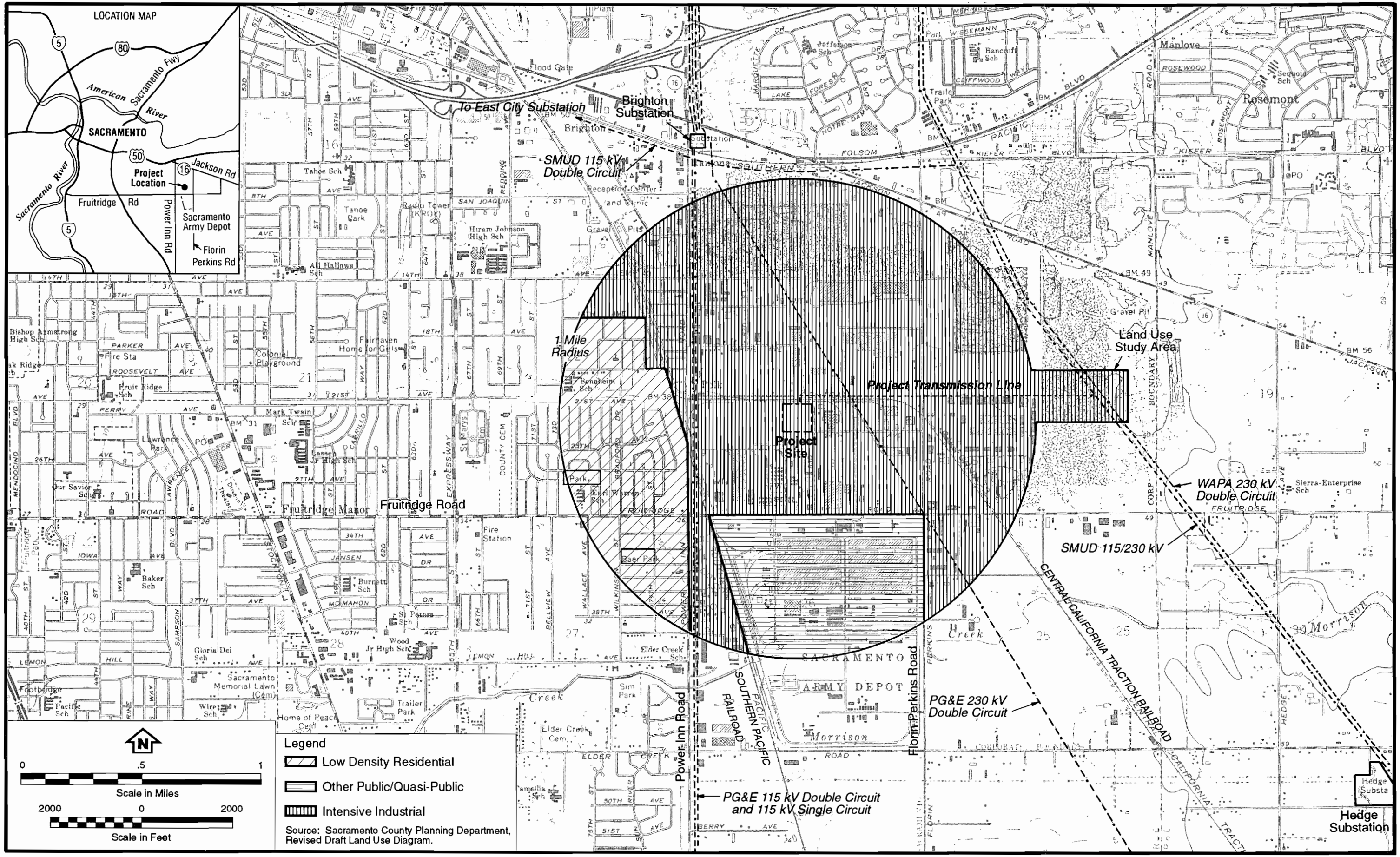

Base Map Source: USGS, Sacramento East and Carmichael, Calif, 1:24,000 scale quadrangles.

EXISTING LAND USE IN THE PROJECT VICINITY

Figure 6.6-3

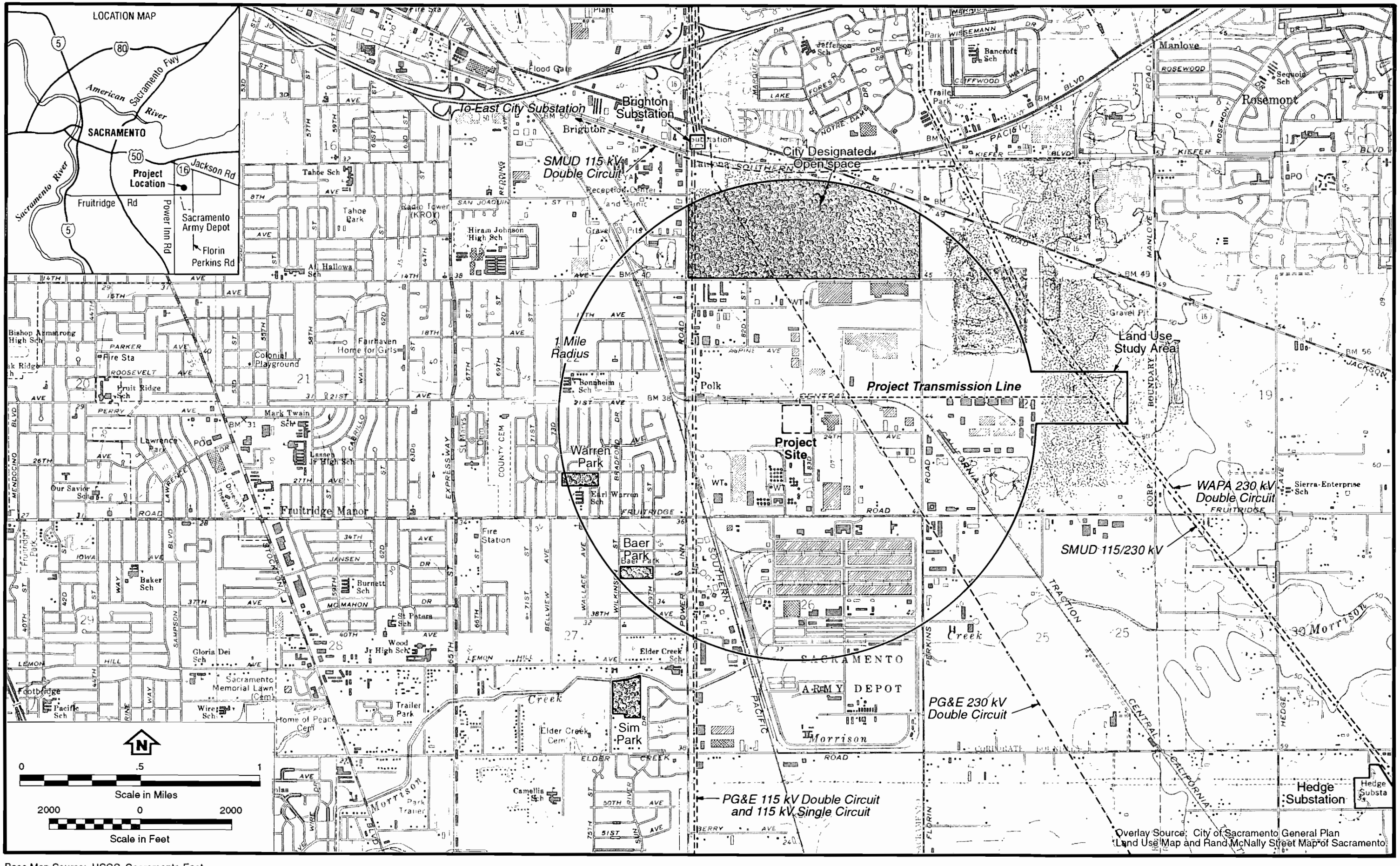

Base Map Source: USGS, Sacramento East and Carmichael, Calif, 1:24,000 scale quadrangles.

RECREATIONAL PARKS AND OPEN SPACE IN THE PROJECT VICINITY

Figure 6.6-4

are proposed as sensitive receptors for the proposed project. This area is characterized by modest, single family starter homes built after World War II. Florin neighborhood has been the target of City redevelopment money in an effort to boost southern Sacramento. The Chamber of Commerce indicates that because of municipal efforts and the costly real estate market of the late 1980s, this area of the City is revitalizing.

6.6.1.3 Project Site Characteristics. The project site encompasses approximately 10 acres immediately north of the Procter & Gamble facility (City of Sacramento Assessor Map, County of Sacramento, California Identification Number 061-0010-022-0000) in Section 23, Township 8N, Range 5E, Sacramento, Sacramento County. The project site is bordered by the Central California Traction Rail Line to the north and East 83rd Street to the east. Power Inn Road is approximately 0.4 mile west of the site; Fruitridge Road is approximately 0.35 mile south of the site. It is anticipated that the cogeneration facility will occupy the entire site during operation. An additional 5 acres west of the site will be leased during the construction phase for temporary lay-down and parking.

Currently, the project site is undeveloped, but heavily disturbed. Roads have been built to facilitate access, and onsite drainage ditches have rerouted the natural water flow. A drainage ditch bisects the project site. Directly north of the site is a track of the Central California Traction Company, and directly west of the site are undeveloped, disturbed fields, and a track of the Southern Pacific Railroad Company. Immediately east and south of the project site are undeveloped fields and an access road. Southwest of the site are parking lots used by employees of the Procter & Gamble facility.

6.6.1.4 Transmission Line. The transmission line preferred alternative will consist of a 1.2 mile, 230 kV double circuit line which will exit from the proposed 230 kV switchyard north of the project site, cross the Central California Traction Company rail track, and head east to SMUD's existing Hedge/Hurley 230 kV line. Figure 3.15-6 depicts the preferred alternative route.

The preferred alternative study area consists of the transmission line, the right-of-way (varying from 60 to 100 feet), and an additional 500 foot study area. The transmission line right-of-way widths include the areas north, south, and east of the transmission line. The total study area roughly equals 22 acres. The transmission line will be supported by approximately 12 steel poles whose span will vary from 600 to 800 feet apart. Access to the transmission line will be provided by existing local roads.

Existing land uses surrounding the transmission line include various types of industrial and heavy commercial uses. According to the City of Sacramento General Plan Land Use Map, planned uses for the transmission line corridor and adjacent study area are Heavy Commercial or Warehouse.

Transmission lines within one mile of the preferred alternative study include Pacific Gas & Electric's 115 kV double circuit and single circuit, Pacific Gas & Electric's 230 kV double circuit, SMUD's 115/230 kV double circuit, and Western Area Power Administration's 230 kV double circuit. There are no airports or major airstrips within one mile of the transmission line preferred alternative route. According to Bob Wilson, Manager of Technical Support of the Sierra Nevada Airway Facilities Sector, the FAA does not have any ground navigational aids or radar facilities that would be affected by construction of the transmission line (Wilson 1993).

Currently, the study area land use is designated intensive industrial as illustrated on Figure 6.6-3. The study area is within the City of Sacramento corporate limits. The City of Sacramento General Plan indicates the study area as designated for industrial development.

Public and private easements will be necessary to construct the transmission line. The City of Sacramento recognizes right-of-way widths established by utility companies (Dale 1993).

The proposed transmission line is in compliance with established and future land use plans and zoning designations. In addition, given the industrialized character of the surrounding land and developments, it is unlikely that the preferred alternative transmission line will cause adverse impacts to existing and planned land uses. Furthermore, as demonstrated in Section 3.15, the preferred alternative results in less overall impacts to sensitive areas such as recreational, scenic, and cultural places of interest.

6.6.1.5 Fiber Optic Communication Line. A 3.9 mile long fiber optic communication line will be installed between the project and the Hedge Substation southeast of the project site. The fiber optic line will be installed on the new transmission line poles running east of the project site and connecting to existing 115/230 kV transmission line poles south to the Hedge Substation.

Land uses in the fiber optic line corridor include Intensive Industrial, Agricultural-Urban Reserve, Urban Development Area, Aggregate Resource Area, and Recreational Area (County of Sacramento Land Use Diagram). No additional

construction will be necessary to install the fiber optic line and, as a result, no adverse impacts are expected.

6.6.1.6 Available Infrastructure and Land Use Patterns and Trends. The following subsections discuss the configurations of Sacramento land use.

6.6.1.6.1 Available infrastructure. A wide range of infrastructure is available in the Sacramento area. The project site is in an industrialized part of the City and. as a result, a high level of infrastructure services are available.

Several railroads provide service to the project site vicinity, including a light rail track north of the project site study area. Road networks have been developed extensively; several major highways are located within the project vicinity. Subsection 6.5.1 more thoroughly discusses existing transportation in the project vicinity.

Utility services such as electricity, gas, sewer, water, and solid waste disposal facilities in the project region are more than adequate. Subsection 6.7.1.5 provides a detailed overview of public services available in the City of Sacramento.

6.6.1.6.2 Land ownership and use patterns. Figure 6.6-5 shows ownership patterns for the project vicinity. Appendix J identifies ownership by parcel number. Parcel owners within one half mile west of the site and 1 mile north, south, and east of the project site are identified.

Most of the land in the project vicinity is privately owned. The obvious exception is the US Army Depot, which is owned by the federal government. Parks in the vicinity and nonfederal streets are owned and/or maintained by the City or County.

The project site is designated as industrial and zoned for heavy manufacturing with a 25 foot landscaped setback from streets on all sides [zoning category M-2(S)]. Figure 6.6-6 shows zoning within 1 mile of the project site. Table 6.6-1 indicates zoning categories that apply to the project vicinity. The City of Sacramento Zoning Ordinance manual does not address power generating facilities. Currently, the City of Sacramento Planning and Development Department is evaluating the proposed project to determine if it is compatible with surrounding land uses or whether a special use permit will be necessary.

6.6.1.7 Land Use Trends. Closure of military bases in the Sacramento region will affect land uses in the project vicinity. All of the military bases are owned by the federal government, and consequently historical private development has been impeded. However, a large portion of land in the southeastern sector of the City, including the US Army Depot, has been declared a New Growth Area by the City of Sacramento General Plan.

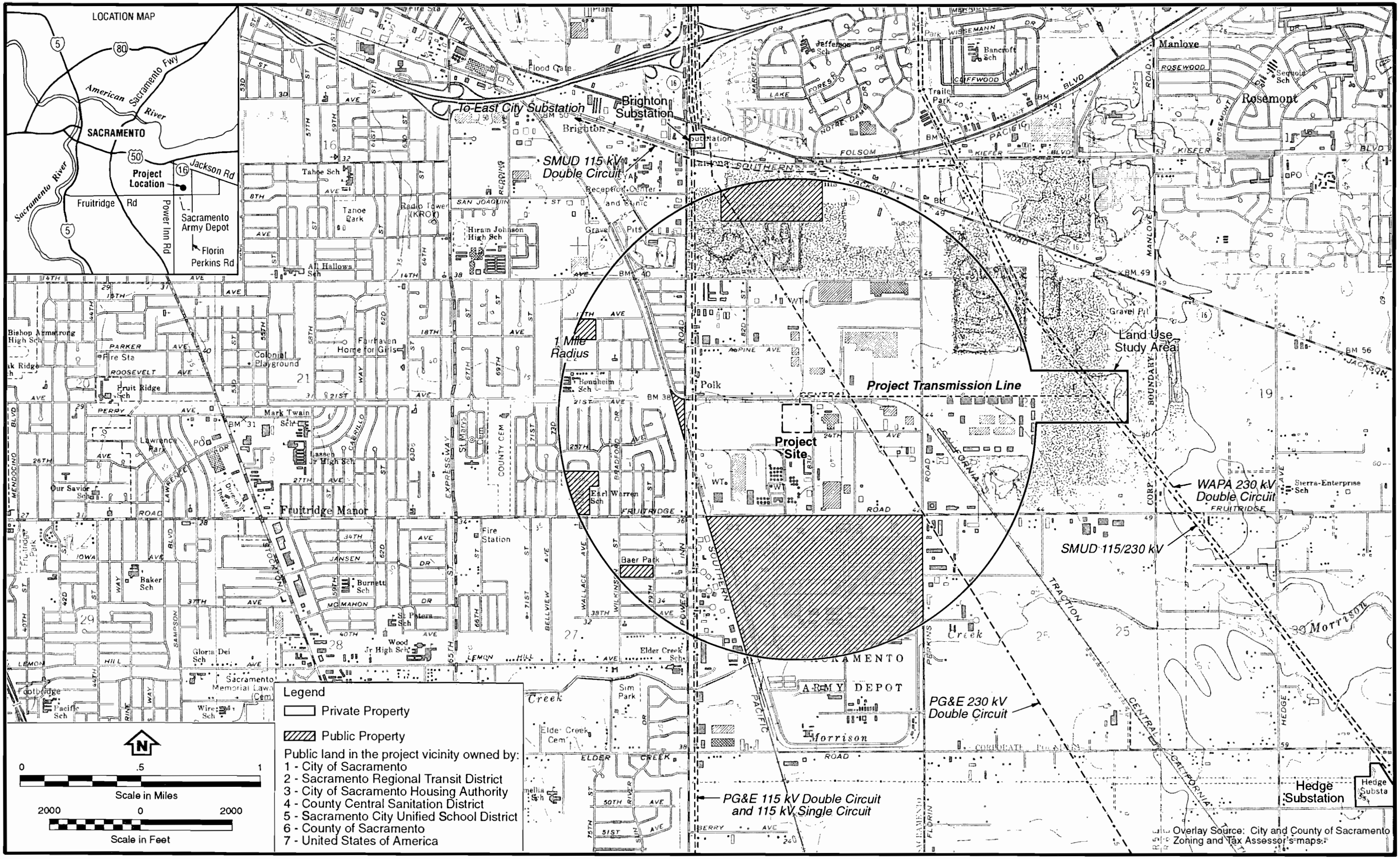

Base Map Source: USGS, Sacramento East and Carmichael, Calif, 1:24,000 scale quadrangles.

PUBLIC AND PRIVATE LAND OWNERSHIP IN THE PROJECT VICINITY

Figure 6.6-5

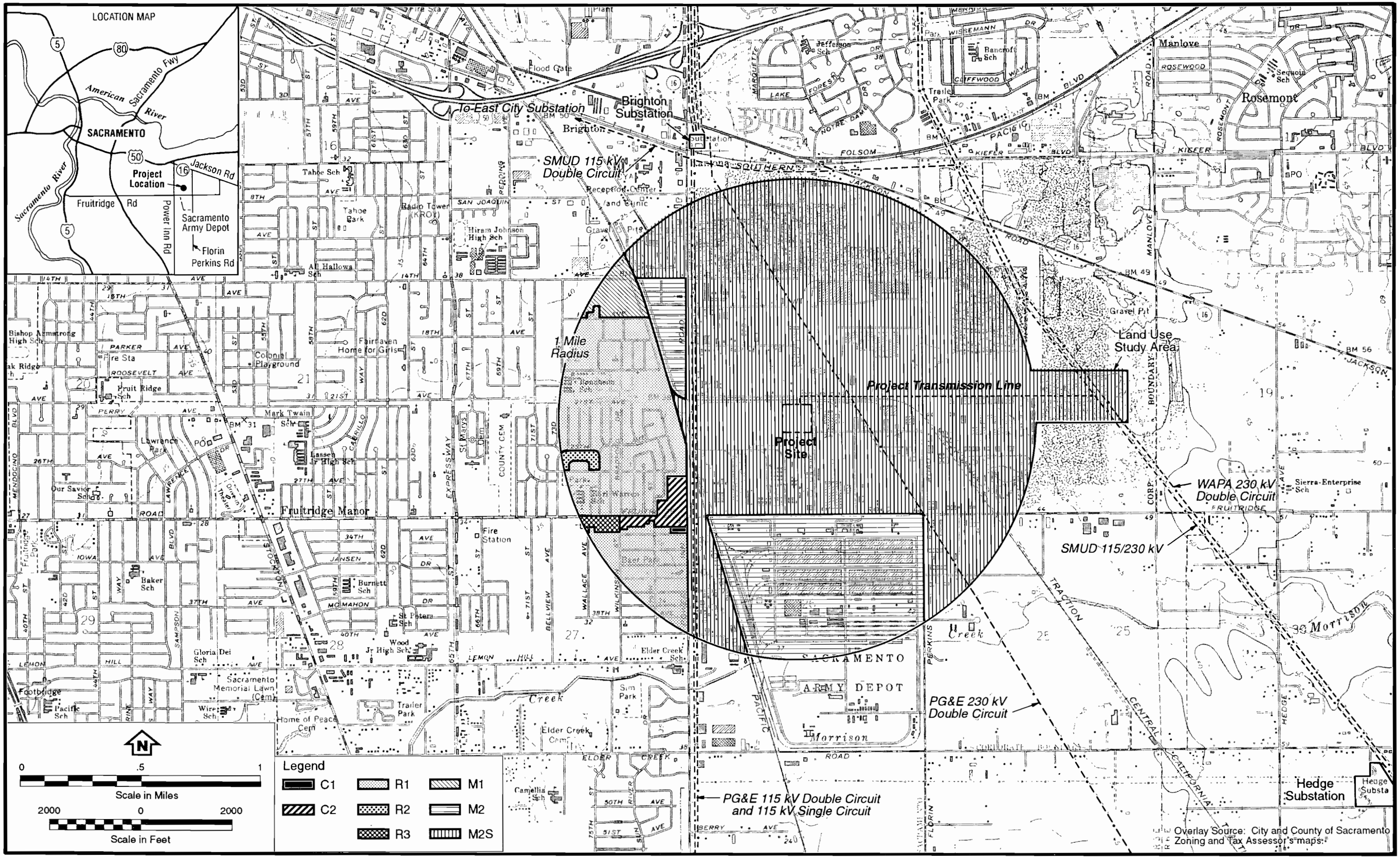

Base Map Source: USGS, Sacramento East and Carmichael, Calif, 1:24,000 scale quadrangles.

ZONING DESIGNATIONS IN THE PROJECT VICINITY

Figure 6.6-6

Table 6.6-1
Zoning Categories in the Project Vicinity

Designation	Description	Conditions/Permitted Uses
M-1	Light Industrial	This zone permits most fabricating activities, with the exception of heavy manufacturing and the processing of raw materials. In addition, regulations are provided in the M-1(S) zone to provide more attractive and uncrowded developments.
M-2	Heavy Industrial	This zone permits the manufacture or treatment of goods from raw materials. Like the M-1(S) zone, the M-2(S) zone has certain regulations designed to obtain industrial park developments that are in keeping with the modern concept of attractive, landscaped industrial plants.
R-1	Standard Single Family	This is a low density residential zone composed of single family detached residences on lots a minimum of 52 feet by 100 feet. This zone may also include recreational, religious, and educational facilities as the basic elements of a balanced neighborhood. Such areas should be clearly defined and without encroachment by uses not performing a neighborhood function. Minimum lot dimensions are 52 feet by 100 feet interior, 62 feet by 100 feet corner.
R1-A	Single family Alternative	This is a low to medium density residential zone intended to permit the establishment of single family, individually owned, attached or detached residences where lot sizes, height, area and/or setback requirements vary from Standard Single Family. This zone is intended to accommodate alternative single family designs which are determined to be compatible with Standard Single Family areas. Maximum density in this zone is 15 dwelling units per net acre.

Table 6.6-1 (Continued)
Zoning Categories in the Project Vicinity

Designation	Description	Conditions/Permitted Uses
R-2	Two-Family Zone	This is a residential zone allowing two single family attached or detached units under one ownership. This zone is intended to provide a low density buffer between single family and more intense land uses. Minimum land area per unit is 2,600 square feet per unit for an interior lot and 3,100 square feet per unit for a corner lot.
R-2A	Multi-Family	This is a multi-family residential zone designated to provide for garden apartments and cluster housing. This zone is regulated so that the structures cover a minimum of ground area and a maximum of open space is provided. Units can be individually owned through compliance with Section 7 of this ordinance. Minimum land per unit is 2,500 square feet.
R-3	Multi-Family	This is a multi-family residential zone intended for more traditional types of apartments. This zone is located outside the central city serving as a buffer along major streets and shopping centers. Minimum land area per unit is 1,500 square feet.
C-1	Limited Commercial Zone	This is a limited commercial zone which allows certain office and retail stores and service establishments which are compatible with residential developments. This zone is intended to be applied to small parcels which are surrounded by a residential neighborhood.
C-2	General Commercial Zone	This is a general commercial zone which provides for the sale of commodities, or performance of services, including repair facilities, small wholesale stores or distributors, and limited processing and packaging.

Source: City of Sacramento Zoning Ordinance 8-1989.

Continued industrial development is the primary land use trend in the project vicinity. Subsection 6.6.5, Land Use Cumulative Impacts, includes an analysis of proposed projects within the study area. According to the City of Sacramento General Plan, Land Use Element, the City plans for the southeastern sector of the City to remain primarily industrial (City Plan Land Use Map 1993). In addition, the City encourages new industrial developments in the project vicinity that are consistent with applicable provisions of the County and City General Plans, which are discussed further below.

6.6.2 General Plans

The following subsections discuss applicable provisions of general plans implemented by planning agencies. The project site and transmission line corridor are within the City limits, and the fiber optic corridor is outside the City limits. Consequently, both County and City plans are addressed.

6.6.2.1 Sacramento Area Council of Governments. The Sacramento Area Council of Governments (SACOG) is a regional planning council composed of El Dorado, Placer, Sacramento, Sutter, Yolo, and Yuba Counties. According to SACOG, the agency's responsibilities include transportation planning of the federal highway system and air quality tracking in the Sacramento metropolitan area (Wray 1993). SACOG publications include studies of housing supply, air quality, and summaries of US Census housing and population data.

6.6.2.2 County of Sacramento. The County of Sacramento General Plan (County Plan) comprises several elements, including a Land Use Element. The Land Use Element is divided into three major categories: (1) Section I - General Plan Land Use Diagram, (2) Section II - Residential and Nonresidential Land Use Inventory and Analysis, and (3) Section III - Land Use Strategies and Policies. Sections I and II provide a very broad overview of current land uses and available land uses by category throughout the County. Section III specifically discusses rules and regulations which are pertinent to the proposed project.

Section III of the Land Use Element is further broken down into the following subcategories:

- Introduction.
- Strategies to Accommodate Growth.
- Urban Growth Management Strategy.
- Rural Growth Management Strategy. (This subcategory is not applicable to the proposed project as it is located within the City of Sacramento limits.)

- Inter-Jurisdictional Coordination.
- Zoning Consistency.

The following is a discussion of the County Plan's Land Use Element provisions which are applicable to the project site and project vicinity. The project's compliance with these provisions is also briefly discussed.

6.6.2.2.1 Land Use Element, Section I, General Plan Land Use Diagram. The County Plan designates the project site for intensive industrial land use, a type of land use that is consistent with project construction and operation activities. According to the General Plan Land Use Diagram, Section I, "This land use designation provides for office and light industrial activities that emit limited amounts of smoke, dust, noise, light, or pollutants and are either integrated or compatible with surrounding uses. Industrial intensive areas are within the urban portion of the County and receive an urban level of public infrastructure and service." (County of Sacramento 1992). The project and its associated transmission line and fiber optic communication line will not produce significant amounts of smoke, dust, noise, light, or other pollutants. Therefore, the project will comply with the Land Use Diagram.

Low density residential designations are assigned to the area west of Power Inn Road. Other land use categories within 1 mile of the project site include Cemetery, Other Public & Quasi-Public, Urban Transit/Oriented Development, Extensive Industrial, and Commercial & Offices. Figure 6.6-7 indicates Land Use Element designations within 1 mile of the project site.

6.6.2.2.2 Land Use Element, Section III, Introduction. According to the Introduction of Section III of the Land Use Element, a general goal of the County is to facilitate "An orderly pattern of land use that concentrates urban development, enhances community character and identity through the creation and maintenance of neighborhoods, is functionally lined with transit, and protects the County's natural, environmental and agricultural resources." (County of Sacramento 1992). The project and its associated transmission line and fiber optic communication line will be located in an industrialized area that readily accommodates local road and rail traffic. In addition, the project and its associated transmission line and fiber optic communication line will be constructed and operated in an environmentally sound manner consistent with the applicable local, state, and federal regulations. Considering these factors, the project and its associated transmission line and fiber optic communication line will be consistent with the County's general land use goal.

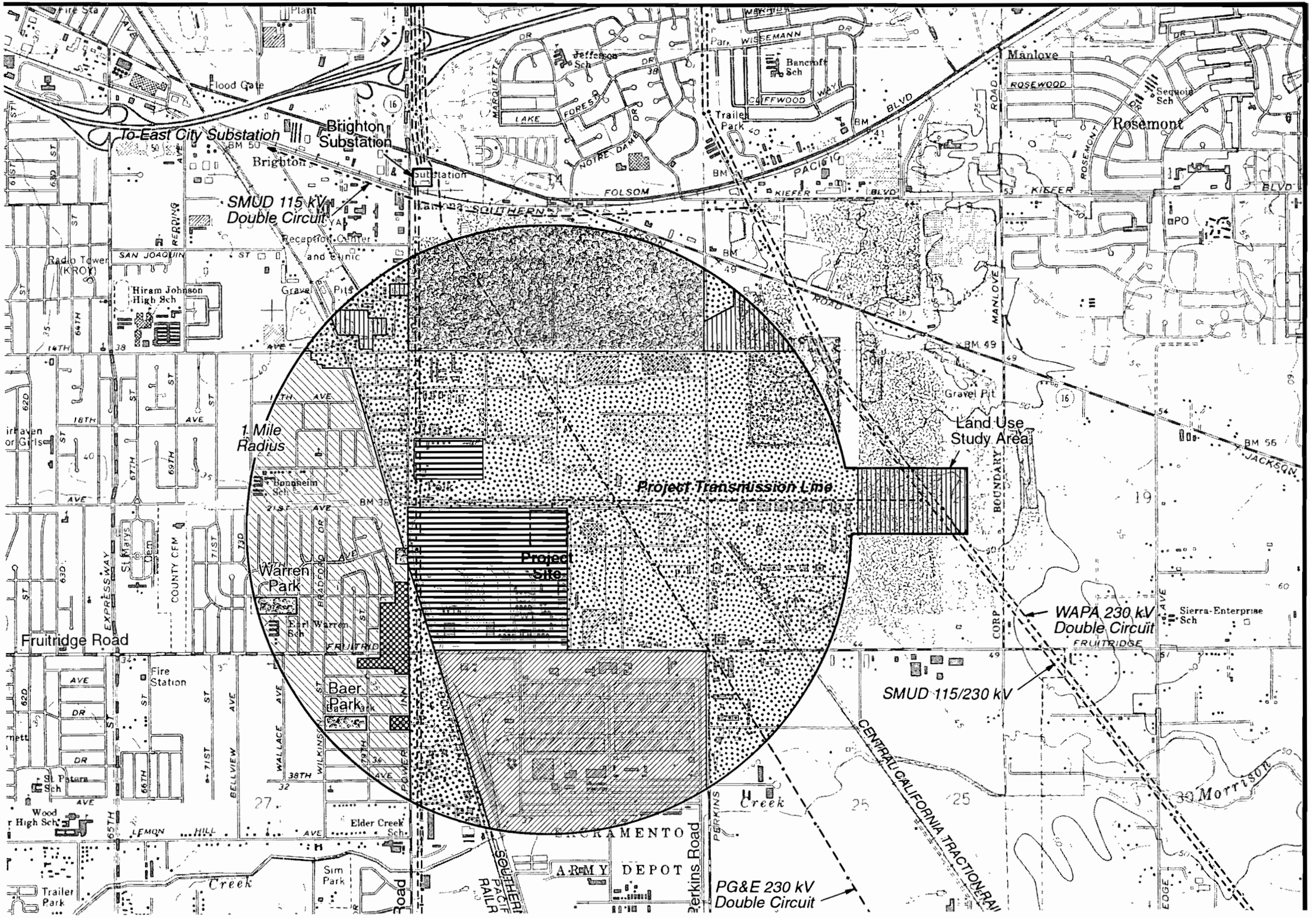

To East City Substation
Brighton Substation
SMUD 115 kV Double Circuit
1 Mile Radius
Project Transmission Line
Project Site
Land Use Study Area
WAPA 230 kV Double Circuit
SMUD 115/230 kV
PG&E 230 kV Double Circuit
Warren Park
Baer Park
Fruitridge Road
Rosemont
Manlove
Perkins Road
SACRAMENTO ARMY DEPOT
CENTRAL CALIFORNIA TRACTION RAI
Morrison
Creek
Hiram Johnson High Sch
Radio Tower (KROY)
Fire Station
Elder Creek Sch
Sierra-Enterprise Sch
Sequoia Sch
Bancroft Sch
Jefferson Sch
Trailer Park
Gravel Pit
Flood Gate
Sim Park
Wood High Sch
St Patera Sch
Earl Warren Sch
Bonnheim Sch
Hiram Johnson High Sch
Reception Center and Clinic
Gravel Pits
Trailer Park

6.6.2.2.3 Land Use Element, Section III, Strategies to Accommodate Growth. The goal of the Strategies to Accommodate Growth subcategory is to, "Accommodate projected population and employment growth in areas where the appropriate level of public infrastructure and services are or will be available during the planning period." (County of Sacramento 1992). As discussed above in Subsection 6.6.1.6.1, Available infrastructure, a wide range of services is provided for the project site and vicinity.

6.6.2.2.4 Land Use Element, Section III, Urban Growth Management Strategy. The project and its associated transmission line and fiber optic communication line further demonstrates compliance with the County Plan by developing within the Urban Services Area (Figure 6.6-8) as provided in the Urban Growth Management Strategy subcategory. The County Plan guides growth in the Urban Services Area by revitalizing previously developed urban areas and by "developing new urban growth areas and building-out existing Agricultural-Residential land uses in urbanizing areas" (County of Sacramento 1992).

In addition, the project will maintain the Commercial and Industrial Land Use Objective within the Urban Growth Management Strategy subcategory to provide, "Viable commercial services and a diversity of employment opportunities located in proximity to residents." (County of Sacramento 1992). According to the County Plan, the County relies too heavily on governmental sectors as sources of employment. The County Plan contends that the economic structure of the County needs to be diversified. It is the intent of the County Plan to promote development that will provide alternative employment opportunities. The project facilitates achievement of this objective by assuring that SMUD has sufficient electric generation capacity to support future industrial and residential growth.

The Performance Standards Objective of the Urban Growth Management Strategy subcategory allows development if such development is located in areas where sufficient public facilities and services exist. The project area contains more than adequate services and facilities to serve the project as demonstrated in Subsection 6.7.1.5, which addresses community and public services.

6.6.2.2.5 Land Use, Section III, Interjurisdictional Coordination. The goal of this category is to ensure that "Policies and programs of County departments and other governmental agencies and jurisdictions (are) mutually consistent with one another and with the policies contained in this plan." (County of Sacramento 1992). Although this category does not specifically apply to the project and its associated transmission line and fiber optic communication line, the project and its associated

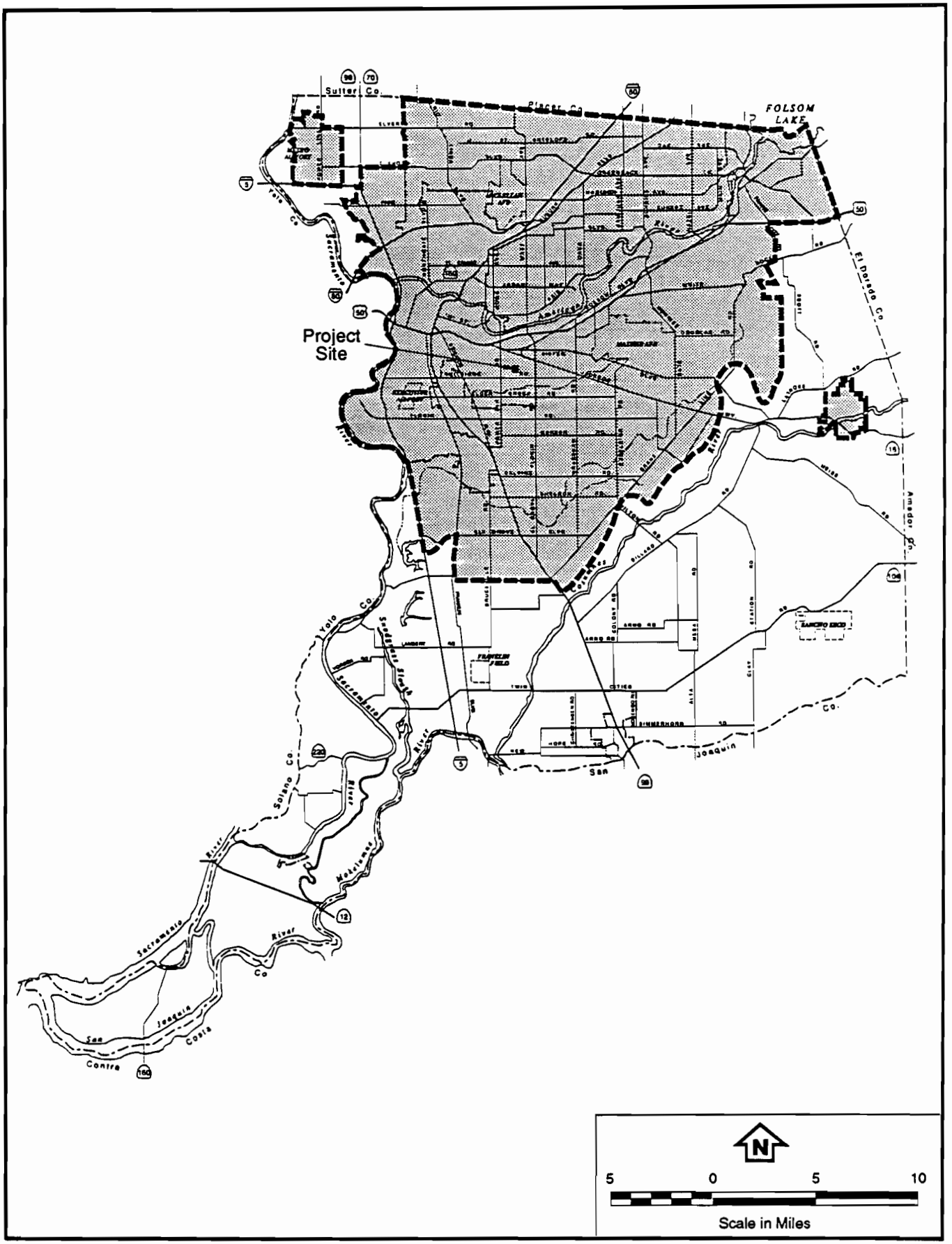

Source: Sacramento County Planning and Community Development Department

COUNTY OF SACRAMENTO URBAN SERVICE AREA

Figure 6.6-8

transmission line and fiber optic communication line will comply with the provisions of this category as well as other applicable plans, laws, ordinances, regulations, or standards (Subsection 6.6.7).

6.6.2.2.6 Land Use, Section III, Zoning Consistency. The project site and its associated transmission line are within the City limits. No modification of zoning assignment or land use designations will be required to facilitate project compliance with current plans. The fiber optic line will be installed on the existing SMUD 230 kV Hedge to Hurley transmission line. The Hedge to Hurley transmission line runs within both the City and the County of Sacramento. The fiber optic line should not require zoning modifications as it will be installed entirely on existing structures within the County's jurisdiction. In addition, the fiber optic line will be unobtrusive and will not affect air quality, noise, transportation, or aesthetic qualities of the surrounding environment.

6.6.2.3 City of Sacramento. The City of Sacramento General Plan is divided into the following categories:

- The General Plan for Sacramento (Element).
- Residential Land Use Element.
- Housing Element.
- Commerce and Industry Land Use Element.
- Circulation Element.
- Conservation and Open Space Element.
- Public Facilities and Services Element.
- Health and Safety Element.
- Implementation.

While several of these Elements are partially applicable, the General Plan (Element) and Commerce and Industry Land Use Element specifically address issues of concern regarding the proposed project and the project site and vicinity.

6.6.2.3.1 General Plan (Element). In many ways, the goals and policies of the City mirror those of the County. The City General Plan (Element) indicates that employment by industry should be diversified (Sacramento City Planning Commission 1988). Urban Growth Policy 3 of the General Plan (Element) states that, "It is the policy of the City to actively promote the continued vitality and diversification of the local economy, and to expand employment opportunities for City residents." (Sacramento City Planning Commission 1988). Specifically, the City foresees industrial developments as a key factor in diversifying Sacramento's economy.

Anticipated industrial growth should precipitate jobs in new areas of the workforce that are currently untapped. The General Plan (Element) contends that in order to encourage industrial developments within the City, "...economic development programs, capital improvement expenditures, and industrial land availability..." (Sacramento City Planning Commission 1988) will be provided by the City through its General Plan. Furthermore, according to the Commerce and Industry Land Use Element, approximately 84 percent of the City's heavy commercial/industrial developed land is located in five areas of the City: East Broadway, Central City, North Natomas, North Sacramento, and South Sacramento (Sacramento City Planning Commission 1988). In addition, these regions contain approximately 92 percent of the vacant land designated for heavy commercial/industrial use (Sacramento City Planning Commission 1988).

Urban Growth Policy 4 of the General Plan (Element) maintains that development will be approved in new growth areas provided such developments are compatible with contiguous land uses, have adequate public services, and promote overall efficient growth. The project and its associated transmission line are in an area targeted for new growth and designated for industrial land uses, as shown on Figures 6.6-9, 6.6-10, and 6.6-11. Subsection 6.7.1.5 addresses the adequacy of public facilities available to the project.

Urban Growth Policy 5 of the General Plan (Element) discusses infilling areas as an efficient growth strategy. "Some neighborhoods are characterized by vacant land skipped over in the process of development. To more fully utilize this resource, efforts to promote infill and remove development constraints will be necessary." (Sacramento City Planning Commission 1988). As described in Subsection 6.6.1.3, the project site is a vacant lot in a heavily industrialized area. Development of the lot, as opposed to another site in an area not assigned for new growth, will facilitate compliance with the goals and policies of the City Plan.

6.6.2.3.2 Commerce and Industry Land Use Element. A primary goal of the Commerce and Industry Land Use Element is to, "... minimize potential adverse impacts from increased industrial developments." (Sacramento City Planning Commission 1988). Policy 1 of this goal promotes industrial developments in areas where possible impacts are slight. To accomplish this goal, express guidelines have been drafted to direct industrial development. These guidelines, on page 4-20 of the City Plan, are as follows:

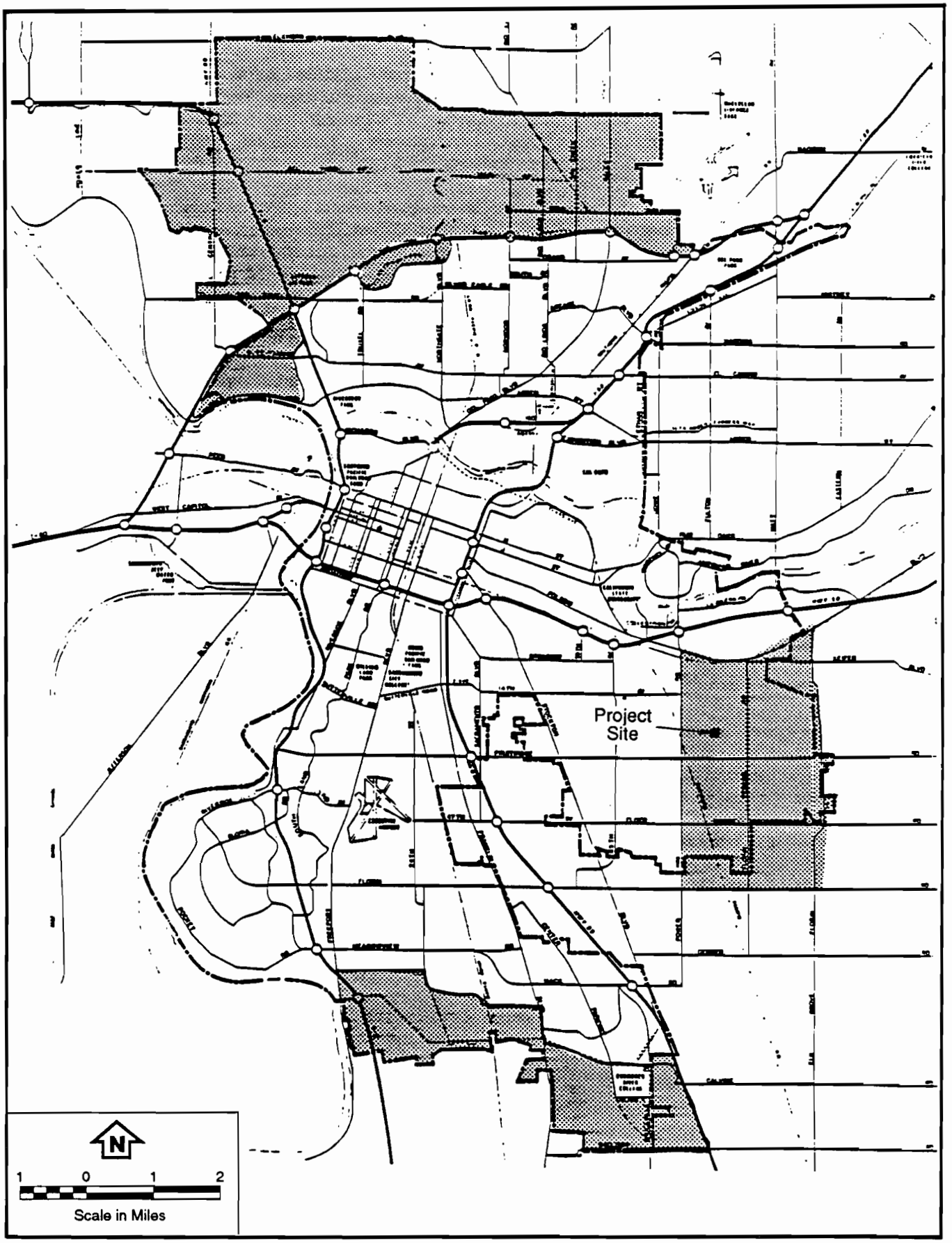

Source: City of Sacramento General Plan

CITY OF SACRAMENTO
NEW GROWTH AREAS

Figure 6.6-9

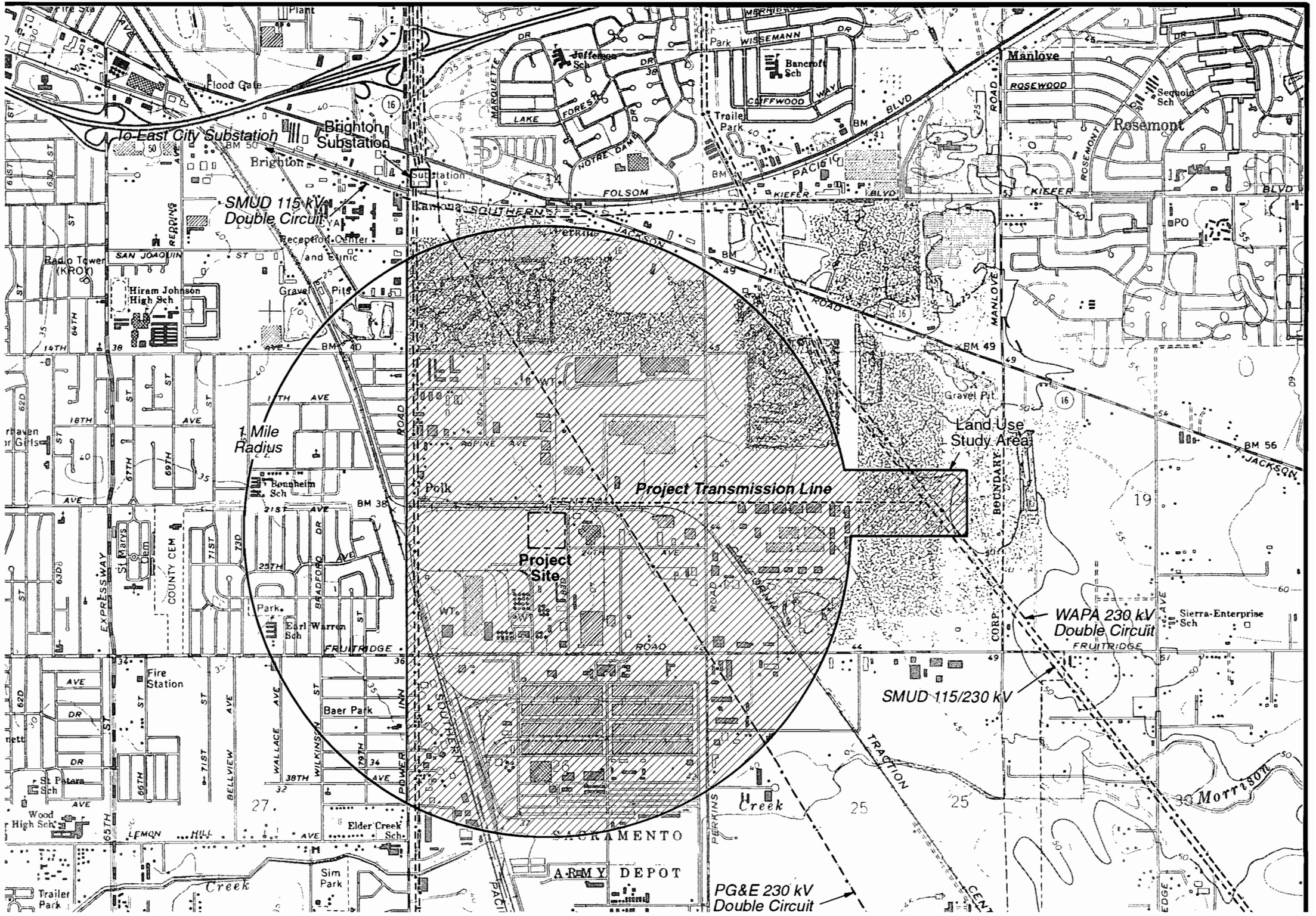

To East City Substation
Brighton Substation
SMUD 115 kV Double Circuit
1 Mile Radius
Project Transmission Line
Project Site
Land Use Study Area
WAPA 230 kV Double Circuit
SMUD 115/230 kV
PG&E 230 kV Double Circuit
Manlove
Rosemont
Brighton
Polk
SACRAMENTO ARMY DEPOT
Morrison
Creek
Flood Gate
Jefferson Sch
Bancroft Sch
Sequoia Sch
Trailer Park
Reception Center and Clinic
Radio Tower (KROY)
Hiram Johnson High Sch
Gravel Pits
Bonnheim Sch
Earl Warren Sch
Fire Station
Baer Park
St Patera Sch
Wood High Sch
Elder Creek Sch
Sim Park
Sierra-Enterprise Sch
Gravel Pit
FOLSOM
JACKSON
ROAD
FRUITRIDGE
KIEFER
BLVD
ROSEWOOD
MANLOVE
BOUNDARY
CORP
TRACTION
PERKINS
POWER INN
BRADFORD
WILKINSON
WALLACE
BELLVIEW
COUNTY CEM
EXPRESSWAY
SAN JOAQUIN
REDDING
MARQUETTE
LAKE
FOREST
NOTRE DAME
WISSEMANN
CLIFFWOOD
WAY
PACIFIC
SOUTHERN

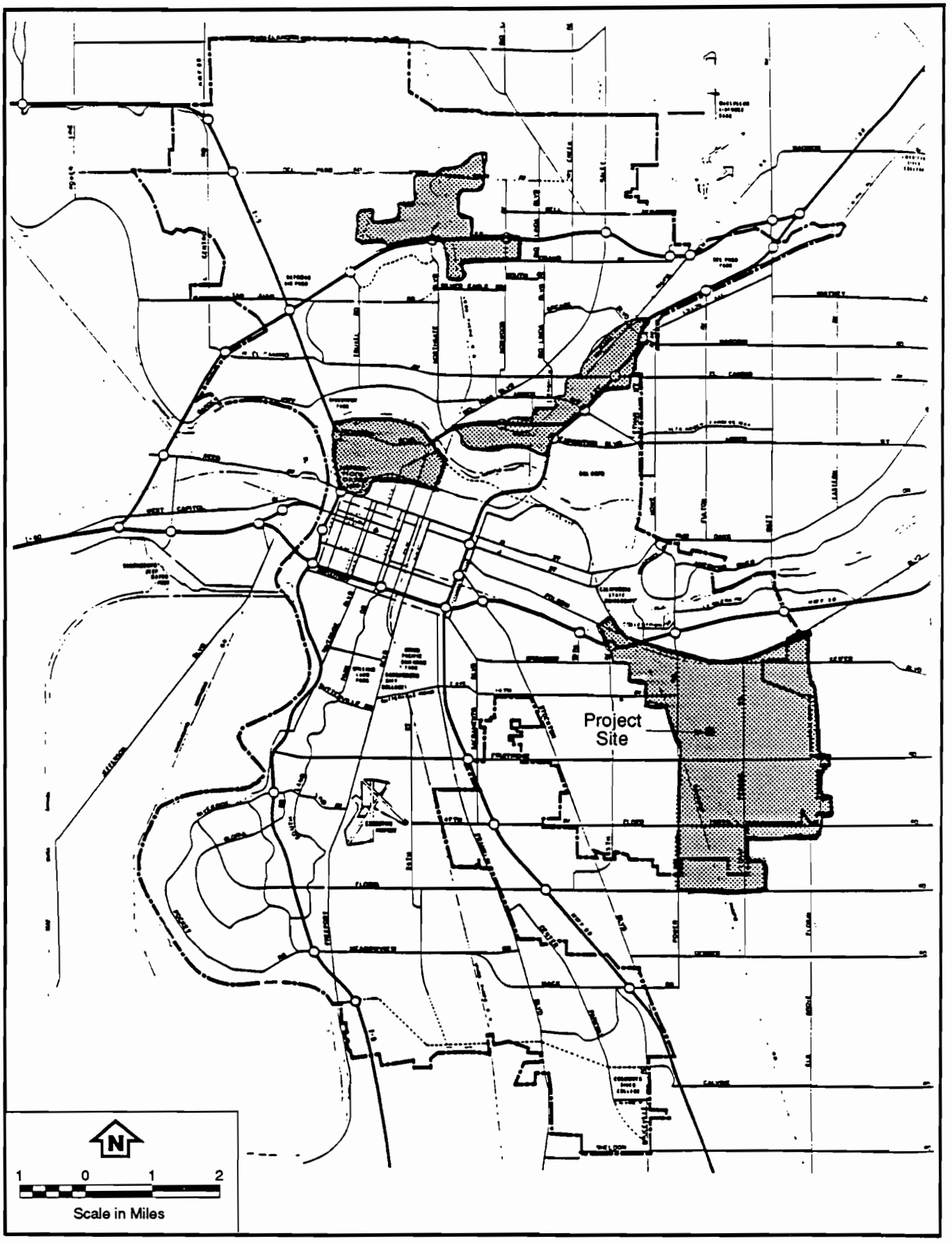

Source: City of Sacramento General Plan

MAJOR INDUSTRIAL AREAS IN THE CITY OF SACRAMENTO

Figure 6.6-11

- (Action a): Industrial uses will be regulated using the Zoning Ordinance, General Plan and community plan goals, and the environmental review process.
- (Action b): Industrial uses, proposed near existing residential areas, must have an internal circulation system and other design amenities.
- (Action c): Work with the City's Toxic Substances Commission and other governmental agencies in developing a Toxic Substance Management Plan that would include restricting the use of toxic/hazardous materials by industrial users adjacent to residential areas, schools, or other sensitive uses.

The project site and its associated transmission line are in the largest existing industrial area in the City. Figure 6.6-11 from the City Plan displays industrial regions within the City. No modification of zoning assignments or land use designations will be required to facilitate project compliance with current City plans. In addition, specified goals, policies, and guidelines will be adhered to during construction, operation, and maintenance of the project.

6.6.2.4 South Sacramento Community Plan. The project site and its associated transmission line are not within a community planning district. The area in which the project is located had previously been designated as the East Broadway Planning District; however, that district has been dissolved (Pierce 1993). Part of the southern portion of the project vicinity falls within the jurisdiction of the South Sacramento Community Planning District Community Plan (Community Plan). Figure 6.6-12 displays specific plans for the project vicinity. Since the project site and a larger portion of the project vicinity do not fall within an established planning district, the City of Sacramento's New Growth Area has been used on Figure 6.6-9 to cover parts of the project vicinity not addressed by the South Sacramento Community Planning District.

The Community Plan is divided into the following categories:

- Purpose of the Plan.
- Community Profile and Population Trends.
- Land Use.
- Residential Land Use and Housing.
- Commercial Land Use.
- Industrial Land Use.
- Special Issues.
- Transportation and Circulation Element.
- Public Facilities and Services Element.
- The Environment.
- Bibliography.

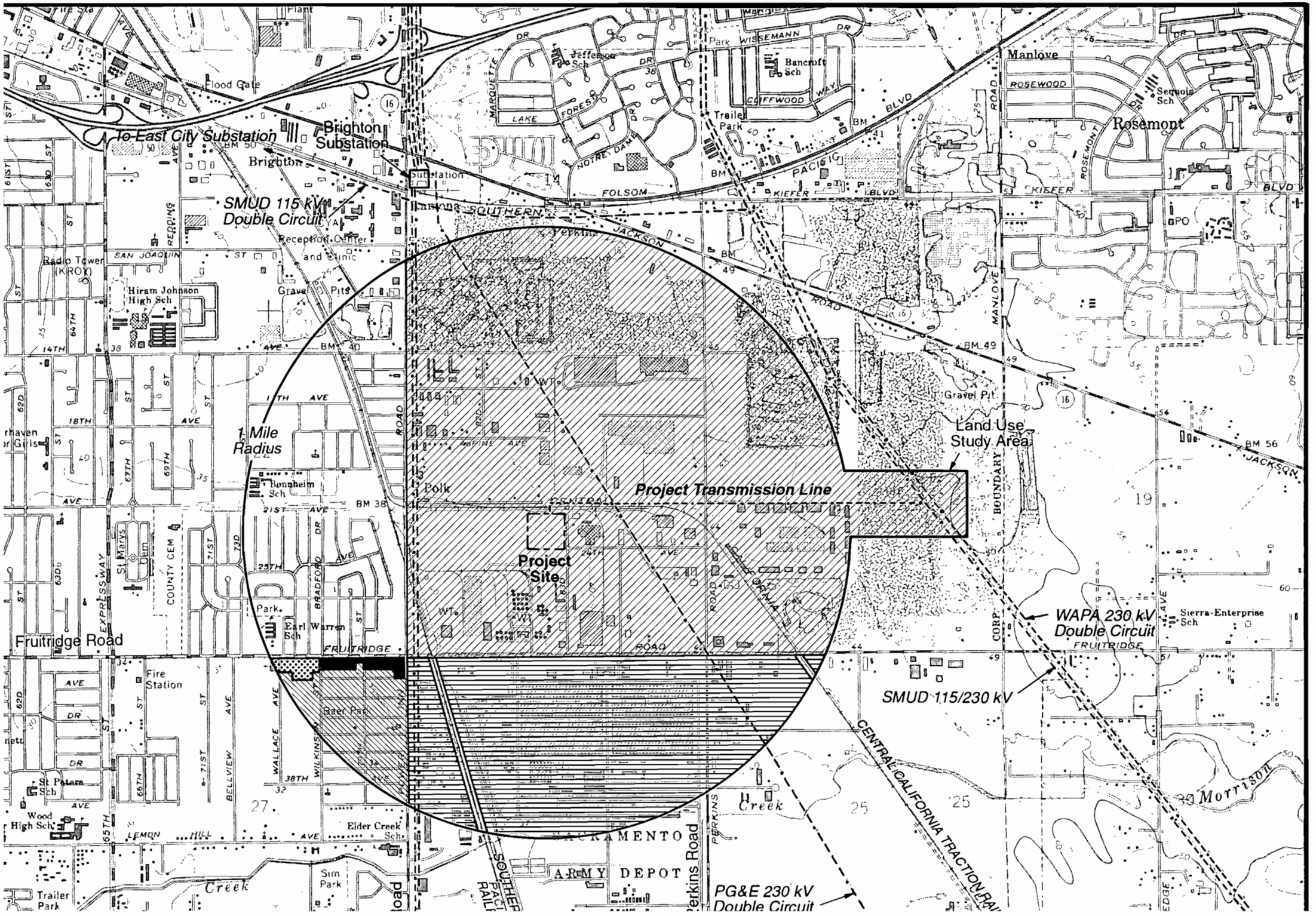

To East City Substation
Brighton Substation
SMUD 115 kV Double Circuit
1 Mile Radius
Project Transmission Line
Project Site
Land Use Study Area
WAPA 230 kV Double Circuit
SMUD 115/230 kV
PG&E 230 kV Double Circuit
Fruitridge Road
Rosemont
Manlove
Perkins Road
CENTRAL CALIFORNIA TRACTION RAILROAD
SACRAMENTO ARMY DEPOT
Morrison
Creek
Flood Gate
Brighton
Substation
Reception Center and Clinic
Gravel Pits
Hiram Johnson High Sch
Radio Tower (KROY)
Bonnheim Sch
Earl Warren Sch
Fire Station
Baer Park
St Peters Sch
Wood High Sch
Elder Creek Sch
Sim Park
Trailer Park
Jefferson Sch
Bancroft Sch
Sequoia Sch
Sierra-Enterprise Sch
Gravel Pit
Polk
Park
Trailer Park

The cumulative and land use goals and policies of the Community Plan are modeled after those of the County Plan and the City Plan. Essentially, the cumulative and land use goals are to provide compatible land uses and to direct development toward areas of adequate public services in appropriately zoned areas that will not cause significant adverse impacts on the environment.

The Industrial Land Use category, which is directly applicable to the project vicinity, contains the following goals as stated on page 45 of the Community Plan:

- Encourage new businesses and industries to locate in the Florin-Perkins Industrial Area...particularly those which are labor intensive and which provide job opportunities for local residents.
- Improve the appearance of South Sacramento's industrial areas, particularly through the continued requirement of landscaped setbacks and fences to screen outdoor uses.
- Ensure that industrial uses are designated for areas where they will have minimal adverse impacts on other types of land uses.
- Ensure that industrial uses will have a minimal adverse impact on the environment.

All these goals are applicable to the project. Industries are encouraged to locate in areas designated for industrial development, namely the Florin-Perkins Industrial Area. As previously stated, the project site and its associated transmission line are not within the South Sacramento Planning District (SSPD). However, the southern portion of the project vicinity, which is within the SSPD, is part of the Florin-Perkins Industrial Area. Figure 6.6-13 provides a layout of industrial land uses within the South Sacramento Community Planning District.

Industrial goals also focus on attracting business to the community by providing an appealing environment. The project vicinity is zoned M-2(S), which allows heavy industry with a required 25 foot landscaped setback on all sides. The 25 foot landscaped setback included in the project will provide an attractive buffer and thereby fulfill the Community Plan's ambition to expand industrial development within the SSPD in an aesthetically pleasing manner.

6.6.3 Potential Construction Impacts

Land use construction impacts on adjacent areas of the proposed cogeneration facility, associated transmission line, and fiber optic communication line will be

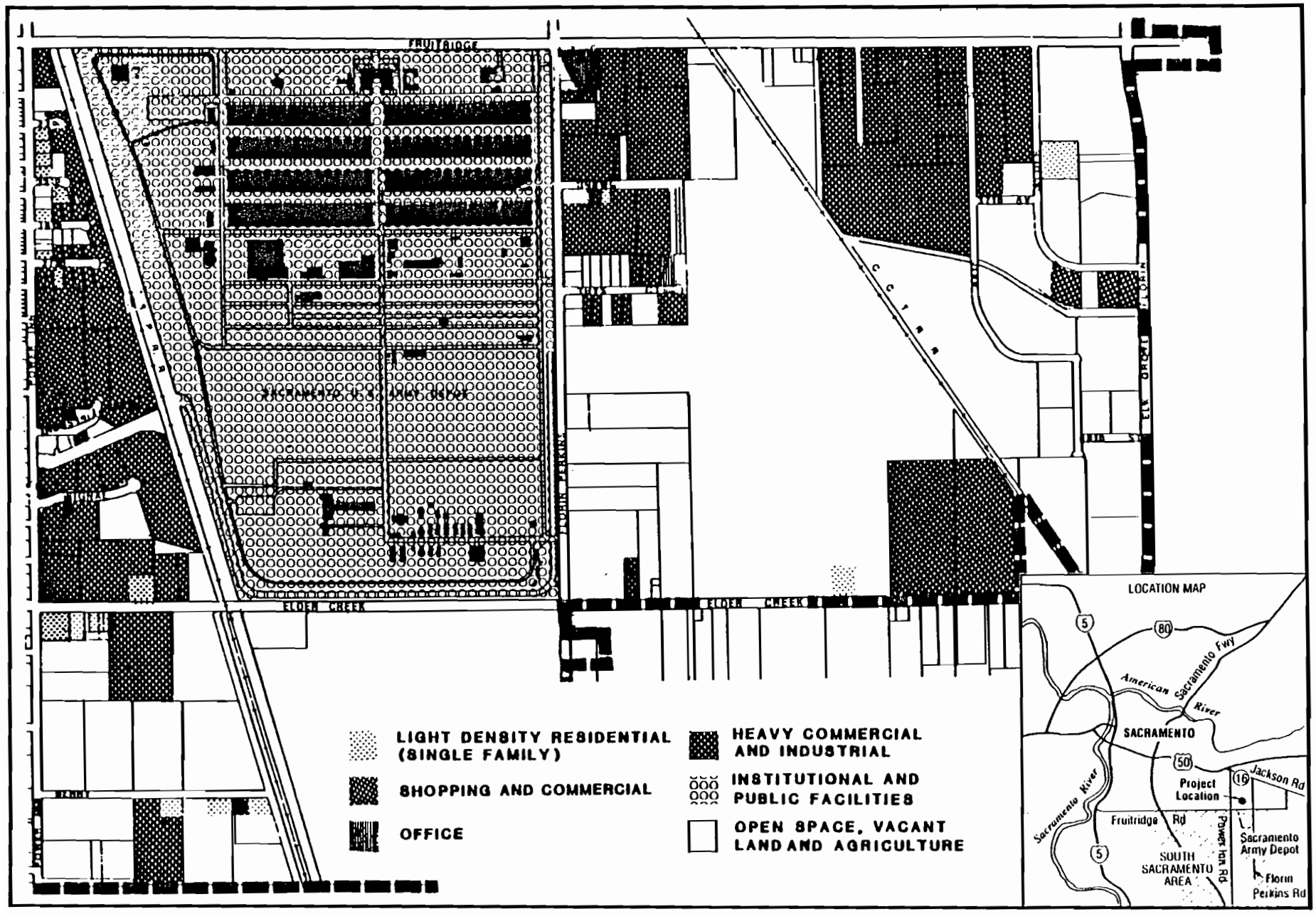

Source: South Sacramento Community Plan

COMMUNITY OF SOUTH SACRAMENTO
FLORIN-PERKINS INDUSTRIAL LAND USE MAP

Figure 6.6-13

insignificant. Land uses surrounding the site are classified industrial and heavy commercial warehousing; the site itself is severely disturbed. No alterations to land use designations or zoning ordinances will be required for construction. As a result, no construction impacts to land use are expected. As discussed in Subsection 6.6.2, the project will be consistent with local land uses and the applicable land use plans and goals.

Construction impacts to land uses in the project vicinity are also expected to be minimal. Given the established industrial nature of the area, visual impacts will be slight. Minor visual disturbances will be temporary and not uncharacteristic of the project vicinity. Section 6.9 further details potential construction impacts to visual resources.

Noise and air quality impacts will be negligible during construction. Impacts related to machinery necessary for construction, including trucks delivering supplies, will be the principal source of noise impacts. Emissions from machinery and fugitive dust from clearing and preparing the site will constitute potential air quality impacts. Therefore, no adverse impacts to existing or future developments in the project vicinity are anticipated. Sections 6.10 and 6.1 discuss additional noise and air quality construction impacts, respectively.

Additional workers commuting to the project site and deliveries of materials and supplies can produce notable effects to traffic flow. According to the City of Sacramento's standards and evaluation criteria, no significant adverse traffic impacts are anticipated as a result of construction. A temporary drop in the level of service will result from construction material deliveries and community construction workers. Evaluating traffic impacts and determining anticipated commuter routes is typically very complex; further discussion is provided in Section 6.5.

Safety impacts to workers during construction will be minimized by establishing a safety plan and implementing worker safety training. First aid stations will be established and maintained throughout the project site. In addition, a number of construction workers, all foremen, and all supervisors will be given first aid training to provide the construction workforce with adequate safety services. A more thorough discussion of safety impacts is given in Section 6.13.

6.6.4 Potential Operation Impacts

Operation of the cogeneration facility will be consistent with local land use plans and goals and will not produce any significant impacts to adjacent or surrounding

land uses. The facility will occupy approximately 10 acres of a heavily disturbed site in an industrially developed section of the City.

As discussed in the potential construction impacts section (6.6.3), visual impacts will be negligible because of the industrial character of the project vicinity. Noise impacts related to operation of the facility will be negligible due to existing high levels of noise associated with surrounding industry. Air quality may be affected, although emissions will be insignificant and within regulated limits. Therefore, no adverse impacts to existing or future developments in the project vicinity are anticipated.

Operational traffic impacts will be negligible, since only approximately two dozen permanent workers will be employed. According to the City of Sacramento's standards and evaluation criteria, no significant adverse impacts are anticipated as a result of operation. In addition, an Injury and Illness Prevention Plan will be implemented to reduce potential operational impacts to worker safety (Appendix N). Sections 6.5 and 6.13 discuss traffic and worker safety impacts, respectively.

The project's transmission line and fiber optic communication line will be consistent with local land use plans and will not produce any significant impacts to adjacent or surrounding land uses.

6.6.5 Land Use Cumulative Impacts

Land use trends in the project vicinity can be evaluated by considering building and development permits. Since May of 1991, approximately 94 permits and applications have been issued by or filed with the City or County within a 2 mile radius of the project site. Of these permits and applications, 91 are requests for rezoning, zoning variances, lot line adjustment, parcel map requests, time extensions, renewals, minor improvements to existing structures, or temporary use permits. The remaining projects include the following:

Project Number	Parcel Number	Description	Application or Permit Date
P92-145	027-0142-010	600 sq ft garage	5/21/92
92-GPB-CZB-SDP-SPP-0331	063-0011-019,020,034,035, 044,045,046	289 lot subdivision	6/30/93
P91-243	078-0022-029	Office building	8/16/91

The first project, the 600 sq ft garage, will be located between 33rd and 34th Avenues, east of Wallace Avenue. The garage is approximately 1 mile from the project site. Because of the minimal size of the development, no impacts to surrounding land uses, including the project, are expected.

The proposed subdivision is 2 miles away at Jackson Road and Burst Court, outside the City limits. Given the distance of the subdivision from the project, land use impacts resulting from development of the subdivision will be negligible.

The office building on Folsom Boulevard between South Watt Avenue and Wissemann Drive was permitted in August of 1991. The building has already been constructed and is consistent with general development plans set forth by the City of Sacramento. None of the above developments will be affected by the project.

Future developments and uses of the US Army Depot site are undefined at this time. Decommissioning activities for the US Army Depot have already been initiated. A Re-Use Commission has been appointed the task of determining the best and most appropriate land uses for the US Army Depot site. On September 20, the City Planning and Development Department made a presentation to the Re-Use Commission regarding preferred uses of the Army Depot site. Although there were some disagreements concerning the percentage of open space required, the concept of using the land for an "employment center" was well accepted. A maximum of 15,000 people are expected to be employed onsite. Land uses are anticipated to include Industrial Labor Intensive (35 people per acre) and Office/Commercial (50 people per acre) (Holmen 1993).

As previously discussed in Subsection 6.6.2, General Plans, the project and its associated transmission line and fiber optic line are consistent with the patterns of development planned by the City and County. The project site is located in the largest existing industrial area in the City and demonstrates compliance with plans through development in an appropriately designated area and infilling an undeveloped parcel within the Urban Services Boundary. No modification of zoning assignments or land use designations will be required to facilitate project compliance with City or County plans. In addition, all applicable laws, ordinances, regulations, and standards will be adhered to during construction and operation of the project.

6.6.6 Mitigation

No significant impacts to adjacent land uses or land uses in the project vicinity are expected. Therefore, no mitigation measures should be necessary and none are proposed.

6.6.7 Laws, Ordinances, Regulation, and Standards

This subsection is a summary of applicable laws, ordinances, regulations, and standards (LORS) that apply to the land use sections of the Application for Certification (AFC). The following LORS will be used as guidance tools for adequately fulfilling the requirements of the California Energy Commission (CEC).

Land use studies address the organization and intensity of land use in a defined area. According to the California State Government Code Section 65302(a), important elements to consider when studying land use include the following:

- Housing.
- Business.
- Industry.
- Open space.
- Agriculture.
- Natural resources.
- Recreation.
- Areas of scenic beauty.
- Education.
- Public buildings and grounds.
- Solid and liquid waste disposal facilities.
- Other categories of public and private land use.

6.6.7.1 Federal LORS. There are no federal land use LORS applicable to the project.

6.6.7.2 State LORS. California state LORS applicable to the project are discussed below.

6.6.7.2.1 Warren-Alquist Act. The Warren-Alquist Act (Public Resources Code, 25000 et seq.) addresses some topics related to land use. By law, specific areas of the state cannot be approved for development unless it is determined that "...such use is not inconsistent with the primary uses of such lands and that there will be no substantial adverse environmental effects and the approval of any public agency having ownership or control of such lands is obtained" (Public Resources Code Section 25527). "Such lands" include parks under the jurisdiction of state, regional, county, or city governments; estuaries that have had limited disturbance; wilderness, scenic, or natural reserves; areas of historic preservation, recreation, or designated as wildlife preserves; and natural preservation areas in existence as of January 7, 1975.

Controlling development around the proposed project facilities is discussed in PRC Section 25528.

6.6.7.2.2 CEC regulations. The California Code of Regulations Title 20 Section 1752 requires that the CEC's proposed decision for approval of a project should evaluate the following:

- Managing population densities in areas surrounding the proposed project facilities and considering the following issues of concern:
  - -- Whether existing governmental land use restrictions are of a type necessary and sufficient to guarantee the maintenance of population levels and land use development over the lifetime of the facilities which will ensure the public health and safety (CEC Staff AFC Instructions).
  - -- Whether the commission should require as a condition of certification that the applicant acquire, by grant or contract, the right to prohibit development of privately owned lands in areas surrounding the facilities in order to control population densities and to protect public health and safety (CEC Staff AFC Instructions).
- Findings and conclusions on whether the facility will be consistent with the primary land use of the area; whether the facility, after consideration of feasible mitigation measures, will avoid any substantial adverse environmental effects; and whether the approval of the public agency having ownership or control of the land has been obtained (CEC Staff AFC Instructions).

6.6.7.2.3 California Environmental Quality Act (CEQA). Appendix G of CEQA provides a list of factors to consider when determining the significance of a proposed project. Projects are considered to significantly affect land use issues if they:

- Conflict with adopted environmental plans and goals of the community where it (the proposed project) is located.
- Induce substantial growth or concentration of population.
- Displace a large number of people.
- Disrupt or divide the physical arrangement of an established community.
- Conflict with established recreational, educational, religious, or scientific uses of the area.
- Convert prime agricultural land to nonagricultural use or impair the agricultural productivity of prime agricultural land.
- Interfere with emergency response plans or emergency evacuation plans.

6.6.7.2.4 California State Planning Law. This statute requires that all counties and cities establish an approved comprehensive planning document to govern existing and proposed development within the state. The guidelines recommend a format but

will accept variations. The guidelines require that the following topics be examined in each comprehensive plan:

- Land use.
- Circulation.
- Housing.
- Conservation.
- Open space.
- Safety.
- Noise.
- Public facilities/services (optional).
- Economic development (optional).

6.6.7.3 Regional LORS. There are no regional LORS applicable to the project.

6.6.7.4 Local LORS. There are two principal local land use LORS applicable to the project.

6.6.7.4.1 Sacramento County. Sacramento County has compiled a comprehensive plan to address the topics mandated by the California State Planning Law. In addition to evaluating the topics required by the State Government Code Section 65302(a), the Land Use Element must also include "... a statement of the standards of population density and building intensity recommended for the various districts and other territory covered by the plan." [State Government Code 65302(a)].

The following Land Use Element goals of the County of Sacramento General Plan directly apply to land use issues of the proposed project:

- Land Use Element Goal--An orderly pattern of land use that concentrates development, enhances community character and identity through the creation and maintenance of neighborhoods, is functionally linked with transit, and protects the County's natural, environmental, and agricultural resources (County of Sacramento 1992).
- Strategies to Accommodate Growth--Accommodates projected population and employment growth in areas where the appropriate level of public infrastructure and services are or will be available during the planning period (County of Sacramento 1992).
- Urban Growth Management Strategy--Land use patterns that minimize the impacts of new and existing development while maintaining the quality, character, and identity of neighborhoods and community areas (County of Sacramento 1992).

6.6.7.4.2 City of Sacramento. The City of Sacramento has also compiled a comprehensive plan pursuant to the state planning laws. The applicable land use goals of the City of Sacramento General Plan are as follows:

- Quality of Life--It is the policy of the City to enhance and maintain the quality of life by adhering to high standards for project and plan evaluation as these relate to characteristics that help define the quality of life in the City (County of Sacramento 1992).
- Economic Development and Employment Opportunities--It is the policy of the City to actively promote the continued vitality and diversification of the local economy, and to expand employment opportunities for City residents (County of Sacramento 1992).
- New Growth Areas--It is the policy of the City to approve development in the City's new growth areas that promotes efficient growth patterns and public service extensions, and is compatible with adjacent developments (County of Sacramento 1992).
- Local and Regional Government--It is the policy of the City to cooperate with the region's various public jurisdictions on matters of mutual interest, including social, economic, and environmental issues; land use policies; and private development project reviews (County of Sacramento 1992).

6.6.7.5 Compliance with LORS. Subsection 6.6.2 contains discussions of planning documents applicable to the proposed project and its associated transmission line and fiber optic cable. The California State laws which require every county and city to adopt a comprehensive planning document do not directly affect the project. Since both Sacramento County and the City of Sacramento have comprehensive General Plans, it is imperative that the project show compliance with applicable provisions. Subsection 6.6.2 indicates compliance with each individual provision that applies to the project as the goal or objective is discussed. In addition, Subsection 6.6.2 discusses compliance with the appropriate regional and community (neighborhood) comprehensive planning documents.

6.6.8 Land Use References

City of Sacramento Department of Planning and Community Development, August 1986, *South Sacramento Community Plan.*

County of Sacramento Planning and Community Development Department General and Advanced Planning Section, December 9, 1992, *Revised Draft Land Use Element of the County of Sacramento General Plan.*

Dale, Mike, June 29, 1993, City of Sacramento Planning and Development Department, in personal communication to R. R. Goldman, Black & Veatch.

Dobbs, Benita, June 29, 1993, McClellan Air Force Base Public Affairs, in personal communication to R. R. Goldman, Black & Veatch.

Holmen, Doug, September 23, 1993, City of Sacramento Planning and Development Department, in personal communication with R. R. Goldman, Black & Veatch.

Kowalski, Ernie, June 29, 1993, Mather Air Force Base Public Affairs, in personal communication to R. R. Goldman, Black & Veatch.

Pierce, Rosemary, May 12, 1993, City of Sacramento Planning and Development Department, in personal communication to J. M. Wynne, Black & Veatch.

Sacramento City Planning Commission, Adopted by City Council members, January 19, 1988, *City of Sacramento General Plan.*

Sacramento Metropolitan Chamber of Commerce and Sacramento Association of Realtors, 1992/1993, *Sacramento Today.*

State of California Department of Finance, November 1992, *California Statistical Abstract.*

Wilson, Bob, June 1, 1993, Manager Technical Support, Sierra Nevada Airway Facilities Sector, personal communication to R. R. Goldman, Black & Veatch.

Wray, Jo, August 3, 1993, SACOG, in personal communication to R. R. Goldman, Black & Veatch.

6.7 Socioeconomics

The socioeconomic environment refers to the economic, demographic, and social characteristics of a region. Because a new generating facility has the potential to impact a region's socioeconomic conditions, it is appropriate to evaluate current conditions and project changes that will be brought about by construction and operation of the facility and estimate any impacts that may occur.

In this section, the existing socioeconomic characteristics of the study area are identified and, where useful, compared to figures for the State of California. Consistent with the potential for most of the project impacts, the study area is defined as the Sacramento Metropolitan Statistical Area (MSA) which consists of the counties of El Dorado, Placer, Sacramento, and Yolo.

Subsection 6.7.1 describes historical, current, and projected socioeconomic conditions. Most of the information is provided for the Sacramento MSA and is compared to the state; however, some local facilities and service information is presented on a city or local area basis consistent with the potential for impacts. Subsections 6.7.2 and 6.7.3 discuss potential socioeconomic impacts during construction and operation, respectively.

6.7.1 Existing Socioeconomic Conditions

In general, the Sacramento MSA has experienced positive growth in most socioeconomic categories since 1980 including income, employment, and population. This growth has often occurred at a faster rate than at the state level. Despite these positive growth trends since 1980, the recent recession and US government cutbacks have negatively impacted the MSA. While the Sacramento MSA should continue to achieve long-term economic growth, the scheduled closure of Mather AFB and the US Army Depot, as well as further employment cuts in the government sector, could offset otherwise strong economic growth in the short-run.

6.7.1.1 Demographics. Historical population estimates are listed for the Sacramento MSA, selected cities, and the state in Table 6.7-1. The 1992 Sacramento MSA population was nearly 1.6 million and Sacramento County accounted for nearly 1.1 million of this figure. The Sacramento MSA 1992 population was approximately 5.1 percent of the state population of 31.0 million.

The Sacramento MSA 1992 population was 472,586 more than the 1980 population figure. The average annual growth rate in population for the MSA was 3.02 percent compared to a 2.23 percent average annual growth rate at the state level. Within the MSA, El Dorado County and Placer County each experienced an average

Table 6.7-1
Population Estimates for California, the Sacramento MSA, and Selected Cities (1980-1992)

Location	1980	1985	1992	Average Annual Percent Change 1980-1992
El Dorado County	85,812	103,700	137,200	3.99
Placerville	6,739	7,204	8,700	2.15
South Lake Tahoe	20,681	21,192	22,650	0.76
Unincorporated	58,392	72,815	105,900	5.09
Placer County	117,247	137,500	186,900	3.96
Auburn	7,540	8,263	11,150	3.31
Rocklin	7,344	9,142	23,250	10.08
Roseville	24,347	28,001	50,300	6.23
Unincorporated	72,903	79,021	87,100	1.49
Sacramento County	783,381	887,800	1,099,100	2.86
Folsom	11,003	15,653	36,500	10.51
Galt	5,514	6,581	11,050	5.96
Sacramento	275,741	310,048	385,100	2.82
Unincorporated	490,209	544,768	665,500	2.58

Table 6.7-1 (Continued)
Population Estimates for California, the Sacramento MSA, and Selected Cities (1980-1992)

Location	1980	1985	1992	Average Annual Percent Change 1980-1992
Yolo County	113,374	123,000	149,200	2.31
Davis	36,640	40,092	49,600	2.56
West Sacramento	--	--	30,550	--
Woodland	30,235	32,782	42,250	2.83
Unincorporated	43,847	45,608	21,850	-5.64
Sacramento MSA	1,099,814	1,252,000	1,572,400	3.02
California	23,782,000	26,403,000	30,989,000	2.23

Source: Sacramento Metropolitan Chamber of Commerce, *Greater Sacramento Area Statistical Abstract*, 1992, Page 2-2; California Department of Finance, *California Statistical Abstract*, 1992, Table B-4.

annual growth rate of nearly 4 percent, followed by Sacramento County's 2.86 average annual rate. At a 2.31 average growth rate, Yolo County grew at the lowest rate of all MSA counties, but was still above the state average growth rate of 2.23 percent.

Population projections for the Sacramento MSA and the state are listed in Table 6.7-2 for the years 1995, 2000, and 2005. Compared to recent growth trends, California and the Sacramento MSA are projected to experience more moderate growth through 2005. California is projected to experience a 1.8 percent average annual growth rate from 1995 through 2005 while the Sacramento MSA is expected to grow at a 2.3 percent rate annually (Sacramento Metropolitan Chamber of Commerce 1992). Within the MSA, El Dorado County is projected to grow at a 2.7 percent average rate, Placer County is projected to rank second with a 2.5 percent average growth rate, followed by Sacramento County (2.3 percent) and Yolo County (1.6 percent). The total MSA population is projected to surpass 2 million after the year 2000 and reach nearly 2.2 million by 2005. The 2005 state population is projected to approach 40 million by 2005, when approximately 5.61 percent of the state's population is expected to live in the Sacramento MSA.

6.7.1.2 Employment and Labor Force Statistics. Employment and labor force characteristics for California and the Sacramento MSA are presented in Table 6.7-3. From 1985 through 1992, the Sacramento MSA civilian labor force increased 27.48 percent, from 615,300 to 784,400 (Sacramento Metropolitan Chamber of Commerce, 1992). As with population, Sacramento County comprised the largest share of the MSA labor force (69.75 percent). Statewide, the labor force grew 16.99 percent from 12.98 million in 1985 to 15.19 million in 1992 (California Department of Finance 1992; EDD 1993).

Table 6.7-3 also contains information regarding the levels of employment, unemployment, and the unemployment rate. Statewide, the unemployment rate showed steady improvement from 1985, when the rate was 7.2 percent, to 1989 when the unemployment rate fell to 5.1 percent. In 1990, however, the state's unemployment rate increased to 5.6 percent, jumped to 7.5 percent in 1991, and in 1992 averaged 9.2 percent. The Sacramento MSA had a lower unemployment rate than the state in all years from 1985 through 1992, except in 1988. The unemployment rate in the MSA decreased from 7.1 percent in 1985 to 4.8 percent in 1990 before increasing to 6.6 percent in 1991 and 7.9 percent in 1992. Within the MSA in 1992, the unemployment rate was the lowest in Sacramento County (7.7 percent) followed by Placer

Table 6.7-2
Population Projections for California and the Sacramento MSA Counties (1995-2005)

Location	1995	2000	2005	Percent Change 1995-2005
El Dorado County	151,400	174,300	197,400	2.7
Placer County	209,900	238,700	267,400	2.5
Sacramento County	1,222,300	1,382,200	1,533,100	2.3
Yolo County	160,400	174,400	187,100	1.6
Sacramento MSA	1,744,000	1,969,600	2,185,000	2.3
California	33,373,000	36,259,000	39,980,000	1.8
Sacramento MSA as a Percent of California	5.23	5.43	5.61	--

Source: Sacramento Metropolitan Chamber of Commerce, *Greater Sacramento Area Statistical Abstract*, 1992, Page 2-11.

Table 6.7-3
Civilian Labor Force, Employment, and Unemployment for the State and Sacramento MSA (1985-1992)

Location	1985	1986	1987	1988	1989	1990	1992
El Dorado County							
Civilian Labor Force	52,300	55,500	58,100	63,400	65,700	66,500	68,100
Employment	48,800	52,300	55,200	60,500	62,900	63,600	62,600
Unemployment	3,500	4,300	2,900	2,900	2,800	2,900	5,500
Unemployment Rate	6.7	5.7	4.9	4.6	4.3	4.3	8.1
Placer County							
Civilian Labor Force	65,300	68,600	71,900	76,700	79,200	80,300	94,800
Employment	60,700	64,600	68,200	72,700	75,600	76,500	87,200
Unemployment	4,600	4,000	3,700	4,000	3,600	3,800	7,600
Unemployment Rate	7.1	5.9	5.2	5.1	4.6	4.8	8.0
Sacramento County							
Civilian Labor Force	435,200	455,400	478,100	498,000	515,700	521,000	547,100
Employment	405,500	428,000	452,000	472,100	490,600	496,500	504,800
Unemployment	29,700	27,400	26,100	26,500	25,100	24,500	42,300
Unemployment Rate	6.8	6.0	5.5	5.3	4.9	4.7	7.7

Table 6.7-3 (Continued)
Civilian Labor Force, Employment, and Unemployment for the State and Sacramento MSA (1985-1992)

Location	1985	1986	1987	1988	1989	1990	1992
Yolo County							
Civilian Labor Force	62,500	64,400	67,300	68,400	70,700	71,400	74,400
Employment	56,700	59,100	62,500	63,800	66,300	67,100	67,900
Unemployment	5,800	5,300	4,800	4,600	4,400	4,300	6,500
Unemployment Rate	9.2	8.2	7.1	6.7	6.3	6.0	8.7
Sacramento MSA							
Civilian Labor Force	615,300	643,900	669,800	700,700	731,400	739,200	784,400
Employment	571,700	604,000	632,500	669,100	695,400	703,700	722,500
Unemployment	43,600	39,900	37,300	37,900	36,000	35,500	61,900
Unemployment Rate	7.1	6.2	5.6	5.4	4.9	4.8	7.9
California							
Civilian Labor Force	12,981,000	13,332,000	13,737,000	14,133,000	14,518,000	14,670,000	15,187,000
Employment	12,048,000	12,442,000	12,946,000	13,385,000	13,780,000	13,846,000	13,805,000
Unemployment	934,000	890,000	791,000	748,000	737,000	823,000	1,382,000
Unemployment Rate	7.2	6.7	5.8	5.3	5.1	5.6	9.1

Source: Sacramento Metropolitan Chamber of Commerce, *Greater Sacramento Area Statistical Abstract*, 1992, Page 4-15; California Department of Finance, *California Statistical Abstract*, 1992, Table C-1; California Employment Development Department, May 1993, unpublished data.

County (8.0 percent), El Dorado County (8.1 percent), and Yolo County which had an 8.7 percent unemployment rate, but which was still below the 1992 state unemployment rate.

The California Employment Development Department's (EDD) March 1993 forecast projects the statewide unemployment rate to continue to remain at a high level through 1995. The state unemployment rate is projected to peak in the fourth quarter of 1993 at 10.4 percent, up from the 9.2 average rate for 1992. Following this peak, the state unemployment rate is expected to decrease only slowly, falling to 9.6 percent in the fourth quarter of 1995, the end of the EDD's forecast period (EDD 1993).

It is expected that the Sacramento MSA's unemployment rate will also remain at a high level through the end of 1995. The preliminary rates for April 1993 indicate that, compared to average 1992 levels, the MSA unemployment rate is higher in Sacramento County (6.8 percent), El Dorado County (7.8 percent), and Placer County (7.0 percent), while lower in Yolo County (8.2 percent). In addition to the slow recovery at the national and state level, some of the factors expected to contribute to the high unemployment rate in the short-term are provided later in this section.

In 1992, employment in the Sacramento MSA was 622,500 which was 5.13 percent of the state's total employment figure. From 1985 to 1992, Sacramento MSA employment grew by approximately 150,800. Sacramento County's 1992 employment was 504,800 which was about 70 percent of the MSA's total employment figure. The Sacramento MSA averaged 61,900 persons unemployed in 1992 and Sacramento County accounted for 68 percent (42,300) of the MSA figure.

Table 6.7-4 lists the Sacramento MSA nonagricultural wage and salary employment by industry for selected years from 1980 through 1992. During this time period, total wage and salary industry employment increased by an average annual growth rate of 3.38 percent, from 417,900 in 1980 to 622,500 in 1992 (Sacramento Metropolitan Chamber of Commerce 1992; EDD 1993). This was well in excess of the state's 1.76 percent average rate of growth. The wage and salary employment growth in the services sector led the way during this period with a 5.62 average annual rate of growth. Wage and salary employment growth in the finance, insurance and real estate sector was also above five percent and the manufacturing sector and

Table 6.7-4
Nonagricultural Wage and Salary Employment by Industry in the Sacramento MSA
in Thousands (1980-1992)

Industry	1980	1985	1990	1991	1992	Average Percent Change 1980-1992
Total	417.9	494.5	629.4	631.4	622.5	3.38
Mining	0.6	0.9	0.6	0.5	0.8	2.43
Construction	20.9	27.3	40.7	36.8	29.5	2.91
Manufacturing	28.5	35.1	45.6	45.5	42.6	3.41
Transportation and Public Utilities	22.7	23.8	28.5	29.1	29.1	2.09
Wholesale Trade	18.0	24.2	29.0	28.9	27.8	3.69
Retail Trade	80.3	97.6	116.7	116.9	114.9	3.03
Financial Insurance R. Estate	23.2	28.6	41.1	42.8	42.4	5.15
Services	77.9	101.5	142.3	144.6	150.1	5.62
Government	145.8	155.7	185.0	186.1	185.8	2.04

Source: Sacramento Metropolitan Chamber of Commerce, *Greater Sacramento Area Statistical Abstract*, Page 4-3; California Employment Development Department, May 1993, unpublished data.

wholesale trade sector experienced significant rates of growth as well. The construction sector employment increased at an average growth rate of 2.91 percent from 1980 through 1992. However, the employment in this sector has been volatile reflecting the sector's dependence on the health of the economy, input costs, and interest rates. For example, the 1980 employment in the construction sector was 20,900. This wage and salary employment nearly doubled by 1990 when 40,700 workers were employed in the Sacramento MSA. Since 1990 however, the construction sector employment has dropped significantly, decreasing to 36,800 in 1991 and to 29,500 in 1992.

The historical wage and salary employment distribution among industries for the Sacramento MSA and California is shown in Table 6.7-5 for 1980 and 1992. Reflecting its designation as the state capital, employment in the Sacramento MSA was heavily concentrated in the government sector (29.78 percent) compared to the state (17.23 percent) in 1992 (Sacramento Metropolitan Chamber of Commerce 1992; EDD 1993). The Sacramento MSA also had a slightly greater distribution of employment in the construction sector, the retail trade sector, and the finance, insurance, and real estate sector. The MSA had a significantly smaller employment concentration in the manufacturing sector than the state, 6.84 percent versus 15.56 percent, respectively. The percentage of employment in the services sector also trailed the state distribution.

A comparison of the Sacramento MSA 1992 and 1980 employment distribution shows that the area became less concentrated in the government sector between 1980 and 1992 although there was a net increase of about 40,000 wage and salary jobs in this sector. Most other sectors retained roughly the same proportion of employment with the exception of the services sector which increased its employment distribution from 18.64 percent to 24.11 percent and experienced an increase of 72,200 jobs. This increase in service sector employment concentration reflects state and national trends as typified by the state increase of 327,400 service sector wage and salary jobs from 1980 to 1992.

Short-term employment projections for wage and salary employment by industry for the Sacramento MSA are presented in Table 6.7-6 and compared to the 1992 employment figures. According to the forecast, the total number of jobs in the Sacramento MSA will increase to 716,700 by 1996; this increase will require an average annual growth rate of 3.22 percent from the 1992 total employment figure and

Table 6.7-5
Nonagricultural Wage and Salary Employment Distribution in the Sacramento MSA and in California (1980 and 1992)

Industry	Sacramento MSA				California			
	1980		1992		1980		1992	
	(000's)	% Dist.	(000's)	% Dist.	(000's)	% Dist.	(000's)	% Dist.
Total	417.9	--	622.5	--	9,848.8	--	12,140.4	--
Mining	0.6	0.14	0.8	0.13	43.5	0.44	34.9	0.01
Construction	20.9	5.00	29.5	4.74	428.3	4.35	475.3	3.92
Manufacturing	28.5	6.82	42.6	6.84	2,018.2	20.49	1,889.6	15.56
Transportation and Public Utilities	22.7	5.43	29.1	4.67	546.3	5.55	606.5	5.00
Wholesale	18.0	4.31	27.8	4.47	583.7	5.93	721.2	5.94
Retail	80.3	19.22	114.9	18.46	1,683.2	17.09	2,111.4	17.39
Financial Insurance R. Estate	23.2	5.55	42.4	6.81	623.1	6.33	789.9	6.51
Services	77.9	18.64	150.1	24.11	2,158.8	21.92	3,420.4	28.17
Government	145.8	34.89	185.4	29.78	1,763.9	17.91	2,091.3	17.23

Source: Sacramento Metropolitan Chamber of Commerce, *Greater Sacramento Area Statistical Abstract*, 1992, Page 4-3; California Department of Finance, *California Statistical Abstract*, 1992, Table C-3; California Employment Development Department, May 1993, unpublished information.

Table 6.7-6
Historical and Projected Nonagricultural Wage and Salary Employment for the Sacramento MSA

Industry	1992 Employment (000's)	1992 Percent Distribution	1996 Employment (000's)	1996 Percent Distribution	Change 1991-1996	Average Annual Percent Change 1991-1996
Total	631.4	--	716.7	--	85.3	3.22
Mining	0.5	0.08	0.8	0.11	0.2	12.47
Construction	36.8	5.83	47.4	6.61	10.6	6.53
Manufacturing	45.5	7.21	51.1	7.13	5.6	2.94
Transportation and Public Utilities	29.1	4.61	32.3	4.51	3.2	2.64
Wholesale Trade	28.9	4.58	35.0	4.88	6.1	4.9
Retail Trade	116.9	18.51	135.6	18.92	18.7	3.78
Financial Insurance R. Estate	42.8	6.78	48.5	6.77	5.7	3.18
Services	144.6	22.90	178.2	24.86	33.6	5.36
Government	186.1	29.47	187.8	26.20	1.7	0.23

Source: Sacramento Metropolitan Chamber of Commerce, *Greater Sacramento Area Statistical Abstract*, 1992, Page 4-3; California Employment Development Department, *Projections of Employment 1989-1996*, for Sacramento County, the Golden Sierra Consortium, and Yolo County, 1992.

represents a net increase of 85,300 jobs over the 1992 figure (Sacramento Metropolitan Chamber of Commerce 1992; EDD 1992). Based on 1992 actual employment figures, the increase in jobs forecasted for 1996 will be dominated by three industries: the construction industry (10,600 net jobs over 1992), the retail trade sector (18,700 net jobs), and the services sector (33,600 net jobs). The services sector (5.36 percent) and construction sector (6.53 percent) also are projected to experience high annual rates of growth. The government sector, the largest employment sector in the Sacramento MSA, is forecasted to realize very little employment growth (1,700 net jobs) between 1992 and 1996.

The short-term employment projections in Table 6.7-6 are likely optimistic given recent economic developments in the Sacramento MSA and the nation. Since these projections were made, the national, state, and regional economies have continued to exhibit sluggish performance due to the economic recession. This has had a direct negative impact on the Sacramento MSA construction sector employment which decreased by about 11,000 jobs from 1990 to 1992.

The decrease in construction employment opportunities is reflected in the number of new construction permits issued in the past several years by the City of Sacramento. The new construction permits for single family dwellings in 1992 numbered 629 (down from 887 in 1991), 1,885 in 1990 (down from 1,589 in 1989), and the peak of 2,147 new construction permits issued in 1985 (City of Sacramento 1985-1992). A similar pattern is illustrated for the total number of permits issued for new construction. The 1992 total for the City was 1,088 compared to 1,429 in 1991, 2,464 in 1990, and 2,212 in 1989. The peak occurred in 1988 when a total of 3,514 building permits for new construction were issued by the City.

Another negative impact has been the announcement of the planned closure of Mather AFB and the US Army Depot, both major employers in the Sacramento MSA. According to studies by the City of Sacramento, Mather AFB and the Army Depot have a combined economic impact of approximately 11,500 direct jobs of which nearly 5,500 were civilian jobs (City of Sacramento 1989 and 1990). An additional 5,800 secondary jobs in the Sacramento area are linked to the two facilities yielding a total area employment impact of roughly 17,000 jobs. The total economic impact from these two facilities was estimated to be $273 million (1989 dollars) for the US Army Depot and $345 million (1988 dollars) for the Mather AFB. This includes a combined direct expenditure of nearly $10 million in construction related items and an additional $55 million in the direct purchase of goods and services.

Other short-term negative impacts on the Sacramento economy could come from additional cutbacks on the size of the government workforce. In 1990, state voters passed Proposition 140 which, among other impacts, limited the State Legislature's annual budget and ultimately resulted in the loss of hundreds of staff positions (Sacramento Metropolitan Chamber of Commerce 1991). At the city and county level, there is also the threat of significant cuts in the size of the government workforce. An initiative which was defeated by local voters in 1990 would have combined the Sacramento City and County governments and eliminated an uncertain number of government jobs. Even without this initiative, the City has cut back its staffing levels in the past two years and is proposing to eliminate an additional 12 percent of its workforce in the 1993-1994 budget in response to expected decreases in state funding (City of Sacramento 1991). While future cutbacks in the number of government employees at all levels are uncertain, it is apparent that the government sector, the Sacramento MSA's largest employment sector, is negatively impacted during economic downturns.

Despite the short-term uncertainties in the Sacramento MSA, long-term employment growth in the area continues to have the potential to outpace that in the state due to a favorable business climate which includes a well educated and well trained workforce, reasonable labor costs, access to regional transportation, and an affordable living environment for workers (Sacramento Metropolitan Chamber of Commerce 1992). The Sacramento Area Council of Governments' (SACOG) 1993 projections of employment forecast an increase in employment from an estimated 642,000 in 1992 to 1,195,000 in 2010. This would represent an annual average increase in employment of 3.51 percent through 2010 (SACOG 1993).

6.7.1.3 Wages and Personal Income. Per capita income figures for the Sacramento MSA and California are presented in Table 6.7-7. The 1990 per capita income for the Sacramento MSA was $19,691 in 1990 compared to $21,229 at the state level (Sacramento Metropolitan Chamber of Commerce 1992). Within the MSA, the per capita income of $20,691 in Placer County ranked first followed by Yolo County ($20,133), Sacramento County ($19,468), and El Dorado County ($18,472).

Historically, the Sacramento per capita income has lagged behind that for the rest of the state although the average annual rate of growth in per capita income from 1970 through 1990 in the MSA was 7.9 percent, just above the 7.8 percent growth at the state level. Within the MSA, the per capita income in Placer County realized the largest average annual percentage growth during the 1970-1990 period

Table 6.7-7
Per Capita Income for the State and Sacramento MSA (1970-1990)

Year	El Dorado County	Placer County	Sacramento County	Yolo County	Sacramento MSA	California
1970	4,303	4,154	4,341	4,420	4,330	4,746
1980	10,200	11,049	10,542	10,894	10,606	11,603
1985	13,746	15,488	14,499	14,357	14,531	16,033
1987	15,517	17,399	16,238	16,179	16,300	17,841
1989	17,264	19,337	18,194	18,846	18,299	19,840
1990	18,472	20,691	19,468	20,133	19,691	21,229
Average Percent Growth	7.6	8.4	7.8	7.9	7.9	7.8

Source: Sacramento Metropolitan Chamber of Commerce, *Greater Sacramento Area Statistical Abstract*, 1992 Page 3-2.

at 8.4 percent. The per capita income growth in El Dorado County, at 7.6 percent, was the lowest average rate of growth in the MSA during the period.

Table 6.7-8 lists the total personal income for the Sacramento MSA and the state from 1970-1990. The 1990 total personal income for the Sacramento MSA in 1990 was over $28.2 billion or about 4.5 percent of the state's $623.3 billion figure (Sacramento Metropolitan Chamber of Commerce 1992). Within the MSA, Sacramento County accounted for nearly $20 billion in personal income in 1990, and Placer County was second with about $3.4 billion in personal income.

Reflective of the greater population increase relative to the state during the 1970 through 1990 period, the total personal income for the Sacramento MSA increased at a higher average annual growth rate than the state, 10.7 percent versus 9.9 percent. Within the MSA, the personal income in El Dorado County experienced a 13.4 percent average annual growth rate, followed by Placer County (12.4 percent), Sacramento County (10.3 percent), and Yolo County (10.0 percent).

Table 6.7-9 lists the personal income for the Sacramento MSA by major source in 1980 and 1990. In 1990, the government sector accounted for 31.81 percent of total personal income in the MSA, the highest of any sector (California Department of Finance 1993). The services sector accounted for 23.90 percent of the MSA's total personal income, followed by the retail trade sector (10.24 percent). No other sector accounted for more than 10 percent of total personal income in 1990.

Compared to 1980, the government sector decreased in its relative importance as a source of personal income in the MSA, decreasing from 35.39 percent to 31.81 percent (Sacramento Metropolitan Chamber of Commerce 1992). The services sector accounted for the largest increase during this period (from 18.32 percent to 23.90 percent) followed by the finance, insurance, and real estate sector which increased from 5.18 percent to 6.45 percent of the MSA's total personal income.

Average 1991 weekly earnings, average hours, and average hourly earnings for production workers in selected industries are presented in Table 6.7-10 for California. Production workers in the construction industry realized the highest average hourly earnings in California in 1991, earning an average of $19.76 per hour. Production workers in the communications and public utilities industry ranked second in the state in 1991 earning an average of $17.60 per hour. Workers in the retail trade sector earned an average of $8.98 in 1991 at the state level, the lowest average hourly rate of those industries listed. Table 6.7-10 also indicates that in 1991, workers in the mining sector (42.9 hours) and in the manufacturing industry (40.6 hours) averaged the most hours per week of the industries listed.

6.7.1.4 Housing Characteristics. Table 6.7-11 lists housing statistics for the Sacramento MSA and California for 1980 and 1992. In 1992, the Sacramento MSA was estimated to have a total of 637,946 housing units, of which 8.4 percent were

Table 6.7-8
Total Personal Income for the State and Sacramento MSA (1970-1990)

Year	El Dorado County	Placer County	Sacramento County	Yolo County	Sacramento MSA	California
1970	191,002	324,903	2,766,392	407,282	3,689,579	95,039,273
1980	884,952	1,308,105	8,310,236	1,239,065	11,742,358	276,106,620
1985	1,428,149	2,136,620	12,912,832	1,775,657	18,253,258	422,607,699
1987	1,765,701	2,587,627	15,349,207	2,082,066	21,784,601	493,547,416
1989	2,208,296	3,129,621	18,359,037	2,533,459	26,230,413	579,200,000
1990	2,376,126	3,367,472	19,754,324	2,726,002	28,223,924	623,300,000
Average Percent Growth	13.4	12.4	10.3	10.0	10.7	9.9

Source: Sacramento Metropolitan Chamber of Commerce, *Greater Sacramento Area Statistical Abstract*, 1992, Page 3-2.

Table 6.7-9
Nonagricultural Personal Income by Major Industry for the Sacramento MSA (1980 and 1990)

Industry	1980		1990	
	Thousands ($)	Percent of Total	Thousands ($)	Percent of Total
Total	8,024,898	--	20,653,643	--
Agricultural Services, Forest, Fisheries	48,845	0.61	137,719	0.67
Mining	31,573	0.39	42,187	0.20
Construction	682,099	8.50	1,766,536	8.55
Manufacturing	604,664	7.53	1,556,985	7.54
Transportation and Public Utilites	593,869	7.40	1,257,550	6.09
Wholesale Trade	367,408	4.58	939,206	4.55
Retail Trade	970,046	12.09	2,114,400	10.24
Financial Insurance Real Estate	415,547	5.18	1,331,445	6.45
Services	1,470,481	18.32	4,937,052	23.90
Government	2,840,266	35.39	6,570,563	31.81

Source: Sacramento Metropolitan Chamber of Commerce, *Greater Sacramento Area Statistical Abstract*, 1992, Page 3-7 through 3-10; California Department of Finance, unpublished information, May 1993.

Table 6.7-10
Average Hours and Earnings of Production Workers, by Selected Industry for California (1991)

Industry	Average Weekly Earnings	Average Weekly Hours	Average Hourly Earnings
Mining	703.56	42.9	16.40
Construction	709.38	35.9	19.76
Manufacturing	481.92	40.6	11.87
Communications and Public Utilities	674.08	38.3	17.60
Wholesale Trade	490.33	38.7	12.67
Retail Trade	266.71	29.7	8.98

Source: California Department of Finance, *California Statistical Abstract*, 1992, Table C-9.

Table 6.7-11
Housing Characteristics for the Sacramento MSA Area Counties and the State (1980 and 1992)

Location	Total Housing Units 1992	Occupied Housing Units 1992	Percent of Units Vacant 1992	Persons Per Household 1992	Total Housing Units 1980	Percent Change in Housing Units 1980-1992
El Dorado County	64,701	50,177	22.5	2.71	46,281	39.8
Placer County	83,651	69,274	17.2	2.66	51,732	61.7
Sacramento County	434,892	411,848	5.3	2.61	328,717	32.3
Yolo County	54,702	52,980	3.2	2.70	44,329	23.4
Sacramento MSA	637,946	584,279	8.4	2.64	471,059	35.4
California	11,471,408	10,667,451	7.0	2.83	9,279,000	23.63

Source: Sacramento Metropolitan Chamber of Commerce, *Greater Sacramento Area Statistical Abstract*, 1992 Page 2-25 through 2-28.

classified as vacant units (Sacramento Metropolitan Chamber of Commerce 1992). The MSA had an average of 2.64 persons per household in 1992. The MSA had about 167,000 more housing units in 1992 than in 1980. Within the Sacramento MSA, Sacramento County had the largest number of housing units in 1992 (434,892) followed by Placer County (83,651), El Dorado County (64,701), and Yolo County (54,702). El Dorado County's 1992 vacancy rate of 22.5 percent was the highest in the MSA although Placer County, with a 17.2 percent vacancy rate, also was well above the 1992 MSA average. From 1980 to 1992, the Sacramento MSA experienced a 35.4 percent increase in the number of housing units. Placer County had the largest growth rate (61.7 percent) followed by El Dorado County's 39.8 percent growth. SACOG projects the number of housing units in the MSA to increase by nearly 350,000 units by 2010. Of this figure, Sacramento County is projected to experience an increase of approximately 240,000 housing units (SACOG 1993).

In 1992, the state had 11.5 million housing units of which about 5.6 percent were in the Sacramento MSA. The state's vacancy rate was estimated to be 7.0 percent in 1992 and the average number of persons per household was 2.83 percent, slightly more than for the Sacramento MSA. Between 1980 and 1992, California experienced a 23.63 percent growth in the number of housing units, a smaller increase than in the Sacramento MSA.

The relatively high vacancy rate in the Sacramento area compared to the California average, the relatively low persons per household figure, and the historical and forecasted increase in the number of housing units illustrate the adequacy of the Sacramento MSA to accommodate the current and near term demand for area housing.

The supply of housing in the Sacramento MSA is considered to be very affordable by California standards. Table 6.7-12 lists the median resale home price for Sacramento County, California, and the US from 1980 through 1991 (Sacramento Metropolitan Chamber of Commerce 1992). As indicated in the table, the median resale home price in Sacramento County has been below the state average, but above that for the US since 1980. In 1991, the average median resale home price in Sacramento County was $137,000 or about $60,000 below the state average of $198,700. The average resale home price in the US was $100,000 in 1991.

6.7.1.5 Community and Public Services and Resources. The following subsections discuss community and public services. The discussion for many services is limited to the City of Sacramento given the likely local concentration of impacts.

Table 6.7-12
Annual Median Resale Home Price in Sacramento County, California and the US (1980-1991)

Year	Sacramento County ($)	California ($)	United States ($)
1980	65,120	99,760	62,200
1981	73,104	107,940	66,400
1982	76,354	112,040	67,800
1983	75,416	114,620	70,300
1984	76,250	114,510	72,400
1985	78,339	120,120	75,500
1986	82,737	133,930	80,300
1987	82,125	142,370	85,600
1988	93,167	168,560	89,100
1989	107,375	196,521	93,100
1990	135,300	194,010	85,500
1991	137,000	198,700	100,000

Source: Sacramento Metropolitan Chamber of Commerce, *Greater Sacramento Area Statistical Abstract*, 1992, Page 5-2.

6.7.1.5.1 Medical and health facilities. The City of Sacramento's health care system is extensive. There are 22 hospitals in the area that employ approximately 6.3 percent of the population (Business in Sacramento p. 27). The University of California, Davis Medical Center is approximately 3 miles from the project site and is the closest hospital. A total of 467 licensed beds, 704 physicians, and the only trauma unit in the City make UC Davis Med Center the largest and busiest hospital in Sacramento (Business in Sacramento 1991/1992). The UC Davis Medical Center offers a wide range of services, and specializes in burn treatment, oncology, pediatrics, kidney and corneal transplants, comprehensive emergency services, internal medicine, and cardiology. Extensive expansion plans include adding 3.6 million square feet of building by 2010 at an estimated cost of $600 million (Business in Sacramento 1991/1992).

A comprehensive Shriner's Hospital for Children is planned for construction on 4.8 acres of UC Davis Med Center's property. The hospital will provide burn treatment, as well as orthopedic and spinal cord injuries treatment when complete (Business in Sacramento 1991/1992).

Sutter General, Sutter Memorial, Auburn Faith Memorial, and Sutter Davis are hospitals in the Sacramento metropolitan area owned by Sutter Health, a nonprofit organization. Sutter General is the largest of the hospitals with 950 physicians and 407 licensed beds. Sutter General specializes in renal dialysis, neuroscience, urology, spinal care, and respiratory rehabilitation (Business in Sacramento 1991/1992).

Sutter Memorial specializes in women's services, oncology, pediatrics, and cardiac services and has 397 licensed beds. Sutter Davis has 48 licensed beds and Auburn Hospital has 102 licensed beds (Business in Sacramento 1991/1992).

Mercy Healthcare Sacramento has four hospitals in the Sacramento metropolitan area. Mercy General is the largest with 966 physicians and 489 beds. Mercy General specializes in orthopedics, intensive care, pediatrics, oncology, general medical/surgical services, cardiology, community education, and diagnostic imaging (Business in Sacramento 1991/1992).

Additional hospitals in the Sacramento metropolitan area include two owned by Kaiser Permanente and eleven others.

6.7.1.5.2 Fire protection. Fire protection for the City of Sacramento is provided by the City of Sacramento Fire Department. The City Fire Department has stations located throughout Sacramento City and employs approximately 450 firefighters (Brocchini 1993). The nearest fire station to the site is located at 5642 66th Street. Currently, 90 fire and emergency vehicles provide services for the City

(Brocchini 1993). The average response time to calls for assistance is 4.34 minutes. In 1992, there were a total of 4,017 fire calls (Brocchini 1993).

The County of Sacramento Fire Department responds to calls in parts of Sacramento County that are not incorporated. The county occasionally assists the city. These instances of assistance are usually limited to a fire reported very close to the city limits or during very large fires.

6.7.1.5.3 Law enforcement. The City of Sacramento Police Department currently employs approximately 580 officers. There is also a California Highway Patrol station located on Stockton Boulevard, north of Mack Road. The City Police Department is authorized to employ a total of 662 officers at any given time. The City Police Department has 355 vehicles including marked and unmarked cars, boats, and motorcycles. The average response time ranges from 7 minutes for a Priority 1 call to 27 minutes for a Priority 5 call (Heenan 1993).

The County Sheriff's Office employs approximately 1,400 officers and has about 500 vehicles. Average response time for calls to the Sheriff's Office is 10 to 12 minutes (Tellis 1993).

6.7.1.5.4 Sewer and water services. Wastewater treatment services for the City of Sacramento are provided by the Sacramento Regional Wastewater Treatment District. Wastewater is transported underground to the treatment plant which is located southeast of the intersection of Freeport and Meadowview Roads, about 5 to 6 miles from the project site (Fontes 1993). Primary and secondary treatment are performed before the effluent is discharged into the Sacramento River. The maximum capacity of the treatment plant is 400 mgd, wet weather flow and daily sewage treatment is 181 mgd (Mulkerin 1993).

Approximately 106,000 residential water accounts and 220,000 business water accounts exist in the City of Sacramento. Total drinking water treatment capacity is 100 mgd, updated from 80 mgd in 1990.

6.7.1.5.5 Telephone, gas, electric, and solid waste. Pacific Bell provides telephone services for the majority of Sacramento metropolitan area. South Placer County and parts of Citrus Heights are served by the Roseville Telephone Company (Living in Sacramento 1992/1993).

Gas services are available to most areas of Sacramento and are provided by Pacific Gas & Electric. Bottled gas is sold by several companies to those who are not part of the natural gas network (Living in Sacramento 1992/1993).

Electricity for Sacramento County is primarily provided by the Sacramento Municipal Utility District (SMUD). Pacific Gas & Electric and the City of Roseville

provide electricity to areas that SMUD does not serve (Living in Sacramento 1992/1993). SMUD serves over 460,000 customers in a 900-square-mile area in and around Sacramento. Following the closing of SMUD's nuclear power plant Rancho Seco, the utility has published a long-term capacity expansion plan which includes a wind farm and four cogeneration plants which will use natural gas to produce electricity and steam for industry (Sacramento Metropolitan Chamber of Commerce 1992). The Procter & Gamble Cogeneration Project is one of these plants.

Solid waste disposal is provided for the Sacramento County area by the County Public Works Department. Two landfills are presently operational. The Jackson Road Landfill at 8597 Jackson Road has been accepting solid waste for some time. The County Landfill located at the intersection of Kieffer and Grant Line Roads is a new landfill with a total capacity of 160 million tons. The annual tonnage of solid waste produced by Sacramento County is approximately 780,000. It is anticipated that the project's solid waste will be accepted by the County Landfill.

6.7.1.5.6 Schools. Table 6.7-13 lists the number of school districts and schools for the Sacramento MSA and California during the 1990-1991 school year. Statewide, there were 1,012 school districts in California in 1990-1991; 55 were in the Sacramento MSA. There were a total of 7,285 schools in the state during the 1990-1991 school year and 457 or about 6.1 percent were in the Sacramento MSA. Sacramento County's 297 schools accounted for 65 percent of the MSA's schools in 1990-1991, followed by the 65 schools in Placer County.

Table 6.7-14 lists the enrollment in public schools by grade in California and the Sacramento MSA in 1990-1991. California had nearly 5 million students enrolled in grades K through 12 in 1990-1991 of which 261,422 or 5.3 percent were enrolled in the Sacramento MSA. Sacramento County accounted for the majority of MSA public school enrollment (180,081) in 1990-1991 followed by Placer County's 33,794 public school students.

In Sacramento County, the Sacramento City Unified District is the largest of the 16 school districts and includes most neighborhoods from downtown south to Florin Road and east past Power Inn Road, including the area in proximity to the project site. In 8 of the last 9 school years, the enrollment in the Sacramento City Unified District has increased. The 1984-1985 enrollment was 42,670; and the District enrollment grew steadily reaching a high of 50,751 students in 1991-1992 prior to decreasing slightly to 50,264 students in 1992-1993. The district is projected to have 49,875 students enrolled in 1993-1994. Projections through 2001 indicate that enrollment

Table 6.7-13
Number of Districts and Schools in California and the Sacramento MSA (1990-1991)

Location	Number of Districts	Elementary	Intermediate	Junior High	High School	Other	Total
El Dorado County	15	28	7	0	5	9	49
Placer County	19	38	10	0	8	9	65
Sacramento County	16	199	29	3	27	39	297
Yolo County	5	27	2	4	5	8	46
Sacramento MSA	55	292	48	7	45	65	457
California	1,012	4,867	853	136	802	827	7,485

Source: Sacramento Metropolitan Chamber of Commerce, *Greater Sacramento Area Statistical Abstract*, 1992, Page 7-2.

Table 6.7-14
Enrollment in Public School Grades by County, State, and the Sacramento MSA (1990-1991)

Grade	El Dorado County	Placer County	Sacramento County	Yolo County	Sacramento MSA	California
K	2,098	3,016	15,538	1,899	22,551	423,740
1	2,238	2,875	15,866	1,977	22,956	432,694
2	2,047	2,782	15,399	1,995	22,223	419,469
3	2,104	2,685	15,158	1,879	21,826	409,839
4	2,147	2,741	14,668	1,758	21,314	399,293
5	2,050	2,717	14,222	1,716	20,705	384,483
6	1,919	2,526	13,596	1,679	19,726	363,538
7	1,868	2,492	13,163	1,659	19,182	359,008
8	1,762	2,472	12,015	1,571	17,820	347,479
Other K-8	291	411	3,489	310	4,501	64,839
9	1,863	2,365	13,109	1,650	18,987	381,573
10	1,715	2,328	12,083	1,626	17,752	361,594
11	1,593	2,266	11,211	1,444	16,514	315,322
12	1,305	1,903	8,953	1,301	13,462	244,142
Other 9-12	31	215	1,611	52	1,909	43,461
Total	25,031	33,794	180,081	22,516	261,422	4,950,474

Source: Sacramento Metropolitan Chamber of Commerce, *Greater Sacramento Area Statistical Abstract*, Page 7-3.

in the Sacramento City school district is expected to grow at about 2 percent each year, reaching 63,872 students in 2001. By comparison, the Sacramento County enrollment is projected to be about 3 percent per year, reaching a total of 259,038 students by 2001, up from about 180,000 in 1990-1991.

The Sacramento MSA has a number of institutions for higher education including community colleges, public universities, and private schools. As indicated in Table 6.7-15, California State University at Sacramento had the area's largest 1991 college enrollment with nearly 26,000 students (Sacramento Metropolitan Chamber of Commerce 1992). The University of California at Davis ranked second with a 1991 enrollment of over 23,000. The American River Community College also had a 1991 enrollment of over 20,000 while the other three community colleges had between 12,000 and 17,000 students.

6.7.1.5.7 Parks and recreation areas. The City of Sacramento Parks and Recreation Department classifies the City's facilities into two regions: the North region, which is north of I-80 and Highway 50, and the South region, which serves residents living south of Broadway and Highway 50 (City of Sacramento 1992). The North region includes approximately 82 parks encompassing 744 acres. The North region also contains six community centers, seven swimming pools, eight wading pools, one jogging center, 22 tennis courts, baseball diamonds, basketball courts, boat launch ramps, playgrounds, and soccer fields.

The project site is located within the South region, which serves approximately 200,000 residents. In this region there are 52 city parks and 10 recreational facilities, including Warren Park and Baer Park, which are each approximately 4,800 feet from the project site. Additional facilities include 30 play areas, 30 ball diamonds, 10 basketball courts, Garcia Bend boat launch, 15 restrooms, 10 wading pools, 8 swimming pools, 10 tennis courts, 20 soccer fields, and 638 acres of nature area.

6.7.1.5.8 Fiscal resources. The project will be located in the City of Sacramento in Sacramento County, California. The fiscal resources and requirements of both of these governmental jurisdictions are presented in this section. Table 6.7-16 lists approved budget information for the City of Sacramento for the fiscal years 1991-1992 and 1992-1993. The City's 1991-1992 approved budget was $462,676,000; a 19 percent increase over the previous years' budget (City of Sacramento 1991). The approved budgets for 1991-1992 and 1992-1993 were balanced budgets meaning that the approved net resources or revenue sources equal the approved net appropriations or expenditures.

Table 6.7-15
Fall Enrollment for Selected Colleges in the Sacramento MSA (1985-1991)

Institution	1985	1986	1987	1988	1989	1990	1991
Community Colleges							
American River	17,468	18,500	20,798	19,444	21,496	21,514	21,147
Cosumnes	7,211	7,867	9,248	6,731	10,300	10,524	12,017
Sacramento City	13,085	13,334	14,611	15,095	16,513	17,229	16,600
Sierra	9,615	10,728	11,000	11,951	14,859	13,774	15,382
Public Universities							
California State University, Sacramento	23,313	23,673	24,128	25,153	25,559	25,900	25,868
University of California, Davis	19,835	19,809	20,858	21,933	22,663	23,898	23,302
Private Schools							
Chapman College	186	202	300	380	420	410	415
Golden Gate University	1,000	1,150	1,197	1,200	1,300	1,200	1,200
Lincoln Law School	223	220	205	260	285	240	250
McGeorge School of Law	1,400	1,262	1,250	1,200	1,150	1,225	1,270
National University	1,025	1,201	1,149	1,055	939	901	870
USC, School of Public Administration	240	250	167	170	175	170	172

Source: Sacramento Metropolitan Chamber of Commerce, *Greater Sacramento Area Statistical Abstract*, 1992, Page 7-5.

Table 6.7-16 indicates that in percentage terms, the net resources were derived from a number of sources. The largest net resources are collected from fees and charges. Property taxes and sales and use taxes also account for a significant amount of resources. The largest component of the 1991-1992 net appropriations was for employee services (45 percent). Capital improvement projects accounted for 24 percent of the approved budget.

The 1992-1993 approved budget was $463,858,000, an increase of 0.24 percent over the 1991-1992 budget. Compared to the 1991-1992 budget, the percentage of budget accounted for by net resource and appropriation source was relatively constant. On the resource side, fees and charges increased from 26 percent of the budget to 28 percent and the other resource categories decreased from 17 percent to 13 percent of the net resources. On the expenditure side, employee services increased from 45 percent to 48 percent of the net appropriations in the 1992-1993 approved budget.

While the approved 1991-1992 and 1992-1993 budgets equated resources and appropriations, in practice, the City was not able to achieve a balanced budget and incurred a deficit in the last two years despite increasing user fees and making significant cutbacks in staffing and department expenditures. These measures included a 10 percent increase in the Real Property Transfer Tax, lower contractual labor costs from the fire union, deferral of cost of living raises for management, and an increase in utility rates for water, sewer, flood control, and garbage services.

As with many cities in California, the fiscal outlook for the City is one of concern. The May 3, 1993, proposed budget for 1993-1994 totals $395 million, a 12 percent decrease from the 1992-1993 budget. The smaller budget would include the elimination of 513 city jobs (about 12 percent of the workforce) and a cut of $29 million in expenditures. These drastic reductions in expenditures are necessary due to the continuing recession which impacts revenue sources, such as the sales and use tax, and state funding cuts to the city which are expected to total $10 million to $20 million. Even with this reduced budget, the City faces an estimated $40 million deficit. Given these expected revenue impacts, the City will be challenged to balance the budget for the foreseeable future and further cutbacks in staffing and services, as well as increased charges and fees, are likely.

The fiscal 1991-92 and 1992-93 approved budget for Sacramento County is summarized in Table 6.7-17. The Sacramento County total budget for 1991-92 was $1,134,905,866 (County of Sacramento 1992). The approved budget for 1992-93 was $1,178,523,318, an increase of approximately 3.8 percent.

Table 6.7-16
City of Sacramento Approved Budget Resources and Appropriations 1991-1992 and 1992-1993

Net Resource Component	1991/1992 (percent)	1992/1993 (percent)
Property Taxes	12	13
Utility Users Tax	8	8
Fines/Forfeits	1	1
Sales and Use Tax	9	9
Other Resources	17	13
License/Permits	2	8
Other Taxes	7	2
Inter Government	7	7
Use of Money	4	3
Fees/Charges	26	28
Miscellaneous Revenue	1	1
Beginning Fund Balance	8	7

Net Appropriation Components	1991/1992 (percent)	1992/1993 (percent)
Services/Supplies	15	16
Equipment	3	2
Capital Improvements	24	19
Debt Service	5	6
Employment Services	45	48
Reserves	7	9

Source: City of Sacramento, *City of Sacramento California 1991-1992/1992-1993 Approved Budget*, 1991.

Table 6.7-17
County of Sacramento Approved Budget Requirements
and Financing Sources 1991-1992 and 1992-1993

County Budget Requirements	1991/1992, percent	1992/1993, percent	County Budget Financing	1991/1992, percent	1992/1993, percent
Health and Sanitation	11.5	14.0	Federal Aid	19.9	21.2
Public Assistance	44.7	42.6	State Aid	35.6	36.0
Roads	6.1	6.1	Year End Balance	6.1	5.4
Public Protection	26.3	25.2	Other Taxes	11.1	10.6
General Government	8.1	9.2	Property Taxes	15.1	14.0
Debts, Reserves, Contingencies	0.8	1.1	Other Revenues	12.2	12.8
Library, Cultural, and Recreational	2.5	1.8			

Source: County of Sacramento, *Final Budget 1992-93, County of Sacramento*, California, 1992.

The 1991-92 budget requirements were led by the public assistance category, which accounted for 44.7 percent of all County requirements. Public protection ranked second with 26.3 percent of budget requirements. Health & Sanitation services (11.5 percent) and general government requirements (8.1 percent) also accounted for a significant amount of the County's budget requirements.

The 1991-92 Sacramento County sources of financing were led by funds in the form of aid from state agencies, which accounted for 35.6 percent of all County financing. Federal aid (19.9 percent) and property taxes (15.1 percent) also accounted for a large percentage of the County's budget financing.

Compared to the previous year, the 1992-93 budget for Sacramento County was very similar in terms of the sources and uses of funds. Public assistance requirements (42.6 percent) and public protection requirements (25.2 percent) accounted for the largest portion of budget requirements. Health and sanitation requirements and general government requirements ranked second and third, respectively, in the percentage of budget requirements. As with the previous year, aid from state agencies made up the largest financing source (36.0 percent), followed by aid from federal agencies (21.2 percent).

As with the City of Sacramento and other government jurisdictions in California, the County of Sacramento will be hard pressed to maintain current levels of service, given the continuing impacts of the economic recession and the uncertain allocation of State funds to counties. The proposed 1993-94 County budget projects the County requirements and financing to total $1,157,367,736, which is an approximate 1.8 percent decrease from the 1992-93 budget. This proposed budget includes the proposed reduction of 290 County positions and the elimination of most cost-of-living increases to County employees.

6.7.2 Potential Construction Impacts

The socioeconomic impacts resulting from the construction of the Procter & Gamble Cogeneration Project will primarily impact the study area defined as the Sacramento MSA counties of El Dorado, Placer, Sacramento, and Yolo. The direct and cumulative impacts on the Sacramento MSA are discussed in this section.

Construction of the SCA Procter & Gamble Cogeneration Project will occur on an approximate 10 acre site (City of Sacramento Assessor Map, County of Sacramento, California Identification Number 061-0010-022-0000) in Section 23, Township 8N, Range 5E, Sacramento, Sacramento County. The project site is bordered by the Central California Traction Rail Line to the north and 83rd Street

to the east. Power Inn Road is approximately 0.4 mile west of the site; Fruitridge Road is approximately 0.35 mile south of the site.

6.7.2.1 Employment. Figure 6.7-1 indicates the total man-months of employment required, by month, during the construction period for the Proctor & Gamble Cogeneration Project, including all related transmission lines and facilities. The construction project is expected to require 25 months, from May 1995 through May 1997. The size of the construction workforce will generally increase over the initial 13 months, reaching a projected peak in May 1996, when an estimated 181 workers will be employed. Thereafter, the workforce will generally decrease and will be less than 70 workers during the last 6 months of construction. Over the entire project, the onsite construction workforce is expected to average about 84 workers. During the 6 months of peak employment from May 1996 through October 1996, an average of approximately 161 workers will be employed. In terms of man-months (one man-month is equal to a worker employed for 1 month), the project will require an estimated 2,109 man-months of construction employment.

The occupations/crafts employed, the peak number of workers, and the total man-months of employment required for the project are listed in Table 6.7-18. As indicated in the table, pipefitter craft workers will have the highest employment peak of any craft with an estimated craft peak of 57 workers. Electricians (40 at craft peak) and general contractor/supervisor/construction management workers (a peak of 33) will also make up a significant portion of the construction workforce.

In terms of total man-months of employment, general contractor personnel are estimated to work a total of 479 man-months onsite, followed by the 443 man-months for electricians and 429 man-months for pipefitters. Table 6.7-18 indicates that the project is expected to create a total of 246 construction jobs and generate 2,109 man-months of employment.

The Sacramento MSA's ability to supply the required number of construction workers can be evaluated through a comparison of the number of construction workers required at the site to the number of study area construction workers. As indicated in Table 6.7-4, there were a total of 29,500 construction workers in the Sacramento MSA in 1992 (Sacramento Metropolitan Chamber of Commerce 1993). If this figure remained constant, when craft construction employment reaches its maximum of 181 workers in August 1995, approximately 0.6 percent (six tenths of 1 percent) of the Sacramento MSA construction workforce would be required at the

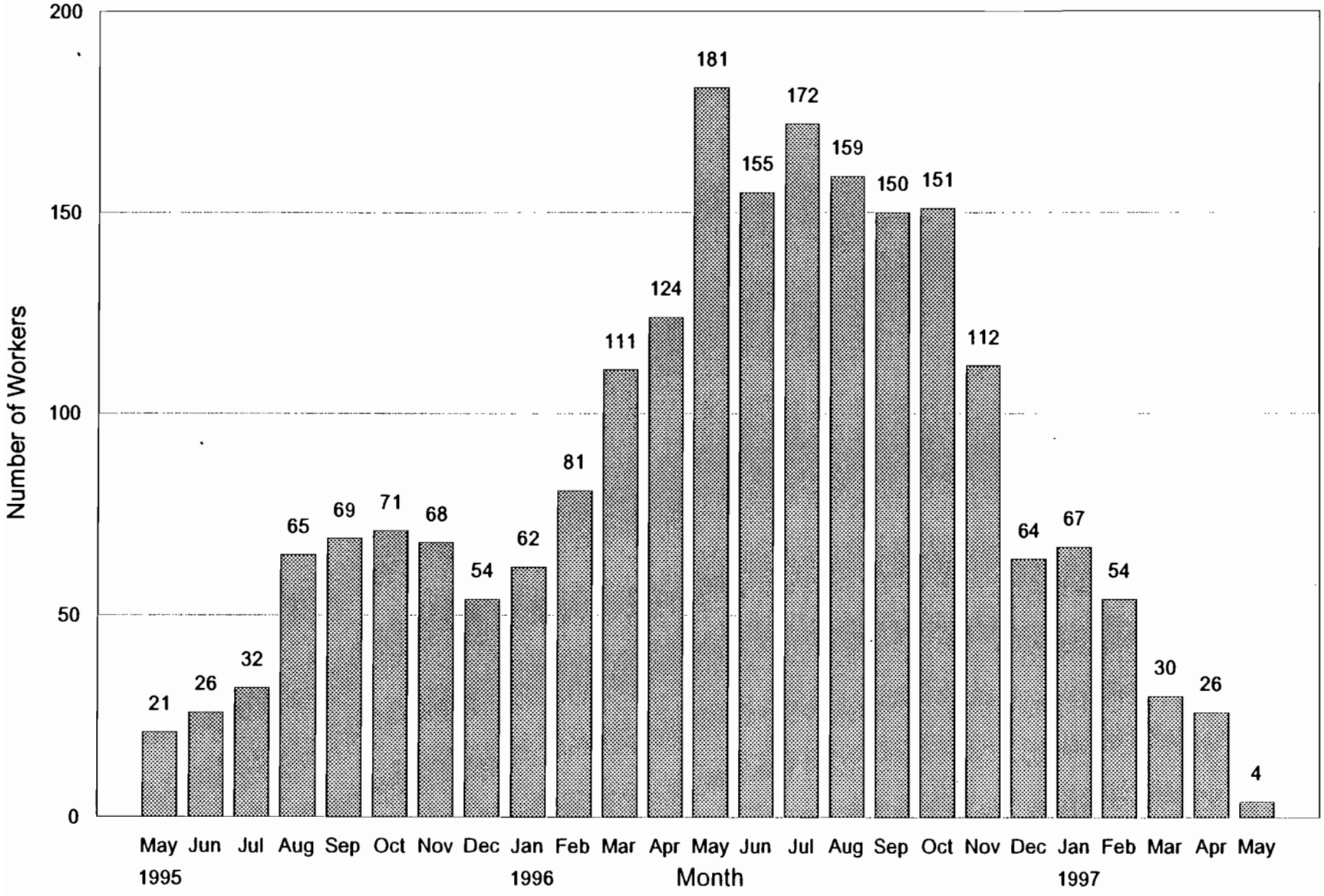

Total Man Months of Employment During the Construction Period
Figure 6.7-1

Table 6.7-18
Estimated Procter & Gamble Cogeneration Project
Construction Workforce by Major Craft/Occupation

Craft	Peak No. of Workers	Total Manmonths of Employment	No. of Workers at Peak Project Employment
Iron Worker	15	145	5
Laborer	9	110	4
Millwright	18	92	11
Operating Engineer	7	46	3
Painter	8	30	3
Pipefitter	57	429	54
Plumber	3	13	2
Insulator	8	23	0
Instrument PF/EL	9	34	0
Electrician	40	443	40
Carpenter	18	148	11
Boiler Maker	21	117	21
General Contractor/ Supervisory/Construction Management	33	479	28
Total	246	2,109	181

site. This percentage will likely be even smaller since it is expected that many of the supervisory/construction management personnel will be from outside the Sacramento MSA.

While this estimate indicates that a very small portion of the area construction workforce will be required at the site, it likely underestimates the ability of the Sacramento MSA to provide the needed construction workers, due to the large number of construction workers unemployed. Total 1990 construction employment in the MSA was 40,700; in 1992 it was 29,500. A comparison of these figures implies that approximately 28 percent of those construction workers employed in 1990 were unemployed in 1992, assuming a constant construction worker labor pool size. As discussed in Subsection 6.7.1.2, this decrease in construction activity is reflected in the decrease of new construction permits issued in the past several years. In 1992, the City issued 1,088 new construction permits. This general downward trend has continued since 1988 when 3,514 permits were issued by the City of Sacramento.

It is expected that the availability of workers in the construction industry will continue in the short term. This expectation is based on the projected unemployment rate at the state level of 9.6 percent at the end of 1995, which is above the 9.2 percent average unemployment rate in the state in 1992. Subsection 6.7.1.2 discusses additional local factors which contribute to the expected slow recovery of the region's construction industry.

Both the SMUD pipeline project and Carson Ice-Gen project will be completed or be near completion prior to the May 1995 start of construction for the Procter & Gamble Cogeneration Project. The SEPCO Cogeneration Project AFC projects a January 1996 completion date and will not overlap the peak employment months of May 1996 through October 1996. The Campbell Soup Cogeneration Project which will be constructed concurrently with the Procter & Gamble project will have a peak workforce of approximately 200 workers. The demand for project workers from the Campbell Soup Cogeneration Project and the Procter & Gamble Cogeneration Project are well within the limits of the regional labor pool supply. This conclusion is further justified in light of the more than 2,000 construction workers required for the Rancho Seco Nuclear Power Plant.

6.7.2.1.1 Cumulative impacts. Cumulative impacts of the Procter & Gamble Cogeneration Project, together with other construction projects will have a beneficial impact on the region's construction industry which has experienced employment decreases since 1990. The only potential concern regarding cumulative impacts is whether the demand for construction workers in all projects would be so large as to

outpace the ability of the region to supply needed workers, resulting in significant immigration of workers, delay of projects, or increased wages that are passed on to consumers.

The cumulative impacts of other known construction projects are not expected to result in a shortage of construction labor.

In addition to the direct employment impacts from construction of the project, indirect economic impacts will be generated through economic multiplier impacts, also called ripple effects. Generally, multiplier effects refer to the direct and indirect employment and earnings created in a region due to an increase in final demand such as a new investment. For example, at peak, 181 project workers will be employed. This is a measure of the direct employment impact. Indirect employment impacts will be created as project construction workers spend their income on goods and services in the region and industries producing the supplies, materials, and equipment for the project increase output. As these firms increase production, they will demand more inputs from their suppliers and so on. When the total economic repercussions from the construction of the project have filtered through the economy, the total employment impact will be a multiple of the direct construction employment at the site.

The US Bureau of Economic Analysis (BEA) has developed a series of employment and income multipliers for each state in its Regional Input-Output Modeling System (RIMS II). The RIMS II direct employment multiplier for the construction industry in California estimates the total change in number of job-years (a job-year is the equivalent of one person employed for 1 year) in the state for each job in the construction industry resulting from an increase in final demand such as investment in a new power plant (BEA 1992). The RIMSII direct-effect employment multiplier for California's construction industry is 3.28. The application of this direct-effect multiplier to the 176 craft construction job-years at the Procter & Gamble Cogeneration Project (2,109 man-months divided by 12 months) indicates that project construction would generate an estimated 577 man-years of employment in the state. Most of these jobs will be generated locally as the majority of expenditures made in the state will occur in the Sacramento MSA.

6.7.2.2 Personal Income. The project will also result in significant personal income benefits. It is projected that the burdened labor cost (which includes the employer's direct wage cost plus indirect costs such as FICA and other costs) for local craft workers will be approximately $13.0 million, and the project will result in more than $8.2 million in direct construction wages.

Applying the RIMS II direct-effect earnings multiplier of 2.51 for the California construction industry to the projected worker earnings of $7.3 million, results in an estimated $20.7 million in earnings that may be generated in the state. As with the employment multiplier impact, most of this income effect will occur in the Sacramento MSA because of the likelihood that most expenditures by craft workers will be made in this region.

6.7.2.3 Demographics. Demographic changes to the Sacramento MSA could potentially occur if construction workers migrated into the Sacramento MSA as a result of plant construction. As explained in Subsection 6.7.2.1, the Sacramento MSA is expected to have a sufficient supply of craft construction workers to meet the onsite demand for construction workers. Therefore, no in-migration of craft workers is is expected.

For project craft workers already living in the Sacramento MSA, no demographic changes between MSA counties are expected, given the reasonable commuting distance from each MSA county to the site. Several case studies by the Electric Power Research Institute (EPRI) indicate that power plant workers may commute up to 100 miles or more, one way, to a power plant construction site (EPRI 1982). The distance to the site from nearly all locations within the Sacramento MSA is within 100 miles of the project site. It is expected that the only demographic impacts associated with the project will be the temporary influx of some supervisory and construction management personnel which will originate from outside the Sacramento MSA. However, the number of supervisory and construction management personnel from outside the MSA should be less than 20 and there will be no noticeable demographic impacts on the Sacramento MSA as a result of project construction.

6.7.2.4 Housing. No in-migration of project craft construction workers to the Sacramento MSA is expected as a result of the construction of the project, and no migration between MSA counties is expected. As a result, there is only projected to be an insignificant impact on the housing accommodations in the project area from the limited number of supervisory and construction management personnel, and these impacts will be on temporary housing sources such as hotels or month by month rentals.

Even if some small increase in the demand for housing would occur, there is ample vacant housing in the Sacramento MSA to accommodate increased demand as evidenced by the 8.4 percent housing vacancy rate in the MSA. This equals a total of over 53,000 vacant units in the area.

6.7.2.5 Community Facilities and Services. An increase in the demand for community facilities and services due to project construction could arise from two potential sources. The first potential source is an increase in demand due to in-migrant project workers; the second potential source is from an increase in demand at the project site.

Because the project construction workforce other than the supervisory and construction management personnel is projected to originate from the Sacramento MSA, there are projected to be no significant increases in the demand for community facilities and services attributable to project workers and families.

There will be impacts on the demand for community facilities and services at the site. These potentially include those typically associated with construction activities--occasional use of medical facilities, emergency services, disposal of construction wastes, and demand for utilities. Emergency services will be coordinated with the local fire department and hospital. An urgent care facility will be contacted to set up non-emergency doctor referrals in advance. First aid kits will be provided around the site and maintained on a regular basis. At least one person trained in first aid will be part of the construction staff. In addition, all foreman and supervisors will be given first aid training. These actions will reduce demand on existing hospital staff and capacities.

The need for City fire fighting services will be minimized by placing fire extinguishers at strategic locations throughout the project. Other routine safety measures, such as restricted storage areas for flammable materials and a safety orientation program, will further reduce the need for local emergency services. Should the local fire department be required at the site, response time is estimated to be approximately 15 minutes.

The need for City police and security will be limited by strictly controlling site access for both vehicles and personnel. Deliveries and visitor access will be controlled by sign-in checklists. A security fence enclosing the 10 acre site will be installed early during construction. The lay-down and storage area which will be directly west of the site boundary will also have a temporary fence installed. The temporary parking area which will be west of the site boundary will provide approximately 185 parking spaces for project personnel. This parking area will have security lighting installed and will be in view of the construction offices for monitoring of access. These security measures should be adequate to minimize the need for City police.

During construction, temporary utilities will be provided for the construction office, construction parking, lay-down area, and the project site. Temporary construction power will be provided from an existing 480 volt panel and be distributed to areas throughout the plant site. Area lighting will be provided in the parking and lay-down areas for safety and security. Construction water will be provided by the city main and piped to the construction site. Drinking water will be distributed daily. Portable toilets will be provided by the general contractor throughout the site, and servicing will occur on a weekly basis. It is estimated that during construction the site will generate an average of one 40 yard container of solid waste per week. The waste will be deposited at the L&D Landfill in Sacramento or at the Sacramento County Landfill and will not represent a significant increase in waste deposited at these facilities.

6.7.2.6 Local Purchases. It is expected that during project construction a total of approximately $12.5 million in local purchases will occur. This total includes an estimated $8.4 million in materials, and an estimated $4.1 million in equipment. Local materials are likely to include concrete, pipe, wire, fuels, structural steel rebar, and consumables.

6.7.2.7 Tax Revenues. The SCA is a subsidiary of the Sacramento Municipal Utility District (SMUD) which was formed and operates under the State of California Municipal Utility District Act (Act). The utility's power to levy property taxes is restricted by the California Constitution, Article XIII A, which places limits on the taxing power of all California public agencies. SMUD is exempt from payment of federal and state income taxes and real and personal property taxes in its service area. The utility is also exempt from property taxes on generation and transmission facility improvements it owns outside its service area.

Although there will be no income or property taxes directly generated during construction, tax revenues will be generated from local purchases and from the expenditure of wages by project workers.

Assuming a local sales tax of 7.75 percent, and an estimated $12.5 million in local purchases during construction, approximately $970,000 would be generated in sales tax revenues due to local purchases (this assumes that legislation which would eliminate sales tax on capital improvements is not enacted). Sales tax revenues will also be generated from the local expenditure of earnings. Including multiplier impacts, the project is expected to generate approximately $20.7 million in earnings

in the state. Assuming 80 percent of total earnings are realized locally and that 20 percent of these earnings are spent on local taxable goods and services, over $250,000 in local sales tax revenue would be generated as a result of project construction.

6.7.3 Potential Operation Impacts

Final construction activities of the Procter & Gamble Cogeneration Project are projected to be completed by March 1998. The ensuing operating life of the facility is projected to be 30 years.

6.7.3.1 Employment. There will be an estimated 21 full-time operating personnel onsite: a plant manager, an operations manager, 3 maintenance technicians, 15 operations personnel, and 1 administrative worker. Given the small size of the operations workforce, the Sacramento MSA will be able to provide all of the plant operations personnel without placing undue pressure on the supply of personnel in the utility industry.

Cumulative operation impacts include the continued competitiveness of the Procter & Gamble facility which will purchase process steam from the plant 24 hours per day. To the extent that the sale of steam to the Procter & Gamble facility lowers production costs, the continued viability of the plant and the security of the jobs at the plant are promoted by the operation of the project.

Additional impacts include the employment multiplier impacts associated with the project. Applying the RIMS II employment multiplier of 5.13 for the electric industry, the permanent operating staff of 21 persons results in an estimated impact of approximately 108 jobs that will be sustained over the life of the plant. Most of these jobs will be created locally because all workers are assumed to live locally and because of the concentration of O&M purchases in the Sacramento MSA.

6.7.3.2 Personal Income. Personal income impacts from the operation of the project include the wages and salaries paid to operating personnel. It is estimated that the yearly operations and maintenance (O&M) cost for the plant will be approximately $5.3 million per year. Of this total, an estimated $1.2 million will be for total burdened plant labor costs and over $860,000 for direct labor costs. This equates to a total of over $25 million in direct wages during the plant's 30 year life. Additional wages will be generated as local firms sell their goods and services to the SCA. It is estimated that approximately $1.8 million in O&M expenditures, such as overhaul and contract service expenditures, may be made locally each year during operation.

A significant portion of these expenditures will be in the form of worker compensation.

Cumulative impacts from the operation of the plant include the direct-effect multiplier impact. Using the RIMS II direct-effect earnings multiplier of 3.93 for California's electric, gas, water, and sanitary services industry of 3.93, the annual staff payroll is estimated to result in direct-effect earnings impacts of nearly $3.4 million per year, or more than $100 million in the 30 year operating life of the plant.

6.7.3.3 Demographics. Demographic impacts from the operation of the plant could potentially include relocating staff and families. Since it is assumed that the Sacramento MSA is capable of providing the plant's operating staff, the Sacramento MSA is not projected to realize a population increase due to the operation of the plant.

6.7.3.4 Housing. Operation of the plant is not expected to affect the Sacramento MSA's housing stock since all operating staff are expected to be area residents.

6.7.3.5 Local Services and Facilities. An increase in the demand for community facilities and services could potentially arise from the location of new employees and families in the study area and from the operation of the plant. Because all operations personnel are expected to be hired from within the Sacramento MSA, there is no expected increase in the demand for community facilities and services. Operation of the plant will impact the demand for community services and facilities.

6.7.3.5.1 Waste facilities. During operation, the Sacramento County solid waste facility or the L&D Landfill will be used for solid waste disposal generated at the site. Hazardous wastes will be either recycled by the supplier (recycling of spent SCR or carbon monoxide reduction catalysts may occur) or disposed of in a designated landfill. The increased cost of using these facilities will be offset by tipping fees.

6.7.3.5.2 Security. Security at the plant site will be maintained through a permanent fence which will extend around the site boundaries, an area of approximately 10 acres. All the primary facilities, including the employee parking area will be fenced. The security lighting which will be installed at the plant during the construction phase, will continue to be utilized to ensure security and safety. Controlled gates on the plant access road off of 83rd Street will control access to the interior of the plant.

6.7.3.5.3 Fire fighting and hospital services. An extensive fire detection and protection system will be installed at the facility to minimize damage in the event of a fire and to limit the need for assistance from the City fire department. The water

supply from the City water system will be used to provide water for the largest fixed fire suppression system demand plus 500 gpm for hose stream demand for a 2 hour duration. Dedicated fire suppression systems will be installed for the transformers, turbine lube oil equipment, and aqueous ammonia tank. Sprinkler systems will be installed in the control and administration building, the chiller building, water treatment building, and maintenance building as required by NFPA and local code requirements. Each combined cycle combustion turbine generator and the transformers will be equipped with fire detection and protection systems. Hand held fire extinguishers will also be located at appropriate intervals throughout the facility.

Additional safety measures include the storage, handling, and use of all chemicals for the project in accordance with all laws, regulations, ordinances, and standards. All chemical storage and chemical feed areas will be surrounded by curbing to contain leaks and spills. The curbing will be sized to contain the contents of the largest tank. Safety showers and eyewash stations will be provided in the area of all chemical storage and use areas. Safety gear will also be provided for use in the event of a chemical spill for containment and cleanup activities. Plant personnel will be trained in the handling and cleanup of these substances. With the security and fire detection and protection systems which will be installed, the plant is expected to place minimal increased demands on the police, fire, and hospital facilities and services in the Sacramento MSA.

6.7.3.5.4 Water and wastewater demand. The plant will use a significant amount of water for operation. It is estimated that at full production, the average daily water requirement for the facility will be approximately 1.15 million gallons per day. Section 3.9 provides more detail regarding the uses of this water. The City will be the supplier of water for the project. The City of Sacramento has indicated that the capacity of the City's existing treatment plants, storage reserves, and transmission mains are adequate to meet the needs of the project (City of Sacramento, June 9, 1993). There may be a need to construct a second or larger water distribution main or a water main extension to ensure adequate delivery to the site. If these modifications are made, the SCA will pay for these costs. The SCA will also pay the required water development and connection fees.

The plant design includes a wastewater collection system for the collection, treatment, and disposal of all wastewaters produced by the plant. Section 3.10 provides a more detailed description of the design and capacities of the wastewater system. The design will be of sufficient capacity to accommodate the maximum likely wastewater flow from the facility.

6.7.3.5.5 Electrical demand. The facility will have a net positive impact on the supply of electricity available to SMUD. This increase in supply will be secured through the Power Sales Agreement between SCA and SMUD for the purchase of the plant's net electrical output. This power will be a cost effective and reliable supply of power based on the projected overall availability of 90 percent or higher. Through the dispatch of the facility in various operating modes, depending upon SMUD's load characteristics and plant component availability, the facility may be able to produce electricity continuously throughout the year.

6.7.3.5.6 Natural gas demand. The project will burn natural gas for the production of electricity and steam. Gas will be purchased from various sources and transported to the site by a new pipeline which is currently under environmental review. The maximum natural gas requirements during peak load operation are estimated to be approximately 61,820 pounds per hour.

6.7.3.6 Local Purchases. Subsection 6.7.3.2 stated that total annual O&M expenditures are expected to be approximately $5.3 million, of which $1.2 million would be plant staff labor costs. Additional benefits to the Sacramento area will arise from local purchases of O&M materials and services. In total, it is expected that of the $5.3 million in O&M expenses incurred annually, over $3.0 million, or nearly 60 percent, will be spent in the Sacramento regional economy.

6.7.3.7 Tax Revenues. SCA is a subsidiary of SMUD which, under California law, has an exempt status for income and property taxes. There will be no payment in lieu of property taxes. Tax revenues will be generated from sales taxes imposed on the purchase of O&M materials and services and from the expenditure of earnings generated by the plant.

Assuming a local sales tax rate of 7.75 percent and local O&M expenditures of approximately $3 million per year, local O&M expenditures on taxable goods and services could result in approximately $230,000 in sales tax revenues locally each year. In addition, local sales tax revenues will be generated from earnings expenditures from O&M and plant staff. Subsection 6.7.3.2 estimated that the cumulative statewide earnings impact associated with operation of the facility will be $7 million annually. Assuming 80 percent of this will be generated locally and that 20 percent will be spent on goods and services taxed at a 7.75 percent rate, over $85,000 would be expected to be generated in local sales tax revenues annually.

6.7.3.8 Property Value Impacts. Operation of the Procter & Gamble Cogeneration Project will not have a significant impact on local property values. The site is located in an industrially zoned area (City of Sacramento Assessor Map, County of

Sacramento, California Identification Number 061-0010-022-0000) and is compatible with existing land uses in the immediate project vicinity. Both the City and County have identified the land in the vicinity of the project as a target area for future industrial land use. The City has endorsed the concept of industrial infilling which promotes use of vacant land in industrial areas for industrial development. The project will infill the currently vacant 10 acre site adjacent to current industrial land uses. Given the compatibility with current land uses in the immediate vicinity of the site, zoning designations, and development goals, it is concluded that the site will have no measurable impacts on the property value of surrounding land.

6.7.4 Mitigation

The planned project mitigation activities should minimize potentially negative socioeconomic impacts. As a result, the measurable socioeconomic impacts of the Procter & Gamble Cogeneration Project are expected to be largely beneficial.

6.7.4.1 Construction. The most significant socioeconomic impacts of construction will be the beneficial employment and personal income impacts on the Sacramento MSA. Adverse socioeconomic impacts associated with construction will be negligible or will not have a significant impact on the area. The lack of significant impacts during construction is due to the projected ability of the Sacramento MSA to supply nearly all project workers. No permanent in-migration is expected because of the large size of the construction workforce in the area and the ongoing high unemployment in the industry.

Only minor socioeconomic impacts should result from construction at the site. These impacts include an increased disposal of solid wastes, an increase in the demand for water, and the possible increased demand for fire, police, medical, and emergency services. As discussed in Subsection 6.7.2.5, several measures will be taken to minimize these impacts and no noticeable impacts should result. These measures include first aid-trained personnel and first aid supplies onsite, a coordinated emergency plan with local hospitals, security fencing and lighting, and firefighting equipment. Based on the expected effectiveness of these measures, no additional mitigation activities are recommended for the construction phase.

6.7.4.2 Operation. Plant operation will result in positive socioeconomic benefits to the Sacramento MSA in the form of increased employment, personal income, and sales tax revenues. Other impacts on socioeconomic variables will be minor or will not significantly affect existing facilities and services because of several planned operation procedures and design characteristics. As discussed in Subsection 6.7.3.5,

these include safety training for operations personnel, a sophisticated fire detection and control system, security fencing and lighting, a design to contain and limit damage from chemical spills, and proper waste disposal techniques. With the implementation of these measures, the increased demand for community services and facilities during operation is expected to be limited, and no additional mitigation activities are recommended.

6.7.5 Laws, Ordinances, Regulations, and Standards

Socioeconomics addresses the social and economic structure of a community and/or region. Social and economic issues are closely linked and are often difficult to separate. Socioeconomics covers a broad category of issues including employment, income, housing, revenues, transportation, and community services. Community services include available medical, law enforcement, fire, and emergency facilities, schools, recreation facilities, utility services (sewer, gas, water, electricity), and other local government support services.

This section is a summary of applicable laws, ordinances, regulations, and standards (LORS) that apply to the socioeconomic sections of the Application for Certification (AFC). The following LORS will be used as guidance tools for adequately fulfilling requirements of the California Energy Commission (CEC).

6.7.5.1 Federal LORS. There are no applicable federal LORS.

6.7.5.2 State LORS. The CEC requires addressing socioeconomic issues when an AFC for a power plant is prepared.

6.7.5.3 Regional LORS. No regional LORS specifically addresses socioeconomics.

6.7.5.4 Local LORS. Sacramento County's General Plan and the City of Sacramento's General Plan address issues related to socioeconomics such as housing and public facilities. However, neither Plan contains specific LORS that pertain to socioeconomics.

6.7.5.5 Compliance with LORS. Compliance with the applicable LORS has been accomplished by analyzing the existing socioeconomic structure of Sacramento County, the City of Sacramento and, where appropriate, the surrounding counties and state. Information on employment, income, housing, revenues, transportation, and community services has been obtained and incorporated into the socioeconomic analyses discussed in previous sections of this document.

6.7.6 References

Brocchini, Jack, May 18, 1993, Deputy Chief of Operations, Sacramento City Fire Department, in personal communications with Robin Goldman, Black & Veatch.

Business in Sacramento, 1991/1992, Sacramento Metropolitan Chamber of Commerce.

California Department of Finance, 1992, *California Statistical Abstract*, Table C-1.

City of Sacramento, California, September 3, 1991, *Approved Budget 1991-1992, 1992-1993.*

City of Sacramento, California, May 3, 1993, *Proposed Budget 1993-1994.*

City of Sacramento, California, May 1989, Department of Planning and Development, *Reference Guide on the Economic Impacts of the Closure of Mather Air Force Base.*

City of Sacramento, California, August 1990, Department of Planning and Development, *Reference Guide on the Economic Impacts of the US Army Depot on Sacramento.*

City of Sacramento, California, June 9, 1993, Department of Utilities, letter to Ron Simms, Construction Manager for Walsh Construction.

City of Sacramento, California, Planning and Development Department, *Sacramento Economic, Employment and Development Analysis, 1991-1992.*

City of Sacramento, 1985-1992, Building Inspections Division, *Construction Report*, annual summaries.

County of Sacramento, California, June 7, 1993, *Proposed Budget 1993-1994.*

County of Sacramento, California, November 20, 1992, *Final Budget 1992-1993.*

Electric Power Research institute, 1982, *Socioeconomic Impacts of Power Plants*, Palo Alto, California.

Fontes, Tony, May 17, 1993, City of Sacramento Sewer & Water Department, in personal communication with Robin Goldman, Black & Veatch.

Heenan, Michael, May 5, 1993, City of Sacramento Police Department Media Services, in personal communications with Robin Goldman, Black & Veatch.

Jones, Georgia, May 18, 1993, California Employment Development Department, in personal communications with Robin Goldman, Black & Veatch.

Living in Sacramento, 1992/1993, Sacramento Metropolitan Chamber of Commerce.

Metevoy, George, May 18, 1993, Sacramento Unified School District Public Relations, in personal communications with Robin Goldman, Black & Veatch.

Rudek, Michele, June 15, 1993, City of Sacramento Parks & Recreation Department in personal communication to Robin Goldman, Black & Veatch.

Sacramento Area Council of Governments (SACOG), April 1993, *SACOG 1993 Forecasts 1992-2015*.

Sacramento Area Council of Governments (SACOG), February 1992, *1992 Regional Transportation Plan*.

Sacramento City Unified School District, September 15, 1992, Research and Evaluation Office, memorandum entitled *Fifth Day Enrollment*.

Sacramento City Unified School District, February 9, 1993, Research and Evaluation Office, *District Enrollment Projection 1993-94*.

Sacramento City Unified School District Fiscal/Budget Services, October 15, 1992, *J-200 Series Report Revisions for Budget Year 1992-1993*.

Sacramento Metropolitan Chamber of Commerce, 1992, *Greater Sacramento Area Statistical Abstract*.

Sacramento Metropolitan Chamber of Commerce, 1992, *Sacramento Region Today*.

Sacramento Metropolitan Chamber of Commerce, 1992, *Greater Sacramento Area Manufacturers and Processors Guide, 1992-1993*.

Smith, Bob, April 20, 1993, County Executive, Inter-Department Correspondence entitled *Sacramento County Discretionary Tax Revenues*.

State of California, November 1992, Department of Finance, *California Statistical Abstract, 1992*, Sacramento.

State of California Employment Development Department (EDD), February 18, 1993, *Characteristics of Unemployment Insurance Beneficiaries*.

State of California Employment Development Department (EDD), 1992, *Projections of Employment by Industry and Occupation, Yolo County 1989-1996*.

State of California Employment Development Department (EDD), 1992, *Projections of Employment by Industry and Occupation, Sacramento County 1989-1996.*

State of California Employment Development Department (EDD), 1992, *Projections of Employment by Industry and Occupation, Mother Lode Consortium 1989-1996.*

State of California Employment Development Department (EDD), 1992, *Projections of Employment by Industry and Occupation, Golden Sierra Consortium 1989-1996.*

State of California Employment Development Department (EDD), June 1992, *Annual Planning Information, Yolo County.*

State of California Employment Development Department (EDD), April 6, 1993, interoffice memorandum entitled *California Labor Market Forecast.*

Tellis, Sharon, May 13, 1993, Sacramento County Sheriff's Office, personal communication to Robin Goldman, Black & Veatch.

Tennis, Michael W., Ian Goodwins, and Matthew Clark, June 2, 1991, *Employment Impacts of New York State Energy Options.*

US Department of Commerce, Bureau of Economic Analysis, Distributed by California Department of Finance, *Personal Income by County: California 1987-1990.*

US Department of Commerce, May 1992, Bureau of Economic Analysis, *Regional Multipliers: A User Handbook for the Regional Input-Output Modeling System (RIMS II)*, Washington, D.C.

US Department of Labor, 1993, Bureau of Labor Statistics, *BLS Report on Employment, Hours and Earnings.*

6.8 Cultural and Paleontological Resources

Cultural resources in the general project area include archaeological, historic, and ethnographic resources. Archaeological resources are those materials relating to prehistoric human occupation of the project area. Historic resources are those materials related to the period of Euro-American exploration and settlement of the project area. Ethnographic resources are those materials important to the heritage of a particular ethnic or cultural group. Paleontological resources consist of fossilized evidence of prehistoric plants or animals preserved in soil or rock.

Cultural resources significance is determined under criteria listed in the California Environmental Quality Act (CEQA), Appendix K "Archaeological Impacts." CEQA (Appendix K, Section II) states that "Public agencies should seek to avoid damaging effects on an archaeological resource whenever feasible."

Under CEQA (Appendix K, Section III), if a project may cause damage to an important archaeological resource, the project may have a significant effect on the environment. Impacts on historic resources listed in a local register or eligible for listing on the National Register of Historic Places or the California Register of Historic Places are presumed significant. For the purpose of CEQA, an important archaeological resource is one which is characterized by one or more of the following:

- Is associated with an event or person of recognized significance in California or American history or recognized scientific importance in prehistory.
- Can provide information which is both of demonstrable public interest and useful in addressing scientifically consequential and reasonable or archaeological research questions.
- Has a special or particular quality such as oldest, best example, largest, or last surviving example of its kind.
- Is at least 100 years old and possesses substantial stratigraphic integrity.
- Involves important research questions that historical research has shown can be answered only with archaeological methods (CEQA 1992).

6.8.1 Regional Resources

Both historic and archaeological sites are scattered throughout Sacramento County, although both can be potentially found in greater concentration along the waterways. The areas likely to contain archaeological sites include the Cosumnes

River area, the American River area, and the Delta and Sacramento River areas. Historic sites tend to be concentrated in currently developed areas (Figure 6.8-1).

Evidence of prehistoric human activity in Sacramento County extends back at least 11,000 years. Written historical sources document the Euro-American presence in Sacramento County for the past 200 years.

6.8.1.1 Archaeological Resources. The evidence of prehistoric peoples in the vicinity of Sacramento County is often difficult to detect. Most artifacts of prehistoric peoples were made primarily of natural materials; stone, fur, sticks, grasses, and mud. However, several important archaeological sites have been discovered in Sacramento County, including an array of hand implements, middens rich in discarded objects, and structural remains. Archaeologists attempt to determine food gathering practices, societal structuring, and trading networks from the study of collected artifacts.

The general trend of prehistory in California has been established by archaeologists: an increase in population density over time, coupled with greater sedentism and the use of a greater diversity of food resources. The major periods of prehistory in the project area are Paleo-Indian, Archaic, and Pacific (Fagan 1991). These periods are described in the following subsections.

6.8.1.1.1 Paleo-Indian Period (10,000-9,000 B.C.). Present evidence indicates an extremely sparse human population in western North America before about 9,000 B.C. Most recorded Paleo-Indian sites are little more than surface scatters of lithic artifacts. One of the earliest sites is the Borax Lake site near Clear Lake in northern California, which may date to as early as 10,000 B.C. Generally, Paleo-Indian subsistence strategies included the capture of big game, including now extinct large Pleistocene mammals (Fagan 1991). Grinding instruments are rare in Paleo-Indian sites, as if intensive exploitation of vegetable foods was unimportant (Fagan 1991).

Increasing cultural diversity was an overall trend in Paleo-Indian adaptation. At the end of the Paleo-Indian period, western hunter-gatherers were pursuing very diverse subsistence strategies, relying heavily on plants and non-migratory small game. Only in local areas where food resources were predictable and seasonally more abundant than usual did populations rise to higher levels (Fagan 1991). Research in the Great Basin indicates that the economies of the Paleo-Indian peoples of far western United States, as well as their immediate successors, were based on a wide-ranging hunting and gathering strategy tethered to local lake-marsh

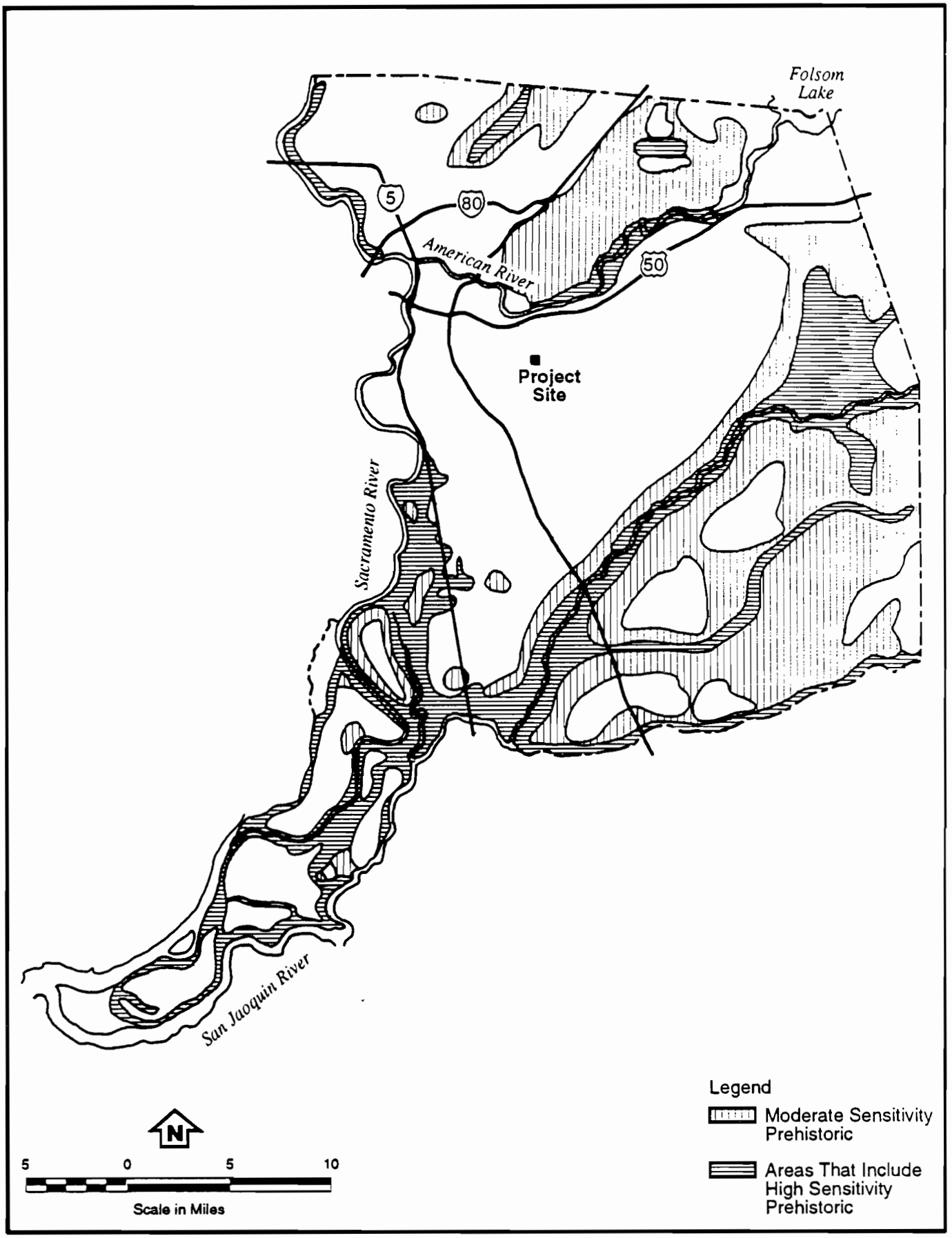

Source: Sacramento County Planning and Community Development Department

SACRAMENTO COUNTY MAP

Figure 6.8-1

habitats (Davy 1992). The lower Sacramento Valley region supported the highest population densities in prehistoric California. Three staple food categories made up the diet of prehistoric people along the West Coast and immediately inland: large and small game animals, edible plants, and sea foods (Fagan 1991).

Fluted projectile points, which are diagnostic of the Paleo-Indian Period, have been found at the Borax Lake site, the Tulare Lake Basin, and other places in California. Because a Clovis fluted point was found in a deeply buried stratum in Calaveras County at the Skyrocket site in the Sierra foothills (Davy 1992), archaeologists have suggested that very early sites may be buried in alluvial deposits in the Sacramento Valley.

6.8.1.1.2 Early and Middle Archaic Periods (9,000-4,000 B.C.). Archaeologists have indicated that during the Early and Middle Archaic Periods, California prehistoric cultures shifted from a primary emphasis on hunting large game to subsistence reliance on a varied resource base. Along the California coast, people were exploiting fish, marine mammals, and shellfish perhaps as early as 8,000 B.C. At that time, the Pacific shore was several miles further offshore, but is now submerged under higher sea levels. As western environments became drier and resources more localized, Paleo-Indians developed more diverse local adaptations and greater cultural diversity, as well as highly varied population densities. In much of southern California, for example, drowned river valleys persisted as late as 3,500 B.C., accounting for a continued human presence in these regions, while population densities apparently decreased further north (Fagan 1991).

The San Dieguito Complex hunter-gatherer culture may date as early as 9,000 B.C. and flourished until after 8,000 B.C. (Fagan 1991). San Dieguito may have originated in the Great Basin and flourished over much of southern California as far north as the Death and Owens Valleys. Emerging in an area where drowned river valleys were commonplace along the coast, the exploitation of marshlands and lakeside resources was probably important (Fagan 1991).

Evidence of human occupation in the Sacramento Valley and adjacent areas during these periods is rare. The evidence for human occupation comes primarily from finds of large stemmed projectile points of the Western Stemmed tradition. This is because many of the key artifacts used for plant or shell gathering are perishable items like baskets, skin bags, or wooden digging tools. Recent finds of major Stemmed tradition components have occurred in Calaveras County in the Stanislaus River drainage at Clarks Flat and the nearby Skyrocket Site (Davy 1992).

Many other Early Archaic sites may exist, perhaps deeply buried in alluvium deposits. Davy reports that two Gypsum Cave projectile points were found in Sacramento County beneath 9 feet of alluvium in the cut bank of Arcade Creek (1992).

6.8.1.1.3 Late Archaic Period (4,000-2,000 B.C.). Fagan (1991) reports that the size of local bands varied considerably during this period, with little of the elaboration found in later coastal and Sacramento Delta cultures. In the San Francisco Bay area, early sites were not only on bay and ocean shores but in hill country, and considerable distances inland. Some groups collected shellfish, but others subsisted on vegetable foods, moving seasonally from one concentration of edible foods to another. Habitat flexibility enabled the people to accommodate plant distribution changes resulting from climatic fluctuations.

Coastal population rose rapidly after 3,500 B.C. The first mortars and pestles were used about the same time, perhaps coincidental with more intensive acorn production. Fagan reports (1991) that the shift to acorn harvesting may have resulted from rising sea levels, which drowned the seed-rich coastal plain and forced the people inland. The intensive exploitation of acorns and marine resources led to the great elaboration of technology, art, and social organization in some areas, especially in the San Francisco Bay-Sacramento-San Joaquin Delta regions. Davy also reports (1992) that trade networks began to diversify and develop during the Late Archaic Period, bringing raw materials and finished goods from one region to another.

About 2,500 B.C., people originally from the Columbia Plateau or western Great Basin settled in the Sacramento Delta region. The Windmiller economy was focused on hunting small game and waterfowl. The people fished with spears and nets and lines, as well as gathered and stored plant foods such as acorns. Many groups may have hunted in the nearby Sierras during the summer months. Coastal shells and ornaments from the Pacific were traded for obsidian and other exotic materials. Windmiller cemeteries show evidence of considerable ceremony with the use of red ocher and body placement to the west. The Windmiller Pattern spread widely in the Central Valley and westward into the San Francisco Bay area.

The spear thrower or atlatl may have been introduced or increased in importance during this period, accounting for the change in projectile point styles to the Pinto and Humbolt series from the Western Stemmed series. The Pinto and Humbolt series are generally stemmed or have indented bases, or both (Davy 1992).

6.8.1.1.4 Early and Middle Pacific Periods (2,000 B.C.-A.D. 500). California's later prehistoric cultures were remarkable for their intensive and often highly specialized hunting, gathering, and fishing activities. After 3,000 to 2,000 B.C., the climate was essentially the same as it is today. The implements used on land and sea were basically the same all along the coast, with variations depending on local needs and challenges. Acorn crops were important everywhere. The people also enhanced the resources available to them by controlled burning, husbanding and managing wild foods, and occasionally planting wild grasses and other plants. They also developed complex social mechanisms to regulate long distance trade and the redistribution of resources (Fagan 1991).

By A.D. 1, Berkeley Pattern villages flourished throughout the Central Coast, associated with the exploitation of acorns and some shellfish collecting. Many Berkeley Pattern settlements were sited to take full advantage of the wide diversity of environments existing in the prehistoric bay region, often lying near freshwater streams and marshlands. Such locations enabled the people to exploit both inland and bayshore locations (Fagan 1991).

Between A.D. 300 and 500, the Berkeley Pattern gradually evolved into the Augustine Pattern, associated with technological innovations such as the bow and arrow, harpoons, tubular tobacco pipes, and an unusual custom of burning artifacts in a grave before the body was interred.

Augustine communities supported large, dense populations in favored locations, intensifying hunting, gathering, and fishing to the point that their culture was much elaborated (Fagan 1991).

6.8.1.1.5 Late Pacific Period (A.D. 500-1400). There is evidence that this period was a time of cultural stress throughout the Central Valley and foothills (Davy 1992; Fagan 1991). Warfare was common and populations shifted away from the foothills into higher mountain elevations. Explanation for such activities have included rapid climatic fluctuations and a corresponding movement of vegetation zones (Davy 1992). Fagan reported (1991) that Berkeley Pattern settlements were sited in prime locations where few gaps existed in the annual harvest of different resources. Later, smaller camps were established in the interior; the result of dense populations splitting off to form satellite communities in more marginal lands. Eventually, each major community was surrounded by peripheral settlements. Territory was restricted, and warfare a probable occurrence. The result would have been

more formal social and political relationships, with the emergence of important kin leaders and nonegalitarian political systems.

6.8.1.1.6 Final Pacific Period (A.D. 1400-1789). Sedentary populations increased during this period, depending more on staple foods even though the diversity of food exploitation increased. The resource rich Sacramento Valley contained permanent settlements with populations as high as 1,000 persons. Every available ecological niche was exploited (Davy 1992). After A.D. 1400, the number of Augustine settlements proliferated dramatically, fostered by kin leaders who maintained constant ties with neighboring communities. An elaborate ceremonial practice involving secret societies and cults came into being, as well as the use of clam shell disk "money." This increasingly complex cultural system survived until the arrival of the Europeans (Fagan 1991).

6.8.1.2 Ethnographic Resources. Some 300,000 Indians lived in California as late as 1769, when actual Spanish colonization began (Fagan 1991). The Sacramento and lower American Rivers were occupied in protohistoric times by the Valley Nisenan. The economic practices of the Valley Nisenan tended to be somewhat distinct from the Hill Nisenan, who occupied the lower Sierra foothills below 300 feet elevation. The Valley Nisenan lived in villages that sometimes reached a population of 500 or more. In 1808, Gabriel Moraga noted 11 villages on the lower American River and 7 on the Sacramento River in the general vicinity of Sacramento.

Interaction with Euro-Americans brought disease and displacement to the Nisenan. Several epidemics greatly reduced the Native American population in the Sacramento Valley. An 1833 epidemic of malaria or influenza killed an estimated 75 percent of the Sacramento Valley Native American population (Davy 1992).

6.8.1.3 Historic Resources. Sacramento County was the center of many interesting and important events which are historically significant, including the Gold Rush, the development of railroads, and the establishment of Sacramento as the seat of state government. Historic sites are most likely to be found in areas still inhabited, such as the cities of Sacramento and Folsom, the Delta, old travel routes such as the Jackson Highway, Central California Traction Railroad, and Southern Pacific Railroad, and along river and stream beds. Few historic sites remain, however, due to continual changes to the area caused by successional use.

Recorded history in the project area began with the Spanish exploration attempts beyond the coastal zone. The coastal missions were always in need of manpower, and the search for Native American converts led the Spanish inland. In addition,

they moved inland to punish Indians who opposed Spanish presence in the early 1800s.

The 1808 Gabriel Moraga expedition, the first recorded Euro-American penetration into the project region, was one of the first to travel beyond the tule marshes of the Sacramento Delta to the eastern side of the Sacramento Valley. Native Americans told members of the expedition, however, that similar-looking men had entered their country before.

By 1820, the tribes of the coastal ranges and western Sacramento Valley had largely been missionized. However, many recent converts captured from the interior escaped, returning home to relate firsthand their experience with the Spanish. With such knowledge, the interior tribes began to raid the coastal ranchos to steal cattle and horses. The Spanish, in retaliation, sent several punitive expeditions inland, the most notable being those led by Jose Sanchez in 1819 and 1826, and Mariano Vallejo in 1828. The Indian casualties were always much higher than the Spanish, primarily due to Spanish armor and firearms. Nevertheless, the attacks on the Spanish ranchos continued. Indeed, raids were conducted from as far away as central Colorado, driving off up to 3,000 horses at a time.

While the Spanish entered the interior of California primarily for military purposes, Americans began to make their own explorations into the interior. Jedediah Smith arrived in 1826 with a party of trappers and, in 1827, he made the first recorded crossing of the Sierra by a Euro-American, near Ebbetts Pass. Smith's reports of good fur trapping in the interior of California provided the impetus for the annual Hudson's Bay Fur Brigades, which entered the Sacramento Valley every year between 1829 and 1843 from their base at Fort Vancouver on the Columbia River.

The Spanish regarded the American expeditions as intrusions into their territory. They also suspected the Americans of inciting the Indians against them. There was little the Spanish could do; they had not previously settled the lands the Americans were claiming. In 1839, the new Mexican government granted John Sutter permission to settle in the Sacramento Valley, primarily to represent Mexico in the region. Sutter was made a Mexican citizen and accorded permission to explore the rivers and to take possession of any location that might please him (Zauner 1979).

The first overland immigration attempt was made in 1841 by the John Bidwell Party consisting of 30 members. In 1843, another party of immigrants crossed the Sierras. By 1845, over 200 had come through, including Lt. John Fremont. Several members of these early immigrant parties later became prominent California citizens.

The gold rush, however, temporarily disrupted the flow of prospective agriculturalists to California by turning it into a torrent of gold seekers. There were an estimated 4,000 miners in 1848, 200,000 in 1849, and 500,000 in 1850. By August 1849, Sacramento had 2,000 inhabitants, about 200 houses, and lots were selling for $5,000.00. The new city had well defined streets, hotels, stores, saloons and a theater, all within ten years (Zauner 1979).

After 1852, gold mining began to decline because the price of gold had fallen sharply while the price of food and supplies in the mining towns remained high. Other local industries, such as agriculture, began to develop in Sacramento County. The 1882 Wright Act enabled farmers to organize into local irrigation districts, leading to large-scale planting in irrigated orchard crops. Other early agricultural pursuits in Sacramento County included dairy, wheat, strawberry, and fruit farming.

The first railroad west of the Rockies was a short line that ran from Sacramento to Folsom (known as the Sacramento Valley Railroad, built by Theodore Judah). In October 1863, construction began in Sacramento on the transcontinental Central Pacific Railway route.

On April 3, 1860, the first Pony Express rider left St. Joseph, Missouri, for Sacramento. The route to Sacramento was 1,980 miles and took eight days to complete. It required 200 stations, 500 horses, and 80 riders. The first mail delivery pouch held 80 letters for Sacramento and San Francisco, sent at a rate of $5.00 a half-ounce.

The modern advance that ended the life of the Pony Express was the completion of the Overland Telegraph Line, which reached Sacramento on October 4, 1861. Cost of a telegram from Sacramento to San Francisco was $2.00 for the first ten words, $.75 for each additional five words.

6.8.1.4 Paleontological Resources. The project site is characterized by brown, non-calcic clayey silt (SC) soils of the San Joaquin series, containing some gravel and rounded, metamorphic cobbles. The geologic deposits underlying the site belong to the Riverbank Formation (Middle to Late Pleistocene) and were deposited by a former channel of the American River when it flowed south of its present location (Wiggett 1993). The present-day drainage closest to the project site is Morrison Creek which flows approximately 1-1/2 miles south of the project site.

The Riverbank Formation, together with the Modesto Formation, make up the Victor Formation. Much of the greater Sacramento area is on the Victor Plain, which formed during the Pleistocene Epoch as a plain of aggradation and has been

partially dissected. Victor Formation deposits are generally granitic sand, silt, and clay. Locally, Victor Formation deposits contain gravel lenses and stringers deposited in now-buried stream channels. In the Sacramento area, the American River of Pleistocene times changed its channel several times, leaving a series of channel and terrace deposits in its former courses. In the southeastern Sacramento area north of Morrison Creek, the Riverbank Formation consists of basal channel deposits.

Fossil remains constitute a nonrenewable resource that is often of significant scientific and/or popular interest. A find of vertebrate fossils from the Riverbank Formation deposits in northern Sacramento, approximately 20 miles north of the project site, generated much interest. Discovery of fossils in the Riverbank/Victor is rare due to the nature of the fluviatile deposition environment, and to the infrequency of subsurface excavations in the flat Central Valley. Finds thus far include the scapula and teeth of Pleistocene horses and post-cranial bones of a Pleistocene camelid. These finds were from gravel pits a few miles south and east of the project site. They were not sufficiently diagnostic to permit dating of the Riverbank Formation more precisely than Middle to Late Pleistocene. An article published in the Sacramento Bee (1989) describes a recent fossil assemblage discovery in the Sacramento area as the most extensive and varied group of fossils representing the Pleistocene ecosystem in Riverbank/Victor deposits. The fossils include bison, sloth, wolf, clam shells, and plant material. In all instances, fossils were discovered at depths of approximately 3 to 17 feet, as a result of excavations.

6.8.2 Resources of Project Site

6.8.2.1 Existing Resources. Although evidence of prehistoric human activity in Sacramento County extends back in time at least 11,000 years, a records search, onsite survey, and consultation with various agencies and individuals has determined that no archaeological, ethnographic, historic, or paleontological resources are evident on or near the project site (Figure 6.8-2).

6.8.2.1.1 Methodology. Project research methods to determine the existence of archaeological, ethnographic, historic, or paleontological resources included archival research, pedestrian field investigation, architectural reconnaissance, and consultation with the Native American Heritage Commission. Copies of all correspondence relating to the project site investigations, pertaining to both cultural and paleontological resources, are included in Appendix K of this AFC. A copy of the cultural resources and paleontological technical report is included in Appendix L.



Procter & Gamble Cogeneration Project Site Location
Figure 6.8-2

Archival research. A records search at the North Central Information Center of the California Archaeological Inventory (CAI) at California State University, Sacramento, California, was conducted by the Black & Veatch staff archaeologist and CAI staff to determine whether significant cultural resources exist on or near the project site. In addition, the National Register of Historic Places, the California Historic Landmarks and California Inventory of Historic Resources lists, and California Points of Historic Interest and California Landmark files were searched to locate historic and archaeological sites in the project area.

A records search was conducted by the Black & Veatch staff archaeologist and by Dr. Gail Wiggett, an independent consultant specializing in hydrology and paleontology, to ascertain the fossil-bearing potential of the underlying Victor Formation in the project vicinity. The literature sources included publication by A. M. Piper, et al, the Sacramento Bee, the 1992 SEPCO AFC, and R. J. Schlemon. Complete citations are included in the bibliography.

Field investigation. A Black & Veatch staff archaeologist surveyed the project site on May 18, 1993. The project site included the power facilities area (10 acres) and the adjacent temporary storage/lay-down area (approximately 5 acres). On the basis of environmental conditions, the project site was considered to have a relatively low potential for containing archaeological or historical sites. It lacked areas of obvious relief and was not in proximity to major or permanent water sources.

A supplementary pedestrian surface examination and subsurface testing were conducted to ensure that significant sites on the project site were not escaping detection. The entire project site was surveyed in parallel transects 10 meters apart. Subsurface test units (shovel test probes) were placed at approximately 20 meter intervals on the 10 meter transects and were excavated to hardpan. Ground visibility was excellent during the field investigation because the entire project site (except for the existing roadways transecting the site) had recently been disc harrowed.

In addition, Dr. Gail Wiggett, paleontologist, visited the project site to assess the fossil bearing potential of the site. The site investigation and record search indicate that no recorded or unrecorded paleontological resources occur on the ground surface.

Architectural reconnaissance. A pedestrian architectural reconnaissance was conducted by a Black & Veatch staff archaeologist. The perimeter of the project site was surveyed to determine whether structures of potentially significant historic architecture were located near the project site and, if so, whether the views of the

project facilities would significantly affect the structures' integrity of feeling and association. Upon completion of the survey, it was determined that no significant impacts were likely to occur as a result of the project.

Native American consultation. Consultation with the Native American Heritage Commission (D. Pilas-Treadway) and a record search of the sacred lands file did not indicate the presence of Native American cultural resources in the immediate project area. Black & Veatch was advised to contact and work closely with Bill Franklin, the designated Native American, during the initial project planning stages. Black & Veatch subsequently initiated consultation with the designated Native American.

6.8.2.1.2 Survey results. The following paragraphs describe the results of the onsite cultural resources survey.

Archaeological resources. The archival research, field investigation, and Native American consultation conducted by the Black & Veatch staff archaeologist indicated no evident archaeological resources on the project site.

Ethnographic resources. The archival research, field investigation, and Native American consultation conducted by the Black & Veatch staff archaeologist indicated no evidence of ethnographic resources on the project site.

Historic resources. The archival research, field investigation, and native American consultation conducted by Black & Veatch staff archaeologist indicated no historic resources evident on the project site. The only potentially historic site in the immediate vicinity of the project site was the Central California Traction Railroad, north of the project site. However, due to periodic maintenance and upgrading, it is doubtful that much of the original railroad exists. Additionally, the railroad does not cross the project site and was not included in the survey.

Paleontological resources. The archival research and field investigations conducted by the Black & Veatch staff archaeologist and Dr. Gail Wiggett indicate that there are no known or recorded paleontological finds outcropping on the ground surface in the project area. Although relatively low in fossil bearing potential, significant fossils have been known to occur in the Victor Formation underlying the project site. Onsite project excavations should be monitored; however, and any fossils discovered should be reported to and collected by a qualified paleontologist.

6.8.2.2 Potential Construction Impacts. This subsection addresses the potential impacts to archaeological, ethnographic, historic, and paleontological resources resulting from construction of the Procter & Gamble Cogeneration Project. Specific

measures to mitigate the potential impacts of project construction on significant cultural and/or paleontological resources are identified in Subsection 6.8.2.3.

6.8.2.2.1 Archaeological resources. The archival research, field investigation, and Native American consultation conducted by the Black & Veatch staff archaeologist indicate that no archaeological resources are evident on the project site. Consequently, no significant, operation-related impacts to archaeological resources are expected.

6.8.2.2.2 Ethnographic resources. The archival research, field investigation, and Native American consultation conducted by the Black & Veatch staff archaeologist indicate that no apparent ethnographic resources exist on the project site. Consequently, no significant, operation-related impacts to ethnographic resources are expected.

6.8.2.2.3 Historic resources. The archival research, field investigation, and Native American consultation conducted by the Black & Veatch staff archaeologist indicate that no historic resources exist on the project site. Consequently, no significant impacts to historic resources are expected.

6.8.2.2.4 Paleontological resources. The archival research and field investigations conducted by the Black & Veatch archaeologist and Dr. Gail Wiggett, paleontologist, indicate that there are no known or recorded paleontological resources evident on the ground surface in the project area. Although relatively low in fossil bearing potential, significant fossils have been known to occur in the Victor Formation underlying the project site. No significant impacts to paleontological resources are expected.

6.8.2.3 Potential Operation Impacts. This subsection addresses the potential impacts to archaeological, ethnographic, historic, and paleontological resources resulting from operation of the Procter & Gamble Cogeneration Project. Specific measures to mitigate the potential impacts of project operation on significant cultural and/or paleontological resources are described in Subsection 6.8.6.

6.8.2.3.1 Archaeological resources. The archival research, field investigation, and Native American consultation conducted by the Black & Veatch staff archaeologist indicate that there is no evidence of archaeological resources on the project site. Consequently, no significant, operation-related impacts to archaeological resources are expected.

6.8.2.3.2 Ethnographic resources. The archival research, field investigation, and Native American consultation conducted by the Black & Veatch staff archaeologist

indicate that no apparent ethnographic resources exist on the project site. Consequently, no significant impacts to ethnographic resources are expected.

6.8.2.3.3 Historic resources. The archival research, field investigation, and Native American consultation conducted by the Black & Veatch staff archaeologist indicate that no historic resources exist on the project site. Consequently, no significant, operation-related impacts to historic resources are expected.

6.8.2.3.4 Paleontological resources. The archival research and field investigations conducted by the Black & Veatch staff archaeologist and Dr. Gail Wiggett indicate that there are no known or recorded paleontological finds outcropping on the ground surface in the project area. Consequently, no operation-related impacts to paleontological resources are expected.

6.8.2.4 Mitigation. No significant impacts to local cultural or paleontological resources are expected to occur due to project construction and operation. Should construction personnel discover previously unknown cultural and/or paleontological resources in the project area during construction, work shall immediately stop in the vicinity of the discovered resources until the significance of the find can be assessed and appropriate treatment measures implemented. A qualified archaeologist and the CEC shall be immediately notified of the discovery. Any discovered human remains will be treated according to the appropriate state procedures and other guidelines.

6.8.3 Resources of Transmission Line and Fiber-Optic Communication Line

6.8.3.1 Existing Resources. Ebasco Environmental conducted a cultural resources survey of the preferred electrical transmission corridor for the Procter & Gamble Cogeneration Project. The survey included a literature review and a field evaluation. Figure 6.8-3 shows the area surveyed. The last 40 percent of the transmission line corridor was not surveyed because the landowner did not grant access to the property.

The route of the fiber optic line associated with the Hedge to Hurley transmission line was surveyed by Ann S. Peak Associates (1980) in the spring of 1980 for the Sacramento Municipal Utility District. The following is a summary of the findings of those cultural resources assessments.

6.8.3.1.1 Archival research. The results of the archival research of the transmission line and fiber-optic communication line corridor are described below.

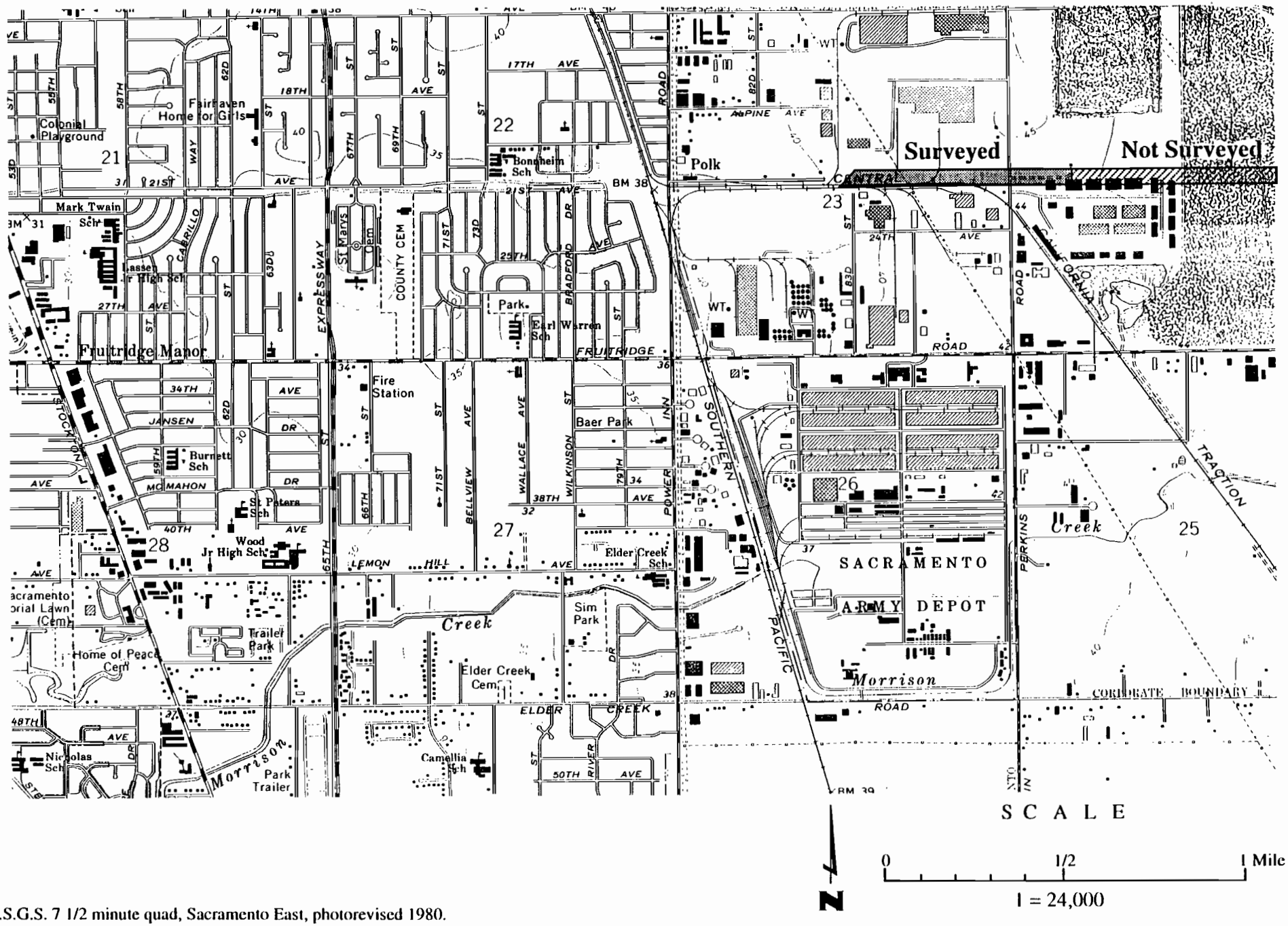

U.S.G.S. 7 1/2 minute quad, Sacramento East, photorevised 1980.

Figure 6.8-3
Transmission Line Cultural Resources

Transmission line. A literature review of the project was conducted by visiting the North Central Information Center of the California Archaeological Inventory and searching the archaeological site files and other sources for indications of historic properties in the survey area. Ebasco also consulted standard lists of historic properties, including the National Register of Historic Places, California Historic Landmarks, California Points of Historic Interest, and the California Office of Historic Preservation's Historic Properties Directory. Discussions with staff of the California Archaeological Inventory indicated that prehistoric archaeological sites are very rare at distances greater than 1 mile from the American River, even along minor drainages such as Morrison Creek (Russo 1993).

Five historic properties surveys had previously been conducted within 1 mile of the project. The US Army Corps of Engineers (Corps 1979) surveyed Sacramento Army Depot, which consists of a 485 acre parcel to the south of the project site. The Corps did not record significant historic properties. A subsequent overview and management plan prepared for Sacramento Army Depot researched the locations of buildings prior to the establishment of Sacramento Army Depot, but did not locate archaeological deposits at these locations (Wirth Environmental Services 1983). An assessment of the Army Depot's architecture (Building Technologies 1984) concluded that none of its buildings are eligible for National Register nomination.

The fourth historic properties survey covered right-of-way for the widening of a 3 mile stretch of Florin-Perkins Road between Florin Road and Folsom Boulevard, and crossed the project site (Nelson and Rondeau 1979). This survey resulted in additional assessment at the Davis Winery at the corner of Jackson Road and Florin-Perkins Road approximately 3/4 mile north of the project site (Bakarich and Rondeau 1980). The assessment report concluded that the Davis Winery is not eligible for National Register nomination.

The fifth historic properties survey covered several alternative rights-of-way for a new 230 kV transmission line (Ann S. Peak & Associates 1980). All four alternative routes surveyed passed within 1 mile of the project. One of the alternatives followed the Central California Traction Railroad line, which crosses the project alignment. This survey did not discover any historic properties.

Fiber-optic communication line. An archival research was conducted at the Archaeological Study Center, California State University in Sacramento. Records and files of known, identified archaeological sites were examined in addition to texts and journals to obtain a comprehensive history of recorded sites in the corridor.

No recorded archaeological sites were found within the transmission line corridor. However, the route is within 1/2 mile of CA-Sac-33 and the Kadema site which are both east of the route within developed residential areas. In addition, the transmission line route crosses the routes of SRL 526 (the first passenger rail in California) and SRL 745-748 (the Coloma Road), recorded historic sites. No further unrecorded historic sites were discovered during the survey and archival review.

6.8.3.1.2 Field investigation. The results of the field investigations of the transmission line and fiber-optic communication line corridor are described below.

Transmission line. Ebasco Environmental conducted a pedestrian archaeological survey of the project area on May 14, 1993. The survey was conducted in two 30 meter wide transects. The Central California Traction Railroad tracks occupy much of this right-of-way between the survey area and Florin-Perkins Road, where the railway veers to the southeast. The railroad tracks occupy the south half of the right-of-way. On the north half is a swath of weeds and brambles between the railway and a cyclone fence that marks the boundary of industrial property to the north. Where the railway begins to veer south, the north half of the survey area is occupied by a row of large eucalyptus trees.

The right-of-way on the east side of the Florin-Perkins Road consisted of a paved alleyway between two sets of warehouses. Beyond the alleyway is the last 40 percent of the transmission line which the surveyor did not cover because access was denied.

A trail running along the cyclone fence offered good ground surface exposure. The surveyor also checked ground exposure next to the railway cut on either side. Where ground visibility was obscured by dense vegetation, the surveyor placed shovel probes (shallow shovel cuts) every 20 meters in order to penetrate the vegetation and search for artifacts. It is anticipated that the potential for resources to occur in the unsurveyed area is similar to that of the surveyed area.

The surveyor did not discover or record historic properties along the right-of-way. There was one material find which the surveyor did not record, a large dumping area for scrap metal and other objects adjacent to Florin-Perkins Road. This area contained steel drum barrels, used tires, and miscellaneous metal objects, some of them large. This site, however, is apparently less than 50 years old and so does not qualify as property with potential historical or scientific significance.

Because it is greater than 50 years old, the Central California Traction Railway may qualify as a historic property. Construction of the project would not affect the railway because construction activities will not require extensive excavations.

Fiber optic communication line. The Hedge to Hurley transmission line portion of the fiber optic communication line route was examined via pedestrial survey by Robert A. Gerry and Melinda A. Peak on March 24 and 25, 1980. Small trowel holes were dug to maximum depths of 25 centimeters in areas where a likelihood of prehistoric or historic occupation or use when determined. Otherwise, the ground surfaces were carefully examined for evidence of human use. No new sites were identified during the survey.

6.8.3.2 Impacts Associated with Transmission Line and Fiber Optic Communication Line. Potential impacts associated with the construction and operation of the transmission line and the fiber optic communication line are discussed below.

6.8.3.2.1 Transmission line. Construction and operation of the electrical transmission line for the project would not affect known historic properties. It is possible, however, that buried archaeological or paleontological deposits could be found beneath the ground surface or in the unsurveyed portion of the survey area during construction. Buried Pleistocene faunal remains, for example, have been found in gravel quarries to the east of the project. If this occurs, construction should stop in the immediate vicinity of the find until a qualified scientist can examine and evaluate the find.

6.8.3.2.2 Fiber optic communication line. No new sites were identified after the archival and field surveys were conducted. However, it is possible that sites may exist that are buried and not easily evident at the present time. No additional sites were observed during construction of the 115/230 kV transmission line. It is very unlikely that new sites will be discovered during installation of the fiber optic line since no construction will be necessary. Operation of the fiber optic line will not affect cultural resources.

6.8.3.3 Mitigation. Mitigation measures associated with the transmission line and fiber-optic communication line are discussed below.

6.8.3.3.1 Transmission line. No significant impacts to local cultural or paleontological resources are expected to occur due to project construction and operation. Should construction personnel discover previously unknown cultural and/or paleontological resources in the project area during construction, work shall stop immediately in the vicinity of the discovered resources until the significance of the find can be assessed and appropriate treatment measures are implemented. A qualified archaeologist and the CEC will be immediately notified of the discovery.

6.8.3.3.2 Fiber optic communication line. No additional construction other than that required for the transmission line will be necessary for the fiber-optic communication line. Consequently, no impacts will result due to the installation and operation of the fiber optic communication line, and no additional mitigation measures are required.

6.8.4 Cultural and Paleontological Resources Cumulative Impacts

The investigations conducted indicate that no cultural and/or paleontological resources are evident on the project site or the transmission line and fiber optic communication line corridor. Although project construction could encounter buried cultural and/or paleontological resources, the location of the project is not within medium to high cultural resources sensitivity areas as depicted in the Sacramento County General Plan. Construction activities associated with the transmission line will not include extensive excavations. Therefore, resources such as the California Central Traction Railroad will not be affected. Consequently, no cumulative impacts to cultural or paleontological resources are expected as a result of project construction or operation. However, if cultural and/or paleontological resources are discovered or unearthed during construction of the project, work in the vicinity of the discovered resources will be stopped and a qualified archeologist, the CEC, and the OHP will be notified. Any discovered human remains will be treated according to the appropriate state procedures and other appropriate guidelines.

6.8.5 Laws, Ordinances, Regulations, and Standards

This section is a summary of laws, ordinances, regulations, and standards (LORS) applicable to the project's cultural resources and paleontological resources sections of the Application for Certification (AFC).

6.8.5.1 Cultural Resources. Cultural resources include the archaeological, historic, and ethnographic resources. Archaeological resources are those materials relating to prehistoric human occupation of the proposed project area. Historic resources are those materials related to the period of Euro-American exploration and settlement of an area. Ethnographic resources are those materials important to the heritage of a particular ethnic or cultural group.

6.8.5.1.1 Federal LORS. The following LORS apply to projects in which a federal agency is involved or for cultural resources which may be eligible for inclusion on, have been nominated to, or are already listed in the National Register of Historic Places:

- National Environmental Policy Act of 1969, PL 91-190; 83 Stat. 852; 42 U.S.C. 4321-4327. The Act requires an analysis of potential environmental impacts of projects and requires the application of appropriate mitigation measures.
- National Historic Preservation Act of 1966, PL 89-665; 80 Stat. 915; 16 U.S.C. 470 et seq. (amended by PL 91-243, PL 94-458, PL 96-199, PL 96-244, and PL96-515). Establishes a national policy to preserve for public use historic sites, buildings, and objects of national significance for the inspiration and benefit of the people of the US. Section 106 requires federal agencies to consider the effects of their actions on historic properties to determine the eligibility of the property for listing in the National Register of Historic Places.
- Native American Graves Protection and Repatriation Act, PL 101-601. Defines "cultural items," "sacred objects," and "objects of cultural patrimony;" establishes an ownership hierarchy; provides for review; allows excavation of human remains but stipulates return of the remains according to ownership; sets penalties; calls for inventories; and provides for return of specified cultural items.
- American Indian Religious Freedom Act, PL 95-341. Protects ethnic heritage sites and land uses.
- Executive Order 11593, Protection of the Cultural Environment, (May 13, 1971) 36 CFR 8921, 16 U.S.C. 470. Orders the protection and enhancement of the cultural environment through the providing of leadership, establishment of state offices of historic preservation, and the development of criteria for assessing resource values.
- 36 CFR 60 National Register of Historic Places. Specifies criteria for listing in the National Register of Historic Places.
- 36 CFR Part 800 Protection of Historic Properties. Federal regulations for implementing the Section 106 process.

6.8.5.1.2 State LORS. The state LORS applicable to the project follow:

- California Environmental Quality Act (CEQA) Statutes and Guidelines, 1986. CEQA and its implementing regulations state that public agencies should seek to avoid damaging effects on an archaeological resource whenever possible.
- California Public Resources Code, Section 5020.4. The State exercises its authority through the State Historical Resources Commission in the Department of Parks and Recreation. The Commission evaluates applications for entries in the National Register of Historic Places and the California Register of Historic Places. Section 5097.5 et seq. protects significant Native American cemeteries and ceremonial sites.
- California Penal Code, Section 622.5. This provision sets the penalties for damage or removal of archaeological resources.

6.8.5.1.3 Local LORS. The cultural resources section of the Sacramento County General Plan identifies areas to avoid; identifies the California Archaeological Inventory as the major clearinghouse for archaeological and historic information; identifies cultural resource sensitivity areas; and, identifies the agencies and interest groups to contact for the purpose of coordinating the preservation and stabilization of historic resources.

6.8.5.2 Paleontological Resources. Paleontological resources consist of fossilized evidence of prehistoric plants or animals preserved in soil or rock. The following LORS are applicable to the project.

6.8.5.2.1 Federal LORS. The federal LORS applicable to the project follow:

- National Environmental Policy Act of 1969, PL 91-190; 83 Stat. 852; 42 U.S.C 4321-4327. NEPA requires analysis of potential environmental impacts of projects with federal involvement and requires application of appropriate mitigation measures.
- Antiquities Act of 1906. Paleontological resources are accepted as non-renewable resources significant to our culture and are to be protected.
- 1978 Memorandum from the Associate Director of the US Bureau of Land Management. This memorandum outlined significant criteria for paleontological resources.

6.8.5.2.2 State LORS. The state LORS applicable to the project follow:

- CEQA Guidelines, Appendix G (j). These guidelines define a significant environmental effect as occurring when the project will disrupt or adversely affect a paleontological site, except as part of a scientific study.
- California Public Resources Code, Section 5097.5. This section specifies that any unauthorized removal of paleontological remains is a misdemeanor.
- California Penal Code, Section 622.5. This section sets the penalties for damage or removal of paleontological resources.

6.8.5.2.3 Local LORS. There are no local LORS applicable to the project.

6.8.5.3 LORS Compliance. The project will comply with all directives contained within the applicable LORS, including Native American and agency consultation and report generation.

6.8.6 Bibliography

Reference used in describing the cultural and/or paleontological resources are listed below.

6.8.6.1 Project Site.

California Department of Water Resources, 1974, Evaluation of Ground Water Resources: Sacramento County, DWR Bulletin No. 118-3.

California Department of Water Resources, 1978, Evaluation of Ground Water Resources: Sacramento Valley, DWR Bulletin No. 118-6.

Carlisle, Ronald C., ed., 1988, *Americans Before Columbus: Ice-Age Origins*, Cushing-Malloy, Inc., Ann Arbor, Michigan.

County of Sacramento, 1992, Revised Draft Conservation Element of the County of Sacramento General Plan, Planning and Community Development Department, General and Advance Planning Section.

Craigo, Steade R., May 18, 1993, Office of Historic Preservation, personal communication.

Davis, J., 1969, *Trade Routes and Economic Exchange Among the Indians of California*, University of California Archaeological Survey 54, Berkeley.

Davy, Douglas M., 1992, "Cultural and Paleontological Resources," *SEPCO Application for Certification*, Ebasco Environmental, Sacramento.

Fagan, Brian M., 1991, *Ancient North America*, Thames and Hudson, London.

Fagan, Brian M., 1987, *The Great Journey: The Peopling of Ancient America*, Thames and Hudson, London.

Gibson, Arrell Morgan, 1980, *The American Indian: Prehistory to the Present*, D. C. Heath and Company, Lexington, Kentucky.

Hofman, Jack L., ed., 1991, *Paleo-Indian Hunters*, University of Oklahoma, Norman.

Moratto, M., 1984, *California Archaeology*, Academic Press, Orlando.

National Register of Historic Places: 1966-1991, June 1991, American Association for State and Local History, Nashville, Tennessee.

Pilas-Treadway, Debbie, May 17, 1993, Native American Heritage Commission, personal communication.

Piper, A. M., et al., 1939, Geology and Ground Water Hydrology of the Mokelumne Area, California, US Geological Survey Water-Supply Paper 780.

Russo, Marianne L., May 13, 1993, California Archaeological Inventory, North Central Information, personal communication.

Sacramento Bee, June 27, 1989, When Beasts Ruled: Arco Park Fossils Offer a Look at Ancient Sacramento Valley, Scene section.

SEPCO, 1992, Application for Facility Certification to California Energy Commission, Docket No. 92-AFC-2.

Schlemon, R. J., 1967, "Quaternary Geology of Northern Sacramento County, California," *Field Trip Guidebook*, Geological Society of Sacramento.

Shutler, Richard, Jr., ed., 1983, *Early Main in the New World*, Sage Publications, Beverly Hills.

Wiggett, Gail, May 18, 1993, Geology-Hydrogeology-Paleontology Resources and Services, personal communication.

Zauner, Phyllis, 1979, *Sacramento, A Mini-History*, Zanel Publications, Tahoe Paradise, California.

6.8.6.2 Transmission Line.

Ann S. Peak & Associates, 1980, Sacramento, California, Cultural resource assessment of Sacramento Municipal Utility District's Project A, Phase II 230 kV

Transmission Line, Hurley to Hedge-Pocket Tap, Sacramento County California, prepared for Sacramento Municipal Utility District, Sacramento, California.

Bakarich, L. and M. F. Rondeau, 1980, Additional historic archival research and reconnaissance for the proposed widening of Florin-Perkins Road, prepared for Jones & Stokes Associates, Inc., Sacramento, California, by the Archaeological Study Center, Department of Anthropology, California State University, Sacramento.

Building Technology Incorporated, 1984, Historic properties report, Sacramento Army Depot and Benicia Army Cemetery, prepared by Building Technology Incorporated for the US Department of the Interior, National Park Service.

Nelson, R. and M. F. Rondeau, 1979, An intensive archaeological survey of the proposed widening of Florin-Perkins Road, prepared for Jones & Stokes Associates, Inc., Sacramento, California, by the Archaeological Study Center, Department of Anthropology, California State University, Sacramento.

Russo, Marianne, 1993, Assistant Coordinator, North Central Information Center, California Archaeological Inventory, California State University, Sacramento, California, personal communication.

US Army Corps of Engineers (Corps), 1979, intensive cultural resources survey of the Sacramento Army Depot, prepared by Sacramento District, US Army Corps of Engineers, Sacramento, California, for Sacramento Army Depot, Sacramento, California.

Wirth Environmental Services, 1983, An Archaeological Overview and Management Plan for the Sacramento Army Depot, Sacramento, California, prepared by Wirth Environmental Services, San Diego, California, for the US Department of the Interior, National Park Service, San Francisco, California.

6.8.6.3 Fiber-Optic Cable.

Beals, Ralph, 1933, *Ethnology of the Nisenan*, University of California Publications in American Archaeology and Ethnology, Vol. 31, No. 6, pp. 335-413, Berkeley.

Bennyhoff, James A., 1961, *Ethnogeography of the Plains Miwok*, Ph.D. dissertation, University of California, Berkeley.

Federal Register, February 7, 1978, *National Register of Historic Places*, Part 2, and monthly supplements, Washington, D.C.

Gudde, Erwin, 1969, *California Place Names*, University of California Press, Berkeley.

Gudde, Erwin, 1975, *California Gold Camps*, University of California Press, Berkeley.

Hoover, Mildred, Hero E. Rensch, and Ethel G. Rensch, 1970, *Historic Spots in California*, 3rd ed., edited by William Abeloe, Stanford University Press.

Kroeber, A. L., 1925, *Handbook of the Indians of California*, Bureau of American Ethnology, No. 78, Washington, D.C.

Kroeber, A. L., 1929, *The Valley Nisenan*, University of California Publications in American Archaeology and Ethnology, Vol. 24, No. 4.

Resources Agency, 1976, California Historical Landmarks, Department of Parks and Recreation, Sacramento.

Resources Agency, 1976, California Inventory of Historical Resources, Department of Parks and Recreation, Sacramento.

Severson, Thor, 1973, *Sacramento: An Illustrated History 1839 to 1874, From Sutter's Fort to Capital City*, California Historical Society, San Francisco.

Thompson, Thomas H., and Albert A. West, 1880, *History of Sacramento County*, California, Thompson & West, Oakland.

Wilson, Norman L., and Arlean Towne, 1978, "Nisenan," in *Handbook of North American Indians*, Vol. 8: California, edited by Robert F. Heizer, Smithsonian Institution, Washington, D.C.

6.9 Aesthetics/Visual Resources

This section describes the existing visual setting of the project site and its transmission line, anticipated aesthetic impacts from project construction and operation, and proposed mitigation measures to minimize impacts.

6.9.1 Aesthetic Evaluation Criteria and Methods

The visual assessment was based on methods adapted from the Bureau of Land Management (BLM) Visual Resource Management System (VRM). Because the VRM was designed to evaluate changes in undeveloped natural landscapes, the assessment criteria were modified as needed to address the urban character of the project vicinity. The assessment was carried out in the following steps. First, the existing scenic quality and urban character of the project site and viewshed, the visual sensitivity of potential viewers, and the distances from which the facilities would be seen were determined. The area's scenic quality was characterized considering the landscape created by the mix of industrial, commercial, and residential land uses in the area. The structures (stacks, storage tanks, distillation towers, etc.) associated with the power plant's steam host, Procter & Gamble, were used as a reference point during a field reconnaissance to determine potential project visibility.

Next, the potential impacts of project construction and operation on the visual setting were determined by evaluating the degree of change the project would create from sensitive viewer locations, including residential areas, park and recreation areas, public institutions (such as schools), and transportation corridors. Key Observation Points (KOPs) were selected to complete this portion of the assessment. The KOPs were mutually agreed upon by the applicant's representative (Black & Veatch) and the CEC during a site reconnaissance conducted May 11, 1993. The selected KOPs represent the worst-case visual impacts that may result from project implementation and are representative of viewing conditions in the project area. The following criteria were used to select the KOPs: (1) viewing locations that are typical or most frequently encountered within the project viewshed; (2) areas considered highly sensitive because of community concerns or values; and (3) areas that would incur the worst-case visual effects from project construction and operation. Because of the flat terrain and the complexity and density of urban development (and, subsequently the high degree of screening provided by existing structures), the greatest project visibility and impact will occur within the foreground (0.5 mile from the plant) along Power Inn Road. Similarly, the most unobstructed views of the transmission line

occur within the foreground as it crosses Florin Perkins Road. Therefore, the KOPs evaluated for the project are within the foreground visibility threshold.

VRM criteria for contrast ratings were used to measure the degree of contrast (weak, moderate, strong, none) between the project and the existing urban landscape and included specific considerations for changes in line, form, color, and texture that the various project features would create (such as buildings, transmission line towers, stacks, etc.). Computer-generated photosimulations of the project and transmission line were made to illustrate and evaluate the potential contrast of project features with the existing landscape at the KOPs. Simulations were prepared from two power plant KOPs and one transmission line KOP. The assessment addressed both short-term construction effects and long-term operational changes.

Determination of impact significance was based upon general VRM criteria adapted to urban landscapes and consistency with local agency plans and policies. The following criteria were considered in the evaluation:

- Whether the project repeated or contrasted with the form, line, color, and texture of the characteristic urban landscape and the natural environment.
- Whether the project complied with the City of Sacramento goals and policies regarding visual quality.
- Whether the project significantly altered the existing visual quality of the project vicinity or eliminated any visual resources.
- Whether the project significantly increased light or glare particularly nighttime glare, in the project vicinity.

Where significant visual effects were identified, mitigation measures were formulated, when possible, to minimize these impacts.

6.9.2 Existing Visual Setting

The existing visual setting of the region, project vicinity, and site are described below.

6.9.2.1 Regional Setting. The Procter & Gamble Cogeneration Project is in the southern portion of the City of Sacramento. Sacramento is situated on the floor of California's vast Central Valley, about halfway between San Francisco to the west and the Sierra Nevada mountains to the east. The area immediately surrounding Sacramento, including the project site, is flat. To the southwest of Sacramento, the land dips into the Sacramento River Delta. To the east, the terrain climbs gradually until it reaches the alpine peaks of the Sierra Nevada, about 8,000 feet above sea level.

6.9.2.2 Project Vicinity. The project viewshed is illustrated on Figure 6.9-1. Land use patterns in the project area are shown on Figure 6.6-2. The area immediately north of the project is dominated by commercial and industrial business parks characterized by warehouses and office buildings that are estimated to range in height from about 30 to 50 feet. The buildings are close together providing significant screening of views to the south. Aggregate mining operations occupy the majority of land between 14th Street and Folsom Boulevard and east of Power Inn Road to South Watt Avenue. Fences erected as visual barriers for the aggregate mining operations screen southern views for motorists traveling Jackson Road and Folsom Boulevard. Aggregate elevators and conveyor belts associated with this industry are visible features of the skyline. A mix of low rise commercial and residential land uses occur adjacent to and north of Folsom Boulevard. The residential area extends between Folsom Boulevard and US Highway 50. The Metro Light Rail transit, Southern Pacific Railroad, and California Traction Railroad lines are also prominent features of the landscape.

Lands immediately east of the project are dominated by industrial uses, including a corrugated metal manufacturing and distribution company, a mattress and upholstery company, a lumber yard, and a paper recycling company. Large warehouses estimated between 30 and 50 feet in height occur between the project and Florin Perkins Road, as well as adjacent to and east of Florin Perkins Road. Lands used for aggregate mining operations dominate the remainder of the land between Florin Perkins Road and South Watt Avenue. A portion of the mined area is currently being used for agricultural purposes, while another portion adjacent to Fruitridge Road is being used as a commercial landfill for construction materials.

The project's steam host facility, Procter & Gamble, is adjacent to the southern property boundary. Procter & Gamble occupies about 110 acres and its buildings, stacks, tanks, and other industrial structures form a dominant visual element of the landscape. Some of the more prominent features include numerous storage tanks estimated to be 80 feet tall, several buildings and a superstructure framework estimated between 100 and 150 feet tall, and a chimney estimated at 200 feet in height. The Sacramento Army Depot occupies most of the land south of the Procter & Gamble facility between Fruitridge Road and Elder Creek Road. Commercial land uses occur south of Fruitridge Road and east of Florin Perkins, as well as immediately adjacent to Power Inn Road. In general, these buildings are low to moderate heights. A US Army communication tower, about 200 feet tall, is near the intersection of Fruitridge and Power Inn Roads.

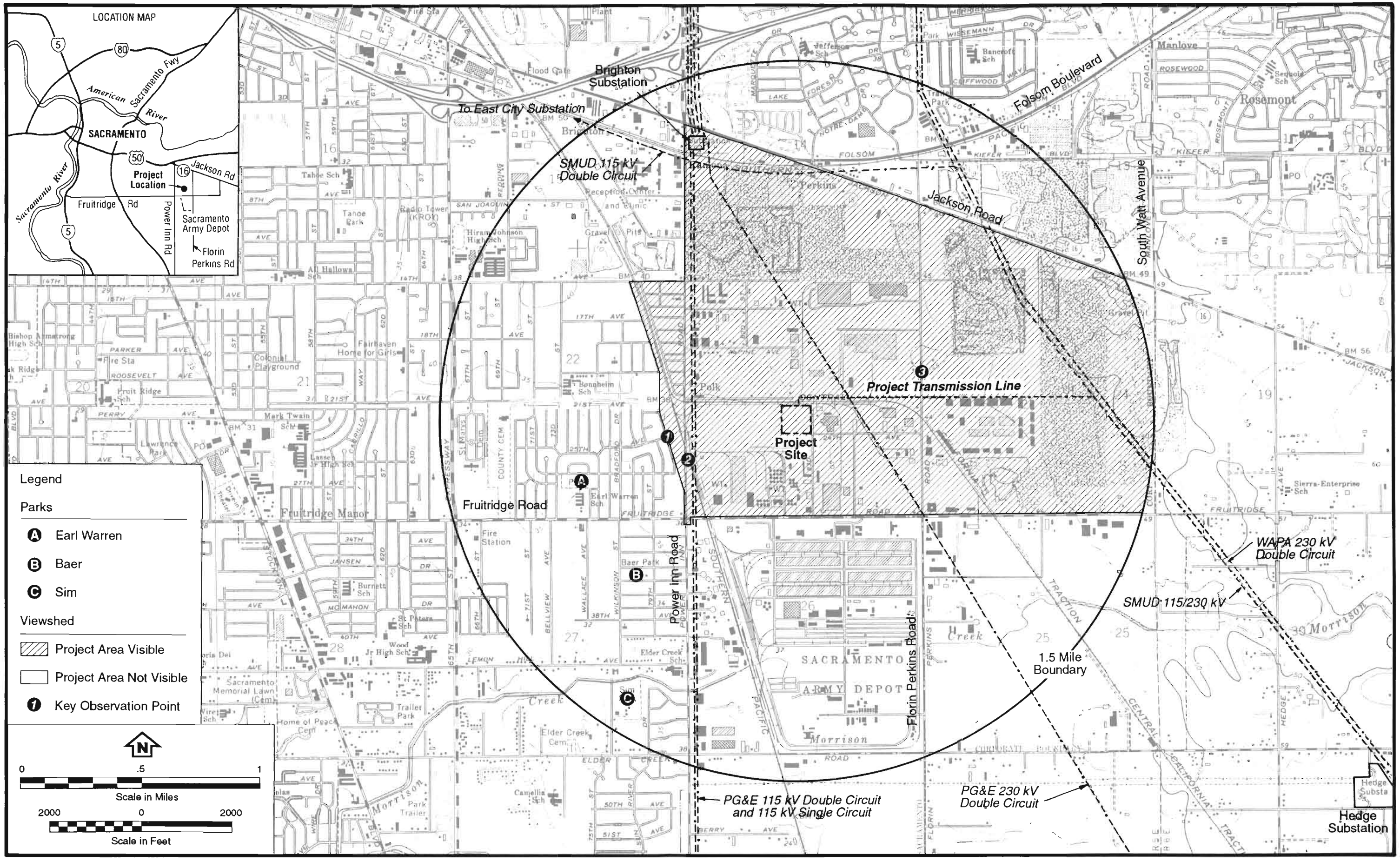

Base Map Source: USGS, Sacramento East and Carmichael, Calif, 1:24,000 scale quadrangles.

PROJECT VIEWSHED

Figure 6.9-1

Most of the land west of Power Inn Road is a single family residential area. The neighborhood consists of small, single story homes, closely compact with very small, fenced yards. Mature shade trees are also characteristic of the neighborhood lots. The closest residences occur about 2,500 feet west of the project. An undeveloped grassy field, Power Inn Road, Pacific Gas & Electric (PG&E) transmission lines, and the South Pacific rail lines are dominant features between the project and the homes. Low rise commercial establishments occur along the west side of Power Inn Road from US Highway 50 to about 21st Street, and then again on both the east and west sides of Power Inn Road from Fruitridge Road to Lemon Hill Avenue.

Multiple transmission lines, estimated at 100 feet tall, are also dominant features of the skyline surrounding the project. Locations of transmission lines are shown on Figure 6.9-1 and 3.15-1. Four PG&E transmission lines (a 230 kV double and single circuit and a 115 kV double and single circuit) parallel the east side of Power Inn Road south from US Highway 50 to the PG&E Brighton Substation. The Brighton Substation is on the east side of Power Inn Road between Folsom Boulevard and the Metro Light Rail Transit line. The 115 kV lines continue south from the Brighton Substation along the east side of Power Inn Road, and pass about 2,000 feet west of the project. The PG&E 230 kV double circuit transmission line turns southeast at the Brighton Substation and passes about 1,000 feet east of the project. SMUD and WAPA share a common north/south corridor 1.2 miles east of the project. Within this corridor, WAPA operates a 230 kV double circuit line and SMUD operates its Hedge to Hurley 230 kV and East City to Hedge 115 kV lines. The East City 115 kV splits off the Hedge to Hurley line where the line crosses the Metro Light Transit Rail and parallels the Light Rail line to the west until it reaches the East City Substation. The East City line passes about 1 mile north of the project.

Cumulatively, the areas immediately north, south, and east of the project site are highly industrial/heavy commercial in character. The Procter & Gamble facility, numerous warehouses, multiple transmission lines, railroads, and roadways create a landscape of very low scenic quality. As in many urban settings, views in the area, including those from the residential area to the west, are prevented or obscured by the density of intervening urban development.

6.9.2.3 Project Site. The Procter & Gamble Cogeneration facility site is at the southwest intersection of 83rd Street and the Central California Traction Railroad Tracks. The plant will be constructed on about 10 acres of a 50 acre grassy, vacant field owned by Procter & Gamble that is regularly disked in the summer months. An additional 5 acres of land immediately west of the plant site will be used for

temporary construction parking and laydown. The site is situated between the Procter & Gamble facility to the south and industrial warehouses to the east and north. The grassy field extends to the west to the Southern Pacific Railroad and Power Inn Road.

A project description is provided in Section 3.0. The site arrangement (Figure 3.3-1) and typical elevation (Figure 3.3-2) illustrate the location and size of proposed project facilities. The tallest structures will include the heat recovery steam generators (45 feet in height), the two HRSG stacks (150 feet in height), the auxiliary boiler stack (80 feet in height), the simple-cycle exhaust stack (estimated at 60 feet in height), the deaerator (50 feet in height), a three-cell cooling tower (50 feet in height), and water storage tanks (42 feet). The project buildings will be small (19 feet at the peak) in comparison to the other structures. Other visibly prominent project components will include the substation, transmission line combination take-off tower and disconnect switch, and steam pipe rack (20 feet off the ground). The photosimulations provided in Section 6.9.4 illustrate the overall appearance of the project upon ultimate development.

6.9.2.4 Transmission Line and Fiber Optic Communication Line. The Procter & Gamble Cogeneration Project 230 kV transmission line route is shown on Figure 6.9-1. After crossing the Central California Traction Railroad at the project site, the transmission line travels about 1.2 miles east to connect with SMUD's Hedge to Hurley 230 kV line. The right-of-way, which varies from 60-100 feet depending on pole placements, follows the 23rd Street right-of-way from the site (parallel to the railroad) east to Florin Perkins Road, passing beneath the PG&E 230 kV line along the way to prevent skylining. The line crosses Florin Perkins Road near 23rd Avenue and continues east between existing warehouses along an existing distribution line. The distribution line will be underbuilt on the Procter & Gamble Cogeneration Project 230 kV line.

Land use along and bordering the transmission corridor is predominately industrial/heavy commercial. After crossing Florin Perkins Road, land uses include commercial warehouses, fallow fields, and mined land currently being used for agriculture purposes and a landfill.

A detailed project description is provided in Section 3.0. The most visible features of the Procter & Gamble Cogeneration Project double circuit 230 kV transmission line will include about 12 steel towers (about 100 feet tall) with three post insulators per circuit and the project conductors. The towers will be dulled to reduce reflectivity and the 1.25 inch diameter conductors will be nonspecular to reduce their

reflectivity. Spans between transmission towers will be between 600 and 800 feet. A fiber optic communication line which is less than 1 inch in diameter will be installed from the Procter & Gamble Substation to the Hedge Substation. The fiber optic line will be either installed in the shield wire or below the conductors. If installed in the Hedge to Hurley shield wire, the existing shield wire will be replaced. Land uses in the fiber optic communication line corridor include Intensive Industrial, Agricultural-Urban Reserve, Urban Development Area, and Aggregate Resource Area.

6.9.3 Project Site Visibility and Visual Sensitivity

The project viewshed is illustrated on Figure 6.9-1. The flat terrain and density of urban development limit most direct, unscreened views of the project to within less than 0.5 mile of the facility; however, limited views of some of the project's taller structures may be possible from a little over 1.5 miles away. Facilities on the project site will be visible to three types of viewers: viewers in areas of industrial and commercial uses to the north, east and south, and immediately west of the site along Power Inn Road; viewers in surrounding residential areas; and commuters traveling on Power Inn, Florin Perkins, and Fruitridge Roads. Distant, fleeting views may be visible to commuters on Folsom Boulevard/Jackson Road and South Watt Avenue.

Viewer sensitivity is dependent upon viewer attitudes, types of activity engaged in when viewing the project, and distance from which the project would be seen. Visual sensitivity is low in areas of industrial or commercial related uses, such as from the corrugated metal company and the Procter & Gamble facility (both within 500 feet of the project), and from the mix of commercial and industrial companies along Power Inn Road (the closest being about 2,500 feet away). In these areas, people are not engaged in an activity where the surrounding scenic quality significantly increases or decreases the value or pleasure of the activity. In addition, they are generally acclimated to the industrial character of the area and can accept the addition of new industry.

A higher degree of visual sensitivity is typically correlated with areas where people live, are engaged in certain outdoor recreational pursuits, or are participating in pleasure or scenic driving. Areas of visual sensitivity include residential communities to the west and north of the project, schools and parks within these communities, and the major commuter routes of Power Inn Road, Fruitridge Road, Florin Perkins Road, South Watt Avenue, Jackson Road, and Folsom Boulevard. No state or local designated scenic routes occur in the project area. Figure 6.9-1 shows

the location of Baer, Warren, and Sim Parks. Figure 6.6-2 shows the patterns of residential development and transportation services in the area.

6.9.3.1 Residential Areas. The densely populated area immediately west of the site will have the closest views of the project from a residential area. Within the study area, this neighborhood, consisting of single family, one-story homes, extends between 14th Street to the north, Lemon Hill Avenue to the south, and Power Inn Road to the west. At the closest point to the project, about 35 homes on Toronto Way parallel the Southern Pacific Railroad and are about 2,500 feet west of the project. Families in these homes will have the most unobstructed (though distant) views of the project. Some screening is provided by a wooden privacy fence and the embankments for the railroad and Power Inn Road. A few of the homes do not have an intact privacy fence. Potential views from the remainder of the homes in this residential area are obscured by the density of neighboring houses and trees and other landscaping. Similarly, potential views from Bonnheim, Earl Warren, and Elder Creek Schools are screened by surrounding houses and vegetation. The Procter & Gamble facility also provides significant screening for the Elder Creek School and homes south of Fruitridge Road.

The residential neighborhood north of Folsom Boulevard also has potential distant and mostly obscured views of the project. Within the 1.5 mile study area, this area consists of several hundred single family homes and one two-story apartment complex near Bicentennial Circle and Power Inn Road. At the closest point, the homes along Folsom Boulevard are about 4,000 feet north of the project. Significant screening is provided by adjacent commercial establishments on the south side of Folsom Boulevard and by adjoining houses. Additional screening is provided by the commercial/industrial business parks between 14th Street and the project site.

6.9.3.2 Parks. Parks in the area include Baer, Warren and Sim parks. Baer and Warren Parks are within the residential community to the west of the project site. Baer Park is a small (less than 2 acres) community park located south of Fruitridge Road, about 4,800 feet southwest of the project. Facilities include a playground and open field for baseball. Procter & Gamble's stack and part of its upper superstructure are visible from the park. However, views of the Procter & Gamble Cogeneration Project are expected to be screened by vegetation, houses, and the existing Procter & Gamble facility with the possible exception of some partial views of the HRSG stacks. Warren Park will not have views of the power plant.

Sim Park is a fairly large (10 acres) community park about 1.3 miles southwest of the project. Park facilities include a swimming pool, baseball diamond, restrooms,

and other open areas for active recreational pursuits. Potential views of the project are expected to be largely screened by surrounding vegetation and the existing Procter & Gamble facilities.

6.9.3.3 Major Travel Routes. US Highway 50, Power Inn Road, Fruitridge Road, Florin Perkins Road, Jackson Road and Folsom Boulevard are the major commuter routes considered to have potential views of the project. A distant (1.5 miles), quick view of the facility is possible from an elevated overpass on US Highway 50 near its intersection with Power Inn Road; however, the view is a fleeting glimpse for east-bound motorists and includes multiple transmission lines, the Procter & Gamble facility, a communication tower, and structures associated with aggregate mining operations.

Power Inn Road is a four lane road traveling north-south by the proposed power plant. At the closest point, this road is about 2,000 feet west of the project. In 1993, a daily average of 23,150 cars traveled Power Inn Road between Fruitridge and 14th Street. (Traffic counts provided in this section are average daily counts provided by the City of Sacramento Department of Transportation. The 1993 counts were collected by K.D. Anderson Transportation Engineers.) Traffic was a little heavier (an average of 25,200 cars daily) between Fruitridge and Elder Creek. Traffic consisted of a mixture of residential commuters and tractor and trailer trucks, tanker trucks, and other heavy industrial equipment.

Fruitridge Road is a major four lane, east-west commuter route. In the project area, the heaviest traffic (20,700 cars) occurs between Power Inn Road and 65th Street. This volume of traffic is probably attributable to the residential community west of the site. Between Power Inn and Florin Perkins Roads, the traffic load drops off to an average daily count of 14,100 cars and even more between Florin Perkins Road and South Watt Avenue (9,850 cars). This lesser traffic volume is attributed to motorists entering the Procter & Gamble facility and other industries along the road. Motorists traveling this road are not expected to have significant views of the project because of the screening provided by Procter & Gamble (Figure 6.9-2) and other industries in the area. Because of their height, the HRSG stacks may be visible.

Florin Perkins Road is also four lanes and travels in a north-south direction. In 1993, a daily average of 18,600 cars traveled Florin Perkins Road between 14th Street and Fruitridge Road, and 18,250 cars traveled it between Fruitridge and Elder Creek. Most of these motorists are expected to be employees, delivery services, or



View looking northeast from the intersection of Fruitridge Road and the Southern Pacific Railroad.

TYPICAL VIEW FROM FRUITRIDGE ROAD

Figure 6.9-2

patrons of the surrounding businesses. Motorists traveling south on Florin Perkins Road will have potential views of the power plant through a break in the buildings created by the Central Traction Railroad and SMUD 69 kV distribution line right-of-way.

South Watt Avenue is a two lane road that was travelled by 18,000 motorists in 1993 (count is from between Fruitridge Road and Jackson Road). Potential views of the power plant are distant (greater than 1.5 miles), fleeting, and largely screened by intervening warehouses and fences erected to screen aggregate mining operations. Only the HRSG stacks are likely to be visible from this road.

Folsom Boulevard is a major east-west commuter route about 1 mile north of the site. In 1989, it was travelled by between 35,000 (eastbound) and 19,000 (westbound) vehicles (count taken at Folsom Boulevard and Power Inn Road). Jackson Road is a two lane road that travels in a northwest-southeast direction. It is traveled on a daily basis by an average of 8,600 vehicles (1989 count). Motorists on both roads consist of a mixture of residential, commercial, and industrial related traffic. Existing commercial buildings and fences erected as visual barriers for aggregate mining operations would prevent all but the most distant (ranging from 5,500 feet to greater than 1.5 miles) and fleeting glimpses of the Procter & Gamble Cogeneration Facility.

6.9.4 Transmission Line and Fiber Optic Communication Line Visibility and Visual Sensitivity

The linear nature of the projects' transmission line and tower heights result in a viewshed coincident to that of the project (Figure 6.9-1). The transmission line will be visible to the same types of viewers as the project site: viewers in areas of industrial and commercial uses to the north, south, and immediately west of the project site; viewers in the residential neighborhood west of the project; and commuters traveling on Power Inn, Florin Perkins, Fruitridge, and Jackson Roads and South Watt Avenue. The fiber optic communication line will not result in a significant visual impact because of its small size (less than 1 inch diameter). The impact of the fiber optic line will be subordinate to the visual impact created by the towers and conductors, particularly from the existing towers and conductors from the loop-in to the Hedge substation.

The most visually sensitive areas, however, include only the residential neighborhood west of the site and the commuter routes listed above. The transmission line will not be visible from Baer, Warren, and Sims Parks.

6.9.4.1 Residential Areas. The residential community west of the site is described in Section 6.9.3.1. Relatively distant views (2,500 feet) of the project transmission line as it crosses the railroad and heads east will be possible to residents of the homes along Toronto Way. Viewer sensitivity is lessened by the distance associated with the view and the numerous existing transmission lines in the foreground and background view. The fiber optic communication line is of small diameter (less than 1 inch) and will be installed on the Procter & Gamble Cogeneration Project's transmission line and the Hedge to Hurley transmission line. Consequently, no visual impacts will occur due to the fiber optic communication line.

6.9.4.2 Major Travel Routes. The transmission line may be viewed from Power Inn Road, Fruitridge Road, Florin Perkins Road, Jackson Road, and South Watt Avenue. Numbers of motorists and the composition of the motorists (i.e., trucks, residential commuters, etc.) are described in Subsection 6.9.3.3.

Potential views of the transmission facilities from Power Inn Road are similar to those described for the site. Unobscured views of the transmission towers and conductors will be possible. The project substation components will be mostly hidden by the project's cooling tower.

A fleeting glimpse of the transmission line through corridors created by 83rd Street and Florin Perkins Road will be possible for motorists on Fruitridge Road. Similarly, motorists on Jackson Road will have unobstructed views of the transmission line down Florin Perkins Road. Wooden fencing erected as visual barriers for the aggregate mining operations will prevent most views of the transmission line along the remainder of Jackson Road and along most of South Watt Avenue. Views from Folsom Boulevard are screened by intervening commercial development.

The closest most unobstructed view of the transmission line is from Florin Perkins Road where the line crosses the road. However, viewer sensitivity is expected to be low because most motorists are expected to be employees, delivery services, or patrons of surrounding businesses.

6.9.5 Potential Project Construction and Operation Impacts

Visual impacts were evaluated at the following three sensitive viewer locations or key observation points (KOPs): (1) the homes on Toronto Way that are adjacent to the Southern Pacific Railroad and Power Inn Road, (2) Power Inn Road near its intersection with the Southern Pacific Railroad, and (3) Florin Perkins Road about 500 feet north of 23rd Avenue (Figure 6.9-1). Views of the proposed project from

KOP 1 and 2 are the closest, most direct, and least obstructed of all available views; thus, they represent a worst-case evaluation of the visual impacts from sensitive receptors at surrounding roadways and residential areas. The degree of impact at other potential viewer locations will be much less because of the distance from the site, screening provided by surrounding industrial/commercial developments, low contrast between the project and surrounding landscape, and the generally low scenic quality of the area.

KOP 3 represents the closest, most direct, and least obstructed view of the project transmission line. The degree of visual impact caused by the transmission line at other potential viewer locations will not be significant because of the greater viewing distance, screening by intervening development, low contrast between the project and surrounding landscape, and the generally low scenic quality of the area.

Construction and operation impacts are described for each KOP. Factors considered in the assessment included distance, visibility, scenic quality, viewer orientation and duration, and the degree of contrast created by a change in line, form, color, or texture to landforms, vegetation patterns, and structures that the proposed project and its transmission line will create from each viewpoint. Visual effects related to the project plume and night lighting are subsequently described.

6.9.5.1 KOP 1--Homes on Toronto Way. The homes on Toronto Way are one-story houses about 2,500 feet directly west of the site. This area represents the location where potential visual impacts will be the greatest for local residents because of the largely unobstructed views that are available from the rear of these homes. Intervening vegetation and houses mostly screen available views within the remainder of the residential area. Overall scenic quality from this KOP is considered low because present views are dominated by the Procter & Gamble plant (including its stack, distillation towers, storage tanks, rail cars and trailer parking), overhead transmission lines, and car and rail traffic. Numerous warehouses further to the east and north are also significant, but somewhat subordinate features of the landscape. Figure 6.9-3a is a panorama of the present view at this KOP. The view is from in front of the privacy fences.

Some screening is provided by the 6 foot high wooden privacy fences present at most of the homes and by the raised berm associated with the Southern Pacific Railroad and Power Inn Road. However, as can be seen on the photosimulation of the project from this KOP (Figure 6.9-3b), many of the project structures will be visible (southern portion of existing setting is unchanged). The most prominent features



KOP 1 – View looking east towards the Procter & Gamble Cogeneration Project, from the homes on Toronto Way.

KOP 1 EXISTING SETTING
(northern portion of view)

Figure 6.9-3a

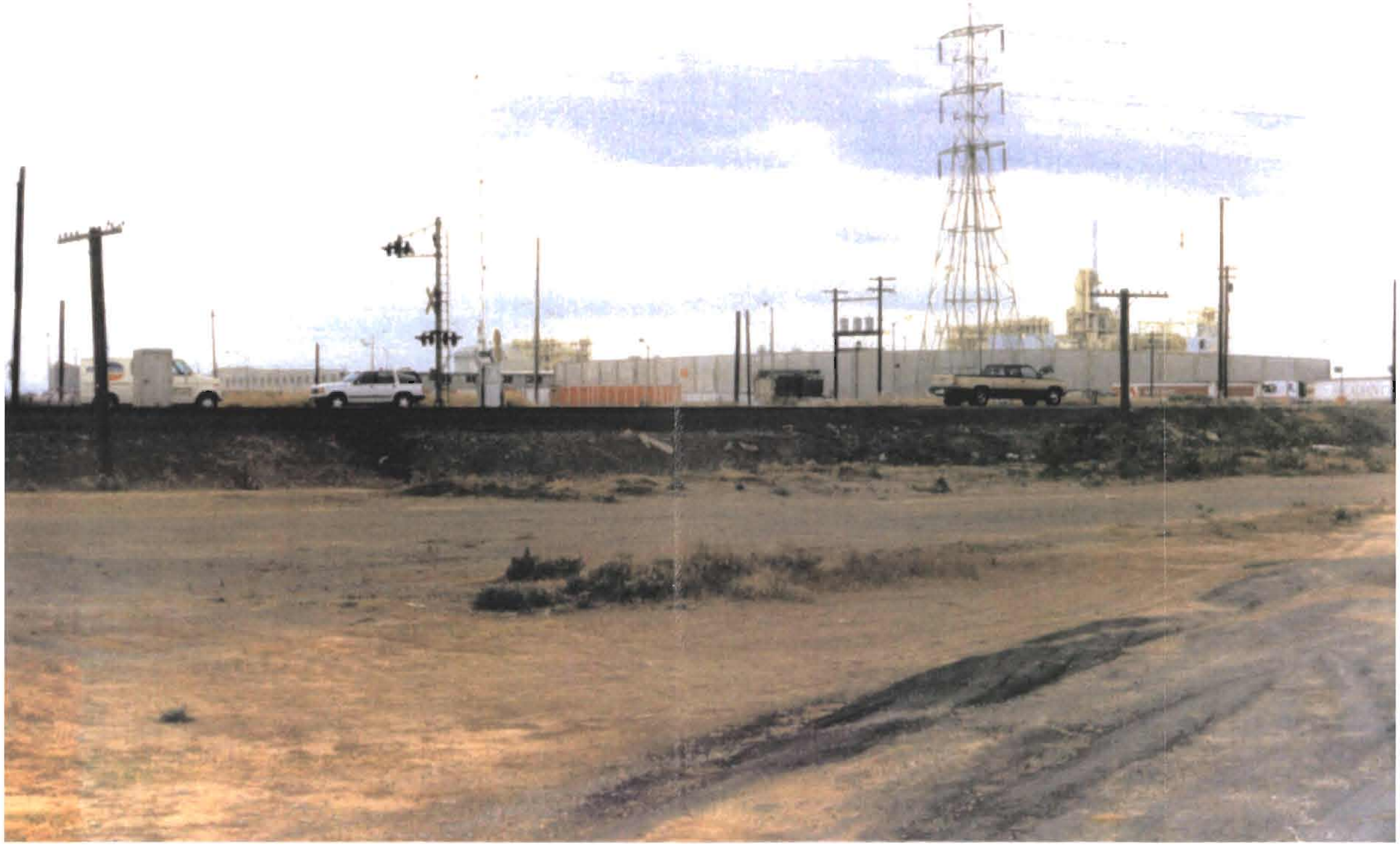

KOP 1 – View looking east towards the Procter & Gamble Cogeneration Project, from the homes on Toronto Way.

KOP 1 EXISTING SETTING
(southern portion of view)

Figure 6.9-3a



KOP 1 – View looking east towards the Procter & Gamble Cogeneration Project, from the homes on Toronto Way.

KOP 1 PROJECT SIMULATION
(northern portion of view)

Figure 6.9-3b

include one of the HRSGs, the HRSG stacks, the cooling tower, the future combustion turbine and its stack, several storage tanks, and transmission line. It should be noted that under specific meteorological conditions, a water vapor plume may be visible from the project cooling tower and stack. However, these conditions occur on an infrequent basis (about 1.6 percent of the year). An analysis of the plume size and frequency of occurrence is provided in Subsection 6.9.4.3.

The overall long-term contrast of the project with the existing landscape is assessed as moderate. Although certain project features are unavoidably visible, the viewing distance reduces the prominence of the structures. The form and size of most of the project features are consistent with the shape, size and form of surrounding industrial buildings, transmission lines, storage tanks, and other components of the landscape. The linear nature and height of the HRSG stacks may attract the attention of the public until they become accustomed to the visual setting. However, the prominence of the HRSG stacks within the viewshed will be reduced by the existing views of the taller Procter & Gamble stack and distillation towers. Long-term impacts are not considered significant.

Construction activities, although to be done in a phased schedule, are expected to result in only a moderate, short-term visual contrast with the surrounding landscape. Some screening of low level activities will be provided by the privacy fences, railroad, and Power Inn Road. Construction crews and equipment will be visible, particularly as the taller structures are assembled, but they are not expected to dominate the landscape because of the existing industrial nature of the area. Heavy construction equipment is commonly seen in transport and in use in the area. Dust suppression controls, such as the periodic spraying of water during land grubbing activities, will prevent significant visual impacts. Therefore, short-term visual impacts are not expected to be significant because of their described level of visibility and short-term nature.

6.9.5.2 KOP 2--Power Inn Road. This KOP is on Power Inn Road near its intersection with Southern California Railroad, about 2,200 feet west of the project site. This site provides views representative of those seen by motorists travelling north on Power Inn Road. Motorists on Power Inn Road will experience short, but essentially unobstructed views of the project for about 1,000 feet as they pass the project site. As indicated earlier, significant screening along the remainder of Power Inn Road will be provided by adjacent commercial warehouses and other industrial land uses. The scenic quality from the KOP is considered low, with views consisting primarily of industrial facilities associated with Procter & Gamble, numerous transmission

towers and overhead lines, railroad cars, semi-trucks and trailers, and commercial/ industrial warehouses (Figure 6.9-4a).

Figure 6.9-4b depicts what the project will look like from this KOP. Views are very similar to those shown for KOP 1 and, for similar reasons stated above for KOP 1, the overall long-term contrast of the project with the surrounding landscape is assessed as moderate to low. Although the viewing angle increases the prominence of the HRSG stacks slightly, the degree of contrast that results is reduced by the presence of the numerous transmission line towers in the foreground and background. Some of the lower structures of the plant are screened by intervening rail cars and trailers that are commonly present for frequent and lengthy periods. Long-term impacts are also not considered significant because of the fleeting nature of the views and the fact that most people will be concentrating on driving, thus reducing their awareness of the surroundings. Many of the motorists will be associated with the surrounding industries, thereby reducing their sensitivity to the addition of new industrial features.

Visual contrasts associated with short-term construction activities are expected to be moderate to weak for the reasons stated for KOP 1.

6.9.5.3 KOP 3--Florin Perkins Road. This KOP is located on Florin Perkins Road about 500 feet north of 23rd Avenue. This KOP provides views representative of those seen by motorists traveling south on Florin Perkins Road. The project transmission line will be most clearly visible to south and north bound motorists along Florin Perkins Road from Jackson Road to Fruitridge Road a distance of about 1 mile. The scenic quality from this KOP is considered low, reflecting views of commercial warehouses and numerous transmission lines (Figure 6.9-5a).

Figure 6.9-5b depicts what the transmission line will look like from this KOP. The long-term contrast of the transmission line with the surrounding landscape is assessed as low. Although several transmission line towers and the conductors will be visible, the degree of contrast is reduced by the presence of numerous transmission line towers and conductors in both the foreground and background. Long-term impacts are also not considered significant because of the fleeting nature of the views and the fact that most people will be concentrating on driving, thus reducing their awareness of the surroundings. The motorists are expected to be associated with the surrounding industries, thereby reducing their sensitivity to the additional transmission line.



KOP 2 – View looking east towards the Procter & Gamble Cogeneration Project, the Intersection of Power Inn Road and the Southern California Railroad.

KOP 2 EXISTING SETTING

Figure 6.9-4a



KOP 2 – View looking east towards the Procter & Gamble Cogeneration Project, the Intersection of Power Inn Road and the Southern California Railroad.

KOP 2 PROJECT SIMULATION

Figure 6.9-4b



KOP 3 – View looking south toward the Procter & Gamble Cogeneration Project's transmission line crossing on Florin Perkins Road from 500' north of 23rd Avenue.

KOP 3 - EXISTING SETTING

Figure 6.9-5a



KOP 3 – View looking south toward the Procter & Gamble Cogeneration Project's transmission line crossing on Florin Perkins Road from 500' north of 23rd Avenue.

KOP 3 - PROJECT SIMULATION

Figure 6.9-5b

Construction activities are expected to result in weak and short-term contrasts with the landscape. Construction crews may be visible as the towers are erected and conductors strung. These activities are not expected to disrupt traffic patterns or distract motorists. Thus, short-term visual impacts are not expected to be significant because of their low level of visibility and short-term nature.

6.9.5.4 Plume Visibility. During certain periods of the year, a white vapor plume (water vapor condensation from the exhaust) may be visible from the project stacks and the cooling tower. The frequency, persistence, and size of visible condensate plumes depends primarily on the design and type of CTG/HRSGs, auxiliary boiler, and cooling tower, as well as the local climate and season. Visible plume formation is more frequent during the cooler seasons (fall and winter), when ambient conditions are less conducive to evaporation of the condensed water droplets.

Exhaust plumes from the CTG/HRSGs and the auxiliary boiler will contain water vapor as a combustion byproduct and from using aqueous ammonia for NO_x control. Evaluating the condensate plume visibility from a combustion source is quite different than evaluating the condensate plume visibility from other sources such as a cooling tower. The fundamental difference between the two is that a cooling tower exhaust plume is completely saturated as it leaves the cooling tower cell, whereas the combustion source exhaust plume contains water vapor at levels much lower than the water saturation vapor pressure level corresponding to the exhaust temperature of the stack. The result is a sub-saturated (nonvisible) condensate plume exhausting from the combustion source. Under certain ambient air conditions, a visible condensate plume from the combustion source will form when rapid localized mixing (a nonadiabatic process) of the exhaust plume with the ambient air lowers the exhaust plume temperature to the water vapor saturation point in the immediate vicinity of the stack. However, the same rapid mixing that formed the condensate plume will also cause rapid evaporation and dispersion of the condensate plume soon after it is formed. Therefore, the formation of a visible condensate plume from a combustion source is a relatively rare and infrequent event, and generally presents less potential for a visual impact than the condensate plume from a cooling tower.

A cooling tower uses thermodynamic cooling to dissipate waste heat by evaporating water into the atmosphere. If the ambient air is cold and/or moist, a portion of the emitted water vapor will condense to form water droplets. This condition is seen as a visible white plume emanating from the cooling tower. The saturated plume evaporates as it is carried downwind because of mixing with unsaturated air. The frequency, persistence, and size of a cooling tower visible condensate plume

depends on the type of cooling tower, the cooling tower orientation with respect to the prevailing winds, local climate, and the season. Visible condensate plume formation is more frequent during the cooler seasons when ambient conditions are less conducive to evaporation of the condensed water droplets.

A modeling analysis was performed to evaluate the magnitude of any potential environmental impacts resulting from the operation of the proposed cooling tower at the site. The results of this analysis are presented in the following subsections.

6.9.5.4.1 Cooling tower model. The Electric Power Research Institute (EPRI)-sponsored Seasonal/Annual Cooling Tower Plume Impact (SACTI, Version 1.0) model (ANL 1984) was used to quantify the cooling tower impacts. This computer model is an outgrowth of an earlier model evaluation study carried out by A. J. Policastro of the Argonne National Laboratory (ANL). Improved plume and drift models in the code have been calibrated with existing field and laboratory data and then subsequently verified with new data not included in the calibration process. The SACTI model has been widely used in preparing environmental assessments of cooling tower impacts by electric utilities and their consultants.

A cooling tower plume generally exhibits a variety of distinctly different sets of plume characteristics (e.g., plume height, plume spread, and plume dispersion) at any given site. The SACTI model assumes that up to 35 distinct plume categories, based on ambient meteorological conditions and tower characteristics, can be identified at any given site. In addition, ten distinct plume categories are characteristic of ground fogging and icing conditions. The cooling tower plume in each of these categories is produced by a different set of ambient meteorological conditions. The hourly meteorological data is used by the SACTI model to compute frequency distributions of meteorological conditions for each plume category and each wind direction.

In the case of a multi-cell mechanical draft cooling tower, the effects of the orientation of the tower with respect to merging cell plumes and structure-induced downwash are simulated through the use of representative wind directions and the specific tower configuration. The representative wind directions account for downwash induced by the cooling tower structure, but do not simulate downwash caused by other nearby buildings. Each of the standard 16 wind directions can be represented by one of three representative wind directions, which take into account similarities between certain wind directions and the geometry of the tower orientation. For example, if a cooling tower is oriented north-south, both an east wind and a west wind will encounter the same tower orientation and thus both directions are simulated with the same representative wind direction.

The SACTI model performs the following computational functions in a sequential manner to determine the representative plume categories and plume impacts.

Meteorological Data Preprocessor. The preprocessor performs three subtasks to delineate plume categories and calculate representative parameters for each category. For the first subtask (Subtask 1), hourly surface meteorological data are read and invalid or missing parameters and hours are discarded. For each valid record, the model uses cooling tower parameters such as tower height, tower effective exit diameter, tower effective heat rejection, and tower effective air flow to calculate additional exit parameters including temperature and velocity. Some nondimensional parameters which characterize the buoyancy of the plume and the stability and saturation of the ambient air are also calculated.

The second subtask (Subtask 2) generates frequency distribution tables for ranges of tower, meteorological, and nondimensional parameters as a function of the standard 16 wind directions. These meteorological variables represent the full range of atmospheric conditions affecting plume dispersion and drift deposition. For example, the SACTI model selects temperature ranges from -49° F to 113° F in 9° F intervals. The frequency of actual dry-bulb temperatures occurring in each of those ranges for each of the standard 16 wind directions is tabulated. For the 5 year meteorological period considered, the actual ambient dry-bulb temperatures ranged from 5° F to 104° F. Likewise, the model tabulates relative humidity values falling between 0 and 100 percent in intervals of 10 percent, with the actual modeled relative humidities falling between 10 and 100 percent.

The third subtask (Subtask 3) uses the frequency distributions from Subtask 2 to delineate the distinctly different plume categories that could occur from cooling tower operation. Categories are selected so that all categories are equally populated. A single set of representative tower and ambient conditions is then calculated from the range of conditions in each category, and then reassigned to each category.

Plume Calculations. Using the preprocessor's representative conditions and additional tower makeup data (e.g., tower orientation, number of cells, drift droplet spectrum, and salt concentrations), the plume code calculates fogging/icing and the plume's dimensions and depositional characteristics for each plume category and each representative wind direction. For example, assuming 45 total drift and fogging categories and three representative wind directions, a total of 135 plume cases are simulated. As stated before, the representative wind directions are used to simulate tower-induced downwash. Therefore, specific output showing the nature and extent of the downwash is not generated by the program. Rather, output is generated for

each representative wind direction, and the downwash effects can be inferred from the deposition/fogging/icing gradients.

Impact Calculations. The various plume code predictions are used in conjunction with the preprocessor's frequency distribution of plume categories and actual wind directions to calculate impacts. The resulting cumulative impacts from all categories are tabularized and plotted as a function of wind direction and distance from the tower.

6.9.5.4.2 Cooling tower model input. Five years of hourly sequential surface meteorological data (1985-1989), and the corresponding years of mixing height data collected at the Sacramento Executive and Metropolitan Oakland Airports, respectively, were used for this analysis. These data contained the complete set of surface meteorological parameters necessary to conduct the cooling tower analysis. The Sacramento National Weather Service (NWS) and Oakland NWS stations are located approximately 4.3 miles (7 kilometers) west and 77.7 miles (125 kilometers) southwest of the proposed site, respectively.

The model also requires as input certain site-specific, tower-specific, and makeup water-specific data. Site-specific data include latitude and longitude, time zone, monthly clearness indices, and daily solar insolation values. The clearness indices and solar insolation values were obtained from Appendix B of the User's Manual for the SACTI Computer Code (ANL 1984). Site-specific data included information relating to the orientation of the tower housing, tower heat dissipation, tower air flow, and drift rate. A drop size distribution of the water droplets emanating from the cooling tower is also required as input in order to calculate the drift impacts. Input data from the cooling tower model are presented in Table 6.9-1.

6.9.5.4.3 Cooling tower plume formation and shadowing. The favorable conditions for visible plume development, plume rise, and plume persistence are most frequent at night due to the colder temperatures and higher relative humidity. Meteorological conditions that produce dense cloud cover and precipitation are also conducive to plume development. The SACTI model provides estimates of plume length (i.e., the distance over which a plume remains intact), plume height (the height downwind where the plume remains intact), and plume shadowing (i.e., the blocking of incident solar radiation by a plume). Plume shadowing results from an elevated plume occurrence during the daytime hours. The occurrence of plume shadowing is mainly an aesthetic concern as the presence of the cooling tower plume lowers visibility. In addition, an elevated plume will block solar radiation from impinging on the ground surface.

Table 6.9-1
Cooling Tower Modeling Parameters

Site-Specific Data		
Site Latitude	38.53 degrees	
Site Longitude	121.40 degrees	
Time Zone	Pacific (8)	
Roughness Height	100.0 cm	
Reference Height of Met Data	10 meters	
Tower-Specific Data		
Tower Type	Linear Mechanical Draft	
Number of Towers	1	
Total Number of Fans	3	
Tower Length	45.7 meters	
Tower Width	16.5 meters	
Tower Height	16.61 meters	
Effective Outlet Diameter	14.77 meters	
Total Heat Dissipation Rate	102.0 MW	
Total Airflow Rate	1,524.8 kg/s	
Total Drift Loss Rate	58.6 g/s	
Tower Orientation	North-South	
Tower X,Y Origin	0,0	
X,Y Cell 1	0.0 meters, 14.6 meters	
X,Y Cell 2	0.0 meters, 0.0 meters	
X,Y Cell 3	0.0 meters, -14.6 meters	
Representative Wind Directions	3 (0.0,45.0, and 90 degrees)	
Makeup Water-Specific		
Cooling Tower Salt Concentration	0.002 g salt/g solution	
Salt Density	2.6 g salt/cm^3	
Drift Droplet Spectrum	0-25 microns	30 percent
	25-50 microns	20 percent
	50-170 microns	40 percent
	170-375 microns	9 percent
	>375 microns	1 percent

The SACTI model predicted that for approximately 90 percent a year the predicted plume height will be less than 394 feet (120 meters). Additionally, the model predicted that maximum shadowing will occur about 656 feet (200 meters) east of the tower for 684 hours for the 5 year meteorological period (1985-1989), or an average of 1.6 percent a year. Beyond 656 feet (200 meters), the model predicted that the average hours of plume shadowing occurring at any direction from the tower represent less than 0.5 percent of the year (approximately 119 hours for the 5 year period). These results are conservative in nature due to the following limitations associated with the plume length and shadowing computer model predictions:

- The SACTI program does not have the ability to limit plume predictions to just one subset of the hourly meteorological data (e.g., cool ambient dry bulb temperatures).
- The model cannot distinguish natural meteorological conditions of haze, overcast skies, fog, and precipitation during which shadowing is not experienced and background visibility is poor. During these events, the cooling tower plume will sometimes be indiscernible. In certain cases, especially as the distance from the tower increases, the model may predict saturation, but due to spreading of the plume it may only be visible as a slight haze. If this is the case, the plume may not be discernible against the background haze that would already exist due to the high humidity or suspended particulate matter. In other cases, the plume may be dense, but it would not be discernable against the existing cloud deck (Argonne National Laboratory 1984)

The same ambient meteorological conditions that result in a condensate plume formation from the cooling tower (i.e., cool temperatures and high relative humidity), will also likely cause natural conditions of fog, haze, and precipitation which generally lead to reduced visibility. In fact, 5 years (1985-1989) of meteorological data were assessed to determine the actual number of daylight hours when the visibility was less than 2 miles, as well as the number of daylight hours when fog occurred. The results of the analysis demonstrate that the visibility was less than 2 miles for 1,338 daylight hours for the 5 year period, or an average of 3 percent a year, and fog occurred for 2,590 daylight hours for the 5 year period, or an average of 6 percent a year.

As stated above, the cooling tower plume would be less discernable under low visibility conditions, and the plume shadowing would be substantially reduced during periods having low overcast cloud decks or in foggy conditions. Climatologically, low

visibility occurs nearly twice as often as does the formation of a condensate plume from the cooling tower, and foggy conditions occur naturally in the area more than six times as often as plume fogging caused by the cooling tower. The SACTI model predicted that fogging caused by the cooling tower will occur less than 1 percent a year. Because natural events are likely to occur simultaneously with the formation of a visible condensate plume from a cooling tower, the actual amount of time a condensate plume from the cooling tower causes shadowing or fogging, or is even discernable, is likely to be less than the 1.6 percent of the year predicted by the SACTI model. It is not expected that reduced visibility that may accompany naturally occurring fog conditions would be further degraded as a result of cooling tower plume fogging.

6.9.5.4.4 Visual Impacts. The visual impacts associated with the operation of the cooling tower and the CT/HRSGs for the proposed facility are environmentally acceptable. The average maximum predicted hours of shadowing from the cooling tower condensate plume represent 1.6 percent of the year. The formation of visible condensate plumes from the combustion sources are relatively rare and infrequent events, and present less risk of a visual impact than the condensate plume from the cooling tower. Additionally, these impacts are conservative estimates due to the simplifications inherent in the model which do not allow the user to simulate all mitigative aspects of the cooling tower or the surrounding environment. Comparisons with actual meteorological data demonstrated that the cooling tower design will limit visible plume formation, subsequently mitigating shadowing occurrences. In addition, the cooling tower induced events represent only a small percentage of similar, naturally occurring events, and both may occur simultaneously.

The contrasts between the project plumes and the surrounding landscape are further reduced by the fact that existing plumes from the Procter & Gamble facility will also be present during the same period. The exact number and size of the plumes from the Procter & Gamble facility are not known, but they are expected to be numerous. Given the season and meteorological conditions present at the time the photos used in the simulation were taken, an analysis of the existing plumes from the Procter & Gamble facility in relation to those anticipated for the project could not be assessed. Therefore, the cooling tower plumes were not included in the photo-simulation.

In conclusion, the infrequent occurrence of visible plumes and the industrial setting of the project area result in insignificant long-term visual impacts. The addition of the project's plumes are expected to be accepted by the public.

6.9.5.5 Night Lighting and Glare. Procter & Gamble's existing stack, superstructure, parking areas, and security lighting are highly visible at night to the surrounding residents and drivers on Power Inn Road and other surrounding commuter routes. Procter & Gamble's high visibility is due to the general lack of other tall, well-lit structures in the area. Street lighting along the major roads adds to the illuminance of the project area.

Lighting at the proposed project will be maintained at levels necessary to meet security, operation and maintenance, and safety requirements. Steady burning red aviation lights will be required at the top of each of the stacks. Security lighting will also add to the project's overall visibility. While the project will be visible in the night sky, its distance away from the major commuter routes and residential areas reduces the effects on surrounding, visually sensitive areas. In addition, the project represents only a small incremental change in the existing nighttime artificial lighting conditions, and one that is assessed as less than significant given the present industrial nature of the site. The mitigation measures described below will decrease the degree of contrast between the project facilities and the night sky and minimize the impacts of the project on the surrounding community.

6.9.6 Aesthetics Cumulative Impacts

The project site and surrounding area is highly industrialized. The addition of the project and its associated transmission line will result in an incremental increase in industrial growth and the industrial appearance of the area. No specific future projects are known for the area west of the project site, but redevelopment of the US Army Depot for employee intensive land uses will contribute to the industrial growth and appearance of the area. Increased industrial growth is consistent with the projected City of Sacramento plans for the area and will likely occur with or without the proposed power plant. Mitigation in the form of aesthetically pleasing landscaping will minimize some of the effects of industrial growth.

The fiber optic communication line is of small diameter (less than 1 inch) and will be installed on the SMUD's transmission line towers interconnecting with the Hedge to Hurley transmission line towers. Consequently, no visual impacts will result from the fiber optic communication line.

6.9.7 Mitigation

The project has been designed to be as unobtrusive as possible. The following described mitigation measures are proposed to reduce visual impacts of the project and its transmission line.

6.9.7.1 Project Site. As discussed above, the project will result in insignificant visual impacts to surrounding viewers. The taller features of the project, particularly the new chimneys, will be unavoidably visible. However, such impacts will be minimal because of the industrial nature of the site created by the large Procter & Gamble plant and surrounding commercial/industrial uses.

Under specific meteorological conditions a water vapor plume may also be visible on an infrequent basis. Because of the infrequent occurrence of the project's visible plumes, the presence of existing plumes associated with the Procter & Gamble plant, and the industrial setting of the project area, the project's visible plumes will result in insignificant impacts that do not require mitigation. However, the following mitigation measures are proposed to make the project more aesthetically acceptable:

- All fencing will be constructed of nonreflective materials.
- Project lighting will be limited to areas required for safety and shielded from public view to the extent feasible. Directional lighting will be oriented down and inward to the site and will be used to minimize light and glare impacts on surrounding areas. With the exception of the steady burning aviation lights on top of the HRSG stacks, often the taller structures onsite will not be lit.

Trees will also be planted in parking and other maneuvering areas along the front of the plant to provide shading. This is proposed to meet the requirements of the City of Sacramento's shading ordinance.

6.9.7.2 Transmission Line and Fiber Optic Communication Line. The project's transmission line will result in insignificant visual impacts to surrounding viewers. All the towers will create an additional visual impact. This will not be significant due to the visual impact created by in-place towers. Steel towers that have been dulled will be used to reduce reflectivity. Similarly, nonspecular conductors will be used to reduce reflectivity and thus their attraction. The transmission line is being routed beneath the PG&E line to prevent skylining. No additional mitigation measures are proposed.

The fiber optic communication line is of small diameter (less than 1 inch) and will be installed on the Procter & Gamble Cogeneration Project's transmission line towers and on the Hedge to Hurley transmission line towers. Consequently, no visual impacts will result from the fiber optic communication line.

6.9.8 Compliance with Laws, Ordinances, Regulations, and Standards

The following identifies applicable federal, state and local ordinances regarding visual resources.

6.9.8.1 Federal LORS. None are applicable.

6.9.8.2 State LORS. None are applicable.

6.9.8.3 Local LORS. The project is located within the jurisdiction of the City of Sacramento. The City's General Plan (adopted in 1987) establishes specific goals and policies to guide development so as to enhance the visual amenities of open space areas, with particular emphasis on establishing development standards for water related open space areas. Although the project site is currently vacant land, the General Plan projects the land to be developed for industrial uses. No scenic highways occur in the study area. Thus, the development of a power plant on this site will be consistent with the policies of the City of Sacramento's General Plan.

The City of Sacramento adopted a shade tree ordinance on May 24, 1983, that requires that shade trees be planted and maintained throughout surface parking lots. The ordinance requires that within 15 years after establishment of the parking lot, at least 50 percent of the parking area is shaded. Shade trees will be planted in the project's employee and visitor parking area. The exact species to be used will be determined during the project's final design, but will use species approved by the City of Sacramento.

The Sacramento City Council also adopted the Water Conserving Landscape Ordinance on November 5, 1992. The ordinance is designed to ensure that efficient and effective landscaping that avoids excessive water demands and is less vulnerable to periods of severe drought is developed and maintained. Species used for landscaping will have low water requirements and thus will conform to the requirements of the Ordinance.

6.9.9 References

Argonne National Laboratory, April 1984, *User's Manual: Cooling-Tower-Plume Prediction Code*, prepared for the Electric Power Research Institute, Argonne, Illinois.

United States Bureau of Land Management (BLM), 1980, *Visual Resource Management Program*. US Department of Interior, Washington, D.C.

6.10 Noise

An ambient noise survey was conducted in and around the proposed Procter & Gamble Cogeneration Project in May 1993. During the survey, noise levels were measured at the nearest noise sensitive areas and at the project's property boundary. The following sections describe the noise survey procedures, discuss the existing noise environment, and estimate noise emissions attributed to the construction and operation of the Procter & Gamble Cogeneration Project.

6.10.1 Discussion of Terminology

The following terms are used within the noise related sections. Definitions are provided to enhance reader understanding.

- A-weighting Scale--Sound level weighting network which provides different response characteristics to sound pressure levels as a function of frequency. The A-weighting network is approximately representative of the frequency response of the human ear. The human ear is less sensitive to low frequency than to high frequency sound.
- A-weighted Decibel (dBA)--Decibel level which has been adjusted using the A-weighting scale.
- Decibel (dB)--Ten times the logarithm of the ratio of the square of the sound pressure to a reference level.
- L_x--The sound level exceeded during x percentage of the measurement period.
- $L_{eq(x)}$ (Equivalent Sound Level)--The dBA level of a steady-state sound which has the same dBA weighted sound energy as that contained in the actual sound being measured when averaged over a specific time period, x, in hours.
- Noise Sensitive Location--Any location or land use area which has the potential to be adversely impacted by noise emissions.
- Sound Power Level (L_p)--The acoustic power radiated from a given sound source as related to a reference power level (specified to be 10^{-12} watts) and expressed in decibels.
- Sound Pressure Level--The ratio, expressed in decibels, of mean-square sound pressure to a reference mean-square pressure which by convention has been selected to be equal to the assumed threshold of hearing (20 micropascals).

- Day-Night Equivalent Sound Level (L_{dn})--The equivalent sound level for a 24 hour period, with an additional 10 dB weighting imposed on levels between 10:00 p.m. and 7:00 a.m.
- Community Noise Equivalent Level (CNEL)--Similar to the L_{dn} except that an additional 5 dBA weighting is added to the hours between 7:00 p.m. and 10:00 p.m.

6.10.2 Laws, Ordinances, Regulations, and Standards

Facility noise emissions are often regulated by different agencies. The following subsections discuss federal, state, or local regulations which apply to the facility noise emissions.

6.10.2.1 State and Local Agencies. There are no State of California regulations which stipulate community noise emission limits for power generating facilities. However, the County of Sacramento has promulgated noise ordinances which limit noise levels to residential areas.

The Revised Draft Noise Element of the County of Sacramento General Plan, dated December 9, 1992, limits noise levels due to "nontransportation" sources. The established limits are 45 dBA at residential property boundaries during the night and 50 dBA during the day. Nighttime hours are specified to be 10:00 p.m. to 7:00 a.m.; daytime is defined to be 7:00 a.m. to 10:00 p.m. Table 6.10-1 contains a summary of the limits defined in the Noise Element.

The Sacramento County Noise Control Ordinance limits noise levels according to receiving land zoning classification. Various residential and agricultural areas have a restriction of 50 and 55 dBA during the nighttime and daytime hours, respectively; no other zoning classifications are listed. Construction and demolition are exempt from this regulation except between the hours of 8:00 p.m. and 6:00 a.m. on weekdays and 8:00 p.m. and 7:00 p.m. on weekends.

Obviously, the Noise Element is the more restrictive of the ordinances for community noise impacts; therefore, it will be considered as the governing regulation.

6.10.2.2 Federal Agencies. There are no federal noise regulations which establish noise emission limits for power generating facilities.

6.10.2.3 Other Standards. Federal Occupational Safety and Health Administration (OSHA) regulations stipulate a maximum worker noise exposure level. OSHA noise provisions are designed to protect workers against the effects of noise exposure and provide a listing of permissible noise exposures (for example, workers should not be exposed to noise levels equivalent to 90 dBA or greater for more than 8 hours a

Table 6.10-1
Applicable Noise Limits

Cumulative Number of Minutes in any 1 Hour Period		Statistical Noise Level Descriptor	Exterior Noise Level Standards (dBA)	
Greater Than	Up To		Daytime	Nighttime
30	60	L_{50}	50	45
0	1	L_{max}	70	65

Source: *Revised Draft Noise Element of the County of Sacramento General Plan*, December 9, 1992.

day). OSHA noise provisions also dictate hearing conservation program requirements and noise monitoring requirements (monitoring is considered necessary when information indicates that any employee's 8 hour exposure exceeds 85 decibels). OSHA noise provisions also include notification requirements, audiometric test requirements, hearing protector attenuation criteria, and other guidelines.

The State of California and Federal OSHA regulations are essentially the same.

6.10.3 Existing Conditions

The project site is within an area zoned for industrial use. The site is an open field bordered to the east by the Angeles Metal Systems facility and by the American Sanitation Company, to the north by the Central California Traction Railroad rail line, and to the south by the Procter & Gamble facility. Power Inn Road is approximately 2,200 feet west of the project site. The nearest sensitive receptors are the residences approximately 2,500 feet west of the site across Power Inn Road.

6.10.3.1 Ambient Sound Levels. An ambient noise survey was conducted on May 26th, 27th, and 28th, 1993, to characterize the existing noise environment in the site vicinity. Continuous measurements were taken using Larson & Davis 700 Integrating Sound Level Meters (serial numbers B3194, B3195, B3196, and B3198). Octave band data were recorded with a CEL 393B noise meter (serial number 600028B). The Larson Davis meters are ANSI Type II; the CEL meter is Type I. Each meter was laboratory calibrated within the past year and is National Institute of Standards and Technology traceable. In addition, each meter was field calibrated immediately prior to and after the survey with its corresponding calibrator. The CEL meter and its field calibrator, model CEL-177, were laboratory calibrated on January 4, 1993. The LD 700 meters and their field calibrator, Larson Davis Model CA250 were laboratory calibrated during the period from May 11th through May 14th, 1993. Calibration certificates are available upon request.

Weather conditions during the survey period included temperatures in the 80s, cloudy skies, and winds below 10 mph. Continuous monitoring was begun at each location on May 25th, 1993 at 11:00 a.m. but was discontinued at 1:00 p.m. due to rain. The meters were restarted at 3:00 a.m. on May 26th and continued to record sound levels until 10:00 a.m. on May 27th, 1993.

6.10.3.1.1 Noise measurement locations. Ambient noise levels were recorded at various noise measurement locations along the project site boundary and in the project vicinity. Continuous measurements were approximately 33 hours in duration. Five monitoring locations were originally selected; however, one meter was stolen

within the first two hours of monitoring. The remaining four meters were then rearranged and various statistical noise level data were recorded (L_{eq}, L_{90}, L_{50}, and L_{10}). Actual monitoring locations are shown on Figure 6.10-1. In addition, the L_{eq} values for each of the nine standard octave bands were taken at each location at various times throughout the continuous monitoring periods. The recorded sound levels, hourly L_{eq} values, and octave band data are summarized in Tables 6.10-2, 6.10-3, and 6.10-4, respectively, for each of the various monitoring locations.

Noise Measurement Location 1 (NML-1) is along the northern boundary of the site at the rail line. The meter was placed on the second telephone pole west of the eastern site boundary. This location was chosen to represent the noise environment of the industries to the north and northeast of the project site.

NML-2 is on the eastern site boundary at Gate G of the Procter & Gamble facility. Gate G is an infrequently used roadway leading to an employee parking area. The meter was set up on a traffic sign on the edge of the roadway. This location monitored the noise produced by both the Procter & Gamble facility and the other businesses east of the site.

NML-3 is northwest of the site in a field adjoining the backyards of the homes on 79th Street. The meter was placed on the edge of a fence in the backyard between two abandoned homes. This location was chosen to represent the noise environment of the residents to the west and northwest of the site.

NML-4 is west of the site, adjacent to the backyards of homes on Toronto Way. The meter was placed in a bush outside the fenceline of the residences. This location provided data for the residences nearest to the project site and was representative of the communities both west and southwest of the site.

Each of the monitoring locations was chosen to accurately measure sound levels in both the residential area and the industrial area surrounding the project site, while providing access to the meters for Black & Veatch personnel and protection from vandalism for the meters themselves.

Each microphone was placed at a height of approximately 3 feet rather than 5 feet because the microphone cable is 3 feet in length. Each meter was then hidden in grass or bushes or otherwise camouflaged.

6.10.3.1.2 Characterization of the existing noise environment. The property in the vicinity of the facility is mostly industrial. The average sound level measured in the area is typical of an industrial land use area. The nature of the ambient noise

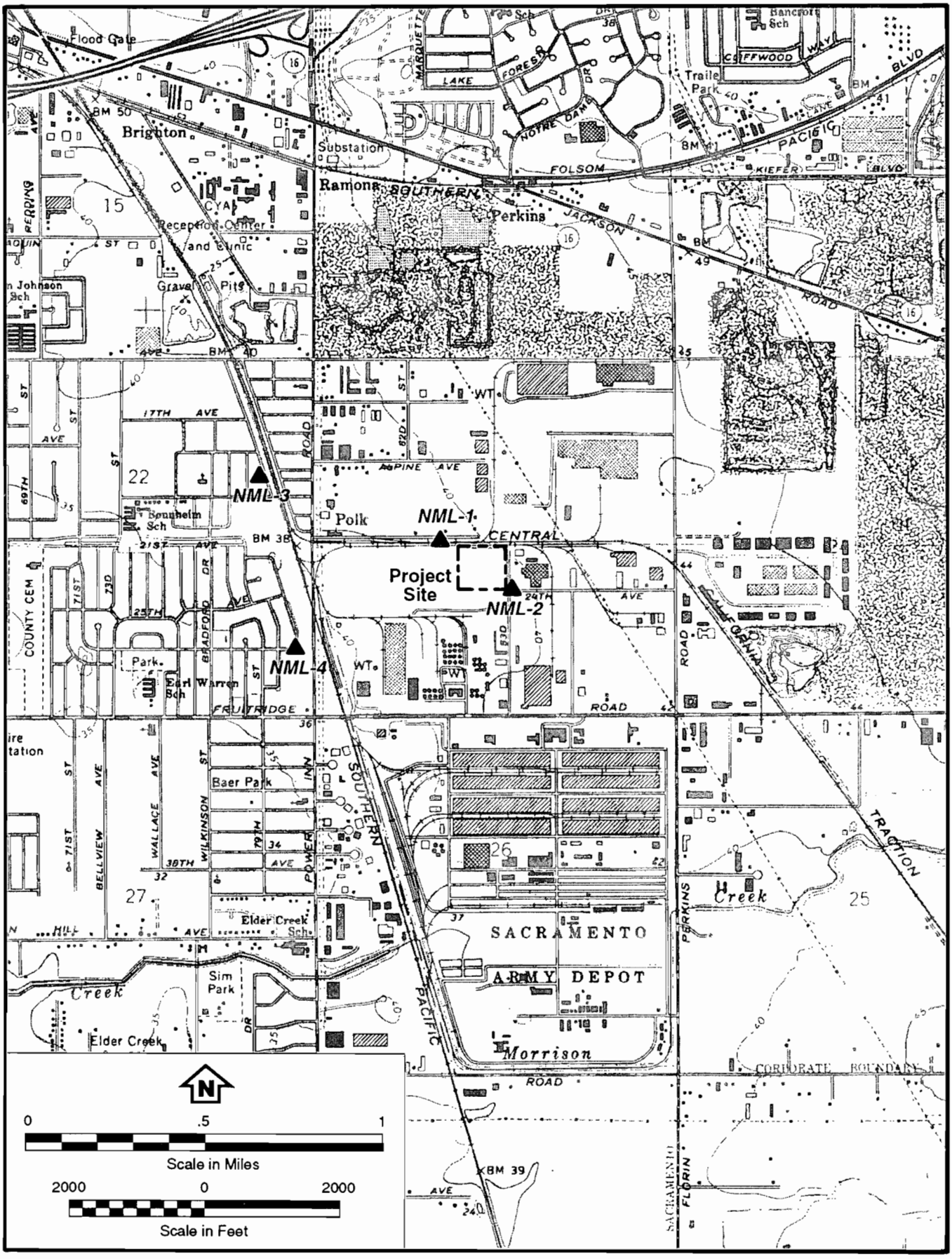

Base Map Source: USGS, Sacramento East, Calif, 1:24,000 scale quadrangle.

NOISE MEASUREMENT LOCATIONS (NMLs)

Figure 6.10-1

Table 6.10-2
Summary of Ambient Noise Data (dBA)

NML	1	2	3	4
L_{90}	54.8	56.1	46.1	54.1
L_{50}	57.3	58.6	48.6	60.2
L_{10}	62.9	66.1	53.2	65.5
CNEL	68.3	67.3	68.7	73.2
L_{dn}	63.2	65.2	62.3	69.1
L_{eq24}	61.0	63.3	58.4	65.0

Table 6.10-3
Hourly L_{eq} Values

		Location			
Date	Time	NML-1	NML-2	NML-3	NML-4
5-26-93	3:00 a.m.	55.0	57.0	46.0	55.5
	4:00 a.m.	57.5	60.0	61.5	66.5
	5:00 a.m.	58.5	59.0	59.0	66.5
	6:00 a.m.	58.5	59.5	56.0	66.0
	7:00 a.m.	58.5	61.0	63.0	67.5
	8:00 a.m.	57.0	60.5	65.0	69.0
	9:00 a.m.	59.0	61.5	64.0	69.0
	10:00 a.m.	62.0	65.0	57.0	65.5
	11:00 a.m.	66.0	71.0	54.0	65.5
5-27-93	12:00 p.m.	65.5	70.5	56.0	65.0
	1:00 p.m.	66.0	67.5	53.5	66.0
	2:00 p.m.	63.0	69.0	64.0	72.5
	3:00 p.m.	60.5	57.5	56.0	65.5
	4:00 p.m.	60.5	57.5	50.0	62.5
	5:00 p.m.	63.5	63.0	49.5	62.5
	6:00 p.m.	68.0	59.5	62.5	64.0
	7:00 p.m.	64.5	59.5	63.0	64.0
	8:00 p.m.	55.5	58.0	62.0	64.5
	9:00 p.m.	55.5	57.5	58.5	67.5
	10:00 p.m.	55.5	57.5	64.5	67.0
	11:00 p.m.	54.0	57.0	66.5	68.0
	12:00 a.m.	52.5	56.5	63.5	64.5
	1:00 a.m.	50.5	56.5	43.5	55.5
	2:00 a.m.	52.0	55.5	62.0	63.5
	3:00 a.m.	54.0	55.5	68.0	69.5
	4:00 a.m.	55.5	57.0	62.5	66.0

Table 6.10-4
Ambient Noise Survey Octave Band Levels

NML	Date	Time	Octave Band Center Frequency (Hz)								
			31.5	63	125	250	500	1000	2000	4000	8000
1	05-25-93	11:05 a.m.	67.3	65.8	58.9	49.9	47.8	49.9	47.1	36.6	20.4
	05-25-93	11:08 a.m.	65.3	66.4	59.4	50.5	47.7	48.3	45.6	38.7	20.1
1	05-25-93	8:25 p.m.	65.9	65.4	59.4	53.8	50.3	49.7	46.1	40.3	30.1
	05-25-93	8:27 p.m.	64.9	65.5	59.1	53.4	49.9	49.3	46.9	37.7	30.1
1	05-26-93	2:10 a.m.	66.8	66.4	57.7	54.2	48.6	46.3	43.9	34.0	30.0
	05-26-93	2:13 a.m.	65.2	66.7	58.7	53.3	48.8	46.9	44.3	34.4	20.0
2	05-25-93	11:14 a.m.	69.4	72.1	75.3	59.2	53.7	50.2	46.9	42.9	31.3
	05-25-93	11:17 a.m.	66.4	69.8	65.7	59.5	53.9	49.1	45.1	37.9	26.7
2	05-25-93	8:10 p.m.	68.5	71.4	68.6	63.4	59.1	54.9	51.9	47.1	34.9
	05-25-93	8:13 p.m.	68.1	68.1	66.8	60.8	53.9	52.8	48.9	43.7	33.2
2	05-26-93	2:35 a.m.	64.0	67.3	64.3	56.4	53.8	50.9	45.6	38.0	30.0
	05-26-93	2:38 a.m.	66.3	67.6	65.0	56.0	51.8	51.0	45.5	37.8	30.0
2	05-27-93	4:12 a.m.	66.2	66.5	63.1	55.6	50.5	50.3	45.7	37.0	26.5
	05-27-93	4:14 a.m.	67.0	67.2	64.2	54.4	51.5	51.7	48.3	37.6	26.5
3	05-25-93	11:25 a.m.	59.9	59.8	54.0	46.6	42.4	41.4	36.8	49.6	28.9
	05-25-93	11:28 a.m.	63.0	60.6	56.3	47.1	40.4	40.9	37.6	27.8	20.0
3	05-25-93	7:35 p.m.	58.8	59.4	58.1	48.8	48.2	47.9	41.3	36.6	21.1
	05-25-93	7:38 p.m.	59.1	59.6	53.5	49.6	47.9	42.4	36.5	38.8	20.3
3	05-26-93	3:10 a.m.	59.9	56.3	46.0	38.7	35.3	30.2	30.7	20.0	20.0
	05-26-93	3:13 a.m.	60.5	59.8	50.4	38.9	38.2	36.9	30.6	33.8	28.7

Table 6.10-4 (Continued)
Ambient Noise Survey Octave Band Levels

NML	Date	Time	Octave Band Center Frequency (Hz)								
			31.5	63	125	250	500	1000	2000	4000	8000
3	05-27-93	3:15 a.m.	57.0	52.7	42.7	38.0	34.7	31.1	26.1	25.0	20.0
	05-27-93	3:18 a.m.	59.5	59.0	49.8	40.3	37.2	36.9	31.0	38.5	20.0
4	05-25-93	11:35 a.m.	66.6	67.6	66.6	62.6	64.6	61.4	55.9	48.3	47.6
	05-25-93	11:38 a.m.	69.0	72.9	68.3	60.6	56.8	58.9	51.7	47.9	38.1
4	05-25-93	7:45 p.m.	---	---	64.6	63.6	49.4	48.1	40.9	32.4	30.1
	05-25-93	7:48 p.m.	64.4	63.9	68.3	61.6	58.5	65.5	67.6	59.1	53.1
4	05-26-93	2:45 a.m.	62.7	63.8	61.7	57.6	46.3	47.3	53.5	34.5	34.7
	05-26-93	2:47 a.m.	61.7	60.6	60.8	56.1	48.1	39.8	40.0	29.2	20.0
4	05-27-93	3:50 a.m.	62.1	61.7	62.7	59.0	47.8	43.3	41.7	32.6	24.8
	05-27-93	3:52 a.m.	62.7	62.8	65.5	60.2	49.9	43.6	41.3	48.0	49.1

environment varied throughout the daytime and nighttime; this is typical in areas where the noise is controlled by man-made sources. The reduction in the noise levels during the nighttime hours was caused by a decrease in local traffic and a reduction in activities at local businesses. Hourly L_{eq} values reached highs of 68.0, 71.0, 65.0, and 72.5 dBA during the daytime hours at NMLs-1, -2, -3, and -4, respectively, while the hourly L_{eq} dropped to lows at the same respective locations of 50.5, 55.5, 43.5, and 55.5 during the nighttime hours. The Procter & Gamble facility, the Air Products facility (east of the Procter & Gamble plant), and traffic on Power Inn Road are the dominant noise sources at all locations during the nighttime hours. Other noise sources in the area are the rail lines, occasional aircraft, various businesses and industries, and natural noise sources. Natural noise sources include crickets, birds, wind in the trees, etc. At NML-1 and -2, the dominant noise sources were the Procter & Gamble and Air Products facilities, other nearby industries, birds, and crickets. Sound levels at NML-2 are higher than at NML-1 due to the proximity to the Procter & Gamble and Air Products facilities. Peak noise levels at these locations are typically caused by worker traffic during shift changes and breaks. Ambient noise levels at NML-3 are attributed to traffic on Power Inn Road, Procter & Gamble, Air Products, a railyard, local traffic, nearby industries, airplanes, and natural noise sources. Power Inn Road traffic is the dominant source at this location although residential activity is a frequent noise source in this area. The ambient noise environment at NML-4 is also controlled by Power Inn Road traffic in addition to the railyard. Levels at this location are higher than at NML-3 because of its nearness to Power Inn Road and the railyard. Sound levels in the residential area drop below the regulated impact level of 45 dBA (nighttime) only during periods of low traffic and train activity.

6.10.3.2 Future Noise Producing Developments. Approximately 94 permits have been completed and applications filed with the City of Sacramento or Sacramento County planning boards since May of 1991 within a 2 mile radius of the site. Of these permits and applications, 91 are requests for rezoning, variances, lot line adjustments, parcel map requests, time extensions, renewals, minor developments (e.g., adding an office to a social center), or temporary use permits. The remaining three projects could affect the noise environment of the community within the site vicinity. These projects are listed in Table 6.10-5.

The first project, the 600 sq ft garage, is to be located between 33rd and 34th Avenues east of Wallace Avenue. This is 1 mile from the project site and is a minor

Table 6.10-5
Future Noise Producing Developments

Project No.	Parcel No.	Description	Application or Permit Date
P92 145	027-0142-010	600 sq ft garage	5-21-92
92-GPB-CZB-SDP-SPP-0331	063-0011-019, 020, 034, 035, 044, 045, 046	289 lot subdivision	6-30-93
P91-243	078-0022-029	Major office building	8-16-91

development; it is therefore not considered to be a concern. The second project, the subdivision, will be voted on June 30th, 1993. It is exactly 2 miles from the project site, in the vicinity of Jackson Road and Burst Court, and will not be a factor for the noise environment of the project area. The third project, the office building, has already been approved and completed. Therefore, no "foreseeable" projects are expected to acoustically affect the proposed Procter & Gamble Cogeneration Project site.

Further residential development in this area is not expected. Additional industrial or commercial development is possible as a result of infilling in the vacant lots within the industrial area surrounding the project site. The Sacramento US Army Depot south of the site is to be closed. Future uses for this land are as yet unknown.

6.10.4 Potential Construction Noise Impacts

Construction related noise emissions are dependant upon the location, operating load, and activity of construction equipment; therefore, construction related noise emissions are highly variable. Variable noise emissions are difficult to characterize using predictive noise calculation techniques. For the purposes of this assessment, average noise levels have been calculated for the worst-case construction activities. These levels represent the average noise level emitted from the construction site when the construction equipment is operating at a worst-case scenario. In reality, the instantaneous construction noise levels will occasionally exceed the worst-case average noise level, but typically the construction noise emissions will be much less than the predicted levels. The following sections discuss the methodology for calculating the average construction noise emissions, the offsite noise levels associated with facility construction, and the evaluation of the noise levels.

6.10.4.1 Construction Activities. For purposes of an acoustic analysis, the construction activities have been divided into separate phases. Major construction phases consist of site preparation, foundation construction, building and equipment erection, site cleanup, and facility startup. Construction activities will continue for approximately a 21-month period; noise emissions will vary with each phase of construction depending upon the construction activity and associated equipment.

Limited site preparation will be required for the Procter & Gamble Cogeneration Project. Site preparation will require the use of heavy diesel-powered equipment. Noise emissions during this construction phase will be dominated by the diesel engine noise.

Foundation construction involves concrete handling equipment and heavy diesel-powered equipment. Neither pile driving nor blasting activities will be required during this or any other phase of construction.

The equipment erection will involve stationary and mobile cranes, equipment delivery, torque wrenches, and heavy diesel-powered equipment. Hence, noise emissions during this phase are expected to be slightly higher than during the other phases.

Site cleanup and facility startup will generally result in lower noise emissions than other stages. The most significant noise emission associated with facility startup will be steam blowout of the heat recovery steam generators' (HRSGs) steam lines. At the end of construction, high-pressure steam is passed through the HRSGs to remove any debris within the steam lines prior to hookup with the steam turbine. Noise is produced when the high-pressure steam is vented to the atmosphere. Because noise levels are a concern, a temporary silencer which is specially designed for this purpose will be used. The steam blowout of each HRSG will be conducted only during daylight hours for an approximately three week period. Although the noise level due to this operation is very difficult to quantify, the impact will be reduced to acceptable levels by the silencer. The steam blows will be noticeable mostly because of the sudden onset of the noise as opposed to the actual decibel level.

Construction activities are scheduled to occur between 7:00 a.m. and 6:00 p.m. to the fullest extent possible. Some activities may require extended hours of operation due to scheduling constraints or to maintain the structural integrity of concrete pours. Any nighttime construction will be limited to low noise producing activities.

6.10.4.2 Equipment Noise Emissions. The variable nature of construction noise is best represented by an average noise impact level. The average noise impacts account for the type and quantity of equipment, the typical usage (the percentage of daytime hours the equipment is in operation) of each piece of equipment, and typical noise levels of the equipment used during each phase of construction. The type of equipment, equipment usage, and equipment noise emissions for the major noise sources during the worst-case phase of construction are listed in Table 6.10-6. Other types of equipment will be onsite during each phase of construction; however, noise emissions will not be significant by comparison and are, therefore, not included in the table. The estimation of the construction equipment usage and noise levels are

Table 6.10-6
Construction Equipment Noise Emissions

Phase	Equipment	Lp* (15m) (dBA)	Quantity	Usage	Leq** (15m) (dBA)
Clearing	Backhoe	85	1	.20	78
	Concrete Vibrator	76	5	.16	75
	Drill	85	1	.16	77
	Grader	85	1	.30	80
	Diesel Generator	78	1	.16	70
	Trencher	82	1	.21	75
	Mobile Crane	83	1	.33	78
	Dozer	87	2	.33	85
	Front End Loader	84	2	.33	82
	Compactor	80	2	.25	77
	Truck, Large	88	7	.16	88
Foundation	Mobile Crane	83	1	.33	78
	Front End Loader	84	2	.33	82
	Concrete Vibrator	76	7	.16	76
	Drill	85	1	.16	77
	Saw	78	2	.21	74
	Torque Wrench	85	2	.16	80
	Dozer	87	1	.33	82
	Stationary Crane	88	2	.33	86
	Backhoe	85	2	.20	81
	Truck, Large	88	7	.16	88
	Diesel Generator	78	1	.16	70
	Compactor	80	2	.25	77
	Air Compressor	81	1	.25	75
	Trencher	82	1	.21	75

Table 6.10-6 (Continued)
Construction Equipment Noise Emissions

Phase	Equipment	Lp* (15m) (dBA)	Quantity	Usage	Leq** (15m) (dBA)
Erection	Mobile Crane	83	1	.33	78
	Backhoe	85	2	.20	81
	Truck, Large	88	6	.16	88
	Trencher	82	1	.21	75
	Stationary Crane	88	5	.33	90
	Drill	85	1	.16	77
	Torque Wrench	85	10	.16	87
	Air Compressor	81	1	.25	75
Startup	Grader	85	1	.30	80
	Trencher	82	1	.21	75
	Drill	85	1	.16	77
	Torque Wrench	85	5	.16	84
	Diesel Generator	78	1	.16	70
	Truck, Large	88	5	.16	87
	Mobile Crane	83	1	.33	78
	Air Compressor	81	1	.25	75

*Sound pressure level at 15 meters horizontal distance from the equipment.

**Energy average sound pressure level at 15 meters horizontal distance from the equipment.

based on information provided in the EPA documents PB-250 430 titled, *Noise Emission Standards for Construction Equipment*, and NTID300.1, *Noise From Construction Equipment and Operations, Building Equipment, and Home Appliances*.

6.10.4.3 Modeling Methodology. A Black & Veatch developed computer model was used to determine the offsite facility construction noise impacts. The model simulates the propagation of sound from point sources of noise by considering wave divergence, atmospheric absorption, directivity of the noise emissions, and blockage of noise by any interceding barriers. The model calculates the sound pressure level from each source at each point on a specified receptor grid. The model then combines the impact of each individual source to determine the combined noise impact. The sound pressure levels are calculated in each octave band and in overall A-weighted decibel levels. The program then produces plots of the L_{eq} noise contours (also called isobels).

The location, sound power level, and directivity of each source were entered into the computer model. In performing the computer modeling, no acoustic blockage due to the existing buildings was included in the modeling.

6.10.4.4 Evaluation of Construction Noise Impacts. The equipment erection phase average noise contours are shown in Figure 6.10-2. As indicated in the figure, the worst-case average noise level is estimated to be approximately 55 dBA at the nearest residences. This noise level represents the daytime average emission level during worst-case construction conditions. The variable nature of construction noise makes it evident that noise emissions will occasionally be greater than the worst-case average, but typically will be lower. Combined with the $L_{eq(24)}$ value of 65.0 dBA at this location, the cumulative noise impact is approximately 65 dBA.

Traffic volumes for both cars and large trucks in the area surrounding the project site are already substantial. A slight increase in truck traffic will occur during the construction period; however, this will be during daytime hours only and will not cause a noticeable increase.

6.10.5 Potential Operation Impacts

Operation of the Procter & Gamble Cogeneration Project will produce long-term steady noise emissions which will affect the noise environment within the site vicinity. The following sections discuss the operational activities of the facility and the noise level associated with the facility operation. Also discussed is the methodology used in modeling the facility noise impacts at the nearest residences and evaluation of the expected noise impacts with regard to regulatory criteria.

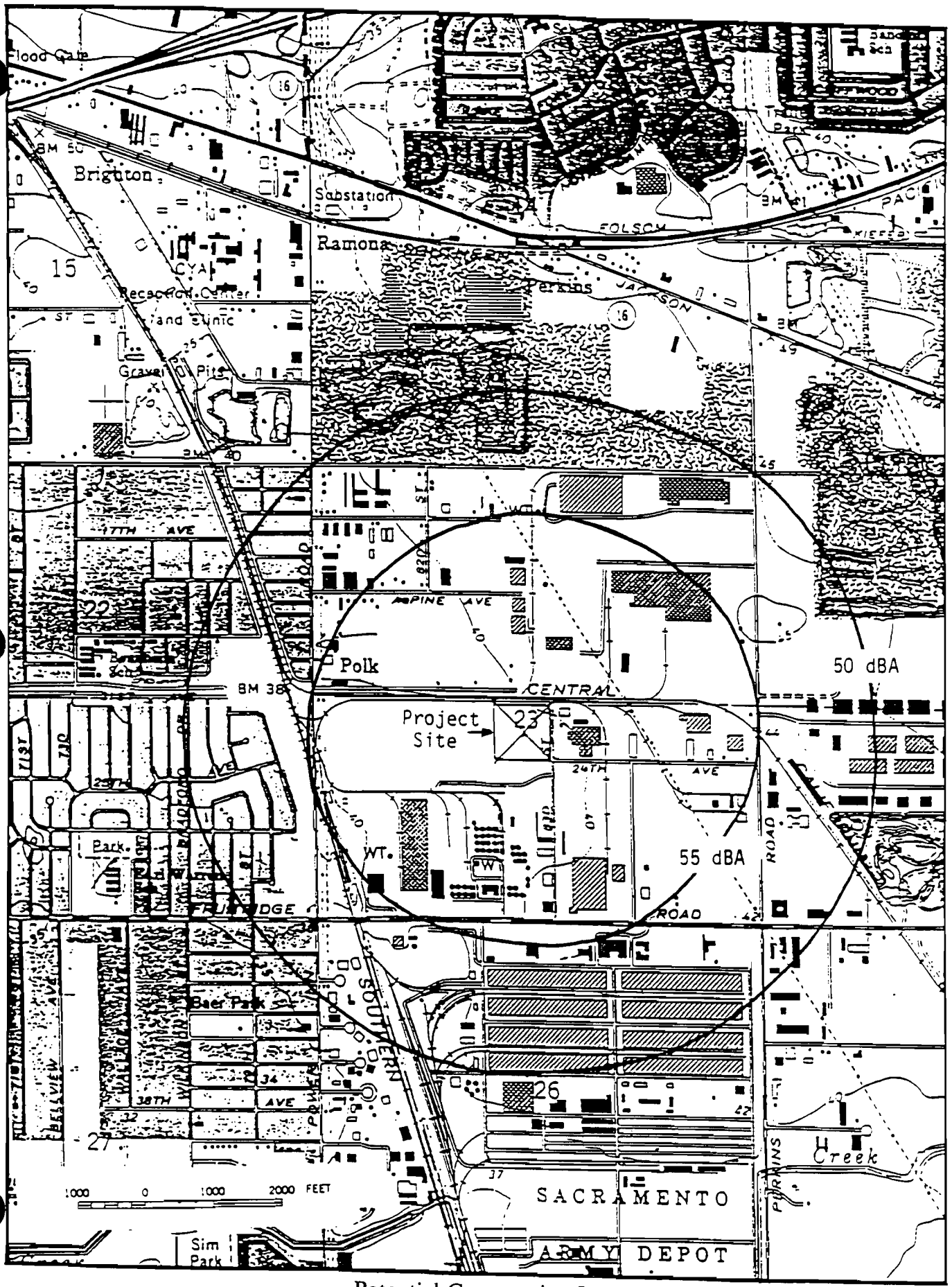

Potential Construction Impacts
Figure 6.10-2

6.10.5.1 Facility Equipment. The power generation equipment will consist of two LM6000 aeroderivative combustion turbines (CTs) in operation with two heat recovery steam generators (HRSGs), one combustion turbine of a size equivalent to an LM6000 to be operated in simple cycle mode, two generator transformers, four gas compressors (three operating at a time with the combined cycle and simple cycle CTGs at baseload), one cooling tower, one steam turbine generator, an auxiliary boiler, a standby generator, and associated facility equipment.

6.10.5.2 Equipment Noise Emissions. Noise emissions due to the LM6000 combustion turbines and the HRSGs are based on vendor supplied acoustic data. The primary noise sources associated with a combustion turbine operating with an HRSG are the air inlet and the turbine housing. Noise emitted by an HRSG is due to the combustion turbine exhaust and duct burners. Therefore, the transition duct and the exhaust stack are the major noise sources associated with HRSGs.

The acoustic emissions of the cooling tower for this project are taken from data supplied by the Marley Cooling Tower Company. The remaining generation equipment noise levels are derived from information contained in the Edison Electric Institute's report entitled, *Electric Power Plant Environmental Noise Guide*. A summary of the emissions due to each major piece of equipment is contained in Table 6.10-7.

6.10.5.3 Modeling Methodology. The same model was used in developing the project's operational noise impacts as was used for the construction noise impacts. The computer model is discussed in Subsection 6.10.4.3.

6.10.5.4 Evaluation of Operational Noise Impact. The expected operational noise contours from the Procter & Gamble Cogeneration Project equipment are shown on Figure 6.10-3. To ensure that the modeling results are conservative, none of the existing buildings or local terrain have been included in the noise emission modeling. Therefore, the actual facility noise emissions are expected to be slightly lower than predicted in most locations. The proposed generating equipment will produce an overall noise emission level of approximately 45 dBA ($L_{eq(24)}$) at the nearest residential area. This will meet the 45 dBA (nighttime) requirement at the nearest residence. The existing $L_{eq(24)}$ level outside of these residences was measured to be 65.0 dBA. Therefore, the operation of the Procter & Gamble Cogeneration Project is not expected to be noticeable over the existing community noise.

Table 6.10-7
Cogeneration Facility Equipment Noise Emissions

Equipment (quantity)	Expected Sound Power Level, dBA	Mitigation Measures	Mitigated Sound Power Level, dBA	Expected Sound Pressure Level at 3 ft, dBA
LM6000 Air Inlet (2)	106 each	Inlet Silencer	106 each	87
LM6000 Turbine Generator (2)	115 each	Acoustical Wall	111 each	88
HRSG Walls (2)	94 each	None	94 each	73
HRSG Exhaust (2)	126 each	Stack Silencer	101 each	58 @ 5 ft above base of stack
Steam Turbine Generator	108	Enclosure	99	85
Circulating Water Pumps (3)	107 each	None	107 each	89
Cooling Tower	112	Low Noise Fans	112	85
Gas Compressor (4)	115 each	Enclosure	98 each	85
Auxiliary Boiler	94	None	94	85
Standby Generator	121	Enclosure	107	88
Boiler Feed Pump	104	None	104	85
Transformers (2)	98 each	None	98 each	79 each
Simple Cycle CT Air Inlet	106	Inlet Silencer	106	87
Simple Cycle CT Generator	115	Acoustical Wall	111	88
Simple Cycle CT Exhaust	126	Stack Silencer	106	65 @ 5 ft above base of stack

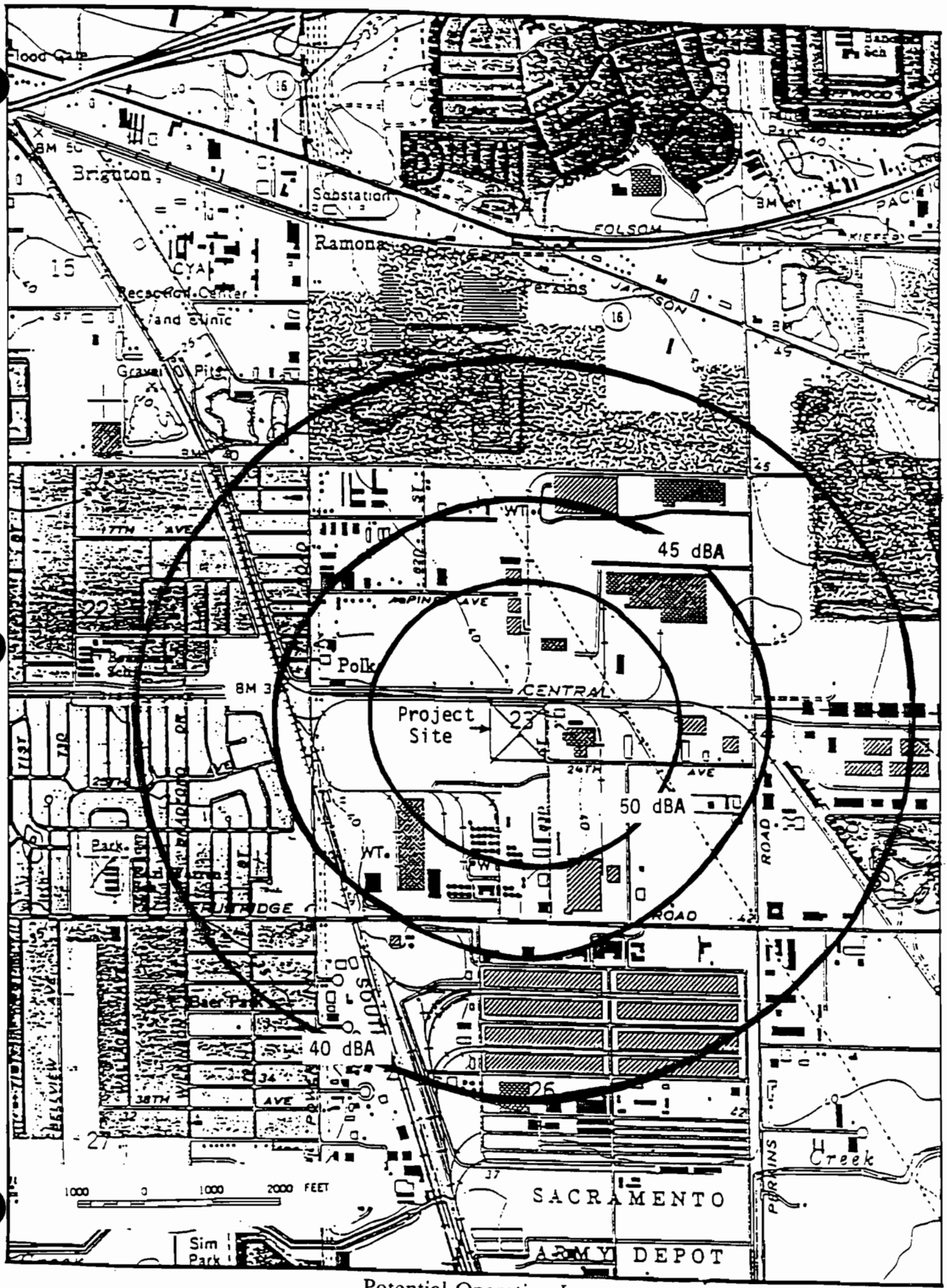

Potential Operation Impacts
Figure 6.10-3

Operational traffic volumes due to the facility workforce will be minimal. In addition, neither fuel delivery nor waste removal should affect the ambient noise environment.

6.10.6 Noise Cumulative Impacts

Construction noise may be audible at the quietest times of the day, but should not cause a significant increase in the ambient noise levels at most times. The impact at the nearest residences during the loudest phase of construction is expected to be approximately 55 dBA while the existing $L_{eq(24)}$ value is 65 dBA. The combined impact is 65.4 dBA, an inaudible increase. Noise due to construction is exempt from the local ordinance during daytime hours; therefore, the construction noise impacts will be in compliance with the local regulations.

Operational noise levels are subject to the 45 dBA nighttime requirement. With the mitigation measures applied the facility is expected to emit 45 dBA at the nearest residence; this level will not cause an increase in the existing $L_{eq(24)}$ at this location. In addition, no other large projects are planned within a 1 mile radius of the project site; therefore, cumulative impacts due to construction or operation will be negligible.

Traffic volumes for both cars and large trucks in the area surrounding the project site are already substantial. A slight increase in truck traffic will occur during the construction period; however, this will be during daytime hours only and will not cause a noticeable increase. Operational traffic volumes due to the facility workforce will be minimal. Additionally, neither fuel delivery nor waste removal should affect the ambient noise environment. The facility will operate on natural gas only, which will be piped in. Waste removal will not occur frequently and will consist only of trucks with miscellaneous garbage going to the Sacramento landfill. There will be no noticeable cumulative noise impact due to traffic.

6.10.7 Mitigation Measures

Several means of quieting will be implemented to minimize local noise impacts. Anticipated mitigation measures include inlet silencing on the LM6000 and simple cycle combustion turbine air inlets, acoustical treatment for the combustion turbine generators, stack silencing for the HRSG exhausts, and simple cycle CT exhaust, enclosing the steam turbine generator, low noise fans for the cooling tower, and enclosing the gas compressors. No further mitigation measures are expected to be necessary to meet the 45 dBA nighttime limit; however, equipment may be enclosed or otherwise quieted as deemed necessary after installation.

In order to comply with OSHA regulations, most equipment has been specified not to exceed 85 dBA at 3 feet. In this type of facility it is unavoidable that some areas, especially inside acoustical enclosures, will exceed 85 and 90 dBA; these areas will be marked as hearing protection areas.

To further good relations with the community, a complaint resolution protocol will be followed. All noise complaint calls received will be entered into a logbook along with the time, name and address of the caller, and the nature of the complaint. The caller will then be transferred to the appropriate personnel for more detailed analysis of the problem. The complainant will be notified within 30 days as to the method of resolution.

6.10.8 Compliance with LORS

Section 6.10.2 describes the LORS which would be applicable to the project. As indicated in Section 6.10.4, construction noise may be audible at the quietest times of the day, but should not cause a significant increase in the ambient noise levels at most times. The impact at the nearest residences during the loudest phase of construction is expected to be approximately 55 dBA while the existing $L_{eq(24)}$ value is 65 dBA. The combined impact is 65.4 dBA, an inaudible increase. Noise due to construction is exempt from the local ordinance during daytime hours; therefore, the construction noise impacts will be in compliance with the local regulations.

Operational noise levels are subject to the 45 dBA nighttime requirement. With the mitigation measures applied, the facility is expected to emit 45 dBA at the nearest residence; this level will not cause an increase in the existing $L_{eq(24)}$ at this location.

6.11 Waste Management

A discussion of the potential effects of the proposed project on waste management issues follows. Existing local waste disposal facilities, potential construction impacts, and potential operation impacts are addressed.

6.11.1 Existing Local Waste Disposal Facilities

The Sacramento County Landfill is the principal facility in the area that receives nonhazardous wastes. There are other smaller landfills in the county, but they are private facilities that have restrictions on the services they offer. These private facilities include the Dixon Pit Landfill, B and C Disposal Site, and the L and D Landfill Company. It is anticipated that nonhazardous waste from the cogeneration facility will be transported to the Sacramento County Landfill or the L and D Landfill for disposal.

There also are two commercial facilities in the county licensed to receive hazardous waste.

6.11.1.1 Nonhazardous Waste Facilities. Nonhazardous waste facilities in the project vicinity are as follows.

6.11.1.1.1 The Sacramento County Landfill (Kiefer). The county landfill, located at Rancho Cordova, occupies 656 acres and has a total capacity of approximately 160 million tons. The facility currently receives about 2,200 tons per day. The wastes that the landfill receives include construction and demolitions materials, dead animals, leaves and clippings, mixed municipal, and tires. Sacramento County produces approximately 780,000 tons of nonhazardous waste annually.

Vernal pools have been identified on more than half of the site; thus, the overall capacity of the site may be reduced. The estimated closure date for the facility is 2040.

The landfill is relatively new, and no upgrading of the facility is expected in the near future. There are no enforcement or regulatory problems at the facility.

The Sacramento County Landfill is a Class III facility that is managed by the County Department of Public Works (Solid Waste Division). The Department of Public Works also manages three transfer stations. Class III landfills are licensed facilities that are safe and adequate for the disposal of nonhazardous wastes.

6.11.1.1.2 The L and D Landfill. This Class III landfill receives approximately 822 tons per day of nonhazardous waste. Wastes received include construction and demolition materials, leaves, and clippings. The estimated closure date for the facility is 2011. Need for upgrading is not known at this time.

6.11.1.1.3 Other nonhazardous landfill facilities. Other nonhazardous landfill facilities in the project vicinity are described below:

- Name--Dixon Pit Landfill.
  - -- Location--Elk Grove, CA.
  - -- Tons-per-Day--51.
  - -- Closure Date--2000.
  - -- Types of Wastes Received--Construction and demolition, wood mill.
- Name--B and C Disposal Site.
  - -- Location--Sacramento, CA.
  - -- Tons-per-Day--1.
  - -- Closure Date--Unknown.
  - -- Types of Wastes Received--Construction and demolition.

6.11.1.2 Hazardous Waste Facilities. There are two hazardous waste facilities, both of them transfer stations. Hazardous waste received at both facilities ultimately is transferred to disposal or recycling sites outside the county. A brief description of the two facilities follows.

6.11.1.2.1 American Environmental Corporation (AEMC) Facility. The AEMC facility is permitted to transfer and store all types of hazardous waste. Waste materials can be accumulated on the site before being transferred to another facility for disposal or recycling. The transfer station also is permitted to incinerate biological hazardous waste and to drain and store polychlorinated biphenyls (PCBs) prior to shipment. AEMC receives, processes, and ships hazardous waste on a continuous basis. The total storage capacity of the facility is approximately 380 tons. About 290 tons of capacity is designated for PCB storage, and the remaining 90 tons is for all other types of hazardous waste. There presently are no enforcement or regulatory problems at the facility. No closure date has been indicated for this facility.

6.11.1.2.2 Safety Kleen Corporation Facility. This facility transfers and stores various solvents. It is permitted for halogenated and nonhalogenated solvents, and these materials can be stored up to 1 year before they are required to be shipped to a recycling installation. Other permitted hazardous wastes are stored no longer than 30 days. Other forms of halogenated solvents that do not require a permit also are handled at the facility, and these wastes can be stored for a maximum of 144 hours.

The Safety Kleen Corporation facility has a total area of approximately 40,000 square feet, and about 12,000 square feet are used for hazardous waste storage. The permitted capacity of the facility is approximately 2,000 gallons for halogenated

solvents and 10,000 gallons for nonhalogenated solvents. No enforcement or regulatory problems are associated with the facility. No closure date has been set for this transfer station.

6.11.3 Potential Construction Impacts

A discussion of wastes generated during the construction of the proposed project follows.

6.11.3.1 Types and Volumes of Construction Generated Wastes. Small quantities of nonhazardous and hazardous wastes will be generated during the construction of the cogeneration facility.

6.11.3.1.1 Nonhazardous wastes. Chemical wastes will be generated during preoperational cleaning of the preboiler and boiler systems. Preoperational cleaning wastes will include disodiumphosphate, trisodiumphosphate, and Neodol 91-6 (a wetting agent). These materials are classified as "nonhazardous wastes," and disposal will be carried out by the boiler contractor in an acceptable manner. It is estimated that approximately 16,000 gallons of nonhazardous wastes will be generated in cleaning the boilers and about 6,000 gallons in cleaning the auxiliary boiler units.

Other nonhazardous wastes will consist mainly of construction materials and related items such as lumber, various metals, excess concrete, insulation, shipping containers, and empty drums for nonhazardous materials. It is estimated that 40 cubic yards per week of such wastes may be produced during the construction period. Trash and office wastes will be collected by a contractor for disposal at an approved facility.

6.11.3.1.2 Hazardous wastes. Limited quantities of paints, solvents, and welding materials that are classified as hazardous wastes will be generated during construction. These materials are considered hazardous because of their toxic chemical properties.

6.11.3.2 Handling, Treatment, Storage, and Disposal of Construction Wastes. Specific waste haulers and recyclers and treatment, storage, and disposal facilities to be used for the proposed project have not been identified at the present time. A description of the handling, treatment, storage, and disposal of construction wastes follows.

6.11.3.2.1 Nonhazardous wastes. The disposal of nonhazardous boiler cleaning wastes will be carried out by the boiler contractor in an acceptable manner. Approximately 22,000 gallons of nonhazardous cleaning wastes will be generated one time only during the preoperational phase of the project.

Nonhazardous construction waste materials will be collected and stored onsite in trash bins. A licensed contractor will remove the refuse in the bins and transport the material to an approved facility for disposal, as necessary.

6.11.3.2.2 Hazardous wastes. The small quantities of hazardous waste (e.g., solvents, paints, welding materials, and other materials) will be collected by a licensed hazardous waste treatment operator and removed to one of the two hazardous waste transfer stations in the county. The materials may be temporarily stored, and then transported to an approved disposal facility for storage or disposal.

6.11.3.3 Effects on Local Landfills. The relatively small quantities of nonhazardous and hazardous waste generated during the construction of the cogeneration facility should have little impact on local landfills.

6.11.3.3.1 Nonhazardous wastes. Landfill capacity to accommodate the disposal of nonhazardous waste during the construction period is adequate. The largest landfill in the area is the Sacramento County Landfill, which receives approximately 2,200 tons per day of waste and has a design capacity through the year 2040. Construction wastes from the cogeneration project would have no significant impact on the landfill. Smaller landfills that could handle the construction wastes are available, if necessary.

6.11.3.3.2 Hazardous wastes. AEMC and the Safety Kleen Corporation are commercial hazardous waste facilities in Sacramento County. These two facilities are transfer stations, and hazardous waste received is subsequently transferred to disposal or recycling installations in other counties. Hazardous waste from the construction site will be transported to one of the transfer stations by a licensed contractor.

Three major landfills in California are licensed to dispose of hazardous waste: (1) Chemical Waste Management, Inc. in King County; (2) Laidlaw Environmental in Kern County; and (3) Laidlaw Environmental in Imperial County. Presently, these landfills have over 6 million tons of permitted capacity remaining. There are plans to expand the three landfills to provide approximately 19 million tons of disposal capacity.

California has 26 waste treatment and recycling facilities that have a capacity of more than 10,000 tons per year. The total treatment of all facilities is approximately 2.5 million per year. An additional 2 million tons per year of treatment capacity in the state has been proposed. According to the State Department of Toxics Substances Control, adequate treatment capacity exists in California for all hazardous wastes, except for wastes requiring incineration.

Capacity in the state is more than adequate to handle the small quantity of hazardous waste that will be generated during the construction period of the planned facility.

6.11.4 Potential Operation Impacts

The potential impacts of nonhazardous and hazardous wastes generated during the operation of the cogeneration facility are addressed in the following subsections.

6.11.4.1 Types and Volumes of Operation Generated Wastes. Small quantities of nonhazardous and hazardous wastes will be generated during the operation of the cogeneration facility.

6.11.4.1.1 Nonhazardous wastes. Office wastes and other normal trash will be generated during the operation of the planned facility. Such wastes will be removed on a regular basis by a trash hauler for disposal at the county landfill. The volume of these wastes will vary, and it is difficult to estimate their quantities. In any case, the amount of these nonhazardous wastes will not be significant.

6.11.4.1.2 Hazardous wastes. Some hazardous wastes will be generated during the operation of the cogeneration facility. Spent catalyst from the selective catalytic reduction (SCR) system is considered a hazardous waste because it contains heavy metals and toxic chemicals.

Waste oil, oil contaminated materials (such as oily rags and lube oil filters) also are considered hazardous wastes by the state. Approximately 1,300 gallons of waste oil will be generated annually.

Operational cleaning of the boiler system will be performed as required. Generally, the industry practice is to clean the system once every 5 years of operation. Hazardous wastes generated will include acid and alkaline cleaning solutions, and the flushing waters and materials removed by the treatment also may be hazardous materials. Approximately 60,000 gallons of these wastes will be generated during each cleaning operation.

6.11.4.2 Handling, Treatment, Storage, and Disposal of Operation Wastes. Wastes, waste haulers, and recyclers and treatment, storage, and disposal facilities to handle and accommodate hazardous wastes from the operation of the cogeneration facility have not been identified to date. A description of the handling, treatment, storage, and disposal of operation wastes follows.

6.11.4.2.1 Nonhazardous wastes. Trash, office wastes, and other nonhazardous wastes will be collected in trash storage bins, picked up regularly by a trash hauler, and transported to a Class III landfill for disposal.

6.11.4.2.2 Hazardous wastes. The boiler system will be cleaned once about every 5 years, and approximately 60,000 gallons of hazardous waste material will be generated. These cleaning wastes will be collected and disposed of by a licensed contractor in compliance with all applicable regulatory requirements.

Spent catalyst from the SCR system will be sent back to the manufacturer every 6 to 10 years for replacement, and disposal of the material will not be required.

Waste oil will be stored in approved containers and will be removed by a licensed contractor for recycling. Oil or heavy metal contaminated filters will be removed to a Class I hazardous waste disposal facility. Oil and oily wastes will be recycled. Oil or heavy metal contaminated filters will be removed to a Class I hazardous waste disposal facility. Oil, oily wastes, and other reusable materials will be recycled.

6.11.4.3 Effects on Local Landfills. The relatively small quantities of non-hazardous and hazardous wastes generated during project operation should have little impact on local landfills.

6.11.5 Waste Management Cumulative Impacts

The quantity of nonhazardous waste generated during the operation of the cogeneration facility will be insignificant, consisting of small quantities of normal office trash, packing materials, boxes, clean bottles, and various other nonhazardous materials. Landfill capacity in Sacramento County is adequate to accommodate nonhazardous waste disposal requirements for the Procter & Gamble Cogeneration Facility and other projects in the area until at least 2040 (Subsection 6.11.1.1).

Approximately 600,000 gallons maximum of hazardous waste will be generated during the life of the proposed facility. The three major landfills and the 26 waste treatment and recycling facilities in the state will have sufficient capacity for the disposal of the relatively small quantities of hazardous waste generated during the approximate 30 years that the Procter & Gamble Cogeneration Facility and other projects in the vicinity are in operation.

6.11.6 Mitigation

Mitigation for nonhazardous and hazardous wastes are addressed in the following subsections.

6.11.6.1 Nonhazardous Wastes. Because only small quantities of nonhazardous wastes will be generated during the construction or operation of the proposed project, the impact on local landfills and the environment generally will be negligible. No mitigation measures are required.

6.11.6.2 Hazardous Wastes. Hazardous wastes generated as a result of the proposed project will be handled, stored, transported, treated, and disposed of in accordance with all applicable federal, state, and local regulations and requirements. A licensed hazardous waste contractor will be engaged to collect and remove the waste materials from the project site and transport them to an approved transfer station. The hazardous waste subsequently will be shipped to a licensed facility outside of Sacramento County for final disposal. These procedures and the employment of qualified contractor personnel will ensure the protection of the environment and human health.

Plant workers will receive training in various aspects of hazardous waste procedures, including characteristics of hazardous wastes, packaging and labeling, recordkeeping, contingency planning, emergency response procedures, and other instructions that may be appropriate. The training provided will meet OSHA requirements.

Emergency response procedures will be prepared to address possible spills, leaks, or other releases of hazardous materials to the environment. The procedures will address hazardous materials storage and use locations, emergency equipment, clean-up and containment procedures, and other pertinent information. Emergency services will be coordinated with the local fire department and hospital. Arrangements also will be made at a health care facility for nonemergency doctor referrals. First aid kits will be provided at various locations at the facility. Supervisors and foremen will receive first aid instructions.

Reports required for the hazardous waste handled or generated by the cogeneration facility will be prepared, and copies of the reports, manifests, analytical data, and other documents related to the hazardous wastes will be retained onsite for reference and inspection.

A Business Plan also will be prepared which will include emergency response plans and procedures, and information and descriptions regarding the hazardous wastes stored or handled. In the event that threshold quantities of acute hazardous materials are handled, a Risk Management and Prevention Program will be developed. A description of the regulatory basis for these two plans is contained in Subsection 6.11.7.

The quantities of hazardous waste generated will be minimized. Nonhazardous materials will be substituted for hazardous materials where feasible, and hazardous materials will be reused where feasible. Solvents and other hazardous wastes will be shipped to appropriate facilities for recycling.

6.11.6.3 Existing Project Site Conditions. A Phase I environmental investigation conducted in June 1993 indicated that there are no contaminated soil, buried hazardous waste, underground storage tanks, or other conditions onsite that may be of concern. The Phase I ELA indicated that the property east of the project site across 83rd Street had, at one time, an underground gasoline storage tank on the property. Ground water samples have been collected from the adjacent site and tested, and some contaminants have been detected. During the first quarter of 1993, the concentrations of benzene, toluene, ethylbenzene, xylenes, 1,1-dichloroethene, and 1,1-trichloroethene, and methyl ethyl ketone were found to be below detection limits, and 1,1,1-trichloroethane concentration was 4.2 parts per billion. Total petroleum hydrocarbons as gasoline (THPg) were present in a concentration of 53 ppb, which is only 3 ppb above the detection limit.

There are no indications that pollutants from the adjacent area have affected the ground water quality at the project site. The proposed cogeneration facility will not use onsite well water and thus will not contribute to ground water contamination.

6.11.7 Laws, Ordinances, Regulations, and Standards (LORS)

The following federal and state waste-related laws, ordinances, regulations, and standards apply to the proposed project.

6.11.7.1 Federal LORS. The following federal LORS apply to the project:

- Resource Conservation and Recovery Act (RCRA) - 42 USC 6901 et seq. and 1984 RCRA Amendments - Public Law 98-616. The 1976 Federal RCRA sets forth standards for the management of hazardous solid wastes. The provisions of the Act may be administered in each state by the US Environmental Protection Agency (EPA). However, the law also allows EPA to delegate the administration of the RCRA program to the various states. When a state receives final EPA authorization, its regulations have the force and effect of federal law. EPA grants final authorization when a state program is shown to be equivalent to the federal requirements. California received final authorization on August 1, 1992.

  Subchapter III of RCRA establishes requirements for the management of hazardous wastes from the time of generation to the point of ultimate

treatment or disposal. Section 6921 requires EPA to promulgate regulations identifying hazardous wastes subject to the management standards either by listing them or describing characteristics which qualify the wastes as hazardous.

Section 6922 requires generators of hazardous waste to comply with requirements regarding the following:

-- Recordkeeping practices which identify quantities of hazardous wastes generated and their disposition.
-- Labeling practices and use of appropriate containers.
-- Use of a manifest system for transportation.
-- Submission of periodic reports to the USEPA or authorized state.

The RCRA also establishes requirements applicable to hazardous waste transporters, including recordkeeping, compliance with the manifest system, and transportation only to permitted facilities.

Amendments to RCRA passed in 1984 broadened regulatory control and banned land disposal of untreated hazardous wastes.

- Code of Federal Regulations, Title 40, Part 260 et seq. (40 CFR 260 et seq.) - Hazardous Waste Management System. These sections contain regulations promulgated by the USEPA to implement the requirements of the RCRA as described above. Characteristics of hazardous waste are described in terms of ignitability, corrosivity, reactivity, and toxicity, and specific types of wastes are listed.
- Comprehensive Environmental Response, Compensation, and Liability Act (CERCLA or Superfund) 42 USC 9601 et seq. as amended by the Superfund Amendments and Reauthorization Act of 1986 (SARA). Persons in charge of onshore facilities are required to report to the federal government any spill or other unpermitted release of a hazardous substance to the environment in a reportable quantity. Superfund defines *hazardous substance* as any material appearing in lists referenced in 42 USC 9601 (14) (Section 101 of the law). EPA's regulations at 40 CFR 302.4, Table 302.4, set forth the list of all hazardous substances under Superfund, and the reportable quantities for each.

6.11.7.2 State LORS. The following California state LORS apply to the project:

- Public Resources Code Sections 40000 et seq. (California Integrated Waste Management Act of 1989). These sections, making up Division 30 of the Public Resources Code, regulate solid waste management in California and

created the California Integrated Waste Management Board. The Board is required to adopt and revise minimum standards for solid waste handling and disposal, including design, operation, maintenance, and ultimate reuse of solid waste processing or disposal facilities.

Local government has the primary responsibility for solid waste management and planning. Each county and city must prepare and submit to the Integrated Waste Management Board a countywide integrated waste management plan which includes source reduction and recycling elements, a countywide siting element, and a summary of significant waste management problems facing the county. Within each county, an enforcement agency may be designated to carry out permitting, inspection, and enforcement of regulations at solid waste landfills, incinerators, and transfer and processing stations.

- Title 14, California Code of Regulations, Sections 17020 et seq. These regulations set forth planning guidelines for county solid waste management plans, minimum standards for solid waste handling and disposal, guidelines to ensure conformance of solid waste facilities with county solid waste management plans, as well as enforcement and administration provisions.
- California Health and Safety Code Sections 25100 et seq. (Hazardous Waste Control Act of 1972, as amended). This act creates the framework under which Californians manage and dispose of hazardous wastes. It also requires hazardous waste generators to file notification statements with CalEPA and creates a manifest system to be used when transporting such wastes. In addition, transporters of hazardous wastes must hold valid registrations with CalEPA.

  The Department of Toxic Substances Control (DTSC) is responsible for the administration and enforcement of the California Hazardous Waste Control Law (HWCL). The DTSC was created July 17, 1991, as a department of the CalEPA. The Toxic Substances Control Program of the former state Department of Health Services (DHS) was transferred to the CalEPA and redesignated DTSC.
- California Health and Safety Code Sections 25500 et seq. (Hazardous Materials Release Response Plans and Inventory). This portion of the Code requires businesses to prepare plans relating to the handling and release or threatened release of hazardous materials. Quantities of hazardous materials or mixtures (including hazardous waste) handled by businesses are

established which, if exceeded, require the preparation and implementation of a business plan. Business plans must include emergency response plans and procedures and information on hazardous wastes, including chemical composition, and maximum amounts handled. If certain quantities of acute hazardous materials are handled, a Risk Management and Prevention Program may be required to be prepared.

- Title 22, California Code of Regulations, Sections 66001 et seq. These sections set forth the state's minimum standards for the management of hazardous and extremely hazardous wastes, thereby implementing the Hazardous Waste Control Act of 1972, as amended.
- Chapter 12, Division 4.5. This section establishes requirements for generators of hazardous waste. Under these sections, waste generators must determine if their waste is hazardous according to listings in either Article 4 or Appendix X of Chapter 11 (Identification and Listing of Hazardous Wastes), or according to the characteristics specified in Article 3. As in the federal program, hazardous waste generators must obtain EPA identification numbers, prepare manifests before transporting the waste offsite, and use only treatment storage, disposal facilities, or transporters which have received EPA identification numbers. Chapter 12 also establishes recordkeeping, reporting, packaging, and labeling requirements for the generator.
- Water Code Sections 13000 et seq. (Porter-Cologne Water Quality Control Act). This law regulates the discharge of wastes which could affect water quality and is designed to protect surface and ground waters of the state against contamination and loss of beneficial use. The Act requires the State Water Resources Control Board to classify wastes according to the risk of impairing water quality and the types of disposal sites according to the level of protection provided for water quality.

  Regional Water Quality Control Boards must review and classify waste disposal sites consistent with the classifications adopted by the State Board. The regional boards also issue waste discharge requirements addressing the nature and limiting the release of any wastes which could degrade waters of the state. Discharge of a hazardous substance which is not in compliance with waste discharge requirements requires notification of the State Office of Emergency Services in accordance with the spill reporting provision of the State Toxic Disaster Contingency Plan.

For purposes of spill reporting, the State Water Resources Control Board must establish reportable quantities of hazardous wastes and hazardous materials based on their potential to degrade surface or ground water and the attendant environmental and health risks.

- Title 23, California Code of Regulations, Sections 2510 et seq. These sections (Chapter 15, Discharges of Waste to Land) establish waste and site classifications and waste management requirements for waste treatment, storage, or disposal accomplished by landfills, surface impoundments, waste piles, and land treatment facilities.

  Article 2 contains a waste classification system which provides the basis for determining which wastes may be discharged at each class of waste management unit.

  Article 3 contains classification and siting criteria for waste management units and establishes three classes of disposal units (e.g., landfills): Class I for hazardous waste, Class II for designated waste, and Class III for nonhazardous solid waste.

  Article 9 requires anyone proposing to discharge wastes to land where water quality can be affected to submit a report of waste discharge to the regional board which then adopts waste discharge requirements.

6.11.7.3 Local LORS. The following local requirements apply to the project:

- Business Plan--Businesses handling hazardous materials or waste in excess of the threshold quantities must submit a Business Plan to the designated administering agency. A typical Business Plan must contain detailed inventory forms, including the following items:
  - -- Identification of hazardous material handling.
  - -- Identification of each category of hazardous waste handled.
  - -- The expected maximum amount of each material handled onsite in any 1 year.
  - -- A description for the use of emergency response agencies where hazardous material exist.
  - -- An emergency response plan and procedures to be instituted in the event of a release or threat of a release.

  Business Plans and inventory requirements must be coordinated with local government building and occupancy permit programs. No city or county may issue a final occupancy permit unless these requirements have been met.

- Risk Management and Prevention Program--Businesses that handle acutely hazardous waste in excess of specific threshold quantities are subject to certain registration requirements and are required to prepare a Risk Management and Prevention Program (RMPP).

  Businesses handling "acutely hazardous materials" (AHM) that are found by the local administering agency to present a sufficient risk must prepare an RMPP. The RMPP is intended to prevent accidents and provide a framework for responses to onsite and offsite consequences of accidents. It has not been determined if an AHM will be used at the proposed cogeneration project. If an RMPP is required, it must include, at a minimum, the following:

  -- Identification and description of AHM accidents for the past 3 years.
  -- A description of design, operating, and maintenance controls instituted to minimize accident risks.
  -- The findings of a "hazard and operability study" assessing the risks of AHM accidents involving error, equipment failure, or external events.
  -- The results of an "offsite consequence analysis" using "pessimistic air dispersion" and other adverse environmental conditions.

  Businesses must identify on their building permit application whether it will be subject to RMPP requirements. Upon submitting the building permit application, the affected business must notify the local RMPP administrating agency within 5 days that they will be handling regulated quantities of acutely hazardous materials. Cities and counties are also prevented from issuing a final certificate of occupancy without evidence that regulatory requirements have been met.

6.11.7.4 Compliance with LORS. The proposed cogeneration project will comply with all applicable federal, state, and local LORS listed and described in Subsections 6.11.7.1, 6.11.7.2, and 6.11.7.3. All necessary federal, state, and local permits and approvals will be obtained. Required reports and information concerning the construction and operation of the planned facility will be prepared and submitted on a timely basis. In addition, a Business Plan also will be prepared. A Risk Management Prevention Program also will be developed, if it is determined that regulated quantities of acutely hazardous materials will be handled at the cogeneration facility.

6.11.8 References

California Department of Health Services, February 1991, *Hazardous Waste Generator Requirements*, Sacramento, California.

California Environmental Protection Agency, October 1992, *Tiered Permitting Factsheet*, Department of Toxic Substances Control, Sacramento, California.

California Integrated Waste Management Board, 1992, *Active Landfills, May 27, 1992*, Sacramento, California.

Sacramento Area Council of Governments, January 1990, *Hazardous Waste Management Plan for the SACOG Region*, Sacramento, California.

6.12 Public Health/Hazardous Material Handling

This section of the AFC is an assessment of the potential for impacts associated with project-related emissions. The potential of public exposure to pollutant emissions during routine operations, upsets, accidents, and control equipment failure is evaluated. This analysis involves identification of potential pollutant emissions, environmental transport modeling to evaluate the potential for public exposure, evaluation of toxicity data related to emitted pollutants of concern, and the identification of the public health impacts.

Public health impacts and mitigation are discussed in Subsection 6.12.2 for toxic air emissions from the combustion sources and Subsection 6.12.3 for hazardous material handling.

6.12.1 Existing Local Land Use and Sensitive Receptors

An evaluation of existing conditions at the proposed site and in the immediate vicinity allows for a determination of potential adverse impacts to public health. Identification of populations potentially impacted and the location of "sensitive" population groups allows for the evaluation of acute and chronic exposure to pollutants potentially emitted from the proposed site.

6.12.1.1 Local Land Use. The proposed site is in an area designated as industrial and is zoned for heavy manufacturing. The project site is undeveloped, although heavily disturbed. Access roads exist onsite. Ditches have rerouted the natural water drainage. Section 6.1, Air Quality, discusses existing climatology and meteorology. The existing geology and seismicity are discussed in Section 6.2, Soils and Geology. Section 6.6, Land Use, provides a discussion of site characteristics and land use trends. A map showing existing land use and ownership parcels within 1 mile of the proposed site is presented on Figure 6.6-5. This map indicates that use of the proposed site is consistent with existing land use and zoning of the area. Future land use trends are discussed in Section 6.6, Land Use.

The Sacramento US Army Depot, an existing California State Superfund site, is approximately 2,000 feet south of the proposed site. Test results from a ground water monitoring program at the depot found that solvents were present in the ground water at concentrations 5 to 20 times the state action levels (Sacramento County 1986). Two other existing California State Superfund sites (Palm Iron and Bridge Works, and Sacramento Surplus Sales Company) located to the southeast and east, respectively, are within 3 miles of the proposed site. An industrial facility immediately to the east of the proposed site also has been identified as a source of

ground water contamination. Contaminants that have been found under this facility include total petroleum hydrocarbons (TPH) as gasoline, 1,1,1-trichloroethane (TCA), benzene, toluene, ethylbenzene, xylenes (BTEX), methyl ethyl ketone (MEK), tetrachloroethene, 1,1-dichloroethene, and 1,1-dichloroethane.

Hazards external to the proposed project site that may affect the placement of acutely hazardous material (AHM) storage and handling facilities onsite include the tracks of the Central California Traction Company and Southern Pacific Railway Company to the immediate north of the site. These facilities may be used by railway tank cars that transport or otherwise handle varying quantities of hazardous materials. The siting of AHM storage and handling locations on the proposed site has been arranged in conformance with CEC guidance concerning minimum distances between these facilities and access of emergency response equipment to these facilities.

6.12.1.2 Sensitive Receptors. Residential areas do not occur in proximity to the proposed site. No residential areas are located within one-quarter mile (1,320 feet) of the proposed site. The nearest residential area is approximately 2,500 feet to the west of the proposed site across Power Inn Road. This is the nearest "sensitive receptor" to the site.

Other sensitive receptors located within 3 miles of the proposed site, such as schools, child care facilities, medical facilities and residential care facilities, are presented on Figure 6.12-1. Maps, government documents, and local telephone books were used to locate the sensitive receptors:

- Schools--Numerous (33) elementary and secondary schools are located within 3 miles of the proposed site. However, the nearest school is more than 1 mile from the site.
- Child Care Facilities--The nearest known child care facility is more than 2 miles from the proposed site.
- Medical Facilities--The University of California-Davis Medical Center is the only facility of this type located within 3 miles of the proposed site. This facility is just inside the 3 mile radius to the northwest of the proposed site.
- Residential Care Facilities--Two residential care facilities are located within 3 miles of the proposed site. The nearest facility of this type is the California Youth Authority, more than 1 mile to the northwest of the proposed site. Other residential care facilities, such as convalescent homes, are not within a 3 mile radius of the proposed site.

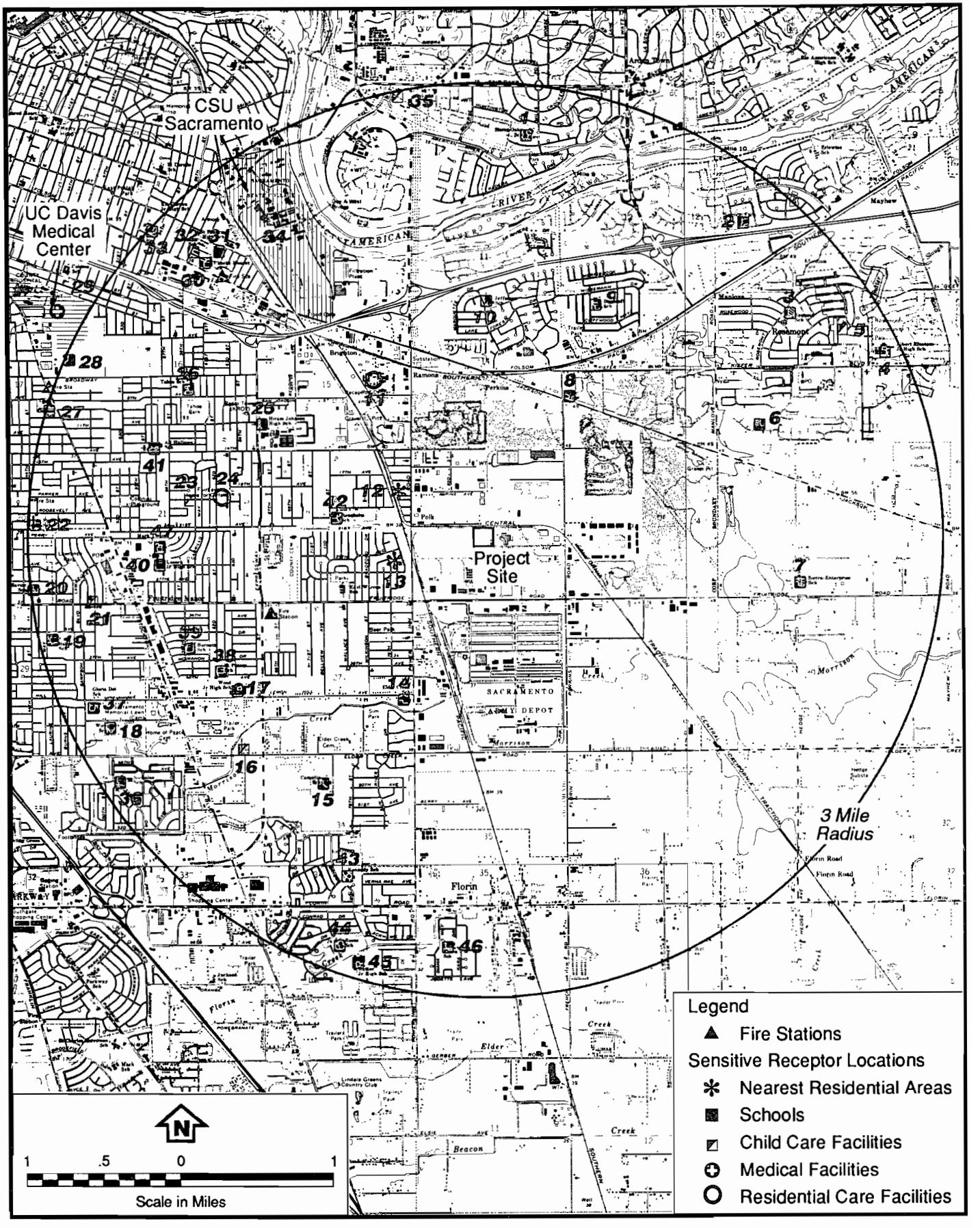

Base Map Source: USGS, Sacramento East, Carmichael, Florin, and Elk Grove, Calif, 1:24,000 scale quadrangles.

SENSITIVE RECEPTOR LOCATIONS

Figure 6.12-1

Also shown on Figure 6.12-1 are the locations of fire stations (four) that are within 3 miles of the proposed site. Figure 6.12-2 and Table 6.12-1 delineate the census tracts within a 3 mile radius of the project site. Also shown on this figure are the locations of the Central California Traction Company and Southern Pacific Railway Company tracks discussed above.

6.12.2 Air Toxics Emissions

Air toxic emissions generated from utility sources can enter the population through various media or pathways. An air toxic has multiple pathways if it enters the body through processes other than inhalation. Noninhalation pathways are divided into two categories, primary (direct) and secondary (indirect). Primary noninhalation pathways are direct paths associated with entering the population through ingestion and dermal exposure. Secondary noninhalation pathways are indirect paths associated with exposure to a toxic through a food source. An emission and multi-path exposure risk assessment of air toxics generated during the normal operation of the proposed units was performed.

6.12.2.1 Applicable Regulations. The requirements for the air toxic risk assessment are found in the Air Toxics "Hot Spots" Information and Assessment Act of 1987 (Health and Safety Code, Section 44360). This law established statewide guidelines for air toxic risk assessments. These guidelines have been outlined in the California Air Pollution Control Officers Association's (CAPCOA) *Air Toxics "Hot Spots" Program Risk Assessment Guidelines*, (January 1992).

6.12.2.2 Summary of Results. (Later).

6.12.2.3 Toxic Pollutant Emission Analysis. (Later).

6.12.2.3.1 Hazard identification. (Later).

6.12.2.3.2 Toxic pollutant emissions. (Later)

6.12.2.4 Screening Health Risk Assessment. The screening health risk assessment procedure includes the calculation of air toxic impacts through the use of air dispersion modeling and characterization of the associated health risks. The ACE2588 Risk Assessment Computer Model was used to identify the specific toxic health risks associated with the project.

6.12.2.4.1 Source parameters. (Later).

6.12.2.4.2 Sensitive receptor locations. (Later).

6.12.2.4.3 Toxic air dispersion modeling. (Later).

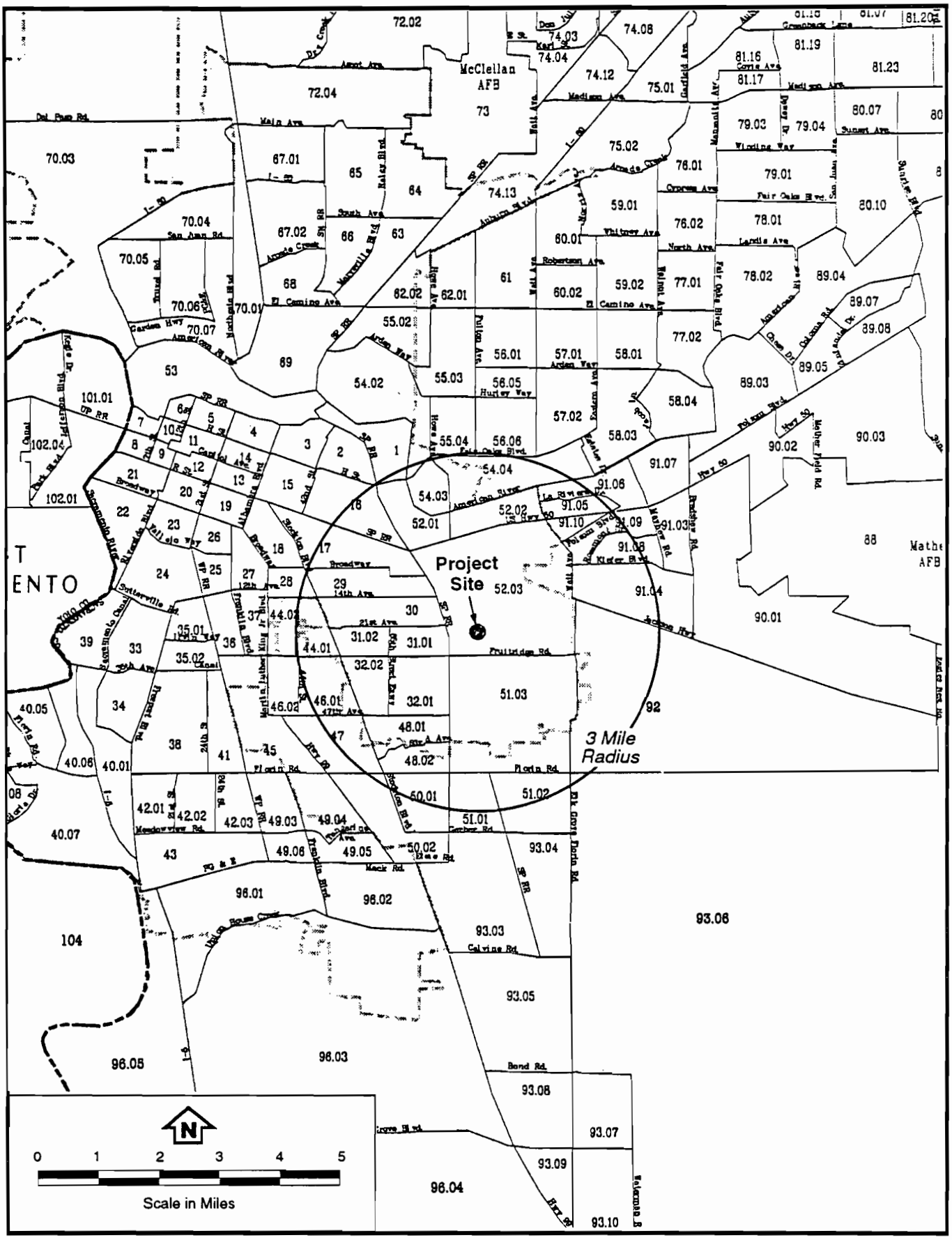

Source: Sacramento Area Council of Governments

POPULATION DISTRIBUTION (Census Tracts)

Figure 6.12-2

Table 6.12-1
Census Tract Populations
Within 3 Miles of the Project Site

Tract Number	Population*
1	3,531
16	5,153
17	4,936
28	3,708
29	4,845
30	6,668
31.01	3,701
31.02	3,134
32.01	6,795
32.02	4,875
44.01	3,926
46.01	6,469
47	7,198
48.01	4,769
48.02	4,333
50.01	7,235
50.02	4,749
51.01	3,960
51.02	4,224
51.03	758
52.01	3,037
52.02	3,517
52.03	7,420
54.02	2,554
54.03	2,455
54.04	5,579
91.04	8,656
91.05	3,012
91.06	4,495
91.08	3,981
91.09	5,554
91.1	1,519
92	1,511

*Populations are based on 1990 Census data.

Source: Sacramento Area Council of Governments (SACOG) and US Census Bureau.

Table 6.12-2
Characterization of the Air Toxic Health Risks*
(Later)

*Source: Output report generated by the ACE2588 Risk Assessment Computer Model.

Table 6.12-3
Emission Factors and Emission Rates for the
LM6000 Combined Cycles[a]
(Later)

[a]Per unit.

[b]Emission rate calculated as the product of SCAQMD's approved toxic emission factor and a maximum heat input (including duct boring) of 459.74 MBtu/h.

[c]Combustion turbine performance data sheets which provide emissions in lb/h.

Table 6.12-4
Emission Factors and Emission Rates for the
LM6000 Simple Cycle
(Later)

[a]Emission rate calculated as the product of SCAQMD's approved toxic emission factors and a maximum heat input of 387.76 MBtu/h.

[b]Combustion turbine performance data sheets which provide emission in lb/h.

Table 6.12-5
Source Parameters
(Later)

Parameter	LM6000 Combined Cycles	LM6000 Simple Cycle
Emission rate (g/s)		
Exit gas temperature (K)		
Exit gas velocity (m/s)		
Stack height (m)		
Stack diameter (m)		

Table 6.12-6
Sensitive Receptors

Receptor Number	UTM Location North (km)	UTM Location East (km)	Terrain Height at Receptor (feet)	Description
1	4,270.08	640.15	40	Sierra Oaks School
2	4,269.12	642.34	45	Salmon Falls Park
3	4,268.14	642.84	50	Sequoia School
4	4,267.76	643.90	60	Albert Einstein School
5	4,268.00	643.38	50	Childcare
6	4,267.00	642.53	55	School
7	4,265.34	642.94	55	Sierra-Enterprise School
8	4,267.27	640.48	45	School
9	4,268.26	640.82	40	Bancroft School
10	4,268.32	639.66	40	Jefferson School
11	4,267.46	638.47	40	CYA Reception Center
12	4,266.34	638.80	40	Near-by Residential
13	4,265.46	639.24	40	Near-by Residential
14	4,264.10	639.24	35	Elder Creek School
15	4,263.24	637.90	30	Camellia School
16	4,263.56	637.06	30	Childcare
17	4,264.20	637.00	30	Woud School
18	4,263.83	635.64	25	Wire School
19	4,264.57	635.04	30	Baker School
20	4,265.14	634.77	30	Our Savior School
21	4,265.00	635.41	30	Childcare
22	4,265.83	634.85	30	Fruit Ridge School
23	4,266.08	636.53	35	Childcare
24	4,266.08	636.93	35	Fairhaven Home for Girls
25	4,267.00	637.42	40	Hiram Johnson School
26	4,267.42	636.51	35	Tahoe School
27	4,267.10	635.00	30	Donner School
28	4,267.48	635.16	30	School
29	4,268.18	634.98	30	UC Davis Med Center
30	4,268.56	636.73	35	Phoebe Hearst School
31	4,268.77	636.93	35	St. Francis School
32	4,268.77	636.65	35	St. Mary's School
33	4,268.95	636.12	30	Kit Carson School
34	4,267.00	637.48	35	SAC St. College
35	4,270.46	638.75	35	Childcare
36	4,263.08	635.73	25	Nicholas School
37	4,263.86	635.42	25	Gloria Dei School
38	4,264.24	636.77	30	St. Peters School
39	4,264.51	636.46	30	Burnett School
40	4,265.38	636.17	30	Lassen School

Table 6.12-6 (Continued)
Sensitive Receptors

Receptor Number	UTM Location North (km)	UTM Location East (km)	Terrain Height at Receptor (feet)	Description
41	4,266.63	636.16	35	All Hallows School
42	4,265.87	638.02	35	Bonnheim School
43	4,262.18	638.16	30	Kennedy School
44	4,261.50	638.04	26	Reese School
45	4,261.32	638.30	25	Rutter School
46	4,261.50	639.24	30	Elomn School
47	4,265.59	636.17	30	Mark Twain School
48	4,266.06	639.29	40	Maximum 1-hour Receptor*
49	4,267.49	640.45	50	Maximum Annual Receptor*

*Maximum impacted receptor location from the AQIA modeling.

6.12.2.4.4 Risk assessment computer modeling. (Later).

6.12.2.5 Risk Characterization. (Later).

6.12.2.5.1 Cancer risk. (Later).

6.12.2.5.2 Noncancer risks. (Later).

6.12.2.6 Mitigation. (Later).

6.12.2.7 Cumulative Impacts. (Later).

6.12.2.8 Compliance with LORS. (Later).

6.12.2.8.1 Federal LORS. (Later).

Table 6.12-7
Maximum Annual Impacts for Carcinogenic Air Toxics*
(Later)

Toxic Pollutant	Maximum Annual Impacts, ug/m3 **
Acetaldehyde	
Benzene	
Formaldehyde	

*Combined impact of the entire facility.

**Maximum annual impacts occurred at sensitive receptor 49, which was the maximum impacted receptor.

Table 6.12-8
Cancer Risk Assessment
(Later)

Air Toxic	Lifetime Individual Excess Cancer Risk
Acetaldehyde	
Benzene	
Formaldehyde	
Total Lifetime Individual Excess Cancer Risk	

Table 6.12-9
Comparison of Acute and Chronic Exposure Levels to the Adopted OEHHA and EPA AELs (Later)

	Chronic*			Chronic*		Acute**		
Air Toxic	Concentration ug/m^3	AEL, ug/m^3	Chronic Hazard Index	NonInhal.** Dose Sum, mg/kg-d	AOD, mg/kg-d	Conc. μg/m^3	AEL, ug/m^3	Acute Hazard Index

*Chronic health risk data based on the 1987 air toxics modeling output.

**Acute health risk data based on the 1988 air toxics modeling output.

6.12.2.8.2 State LORS. (Later).

6.12.3 Hazardous Materials

6.12.3.1 Identification of Hazardous Materials. Several hazardous materials will be used at the plant site during normal operation of the facility and during nonroutine chemical cleaning activities. Figure 6.12-3 is a schematic of the proposed facility that shows the storage locations of the hazardous materials onsite. Representative Material Safety Data Sheets for chemicals that will be used onsite are provided in Appendix M. The hazardous materials that will be stored in significant quantities onsite* are as follows:

- Aqueous ammonia--Used in the SCR, and in feedwater pH control.
- Sodium hydroxide and sulfuric acid--Used in the demineralizer system.
- Sodium hypochlorite--Biocide for condenser cooling system.
- Hydrazine--Feedwater oxygen scavenger.
- Lubricating oils--Used for equipment maintenance.
- Miscellaneous solvents and cleaning rags--Used for equipment maintenance.
- Paint containers--Used for equipment maintenance.

Hydrochloric acid and ammonium bifluoride, which will be used in the chemical cleaning of the HRSG, will be onsite initially and then once every 3 to 5 years for a 2 week period or less. In Section 3.11, Table 3.11-1 identified each hazardous chemical, the intended use, and the estimated quantity to be stored onsite.

The project plans to use materials that are intrinsically safe or to incorporate design features that will reduce the levels of risk associated with the use of any hazardous material, whenever possible. Normal storage and use of these materials will not pose any potential hazards to public health because of the incorporation of appropriate safety design standards in the overall design of the facility. However, accidental spills or releases of hazardous materials could potentially affect nearby areas or expose sensitive populations of the public if releases were large enough to migrate offsite. This subsection provides an assessment of such possibilities.

---

*(Defined as the threshold planning quantity (TPQ) in Appendix A of Part 355 of Subchapter J of Chapter I of Title 40 of the Code of Federal Regulations. and referenced in Section 25532(d) of the California Health & Safety Code, Division 20, Chapter 6.95)

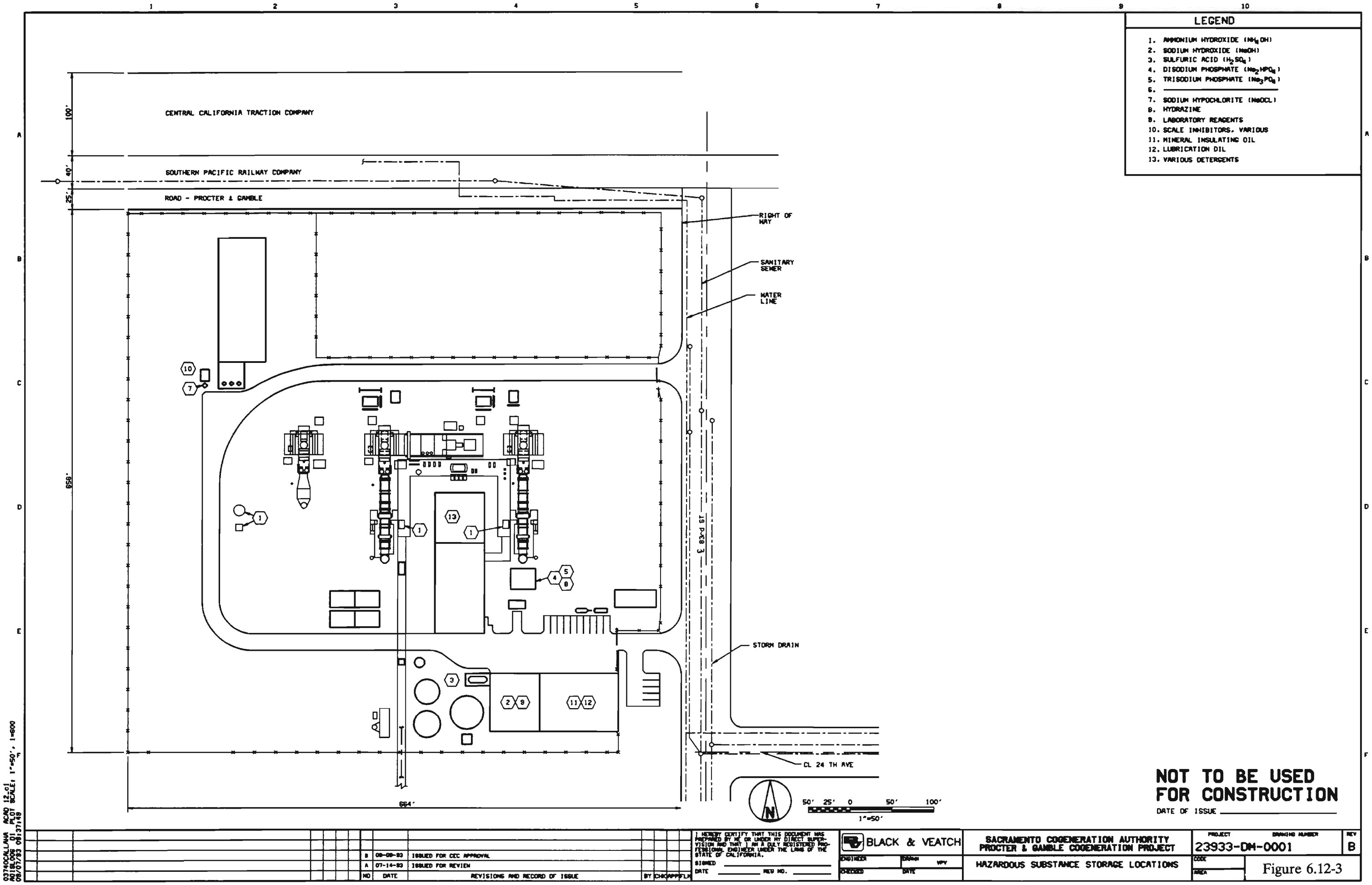

LEGEND
1. AMMONIUM HYDROXIDE (NH_4OH)
2. SODIUM HYDROXIDE (NaOH)
3. SULFURIC ACID (H_2SO_4)
4. DISODIUM PHOSPHATE (Na_2HPO_4)
5. TRISODIUM PHOSPHATE (Na_3PO_4)
6. ———
7. SODIUM HYPOCHLORITE (NaOCL)
8. HYDRAZINE
9. LABORATORY REAGENTS
10. SCALE INHIBITORS, VARIOUS
11. MINERAL INSULATING OIL
12. LUBRICATION OIL
13. VARIOUS DETERGENTS
CENTRAL CALIFORNIA TRACTION COMPANY
SOUTHERN PACIFIC RAILWAY COMPANY
ROAD - PROCTER & GAMBLE
RIGHT OF WAY
SANITARY SEWER
WATER LINE
STORM DRAIN
CL 24 TH AVE
℄ 83rd ST
100'
40'
25'
658'
664'
50' 25' 0 50' 100'
1"=50'
NOT TO BE USED FOR CONSTRUCTION
DATE OF ISSUE
B 08-09-93 ISSUED FOR CEC APPROVAL
A 07-14-93 ISSUED FOR REVIEW
NO DATE REVISIONS AND RECORD OF ISSUE BY CHK APP FLM
I HEREBY CERTIFY THAT THIS DOCUMENT WAS PREPARED BY ME OR UNDER MY DIRECT SUPERVISION AND THAT I AM A DULY REGISTERED PROFESSIONAL ENGINEER UNDER THE LAWS OF THE STATE OF CALIFORNIA.
SIGNED
DATE REG NO.
BLACK & VEATCH
ENGINEER DRAWN VPV
CHECKED DATE
SACRAMENTO COGENERATION AUTHORITY
PROCTER & GAMBLE COGENERATION PROJECT
HAZARDOUS SUBSTANCE STORAGE LOCATIONS
PROJECT DRAWING NUMBER
23933-DM-0001
REV B
CODE
AREA

Figure 6.12-3

Hazardous materials management is addressed in Section 25531 et seq. of the California Health and Safety Code (H&SC). These regulations established the requirement for registration of any business that handles acutely hazardous materials (AHM) in quantities equal to or greater than the threshold planning quantities listed in Appendix A of 40 CFR 355 (list of extremely hazardous substances for emergency planning and notification). The list of extremely hazardous substances in 40 CFR 355 is defined as AHMs for purposes of the H&SC. H&SC Section 25531 et seq. also require the preparation of a Risk Management and Prevention Program (RMPP) by handlers of AHMs, where there is a significant likelihood that the use of the materials may pose an AHM accident risk. An RMPP typically identifies AHMs and assesses zones of vulnerability for each AHM handled at the facility in quantities greater than their respective threshold planning quantities.

The AHMs to be used at the facility include sulfuric acid, hydrazine, and hydrochloric acid. Of these materials, only hydrochloric acid and hydrazine may have the potential to generate hazardous gases that may migrate offsite when released. Hydrazine will be stored in containers that are smaller than their threshold planning quantities. Sulfuric acid is a liquid with very low vapor pressure. Only hydrochloric acid (HCl) and aqueous ammonia (NH_3), which is not an AHM, have the potential to migrate offsite. An RMPP will be prepared prior to operation of the facility for HCl and sulfuric acid.

6.12.3.2 Determination of Vulnerable Zones. An analysis of vulnerable zones for both NH_3 and HCl was performed using the procedures in *Technical Guidance for Hazards Analysis* (EPA 1987). This guidance document was developed by the US Environmental Protection Agency (EPA) in conjunction with the Federal Emergency Management Agency (FEMA) and the US Department of Transportation (DOT) to provide guidance to local emergency planning committees in the assessment of hazards related to potential airborne releases of extremely hazardous substances. The estimated vulnerable zones were compared to the sensitive receptors (e.g., hospitals, schools, nursing homes, and day-care centers) identified in Subsection 6.12.1.2 and other land uses, such as major thoroughfares within the zones, to assess potential risk to the public. The vulnerability analysis is intended to provide a screening-level assessment to identify areas, and associated populations that may be affected by an accidental AHM release. The analysis is not considered comprehensive, but rather provides a conservative indication whether additional assessment is necessary.

Estimating the size of vulnerable zones requires the consideration of a number of variables. These variables include quantities and rates of release of AHMs to the air, meteorological conditions, surrounding land uses (urban versus rural), and levels of concern (LOC). An LOC is defined as the concentration of an AHM in air, above which serious irreversible health effects may exist as a result of a single exposure for a relatively short period of time (EPA 1987). The EPA guidance document estimates LOCs by using one-tenth of the "immediately dangerous to life and health" (IDLH) levels published by the National Institute for Occupational Safety and Health. IDLH levels for NH_3 and HCl are 500 ppm (0.348 g/m^3) and 100 ppm (0.149 g/m^3), respectively. At one-tenth of these levels, as given in the EPA guidance, LOCs are 0.035 g/m^3 for NH_3 and 0.015 g/m^3 for HCl.

The EPA's hazards analysis guidance document contains equations for the estimation of rates of release of the chemicals considered and the sizes of the vulnerable zones. The airborne release rate equation for chemicals spilled as liquids into contained areas is given as follows:

$$QR = \frac{0.106 \times (u)^{0.78} \times MW^{2/3} \times A \times VP}{R \times (T1 + 273)} \quad , \qquad (1)$$

where

QR = Rate of release to air (lb/min);
MW = Molecular weight (g/g mole);
A = Surface area of spilled material (ft^2);
VP = Vapor pressure of material at temperature T1 (mm Hg);
R = 82.05 atm cm^2/g mole K;
K = Gas phase mass transfer coefficient (cm/sec);
T1 = 25 C; and
u = Wind speed (1.5 m/sec).

For situations where there is the possibility of a spill into a noncontained area (as is the case for HCl), a slightly different form of the equation is appropriate. Here, the quantity spilled is used with the assumption that a pool forms that is 1 cm deep. The equation for this case is as follows:

$$QR = \frac{0.106 \times (u)^{0.78} \times MW^{2/3} \times 0.49 \times QS \times VP}{82.05 \times (T1 + 273)} \quad , \qquad (2)$$

where QS = Quantity spilled (lbs).

The calculation of vulnerable zones assumes that HCl will spill into a non-contained area. HCl will be used and stored on the plant site only during chemical cleaning of the HRSGs. The HRSGs will be chemically cleaned approximately every 3 to 5 years. HCl will be onsite for 2 weeks or less. Temporary spill barricades will be installed around the chemical cleaning equipment to contain any spills, but permanent containment will not be provided.

The calculation of vulnerable zones assumes that aqueous ammonia (NH_3) storage tank will be spilled in significant quantities only within its containment area during unloading operations or during normal operating conditions. This is considered the worst-case accidental release scenario. The minimum containment area for the worst-case scenario, as calculated, would have a surface area of 3,742 ft^2 and a depth of 0.37 ft. This worst-case scenario, using a containment structure with a very large surface area, provides the largest vulnerable zone. A containment structure with a smaller surface area would provide a significantly smaller vulnerable zone. Spillage of NH_3 under other scenarios (leaks from piping, valves, etc.) is assumed to result in a spillage of much less NH_3 over a smaller area than for a tank rupture. Spillage of the HCl or NH_3 during transport to the site was not considered.

The vulnerable zones for ammonia (NH_3) and hydrochloric acid (HCl) were based on the procedures provided in Appendix G of the *Technical Guidance for Hazards Analysis* that uses the QR values calculated above and LOC and IDLH levels given in Appendices C and D, respectively, of the guidance document. Diffusion coefficients representative of urban conditions and stability classes E-F were used for this assessment. The vulnerable zone sizes are included in Table 6.12-10 and are shown on Figure 6.12-4. The analysis shows that calculated vulnerable zones resulting from an accidental release of aqueous ammonia or hydrochloric acid are small and will not extend to the nearest offsite sensitive receptors to the west of the plant site. No identified sensitive receptors are included in the zones. Therefore, it is concluded that the combination of design mitigation measures to reduce the risk of accidental releases and the relatively small sizes of calculated vulnerable zones result in an overall very low risk to the public health.

6.12.3.3 Other Considerations. The accidental mixing of plant materials presents a potential hazard resulting from evolution of toxic gases. The greatest potential hazard would be the mixing of aqueous ammonia and sodium hypochlorite. However, the physical separation of plant chemical storage areas, separate truck fill connections for each storage tank, and the use of signs to identify the contents of

Table 6.12-10
Vulnerable Zones for Hazardous Materials

Material	MW[a]	VP[b] (mm Hg)	Area (ft^2)	QR[c] (lb/min)	LOC[d] (g/m^3)	VZ[e] (ft)	IDLH Levels (ppm)	Vulnerable Zone Radius for IDLH Levels (ft)
NH_3	17	656	3,472	89.67	0.035	2,461	500	738
HCl	36.5	15.1	1,470	1.45	0.015	443	100	138

[a]Molecular weight.

[b]Vapor pressure at 25 C, Chemical Engineers' Handbook, 5th Edition, Perry & Chilton.

[c]Release rate to air; from equation (1) or (2).

[d]Level of concern.

[e]Vulnerable zone radius.

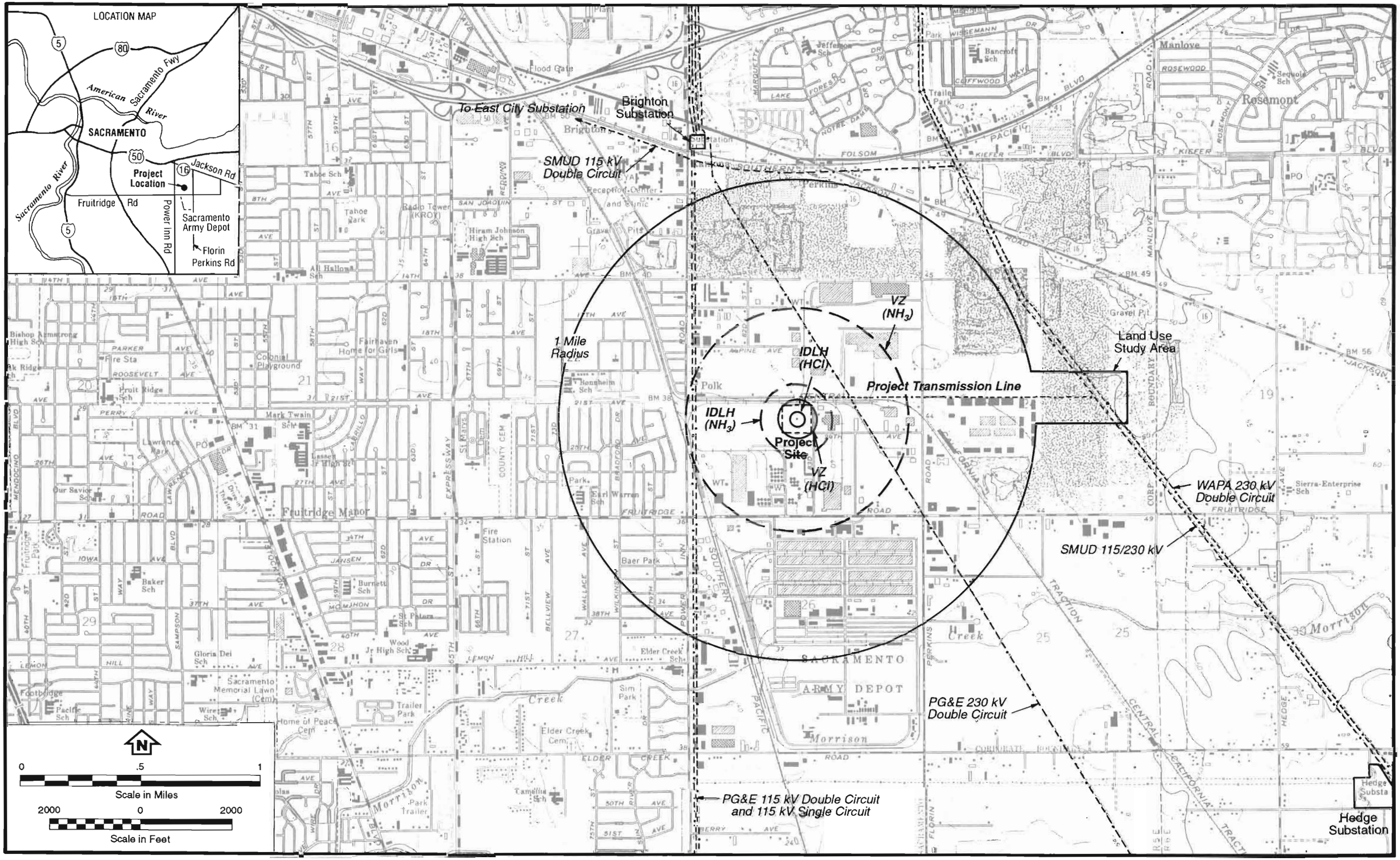

Base Map Source: USGS, Sacramento East and Carmichael, Calif, 1:24,000 scale quadrangles.

MAXIMUM VZ AND IDLH AREAS (NH_3 and HCl)

Figure 6.12-4

storage tanks should prevent accidental mixing of incompatible materials. Transfer procedures specific to the material will be followed by trained plant personnel.

Chemicals transported onsite for cleaning the plant boilers will be handled by experienced contractors specializing in boiler cleaning operations involving acids and alkaline materials.

Plant chemicals listed in Table 3.11-1, Section 3.11, Waste Disposal and Management, do not pose a fire or explosion hazard at ambient conditions when stored in appropriate tanks and areas provided by design. Combining various chemicals or storing the chemicals at higher temperatures and pressures than recommended by the manufacturer could result in explosive mixtures. However, accidental mixing of incompatible materials should be prevented with the safety features described above. Handling of plant fuels and chemicals will be performed by personnel trained and familiar with the safety procedures and the chemical handling equipment.

6.12.3.4 Risk Management Prevention Program. Hazardous materials and acutely hazardous materials used at the plant site will be handled in accordance with the requirements of The City of Sacramento Fire Department and the Environmental Health Branch of the Sacramento County Health Department.

6.12.3.4.1 General responsibilities. Certain hazardous materials inventory management requirements and emergency response planning responsibilities have been imposed on business and local authorities. Local implementing agencies must regulate the storage of hazardous materials and establish emergency response plans in the event of a hazardous material release. For the project vicinity, the City of Sacramento Fire Department and the Environmental Health Branch of the County Health Department have primary authority for fire safety and for enforcement and implementation of state regulations regarding emergency response and hazardous materials management.

6.12.3.4.2 Regulated materials. "Hazardous material" is defined as any material that, because of its quantity, concentration, or physical and chemical characteristics, poses a significant present or potential hazard to human health and safety or to the environment if released in the workplace or the environment. Hazardous materials include, but are not limited to, hazardous substances, hazardous waste, and any material that a handler or the administering agency has reasonable basis for believing would be injurious to the health or safety of persons or harmful to the environment if released into the workplace or the environment. This definition is intended to be inclusive and is not restricted to any set of pre-identified lists.

A hazardous substance includes a substance or chemical product for which one of the following applies:

- The manufacturer is required to prepare a material safety data sheet.
- The substance is listed as a radioactive material in 10 CFR Chapter 1. Appendix B.
- The substance is listed by the DOT as hazardous.
- The material is listed in subdivision (b) of Section 6382 of the Labor Code.

However, lubricating oil is not considered a regulated material, even if it otherwise meets any of the above criteria.

6.12.3.4.3 Regulated parties. Business Plan and Inventory Reporting Requirements apply to businesses handling hazardous materials. "Handle" is defined broadly and means "to use, generate, process, package, treat, store, emit, discharge, or dispose of a hazardous material in any fashion." "Handler" means a business handling a hazardous material.

6.12.3.5 Business Plan. A Business Plan, discussing applicable hazardous material use and storage, will be developed prior to operation of the proposed facility.

6.12.3.5.1 Reporting thresholds. A number of threshold reporting quantities has been established for hazardous materials grouped according to their physical state:

- Fifty-five gallons of a liquid.
- Five hundred pounds of a solid.
- Two hundred cubic feet of a compressed gas.
- A quantity for radioactives as established by state or federal law requiring preparation of an emergency plan.

Generally, businesses handling materials in quantities less than these established thresholds are exempt from the Business Plan requirements, unless an administering agency requires the business to report.

6.12.3.5.2 Business plan contents. Businesses handling hazardous material or wastes in excess of threshold quantities must submit a Business Plan to the local administering agency. The Business Plan must be reviewed and updated every 2 years. In addition, any amended Business Plan must be submitted within 30 days to the local administering agency whenever a 100 percent increase in hazardous materials occurs; new hazardous materials are added; there is a change in storage, location, or use of the hazardous materials; or there is a change in business name, ownership, or address.

A Business Plan must contain detailed inventory forms, including the following items:

- Identification and quantity of all hazardous material and waste handled.
- Identification of each category of hazardous waste handled, including compositions of the waste and an expected range of concentrations.
- The expected maximum amount of each material handled onsite in any 1 year.
- A description for the use of emergency response agencies where hazardous materials are handled and how these materials are handled.
- The business' SIC code number and a brief description of the business.
- The name, title, and 24 hour telephone number of the designated emergency response contact individual and alternate.

The detailed inventory must also include an estimate of the total amount of hazardous waste handled by the business in a year.

6.12.3.5.3 Emergency response plan. The Business Plan also must contain an emergency response plan and procedures to be instituted in the event of a release or threat of a release. The emergency response plan must contain the following, at a minimum:

- A notification plan requiring immediate notification of:
  - -- The State Office of Emergency Services (OES).
  - -- The local administering agency.
  - -- Local emergency response personnel.
  - -- Necessary facility emergency response personnel.
- Identification of appropriate local medical institutions.
- Identification of areas and systems at the facility that require immediate inspection or isolation because of their inherent vulnerability to earthquakes.
- A safety and release response training program for employees.

6.12.3.5.4 Reporting releases. Any actual or threatened release of hazardous material must be reported immediately to the local administering agency and to OES. OES requires that the notice must include the following:

- The location of the release or threatened release.
- Name of person reporting.
- Identification of the hazardous material involved.
- An estimate of the quantities of materials involved.
- A description of the hazard.

l, however, is not required if the release or threatened release does not reasc present a real or potential hazard to health, safety, property, or the envimt.

6.12 Cumulative Impacts

otential cumulative impacts on existing public receptors and future residdevelopment are expected to be minimal. The proposed project site is locatn existing industrialized area zoned for heavy manufacturing. The nearest residarea in the vicinity of the proposed site is approximately 2,500 feet to the west; Power Inn Road. While future residential development will most likely occustances much farther from the site, additional industrial development of the expected. Re-use of the US Army Depot, a California Superfund Site, to th of the site is expected to result in additional industrial development, althe required remediation of the Depot may offset any potential additional impa

ribed in Subsection 6.12.3.7 Mitigation, potential public health impacts from e of hazardous materials on the site could occur only as result of an accihazardous materials are heavily regulated under federal, state, and local publh and safety regulations, and industry's trend is to specify less hazardous or lated materials where possible. Industrial facilities are required to inco into their design, features, and industrial standards (some of which are menn Subsection 6.12.3.8.4 Industry Standards) to prevent and mitigate any impt would arise from the use and accidental release of any hazardous matous, it is expected that the cumulative impacts arising from operation of the d facility will be minimal.

6.1 Mitigation. Potential public health impacts from hazardous materials coulonly as a result of an accident. The facility will be built in accordance with state, and local public health and safety regulations. Safety will be inco into its design to prevent and mitigate any impacts that would result fromand accidental release of any hazardous material. Some of these design featbe as follows:

- s, berms, and/or catchment basins will be provided for caustic and acid rials and fuels to contain accidental releases that might occur during ge or delivery. Areas subject to potential leaks also will be mitigated.
- mpatible materials will be stored in separate containment areas.

- Assignment of trained personnel to the delivery of hazardous chemicals to ensure that the chemicals are mixed.
- Fire protection system to detect, alarm, and suppress a fire.
- Implementation of a hazardous material safety program for construction and operation personnel.
- Establishment of emergency procedures to include evacuation, spill cleanup, fire prevention, and emergency response.

6.12.3.8 Compliance with LORS. Laws, ordinances, regulations, and standards (LORS) designed to protect the public health from toxic levels of hazardous materials and air pollutants exist at the federal, state and local level.

6.12.3.8.1 Federal LORS. The following federal LORS apply to the project:

- The Superfund Amendments and Reauthorization Act (SARA), Title III established a nationwide emergency planning and response program and imposes reporting requirements for businesses which store, handle, or produce significant quantities of acutely toxic substances. SARA requires the states to implement a comprehensive system to inform local agencies and the public when a significant quantity of an acutely hazardous substance is stored or handled at a facility. These requirements are reflected in Chapter 6.95 of the California Health and Safety Code (H&SC).

  The proposed facility will comply with all applicable requirements designated under SARA Title III. These requirements include the development of a facility emergency response plan incorporating spill reporting requirements and toxic chemical release reporting requirements.

- Occupational Health and Safety Administration (OSHA) regulations found in Title 29 of the Code of Federal Regulations (CFR) Section 1910 et seq., contain requirements for equipment used to store and handle hazardous materials. This regulation also addresses requirements for equipment necessary to protect workers in emergencies. It is designed primarily to protect worker health, but does contain requirements that also affect general facility safety. Title 8 of the California regulations generally is more stringent than those contained in 29 CFR.

  The proposed facility will comply with all applicable requirements designated under 29 CFR 1910 et seq., and the more stringent Title 8 of the California regulations.

6.12.3.8.2 State LORS. The following state LORS apply to the project:

- Public Resources Code (PRC) Section 25523(d) requires the California Energy Commission to ensure through its licensing process that thermal power plants are constructed and operated in a manner that will protect environmental quality and assure public health. This act allows the commission to license proposed facilities only if they comply with public safety, air, water, and other relevant local, regional, state, and federal standards ordinances, or laws.

  The proposed facilities will comply with public safety, air, water, and other relevant local, regional, state, and federal standards ordinances, or laws. The proposed facility will be constructed and operated in a manner that will protect the environmental quality and assure public health and safety.

- H&SC Section 41700 states "No person shall discharge from any source whatsoever such quantities of air contaminants or other material which cause injury, detriment, nuisance or annoyance to any considerable number of persons or to the public, or which endanger the comfort, repose, health or safety of such persons or the public, or which cause, or have a natural tendency to cause injury or damage to business or property."

  The proposed facilities will comply with H&SC Section 41700 and shall not "discharge from any source whatsoever such quantities of air contaminants or other material which cause injury, detriment, nuisance or annoyance to any considerable number of persons or to the public, or which endanger the comfort, repose, health or safety of such persons or the public, or which cause, or have a natural tendency to cause injury or damage to business or property."

- H&SC Section 25500 et seq. require the preparation of a business plan, which addresses in detail the emergency planning and response aspects in the event of a hazardous materials release at a facility. Preparation of risk management and prevention plans also may be required where AHMs are used. This plan must be based on studies that identify the potential hazards associated with the handling of the AHMs proposed for use at the facility.

  The proposed facility will comply with H&SC Sections 25500-25541 and will prepare a Business Plan if handling hazardous materials in excess of threshold quantities. This plan will include the identification of hazardous materials covered by these requirements, the category of those materials, the

maximum quantity onsite in any year, the location of the materials onsite, an emergency response plan, and procedures to be used in the event of a release (or threat of a release), and the name, title, and 24 hour telephone number of a designated emergency response contact individual. A Risk Management and Prevention Program (RMPP) will be prepared should the proposed facility handle AHMs in excess of threshold quantities. This report will include the identification and description of AHM accidents during the last 3 years; details on the condition, age, and nature of any equipment used in handling AHMs; the design, operating and maintenance controls present and other steps designed to minimize risk; a "hazard and operability study assessing the risks of AHM accidents involving error, equipment failure or external events; and the results of an "offsite consequence analysis" using "pessimistic air dispersion" and other adverse environmental conditions.

- The Uniform Fire Code Article 80 includes provisions for the storage and handling of hazardous materials. There is considerable overlap between this code and H&SC Chapter 6.95. The fire code does contain independent and specific requirements concerning fire protection and neutralization systems for emergency venting of hazardous materials.

  The proposed facility will comply with all applicable requirements designated under the Uniform Fire Code and H&SC Chapter 6.95 concerning the handling and storage of hazardous materials.

- Title 8 CCR contains requirements for storage and handling systems equipment applicable to different materials. It also contains requirements for protective equipment for workers. These requirements are designed primarily for workers but also may affect the general safety of the facility.

  As mentioned above, the proposed facility will comply with all applicable requirements designated under 29 CFR 1910 et seq. and the more stringent California regulations contained in Title 8.

6.12.3.8.3 Local LORS. The City of Sacramento Fire Department and the Environmental Health Branch of the County Health Department have primary authority for fire safety and for enforcement and implementation of state regulations regarding emergency response and hazardous materials management pursuant to Chapter 6.93 of the H&SC. This is implemented through the Sacramento County Disclosure Ordinance and the Uniform Fire Code.

The proposed facility will comply with all applicable requirements designated under Chapter 6.93 of the H&SC as implemented through the Sacramento County Disclosure Ordinance and the Uniform Fire Code.

6.12.3.8.4 Industry standards. Industrial engineering design standards may apply to equipment used in the proposed project. These standards include those adopted by the American National Standards Institute (ANSI) and the American Society of Mechanical Engineers (ASME). Conformance with these standards is relevant to the safe operation of the facility, but additional safety measures or more stringent design criteria may be employed, as needed, to protect the public safety.

The proposed facility will incorporate industrial engineering design standards, including ANSI and ASME standards, to ensure the safe operation of the proposed facility and provide for the protection of public health, as appropriate.

6.12.4 References

California Air Pollution Control Officers Association (CAPCOA). January 1992. *Air Toxics "Hot Spots" Program: Risk Assessment Guidelines.*

Ventura County Air Pollution Control District (APCD), *AB 2588 Combustion Emission Factors*, December 30, 1992, provided by Karen Kelley, July 28, 1993, Air Toxics Specialist, Sacramento Metropolitan Air Quality Management District (SMAQMD), Sacramento, California.

Sacramento County, Planning and Community Development Department and Health Department. 1986. *Hazardous Materials Element of the Sacramento County General Plan*, adopted December 17, 1986, Sacramento, California.

US Environmental Protection Agency (EPA), Federal Emergency Management Agency, and US Department of Transportation. 1987. *Technical Guidance for Hazards Analysis: Emergency Planning for Extremely Hazardous Substances.*

6.13 Worker Safety

This section of the AFC discusses worker safety items for construction and operation that are related to the proposed project.

6.13.1 Potential Impacts and Mitigation Measures

This section of the AFC describes the type of accidents that might occur onsite and the preventive measures and regulations intended to prevent these accidents.

6.13.1.1 Hazard Identification. The project will be built on disturbed land in an industrial section of the City of Sacramento. Figure 3.3-1 presents a schematic of the proposed facility. Potential hazards at the project include hazardous materials, excessive noise, high temperature, rotating equipment, steam, high voltage, and high pressure storage vessels. Potential worker hazards at each location are presented in Table 6.13-1. Figure 6.12-3 in Section 6.12 shows the location of hazardous materials at the plant site.

6.13.1.2 Construction Hazards. During construction various injuries, as well as electrical shock, can occur to any part of the body. These injuries can be mitigated by following the general construction safety orders found in 8 CCR 1509 et seq. and the regulations found in 8 CCR 1680 et seq. when tools are being used. Anytime during construction and during modifications or repairs, dust, fumes, mists, vapors, or gases that are capable of causing health problems can be produced. These hazards can be prevented by following the regulations in 8 CCR 1528 et seq. Injuries incurred while earth is being moved can be avoided by following the regulations in 8 CCR 1590 et seq. Traffic accidents will be prevented by following regulations in 8 CCR 1597 et seq.

Hoists and booms will be used to erect equipment for the project. Lifting accidents will be prevented by following the applicable construction regulations in 8 CCR 1604 et seq. Accidents on or under railings, stairways, temporary floors, or scaffolding will be prevented by following regulations in 8 CCR 1620 et seq. Hazards associated with the erection and construction of buildings and structures will be prevented by following regulations in 8 CCR 1709 et seq. Roofing accidents will be prevented by following regulations in 8 CCR 1723 et seq. Accidents with boom type mobile cranes will be prevented by following regulations in 8 CCR 4920 et seq. Fires will be prevented by following the fire protection regulations in 8 CCR 1723 et seq. and in the Uniform Fire Code (UFC).

Table 6.13-1
Locations of Potential Worker Hazards

Location	Aqueous NH_3	Acid	Hazardous Material	Flammable Material	Noise	High Temperature	Rotating Equipment	Steam	Pressure Vessel	High Voltage
Generation Area	X		X		X	X	X	X		X
Warehouse				X						
Water Treatment Building		X	X		X		X		X	X
Control/Administration Area				X						X
Chiller Building					X		X	X		X
CT Cooling Unit					X					
HRSG	X		X	X	X	X		X	X	
HRSG Stack	X				X	X				
Step-up Transformer			X							X
Gas Compressor				X	X	X	X		X	
Oil/Water Separator				X						
Auxiliary Boiler			X	X	X	X	X	X	X	
Auxiliary Deaerator						X		X	X	
Neutralization Tank		X	X							
Aqueous Ammonia Tank	X									
Acid Storage Tank		X								
Chemical Feed System		X	X							
Circulating Water Chemical Feed System		X	X							
Meter Pump for Chemical Feed		X	X							

6.13.1.3 Unfired Pressurized Vessel Hazards. If the contents of an unfired pressurized vessel are released or ignited, workers can be injured. Unfired pressurized vessels onsite will include the compressed natural gas system, deaerators, air tanks, and the HRSG. During construction and operation, these systems will be installed, inspected, tested, certified, maintained, repaired, and operated according to the industrial safety orders in 8 CCR 450 et seq.

6.13.1.4 Electrical Hazards. Section 3.7 and Figure 3.7-1 describe the facility's electric distribution system. Power will be produced at the facility by the combustion turbine and steam turbine generators at 13.8 kV. Large motors will be supplied from a 4160 volt service transformer. Low voltage electrical power will be supplied at 120/208/480 volts alternating current and 125 volts direct current.

Accidents involving low voltage systems will be mitigated according to the electrical safety orders in 8 CCR 2300 et seq. By following the work procedures in 8 CCR 2320 et seq., workers will be protected from electrocution while working on electrical equipment. Workers will be protected from electrically energized equipment by the installation and grounding of electrical equipment according to the requirements in 8 CCR 2340 and in 8 CCR 2395, respectively. Electrically energized heating equipment for pipes will meet the regulations in 8 CCR 2527. Motor controllers will meet the regulations in 8 CCR 2530.

Accidents involving high voltage systems will be prevented by following the electrical safety orders in 8 CCR 2700 et seq. Metal-clad enclosures, metal-enclosed busses, vaults and enclosures, and continuous rigid cable supports will be used to protect high voltage distribution circuits. Electrical equipment will be grounded according to regulations in 8 CCR 2739 et seq.

Vapors of flammable materials can be ignited by electrical equipment. Vapor ignition will be prevented by the use of electrical equipment that meets the requirements in 8 CCR 2540, as well as the National Electrical Code and National Fire Protection Association.

6.13.1.5 General Industrial Hazards. Accidents during fires and evacuations will be prevented by following the regulations in 8 CCR 3209 et seq. and in the UFC. The UFC also discusses emergency response training. The regulations in 8 CCR 3270 and the UFC deal with the prevention of injuries resulting from tripping and falls.

Injuries to any part of the body can occur during operation and construction. Regulations governing personal protective clothing and equipment are in 8 CCR 3380 et seq. Following these regulations and requiring workers to use protective clothing and equipment in Table 6.13-2 will prevent these injuries. Several areas of the plant will have high noise levels during normal operation. Hearing damage will be mitigated by following the noise protection and control measures in 8 CCR 5095.

Steam released from the HRSGs, the auxiliary boiler, and the steam turbine system can cause injuries. Applicable regulations in 8 CCR 750 et seq. will be followed to prevent these injuries.

Sanitary conditions for potable water supplies, washing facilities, sanitary facilities, lunch rooms, and change rooms will be maintained as required by regulations in 8 CCR 3360 et seq.

The operation, maintenance, and repair of stationary engines and compressors will be in accordance with the regulations in 8 CCR 3511 et seq. To prevent accidents with hand and portable tools, the regulations in 8 CCR 3555 et seq. will be followed.

Vehicles will be used for the delivery of supplies and shipping parts. In addition, maintenance vehicles will be operated and maintained by the project. Accidents by transport vehicles will be prevented by conforming to the standards in 8 CCR 3649 et seq. and by being operated in accordance with 8 CCR 3700 et seq. Regulations in 8 CCR 3636 apply to elevated work platforms.

Permanent cranes may be installed above the turbines and inside the maintenance building. Hoisting equipment for lifting may be used during maintenance. Following the regulations in 8 CCR 4884 will prevent lifting accidents.

Fires and injuries due to welding accidents will be prevented by following the regulations in 8 CCR 4794 et seq. and 4821 et seq. Accidents associated with welding or cutting operations will be prevented by following regulations in 8 CCR 4848 et seq.

Welding, sandblasting, grinding, spraying, painting, and other operations in the maintenance building can produce harmful dusts, fumes, mists, vapors, and gases. These hazards will be mitigated by following the regulations in 8 CCR 5139 et seq. Heating, ventilation, and air-conditioning systems, as well as other equipment and operational controls, will avert these hazards. The use of respiratory protective equipment as described in 8 CCR 5144 will protect workers from these hazards. Worker exposures to hazardous chemicals will be limited below the values given in Table AC-1 in 8 CCR 5155.

Table 6.13-2
Basic Protective Equipment Guide

Body Area	Hazards	Recommended Protection
Eyes/Face	Low velocity flying particles	Safety glasses with side shields
	High velocity chips and sparks	Impact goggles or safety glasses with full face shield
	Corrosive liquid splash during transfer	Splashproof goggles and face shield
	Breaking into an acid piping system	Acid hood
	Welding - injurious light rays	Welding hood with appropriate eye filter lenses
Head/Ears	General wear, overhead rigging, material handling, maintenance and general construction operation	Hard hat
	High noise level	Ear plugs or muff
Respiratory System	Low hazard inert dusts	Dust mask
	Low concentration solvent vapors	Cartridge type organic vapor respirator
	Acid mists	Cartridge type acid mist respirator
	High concentration dusts or vapors	Airline respirator or air purifying respirator
	Oxygen deficiencies or gases	Self-contained breathing apparatus or air line respirator
Hands and Arms	Handling rough or sharp objects	Leather gloves

Table 6.13-2
Basic Protective Equipment Guide (Continued)

Body Area	Hazards	Recommended Protection
	Handling hot objects	Leather gloves
	Using solvents	Impervious synthetic gloves
Feet and Legs	Electric current	Dielectric gloves
	General wear for light handling	Safety toe shoes
	Handling heavy objects	Metatarsal safety shoes
	Using brush hooks or scythes	Shin guards
	Working with steam or corrosive liquids	Safety toe synthetic boots
	Underground work	Safety toe synthetic boots
Trunk and Full Body	Hot or corrosive liquids	Synthetic apron
	Punctures, impact, or cuts	Canvas or leather kickback apron or metal mesh apron
	Breaking acid lines	Full body suit made of appropriate materials
Fall Protection/ Rescue	Working from elevated structure of platform without standard railings	Safety belt and lanyard
	Vessel entry	Harness and lifeline or wristlets and lifeline
	Suspended scaffolds	Lifeline, safety belt/lanyard

Other hazardous materials are associated with changing and charging storage batteries and storing and using hazardous materials during maintenance operations. Injuries can be prevented by following the applicable regulations in the UFC and 8 CCR 5160 et seq. These regulations implement a hazard communication program and the use of emergency eyewash and shower equipment. Material Safety Data Sheets for chemicals used onsite will be readily available for workers. Potential physical hazards from chemicals will be addressed in the IIPP.

Emergency response operations by workers, in accordance with 8 CCR 5192(g), will include cleanup of hazardous material spills and repair of equipment handling hazardous material. The project Emergency Response Plan will meet the requirements found in 8 CCR 5192(g)(1-3). As described in 5192(q)(6), all employees will receive first responder awareness level training. The plant hazmat team will receive training described in 8 CCR 5192(q)(6) and 5192(q)(11). The facility safety officer will receive training specified in 8 CCR 5192(q)(6).

Miscellaneous hazards will include hot pipes and hot surfaces, relief valves, rotating equipment, pipelines, vehicle loading dock operations, confined spaces, and the compressed air system. Potential accidents will be prevented by following the regulations in 8 CCR 3301 et seq. The regulations in 8 CCR 3940 et seq. will be used in operating and maintaining transmission equipment. Regulations in 8 CCR 4649 et seq. cover compressed gas and air cylinders requirements. Workers entering confined spaces will follow the regulations in 8 CCR 5156 et seq.

6.13.1.6 Natural Gas Hazards. Compressed natural gas, as described in Section 3.8, will be used by the project. Gas compressors will be operated and maintained in accordance with 8 CCR 6872 et seq.

Following the requirements found in Subchapter 15 of 8 CCR will prevent gas from burning, exploding, or injuring personnel. The facility's IIPP will contain accident prevention programs required by 8 CCR 6760 et seq. Regulations in 8 CCR 6772 et seq. will be used to prevent fires and explosions. Regulations in 8 CCR 6786 et seq. will be followed in preventing dangerous exposure and asphyxiation.

6.13.1.7 Worker Safety Cumulative Impacts. The only significant cumulative worker safety impact caused by the project and other nearby projects would be related to increased traffic. Such potential impacts are discussed in Section 6.5. The section of the City of Sacramento where the project is to be located is zoned for industrial development. Although other nearby facilities could pose safety risks to employees at the project (e.g., hazardous material spills/plumes), the possible

cumulative worker safety issues will be minimized by the safety measures these other projects have incorporated to protect the safety and health of their own employees. Therefore, the Procter & Gamble Cogeneration Project believes that it and the surrounding projects would not pose any significant cumulative worker safety risks.

6.13.2 Project Safety Features

The Injury and Illness Prevention Program (IIPP), required by Title 8 of the California Code of Regulations (CCR), Section 3203, contains the primary mitigation measures for worker hazards during construction and operation. A tentative outline for the IIPP is included in Appendix N. The IIPP designates a safety officer who is responsible for implementing the program. It also describes safety training for new employees and procedures for tracking safety training. The IIPP identifies safety hazards and establishes procedures for avoiding, correcting, reporting, and notifying employees of these hazards.

The IIPP also contains an emergency action plan to address potential emergencies, including chemical releases and fires, and describes evacuation routes and other actions to be taken in the event of an emergency. The plan describes arrangements with local emergency response agencies for responding to emergencies.

The project will follow the IIPP requirements presented in 8 CCR 3203 et seq. In addition, the project will comply with all applicable Occupational Safety and Health Administration (OSHA) requirements.

6.13.2.1 Safety Personnel. Safety personnel will be responsible for promoting the safety and health program as a specialized task. As part of this responsibility, safety personnel are to be cognizant of, or research any special jurisdictional requirements that mandate specialized permits or programs in certain areas. This process will begin with construction and continue into operation.

Safety personnel will provide technical advice regarding safety and health requirements, develop safety controls and procedures as needed, and initiate training or instruction programs for all employees. They will critique the safety performance of job supervisors and all work areas for the purpose of evaluating the effectiveness of the safety and health program.

As a staff function, the work of the safety personnel must take place within the management structure. Therefore, qualified and responsible safety personnel will be appointed with the authority to take any necessary actions when appropriate.

6.13.2.2 Safety Training Programs. During construction and operation, all employees will be given training and instructions regarding their responsibility for

safe conduct of their work. These training and instructions will be given in part at the time the employee is hired and as an ongoing training program of hazard recognition and avoidance. Employees will also be instructed in the safety regulations pertinent to their employment. Safe working conditions, work practices, and protective equipment requirements will be communicated in the following manner:

- The Contractor has developed a Code of Safe Work Practices that addresses most conditions that could be encountered at the project site during construction and operation. Each new employee and each subcontractor's employee will be given a copy.
- A new or transferred employee will receive safety training orientation.
- Weekly safety meetings will be held with craft employees.
- Weekly safety meetings will be held with subcontractors.
- A monthly staff safety meeting will be held.

Safety training will be provided to each new employee and each subcontractor's employees as described below:

- A list of safe work rules for the project site will be explained to each new employee. The employee will be required to sign a statement that he or she will follow all of the rules. Signed copies of this statement will be filed in the employee's personnel folder.
- A safe work practices video developed specifically by the Contractor will be shown to each new employee. The video will explain the Contractor's policy and requirements for personal protection for the types of hazards that may be encountered at the project site. Each employee will be required to sign a log indicating that he or she has seen this video.
- A hazard communication video will be shown to all new employees and subcontractors' employees. This video will cover the characteristics of the various families of chemicals, container labeling, how to read a material safety data sheet, etc. Following the video, the hazard communication program for this project will be discussed in detail.

  The emergency evacuation plan and fire protection plan will be discussed with each employee. Instructions regarding the handling of medical emergencies and routine injuries also will be provided at this time.
- Unusual hazards that are found onsite will be explained in detail to each new employee, including any specific requirements for personal protection.

- Safety requirements for the new employee's specific job assignment will be explained by the foreman upon initial assignment and upon any reassignment.
- A copy of the Code of Safe Work Practices will be given to each new employee. A signed statement that the employee received these practices will be filed in the employee's personnel folder.

Communication on safety with employees will include the following methods:

- "Toolbox" safety meetings will be conducted for each crew at least once a week. A general safety topic and specific hazards that may be encountered by that crew in the coming week will be discussed. Comments and suggestions from all employees will be encouraged. A document indicating the subjects discussed and signed by each employee in attendance will be maintained.
- A safety meeting with all subcontractors will be conducted once a week.
- A safety training session for project staff will be conducted once a month.
- Hazard communication training will be conducted as new hazardous materials are introduced to the workplace.
- A bulletin board with required postings and other information will be on the site.
- A large sign near the project entrance will show the number of days worked without a lost-time injury.
- An awards program will be in effect that allows employees and their foremen to win cash awards for working safely.
- Warning signs will be posted in hazardous areas.
- Employees will be encouraged to make safety suggestions at the time of hire and at the weekly "toolbox" meetings. This may be done anonymously if they desire.

All written attendance records will be maintained for at least 3 years unless a longer duration is required. Records for employees who worked less than 1 year will also be maintained.

6.13.2.3 Protective Clothing and Equipment. Personal protective clothing and equipment will be used during construction and operation. Each employee will be provided the following information pertaining to the protective clothing and equipment:

- Proper use and maintenance.

- When the protective clothing and equipment are to be used.
- Benefits and limitations.
- When and how the protective clothing and equipment are to be replaced.
- Each employee will be checked for proper fit and to see if they are medically capable of wearing the equipment.

All safety equipment must meet ANSI standards and will carry markings, numbers, or certificates of approval. The following are specific standards that will be implemented at the project:

- Hard hats will be worn at all times in the work areas.
- Safety glasses will fit high enough on the nose to adequately protect the eyes.
- Employees who wear prescription glasses where safety glasses are required will have eye protection that meets ANSI Z87.1 standards.
- Ear protection will be adequate and comfortable. It may be necessary to purchase more than one brand or style.
- All eye and face protection will be purchased to be worn with appropriate head protection.
- Safety belts will provide maximum safety and as much comfort as practical.

Table 6.13-2 contains a guide to the basic protective equipment that will be used during construction and operation.

6.13.2.4 Operating and Emergency Safety Procedures. The following safety housekeeping rules will be for the protection of all persons involved with the construction and operation of the project:

- Scrap materials and rubbish that are fire and accident hazards will be removed from work areas.
- Trash barrels will be located throughout the project site.
- All surplus materials will be returned to the stockpile.
- Tools and materials will be kept in the gang box or returned to the tool room when not in use.
- Oily rags will be placed in approved metal containers.
- Spilled liquids will be wiped up immediately.
- Change rooms will be kept clean. Soiled clothes, food scraps, or food containers will not be allowed to accumulate. Drinking cups, food wrappers, bags, and other trash will be deposited in containers provided.
- Toilets and wash-up facilities will be kept clean and sanitary.

- All nails will be pulled or bent over. If possible, this will be done before material is piled or thrown down.
- Nails or fasteners will be removed when opening crates or cartons.
- All stairways, ladder landings, ramps, scaffolds, platforms, walkways, and work areas will be kept free from loose materials and debris.

The Procter & Gamble Cogeneration Project will maintain an Operation Manual. Detailed procedures for operating plant systems and equipment will be contained in this manual. The manual will include an integrated startup and shutdown procedure; normal, abnormal, and emergency operating conditions; system descriptions, design bases, flow diagrams, alarm lists, and equipment data. The Operator's Instruction Manual also will include emergency procedures for the following items: emergency procedures for operational emergencies such as loss of electricity, loss of water, or other utility malfunction.

A separate manual will be available for nonoperational external emergencies. Such emergencies include fire, vehicle accidents, bomb threat, and earthquakes.

Table 6.13-3 contains a sample outline of the Emergency Response Plan.

6.13.2.5 Fire Safety. All construction and operation employees will be given fire safety instructions as part of the safe conduct of their work. These instructions will be given at the time the employee is hired and as an ongoing training program. Employees will also be instructed in fire safety regulations pertinent to their employment. The Contractor has developed a Code of Safe Work Practices that addresses fire safety at the project site during construction and operation. Each new employee and each subcontractor's employee will be given a copy. The following fire safety rules will be for the protection of all persons involved with the construction and operation of the project:

- Only approved solvents will be used for cleaning and degreasing. The use of gasoline and similar flammable products for this purpose will be prohibited.
- Work areas will be kept neat.
- Areas where fire hazards are prevalent will have additional fire extinguishers and/or a fire watch posted.
- When welding or burning could ignite combustible materials, employees will cover materials with fire-resistant fabric or wet them down.
- Flammable and combustible liquids will be handled only in approved, properly labeled safety cans.

Table 6.13-3
Sample Emergency Response Plan Outline

1.0 Introduction
- 1.1 Purpose
- 1.2 Scope

2.0 Responsibilities
- 2.1 Plant Manager
- 2.2 Plant Supervisor
- 2.3 Control Room Operator
- 2.4 Maintenance
- 2.5 Security

3.0 Response and Notification Plan
- 3.1 Plant Supervisor/Emergency Coordinator
- 3.2 Control Room Operator

4.0 Response Procedures
- 4.1 Evacuation Routes and Procedures
- 4.2 Site Security
- 4.3 Emergency Medical Treatment and First Aid
- 4.4 Decontamination Procedure
- 4.5 Documentation and Recordkeeping
- 4.6 News Media
- 4.7 Emergency Notification List

5.0 Reference Procedures
- 5.1 Plant Security
- 5.2 Accidental Reporting and Investigating
- 5.3 Clearance and Tagging
- 5.4 Operating Tags/Recordkeeping
- 5.5 Hazard Communication Standard Training
- 5.6 CEMS/AQMD Reporting
- 5.7 Spill/NPDES Reporting
- 5.8 Secondary Containment
- 5.9 Earthquake Procedure
- 5.10 First Aid and CPR Training
- 5.11 Emergency Training
- 5.12 Respiratory Protection Program
- 5.13 Safety Inspections

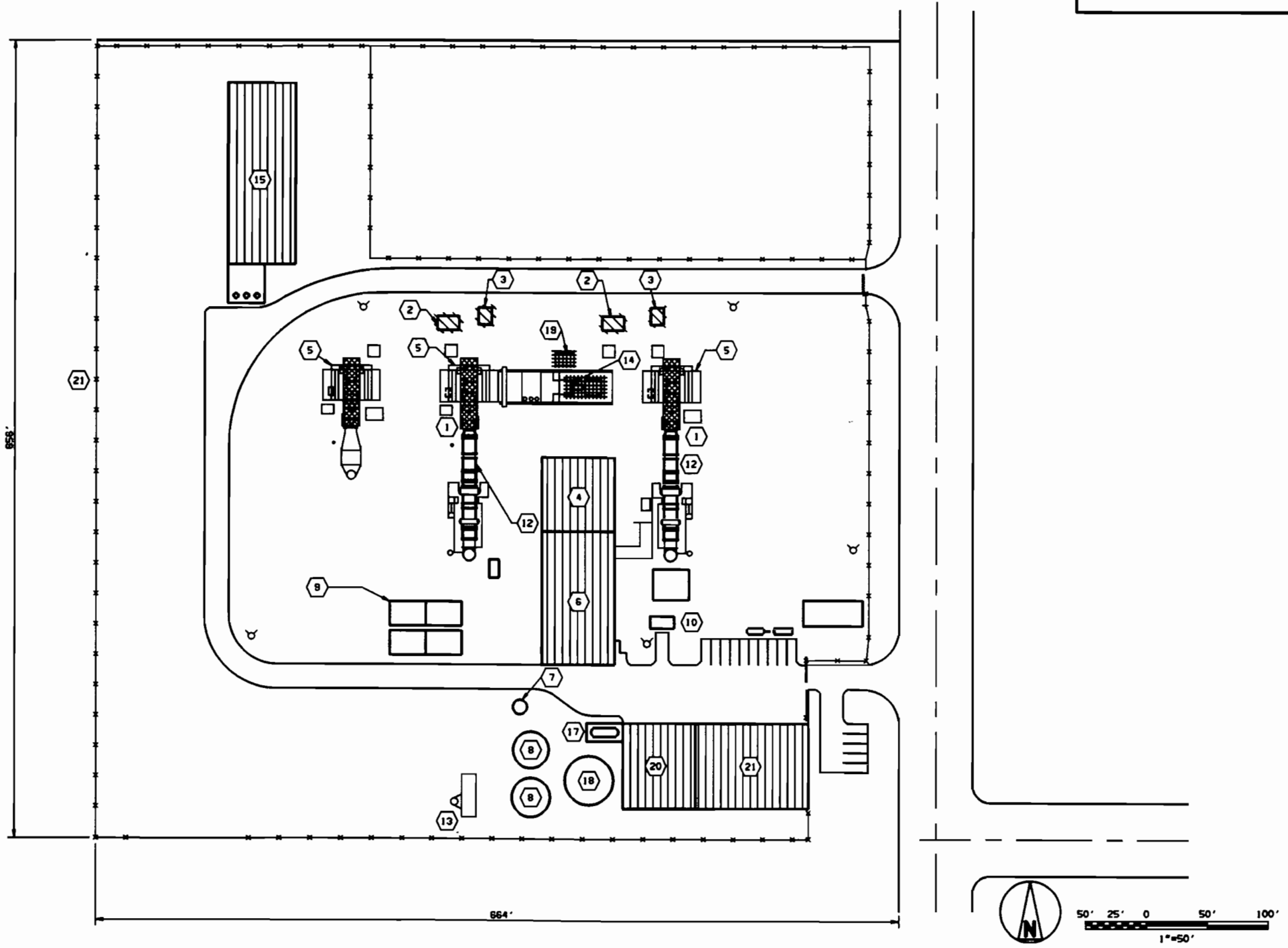

SYSTEM LEGEND

- WATER SPRAY (DELUGE)
- DRY PIPE SPRINKLER
- CARBON DIOXIDE
- PREACTION SPRAY SYSTEM
- FIRE HYDRANT

LEGEND

1. COMBUSTION TURBINE (2)
2. GENERATOR TRANSFORMER (3)
3. AUXILIARY TRANSFORMER (3)
4. CHILLER BUILDING
5. INLET FILTER (3)
6. CONTROL/ADMIN BUILDING
7. CONDENSATE STORAGE TANK
8. DEMINERALIZED WATER STORAGE TANK (2)
9. GAS COMPRESSORS
10. STANDBY DIESEL GENERATOR
11. ELECT/CONT BUILDING FOR RELOCATED CT
12. HEAT RECOVERY STEAM GENERATOR (2)
13. AUXILIARY BOILER
14. STEAM TURBINE
15. COOLING TOWER
16. FIREWATER PUMP BUILDING
17. ACID STORAGE TANK
18. NEUTRALIZATION TANK
19. LUBE OIL SKID
20. WATER TREATMENT BUILDING
21. WAREHOUSE AND MAINTENANCE SHOP BUILDING

NOT TO BE USED FOR CONSTRUCTION

DATE OF ISSUE _____

NO	DATE	REVISIONS AND RECORD OF ISSUE	BY	CHK	APP	FLM
B	09-08-93	ISSUED FOR CEC APPROVAL				
A	07-14-93	ISSUED FOR REVIEW				

I HEREBY CERTIFY THAT THIS DOCUMENT WAS PREPARED BY ME OR UNDER MY DIRECT SUPERVISION AND THAT I AM A DULY REGISTERED PROFESSIONAL ENGINEER UNDER THE LAWS OF THE STATE OF CALIFORNIA

SIGNED _____

DATE _____ REG NO. _____

BLACK & VEATCH

ENGINEER | DRAWN RLC

CHECKED | DATE

SACRAMENTO COGENERATION AUTHORITY
PROCTER & GAMBLE COGENERATION PROJECT

SITE FIRE PROTECTION

PROJECT | DRAWING NUMBER: 23933-DM-0002 | REV: B

CODE

AREA

Figure 6.13-1

03740CALLAWA ACAD 12.c1
A01SL006 01 PLOT SCALE: 1"=50', 1=600
08/17/93 08:53:46

The project will have the following fire protection systems:

- Carbon Dioxide Fire Protection System--This system protects the combustion turbine, its generator, and its accessory equipment compartments from fire. The system will have fire detection sensors in all compartments.
- Deluge Spray System--This system provides fire protection to the generator transformer and auxiliary power transformer in the event of a fire. The deluge system is fed by the fire water storage and supply system.
- Sprinkler System--This system will provide protection in the Control/ Administration and Warehouse Buildings.
- Fire Hydrants/Hose Stations--These will be located approximately every 300 feet.
- Smoke Detectors and Fire Extinguishers--These will be provided at all locations having potential fire hazards due to the presence of combustible liquids, solids, or other highly flammable materials, and where major property damage could result. Extinguishers will be located at code approved intervals throughout the facility.

Water will be used as the primary extinguishing agent. Chemical and gas extinguishing agents (permanently installed or in portable extinguishers) will be provided in special hazard areas where water would be ineffective or harmful to the equipment being protected.

6.13.2.6 Fuel Handling Systems. The fuel handling systems are described in Section 3.8.

6.13.2.7 Safety Precautions. The technical appendices to the AFC list the design practices and codes applicable to the project. All air emissions and wastewater effluents will comply with federal, state, and local air/water quality control requirements. Compliance with the requirements will minimize the project's effects on public and employee safety.

6.13.2.7.1 Implementation. The response to any major accident/incident by plant personnel will be limited to an immediate response to minimize the risk of escalation of the accident/incident. Plant personnel will be trained to respond to fires, spills, earthquakes, and injuries. However, the project will rely on local fire departments for any fire beyond the incipient stage. Plant emergency personnel will be available for assistance and technical expertise.

6.13.3 Laws, Ordinances, Regulations, and Standards

The Federal Occupational Safety and Health Administration (OSHA) within the Department of Labor is responsible for promulgating standards to protect employees from occupational health and safety hazards. Furthermore, the State of California Division of Occupational Safety and Health (Cal/OSHA) within California's Department of Industrial Relations has established additional rules to protect employees from occupational and safety hazards. OSHA has promulgated two separate health and safety standards programs. One applies to the construction industry and the other to general industry. Similarly, Cal/OSHA has established a number of health and safety orders governing several categories including construction, general industry, petroleum safety, electrical safety, boilers, and unfired pressure vessels. By agreement between OSHA and Cal/OSHA, California has assumed enforcement responsibility for most relevant federal regulations. OSHA retains concurrent jurisdiction governing standards relating to hazardous materials. The following federal, state, and local laws, ordinances, regulations, and standards are applicable to the project.

6.13.3.1 Federal LORS. Applicable federal regulations include the following:

- Department of Labor, Safety, and Health regulations for construction promulgated under Section 333 of the Contract Work Hours and Safety Standards Act (40 USC 327 et seq.). The requirements for this regulation are all addressed in Title 8 of the California Code of Regulations (CCR).
- Uniform Fire Code, Article 80 includes provisions for storage and handling of hazardous materials. Considerable overlap exists between this code and Chapter 6.95 of the Health and Safety Code (H&SC). However, the fire code does contain independent provisions regarding fire protection and neutralization systems for emergency venting (Section 80.303, D, compressed gases).
- OSHA, Title 29 Code of Federal Regulations (CFR) Part 1926 (29 CFR 1926) sets forth the safety and health standards promulgated by the Secretary of Labor under Section 107 of the Contract Work Hours and Safety Standards Act.
- OSHA Standards, 29 CFR 1910.1000 and 1910.1200. Section 1910.1000 sets permissible exposure limits for toxic air contaminants. Section 1910.1200 ensures that information concerning the hazards associated with the use of

all chemicals produced or imported is transmitted to employers and employees.

- The Clean Water Act of 1977 (40 CFR Parts 112, 300, and 302). Environmental Protection Agency, established such requirements as Spill Prevention, Control, and Countermeasures Plans.

6.13.3.2 State LORS. Applicable state regulations include 8 CCR, 24 CCR, and the California Labor Code. Applicable sections of 8 CCR, Chapter 4, Subchapter 7, include the following:

- Section 1509 et seq. (Construction, Accident, and Prevention Program).
- Section 3200 et seq. and 5139 et seq. (Control of Hazardous Substances).
- Section 3203 et seq. (Operation, Accident, and Prevention Program).
- Section 5160 et seq. (Hot, Flammable, Poisonous, Corrosive, and Irritant Substances).
- Section 5194 et seq. (Dust, Fumes, Mists, Vapors, and Gases).
- Section 5405 et seq.; 5426 et seq.; 5465 et seq.; 5500 et seq.; 5521 et seq.; 5545 et seq.; 5554 et seq.; 5565 et seq.; 5583 et seq.; and 5606 et seq. (Flammable Liquids, Gases, and Vapors).
- Section 5583 et seq. (Design, Construction and Installation of Venting, Diking, Valving, and Supports).
- Sections 6150, 6151, 6165, 6170, and 6175 (Fire Protection).

Applicable sections of 24 CCR include the following:

- Sections 3, 4, and 5 et seq. incorporating the current edition of the Uniform Building Code (UBC).
- Sections 18916 and Parts 2, 3, 4, and 5.

Applicable sections of the California Labor Code include sections 6500, 7261, 7300 et seq., 7680, and 7683:

- Cal/OSHA, 1970.
- Cal/OSHA Safety Orders (8 CCR, Chapter 4).

6.13.3.3 Local LORS. Local (city and county) laws and ordinances are contained in most local building permits and vary from area to area. These regulations incorporate the Uniform Building Code (UBC) and the National Fire Code. The local Chief Building Official and Fire Marshall will be consulted for specific details of local requirements.

6.13.3.4 Industrial Codes. Industrial codes that will be implemented during project construction and operation are listed below:

- American Society of Mechanical Engineers (ASME) Fuel Gas Piping Code B31.2.
- American Gas Association (AGA) Standards.
- American Concrete Institute (ACI) 349-80, Appendix B: Foundations for Welded Steel Tanks.
- Technical Information Document (TID) 7024, Chapter 6: Design Construction, Support of Tanks.
- Uniform Building Code (UBC 1986) including:
  - -- Chapter 5: Classification of all buildings by use or occupancy, general requirements for all buildings by use or occupancy and general requirements for all occupancies.
  - -- Chapter 19: Type II one hour and II-N buildings.
  - -- Chapter 32: Roof construction and covering.
  - -- Chapter 33: Exits.
- National Fire Protection Association (NFPA) Standards. The National Fire Codes are compilations of the codes, standards, recommended practices, manuals, guides, and model laws prepared by technical committees organized under NFPA sponsorship. The following NFPA standards are relevant to this project:
  - -- NFPA 10: Portable Fire Extinguishers.
  - -- NFPA 11: Low Expansion Foam and Combined Agent Systems.
  - -- NFPA 12: Carbon Dioxide Extinguishing Systems.
  - -- NFPA 13: Installation of Sprinkler Systems.
  - -- NFPA 14: Installation of Standpipe and Hose Systems.
  - -- NFPA 15: Water Spray Fixed Systems.
  - -- NFPA 16: Installation of Deluge Foam-Water Sprinkler Systems and Foam-Water Spray Systems.
  - -- NFPA 17: Dry Chemical Extinguishing Systems.
  - -- NFPA 20: Centrifugal Fire Pumps.
  - -- NFPA 22: Water Tanks for Private Fire Protection.
  - -- NFPA 24: Private Fire Service Mains and Their Appurtenances.
  - -- NFPA 26: Valves Controlling Water Supplies.
  - -- NFPA 30: Flammable and Combustible Liquids Code.
  - -- NFPA 31: Installation of Oil Burning Equipment.
  - -- NFPA 37: Stationary Combustion Engines and Gas Turbines.

- -- NFPA 54: National Fuel Gas Code.
- -- NFPA 58: Liquified Petroleum Gases.
- -- NFPA 70: National Electric Code.
- -- NFPA 72A: Installation, Maintenance, and Use of Local Protective Signaling Systems for Guard's Tour, Fire Alarm, and Supervisory Service.
- -- NFPA 72D: Installation, Maintenance, and Use of Proprietary Protection Signaling Systems.
- -- NFPA 72E: Automatic Fire Detection.
- -- NFPA 78: Lighting Protection Code.
- -- NFPA 85A: Prevention of Furnace Explosions in Fuel-Oil and Natural Gas Fired Single Burner Boiler-Furnaces.
- -- NFPA 101: Life Safety Code.
- -- NFPA 214: Standards on Water Cooling Towers.
- -- NFPA 255: Method of Test of Surface Burning Characteristics of Building Materials.
- -- NFPA 291: Testing and Marking Hydrants.
- -- NFPA 321: Flammable and Combustible Liquids Classification.
- -- NFPA 496: Purged and Pressurized Enclosures for Electrical Equipment for Hazardous Locations.
- -- NFPA 850: Fire Protection for Fossil Fuel Steam/Electric Generating Plants.
- -- NFPA 1961: Fire Hose.
- -- NFPA 1962: Care, Use, and Service Testing of Fire Hose Including Couplings and Nozzles.
- -- NFPA 1963: Screws, Threads, and Gaskets for Fire Hose Connections.
- -- National Electric Code (NEC), Articles 500, 501, 502, 503, 510, Battery Storage and Special Occupancy and Hazardous Locations.

The City of Sacramento has adopted NFPA codes in addition to the UFC. Any structure must be in compliance with NFPA standards as well as UBC and UFC standards:

- ASME Boiler, Pressure, Vessel, and Performance Test Code.
- Standards of Tubular Exchanger Manufacturers Association (TEMA).
- Heat Exchanger Institute.
- American Petroleum Institute (API) Standard 650, Welded Steel Tanks for Oil Storage.

- Hydraulic Institute Standards.
- Heating, Ventilating, and Air Conditioning Guide by American Society of Heating, Refrigeration, and Air Conditioning Engineers (ASHRAE).
- Uniform Plumbing Code (UPC).
- American Institute of Steel Construction (AISC) Specifications.
- Standards for the American Society for Testing Materials (ASTM).
- Steel Structures Painting Council Standards (SSPC).
- American National Standards Institute, ANSI B31.1 Power Piping.
- American National Standards Institute, ANSI B16.25 Butt Welding Ends.
- Institute of Electrical and Electronic Engineers (IEEE).
- Insulated Power Cable Engineers Association (IPCEA).
- Instrument Society of America (ISA).
- American Association of State Highway Officials (AASHO).
- American Welding Society (AWS).
- Asphalt Institute, Pacific Coast Division.
- American Society of Nondestructive Testing (SNT-TC-1A).
- Underwriters Laboratories (UL).

6.13.3.5 Compliance with LORS. All necessary and prudent actions will be taken to ensure that the project is in compliance with federal, state, and local laws, ordinances, regulations, and standards governing worker safety. All employees will be given an orientation in worker safety rules. As part of a contractor's contractual commitment, he will follow certain project worker safety rules. The Contractor will ensure that all employees are familiar with these rules and the possible penalties for violations. These rules will apply to management and contractor personnel as well as visitors while on the project site. In addition, all necessary and prudent actions will be taken to ensure that the project is in compliance with federal, state, and local laws, ordinances, regulations, and standards governing construction and operation standards.

7.0 Financial Impacts

7.1 Capital Cost Estimate

The capital cost estimate for the Procter & Gamble Cogeneration facility is $115.1 million in the twin LM6000 combined cycle configuration. This estimate includes engineering, design, procurement, construction, and startup costs based on 1993 prevailing costs and prices. The capital costs do not reflect construction financing costs.

The capital costs are based on the lump sum pricing that was the result of SMUD's RFP process which includes costs for permitting, engineering, procurement, construction, and startup.

Capital cost is $1,153/kW.

7.2 Fuel Costs

Natural gas will be the fuel for the power plant. Gas will be delivered to the site by a SMUD gas distribution system.

The estimated yearly cost for natural gas, based upon an annual use of 8,000,000 MMBtu at $3.23 per million Btu, is $25.7 million.

7.3 Operating and Maintenance Costs

The estimated fixed costs for operation and maintenance are $21/kW-yr. Estimated variable costs for operation and maintenance are 2.4 mils/kWh.

This estimate does not include the costs of fuel and inflation.

8.0 Alternatives

8.1 Introduction

This chapter presents the discussion of alternatives to the design of the Procter & Gamble Cogeneration Facility. This process will evaluate a full range of design and siting alternatives intended to meet the requirements as defined by the California Environmental Quality Act (CEQA, CAL. PUB. REG. CODE § 21001, 21002.1) and the California Energy Commission Siting Requirements.

The Procter & Gamble Cogeneration Facility is being proposed to provide process steam to an existing industrial facility in Sacramento, California. During the development of the project initially proposed in response to the SMUD Request for Proposal for Power, a variety of operational, design, and economic concerns were considered.

In order to meet SCA's and Procter & Gamble's objectives for the project, only one location and a limited number of power generation technologies were technically feasible.

Natural gas was selected as the most appropriate fuel for the plant given air quality concerns.

A number of plant layouts within the Procter & Gamble property are possible; the proposed design is intended to be the least intrusive to Procter & Gamble and the residential area to the west.

8.2 Alternative Site Evaluation

The Procter & Gamble Cogeneration Facility is being developed to provide a reliable and economical source of process steam to an existing industrial facility, while simultaneously providing a highly efficient source of power for the Sacramento Municipal Utility District.

Factors evaluated in selecting an appropriate site for the Procter & Gamble Cogeneration Facility are as follows:

- Adequate space requirements to accommodate the new facility and ancillary project facility development.
- Proximity to the Procter & Gamble steam system to minimize energy loss in the steam supply piping.
- Impact on the currently high standard of reliable operation at the Procter & Gamble Manufacturing Facility.

- Distance to utility interconnections.
- Access into and out of the site during both construction and operation of the new facility.
- Impacts to the surrounding residential areas.
- Disruptions of the existing Procter & Gamble business operations, including the potential for future expansion are avoided.
- Compliance with contract obligations between SMUD and Procter & Gamble are met.

The California Environmental Quality Act (CEQA) requires identification of project alternatives to the project to avoid or lessen significant adverse environmental effects. The above mentioned criteria used for alternative site evaluation are consistent with CEQA.

The Procter & Gamble Cogeneration Project will supply steam to the Procter & Gamble Manufacturing Plant through an interconnection with their steam header. This interconnection requires that the site of the project be as close as practicable to the plant to minimize losses and cost associated with the steam supply line. The nearest undeveloped, adequately sized acreage adjacent to the plant was north of the plant on property already owned by Procter & Gamble. Procter & Gamble offered the proposed site location because, in their view, it caused the least impediment to any possible future expansion to the plant. The proposed location provided direct access from 83rd Street for vehicular traffic and for sewer and water connections. It is also closest to the proposed point for electrical interconnection.

Other locations to the west would require extending transmission line and purchasing additional property or easement for utility connections and access. Moving the site south along 83rd Street would reduce steam line length and maintain vehicular and utility access but would require a new access for Procter & Gamble and would require additional land from Procter & Gamble for transmission line access to the site. Open land exists farther north of the plant but siting of the project farther north would require railroad crossing for the steam line and potentially for utility connections and vehicular access.

8.2.2 Alternative Locations on Procter & Gamble Property

Locating the proposed new project facility on land owned by and adjacent to the Procter & Gamble facility has obvious advantages from an engineering, land use, economic, and environmental perspective.

The vacant area located to the north of the existing Procter & Gamble Manufacturing Plant is approximately 50 acres. The proposed cogeneration facility could be located anywhere on this parcel.

The site was divided into three equal areas titled west, center, and east.

8.2.3 Screening: Site Selection

SCA has conducted an environmental screening process to review the alternative sites on the Procter & Gamble property for the cogeneration facility.

8.2.3.1 Geology and Seismic Hazards. On the Procter & Gamble boundary there is no variation in the geology and no seismic hazards.

8.2.3.2 Hydrology. On the Procter & Gamble property hydrologic components do not differ. This is variable independent.

8.2.3.3 Biological Resources. On the Procter & Gamble property, biological resources are significantly degraded with the exception of scattered populations of freshwater shrimp. The two species of freshwater shrimp found on the property have been proposed for federal threatened status (Section 6.4). The freshwater shrimp populations are more prevalent on the western portion of the Procter & Gamble property. The central portion of the site has less freshwater shrimp habitat. In the eastern portion of the site, freshwater shrimp have been found within two tire depressions caused by trucks driving on the shoulder of an access road. The proposed project will mitigate any impact to the freshwater shrimp. Mitigation alternatives are being discussed with the US Fish and Wildlife Service and the California Energy Commission.

8.2.3.4 Air Quality. On the Procter & Gamble boundary, no matter where the cogeneration facility is located, air quality will not differ.

8.2.3.5 Land Use. Within the Procter & Gamble boundary there is no variation in the land use. The use of any portion of the property will not result in any environmentally detrimental consequences in existing land uses.

8.2.3.6 Soils and Agriculture. On the Procter & Gamble boundary there is no variation in the soils and agriculture. This is variable independent.

8.2.3.7 Noise. Locating the proposed cogeneration facility on the western portions of the property would place the facility closer to residential areas and may result in a slight increase in noise due to construction. Location of the facility to the east

avoids this potential problem. Construction noise will be minimal because of the industrial nature of the area. Operation noise will be mitigated by careful engineering.

8.2.3.8 Cultural and Paleontological. The project site is highly disturbed and has no cultural or paleontological values. The use of any portion of the proposed site will not result in any environmentally detrimental consequences to existing cultural and paleontological resources.

8.2.3.9 Socioeconomic. Within the Procter & Gamble property this is variable independent.

8.2.3.10 Transportation. Within the Procter & Gamble property this is variable independent.

8.2.3.11 Aesthetics and Visual Resources. Within the immediate area this is variable independent. Aesthetic impacts will not differ locating the facility on any portion of the Procter & Gamble property.

8.2.3.12 Public Health. Within the Procter & Gamble property this is variable independent.

8.2.4 Conclusions

The Procter & Gamble property located to the north of the existing plant was surveyed for technically feasible locations for the cogeneration facility. In this effort, environmental criteria were given a higher priority than business related criteria.

All alternative locations were considered. All the sites would meet the attainment of project objectives. The eastern portion of the site would be the least costly to purchase.

The property north of the Procter & Gamble Cogeneration Plant is severely degraded from an environmental perspective. The property reflects the industrial nature of the community. The only difference on the property is the distribution of freshwater shrimp populations (Section 6.4).

The eastern portion of the property was chosen as the preferred site for the cogeneration facility. The eastern site has economic and engineering advantages over the central or western portions of the property. Locating the cogeneration facility on the eastern portion of the property will eliminate or minimize all but one project related impact.

Acceptable mitigation will be carried out for project impacts to the freshwater shrimp found on the eastern portion of the property.

8.3 Alternative Plant Configurations

At the time the Procter & Gamble project was being evaluated, three other projects had been selected. Two of those projects had been proposed on the basis of single industrial units in combined cycle. SMUD recognized a system need for a project that provided more operating flexibility while still maintaining a favorable heat rate. This requirement translated into the requirement for multiple units. Units capable of meeting this constraint within the project rating included the ABB GT-8, GE Fr6, GE LM 5000, or the GE LM 6000.

The GE LM 6000 was selected because it offered the best efficiency during turndown or part load conditions, while still providing sufficient waste heat and redundancy to meet the steam requirements of Procter & Gamble. High efficiency during turndown is assumed by being able to shut down one entire unit and still enjoy the "full load" efficiency of the on-line unit.

8.3.1 Screening: Alternative Plant Configuration

Numerous plant configurations were considered in the preliminary design of the Procter & Gamble Cogeneration Project.

All of the configurations evaluated numerous variables including construction, maintenance, public safety, the impact of noise generated during the construction period, and impacts to Procter & Gamble operations.

The following evaluated the proposed configuration versus other potential possible configurations.

8.3.1.1 Geology and Seismic Hazards. Any seismic risk can be mitigated to a safe level for any configuration considered. This factor is independent of any configuration.

8.3.1.2 Hydrology. Designing the most efficient water consumption and effluent treatment for the project was a prime consideration in the design of the proposed facility. Water used during the process activities of Procter & Gamble would remain unchanged by any configuration considered for the cogeneration facility. Existing utility capacity will not be affected by any configuration.

8.3.1.3 Biological Resources. The existing site is highly disturbed. Freshwater shrimp have been found within two tire track depressions adjacent to an access road. If the plant configuration were to be located to the west of the proposed site, the freshwater shrimp habitats would not be impacted by the cogeneration facility.

Mitigation alternatives are being discussed with the US Fish and Wildlife Service and the California Energy Commission.

8.3.1.4 Air Quality. The emissions from the Procter & Gamble Cogeneration Facility vary slightly with each configuration and mode of operation. In general, these differences would not vary significantly.

The air quality impacts are largely independent of the layout of the cogeneration facility.

When observed from a regional perspective, alternative plant configurations do not suggest any environmental benefit.

8.3.1.5 Land Use. The proposed design for the cogeneration facility uses a compact design with the intention of minimizing the amount of land needed for the facility. The site under consideration is disrupted and the best use of the land is for an industrial facility. Land use impacts are therefore independent of any plant configuration.

8.3.1.6 Soils and Agriculture. Standard mitigation measures will eliminate the impact to soils. Any soil and agriculture impacts are independent of any plant configuration.

8.3.1.7 Noise. Noise associated with construction and operation of the cogeneration facility will not differ with any configuration alternative. Best design techniques and noise mitigation measures are incorporated in the design of the proposed facility. Noise impacts would not significantly differ if an alternative plant configuration were selected.

8.3.1.8 Cultural and Paleontological. No resources are identified. The likelihood of discovering any resources is limited. There will be no impact regardless of plant design or plant configuration.

8.3.1.9 Socioeconomic. Alternative site configurations will not differ significantly with respect to their impact upon local employment. Smaller plant size would result in less benefits to Procter & Gamble and SMUD.

8.3.1.10 Transportation. There are no significant impacts to transportation brought about by the project. Alternative plant configurations and sizing would similarly have no impact upon transportation.

8.3.1.11 Aesthetics and Visual Resources. Alternative plant configurations would not result in any significant reductions in the degree of visual impacts.

8.3.1.12 Public Health. With the exception of the impact of the facility on air quality, the only potential impact of the facility would be the storage and use of hazardous materials. Whatever design or plant configuration is considered for the

Procter & Gamble Cogeneration Facility, it would incorporate best management practices and current designs for the safe storage and handling of hazardous materials.

8.3.2 Conclusions

SMUD has conducted a screening analysis of alternative project configurations and sizes. This screening analysis was unable to demonstrate that any alternative configuration was environmentally superior over the proposed configuration.

8.4 Transmission Connection Alternatives

Transmission connection alternatives are discussed in Section 3.15.

8.5 Applicable Laws, Ordinances, Regulations, and Standards

- Authority: California Environmental Quality Act (CEQA, CAL PUB. REG. CODE § 21001, 21002.1).
- Requires analysis of alternatives to a proposed project.
- Administering Agency: California Energy Commission.

9.0 List of Preparers

The following list includes the individuals who contributed to the respective sections of the AFC:

Section	
Need	Susan L. Strachan, SCA George R. Savage, Black & Veatch
Project Description	
Facility Construction	Ron Simms, Walsh Construction Company
Civil/Structural Engineering and Design Criteria	Vernon B. Dekker, Black & Veatch
Mechanical Engineering and Design Criteria	Brian D. Miles, Black & Veatch
Chemical Engineering and Design Criteria	James E. O'Connor, Black & Veatch
Electrical Engineering and Design Criteria	Mark W. Swanson, Black & Veatch
Transmission Line Engineering	David M. Lefebvre, Black & Veatch Michael Deis, SCA Sherri Eklof, SCA
Transmission Line Safety and Nuisance	Ron Knetrim, SCA
Project Schedule	Ron Simms, Walsh Construction Company John E. Larsen, SCA
Reliability	Susan L. Strachan, SCA Curtis L. Kling, Black & Veatch
Environmental Setting	
Geology and Soils	Youngdahl & Associates Inc.
Air Quality and Climate	Brian A. Petermann, Black & Veatch James G. Tangeman, Black & Veatch
Water Resources	James E. O'Connor, Black & Veatch Michele S. Stern, Black & Veatch
Terrestrial Ecology	Ralph E. Brooks, Black & Veatch David A. Turner, Black & Veatch E. J. Koford, Ebasco Environmental

Environmental Setting (Continued)	
Aquatic Ecology	Ralph E. Brooks, Black & Veatch Michele S. Stern, Black & Veatch E. J. Koford, Ebasco Environmental
Traffic	John M. Wynne, Black & Veatch
Land Use	Robin R. Goldman, Black & Veatch David A. Turner, Black & Veatch
Socioeconomics	John M. Wynne, Black & Veatch
Cultural and Paleontological Resources	Mark W. Kelly, Black & Veatch Douglas M. Davy, Ebasco Environmental
Aesthetics	David A. Turner, Black & Veatch
Noise	Deborah R. Murphey, Black & Veatch
Waste Management	George R. Savage, Black & Veatch
Public Health/Hazardous Materials Handling	Mark J. Bareta, Black & Veatch Michele S. Stern, Black & Veatch
Worker Safety	Ron Ross, Walsh Construction Company Michele S. Stern, Black & Veatch
Financial Impacts	Susan L. Strachan, SCA
Alternatives	Paul Olmstead, SCA Dan Whitney, SCA Marino Monardi, SCA
<u>Other Contributors</u>	
SCA	
Project Manager	John E. Larsen
Asst. Project Manager	David H. Thorpe
Permitting and Licensing Manager	Susan L. Strachan
Walsh Construction Company	
Construction Manager	Ron Simms
Administrative Manager	Ross Cates
Project Engineer	Lynn Small
Black & Veatch	
Partner-in-Charge	James H. Templin
Project Manager	Richard G. Chapman
Engineering Manager	Curtis L. Kling
Licensing Manager	David M. Lefebvre
Environmental Manager	Douglas C. Timpe

Procter & Gamble Cogeneration Project

Application for Certification
Volume 3

September 1993

Submitted to

California Energy Commission

Submitted by

Sacramento Cogeneration Authority

3.19 Facility Operation and Maintenance 3-96
3.20 Schedule 3-102

4.0 Project Schedule 4-1
4.1 Construction Schedule 4-1
4.2 Estimated Operating Life and Facility Closure 4-1

5.0 Reliability 5-1
5.1 Plant Availability 5-1
5.2 Equipment Redundancy 5-3
5.3 Fuel Availability 5-9
5.4 Water Availability 5-10
5.5 Project Quality Control 5-10

6.0 Environmental Setting, Impacts, and Mitigation 6.1-1
6.1 Air Quality (To Be Issued Separately) 6.1-1
6.2 Geology and Soils 6.2-1
6.3 Water Resources 6.3-1
6.4 Biological Resources 6.4-1

Tables

Table 3.3-1 Active and Potentially Active Faults Within a 60 Mile Radius of the Project Boundaries 3-16
Table 3.9-1 Estimated Average Daily Water Requirements--Cogeneration Facilities 3-29
Table 3.9-2 Estimated Peak Daily Water Requirements--Cogeneration Facilities 3-30
Table 3.9.3 Cycle Heat Rejection Design Criteria 3-33
Table 3.10-1 Wastewater Quality--Discharge to City Sewer 3-35
Table 3.11-1 Power Project Plant Chemicals 3-38
Table 3.15-1 Existing Transmission Facilities Information 3-53

Table 3.15-2	1992 Construction Cost Summary For SMUD Interconnection Alternatives--Two Plant Terminations	3-63
Table 3.15-3	Construction Cost to Interconnect With PG&E or WAPA	3-64
Table 3.15-4	PG&E and WAPA Wheeling Charges	3-65
Table 3.15-5	Net Change in 1996 SMUD System Capacity and Energy Losses	3-67
Table 3.15-6	Loss Comparisons of Alternatives	3-68
Table 3.15-7	1996 Capacity and Energy Losses For Conductor Sizing	3-80
Table 3.18-1	Procter & Gamble Cogeneration Project Equipment Onsite Monthly	3-93
Table 3.18-2	Rail Delivery of Major Equipment Components for Procter & Gamble Cogeneration Project	3-94
Table 3.18-3	Procter & Gamble Cogeneration Project Truck Deliveries Per Month	3-95
Table 3.18-4	Number of Craft Persons Per Month	3-97
Table 3.19-1	Projected Full-Time Operating and Maintenance Staff for Procter & Gamble Cogeneration Project	3-99
Table 3.19-2	Projected Hours of Operation for Procter & Gamble Cogeneration Project	3-100
Table 5.2-1	Major Equipment Redundancy Proctor & Gamble Cogeneration Project	5-4
Table 5.3-1	30 Year Forecast SMUD Delivered Weighted Average Cost of Gas	5-11
Table 6.2-1		6.2-6
Table 6.3-1	Source of Water for Local Water Agencies in Sacramento County	6.3-2
Table 6.3-2	Water Quality Data Averages City of Sacramento Water Treatment Plants and Well System 1991-1992	6.3-10
Table 6.4-1	Plants Observed on the Procter & Gamble Cogeneration Project Study Area, Sacramento, California	6.4-8
Table 6.4-2	Plant Species of Special Concern Occurring in Sacramento County, California	6.4-18

Table 6.4-3 Sensitive Terrestrial Wildlife Species Potentially Occurring in the Procter & Gamble Cogeneration Project Area, Sacramento County, California 6.4-20

Figures

Figure 1-1 Representative View of the Project Site 1-3
Figure 3.0-1 Combined Cycle Diagram 3-2
Figure 3.0-2 Simple Cycle Diagram 3-3
Figure 3.0-3 Cogeneration Process Diagram 3-4
Figure 3.1-1 Combined Cycle Baseload Operation 3-6
Figure 3.1-2 Combined Cycle Peak Load Operation 3-7
Figure 3.1-3 Simple Cycle Baseload Operation 3-8
Figure 3.2-1 Regional Location Map 3-10
Figure 3.3-1 Site Arrangement 3-12
Figure 3.3-2 Typical Elevations 3-13
Figure 3.3-3 Site Grading and Drainage 3-14
Figure 3.7-1 Overall One-Line Diagram 3-23
Figure 3.9-1 Daily Average Water Mass Balance 3-27
Figure 3.9-2 Peak Average Water Mass Balance 3-28
Figure 3.15-1 Transmission Routing Existing Facilities 3-49
Figure 3.15-2 SMUD's Existing Hedge Substation 3-50
Figure 3.15-3 SMUD's Existing Hurley Substation 3-51
Figure 3.15-4 Existing Tower Configuration Hedge/Hurley 230 kV Line and East City/Hedge 115 kV Line 3-52
Figure 3.15-5 Transmission Routing 115 kV Alternatives 3-54
Figure 3.15-6 Transmission Routing 230 kV Alternatives 3-55
Figure 3.15-7 SMUD Transmission System With No Project Generation 3-69
Figure 3.15-8 SMUD Transmission System With Project Generating 177 MW 3-70
Figure 3.15-9 SMUD Transmission System During Construction of Project Interconnection 3-71
Figure 3.15-10 Existing Transmission Facilities and Proposed Interconnection Route 3-74

Figure 3.15-11 Transmission Line Schedule 3-75
Figure 3.15-12 Procter & Gamble Project Interconnection Plan of Service 3-76
Figure 3.15-13 Proposed Pole Configuration Hedge/Hurley 230 kV Loop-In 3-78
Figure 3.15-14 Local Airports 3-82
Figure 3.16-1 SMUD Cogeneration Pipeline Project 3-89
Figure 3.18-1 Total Manpower by Month 3-98
Figure 6.2-1 Fault and Epicenter Map 6.2-2
Figure 6.3-1 Sacramento County Ground Water Contour Map Fall 1991 . . . . . 6.3-6
Figure 6.3-2 Sacramento County 3-D Ground Water Surface Plot Spring 1990 . . . . . 6.3-7
Figure 6.4-1 Representative View of the Project Site 6.4-2
Figure 6.4-2 Plant Communities and Wetlands in the Study Area 6.4-7
Figure 6.4-3 Locations of Fairy Shrimp in the Study Area 6.4-15

Volume 2

6.5 Transportation 6.5-1
6.6 Land Use 6.6-1
6.7 Socioeconomics 6.7-1
6.8 Cultural and Paleontological Resources 6.8-1
6.9 Aesthetics/Visual Resources 6.9-1
6.10 Noise 6.10-1
6.11 Waste Management 6.11-1
6.12 Public Health/Hazardous Material Handling 6.12-1
6.13 Worker Safety 6.13-1

7.0 Financial Impacts 7-1
7.1 Capital Cost Estimate 7-1
7.2 Fuel Costs 7-1
7.3 Operating and Maintenance Costs 7-1

Contents (Continued)

Volume 2 (Continued)

8.0 Alternatives 8-1
8.1 Introduction 8-1
8.2 Alternative Site Evaluation 8-1
8.3 Alternative Plant Configurations 8-5
8.4 Transmission Connection Alternatives 8-7
8.5 Applicable Laws, Ordinances, Regulations, and Standards . 8-7

9.0 List of Preparers 9-1

Tables

Table 6.5-1 Mileage of Maintained Public Roads in the Sacramento MSA (1980, 1985, and 1989) 6.5-2
Table 6.5-2 Segments of Major Highways at or Reaching Capacity in Sacramento County 6.5-5
Table 6.5-3 Interpretation of Level of Service (LOS) Ratings for Various Road Classifications 6.5-16
Table 6.5-4 Existing 1993 Level of Service (LOS) at Selected Intersections Along Primary Commuter Routes 6.5-18
Table 6.5-5 Expected Equipment Deliveries by Rail to the Procter & Gamble Cogeneration Site During Construction 6.5-23
Table 6.5-6 Peak Hour Level of Service Under Baseline and Project Conditions at Selected Locations During Peak Construction 6.5-27
Table 6.5-7 Projected Level of Service Under Baseline and Project Conditions at Selected Locations During Operation 6.5-31
Table 6.6-1 Zoning Categories in the Project Vicinity 6.6-12
Table 6.7-1 Population Estimates for California, the Sacramento MSA, and Selected Cities (1980-1992) 6.7-2
Table 6.7-2 Population Projections for California and the Sacramento MSA Counties (1995-2005) 6.7-5
Table 6.7-3 Civilian Labor Force, Employment, and Unemployment for the State and Sacramento MSA (1985-1992) 6.7-6

Table 6.7-4	Nonagricultural Wage and Salary Employment by Industry in the Sacramento MSA in Thousands (1980-1992)	6.7-9
Table 6.7-5	Nonagricultural Wage and Salary Employment Distribution in the Sacramento MSA and in California (1980 and 1992)	6.7-11
Table 6.7-6	Historical and Projected Nonagricultural Wage and Salary Employment for the Sacramento MSA	6.7-12
Table 6.7-7	Per Capita Income for the State and Sacramento MSA (1970-1990)	6.7-15
Table 6.7-8	Total Personal Income for the State and Sacramento MSA (1970-1990)	6.7-17
Table 6.7-9	Nonagricultural Personal Income by Major Industry for the Sacramento MSA (1980 and 1990)	6.7-18
Table 6.7-10	Average Hours and Earnings of Production Workers, by Selected Industry for California (1991)	6.7-19
Table 6.7-11	Housing Characteristics for the Sacramento MSA Area Counties and the State (1980 and 1992)	6.7-20
Table 6.7-12	Annual Median Resale Home Price in Sacramento County, California and the US (1980-1991)	6.7-22
Table 6.7-13	Number of Districts and Schools in California and the Sacramento MSA (1990-1991)	6.7-26
Table 6.7-14	Enrollment in Public School Grades by County, State, and the Sacramento MSA (1990-1991)	6.7-27
Table 6.7-15	Fall Enrollment for Selected Colleges in the Sacramento MSA (1985-1991)	6.7-29
Table 6.7-16	City of Sacramento Approved Budget Resources and Appropriations 1991-1992 and 1992-1993	6.7-31
Table 6.7-17	County of Sacramento Approved Budget Requirements and Financing Sources 1991-1992 and 1992-1993	6.7-32
Table 6.7-18	Estimated Procter & Gamble Cogeneration Project Construction Workforce by Major Craft/Occupation	6.7-36
Table 6.9-1	Cooling Tower Modeling Parameters	6.9-27
Table 6.10-1	Applicable Noise Limits	6.10-3
Table 6.10-2	Summary of Ambient Noise Data (dBA)	6.10-7
Table 6.10-3	Hourly L_{eq} Values	6.10-8

Table 6.10-4	Ambient Noise Survey Octave Band Levels	6.10-9
Table 6.10-5	Future Noise Producing Developments	6.10-12
Table 6.10-6	Construction Equipment Noise Emissions	6.10-15
Table 6.10-7	Cogeneration Facility Equipment Noise Emissions	6.10-20
Table 6.12-1	Census Tract Populations Within 3 Miles of the Project Site	6.12-6
Table 6.12-2	Characterization of the Air Toxic Health Risks	6.12-7
Table 6.12-3	Emission Factors and Emission Rates for the LM6000 Combined Cycles	6.12-8
Table 6.12-4	Emission Factors and Emission Rates for the LM6000 Simple Cycle	6.12-9
Table 6.12-5	Source Parameters	6.12-10
Table 6.12-6	Sensitive Receptors	6.12-11
Table 6.12-7	Maximum Annual Impacts for Carcinogenic Air Toxics	6.12-14
Table 6.12-8	Cancer Risk Assessment	6.12-15
Table 6.12-9	Comparison of Acute and Chronic Exposure Levels to the Adopted OEHHA and EPA AELs	6.12-16
Table 6.12-10	Vulnerable Zones for Hazardous Materials	6.12-22
Table 6.13-1	Locations of Potential Worker Hazards	6.13-2
Table 6.13-2	Basic Protective Equipment Guide	6.13-5
Table 6.13-3	Sample Emergency Response Plan Outline	6.13-13

Figures

Figure 6.5-1	Regional Transportation	6.5-4
Figure 6.5-2	Proposed Capital Improvements	6.5-8
Figure 6.5-3	HOV Segments Within and Near the City of Sacramento	6.5-9
Figure 6.5-4	Average Daily Traffic and Level of Service Locations on Local Transportation Network	6.5-13
Figure 6.5-5	Peak A.M. Project Worker Vehicle Projections on the Local Transportation Network	6.5-25
Figure 6.6-1	City of Sacramento	6.6-2

Figure 6.6-2 Aerial Photograph of the Project Vicinity 6.6-4
Figure 6.6-3 Existing Land Use in the Project Vicinity 6.6-5
Figure 6.6-4 Recreational Parks and Open Space in the Project Vicinity 6.6-6
Figure 6.6-5 Public and Private Land Ownership in the Project Vicinity 6.6-10
Figure 6.6-6 Zoning Designation in the Project Vicinity 6.6-11
Figure 6.6-7 General Land Use Element Designations in the Project Vicinity 6.6-16
Figure 6.6-8 County of Sacramento Urban Service Area 6.6-18
Figure 6.6-9 City of Sacramento New Growth Areas 6.6-21
Figure 6.6-10 New Growth Area Designations in the Project Study Area 6.6-22
Figure 6.6-11 Major Industrial Areas in the City of Sacramento 6.6-23
Figure 6.6-12 Specific Land Use Plan Designations in the Project Area 6.6-25
Figure 6.6-13 Community of South Sacramento Florin-Perkins Industrial Land Use Map 6.6-27
Figure 6.7-1 Total Man-Months of Employment During the Construction Period 6.7-35
Figure 6.8-1 Sacramento County Map 6.8-3
Figure 6.8-2 Procter & Gamble Cogeneration Project Site Location . 6.8-11
Figure 6.8-3 Transmission Line Cultural Resources 6.8-16
Figure 6.9-1 Project Viewshed 6.9-4
Figure 6.9-2 Typical View from Fruitridge Road 6.9-10
Figure 6.9-3a KOP 1--Existing Setting 6.9-14
Figure 6.9-3b KOP 1--Project Simulation (Northern Portion of View) 6.9-16
Figure 6.9-4a KOP 2--Existing Setting 6.9-19
Figure 6.9-4b KOP 2--Project Simulation 6.9-20
Figure 6.9-5a KOP 3--Existing Setting 6.9-21
Figure 6.9-5b KOP 3--Project Simulation 6.9-22
Figure 6.10-1 Noise Monitoring Locations (NMLs) 6.10-6
Figure 6.10-2 Potential Construction Impacts 6.10-18

Figure 6.10-3 Potential Operation Impacts 6.10-21
Figure 6.12-1 Sensitive Receptors 6.12-3
Figure 6.12-2 Census Tracts Within 3 Miles of the Project Site 6.12-5
Figure 6.12-3 Storage Locations of Hazardous Materials 6.12-18
Figure 6.12-4 Maximum VZ and IDLH Areas 6.12-23
Figure 6.13-1 Locations of Fire Suppression and Fire Fighting Equipment 6.13-15

Volume 3

Appendix A1 Western Systems Coordinating Council Existing Generation and Changes to System Facilities
Appendix A2 SMUD's Reliability Criteria for Transmission System Planning
Appendix A3 Procter & Gamble Project Interconnection Study
Appendix A4 Transmission Alternatives Cost Estimates
Appendix A5 Loss Analysis
Appendix A6 Power Flow Analysis
Appendix A7 Short-Circuit Analysis
Appendix B Mechanical Engineering Design Criteria
Appendix C Civil Engineering Design Criteria
Appendix C1 Geotechnical Engineering Study
Appendix D Structural/Seismic Engineering Design Criteria
Appendix E Chemical Engineering Design Criteria
Appendix F Electrical Engineering Design Criteria
Appendix G Control Engineering Design Criteria

Volume 4

Appendix H Letter from City of Sacramento
Appendix I Traffic Counts at Level of Service Locations
Appendix J Land Ownership by Parcel Number
Appendix K Cultural and Paleontological Resources Correspondence
Appendix L Phase I Archeological Survey

Contents (Continued)

Appendix M	Material Safety Data Sheets
Appendix N	Injury and Illness Prevention Program
Appendix O	Plant Maintenance Program

Contents

Volume 1

List of Acronyms

1.0 Executive Summary 1-1
- 1.1 Project Description 1-1
- 1.2 Project Need 1-4
- 1.3 Project Reliability 1-4
- 1.4 Environmental Considerations 1-5
- 1.5 Conclusion 1-7

2.0 Project Need 2-1
- 2.1 Introduction 2-1
- 2.2 Project Objectives 2-1
- 2.3 Need for the Proposed Facility 2-2
- 2.4 References 2-3

3.0 Project Description and Engineering 3-1
- 3.1 Introduction 3-1
- 3.2 Project Location 3-9
- 3.3 Site Description 3-9
- 3.4 Combustion Turbine Generators 3-17
- 3.5 Heat Recovery Steam Generators 3-20
- 3.6 Steam Turbine Generator 3-21
- 3.7 Major Electrical Equipment 3-22
- 3.8 Fuel Gas System 3-25
- 3.9 Water Supply and Treatment Facilities 3-26
- 3.10 Wastewater Collection and Treatment Facilities 3-34
- 3.11 Waste Disposal and Management 3-37
- 3.12 Emissions Control and Monitoring Equipment 3-40
- 3.13 Auxiliary Systems 3-43
- 3.14 Roads 3-48
- 3.15 Transmission Line Engineering 3-48
- 3.16 Gas Pipeline 3-88
- 3.17 Engineering Design Criteria 3-88
- 3.18 Facility Construction 3-90

Appendix A1
Western Systems Coordinating Council
Existing Generation and Changes
to System Facilities



Western Systems Coordinating Council

EXISTING GENERATION
AND
SIGNIFICANT ADDITIONS AND CHANGES
TO SYSTEM FACILITIES
1992-2002

Data as of

January 1, 1993

ISSUED
APRIL 1993

Prepared by
Loads and Resources Subcommittee
Data Collection Task Force
WSCC Technical Staff

WESTERN SYSTEMS COORDINATING COUNCIL
SUMMARY OF GENERATION ADDITIONS AND CHANGES
CALIFORNIA - SO. NEVADA POWER AREA
U.S. SYSTEMS

ORG.	PLANT NAME / UNIT NO. / LOCATION	UNIT TYPE	NET CAPABILITY MW SUMMER	NET CAPABILITY MW WINTER	PRIMARY FUEL FUEL TYPE	PRIMARY FUEL DELIV. METHOD	ALT. FUEL TYPE	COMMERCIAL OPERATION DATE PREV.	COMMERCIAL OPERATION DATE NEW	COMMERCIAL OPERATION DATE DATE	STATUS	COMMENTS
SCE	ALAMITOS 1, LONG BEACH CA	ST	-175	-175	NG	PL	FO4			1-92	M	UNIT PLACED ON COLD STANDBY
SCE	ALAMITOS 2, LONG BEACH CA	ST	-175	-175	NG	PL	FO4			1-92	M	UNIT PLACED ON COLD STANDBY
SCE	ALAMITOS 3, LONG BEACH CA	ST	320	320	NG	PL	FO4	1-96	YES	1-92	RA	UNIT RETURNED TO SERVICE
SDGE	QF COGENERATION, CA	CG	9	9	NG	PL	NA	1-92	NO	1-92	A	NON-UTILITY GENERATION
SDGE	QF COGENERATION, CA	CG	-20	-20	NG	PL	FO2			1-92	D	NON-UTILITY GENERATION
SDGE	QF HYDRO, CA	HL	-5	-5	WAT					1-92	D	NON-UTILITY GENERATION
SDGE	QF BIOGAS, CA	OT	1	1	OT		NA			1-92	A	NON-UTILITY GENERATION FUEL: SEWER & LANDFILL GAS
SDGE	ENCINA 4, CARLSBAD CA	ST	1	1	NG	PL	FO6			1-92	A	
ANHM	ANAHEIM CT, ANAHEIM CA	GT	2	2	NG	PL	NONE			1-92	A	UNIT UPRATED
PG&E	PVUSA 1, DAVIS CA	PV	1	1	SUN			1-92	NO	1-92		IN SERVICE
PG&E	QF HYDRO 92, NORTHERN CA	HY	3	3	WAT			1-92	NO	1-92		NON-UTILITY GENERATION INCLUDES FIRM & AS DEL'D CAP
PG&E	QF COGENERATION 92, NORTHERN CA	CG	208	208	NA			1-92	NO	1-92		NON-UTILITY GENERATION INCLUDES FIRM & AS DEL'D CAP
LDWP	HARBOR 3, WILMINGTON CA	ST	-62	-62	NG	PL	FO6	3-92	NO	3-92	M	DEACTIVATED SHUTDOWN
SDGE	ENCINA 1, CARLSBAD CA	ST	2	2	NG	PL	FO6			3-92	A	
NEVP	BONNEVILLE A, CLARK CO NV	CG	85	85	NG	PL	NONE	6-92	NO	6-92		NON-UTILITY GENERATION
SCE	NON-UTILITY HYDRO, CA	HY	-3	-3	WAT					7-92	D	NON-UTILITY GENERATION EXPECTED VALUE
SCE	NON-UTILITY GEOTHERMAL, CA	GE	1	1	GST			7-92	NO	7-92	A	NON-UTILITY GENERATION EXPECTED VALUE
SCE	NON-UTILITY COGEN., CA	CG	-4	-4	NA			7-92	NO	7-92	D	NON-UTILITY GENERATION EXPECTED VALUE
SCE	NON-UTILITY BIOMASS, CA	OT	31	31	BIO			7-92	NO	7-92	A	NON-UTILITY GENERATION EXPECTED VALUE
PG&E	GEYSERS 3, HEALDSBURG CA	GE	-27	-27	GST			4-92	YES	7-92	RT	UNIT RETIRED
PG&E	GEYSERS 4, HEALDSBURG CA	GE	-27	-27	GST			4-92	YES	7-92	RT	UNIT RETIRED
PG&E	GEYSERS 2, HEALDSBURG CA	GE	-13	-13	GST			4-92	YES	10-92	RT	UNIT RETIRED
SCE	SAN ONOFRE 1, SAN CLEMENTE CA	NP	-436	-436	UR			10-95	YES	12-92	M	DEACTIVATED SHUTDOWN
NEVP	BONNEVILLE B, CLARK CO NV	CG	85	85	NG	PL	NONE	12-92	NO	12-92		NON-UTILITY GENERATION
LDWP	MISC. SMALL COGEN, LOS ANGELES	CG	1	1	NA			1-93	NO	1-93	OT	NON-UTILITY GENERATION
PG&E	QF COGENERATION 93, NORTHERN CA	CG	43	43	NA			1-93	NO	1-93	OT	NON-UTILITY GENERATION INCLUDES FIRM & AS DEL'D CAP
PG&E	QF SOLID WASTE/BIOMASS 93, NO CA	OT	6	6	NA			1-93	NO	1-93	OT	NON-UTILITY GENERATION INCLUDES FIRM & AS DEL'D CAP
PG&E	QF GEOTHERMAL, NORTHERN CA	GE	40	40	GST			1-93	NO	1-93	OT	NON-UTILITY GENERATION
NEVP	CLARK 5, LAS VEGAS NV	GT	-70	-78	NG	PL	FO2	6-93	NO	6-93	RT	CLARK 5 CONVERTED TO
NEVP	CLARK 5, LAS VEGAS NV	CT	73	81	NG	PL	FO2	6-93	NO	6-93	V	COMBINED CYCLE OPERATION
NEVP	CLARK 6, LAS VEGAS NV	GT	-70	-78	NG	PL	FO2	6-93	NO	6-93	RT	CLARK 6 CONVERTED TO
NEVP	CLARK 6, LAS VEGAS NV	CT	73	81	NG	PL	FO2	6-93	NO	6-93	V	COMBINED CYCLE OPERATION

WESTERN SYSTEMS COORDINATING COUNCIL
SUMMARY OF GENERATION ADDITIONS AND CHANGES
CALIFORNIA - SO. NEVADA POWER AREA
U.S. SYSTEMS

ORG.	PLANT NAME / UNIT NO. / LOCATION	UNIT TYPE	NET CAPABILITY MW SUMMER	NET CAPABILITY MW WINTER	PRIMARY FUEL FUEL TYPE	PRIMARY FUEL DELIV. METHOD	ALT. FUEL TYPE	COMMERCIAL OPERATION DATE PREV.	COMMERCIAL OPERATION DATE NEW DATE	S T A T	COMMENTS
NEVP	CLARK 9, LAS VEGAS NV	CW	90	94	NG	PL	FO2	6-93 NO	6-93	V	
CDWR	DEVIL CANYON 3, SAN BERN. CA	HY	80	80	WAT			4-92 YES	6-93	OT	CONSTRUCTION COMPLETE UNIT UNDER TESTING
CDWR	DEVIL CANYON 4, SAN BERN. CA	HY	80	80	WAT			4-92 YES	6-93	OT	CONSTRUCTION COMPLETE UNIT UNDER TESTING
MID	WOODLAND GT, MODESTO CA	GT	46	48	NG	PL	FO2	6-93 NO	6-93	U	
SCE	NON-UTILITY GEOTHERMAL, CA	GE	30	30	GST			7-93 NO	7-93	OT	NON-UTILITY GENERATION EXPECTED VALUE
SCE	NON-UTILITY COGEN., CA	CG	6	6	NA			7-93 NO	7-93	OT	NON-UTILITY GENERATION EXPECTED VALUE
SCE	NON-UTILITY WIND, CA	WT	2	2	WND			7-93 NO	7-93	OT	NON-UTILITY GENERATION EXPECTED VALUE
SCE	NON-UTILITY BIOMASS, CA	OT	23	23	BIO			7-93 NO	7-93	OT	NON-UTILITY GENERATION EXPECTED VALUE
SDGE	QF COGENERATION (YCA), AZ	CG	12	12	NG	PL	NA	1-95 YES	7-93	C	NON-UTILITY GENERATION 50MW EXPECTED VALUE
LDWP	UCLA COGEN, LOS ANGELES CA	CG	39	39	NG	PL	NONE	1-93 YES	9-93	V	NON-UTILITY GENERATION
LDWP	HARBOR CC, WILMINGTON CA	CW	80	80	WH			1-94 NO	1-94	RA	HARBOR 5 CONVERTED TO COMBINED CYCLE OPERATION
LDWP	HARBOR CC, WILMINGTON CA	CT	160	160	NG	PL	FO6	1-94 NO	1-94	U	TWO 80MW UNITS
LDWP	MISC. SMALL COGEN, LOS ANGELES	CG	2	2	NA			1-94 NO	1-94	OT	NON-UTILITY GENERATION
LDWP	UNION PAC RES I, CA	CG	20	20	NG	PL	NONE		1-94	OT	NON-UTILITY GENERATION
LDWP	UNION PAC RES II, CA	CG	18	18	NG	PL	NONE		1-94	OT	NON-UTILITY GENERATION
SNCL	GRIZZLY, GRIZZLY FOREBAY CA	HY	20	20	WAT			1-94 NO	1-94	V	
RDNG	REDDING POWER, SHASTA CA	CG	30	30	NG	PL	WD	1-93 YES	1-94	U	RETROFIT UNIT FOR GAS FIRING
NEVP	LVCOGEN, CLARK CO NV	CG	41	41	NG	PL	NONE		3-94	C	NON-UTILITY GENERATION
MWD	ETIWANDA (2), RANCHO CUCAMONGA	HL	24	24	WAT			3-94 YES	4-94	U	
NEVP	CLARK 7, LAS VEGAS NV	GT	-73	-81	NG	PL	FO2	6-94 NO	6-94	RT	CLARK 7 CONVERTED TO
NEVP	CLARK 7, LAS VEGAS NV	CT	73	81	NG	PL	FO2	6-94 NO	6-94	U	COMBINED CYCLE OPERATION
NEVP	CLARK 8, LAS VEGAS NV	GT	-73	-81	NG	PL	FO2	6-94 NO	6-94	RT	CLARK 8 CONVERTED TO
NEVP	CLARK 8, LAS VEGAS NV	CT	73	81	NG	PL	FO2	6-94 ND	6-94	U	COMBINED CYCLE OPERATION
NEVP	CLARK 10, LAS VEGAS NV	CW	90	94	NG	PL	FO2	6-94 NO	6-94	U	
CDWR	MOJAVE SIPHON 1, SILVERWOOD CA	HL	11	11	WAT			6-94 NO	6-94	U	
RDNG	PEAKING, SHASTA CA	NA	70	75	NA	UN		1-94 YES	6-94	P	
SCE	NON-UTILITY GEOTHERMAL, CA	GE	37	37	GST			7-94 NO	7-94	OT	NON-UTILITY GENERATION EXPECTED VALUE
SCE	NON-UTILITY WIND, CA	WT	11	11	WND			7-94 NO	7-94	OT	NON-UTILITY GENERATION EXPECTED VALUE
SDGE	QF SOLAR (LUZ), CA	SS	2	2	SUN			7-94 NO	7-94	C	NON-UTILITY GENERATION 80MW EXPECTED VALUE
SDGE	QF COGENERATION, CA	CG	24	24	NG	PL	NA		7-94	C	NON-UTILITY GENERATION

WESTERN SYSTEMS COORDINATING COUNCIL
SUMMARY OF GENERATION ADDITIONS AND CHANGES
CALIFORNIA - SO. NEVADA POWER AREA
U.S. SYSTEMS

ORG.	PLANT NAME / UNIT NO. / LOCATION	UNIT TYPE	NET CAPABILITY MW SUMMER	NET CAPABILITY MW WINTER	PRIMARY FUEL FUEL TYPE	PRIMARY FUEL DELIV. METHOD	ALT. FUEL TYPE	COMMERCIAL OPERATION DATE PREV.	COMMERCIAL OPERATION DATE NEW DATE	S T A T	COMMENTS
NEVP	OXFORD, MOAPA NV	OT	45	45	OT			7-94 NO	7-94	C	NON-UTILITY GENERATION EXPECTED VALUE FUEL: USED TIRES
CDWR	MOJAVE SIPHON 2, SILVERWOOD CA	HL	11	11	WAT			9-94 NO	9-94	U	
MID	COGEN NO. 1, LIVINGSTON CA	CG	46	48	NG	PL	FO2	6-93 YES	9-94	L	
CDWR	MOJAVE SIPHON 3, SILVERWOOD CA	HL	11	11	WAT			12-94 NO	12-94	U	
LDWP	MISC. SMALL COGEN, LOS ANGELES	CG	2	2	NA			1-95 NO	1-95	OT	NON-UTILITY GENERATION
LDWP	COSO 1 (2), COSO JUNCTION CA	GE	60	60	GST			1-96 YES	1-95	L	
SDGE	QF COGENERATION, CA	CG	160	160	NG	PL	NONE	1-95 NO	1-95	OT	NON-UTILITY GENERATION
SDGE	QF-IDR, CA	NA	135	135	NA				1-95	I	NON-UTILITY GENERATION
PG&E	QF SOLID WASTE/BIOMASS 95, NO CA	OT	8	8	NA			1-95 NO	1-95	OT	NON-UTILITY GENERATION INCLUDES FIRM & AS DEL'D CAP
SMUD	CARSON ICE, SACRAMENTO CA	CG	95	95	NG	PL	NONE	1-95 NO	1-95	P	FORMERLY REPORTED AS A NUG
SMUD	U. S. WIND, RIO VISTA CA	WT	0	0	WND			1-95 NO	1-95	P	FORMERLY REPORTED AS A NUG
NCPA	CT PROJECT NO. 2, LODI CA	GT	49	49	NG	PL	PRO	1-93 YES	1-95	P	
TID	CERES CC, CERES CA	CS	49	49	NG	PL	LPG	7-93 YES	2-95	T	
CDWR	SAN LUIS OBISPO 1, CA	HY	5	5	WAT			4-95 NO	4-95	P	
NEVP	ALLEN CT 1, CLARK CO NV	GT	70	78	NG	PL	FO2	6-94 YES	6-95	T	
SDGE	QF COGENERATION, CA	CG	24	24	NG	PL	NA		7-95	C	NON-UTILITY GENERATION
LDWP	MISC. SMALL COGEN, LOS ANGELES	CG	1	1	NA			1-96 NO	1-96	OT	NON-UTILITY GENERATION
LDWP	HYPERION UPGRADE, LOS ANGELES CA	CG	20	20	OT				1-96	U	NON-UTILITY GENERATION FUELED BY WASTE GAS & SLUDGE
SDGE	QF-IDR, CA	NA	138	138	NA				1-96	I	NON-UTILITY GENERATION
PG&E	PVUSA 2, DAVIS CA	PV	2	2	SUN			1-96 NO	1-96	T	
PG&E	QF COGENERATION 96, NORTHERN CA	CG	37	37	NA			1-96 NO	1-96	OT	NON-UTILITY GENERATION INCLUDES FIRM & AS DEL'D CAP
PG&E	UNID. PG&E HYDRO 96, NORTHERN CA	HY	1	1	WAT			1-96 NO	1-96	P	HYDRO PROJECT IMPROVEMENTS
SMUD	CAMPBELL CG, SACRAMENTO CA	CG	113	113	NG	PL	NONE	1-96 NO	1-96	P	FORMERLY REPORTED AS A NUG
SMUD	PROCTER & GAMBLE, SACRAMENTO CA	CG	143	143	NG	PL	NONE	1-96 NO	1-96	P	FORMERLY REPORTED AS A NUG
SMUD	SUTTER ETHANOL, SUTTER COUNTY CA	CG	149	149	NG	PL	NONE	1-96 NO	1-96	P	FORMERLY REPORTED AS A NUG
NEVP	ALLEN CT 2, CLARK CO NV	GT	70	78	NG	PL	FO2	6-94 YES	6-96	L	
SDGE	QF BIOMASS, CA	OT	10	10	REF			1-95 YES	7-96	C	NON-UTILITY GENERATION 38MW FUEL: MUNICIPAL SOLID WASTE FORMERLY QF COGENERATION
LDWP	MISC. SMALL COGEN, LOS ANGELES	CG	2	2	NA			1-97 NO	1-97	OT	NON-UTILITY GENERATION
SDGE	SOUTH BAY 3, CHULA VISTA CA	ST	455	455	NG	PL	FO6	1-97 NO	1-97	RP	REPOWER
SDGE	QF-RENEWABLE IDR, CA	NA	100	100	NA				1-97	I	NON-UTILITY GENERATION
PG&E	UNID. PG&E HYDRO 97, NORTHERN CA	HY	114	114	WAT			1-97 NO	1-97	P	HYDRO PROJECT IMPROVEMENTS
NEVP	ALLEN CT 3, CLARK CO NV	GT	70	78	NG	PL	FO2	6-95 YES	6-97	L	
SCE	NON-UTILITY GEOTHERMAL, CA	GE	100	100	GST			7-95 YES	7-97	OT	NON-UTILITY GENERATION EXPECTED VALUE

WESTERN SYSTEMS COORDINATING COUNCIL
SUMMARY OF GENERATION ADDITIONS AND CHANGES
CALIFORNIA - SO. NEVADA POWER AREA
U.S. SYSTEMS

ORG.	PLANT NAME / UNIT NO. / LOCATION	UNIT TYPE	NET CAPABILITY MW SUMMER	NET CAPABILITY MW WINTER	PRIMARY FUEL FUEL TYPE	PRIMARY FUEL DELIV. METHOD	ALT. FUEL TYPE	COMMERCIAL OPERATION DATE PREV.	NEW	DATE	STAT	COMMENTS
SCE	NON-UTILITY WIND, CA	WT	50	50	WND			7-97	NO	7-97	OT	NON-UTILITY GENERATION EXPECTED VALUE
LDWP	MISC. SMALL COGEN, LOS ANGELES	CG	2	2	NA			1-98	NO	1-98	OT	NON-UTILITY GENERATION
LDWP	VALLEY 1, SUN VALLEY CA	ST	-95	-95	NG	PL	FO6			1-98	RT	UNIT TO BE RETIRED
LDWP	VALLEY 2, SUN VALLEY CA	ST	-99	-99	NG	PL	FO6			1-98	RT	UNIT TO BE RETIRED
LDWP	COMBINED CYCLE 2, LA COUNTY CA	CW	87	87	WH					1-98	P	
LDWP	COMBINED CYCLE 2, LA COUNTY CA	CT	173	173	NG	PL	FO6			1-98	P	
LDWP	COSO 2 (3), COSO JUNCTION CA	GE	90	90	GST			1-99	YES	1-98	L	
SDGE	QF-RENEWABLE IDR, CA	NA	100	100	NA					1-98	I	NON-UTILITY GENERATION
PASA	GENERIC FUEL CELL, CA	FC	2	2	NG	PL	NONE			1-98	P	
PG&E	UNID. PG&E SMALL HYDRO 98, CA	HY	3	3	WAT			1-98	NO	1-98	P	
PG&E	UNID. PG&E HYDRO 98, NORTHERN CA	HY	16	16	WAT			1-98	NO	1-98	P	HYDRO PROJECT IMPROVEMENTS
NEVP	ALLEN CT 4, CLARK CO NV	GT	70	78	NG	PL	FO2	6-95	YES	6-98	L	
NEVP	CLARK 4, LAS VEGAS NV	GT	-50	-59	NG	PL	FO2	6-98	NO	6-98	RT	
SCE	HUNTINGTON BEACH 3, HUNT. BCH CA	CT	420	445	NG	PL	NONE	7-98	NO	7-98	RP	RETURNED TO SERVICE
SCE	HUNTINGTON BEACH 3, HUNT. BCH CA	CW	180	190	WH			7-98	NO	7-98	RP	REPOWERED AS CC UNIT
RDNG	LAKE RED BLUFF, SACRAMENTO R CA	HY	4	8	WAT			7-98	NO	7-98	L	
NEVP	SUNRISE 2, LAS VEGAS NV	GT	-69	-76	NG	PL	FO2	1-99	YES	12-98	RT	
LDWP	MISC. SMALL COGEN, LOS ANGELES	CG	2	2	NA			1-99	NO	1-99	OT	NON-UTILITY GENERATION
SDGE	ENCINA 2, CARLSBAD CA	ST	274	274	NG	PL	FO6	1-01	YES	1-99	RP	REPOWER
PG&E	HUNTERS PT REPWR, SAN FRANCISCO	ST	-214	-214	NG	PL	FO6	1-99	NO	1-99	RP	REPOWER GAS/OIL STEAM UNITS
PG&E	HUNTERS PT REPWR, SAN FRANCISCO	CW	125	125	WH			1-99	NO	1-99	RP	FOR COMBINED CYCLE OPERATION
PG&E	HUNTERS PT REPWR, SAN FRANCISCO	CT	310	310	NG	PL	FO2	1-99	NO	1-99	RP	
NEVP	ALLEN CT 5, CLARK CO NV	GT	70	78	NG	PL	FO2	6-96	YES	6-99	L	
NEVP	ALLEN CT 6, CLARK CO NV	GT	70	78	NG	PL	FO2	6-96	YES	6-99	L	
RDNG	SPRING CREEK PS, SACRAMENTO R CA	PS	50	50	WAT			6-95	YES	6-99	L	PLANT DESIGNED FOR 4 UNITS INITIAL INSTALLATION WILL BE TWO-25MW UNITS
SCE	NON-UTILITY GEOTHERMAL, CA	GE	200	200	GST					7-99	OT	NON-UTILITY GENERATION EXPECTED VALUE
LDWP	MISC. SMALL COGEN, LOS ANGELES	CG	1	1	NA			1-00	NO	1-00	OT	NON-UTILITY GENERATION
LDWP	VALLEY 3, SUN VALLEY CA	ST	-163	-163	NG	PL	FO6			1-00	RT	UNIT TO BE RETIRED
LDWP	VALLEY 4, SUN VALLEY CA	ST	-160	-160	NG	PL	FO6			1-00	RT	UNIT TO BE RETIRED
LDWP	COMBINED CYCLE 3, LA COUNTY CA	CW	87	87	WH					1-00	P	
LDWP	COMBINED CYCLE 3, LA COUNTY CA	CT	173	173	NG	PL	FO6			1-00	P	
LDWP	GENERIC SOLAR, CA	SS	50	50	SUN					1-00	P	
LDWP	FUEL CELL 1, LOS ANGELES CA	FC	10	10	NG	PL	NONE			1-00	P	
SMUD	UNID. ADVANCED SOLAR, NO CA	SS	150	150	SUN			1-00	NO	1-00	OT	NON-UTILITY GENERATION RECOMMENDED ONLY. NOT BOARD APPROVED

WESTERN SYSTEMS COORDINATING COUNCIL
SUMMARY OF GENERATION ADDITIONS AND CHANGES
CALIFORNIA - SO. NEVADA POWER AREA
U.S. SYSTEMS

ORG.	PLANT NAME / UNIT NO. / LOCATION	UNIT TYPE	NET CAPABILITY MW SUMMER	NET CAPABILITY MW WINTER	PRIMARY FUEL FUEL TYPE	PRIMARY FUEL DELIV. METHOD	ALT. FUEL TYPE	COMMERCIAL OPERATION DATE PREV.	COMMERCIAL OPERATION DATE NEW	COMMERCIAL OPERATION DATE DATE	STATUS	COMMENTS
SMUD	UNID. ADVANCED GEO, NO CA	GE	51	51	GST			1-00	NO	1-00	OT	NON-UTILITY GENERATION RECOMMENDED ONLY. NOT BOARD APPROVED
SMUD	SMUD FUEL CELL, SACRAMENTO CA	FC	50	50	NG	PL	NONE			1-00	P	LOCATION NOT DETERMINED RECOMMENDED ONLY. NOT BOARD APPROVED
NEVP	ALLEN CT 7, CLARK CO NV	GT	70	78	NG	PL	FO2	6-97	YES	6-00	L	
NEVP	ALLEN CT 8, CLARK CO NV	GT	70	78	NG	PL	FO2	6-97	YES	6-00	L	
LDWP	MISC. SMALL COGEN, LOS ANGELES	CG	2	2	NA			1-01	NO	1-01	OT	NON-UTILITY GENERATION
LDWP	FUEL CELL 2, LOS ANGELES CA	FC	10	10	NG	PL	NONE			1-01	P	
NEVP	ALLEN CT 9, CLARK CO NV	GT	125	139	NG	PL	FO2	6-99	YES	6-01	P	
NEVP	ALLEN CT 10, CLARK CO NV	GT	125	139	NG	PL	FO2	6-00	YES	6-01	P	
LDWP	MISC. SMALL COGEN, LOS ANGELES	CG	2	2	NA					1-02	OT	NON-UTILITY GENERATION
LDWP	FUEL CELL 3, LOS ANGELES CA	FC	10	10	NG	PL	NONE			1-02	P	
NEVP	ALLEN CT 11, CLARK CO NV	GT	125	139	NG	PL	FO2	6-01	YES	6-02	P	
	********** THE FOLLOWING ITEMS HAVE BEEN CANCELED OR DELAYED BEYOND THE STUDY PERIOD **********											
SCE	NON-UTILITY SOLAR, CA	SS	20	20	SUN			7-92				CANCELED
SCE	NON-UTILITY WIND, CA	WT	-13	-13	WND			7-92				CANCELED
SCE	NON-UTILITY SOLAR, CA	SS	8	8	SUN			7-93				CANCELED
SCE	NON-UTILITY SOLAR, CA	SS	8	8	SUN			7-94				CANCELED
SCE	NON-UTILITY WIND, CA	WT	8	8	WND			7-95				CANCELED
SCE	SAN BERNARDINO 1-2, SAN BERN. CA	CT	280	305	NG	PL	NONE	7-96				DELAYED BEYOND STUDY PERIOD
SCE	SAN BERNARDINO 1-2, SAN BERN. CA	CW	120	130	WH			7-96				DELAYED BEYOND STUDY PERIOD
SCE	NON-UTILITY WIND, CA	WT	2	2	WND			7-96				CANCELED
SDGE	QF GEOTHERMAL, CA	GE	20	20	GST			1-94				CANCELED
SDGE	QF GEOTHERMAL, CA	GE	10	10	GST			1-95				CANCELED
SDGE	QF COGENERATION, CA	CG	140	140	NG	PL	NONE	1-95				CANCELED
SDGE	QF GEOTHERMAL, CA	GE	20	20	GST			1-96				CANCELED
SDGE	GEOTHERMAL, CA	GE	50	50	GST			1-97				CANCELED
SDGE	ENCINA 1, CARLSBAD CA	ST	273	273	NG	PL	FO6	1-99				CANCELED
PG&E	QF HYDRO 93, NORTHERN CA	HY	1	1	WAT			1-93				NOT IN CURRENT RESOURCE PLAN
USMP	SHASTA UNIT 4, SACTO RIVER CA	HY	20	20	WAT			10-94				CANCELED
USMP	SHASTA UNIT 5, SACTO RIVER CA	HY	20	20	WAT			10-95				CANCELED
SMUD	DIESEL GENERATION 1, HERALD CA	IC	3	3	FO2	TK	NONE	10-92				CANCELED
SMUD	DIESEL GENERATION 2, HERALD CA	IC	3	3	FO2	TK	NONE	10-92				CANCELED
SMUD	DIESEL GENERATION 3, HERALD CA	IC	3	3	FO2	TK	NONE	10-92				CANCELED

WESTERN SYSTEMS COORDINATING COUNCIL
SUMMARY OF GENERATION ADDITIONS AND CHANGES
CALIFORNIA - SO. NEVADA POWER AREA
U.S. SYSTEMS

ORG.	PLANT NAME / UNIT NO. / LOCATION	UNIT TYPE	NET CAPABILITY MW SUMMER	NET CAPABILITY MW WINTER	PRIMARY FUEL FUEL TYPE	PRIMARY FUEL DELIV. METHOD	ALT. FUEL TYPE	COMMERCIAL OPERATION DATE PREV.	COMMERCIAL OPERATION DATE NEW DATE	STAT	COMMENTS
	********** THE FOLLOWING ITEMS HAVE BEEN CANCELED OR DELAYED BEYOND THE STUDY PERIOD **********										
SMUD	UARP UPGRADE, SF AMERICAN R CA	HY	100	100	WAT			1-00			DELAYED BEYOND STUDY PERIOD

WESTERN SYSTEMS COORDINATING COUNCIL
SUMMARY OF SIGNIFICANT TRANSMISSION ADDITIONS AND CHANGES
CALIFORNIA - SO. NEVADA POWER AREA
U.S. SYSTEMS

ORG.	TERMINAL LOCATIONS		RT/WY MILES	CKT. MILES	NOMINAL VOLTAGE IN KV DESIGN	NOMINAL VOLTAGE IN KV OPER.	RATING (MVA)	COMMERCIAL OPERATION DATE PREV.	COMMERCIAL OPERATION DATE NEW	COMMERCIAL OPERATION DATE DATE	COMMENTS
	COMMENTS FOR ALL SCE 500KV LINE RATING										THE RATINGS OF SCE 500KV LINES ARE NOMINALLY 1000 MW DUE TO STABILITY + SYSTEM PERFORMANCE CONSTRAINTS. ACTUAL CAPABILITY OF THE SCE 500KV SYSTEM WILL FROM TIME TO TIME BE DETERMINED BY SYSTEM STUDIES
WAMP	TRACY CA	BANKS CA	0	2	230	230	890 A	2-92	NO	2-92	IN SERVICE
NEVP	MCCULLOUGH NV	ARDEN NV	24	24	230	230	335 A	6-92	NO	6-92	IN SERVICE
NEVP	CLARK NV	ARDEN NV	12	12	138	138	200 A	6-92	NO	6-92	IN SERVICE
WAMP	COTTONWOOD CA	ELVERTA CA	0	-130	230	230	890 A	7-92	NO	7-92	REMOVED FROM SERVICE
WAMP	COTTONWOOD CA	ROSEVILLE CA	12	142	230	230	890 A	7-92	NO	7-92	IN SERVICE
WAMP	ELVERTA CA	ROSEVILLE CA	2	14	230	230	890 A	7-92	NO	7-92	IN SERVICE
PG&E	TESLA CA	LOS BANOS CA	0	-57	500	500	0	12-92	NO	12-92	REMOVED FROM SERVICE
PG&E	TRACY CA	LOS BANOS CA	0	65	500	500	2121 A	12-92	NO	12-92	IN SERVICE
WAMP	KESWICK CA	COTTONWOOD CA	0	-21	230	230	0	12-92	NO	12-92	REMOVED FROM SERVICE
WAMP	KESWICK CA	OLINDA CA	1	15	230	230	1050 A	12-92	NO	12-92	IN SERVICE
WAMP	OLINDA CA	COTTONWOOD CA	0	7	230	230	1050 A	12-92	NO	12-92	IN SERVICE
WAMP	COTTONWOOD CA	ELVERTA CA	0	-154	230	230	0	12-92	NO	12-92	REMOVED FROM SERVICE
WAMP	OLINDA CA	COTTONWOOD CA	0	7	230	230	1050 A	12-92	NO	12-92	IN SERVICE
WAMP	OLINDA CA	ELVERTA CA	0	147	230	230	1050 A	12-92	NO	12-92	IN SERVICE
WAMP	TRACY CA	TESLA CA	8	8	500	525	2310 A	12-92	YES	3-93	INCREASE INTERCHANGE CAP
WAMP	OLINDA CA	CAPTAIN JACK OR	0	130	500	525	2000 A	12-92	YES	3-93	INCREASE INTERCHANGE CAP
WAMP	OLINDA CA	MAXWELL CA	0	100	500	525	2300 G	12-92	YES	3-93	CONVERT A SECTION OF SHASTA/ COTTONWOOD-TRACY 230KV LINES TO CREATE THE OLINDA-MAXWELL -TRACY 500KV LINE
WAMP	MAXWELL CA	TRACY CA	0	100	500	525	2300 G	12-92	YES	3-93	CONVERT A SECTION OF SHASTA/ COTTONWOOD-TRACY 230KV LINES TO CREATE THE OLINDA-MAXWELL-TRACY 500KV LINE
PG&E	PANOCHE CA	GATES CA	0	14	230	230	300 A	7-93	NO	7-93	ESTABLISH SECOND 230KV CIRCUIT

NOTE - LINE RATING CODES: A = CONTINUOUS CURRENT RATING, B = SYSTEM STABILITY, C = PERMISSIBLE VOLTAGE DROP, D = LIMITATIONS IN CAPACITY OF OTHER CONNECTING LINES, E = TRANSFORMER CAPACITY, F = LINE CAPACITY CONTROLLED BY PARALLEL CIRCUITS & LOAD LOCATION, G = LIMITATIONS ASSOCIATED WITH LINE EQUIPMENT, H = RELAY SETTINGS, I = SURGE IMPEDANCE LOADING, J = OTHER (SEE COMMENTS)

WESTERN SYSTEMS COORDINATING COUNCIL
SUMMARY OF SIGNIFICANT TRANSMISSION ADDITIONS AND CHANGES
CALIFORNIA - SO. NEVADA POWER AREA
U.S. SYSTEMS

ORG.	TERMINAL LOCATIONS		RT/WY MILES	CKT. MILES	NOMINAL VOLTAGE IN KV DESIGN	NOMINAL VOLTAGE IN KV OPER.	RATING (MVA)	COMMERCIAL OPERATION DATE PREV.	COMMERCIAL OPERATION DATE NEW	COMMERCIAL OPERATION DATE DATE	COMMENTS
LDWP	MEAD NV	MCCULLOUGH NV #1	0	15	230	230	358 A	6-94	NO	6-94	LOOP THE HOOVER-MCCULLOUGH LINE THROUGH MEAD TO DELIVER GENERATOR OUTPUT. PART OF HOOVER CONSOLIDATION
LDWP	MEAD NV	MCCULLOUGH NV #2	0	15	230	230	358 A	6-94	NO	6-94	LOOP THE HOOVER-MCCULLOUGH LINE THROUGH MEAD TO DELIVER GENERATOR OUTPUT. PART OF HOOVER CONSOLIDATION
SDGE	TALEGA CA	SAN ONOFRE CA	0	7	230	230	518 A			6-94	LOAD GROWTH AND IMPROVED RELIABILITY
NEVP	LV COGEN NV	PECOS NV	4	4	138	138	204 A			6-94	FOR 45 MW OF COGENERATION
ANHM	ADELANTO CA	LUGO CA	20	20	500	500	1500 A	1-95	NO	1-95	JOINT PARTICIPATION PROJECT TO DELIVER GENERATOR OUTPUT TO MUNICIPAL UTILITIES
NEVP	PECOS NV	HARRY ALLEN NV	17	17	230	230	400 E	6-95	NO	6-95	FOR HARRY ALLEN COMBUSTION TURBINES
NEVP	CRAIG NV	HIGHLAND NV	9	9	138	138	204 A			6-95	SYSTEM REINFORCEMENT
TID	TRACY CA	WESTLEY CA	0	30	230	230	780 E			8-95	INCREASE INTERCHANGE CAP AND PROVIDE BACKUP TRANSMISSION
LDWP	MCCULLOUGH NV	MARKETPLACE NV #1	1	1	500	500	4000 A	12-95	NO	12-95	INTERCONNECT TWO 500KV STATIONS FOR IMPROVED RELIABILITY
LDWP	ADELANTO CA	MARKETPLACE NV	202	202	500	500	1200 B	12-95	NO	12-95	DELIVER GENERATOR OUTPUT FORMERLY ADELANTO-MCCULLOUGH
SMUD	ETHANOL SUB CA	ELVERTA SUB CA	1	1	230	230	303 A	1-96	NO	1-96	RADIAL TIE FROM ETHANOL SUB TO ELVERTA SUB
NEVP	TAP POINT NV	HARRY ALLEN NV	1	1	230	230	637 A	6-96	NO	6-96	DELIVER NEW GENERATOR OUTPUT LOOP-IN OF REID GARDNER-PECOS #1 INTO HARRY ALLEN
NEVP	HARRY ALLEN NV	TAP POINT NV	0	1	230	230	637 A	6-96	NO	6-96	LOOP-IN OF REID GARDNER-PECOS #1 INTO HARRY ALLEN
SMUD	HEDGE SUB CA	HURLEY SUB CA	0	-7	230	230	303 A	1-96	YES	7-96	LOOP HEDGE-HURLEY INTO NEW PROCTER SUB DELIVER NEW GENERATOR OUTPUT

NOTE - LINE RATING CODES: A = CONTINUOUS CURRENT RATING, B = SYSTEM STABILITY, C = PERMISSIBLE VOLTAGE DROP, D = LIMITATIONS IN CAPACITY OF OTHER CONNECTING LINES, E = TRANSFORMER CAPACITY, F = LINE CAPACITY CONTROLLED BY PARALLEL CIRCUITS & LOAD LOCATION, G = LIMITATIONS ASSOCIATED WITH LINE EQUIPMENT, H = RELAY SETTINGS, I = SURGE IMPEDANCE LOADING, J = OTHER (SEE COMMENTS)

WESTERN SYSTEMS COORDINATING COUNCIL
SUMMARY OF SIGNIFICANT TRANSMISSION ADDITIONS AND CHANGES
CALIFORNIA - SO. NEVADA POWER AREA
U.S. SYSTEMS

ORG.	TERMINAL LOCATIONS		RT/WY MILES	CKT. MILES	NOMINAL VOLTAGE IN KV DESIGN	NOMINAL VOLTAGE IN KV OPER.	RATING (MVA)	COMMERCIAL OPERATION DATE PREV.	COMMERCIAL OPERATION DATE NEW DATE	COMMENTS
SMUD	HEDGE SUB CA	PROCTER SUB CA	2	4	230	230	303 A	1-96 YES	7-96	LOOP HEDGE-HURLEY INTO NEW PROCTER SUB DELIVER NEW GENERATOR OUTPUT
SMUD	HURLEY SUB CA	PROCTER SUB CA	2	7	230	230	303 A	1-96 YES	7-96	LOOP HEDGE-HURLEY INTO NEW PROCTER SUB DELIVER NEW GENERATOR OUTPUT
SMUD	HEDGE SUB CA	POCKET SUB CA	0	-8	230	230	478 A	1-96 YES	7-96	LOOP HEDGE-POCKET INTO NEW CAMPBELL SUB DELIVER NEW GENERATOR OUTPUT
SMUD	HEDGE SUB CA	CAMPBELL SUB CA	1	8	230	230	478 A	1-96 YES	7-96	LOOP HEDGE-POCKET INTO NEW CAMPBELL SUB DELIVER NEW GENERATOR OUTPUT
SMUD	POCKET SUB CA	CAMPBELL SUB CA	1	2	230	230	478 A	1-96 YES	7-96	LOOP HEDGE-POCKET INTO NEW CAMPBELL SUB DELIVER NEW GENERATOR OUTPUT
SDGE	SDUTH BAY CA	MISSION CA	0	14	230	230	797 A		6-97	LOAD GROWTH AND IMPROVED RELIABILITY
SDGE	SOUTH BAY CA	MIGUEL CA	0	11	230	230	797 A		6-97	LOAD GROWTH AND IMPROVED RELIABILITY
NEVP	TAP POINT NV	HARRY ALLEN NV	0	1	230	230	637 A	6-97 NO	6-97	LOOP-IN OF REID GARDNER-PECOS #2 INTO HARRY ALLEN
NEVP	HARRY ALLEN NV	TAP POINT NV	0	1	230	230	637 A	6-97 NO	6-97	LOOP-IN OF REID GARDNER-PECOS #2 INTO HARRY ALLEN
LDWP	MCCULLOUGH NV	MARKETPLACE NV #2	0	1	500	500	4000 A	8-97 YES	12-97	INTERCONNECT TWO 500KV STATIONS FOR IMPROVED RELIABILITY
PG&E	GATES CA	GREGG CA	59	59	230	230	753 A	5-97 YES	12-97	RELIEVE OVERLOADS
PG&E	GATES CA	HERNDON CA	0	59	230	230	753 A	5-97 YES	12-97	RELIEVE OVERLOADS
NEVP	NORTHWEST NV	HARRY ALLEN NV	34	34	230	230	300 E	6-98 NO	6-98	FOR HARRY ALLEN COMBUSTION TURBINES
NEVP	ARDEN NV	NORTHWEST NV	30	30	230	230	681 A		6-98	SYSTEM REINFORCEMENT
PG&E	MARTIN CA	SAN MATEO CA	13	13	230	230	418 A	6-98 YES	6-99	MEET LOAD GROWTH
SCE	PALO VERDE AZ	DEVERS CA #2	0	238	500	500	1000 J	6-97 YES	12-99	INCREASE INTERCHANGE CAP

NDTE - LINE RATING CODES: A = CONTINUOUS CURRENT RATING, B = SYSTEM STABILITY, C = PERMISSIBLE VDLTAGE DROP, D = LIMITATIONS IN CAPACITY OF OTHER CONNECTING LINES, E = TRANSFORMER CAPACITY, F = LINE CAPACITY CONTROLLED BY PARALLEL CIRCUITS & LOAD LOCATION, G = LIMITATIONS ASSOCIATED WITH LINE EQUIPMENT, H = RELAY SETTINGS, I = SURGE IMPEDANCE LOADING, J = OTHER (SEE COMMENTS)

WESTERN SYSTEMS COORDINATING COUNCIL
SUMMARY OF SIGNIFICANT TRANSMISSION ADDITIONS AND CHANGES
CALIFORNIA - SO. NEVADA POWER AREA
U.S. SYSTEMS

ORG.	TERMINAL LOCATIONS		RT/WY MILES	CKT. MILES	NOMINAL VOLTAGE IN KV DESIGN	NOMINAL VOLTAGE IN KV OPER.	RATING (MVA)	COMMERCIAL OPERATION DATE PREV.	COMMERCIAL OPERATION DATE NEW DATE	COMMENTS
LDWP	DELTA UT	MARKETPLACE NV	345	345	500	500	1386 A	1-00	NO 1-00	PROJECT IS TENTATIVE POSSIBLE JOINT PARTICIPATION WITH DGT AND UAMP
LDWP	DELTA UT	INTERMOUNTAIN UT #1	2	2	345	345	1386 A	1-00	NO 1-00	PROJECT IS TENTATIVE POSSIBLE JOINT PARTICIPATION WITH DGT AND UAMP
LDWP	ROBINSON SUMMIT NV	DELTA UT	165	165	500	500	1386 A	1-01	NO 1-01	PROJECT IS TENTATIVE POSSIBLE JOINT PARTICIPATION WITH DGT AND UAMP
	**********	THE FOLLOWING ITEMS HAVE BEEN CANCELED OR DELAYED BEYOND THE STUDY PERIOD								**********
SCE	VICTOR CA	KRAMER CA #1	35	35	230	230	500 A	1-93		CANCELED
SCE	VICTOR CA	KRAMER CA #2	0	35	230	230	500 A	1-93		CANCELED

NOTE - LINE RATING CODES: A = CONTINUOUS CURRENT RATING, B = SYSTEM STABILITY, C = PERMISSIBLE VOLTAGE DROP, D = LIMITATIONS IN CAPACITY OF OTHER CONNECTING LINES, E = TRANSFORMER CAPACITY, F = LINE CAPACITY CONTROLLED BY PARALLEL CIRCUITS & LOAD LOCATION, G = LIMITATIONS ASSOCIATED WITH LINE EQUIPMENT, H = RELAY SETTINGS, I = SURGE IMPEDANCE LOADING, J = OTHER (SEE COMMENTS)

Appendix A2

SMUD's Reliability Criteria for Transmission System Planning

RELIABILITY CRITERIA FOR TRANSMISSION SYSTEM PLANNING

Sacramento Municipal Utility District

August 19, 1993

CONTENTS

PAGE

1 INTRODUCTION 1

1.1 Purpose of Criteria 1
1.2 Objective of Criteria 1
1.3 Single System Planning 2
1.4 Description of Criteria 2
1.5 WSCC Criteria 2
1.6 Application of Criteria 2

2 DEFINITIONS 3

2.1 Transmission System 3
2.2 Region 3
2.3 Intertie 3
2.4 Point of Delivery or Receipt 3
2.5 Point of Interconnection 3
2.6 Major Load Area 3
2.7 Inadvertent Interchange 4
2.8 Inadvertent Flow 4
2.9 Unscheduled Flow (Loop Flow) 4
2.10 Remedial Actions 4
2.11 Remedial Action Scheme 4
2.12 Interregional Separation 4
2.13 Area Separation 5
2.14 Contingency 5
2.15 Cascading 5
2.16 Control Area 5
2.17 Operational Transfer Capability 5
2.18 Rated Transfer Capability 5

3 ASSUMPTIONS 6

3.1 Loads 6

3.2 Generation 6

3.3 Equipment Ratings 6

3.4 Bus Arrangements 6

4 SYSTEM TESTS/PERFORMANCE REQUIREMENTS 6

4.1 Steady-state Voltage Requirements 6

4.1.1 Line Switching to Control Voltages 7
4.1.2 Capacitor/Reactor Switching Voltage Changes 7
4.1.3 Voltage Regulating Equipment Assumptions 7

4.2 Steady-state Line Loading Requirements 7

4.3 Voltage Stability 7

4.4 Transient Stability 8

4.4.1 Remedial Actions 8
4.4.2 Faults 8
4.4.3 Load Models 8
4.4.4 Generation 8
4.4.5 Voltage Swings 9
4.4.6 Damping 9
4.4.7 System Readjustment 9
4.4.8 Simultaneous Vs. Nonsimultaneous Outages 9

4.5 Exceptions and Special Considerations 9

4.6 Disturbance-Performance Table 10

The attached criteria is to be used by the Transmission Planning Area from this date forward until revised. The use of this criteria will be for planning purposes on the District's internal transmission system. Joint projects and projects within other utilities system's will be planned consistently with the owner system's criteria.

Submitted:

Jeffrey C. Miller
Supervising Transmission Planning Engineer

8/19/93
Date

Approved:

James G. Bringle
Supervisor, Transmission Planning

8/20/93
Date

Approved:

Eric Toolson
Manager, Resource Planning and Evaluation

8/23/93
Date

1) INTRODUCTION

1.1 Purpose of Criteria

The mission of SMUD's Transmission Planning Area is to:

1) Formulate plans and make recommendations to management for the installation of transmission facilities to meet electric power needs in a reliable, efficient, environmentally sound, and economic manner.

2) Work closely with Engineering, Contracts, and Operations to assure the successful implementation, including licensing, of transmission plans.

and, 3) Work closely with neighboring utilities to coordinate the development of the SMUD, WAPA, and PG&E transmission systems.

A basic step necessary to accomplish this mission, is to establish a standard of reliability for SMUD's transmission system. The transmission system planning criteria provide this standard of reliability.

1.2 Objective of Criteria

Continuity of quality service to the customer is the primary objective of the criteria. The primary constraint on this objective is the cost of providing this service. Cost-effectiveness is viewed from the perspective of the electricity consumer. The system is planned to have sufficient strength or capacity to maintain continuity and quality of service to electrical loads during certain more common contingencies or system disturbances. For other less common contingencies, it may not be economical to provide enough capacity to maintain full service, so interruption of service or some reduction of quality of service may be allowed in the planning arena. The criteria is intended to provide margin in the transmission system to allow for unforeseen system conditions which may exist during actual system operation. Operating actions are not normally allowed as a means of achieving the performance levels required by the criteria.

1.3 Single System Planning

The transmission system is to be planned as if all generation and transmission facilities were owned by a single entity to minimize duplication of facilities, costs, environmental impact, and maximize system efficiency. Adjustments to this basic plan shall be made based upon financial, contractual, political, and institutional concerns.

1.4 Description of Criteria

The Reliability Criteria for Transmission System Planning set the performance requirements for planning the SMUD system. The performance requirements are given in terms of the effects that are allowed on electrical loads and the transmission system as a result of various contingencies. The Criteria are deterministic, that is, the same generalized performance is specified for the same generalized types of contingencies and applied uniformly over the system. Application of the criteria is expected to provide overall system cost-effectiveness. These criteria are used exclusively for system planning. A separate set of criteria apply to actual system operation.

1.5 WSCC Criteria

Criteria adopted by the Western Systems Coordinating Council (WSCC), "Reliability Criteria for Transmission System Planning", set the limits of the effects that disturbances on one system can have on other systems. The SMUD system is planned to satisfy both the SMUD and WSCC criteria.

1.6 Application of Criteria

The criteria set minimum performance requirements. They are intended to provide firm guidance but not absolute standards for planning. Application of the criteria must be tempered by the judgment of experienced planners and the circumstances that apply in each specific situation. Where the planner deviates outside the criteria, those deviations shall be explicitly noted and justified.

2) DEFINITIONS

2.1 Transmission System

The transmission lines and related substations that carry bulk power to distribution facilities. The transmission system provides the primary connections among major load areas, large generating plants, major interties, and some intermediate load areas. The transmission system includes all 500 kV, 230 kV, and 115 kV lines, and those lower voltage lines that perform the transmission function such as the 69 kV transmission lines in the UARP. Those portions of substations, including transformers, supporting the transmission system are also included.

2.2 Region

A portion of the WSCC system, such as Northern California or the Northwest that operates as an interchange area.

2.3 Intertie

A line or lines and related substations that provide an interconnection between regions.

2.4 Point of Delivery or Receipt

Point, for contractual and accounting purposes, at which utility systems are connected with the primary purpose of one-way power delivery.

2.5 Point of Interconnection

Point at which utility systems are connected at which power can flow in either direction for power delivery, resource integration, and system reliability improvement.

2.6 Major Load Area

A major population or industrial center with a large load and strong integrating transmission facilities.

2.7 Inadvertent Interchange

The net actual interchange minus the net scheduled interchange for a specific time period.

2.8 Inadvertent Flow

Power flows resulting from inadvertent interchange.

2.9 Unscheduled Flow (Loop Flow)

The difference between the scheduled and actual power flow, assuming zero inadvertent interchange, on an interconnection between control areas. Also called parallel flow.

2.10 Remedial Actions

Special preplanned corrective measures which are initiated following a disturbance to provide for acceptable system performance. These actions can either be manual or automatic. Typical automatic remedial actions include generator tripping or equivalent reduction of energy input to the system, controlled tripping of interruptable load, DC line ramping, insertion of braking resistors, insertion of series capacitors and controlled opening of interconnections and/or other lines including system islanding. Typical manual remedial actions include manual tripping of load, tripping of generation, etc.

2.11 Remedial Action Scheme

A protective system which automatically initiates one or more remedial actions. Also called Special Protection System or Remedial Action System.

2.12 Interregional Separations

Separation of a region from the rest of the interconnected system.

2.13 Area Separations

Disconnection of a load area by protective relay or operator actions. All or part of the disconnected area may be blacked out.

2.14 Contingency

Automatic disconnection (momentary or permanent) or emergency manual disconnection of a transmission facility, load, or generator.

2.15 Cascading

The uncontrolled successive loss of system elements in which the loss of each successive element is contingent upon prior losses of elements.

2.16 Control Area

A system capable of regulating its generation to maintain its interchange schedule with other systems and contribute its frequency bias obligation to the interconnection.

2.17 Operational Transfer Capability

The rated transfer capability less reductions caused by, but not limited to, physical limitations as a result of, among other things, line or equipment outages, stability limits, or loop flow.

2.18 Rated Transfer Capability

The maximum capability of a transmission line or system to transfer electric power in a reliable and safe manner as mutually determined and consistent with safe utility practice.

3) ASSUMPTIONS

3.1 Loads

The load forecast and load allocation used should be the most recent versions provided in the Transmission Planning Handbook.

3.2 Generation

The base case generation schedules modeled shall be consistent with the most recent official generation schedule provided in the Transmission Planning Handbook.

3.3 Equipment Ratings

Lines, transformers, switchgear, and terminal equipment shall not be loaded so as to exceed the adopted limits as established by either the Electric System Design Department or the equipment manufacturer. These ratings, along with ratings for neighboring systems, are provided in the Transmission Planning Handbook.

3.4 Bus Arrangements

A variety of bus arrangements of varying costs are possible for any substation (main and transfer, ring, breaker and one half, etc.). It is necessary to coordinate with the Electric System Design Department and the Energy Operations Department to select an optimum bus arrangement. Transmission Planning's responsibility is to assess the transmission system reliability requirements of the bus arrangement. Refer to the Transmission Planning Handbook for additional information concerning bus arrangements.

4) SYSTEM TESTS/PERFORMANCE REQUIREMENTS

4.1 Steady-state Voltage Requirements

System normal voltages shall not be more than 5% above or 5% below nominal voltages (69 kV/115 kV/230 kV). Outage case voltages shall be within the limits specified in the WSCC Criteria for Transmission System Planning. Cases with voltages outside this range shall be investigated to determine if an unacceptable system condition would result such as loss of load or a voltage collapse.

4.1.1 Line Switching to Control Voltages

With normal light loads and average or better hydro conditions, it shall not be necessary to switch lines out of service to keep voltages from exceeding maximum levels.

4.1.2 Capacitor/Reactor Switching Voltage Changes

Voltage changes caused by shunt capacitor or reactor switching shall not exceed 3.0 percent on any bus with all lines in service.

4.1.3 Voltage Regulating Equipment Assumptions

To meet the steady-state voltage requirements, all regulating equipment, including generators, must be operated within limits. An allowance, developed from operating records (generators, capacitors, or reactors) shall be made for that equipment which is typically unavailable because of scheduled or forced outages. Coordinated operation of the northern California reactive and voltage control facilities shall be assumed.

4.2 Steady-state Line Loading Requirements

All transmission facilities shall be loaded within their normal ratings with all facilities in service and within their emergency ratings during contingencies. Any exceptions shall be explicitly noted and justified.

4.3 Voltage Stability

Sufficient reactive capability shall be provided to ensure that voltage collapse would not occur for credible contingencies. For the purpose of this criteria, the system will be considered stable if the post outage system operating point is above the nose point of the post outage PV curve. Voltage stability must be maintained for all performance levels in the Disturbance-Performance Table. Refer to the Transmission Planning Handbook for specific guidance on appropriate amounts of reactive margin.

4.4 Transient Stability

System transient stability must be maintained for all performance levels in the Disturbance-Performance Table.

4.4.1 Remedial Actions

Remedial actions other than those involving firm load dropping may be considered for any contingencies to maintain stability. Remedial actions involving load tripping or shedding may be considered if the requirements for serving load, as specified in the Disturbance-Performance Table, are met. All remedial actions used should be explicitly noted.

4.4.2 Faults

Both three-phase and single line to ground faults shall be studied. Unsuccessful reclosure will be assumed unless the protection scheme would not allow reclosure for the case being studied. All faults are assumed to occur at the line terminal of the power circuit breaker at the end of the line which will result in the greatest stress on the system. Clearing times shall be actual maximum times without added margin. See Section N of the Transmission Planning Handbook for more detail on reclosure assumptions and clearing times.

4.4.3 Load Models

In cases where specific load characteristics are not known, loads in stability studies shall be represented as P = constant current and Q = constant impedance. Otherwise known load characteristics shall be used. Refer to the Transmission Planning Handbook for specific information on load models.

4.4.4 Generation

Generation shall be represented as operated, with governor droop or blocking as appropriate. PSS shall be assumed in service per WSCC guidelines or as otherwise operated. Refer to the Transmission Planning Handbook for specific information on Generator modeling.

4.4.5 Voltage Swings

System performance shall be unacceptable if they do not fall within the requirements specified in the WSCC Criteria for Transmission System Planning. Voltage dips concurrent with faults are not to be considered.

4.4.6 Damping

Acceptable system performance requires positive damping of all appropriate machine quantities, bus voltage, frequency, and tie line power.

4.4.7 System Readjustment

For multiple contingencies involving lines, generators, or transformers; sectionalizing the system, reconnecting loads, or adjusting generation to control overloads on transformers or lines may be allowed.

No adjustments are allowed for single line or transformer outages. Transformers may not be loaded above emergency limits (except for transient power swings) even to allow time for system adjustments.

4.4.8 Simultaneous Vs. Nonsimultaneous Outages

All multiple contingencies are considered to be independent events except for lines in the same corridor or that connect to a common bus or breaker. Independent contingencies are considered to be non-simultaneous, and 1/2 hour shall be assumed to be available between contingencies for system adjustments. Dependent contingencies shall be assumed to occur simultaneously.

4.5 Exceptions and Special considerations

The combined outage of the Rancho Seco-Hedge and Rancho Seco-Elk Grove 230 kV lines or the Hedge-Rancho Seco and Hedge-Elk Grove 230 kV lines shall be treated as a single circuit outage for the purposes of applying this criteria.

4.6 Disturbance-Performance Table

The Disturbance-Performance Table in the WSCC Reliability Criteria for Transmission System Planning specifies the transmission system performance required for the contingencies that are considered generally credible events that merit consideration.

Appendix A3
Procter & Gamble Project Interconnection Study

Appendix A3
Procter & Gamble Project Interconnection Study

To be provided as a separate document.

Appendix A4
Transmission Alternatives Cost Estimates

SACRAMENTO MUNICIPAL UTILITY DISTRICT
OFFICE MEMORANDUM

October 7, 1992

TO: S. EKLOF

FROM: R. WEITZENBERG & Q. DIWAN

SUBJECT: PROCTER & GAMBLE PROJECT INTERCONNECTION COST ESTIMATES

In response to your request, we have reviewed our estimates of September 26, 1991 and May 1, 1992.

Alternative 2 **115kV radial generation tie to Hedge, single circuit**

At Hedge Substation, a vacant 115kV bay is available for this tie line. Line construction includes bundled 636 conductor.

Plant transformers	1 XFMR	2 XFMRS	3 XFMRS
Line Construction Costs:	$1,200,000	$1,200,000	$1,200,000
Project Substation Costs:	900,000	2,900,000	3,400,000
Total:	$2,100,000	$4,100,000	$4,600,000

Alternative 2A **115kV radial generation tie to Hedge, double circuit**

An additional bay has to be constructed at Hedge substation. Line is single 954 conductor.

Plant transformers	1 XFMR	2 XFMRS	3 XFMRS
Line Construction Costs:	$1,300,000	$1,300,000	$1,300,000
Hedge Substation Costs:	600,000	600,000	600,000
Project Substation Costs:	2,900,000	4,500,000	5,100,000
Total:	$4,800,000	$6,400,000	$7,000,000

Alternative 3 **Hedge to South City 115kV loop-in.** (2.6 miles)

The northerly circuit of the Hedge-South City line is looped into the project substation. The existing circuit is single 477 conductor, and it is not possible to upgrade to 954 conductor without replacement of the existing towers.

Plant transformers	1 XFMR	2 XFMRS	3 XFMRS
Line Construction Costs:	$825,000	$825,000	$825,000
Project Substation Costs:	3,400,000	4,500,000	5,300,000
Total:	$4,225,000	$5,325,000	$6,125,000

Alternative 3A **Hedge to South City 115kV Loop-in (one circuit), and 115kv radial tie to South City.** (4.7 miles)

The new circuit to South City will have to be underground because of lack of overhead rights-of-way between P&G and South City substation.

Plant transformers	1 XFMR	2 XFMRS	3 XFMRS
Line Construction Costs:	$10,800,000	$10,800,000	$10,800,000
Project Substation Costs:	4,500,000	6,900,000	8,100,000
South City Substation Costs:	600,000	600,000	600,000
Total:	$15,900,000	$18,300,000	$19,500,000

Alternative 3B **Reconductor Hedge-South City 115kV** (6.1 miles)

To reconductor this line, the existing line will have to be removed and replaced. Additional costs may be incurred at both Hedge and South City Subs to upgrade equipment. If reconductoring is included as part of Alternative 3C, reduce this line distance by 1.8 miles.

Reconstruct 6.1 miles	$2,600,000
Reconstruct 4.3 miles	$1,950,000

Alternative 3C **Loop-in both South City to Hedge Lines**

The Hedge-P&G lines will run along the Central California Traction Railroad rights-of-way, and the South City-P&G lines will run along the Army Depot-SP Railroad rights-of-way.

Plant transformers	1 XFMR	2 XFMRS	3 XFMRS
Line Construction Costs:	$1,300,000	$1,300,000	$1,300,000
Project Substation Costs:	4,600,000	6,100,000	6,900,000
Total:	5,900,000	7,400,000	8,200,000

Alternative 4 **Hedge to East City 115kV Loop-in.** (~~1.75~~ 1.2 miles) Changes by S. Ekl per telecon wit D. Weitzenber 8-4-93.

Plant transformers	1 XFMS	2 XFMRS	3 XFMRS
Line Construction Costs:	$~~8~~4,00,000	$~~8~~4,00,000	$~~8~~4,00,000
Line Construction Costs:	3,400,000	4,500,000	5,300,000
Total:	$~~4,000~~ 3,800,000	$~~5,100~~ 4,900,000	$5,~~900~~ 700,000

Alternative 4A **Hedge to East City 115kV Loop-in and 115kV radial tie to East City.** (2.6 miles)

The radial tie to East City will probably have to be all underground. It may be possible to reconstruct 1.5 miles of PG&E single circuit along Power Inn Road to double circuit, reducing the underground to the section between Power Inn and East City.

Plant transformers	1 XFMR	2 XFMRS	3 XFMRS
Line Construction Costs:	$6,500,000	$6,500,000	$6,500,000
Project Substation:	4,500,000	6,900,000	8,100,000
East City Substation Costs:	600,000	600,000	600,000
Total:	$11,600,000	$13,400,000	$14,600,000

Alternative 5 **Single circuit 230kV radial to Hedge.** (3.4 miles)

*At Hedge Substation, a vacant 230kV bay is available for this tie line.

Plant transformers	1 XFMR	2 XFMRS	3 XFMRS
Line Construction Costs:	$1,100,000	$1,100,000	$1,100,000
Project Substation Costs:	1,100,000	3,600,000	4,300,000
Hedge Substation Costs:	100,000	100,000	100,000
Total:	$2,300,000	$4,800,000	$5,500,000

Alternative 5A **Double circuit 230kV to Hedge.** (3.4 miles)

*This alternative would involve the relocation of a public road and the Lake-Pocket 230kV line in order to construct a new bay at Hedge for the 2nd P&G circuit.

Plant transformers	1 XFMR	2 XFMRS	3 XFMRS
Line Construction Costs:	$1,500,000	$1,500,000	$1,500,000
Project Substation Costs:	4,500,000	5,200,000	5,800,000
Hedge Substation Costs:	1,500,000	1,500,000	1,500,000
Total:	$7,500,000	$8,200,000	$8,800,000

* The vacant bay at Hedge may not be available because of potential additional 69kV transformation. If this happens, add $1,000,000 to all alternatives for a second 230kV bay at Hedge.

Alternative 6 **Hedge to Hurley 230kV loop-in.** (~~1.75~~ 1.2 miles) changes by S. Ekl per telecon with D. Weitzenberg 8-4-93.

Plant transformers	1 XFMR	2 XFMRS	3 XFMRS
Line Construction Costs:	~~$800~~ 550,000	~~$800~~ 550,000	~~$800~~ 550,000
Project Substation Costs:	4,200,000	5,400,000	6,000,000
Total:	~~$5,000~~ 4,750,000	~~$6,200~~ 5,950,000	$6,~~800~~ 550,000

Alternative 7 **Hedge (or Lake) to Pocket 230kV loop-in.** (2.6 miles)

Plant transformers	1 XFMR	2 XFMRS	3 XFMRS
Line Construction Costs:	$1,200,000	$1,200,000	$1,200,000
Project Substation Costs:	4,200,000	5,400,000	6,000,000
Total:	$5,400,000	$6,600,000	$7,200,000

Alternative 8 **Lake (or Hedge) to Pocket 230kV loop-in.** (1.9 miles)

Plant transformers	1 XFMR	2 XFMRS	3 XFMRS
Line Construction Costs:	$850,000	$850,000	$850,000
Project Substation Costs:	4,200,000	5,400,000	6,000,000
Total:	$5,050,000	$6,250,000	$6,850,000

Note that these estimates have been made without the benefit of detailed technical studies, such as load flow and short circuit. When these technical studies are completed in the future, there may be significant upgrades required to existing equipment at remote substations, resulting in substantial substation cost increases. Without a detailed definition of the project, the substation design is based on various assumptions, and the use of the costs should be evaluated accordingly.

The project substation cost can be substituted for one, two or three breaker positions in the switchyard for lines coming from the plant in place of 1 XFMR, 2 XFMRS or 3 XFMRS respectively.

ESTIMATED PG&E WHEELING COSTS FOR PROCTER & GAMBLE IN 1992 $

	MW ALLOCATION:	175.00 MW
	PG&E LOSS FACTOR:	3.60%
1994	FIRM WHEELING COSTS:	$7.56 /KW-YR
	WHEELING ESC RATE:	1.50%/YEAR
	LEVELIZED MARG CAP COST:	$97.00 /KW-YEAR
	SMUD DISCOUNT RATE:	7.60%
	CAPACITY FACTOR:	100.00%

1992 NET PRES. VALUE: $49,944,421 (20 YEAR TOTAL WHEELING COSTS)

YEAR	FIRM WHEELING RATE ($/KW-YR)	WHEELING COST ($)	SMUD'S YEARLY CAPACITY LOSSES ($)	SMUD'S YEARLY ENERGY LOSSES ($)	TOTAL COST ($)
1996	7.7885	1,362,988	611,100	2,455,866	4,429,954
1997	7.9053	1,383,432	611,100	2,566,242	4,560,774
1998	8.0239	1,404,184	611,100	2,715,250	4,730,534
1999	8.1443	1,425,247	611,100	2,963,596	4,999,942
2000	8.2664	1,446,625	611,100	3,234,017	5,291,742
2001	8.3904	1,468,325	611,100	3,570,664	5,650,088
2002	8.5163	1,490,350	611,100	3,885,235	5,986,685
2003	8.6440	1,512,705	611,100	4,161,175	6,284,980
2004	8.7737	1,535,396	611,100	4,448,153	6,594,648
2005	8.9053	1,558,426	611,100	4,751,687	6,921,213
2006	9.0389	1,581,803	611,100	5,176,634	7,369,537
2007	9.1745	1,605,530	611,100	5,623,657	7,840,287
2008	9.3121	1,629,613	611,100	6,021,011	8,261,724
2009	9.4518	1,654,057	611,100	6,456,996	8,722,153
2010	9.5935	1,678,868	611,100	6,804,680	9,094,648
2011	9.7374	1,704,051	611,100	7,283,160	9,598,311
2012	9.8835	1,729,612	611,100	7,795,305	10,136,017
2013	10.0317	1,755,556	611,100	8,343,322	10,709,978
2014	10.1822	1,781,889	611,100	8,929,418	11,322,408
2015	10.3350	1,808,618	611,100	9,557,458	11,977,175

MARGINAL ENERGY COST PER YEAR ($/kWH) USED IN CALCULATION

1996	0.0445	2003	0.0754	2010	0.1233
1997	0.0465	2004	0.0806	2011	0.13197
1998	0.0492	2005	0.0861	2012	0.14125
1999	0.0537	2006	0.0938	2013	0.15118
2000	0.0586	2007	0.1019	2014	0.1618
2001	0.0647	2008	0.1091	2015	0.17318
2002	0.0704	2009	0.117		

ESTIMATED WAPA WHEELING COSTS FOR PROCTER & GAMBLE IN 1992 $

	MW ALLOCATION:	175.00 MW
	WAPA LOSS FACTOR:	2.00%
1994	FIRM WHEELING COSTS:	$5.77 /KW-YR
	WHEELING ESC RATE:	1.50%/YEAR
	LEVELIZED MARG CAP COST:	$97.00 /KW-YEAR
	SMUD DISCOUNT RATE:	7.60%
	CAPACITY FACTOR:	100.00%

1992 NET PRES. VALUE: $30,134,276 (20 YEAR TOTAL WHEELING COSTS)

YEAR	FIRM WHEELING RATE ($/KW-YR)	WHEELING COST ($)	SMUD'S YEARLY CAPACITY LOSSES ($)	SMUD'S YEARLY ENERGY LOSSES ($)	TOTAL COST ($)
1996	5.9465	1,040,630	339,500	1,364,370	2,744,500
1997	6.0357	1,056,240	339,500	1,425,690	2,821,430
1998	6.1262	1,072,083	339,500	1,508,472	2,920,055
1999	6.2181	1,088,165	339,500	1,646,442	3,074,107
2000	6.3114	1,104,487	339,500	1,796,676	3,240,663
2001	6.4060	1,121,054	339,500	1,983,702	3,444,256
2002	6.5021	1,137,870	339,500	2,158,464	3,635,834
2003	6.5996	1,154,938	339,500	2,311,764	3,806,202
2004	6.6986	1,172,262	339,500	2,471,196	3,982,958
2005	6.7991	1,189,846	339,500	2,639,826	4,169,172
2006	6.9011	1,207,694	339,500	2,875,908	4,423,102
2007	7.0046	1,225,809	339,500	3,124,254	4,689,563
2008	7.1097	1,244,196	339,500	3,345,006	4,928,702
2009	7.2163	1,262,859	339,500	3,587,220	5,189,579
2010	7.3246	1,281,802	339,500	3,780,378	5,401,680
2011	7.4345	1,301,029	339,500	4,046,200	5,686,730
2012	7.5460	1,320,545	339,500	4,330,725	5,990,770
2013	7.6592	1,340,353	339,500	4,635,179	6,315,032
2014	7.7740	1,360,458	339,500	4,960,788	6,660,746
2015	7.8907	1,380,865	339,500	5,309,699	7,030,064

MARGINAL ENERGY COST PER YR. ($/kWH) USED IN CALCULATION

1996	0.0445	2003	0.0754	2010	0.1233
1997	0.0465	2004	0.0806	2011	0.13197
1998	0.0492	2005	0.0861	2012	0.14125
1999	0.0537	2006	0.0938	2013	0.15118
2000	0.0586	2007	0.1019	2014	0.1618
2001	0.0647	2008	0.1091	2015	0.17318
2002	0.0704	2009	0.117		

procwap4.wk1 9/20/93

SACRAMENTO MUNICIPAL UTILITY DISTRICT
OFFICE MEMORANDUM

May 1, 1992

TO: S. EKLOF

FROM: R. WEITZENBERG & Q. DIWAN

SUBJECT: PROCTER & GAMBLE PROJECT INTERCONNECTION COST ESTIMATES AND CONCERNS

In response to your request of April 27, 1992 (TP 92-197), we have reviewed the costs given in our memo of September 26, 1991. The cost estimates assume that the environmental and licensing is done as part of the generation plant, and that the costs of the plant low voltage switchgear, station service, and step-up transformers are included in the plant cost. The project substation starts at the high side of the transformers and include the switches, circuit breakers, metering, and the remote substation terminals protection adjustments. A contingency of 20% is included in the costs.

See the map attached to the September 26th memo for the routes that may be used for the various options, except for the underground options.

Alternative 2 **115kV radial generation tie to Hedge, single circuit**

At Hedge Substation, a vacant 115kV bay is available for this tie line. Line construction includes bundled 636 conductor.

Plant transformers	2 XFMRS	3 XFMRS
Line Construction Costs:	$1,200,000	$1,200,000
Project Substation Costs:	2,900,000	3,400,000
Total:	$4,100,000	$4,600,000

Alternative 2A **115kV radial generation tie to Hedge, double circuit**

An additional bay has to be constructed at Hedge substation. Line is single 954 conductor.

Plant transformers	2 XFMRS	3 XFMRS
Line Construction Costs:	$1,300,000	$1,300,000
Hedge Substation Costs:	600,000	600,000
Project Substation Costs:	4,500,000	5,100,000
Total:	$6,400,000	$7,000,000

Alternative 3 **Hedge to South City 115kV loop-in.** (2.6 miles)

The northerly circuit of the Hedge-South City line is looped into the project substation. The existing circuit is single 477 conductor, and it is not possible to upgrade to 954 conductor without replacement of the existing towers.

	2 XFMRS	3 XFMRS
Plant transformers		
Line Construction Costs:	$825,000	$825,000
Project Substation Costs:	4,500,000	5,300,000
Total:	$5,325,000	$6,125,000

Alternative 3A **Hedge to South City 115kV Loop-in (one circuit), and 115kv radial tie to South City.** (4.7 miles)

The new circuit to South City will have to be underground because of lack of overhead rights-of-way between P&G and South City substation.

	2 XFMRS	3 XFMRS
Plant transformers		
Line Construction Costs:	$10,800,000	$10,800,000
Project Substation Costs:	6,900,000	8,100,000
South City Sub Costs:	600,000	600,000
Total:	~~$14,900,000~~ $18,300,000	~~$17,300,000~~ 19,500,000 QD 5/4/92

Alternative 3B **Reconductor Hedge-South City 115kV** (6.1 miles)

To reconductor this line, the existing line will have to be removed and replaced. Additional costs may be incurred at both Hedge and South City Subs to upgrade equipment. If reconductoring is included as part of Alternative 3C, reduce this line distance by 1.8 miles.

Reconstruct 6.1 miles	$2,600,000
Reconstruct 4.3 miles	$1,950,000

$0.5 M ADDITIONAL TO RECONDUCTOR A SINGLE CIRCUIT FOR A HEDGE TO S.CITY 115 kV LOOP-IN (SAME TOWERS) S. ERLOF

PER TELECON WITH DICK WEITZENBERG MAY 26, 1992 →

Alternative 3C **Loop-in both South City to Hedge Lines**

The Hedge-P&G lines will run along the Central California Traction Railroad rights-of-way, and the South City-P&G lines will run along the Army Depot-SP Railroad rights-of-way.

	2 XFMRS	3 XFMRS
Plant transformers		
Line Construction Costs:	$1,400,000	$1,400,000
Project Substation Costs:	6,100,000	6,900,000
Total:	$7,500,000	$8,300,000

Alternative 4 **Hedge to East City 115kV Loop-in.** (1.75 miles)

	2 XFMRS	3 XFMRS
Plant transformers		
Line Construction Costs:	$ 600,000	$ 600,000
Project Substation Costs:	4,500,000	5,300,000
Total:	$5,100,000	$5,900,000

PER TELECON WITH D. WEITZENBERG MAY 26, 1992 → $0.55 M ADDITIONAL TO RECONDUCTOR EAST CITY TO HEDGE 115 kV LOOP-IN WITH THE SAME ~~SIZE~~ TOWERS. S. EKLOF

Alternative 4A **Hedge to East City 115kV Loop-in and 115kV radial tie to East City.** (2.6 miles)

The radial tie to East City will probably have to be all underground. It may be possible to reconstruct 1.5 miles of PG&E single circuit along Power Inn Road to double circuit, reducing the underground to the section between Power Inn and East City.

	2 XFMRS	3 XFMRS
Plant transformers		
Line Construction Costs:	$6,500,000	$6,500,000
Project Substation Costs:	6,900,000	8,100,000
East City Sub Costs:	600,000	600,000
Total:	$14,000,000	$15,200,000

Alternative 5 **Single circuit 230kV radial to Hedge.** (3.4 miles)

At Hedge Substation, a vacant 230kV bay is available for this tie line.

	2 XFMRS	3 XFMRS
Plant transformers		
Line Construction Costs:	$1,100,000	$1,100,000
Project Substation Costs:	3,600,000	4,300,000
Hedge Substation Costs:	100,000	100,000
Total:	$4,800,000	$5,500,000

Alternative 5A **Double circuit 230kV to Hedge.** (3.4 miles)

This alternative would involve the relocation of a public road and the Lake-Pocket 230kV line in order to construct a new bay at Hedge for the 2nd P&G circuit.

	2 XFMRS	3 XFMRS
Plant transformers		
Line Construction Costs:	$1,500,000	$1,500,000
Project Substation Costs:	5,200,000	5,800,000
Hedge Substation Costs:	1,500,000	1,500,000
Total:	$8,200,000	$8,800,000

Alternative 6 **Hedge to Hurley 230kV loop-in.** (1.75 miles)

	2 XFMRS	3 XFMRS
Plant transformers		
Line Construction Costs:	$ 800,000	$ 800,000
Project Substation Costs:	5,400,000	6,000,000
Total:	$6,200,000	$6,800,000

Alternative 7 **Hedge (or Lake) to Pocket 230kV loop-in.** (2.6 miles)

	2 XFMRS	3 XFMRS
Plant transformers		
Line Construction Costs:	$1,200,000	$1,200,000
Project Substation Costs:	5,400,000	6,000,000
Total:	$6,600,000	$7,200,000

Alternative 8 **Lake (or Hedge) to Pocket 230kV loop-in.** (1.9 miles)

	2 XFMRS	3 XFMRS
Plant transformers		
Line Construction Costs:	$850,000	$850,000
Project Substation Costs:	5,400,000	6,000,000
Total:	$6,250,000	$6,850,000

Note that these estimates have been made without the benefit of detailed technical studies, such as load flow and short circuit. When these technical studies are completed in the future, there may be significant upgrades required to existing equipment at remote substations, resulting in substantial substation cost increases. Without a detailed definition of the project, the substation design is based on various assumptions, and the use of the costs should be evaluated accordingly.

cy: J. Bringle
J. Miller
F. Sheehan
M. Deis

Appendix A5
Loss Analysis

Appendix A5
Loss Analysis

For each transmission alternative investigated, the SMUD system capacity and energy losses with the Procter & Gamble Cogeneration Project interconnected and on-line generating 135 MW were compared to the base case system losses prior to the Procter & Gamble Cogeneration Project. Transformer losses from generation at 13.8 kV to transmission at 115 or 230 kV were excluded. For the Hedge to Hurley 230 kV Loop-In, 954 kcm AAC to match the existing line and bundled 636 kcm AAC with a reconductor of the existing line back to Hedge and Hurley Substations were considered.

The change in annual energy losses (MWh) associated with each interconnection alternative was computed using the method of analysis described by the document entitled, *Time-Load Coefficients Method for Evaluating System Energy Losses and Incremental Costs of Losses*, dated October 17, 1988, by Mr. Gilbert Butler of SMUD.

This method takes into account the anticipated project generation capacity factor by season over twenty years, and the change in system losses with variation in system load. Detailed backup is contained within this appendix. The net present value of the change in overall SMUD system losses over 20 years is computed based on the marginal cost of replacement capacity and energy.

Figure 1
Procter & Gamble Project
Generation Capacity Factors by Season over Twenty Years

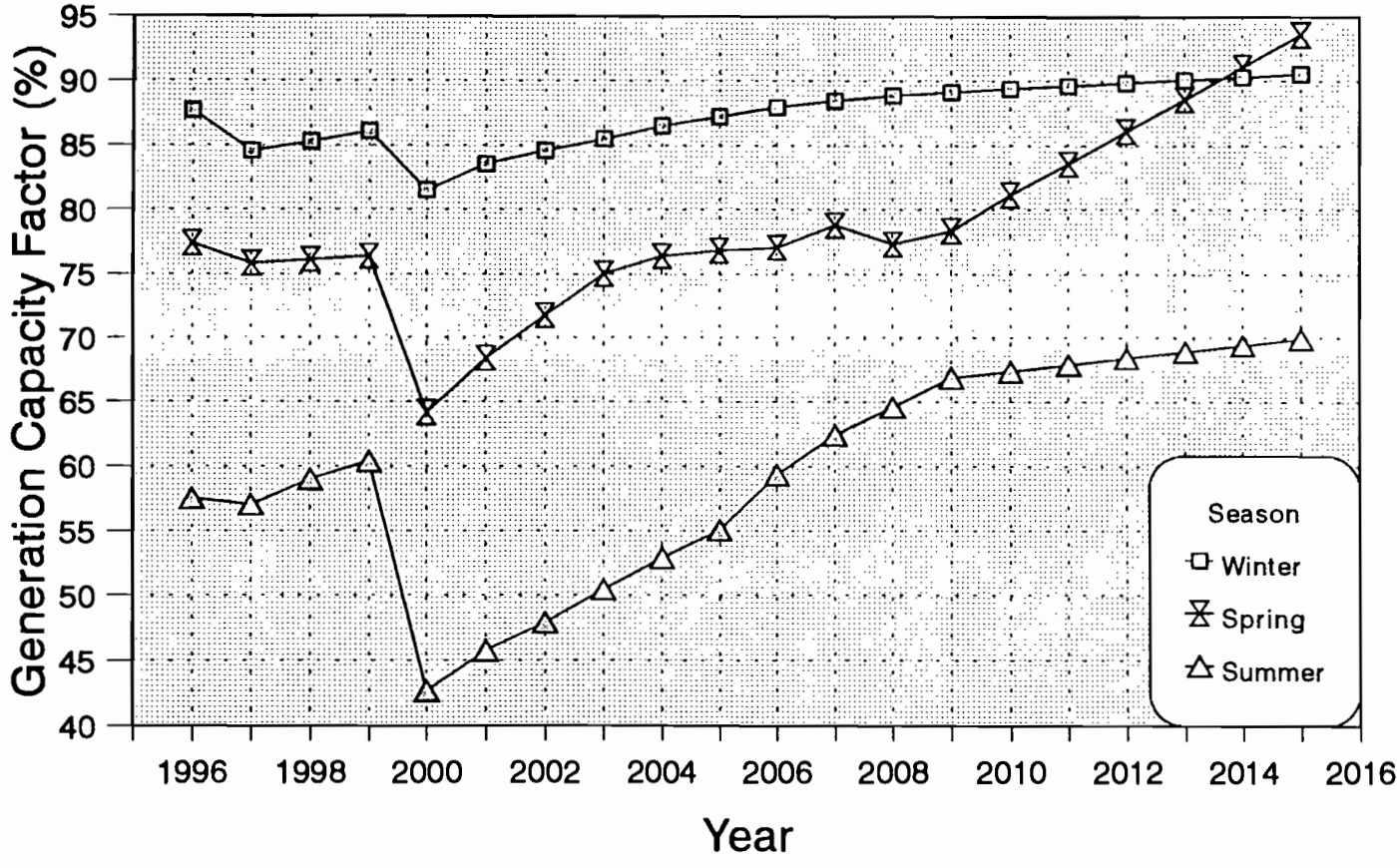

Information is based on the ER92 submittal of monthly capacity factors with the exception of years 2012-2015, for which data was extrapolated.

Figure 2
1996 SMUD System Losses for Varying System Load
Base Case Prior to Procter & Gamble Project

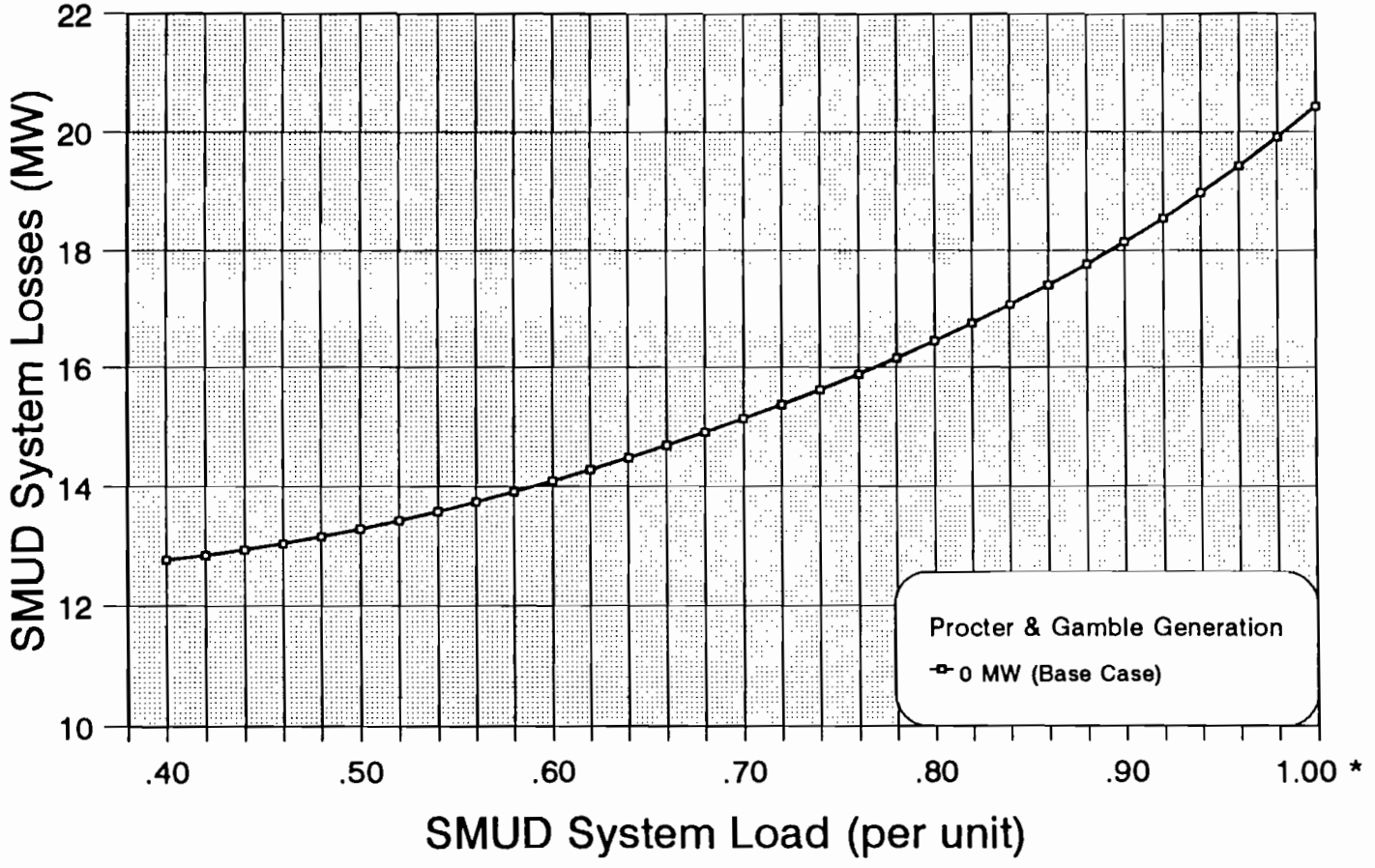

* SMUD System Load = 2255 MW at 1.0 per unit

ALT 2 - 115 KV SINGLE-CIRCUIT TO HEDGE

NET PRESENT VALUE = $2,126,859

SMUD'S MARGINAL COST of REPLACEMENT POWER

COST OF LOSSES CALCULATION

DISCOUNT RATE: 7.60%

CHANGE IN SMUD SYSTEM LOSS -210 KW

	YEAR	1/ MARGINAL COST CAPACITY ($/KW-YR)	CAPACITY COST	1/ MARGINAL COST ENERGY ($/KWH)	2/ SYSTEM LOAD FACTOR	ENERGY (MWH)	3/ ENERGY COST	TOTAL COST OF LOSSES
1	1996	97.00	($20,370)	0.04450	0.470	3848.074	$171,239	$150,869
2	1997	97.00	($20,370)	0.04650	0.470	3848.074	$178,935	$158,565
3	1998	97.00	($20,370)	0.04920	0.470	3848.074	$189,325	$168,955
4	1999	97.00	($20,370)	0.05370	0.470	3848.074	$206,642	$186,272
5	2000	97.00	($20,370)	0.05860	0.470	3848.074	$225,497	$205,127
6	2001	97.00	($20,370)	0.06470	0.470	3848.074	$248,970	$228,600
7	2002	97.00	($20,370)	0.07040	0.480	3761.330	$264,798	$244,428
8	2003	97.00	($20,370)	0.07540	0.480	3761.330	$283,604	$263,234
9	2004	97.00	($20,370)	0.08060	0.480	3761.330	$303,163	$282,793
10	2005	97.00	($20,370)	0.08610	0.480	3761.330	$323,851	$303,481
11	2006	97.00	($20,370)	0.09380	0.490	3674.810	$344,697	$324,327
12	2007	97.00	($20,370)	0.10190	0.490	3674.810	$374,463	$354,093
13	2008	97.00	($20,370)	0.10910	0.490	3674.810	$400,922	$380,552
14	2009	97.00	($20,370)	0.11700	0.490	3674.810	$429,953	$409,583
15	2010	97.00	($20,370)	0.12330	0.500	3588.540	$442,467	$422,097
16	2011	97.00	($20,370)	0.13197	0.500	3588.540	$473,574	$453,204
17	2012	97.00	($20,370)	0.14125	0.500	3588.540	$506,868	$486,498
18	2013	97.00	($20,370)	0.15118	0.500	3588.540	$542,502	$522,132
19	2014	97.00	($20,370)	0.16180	0.500	3588.540	$580,642	$560,272
20	2015	97.00	($20,370)	0.17318	0.500	3588.540	$621,463	$601,093

ENERGY ESCALATION FACTOR FOR THE LAST 5 YRS = 0.07030

proc2\proctlc3.wk1

1/ "MARGINAL COST STUDY, VOLUME II - TECHNICAL ANALYSIS", JUNE, 1990

2/ PS 91-273; "LOAD FORECAST SUBMISSION TO CEC"

3/ TIME-LOAD COEFFICIENTS METHOD OF ANALYSIS

Figure 3
1996 SMUD System Losses for Varying System Load
Alt. 2 - 115 kV Single-Circuit Radial Generation Tie to Hedge

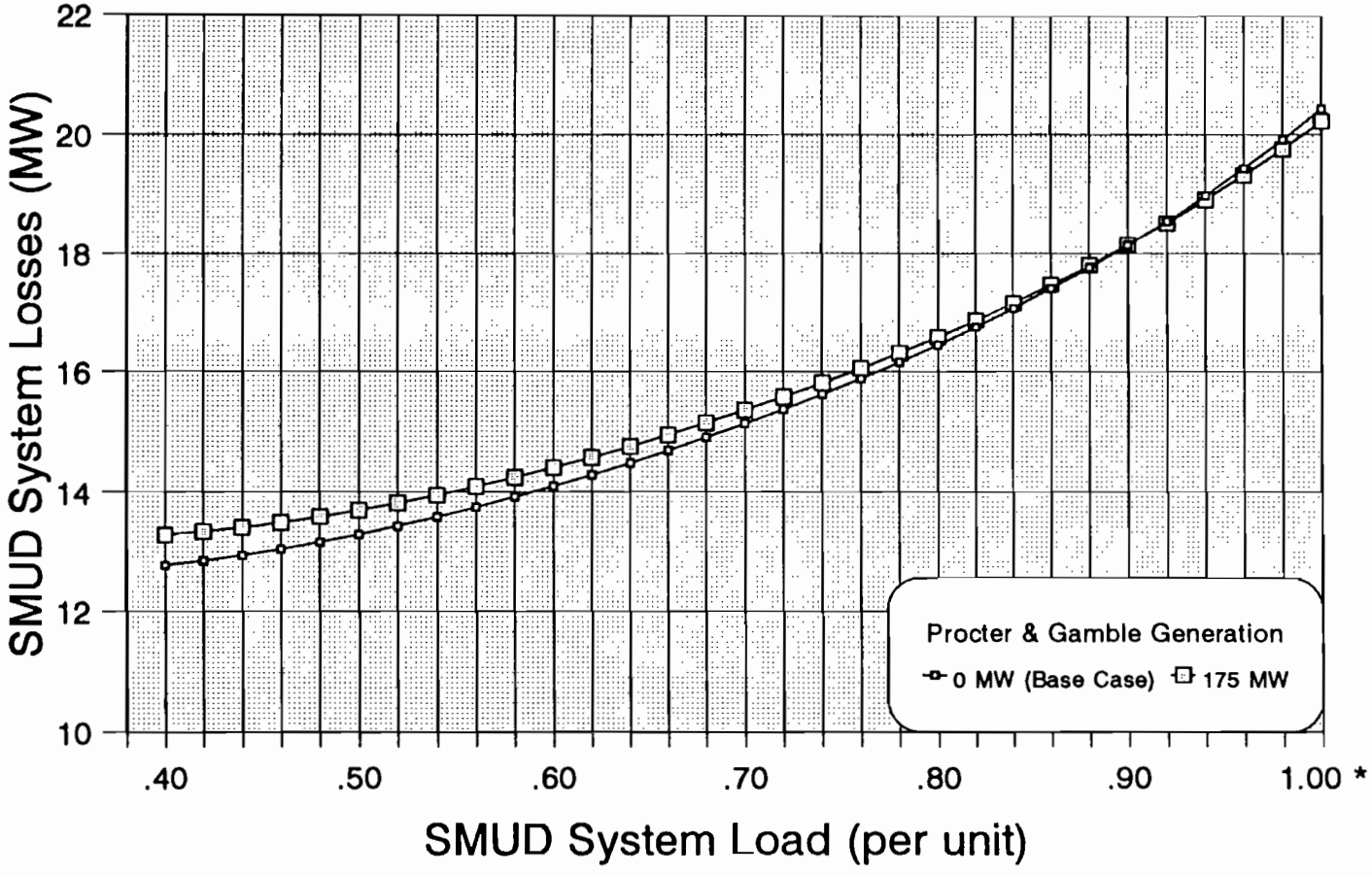

* SMUD System Load = 2255 MW at 1.0 per unit

ALT 2A - 115 KV DOUBLE-CIRCUIT TO HEDGE — NET PRESENT VALUE = $1,043,957

SMUD'S MARGINAL COST of REPLACEMENT POWER
COST OF LOSSES CALCULATION
DISCOUNT RATE: 7.60%
CHANGE IN SMUD SYSTEM LOSS -420 KW

	YEAR	1/ MARGINAL COST CAPACITY ($/KW-YR)	CAPACITY COST	1/ MARGINAL COST ENERGY ($/KWH)	2/ SYSTEM LOAD FACTOR	ENERGY (MWH)	3/ ENERGY COST	TOTAL COST OF LOSSES
1	1996	97.00	($40,740)	0.04450	0.470	2336.369	$103,968	$63,228
2	1997	97.00	($40,740)	0.04650	0.470	2336.369	$108,641	$67,901
3	1998	97.00	($40,740)	0.04920	0.470	2336.369	$114,949	$74,209
4	1999	97.00	($40,740)	0.05370	0.470	2336.369	$125,463	$84,723
5	2000	97.00	($40,740)	0.05860	0.470	2336.369	$136,911	$96,171
6	2001	97.00	($40,740)	0.06470	0.470	2336.369	$151,163	$110,423
7	2002	97.00	($40,740)	0.07040	0.480	2247.625	$158,233	$117,493
8	2003	97.00	($40,740)	0.07540	0.480	2247.625	$169,471	$128,731
9	2004	97.00	($40,740)	0.08060	0.480	2247.625	$181,159	$140,419
10	2005	97.00	($40,740)	0.08610	0.480	2247.625	$193,521	$152,781
11	2006	97.00	($40,740)	0.09380	0.490	2158.985	$202,513	$161,773
12	2007	97.00	($40,740)	0.10190	0.490	2158.985	$220,001	$179,261
13	2008	97.00	($40,740)	0.10910	0.490	2158.985	$235,545	$194,805
14	2009	97.00	($40,740)	0.11700	0.490	2158.985	$252,601	$211,861
15	2010	97.00	($40,740)	0.12330	0.500	2070.479	$255,290	$214,550
16	2011	97.00	($40,740)	0.13197	0.500	2070.479	$273,238	$232,498
17	2012	97.00	($40,740)	0.14125	0.500	2070.479	$292,447	$251,707
18	2013	97.00	($40,740)	0.15118	0.500	2070.479	$313,007	$272,267
19	2014	97.00	($40,740)	0.16180	0.500	2070.479	$335,013	$294,273
20	2015	97.00	($40,740)	0.17318	0.500	2070.479	$358,565	$317,825

ENERGY ESCALATION FACTOR FOR THE LAST 5 YRS = 0.07030

proc2\proctlc3.wk1

1/ "MARGINAL COST STUDY, VOLUME II - TECHNICAL ANALYSIS", JUNE, 1990
2/ PS 91-273; "LOAD FORECAST SUBMISSION TO CEC"
3/ TIME-LOAD COEFFICIENTS METHOD OF ANALYSIS

Figure 4
1996 SMUD System Losses for Varying System Load
Alt. 2A - 115 kV Double-Circuit Radial Generation Tie to Hedge

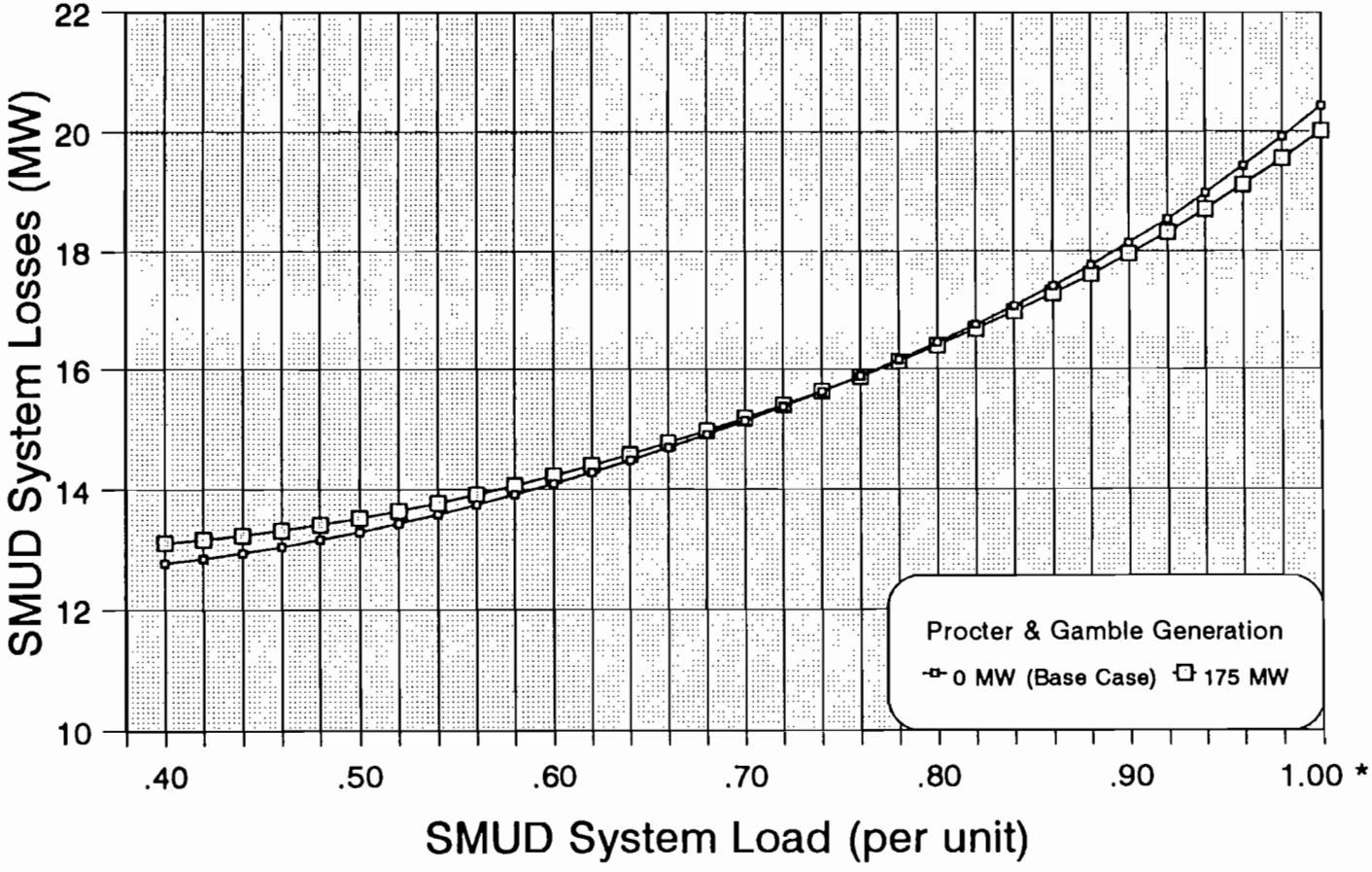

* SMUD System Load = 2255 MW at 1.0 per unit

ALT 3 - HEDGE TO S. CITY 115 KV LOOP-IN

NET PRESENT VALUE = $3,747,351

SMUD'S MARGINAL COST of REPLACEMENT POWER
COST OF LOSSES CALCULATION
DISCOUNT RATE: 7.60%
CHANGE IN SMUD SYSTEM LOSS -30 KW

	YEAR	1/ MARGINAL COST CAPACITY ($/KW-YR)	CAPACITY COST	1/ MARGINAL COST ENERGY ($/KWH)	2/ SYSTEM LOAD FACTOR	ENERGY (MWH)	3/ ENERGY COST	TOTAL COST OF LOSSES
1	1996	97.00	($2,910)	0.04450	0.470	6300.328	$280,365	$277,455
2	1997	97.00	($2,910)	0.04650	0.470	6300.328	$292,965	$290,055
3	1998	97.00	($2,910)	0.04920	0.470	6300.328	$309,976	$307,066
4	1999	97.00	($2,910)	0.05370	0.470	6300.328	$338,328	$335,418
5	2000	97.00	($2,910)	0.05860	0.470	6300.328	$369,199	$366,289
6	2001	97.00	($2,910)	0.06470	0.470	6300.328	$407,631	$404,721
7	2002	97.00	($2,910)	0.07040	0.480	6196.850	$436,258	$433,348
8	2003	97.00	($2,910)	0.07540	0.480	6196.850	$467,242	$464,332
9	2004	97.00	($2,910)	0.08060	0.480	6196.850	$499,466	$496,556
10	2005	97.00	($2,910)	0.08610	0.480	6196.850	$533,549	$530,639
11	2006	97.00	($2,910)	0.09380	0.490	6093.552	$571,575	$568,665
12	2007	97.00	($2,910)	0.10190	0.490	6093.552	$620,933	$618,023
13	2008	97.00	($2,910)	0.10910	0.490	6093.552	$664,807	$661,897
14	2009	97.00	($2,910)	0.11700	0.490	6093.552	$712,946	$710,036
15	2010	97.00	($2,910)	0.12330	0.500	5990.465	$738,624	$735,714
16	2011	97.00	($2,910)	0.13197	0.500	5990.465	$790,552	$787,642
17	2012	97.00	($2,910)	0.14125	0.500	5990.465	$846,131	$843,221
18	2013	97.00	($2,910)	0.15118	0.500	5990.465	$905,616	$902,706
19	2014	97.00	($2,910)	0.16180	0.500	5990.465	$969,284	$966,374
20	2015	97.00	($2,910)	0.17318	0.500	5990.465	$1,037,428	$1,034,518

ENERGY ESCALATION FACTOR FOR THE LAST 5 YRS = 0.07030

proc2\proctlc3.wk1

1/ "MARGINAL COST STUDY, VOLUME II - TECHNICAL ANALYSIS", JUNE, 1990
2/ PS 91-273; "LOAD FORECAST SUBMISSION TO CEC"
3/ TIME-LOAD COEFFICIENTS METHOD OF ANALYSIS

Figure 5
1996 SMUD System Losses for Varying System Load
Alt. 3 - Hedge to S. City 115 kV Loop-In

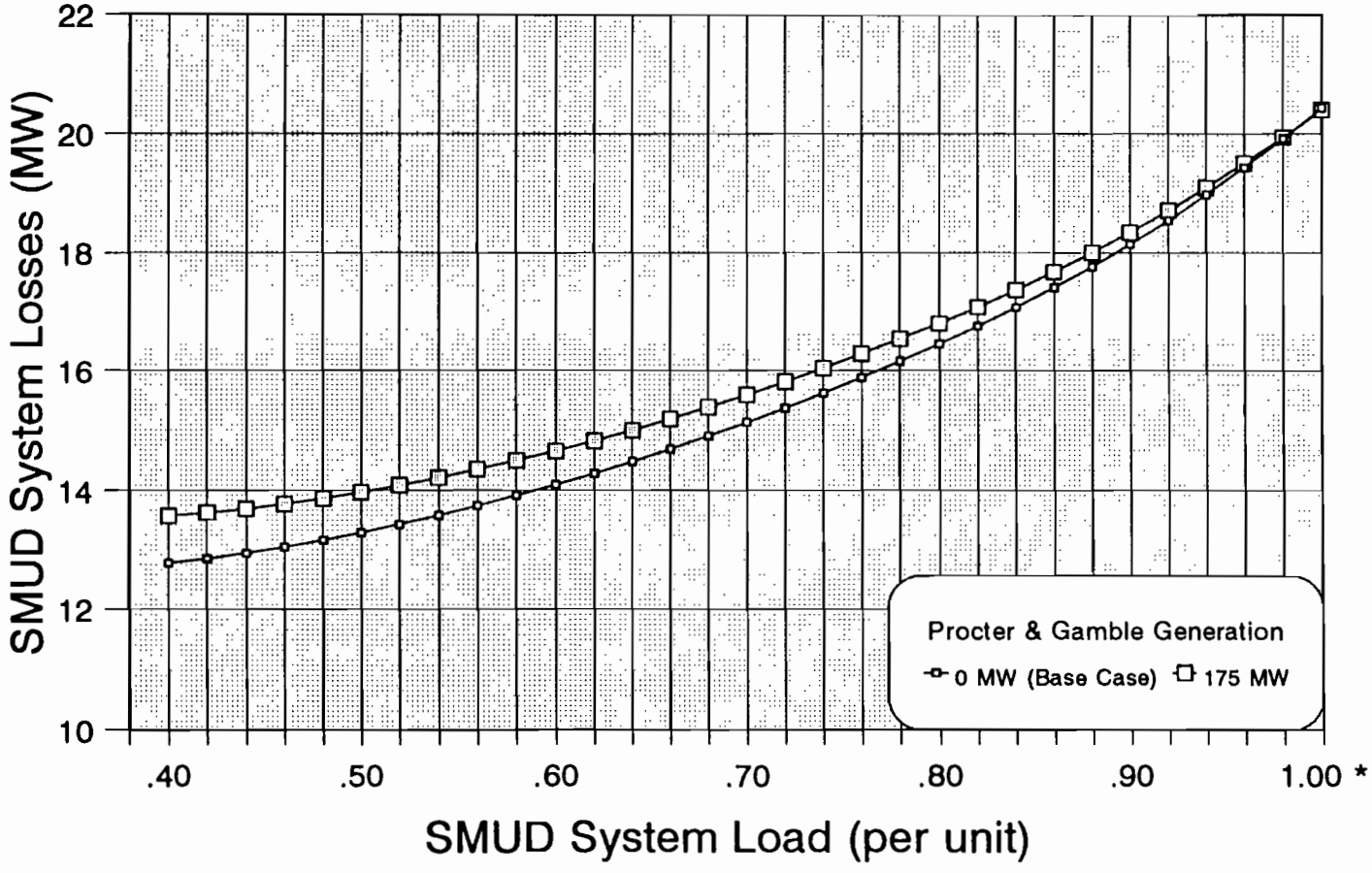

* SMUD System Load = 2255 MW at 1.0 per unit

ALT 3A - HEDGE TO S. CITY 115 KV LOOP-IN; AND 2ND PROCTER TO S. CITY LINE — NET PRESENT VALUE = ($187,445)

SMUD'S MARGINAL COST of REPLACEMENT POWER
COST OF LOSSES CALCULATION
DISCOUNT RATE: 7.60%
CHANGE IN SMUD SYSTEM LOSS -1020 KW

	YEAR	1/ MARGINAL COST CAPACITY ($/KW-YR)	CAPACITY COST	1/ MARGINAL COST ENERGY ($/KWH)	2/ SYSTEM LOAD FACTOR	ENERGY (MWH)	3/ ENERGY COST	TOTAL COST OF LOSSES
1	1996	97.00	($98,940)	0.04450	0.470	1145.111	$50,957	($47,983)
2	1997	97.00	($98,940)	0.04650	0.470	1145.111	$53,248	($45,692)
3	1998	97.00	($98,940)	0.04920	0.470	1145.111	$56,339	($42,601)
4	1999	97.00	($98,940)	0.05370	0.470	1145.111	$61,492	($37,448)
5	2000	97.00	($98,940)	0.05860	0.470	1145.111	$67,104	($31,836)
6	2001	97.00	($98,940)	0.06470	0.470	1145.111	$74,089	($24,851)
7	2002	97.00	($98,940)	0.07040	0.480	989.859	$69,686	($29,254)
8	2003	97.00	($98,940)	0.07540	0.480	989.859	$74,635	($24,305)
9	2004	97.00	($98,940)	0.08060	0.480	989.859	$79,783	($19,157)
10	2005	97.00	($98,940)	0.08610	0.480	989.859	$85,227	($13,713)
11	2006	97.00	($98,940)	0.09380	0.490	834.370	$78,264	($20,676)
12	2007	97.00	($98,940)	0.10190	0.490	834.370	$85,022	($13,918)
13	2008	97.00	($98,940)	0.10910	0.490	834.370	$91,030	($7,910)
14	2009	97.00	($98,940)	0.11700	0.490	834.370	$97,621	($1,319)
15	2010	97.00	($98,940)	0.12330	0.500	678.689	$83,682	($15,258)
16	2011	97.00	($98,940)	0.13197	0.500	678.689	$89,566	($9,374)
17	2012	97.00	($98,940)	0.14125	0.500	678.689	$95,862	($3,078)
18	2013	97.00	($98,940)	0.15118	0.500	678.689	$102,602	$3,662
19	2014	97.00	($98,940)	0.16180	0.500	678.689	$109,815	$10,875
20	2015	97.00	($98,940)	0.17318	0.500	678.689	$117,535	$18,595

ENERGY ESCALATION FACTOR FOR THE LAST 5 YRS = 0.07030

proc2\proctlc3.wk1

1/ "MARGINAL COST STUDY, VOLUME II - TECHNICAL ANALYSIS", JUNE, 1990
2/ PS 91-273; "LOAD FORECAST SUBMISSION TO CEC"
3/ TIME-LOAD COEFFICIENTS METHOD OF ANALYSIS

Figure 6
1996 SMUD System Losses for Varying System Load
Alt. 3A - Hedge to S. City 115 kV Loop-In & 2nd Procter to S. City Line

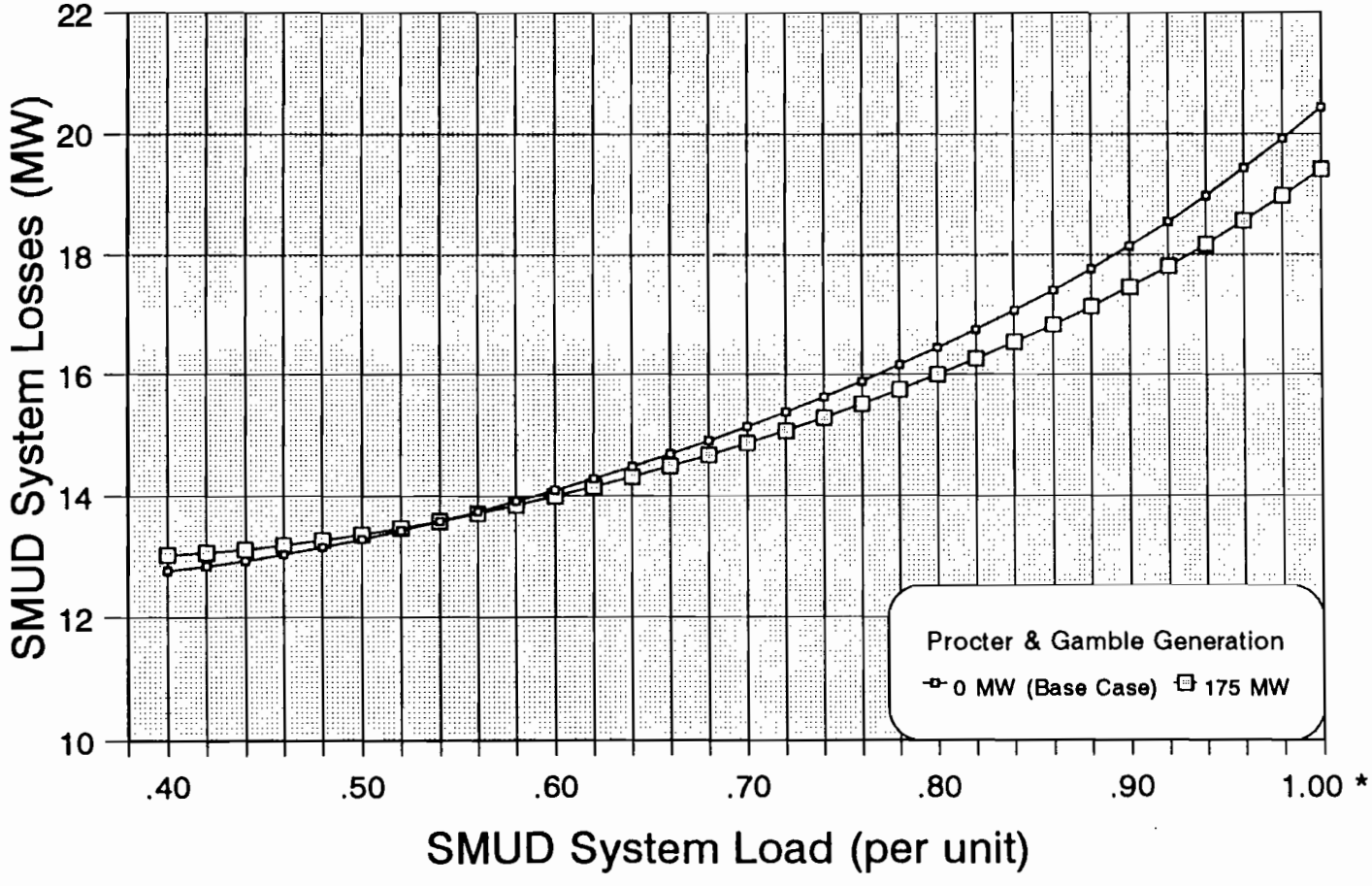

* SMUD System Load = 2255 MW at 1.0 per unit

ALT 3B - LOOP-IN BOTH HEDGE TO S. CITY 115 KV LINES — NET PRESENT VALUE = $396,151

SMUD'S MARGINAL COST of REPLACEMENT POWER
COST OF LOSSES CALCULATION
DISCOUNT RATE: 7.60%
CHANGE IN SMUD SYSTEM LOSS -720 KW

	YEAR	1/ MARGINAL COST CAPACITY ($/KW-YR)	CAPACITY COST	1/ MARGINAL COST ENERGY ($/KWH)	2/ SYSTEM LOAD FACTOR	ENERGY (MWH)	3/ ENERGY COST	TOTAL COST OF LOSSES
1	1996	97.00	($69,840)	0.04450	0.470	1695.434	$75,447	$5,607
2	1997	97.00	($69,840)	0.04650	0.470	1695.434	$78,838	$8,998
3	1998	97.00	($69,840)	0.04920	0.470	1695.434	$83,415	$13,575
4	1999	97.00	($69,840)	0.05370	0.470	1695.434	$91,045	$21,205
5	2000	97.00	($69,840)	0.05860	0.470	1695.434	$99,352	$29,512
6	2001	97.00	($69,840)	0.06470	0.470	1695.434	$109,695	$39,855
7	2002	97.00	($69,840)	0.07040	0.480	1568.605	$110,430	$40,590
8	2003	97.00	($69,840)	0.07540	0.480	1568.605	$118,273	$48,433
9	2004	97.00	($69,840)	0.08060	0.480	1568.605	$126,430	$56,590
10	2005	97.00	($69,840)	0.08610	0.480	1568.605	$135,057	$65,217
11	2006	97.00	($69,840)	0.09380	0.490	1441.900	$135,250	$65,410
12	2007	97.00	($69,840)	0.10190	0.490	1441.900	$146,930	$77,090
13	2008	97.00	($69,840)	0.10910	0.490	1441.900	$157,311	$87,471
14	2009	97.00	($69,840)	0.11700	0.490	1441.900	$168,702	$98,862
15	2010	97.00	($69,840)	0.12330	0.500	1315.371	$162,185	$92,345
16	2011	97.00	($69,840)	0.13197	0.500	1315.371	$173,587	$103,747
17	2012	97.00	($69,840)	0.14125	0.500	1315.371	$185,791	$115,951
18	2013	97.00	($69,840)	0.15118	0.500	1315.371	$198,853	$129,013
19	2014	97.00	($69,840)	0.16180	0.500	1315.371	$212,833	$142,993
20	2015	97.00	($69,840)	0.17318	0.500	1315.371	$227,796	$157,956

ENERGY ESCALATION FACTOR FOR THE LAST 5 YRS = 0.07030 — proc2\proctlc3.wk1

1/ "MARGINAL COST STUDY, VOLUME II - TECHNICAL ANALYSIS", JUNE, 1990
2/ PS 91-273; "LOAD FORECAST SUBMISSION TO CEC"
3/ TIME-LOAD COEFFICIENTS METHOD OF ANALYSIS

Figure 7

1996 SMUD System Losses for Varying System Load

Alt. 3B - Loop Both Hedge to S. City 115 kV Lines into Procter & Gamble

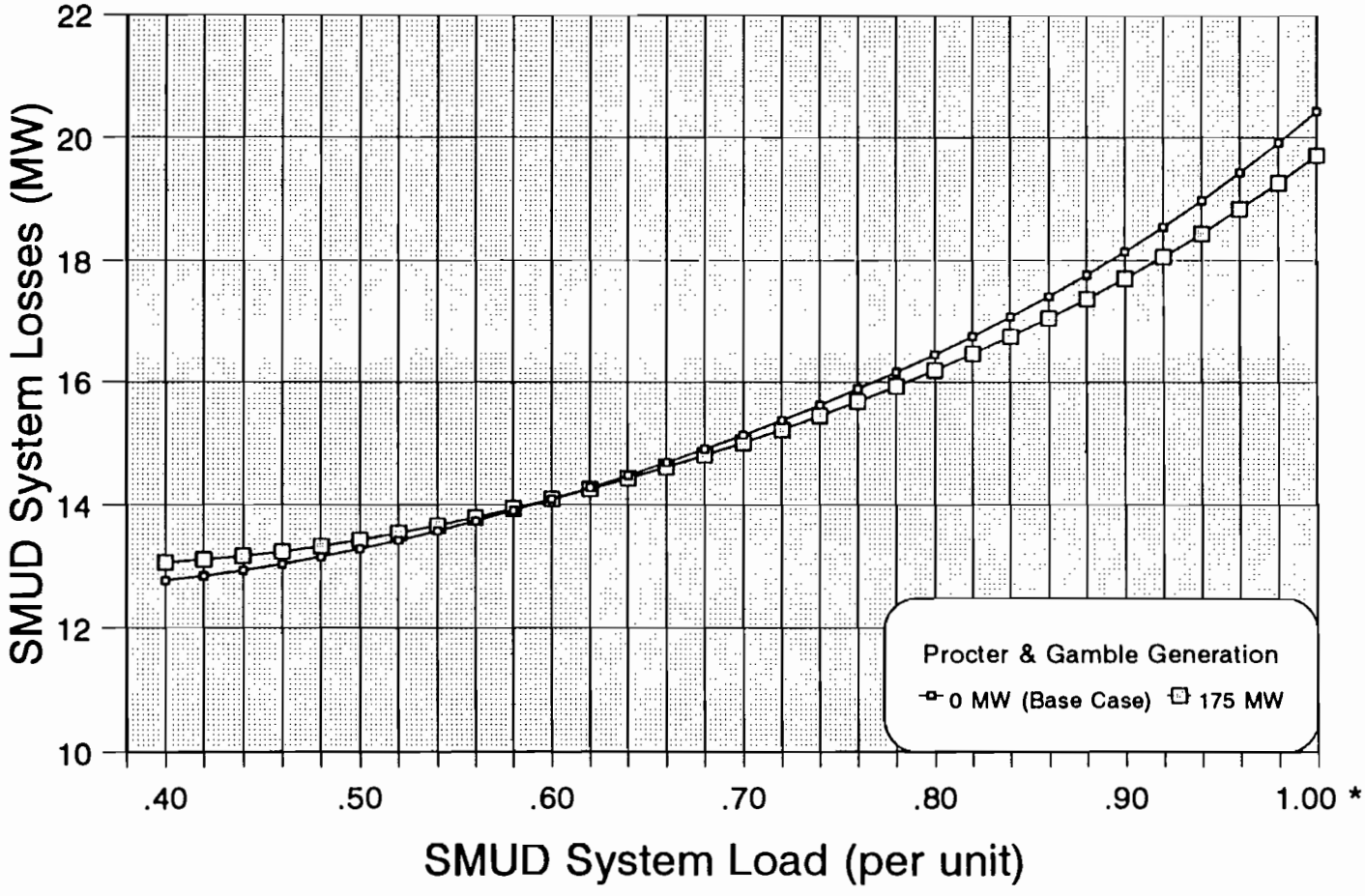

* SMUD System Load = 2255 MW at 1.0 per unit

ALT 4 - E. CITY TO HEDGE 115 KV LOOP-IN

NET PRESENT VALUE = ($57,643)

SMUD'S MARGINAL COST of REPLACEMENT POWER
COST OF LOSSES CALCULATION
DISCOUNT RATE: 7.60%
CHANGE IN SMUD SYSTEM LOSS -830 KW

	YEAR	1/ MARGINAL COST CAPACITY ($/KW-YR)	CAPACITY COST	1/ MARGINAL COST ENERGY ($/KWH)	2/ SYSTEM LOAD FACTOR	ENERGY (MWH)	3/ ENERGY COST	TOTAL COST OF LOSSES
1	1996	97.00	($80,510)	0.04450	0.470	1096.519	$48,795	($31,715)
2	1997	97.00	($80,510)	0.04650	0.470	1096.519	$50,988	($29,522)
3	1998	97.00	($80,510)	0.04920	0.470	1096.519	$53,949	($26,561)
4	1999	97.00	($80,510)	0.05370	0.470	1096.519	$58,883	($21,627)
5	2000	97.00	($80,510)	0.05860	0.470	1096.519	$64,256	($16,254)
6	2001	97.00	($80,510)	0.06470	0.470	1096.519	$70,945	($9,565)
7	2002	97.00	($80,510)	0.07040	0.480	963.457	$67,827	($12,683)
8	2003	97.00	($80,510)	0.07540	0.480	963.457	$72,645	($7,865)
9	2004	97.00	($80,510)	0.08060	0.480	963.457	$77,655	($2,855)
10	2005	97.00	($80,510)	0.08610	0.480	963.457	$82,954	$2,444
11	2006	97.00	($80,510)	0.09380	0.490	830.261	$77,878	($2,632)
12	2007	97.00	($80,510)	0.10190	0.490	830.261	$84,604	$4,094
13	2008	97.00	($80,510)	0.10910	0.490	830.261	$90,581	$10,071
14	2009	97.00	($80,510)	0.11700	0.490	830.261	$97,141	$16,631
15	2010	97.00	($80,510)	0.12330	0.500	697.025	$85,943	$5,433
16	2011	97.00	($80,510)	0.13197	0.500	697.025	$91,985	$11,475
17	2012	97.00	($80,510)	0.14125	0.500	697.025	$98,452	$17,942
18	2013	97.00	($80,510)	0.15118	0.500	697.025	$105,374	$24,864
19	2014	97.00	($80,510)	0.16180	0.500	697.025	$112,782	$32,272
20	2015	97.00	($80,510)	0.17318	0.500	697.025	$120,711	$40,201

ENERGY ESCALATION FACTOR FOR THE LAST 5 YRS = 0.07030

proc2\proctlc3.wk1

1/ "MARGINAL COST STUDY, VOLUME II - TECHNICAL ANALYSIS", JUNE, 1990
2/ PS 91-273; "LOAD FORECAST SUBMISSION TO CEC"
3/ TIME-LOAD COEFFICIENTS METHOD OF ANALYSIS

Figure 8
1996 SMUD System Losses for Varying System Load
Alt. 4 - E. City to Hedge 115 kV Loop-In

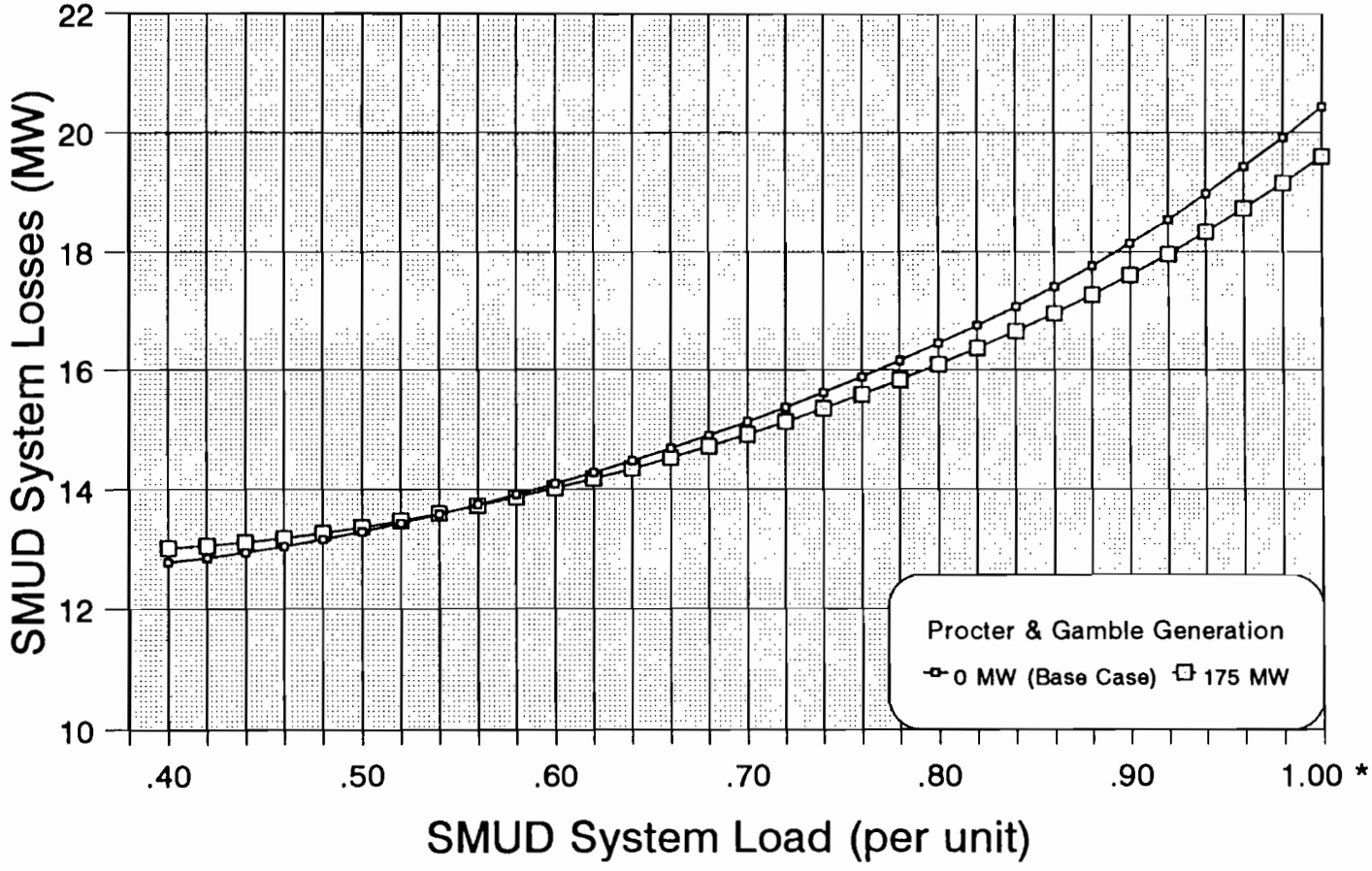

* SMUD System Load = 2255 MW at 1.0 per unit

ALT 4A - E. CITY TO HEDGE 115 KV LOOP-IN; AND 2ND PROCTER TO E. CITY LINE — NET PRESENT VALUE = ($2,234,101)

SMUD'S MARGINAL COST of REPLACEMENT POWER
COST OF LOSSES CALCULATION
DISCOUNT RATE: 7.60%
CHANGE IN SMUD SYSTEM LOSS -1450 KW

	YEAR	1/ MARGINAL COST CAPACITY ($/KW-YR)	CAPACITY COST	1/ MARGINAL COST ENERGY ($/KWH)	2/ SYSTEM LOAD FACTOR	ENERGY (MWH)	3/ ENERGY COST	TOTAL COST OF LOSSES
1	1996	97.00	($140,650)	0.04450	0.470	-1660.187	($73,878)	($214,528)
2	1997	97.00	($140,650)	0.04650	0.470	-1660.187	($77,199)	($217,849)
3	1998	97.00	($140,650)	0.04920	0.470	-1660.187	($81,681)	($222,331)
4	1999	97.00	($140,650)	0.05370	0.470	-1660.187	($89,152)	($229,802)
5	2000	97.00	($140,650)	0.05860	0.470	-1660.187	($97,287)	($237,937)
6	2001	97.00	($140,650)	0.06470	0.470	-1660.187	($107,414)	($248,064)
7	2002	97.00	($140,650)	0.07040	0.480	-1827.343	($128,645)	($269,295)
8	2003	97.00	($140,650)	0.07540	0.480	-1827.343	($137,782)	($278,432)
9	2004	97.00	($140,650)	0.08060	0.480	-1827.343	($147,284)	($287,934)
10	2005	97.00	($140,650)	0.08610	0.480	-1827.343	($157,334)	($297,984)
11	2006	97.00	($140,650)	0.09380	0.490	-1995.036	($187,134)	($327,784)
12	2007	97.00	($140,650)	0.10190	0.490	-1995.036	($203,294)	($343,944)
13	2008	97.00	($140,650)	0.10910	0.490	-1995.036	($217,658)	($358,308)
14	2009	97.00	($140,650)	0.11700	0.490	-1995.036	($233,419)	($374,069)
15	2010	97.00	($140,650)	0.12330	0.500	-2163.199	($266,722)	($407,372)
16	2011	97.00	($140,650)	0.13197	0.500	-2163.199	($285,474)	($426,124)
17	2012	97.00	($140,650)	0.14125	0.500	-2163.199	($305,544)	($446,194)
18	2013	97.00	($140,650)	0.15118	0.500	-2163.199	($327,024)	($467,674)
19	2014	97.00	($140,650)	0.16180	0.500	-2163.199	($350,015)	($490,665)
20	2015	97.00	($140,650)	0.17318	0.500	-2163.199	($374,623)	($515,273)

ENERGY ESCALATION FACTOR FOR THE LAST 5 YRS = 0.07030

proc2\proctlc3.wk1

1/ "MARGINAL COST STUDY, VOLUME II - TECHNICAL ANALYSIS", JUNE, 1990
2/ PS 91-273; "LOAD FORECAST SUBMISSION TO CEC"
3/ TIME-LOAD COEFFICIENTS METHOD OF ANALYSIS

Figure 9

1996 SMUD System Losses for Varying System Load

Alt. 4A - E. City to Hedge 115 kV Loop-In & 2nd E. City to Procter Line

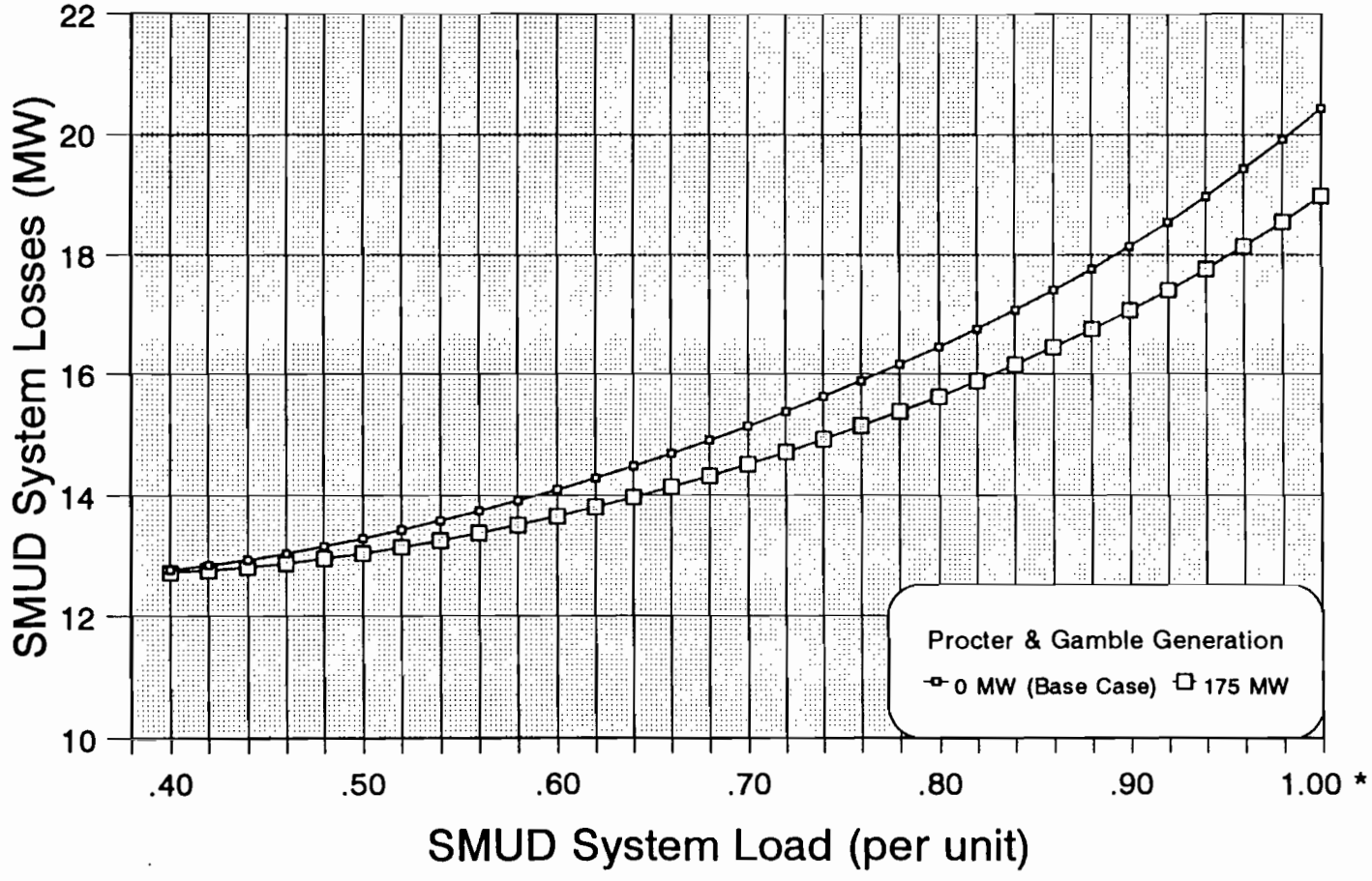

* SMUD System Load = 2255 MW at 1.0 per unit

ALT 5 - 230 KV SINGLE-CIRCUIT TO HEDGE — NET PRESENT VALUE = ($894,290)

SMUD'S MARGINAL COST of REPLACEMENT POWER
COST OF LOSSES CALCULATION
DISCOUNT RATE: 7.60%
CHANGE IN SMUD SYSTEM LOSS -790 KW

	YEAR	1/ MARGINAL COST CAPACITY ($/KW-YR)	CAPACITY COST	1/ MARGINAL COST ENERGY ($/KWH)	2/ SYSTEM LOAD FACTOR	ENERGY (MWH)	3/ ENERGY COST	TOTAL COST OF LOSSES
1	1996	97.00	($76,630)	0.04450	0.470	-380.573	($16,935)	($93,565)
2	1997	97.00	($76,630)	0.04650	0.470	-380.573	($17,697)	($94,327)
3	1998	97.00	($76,630)	0.04920	0.470	-380.573	($18,724)	($95,354)
4	1999	97.00	($76,630)	0.05370	0.470	-380.573	($20,437)	($97,067)
5	2000	97.00	($76,630)	0.05860	0.470	-380.573	($22,302)	($98,932)
6	2001	97.00	($76,630)	0.06470	0.470	-380.573	($24,623)	($101,253)
7	2002	97.00	($76,630)	0.07040	0.480	-470.125	($33,097)	($109,727)
8	2003	97.00	($76,630)	0.07540	0.480	-470.125	($35,447)	($112,077)
9	2004	97.00	($76,630)	0.08060	0.480	-470.125	($37,892)	($114,522)
10	2005	97.00	($76,630)	0.08610	0.480	-470.125	($40,478)	($117,108)
11	2006	97.00	($76,630)	0.09380	0.490	-559.771	($52,507)	($129,137)
12	2007	97.00	($76,630)	0.10190	0.490	-559.771	($57,041)	($133,671)
13	2008	97.00	($76,630)	0.10910	0.490	-559.771	($61,071)	($137,701)
14	2009	97.00	($76,630)	0.11700	0.490	-559.771	($65,493)	($142,123)
15	2010	97.00	($76,630)	0.12330	0.500	-649.432	($80,075)	($156,705)
16	2011	97.00	($76,630)	0.13197	0.500	-649.432	($85,705)	($162,335)
17	2012	97.00	($76,630)	0.14125	0.500	-649.432	($91,730)	($168,360)
18	2013	97.00	($76,630)	0.15118	0.500	-649.432	($98,179)	($174,809)
19	2014	97.00	($76,630)	0.16180	0.500	-649.432	($105,081)	($181,711)
20	2015	97.00	($76,630)	0.17318	0.500	-649.432	($112,469)	($189,099)

ENERGY ESCALATION FACTOR FOR THE LAST 5 YRS = 0.07030

proc2\proctlc3.wk1

1/ "MARGINAL COST STUDY, VOLUME II - TECHNICAL ANALYSIS", JUNE, 1990
2/ PS 91-273; "LOAD FORECAST SUBMISSION TO CEC"
3/ TIME-LOAD COEFFICIENTS METHOD OF ANALYSIS

Figure 10
1996 SMUD System Losses for Varying System Load
Alt. 5 - 230 kV Single-Circuit Radial Generation Tie to Hedge

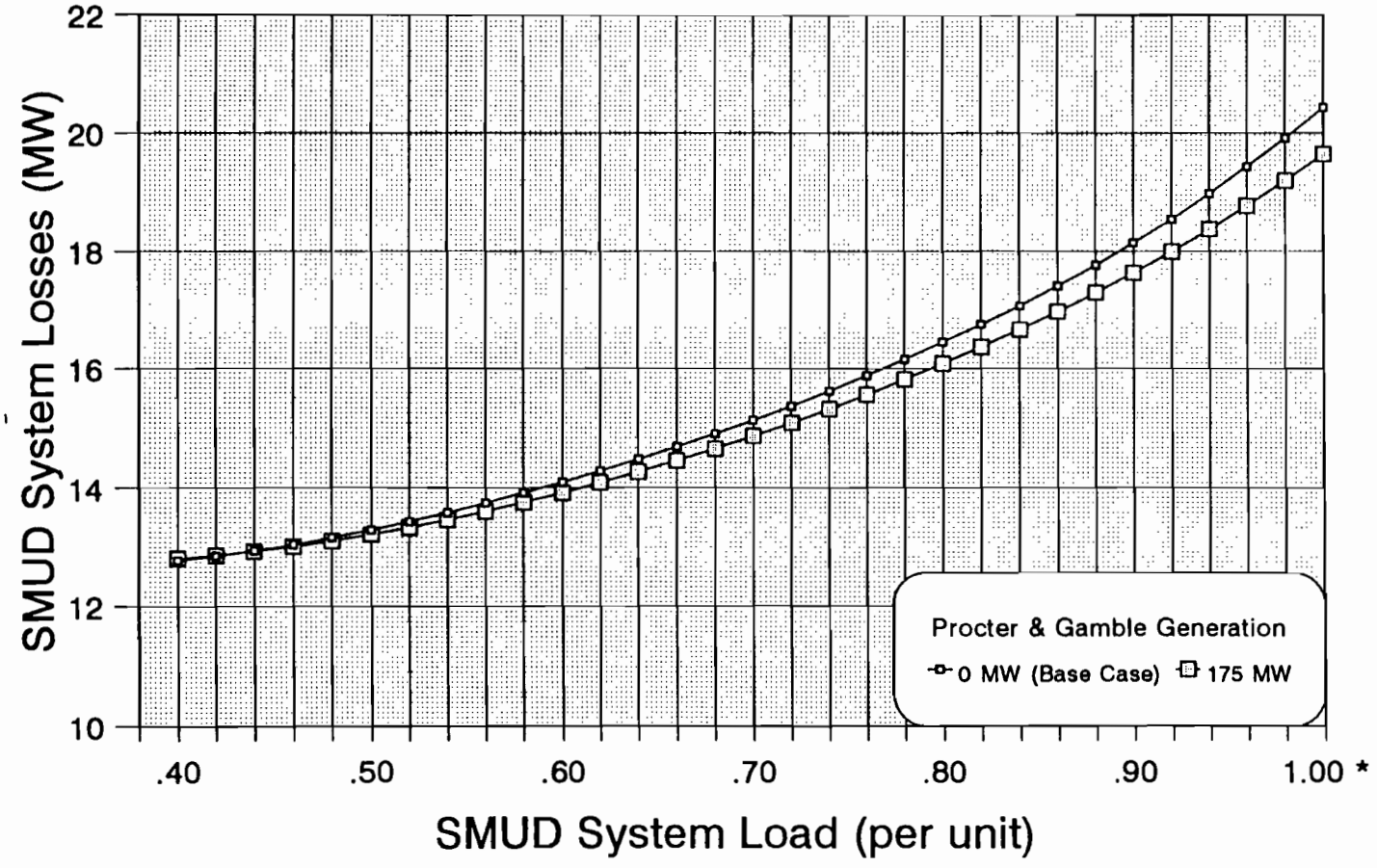

* SMUD System Load = 2255 MW at 1.0 per unit

ALT 5A - 230 KV DOUBLE-CIRCUIT TO HEDGE

NET PRESENT VALUE = ($1,493,162)

SMUD'S MARGINAL COST of REPLACEMENT POWER
COST OF LOSSES CALCULATION
DISCOUNT RATE: 7.60%
CHANGE IN SMUD SYSTEM LOSS -900 KW

	YEAR	1/ MARGINAL COST CAPACITY ($/KW-YR)	CAPACITY COST	1/ MARGINAL COST ENERGY ($/KWH)	2/ SYSTEM LOAD FACTOR	ENERGY (MWH)	3/ ENERGY COST	TOTAL COST OF LOSSES
1	1996	97.00	($87,300)	0.04450	0.470	-1219.966	($54,288)	($141,588)
2	1997	97.00	($87,300)	0.04650	0.470	-1219.966	($56,728)	($144,028)
3	1998	97.00	($87,300)	0.04920	0.470	-1219.966	($60,022)	($147,322)
4	1999	97.00	($87,300)	0.05370	0.470	-1219.966	($65,512)	($152,812)
5	2000	97.00	($87,300)	0.05860	0.470	-1219.966	($71,490)	($158,790)
6	2001	97.00	($87,300)	0.06470	0.470	-1219.966	($78,932)	($166,232)
7	2002	97.00	($87,300)	0.07040	0.480	-1313.272	($92,454)	($179,754)
8	2003	97.00	($87,300)	0.07540	0.480	-1313.272	($99,021)	($186,321)
9	2004	97.00	($87,300)	0.08060	0.480	-1313.272	($105,850)	($193,150)
10	2005	97.00	($87,300)	0.08610	0.480	-1313.272	($113,073)	($200,373)
11	2006	97.00	($87,300)	0.09380	0.490	-1406.713	($131,950)	($219,250)
12	2007	97.00	($87,300)	0.10190	0.490	-1406.713	($143,344)	($230,644)
13	2008	97.00	($87,300)	0.10910	0.490	-1406.713	($153,472)	($240,772)
14	2009	97.00	($87,300)	0.11700	0.490	-1406.713	($164,585)	($251,885)
15	2010	97.00	($87,300)	0.12330	0.500	-1500.187	($184,973)	($272,273)
16	2011	97.00	($87,300)	0.13197	0.500	-1500.187	($197,977)	($285,277)
17	2012	97.00	($87,300)	0.14125	0.500	-1500.187	($211,896)	($299,196)
18	2013	97.00	($87,300)	0.15118	0.500	-1500.187	($226,793)	($314,093)
19	2014	97.00	($87,300)	0.16180	0.500	-1500.187	($242,737)	($330,037)
20	2015	97.00	($87,300)	0.17318	0.500	-1500.187	($259,802)	($347,102)

ENERGY ESCALATION FACTOR FOR THE LAST 5 YRS = 0.07030

proc2\proctlc3.wk1

1/ "MARGINAL COST STUDY, VOLUME II - TECHNICAL ANALYSIS", JUNE, 1990
2/ PS 91-273; "LOAD FORECAST SUBMISSION TO CEC"
3/ TIME-LOAD COEFFICIENTS METHOD OF ANALYSIS

Figure 11
1996 SMUD System Losses for Varying System Load
Alt. 5A - 230 kV Double-Circuit Radial Generation Tie to Hedge

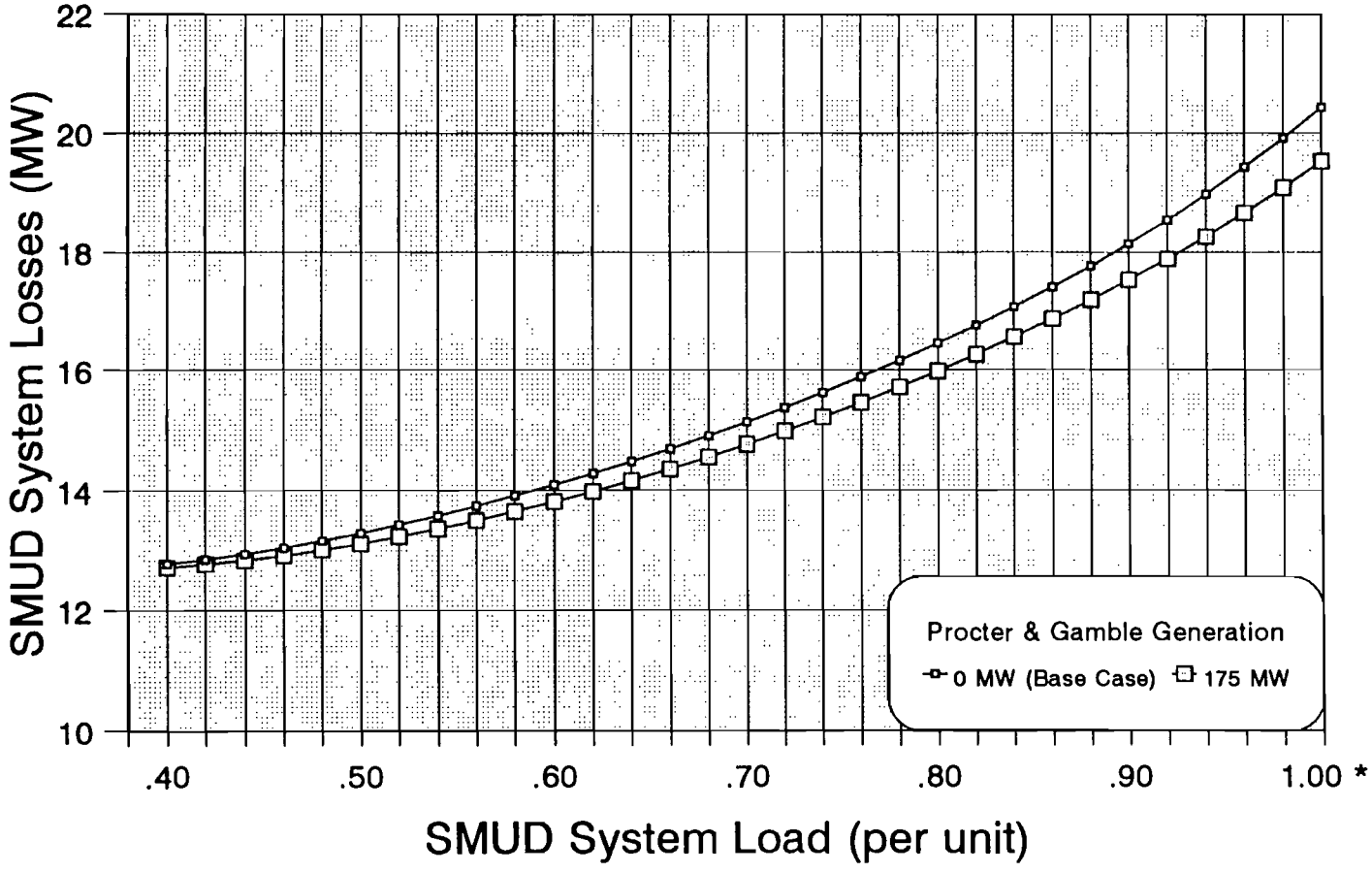

* SMUD System Load = 2255 MW at 1.0 per unit

ALT 6 - HEDGE TO HURLEY 230 KV LOOP-IN WITH 954 AAC CONDUCTOR — NET PRESENT VALUE = ($1,010,718)

SMUD'S MARGINAL COST of REPLACEMENT POWER
COST OF LOSSES CALCULATION
DISCOUNT RATE: 7.60%
CHANGE IN SMUD SYSTEM LOSS -750 KW

	YEAR	1/ MARGINAL COST CAPACITY ($/KW-YR)	CAPACITY COST	1/ MARGINAL COST ENERGY ($/KWH)	2/ SYSTEM LOAD FACTOR	ENERGY (MWH)	3/ ENERGY COST	TOTAL COST OF LOSSES
1	1996	97.00	($72,750)	0.04450	0.470	-627.164	($27,909)	($100,659)
2	1997	97.00	($72,750)	0.04650	0.470	-627.164	($29,163)	($101,913)
3	1998	97.00	($72,750)	0.04920	0.470	-627.164	($30,856)	($103,606)
4	1999	97.00	($72,750)	0.05370	0.470	-627.164	($33,679)	($106,429)
5	2000	97.00	($72,750)	0.05860	0.470	-627.164	($36,752)	($109,502)
6	2001	97.00	($72,750)	0.06470	0.470	-627.164	($40,578)	($113,328)
7	2002	97.00	($72,750)	0.07040	0.480	-710.765	($50,038)	($122,788)
8	2003	97.00	($72,750)	0.07540	0.480	-710.765	($53,592)	($126,342)
9	2004	97.00	($72,750)	0.08060	0.480	-710.765	($57,288)	($130,038)
10	2005	97.00	($72,750)	0.08610	0.480	-710.765	($61,197)	($133,947)
11	2006	97.00	($72,750)	0.09380	0.490	-794.368	($74,512)	($147,262)
12	2007	97.00	($72,750)	0.10190	0.490	-794.368	($80,946)	($153,696)
13	2008	97.00	($72,750)	0.10910	0.490	-794.368	($86,666)	($159,416)
14	2009	97.00	($72,750)	0.11700	0.490	-794.368	($92,941)	($165,691)
15	2010	97.00	($72,750)	0.12330	0.500	-877.897	($108,245)	($180,995)
16	2011	97.00	($72,750)	0.13197	0.500	-877.897	($115,855)	($188,605)
17	2012	97.00	($72,750)	0.14125	0.500	-877.897	($124,000)	($196,750)
18	2013	97.00	($72,750)	0.15118	0.500	-877.897	($132,717)	($205,467)
19	2014	97.00	($72,750)	0.16180	0.500	-877.897	($142,048)	($214,798)
20	2015	97.00	($72,750)	0.17318	0.500	-877.897	($152,034)	($224,784)

ENERGY ESCALATION FACTOR FOR THE LAST 5 YRS = 0.07030 — proc2\proctlc3.wk1

1/ "MARGINAL COST STUDY, VOLUME II - TECHNICAL ANALYSIS", JUNE, 1990
2/ PS 91-273; "LOAD FORECAST SUBMISSION TO CEC"
3/ TIME-LOAD COEFFICIENTS METHOD OF ANALYSIS

Figure 12
1996 SMUD System Losses for Varying System Load
Alt. 6 - Hedge to Hurley 230 kV Loop-In with 954 AAC Conductor

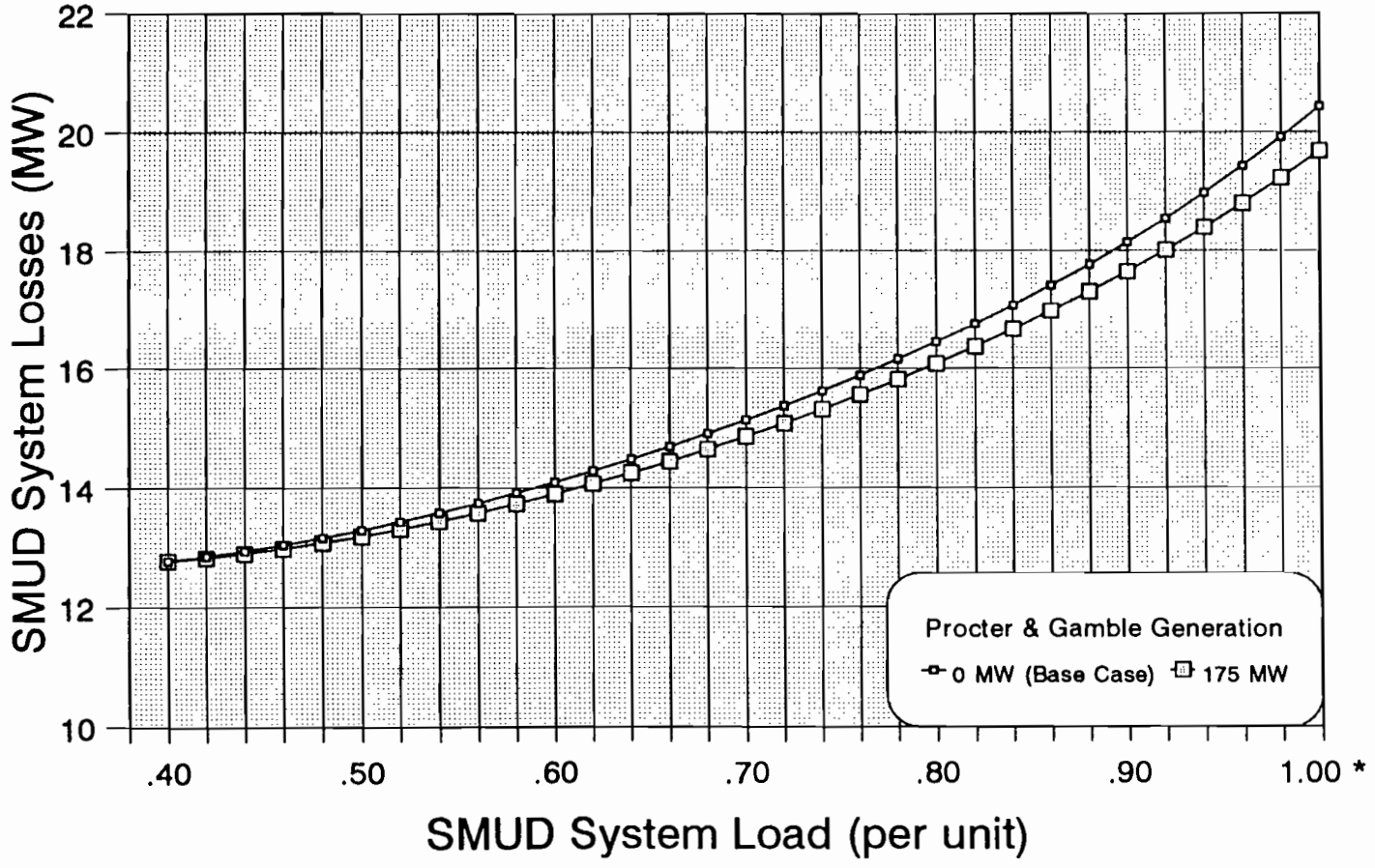

* SMUD System Load = 2255 MW at 1.0 per unit

ALT 6R - HEDGE TO HURLEY 230 KV LOOP-IN WITH RECONDUCTOR TO 2-636 AAC — NET PRESENT VALUE = ($1,240,737)

SMUD'S MARGINAL COST of REPLACEMENT POWER
COST OF LOSSES CALCULATION
DISCOUNT RATE: 7.60%
CHANGE IN SMUD SYSTEM LOSS -800 KW

	YEAR	1/ MARGINAL COST CAPACITY ($/KW-YR)	CAPACITY COST	1/ MARGINAL COST ENERGY ($/KWH)	2/ SYSTEM LOAD FACTOR	ENERGY (MWH)	3/ ENERGY COST	TOTAL COST OF LOSSES
1	1996	97.00	($77,600)	0.04450	0.470	-940.320	($41,844)	($119,444)
2	1997	97.00	($77,600)	0.04650	0.470	-940.320	($43,725)	($121,325)
3	1998	97.00	($77,600)	0.04920	0.470	-940.320	($46,264)	($123,864)
4	1999	97.00	($77,600)	0.05370	0.470	-940.320	($50,495)	($128,095)
5	2000	97.00	($77,600)	0.05860	0.470	-940.320	($55,103)	($132,703)
6	2001	97.00	($77,600)	0.06470	0.470	-940.320	($60,839)	($138,439)
7	2002	97.00	($77,600)	0.07040	0.480	-1025.451	($72,192)	($149,792)
8	2003	97.00	($77,600)	0.07540	0.480	-1025.451	($77,319)	($154,919)
9	2004	97.00	($77,600)	0.08060	0.480	-1025.451	($82,651)	($160,251)
10	2005	97.00	($77,600)	0.08610	0.480	-1025.451	($88,291)	($165,891)
11	2006	97.00	($77,600)	0.09380	0.490	-1110.463	($104,161)	($181,761)
12	2007	97.00	($77,600)	0.10190	0.490	-1110.463	($113,156)	($190,756)
13	2008	97.00	($77,600)	0.10910	0.490	-1110.463	($121,152)	($198,752)
14	2009	97.00	($77,600)	0.11700	0.490	-1110.463	($129,924)	($207,524)
15	2010	97.00	($77,600)	0.12330	0.500	-1195.308	($147,381)	($224,981)
16	2011	97.00	($77,600)	0.13197	0.500	-1195.308	($157,743)	($235,343)
17	2012	97.00	($77,600)	0.14125	0.500	-1195.308	($168,833)	($246,433)
18	2013	97.00	($77,600)	0.15118	0.500	-1195.308	($180,702)	($258,302)
19	2014	97.00	($77,600)	0.16180	0.500	-1195.308	($193,406)	($271,006)
20	2015	97.00	($77,600)	0.17318	0.500	-1195.308	($207,003)	($284,603)

ENERGY ESCALATION FACTOR FOR THE LAST 5 YRS = 0.07030

proc2\protlc3r.wk1

1/ "MARGINAL COST STUDY, VOLUME II - TECHNICAL ANALYSIS", JUNE, 1990
2/ PS 91-273; "LOAD FORECAST SUBMISSION TO CEC"
3/ TIME-LOAD COEFFICIENTS METHOD OF ANALYSIS

Figure 13
1996 SMUD System Losses for Varying System Load
Alt. 6R - Hedge to Hurley 230 kV Loop-In; Reconductor to 2-636 AAC

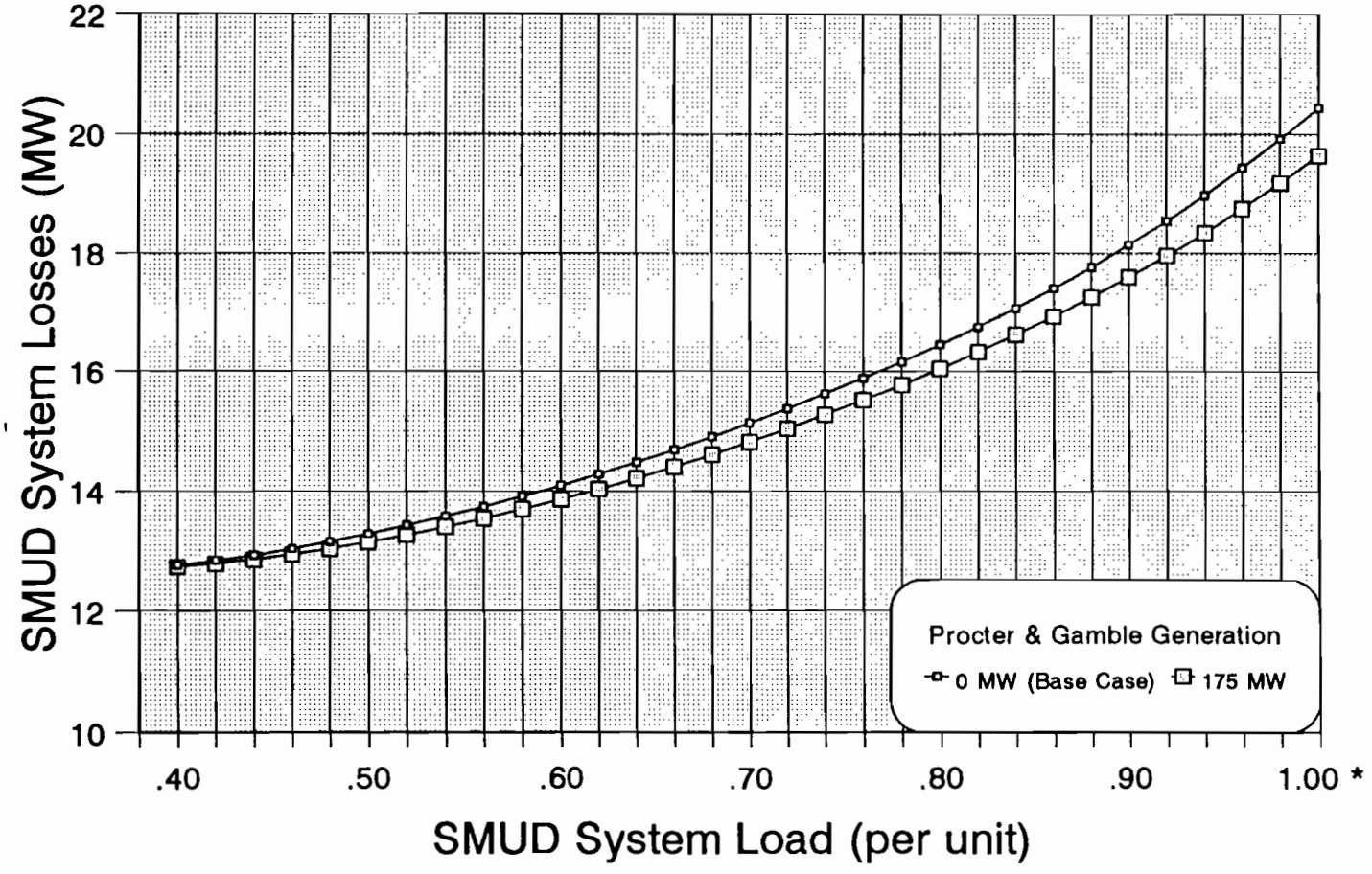

* SMUD System Load = 2255 MW at 1.0 per unit

ALT 7 - HEDGE TO POCKET 230 KV LOOP-IN

NET PRESENT VALUE = ($1,646,581)

SMUD'S MARGINAL COST of REPLACEMENT POWER
COST OF LOSSES CALCULATION
DISCOUNT RATE: 7.60%
CHANGE IN SMUD SYSTEM LOSS -930 KW

	YEAR	1/ MARGINAL COST CAPACITY ($/KW-YR)	CAPACITY COST	1/ MARGINAL COST ENERGY ($/KWH)	2/ SYSTEM LOAD FACTOR	ENERGY (MWH)	3/ ENERGY COST	TOTAL COST OF LOSSES
1	1996	97.00	($90,210)	0.04450	0.470	-1438.029	($63,992)	($154,202)
2	1997	97.00	($90,210)	0.04650	0.470	-1438.029	($66,868)	($157,078)
3	1998	97.00	($90,210)	0.04920	0.470	-1438.029	($70,751)	($160,961)
4	1999	97.00	($90,210)	0.05370	0.470	-1438.029	($77,222)	($167,432)
5	2000	97.00	($90,210)	0.05860	0.470	-1438.029	($84,268)	($174,478)
6	2001	97.00	($90,210)	0.06470	0.470	-1438.029	($93,040)	($183,250)
7	2002	97.00	($90,210)	0.07040	0.480	-1528.737	($107,623)	($197,833)
8	2003	97.00	($90,210)	0.07540	0.480	-1528.737	($115,267)	($205,477)
9	2004	97.00	($90,210)	0.08060	0.480	-1528.737	($123,216)	($213,426)
10	2005	97.00	($90,210)	0.08610	0.480	-1528.737	($131,624)	($221,834)
11	2006	97.00	($90,210)	0.09380	0.490	-1619.718	($151,930)	($242,140)
12	2007	97.00	($90,210)	0.10190	0.490	-1619.718	($165,049)	($255,259)
13	2008	97.00	($90,210)	0.10910	0.490	-1619.718	($176,711)	($266,921)
14	2009	97.00	($90,210)	0.11700	0.490	-1619.718	($189,507)	($279,717)
15	2010	97.00	($90,210)	0.12330	0.500	-1710.874	($210,951)	($301,161)
16	2011	97.00	($90,210)	0.13197	0.500	-1710.874	($225,781)	($315,991)
17	2012	97.00	($90,210)	0.14125	0.500	-1710.874	($241,654)	($331,864)
18	2013	97.00	($90,210)	0.15118	0.500	-1710.874	($258,644)	($348,854)
19	2014	97.00	($90,210)	0.16180	0.500	-1710.874	($276,827)	($367,037)
20	2015	97.00	($90,210)	0.17318	0.500	-1710.874	($296,289)	($386,499)

ENERGY ESCALATION FACTOR FOR THE LAST 5 YRS = 0.07030

proc2\proctlc3.wk1

1/ "MARGINAL COST STUDY, VOLUME II - TECHNICAL ANALYSIS", JUNE, 1990
2/ PS 91-273; "LOAD FORECAST SUBMISSION TO CEC"
3/ TIME-LOAD COEFFICIENTS METHOD OF ANALYSIS

Figure 14
1996 SMUD System Losses for Varying System Load
Alt. 7 - Hedge to Pocket 230 kV Loop-In

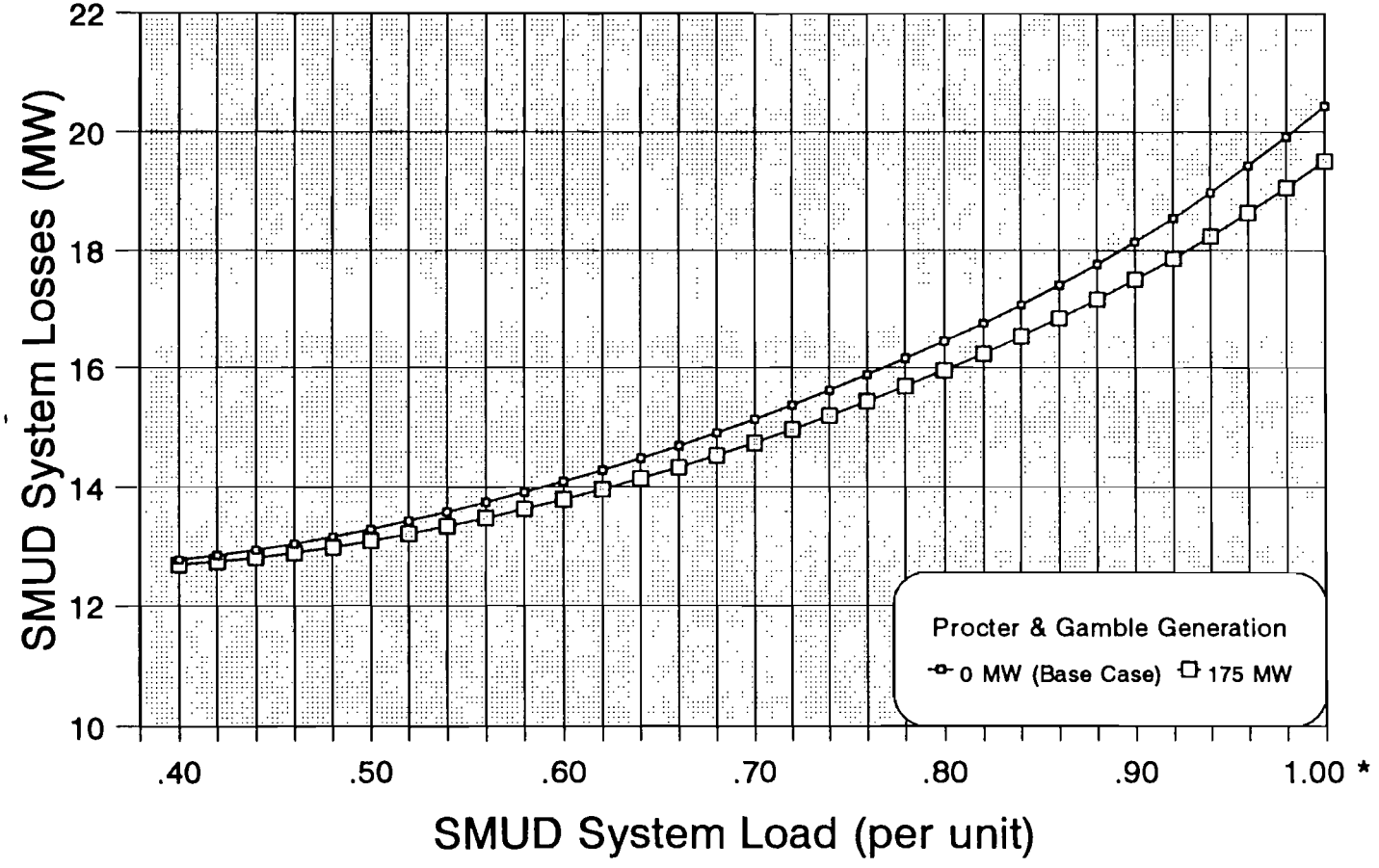

* SMUD System Load = 2255 MW at 1.0 per unit

ALT 8 - LAKE TO POCKET 230 KV LOOP-IN

NET PRESENT VALUE = $1,278,749

SMUD'S MARGINAL COST of REPLACEMENT POWER
COST OF LOSSES CALCULATION
DISCOUNT RATE: 7.60%
CHANGE IN SMUD SYSTEM LOSS -640 KW

	YEAR	1/ MARGINAL COST CAPACITY ($/KW-YR)	CAPACITY COST	1/ MARGINAL COST ENERGY ($/KWH)	2/ SYSTEM LOAD FACTOR	ENERGY (MWH)	3/ ENERGY COST	TOTAL COST OF LOSSES
1	1996	97.00	($62,080)	0.04450	0.470	3022.965	$134,522	$72,442
2	1997	97.00	($62,080)	0.04650	0.470	3022.965	$140,568	$78,488
3	1998	97.00	($62,080)	0.04920	0.470	3022.965	$148,730	$86,650
4	1999	97.00	($62,080)	0.05370	0.470	3022.965	$162,333	$100,253
5	2000	97.00	($62,080)	0.05860	0.470	3022.965	$177,146	$115,066
6	2001	97.00	($62,080)	0.06470	0.470	3022.965	$195,586	$133,506
7	2002	97.00	($62,080)	0.07040	0.480	2906.963	$204,650	$142,570
8	2003	97.00	($62,080)	0.07540	0.480	2906.963	$219,185	$157,105
9	2004	97.00	($62,080)	0.08060	0.480	2906.963	$234,301	$172,221
10	2005	97.00	($62,080)	0.08610	0.480	2906.963	$250,290	$188,210
11	2006	97.00	($62,080)	0.09380	0.490	2790.775	$261,775	$199,695
12	2007	97.00	($62,080)	0.10190	0.490	2790.775	$284,380	$222,300
13	2008	97.00	($62,080)	0.10910	0.490	2790.775	$304,474	$242,394
14	2009	97.00	($62,080)	0.11700	0.490	2790.775	$326,521	$264,441
15	2010	97.00	($62,080)	0.12330	0.500	2674.471	$329,762	$267,682
16	2011	97.00	($62,080)	0.13197	0.500	2674.471	$352,946	$290,866
17	2012	97.00	($62,080)	0.14125	0.500	2674.471	$377,759	$315,679
18	2013	97.00	($62,080)	0.15118	0.500	2674.471	$404,317	$342,237
19	2014	97.00	($62,080)	0.16180	0.500	2674.471	$432,741	$370,661
20	2015	97.00	($62,080)	0.17318	0.500	2674.471	$463,165	$401,085

ENERGY ESCALATION FACTOR FOR THE LAST 5 YRS = 0.07030

proc2\proctlc3.wk1

1/ "MARGINAL COST STUDY, VOLUME II - TECHNICAL ANALYSIS", JUNE, 1990
2/ PS 91-273; "LOAD FORECAST SUBMISSION TO CEC"
3/ TIME-LOAD COEFFICIENTS METHOD OF ANALYSIS

Figure 15
1996 SMUD System Losses for Varying System Load
Alt. 8 - Lake to Pocket 230 kV Loop-In

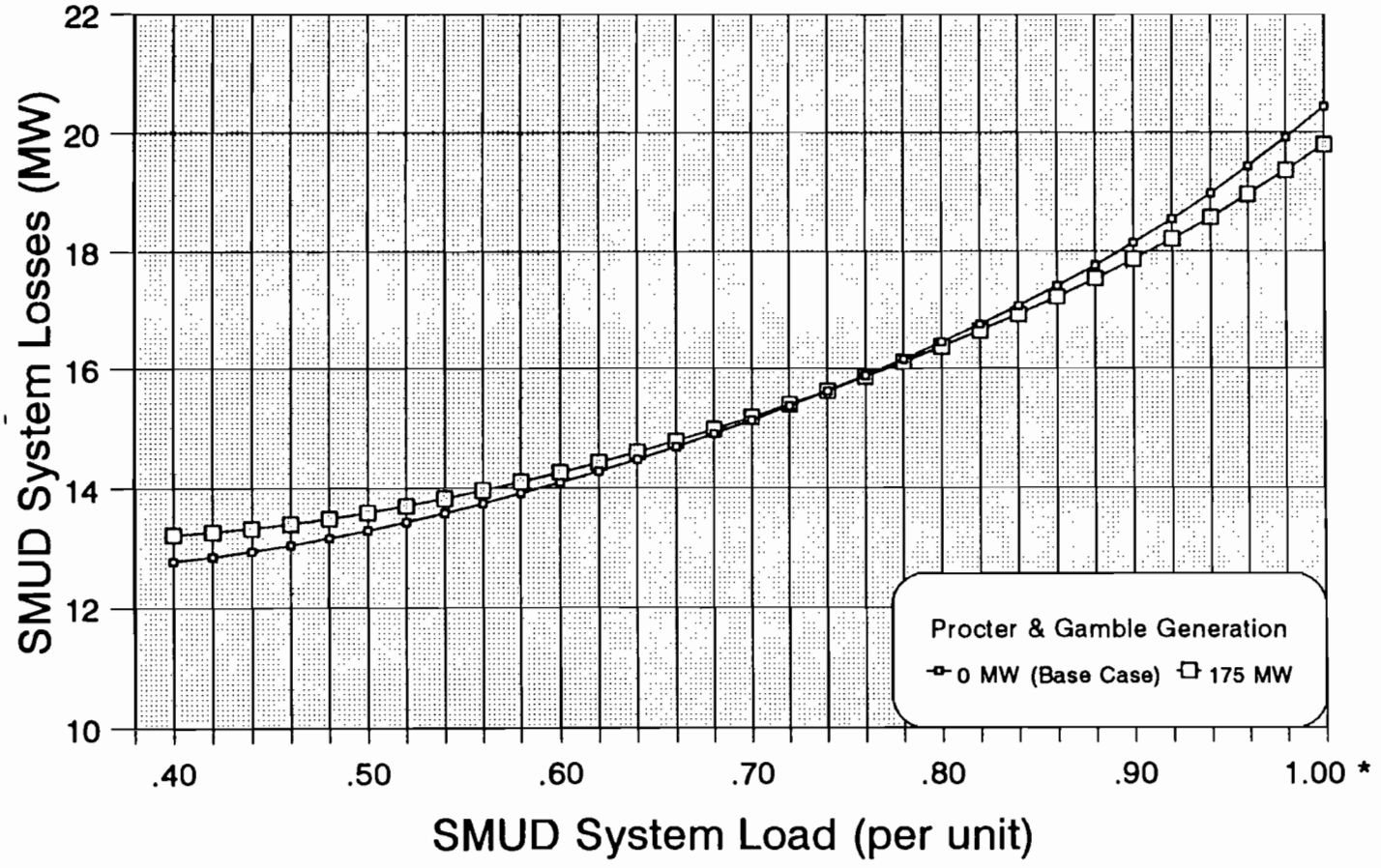

* SMUD System Load = 2255 MW at 1.0 per unit

Appendix A6
Power Flow Analysis

SMUD TRANSMISSION SYSTEM

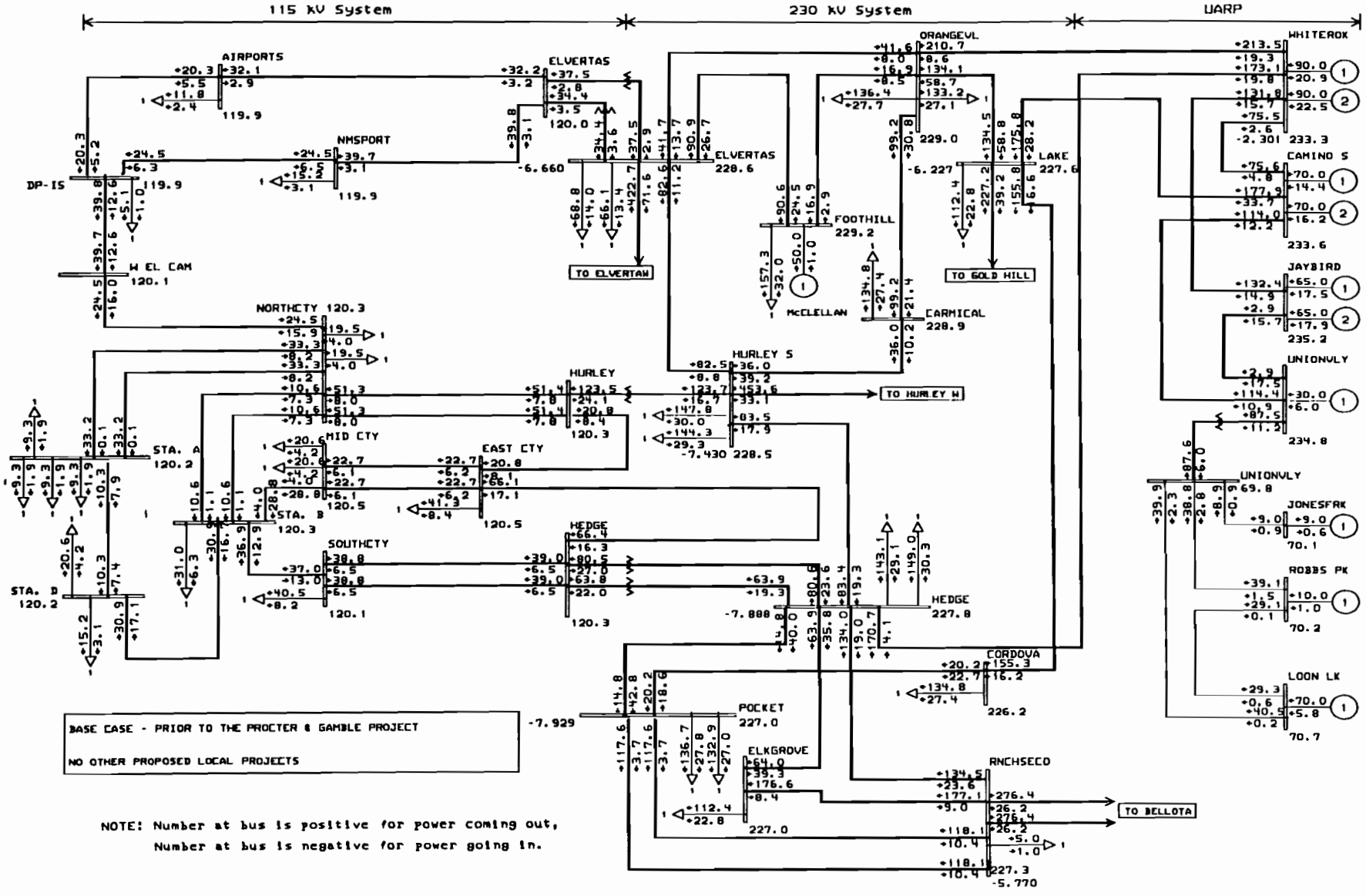

Electric Power Consultants Inc. PSLF Program MW/MVAR Mon Sep 20 17:56:32 1993

SMUD

1996 HS2 WSCC + PG&E DETAIL + SMUD DETAIL
BASE CASE - NO PROCTER & GAMBLE PROJECT
EARSON ICE, SEPCO, CAMPBELL, AND HENDERING NOT ON-LINE

procbswo.drw
procbswo.sav

SMUD TRANSMISSION SYSTEM

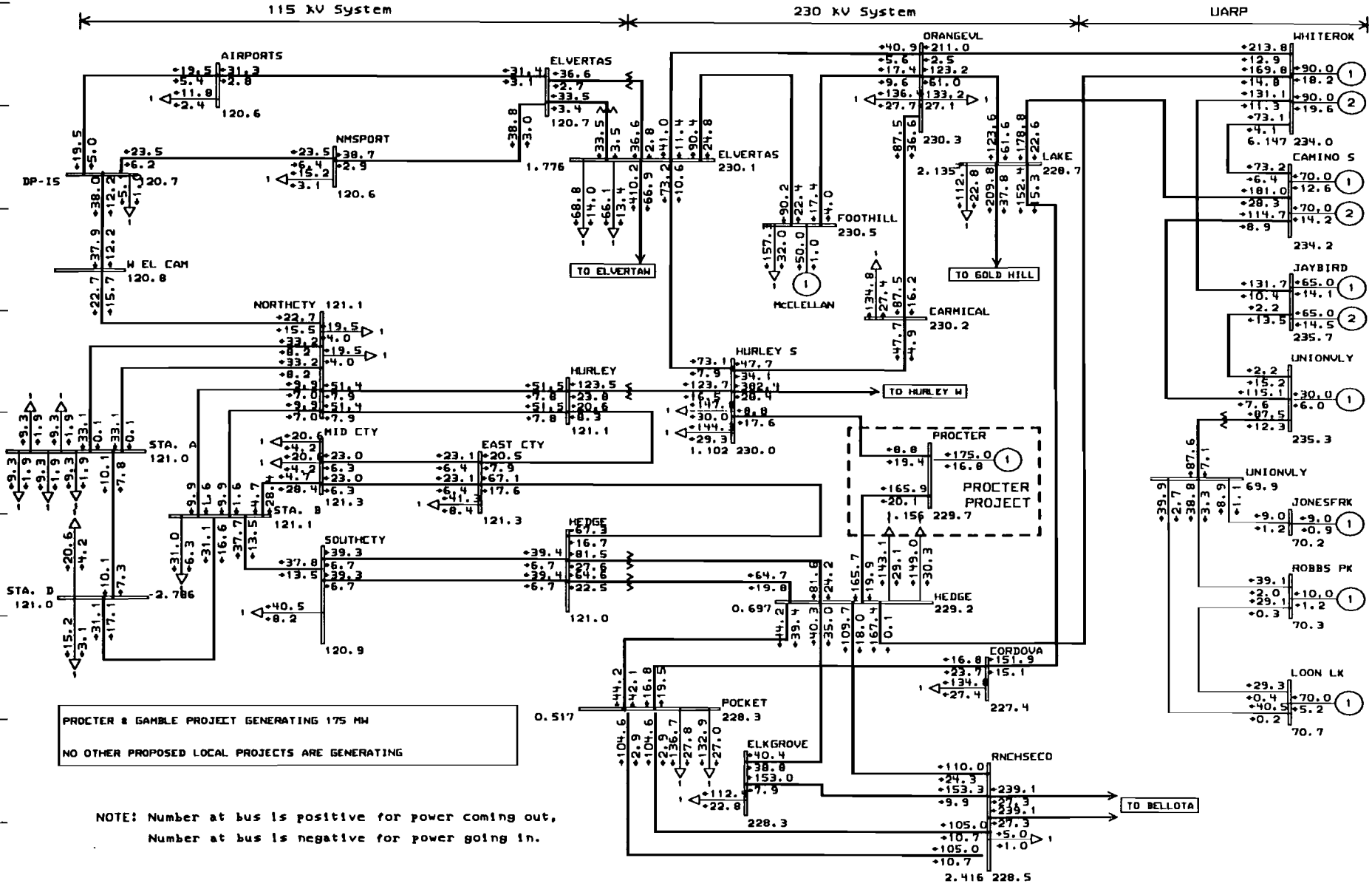

Electric Power Consultants Inc. PSLF Program — MW/MVAR — Mon Sep 20 18:14:10 1993

SMUD

1996 HS2 WSCC + PGBE DETAIL + SMUD DETAIL
PROCTER & GAMBLE PROJECT ON-LINE GENERATING 175 MW

prochehu.drw
/u/sherri/basecase/hehu_2ml.sa

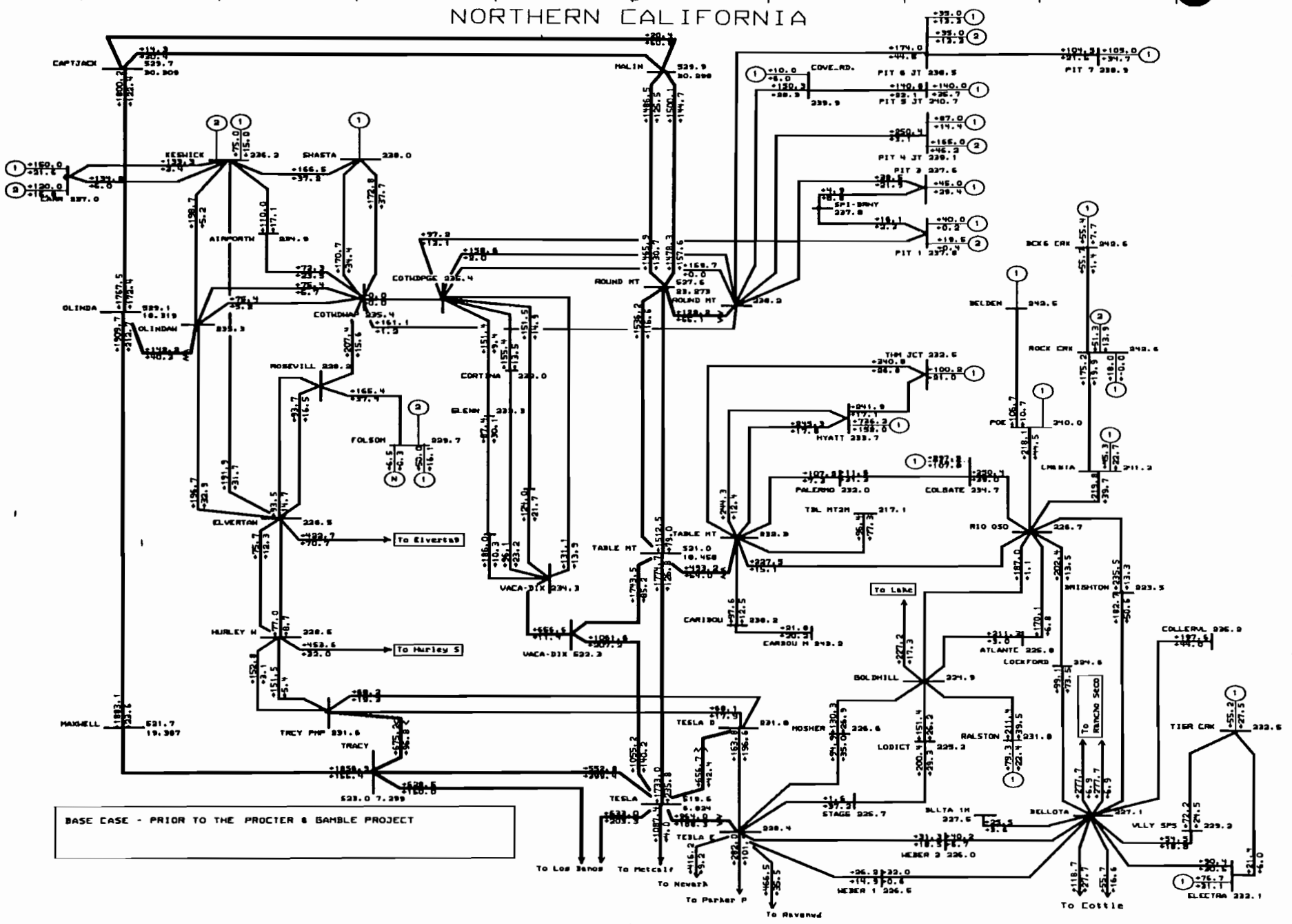

Electric Power Consultants Inc. PSLF Program MW/MVAR Mon Sep 20 17:59:47 1993

SMUD

1996 HS2 WSCC + PG&E DETAIL + SMUD DETAIL
BASE CASE - NO PROCTER & GAMBLE PROJECT
CARSON ICE, SEPCO, CAMPBELL, AND RENDERING NOT ON-LINE

/u/sherri/draw/1996nc.drw
procbswo.sav

NORTHERN CALIFORNIA

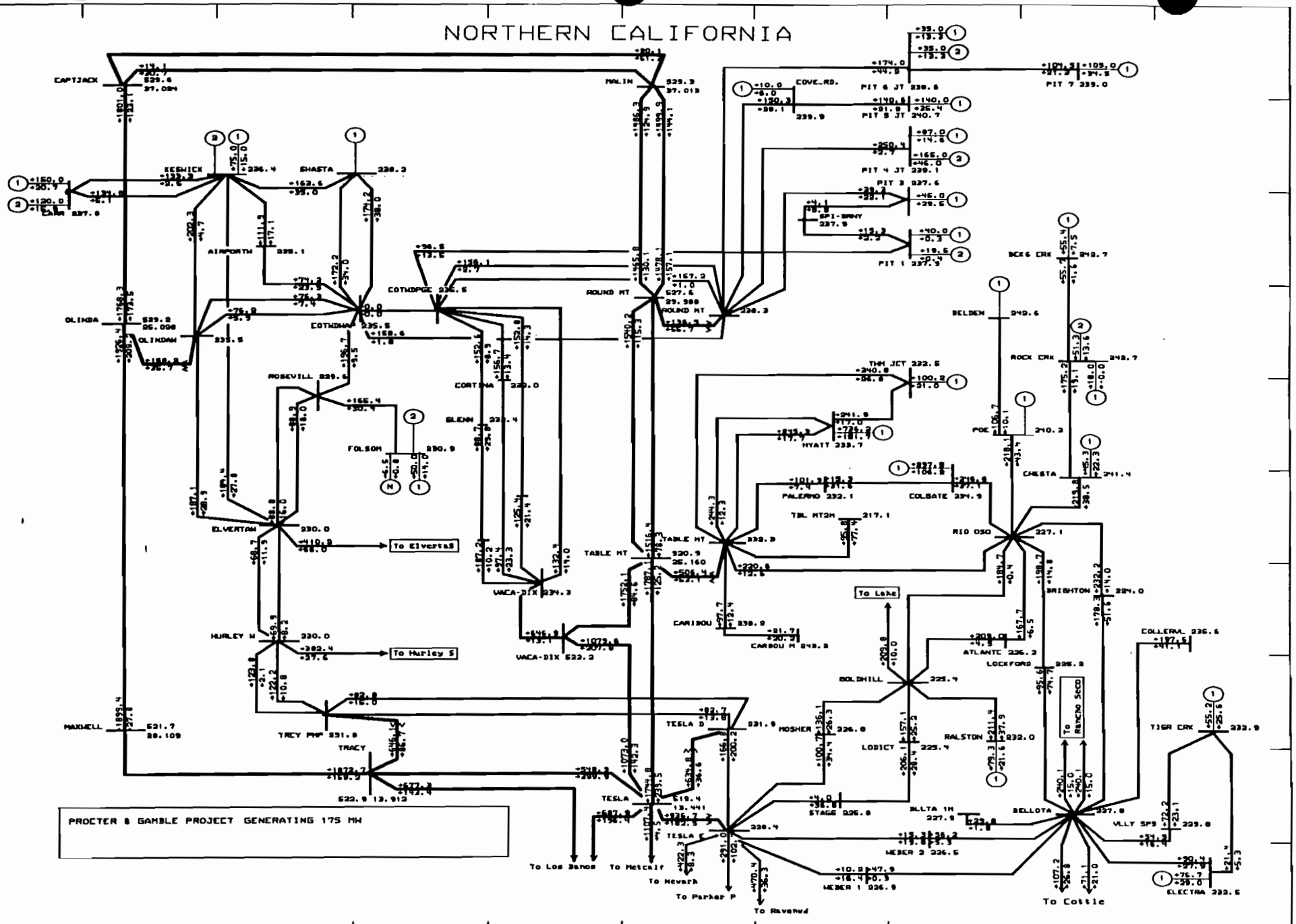

Electric Power Consultants Inc. PSLF Program

MW/MVAR

Mon Sep 20 18:17:15 1993

SMUD

1996 HS2 WSCC + PG&E DETAIL + SMUD DETAIL
PROCTER & GAMBLE PROJECT ON-LINE GENERATING 175 MW

/u/sherri/draw/1996nc.drw
/u/sherri/basecase/hehu.2mi.sa

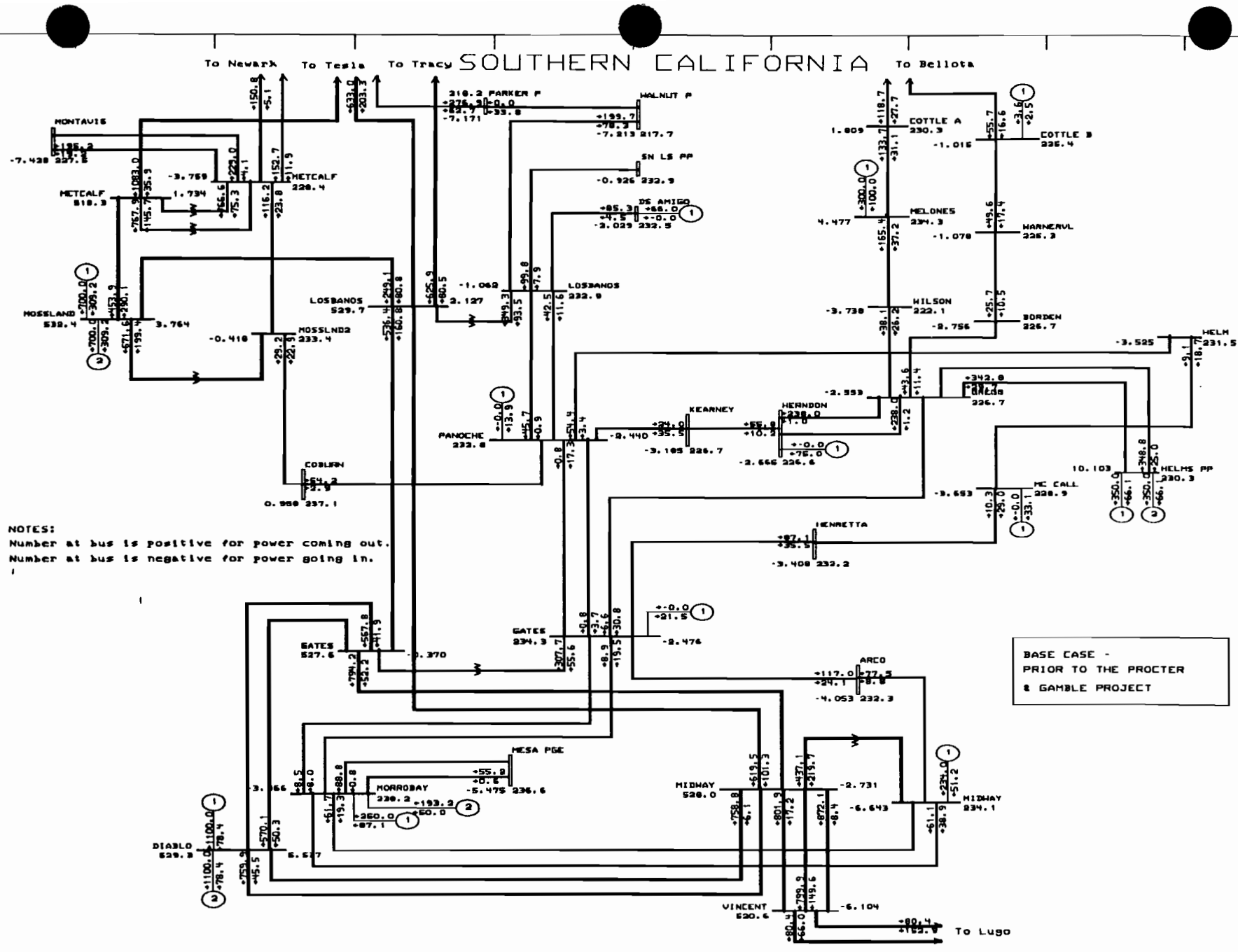

Electric Power Consultants Inc. PSLF Program MW/MVAR Mon Sep 20 18:02:36 1993

SMUD

1996 HS2 WSCC + PG&E DETAIL + SMUD DETAIL
BASE CASE - NO PROCTER & GAMBLE PROJECT
CARSON ICE, SEPECO, CAMPBELL, AND RENDERING NOT ON-LINE

/u/sherri/draw/1996sc.drw
procbswo.sav

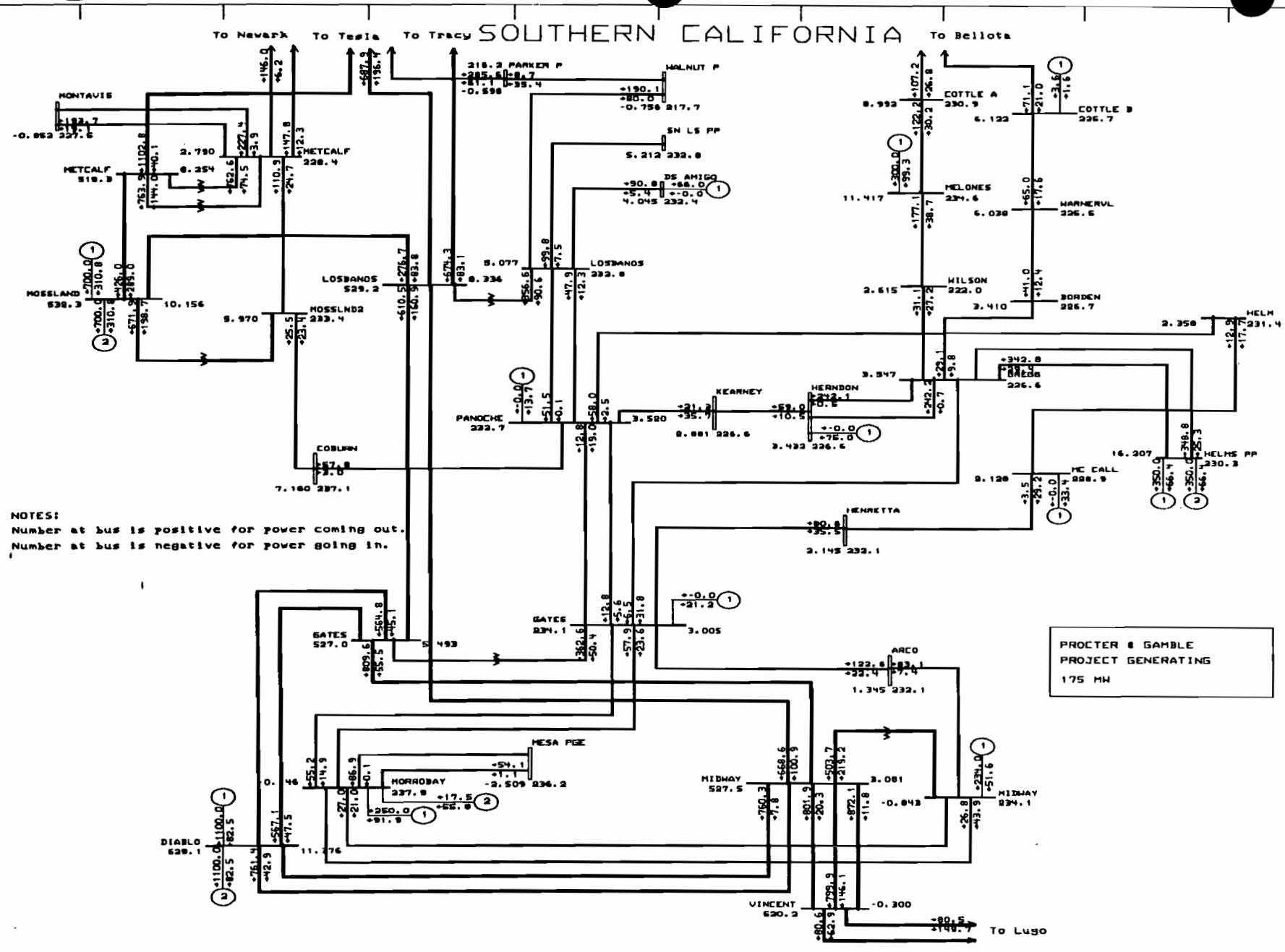

Electric Power Consultants Inc. PSLF Program MW/MVAR Mon Sep 20 18:18:37 1993

SMUD

1996 HS2 WSCC + PG&E DETAIL + SMUD DETAIL
PROCTER & GAMBLE PROJECT ON-LINE GENERATING 175 MW

/u/sherri/draw/1996sc.drw
/u/sherri/basecase/hchu_2m1.sa

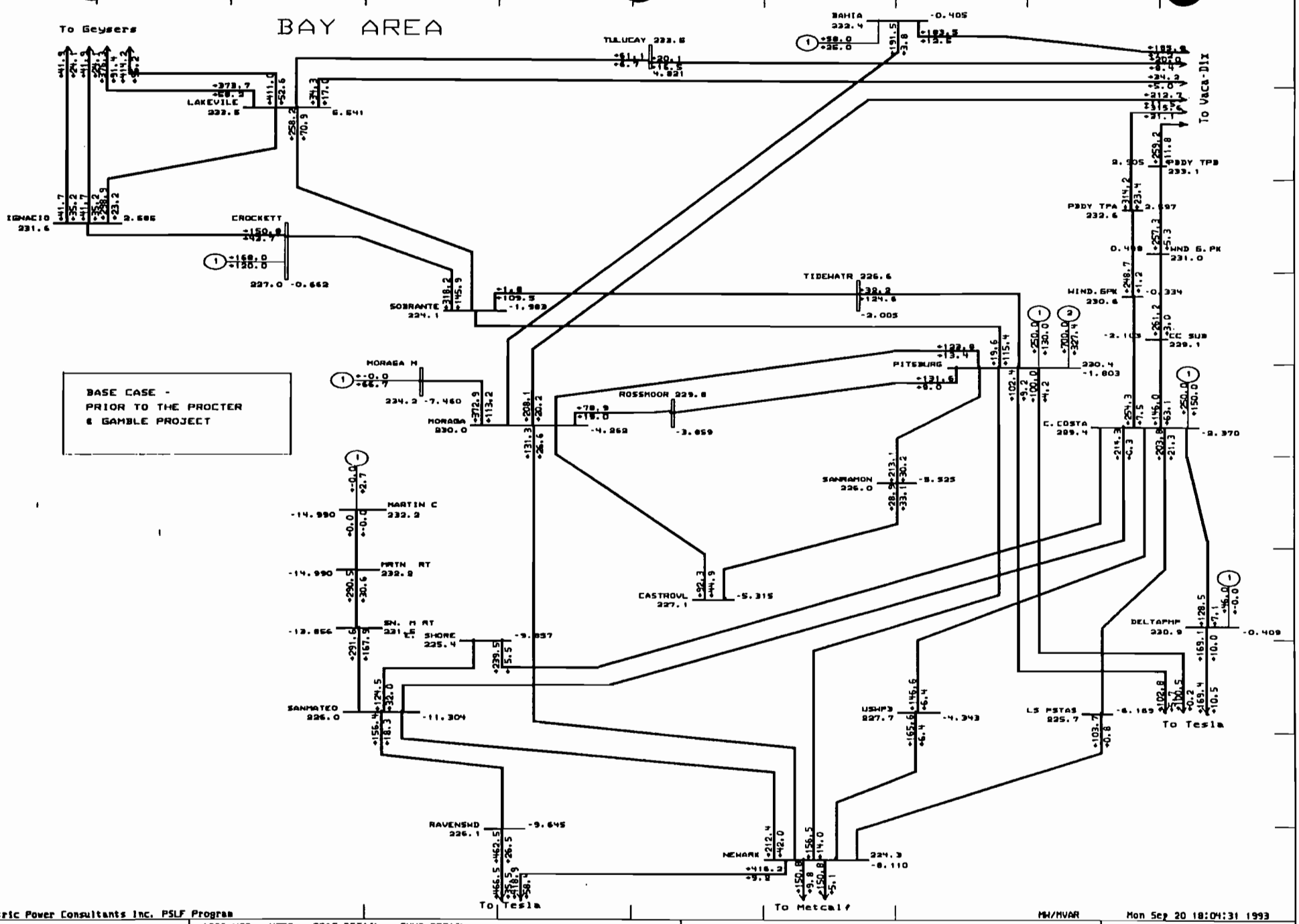

Electric Power Consultants Inc. PSLF Program

MW/MVAR

Mon Sep 20 18:04:31 1993

SMUD

1996 HS2 WSCC + PG&E DETAIL + SMUD DETAIL
BASE CASE - NO PROCTER & GAMBLE PROJECT
CARSON ICE, SEPCO, CAMPBELL, AND RENDERING NOT ON-LINE

/u/sherri/draw/1996bay.drw
procbswo.sav

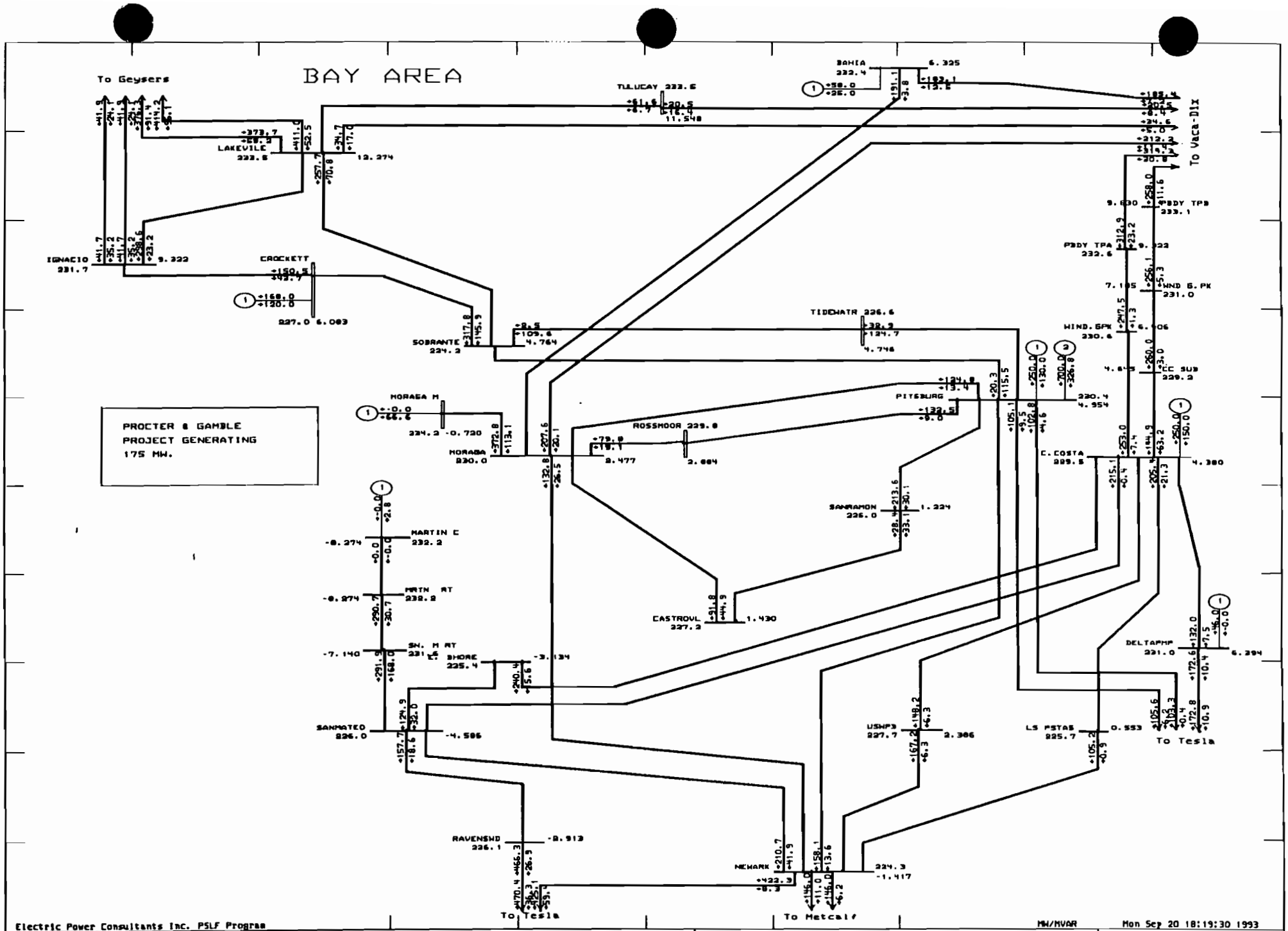

Electric Power Consultants Inc. PSLF Program

MW/MVAR

Mon Sep 20 18:19:30 1993

SMUD

1996 HS2 WSCC + PG&E DETAIL + SMUD DETAIL
PROCTER & GAMBLE PROJECT ON-LINE GENERATING 175 MW

/u/sherri/draw/1996bay.drw
/u/sherri/basecase/hehu_2mi.sa

Appendix A7
Short-Circuit Analysis

Appendix A7
Short-Circuit Analysis

A7.1 Short-Circuit Analysis

A short-circuit analysis was performed to determine the impact of the Procter & Gamble Cogeneration Project, interconnection via the Hedge to Hurley loop-in line, on the maximum 3-phase symmetrical amps. Table A7-1 provides the results of the short-circuit analysis.

A7.1.1 Study Assumptions

The results of this short-circuit planning study are intended for preliminary breaker sizing at the high voltage bus, and are not recommended as a substitute for final design studies or for the purpose of the final equipment specifications.

The low voltage generator bus is outside the scope of study, which is limited to the project switchyard and interconnection with the existing transmission system.

The 115 kV North Natomas expansion is modeled in the study, as is the California-Oregon Transmission Project (COTP). This study does not attempt to represent the impact of potential future projects, including other new system generation or line construction.

The assumed positive sequence data for this analysis is also provided in Table A7-1. The assumed configuration is represented by the one-line diagram provided as Figure 3.15-12.

A7.1.2 Method

A classical fault analysis was performed on a "flat start" system condition with simplified modeling. All loads, charging capacitance, and shunt paths are ignored, and all system generators are excited to one per unit rated voltage with zero current just prior to the disturbance.

A 3-phase fault was simulated at the high voltage project bus (Procter 230 kV) and at neighboring substations one bus away (Hedge and Hurley 230 kV Substations). The fault was simulated both before and after the addition of the Procter & Gamble Cogeneration Project.

092793-2

Table A7-1
Procter & Gamble Project 3-Phase Short-Circuit Results

Faulted Bus	Maximum 3-Phase Short-Circuit Symmetrical Amperes		
	Prior to Procter & Gamble Project (amps)	Procter & Gamble Project (amps)	Percent Increase Due to Project
Procter 230 kV (No. 808)	NA	17,000 ∠ -85.1°	NA
Hedge 230 kV (No. 775)	15,400 ∠ -84.6°	17,300 ∠ -85.1°	12.3
Hurley 230 kV (No. 67 and No. 779)	16,400 ∠ -84.7°	18,100 ∠ -85.1°	10.4
Assumed Positive Sequence Project Data			
LM6000 gas turbine generator (3) X"d = 0.130 p.u. on 60 MVA base Steam turbine generator (1) X"d = 0.19 on 50 MVA base	Step-up transformers X1 = 0.07 on 50 MVA transformer base (all transformers)		

A7.2 Results

The results indicate an increase in short-circuit current of 12.3 percent at the Hedge Substation 230 kV bus and 10.4 percent at the Hurley Substation 230 kV bus. It should be noted that the cumulative impact of all proposed projects will likely represent the highest short-circuit magnitudes.

Appendix B
Mechanical Engineering Design Criteria

Appendix B
Mechanical Engineering Design Criteria

B.1 Introduction

Control of the design, engineering, procurement, and construction activities on the project will be completed in accordance with various predetermined standard practices and project specific programs/practices. An orderly sequence of events for the implementation of the project is planned consisting of the following major activities:

- Conceptual design.
- Licensing and permitting.
- Detailed design.
- Procurement.
- Construction and construction management.
- Startup, testing, and checkout.
- Project completion.

The purpose of this appendix is to summarize the codes and standards and standard design criteria and practices that will be used during the project. The following will summarize the general mechanical design criteria for the project. These criteria form the basis of the design for the mechanical components and systems of the project. More specific design information is developed during detailed design to support equipment and erection specifications. It is not the intent of this appendix to present the detailed design information for each component and system, but rather to summarize the codes, standards, and general criteria that will be used.

Section B.2 summarizes the applicable codes and standards and Section B.3 includes the general design criteria for piping, valves, insulation, lagging, and space conditioning.

B.2 Design Codes and Standards

The design and specification of all work shall be in accordance with all applicable laws and regulations of the federal government, the State of California, and with the applicable local codes and ordinances. A summary of the codes and industry standards to be used in design and construction is listed below:

- ASTM--American Society for Testing and Materials.
  - -- ASTM A36--Standard Specification for Structural Steel.

- ASTM A53--Standard Specification for Pipe, Steel, Black and Hot-Dipped, Zinc-Coated Welded and Seamless.
- ASTM A105--Standard Specification for Forgings, Carbon Steel, for Piping Components.
- ASTM A106--Standard Specification for Seamless Carbon Steel Pipe for High-Temperature Service.
- ASTM A123--Specification for Zinc (Hot-Dip Galvanized) Coatings on Iron and Steel Products.
- ASTM A126--Standard Specification for Gray Iron Castings for Valves, Flanges, and Pipe Fittings.
- ASTM A182--Standard Specification for Forged or Rolled Alloy Steel Pipe Flanges/Forged Fitting and Valves and Parts for High-Temperature Service.
- ASTM A193--Standard Specification for Alloy-Steel and Stainless Steel Bolting Materials for High-Temperature Service.
- ASTM A194--Standard Specifications for Carbon and Alloy Steel Nuts for Bolts for High-Pressure and High-Temperature Service.
- ASTM A213--Standard Specification for Seamless Ferritic and Austenitic Alloy-Steel Boiler, Superheater, and Heat-Exchanger Tubes.
- ASTM A216--Standard Specifications for Steel Castings, Carbon, Suitable for Fusion Welding, for High-Temperature Service.
- ASTM A217--Standard Specification for Steel Castings, Martenistic Stainless and Alloy for Pressure Containing Parts, Suitable for High-Temperature Service.
- ASTM A234--Standard Specification for Piping Fittings of Wrought Carbon Steel and Alloy Steel for Moderate and Elevated Temperatures.
- ASTM A262--Practices for Detecting Susceptibility to Intergranular Attack in Austenitic Stainless Steels.
- ASTM A283--Low and Intermediate Tensile Strength Carbon Steel Plates.
- ASTM A307--Standard Specifications for Carbon Steel Bolts and Studs, 60,000-psi, Tensile Strength.
- ASTM A312--Standard Specification for Seamless and Welded Austenitic Stainless Steel Pipes.
- ASTM A325--High Strength Bolts for Structural Steel Joints.

- -- ASTM A335--Standard Specification for Seamless Ferritic Alloy-Steel Pipe for High-Temperature Service.
- -- ASTM A351--Standard Specification for Steel Castings, Austenitic, for High-Temperature Service.
- -- ASTM A380--Standard Practice for Cleaning and Descaling Stainless Steel Parts, Equipment and Systems.
- -- ASTM A387--Standard Specification for Pressure Vessel Plates, Alloy Steel, Chromium-Molybdenum.
- -- ASTM A403--Standard Specification for Wrought Austenitic Stainless Steel Piping Fittings.
- -- ASTM A490--Specification for Heat-Treated, Steel Structural Bolts, 150 ksi Tensile Strength.
- -- ASTM B61--Standard Specification for Steam or Valve Bronze Castings.
- -- ASTM B62--Composition Bronze or Ounce Metal Castings.
- -- ASTM B88--Standard Specification for Seamless Copper Water Tube.
- -- ASTM B111--Specification for Copper and Copper-Alloy Seamless Condenser Tubes and Ferrule Stock.
- -- ASTM B209--Standard Specification for Aluminum and Aluminum-Alloy Sheet and Plate.
- -- ASTM C195--Specification for Mineral Fiber Thermal Insulating Cement.
- -- ASTM C411--Test Method for Hot-Surface Performance of High-Temperature Thermal Insulation.
- -- ASTM C533--Specification for Calcium Silicate Block and Pipe Thermal Insulation.
- -- ASTM C612--Specification for Mineral Fiber Block and Board Thermal Insulation.
- -- ASTM D1066--Practice for Sampling Steam.
- -- ASTM D1248--Specification for Polyethylene Plastics Molding and Extrusion Materials.
- -- ASTM F441--Specification for Chlorinated Poly (vinyl chloride) (CPVC) Plastic Pipe, Schedules 40 and 80.

- ANSI--American National Standards Institute.
  - -- ANSI B1.1--Unified Inch Screw Threads (UN and UNR thread form).
  - -- ANSI B2.1--Pipe Threads Except Dryseal.

- -- ANSI B16.1--Cast Iron Pipe Flanges and Flanged Fittings, Class 25, 125, 250, and 800 lb.
- -- ANSI B16.5--Pipe Flanges and Flanged Fittings, Steel Nickel Alloy, and Other Special Alloys.
- -- ANSI B16.9--Factory-Made Wrought Steel Buttwelding Fittings.
- -- ANSI B16.10--Face-to-Face and End-to-End Ferrous Valves.
- -- ANSI B16.11--Forged Steel Fittings Socket-Welding and Threaded.
- -- ANSI B16.21--Nonmetallic Flat Gaskets for Pipe Flanges.
- -- ANSI B16.22--Wrought Copper and Copper Alloy Solder-Joint Pressure Fittings.
- -- ANSI B16.24--Bronze Pipe Flanges and Flanged Fittings, Class 150 and 300 lb.
- -- ANSI B16.28--Wrought Steel Buttwelding Short Radius Elbows and Returns.
- -- ANSI B16.34--Valves-Flanged, Threaded and Welding End.
- -- ANSI B18.2.1--Square and Hex Bolts and Screws, Inch Series.
- -- ANSI B18.6.3--Machine Screws and Machine Nuts.
- -- ANSI B18.21.1--Lock Washers.
- -- ANSI B18.22.1--Plain Washers.
- -- ANSI B31.1--Power Piping.
- -- ANSI B31.3--Chemical Plant and Petroleum Refinery Piping.
- -- ANSI B36.10--Welded and Seamless Wrought Steel Pipe.
- -- ANSI B36.19--Stainless Steel Pipe.
- -- ANSI B73.1--Specifications for Horizontal End Suction Centrifugal Pumps for Chemical Process.
- -- ANSI B133.1--Procurement Standards for Gas Turbines.

- API--American Petroleum Institute.
  - -- API 616--Type H Industrial Combustion Gas Turbines for Refinery Services.
- ASA--Acoustical Society of America.
  - -- ASA 47--Sound Level Meters.
  - -- ASA 53--Preferred Frequencies, Frequency Levels, and Band Numbers for Acoustical Measurements.
- ASME--American Society of Mechanical Engineers.
  - -- ASME Section I--Rules for Construction of Power Boilers.

- -- ASME Section II--ASME Boiler and Pressure Vessel Code Materials Specification-Metals.
  - -- ASME Section VIII--Rules for Construction of Pressure Vessels.
  - -- ASME Section IX--Qualification Standard for Welding and Brazing Procedures, Welders, Brazers, and Welding and Brazing Operators.
  - -- ASME PTC-4.4--Gas Turbine Heat Recovery Steam Generators.
  - -- ASME PTC-6--Steam Turbines.
  - -- ASME PTC-12.1--Closed Feedwater Heaters.
  - -- ASME PTC-12.2--Steam Condensing Apparatus.
  - -- ASME PTC-12.3--Deaerators.
  - -- ASME PTC-22--Power Test Code for Gas Turbine Power Plants.
  - -- ASME PTC-23--Atmospheric Water-Cooling Equipment, Performance Test Code No. 23.
  - -- ASME Supplement 19.5--Application - Part II of Fluid Meters.
  - -- ASME B1.20.1--Pipe Threads, General Purpose.
  - -- ASME B1.33.4--Gas Turbine Control and Protection System.
- ANST--American Society for Nondestructive Testing.
  - -- SNT-TC-1A--Recommended Practice Cat. No. 2025.
- AFBMA--Antifriction Bearing Manufacturers Association.
  - -- AFBMA 9--Load Ratings and Fatigue Life for Ball Bearings.
  - -- AFBMA 11--Load Ratings and Fatigue Life for Roller Bearings.
- CFR--Code of Federal Regulations.
  - -- CFR Title 29--Occupational Safety and Health Administration (OSHA).
  - -- 40 CFR, Part 60--Standards of Performance for New Stationary Sources.
  - -- 40 CFR, Subchapter C--Air Programs, 50 et seq.
  - -- 40 CFR, Subchapter D--Water Programs, 100 et seq.
  - -- 40 CFR, Subchapter I--Solid Waste, 260 et seq., Hazardous Waste.
  - -- 40 CFR, Subchapter J--Superfund, Emergency Planning & Community Right-to-Know Act, 300 et seq.
  - -- 40 CFR, Subchapter N--Effluent Guidelines & Standards, 400 et seq.
- CTI--Cooling Tower Institute Standard Specification.
  - -- CTI STD-103--Redwood Lumber Specification.
  - -- CTI STD-111--Gear Speed Reducers.
  - -- CTI STD-114--Douglas Fir Lumber Specification.
- MSS--Manufacturers Standardization Society of Valve and Fitting Industry.
  - -- MSS-SP 55--Quality Standard for Steel Castings-Visual Method.

- -- MSS-SP 58--Pipe Hangers and Supports-Materials, Design, and Manufacture.
  - -- MSS-SP 61--Butterfly Valves.
  - -- MSS-SP 69--Pipe Hangers and Supports-Selection and Application.
  - -- MSS-SP 80--Bronze Gate-Globe-Angle and Check Valves.
  - -- MSS-SP 84--Steel Valves-Socket Welding and Threaded Ends.
  - -- MSS-SP 89--Pipe Hangers and Supports-Fabrication and Installation Practices.
- ISA--Instrument Society of America.
  - -- ISA S20--Specification Forms for Process Measurement and Control Instruments, Primary Elements and Control Valves.
- NACE--National Association of Corrosion Engineers.
  - -- RP-01-69--Control of External Corrosion on Underground or Submerged Metallic Piping Systems.
- MIL--US Department of Defense--Military Specification.
  - -- MIL-I-24244 Amendment 3--Insulation Material, with Special Corrosion, Chloride, and Fluoride Requirements.
- AWS--American Welding Society.
  - -- AWS-D1.1--Structural Welding Code-Steel.
- AWWA--American Water Works Association.
  - -- AWWA-C207--Steel Pipe Flanges for Waterworks Service-Sizes 4 in. through 144 in.
  - -- AWWA-C504--Rubber Seated Butterfly Valves.
- OSHA--Occupational Safety and Health Act.
- HEI--Heat Exchange Institute Standard.
- HI--Hydraulic Institute Standards.
- TEMA--Tubular Exchanger Manufacturers Association.
- SSPC--Steel Structures Painting Council, Volume 2.
  - -- SSPC-PA1--Shop, Field, and Maintenance Painting.
  - -- SSPC-PA2--Measurement of Dry Paint Thickness with Magnetic Gages.
  - -- SSPC-PS7.01--One Coat Shop Paint System No. 7.01 with Red or Brown Primer.
  - -- SSPC-PS12--Guide for Selecting Zinc Rich Painting Systems.
  - -- SSPC-SP1--Solvent Cleaning.
  - -- SSPC-SP2--Hand Tool Cleaning.
  - -- SSPC-SP3--Power Tool Cleaning.

- -- SSPC-SP5--White Metal Blast Cleaning.
  - -- SSPC-SP6--Commercial Blast Cleaning.
  - -- SSPC-SP8--Pickling.
  - -- SSPC-SP10--Near-White Blast Cleaning.
  - -- SSPC-Vis 1--Pictorial Surface Preparation Standard for Painting Steel Surfaces.
- California Administrative Code, Title 8.
  - -- Chapters 4 through 7, Groups 20 Flammable Liquids, Gases, and Vapors.
  - -- Chapter 27, Fire Protection.
- National Fire Protection Association (NFPA) codes (1989 Edition).
  - -- NFPA 10--Portable Fire Extinguishers.
  - -- NFPA 11--Low Expansion Foam and Combined Agent Systems.
  - -- NFPA 12--Carbon Dioxide Extinguishing Systems.
  - -- NFPA 13--Installation of Sprinkler Systems.
  - -- NFPA 14--Installation of Standpipe and Hose Systems.
  - -- NFPA 15--Water Spray Fixed Systems.
  - -- NFPA 16--Installation of Deluge Foam-Water Sprinkler Systems and Foam-Water Spray Systems.
  - -- NFPA 20--Installation of Centrifugal Fire Pumps.
  - -- NFPA 22--Water Tanks for Private Fire Protection.
  - -- NFPA 24--Private Fire Service Mains and Their Appurtenances.
  - -- NFPA 26--Supervision of Valves Controlling Water Supplies for Fire Protection.
  - -- NFPA 30--Flammable and Combustible Liquids Code.
  - -- NFPA 31--Oil Burning Equipment.
  - -- NFPA 37--Stationary Combustion Engines and Gas Turbines.
  - -- NFPA 58--Liquified Petroleum Gases.
  - -- NFPA 70--National Electrical Code.
  - -- NFPA 72A--Installation, Maintenance, and Use of Local Protective Signaling Systems for Guard's Tour, Fire Alarm, and Supervisory Service.
  - -- NFPA 72D--Installation, Maintenance, and Use of Proprietary Protection Signaling Systems.
  - -- NFPA 72E--Automatic Fire Detectors.
  - -- NFPA 78--Lightning Protection Code.

- -- NFPA 85A--Boiler Furnaces, Oil- and Gas-Fired Single Burner.
  - -- NFPA 214--Standards on Water-Cooling Towers.
  - -- NFPA 255--Method of Test of Surface Burning Characteristics of Building Materials.
  - -- NFPA 850--Steam Electric Generating Plants.
  - -- NFPA 1961--Fire Hose.
  - -- NFPA 1962--Care, Use, and Service Testing of Fire Hose Including Couplings and Nozzles.
  - -- NFPA 1963--Screw Threads and Gaskets for Fire Hose Connections.
- UBC--Uniform Building Code (1988 Edition).
  - -- Chapter 5, Classification of All Buildings by Use or Occupancy and General Requirements for All Occupancies.
  - -- Chapter 19--Type II One-Hour and II-N Buildings.
  - -- Chapter 32--Roof Construction and Covering.
  - -- Chapter 33--Exits.
- UPC--Uniform Plumbing Code.
- CGA--Compressed Gas Association.
  - -- CGA G-2.1-81--Ammonia Injection System (Refer to ANSI K61.1).
- Barclays California Code of Regulations.
  - -- Title 8.
- Proposition 65 Regulations.
- ASHRAE--American Society of Heating, Refrigerating, and Air-Conditioning Engineers.
- PFI--Pipe Fabrication Institute.
  - -- PFI ES-3--Fabricating Tolerances.
  - -- PFI ES-22--Color Coding of Piping Materials.
  - -- PFI ES-24--Pipe Bending Methods, Tolerances, Process and Material Requirements.
- NIST--National Institute of Standards and Technology.
- CCR--California Code of Regulations.
  - -- 14 CCR--Natural Resources.
  - -- 17 CCR--Public Health.
  - -- 19 CCR--Public Safety.
  - -- 20 CCR--Public Utilities & Energy.
  - -- 22 CCR--Social Security, Division 4.5, Minimum Standards for Management of Hazardous & Extremely Hazardous Waste.

-- 23 CCR--Waters.
-- 24 CCR--California Building Code.
-- 26 CCR--Toxics.

Other recognized standards will be used as required to serve as design, fabrication, and construction guidelines when not in conflict with the above listed standards.

The codes and industry standards used for design, fabrication, and construction will be the codes and industry standards, including all addenda, in effect as stated in equipment and construction purchase or contract documents.

B.3 Mechanical Engineering General Design Criteria

B.3.1 Piping

Piping will be designed, selected, and fabricated in accordance with the following criteria.

B.3.1.1 Design Temperature and Pressure. The design pressure and temperature for piping will be consistent with conditions established for the design of the associated system.

The design pressure of a piping system generally will be based on the maximum sustained pressure that may act on the system plus 25 psi. The design pressure of low-pressure nonmetallic piping systems will be based on maximum sustained pressure plus 25 psi or 25 percent, whichever is less. All design pressure values will be rounded up to the next 10 psi increment.

The design temperature of a piping system generally will be based on the maximum sustained temperature which may act on the system plus 10° F. Design temperatures will be rounded up to the next 5° F increment.

B.3.1.2 General Design and Selection Criteria. Piping will be designed in accordance with the requirements of the Code for Pressure Piping, ANSI B31.1--Power Piping, or other codes and standards referenced in B.2 Design Codes and Standards of this manual, as applicable.

Material selection will generally be based on the design temperature and service conditions in accordance with the following:

- Carbon steel piping materials will be used for design temperatures less than or equal to 750° F.
- 2-1/4 percent chromium alloy steel piping materials will be used for design temperatures greater than 750° F.

- 5 percent chromium alloy steel piping materials will be used where flashing may occur.
- Stainless steel piping materials will be used as follows:
  - -- Piping applications requiring a high degree of cleanliness generally including injection water supply piping after strainers, lubricating oil system piping, and sampling after process isolation valves.
  - -- Piping generally subjected to corrosive service applications.
- Copper piping materials will be used for aboveground control air piping and for 2 inch and smaller service air piping in which cleanliness is critical.
- High density polyethylene materials will be used for low-pressure, underground water service.
- Fiberglass reinforced plastic piping materials will be used in applications requiring corrosion-resistant materials.
- The above listed materials or other suitable piping materials will be used where required for special service to meet specific requirements.

B.3.1.3 Miscellaneous Piping Design and Selection Criteria. The minimum pipe size and wall thickness for miscellaneous piping will generally be in accordance with the following criteria:

- All pressure, test, vent, and sample connections will be 3/4 inch minimum.
- All temperature connections will be 1-1/4 inch minimum.
- All piping drain connections will be 1-1/2 inch minimum.
- Vent connections will be provided at all high points in water and oil piping, and all high points in other piping which will be hydrostatically tested.
- Drain connections will be provided at all nondrainable points in steam, water, and oil piping, and all other piping which will be hydrostatically tested.
- All vent and drain connections will be provided with isolation valves. All vents will use globe valves. All drains will use gate valves to resist pluggage, if possible.
- Vent and drain connections that require frequent operation or which may discharge significant quantities of fluid will be piped to a suitable drain. Vent or drain connections that will normally require operation at a time when hot fluids will be discharged will be piped to a safe termination point.

B.3.1.4 Piping Materials. Piping materials will be in accordance with applicable ASTM and ANSI standards. Materials to be incorporated in permanent systems will

be new, unused, and undamaged. Piping materials will generally be in accordance with the following criteria:

- Steel and Iron Pipe--Carbon steel piping 2 inch nominal size and smaller will be ungalvanized ASTM A106, Grade B minimum.

  Carbon steel piping 2-1/2 inch through 26 inch nominal size will be ungalvanized ASTM A53 Grade B seamless or A106 Grade B, with the indicated grades as a minimum. Carbon steel piping larger than 26 inch nominal size will be ASTM A672 Grade B70, Class 21, for steam service, and ASTM A134 (with ASTM A283 Grade C plate material) for cold water service, with the industrial grades as a minimum.

  The use of ASTM A53 piping material will be limited to 2-1/2 inch nominal size and larger piping, with low temperature and pressure applications.

  Alloy steel pipe, including large diameter special wall pipe, will be ungalvanized seamless type. Alloy steel pipe with a 2-1/4 percent chromium content will conform to ASTM A335 Grade P22. Alloy steel pipe with a 5 percent chromium content will conform to ASTM A335, Grade P5.

  Stainless steel pipe will be ASTM A312 Grades TP 304, TP 304L, TP 316, or TP 316L seamless piping. All stainless steel piping materials will be fully solution annealed prior to fabrication. The Type 316 materials will be utilized for high resistance to corrosion. The Type 316L materials will be utilized for applications requiring hot working (welding, etc.), when the piping will handle solutions that are high in chlorides.

  Schedule numbers, sizes, and dimensions of all carbon steel and alloy steel pipe will conform to ANSI B36.10. Sizes and dimensions of stainless steel pipe designated as Schedule 5S, 10S, 40S, or 80S will conform to ANSI B36.19. Schedule numbers, sizes, and dimensions of stainless steel pipe not designated as 5S, 10S, 40S, or 80S will conform to ANSI B36.10.

  Steel plate piping will be of the welded straight seam type.

- Galvanized Steel Pipe--Galvanized carbon steel piping will be ASTM A53 Grade B. The piping will be hot-dip galvanized.

  The use of galvanized steel pipe will be limited to systems where a high degree of cleanliness is required or where codes require the use of galvanized steel pipe rather than black steel pipe.

- Rubber Lined Pipe--Lining materials for rubber lined carbon steel pipe, method of application, and lining manufacturer will be chosen in accordance with service requirements.
- Copper Alloy Pipe--Copper alloy pipe will conform to ASTM B43, Seamless Red Brass Pipe.
- Polypropylene Lined Pipe--Polypropylene lined pipe will be ASTM A53 steel pipe with an applied liner of polypropylene. The pipe will be as manufactured by Dow Chemical Company, Resistoflex Corporation, or Peabody Doré.
- Fiberglass Reinforced Plastic Pipe--Fiberglass reinforced plastic pipe will be chosen in accordance with the specific service requirements.
- Polyvinyl Chloride Pipe--Polyvinyl chloride (PVC) pipe will conform to ASTM D1785 or ASTM D2241.
- Chlorinated Polyvinyl Chloride Pipe--Chlorinated polyvinyl chloride (CPVC) pipe will conform to ASTM F441.
- High Density Polyethylene Pipe--High density polyethylene pipe will conform to ASTM D3350 with a Plastic Pipe Institute rating of PE 3406 or 3408.

B.3.1.5 Tubing Materials. Tubing materials will generally be in accordance with the following criteria:

- Copper Tubing--Copper tubing 3/8 inch and smaller will be light drawn temper tubing conforming to ASTM B75. Copper tubing 1/2 inch and larger will be ASTM B88 Type K drawn temper.

  Copper tubing will be oxygen free or phosphorus deoxidized copper. Oxygen bearing tough pitch copper tubing will be used.
- Stainless Steel Tubing--Stainless steel tubing will conform to ASTM A213, Type 316. All stainless steel tubing will be of the fully annealed type, with a carbon content greater than 0.04 percent. Stainless steel tubing for use with tubing fittings will not exceed Rockwell B80 hardness.
- Tubing Wall Thickness--Wall thickness for tubing will be as required for specific design pressure and temperature conditions.

  Wall thickness of Type K copper tubing will be in accordance with ASTM B88.

B.3.1.6 Fitting Materials. Fittings will be constructed of materials equivalent to the pipe with which they are used, except for polypropylene lined cast iron or ductile iron fittings which will be used with polypropylene lined steel pipe, and rubber lined cast iron or ductile iron fittings which will be used with rubber lined steel pipe:

- Steel Fittings--Steel fittings 2-1/2 inches and larger will be of the butt welding type. Steel fittings 2 inches and smaller in the turbine lube oil system will be of the butt welding type. Steel fittings 2 inches and smaller in all other systems will be of the socket welding type.
- Galvanized Steel Fittings--Galvanized steel fittings will be threaded.
- Butt Welding Fittings--The wall thicknesses of butt welding fittings will be equal to the pipe wall thickness with which they are used. The fittings will be manufactured in accordance with ANSI B16.9, ANSI B16.28, and ASTM A234 or ASTM A403.
- Forged Steel Fittings--Forged steel fittings will be used for socket-weld and steel threaded connections and will conform to ANSI B16.11. The metal thicknesses in the fittings will be adequate to provide actual bursting strengths equal to or greater than those of the pipe with which they are used.
- Cast Steel Flanged Fittings--Cast carbon steel flanged fittings will conform to ANSI B16.5 and will be of materials conforming to ASTM A216 WCB.
- Adapters--Reducing outlet tees should be used in lieu of specially designed adapters for branch piping 2-1/2 inches and larger whenever possible. Specially designed adapters may be used in lieu of reducing outlet tees if standard reducing outlet tees are not available for the run and branch sizes specified. Specially designed adapters must be postweld heat treated as specified in ANSI B31.1.

  Branch connections 2 inches and smaller will be made with special reinforced welding adapters.
- Rubber Lined Pipe Fittings--Flanged cast iron or ductile iron fittings used with rubber lined pipe will be lined with the same materials as the pipe with which they are used.
- Brass and Bronze Fittings--Screwed brass and bronze pipe fittings will conform to ANSI B16.15. Flanged brass and bronze pipe fittings will conform to ANSI B16.24.

- Polypropylene Lined Ductile Iron Fittings--Flanged ductile iron fittings used with polypropylene lined steel pipe will be ductile iron fittings conforming to ANSI A21.10, and will be lined with the same material as the pipe with which they are used.
- Fiberglass Reinforced Plastic Fittings--Fittings for use with fiberglass reinforced plastic pipe will be manufactured from material of the same type as the pipe. Joints will be as required by the application.
- Polyvinyl Chloride Fittings--Polyvinyl chloride pipe fittings will be manufactured from PVC material of the same type as the pipe with which they are used. The fittings will have socket ends with internal shoulders designed for solvent cementing.
- Tubing Fittings--Brass fittings will be used with ASTM B75 copper tubing, and will be of the flareless "bite" type. Braze joint fittings will be used with ASTM B88 Type K copper tubing and will be wrought copper, bronze, or brass, conforming to ANSI B16.22.

  Stainless steel fittings will be used with stainless steel tubing. Fitting material and bursting strength will be equivalent to the tubing with which they are used.

B.3.1.7 Flanges, Gaskets, Bolting, and Unions. Flanged joints will be in accordance with the following requirements:

- Flange Selection--Flanges mating with flanges on piping, valves, and equipment will be of sizes, drillings, and facings which match the connecting flanges of the piping, valves, and equipment.

  Flange class ratings will be adequate to meet the design pressure and temperature values specified for the piping with which they are used.

  Flanges will be constructed of materials equivalent to the pipe with which they are used.
- Steel Flanges--Steel flanges will conform to ANSI B16.5.

  Steel flanges will have raised face flange preparation. Flat face flanges will be used to mate with cast iron, ductile iron, fiberglass reinforced plastic, polyvinyl chloride, or bronze flanges.

  Carbon steel flanges will be of ASTM A105 material. Carbon steel flanges will not be used for temperatures exceeding 750° F.

  Chromium alloy steel and stainless steel flanges will conform to ASTM A182.

- Brass and Bronze Flanges--Brass and bronze screwed companion flanges will be plain faced and will conform to Class 150 or Class 300 classifications of ANSI B16.24. Drilling will be in accordance with ANSI Class 125 or Class 250 standards.

Compressed fiber gaskets will be used with flat face flanges and raised face slip-on flanges. Spiral wound gaskets will be used with raised face flanges, except for raised face slip-on flanges. Gaskets containing asbestos are not acceptable.

Gaskets will be suitable for the design pressures and temperatures:

- Compressed Fiber Gaskets--Compressed fiber gaskets will be in accordance with ANSI B16.21, and materials will be suitable for a maximum working pressure of 600 psi and a maximum working temperature of 750° F. Gaskets will be dimensioned to suit the contact facing. They will be full faced for flat face flanges and will extend to the inside edge of the bolt holes on raised face flanges. Gaskets for plain finished surfaces will be not less than 1/16 inch thick and for serrated surfaces will be not less than 3/32 inch thick.
- Spiral Wound Gaskets--Spiral wound gaskets will be constructed of a continuous stainless steel ribbon wound into a spiral with nonasbestos filler between adjacent coils. The gasket will be inserted into a steel gauge ring whose outside diameter will fit inside the flange bolts properly positioning the gasket. The gauge ring will serve to limit the compression of the gasket to the proper value. Compressed gasket thickness will be 0.130 inch $\pm$0.005 inch.
- Rubber Gaskets--Rubber gasket materials will be cloth inserted sheet rubber and will conform to ANSI B16.21. They will be full face and 1/16 inch thick.

Flange bolting will conform to the following requirements:

- Alloy steel bolting will be used for joining all steel flanges, except steel slip-on flanges, with Class 150 or greater ratings, and will conform to the following:
  - -- Bolting will conform to the requirements of ANSI B16.5.
  - -- Bolting will consist of threaded studs and two nuts for each stud.

- -- Material for studs will be ASTM A193 Grade B16 for piping design temperatures 750° F and above, and Grade B7 for piping design temperatures less than 750° F.
  - -- Material for nuts will be ASTM A194 Grade 3 for piping design temperatures 750° F and above, and Grade 2H for piping design temperatures less than 750° F.
- Carbon steel bolting will be used for joining all other flanges, including steel slip-on flanges, and will conform to the following:
  - -- Bolting will conform to the requirements of ANSI B16.1 and ANSI B16.24.
  - -- Bolting for bolt sizes 1-1/2 inches and larger will consist of threaded studs and two nuts. Bolting for bolt sizes less than 1-1/2 inches may be threaded studs and nuts or bolts and nuts.
  - -- Bolts and nuts will be heavy hexagonal head conforming to ANSI B18.2.
  - -- Materials will be ASTM A307 Grade B.
- Buried bolting will be cadmium plated in accordance with ASTM A165 or zinc plated in accordance with ASTM A153.

Piping unions will be of the ground joint type constructed of materials equivalent in alloy composition and strength to other fittings in the piping systems in which they are installed. Union class ratings and end connections will be the same as the fittings in the piping systems in which they are installed.

Steel unions will have hardened stainless steel seating surfaces on both faces.

B.3.1.8 Cathodic Protection. Where required, underground piping will be electrically isolated from aboveground piping and other steel components to allow the underground piping to be cathodically protected. Isolation will be achieved by installation of isolation flanges with insulating gaskets, tubes, and washers.

B.3.1.9 Piping Fabrication. Piping fabrication will generally be in accordance with the requirements stated herein.

B.3.1.9.1 Fittings. Fittings such as tees, crosses, elbows, caps, and reducers will be used for all changes in direction, intersections, size changes, and end closures of piping, unless the use of fittings is impractical.

Couplings will be used for joining straight lengths of 2 inch and smaller piping.

Branch welds and mitered fittings will not be used except where specifically required. The radius of mitered fittings will be equal to the diameter of the pipe, and mitered segment angles will not exceed 15 degrees for aboveground piping and 22-1/2 degrees for belowground piping.

Welding adapters, drilled and welded pads, and branch weld connections will be reinforced to meet the requirements of Paragraph 104.3 of ANSI B31.1. Safety valve nozzles will be additionally reinforced as required to resist thrust due to valve operation.

B.3.1.9.2 Welder qualification and welding procedures. Welding procedures, welders, and welding operators will be qualified in accordance with ANSI/ASME Section IX code requirements.

B.3.1.9.3 Welding methods. Welding will be performed using an electric arc welding process. Only the following welding processes will be permitted, subject to proper code qualification:

- Shielded metal arc.
- Gas tungsten arc.
- Flux cored arc (except self-shielded electrodes).
- Gas metal arc (except short-circuiting transfer mode).
- Submerged arc.

Field welds in piping systems so specified in the System Field Welding and End Preparation List, Table 3.1-1, will be made using the gas tungsten arc process for the first welding pass. The remaining weld passes will be made using one of the processes listed above.

All gas tungsten arc welds will be made with the addition of filler metal.

Backing rings will not be used for shop or field welds except where specifically permitted by the System Field Welding and End Preparation List.

B.3.1.9.4 Butt weld end preparation and piping fit-up. Preparation of weld ends and fit-up will be in accordance with the applicable codes, the requirements stated below, the System Field Welding and End Preparation List (Table 3.1-1), and the Field Butt Weld End Preparation details (Figures 3.1-1 through 3.1-3).

The butt weld end preparation of the base metals for shop welded joints will be prepared as required by the welding procedure used.

The butt weld end preparation of the base metals for all field weld joints in shop fabricated piping will be prepared in the fabricator's shop in accordance with the System Field Welding and End Preparation List and the referenced Field Butt Weld End Preparation detail drawings.

Table 3.1-1
System Field Welding and End Preparation List[1]

System File	System Name	GTAW First Pass Weld Required	Permissible to Use Backing Rings
__.0601	Auxiliary Steam Supply	No	No
__.1801	Compressed Air	No	No
__.2601	Condensing	No	No
__.2602	Condenser Air Extraction	No	No
__.2603	Circulating Water		
	26 inch and larger	No	No
	24 inch and smaller	No	No
__.3201	Auxiliary Cooling Water		
	26 inch and larger	No	No
	24 inch and smaller	No	No
__.3202	Closed Cycle Cooling Water	No	No
__.3401	Boiler Feed	Yes	No
__.3403	Condensate[2]	No	No
__.3406	Cycle Makeup and Storage[2]	No	No
__.3601	Site Fire Protection	No	No
__.3801	Fuel Gas Supply	Yes	No
__.5801	Heat Recovery Steam Generator	Yes	No
__.5806	Boiler Vents and Drains	Yes	No
__.5807	HP, LP, and Extraction Steam	Yes	No
__.6201	Steam Turbine	Yes	No
__.6203	Steam Turbine Seals and Drains	No	No
__.6204	Steam Turbine Lube Oil	Yes	No
__.6208	Combustion Turbine Drains	No	No

Table 3.1-1 (Continued)
System Field Welding and End Preparation List[1]

System File	System Name	GTAW First Pass Weld Required	Permissible to Use Backing Rings
__.6210	Combustion Turbine Off-Base Auxiliaries	No	No
__.6211	Chilled Water	No	No
__.6603	Service Water	No	No

Notes:

[1]Field welding list applicable only to seamless steel and electric fusion welded pipe and fittings.

[2]Field welding method for first pass on carbon steel piping may be either GTAW or SMAW using E6010/E7010 electrodes with open butt root pass.

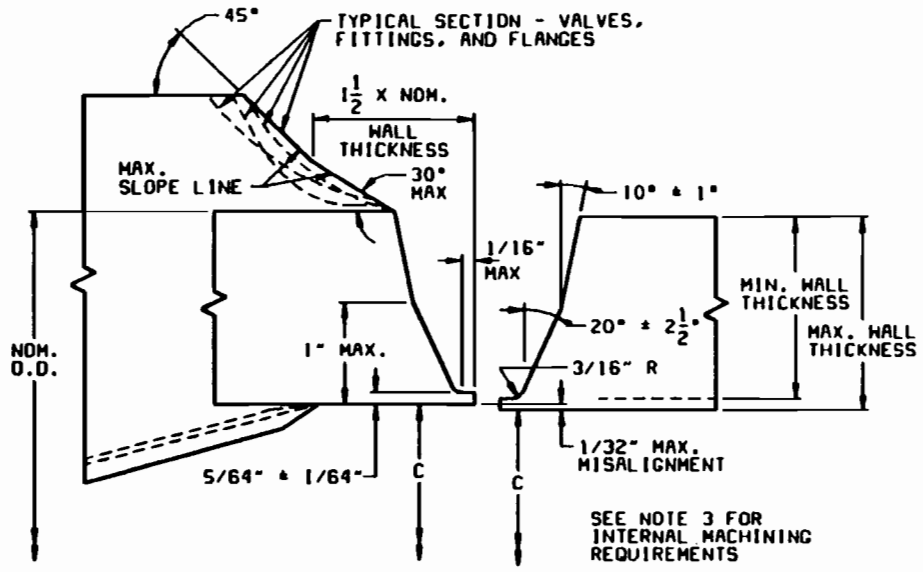

"J" BEVEL - NOMINAL WALL THICKNESS GREATER THAN 3/8"

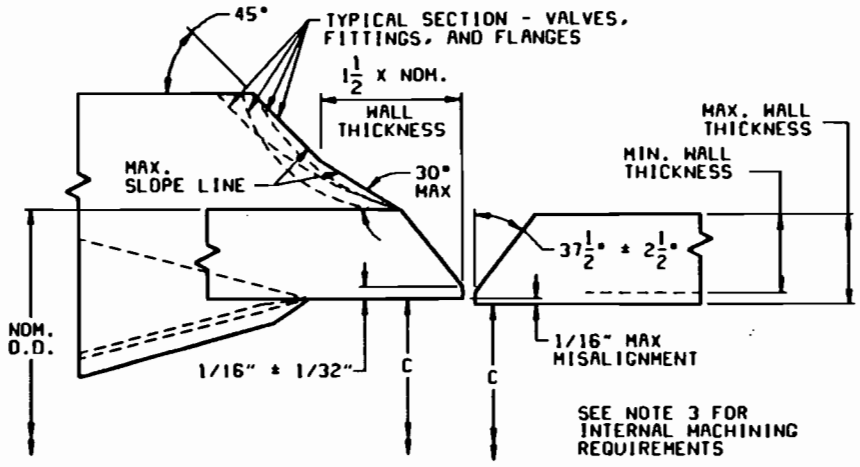

"V" BEVEL - NOMINAL WALL THICKNESS GREATER THAN 1/8" TO 3/8" INCLUSIVE

NOTE:

1. ALL FIELD WELDS FOR PIPING, VALVES, FITTINGS, ETC. MUST HAVE WELD-ENDS MACHINED TO MEET THE REQUIREMENTS DESCRIBED BY THIS DETAIL. THE EXCEPTION IS PIPE TO PIPE FIELD WELDS WHEN BOTH WELD-ENDS ARE PREPARED BY THE SAME FABRICATOR. SUCH WELD-ENDS MUST MEET ALL CONDITIONS DESCRIBED EXCEPT ADHERENCE TO I.D. REQUIREMENT IS NOT REQUIRED IF 1/16" MAXIMUM I.D. DIFFERENCE IN WELD-ENDS IS MAINTAINED.
2. IF METAL MUST BE REMOVED TO MEET I.D. REQUIREMENT THE PIPE WALL THICKNESS MUST BE CHECKED TO ASSURE NO ENCROACHMENT ON MINIMUM WALL.
3. IF INTERNAL MACHINING IS REQUIRED TO MEET I.D. REQUIREMENTS TABULATED ON STANDARD DETAIL DRAWING DM-0103, THE DEPTH AND CONTOURS ASSOCIATED WITH SUCH MACHINING MUST MEET THE REQUIREMENTS OF PFI ES-21 FOR THE "J" BEVEL JOINT AND ANSI B16.25 FOR THE "V" BEVEL JOINT.

NO	DATE	REVISIONS AND RECORD OF ISSUE	BY	CHK	APP	FLM
0	04-22-83	INITIAL ISSUE	AGG	MKK	LET	

BLACK & VEATCH ENGINEERS-ARCHITECTS

ENGINEER	DRAWN
LET	AGG
CHECKED	DATE
MKK	04-22-83

FIELD BUTT WELD END PREPARATION SCHEDULE WALL THICKNESS

PROJECT 81113 DRAWING NUMBER DM-0102 REV 0

CODE

AREA

Figure B 3.1-1

11523GUTHRIE ACAD 10 c7
A01SL003 81 1=1
11/29/90 10:52:08

PIPE SIZE	SCH	COUNTERBORE DIAMETER "C"	
		MINIMUM	MAXIMUM
2 1/2	40	2.439	2.489
	80	2.311	2.361
	160	2.138	2.188
	XXS	1.828	1.878
3	40	3.041	3.091
	80	2.894	2.944
	160	2.653	2.703
	XXS	2.369	2.419
4	40	4.004	4.054
	80	3.829	3.879
	120	3.653	3.703
	160	3.490	3.540
	XXS	3.240	3.290
5	40	5.031	5.081
	80	4.826	4.876
	120	4.607	4.657
	160	4.388	4.438
	XXS	4.170	4.220
6	40	6.054	6.104
	80	5.788	5.838
	120	5.561	5.611
	160	5.286	5.336
	XXS	5.032	5.082
8	20	8.107	8.157
	30	8.059	8.109
	40	7.981	8.031
	60	7.834	7.884
	80	7.669	7.719
	100	7.505	7.555
	120	7.286	7.336
	140	7.123	7.173
	XXS	7.013	7.063
	160	6.959	7.009

PIPE SIZE	SCH	COUNTERBORE DIAMETER "C"	
		MINIMUM	MAXIMUM
10	20	10.232	10.282
	30	10.132	10.182
	40	10.030	10.080
	60	9.794	9.844
	80	9.630	9.680
	100	9.411	9.461
	120	9.192	9.242
	140	8.919	8.969
	160	8.700	8.750
12	20	12.232	12.282
	30	12.092	12.142
	STD	12.013	12.063
	40	11.959	12.009
	XS	11.794	11.844
	60	11.686	11.736
	80	11.465	11.515
	100	11.192	11.242
	120	10.919	10.969
	140	10.700	10.750
	160	10.373	10.423
14	10	13.482	13.532
	20	13.373	13.423
	30	13.263	13.313
	40	13.153	13.203
	XS	13.044	13.094
	60	12.880	12.930
	80	12.607	12.657
	100	12.278	12.328
	120	12.005	12.055
	140	11.732	11.782
	160	11.459	11.509

PIPE SIZE	SCH	COUNTERBORE DIAMETER "C"	
		MINIMUM	MAXIMUM
16	10	15.482	15.532
	20	15.373	15.423
	30	15.263	15.313
	40	15.044	15.094
	60	14.771	14.821
	80	14.442	14.492
	100	14.115	14.165
	120	13.786	13.836
	140	13.403	13.453
	160	13.130	13.180
18	10	17.482	17.532
	20	17.373	17.423
	STD	17.263	17.313
	30	17.153	17.203
	XS	17.044	17.094
	40	16.936	16.986
	60	16.607	16.657
	80	16.278	16.328
	100	15.896	15.946
	120	15.513	15.563
	140	15.186	15.236
	160	14.802	14.852
20	10	19.482	19.532
	20	19.263	19.313
	30	19.044	19.094
	40	18.880	18.930
	60	18.498	18.548
	80	18.115	18.165
	100	17.677	17.727
	120	17.294	17.344
	140	16.857	16.907
	160	16.473	16.523

PIPE SIZE	SCH	COUNTERBORE DIAMETER "C"	
		MINIMUM	MAXIMUM
22	10	21.482	21.532
	20	21.263	21.313
	30	21.044	21.094
	60	20.388	20.438
	80	19.950	20.000
	100	19.513	19.563
	120	19.075	19.125
	140	18.638	18.688
	160	18.200	18.250
24	10	23.482	23.532
	20	23.263	23.313
	XS	23.044	23.094
	30	22.936	22.986
	40	22.715	22.765
	60	22.223	22.273
	80	21.786	21.836
	100	21.240	21.290
	120	20.748	20.798
	140	20.311	30.361
	160	19.817	19.867
26	10	25.373	25.423
	STD	25.263	25.313
	20	25.044	25.094
28	10	27.373	27.423
	STD	27.263	27.313
	20	27.044	27.094
	30	26.825	26.875
30	10	29.373	29.423
	STD	29.263	29.313
	20	29.044	29.094
	30	28.825	28.875

PIPE SIZE	SCH	COUNTERBORE DIAMETER "C"	
		MINIMUM	MAXIMUM
32	10	31.373	31.423
	STD	31.263	31.313
	20	31.044	31.094
	30	30.825	30.875
	40	30.715	30.765
34	10	33.373	33.423
	STD	33.263	33.313
	20	33.044	33.094
	30	32.825	32.875
	40	32.715	32.765
36	10	35.373	35.423
	STD	35.263	35.313
	20	35.044	35.094
	30	34.825	34.875
	40	34.607	34.657
38	STD	37.263	37.313
	XS	37.044	37.094
40	STD	39.263	39.313
	XS	39.044	39.094
42	STD	41.263	41.313
	XS	41.044	41.094
44	STD	43.263	43.313
	XS	43.044	43.094
46	STD	45.263	45.313
	XS	45.044	45.094
48	STD	47.263	47.313
	XS	47.044	47.094

NO	DATE	REVISIONS AND RECORD OF ISSUE	BY	CHK	APP	FLM
0	04-22-83	INITIAL ISSUE	ACC	MKK	LET	

BLACK & VEATCH
ENGINEERS-ARCHITECTS

ENGINEER LET | DRAWN ACC
CHECKED MKK | DATE 04-22-83

FIELD BUTT WELD END PREPARATION
SCHEDULE WALL COUNTERBORE DIAMETERS

PROJECT 81113-DM-0103 | DRAWING NUMBER | REV 0

CODE

AREA

Figure B 3.1-2

11523GUTHRIE ACAD 10 c7
A01SL003 81 1=1
11/29/90 10:47:35

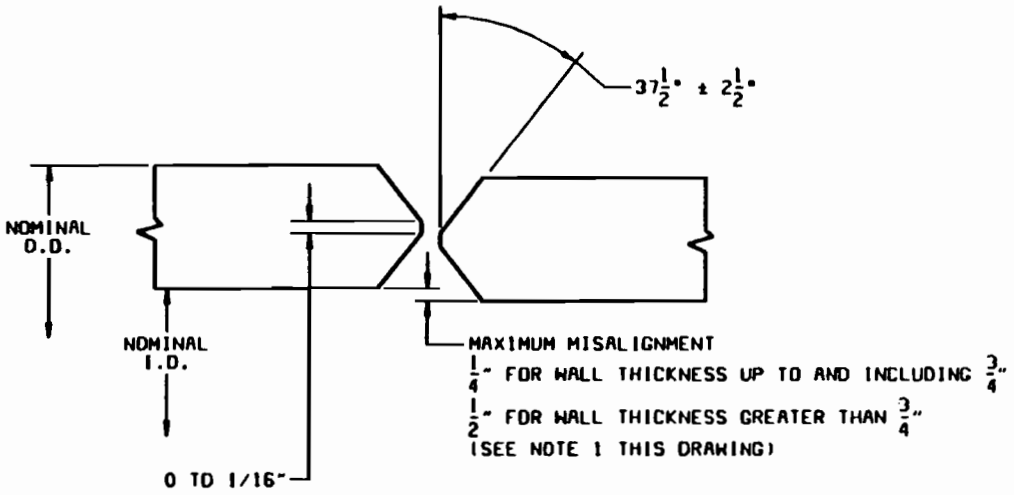

WALL THICKNESS GREATER THAN 3/8"

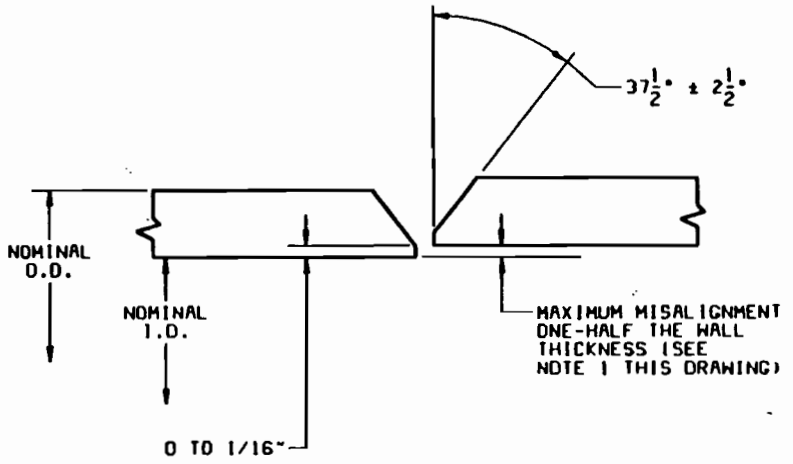

WALL THICKNESS 1/8" TO 3/8" INCLUSIVE

NOTE:

1. MINIMUM WELD THROAT THICKNESS SHALL EQUAL BASE MATERIAL THICKNESS.
2. IF MISALIGNMENT OCCURS, THE WELD METAL FACE SHALL BE SLOPED (3:1) AS A GRADUAL TRANSITION.

NO	DATE	REVISIONS AND RECORD OF ISSUE	BY	CHK	APP	FLM
0	04-22-83	INITIAL ISSUE	AGG	MKK	LET	

BLACK & VEATCH
ENGINEERS-ARCHITECTS

ENGINEER LET | DRAWN AGG
CHECKED MKK | DATE 04-22-83

FIELD BUTT WELD END PREPARATION
LOW PRESSURE PIPING-26" O.D. & LARGER

PROJECT DRAWING NUMBER: B1113-DM-0104
REV: 0
CODE
AREA

Figure B 3.1-3

10204SEGDRM ACAD 10
A01SL003 B1 J=1
03/20/89 14:45:22

Terminals of equipment, valves, and piping accessories will be prepared for welding in accordance with the System Field Welding and End Preparation List and the Field Butt Weld End Preparation detail drawings. The weld end preparation used for the mating end will be designed for compatibility with those end preparations.

Piping which is being furnished "long" will be field cut to fit and prepared for welding. The end preparation will be compatible with the mating end. Butt welding ends of field modified pipe will be prepared in accordance with the Field Butt Weld End Preparation details.

Mating end joints between shop fabricated sections will be prepared in the shop for field welding in accordance with the System Field Welding and End Preparation List and the Field Butt Weld End Preparation details.

Radial misalignment of inside surfaces of field welded joints will not exceed the value indicated on the applicable butt weld end preparation detail.

Control of inside diameters of weld ends will be by means of selection of piping components, addition of weld metal and machining, or machining as required. Machining will be in accordance with the Field Butt Weld End Preparation details.

B.3.1.9.5 Welding filler metal. When low-hydrogen type electrodes are used in welding procedures, the method used for storing, handling, baking, drying, and reconditioning will be explained in welding procedures or in a separate electrode control procedure.

Submerged arc multipass welds in carbon steels and all welds in alloy steels and corrosion-resistant steels will use essentially a neutral flux.

Electrodes E6012, E6013, and E7014 will not be used for strength welds in piping systems.

The maximum diameter electrode used for shielded metal arc welding of austenitic stainless steels will be 5/32 inch.

The maximum diameter filler rod used for gas tungsten arc welding of austenitic stainless steel will be 1/8 inch.

B.3.1.9.6 Weld reinforcement limits. The interior and exterior surfaces of double welded butt joints and the exterior surfaces of single welded butt joints will be sufficiently free from coarse ripples, grooves, abrupt ridges, and valleys to be within the maximum reinforcement limits permitted by ANSI B31.1.

The interior reinforcement of single welded butt joints will not exceed the limits stated below. The reinforcement will be determined from the higher of the abutting surfaces involved:

Material Nominal Thickness inch	Maximum Internal Reinforcement Thickness inch
Up to 3/16, inclusive	3/32
Over 3/16 to 1/2, inclusive	1/8
Over 1/2	5/32

The internal reinforcement of welds not accessible for visual examination may be evaluated by suitable nondestructive examination methods. All defective welds will be repaired, regardless of the examination method by which they are discovered.

Welding concavity, grinding, "suck-back," or other conditions will not result in a weld thickness less than the minimum wall thickness of the base metal.

Arc strikes in P Number 5 Group 2 material will be confined to the area to be covered by the weld. Arc strikes outside the weld area will be removed by grinding to a smooth contour. The ground area will be visually examined for cracks, porosity, and blemishes. Any defects in the ground areas will be removed and/or repaired. Ground areas may be left unrepaired if minimum base metal thickness requirements have not been violated.

B.3.1.9.7 Backing rings. Backing rings will not be used.

B.3.1.9.8 Welding preheat and interpass temperature. Preheat and interpass temperatures will be maintained in accordance with the requirements of the applicable code. Electric or gas heat sources which provide a uniform application of heat over the weld area will be used.

The maximum preheat and interpass temperatures for austenitic stainless steels will be 350° F.

B.3.1.9.9 Postweld heat treatment. Stress relief of all welds will be performed in accordance with the requirements of the applicable code. All welding zones, bends, and hot formed sections will be fully stress relieved as required by the code.

No stress relieving for seal welds will be required.

B.3.1.9.10 Piping attachments. All lugs, ears, and other attachments for support of piping will be welded to the piping. Attachments for piping systems which must be stress relieved will be welded to the pipe prior to final stress relieving. Attachments on shop fabricated piping which must be stress relieved will be shop welded to the piping.

All attachments will be of the same material as the piping on which they are installed.

B.3.1.9.11 Flow nozzles and orifices. Weld-in type flow nozzles will be installed, and the inside of the pipe bored, in complete conformance with details and recommendations of the flow nozzle manufacturer.

Flanges for orifices will be of the orifice flange type.

B.3.1.9.12 Brazed joints. Brazing will be accomplished in accordance with the requirements specified in ANSI B31.1.

Brazing filler metals shall meet the requirements of the applicable ASME Section II, Part C Filler Metal Specification.

B.3.1.9.13 Fiberglass reinforced plastic pipe joints. Joints in fiberglass reinforced plastic piping will be as required by the application.

B.3.1.9.14 PVC pipe joints. Joints in polyvinyl chloride (PVC) piping will be of the solvent cemented type and will be carefully made using methods recommended by the pipe manufacturer. All joints will be seal welded after solvent cementing by using PVC filler rod and hot air welding equipment designed for this purpose.

B.3.1.9.15 Inspection and testing. Inspection and testing of piping will be performed in accordance with the requirements of the applicable code and in accordance with the following criteria.

Nondestructive testing of piping will be performed as discussed herein. Nondestructive testing will generally include visual, radiographic, magnetic particle and liquid penetrant, and ultrasonic examinations:

- Visual examination of welds will be performed by personnel qualified and certified in accordance with AWS QCl, Standard for Qualification and Certification of Welding Inspectors.
- Radiographic examination will be performed on welds requiring examination under the code, on circumferential butt welds 6 inches and larger, and on special fitting welds, in high-pressure main steam, and gas piping.
- Magnetic particle and liquid penetrant examination will be performed as required by the applicable code.
- Ultrasonic tests will be performed as required by the applicable code.

B.3.1.9.16 Cleaning and painting. The exterior and interior surfaces of all piping will be thoroughly cleaned of all sand, mill scale, greases, oils, dirt, and other foreign materials.

The interior surfaces of piping which will be exposed to steam or feedwater (including all main cycle water systems) will be shotblast cleaned by thorough blast cleaning using a nonsiliceous blasting material. The use of a silicon containing material on these surfaces will not be permitted. After cleaning, the interior surfaces of all piping will be thoroughly blown dry and protected with a completely water soluble preservative coating.

The interior surfaces of piping other than shotblast cleaned piping will be cleaned with rotary tools or by wire brushing as described in the PFI Standard ES-5, Articles 4.2.1 and 4.2.2.

The external surface of shop fabricated piping will be given one spray applied coat of red alkyd primer applied to a minimum dry film thickness of 2 mils. Primers will be capable of withstanding a constant temperature of 200° F, minimum.

Flange faces will not be painted but will be given an application of an easily removable rust-preventive compound.

All machined surfaces will be coated with rust-preventive paint. The paint will be consumable in the welding process.

B.3.1.10 Pipe Supports and Hangers. The term "pipe supports" includes all assemblies such as hangers, floorstands, anchors, guides, brackets, sway braces, vibration dampeners, positioners, and any supplementary steel required to attach pipe supports.

All support materials, design, and construction will be in accordance with the latest applicable provisions of the Power Piping Code, ANSI B31.1.

B.3.2 Valves

Valve pressure classes, sizes, types, body materials, and end preparations will generally be as described herein. Special features and special application valves will be utilized where required.

Valves specified to have flanged, socket-welded, or screwed connections will have ends prepared in accordance with the applicable ANSI standards. Steel flanges will be raised face type unless otherwise required. Cast iron and bronze flanges will be flat faced type. Butt welding ends will be prepared in accordance with B.3.1 Butt Weld End Preparation and Piping Fit-Up.

B.3.2.1 General Valve Requirements. All valves shall be suitable for operation in the entire pressure/temperature class rating range.

Except for valves furnished as part of vendor supplied equipment packages which shall be of similar quality, valves of the same type, rating, and material shall be from the same manufacturer unless special service dictates otherwise.

Except for control valves, valve's body shall be no more than two nominal sizes smaller than the line in which the valve is installed.

Except for control valves, the fluid velocities through the body of the valve shall be limited to 40 fps for liquid and 0.3 mach for vapor or gas. The trim sizes may be reduced to trim factor of 0.4 minimum when pipe size or velocities are limiting.

The globe and angle type valves shall have cage, top and bottom, or top guiding (no skirt guiding). Bonnets shall be flanged or of integral construction. The packing gland shall be the bolted type.

Seals and packing shall be replaceable without valve disassembly. Packing glands shall be the bolted type, remote from the actuator linkage, to minimize lubrication and service.

B.3.2.2 Steel Body Valves. Steel body gate, globe, angle, and check valves will be designed and constructed in accordance with ANSI B16.34 as applicable.

Steel body valves 2 inches and smaller will have forged steel bodies. Forged steel valves complying with the standards and specifications listed in Table 126.1 of ANSI B31.1 will be used within the manufacturer's specified pressure temperature ratings. The use of Class 1500 forged steel valves will be limited in accordance with the pressure temperature ratings specified in ANSI B16.34, and the criteria established in MSS SP-84.

Forged steel valves will be constructed as follows:

- Forged steel valves will have bolted bonnet joints and will be of integral construction. Gate, globe, and angle valves will have outside screw and yoke construction.
- All valves, except gate valves, will have seats of the integral type. Gate valves will have renewable seats.
- Valve ends will be socket-weld type unless otherwise required.
- Except as otherwise required, check valves will be of the guided piston or swing disk type. All check valves will be designed for installation in either horizontal piping or vertical piping with upward flow.

Steel body valves 2-1/2 inches and larger will have cast steel bodies. The face-to-face and end-to-end dimensions will conform to ANSI B16.10. The use of these

valves will be in accordance with the pressure temperature ratings specified in ANSI B16.34 as applicable.

Valves 2-1/2 inches and larger will be constructed as follows:

- Bonnet joints will be of the bolted or integral type.
- Body ends will be butt weld type unless otherwise required.
- Gate, globe, and angle valves will be of outside screw and yoke construction.

Check valves will be of the guided piston, swing disk, or double-disk spring check type. All check valves will be designed for installation in either horizontal or vertical piping with upward flow. Stop check valves, where specified, will be Y-pattern globe type.

B.3.2.3 Iron Body Valves. Iron body gate, globe, and check valves will be in accordance with ANSI B16.10. These valves will have flanged bonnet joints. Gate and globe valves will be of the outside screw and yoke construction.

Cast iron valve bodies will be used only for underground, cold water service such as fire protection, or for lined diaphragm valves.

B.3.2.4 Butterfly Valves. Rubber-seated butterfly valves will be generally constructed in accordance with AWWA C504 Standard for Rubber-Seated Butterfly Valves. The valves will also generally conform to the requirements of MSS Standard Practice SP-67, Butterfly Valves. Valves of the wafer or lugwafer type will be designed for installation between two ANSI flanges. Valves with flanged ends will be faced and drilled in accordance with ANSI B16.1.

The maximum allowable seat leakage for butterfly valves will be as follows:

- Class 6 Metal to Metal Seats CV--1.0 percent of the maximum
- Class 7 Elastomer Lined Body or Disk Seats--10 air bubbles per minute per inch port diameter.

The valve body will be flanged, wafer, or wafer lug type.

The valve shaft will be a one-piece unit extending through the valve disk, or a two-piece shaft extending into the valve disk at least 1-1/2 shaft diameters. Shaft and disk will be pinned with taper or dowel pins, spliced, or locked together with lugs (no press fits).

Contour disks for 90 degree operation will be provided where possible. Support bearings will be as close to the disk as seals will permit.

All soft seat or piston ring design valves will be equipped with adjustable mechanical stop-limiting devices to prevent overtravel of the disk in the closed position. Each valve will be provided with an external disk position indicator.

B.3.2.5 Bronze Body Valves. Bronze body valves will be in accordance with the pressure temperature ratings specified by the manufacturer and in accordance with the criteria established in MSS SP-80.

B.3.2.6 Plug Valves. Plug valves will be of the eccentric, lubricated, or teflon sleeve plug type, as required by the service. Plug valve bodies will conform to the requirements of ANSI for dimensions, material thicknesses, and material specifications. Bonnets will be of the bolted flange type. Body ends will be flanged, faced, and drilled for installation between ANSI flanges. The use of these valves will be in accordance with the pressure temperature ratings specified by the manufacturer.

B.3.2.7 Ball Valves. Ball valve bodies 2 inches and smaller will have threaded end connections. Ball valves 2-1/2 inches and larger will have flanged ends. The valves will not require lubrication. The use of these valves will be in accordance with the pressure temperature ratings specified by the manufacturer.

B.3.2.8 Diaphragm Valves. Diaphragm valves will be straightaway or weir bodies with flanged ends faced and drilled for installation between ANSI flanges. The use of these valves will be in accordance with the pressure temperature ratings specified by the manufacturer.

B.3.2.9 Polyvinyl Chloride (PVC) and Chlorinated Polyvinyl Chloride (CPVC) Valves. The use of PVC or CPVC valves will be in accordance with the pressure temperature ratings specified by the manufacturer.

B.3.2.10 Control Valves. The maximum allowable seat leakage rates for control valves will be as follows:

- Class 1 Double-Ported or Balanced Single-Ported Valves--0.5 percent of the rated CV.
- Class 2 Single-Ported Valves--0.01 percent of the rated CV.
- Class 3 Single-Ported Valves with Soft Seats--0.05 cc per minute of air per inch of port diameter per psi differential.
- Class 4 Single-Ported or Internal Pilot Balanced Valves with Hard Seats--0.0005 cc per minute of water per inch of port diameter per psi differential.

B.3.2.11 Valve Materials. Valve bodies will generally be constructed of materials equivalent to the pipe with which they are used. Valve body and trim materials of construction will be in accordance with applicable ASTM and AISI standards.

The main cycle system valves will be free of copper materials to allow the cycle to be treated at the optimum pH for corrosion protection of carbon steel components.

Valve body materials will generally be as follows:

Material Name	Description	
Cast Iron	ASTM A126 Class B	
Bronze	ASTM B61 or ASTM B62	
	Forged	Cast
Carbon Steel	ASTM A105	ASTM A216 Grade WCB
1-1/4 or 2-1/4 Percent Chromium Alloy Steel	ASTM A182 Grade F22	ASTM A217 Grade WC6
5 Percent Chromium Alloy Steel	ASTM A182 Grade F5	ASTM A217 Grade C5
Stainless Steel	ASTM A182 Grade F316	ASTM A351 Grade CF8M

The trim materials will be stainless steel, as a minimum, with hardened 400 Series SS or Stellite hard surfaced trim where pressure drops exceed 100 psi or wear is expected from erosion.

Valve body and disk materials will have similar thermal expansion characteristics. Where severe service conditions require hard surfacing body or disk, hardened 400 Series stainless steel or Stellite facing will be applied. Otherwise, valve and trim materials will be manufacturer's standard.

Stellited seats will be provided on all valves used in steam and condensate systems.

Rotary valves will have disks similar to body materials but will have alloy steel shafts for corrosion and shear resistance.

All austenitic stainless steel will be furnished in a solution-annealed, unsensitized condition.

All unstabilized austenitic stainless steel castings will contain at least 5 percent ferrite.

Stainless or alloy steel valves will have alloy steel nuts and studs compatible with the service conditions.

Any soft elastomer seat used on process fluids will be EPT, DuPont, Nordel, or approved equal.

B.3.2.12 Valve Operators. Valves will be provided with manual or automatic operators as required for the service application. Valves that may require frequent

manipulation during startup or load changing shall be provided with automatic operators to enable remote operation. Automatic operators will be motor, piston, or diaphragm type.

Manual operators will be lever, handwheel, or gear type, with the use of lever operators to be limited to valves requiring a maximum of 90 degree stem rotation from full open to full closed position. All operators will be sized to operate the valve with the valve exposed to maximum differential pressure.

Handwheels will be provided on all power operated valves in services that require shutoff for operational or safety considerations. Motor operators will be Limitorque.

B.3.2.13 Valve Special Features. Valves will be provided with locking devices, handwheel extensions, vacuum service packings, limit switches, and other special features as required.

All valve bonnets for valves potentially exposed to high temperatures (over 150° F) will be provided with internal drains. The drains will prevent the bonnets from being exposed to excessive pressure when the bonnet is full of water and the valve is exposed to elevated temperatures.

Valves will not be equipped with bypasses unless specifically required.

The steam stop valve shall be provided with an automatic warm-up globe bypass valve.

All safety valves shall be flanged and insulated.

The blowdown control valve shall be a Hancock "Angle Hi-Press Drop" Figure 7105W or 7205W or equal.

B.3.3 Insulation and Lagging

The insulation and lagging to be applied to piping, equipment, and ductwork for the purposes of reducing heat loss and personnel protection will be in accordance with the following criteria.

B.3.3.1 Insulation Materials and Installation. Insulation materials will be inhibited and of a low halogen content so that the insulation meets the requirements of MIL-I-24244 Amendment 3 regarding stress-corrosion cracking of austenitic stainless steel. Insulation materials will contain no asbestos.

All piping operating above 140° F will be insulated with calcium silicate molded insulation in accordance with ASTM C533 or mineral fiber preformed pipe insulation in accordance with ASTM C547.

Equipment and ductwork operating at elevated temperatures will be insulated with calcium silicate block, mineral fiber block, or mineral fiber blanket insulation.

Mineral fiber block insulation for use on equipment surfaces will be in accordance with ASTM C612, Class 3.

Mineral fiber blanket insulation will be in accordance with ASTM C592.

Insulating cements will be mineral fiber thermal insulating cements and will conform with ASTM C195.

Piping and small diameter cylindrical equipment insulation will be hollow cylindrical shapes split in half lengthwise, or curved segments. Large diameter cylindrical equipment and other items of equipment will be insulated with block or scored block insulation as required to obtain a close fit to the contour. Pipe fittings and accessories will be insulated using either molded insulation or by insulation fabricated from straight pipe insulation segments.

To the extent possible, insulation for valves, fittings, and other irregular surfaces will be fabricated and installed in accordance with the dimensional recommendations of ASTM C450.

Finished insulation will be free of dents, gaps, hollows, or other anomalies which affect thermal performance or otherwise exhibit poor workmanship.

Flanged connections including valves and manholes will be left uninsulated until they are pressure tested. Equipment welds and pipe welds, with the exception of longitudinal pipe welds, will be left uninsulated until they are hydrostatically tested and inspected as required.

On equipment and piping with operating temperature greater than 500° F, all supports or attachments which project through the insulation will be insulated for a distance equal to four times the insulation thickness or a minimum of 12 inches where possible.

Hot piping and equipment which are not normally in operation or do not require heat conservation and have an operating temperature greater than 140° F, will be designated for personnel protection insulation and will have minimally 1 inch of insulation.

B.3.3.2 Lagging Materials and Installation. All insulated surfaces of equipment, ductwork, piping, and valves will be lagged with sheet stainless steel jacketing. The jacketing for equipment will be a minimum of 0.020 inch and for piping will be 0.016 inch thick. The jacketing covers for removable insulations will be a minimum of 0.032 inch thick.

Outdoor lagging will be installed to secure a weatherproof installation. Lagging will be carefully fabricated and fitted to ensure a neat appearance. Open ends of all fluted sections will be provided with tightfitting closure pieces.

All lagging on curved surfaces will be machine rolled and formed to fit the insulation curvatures.

Removable insulated covers will be provided over all equipment manholes, nameplates, and code stampings. Access doors through lagging will be provided as required.

All lagging will be secured in place using stainless steel panhead self-tapping screws, fitted with neoprene washers.

B.3.3.3 Insulation Supports for Piping. Vertical runs of piping which will be insulated will utilize support lugs and collars to prevent slippage of the insulation.

B.3.3.4 Insulation Classes for Piping and Equipment. Piping and equipment insulation classes and corresponding thicknesses are shown in Table 3.3-1. The insulation classes for piping systems will be designated by letters, which will be indicated in the pipeline listing.

The insulation for piping accessories will be of the same class as is indicated for the piping. Insulation materials for miscellaneous piping and equipment will be suitable for the actual operating temperatures and will, whenever possible, be of the same insulation class as insulated main piping and equipment operating under similar temperatures.

B.3.3.5 Freeze Protection. Freeze protection will be provided for all outdoor piping smaller than 2 inch nominal diameter, tubing, gauges, and instrumentation containing fluids subject to freezing using insulated heating cable. Space heaters or heated enclosures will be used for items where heating cable and insulation is not practical. The heating cable circuits will be supplied from distribution panels similar to those used for the lighting circuits and will be controlled by thermostats.

B.3.3.6 HRSG Casing Insulation and Lagging. The transition ducts, HRSG, and exhaust stack will be completely insulated so that the surface temperature of the external casing at any point, with no wind or sunshine, and with an ambient temperature of 95° F, does not exceed 140° F.

Internal insulation will have a Type 409 stainless steel or approved equal cladding of not less than 0.062 inch. The cladding will be attached to the external casing in a manner which allows independent expansion and contraction. Cladding will sufficiently overlap to prevent exposure of the insulation to exhaust gases.

Table 3.3-1
Insulation Classes

Insulation Class	Operating Temperature	Pipe Size	Insulation Thickness					
			Not Freezeproofed			Freezeproofed		
			Inner Layer	Outer Layer	Total	Inner Layer	Outer Layer	Total
A	1,005° F to 801° F	1-1/2" & smaller	2-1/2"	--	2-1/2"	2-1/2"	1-1/2"	4"
		2" - 4"	2"	1-1/2"	3-1/2"	2-1/2"	1-1/2"	4"
		5" - 8"	2-1/2"	2"	4-1/2"	3-1/2"	1-1/2"	5"
		10" & larger	3"	2-1/2"	5-1/2"	4-1/2"	1-1/2"	6"
B	800° F to 501° F	1-1/2" & smaller	2-1/2"	--	2-1/2"	1-1/2"	1-1/2"	3"
		2" - 4"	1-1/2"	1-1/2"	3"	2"	1-1/2"	3-1/2"
		5" - 10"	2"	1-1/2"	3-1/2"	2-1/2"	1-1/2"	4"
		12" & larger	3-1/2"	1-1/2"	5"	4"	1-1/2"	5-1/2"
C	500° F to 301° F	2" & smaller	1-1/2"	--	1-1/2"	1-1/2"	1-1/2"	3"
		2-1/2" & larger	2-1/2"	--	2-1/2"	2"	1-1/2"	3-1/2"
D	300° F to 150° F	10" & smaller	1-1/2"	--	1-1/2"	1-1/2"	--	1-1/2"
		12" & larger	2-1/2"	--	2-1/2"	2-1/2"	--	2-1/2"
E	1,000° F to 501° F	Equipment	3"	2-1/2"	5-1/2"	--	--	--
F	500° F to 201° F	Equipment	2-1/2"	--	2-1/2"	--	--	--
G	200° F to 150° F	Equipment	1-1/2"	--	1-1/2"	--	--	--
H	Antinoise and Antisweat	1-1/2" & smaller	1/2"	--	1/2"	--	--	--
		2" & larger	1"	--	1"	--	--	--
I	Antifreeze 150° F and below	All	--	--	--	1-1/2"	--	1-1/2"

Architectural lagging will be carefully fabricated and fitted to ensure a neat appearance. To prevent damage caused by personnel walking on the lagging, lagging on the top of the steam generator, ductwork, and equipment will be reinforced, except where steel walkways have been provided. Hinged, removable insulated covers will be provided over all manholes, nameplates, and code stampings.

Duct expansion joints will be internal insulated and sealed in a manner to prevent exhaust gas leakage.

B.3.4 Space Conditioning

Space conditioning will consist of redundant heating and cooling systems for the control building and laboratory. The systems will maintain a slightly positive pressure in the areas and maintain the temperature at 72° to 75° F and relative humidity below 55 percent. For other indoor facilities, a ventilating system will maintain the temperature to outdoor ambient plus 10° F. Heating of these areas will maintain a minimum of 55° F. All areas will have separate thermostat to control temperature.

Installations will conform to the Uniform Building Code, Uniform Fire Code, Uniform Mechanical Code, National Fire Protection Association, and ASHRAE Standards. Battery room and toilet/locker room areas will be mechanically exhausted to the outside.

Appendix C
Civil Engineering Design Criteria

Appendix C
Civil Engineering Design Criteria

C.1 Introduction

Control of the design, engineering, procurement, and construction activities on the project will be completed in accordance with various predetermined standard and project specific practices. An orderly sequence of events for the implementation of the project is planned consisting of the following major activities:

- Conceptual design.
- Licensing and permitting.
- Detailed design.
- Procurement.
- Construction and construction management.
- Startup, testing, and checkout.
- Project completion.

The purpose of this appendix is to summarize the codes and standards and standard design criteria and practices that will be used during the project. This appendix summarizes the civil engineering design criteria for the project. These criteria form the basis of the design for the foundation and civil systems of the project. More specific design information will be developed during detailed design to support equipment procurement and construction specifications. It is not the intent of this appendix to present the detailed design information for each component and system, but rather to summarize the codes, standards, and general criteria that will be used.

Section C.2 summarizes the applicable codes and standards and Section C.3 includes the general criteria for foundations, design loads, and general site information.

C.2 Design Codes and Standards

The design and specification of work will be in accordance with all applicable laws and regulations of the federal government, the State of California, and with the

applicable local codes and ordinances. A summary of the codes and industry standards to be used in the design and construction follows:

- Specifications for materials will generally follow the standard specification for the American Society for Testing and Materials (ASTM) and the American National Standards Institute (ANSI).
- Field and laboratory testing procedures for materials will follow standard ASTM specifications.
- Design and placement of structural concrete will follow the recommended practices and the latest version of the American Concrete Institute Code (ACI) and the Concrete Reinforcing Steel Institute (CRSI).
- Welding procedures and qualifications for welders will follow the recommended practices and codes of the American Welding Society (AWS).
- Preparation of metal surfaces for coating systems will follow the specifications and standard practices of the Steel Structures Painting Council (SSPC), National Association for Corrosion Engineers (NACE), and the specific instructions of the coatings manufacturer.
- Plumbing will conform to the Uniform Plumbing Code.
- Design will conform to the requirements of the Federal and California Occupational Safety and Health Administration (OSHA and CALOSHA).
- Design of roof coverings will conform to the requirements of the National Fire Protection Association (NFPA) and Factory Mutual (FM).

Other recognized standards will be used where required to serve as guidelines for the design, fabrication, and construction.

The following laws, ordinances, codes, and standards have been identified as applying to civil engineering design and construction. In cases where conflicts between cited codes (or standards) exist, the requirements of the more conservative code will be met.

Federal

- Title 29, Code of Federal Regulations, Part 1910, Occupational Safety and Health Standards.

- Title 40, CFR Section 112 et seq., US Environmental Protection Agency (EPA), requires a Spill Prevention Control and Countermeasure (SPCC) plan of facilities storing oil in excess of 660 gallons in any single above-ground storage tank; 1,320 gallons in aggregate tanks above ground; and 4,200 gallons below ground.
- Walsh-Healy Public Contracts Act (P.L. 50-204.10).

State

- Business and Professions Code Section 6704, et seq.; Sections 6730 and 6736. Requires state registration to practice as a civil engineer or structural engineer in California.
- Vehicle Code Section 35780, et seq. Requires a permit from Caltrans to transport heavy loads on state roads.
- Labor Code Section 6500, et seq. Requires a permit for construction of trenches or excavations 5 feet or deeper where personnel have to descend. This also applies to construction or demolition of any building, structure, false work, or scaffolding which is more than three stories high or equivalent.
- State of California Department of Transportation, Standard Specifications-1988.
- Title 24, California Administration Code (CAC) Section 2-111, et seq.; Section 3-100, et seq.; Section 4-106 et seq.; Section 5-102, et seq.; Section 6-T8-769, et seq.; Section 6-T8-3233, et seq.; Section 6-T8-3270, et seq.; Section 6-T8-5138, et seq.; Section 6-T8-5465, et seq.; Section 6-T8-5531, et seq.; and Section 6-T8-5545, et seq. Adopts current edition of Uniform Building Code (UBC) as minimum legal building standards.
- Title 8, CAC, Section 1500, et seq.; Section 2300, et seq.; and Section 3200, et seq. Describes general construction safety orders, industrial safety orders, and work safety requirements and procedures.
- Regulations of the following state agencies as applicable.
  - -- Department of Labor and Industry Regulations.
  - -- Bureau of Fire Protection.
  - -- Department of Public Health.
  - -- Water and Power Resources.

County

- Sacramento County Ordinances.

City

- City of Sacramento Ordinances.

Industry Codes and Standards

- California Energy Commission, "Recommended Seismic Design Criteria for Non-Nuclear Generating Facilities in California"--June 1989.
- International Conference of Building Officials, "Uniform Building Code" (UBC, 1991 Edition).
- American Association of State Highway and Transportation Officials-1984, "A Policy on Geometric Design of Highways and Streets."
- Hydraulic Institute Standards.
- American Water Works Association (AWWA).
  - -- "Standards for Prestressed Concrete Pressure Pipe, Steel Cylinder Type for Water and Other Liquids"--(AWWA C301).
  - -- "Standard for Reinforced Concrete Water Pipe--Noncylinder Type, Not Prestressed"--(AWWA C302).
- International Conference of Building Officials.
- International Association of Plumbing and Mechanical Officials.
- Uniform Plumbing Code (UPC).

The codes and industry standards used for design, fabrication, and construction will be the codes and industry standards, including all addenda, in effect as stated in equipment and construction purchase or contract documents. Where no other standard or code governs, the Uniform Building Code (UBC) will be used.

C.3 Civil Design Criteria

C.3.1 Foundations

C.3.1.1 General. Geotechnical exploration, testing, and analysis will determine the most suitable bearing methods for foundations. Criteria will be established to permit design of the most economical foundation that is compatible with life expectancy and service of structures.

Allowable settlements for all foundations (based on predicted elastic, short-term and consolidation, long-term settlements) will be limited as follows:

- Total Settlement--1-1/2 inches.
- Differential Settlement--0.1 percent slope between adjacent concentrated load points or loaded areas.

Floor slabs will be subdivided into pours by designating construction joints on the drawings. Cast iron soil pipe will be used on drain lines, except where fiberglass reinforced pipe or high density polyethylene (HDPE) is required for chemical drainage. Floor slabs and mats will be sloped approximately 1/16 inch per foot between high ridges and low drain grates or floor drains and will receive a float finish.

C.3.1.2 Foundation Design Criteria. Preliminary foundation design criteria for the project are included in Appendix C1, Geotechnical Engineering Investigation, which was prepared to support the AFC effort. Additional borings and testing will be performed later in support of final design activities.

C.3.1.3 Rotating Equipment. The foundation system for the combustion turbine, steam turbine, gas compressors, standby diesel generator, and the boiler feed pumps will be sized and proportioned such that the bearing and allowable settlement criteria will not be exceeded. In addition to a static analysis, a dynamic analysis will be performed to determine the fundamental frequencies of the foundation. To preclude resonance, the fundamental frequency of the foundation will be less than 75 percent or greater than 125 percent of the operational frequency of the machine. Should the foundation system not meet these criteria, the dynamic behavior of the foundation will be evaluated and compared to ISO 3945 Criteria for Vibration Severity. The resultant vibration level will be within the "Good" range of this standard.

C.3.1.4 Equipment Bases. All equipment will be supplied with an equipment base suitable to its operation. Where the equipment could induce vibration problems, the base will have adequate mass to dampen vibration motions. Special consideration will be given to vibration and stiffness criteria where specified by an equipment manufacturer.

Equipment that does not require a special base will generally be placed on a nominal base to keep the equipment off the floor surface. Bases will have minimum temperature and shrinkage reinforcing unless it is determined that additional reinforcement is required for the equipment loads. The bases will be designed to develop the yield strength of the equipment anchor bolts embedded therein as a minimum.

C.3.2 Design Loads

Design loads for all structures will be determined according to the criteria described below, unless the applicable building code requires more severe design conditions.

C.3.2.1 Wheel and Crawler Loads. Loads exerted on roadway pavements, buried piping, and box culverts will be reviewed and selected prior to design of the underlying items. Typically, HS20 loads will be utilized for the design of roadway subgrades. Loadings such as loaded scrapers, crawler cranes, stator transport trailers, etc., exceed the more typical HS20 loadings and will be considered where appropriate.

C.3.3 Site

C.3.3.1 Site Arrangement. The site arrangement will conform to applicable laws, regulations, and environmental standards. The principal elements in the selection of site arrangement criteria are the physical space requirements and relationships dictated by each of the major plant systems. Distances from the main plant to various systems will be minimized for economy. However, adequate clearance between various plant systems will be provided as needed for construction, operations, and maintenance. The plant will be located and oriented to minimize costs for construction, while remaining operationally effective. Utility interconnections will be optimized as much as practical. Spill containment measures will be provided. A sanitary wastewater collection and discharge system will be provided.

An internal access road will be provided. Any wastewaters likely to contain oil will be routed through an oil/water separator.

The following criteria will be followed regarding site infrastructure:

- Chemical unloading areas will be designed to contain spills.
- Culverts and sanitary sewer manholes will be installed as required.
- Location and requirements for fencing or walls will conform to the City of Sacramento Code.

C.3.3.2 Grading and Drainage. The site grading and drainage system will be designed to comply with all applicable federal, state, and local regulations. The general site grading will establish a working surface for construction and plant operating areas, provide positive drainage from buildings and structures, and provide adequate soil coverage for underground utilities.

Onsite drainage will be accomplished through gravity flow whenever possible. The surface drainage system will consist of mild slopes and open channels. The

buildings and structures will be located with the ground floor elevation of a minimum of 6 inches above the finished grade. The preferred slope of the graded areas away from structures will be 1 percent with a minimum slope of 0.5 percent. A storm sewer system (underground inlets and pipes) will be provided in areas where ditches are not feasible due to space limitations.

Road crossings over open channels will utilize culverts to pass the design flow. Culverts will be constructed of reinforced concrete or corrugated metal pipe. Loading conditions addressed in Subsection C.3.2.1, Wheel and Crawler Loads, will be considered as necessary during design.

Site drainage facilities will be designed for the flow resulting from a 25 year, 24 hour rainfall. Temporary facilities will generally be designed for a 10 year rainfall. Drainage facilities will be designed to prevent flooding of permanent plant facilities during a 100 year storm.

Runoff from possible oil and chemical contamination areas, such as the diesel unloading area, transformer areas, and chemical storage areas, will be contained. Storm water contained in these areas will be routed through an oil/water separator or neutralization basin and then drained to the wastewater collection system.

The main plant complex area will be graded with moderate slopes (1 percent minimum preferred) for effective drainage.

C.3.3.2.1 Ditches. Channels and ditches will generally be trapezoidal in section, of sufficient width to facilitate cleaning, and mildly sloping so that erosion of the ditch bottom due to high flow velocities is minimized. Side slopes on ditches will be approximately three horizontal to one vertical. The preferred slope of the ditch bottom will be 1 percent with a minimum slope of 1/2 percent. In areas where space is limited and design flow rates are small, ditches having a triangular cross section will be provided.

Ditches will be designed to carry the 25 year, 24 hour rainfall runoff with nonerosive velocities.

C.3.3.2.2 Culverts. Drainage culverts will be provided at the intersection of ditches and embankments. Culverts will be constructed of reinforced concrete or corrugated metal pipe.

The culverts and drainage ditches will be designed to convey the 25 year peak runoff flow without producing a headwater elevation above the bottom of the roadway base course. Minimum cover will be 12 inches. All culverts will be designed to handle AASHTO HS20 and construction equipment loadings as applicable to the design.

C.3.3.2.3 Storm sewer system. A storm sewer system will be used in areas where space or grade limitations govern the collection method employed or where unobstructed traffic flow is required. Inlets will be constructed of cast-in-place or precast concrete with top grates. Storm sewer pipes will discharge runoff to the nearest open channel. Storm sewer pipes will be sized to limit flow velocities resulting from the 25 year, 24 hour rainfall event to a maximum of 8 fps. A minimum design velocity of 2 fps will be used to facilitate cleaning. The minimum cover requirement, loading, and material selection for pipes will be as specified for culverts.

Storm water runoff will be collected onsite and conveyed to a site runoff pond which will serve as a detention pond.

C.3.3.2.4 Erosion and sedimentation control. Erosion and sedimentation control will be provided to retain sediment onsite and prevent violations of water quality standards.

The proposed site development will alter the land areas of the site. Existing vegetation will be removed during site preparation operations. The general preparation of the overall site will be followed by earthmoving activities required for the construction of specific facilities. Final finish grading and seeding will begin when all other earthmoving operations are complete. Final grading will include aggregate surfacing of the entire site except for concrete roadways and setback landscaping along the street frontage on 83rd Street.

Temporary erosion and sedimentation control measures to be used during construction will be designed to prevent sediments from being displaced and carried offsite by storm water runoff.

Prior to beginning excavation activities, a silt fence or straw bales will be installed along the perimeter of the project where runoff to offsite areas can occur. The silt fence will filter sediments from construction runoff. During construction, the extent of earth disturbances will be minimized as much as practical. Areas outside of cut and fill operations will be protected against unnecessary equipment traffic.

Diversion ditches and/or berms will be constructed as necessary to divert runoff from offsite areas around the construction site. Temporary control measures will be maintained as necessary throughout the construction period.

Permanent erosion and sedimentation control measures within the project plant site will include the runoff collection system (ditches, inlets, culverts, drainage piping) and surfaced traffic and work areas. These measures will minimize the possibility of any appreciable erosion, and the resulting sedimentation, occurring on the project site.

C.3.3.3 Traffic and Transportation. Access to the plant site will be from 83rd Street.

Vehicular traffic into and out of the site will be limited as much as practical to daylight hours Monday through Friday. Permanent roads will be 20 foot wide concrete pavement.

C.3.3.3.1 Roads. Access within the plant site will be provided by a loop road.

All roads will be surfaced with aggregate during the construction period. Periodic watering or applications of a dust palliative material will be used to minimize the dust problem during the dry seasons.

The minimum radius to the inside edge of pavement (EOP) of the roads will be 40 feet.

Due to the flat terrain of the plant site, grades for the road will be minimal.

C.3.3.4 Fencing and Security. Chain link security fencing topped with barbed wire will be provided around the power plant facility site, substation, and other areas requiring controlled access. Fencing heights will be in accordance with applicable codes and regulatory requirements. Controlled access gates will be located at the entrances to the secured area.

C.3.3.5 Landscape Plan. The proposed landscape plan is as follows:

- Landscaping will be provided along the setback at 83rd Street.
- Landscaping will be used to provide human scale and seasonal color to entrances and parking lot. Trees and/or shrubs will be used to unify the ground plane and help to screen some of the smaller components.
- All landscape material used on the project shall be selected with due consideration of the climatic and soil conditions on the site. The theme for the planting plan will be derived from an assessment of naturally occurring plant materials and an evaluation for the need for dense, hardy screening.

C.3.3.6 Sanitary Waste System. Sanitary wastes will be conveyed to the Sacramento County Regional Wastewater Treatment Plant by connection to the Sacramento City sewer system on Fruitridge Road.

C.3.4 Geotechnical Investigation

The Geotechnical Engineering Investigation for the project is included as Appendix C1.

Appendix C1
Geotechnical Engineering Study

Appendix C1
Geotechnical Engineering Study

Appendix C1 contains the Geotechnical Engineering Study for the Procter & Gamble Cogeneration Project dated July 9, 1993, which was prepared by Youngdahl and Associates, Inc.

GEOTECHNICAL ENGINEERING STUDY
for
PROCTOR AND GAMBLE
COGENERATION PLANT
83rd Street
Sacramento, California
for
Walsh Construction Company

By
YOUNGDAHL & ASSOCIATES, INC.

Project No. 93108.e
July 1993

YOUNGDAHL
&ASSOCIATES INC.
GEOTECHNICAL, ENVIRONMENTAL & CONSTRUCTION LAB

Project No. 93108.e
9 July 1993

Walsh Construction Company
10365 Old Placerville Road, Suite 210
Sacramento, California 95827

Attention: Mr. Ross Cates

Subject: PROCTOR AND GAMBLE COGENERATION PLANT
83rd Street
Sacramento, California
GEOTECHNICAL ENGINEERING STUDY

Dear Mr. Ross:

At your request, YOUNGDAHL & ASSOCIATES, INC., has completed a geotechnical engineering study for the subject site.

Our study consisted of subsurface exploration, surface and subsurface sampling, a visual site reconnaissance, geologic mapping, and review of available published and unpublished literature and reports. Laboratory tests were performed on selected soil samples collected from the field study in order to develop engineering design criteria for development of the site.

Based on the results of our field study, laboratory testing, and assessment of potential geologic hazards, the site is suitable to receive the proposed development provided the recommendations presented in this report are incorporated into the project plans and specifications and are adhered to during development.

Should you have any questions or require additional information, please contact our office at your convenience.

Very truly yours,
YOUNGDAHL & ASSOCIATES, INC.

Reviewed by:



Dennis E. Youngdahl, P[illegible].E.
Principal Engineer

Michael P. Walker
Staff Geologist

MPW:DEY
copies: 6 to Walsh Construction Company
1 to Black & Veatch

1234 GLENHAVEN COURT ■ EL DORADO HILLS, CA 95762
PHONE (916) 933-0633 FAX (916) 933-6482

TABLE OF CONTENTS

INTRODUCTION 1
Project Description 1
Purpose and Scope 2

SUBSURFACE SOIL CONDITIONS 3

GEOLOGIC AND SEISMIC SETTING 4
Regional Geology 4
Site Geology 5
Seismic Considerations 5
Fault Movement 7

GEOLOGIC REFERENCES 8

RECOMMENDATIONS 10
General 10
Clearing, Stripping, and Preparation for Grading 11
General Grading 12
Foundations 13
Pier Foundations 14
Slab-on-Grade Construction 15
Retaining Walls 17
Underground Facilities Construction 19
Pavement Design 19
General Recommendations 19
Asphaltic Concrete Pavements 20
Portland Cement Concrete (PCC) Pavements 22

LIMITATIONS AND UNIFORMITY OF CONDITIONS 23

CHECKLIST OF RECOMMENDED SERVICES 25

APPENDIX A 26
Introduction 27
Field Study 27
Site Plan (Figure No. A-1) 29
Logs of Exploratory Borings (Figure Nos. A-2 through A-10) 30

APPENDIX B 40
Introduction 41
Laboratory Analysis 41

APPENDIX C 75
Recommended Grading Specifications 76
Guide Specifications for Rock Under Floor Slabs 84

Project No. 93108.e
9 July 1993

GEOTECHNICAL ENGINEERING STUDY
for
Proctor and Gamble Cogeneration Plant
83rd Street
Sacramento, California

INTRODUCTION

This report presents the results of a Geotechnical Engineering Study performed for the proposed Proctor and Gamble Cogeneration Plant project site in Sacramento, California. This study was performed to provide specific geotechnical information and design criteria for proposed project site.

Project Description

The subject site is located on the west side of 83rd Street in Sacramento, California. It is our understanding that the proposed development will consist of a cogeneration complex and related facilities.

The subject site is identified by Assessors Parcel Numbers: 061-0164-001,002,003 and 004. The property is rectangular in shape with maximum plan dimensions on the order of 664 by 656 feet, covering approximately 10 acres . The site is bound on the east by 83rd Street, on the north by a railway right-of-way occupied by multiple sets of tracks, on the south by portions of the Proctor and Gamble complex and on the west by an undeveloped agricultural parcel.

The topography at the site is essentially flat, appeared to have been plowed in conjunction with its former utilization as a silage crop field. A power line easement traverses the site from north to south in the eastern portion of the site. A grid of shallow unlined drainage or irrigation ditches, consisting of two east to west ditches and a single north to south ditch, traverses the site. Two dirt roads

access the site from the east in the direction of 83rd Street. Surface vegetation observed on the site generally consisted of a moderate growth of wild grasses.

The discussed site location and description is based on a site reconnaissance performed by a representative of *Youngdahl & Associates, Inc.*, and a "Subsurface Investigation Plan", prepared by Black & Veatch, dated 28 May 1993. This plan is the basis for our "Site Plan", Figure A-1, Appendix A.

Purpose and Scope

This report presents the results of a Geotechnical Engineering Study conducted for the proposed Proctor and Gamble Cogeneration Facility site, located on the west side of 83rd Street in Sacramento, California. The purpose of this study was to explore and evaluate the surface and subsurface soil conditions at the site, evaluate potential geologic hazards and develop geotechnical information and design criteria for development. The scope of our study includes the following items:

1. A field study consisting of a site reconnaissance, characterization of the soil and groundwater conditions at the site, and an exploratory boring program to formulate a description of the subsurface conditions.

2. A laboratory testing program performed on representative soil samples collected during our field study.

3. A review of available published and unpublished geotechnical and geologic data pertinent to the project site, including an assessment of potential geologic hazards.

4. Engineering and Geologic analysis of the data gathered during our field study, laboratory testing, and literature review. Development of recommendations for site preparation and grading, and geotechnical

design criteria for foundations, concrete slab-on-grade construction, retaining walls, pavement sections and underground facilities.

5. Preparation of this written report presenting our findings, conclusions and recommendations regarding the geotechnical and geologic aspects of the project site.

SUBSURFACE SOIL CONDITIONS

The near-surface soils encountered in our exploratory borings consisted of medium dense sandy SILTS, clayey SILTS, sandy clayey SILTS and gravelly SILTS in a moist state, except for surface discing. At Boring No. 2 this surface material became a stiff silty CLAY at 2.5 feet and extended to depths of 33 to 37 feet in the exploratory boring except that at a depth of 5 to 9 feet a hard layer of CLAY with calcium carbonate cementation was generally encountered.

The SILTS were underlain by a dense to very dense sandy GRAVEL layer, which caused refusal of the hollow stem auger, was encountered in a moist state and which extended to the termination depth of 47 feet in Boring No. 5 and to depths of 55 and 57 feet in Boring Nos. 1 and 3 respectively. Boring Nos. 1 and 3 were extended through the GRAVELS and they were underlain by dense sandy SILTS encountered in a moist to wet state. These SILTS extended to the boring termination depth of 70 feet in Boring Nos. 1 and 3. Atterberg Limits testing (ASTM D4318-84) of the CLAY and SILT soils encountered revealed Liquid Limits which ranged from 19 to 46 and Plasticity Indices of 3 to 26, indicative of materials with a low to moderate expansion potential.

Consolidation tests indicated that the underlying SILTS are pre-consolidated and that primary consolidation will occur as the loads are applied.

No springs or seeps were encountered during our study and no free ground water was encountered in any of the Exploratory Borings at the time of our field investigation. It should be noted that changes in groundwater levels may occur at the site due to seasonal and/or man-made influences. Groundwater in this area is mapped at a depth of approximately 75 feet.

A more detailed description of the materials encountered in our exploratory borings are presented graphically on the "Logs of Exploratory Borings", Figure Nos. A-2 through A-10, Appendix A. An explanation of the symbols and descriptions used on these logs are presented on the "Soil Classification Chart and Boring Log Legend", Figure A-11, Appendix A.

GEOLOGIC AND SEISMIC SETTING

Regional Geology

The geological study consisted of a review of geologic data pertinent to the site, and an interpretation of aerial photographs, our observations and the logs of exploratory borings drilled during our study.

The subject site is located in Sacramento, on the east central portion of the Great Valley geomorphic province of California. The Great Valley geomorphic province is a large, northwestward-trending asymmetric structural trough that has been filled with as much as 6 vertical miles of sediment in the Sacramento - San Joaquin Valley (USGS, 1986). According to the "Sacramento Quadrangle geologic map contained within the California Division of Mines and Geology (CDMG), Map No 5A, (CDMG, 1991), the site is underlain by undifferentiated alluvial materials of the Riverbank Formation, of Quaternary age.

Site Geology

Six borings were drilled during the field investigation phase of our study. The materials encountered in the borings consisted of SILTS, SANDs, and GRAVELS known collectively as the Riverbank Formation. No soil off-set, springs, seeps, sag ponds or other indications of recent ground rupture were observed on site, or in the borings. Review of aerial photographs showed no evidence of ground instability or landsliding in the area of the site. No slopes were observed during our field study to be located in the vicinity of the site for evidence of slope instability or landsliding to be applicable.

Seismic Considerations

According to the Fault Map of California (Jennings, 1992) and the Geologic Map of the Sacramento Quadrangle, California, (Wagner, 1981), no Special Study Zones active faults are located within the project area. The nearest active fault to the County is the Marsh Creek/Greenville fault. There are several active and other potentially active faults within a 60 mile (100 Kilometer) radius of the site. The major faults mapped in the region (Mualchin, 1992) are listed in Table 1 along with their reported Maximum Credible Earthquake in moment magnitude:

TABLE 1
Active and Potentially Active Faults Within a 60-Mile Radius of the Project Boundaries (Mualchin and Jones, 1992)

Fault	Fault Classification	Maximum Credible Earthquake (Richter Mag.)	Site Max. Ground Accelerat-ions	Distance and Direction from County Boundary (miles)
Foothills	Potentially Active	6 1/2	0.20g	19,E
Greenville	Potentially Active	7 1/4	0.10g	53,SW
Coast Range	Potentially Active	7	0.15g	32,W
Melones	Potentially Active	6 1/2	0.14g	35,NE
Hunting Creek	Potentially Active	6 3/4	0.08g	48,W
Antioch	Potentially Active	6 3/4	0.10g	40, SW
Concord	Potentially Active	6 1/2	0.05g	53, SW
Green Valley	Potentially Active	6 3/4	0.09g	46, SW
West Napa	Potentially Active	6 1/2	0.05g	53, SW
Soda Creek	Potentially Active	6 1/4	0.06g	48, W
Calaveras	Potentially Active	7 1/2	0.07g	60, SW
Cordelia	Potentially Active	6 1/2	0.07g	43, SW
Dunnigan Hills	Potentially Active	6 1/2	0.15g	24, NW
Rogers Creek	Active	7	0.06g	60, SW

Fault Movement

No evidence of fault movement was noted during our field investigation. Strong earthquakes generated along any of the faults within the region may affect the site depending on the characteristics of the earthquake and the location of the epicenter. In general, the effects will be confined to those phenomena associated with shaking and/or ground acceleration. These effects can be minimized by appropriate design and construction procedures. Based on the soil properties and topography of the site, there is no reasonable danger from earthquake-induced liquefaction or landsliding. The potential for earthquake induced flooding and sieches, as well as for ground lurching and seismic settlement is low at this site based upon the anticipated low ground accelerations and probable short-duration events in this area. The Uniform Building Code classifies the site as being within the seismic region Zone 3. Based upon our understanding of the site, we consider the maximum credible rock acceleration to be 0.3g and a seismic coefficient of S = 1.2 is appropriate for this site.

GEOLOGIC REFERENCES

. Alt, J.N., McCrumb, D.R., et. al. (1977), "Characteristics of Late Cenozoic Faults in the Northern Sierra Nevada, California", Geological Society of America Abstracts with programs v. 9 no. 7.

. Bateman, P.C. and Wahrhaftig, C., (1966), "Geology of the Sierra Nevada" in Geology of Northern California, Bulletin 190, California Division of Mines and Geology.

. California Division of Mines and Geology, (1988), "Fault-Rupture Hazard Zones in California", California Department of Conservation, Division of Mines and Geology, Special Publication 42.

. California Division of Mines and Geology, (1983), "Bear Mountain Fault Zone North of Auburn", California Department of Conservation, Division of Mines and Geology, FER-146.

. California Division of Mines and Geology, (1983), "Bear Mountain Fault Zone, Auburn Area", California Department of Conservation, Division of Mines and Geology, FER-147.

. California Division of Mines and Geology, (1975), "Guidelines for Evaluating the Hazard of Surface Fault Rupture", California Department of Conservation, Division of Mines and Geology, Note 49.

. California Division of Mines and Geology, (1990), "Index to Fault Evaluation Reports Prepared 1976-1989 Under the Alquist-Priolo Special Studies Zone Act", California Department of Conservation, Division of Mines and Geology, Open File Report 90-9.

. California Division of Mines and Geology, (1974), "Meeting the Earthquake Challenge", California Department of Conservation, Division of Mines and Geology, Special Publication 45.

. Clark, W.B., (1969), Gold Districts of California, California Division of Mines and Geology, Bulletin 193.

. Clark, L.D., (1960), "Foothills Fault System, Western Sierra Nevada, California" Geological Society of America, Bulletin, v. 71.

. Greensfelder, R.W., (1974), "Maximum Credible Rock Acceleration from Earthquakes in California", Map sheet 23, California Department of Conservation, Division of Mines and Geology.

. Harwood, D.S. and Helley, E.J., (1982), Preliminary Structure Contour Map of the Sacramento Valley, California, United States Geological Survey, Open File Report OFR 82-737.

. Mualchin, L. and Jones, A.L., (1992) "Peak Acceleration from Maximum Credible Earthquakes in California", California Department of Conservation, Division of Mines and Geology, Open File Report 92-1.

. Toppozada, T.R., Real, C.R. and Parke, D.L., (1981), Preparation of Isosiesmal Maps and Summaries of Reported Effects for Pre-1900 California Earthquakes, California Division of Mines and Geology, OFR 81-11 SAC.

. Wagner, D.L., Jennings, C.W., Bedrossian, T.L. and Burtugno, E.J., (1981), "Geologic Map of the Sacramento Quadrangle, California Department of Conservation, Division of Mines and Geology, Map No. 1A, (1:250,000).

. Wong, I.G., Ely, R.W., Killmann, A.C., (1988), "Contemporary Seismicity and Tectonics of the Northern and Central Coast Ranges - Sierran Block Boundary Zone, California", Journal of Geophysical Research, v. 93, no. B-7.

. Wyss, M., (1979), "Estimating Maximum Expectable Magnitude of Earthquakes from Fault Dimensions", Geology, v. 7, 1979.

RECOMMENDATIONS

General

1. The site is suitable for the proposed development provided the recommendations presented in this report are incorporated into the project plans and specifications.

2. All grading and foundation plans should be reviewed by *Youngdahl & Associates, Inc.*, hereinafter described as the Geotechnical Engineer, prior to contract bidding. A review should be performed to determine whether the recommendations contained within this report are incorporated into the project plans and specifications.

3. The Geotechnical Engineer should be notified at least two working days before site clearing or grading operations commence, and should observe the stripping of deleterious material and provide consultation to the Grading Contractor in the field.

4. Field observation and testing during the grading operations should be provided by the Geotechnical Engineer so that he or she can form an opinion regarding the adequacy of the site preparation, the acceptability of fill materials, and the extent to which the earthwork construction and the degree of compaction comply with the project geotechnical specifications. Any work related to grading performed without the full knowledge of, and under direct observation of the Geotechnical Engineer may render the recommendations of this report invalid.

Clearing, Stripping, and Preparation for Grading

1. General site clearing should include removal of any abandoned irrigation and/or underground facilities, overhead power lines, rubble, organic-laden topsoil, and any other deleterious materials facilities within the proposed development areas.

2. Stripping of surface vegetation and/or organic topsoil will be necessary within the proposed development areas of the site. We anticipate that the depth of surface stripping necessary will be on the order of 2 to 4 inches. The actual depth of stripping should be determined in the field by the Geotechnical Engineer at the inception of grading operations. The stripped topsoil should be stockpiled in areas where it will not interfere with grading operations or be removed from the site. The topsoil may be used later in areas which will receive planting. All areas to receive fill shall have stripping operations completed before placement of engineered fill.

3. Any loose materials encountered during grading of the site should be excavated to firm soil, as determined in the field by the Geotechnical Engineer. On-site excavated materials, exclusive of debris, organic-laden or other deleterious materials, may be used as engineered fill.

4. Following the clearing, stripping, and grubbing operations, the exposed soils should be scarified to a depth of at least 12 inches, moisture conditioned as necessary and compacted to the requirements of engineered fill. All depressions extending below final grade resulting from the removal of deleterious materials or loose soil, should be processed properly and backfilled with compacted engineered fill.

General Grading

1. After areas to receive fill have been properly prepared, as mentioned above, soil generated from excavations on the site, excluding debris and other deleterious materials, may be used as engineered fill. It should be noted that the near surface soils encountered at the site generally exhibit a low expansive potential with some pockets of moderately expansive CLAYS at a depth of 2.5 feet. If the moderately expansive materials are utilized as fills in the top 3 feet under light weight structures or site flatwork, they should be placed in thin horizontal lifts not to exceed 8 inches in uncompacted thickness and should be moisture conditioned to at least 4% over optimum moisture, and compacted to between 87 and 92% relative compaction, based on the ASTM D1557-78 Test Method. The upper materials with low expansion characteristics should be compacted to 95% relative compaction for structural fills.

4. If imported fill material is required, it should be approved by the Geotechnical Engineer prior to transporting it to the project. It is preferable that the import material meet the following requirements:

    1. Plasticity index not to exceed 12.
    2. "R"-value of not less than 25.
    3. Should not contain rocks larger than 6 inches in maximum dimension.
    4. Not more than 15% passing through the No. 200 sieve.

If these requirements are not met, additional testing and engineering may be necessary to determine the appropriate design parameters for foundation improvements.

5. Seasonal limits - The near-surface soils may become partially or completely saturated during the rainy season. Commencement of grading operations during this time period may be difficult since the saturated materials may not be compactable and they may not support normal construction equipment. It is therefore recommended that consideration be given to the seasonal limit of the grading operations on the site.

6. All final grades should be provided with a positive drainage gradient directed away from foundations, to rapidly remove surface water runoff. Ponding of water should not be allowed on building pads or adjacent to foundations.

7. All grading should be performed in accordance with the Recommended Grading Specifications, Appendix C.

Foundations

1. Continuous shallow spread footings may be utilized for support of one and two story structures. All of the foundation materials should be competent after preparation in accordance with the grading section of this report.

2. Continuous spread footings should be reinforced with a minimum of two No. 4 reinforcing bars, one located near the bottom of the footing and one near the top of the stem wall. Footings may be founded in compacted native soil or engineered fill. Structural requirements may dictate the use of additional reinforcing steel. All footings should be founded below an imaginary 2 1/2:1 plane projected upward from the bottoms of adjacent parallel continuous footings or parallel trenches. All footings should be a minimum of 18 inches in width, and founded a minimum of 18 inches below the lowest adjacent

grade. An allowable dead plus live load bearing pressure of 2,000 p.s.f. should be used for design of shallow spread footings. A total settlement of less than 1/2 inch is anticipated.

3. The above allowable pressures are for support of dead plus live loads and may be increased by 1/3 for short term wind and seismic loads.

4. For resistance to lateral loads, an adhesion value of 500 p.s.f. between the concrete footing and foundation soil may be used for design. A passive resistance of 150 p.c.f. equivalent fluid weight may be utilized against the sides of spread footings. If adhesion and passive pressures are combined, the lesser value should be reduced by 50%.

5. For shallow foundation design, the following soil parameters would be applicable for design using on-site, native materials:

Internal Angle of Friction: $\phi' = 30°$
Cohesion (Remolded): $c' = 288$ p.s.f.

Appropriate safety factors should be applied when designing with these values. For design of deeper structures applicable soil parameters are given in Appendix B, Figure Nos. B-6&7, B-8&9, B-15, B-18, B-19&20, and B-28&29.

Pier Foundations

1. Pier foundations may consist of straight-shafted end-bearing drilled piers founded in the native materials. The calcified layer encountered at 5.5 to 6.0 feet and the Gravel materials encountered at 33 to 37 feet are both excellent materials to found end-bearing piers depending on loads and type

of structure being founded. Pier parameters may be calculated based on the laboratory data provided once loads are known. The Geotechnical Engineer should be retained to verify proper pier installation during drilling operations.

2. Shallow end bearing piers may be computed using the following formula:

$q_{allowable} = 2{,}500\ D + 2{,}000\ r$

$q_{allowable}$ = the allowable bearing pressure in pounds per square foot

D = depth below lowest adjacent finished grade in feet

r = minimum radius of pier in feet

This formula was derived with a factor of safety of greater than 3 to allow for some variation in materials. A 1/3 increase may be added to the allowable bearing pressures for short term loads such as wind and/or seismic.

3. Resistance to lateral loads will be provided by passive pressure acting against the sides of the pier shafts. An allowable passive pressure of 400 p.s.f. equivalent fluid weight is applicable to the native soils encountered at the site.

Slab-on-Grade Construction

1. Where interior concrete slabs-on-grade are to be constructed, the slabs should be underlain by a minimum of 4 inches of clean crushed rock to serve as a cushion and a capillary break. Where floor coverings are anticipated, a Visquene-type membrane should be placed between the cushion and the slab to provide an effective vapor barrier, and to minimize moisture condensation under the floor covering. It is suggested that a 1 inch thick sand layer be

placed on top of the membrane to assist the curing of the concrete. If sand is used, the thickness of the gravel cushion may be decreased to three inches.

2. Interior concrete slabs-on-grade should be a minimum of 4 inches thick. A 4 inch thick slab should be reinforced with No. 3 deformed reinforcing bars placed at 24 inches on center both ways, at the center of the structural section. Reinforcing bars should have a minimum clear cover of 1.5 inches, and hot bars should be cooled prior to placing concrete. As an alternative to reinforcing bars, 6x6-10/10 wire mesh may be placed in the upper half of the structural section. The aforementioned reinforcement may be used for anticipated floor loads not exceeding 250 p.s.f. If floor loads greater than 250 p.s.f. are anticipated, the slab should be evaluated by a structural engineer.

   Fiber mesh, if used as a concrete additive, should be placed in accordance with the manufacturer's specified requirement of 1.5 pounds per cubic yard of concrete. Where fiber mesh is used, zip strips or other joint systems should be provided to divide the slab into sections of not more than 400 square feet of surface area, with the joints spaced not more than 20 feet apart in any direction. Fiber mesh should not be used as reinforcement in lieu of wire mesh or reinforcing bars.

3. All slabs should be poured at a maximum slump of less than 5 inches. Excessive water content is the major cause of concrete cracking. When fiber mesh and/or reinforcing bars are used, a water reducing agent or plasticizer may be added to the concrete to maintain workability while maintaining a water/cement ratio which will limit excessive shrinkage.

4. For design of concrete floors, a modulus of subgrade reaction of k = 175 p.s.i. per inch would be applicable.

5. Exterior concrete flatwork need not be underlain by a rock cushion. However, some vertical movement of slabs should be anticipated when arranging outside concrete flatwork joints where rock is omitted. If reinforcement is not used, a tool joint should be provided to separate the slab into sections of less than 150 square feet of surface area.

Retaining Walls

1. In general, retaining walls should be designed to resist active lateral pressures exerted from a soil media having an equivalent fluid weight as follows:

gradient of backslope	equivalent fluid weight (p.c.f.)
Flat	45
2:1	60

For restrained conditions, an additional lateral loading of 10 x H p.s.f. should be added to the equivalent fluid weight over the entire retaining height (H) of the wall. Lateral forces on the retaining walls may be resisted by passive pressure acting against the side of the wall footing and/or by adhesion between the soil and the bottom of the foundation. A passive resistance of 150 p.c.f. equivalent fluid weight may be utilized against the side of shallow footings in undisturbed native soil or engineered fill. An adhesion value of 500 p.s.f may be utilized at the base of spread footings for sliding resistance. If adhesion and passive pressures are combined, the lesser value

should be reduced by 50%. All backfill placed behind a retaining wall should be compacted in accordance with the "General Grading" section of this report. The allowable bearing pressure and the depth of foundation should be as recommended in the "Foundations" section of this report.

2. The above criteria is based on fully drained conditions. For these conditions, we recommend that a gravel filter material be placed behind all retaining walls. The blanket of filter material should be a minimum of 12 inches thick, and should extend from the bottom of the walls to within 12 inches of the ground surface. The top 12 inches of wall backfill should consist of a compacted native soil cap. A filter fabric should be placed above the gravel filter material to separate it from the native soil cap. A 4-inch diameter drain pipe should be installed with perforations facing down near the bottom of the filter blanket. As an alternative to drain pipe, weep holes may be provided, if applicable. Drain pipe should be underlain by at least 4 inches of filter-type material. Filter material should conform to Class One, Type B permeable material as designated in Section 68, "Subsurface Drains", of the Standard Specifications, State of California, Department of Transportation, current edition. A typical 1"x #4 concrete coarse aggregate mix approximates this specification. A clean pea gravel is also acceptable. Adequate gradients should be provided to discharge water that collects behind the walls to an adequately controlled discharge system.

3. The following soil parameters would be applicable for design using on-site, native materials:

Internal Angle of Friction:	ϕ'	=	30°
Cohesion (Remolded):	c'	=	288 p.s.f.
Bulk Unit Weight:	γ	=	111 p.c.f.

Appropriate safety factors should be applied when designing with these values.

Underground Facilities Construction

1. Trenches or excavations greater than 5 feet in depth should be provided with shoring or sloped back at a 1:1 slope in accordance with OSHA regulations prior to persons entering them. Trenches within competent bedrock may not require shoring upon review and approval by the Geotechnical Engineer.

2. Native soil should be used for backfill within structural areas and 5 feet beyond for underground facilities extending outside of structures in order to prohibit rapid lateral migration of drainage waters. Beyond the 5 foot distance from structures, native or import material may be used. Compaction of the backfill should be by mechanical methods. Jetting is not recommended.

3. All backfill, placed after the underground facilities have been installed, should be compacted to the same compaction as the surrounding soil within the structural areas and 85% in landscaped areas. Compaction should be accomplished using lifts which do not exceed 8 inches. The thickness of the lifts should be determined by the Geotechnical Engineer based on the method of compaction utilized. If a thicker lift is desired and the contractor can achieve the required compaction, the method will be acceptable.

Pavement Design

General Recommendations

1. All pavement construction and materials used should conform to applicable sections of the latest edition of the California Department of Transportation Standard Specifications.

2. After installation of any underground facilities, the top 8 inches of subgrade soils under pavements (both asphalt and concrete) should be compacted to a minimum relative compaction of 95% based on the ASTM D1557-78 test method at a moisture content above optimum. Aggregate bases and sub-bases should also be compacted to a minimum relative compaction of 95% based on the aforementioned test method.

Asphaltic Concrete Pavements

1. Table 1 provides recommended pavement sections based on an "R" - Value of 13. This value was determined by using California Test Method 301-F on a bulk sample of the on-site native soils expected to be exposed at subgrade. The soil sample tested was a sandy SILT, and is representative of the anticipated subgrade materials. The recommended design thicknesses presented in Table 1 were calculated in accordance with the methods presented in the latest update of the Fourth Edition of the California Department of Transportation Highway Design Manual.

2. We recommend that a Traffic Index (T.I.) of 4.5 be used for design of pavements for automobile use only. For areas to receive truck traffic, we recommend a T.I. of 5.5 for design. All pavement sections should be designed for Traffic Indices in accordance with applicable city standards or county standards.

Table 1
Recommended Design Thickness
"R"-VALUE = 13

T.I.	Alternate	A.C.-in. (ft.)	A.B.-in. (ft.)	A.S.B.-in. (ft.)
4.0	A	2.5 (0.21)	6.5 (0.54)	-
	B	2.5 (0.21)	4.0 (0.33)	3.0 (0.25)
4.5	A	2.5 (0.21)	8.0 (0.67)	-
	B	2.5 (0.21)	4.0 (0.33)	4.5 (0.38)
5.0	A	3.0 (0.25)	8.5 (0.71)	-
	B	3.0 (0.25)	4.0 (0.33)	5.0 (0.42)
5.5	A	3.0 (0.25)	10.0 (0.83)	-
	B	3.0 (0.25)	4.0 (0.33)	7.0 (0.58)
6.0	A	3.5 (0.29)	11.0 (0.92)	-
	B	3.5 (0.29)	6.0 (0.50)	5.5 (0.46)
6.5	A	3.5 (0.29)	12.5 (1.04)	-
	B	3.5 (0.29)	6.0 (0.50)	7.5 (0.63)
7.0	A	4.0 (0.33)	13.5 (1.13)	-
	B	4.0 (0.33)	6.0 (0.50)	8.5 (0.71)
8.0	A	4.5 (0.38)	16.0 (1.33)	-
	B	4.5 (0.38)	6.0 (0.50)	11.0 (0.92)
9.0	A	5.5 (0.46)	18.0 (1.50)	-
	B	5.5 (0.46)	6.0 (0.50)	13.0 (1.08)
10.0	A	6.0 (0.50)	20.5 (1.71)	-
	B	6.0 (0.50)	7.5 (0.63)	14.0 (1.17)

NOTES:

T.I.	=	Traffic Index
A.C.	=	Asphaltic Concrete - must meet specifications for CAL TRANS Class II Asphaltic Concrete
A.B.	=	Aggregate Base - must meet specifications for CAL TRANS Class II Aggregate Base ("R"-Value = minimum 78)
A.S.B.	=	Aggregate Sub-base must meet specifications for CAL TRANS Class II Aggregate Sub-base ("R"-Value = minimum 50)
"R" - Value	=	Resistance Value based on California Test Method 301-F.

Portland Cement Concrete (PCC) Pavements

1. Portland Cement concrete (PCC) pavements for moderate truck traffic may consist of at least 6 inches of concrete with a minimum compressive strength of 4,000 psi.

2. The PCC pavement may be placed directly on the prepared subgrade. Expansion joints should be used to separate the pavement into square-shaped areas at a spacing of no more than 20 feet on center, each way. A concrete shrinkage of approximately 1/16 inch per 10 feet of length should be anticipated and joints should be designed accordingly.

3. The above recommended PCC pavement section was designed for a 20-year life using a Modulus of Subgrade Reaction of k = 175 p.s.i. per inch and a Modulus of Rupture for concrete of 500 (based on a minimum compressive strength of 4,000 psi).

LIMITATIONS AND UNIFORMITY OF CONDITIONS

1. It is the responsibility of the owner or owner's representative to notify YOUNGDAHL & ASSOCIATES, INC., in writing, a minimum of 48 hours before any stripping, grading, subsurface demolition, or foundation excavations commence at this site.

2. The recommendations of this report are based upon the assumption that the soil conditions do not deviate from those disclosed during our study. Should any variations or undesirable conditions be encountered during the development of the site, YOUNGDAHL & ASSOCIATES, INC., should be given the opportunity to provide supplemental recommendations as dictated by the field conditions.

3. This report is issued with the understanding that it is the responsibility of the owner or owner's representative to ensure that the information and recommendations contained herein are brought to the attention of the project architect and engineer for incorporation into the project plans and specifications. The owner or owner's representative is responsible for taking the necessary steps to see that the contractor and subcontractors carry out such recommendations in the field.

4. As of the present date, the findings of this report are valid for the property studied. With the passage of time, changes in the conditions of a property can occur whether they be due to natural processes or to the works of man on this or adjacent properties. Legislation or the broadening of knowledge may result in changes in applicable standards. Changes outside of our control may find this report to be invalid, wholly or partially. Therefore, this

report should not be relied upon after a period of three years without our review nor should it be used or is it applicable for any properties other than those studied.

CHECKLIST OF RECOMMENDED SERVICES

	Item Description	Recommended	Not Anticipated
1	Provide foundation design parameters	Included	
2	Review grading plans and specifications	✓	
3	Review foundation plans and specifications	✓	
4	Observe and provide recommendations regarding demolition	✓	
5	Observe and provide recommendations regarding site stripping	✓	
6	Observe and provide recommendations on moisture conditioning removal, and/or precompaction of unsuitable existing soils	✓	
7	Observe and provide recommendations on the installation of subdrain facilities		✓
8	Observe and provide testing services on fill areas and/or imported fill materials	✓	
9	Review as-graded plans and provide additional foundation recommendations, if necessary	✓	
10	Observe and provide compaction tests on storm drains, waterlines and utility trenches	✓	
11	Observe foundation excavations and provide supplemental recommendations, if necessary, prior to placing concrete	✓	
12	Observe and provide moisture conditioning recommendations for foundation areas prior to placing concrete	✓	
13	Provide design parameters for retaining walls	Included	
14	Provide finish grading and drainage recommendations	Included	
15	Provide geologic observations and recommendations for keyway excavations and cut slopes during grading		✓
16	Excavate and recompact all test pits within structural areas		✓

APPENDIX A

Field Study

Site Plan

Logs of Exploratory Borings

Introduction

The contents of this appendix shall be integrated with the geotechnical engineering study of which it is a part. They shall not be used in whole or in part as a sole source for information or recommendations regarding the subject site.

Field Study

Our field study, conducted on 1, 2 and 4 June 1993, included a site reconnaissance by a representative of YOUNGDAHL AND ASSOCIATES, INC. and the drilling, sampling, and logging of 6 exploratory borings under his direction. The approximate locations of the borings are shown on the "Site Plan", Figure No. A-1, this appendix. The exploratory borings were utilized as a window into the subsurface conditions and a facility to collect subsurface samples.

Drilling of the borings was performed with a Mobile B-61 drill rig equipped with a 8 inch diameter hollow-stem auger. As the drilling proceeded, relatively undisturbed soil samples were collected using a 2-1/2-inch O.D. Modified California split-tube sampler containing 2-inch O.D. brass liners. The sampler was advanced into the soil at various depths under impact of a 140 pound hammer falling 30 inches. The number of blows required to advance the sampler a measured distance of 12 inches into the soil, after seating the sampler 6 inches, was adjusted to the corresponding standard penetration resistance (N) value. The samples collected from the exploratory borings were sealed and returned to our laboratory for testing. In the GRAVEL/COBBLE units encountered in Boring Nos. 1 and 3,at depths greater than 35 feet, a 5 " ODEX system was utilized to advance the borings.

The soils encountered were logged during drilling and these notes are the basis for the "Logs of Exploratory Borings," Figures A-2 through A-10, this appendix. These logs show a graphic representation of the soil profile, the depths at which samples were collected and the laboratory test results. An explanation of the descriptions and symbols used on the exploratory boring logs is presented on the "Soil Classification Chart and Boring Log

Legend", Figure A-11, this appendix.

A site reconnaissance was performed on 26 May 1993 during which a resistivity survey was performed. The survey locations are illustrated on the Site Plan, Figure A-1, this appendix. The results of the resistivity survey are presented in a report by Gasch & Associates, Appendix B.

A site reconnaissance was performed on 8 June 1993, during which percolation tests were performed at the locations illustrated on Figure No. A-1, this appendix. The results of these percolation tests are illustrated in Figure No. B-30, Appendix B.

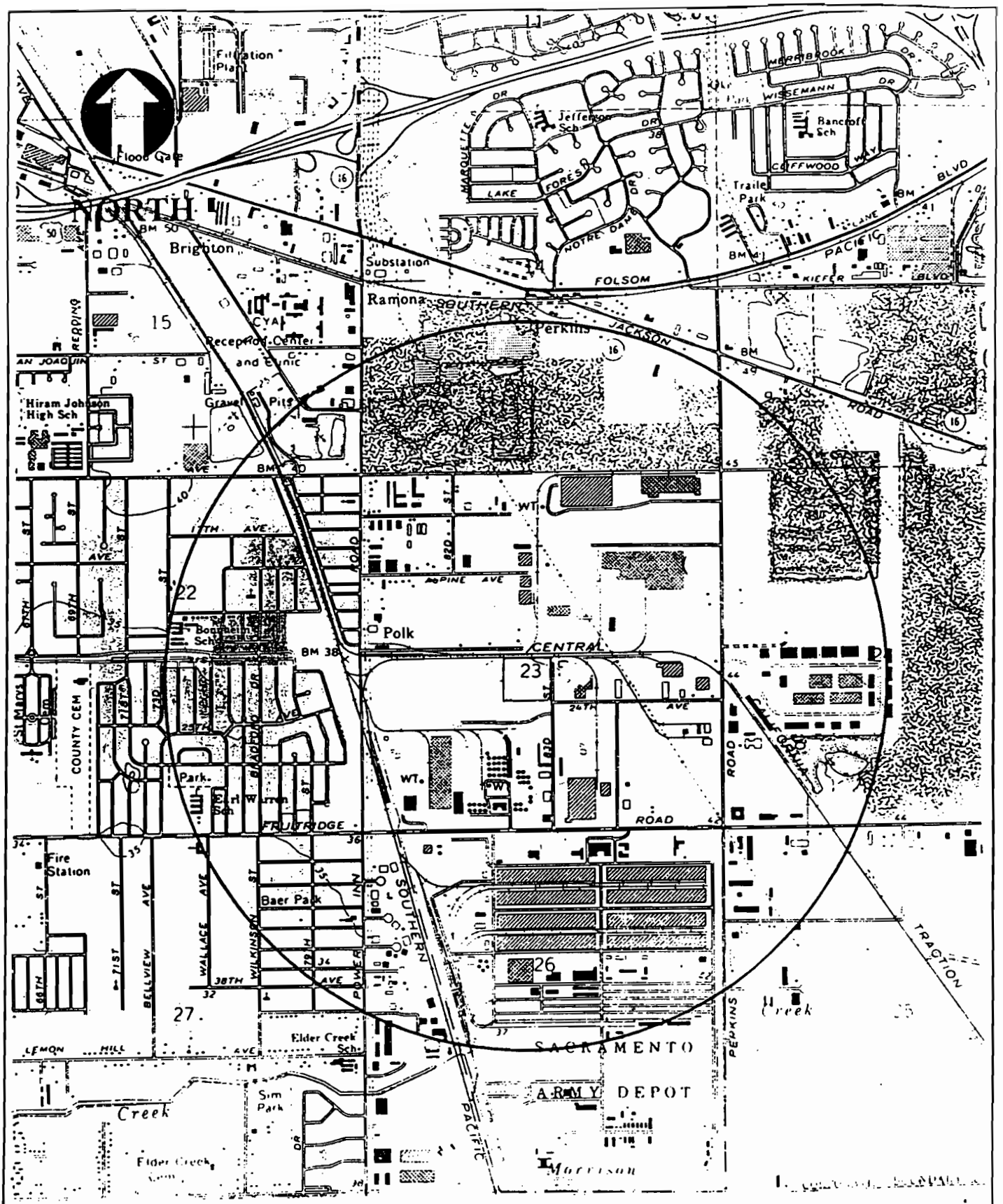

Project No. 93118.	JULY, 1993

Youngdahl & Associates, Inc.
El Dorado Hills, California (916) 933-0633

VICINITY MAP
PROCTOR & GAMBLE
COGENERATION FACILITY
Sacramento, California

FIGURE
1

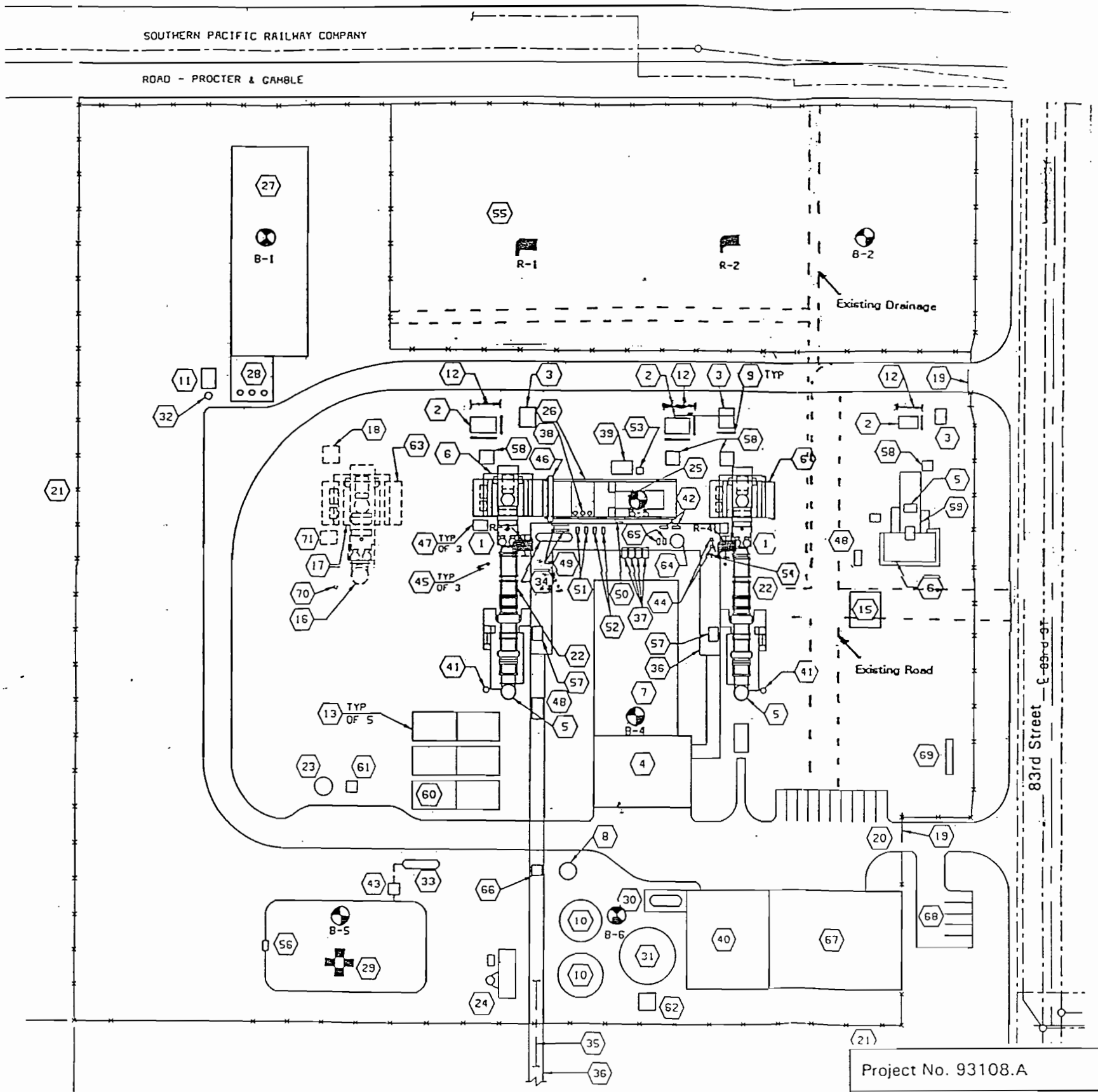

1. COMBUSTION TURBINE (2)
2. GENERATOR TRANSFORMER (3)
3. AUXILIARY TRANSFORMER (3)
4. CHILLER BUILDING
5. STACK (3)
6. INLET FILTER (3)
7. CONTROL/ADMIN BUILDING
8. CONDENSATE STORAGE TANK
9. TRANSFORMER FIREWALL (6)
10. DEMINERALIZED WATER STORAGE TANK (2)
11. CIRC WATER CHEMICAL FEED
12. COMBINATION TAKEOFF TOWER AND DISCONNECT SWITCH (3)
13. GAS COMPRESSORS (5)
14. STANDBY DIESEL GENERATOR
15. ELECT/CONT BUILDING FOR RELOCATED CT
16. FUTURE STACK
17. FUTURE COMBUSTION TURBINE
18. FUTURE GENERATOR BREAKER ENCLOSURE
19. GATE (2)
20. PAVED SITE ACCESS ROAD
21. SITE FENCE
22. HEAT RECOVERY STEAM GENERATOR (2)
23. AMMONIA STORAGE TANK
24. AUXILIARY BOILER
25. STEAM TURBINE
26. CONDENSER
27. COOLING TOWER
28. CIRCULATING WATER PUMP STRUCTURE
29. WASTEWATER POND
30. ACID STORAGE TANK
31. NEUTRALIZATION TANK
32. SODIUM HYPOCHLORITE TANK
33. OIL/WATER SEPARATOR
34. DEAERATOR
35. STEAM LINE TO PROCTER & GAMBLE
36. PIPE RACK
37. BOILER FEED PUMPS (4)
38. CONDENSATE PUMPS (3)
39. TURBINE LUBE OIL UNIT
40. WATER TREATMENT BUILDING
41. BOILER BLOWDOWN TANK (2)
42. AIR COMPRESSORS (2)
43. LIFT STATION
44. DESICCANT AIR DRYERS (2)
45. INLET GAS SCRUBBERS (3)
46. ST MAINTENANCE CRANE
47. NOX WATER INJECTION SKID (3)
48. CT WASH SKID (2)
49. AUX COOLING WATER HEAT EXCHANGERS (2)
50. CONDENSER AIR EJECTOR
51. CLOSED CYCLE COOLING WATER PUMPS (2)
52. CONDENSER VACUUM PUMPS (2)
53. LUBE OIL CONDITIONER
54. AIR RECEIVER
55. OWNER'S SUBSTATION
56. WASTEWATER POND DISCHARGE STRUCTURE
57. AMMONIA FLOW CONTROL SKID (2)
58. GENERATOR BREAKER ENCLOSURE (4)
59. RELOCATED COMBUSTION TURBINE
60. RELOCATED GAS COMPRESSOR FOR RELOCATED CT
61. AMMONIA TRANSFER PUMPS
62. NEUTRALIZATION BASIN PUMPS
63. FUTURE INLET FILTER
64. CLOSED COOLING WATER HEAD TANK
65. AUX BOILER FEED PUMPS (2)
66. CONDENSATE MAKEUP PUMPS
67. WAREHOUSE AND MAINTENANCE SHOP BUILDING
68. VISITOR PARKING
69. GAS METER STATION
70. FUTURE INLET GAS SCRUBBER
71. FUTURE NOX WATER INJECTION SKID

LEGEND:

- Geotechnical Boring
- Percolation Test
- Soil resistivity Test

Scale: 1" = 90'

Base Map Ref: Black & Veatch Subsurface Investigation Plan, Issued 5/28/93

Project No. 93108.A | JULY 1993

YOUNGDAHL & ASSOCIATES, INC.
El Dorado Hills, California (916) 933-0633

SITE PLAN
PROCTOR & GAMBLE
COGENERATION FACILITY
Sacramento, California

FIGURE 2.

LOGGED BY J.D. Mattey	SURFACE ELEVATION 40.1 -feet	BORING NO. 1
DRILL RIG Mobile B-61	BORING DIAMETER 7.75 -inch	DATE DRILLED 6/2/93

ELEVATION (FEET)	DEPTH	SAMPLE NO.	SAMPLE	GRAPHIC LOG	GEOTECHNICAL DESCRIPTION AND CLASSIFICATION	SOIL CLASSIFICATION	BLOW COUNT (BLOWS PER FOOT)	DRY DENSITY (PCF)	MOISTURE CONTENT (PERCENT)	PERCENT RELATIVE COMPACTION	ADDITIONAL TESTS
		1-1			Medium brown, sandy clayey SILT with gravel, damp, soft, Stiff, upper 6-8 inches is cultivated.	ML	10	98	15		PP PI GS
		1-2			Very stiff						UC GSD
		1-3			very hard hard, calcareous zone.		100	104	14		
35	5	1-4			Calcareous Zone	ML	42/100	107	18		
					Medium brown, sandy, clayey, SILT, damp, hard.						
30	10	1-5					40				
		1-6			Some voids present, some caliche veins.						
25	15	1-7			Very stiff.		24	80	18		
		1-8			Becoming very sandy.						
20	20	1-9					32				CU
		1-10			Abundant mica						
15	25	1-11			Gray brown, slightlly silty SAND, damp, medium dense.	SP	20				
		1-12									
10	30	1-13					16	81	16		CU
		1-14			Orange brown.						
5	35	1-15					28				
		1-16									
					Less silt Cobbles.	GP					
					Terminated at 37 feet on 6/2/93, begin ODEX Drilling 6/4/93. Gray brown, sandy GRAVEL, damp, hard						

Continued Next Page

YOUNGDAHL & ASSOCIATES, INC.
GEOTECHNICAL, ENVIRONMENTAL & CONSTRUCTION LAB

EXPLORATORY BORING LOG

PROCTER & GAMBLE
Sacramento, California

PROJECT NO.	DATE	FIGURE NO
93108.AE	June 1993	A-2

LOGGED BY **J.D. Mattey**	SURFACE ELEVATION **40.1** -feet	BORING NO. **1**
DRILL RIG **Mobile B-61**	BORING DIAMETER **7.75** -inch	DATE DRILLED **6/2/93**

ELEVATION (FEET) DEPTH	SAMPLE NO.	SAMPLE	GRAPHIC LOG	GEOTECHNICAL DESCRIPTION AND CLASSIFICATION	SOIL CLASSIFICATION	BLOW COUNT (BLOWS PER FOOT)	DRY DENSITY (PCF)	MOISTURE CONTENT (PERCENT)	PERCENT RELATIVE COMPACTION	ADDITIONAL TESTS
				No water encountered Gray brown, sandy GRAVEL, damp, hard.						
						100+				Standard P
-5 45										
-10 50										
-15 55				Gray brown, sandy SILT, damp, dense.	ML	100+				
-20 60										
-25 65										
						62/ 100				
-30 70				Boring terminated at 70 feet No water encountered.						
-35 75										

YOUNGDAHL & ASSOCIATES, INC.
GEOTECHNICAL, ENVIRONMENTAL & CONSTRUCTION LAB

EXPLORATORY BORING LOG

PROCTER & GAMBLE
Sacramento, California

PROJECT NO.	DATE	FIGURE NO
93108.AE	June 1993	A-3

LOGGED BY	J. D. Mattey	SURFACE ELEVATION	41.5 -feet	BORING NO.	2
DRILL RIG	Mobile B-61	BORING DIAMETER	7.75 -inch	DATE DRILLED	6/1/93

ELEVATION (FEET) DEPTH	SAMPLE NO.	SAMPLE	GRAPHIC LOG	GEOTECHNICAL DESCRIPTION AND CLASSIFICATION	SOIL CLASSIFICATION	BLOW COUNT (BLOWS PER FOOT)	DRY DENSITY (PCF)	MOISTURE CONTENT (PERCENT)	PERCENT RELATIVE COMPACTION	ADDITIONAL TESTS
40 / 0	2-1			Reddish brown, gravelly, sandy, clayey, SILT, damp, soft	ML	8	89	13		GSD GSD
	2-2			Upper 6 to 8 inches is cultivated.						
	2-3					28/100	111	15		
	2-4			Reddish brown, sandy, silty CLAY, damp, stiff.	CL					
5 / 35	2-5			Very stiff to hard, moist Abundant hard calcium carbonate. Rusty brown		100/7	99	17		
	2-6			Rusty brown, clayey SILT to silty SAND, moist, dense.	ML SM	47				
	2-7									
10 / 30	2-8					16	92	21		
	2-9			Medium dense.						
					ML					
15 / 25	2-10			Medium brown, sandy SILT, with rusy matter, moist, hard.		31				
	2-11									
20 / 20	2-12					24				
	2-13			Gray brown, silty SAND, damp, very stiff.	ML					
25 / 15	2-14					23				
	2-15			Very clayey.						
				Gray brown, slightly silty SAND, moist, medium dense.	SM SC	20				
30 / 10	2-16									
	2-17									
				Gray brown, sandy GRAVEL, moist, dense.	GM					
35 / 5				No sample		80				
				Terminated at 35.5 feet. No water encountered.						

YOUNGDAHL & ASSOCIATES, INC.
GEOTECHNICAL, ENVIRONMENTAL & CONSTRUCTION LAB

EXPLORATORY BORING LOG

PROCTER & GAMBLE
Sacramento, California

PROJECT NO.	DATE	FIGURE NO
93108.AE	June 1993	A-4

LOGGED BY	J.D. Mattey	SURFACE ELEVATION	41.8 -feet	BORING NO.	3
DRILL RIG	Mobile B-61	BORING DIAMETER	7.75 -inch	DATE DRILLED	6/2/93

ELEVATION (FEET) DEPTH	SAMPLE NO.	SAMPLE	GRAPHIC LOG	GEOTECHNICAL DESCRIPTION AND CLASSIFICATION	SOIL CLASSIFICATION	BLOW COUNT (BLOWS PER FOOT)	DRY DENSITY (PCF)	MOISTURE CONTENT (PERCENT)	PERCENT RELATIVE COMPACTION	ADDITIONAL TESTS
40 / 0	3-1			Medium brown, sandy, clayey SILT with some gravel damp, firm, Upper 6-8 inches is cultivated.	ML	16	96	13		PP GSD
	3-2			Very stiff						
	3-3			Moist, becomes very silty.		12	94	15		PI
	3-4									
5 / 35	3-5			Medium brown, silty CLAY, hard, moist, calcareous.	CL	90	101	21		
	3-6					56				
	3-7			Medium brown, clayey SILT with sand, moist, very stiff.	ML					
10 / 30	3-8			Very sandy, micaceous.		20	88	24		DS
15 / 25	3-9					16				CONS.
	3-10									
20 / 20	3-11			Medium brown with rusty mottles, silty SAND with some clay and mica, moist, medium dense.	SM GM	24				
	3-12									
25 / 15	3-13					21				
	3-14									
30 / 10	3-15					28				
	3-16			Very micacaous						
				Switch to Standard Pen. Switch to 5 inch Diameter ODEX Casing air drilling 6/3/93						
35 / 5				Gray brown, sandy GRAVEL, moist dense.	GP	100				
				Terminated at 33'3".						
				No water encountered.						

Continued Next Page

YOUNGDAHL & ASSOCIATES, INC.
GEOTECHNICAL, ENVIRONMENTAL & CONSTRUCTION LAB

EXPLORATORY BORING LOG

PROCTER & GAMBLE
Sacramento, California

PROJECT NO.	DATE	FIGURE NO
93108.AE	June 1993	A-5

LOGGED BY	J.D. Mattey	SURFACE ELEVATION	41.8 -feet	BORING NO.	3
DRILL RIG	Mobile B-61	BORING DIAMETER	7.75 -inch	DATE DRILLED	6/2/93

ELEVATION (FEET) DEPTH	SAMPLE NO.	SAMPLE	GRAPHIC LOG	GEOTECHNICAL DESCRIPTION AND CLASSIFICATION	SOIL CLASSIFICATION	BLOW COUNT (BLOWS PER FOOT)	DRY DENSITY (PCF)	MOISTURE CONTENT (PERCENT)	PERCENT RELATIVE COMPACTION	ADDITIONAL TESTS
0 / 45				Gray brown, sandy GRAVEL, damp, dense Elastic to 4" log dimension.						
-5 / 50										
-10 / 55				Rock fragments consisting of greenstone and quartz. Increase in sandy matrix						
-15 / 60				Gray brown, clayey, gravelly, sandy, SILT with some iron staining, very damp dense.	ML					
-20 / 65	3-17			Very sandy, slightly gravelly.		110				
-25 / 70	3-18 3-19			Medium brown, silty SAND, moist, dense. Terminated at 70 feet. No water encountered.	SM	100+				
-30 / 75										
-35										

YOUNGDAHL & ASSOCIATES, INC.
GEOTECHNICAL, ENVIRONMENTAL & CONSTRUCTION LAB

EXPLORATORY BORING LOG

PROCTER & GAMBLE
Sacramento, California

PROJECT NO.	DATE	FIGURE NO
93108.AE	June 1993	A-6

LOGGED BY J.D. Mattey	SURFACE ELEVATION 43.1 -feet	BORING NO. 4
DRILL RIG Mobile B-61	BORING DIAMETER 7.75 -inch	DATE DRILLED 6/1/93

ELEVATION (FEET) DEPTH	SAMPLE NO.	SAMPLE	GRAPHIC LOG	GEOTECHNICAL DESCRIPTION AND CLASSIFICATION	SOIL CLASSIFICATION	BLOW COUNT (BLOWS PER FOOT)	DRY DENSITY (PCF)	MOISTURE CONTENT (PERCENT)	PERCENT RELATIVE COMPACTION	ADDITIONAL TESTS
40 / 5	4-1			Medium brown, clayey sandy, SILT to sandy CLAY, very damp, soft.	CL	14	121	13		GSD PI
	4-2			Upper 6 to 8 inches is cultivated - stiff, slightly gravelly						
	4-3			Very stiff		18	89	17		VC
	4-4			Gray brown, silty CLAY with some organics (rootlets), very moist, very stiff.						
	4-5					100	108	18		Poor Samp
				Rusty brown, silty CLAY, damp, very stiff to hard, very calceous.	CL ML					
35 / 10	4-6			Orange brown, clayey SILT,/silty CLAY, moist, hard.	CL	61	84	24		
	4-7									
	4-8					31				
	4-9									
30 / 15	4-10			Medium brown slightly clayey SILT with rusty mottles, moist, medium dense to hard.	ML	44				
	4-11									
25 / 20	4-12					30				
	4-13			Very sandy						
20				Slightly clayey						
25 / 15	4-14			Medium brown, silty SAND, moist, dense.	SM	30				UU
	4-15									
30 / 10	4-16			Gray brown, slightly silty SAND, abundent mica, damp, medium dense.	SP	31				
	4-17									
35 / 5	4-18			Trace cobbles.		100/				
				No recovery (small bag from shoe)						
				Terminated at 35.5 feet						
				No water encountered.						

YOUNGDAHL & ASSOCIATES, INC.
GEOTECHNICAL, ENVIRONMENTAL & CONSTRUCTION LAB

EXPLORATORY BORING LOG

PROCTER & GAMBLE
Sacramento, California

PROJECT NO.	DATE	FIGURE NO
93108.AE	June 1993	A-7

LOGGED BY J.D. Mattey	SURFACE ELEVATION 42.1 -feet	BORING NO. 5
DRILL RIG Mobile B-61	BORING DIAMETER 7.75 -inch	DATE DRILLED 6/1/93

ELEVATION (FEET) DEPTH	SAMPLE NO.	SAMPLE	GRAPHIC LOG	GEOTECHNICAL DESCRIPTION AND CLASSIFICATION	SOIL CLASSIFICATION	BLOW COUNT (BLOWS PER FOOT)	DRY DENSITY (PCF)	MOISTURE CONTENT (PERCENT)	PERCENT RELATIVE COMPACTION	ADDITIONAL TESTS
40 / 0	5-1			Medium brown, fine, sandy, SILT with clay with dark brown mottles, damp, soft. Upper 6-8 inches is cultivated.	ML CL	29	104	7		GSD
	5-2			Very Stiff.						
	5-3					20	95	7		PI GSD
	5-4									
5 / 35	5-5			Medium to rusty brown, silty CLAY with abundent calcium carbonate and some limonite, damp, very stiff to hard.	CL	58/100	105	18		
	5-6			Medium brown, silty CLAY, very stiff.	CL	36				PP3.5
	5-7									
10 / 30	5-8					41	84	26		
	5-9			Medium brown clayey, silty SAND, damp, very stiff.	SM					
15 / 25	5-10			Medium brown, sandy SILT, damp, very stiff.	ML	30				
	5-11			Slight trace carbonized root fragments.						
20 / 20	5-12			Medium brown, very silty SAND with trace calcium carbonite, damp, very dense.	SP	44				
	5-13									
25 / 15	5-14			Less silt, medium dense.		24				
	5-15									
30 / 10	5-16			Gray brown slightly silty SAND with rusty mottles, moist, medium dense.	SP	24				
	5-17									
35 / 5	5-18			Abundent mica, dense.		15				
				Gray brown, sandy GRAVEL, moist dense.	GP					

Continued Next Page

EXPLORATORY BORING LOG

YOUNGDAHL & ASSOCIATES, INC.
GEOTECHNICAL, ENVIRONMENTAL & CONSTRUCTION LAB

PROCTER & GAMBLE
Sacramento, California

PROJECT NO.	DATE	FIGURE NO
93108.AE	June 1993	A-8

LOGGED BY	J.D. Mattey	SURFACE ELEVATION	42.1 -feet	BORING NO.	5
DRILL RIG	Mobile B-61	BORING DIAMETER	7.75 -inch	DATE DRILLED	6/1/93

ELEVATION (FEET) DEPTH	SAMPLE NO.	SAMPLE	GRAPHIC LOG	GEOTECHNICAL DESCRIPTION AND CLASSIFICATION	SOIL CLASSIFICATION	BLOW COUNT (BLOWS PER FOOT)	DRY DENSITY (PCF)	MOISTURE CONTENT (PERCENT)	PERCENT RELATIVE COMPACTION	ADDITIONAL TESTS
0		N		No recovery		100+				
45				Bag sample						
-5				No recovery.						
50				Refusal on medium gravel. Bottom of hole 47 feet. No water encountered.						
-10										
55										
-15										
60										
-20										
65										
-25										
70										
-30										
75										
-35										

YOUNGDAHL & ASSOCIATES, INC.
GEOTECHNICAL, ENVIRONMENTAL & CONSTRUCTION LAB

EXPLORATORY BORING LOG

PROCTER & GAMBLE
Sacramento, California

PROJECT NO.	DATE	FIGURE NO
93108.AE	June 1993	A-9

LOGGED BY J.D. Mattey	SURFACE ELEVATION 42.4 -feet	BORING NO. 6
DRILL RIG Mobile B-61	BORING DIAMETER 7.75 -inch	DATE DRILLED 6/2/93

ELEVATION (FEET) DEPTH	SAMPLE NO.	SAMPLE	GRAPHIC LOG	GEOTECHNICAL DESCRIPTION AND CLASSIFICATION	SOIL CLASSIFICATION	BLOW COUNT (BLOWS PER FOOT)	DRY DENSITY (PCF)	MOISTURE CONTENT (PERCENT)	PERCENT RELATIVE COMPACTION	ADDITIONAL TESTS
40 / 0	6-1			Medium brown gravelly, sandy, SILT, damp, loose, Upper 6-8 inches culltivated.	ML	20	97	5		GSD PI
	6-2			Very stiff.						
	6-3			Abundant root fragments.		30/100+	93	13		GSD PI
	6-4									
5				Medium brown, sandy, silty CLAY, with abundant limorite, damp, very stiff to hard, no effervescense.	CL					
	6-5					100+	101	24		
35 / 5	6-6									
	6-7			Medium brown, slightly sandy, clayey SILT, micromicaceaus, slightly borous, slightly calecereous, damp, hard.	ML	70	91	25		
10	6-8									
	6-9					47				CONSOL.
	6-10			Slightly porous, micaceous.						
30 / 10										
15	6-11					43				
	6-12			Very sandy Possible rootlates.						
25 / 15										
20	6-13			Medium brown, slightly clayey, fine, sandy, SILT medium damp, dense.	SM	27	85	32		CU
	6-14									
20 / 20										
25	6-15					39				
	6-16									
15 / 25										
30	6-17			Gray brown, slightly silty SAND, very damp, medium dense.	SP SM	22	81	15		
	6-18			Very silty						
10 / 30										
35						100+				Standard P
5 / 35				Bag sample Cobbles Boring terminated at 35.75 feet No water encountered.						

YOUNGDAHL & ASSOCIATES, INC.
GEOTECHNICAL, ENVIRONMENTAL & CONSTRUCTION LAB

EXPLORATORY BORING LOG

PROCTER & GAMBLE
Sacramento, California

PROJECT NO.	DATE	FIGURE NO
93108.AE	June 1993	A-10

MAJOR DIVISIONS			SYMBOLS	TYPICAL NAMES
COARSE GRAINED SOILS More than Half > #200 sieve	GRAVELS MORE THAN HALF COARSE FRACTION IS LARGER THAN NO. 4 SIEVE	CLEAN GRAVELS WITH LITTLE OR NO FINES	GW	WELL GRADED GRAVELS, GRAVEL-SAND MIXTURES
			GP	POORLY GRADED GRAVELS, GRAVEL-SAND MIXTURES
		GRAVELS WITH OVER 12% FINES	GM	SILTY GRAVELS, POORLY GRADED GRAVEL - SAND - SILT MIXTURES
			GC	CLAYEY GRAVELS, POORLY GRADED GRAVEL - SAND CLAY MIXTURES
	SANDS MORE THAN HALF COARSE FRACTION IS SMALLER THAN NO. 4 SIEVE	CLEAN SANDS WITH LITTLE OR NO FINES	SW	WELL GRADED SANDS, GRAVELLY SANDS
			SP	POORLY GRADED SANDS, GRAVELLY SANDS
		SANDS WITH OVER 12% FINES	SM	SILTY SANDS, POORLY GRADED SAND-SILT MIXTURES
			SC	CLAYEY SANDS, POORLY GRADED SAND - CLAY MIXTURES
FINE GRAINED SOILS More than Half < #200 sieve	SILTS AND CLAYS LIQUID LIMIT LESS THAN 50		ML	INORGANIC SILTS AND VERY FINE SANDS, ROCK FLOUR, SILTY OR CLAYEY FINE SANDS, OR CLAYEY SILTS WITH SLIGHT PLASTICITY
			CL	INORGANIC CLAYS OF LOW TO MEDIUM PLASTICITY, GRAVELLY CLAYS, SANDY CLAYS, SILTY CLAYS, LEAN CLAYS
			OL	ORGANIC CLAYS AND ORGANIC SILTY CLAYS OF LOW PLASTICITY
	SILTS AND CLAYS LIQUID LIMIT GREATER THAN 50		MH	INORGANIC SILTS, MICACEOUS OR DIATOMACIOUS FINE SANDY OR SILTY SOILS, ELASTIC SILTS
			CH	INORGANIC CLAYS OF HIGH PLASTICITY, FAT CLAYS
			OH	ORGANIC CLAYS OF MEDIUM TO HIGH PLASTICITY, ORGANIC SILTS
HIGHLY ORGANIC SOILS			Pt	PEAT AND OTHER HIGHLY ORGANIC SOILS

UNIFIED SOIL CLASSIFICATION SYSTEM

PLASTICITY CHART

USED FOR CLASSIFICATION OF FINE GRAINED SOILS

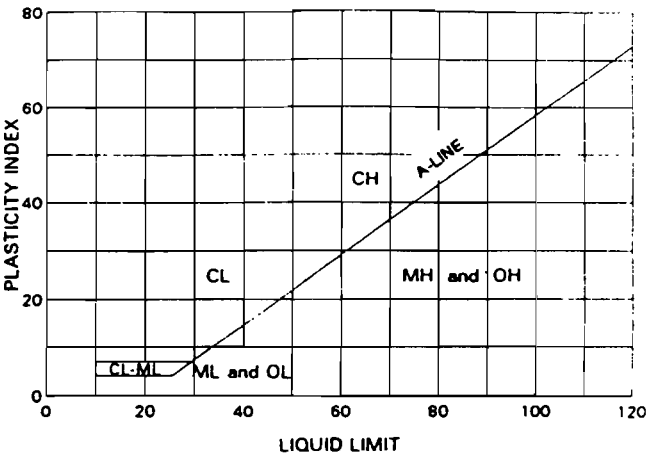

SOIL GRAIN SIZE

U.S. STANDARD SIEVE

6"	3"	3/4"	4	10	40	200		
BOULDERS	COBBLES	GRAVEL		SAND			SILT	CLAY
		COARSE	FINE	COARSE	MEDIUM	FINE		
150	75	19.0	4.75	2.00	0.425	0.075		0.002

SOIL GRAIN SIZE IN MILLIMETERS

Consol	Consolidation		Shear Strength, psf	
LL	Liquid Limit (in %)		Confining Pressure, psf	
PL	Plastic Limit (in %)	CU	2630 (240)	Consolidated Undrained Triaxial
PI	Plasticity Index	DS	3740 (960)	Consolidated Drained Direct Shear
▣	Bag Sample	PP	1320	Pocket Penetrometer
◫	Drive, No Sample Collected	UC	4200	Unconfined Compression
◪	Sample Collected, Not Tested	TVS	500	Torvane Shear
◪	2 1/2" O.D. Mod. Calif. Sample, Tested	CP	Compaction Test (ASTM D1557)	
▯	Standard Penetration Test	EI	Expansion Index	
⊙	Sample Attempt With No Recovery	Perm	Permeability	
▽	Water Level At Time Of Drilling	GSD	Grain Size Distribution	
▼	Water Level After Drilling	PH & R	Corrosivity	

KEY TO TEST DATA

YOUNGDAHL & ASSOCIATES, INC.
GEOTECHNICAL, ENVIRONMENTAL & CONSTRUCTION LAB

Job No: 93108.AE

Date: June 1993

SOIL CLASSIFICATION CHART AND PIT LOG LEGEND

PROCTER & GAMBLE
Sacramento, California

FIGURE NO A-11

APPENDIX B

Laboratory Analysis

Modified Proctor Tests

Atterberg Limits Tests

Grain Size Distribution Tests

Direct Shear Test

Unconfined Compression Tests

Triaxial Tests

Percolation Tests

Resistivity Survey

Introduction

The contents of this appendix shall be integrated with the geotechnical engineering study of which it is a part. They shall not be used in whole or in part as a sole source for information or recommendations regarding the subject site.

Laboratory Analysis

The laboratory testing of undisturbed samples was directed towards determining the physical and engineering properties of the soil underlying the site.

Moisture content and dry density tests were performed on relatively undisturbed soil samples to determine the consistency of the soil and the moisture variation throughout the studied soil profile. The results of the laboratory testing of relatively undisturbed soil samples are presented on the "Logs of Exploratory Borings", Figure Nos. A-2 through A-10, Appendix A.

One Modified Proctor test (ASTM D1557-78) was performed on the near surface materials and the results of this testing are presented on Figure No. B-1.

Seven Hydrometer Tests (ASTM D422-63) and three Sieve Analysis tests (ASTM D422-63) were performed to determine the soil classification of the materials encountered. The results of this testing are presented on Figure Nos. B-5, B-5, B-10, B-12, B-13, B-16, B-21, B-23, B-24, and B-26, this Appendix.

Seven Atterberg Limits tests (ASTM D4318-84) were performed on representative samples of the silty CLAY (CL) and clayey SILT (ML) soils, in order to determine Plasticity Index (PI) and potential for expansion. The results of these tests are presented on Figure Nos. B-2, B-11, B-14, B-17, B-22, B-25, and B-27, this appendix.

A Direct Shear test (ASTM D3080-90), two Unconfined Compression tests, one Triaxial Shear Test, unconsolidated and undrained (ASTM D2850-87), and three Triaxial Shear Test, consolidated and undrained (ASTM 4767-88) were performed on representative samples of the near surface soils in order to provide soil strength data for design of foundations. The results of these tests are presented on Figure Nos. B-4, B-6&7, B-8&9, B-15, B-18, B-19&20, and B-28&29, this appendix.

Field percolation tests were performed in the area of the proposed pond. The results of these tests are presented in Figure No. B-30, this appendix.

"R"-Value testing (California Test Method 301-F) was performed on a representative sample of the near-surface soils for design of asphaltic concrete pavement sections. The results of this testing is presented on Figure Nos. B-31 and B-32, this appendix.

Resistivity tests were performed by Gasch & Associates, Geophysists. The results of this testing are presented following the last figure in this appendix.

COMPACTION TEST REPORT

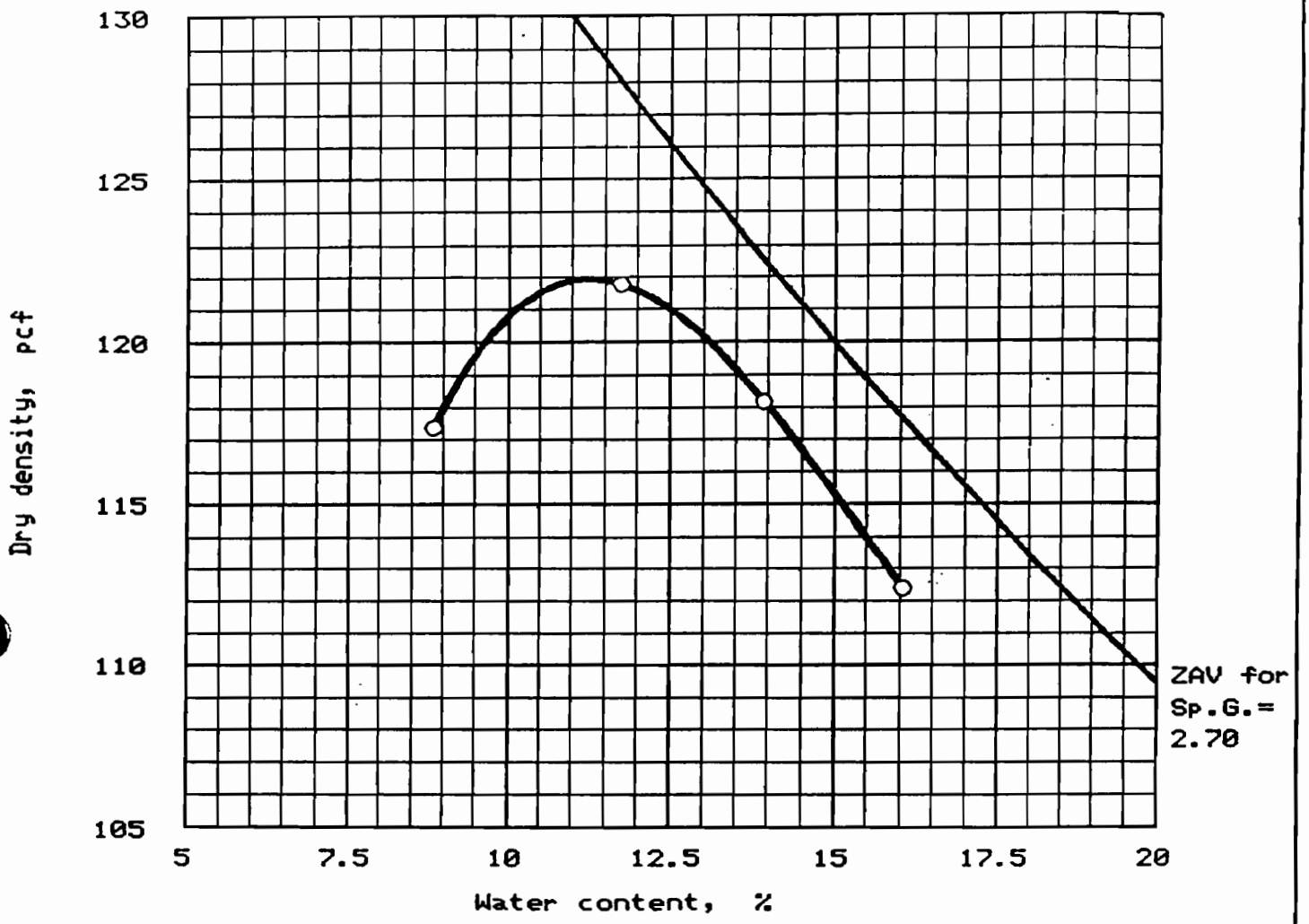

"Modified" Proctor, ASTM D 1557, Method A

Elev/ Depth	Classification		Nat. Moist.	Sp.G.	LL	PI	% > No.4	% < No.200
	USCS	AASHTO						
	SM-ML		11.8 %	2.70				

TEST RESULTS	MATERIAL DESCRIPTION
Optimum moisture = 11.2 % Maximum dry density = 121.9 pcf	Yellowish brown f-m sandy SILT to silty SAND

Project No.: 93018.e
Project: Procter & Gamble Co-Generation Plant
Location: Composite of R-1 & R-2

Date: 6-08-93

Remarks:

COMPACTION TEST REPORT

Figure B.1

Project Name	PROCTO & GAMBLE		Date	6-4-93
Soil Sample Description	1-1 CL-ML			
Location	BORING NO. 1			
Sample No.	1-1	Sample Depth	1.0'	

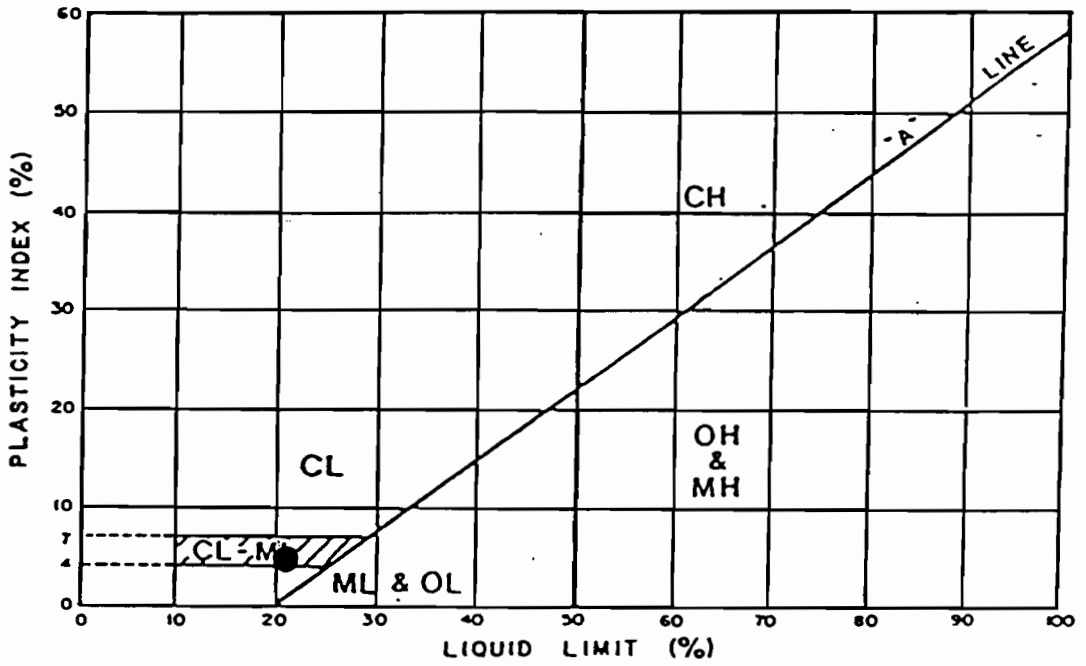

TEST RESULTS

Liquid Limit %	21
Plastic Limit %	16
Plasticity Index	5
Group Symbol	CL/ML

Project No. 93108.E

YOUNGDAHL & ASSOCIATES, INC.
GEOTECHNICAL, ENVIRONMENTAL & CONSTRUCTION LAB

ATTERBERG LIMITS TEST
(ASTM D4318-84)

FIGURE
B-2

GRAIN SIZE DISTRIBUTION TEST REPORT

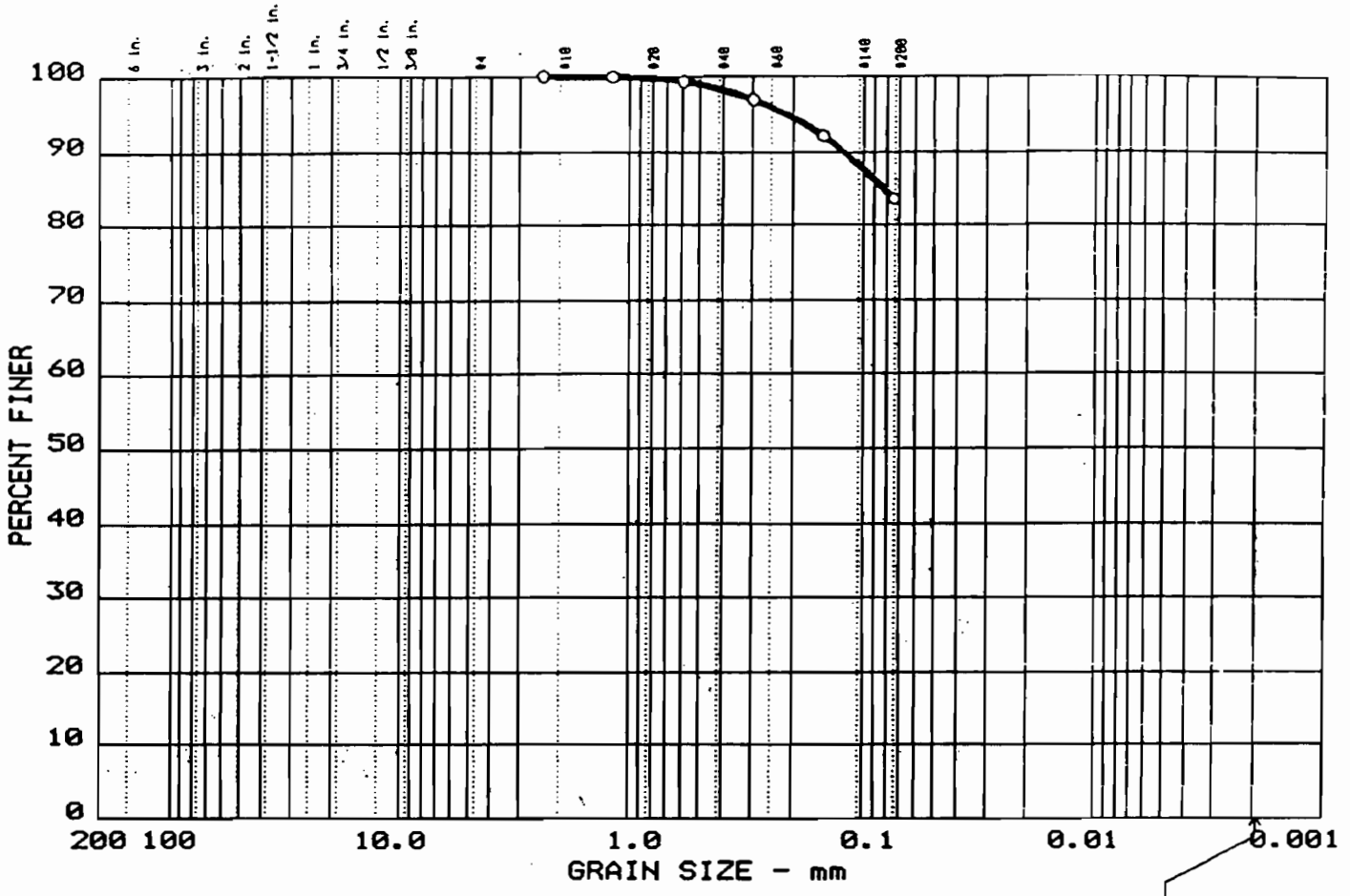

	Test	% +3"	% GRAVEL	% SAND	% SILT	% CLAY
O	4	0.0	0.0	16.4	83.6	

	LL	PI	D_{85}	D_{60}	D_{50}	D_{30}	D_{15}	D_{10}	C_c	C_u
O	21	5	0.08							

MATERIAL DESCRIPTION	USCS	AASHTO
O Yellowish brown fine sandy clayey SILT	CL-ML	A-4(1.7)

Project No.: 93108.AE
Project: Procter & Gamble Co-generation Plant
O Location: 1-1 @ 1.0'

Date: 6-12-93

Remarks:

GRAIN SIZE DISTRIBUTION TEST REPORT

UNCONFINED COMPRESSION TEST

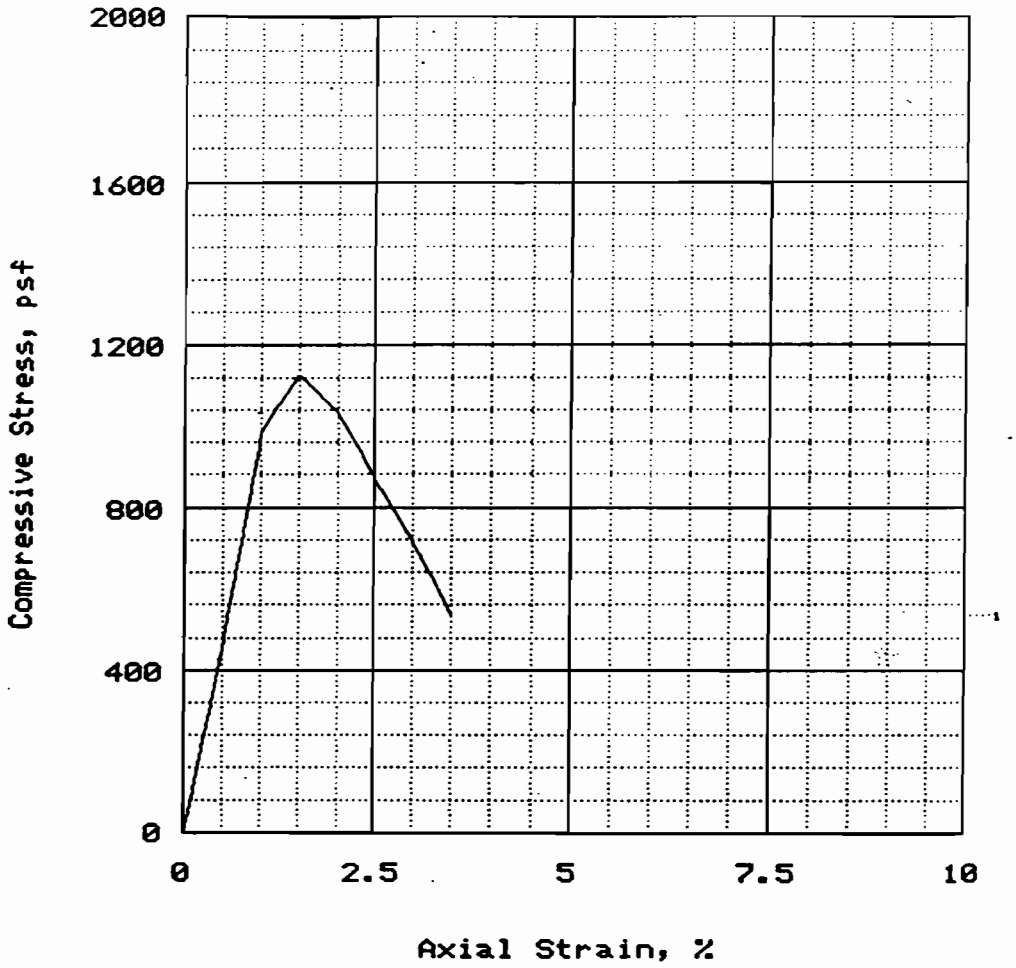

Sample number:	1			
Unconfined strength, psf	1126			
Undrained shear strength, psf	563			
Rate of strain, %/min	1.500			
Water content, %	14.8			
Void ratio	0.6934			
Saturation, %	56.7			
Dry density, pcf	97.7			
Specimen diameter, in	1.94			
Specimen height, in	4.00			

Description: Reddish brown fine sandy clayey SILT

LL = 21	PL = 16	PI = 5	GS = 2.65	Type: Undisturbed

Project No.: 93108.AE
Date: 6-12-93
Remarks:

Client: Walsh Construction

Project: Procter & Gamble Co-Generation Plant
Location: 1-2 @ 1.5'

UNCONFINED COMPRESSION TEST

Figure B-4

GRAIN SIZE DISTRIBUTION TEST REPORT

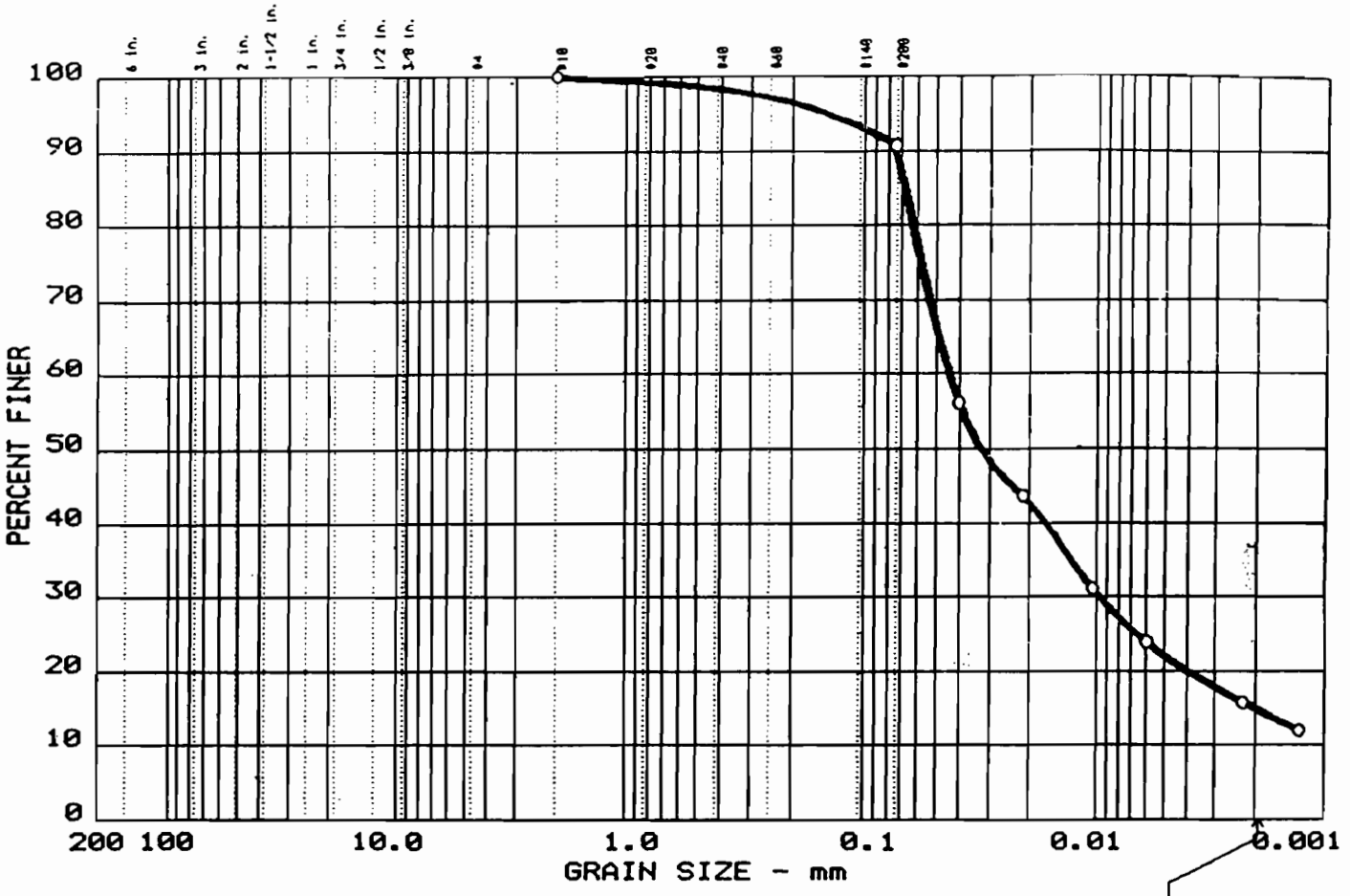

	Test	% +3"	% GRAVEL	% SAND	% SILT	% CLAY
○	7	0.0	0.0	9.3	75.8	14.9

	LL	PI	D_{85}	D_{60}	D_{50}	D_{30}	D_{15}	D_{10}	C_c	C_u
○					0.03	0.010	0.0020			

MATERIAL DESCRIPTION	USCS	AASHTO
○ Yellowish brown fine sandy clayey SILT	ML	A-4(0.0)

Project No.: 93108.AE
Project: Procter & Gamble Co-Generation Plant
○ Location: 1-3 @ 3.0'

Date: 6-12-93

Remarks:

GRAIN SIZE DISTRIBUTION TEST REPORT
YOUNGDAHL & ASSOCIATES, INC.

Figure B-5

TRIAXIAL SHEAR TEST REPORT

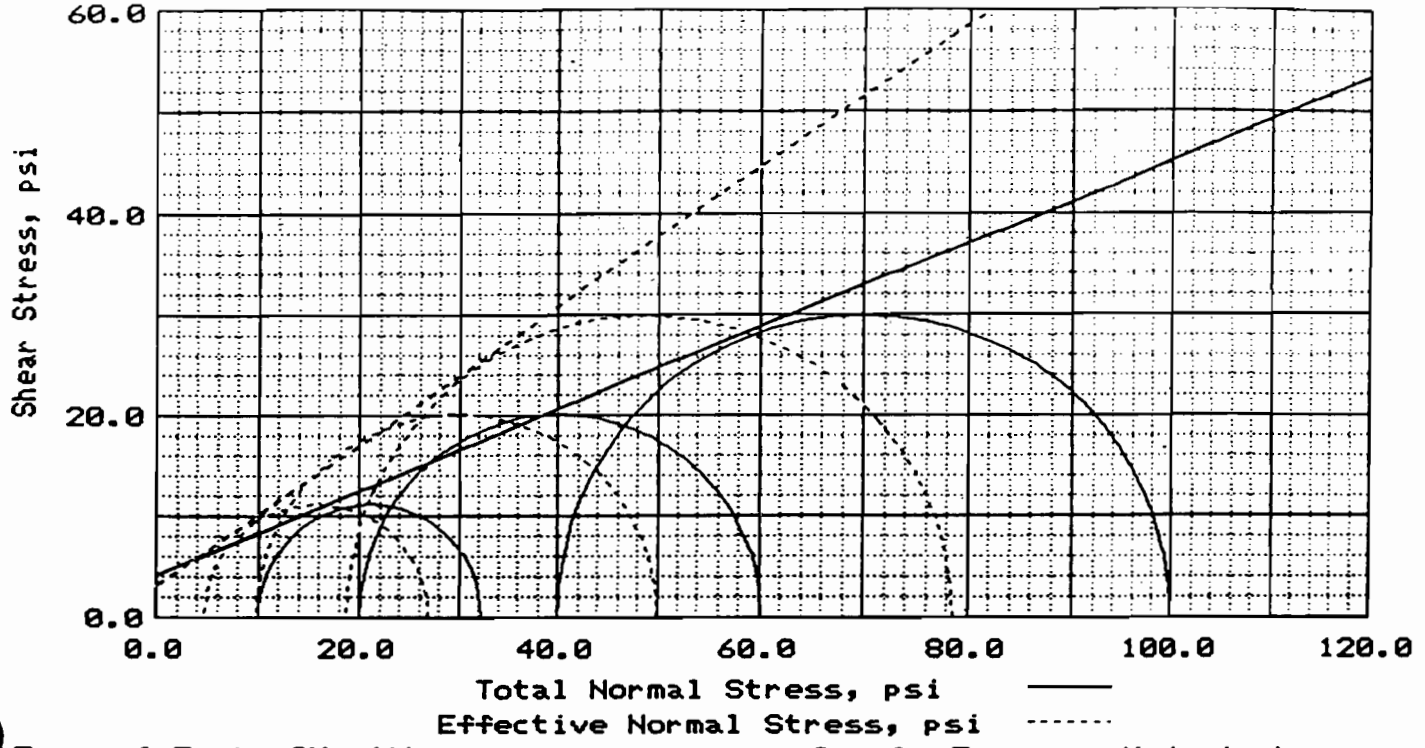

Type of Test: CU with pore pressures Sample Type: undisturbed

No.	FLUID PRESS. psi		MAX. STRENGTH psi		ULT. STRENGTH psi		PRINCIPAL STRESSES AT FAILURE psi	
	Cell	Back	Deviator	Pore	Deviator	Pore	$\bar{\sigma}_1$	$\bar{\sigma}_3$
1	70	60	22.3	65.4			26.9	4.6
2	80	60	40.2	70.2			50.0	9.8
3	100	60	59.8	81.3			78.5	18.7

No.	CONSOLIDATED SAMPLE PARAMETERS						
	% Water Content	Dry Dens. pcf	Satur-ation	Void Ratio	Diameter in	Height in	Strain rate %/min.
1	33.9	80.5	85.2 %	1.0539	1.91	4.11	0.515
2	33.9	83.6	91.6 %	0.9799	1.89	4.06	0.261
3	33.9	86.7	99.0 %	0.9071	1.87	4.01	0.276

MOHR-COULOMB STRENGTH PARAMETERS

	Total	Effective
Strength intercept, c=	4.1 psi	3.1 psi
Friction angle, ϕ =	22.3 deg	34.7 deg
Tangent ϕ =	0.41	0.69

MATERIAL DESCRIPTION

Yellowish brown
fine sandy SILT
LL= PI=

CLIENT: Walsh Construction

PROJECT: Procter & Gamble Co-Generation Plant
LOCATION: 1-9 @ 20.5'

DATE: 6-14-93
File: 93108AE4
REMARKS:
Multi-stage test

TRIAXIAL SHEAR TEST REPORT

Proj. No.: 91308.AE

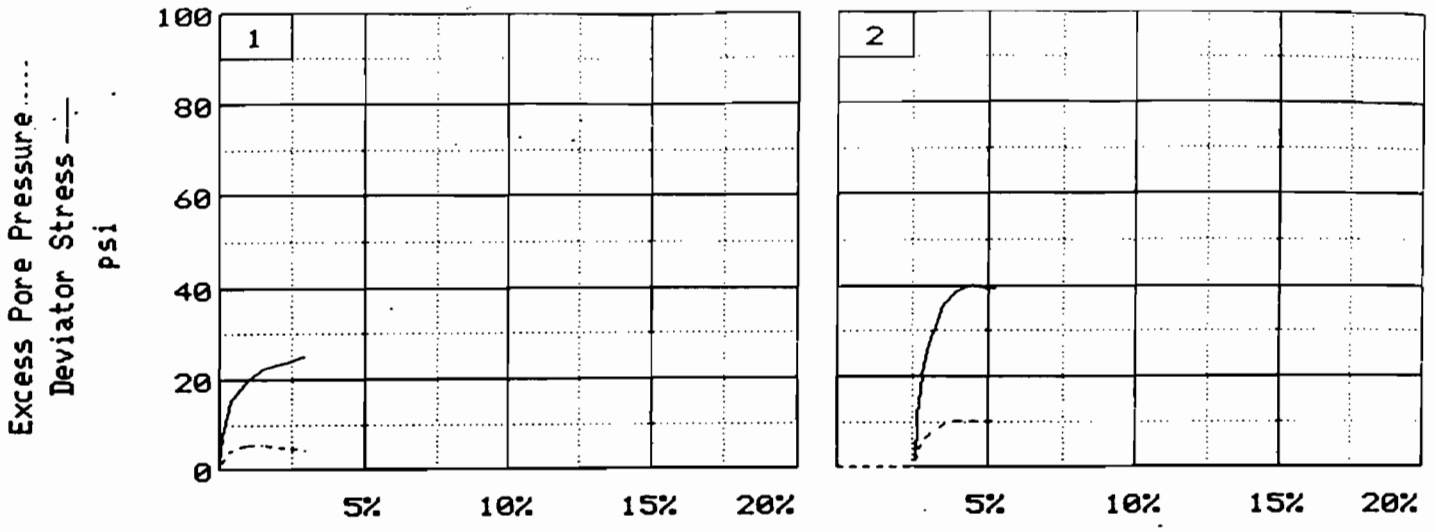

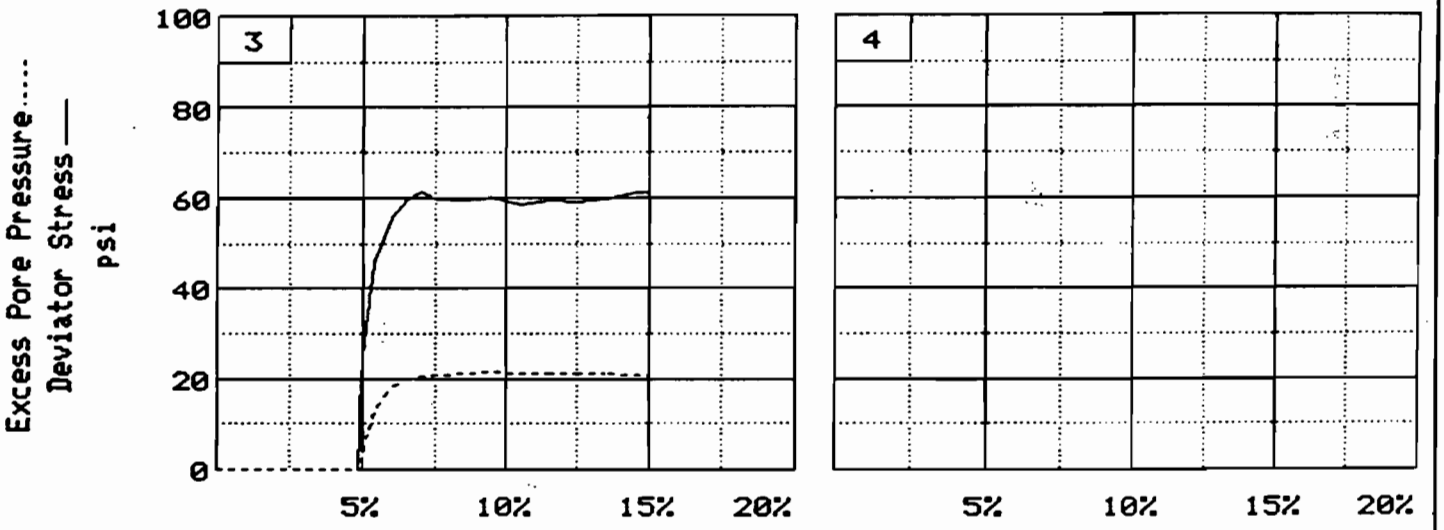

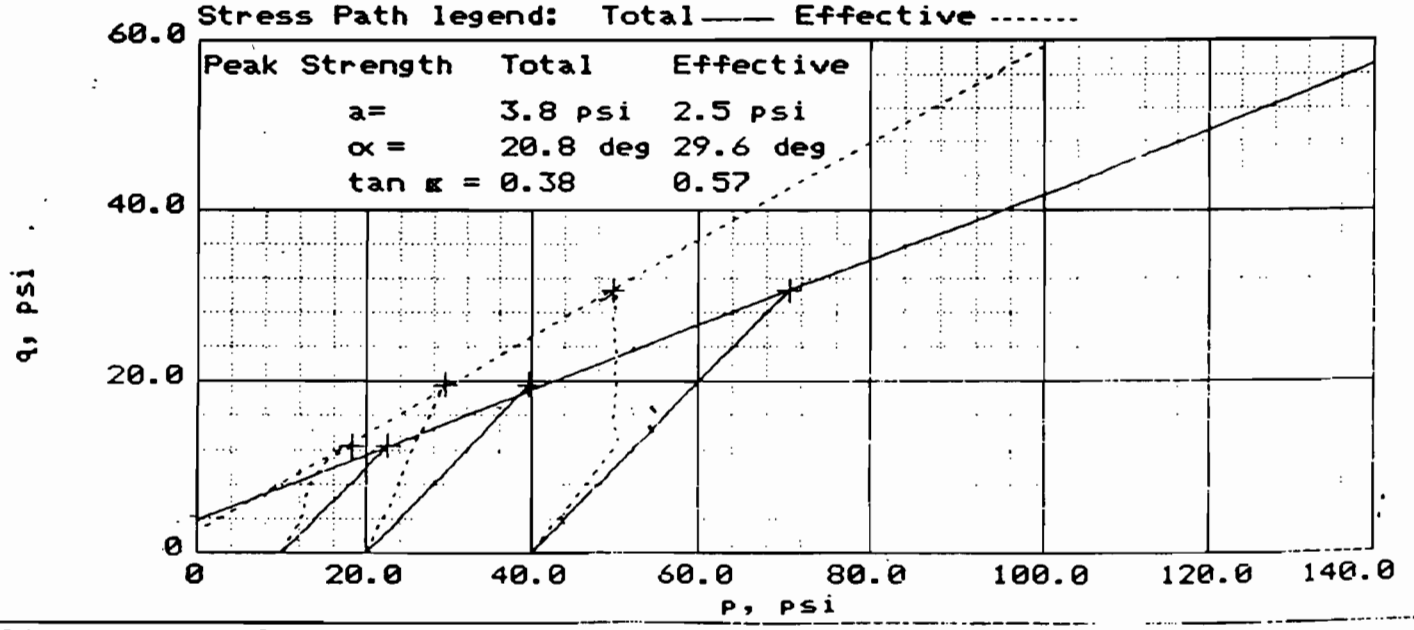

Client: Walsh Construction

Project: Procter & Gamble Co-Generation Plant

Location: 1-9 @ 20.5'

TRIAXIAL SHEAR TEST REPORT

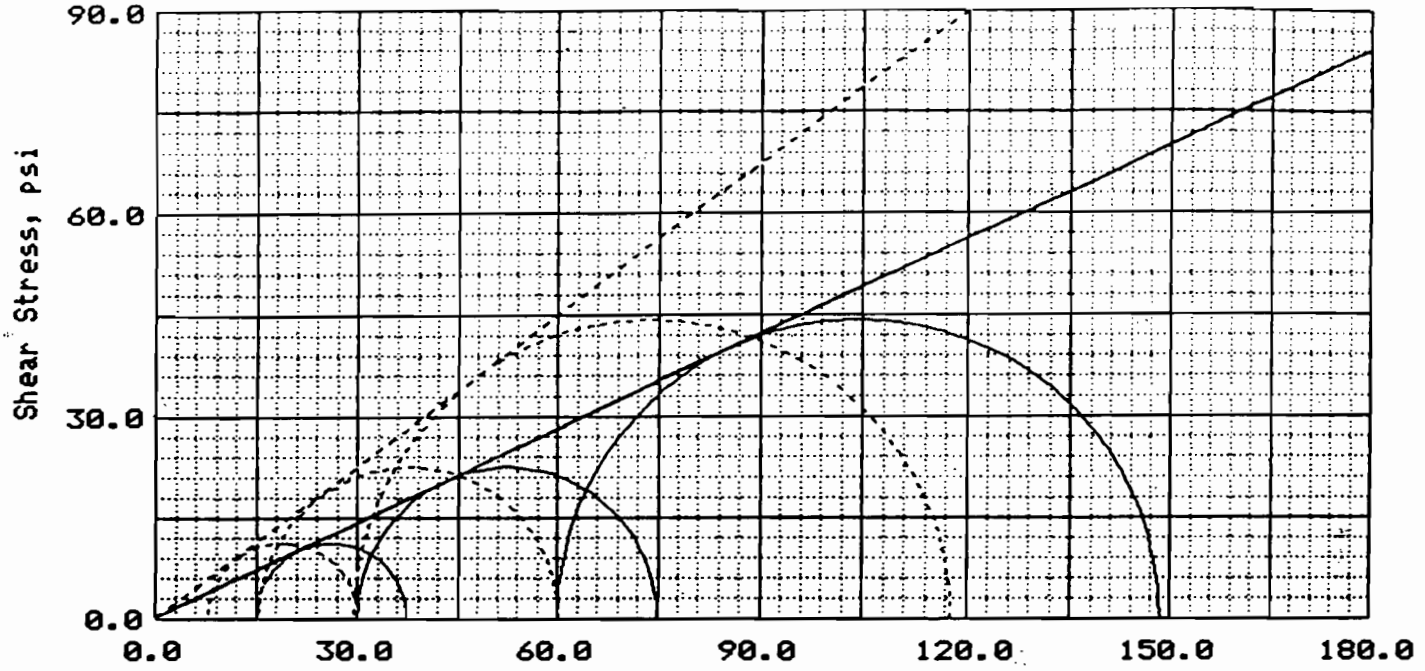

Type of Test: CU with pore pressures Sample Type: Undisturbed

No.	FLUID PRESS. psi		MAX. STRENGTH psi		ULT. STRENGTH psi		PRINCIPAL STRESSES AT FAILURE psi	
	Cell	Back	Deviator	Pore	Deviator	Pore	$\bar{\sigma}_1$	$\bar{\sigma}_3$
1	65	50	22.3	57.3			30.0	7.7
2	80	50	44.9	64.7			60.2	15.3
3	110	50	88.4	80.6			117.8	29.4

No.	CONSOLIDATED SAMPLE PARAMETERS						
	% Water Content	Dry Dens. pcf	Satur-ation	Void Ratio	Diameter in	Height in	Strain rate %/min.
1	32.8	83.3	84.3 %	1.0830	1.88	4.04	0.248
2	32.8	87.2	92.2 %	0.9905	1.85	3.98	0.289
3	32.8	90.6	99.8 %	0.9149	1.83	3.93	0.295

MOHR-COULOMB STRENGTH PARAMETERS

	Total	Effective
Strength intercept, c=	0.2 psi	0 psi
Friction angle, ϕ =	25.0 deg	36.8 deg
Tangent ϕ =	0.47	0.75

MATERIAL DESCRIPTION

Yellowish brown
sl. silty fine SAND
LL= PI=

CLIENT: Walsh Construction

PROJECT: Procter & Gamble Co-Generation Plant
LOCATION: 1-13 @ 30.5

DATE: 6-12-93
File: 93108AE3
REMARKS:
Multi-stage test

TRIAXIAL SHEAR TEST REPORT

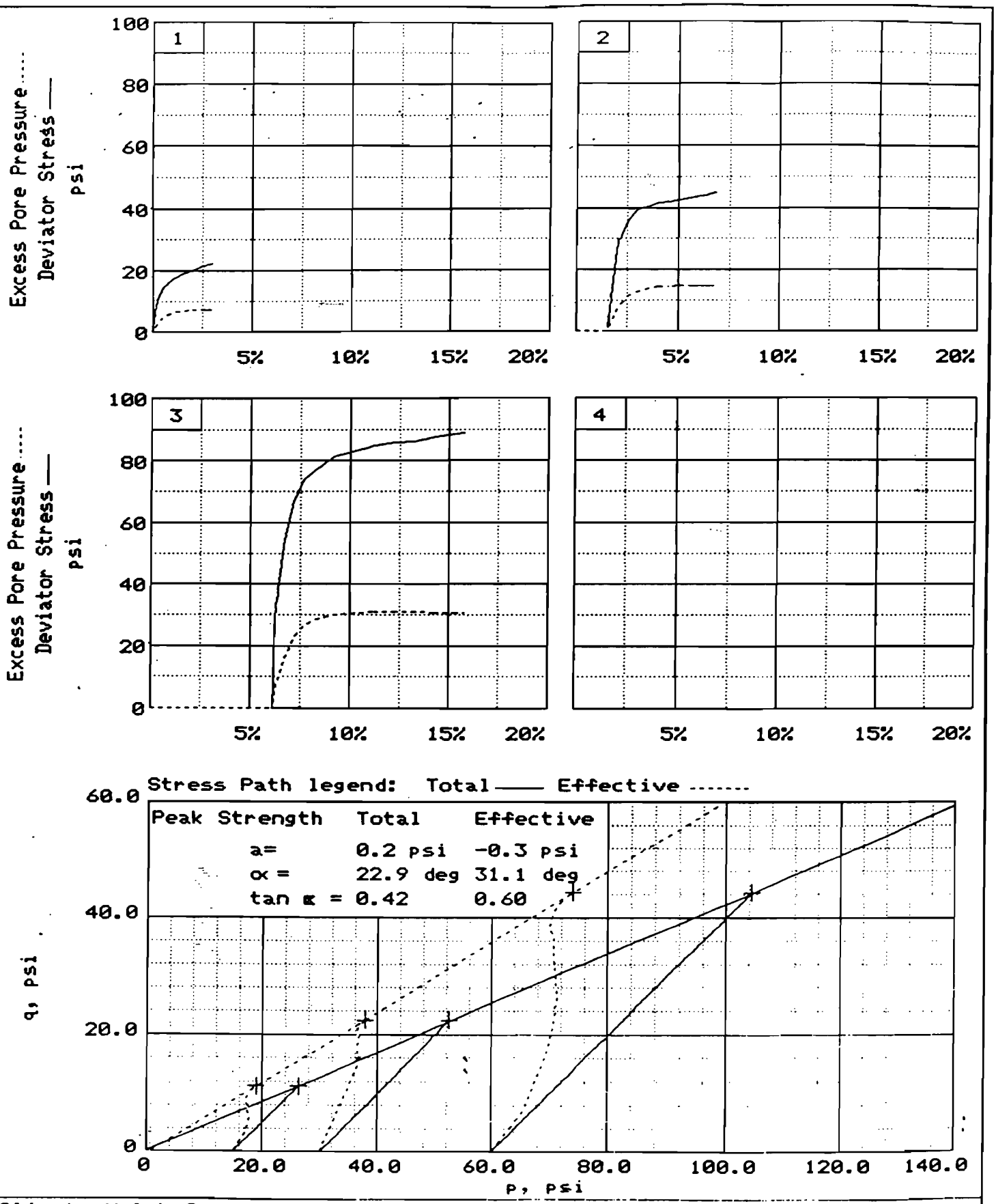

Client: Walsh Construction

Project: Procter & Gamble Co-Generation Plant

Location: 1-13 @ 30.5

GRAIN SIZE DISTRIBUTION TEST REPORT

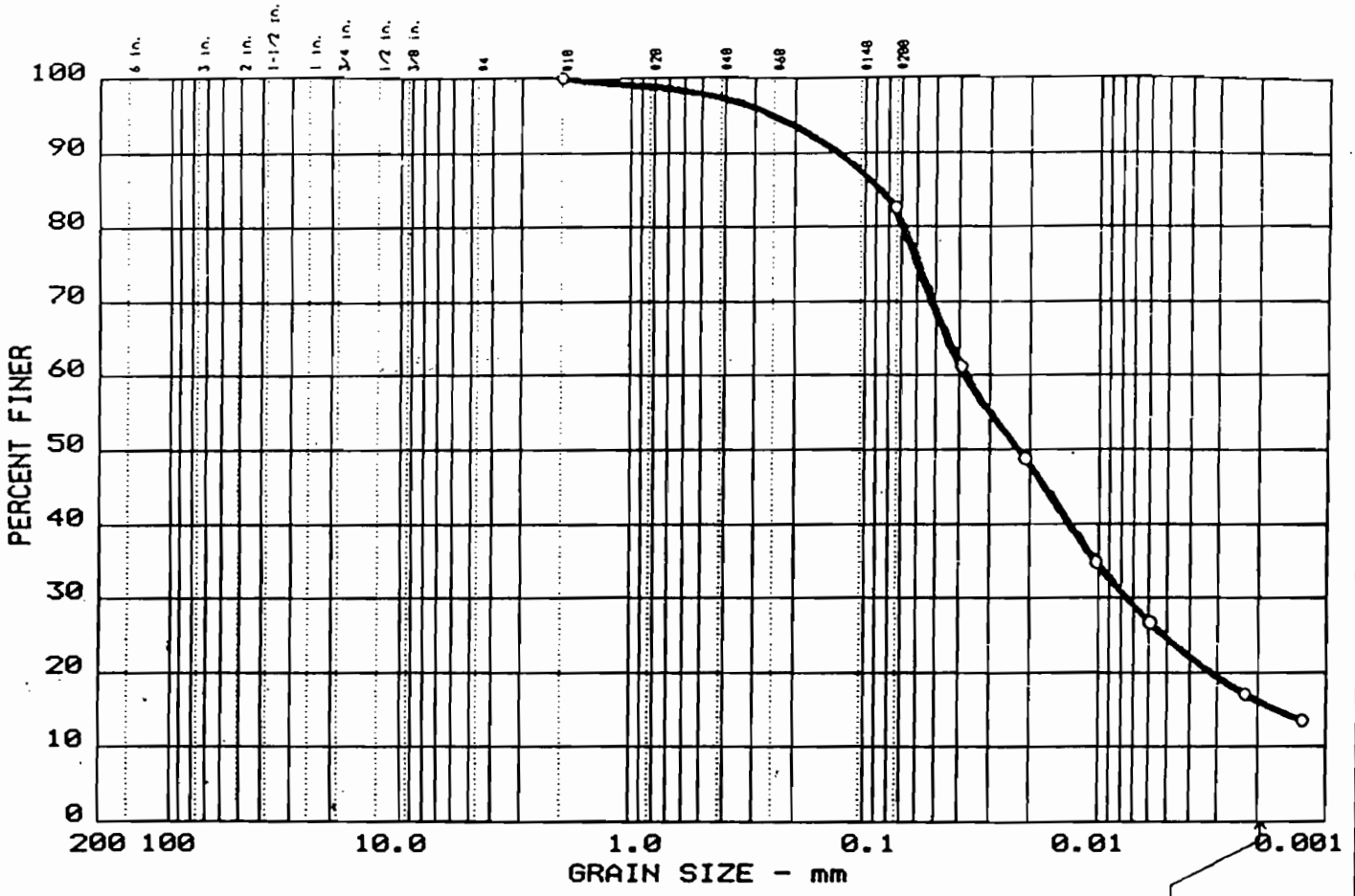

	Test	% +3"	% GRAVEL	% SAND	% SILT	% CLAY
○	11	0.0	0.0	17.4	66.5	16.1

	LL	PI	D_{85}	D_{60}	D_{50}	D_{30}	D_{15}	D_{10}	C_c	C_u
○			0.09		0.02	0.007	0.0016			

MATERIAL DESCRIPTION	USCS	AASHTO
○ Yellowish brown fine sandy clayey SILT	ML	A-4(0.0)

Project No.: 93108.AE
Project: Procter & Gamble Co-Generation Plant
Location: 2-1@ 1.0'

Date: 6-12-93

Remarks:

GRAIN SIZE DISTRIBUTION TEST REPORT
YOUNGDAHL & ASSOCIATES, INC.

Figure B-10

Project Name	PROCTOR & GAMBLE		Date	6-4-93
Soil Sample Description	2-3 YELLOWISH BROWN SILTY CLAY			
Location	BORING 2			
Sample No.	2-3	Sample Depth	3.0'	

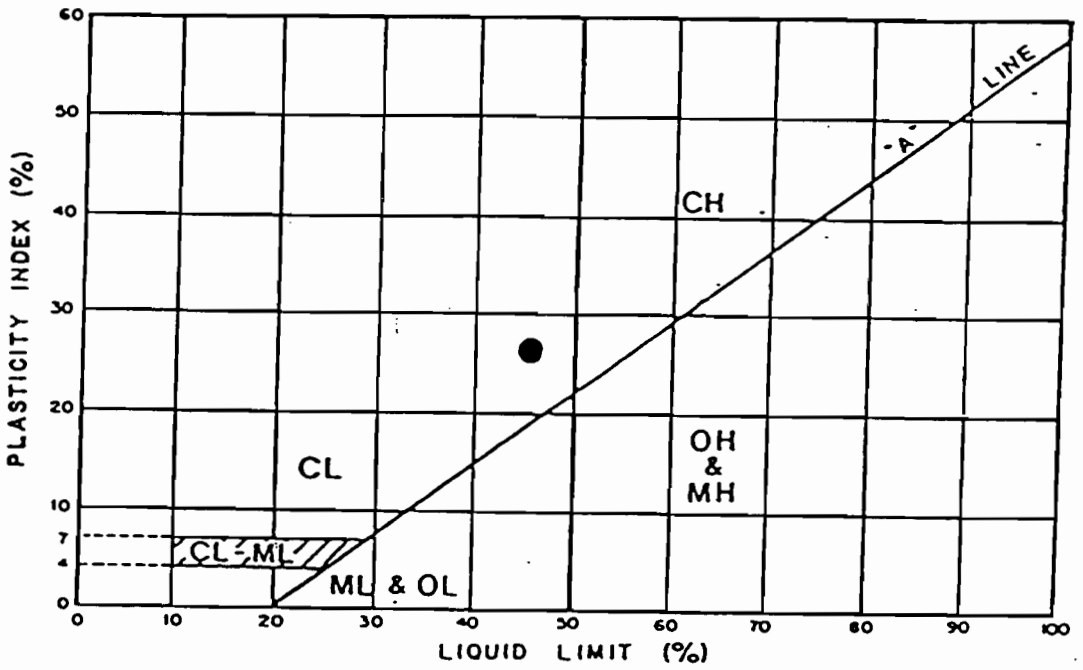

TEST RESULTS

Liquid Limit %	46
Plastic Limit %	20
Plasticity Index	26
Group Symbol	CL

Project No. 93108.E		ATTERBERG LIMITS TEST (ASTM D4318-84)	FIGURE B-11
YOUNGDAHL & ASSOCIATES, INC. GEOTECHNICAL, ENVIRONMENTAL & CONSTRUCTION LAB			

GRAIN SIZE DISTRIBUTION TEST REPORT

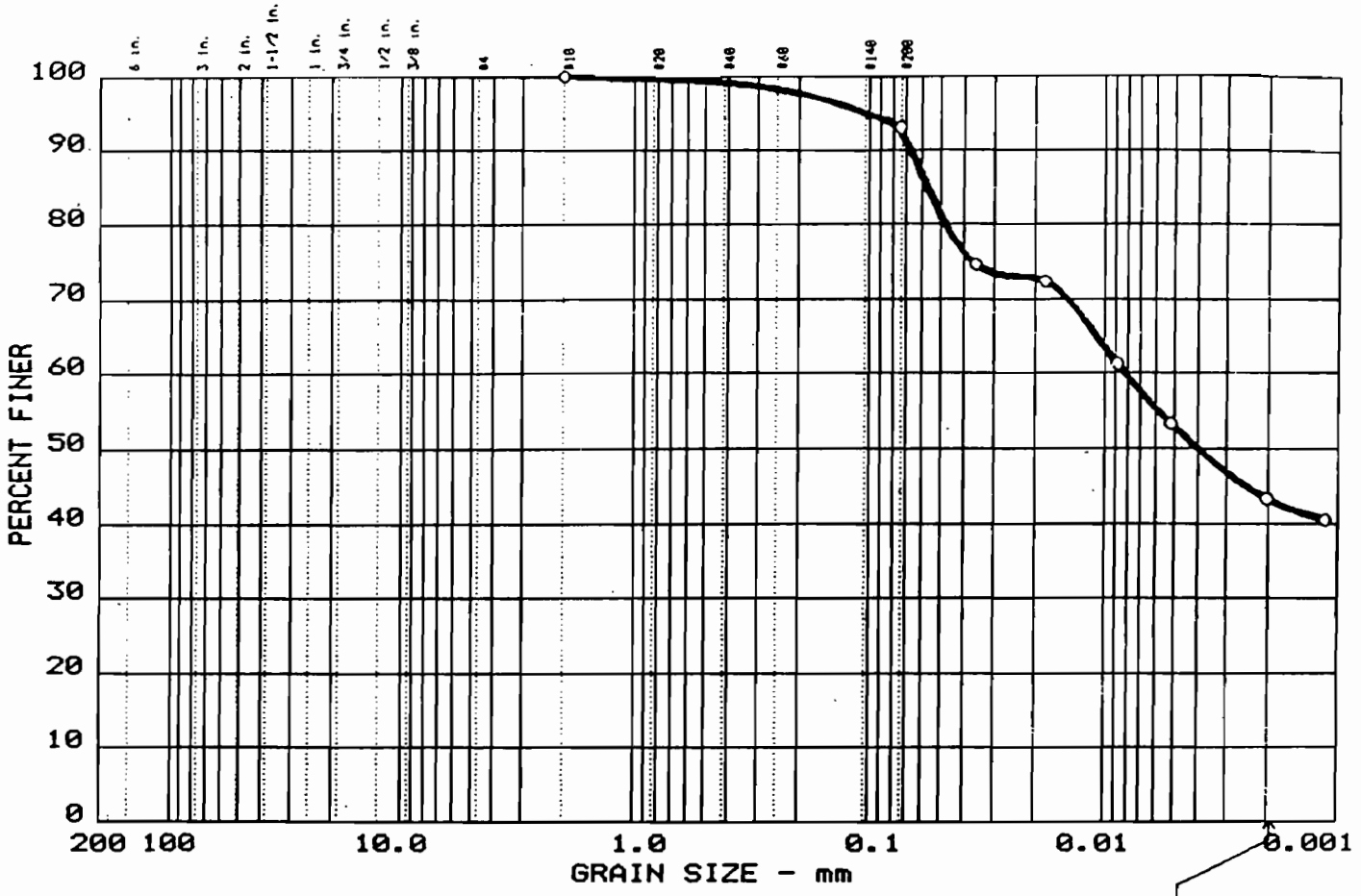

	Test	% +3"	% GRAVEL	% SAND	% SILT	% CLAY
○	12	0.0	0.0	7.1	49.8	43.1

	LL	PI	D_{85}	D_{60}	D_{50}	D_{30}	D_{15}	D_{10}	C_c	C_u
○	46	26			0.00					

MATERIAL DESCRIPTION	USCS	AASHTO
○ Yellowish brown silty CLAY	CL	A-7-6(25.8)

Project No.: 93108.AE
Project: Procter & Gamble Co-Generation Plant
○ Location: 2-3 @ 3.0'

Date: 6-12-93

Remarks:

GRAIN SIZE DISTRIBUTION TEST REPORT
YOUNGDAHL & ASSOCIATES INC.

Figure B-12

GRAIN SIZE DISTRIBUTION TEST REPORT

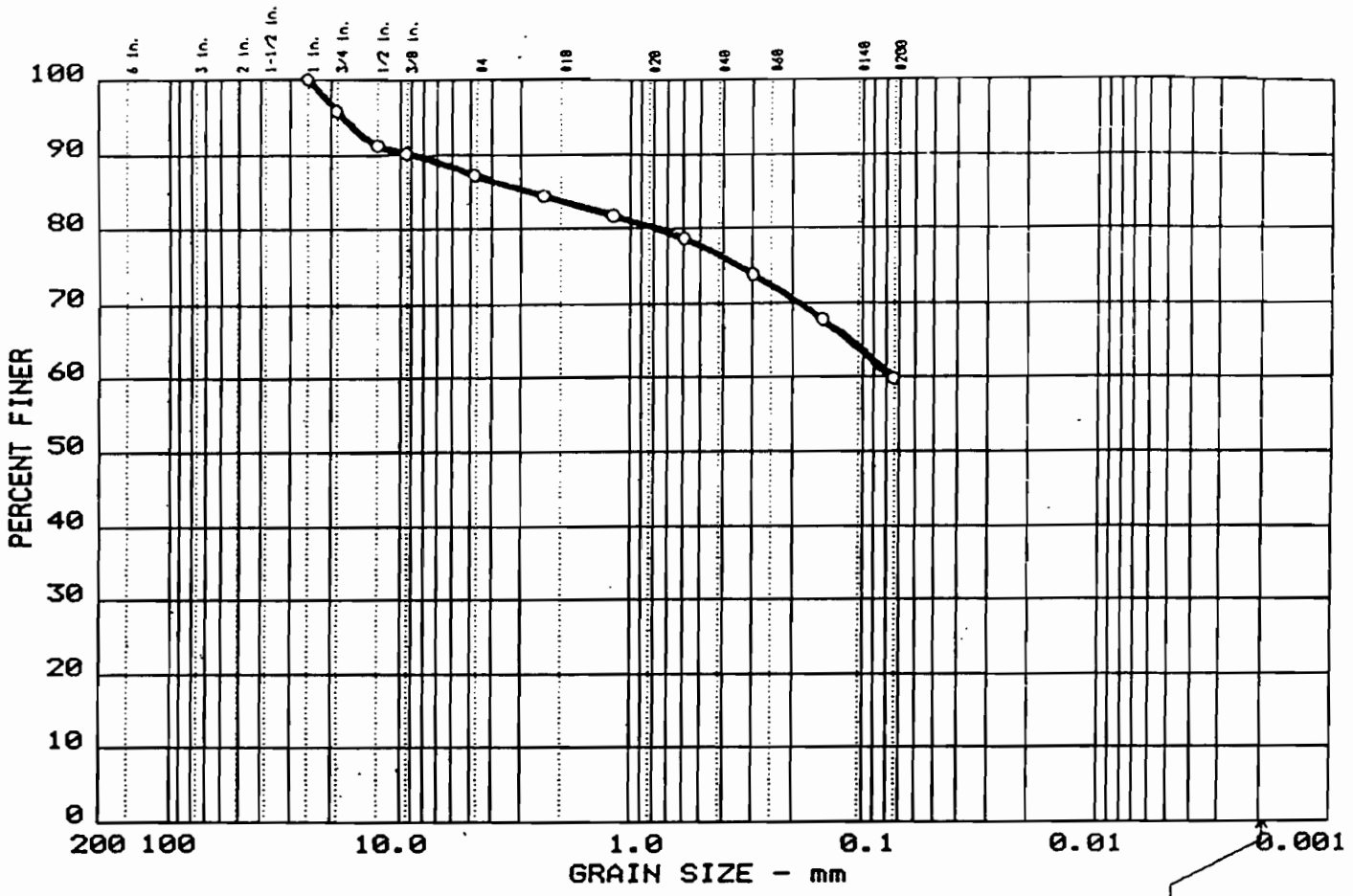

	Test	% +3"	% GRAVEL	% SAND	% SILT	% CLAY
○	5	0.0	12.8	27.4	59.8	

	LL	PI	D_{85}	D_{60}	D_{50}	D_{30}	D_{15}	D_{10}	C_c	C_u
○			2.66	0.07						

MATERIAL DESCRIPTION	USCS	AASHTO
○ Yellowish brown sandy SILT w\ gravel	ML	A-4(0.0)

Project No.: 93108.AE
Project: Procter & Gamble Co-Generation Plant
○ Location: 3-1 @ 1.0'

Date: 6-12-93

Remarks:

GRAIN SIZE DISTRIBUTION TEST REPORT

Project Name	PROCTOR & GAMBLE		Date	6-4-93
Soil Sample Description	3-3 STRONG BROWN SANDY CLAYEY SILT			
Location	BORING 3			
Sample No.	3-3	Sample Depth	3.0'	

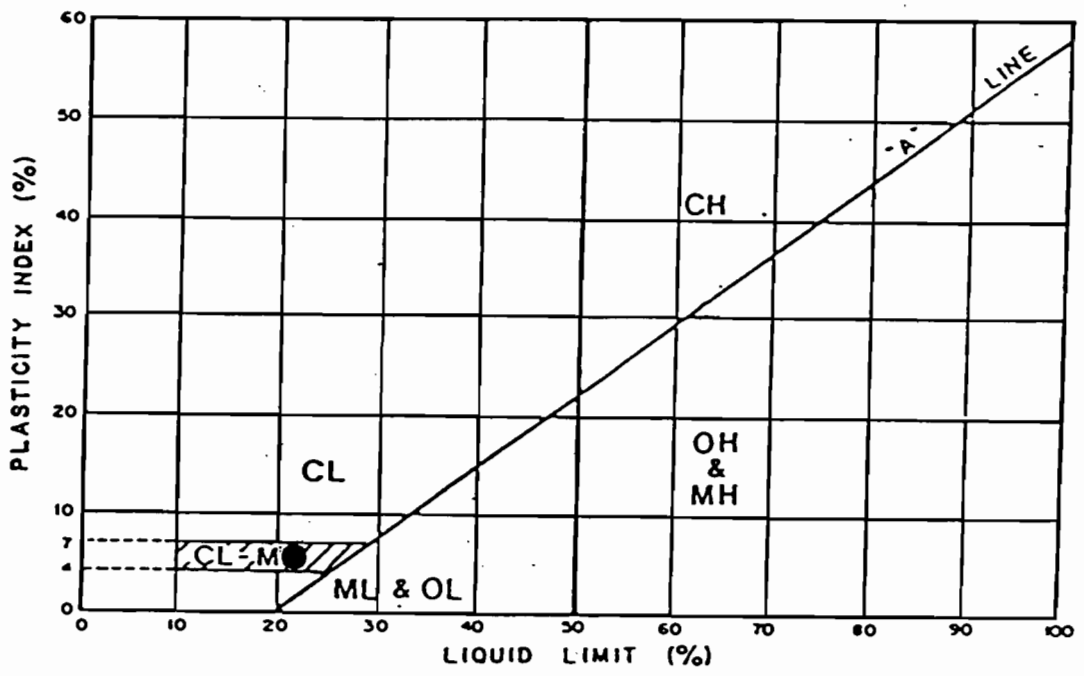

TEST RESULTS

Liquid Limit %	22
Plastic Limit %	16
Plasticity Index	6
Group Symbol	CL-ML

Project No. 93108.E		ATTERBERG LIMITS TEST (ASTM D4318-84)	FIGURE B-14
YOUNGDAHL & ASSOCIATES, INC. GEOTECHNICAL, ENVIRONMENTAL & CONSTRUCTION TAB			

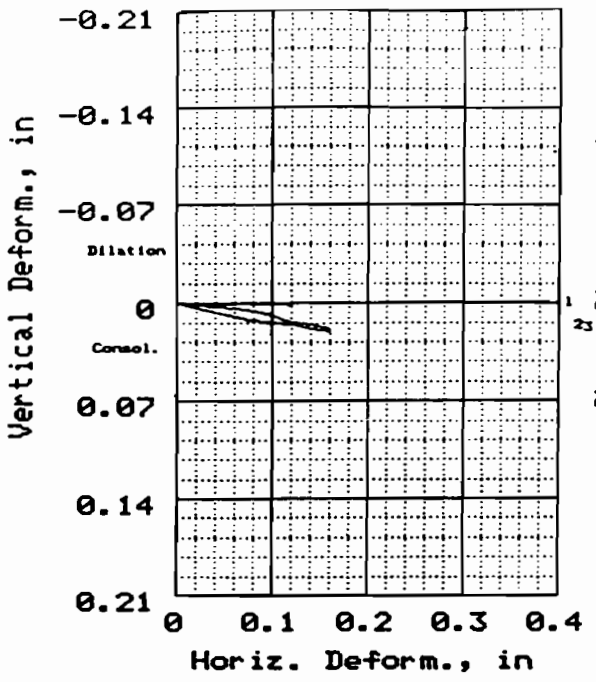

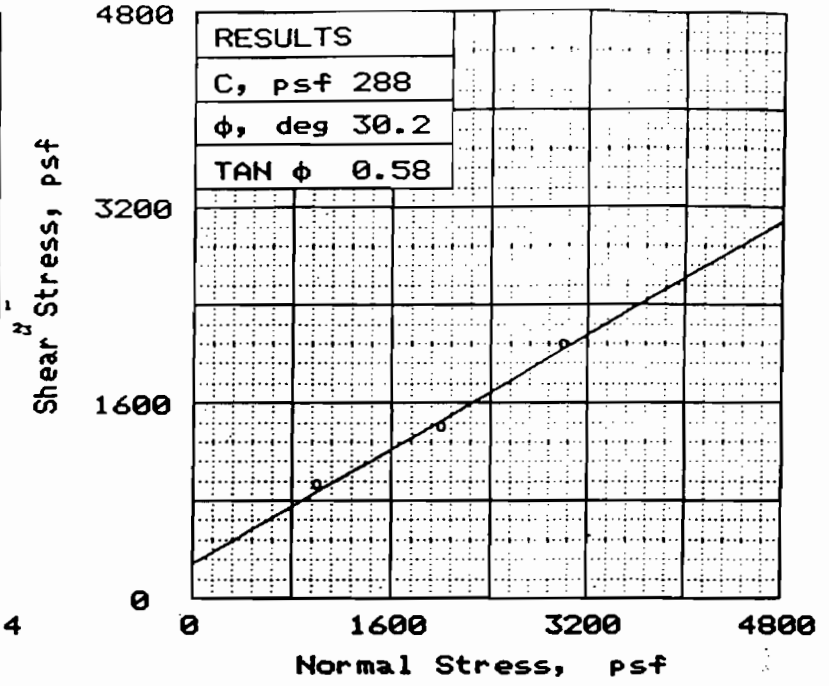

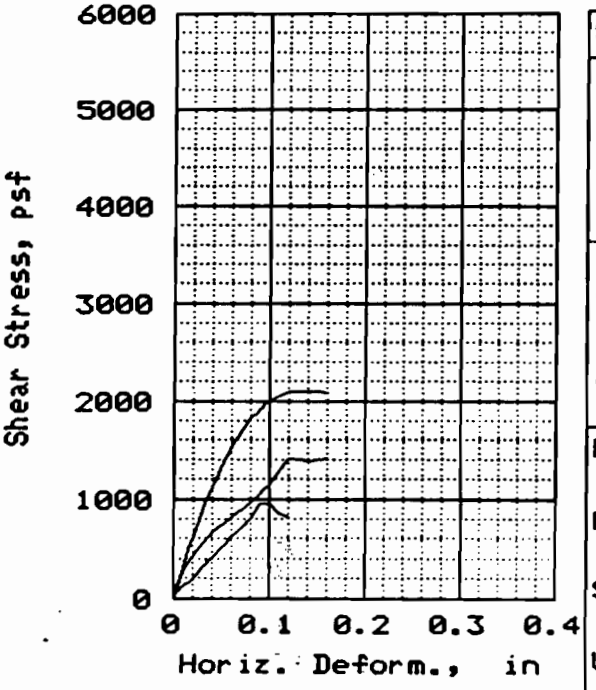

SAMPLE NO.		1	2	3
INITIAL	WATER CONTENT, %	23.7	24.9	23.7
	DRY DENSITY, pcf	87.5	88.9	87.5
	SATURATION, %	64.6	69.8	64.6
	VOID RATIO	1.062	1.030	1.062
	DIAMETER, in	1.94	1.94	1.94
	HEIGHT, in	0.95	0.95	0.95
AT TEST	WATER CONTENT, %	35.6	33.3	33.1
	DRY DENSITY, pcf	88.5	91.8	91.2
	SATURATION, %	99.2	99.7	97.7
	VOID RATIO	1.038	0.964	0.979
	DIAMETER, in	1.94	1.94	1.94
	HEIGHT, in	0.94	0.92	0.91
NORMAL STRESS, psf		1000	2000	3000
MAX. SHEAR, psf		950	1416	2091
STRAIN RATE, %/min.		0.773	0.515	0.485
ULT. SHEAR, psf				

SAMPLE DATA

SAMPLE TYPE: undisturbed

DESCRIPTION: Yellowish brown fine sandy SILT

LL= PL= PI=

SPECIFIC GRAVITY= 2.89

REMARKS:

CLIENT: Walsh Construction

PROJECT: Procter & Gamble Co-Generation Plant

SAMPLE LOCATION: 3-8 @ 11.0'

PROJ. NO.: 93108.AE DATE: 6-12-93

DIRECT SHEAR TEST

YOUNGDAHL & ASSOCIATES, INC.

Figure B-15

GRAIN SIZE DISTRIBUTION TEST REPORT

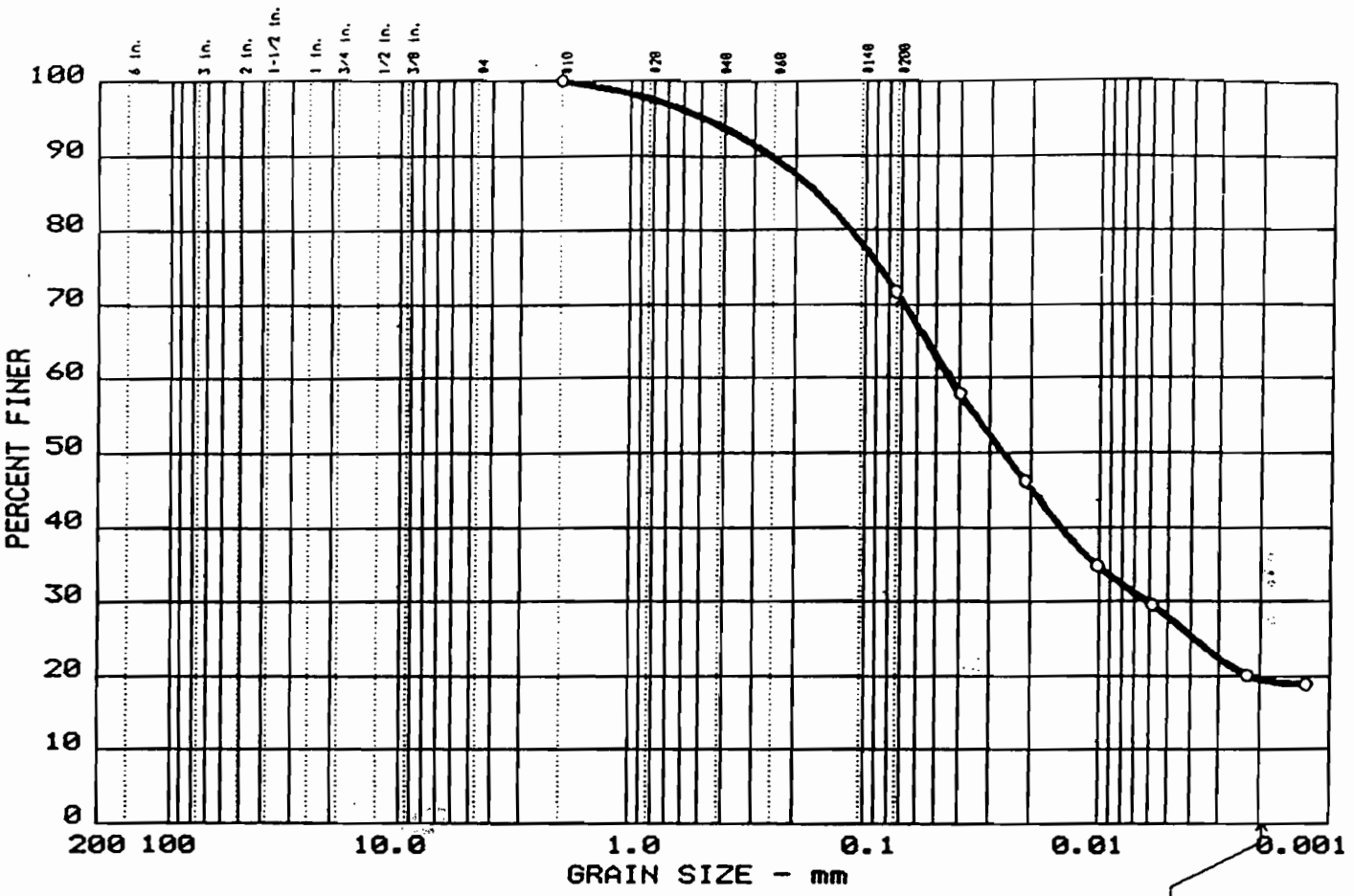

	Test	% +3"	% GRAVEL	% SAND	% SILT	% CLAY
○	14	0.0	0.0	28.3	52.1	19.6

	LL	PI	D_{85}	D_{60}	D_{50}	D_{30}	D_{15}	D_{10}	C_c	C_u
○	27	13	0.16		0.03	0.006				

MATERIAL DESCRIPTION	USCS	AASHTO
○ Yellowish brown Clayey sandy SILT	CL	A-4(0.0)

Project No.: 93108.AE
Project: Procter & Gamble Co-Generation Plant
Location: 4-1 @ 1.0'

Date: 6-12-93

Remarks:

GRAIN SIZE DISTRIBUTION TEST REPORT
YOUNGDAHL & ASSOCIATES INC.

Figure B-16

Project Name	PROCTOR & GAMBLE		Date	6-4-93
Soil Sample Description	4-2 BROWN FINE SANDY SILTY CLAY			
Location	BORING 4			
Sample No.	4-2	Sample Depth	1.5'	

Some sand removed from sample

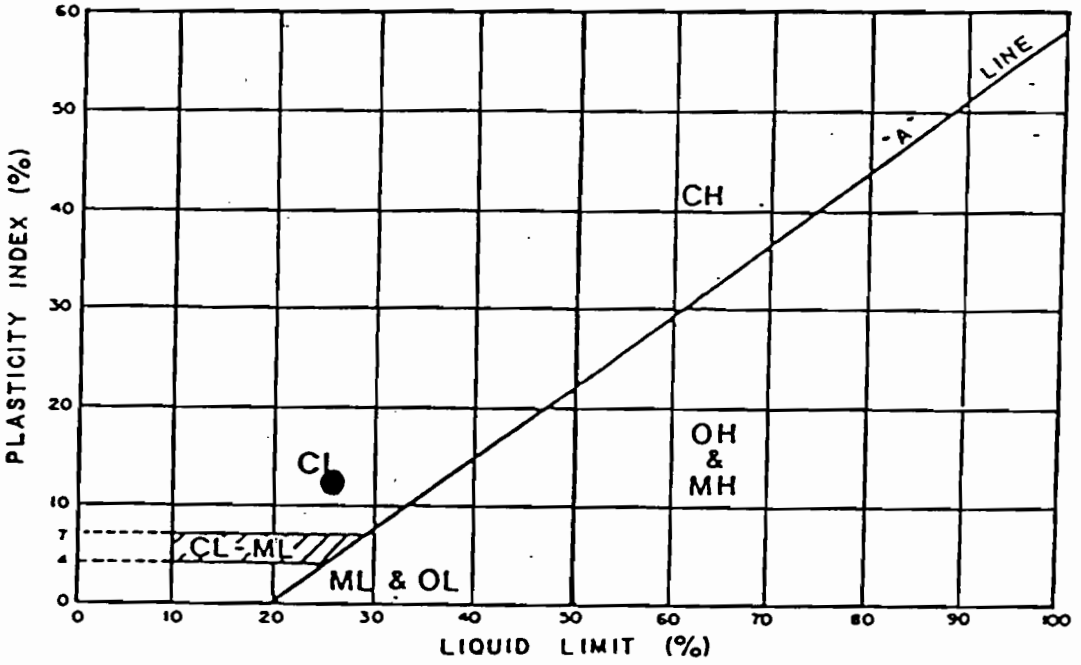

TEST RESULTS	
Liquid Limit %	27
Plastic Limit %	14
Plasticity Index	13
Group Symbol	CL

Project No.: 93108.E			
YOUNGDAHL & ASSOCIATES, INC. GEOTECHNICAL, ENVIRONMENTAL & CONSTRUCTION LAB		ATTERBERG LIMITS TEST (ASTM D4318-84)	FIGURE B-17

UNCONFINED COMPRESSION TEST

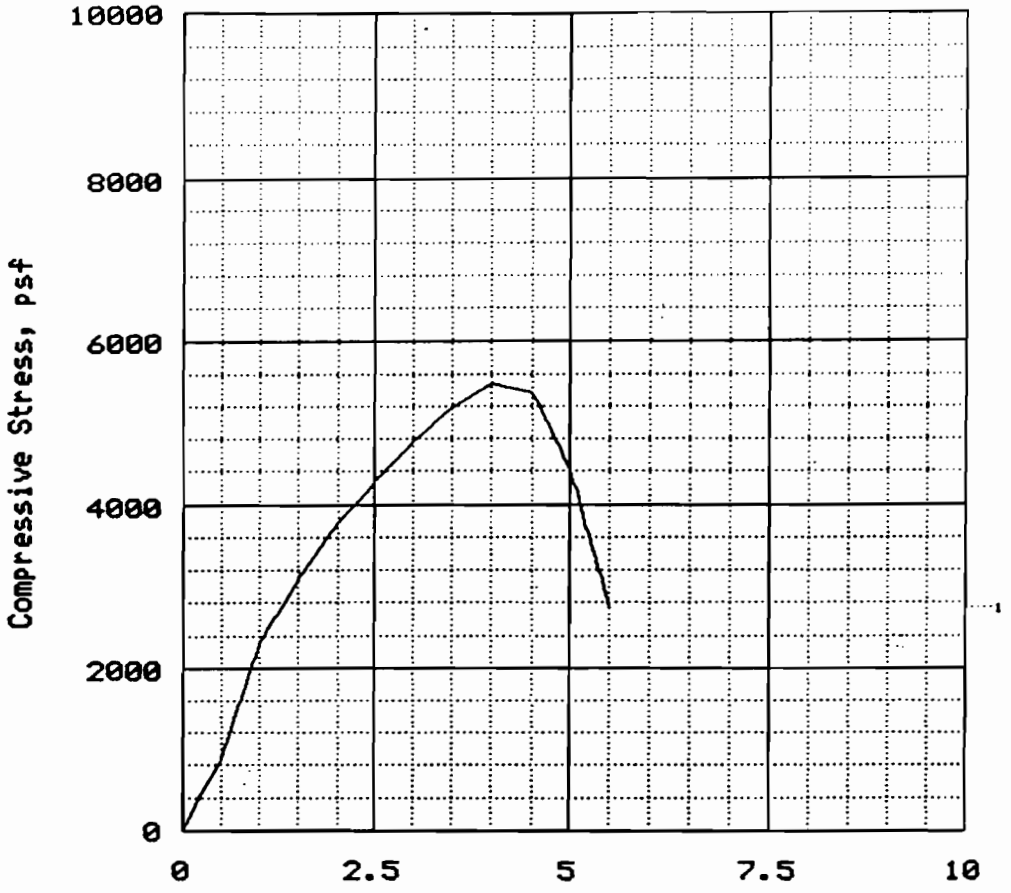

Sample number:	1			
Unconfined strength, psf	5480			
Undrained shear strength, psf	2740			
Rate of strain, %/min	1.220			
Water content, %	16.6			
Void ratio	0.4929			
Saturation, %	89.0			
Dry density, pcf	110.8			
Specimen diameter, in	1.90			
Specimen height, in	4.00			

Description: Yellowish brown sandy,silty CLAY

LL =	PL =	PI =	GS = 2.65	Type: undisturbed

Project No.: 93108.AE
Date: 6-12-93
Remarks:

Client: Walsh Construction

Project: Procter & Gamble Co-Generation Plant
Location: 4-3 @ 3.0'

UNCONFINED COMPRESSION TEST

TRIAXIAL SHEAR TEST REPORT

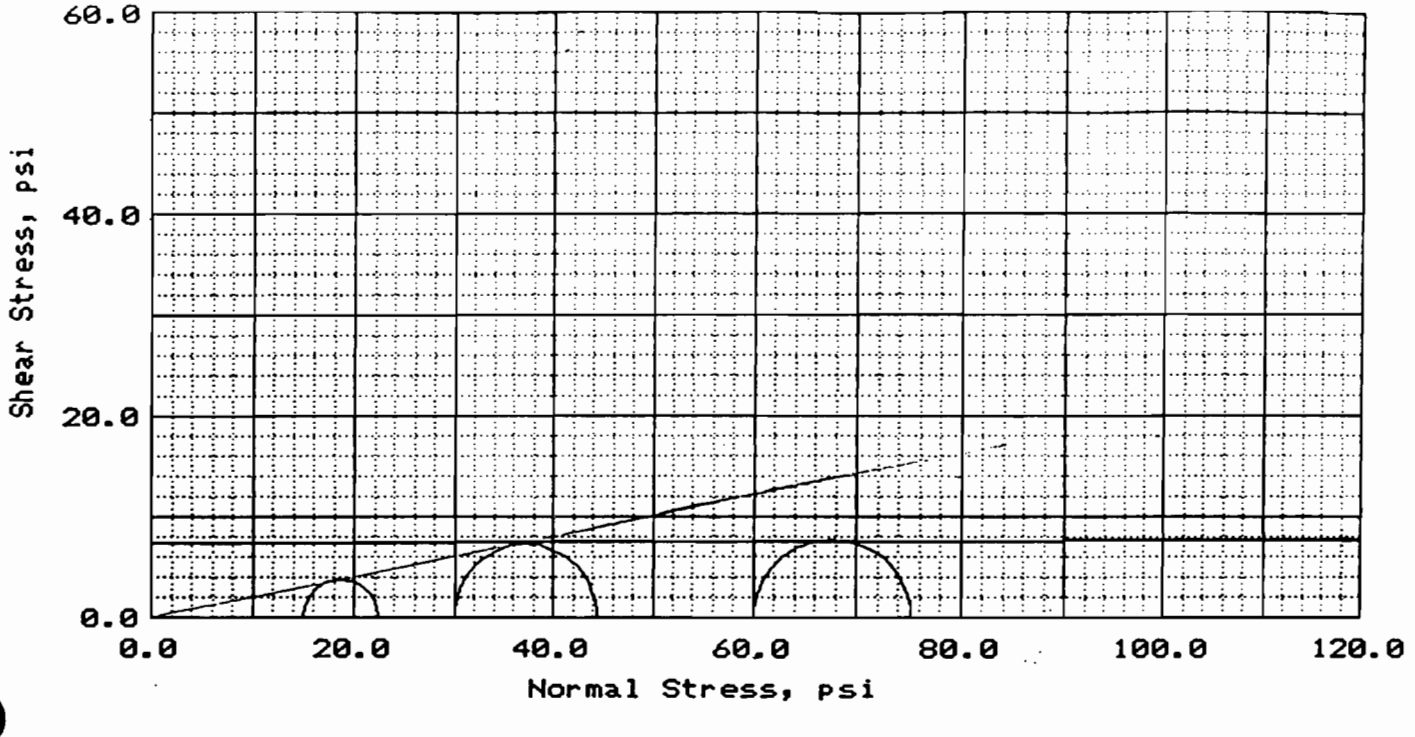

Type of Test: Unconsolidated undrained Sample Type: undisturbed

No.	FLUID PRESS. psi		MAX. STRENGTH psi		ULT. STRENGTH psi		PRINCIPAL STRESSES AT FAILURE psi	
	Cell	Back	Deviator	Pore	Deviator	Pore	σ_1	σ_3
1	55	40	7.3	40.0			22.3	15.0
2	70	40	14.5	40.0			44.5	30.0
3	100	40	15.2	40.0			75.2	60.0

No.	SAMPLE PARAMETERS						
	% Water Content	Dry Dens. pcf	Satur-ation	Void Ratio	Diameter in	Height in	Strain rate %/min.
1	37.0	78.5	88.5 %	1.1069	1.94	4.00	0.700
2	37.0	78.5	88.5 %	1.1069	1.94	4.00	0.700
3	37.0	78.5	88.5 %	1.1069	1.94	4.00	0.663

MOHR-COULOMB STRENGTH PARAMETERS		MATERIAL DESCRIPTION
	Total	Yellowish brown silty fine SAND
Strength intercept, c=	7.3 psi	
Friction angle, ϕ =	0.1 deg	
Tangent ϕ =	0.00	LL= PI=

CLIENT: Walsh Construction

PROJECT: Procter & Gamble Co-Generation Plant

LOCATION: 4-15 @ 26'

DATE: 6-15-93

File: 93108AE6

REMARKS:
Multi-stage test

TRIAXIAL SHEAR TEST REPORT

Proj. No.: 93108.AE

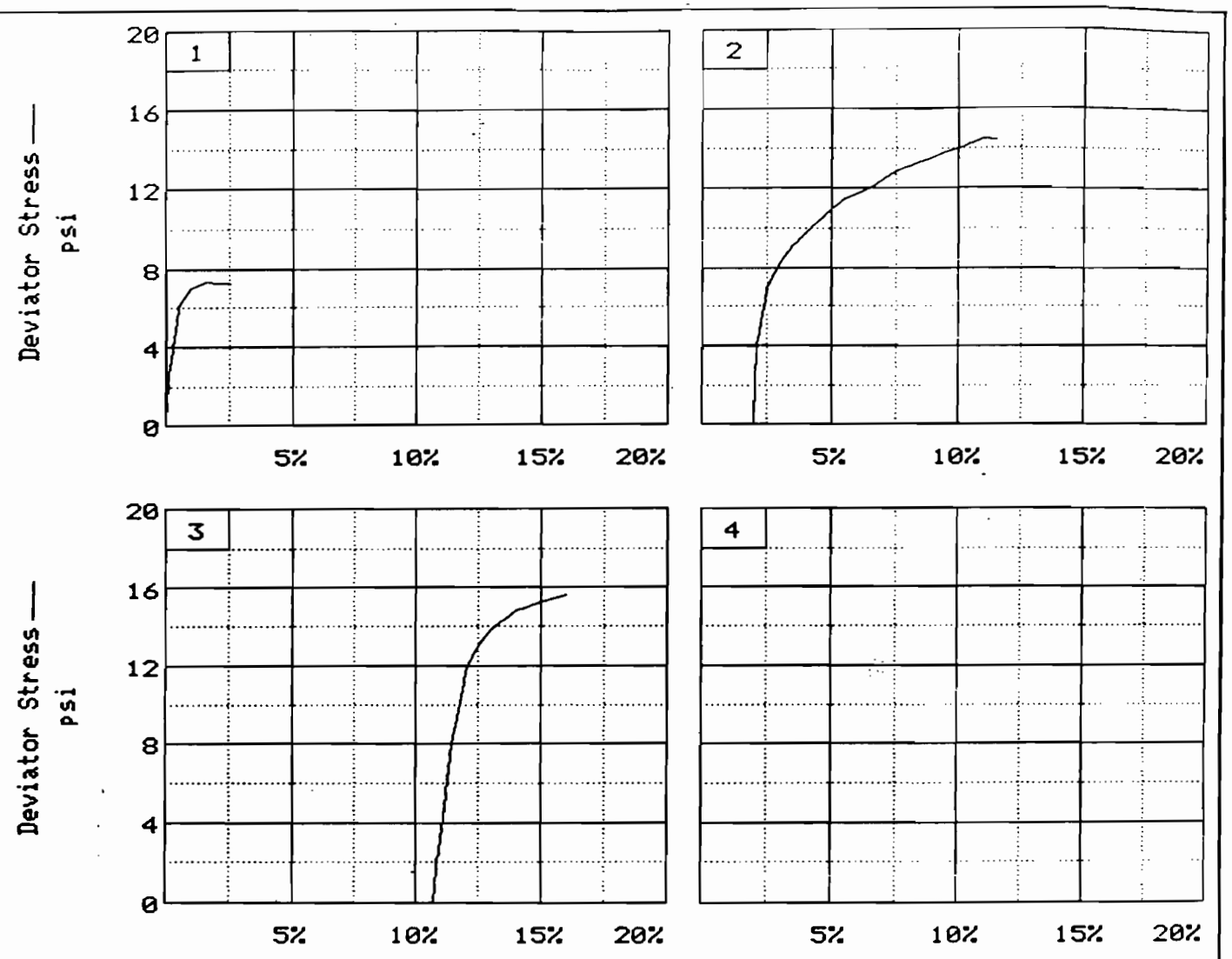

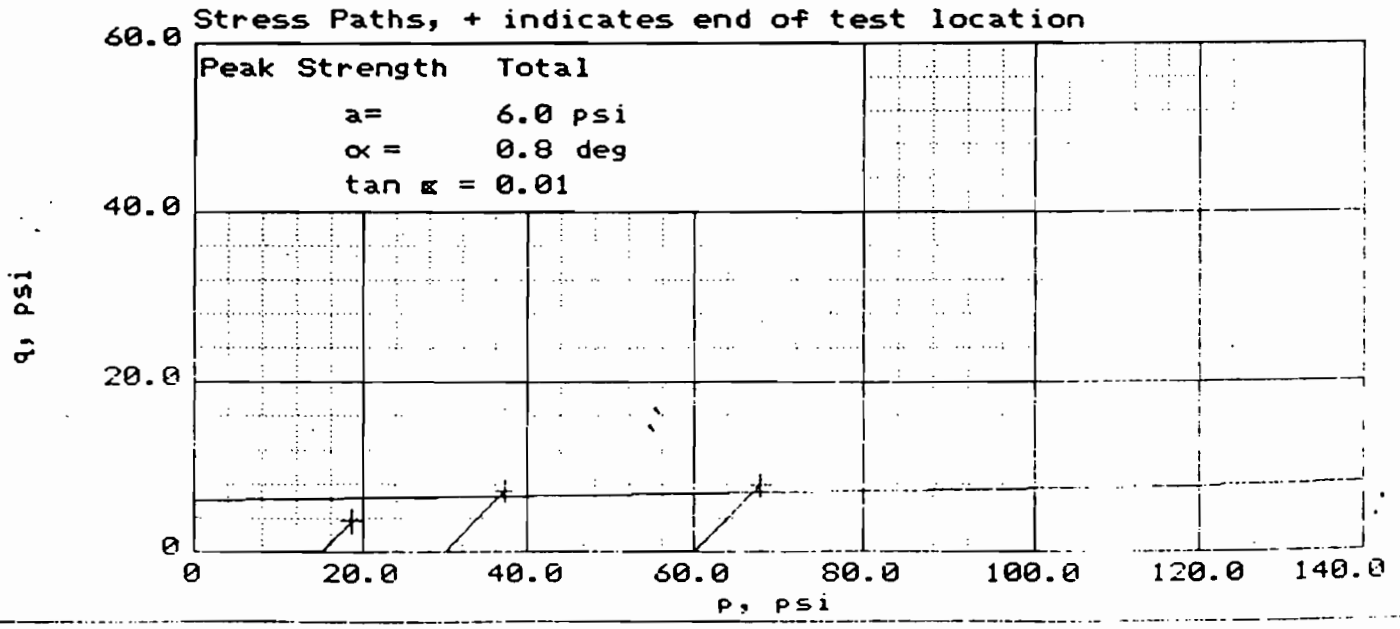

Client: Walsh Construction
Project: Procter & Gamble Co-Generation Plant
Location: 4-15 @ 26'

GRAIN SIZE DISTRIBUTION TEST REPORT

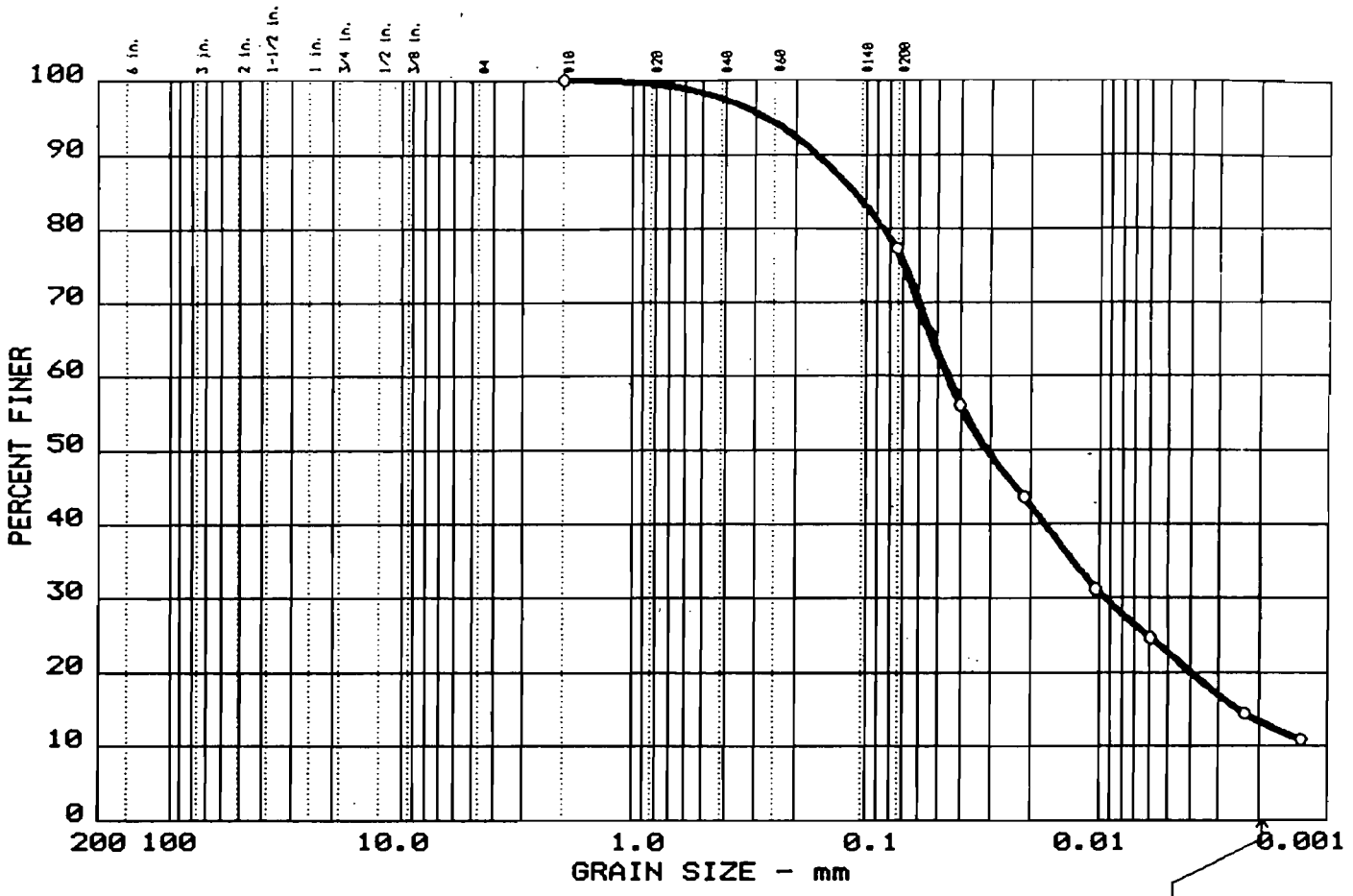

	Test	% +3"	% GRAVEL	% SAND	% SILT	% CLAY
○	16	0.0	0.0	22.7	64.0	13.3

	LL	PI	D_{85}	D_{60}	D_{50}	D_{30}	D_{15}	D_{10}	C_c	C_u
○	19	3	0.11		0.03	0.009	0.0025			

MATERIAL DESCRIPTION	USCS	AASHTO
○ Brown fine sandy SILT with clay	ML	A-4(0.0)

Project No.: 93108.AE
Project: Procter & Gamble Co-Generation Plant
○ Location: 5-3 @ 3.0'

Date: 6-12-93

Remarks:

GRAIN SIZE DISTRIBUTION TEST REPORT
YOUNGDAHL & ASSOCIATES INC.

Figure B-21

Project Name	PROCTOR & GAMBLE		Date	6-4-93
Soil Sample Description	5-3 BROWN FINE SANDY SILT WITH CLAY			
Location	BORING 5			
Sample No.	5-3	Sample Depth	3.0'	

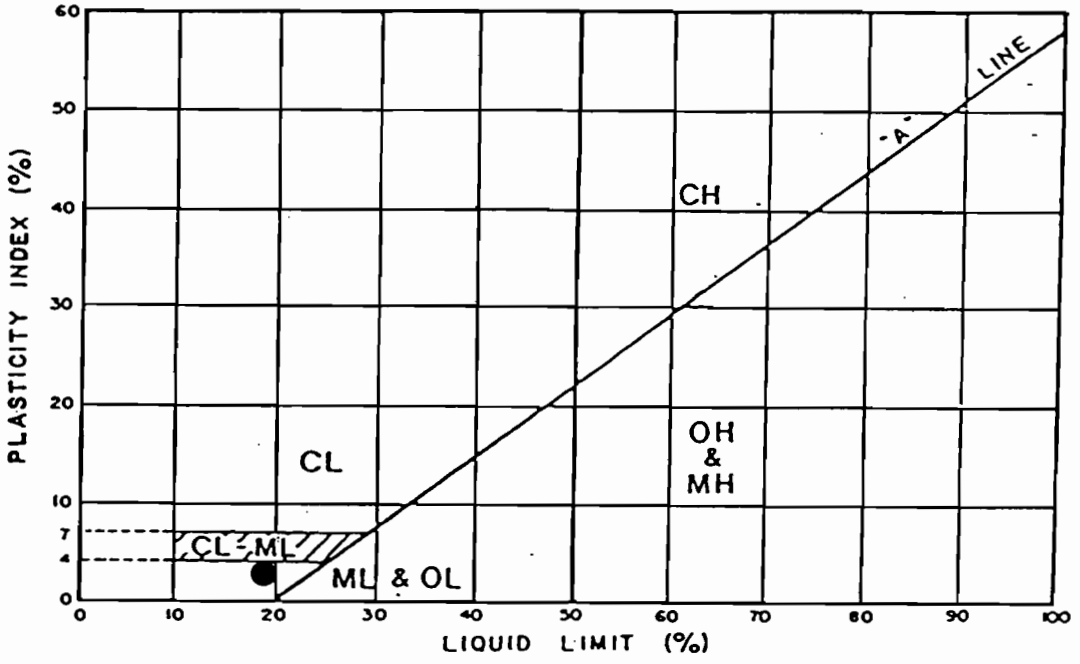

TEST RESULTS

Liquid Limit %	19
Plastic Limit %	16
Plasticity Index	3
Group Symbol	ML

Project No. 93108.E

YOUNGDAHL & ASSOCIATES, INC.
GEOTECHNICAL, ENVIRONMENTAL & CONSTRUCTION LAB

ATTERBERG LIMITS TEST
(ASTM D4318-84)

FIGURE
B-22

GRAIN SIZE DISTRIBUTION TEST REPORT

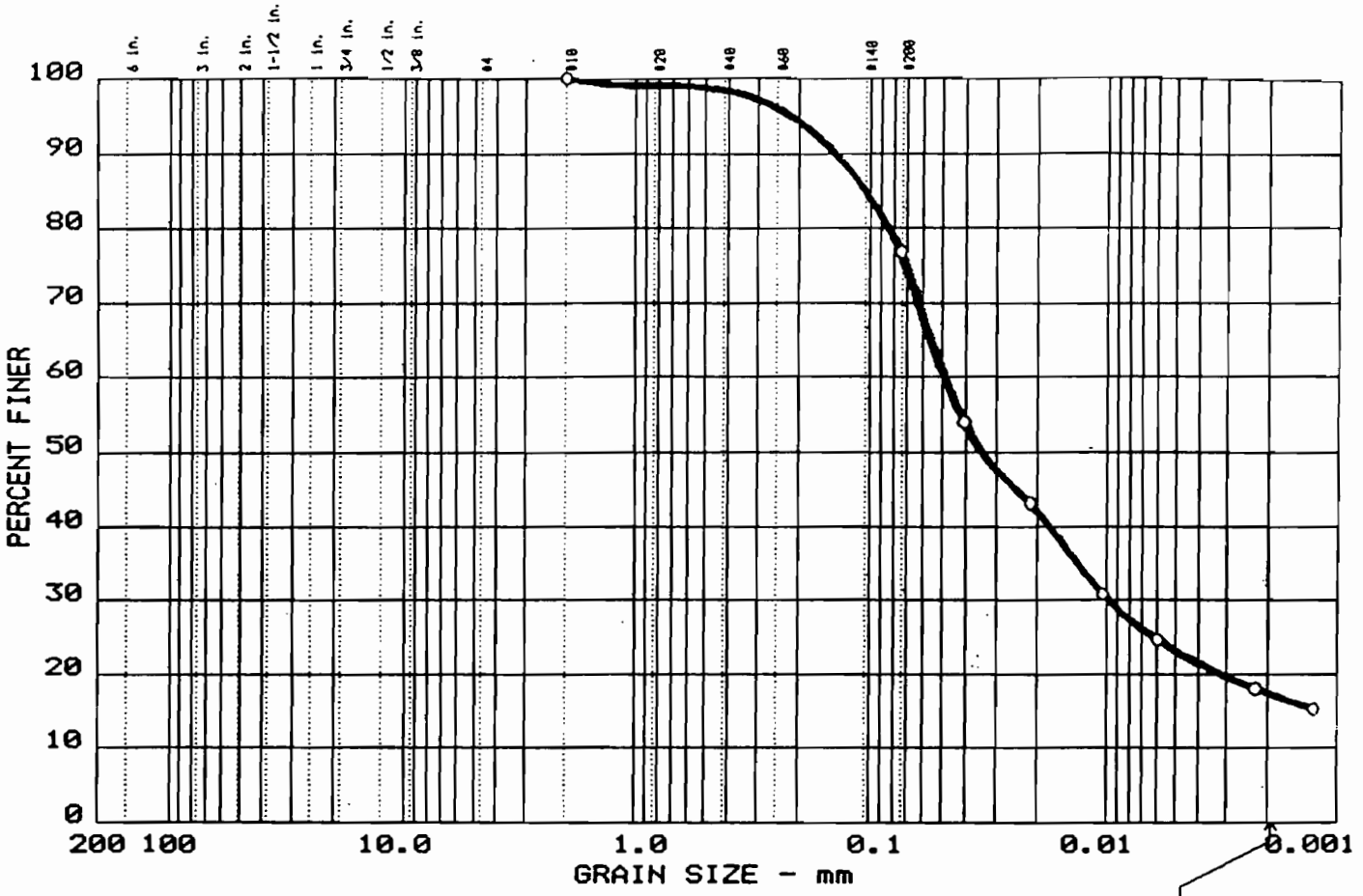

	Test	% +3"	% GRAVEL	% SAND	% SILT	% CLAY
○	15	0.0	0.0	23.2	59.4	17.4

	LL	PI	D_{85}	D_{60}	D_{50}	D_{30}	D_{15}	D_{10}	C_c	C_u
○			0.10		0.03	0.010				

MATERIAL DESCRIPTION	USCS	AASHTO
○ Yellowish browns fine sandy clayey SILT	ML	A-4(0.0)

Project No.: 93108.AE
Project: Procter & Gamble Co-Generation Plant
○ Location: 5-1 @ 1.5'

Date: 6-12-93

Remarks:

GRAIN SIZE DISTRIBUTION TEST REPORT

YOUNGDAHL & ASSOCIATES INC.

Figure B-23

GRAIN SIZE DISTRIBUTION TEST REPORT

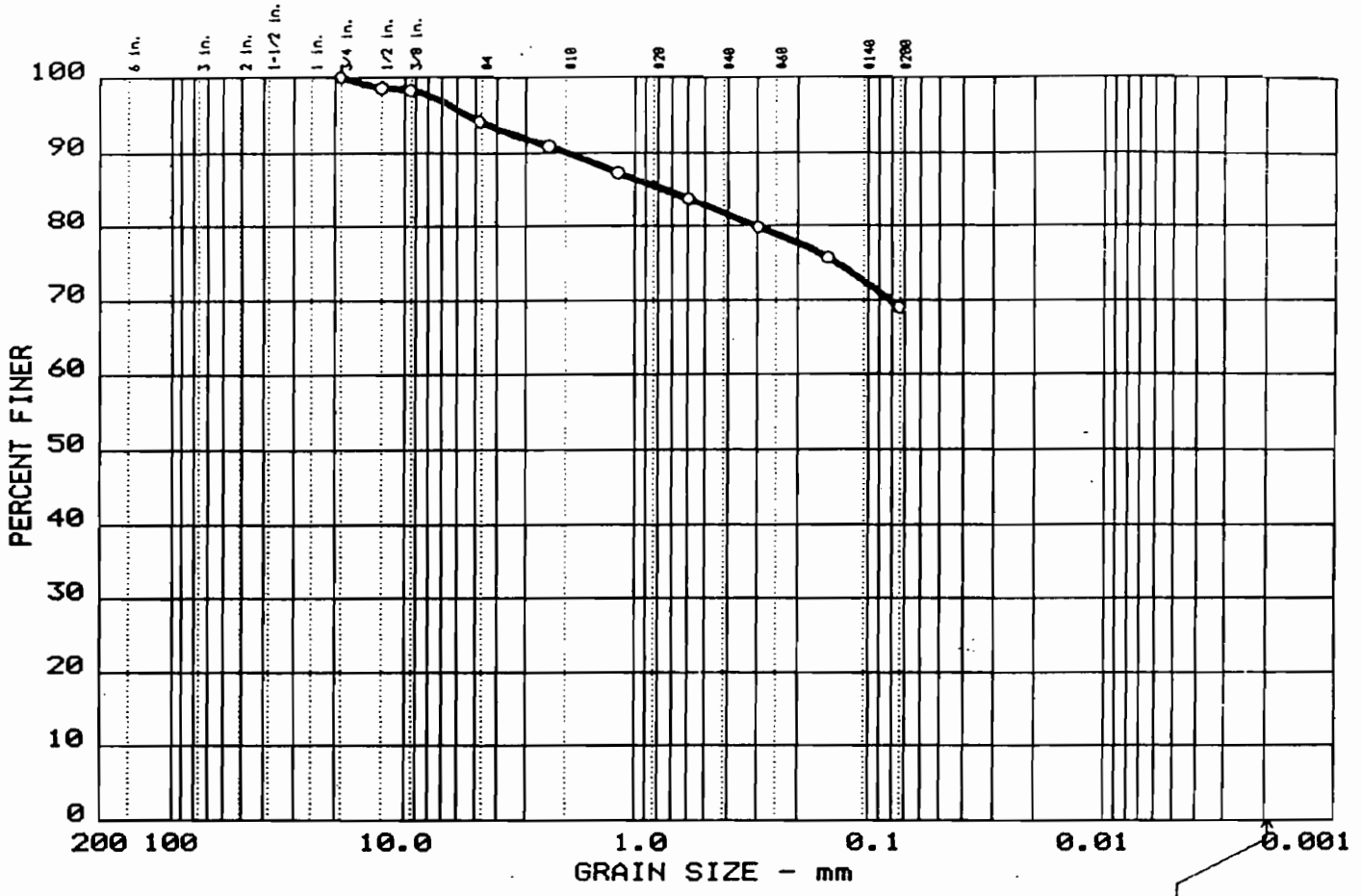

	Test	% +3"	% GRAVEL	% SAND	% SILT	% CLAY
○	6	0.0	5.9	25.1	69.0	

	LL	PI	D_{85}	D_{60}	D_{50}	D_{30}	D_{15}	D_{10}	C_c	C_u
○	25	8	0.75							

MATERIAL DESCRIPTION	USCS	AASHTO
○ Yellowish brown fine sandy SILT trace clay	ML	A-4(0.0)

Project No.: 93108.AE
Project: Procter & Gamble Co-Generation Plant
○ Location: 6-1 @ 1.0'

Date: 6-12-93

Remarks:

GRAIN SIZE DISTRIBUTION TEST REPORT
YOUNGDAHL & ASSOCIATES INC.

Figure B-24

Project Name	PROCTOR & GAMBLE		Date	6-4-93
Soil Sample Description	6-2 YELLOWISH BROWN FINE SANDY VERY SILTY CLAY			
Location	BORING 6			
Sample No.	6-2	Sample Depth	1.5'	

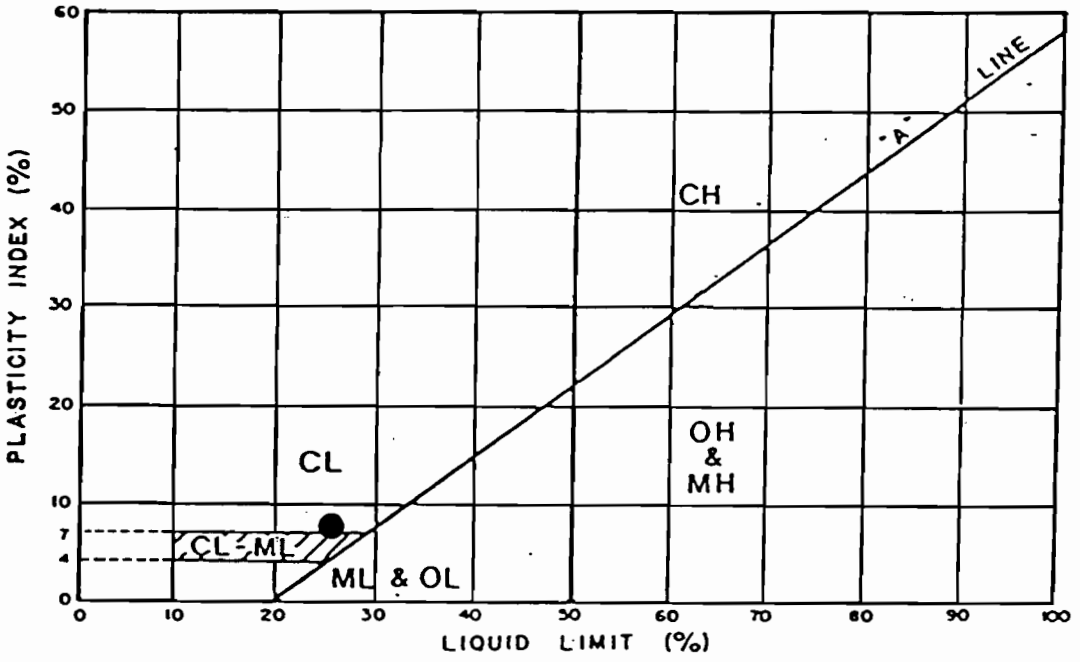

TEST RESULTS

Liquid Limit %	25
Plastic Limit %	17
Plasticity Index	8
Group Symbol	CL-ML

Project No. 93108.E		ATTERBERG LIMITS TEST (ASTM D4318-84)	FIGURE B-25
YOUNGDAHL & ASSOCIATES, INC. GEOTECHNICAL, ENVIRONMENTAL & CONSTRUCTION LAB			

GRAIN SIZE DISTRIBUTION TEST REPORT

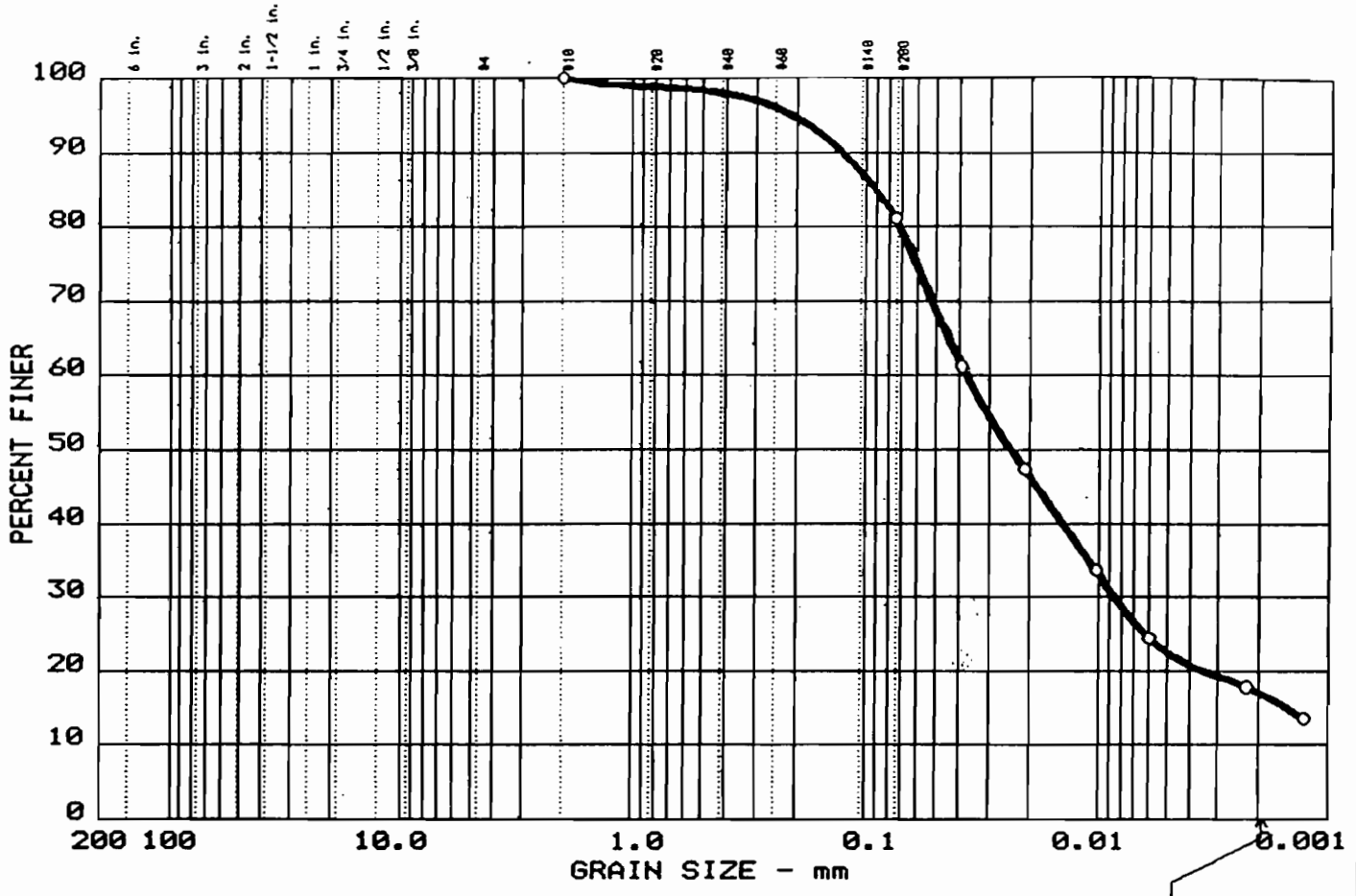

	Test	% +3"	% GRAVEL	% SAND	% SILT	% CLAY
○	17	0.0	0.0	18.8	64.1	17.1

	LL	PI	D_{85}	D_{60}	D_{50}	D_{30}	D_{15}	D_{10}	C_c	C_u
○	30	14	0.09		0.02	0.008	0.0015			

MATERIAL DESCRIPTION	USCS	AASHTO
○ Yellowish brown fine sandy clayey SILT	ML	A-4(0.0)

Project No.: 93108.AE
Project: Procter & Gamble Co-Generation Plant
○ Location: 6-3 @ 3.0'

Date: 6-12-93

Remarks:

GRAIN SIZE DISTRIBUTION TEST REPORT

YOUNGDAHL & ASSOCIATES INC.

Figure B-26

Project Name	PROCTOR & GAMBLE		Date	6-4-93
Soil Sample Description	6-4 LIGHT YELLOWISH BROWN SILTY CLAY WITH SAND			
Location	BORING 6			
Sample No.	6-4	Sample Depth	3.5'	

Some sand removed from sample

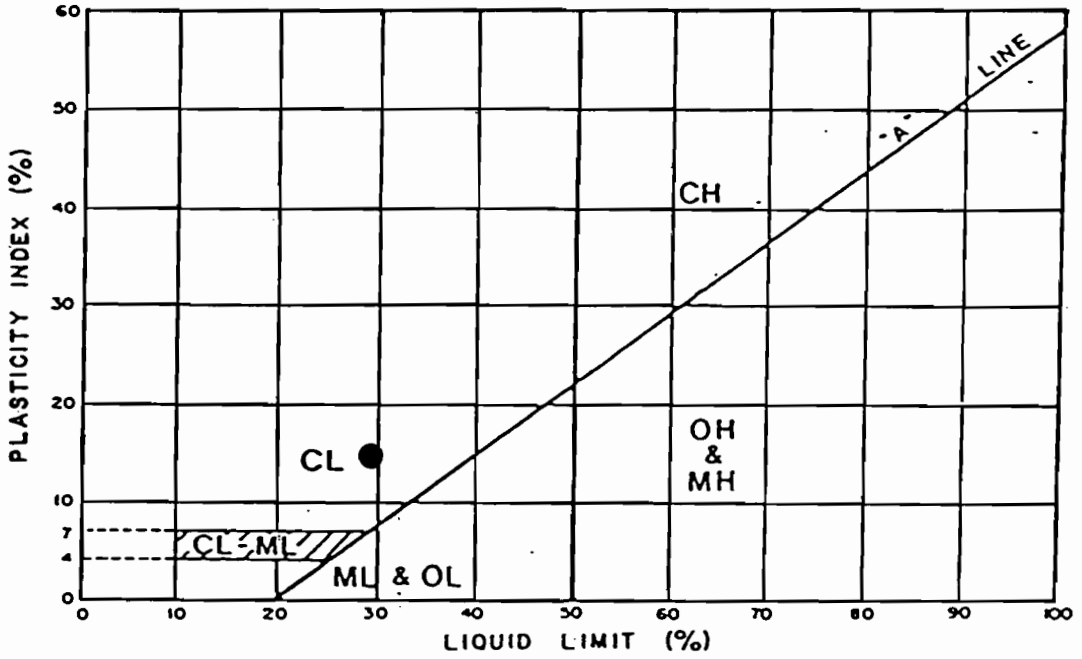

TEST RESULTS

Liquid Limit %	30
Plastic Limit %	16
Plasticity Index	14
Group Symbol	CL

Project No. 93108.E		ATTERBERG LIMITS TEST (ASTM D4318-84)	FIGURE B-27
YOUNGDAHL & ASSOCIATES, INC. GEOTECHNICAL, ENVIRONMENTAL & CONSTRUCTION LAB			

TRIAXIAL SHEAR TEST REPORT

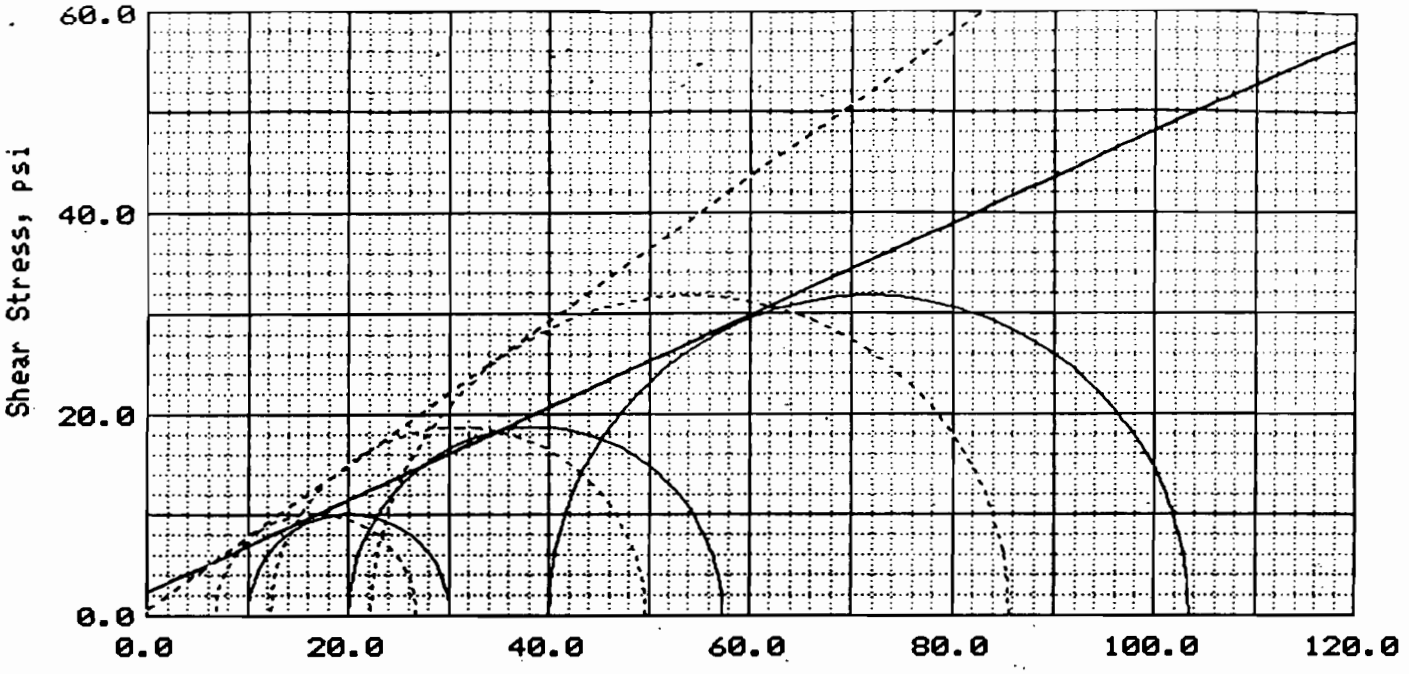

Type of Test: CU with pore pressures Sample Type: undisturbed

No.	FLUID PRESS. psi		MAX. STRENGTH psi		ULT. STRENGTH psi		PRINCIPAL STRESSES AT FAILURE psi	
	Cell	Back	Deviator	Pore	Deviator	Pore	$\bar{\sigma}_1$	$\bar{\sigma}_3$
1	70	60	20.1	63.3			26.8	6.7
2	80	60	37.3	67.7			49.6	12.3
3	100	60	63.4	77.8			85.6	22.2

No.	CONSOLIDATED SAMPLE PARAMETERS						
	% Water Content	Dry Dens. pcf	Satur-ation	Void Ratio	Diameter in	Height in	Strain rate %/min.
1	31.9	84.8	88.2 %	0.9648	1.90	4.08	0.219
2	31.9	86.7	92.3 %	0.9217	1.89	4.05	0.289
3	31.9	90.1	100.0 %	0.8507	1.86	4.00	0.299

MOHR-COULOMB STRENGTH PARAMETERS

	Total	Effective
Strength intercept, c=	2.2 psi	0.5 psi
Friction angle, ϕ =	24.6 deg	35.6 deg
Tangent ϕ =	0.46	0.72

MATERIAL DESCRIPTION

Yellowish brown
fine sandy SILT
LL= PI=

CLIENT: Walsh Construction

PROJECT: Procter & Gamble Co-Generation Plant
LOCATION: 6-14 @ 21'

DATE: 6-14-93
File: 93108AE5
REMARKS:
Multi-stage test

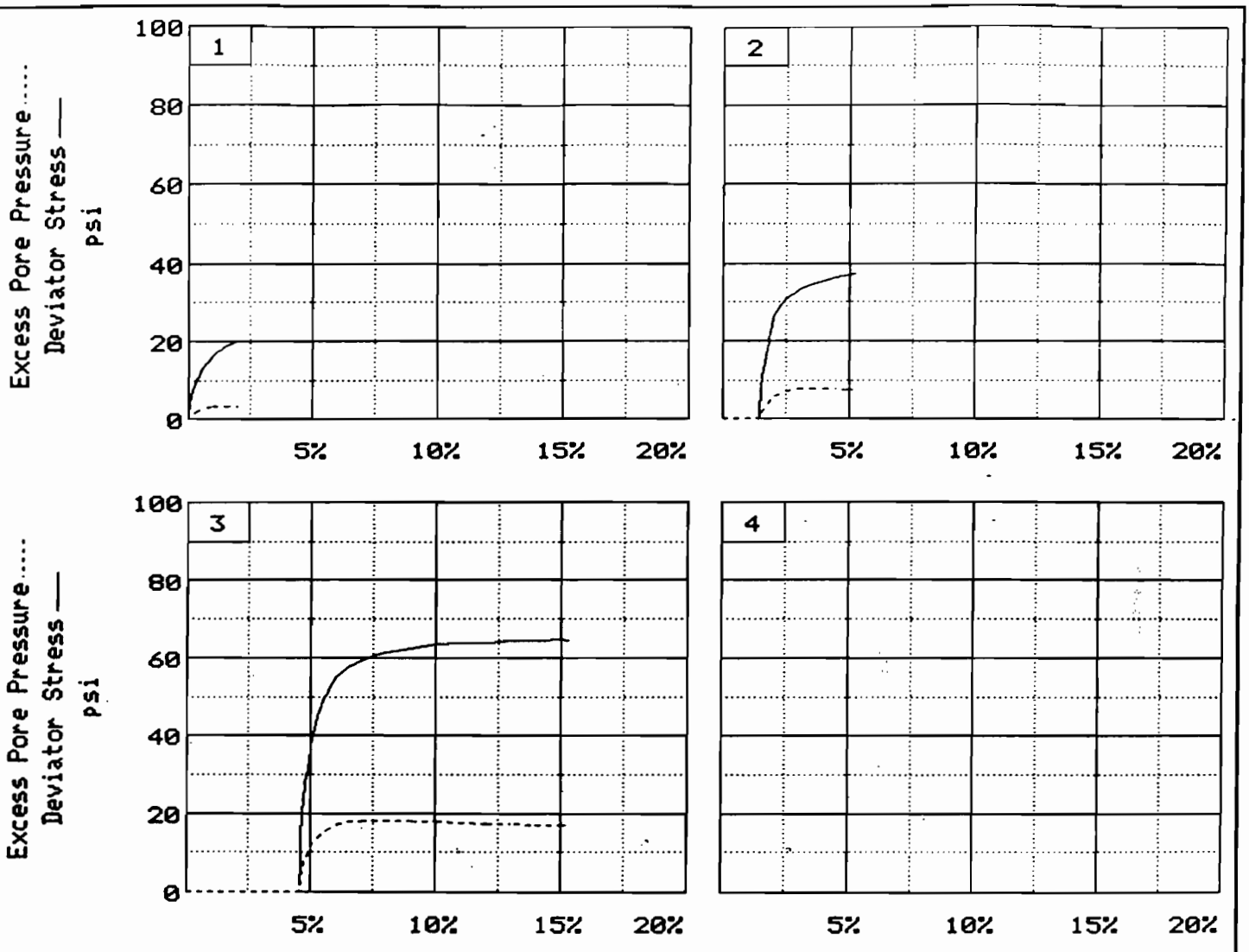

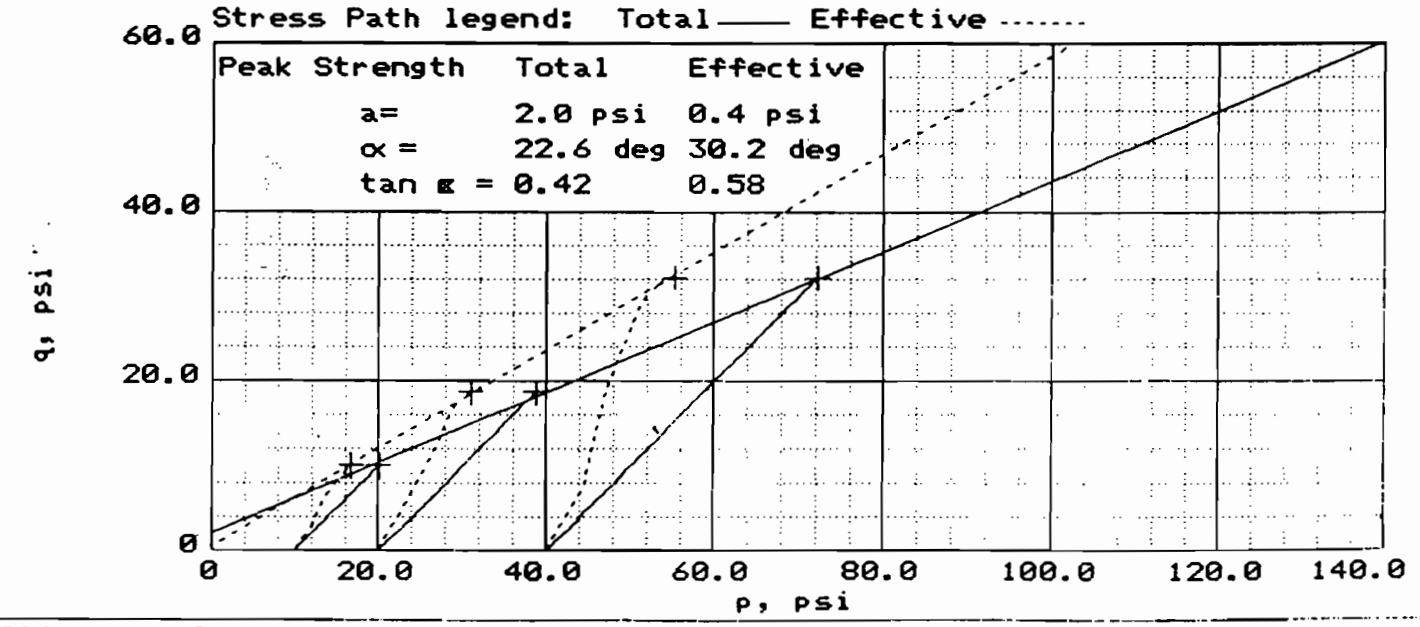

Client: Walsh Construction
Project: Procter & Gamble Co-Generation Plant
Location: 6-14 @ 21'
File: 93108AE5 Project No.: 93108.05 Page 2 of 2 Figure B-29

REPORT OF PERCOLATION TEST

LOCATION OF PROPERTY Proctor & Gamble Cogeneration Plant, Sacramento

OWNER/BUILDER Procter & Gamble c/o Walsh Const. PARCEL NO. 61:164:001

ADDRESS 10365 Old Placerville Rd. Sacramento, CA PHONE

WEATHER Overcast NO. OF HOLES 2 TEST DATE 6/8/93

LOCATION OF TEST HOLES Shown On Site Plan

DEPTH OF HOLES TESTED (ft.) #1 5.00 #2 3.00 #3 #4

DESIGN AREA SOIL PROFILE

DEPTH	COLOR	DESCRIPTION	COMMENTS
0 - 2	Lt. Brn	F. Sandy SILT(ML)	Medium Dense, Moist
2 - 5	Lt. Brn	Clayey SILT (ML)	Medium Stiff, Moist

DATA OBTAINED FROM PERCOLATION TESTS
Following 4-Hour Sustained PreSoak

TIME	HOLE # 1 INCHES TO WATER	HOLE # 2 INCHES TO WATER	HOLE # 3 INCHES TO WATER	HOLE # 4 INCHES TO WATER
1245	52 1/2	29		
1315	53	30 3/4		
1345	53 1/2	31 1/2		
1415	53 7/8	32 3/8		
1445	54 1/4	33		
1515	54 5/8	33 1/2		
1545	55	*34	*Added Water	
1615	55 3/8	32 1/4		
1645	55 3/4	32 3/4		

STABILIZED RATE
(MINUTES/IN) HOLE #1 80 HOLE # 2 60 HOLE # 3 HOLE # 4

AVERAGE PERCOLATION RATE = 70 MINUTES/INCH

Figure B-30

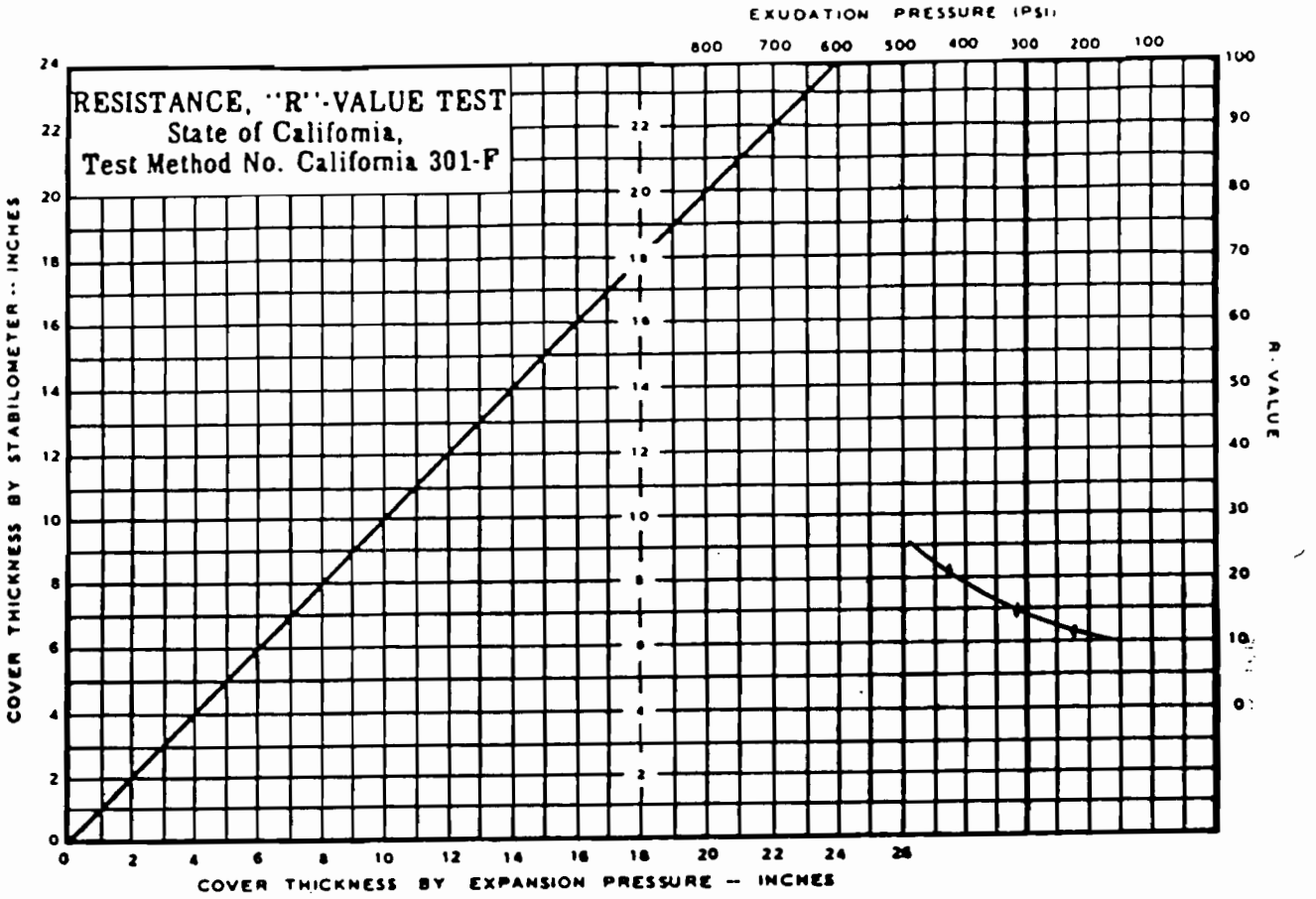

Sample: R-1
Description: Light yellow brown sandy SILT

Specimen	A	B	C
Exudation Pressure, p.s.i.	224	318	430
Expansion dial (.0001")	0	6	10
Expansion Pressure, p.s.f.	0	26	43
Resistance Value, "R"	11	14	21
% Moisture at Test	16.1	15.4	14.6
Dry Density at Test,p.c.f.	113.2	114.0	114.9
"R" Value at 300 p.s.i., Exudation Pressure	=(13)		

Project No. 93108.e

YOUNGDAHL & ASSOCIATES, INC.
GEOTECHNICAL, ENVIRONMENTAL & CONSTRUCTION LAB

"R VALUE" TEST
(Cal. 301-F)

FIGURE B-31

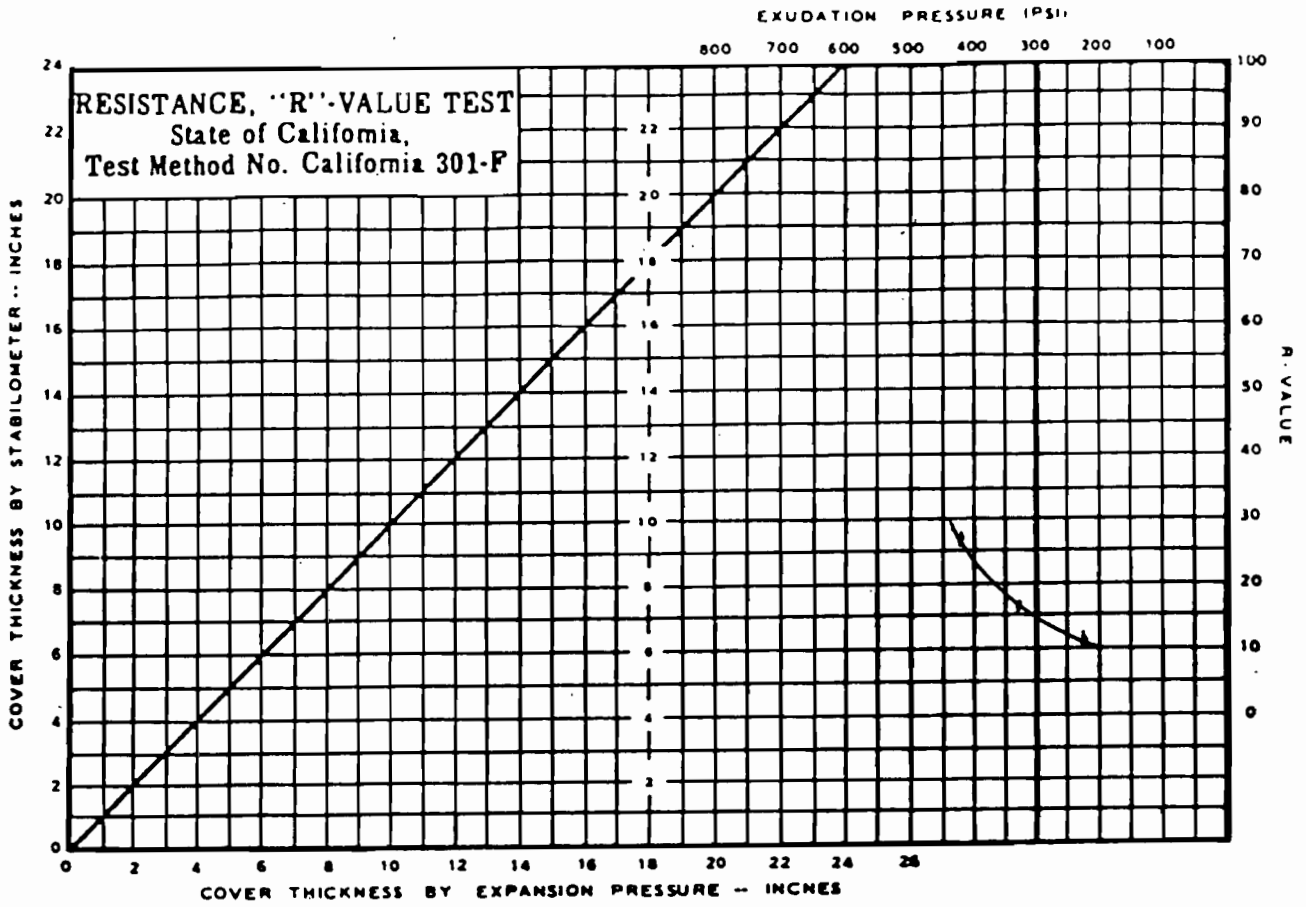

Sample: R-2
Description: Brown sandy SILT

Specimen	A	B	C
Exudation Pressure, p.s.i.	231	329	418
Expansion dial (.0001")	0	7	13
Expansion Pressure, p.s.f.	0	30	56
Resistance Value, "R"	11	17	27
% Moisture at Test	15.7	14.9	14.3
Dry Density at Test,p.c.f.	114.0	114.9	115.9
"R" Value at 300 p.s.i., Exudation Pressure		=(15)	

Project No. 93108.e

YOUNGDAHL & ASSOCIATES, INC.
GEOTECHNICAL, ENVIRONMENTAL & CONSTRUCTION LAB

"R VALUE" TEST
(Cal. 301-F)

FIGURE
B-32

RECEIVED 5/28/93

May 26, 1993

Mr. John D. Mattey, C.E.G.
YOUNGDAHL & ASSOCIATES, INC.
1234 Glenhaven Court
El Dorado Hills, California 95630

Re: Proctor & Gamble Co-generation Site, Resistivity Study.

Dear Mr. Mattey:

At the request and authorization of Youngdahl and Associates and yourself, Gasch & Associates has completed a resistivity survey on the Proctor & Gamble property located southeast of Sacramento, California.

The survey consisted of four lines, R-1 through R-4, located as shown on Black and Veatch, Subsurface Investigation Plan Map. The data on each line was collected by a two man crew using a Biddle Megger Earth Tester Model 250241. All tests were conducted in accordance with ASTM G57-78 specifications.

These data were collected on May 26, 1993. These general observations were made: 1) The ambient temperature was about 61 degrees fahrenheit, 2) the site is a flat lying tilled field, 3) the soil was moist from light rains on May 25, 1993, 4) a water filled drainage ditch was parallel to and about 30 feet to the west of the southern one half of line R-4, and 5) the southern one half of line R-4 was located about 2 feet west of an asphalt road.

The field results of the resistivity tests are on the following page.

Gasch & Associates is pleased to have had the opportunity to perform this work and present the data. Should you have any questions or comments, please feel free to call our Sacramento office.

Sincerely,

Jerrie W. Gasch
Registered Geologist #1203
Registered Geophysicist #516
Engineering Geologist #450

Kent L. Gasch
Geologist

Don Beckstead
Physicist

GASCH & ASSOCIATES • P.O. BOX 661013 • SACRAMENTO, CA 95866 • (916) 635-8906 • FAX (916) 635-8907

DATA

Line: R-1

a Space	Dial Reading	ohm-cm
2.5'	9.40 ohm	1800.1
5.0'	5.02 ohm	961.3
10.0'	1.12 ohm	214.5
15.0'	1.00 ohm	191.5
20.0'	0.70 ohm	134.1
30.0'	0.32 ohm	61.3

Line: R-2

a Space	Dial Reading	ohm-cm
2.5'	6.10 ohm	1168.2
5.0'	1.60 ohm	306.4
10.0'	1.25 ohm	239.4
15.0'	1.05 ohm	201.1
20.0'	0.60 ohm	114.9
30.0'	0.40 ohm	76.6

Line: R-3

a Space	Dial Reading	ohm-cm
2.5'	6.90 ohm	1321.4
5.0'	3.31 ohm	633.8
10.0'	0.90 ohm	172.4
15.0'	0.43 ohm	82.3
20.0'	0.39 ohm	74.7
30.0'	0.53 ohm	101.5

Line: R-4

a Space	Dial Reading	ohm-cm
2.5'	6.5 ohm	1244.8
5.0'	1.95 ohm	373.4
10.0'	1.01 ohm	193.4
15.0'	0.98 ohm	187.7
20.0'	0.92 ohm	176.2
30.0'	0.86 ohm	164.7

APPENDIX C

Recommended Grading Specifications

Guide Specifications for Rock Under Floor Slabs

Project No. 93108.e
9 July 1993

Recommended Grading Specifications
for
Proctor and Gamble Cogeneration Facility
83rd Street
Sacramento, California

1.1 General

1.11 These specifications have been prepared for the grading and site development of the subject property located on the west side of 83rd Street, in Sacramento, California. YOUNGDAHL & ASSOCIATES, INC., hereinafter described as the Geotechnical Engineer should be consulted prior to any site work connected with site development to ensure compliance with these specifications.

1.12 The Geotechnical Engineer should be notified at least two working days before any site clearing or grading operations on the property in order to observe the stripping of surface contaminated material and to coordinate the work with the grading contractor in the field.

1.13 This item shall consist of all clearing or grubbing, preparation of land to be filled, filling of the land, spreading, compaction and control of the filled areas to conform with the lines, grades and slopes as shown on the accepted plans. The Geotechnical Engineer is not responsible for determining line and grade, elevations or slope gradients. The property owner or owner's representative shall designate the person or organizations that will be responsible for those items of work.

1.14 Any grading operations and/or placement of fill done without the full knowledge of, and without field observation and testing by the Geotechnical Engineer, may render the recommendations contained within this report invalid.

1.15 Contents of these specifications shall be integrated with the geotechnical engineering study of which they are a part. They shall not be used as a self-contained document.

2.1 Tests

2.11 The standard test used to define maximum densities of all compaction work shall be the ASTM Test Procedure D1557-78. All densities shall be expressed as a relative compaction in terms of the maximum dry density determined in the laboratory by the foregoing standard procedure.

3.1 Clearing, grubbing and preparing areas to be filled

3.11 All trees, roots, vegetative matter and porous-organic topsoil shall be removed from all structural areas. The depth of porous and organic topsoil to be removed will be determined in the field by the Geotechnical Engineer.

3.12 All soil judged soft or unsuitable by the Geotechnical Engineer shall be removed.

3.13 All underground structures shall be removed from the site such as old foundations, abandoned pipe lines, septic tanks, leach fields, etc.

3.14 The final stripping and excavation shall be approved by the Geotechnical Engineer during construction, before further grading is started.

3.15 After the site has been cleared, stripped, and scarified, it shall be disced or bladed until it is uniform. The exposed native subgrade soils to receive fill shall be scarified, moisture conditioned as necessary, and recompacted to the requirements of engineered fill. Fill can then be placed to provide the

desired finished grades. The contractor shall obtain the Geotechnical Engineer's approval of subgrade compaction before any fill is placed. Cut areas of the building pad shall be scarified, moisture conditioned as necessary, and compacted to the requirements of engineered fill.

4.1 Materials used for fills

4.11 Materials used for fill shall be approved by the Geotechnical Engineer. The material shall be a soil or soil-rock mixture which is free from organic matter or other deleterious substances. The fill material within 3 feet of finished grade shall not contain rocks or lumps over 6 inches in greatest dimensions and not more than 15% larger than 2 1/2 inches. Materials from the site free from organic matter or other deleterious substances are suitable for use in fills. The Geotechnical Engineer shall determine the suitability of materials for use as engineered fill. Rocks greater than 6 inches shall be placed in deep fills so that they are not nested, and so that compaction may be achieved around them.

4.12 Should import fill material be required, it must be approved by the Geotechnical Engineer prior to transporting it to the project and it is preferable that it meet the following requirements:

1. Plasticity index not to exceed 12.
2. "R"-value not less than 25.
3. Should not contain rocks larger than 6 inches in maximum dimension.
4. Not more than 15% passing the No. 200 sieve.

Imported fill material meeting the above requirements should be compacted to 90% of the maximum dry density as determined by ASTM Test Method D1557-78.

5.1 Placing, spreading and compacting fill material

5.11 The fill materials shall be placed in uniform lifts of not more than 8 inches in uncompacted thickness. Each layer shall be spread evenly and shall be thoroughly blade mixed during the spreading to obtain uniformity of material in each layer. Before compaction begins, the fill shall be brought to a water content that will permit proper compaction by either 1) aerating the material if it is too wet, or 2) spraying the material with water if it is dry.

5.12 After each layer has been placed, mixed, and spread evenly, it shall be compacted to at least 90% relative compaction at a moisture content above optimum. Relative compaction is the ratio of the in-situ dry density of the constructed fill to the maximum dry density determined by the ASTM Test Procedure D1557-78.

5.13 Compaction shall be by footed rollers or other types of acceptable compacting rollers. Rollers shall be of such design that they will be able to compact the fill to the specified density. Rolling shall be accomplished while the fill material is within the specified moisture content range. Rolling of each layer shall be continuous over the entire area and the roller shall make sufficient passes to ensure that the required density has been achieved. No ponding or jetting shall be permitted.

5.14 Field density tests shall be performed at least every 2 feet of compacted fill height by the Geotechnical Engineer, in accordance with ASTM Test Procedure D1556-82 or ASTM Test Procedure D2922-81. When footed rollers are used for compaction, the density tests shall be taken in the compacted material below the surface disturbed by the roller. When these tests indicate that the density of any layer of fill or portion thereof is below

the required compaction, it shall be reworked until the required compaction has been achieved.

5.15 No soil shall be placed or compacted either during periods of rain or on ground which is not drained of all free water. Soil which has been soaked and wetted by rain or other causes, shall not be compacted until completely drained and until the moisture content is within the limits hereinbefore described. Prior approval by the Geotechnical Engineer shall be obtained before continuing the grading operations.

6.1 Slopes

6.11 Slopes shall be graded at gradients no steeper than 2:1 (horizontal to vertical) for fill and cut slopes unless steeper slopes in bedrock materials have been reviewed and approved by the Geotechnical Engineer and the governing city or county agency.

6.12 Fill slopes shall be compacted by means of footed rollers or other suitable equipment. Compaction operations shall be continued until the slopes are stable. As an alternative, fill slopes may be over-built and cut back into compacted material. While no appreciable amount of loose soil will be permitted on the slopes, compaction shall not be so dense as to prohibit planting. Compacting of the slopes may be done progressively in increments of three to five feet in fill height, or after the fill is brought to its total height.

6.13 After soil slopes have been graded, they shall be track-rolled completely and provisions made for erosion control. Where slopes are over-built and cut back into compacted material, track walking may not be necessary.

Drainage facilities shall be constructed to prevent water from flowing directly over the top of the slope. No soil slope shall be exposed through a winter without erosion control measures having been provided.

7.1 Subdrain installation

7.11 Provide and install permeable material and perforated metal or plastic pipe for subdrains as shown on the plans or as recommended by the Geotechnical Engineer, and as specified in Section 68 of the current edition of the Standard Specifications, State of California, Department of Transportation, except as modified below.

7.12 No clay drain tile, porous concrete pipe, perforated asbestos-cement pipe, bituminous fiber pipe or perforated clay pipe will be permitted as use for subdrain materials. No wyes, elbows, tees or other joints of these materials will be permitted.

7.13 Filter material shall conform to Class One, Type B permeable materials as designated in Section 68, "Subsurface Drains", of the Standard Specifications, State of California, Department of Transportation, current edition, unless otherwise permitted by written authorization of the Geotechnical Engineer. A typical 1" x #4 concrete coarse aggregate mix generally approximates this specification. The quality testing requirements in the Standard Specifications for the Los Angeles rattler or sand equivalence tests shall be deleted.

7.14 Unless otherwise recommended, pipes shall not be less than four inches in diameter for laterals up to 50 feet in length, or six inches in diameter for laterals up to 250 feet in length. Pipes shall not be less than eight inches in diameter for laterals greater than 250 feet in length.

7.15 Trenches shall be excavated to a width not less than one foot plus the outside diameter of pipe, and at a gradient not less than 2.0%. The pipe shall be bedded on not less than six inches of filter material and installed at such a depth that there is not less than two feet of filter material over the pipe, or as recommended by the Geotechnical Engineer.

8.1 Trench backfill

8.11 Where any opening is made under or through the perimeter foundations for such items as utility lines, the openings must be resealed so that they are watertight to inhibit the entrance of outside irrigation or rain water into the subsurface portion of the structures. The trenches extending under the perimeter foundations and concrete slabs-on-grade floors shall be backfilled with native engineered fill and adequately compacted.

8.12 Trench backfill may be import or native material which is free of organic materials, debris and other deleterious material. All trench backfill materials should not contain rocks or lumps lager than 3 inches in maximum dimension.

9.1 Subsurface pipe line removal (if encountered in the field)

9.11 The methods of removal will be designated by the Geotechnical Engineer in the field depending upon the depth and location of the line. One of the following methods will be used:

1. Remove the pipe. Backfill the trench and compact the soil according to the applicable portions of sections 5.1 and 6.1.

2. The pipe shall be crushed in the trench. The trench shall then be filled and compacted according to the applicable portions of sections 5.1 and 6.1.

3. Cap the ends of the line with concrete to prevent entrance of water. The length of cap shall not be less than 5 feet. The concrete mix shall have a minimum shrinkage.

10.1 Unusual conditions

10.11 If any unusual conditions not covered by the special provisions contained herein are encountered during the grading operations, the Geotechnical Engineer shall be notified immediately for revised or alternate recommendations or grading specifications as required.

Project No. 93108.e
9 July 1993

Guide Specifications for Rock Under Floor Slabs

Definition

Graded gravel or crushed rock for use under slab-on-grade shall consist of a minimum thickness of mineral aggregate placed in accordance with these specifications and in conformity with the dimensions shown on the plans. The minimum thickness is specified in the accompanying report.

Materials

The mineral aggregate shall consist of broken stone, crushed or uncrushed gravel, quarry waste or a combination thereof. The aggregate shall be free from adobe, vegetable matter, loam, volcanic tuff and other deleterious substances. It shall be of such quality that the absorption of water in a saturated surface dry condition does not exceed 3% of the oven dry weight of the sample.

Grading

The mineral aggregate shall be of such size that the percentage composition by dry weight, as determined by laboratory sieves (U.S. Sieve) will conform to the following gradation:

Sieve size	Percentage passing
3/4	100
No. 4	10-35
No. 200	0-7

Placing

Subgrade, upon which gravel or crushed rock is to be placed, shall be prepared as outlined in the accompanying geotechnical engineering study.

Appendix D
Structural/Seismic Engineering Design Criteria

Appendix D
Structural/Seismic Engineering Design Criteria

D.1 Introduction

An orderly sequence of events for the implementation of the project is planned consisting of the following major activities:

- Conceptual design.
- Licensing and permitting.
- Detailed design.
- Procurement.
- Construction and construction management.
- Startup, testing, and checkout.
- Project completion.

The purpose of this appendix is to summarize the codes and standards and standard design criteria and practices that will be used during the project. These criteria form the basis of the design for the structural components and systems of the project. More specific design information will be developed during detailed design to support equipment procurement and construction specifications. Section D.2 summarizes the applicable codes and standards and Section D.3 includes the general criteria for natural phenomena, design loads, architectural features, concrete, steel, and seismic design. Section D.4 describes the structural design methodology for structures and equipment. Section D.5 describes the hazard mitigation for the project.

D.2 Design Codes and Standards

The design and specification of work shall be in accordance with all applicable laws and regulations of the federal government, the State of California, and with the applicable local codes and ordinances. A summary of the codes and industry standards to be used in the design and construction follows:

- Specifications for materials will generally follow the standard specifications of the American Society for Testing and Materials (ASTM) and the American National Standards Institute (ANSI).
- Field and laboratory testing procedures for materials will follow standard ASTM specifications.

- Design and placement of structural concrete will follow the recommended practices and the latest version of the American Concrete Institute (ACI), the International Conference of Building Officials, Uniform Building Code, 1991 Edition (UBC 1991), and the Concrete Reinforcing Steel Institute (CRSI).
- Design, fabrication, and erection of structural steel will follow the recommended practices and the latest version of the American Institute of Steel Construction Code (AISC) and UBC 1991.
- Steel components for metal wall panels and roof decking will conform to the American Iron and Steel Institute (AISI) Specification for the Design of Light Gauge Cold-Formed Structural Members.
- Welding procedures and qualifications for welders will follow the recommended practices and codes of the American Welding Society (AWS).
- Preparation of metal surfaces for coating systems will follow the specifications and standard practices of the Steel Structures Painting Council (SSPC), National Association for Corrosion Engineers (NACE), and the specific instructions of the coatings manufacturer.
- Fabrication and erection of grating will follow applicable standards of the National Association of Architectural Metals Manufacturers (NAAMM).
- Design and erection of masonry materials will follow the recommended practices and codes of the latest revision of the ACI Concrete Masonry Structures Design and Construction Manual and the International Conference of Building Officials, Uniform Building Code, 1991 Edition (UBC).
- Plumbing will conform to the Uniform Plumbing Code.
- Design will conform to the requirements of the Federal and California Occupational Safety and Health Administration (OSHA and CALOSHA).
- Design of roof coverings will conform to the requirements of the National Fire Protection Association (NFPA) and Factory Mutual (FM).

Other recognized standards will be used where required to serve as guidelines for the design, fabrication, and construction.

The following laws, ordinances, codes, and standards have been identified as applying to structural design and construction. In cases where conflicts between cited codes (or standards) exist, the requirements of the more conservative code will be met.

Federal

- Title 29, Code of Federal Regulations, Part 1910, Occupational Safety and Health Standards.
- Walsh-Healy Public Contracts Act (P.L. 50-204.10).

State

- Business and Professions Code Section 6704, et seq.; Section 6730 and 6736. Requires state registration to practice as a Civil Engineer or Structural Engineer in California.
- Labor Code Section 6500, et seq. Requires a permit for construction of trenches or excavations 5 feet or deeper where personnel have to descend. This also applies to construction or demolition of any building, structure, false work, or scaffolding which is more than three stories high or equivalent.
- Title 24, California Administration Code (CAC) Section 2-111, et seq.; Sections 3-100, et seq.; Section 4-106, et seq.; Section 5-102, et seq.; Section 6-T8-769, et seq.; Section 6-T8-3233, et seq.; Section 6-T8-3270, et seq.; Section 6-T8-5138, et seq.; Section 6-T8-5465, et seq.; Section 6-T8-5531, et seq.; and Section 6-T8-5545, et seq. Adopts current edition of UBC as minimum legal building standards.
- State of California Department of Transportation, Standard Specifications, 1988.
- Title 8, CAC Section 1500, et seq.; Section 2300, et seq.; and Section 3200, et seq. Describes general construction safety orders, industrial safety orders, and work safety requirements and procedures.
- Regulations of the following state agencies as applicable.
  - -- Department of Labor and Industry Regulations.
  - -- Bureau of Fire Protection.
  - -- Department of Public Health.
  - -- Water and Power Resources.
- Title 8, CAC Section 450, et seq. and Section 750, et seq. Adopts American Society of Mechanical Engineers Boiler and Pressure Vessel Code (ASME B and PVC) and other requirements for unfired and fired boilers.

County

- Sacramento County Ordinances.

City

- City of Sacramento Ordinances.

Industry Codes and Standards

- California Energy Commission, "Recommended Seismic Design Criteria for Non-Nuclear Power Generating Facilities in California," June 1989.
- International Conference of Building Officials, "Uniform Building Code" (UBC), 1991 Edition.
- Structural Engineers Association of California, "Recommended Lateral Force Requirements and Tentative Commentary," 1988 Recommendation and Commentary.
- Applied Technology Council, "Tentative Provision for the Development of Seismic Regulations for Buildings," (ATC-3-06), Amended December 1982.
- American Institute of Steel Construction (AISC).
  - -- Specification for Structural Steel Buildings-Allowable Stress Design and Plastic Design, June 1, 1989.
  - -- "Code of Standard Practice for Steel Buildings and Bridges."
  - -- "Allowable Stress Design Specification for Structural Joints Using ASTM A325 or A490 Bolts."
  - -- Manual of Steel Construction Allowable Stress Design, 9th Edition.
- American Iron and Steel Institute (AISI) "Specification for the Design of Cold-Formed Steel Structural Members," August 19, 1986, Edition Cold-Formed Steel Design Manual Parts I-VII."
- American Welding Society (AWS) "Structural Welding Code" (AWS D1.1-92).
- American Concrete Institute (ACI).
  - -- "Building Code Requirements for Reinforced Concrete" (ACI 318/318R-89).
  - -- "Building Code Requirement for Structural Plain Concrete" (ACI 318.1/318.1R-89).
  - -- "Code Requirements for Nuclear Safety Related Structures," Appendix B (Steel Embedments only) (ACI 349-85), except that anchor bolts will be embedded to develop their yield strength.
  - -- ACI 531-79 "Building Code Requirements for Concrete Masonry Structures" (Revised 1983).
  - -- ACI 212.3R-91--Chemical Admixtures for Concrete.

- -- ACI 302.IR-89--Guide for Concrete Floor and Slab Construction.
- -- ACI 350R-89--Environmental Engineering Concrete Structures.

- Structural and Miscellaneous Steel.
  - -- ASTM A569/A569M-85--Standard Specifications for Steel Carbon (0.15 maximum percent) Hot-Rolled Sheet and Strip, Commercial Quality.
  - -- ASME/ANSI STS-1-1986--Steel stacks, except for circumferential stiffening which shall be in accordance with British Standard 4076--1978 and except that seismic design shall be in accordance with UBC 1991.
- American Society for Testing and Materials (ASTM). The following codes and standards shall be included as a minimum.
  - -- ASTM A36/A36M-91--Specification for Structural Steel.
  - -- ASTM A53-90b--Specification for Pipe, Steel, Black and Hot-Dipped, Zinc Coated, Welded and Seamless.
  - -- ASTM A276-92--Specification for Stainless and Heat-Resisting Steel Bars and Shapes.
  - -- ASTM A500-90a--Specification for Cold-Formed Welded and Seamless Carbon Steel Structural Tubing in Rounds and Shapes.
  - -- ASTM B695-91--Specification for Coatings of Zinc Mechanically Deposited on Iron and Steel.
  - -- ASTM A307-92a--Specification for Carbon Steel Bolts and Studs, 60000 PSI Tensile Strength.
  - -- ASTM A123-89a--Specification for Zinc (Hot-Dip Galvanized) Coatings and Iron and Steel Products.
  - -- ASTM A153-82 (1987)--Specification for Zinc Coating (Hot-Dip) on Iron and Steel Hardware.
  - -- ASTM A82-90a--Specification for Steel Wire, Plain, for Concrete Reinforcement.
  - -- ASTM A185-90a--Specification for Steel Welded Wire Fabric, Plain, for Concrete Reinforcement.
  - -- ASTM A615/A615M-92b--Specification for Deformed and Plain Billet-Steel Bars for Concrete Reinforcement.
- Masonry Institute of America, "Reinforced Masonry Engineering Handbook."
- American Water Works Association (AWWA).
  - -- "Standards for Welding Steel Tanks," (AWWA D100-84).

- -- "Standards for Prestressed Concrete Pressure Pipe, Steel Cylinder Type for Water and Other Liquids"--(AWWA C301-84).
- -- "Standards for Reinforced Concrete Water Pipe--Noncylinder Type, Not Prestressed"--(AWWA C302-87).

- American Petroleum Institute (API) Standard 650-88, Welded Steel Tanks for Oil Storage.
- American Association of State Highway and Transportation Officials--(GDHS-2), "A Policy on Geometric Design of Highways and Streets."
- Heating, Ventilating, and Air Conditioning Guide by American Society of Heating, Refrigeration, and Air Conditioning Engineers (ASHRAE).
- Uniform Plumbing Code (UPC).
- International Association of Plumbing and Mechanical Officials.
- National Fire Protection Association Standards (NFPA), 1992.
- Steel Structures Painting Council Standards (SSPC).
- American Society of Nondestructive Testing (SNT-TC-1A).
- International Standard Organization (ISO) 3945-85 "Mechanical Vibration of Large Rotating Machines with Speed Range from 10 to 200 revs/sec--Measurement and Evaluation of Vibration Severity In Situ."

The codes and industry standards used for design, fabrication, and construction will be the codes and industry standards, including all addenda, in effect as stated in equipment and construction purchase or contract documents. Where no other standard or code governs, the UBC will be used.

D.3 Structural Design Criteria

D.3.1 Natural Phenomena

The design criteria based on the natural phenomena are discussed below. Climatological data is from the National Climatic Data Center 985 for the Sacramento area.

D.3.1.1 Rainfall. The rainfall design basis may vary for the different systems and system components. Precipitation amounts and intensities to be used with each design basis for various durations and return periods are obtained from the Rainfall Frequency Atlas of the United States, Technical Paper No. 40, May 1961.

D.3.1.2 Wind Speed. The design wind speed will be 80 miles per hour based on UBC 1991 edition for a 50 year recurrence interval. This design wind speed will be used to determine wind loads for all structures as discussed in Subsection D.3.2.3 Wind Loads.

D.3.1.3 Temperature. Systems and system component design criteria which require ambient temperature extremes shall use the range from 17° F to 115° F for dry-bulb temperatures.

D.3.1.4 Relative Humidity. The average annual relative humidity is 66 percent.

D.3.1.5 Seismicity. The plant site is located in Risk Zone 3, as determined from Figure No. 23-2 of UBC 1991.

D.3.1.6 Snow. The plant site is located in a zero ground snow load area, as determined from Figure No. A-5-A of UBC 1991.

D.3.2 Design Loads

Design loads for all structures will be determined according to the criteria described below, unless the applicable building code requires more severe design conditions.

D.3.2.1 Dead Loads. Dead loads will consist of the weights of the structure and all equipment of a permanent or semipermanent nature including tanks, bins, wall panels, partitions, roofing, piping, drains, electrical trays, bus ducts, and the contents of tanks and bins measured at full operating capacity. The contents of tanks and bins shall not be considered as effective in resisting column uplift due to wind forces but shall be considered effective for seismic forces.

Dead loads will be determined using the unit weights from ASCE 7-88, Table C1, or in accordance with Black & Veatch standard practice, whichever is more conservative.

D.3.2.2 Live Loads. Live loads will consist of uniform live loads and equipment live loads. Uniform live loads are assumed unit loads which are sufficient to provide for movable and transitory loads, such as the weight of people, portable equipment and tools, planking and small equipment, or parts which may be moved over or placed on floors during maintenance operations. These uniform live loads will not be applied to floor areas which will be permanently occupied by equipment.

Equipment live loads are calculated loads based upon the actual weight and size of the equipment and parts to be placed on floors during dismantling and maintenance, or to be temporarily placed on or moved over floors during installation.

Ground floor slabs will be designed for a minimum of 250 pounds per square foot (psf). Consideration will be given to designing appropriate areas of the ground floor for support of heavy equipment such as construction and maintenance cranes.

Grating floors will be designed for a minimum live loading of 75 psf.

Live loads may be reduced in accordance with the provisions of UBC Section 2306.

All roof areas will be designed for wind loads as indicated in Subsection D.3.2.3 Wind Loads. Ponding loading effect due to roof deck and framing deflections will be investigated in accordance with AISC Specification Article K2. All roof areas will be designed for a minimum of 20 psf live load in addition to calculated dead loads.

Pipe hanger loads for the major piping systems will be specifically determined and located. Piping expansion and dynamic loads will be considered on an individual basis for their effect on the structural systems.

Pipe loads for other areas will be treated as uniform loads per unit floor area, and will be carried to the columns and foundations as dead loads. Pipe loads will not be considered as reliable dead load for uplift.

Equipment loads will be specifically determined and located. For major equipment, structural members and bases will be specifically located and designed to carry the equipment load into the structural system. For equipment weighing less than the uniform live load, the structural system will be designed for the live load.

The combustion and steam turbine foundations will be designed for the following loads:

- Dead loads.
- Live loads.
- Normal torque loads (turbine).
- Temperature and pressure loads.
- Seismic loads.
- Emergency loads, such as turbine accident loads, and any temperature and pressure loads present during the emergency.

D.3.2.3 Wind Loads. Wind loads for all structures will be based on UBC 1991. Basic wind speed will be 80 miles per hour and wind stagnation pressure (qs) of 15 psf. A step function of pressure with height under Exposure C conditions will be used. The Importance Factor shall equal 1.15. Height brackets and velocity pressures will be as follows:

Height Above Ground feet	Velocity Pressure pounds-force per square foot
Grade to 20	20.7
20 to 40	23.0
40 to 60	25.8
60 to 100	28.7
100 to 160	32.1
160 to 200	34.5

The above velocity pressures are average values for the indicated height brackets. The design wind pressures will be determined by multiplying the velocity pressures by the appropriate pressure coefficients given in UBC Table No. 23-H using Method 1.

D.3.2.4 Steel Stack. The steel stack and supports will be capable of enduring specified normal and abnormal design operating conditions in combination with wind or seismic for the design life of the facility. Effects of wind will include along-wind and across-wind response. The design will address the design considerations, meet the requirements, and utilize the design methods of Steel Stacks, ASME/ANSI STS-1-1986, and AISC Manual of Steel Construction Allowable Stress Design, Ninth Edition, except that increased allowable stresses for wind will not be used. Design values for yield strength and modulus of elasticity of the stack material will depend on the composition of the material and the maximum temperature of the metal at design operating conditions, and will be as prescribed by the ASME Pressure Vessel Code, Section VIII, Division 2, Part AM. Seismic loads shall be in accordance with UBC 1991.

D.3.2.5 Seismic Loads. Seismic loads will be determined in accordance with the requirements specified in Section D.3.6 Seismic Design Criteria.

D.3.2.6 Construction Loads. The integrity of the structures will be maintained without use of temporary framing struts or ties and cable bracing insofar as possible. However, construction or crane access considerations may dictate the use of temporary structural systems.

D.3.2.7 Load Combinations. At a minimum, the following load combinations will be considered. Applicable code prescribed load combinations will also be considered:

- Dead load.

- Dead load plus live load plus all loads associated with normal operation of the equipment, e.g., temperature and pressure loads, piping loads, normal torque loads, impact loads, etc.
- Dead load plus live load plus all loads associated with normal operation plus wind load.
- Dead load plus live load plus all loads associated with normal operation plus seismic load.
- Dead load plus construction loads.
- Dead load plus live load plus emergency loads.
- Dead load plus wind load.
- Dead load plus seismic load.

Every building component will be provided with the strength adequate to resist the most critical effect resulting from the following combinations of loads:

- Dead plus floor live plus roof live.
- Dead plus floor live plus wind.
- Dead plus floor live plus seismic.
- Dead plus floor live plus wind plus roof live/2.
- Dead plus floor live plus roof live plus wind/2.
- Dead plus floor live plus roof live plus seismic.

Note: Use live load only where required by UBC 1991 in combination with seismic.

D.3.2.8 Allowable Stresses. Each load combination will not exceed the allowable stress permitted by the appropriate code for that combination.

D.3.2.8.1 Concrete structures. The required strength (U) will be at least equal to the following:

- U = 1.4 Dead + 1.7 Live.
- U = 0.75 (1.4 Dead + 1.7 Live + 1.7 Wind).
- U = 0.9 Dead + 1.3 Wind.
- U = 0.75 (1.4 Dead + 1.7 Live + 1.87 Seismic).
- U = 0.9 Dead + 1.43 Seismic.
- U = 1.4 Dead + 1.7 Live + 1.7 Earth Pressure.
- U = 0.9 Dead + 1.7 Earth Pressure.

D.3.2.8.2 Steel structures. The required strength (S) based on the elastic design methods and the allowable stresses (Fs) defined in Part 1 of the AISC Specification for the Design, Fabrication, and Erection of Structural Steel for Buildings is as follows:

- S = Dead = 1.0 Fs.
- S = Dead + Wind = 1.33 Fs.
- S = Dead + Seismic = 1.33 Fs; frame members and connections will conform to the additional requirements of UBC Sections 2337 and 2710.
- S = Dead + Live = 1.0 Fs.
- S = Dead + Live + Wind = 1.33 Fs.
- S = Dead + Live + Seismic = 1.33 Fs; frame members and connections will conform to the additional requirements of UBC Sections 2337 and 2710.

D.3.3 Architecture

General design criteria for the architectural systems are as follows.

D.3.3.1 Architecture--General. General design criteria for materials and installation of architectural systems or components will be as follows:

- Interior Walls--Where durability is required, interior walls may be constructed of concrete block masonry, structurally designed and reinforced as required. In offices, shops, etc., metal studs with gypsum board will usually be used to form interior partitions. Insulation for sound control will be used where required by design.
- Fire Exits--Fire exits will be provided at outside walls as required by code. Exit signs will be provided.

  Fire doors will bear an Underwriters' Laboratories certification level for class of opening and rating for door, frame, and hardware. Doors will conform to hollow metal door requirements and have fillers adequate to meet the fire rating.
- Large Access Exterior Doors--Large access exterior doors will be rolling steel type with weather seals and windlocks. Components will be formed from galvanized steel, factory primed, and field painted. Motor-operated doors will be provided with override manual operation.

D.3.3.2 Architecture--Prefabricated Metal Buildings. Prefabricated metal buildings (packaged to include exterior doors, wall louvers, windows, skylights, and related enclosure components) will be furnished as follows:

- Building Enclosure--Building enclosures will be of manufacturer's standard modular rigid frame construction with tapered or uniform depth rafters rigidly connected at ends to pinned-base tapered or uniform depth columns. Purlins and girts will be cold-formed "C" or "Z" sections conforming to "Specifications for Design of Cold-Formed Steel Structural members" of American Iron and Steel Institute. Roof slopes will be approximately 1 inch rise per 12 inches of run. Metal roof coverings will be of prefinished standing seam panels of 24 gauge minimum.
- Steel--Cold-formed components will conform to ASTM A570, Grade E, 42,000 psi minimum yield for material thicknesses equal to or less than 0.23 inch. Hot rolled components will conform to ASTM A529, 42,000 psi minimum yield for material thickness equal to or greater than 1/4 inch. Roof covering and wallcovering will conform to ASTM A446, Grade B, galvanized 37,000 psi minimum yield. All cold-formed components will be manufactured by precision roll or break forming.

D.3.4 Concrete

Reinforced concrete structures will be designed in accordance with UBC 1991 and ACI 318-89, Building Code Requirements for Reinforced Concrete.

D.3.4.1 Materials. The materials described below will be specified and used as a basis for design:

- Reinforcing Steel--Reinforcing steel will meet the requirements of ASTM A615 Grade 60.
- Cement--Cement used in all concrete mixes will be portland cement meeting the requirements of ASTM C150.
- Aggregates--Fine aggregates will be clean natural sand. Coarse aggregates will be crushed gravel or stone. All aggregates will meet the requirements of ASTM C33.
- Admixtures--Plasticizers and retarders will be used to control setting time and to obtain optimum workability. Air entrainment of 4 to 6 percent by volume will be used in all concrete mixes. Calcium chloride will not be permitted. Interior slabs to be trowel finished may use less air entrainment.
- Water--Clean water of potable quality will be used in all concrete.

D.3.4.2 Design. The system of concrete and steel reinforcing strength combinations will be used as follows:

- Concrete Strength--psi (at 28 days)--See table in Subsection D.3.4.3.
- Reinforcing Strength--60,000 psi, Grade 60.

D.3.4.3 Mixes. Concrete mix design for three classes of concrete will be required. The usage classes are as follows:

Class	Design Strength psi at 28 days	ASTM C33 Aggregate Size	Minimum Slump inches	Maximum Slump inches	Cement Plus Fly Ash lb/cu yd	Use
A	4,000	No. 57 No. 67	2	4	585	General, Special
B	3,000	No. 7	4	6	600	Duct Banks
C	2,000	No. 467	2	4	450	Lean Work Slab, Fill

Concrete strength will be determined by ASTM C39.

D.3.4.4 Concrete Tests. Quality control testing of concrete will be performed by an independent laboratory and will consist of the following:

- Preliminary Review--Before concrete mixes are designed, the source and quality of materials will be determined and the following reports will be submitted:
  - -- The type, brand, manufacturer, composition, and method of handling (sack or bulk) of cement.
  - -- The classification, brand, manufacturer, and active chemical ingredients of all admixtures.
  - -- The source of coarse aggregates and test reports to verify compliance with ASTM C33.
  - -- The source of fine aggregates and test reports to verify compliance with ASTM C33.
  - -- The results of tests to determine compliance of admixtures with appropriate ASTM requirements.
- Design Mix Tests--Concrete will be proportioned to provide an average compressive strength as prescribed in UBC 91 Section 2605(d)2. Documentation that proposed concrete proportions will produce an average compressive strength equal to or greater than required average compressive strength will be established based on trial mixtures in accordance with UBC 91 Section 2605(d)3.B.

- Field Control Tests--Field control tests will include the following:
  - -- Aggregate Gradation--Each 500 tons of fine aggregate and each 1,000 tons of coarse aggregate will be sampled and tested in accordance with ASTM D75 and C136.
  - -- Slump--A slump test will be made from each of the first three batches mixed each day. An additional test will be made for each 50 cubic yards placed in any one day.
  - -- Air Content--An air content test will be made from one of the first three batches mixed each day and from each batch of concrete from which compression test cylinders are made. Air content tests will be in accordance with ASTM C231.
  - -- Compression Tests--One set of two concrete test cylinders will be made each day from each class of concrete being placed. Additional sets will be made depending on the amount of concrete placed each day. For each additional 100 cubic yards of each class, or major fraction thereof, placed in any one day, one additional set of cylinders will be made. One cylinder of each set will be tested at an age of seven days, and the other cylinder of each set will be tested at 28 days. Compression tests will be in accordance with ASTM C39.

D.3.4.5 Reinforcing Steel Test. Mill test reports certifying that reinforcing steel is in accordance with ASTM and project specifications will be required.

D.3.5 Steel and Other Metals

D.3.5.1 Structural Steel. Steel framed structures will be designed in accordance with the UBC 1991 and the AISC Specification for the Structural Steel Building, Allowable Stress Design and Plastic Design, June 1, 1989. In addition, steel framed structures will be designed in accordance with the criteria discussed in the following subsections.

D.3.5.1.1 Materials. Structural steel shapes, plates, and appurtenances for general use will conform to ASTM A36. Connection bolts will conform to ASTM A325. Connections will conform to AISC Specification for Structural Joints, November 13, 1985 edition. Welding electrodes will be as specified by the AWS. All exterior structural steel will be hot dipped galvanized. Interior structural steel will be shop primed after fabrication.

D.3.5.1.2 Tests. Mill test reports or reports of tests made by the fabricator will be required certifying that all material is in conformance with the applicable ASTM

specification. In addition, the fabricator will provide an affidavit stating that all steel specified has been provided at yield stresses in accordance with the drawings and the specification.

D.3.5.1.3 Design. All steel framed structures will be designed as "rigid frame" (AISC Specification Type 1) or "simple" space frames (AISC Specification Type 2), utilizing single span beam systems, vertical diagonal bracing at main column lines, and horizontal bracing at the roof and major floor levels. The use of Type 1 rigid frames will generally be limited to prefabricated metal buildings. All other framed structures will utilize Type 2 design and construction.

Metal roof decks attached with welding washers or fasteners may be considered to provide a structure with lateral force diaphragm action. Grating floors will not be considered as providing horizontal rigidity.

Connections will be in accordance with Black & Veatch standard design for shop welded and field bolted connections. Connections will be designed for 3/4 inch bolts for friction type joints. The connection bolts will be pretensioned in accordance with slip-critical type joint requirements.

D.3.6 Seismic Design Criteria

This section provides the general criteria and procedures which will be used for seismic design of structures, equipment, and components.

The Procter & Gamble Cogeneration Project is located in Seismic Risk Zone 3 according to the Uniform Building Code, 1991 edition. The seismic performance objectives for this facility are as follows:

- Resist minor levels of earthquake ground motion without damage.
- Resist moderate levels of earthquake ground motion without structural damage, but possibly experience some nonstructural damage.
- Resist major levels of earthquake ground motion without collapse, but possibly with some structural as well as nonstructural damage.

To achieve these objectives and to meet the requirements of the CEC and local codes, the facility will be designed in accordance with the 1991 edition of the Uniform Building Code.

D.3.6.1 Buildings and Structures. The seismic risk zone used for this site will be Zone 3 as determined from UBC 1991 Figure No. 23-2 titled "Seismic Risk Map of the United States," using an Importance Factor of 1.25. Seismic loading will be used in the design of structures only when it is greater than the computed wind loads.

Buildings and structures defined by UBC 1991 Section 2333(h)2 will be designed using the static lateral force procedure of Section 2334. Where specific structures are listed, the equivalent lateral and vertical load factors of Table 3.6-1 will be used in lieu of those prescribed by UBC. The vertical seismic force coefficient will be two thirds of the prescribed horizontal factor.

Buildings and structures defined by UBC 1991 Section 2333(h)3 will be designed using the dynamic lateral force procedure of Section 2335. The ground motion representation will use the response spectrum indicated in UBC Figure 23-3.

Lateral forces on elements of structures and nonstructural components will be determined from the greater of UBC 2336(b) requirements, that specified in Table 3.6-1, or UBC 2338(d) requirement for equipment supported laterally at or below grade.

Water storage tanks will meet the seismic design requirements of AWWA D100, Appendix A.

D.3.6.2 Critical Structures and Associated Seismic Design Coefficients. Critical structures are those structural components that are necessary for power production and are costly to repair or replace, or have a long lead time to repair or replace; or are used for the storage, containment, or handling of hazardous or toxic materials.

Seismic loads for all critical structures will be determined by the static force procedure of UBC-91. Table 3.6-1 identifies the critical structures and the associated seismic design coefficients.

D.4 Structural Design Methodology

This section describes the structural aspects of the design of the proposed facility. Each major structural component of the plant is addressed by defining the design criteria and analytical techniques that will be employed.

The typical drawings included are intended to show the level of detail that will be provided during the detailed design phase of the work. The drawings do not represent the actual equipment and foundations that will be provided. They are examples only.

D.4.1 Structures

D.4.1.1 Combustion and Steam Turbine Foundations. Each combustion and steam turbine foundation will be designed to support the turbine and generator components.

Table 3.6-1

Critical Structure	Formula	Seismic Zone Factor (Z)	Importance Factor (I)	Horizontal Force Factor (C or Cp)	Numerical Coefficient (Rw)
Buildings	UBC 34-1	0.3	1.25	2.75*	8*
Caustic, acid, and ammonia storage tanks and their foundations and anchorages	UBC 36-1	0.3	1.25	0.75	--
Foundations and anchorages for steam and combustion turbine/generator and wet surface condenser	UBC 36-1	0.3	1.25	0.75	--
Foundation and anchorages for heat recovery steam generator	UBC 34-1	0.3	1.25	2.75	6
Heat recovery steam generator exhaust stack, its foundation and anchorage	UBC 34-1	0.3	1.25	1.66	4

*Value is approximate and may be revised during detailed design to reflect the final configuration.

Each foundation will be designed to resist the loadings furnished by the manufacturer and will be constructed of reinforced concrete.

D.4.1.1.1 Foundation Loads. Foundation loads will be furnished by the combustion and steam turbine manufacturer and will be superimposed with loads for the foundation itself. Typical loading data supplied by the manufacturer include the following:

- Dead loads.
- Live loads.
- Wind loads from project specific criteria.
- Seismic loads from project specific criteria.
- Hydrostatic loads.
- Temperature and pressure loads.
- Emergency loads such as turbine accident loads.

A typical combustion turbine foundation is indicated on Figure D.4.1-1. Foundation loading magnitudes from a combustion turbine are indicated on Figure D.4.1-2.

D.4.1.1.2 Induced forces. The combustion and steam turbines and associated equipment will be securely anchored to the foundation using cast-in-place steel anchor bolts designed to resist the equipment forces.

D.4.1.1.3 Structural system. Refer to Figure D.4.1-1 for information regarding the specific structural system.

D.4.1.1.4 Structural criteria. Each foundation will be designed and constructed as a monolithic reinforced concrete structure using the criteria from Appendix C, Section C.3.1 Foundations and Appendix D, Section D.3.4 Concrete. Each foundation system will likely be a soil-supported rigid mat.

The foundation design will address the following considerations:

- Soil bearing capacities and earth pressures.
- Allowable settlements.
- Equipment, structure, and environmental loads.
- Natural frequencies of rotating equipment.
- Access and maintenance.
- Equipment performance criteria.
- Dynamic effects of the rotating machinery.

Environmental loading will be determined in accordance with Appendix D, Section D.3.1 Natural Phenomena. Wind loads will be determined using the velocity pressures specified in Appendix D, Subsection D.3.2.3 Wind Loads.

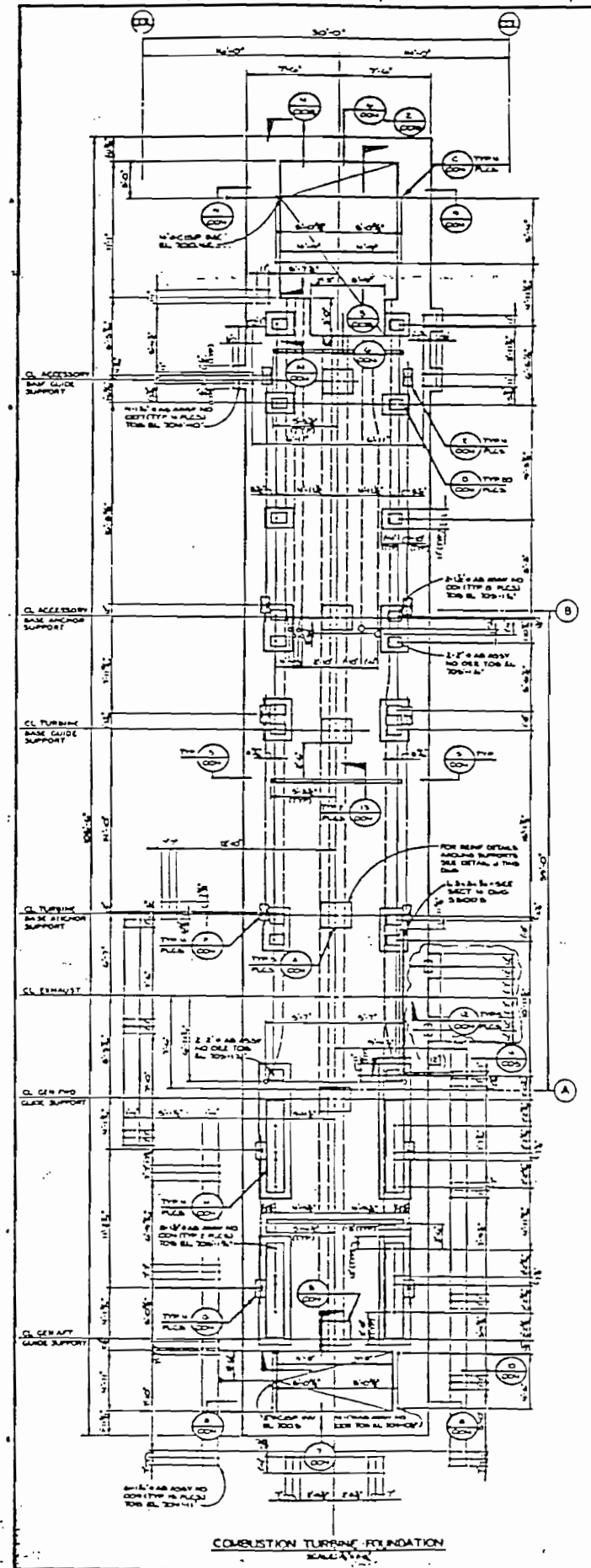

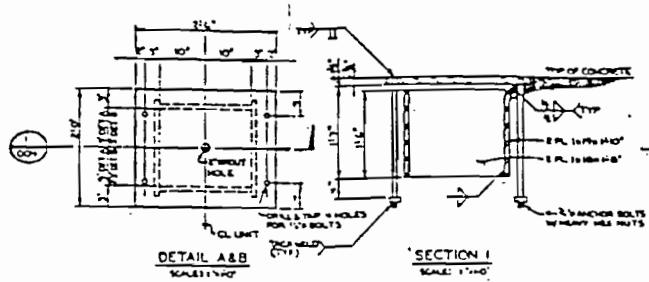

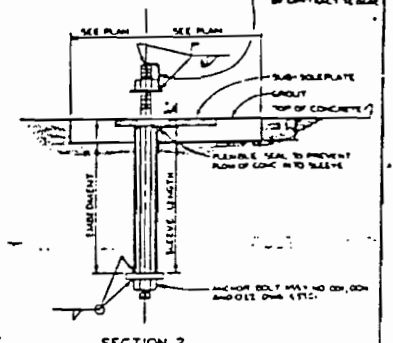

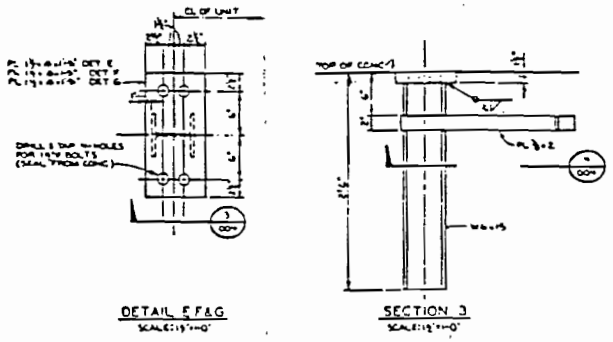

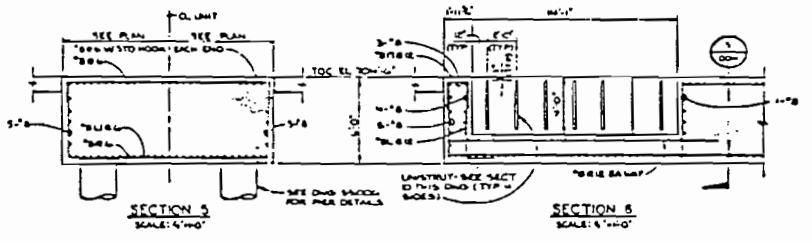

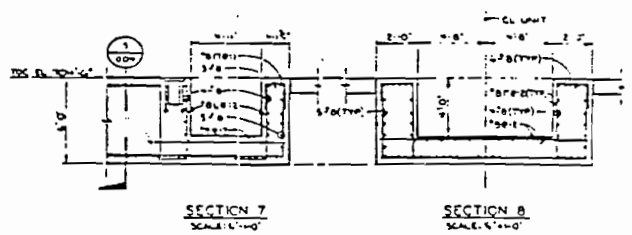

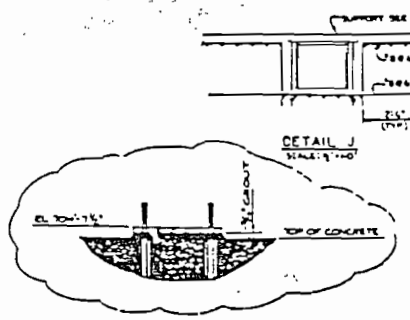

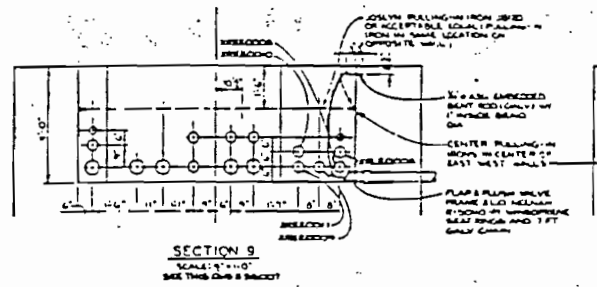

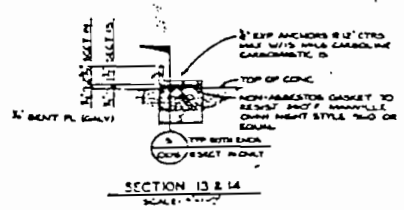

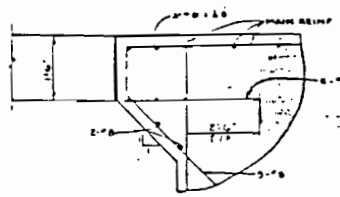

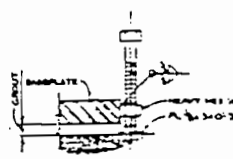

NOTES

1. See drawing 55901 for general notes, legend and anchor bolt list.
2. Foundation dimensions, reinforcing and anchor bolts are symmetrical about main unit centerline unless noted or shown otherwise.
3. All foundation anchor bolts (ABS) shall be set and held to a tolerance of ± 1/8 inch. All ab (ABS) shall be set by means of a suitable structural steel template which interconnects all bolts.
4. Reinforcing spacings indicated are nominal. Spacings may be altered to avoid interference with embedments.
5. All sub-sole plates shall be level within 0.002 inches/inch and flat within 0.002 inches. No sub-sole plate surface shall be more than 0.02 inches from a common reference plane.
6. Grout must not project above sub-sole plates.
7. Leveling plates to be installed on bolts after each unit is set. See Section 2 this drawing.
8. The accessory compartment base shall have a continuous grout fill between the foundation and machine base line on each side of the base from the 1'-3" inch mat plate (shown by section 1/01 sheets 1) to the control compartment base.
9. The control compartment base shall have a continuous grout fill between the foundation and machine base line on the south end of the base and on each side of the base including the gap between the accessory compartment base and control compartment base.
10. The collector compartment base shall have a continuous grout fill between the foundation and machine base around the perimeter of the base.

Figure D4.1-1
TYPICAL CT FND.

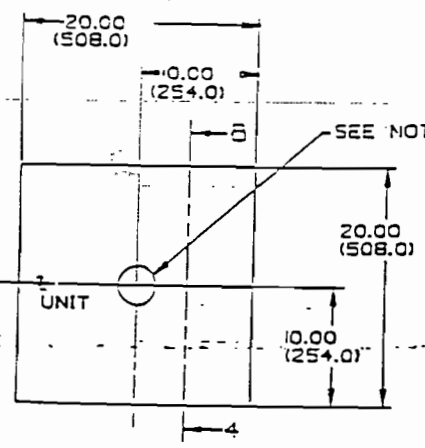

DETAIL B-1 (D-4, D-6)
ANCHOR SUPPORT PAD P&R

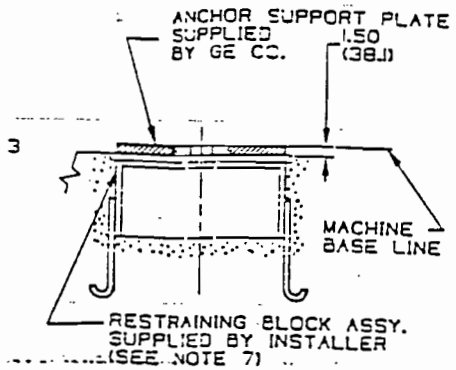

SECTION B-3 (A-1)
ROTATED 90 DEG CW

PAD LETTER	DEAD LOAD PER PAD (LBS)	(KG)
A,A1	17,000	7,711
B,B1	15,000	6,804
C,C1	30,000	13,608
D,D1	15,000	6,804
E,E1	6,000	2,722
F,F1	68,000	30,845
G,G1	73,000	33,113
H,H1	3,000	1,361
J,J1	78,200	35,455
K,K1	78,200	35,455
L,L1	10,000	4,536
M	7,500	3,409
N,P,Q,R,S,T	SEE NOTE 3	

NOTES:
1. FOR ADDITIONAL NOTES, SEE ITEM 2 BELOW.
2. FOUNDATION HARDWARE PROVIDED BY G.E. INCLUDES SHIMS, ANCHOR SUPPORT PLATES, CENTERLINE GUIDE SUPPORTS, AND GENERATOR AXIAL POSITIONING BLOCKS. INSTALLER TO SUPPLY RESTRAINING BLOCK ASSEMBLIES, JACKING POST ASSEMBLIES, VERTICAL JACKING BOLTS, SUB-SOLE PLATES, ANCHOR BOLTS, NUTS AND WASHERS, EMBEDDED CONDUITS AND GROUTING. SEE FOUNDATION BOLTING ARRANGEMENT (ML ITEM 1603) FOR G.E. SUPPLIED MATERIAL.
3. FOR RESTRAINING FORCE ACTING ON ANCHOR SUPPORTS (PADS P&R) AND CENTERLINE GUIDE SUPPORTS (PADS N,Q,S&T), SEE ITEM 2 BELOW.
4. JACKING POST DESIGN RESPONSIBILITY IS THE INSTALLERS. THE JACKING POST ASSEMBLY SHOWN IN DETAIL E-2 AND VIEWS C-2 & H-3 ON SHEET 2 IS G.E.'S RECOMMENDATION AND IS FOR REFERENCE ONLY.

NOTES: (CONT'D)
5. DESIGN OF THE CONTROL COMPARTMENT AND GENERATOR COLLECTOR TRENCHES IS THE INSTALLERS RESPONSIBILITY. EMBEDDED CONDUIT ARRANGEMENT AND TRENCH DIMENSIONS ARE G.E.'S RECOMMENDATION AND ARE FOR REFERENCE ONLY.
6. THE INSTALLER'S DESIGN OF THE SUB-SOLE PLATES SHOULD TAKE INTO ACCOUNT THE SIZE AND LOCATION OF G.E. SUPPLIED SHIMS AND GENERATOR AXIAL POSITIONING BLOCKS. SEE THE FOUNDATION BOLTING ARRANGEMENT FOR SHIM AND POSITIONING BLOCK SIZES.
7. CONCRETE MUST NOT PROJECT ABOVE RESTRAINING BLOCK ASSEMBLY.
8. GROUT MUST NOT PROJECT ABOVE SUB-SOLE PLATES.
9. DIMENSIONS IN BRACKETS ARE IN MILLIMETERS.

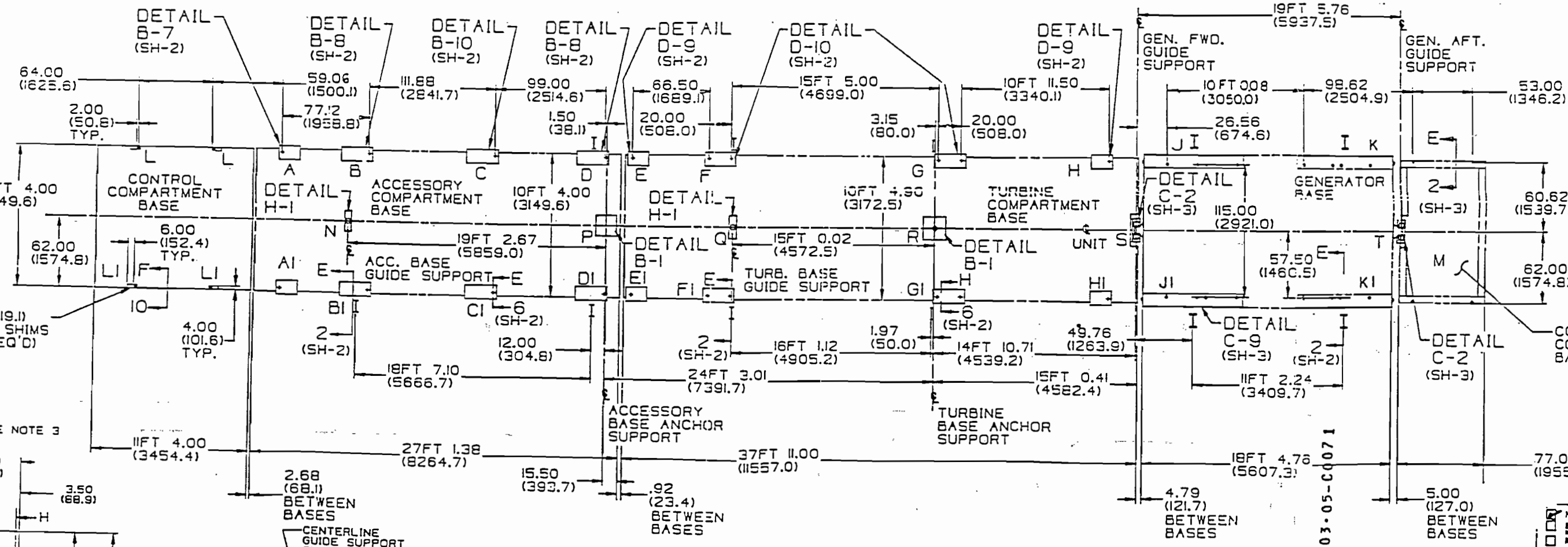

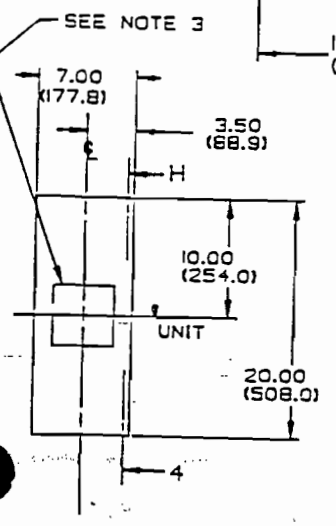

DETAIL H-1 (D-3, D-5)
GUIDE SUPPORT PADS N&Q

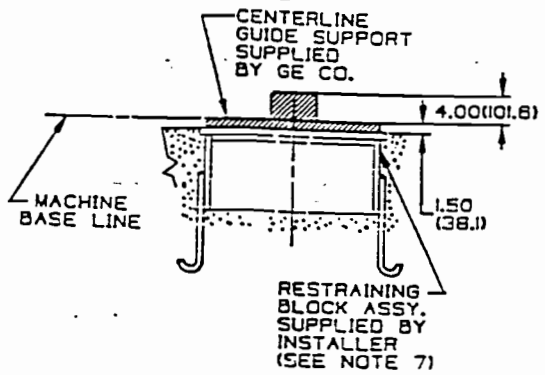

SECTION H-3 (F-1)
ROTATED 90 DEG CW

BB.13582-62-1003-05-C0071

NO EXCEPTIONS NOTED
EXCEPTIONS NOTED
RETURNED FOR CORRECTION
MAY 19 1988
BLACK & VEATCH

2	NOTES	1302A4718
1	APPLIED PRACTICES	11805700
IT	NOMENCLATURE	IDENT
LIST OF COMPLEMENTARY DOCUMENTS		
SIMILAR TO:		ICALC WT

REVISIONS: A AJ 25351 Comp. RAT 1986 | PRINTS TO

Figure D4.1-2
TYPICAL CT FDN LOADING

GAS TURBINE SCHENECTADY 16601069 2 1

13582 62/1003 5

Seismic loading to the foundation from the combustion and steam turbines will be calculated using equivalent lateral forces applied at the center-of-gravity of the equipment in accordance with the criteria specified in Appendix D, Section D.3.6 Seismic Design Criteria for rigid equipment.

Load combinations and their respective strength factors for the foundation design will be as indicated in Appendix D, Subsection D.3.2.7 Load Combinations and Subsection D.3.2.8 Allowable Stresses.

D.4.1.1.5 Analytical techniques. Each combustion and steam turbine foundation will be designed using static analysis techniques assuming a rigid mat. The mat will be sized such that the allowable settlement and bearing pressure criteria developed from a detailed subsurface investigation will not be exceeded. Each foundation will be analyzed as a combined footing assuming a linear soil pressure distribution. The mat will be proportioned such that the resultant of the soil pressure coincides as nearly as possible with the resultant of the vertical loading. The factors of safety against overturning and sliding will be 1.5 and 1.1, respectively.

The combustion and steam turbine foundations will be checked for dynamic response of the operating turbine. Manual calculations and simple computer models based on the fundamental principles of dynamic behavior of structures will be used to determine the natural frequencies of the support system. Where soil-structure interaction effects are important, low strain soil properties will be used to calculate soil springs using the procedures from Vibrations of Soils and Foundation by Richard, Hall, and Woods or a similar procedure. The concrete foundation will be analyzed as a rigid body on soil springs with the equipment modeled as a rigid mass located at its center of gravity and rigidly attached to the foundation. The foundation will be proportioned such that the principal natural frequencies will be at least 25 percent removed from the equipment operating speed.

Should the resulting foundation design prove to be uneconomical, the dynamic behavior of the foundation will be evaluated and compared to ISO 3945 Criteria for Vibration Severity. The resultant vibration level will be within the "Good" range of this standard.

A procedure for the dynamic analysis of large fan foundations supported by soil, piers, or piles may be used to evaluate the dynamic behavior of the turbine foundations.

D.4.1.2 Heat Recovery Steam Generator (HRSG) Foundation. Each HRSG foundation will be designed to support an HRSG and associated equipment.

Each foundation will be designed to resist the loadings furnished by the manufacturer and will be constructed of reinforced concrete.

D.4.1.2.1 Foundation loads. Foundation loads will be furnished by the HRSG manufacturer and will be superimposed with loads for the foundation itself. Typical loading data supplied by the manufacturer include the following:

- Dead loads.
- Live loads.
- Wind loads.
- Seismic loads.
- Hydrostatic loads.
- Temperature and pressure loads.

The HRSG foundation will be designed to resist a superimposed uniform live load of 250 psf over the area not otherwise occupied by equipment.

A typical HRSG foundation is indicated on Figure D.4.1-3. Foundation loading magnitudes from an HRSG are indicated on Figure D.4.1-4.

D.4.1.2.2 Induced forces. The HRSG and associated equipment will be securely anchored to the foundation using cast-in-place steel anchor bolts designed to resist the equipment forces.

D.4.1.2.3 Structural system. Refer to Figure D.4.1-3 for information regarding the specific structural system.

D.4.1.2.4 Structural criteria. The foundation will be designed and constructed as a monolithic reinforced concrete structure using the criteria from Appendix C, Section C.3.1 Foundations and Appendix D, Section D.3.4 Concrete. The foundation system will likely be a soil-supported rigid mat.

The foundation design will address the following considerations:

- Soil bearing capacities and earth pressures.
- Allowable settlements.
- Equipment, structure, and environmental loads.
- Access and maintenance.
- Equipment performance criteria.

Environmental loading will be determined in accordance with Appendix D, Section D.3.1 Natural Phenomena. Wind loads will be determined using the velocity pressures specified in Appendix D, Subsection D.3.2.3 Wind Loads.

Seismic loading to the foundation will be supplied by the HRSG manufacturer and will reflect the structural system used by the HRSG to resist lateral loading.

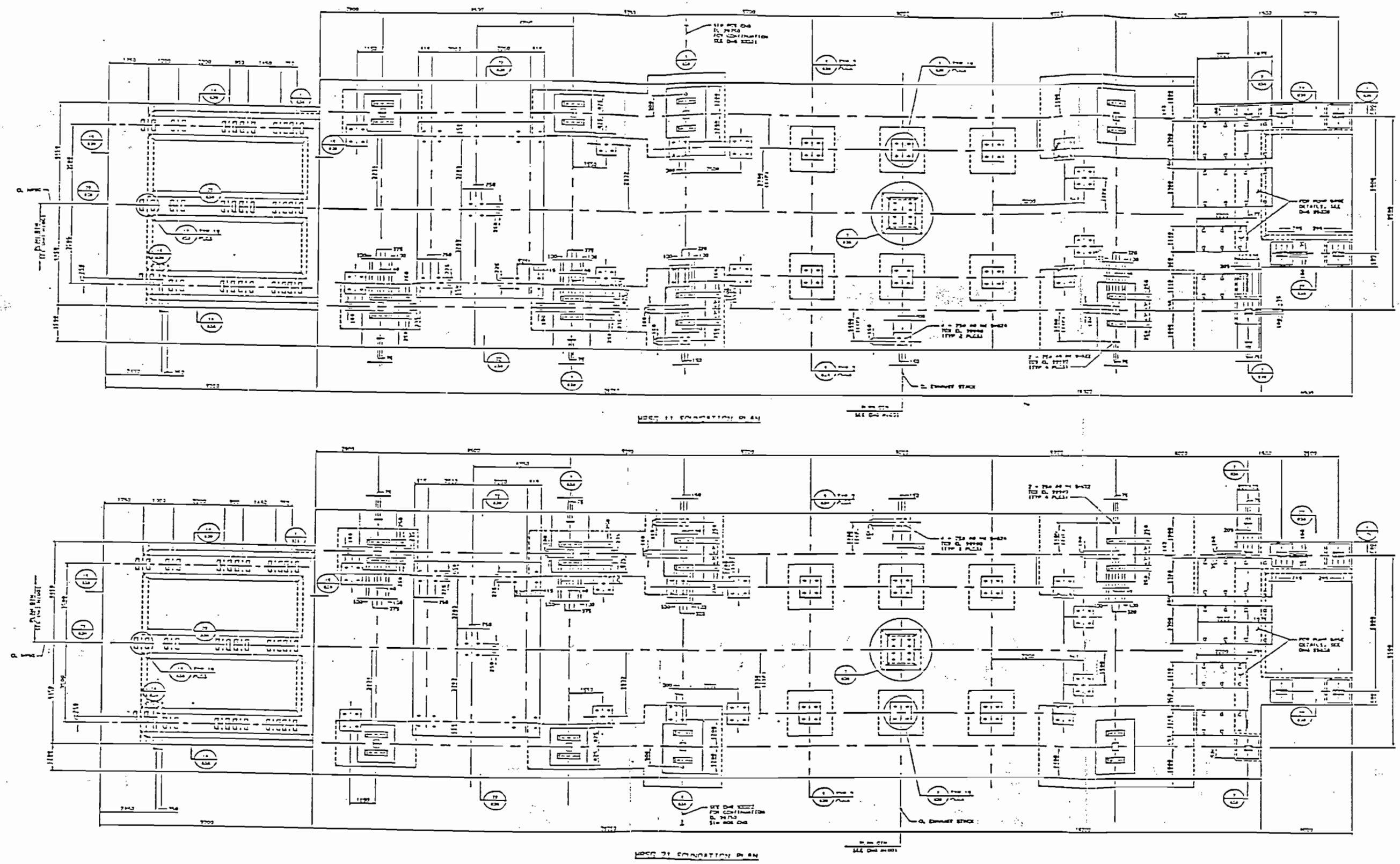

NOTES

1. FOR CONCRETE, MATERIAL SPECIFICATIONS & TYPICAL DETAILS, REFER TO DRAWING 15281-C85A-55035.
2. FOR PIER LOCATIONS REFER TO DRAWINGS 55004 & 55006.
3. FOR PIER LIST AND PIER DETAILS REFER TO DRAWING 55070.
4. ANCHOR BOLTS FOR EQUIPMENT, DUCT SUPPORTS AND PIPING SHALL BE INSTALLED BY SPEC 71.03400, ANCHOR BOLTS FOR PIPING SHALL BE SUPPLIED & INSTALLED BY SPEC 71.04400.
5. ANCHOR BOLTS & DOWELS ARE SYMMETRICAL ABOUT CL UNLESS NOTED OTHERWISE.

Figure D4.1-3
TYPICAL HRSG FDN

ELECTRICITY GENERATING AUTHORITY OF THAILAND	15281-C85A-55035	0
COGENERATION BUILDING - FOUNDATIONS		

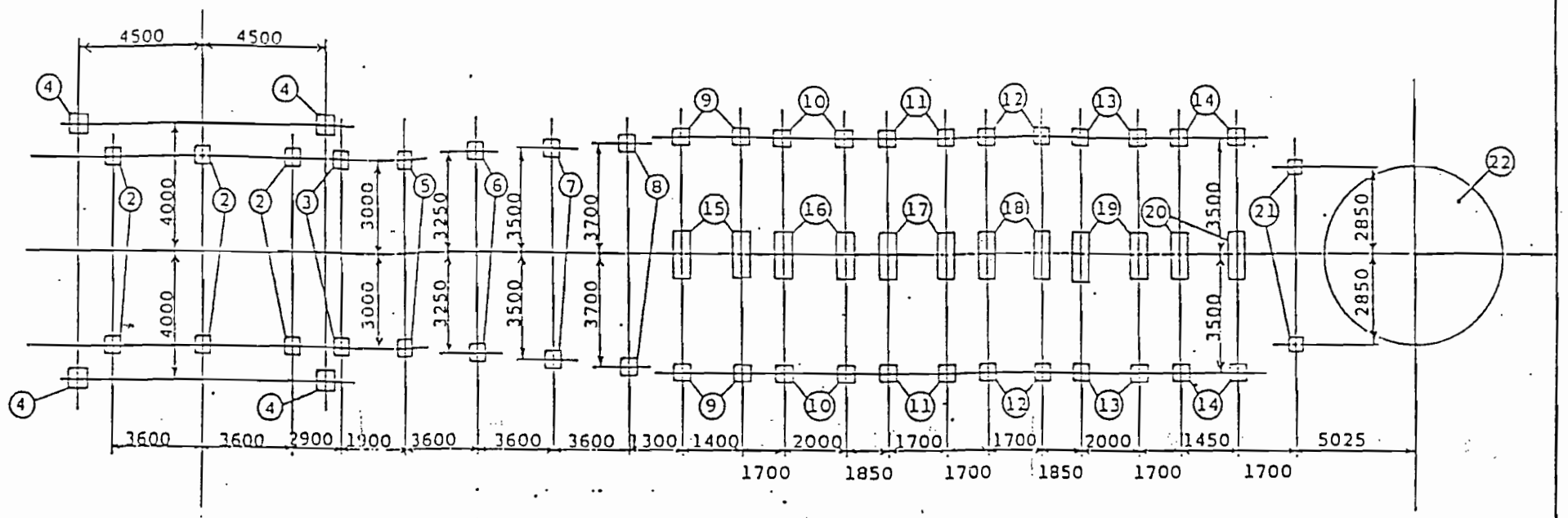

FOUN. NO.	2	3	4	5	6	7	8	9	10	11	12	13	14	15	16	17	18	19	20	21	22
DEAD LOAD (TON)	9.8	14.9	24.1	6.2	7.6	9.5	11.4	26.3	44.6	37.3	32.9	40.5	30.8	52.6	89.2	74.6	65.8	81.0	61.6	6.5	70.0
VERTI. (TON)	±6.5	±2.3	±9.7	±3.2	±5.3	±7.4	±9.7	±8.8	±14.9	±10.7	±10.7	±14.9	±8.8	–	–	–	–	–	–	±6.3	–
Hx(TON)	±2.9	±1.2	±2.5	±2.0	±2.7	±3.4	±4.0	–	–	–	–	–	–	±7.0	±9.9	±8.4	±8.4	±9.9	±7.0	±2.5	±17.3
Hy(TON)	–	–	±2.5	–	–	–	–	–	–	–	–	–	–	–	–	–	–	–	–	–	±17.3
Mx(T.m)	–	–	–	–	–	–	–	–	–	–	–	–	–	–	–	–	–	–	–	–	±196.0
My(T.m)	–	–	–	–	–	–	–	–	–	–	–	–	–	–	–	–	–	–	–	–	±196.0
Q'TY OF FOUN.	6	2	4	2	2	2	2	4	4	4	4	4	4	2	2	2	2	2	2	2	1

Rev.	Date	DESCRIPTION	DRAWN	CHECKED
C				
B				
A				
		PRIMARY ISSUE		

LOADING DATA

Figure D4.1-4
TYPICAL HRSG LOADING

Load combinations and their respective allowable strengths will be as indicated in Appendix D, Subsection D.3.2.7 Load Combinations and Subsection D.3.2.8 Allowable Stresses.

D.4.1.2.5 Analytical techniques. The HRSG foundation will be designed using static analysis techniques assuming a rigid mat. The mat will be sized such that the allowable settlement and bearing pressure criteria developed from a detailed subsurface investigation will not be exceeded. The foundation will be analyzed assuming a linear soil pressure distribution. The mat will be proportioned such that the resultant of the soil pressure coincides as nearly as possible with the resultant of the vertical loading. The factors of safety against overturning and sliding will be 1.5 and 1.1, respectively.

D.4.1.3 Stack and Foundation. The stack will be a carbon steel stack supported on a reinforced concrete mat foundation. The height of the stack will be approximately 150 feet and the diameter will be sized using the volumetric flow rate of the exhaust gases such that the minimum exit velocity will be approximately 63 feet per second.

D.4.1.3.1 Foundation loads. Foundation loads will be determined using project specific design criteria.

The design of the stack and foundation will include the following loads:

- Dead loads.
- Live loads.
- Wind loads.
- Seismic loads.
- Temperature and pressure loads.

A typical steel stack and foundation is indicated on Figure D.4.1-5. Foundation loading magnitudes cannot be determined until specific stack sizing is completed.

D.4.1.3.2 Induced forces. The stack will be securely anchored to the foundation using cast-in-place steel anchor bolts designed to resist the foundation and stack induced forces.

D.4.1.3.3 Structural system. The steel stack will resist lateral loading as a fixed base cantilevered structure.

D.4.1.3.4 Structural criteria. The predominate forces acting on the stack will result from wind or seismic loading. The stack will be designed as indicated in Appendix D, Subsection D.3.2.4 Steel Stacks.

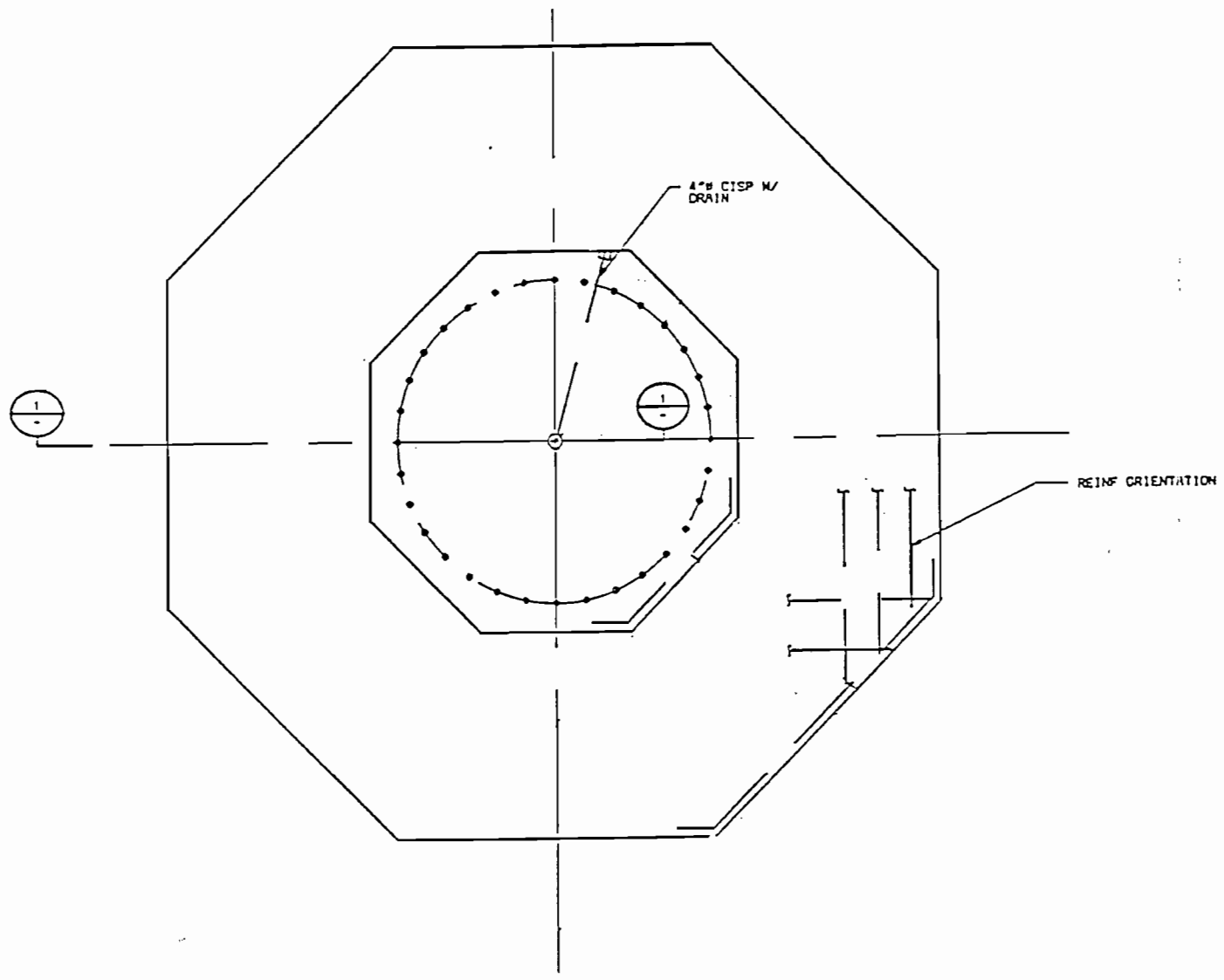

STACK FOUNDATION PLAN

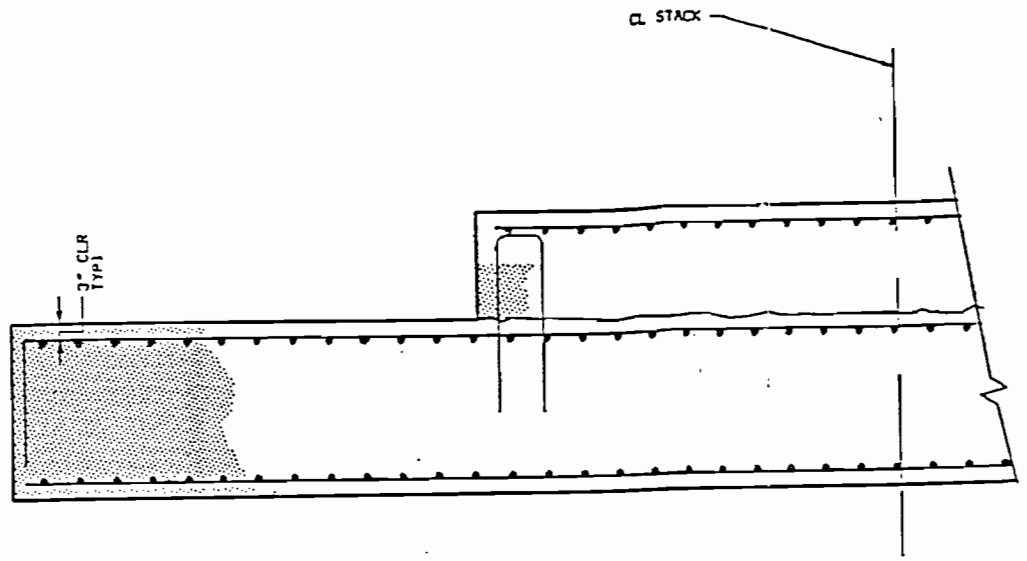

SECTION 1

NO	DATE	REVISIONS AND RECORD OF ISSUE	BY	CHK	APP	FLM

BLACK & VEATCH

ENGINEER	DN	DRAWN	TLD
CHECKED		DATE	04-29-92

PROJECT	DRAWING NUMBER	REV
19319		
CODE		
AREA		

Figure D4.1-5
TYPICAL STACK FDN

04/29/92 16:41:19

Wind loads will be determined from ASCE 7-88, Minimum Design Loads for Buildings and Other Structures. Consideration will be given to along-wind and across-wind responses. No stress increase for wind will be allowed.

Seismic loads will be determined in accordance with UBC Section 2338 Nonbuilding Structures. The fundamental period will be determined using UBC Equation 34-5 and will be calculated by both considering and ignoring the structural contribution of any lining material. The lower period will be used in the development of the seismic forces. A simultaneous vertical seismic force equal to two thirds of the horizontal seismic force will be considered.

The allowable longitudinal stress, F, for the design of the stack shell will be determined from the following equations from ASME/ANSI STS-1-1986:

$F = 1/8\ Et/r/FS$ for $t/r < 8\ F_p/E$

$F = [F_y - K_s (F_y - F_p)]\ /FS$ for $t/r > 8\ F_p/E$ $< 20\ F_y/E$

$F = F_y/FS$ for $t/r > 20\ F_y/E$

where

E = Steel modulus of elasticity,

t = Shell plate thickness with corrosion allowance,

r = Shell radius,

FS = Factor of safety equal to 1.5,

F_y = Steel yield stress, and

F_p = Steel proportional limit equal to $0.70\ F_y$.

$$K_s = \left[\frac{\frac{20\ F_y}{E} - \frac{t}{r}}{\frac{20\ F_y}{E} - \frac{8\ F_p}{E}} \right]^2$$

The minimum shell thickness will be 1/4 inch plus 1/16 inch corrosion allowance. The corrosion allowance will be considered in the generation of seismic loads but not in the resistance to seismic or wind loads. Allowable stresses for stiffeners, platform members, and other details will be in accordance with the American Institute of Steel Construction Allowable Stress Design, Ninth Edition. Allowable stresses for the shell will not be increased for wind or seismic loadings.

The stack will be supported using a circular shaped reinforced mat footing. The foundation will be designed and constructed as a monolithic reinforced concrete

structure using the criteria from Appendix C, Section C.3.1 Foundations and Appendix D, Section D.3.4 Concrete. The foundation system will likely be a soil-supported rigid mat.

The foundation design will address the following considerations:

- Soil bearing capacities and earth pressures.
- Allowable settlements.
- Structure and environmental loads.

Load combinations and their respective allowable strengths will be as indicated in Appendix D, Subsection D.3.2.7 Load Combinations and Subsection D.3.2.8 Allowable Stresses.

D.4.1.3.5 Analytical techniques. Moments, shears, and axial forces will be calculated using static analysis procedures on a cantilevered member. Longitudinal stresses resulting from axial loads and flexure will be combined and compared to a single allowable stress.

The stack foundation will be designed using static analysis techniques assuming a rigid mat. The mat will be sized such that the allowable settlement and bearing pressure criteria developed from a detailed subsurface investigation will not be exceeded. The foundation will be analyzed assuming a linear soil pressure distribution. The mat will be proportioned to resist the vertical gravity loads concurrent with the controlling lateral loads with no net uplift on the foundation. The factor of safety against sliding will be a minimum of 1.5.

D.4.1.4 Buildings. The various plant site buildings will provide support, enclosure, protection, and access to the systems contained within their boundaries.

Each building will be a one story steel framed structure.

D.4.1.4.1 Foundation loads. Foundation loads will be determined from the analysis and design of the superstructure and from the support of the equipment contained within the structure. The following loads will be considered:

- Dead loads.
- Live loads.
- Equipment and piping loads.
- Wind loads.
- Seismic loads.

D.4.1.4.2 Induced forces. Each building and all associated major equipment will be securely anchored to the foundation using cast-in-place steel anchor bolts designed to resist any induced forces.

D.4.1.4.3 Structural system. The buildings will be designed as AISC Type 1 rigid frames or as Type 2 simple braced frames. For the purpose of resisting seismic lateral loads, the structures will be classified as regular structures with a concentric braced frame, ordinary moment resisting frame, or special moment resisting frame in accordance with the definitions of Chapters 23 and 27 of the Uniform Building Code.

D.4.1.4.4 Structural criteria. The building steel frames will be designed and constructed using the materials and criteria set forth in Appendix D, Section D.3.5, Steel and Other Metals.

Environmental loading will be determined in accordance with Appendix D, Section D.3.1 Natural Phenomena. Wind loads will be determined using the velocity pressures specified in Appendix D, Subsection D.3.2.3 Wind Loads.

Seismic loading for the buildings will be calculated using equivalent lateral forces applied to the structure in accordance with the procedures of UBC Chapter 23.

The building foundations will be designed and constructed using reinforced concrete according to the criteria set forth in Appendix C, Section C.3.1 Foundations and Appendix D, Section D.3.4 Concrete. The foundation system will be comprised of shallow soil-supported spread footings to resist the column loads and an isolated slab on grade floor system or a mat foundation.

The foundation design will address the following considerations:

- Soil bearing capacities and earth pressures.
- Allowable settlements.
- Equipment, structure, and environmental loads.
- Access and maintenance.
- Equipment performance criteria.

Load combinations and their respective allowable stresses will be as indicated in Appendix D, Subsection D.3.2.7 Load Combinations and Subsection D.3.2.8 Allowable Stresses.

D.4.1.4.5 Analytical techniques. The building foundations will be designed using static analysis techniques assuming rigid spread footings or a rigid mat. Spread footings or the mat will be sized such that the allowable settlement and bearing pressure criteria developed from a detailed subsurface investigation will not be exceeded assuming a linear soil pressure distribution. The footings will be proportioned such that the resultant of the soil pressure coincides as nearly as possible with the resultant of the vertical loading. The factors of safety against overturning and sliding will be 1.5 and 1.1, respectively.

D.4.1.5 Bridge Crane. The bridge crane will span approximately 27 feet and travel the length of the steam turbine, generator, condenser, and maintenance laydown area. The crane will provide hoisting capabilities to support maintenance and overhaul services to the steam turbine and generator, and associated equipment. The bridge crane will have a main hook capacity of 30 tons and hook height of approximately 17 feet above shaft center line.

D.4.1.5.1 Foundation loads. Foundation loads will be determined from an analysis of the lifting requirements of the heaviest component from the steam turbine and generator. The analysis will consider the following loads:

- Runway dead loads.
- Bridge crane dead loads.
- Weight of heaviest lifted component.
- Impact loads.
- Wind loads.
- Seismic loads.

D.4.1.5.2 Induced forces. The runway will be anchored to the runway girder and designed to resist the bridge crane forces. Rail splices should be specified for a "tight fit."

D.4.1.5.3 Structural system. The crane runway consists of parallel runway girders supported by vertical columns. Transverse lateral loads are resisted at each column by bending. Longitudinal forces are resisted by vertical bracing between two adjacent crane support columns.

The crane girder support column foundation is part of the steam turbine foundation.

D.4.1.5.4 Structural criteria. The crane runway steel will be designed and constructed using the materials and criteria set forth in Appendix D, Section D.3.5 Steel and Other Metals.

Environmental loading will be determined in accordance with Appendix D, Section D.3.1 Natural Phenomena. Wind loads will be determined using the velocity pressures specified in Appendix D, Subsection D.3.2.3 Wind Loads.

The runway structural steel and foundations will be designed for the weight of the crane and lifted package. In addition, the following impact loadings will be considered:

- Vertical--25 percent of the maximum static wheel load.
- Lateral--20 percent of the sum of the lifted load and the weight of the crane trolley, one half to each rail.

- Longitudinal--10 percent of the maximum static wheel load, one half to each rail.

The girder shears, moments, and reactions will be calculated by positioning the crane wheels to produce the maximum results.

Load combinations and their respective allowable stresses will be as indicated in Appendix D, Subsection D.3.2.7 Load Combinations and Subsection D.3.2.8 Allowable Stresses.

Seismic loads in combination with loads from the lifted package will not be considered due to the unlikelihood of these coincidental events.

D.4.1.5.5 Analytical techniques. The steel runway girders will be analyzed and designed as one span simple, or two span continuous, beams depending on the physical constraints of the arrangement.

D.4.2 Tanks

D.4.2.1 Vertical, Cylindrical, Field Erected Storage Tanks. The vertical, cylindrical, field erected storage tanks will generally be of stainless steel construction with a protective interior coating.

The tank roof will be of the self-supported dome or cone type. The tank bottom will be ground-supported, flat bottomed, with a slope of 1 percent. The tank will be provided with ladders, landing platforms, and handrails as required to provide access to all working areas. Vents, manholes, overflow piping, and grounding lugs will also be provided as necessary.

The typical foundation will consist of a circular ringwall. The interior of the ring will be comprised of compacted backfill with a layer of compacted sand to serve as a bearing surface for the tank bottom.

D.4.2.1.1 Foundation loads. Foundation loads will be determined using project specific design criteria.

The design of the tank and foundation will include the following loads:

- Dead loads.
- Live loads.
- Wind loads.
- Seismic loads.
- Hydrodynamic loads.

P-GN-260A

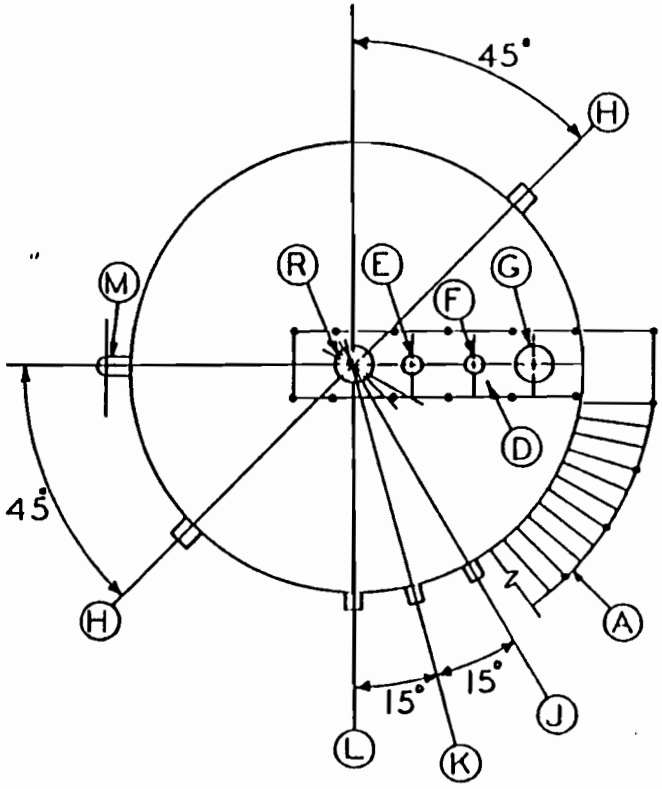

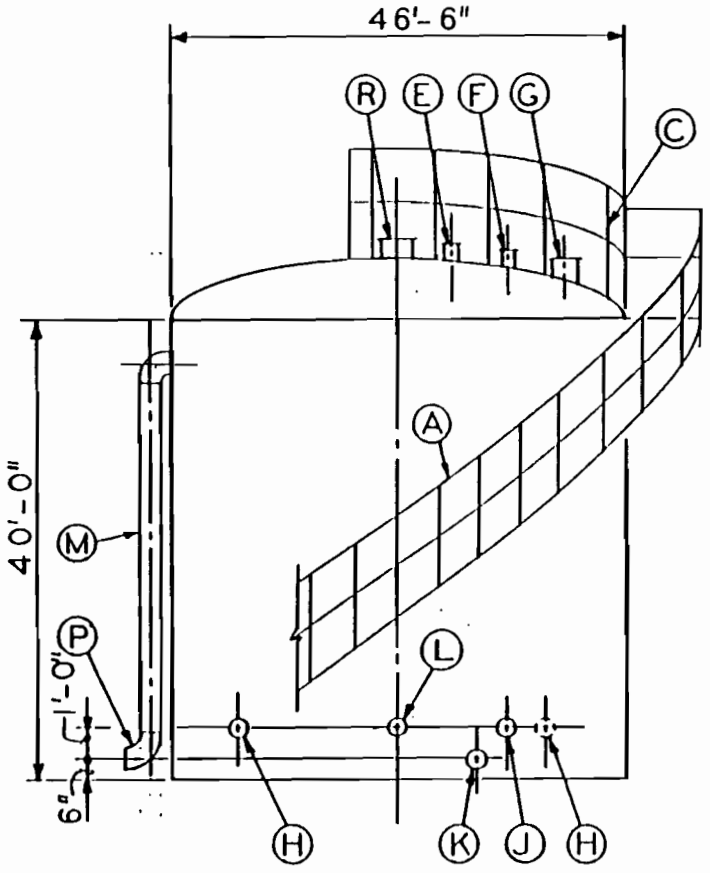

A – STAIRS

C – HANDRAIL
D – NON SKID SURFACE
E – CL 150 CONN. FOR AIR FILTER
F – CL 150 CONN. FOR BREATHER VALVE
G – 24" DIA. ROOF MANHOLE
H – 24" DIA. SHELL MANHOLE
J – 2 1/2" CL 150 FLG. INSTRUMENT CONN.
K – 3" CL 150 FLG. CONN. FOR DRAIN
L – 6" CL 150 FLG CONN. (SEE DETAIL A)
M – OVERFLOW PIPE

P – FLAP VALVE
R – 20" DIA. ROOF MANHOLE

NO	DATE	REVISIONS AND RECORD OF ISSUE	BY	CHK	APP	FLM
2	10-24-88	REVISED CONN	TRJ		SEP	
1	08-16-88	ADDED STAIRS	TRJ		SEP	
0	07-27-88	INITIAL ISSUE	TRJ		[illegible]	

BLACK & VEATCH
ENGINEERS-ARCHITECTS

ENGINEER T.R. Gheeguier
DRAWN A.H.
CHECKED
DATE

PROJECT
DRAWING NUMBER
REV

Figure D4.2-1
TYPICAL FIELD ERECTED TANK

EXCEPTIONS NOTED
EXCEPTIONS NOTED
REVISE & RESUBMIT FOR DISTRIBUTION
RETURNED FOR CORRECTION
DEC 21 1988
REVIEW DOES NOT RELIEVE CONTRACTOR FROM RESPONSIBILITY FOR ERRORS OR DEVIATIONS FROM CONTRACT REQUIREMENTS.

FOUNDATION LOADS

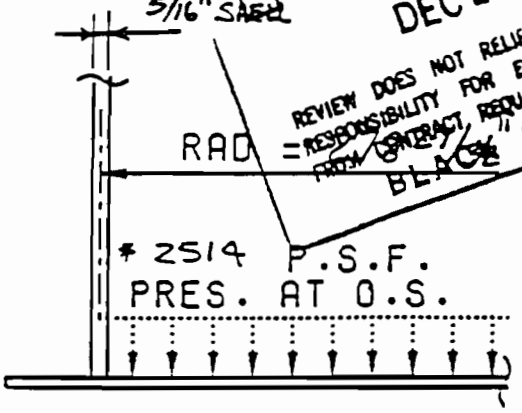

SHELL DISTRIBUTED LOADS

CORR =	290.6	LBS/FT CORRODED
DL = +	687.5	LBS/FT (550.0)
EQ = +	10,878.2	LBS/FT
WL = +	656.3	LBS/FT
PRES =	+ ATM	- ATM LBS/FT

TOTAL SHEARS (T.O.F.)

WL = 45,200. LBS
EQ = 1,051,660. LBS

TOTAL MOMENTS (T.O.F)

WL = 1,114,580. FT. LBS.
EQ = 18,473,670. FT. LBS.

* INCLUDES WT. OF BOTT. PL.

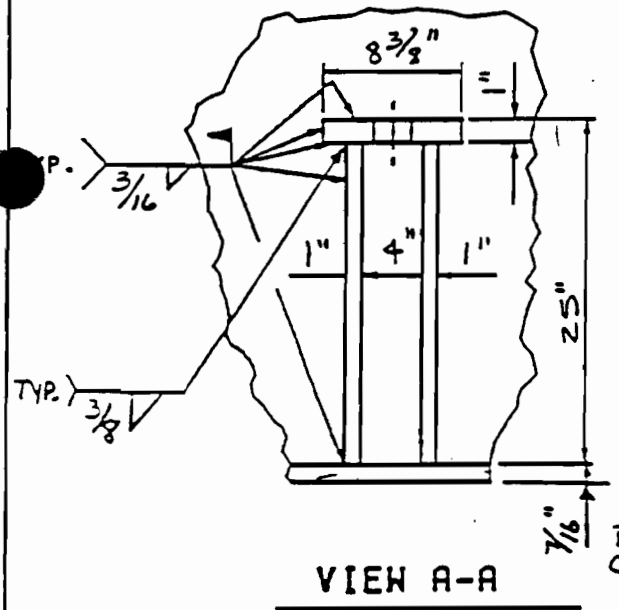

VIEW A-A

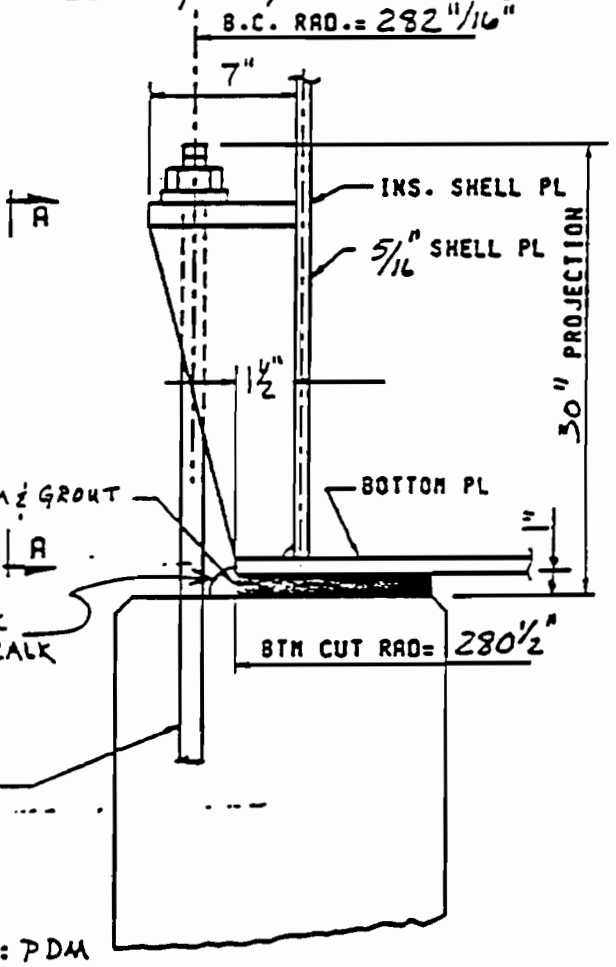

SECTION AT ANCHOR CHAIR

44 -ANCHOR BOLTS REQ'D
BOLTS SUPPLIED BY: CUSTOMER
BOLTS INSTALLED BY: CUSTOMER
CHAIRS FURNISHED AND INSTALLED BY: PDM
FOUNDATION BY: CUSTOMER

SUBJECT					PREPARED AT DM
PREPARED BY / DATE	NGB/11-16-88				FILE NO.
CHECKED BY / DATE					CONTR. NO. 58273
REV. NO.					

Figure D4.2-2
TYPICAL TANK FDN DETAILS

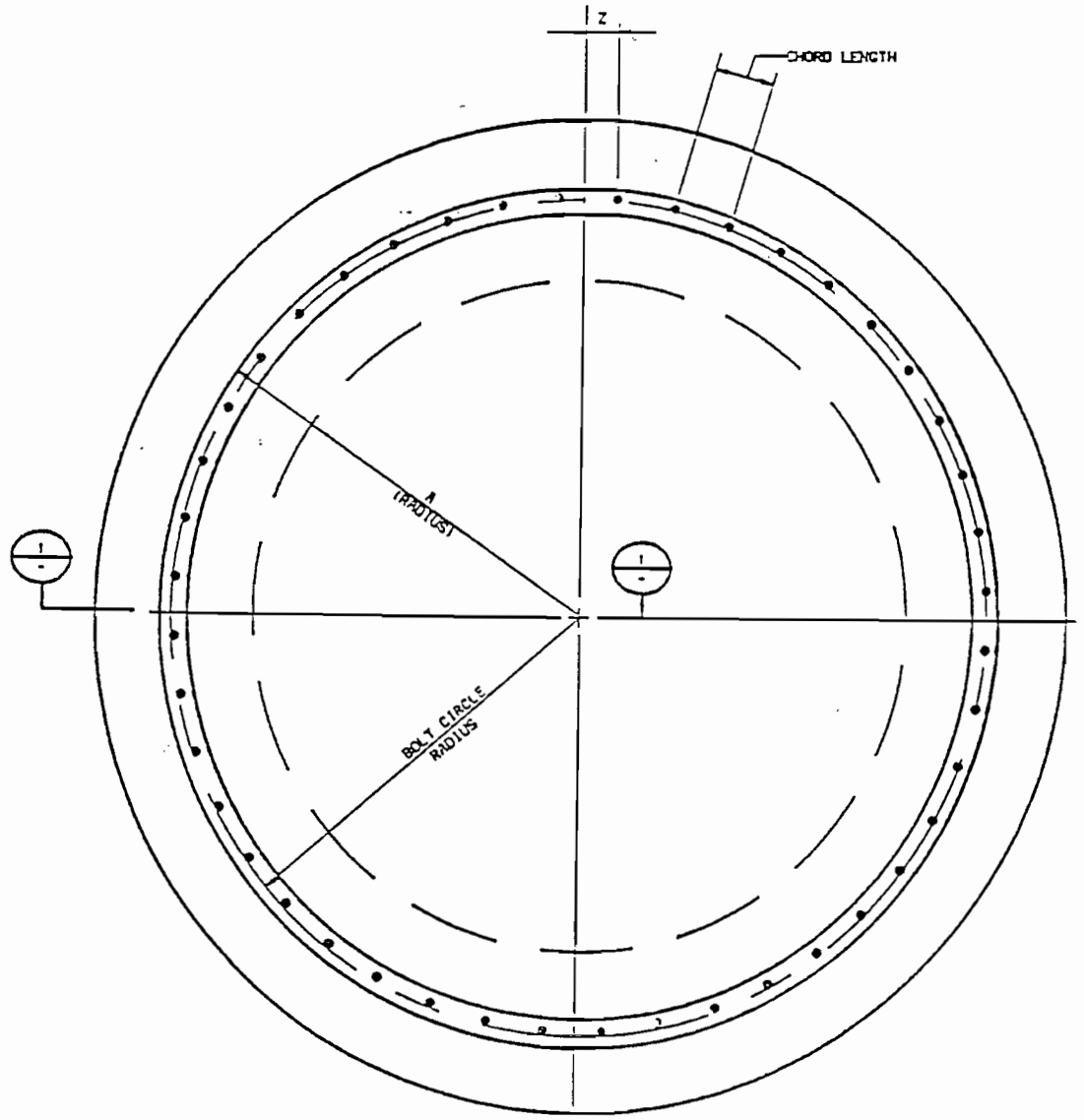

TYPICAL FIELD ERECTED TANK FOUNDATION PLAN
NO SCALE

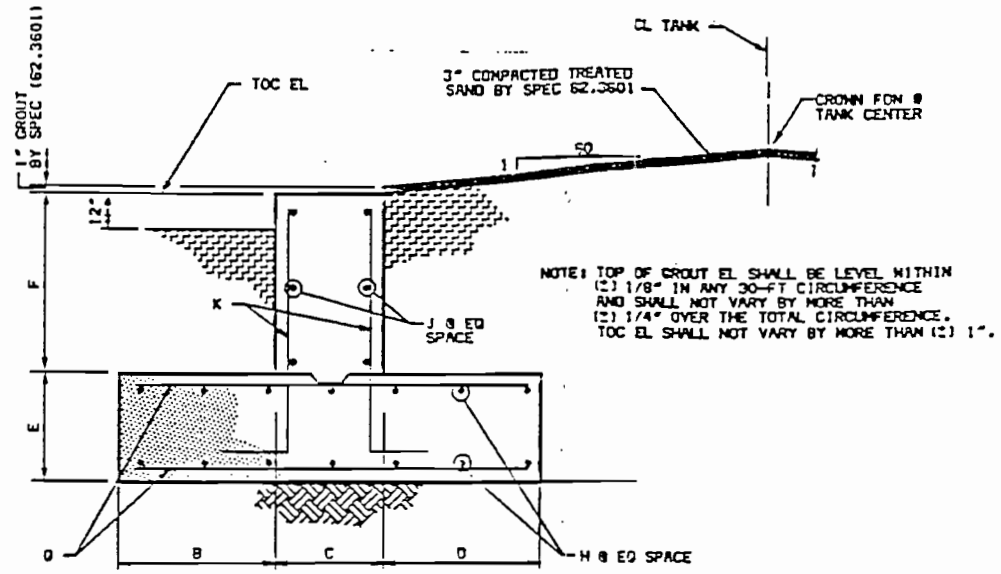

NOTE: TOP OF GROUT EL SHALL BE LEVEL WITHIN (2) 1/8" IN ANY 30-FT CIRCUMFERENCE AND SHALL NOT VARY BY MORE THAN (2) 1/4" OVER THE TOTAL CIRCUMFERENCE. TOC EL SHALL NOT VARY BY MORE THAN (2) 1".

SECTION 1
NO SCALE

FIELD ERECTED TANK FOUNDATION LIST

TANK I.D.	TOC EL	A (RADIUS)	FOOTING DIMENSIONS					REINFORCING				ANCHOR BOLTS					
			B	C	D	E	F	G	H	J	K	MK NO	NO	TOB EL	BOLT CIRCLE (RADIUS)	CHORD LENGTH	Z
DEMINERALIZED WATER STORAGE TANK	1730'-7"	24'-3 11/16"	5'-4 1/2"	1'-5"	5'-4 1/2"	3'-0"	2'-1"	# 8 @ 5	15 - # 5	3 - # 5	# 7 @ 12	080	44	1733'-1"	23'-6 11/16"	3'-4 5/16"	1'-8 3/16"

NO	DATE	REVISIONS AND RECORD OF ISSUE	BY	CHK	APP	FLM

BLACK & VEATCH
ENGINEERS-ARCHITECTS

ENGINEER PBV | DRAWN TEB
CHECKED | DATE

PROJECT | DRAWING NUMBER | REV

Figure D4.2-3
TYPICAL FIELD ERECTED TANK FDN

USERNAME A01SL003 BI
DATE TIME ACAD 10 1=1

A typical field erected tank and representative foundation loads are indicated on Figures D.4.2-1 and D.4.2-2, respectively. A typical field erected tank foundation is presented on Figure D.4.2-3. Foundation loading magnitudes from the tank will not exceed bearing allowables of the soil.

D.4.2.1.2 Induced forces. The storage tanks will be securely anchored to the foundation using cast-in-place steel anchor bolts designed to resist all induced forces in accordance with AWWA D100-84.

D.4.2.1.3 Structural system. The storage tanks will resist lateral loading through shear in the tank walls. Overturning will be resisted by anchor bolts connecting the tank wall to the foundation. Refer to Figures D.4.2-1 and D.4.2-2 for information regarding the specific structural system.

D.4.2.1.4 Structural criteria. The foundation will be designed and constructed as a reinforced concrete ringwall using the criteria from Appendix C, Section C.3.1 Foundations and Appendix D, Section D.3.4 Concrete.

The tank structures will be designed and constructed using the criteria established in AWWA D100-84.

Environmental loadings will be determined in accordance with Appendix D, Section D.3.1 Natural Phenomena. Wind loads will be determined using the velocity pressures specified in Appendix D, Subsection D.3.2.3 Wind Loads multiplied by the appropriate pressure coefficient from Table No. 23-H of UBC.

Seismic loads will be determined in accordance with Appendix D, Section D.3.6 Seismic Design Criteria and AWWA D100-84, Section 13.

The seismic overturning moment will be determined from AWWA D100-84, Section 13.3.3.1 for Z = 0.3. The structure coefficient will be determined from Table 16. The value of C1 will be determined from Section 13.3.3.1. The site amplification factor, S, will be determined from Table 17.

Load combinations and their respective allowable strengths will be as indicated in Appendix D, Subsection D.3.2.7 Load Combinations, Subsection D.3.2.8 Allowable Stresses, and Section 3 of AWWA D100-84.

Design loads will be applied at the center of gravity of the tank. The design of the tank foundation will include the moment resulting from lateral displacement (hydrodynamics) of the tank contents in accordance with AWWA D100-84, Section 13.3.3.2.

Piping connections will be designed with a minimum 2 inches of flexibility in all directions as specified in AWWA D100-84, Section 13.5.

D.4.2.1.5 Analytical techniques. The tank foundation will be designed using static analysis techniques of a circular ringwall. The ringwall will be proportioned

to resist the dead load of the tank and the overturning moment determined from AWWA D100-84. The ringwall will also be proportioned to resist maximum anchor bolt uplift force. Circumferential reinforcing steel hoops will be provided in the ringwall to develop the hoop stress produced by lateral soil pressure within the ringwall. The ringwall will be proportioned to resist the vertical gravity loads concurrent with the controlling lateral loads while maintaining a minimum 1.5 factor of safety against overturning. The factor of safety against sliding will be a minimum of 1.1.

The tank structure will be designed and proportioned such that during the application of any load, or combination of loads, the maximum stresses as stipulated in AWWA D100-84 will not be exceeded.

D.4.2.3 Horizontal, Cylindrical, Shop Fabricated Storage Tanks. The horizontal, cylindrical, shop fabricated tanks will be of carbon steel construction.

The tanks will be provided with ladders, landing platforms, and handrails as required to provide access to all working areas. Each tank will be provided with a fill connection, fill drain, overflow, vent connections, manholes, and grounding lugs as necessary.

The foundations will be designed to resist the loadings imposed by the tanks and will be constructed of reinforced concrete.

D.4.2.3.1 Foundation loads. Foundation loads will be furnished by the tank manufacturer and will be superimposed with loads for the foundation itself.

Typical loadings supplied by the manufacturer include the following:

- Dead loads.
- Live loads.
- Wind loads.
- Seismic loads.
- Temperature and pressure loads.
- Hydrodynamic loads.

A typical shop fabricated tank and foundation are indicated on Figures D.4.2-4 and D.4.2-5, respectively. Foundation loading magnitudes from a typical caustic/acid storage tank are indicated on Figure D.4.2-4.

D.4.2.3.2 Induced forces. The tanks will be securely anchored to the foundation using cast-in-place steel anchor bolts designed to resist all induced forces.

D.4.2.3.3 Structural system. The tanks will be supported by integral legs or saddle supports designed to resist gravity and environmental loadings. Refer to Figure D.4.2-4 for information regarding the specific structural system.

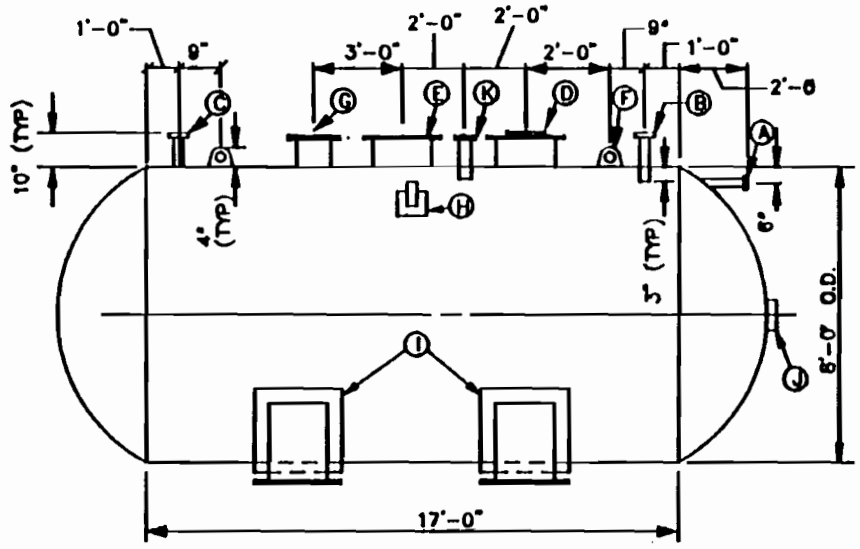

ELEVATION

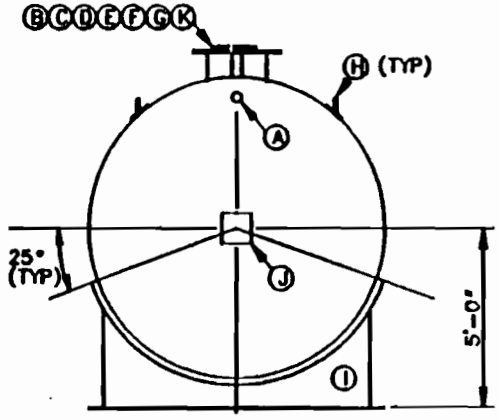

END VIEW

A. 4" CL 150 FLAT FACED FLANGED CONNECTION FOR OVERFLOW AND VENT

B. 2" CL 150 FLAT FACED FLANGED CONNECTION FOR ACID FILL TO EXTEND 3" INTO TANK

C. 2" CL 150 FLAT FACED FLANGED CONNECTION FOR LIQUID LEVEL GAUGE

D. 18" MANHOLE

E. 18" CL 150 FLAT FACED FLANGED CONNECTION FOR PUMP

F. LIFTING LUG (2 REQ'D)

G. 10" CL 150 FLAT FACED FLANGED CONNECTION FOR PUMP

H. PLATFORM SUPPORT LEGS OR SADDLES (SEE NOTE 1)

I. SUPPORT SADDLES (SEE NOTES 1 AND 2)

J. 8"X 8"X 1/4" PLATE FOR PIPE SUPPORT BRACKET

K. 1-1/2" CL 150 FLAT FACED FLANGE CONNNECTION FOR ACID PUMP RECIRCULATION TO EXTEND 3" INTO TANK

LOADING TABLE - Kips					
	Gravity		Seismic		
Support	DL	LL	Lat	Vert	OT
Left	7	53	18	12	13
Right	7	53	18	12	13

NO	DATE	REVISIONS AND RECORD OF ISSUE	BY	CHK	APP	FLM
0	11-11-88	INITIAL ISSUE	TRJ		SCP	

BLACK & VEATCH
ENGINEERS-ARCHITECTS

PROJECT | DRAWING NUMBER | REV

ENGINEER T. R. Gheorghiou | DRAWN EJO
CHECKED | DATE 11-11-88

Figure D4.2-4
TYPICAL DEMIN ACID STG TANK

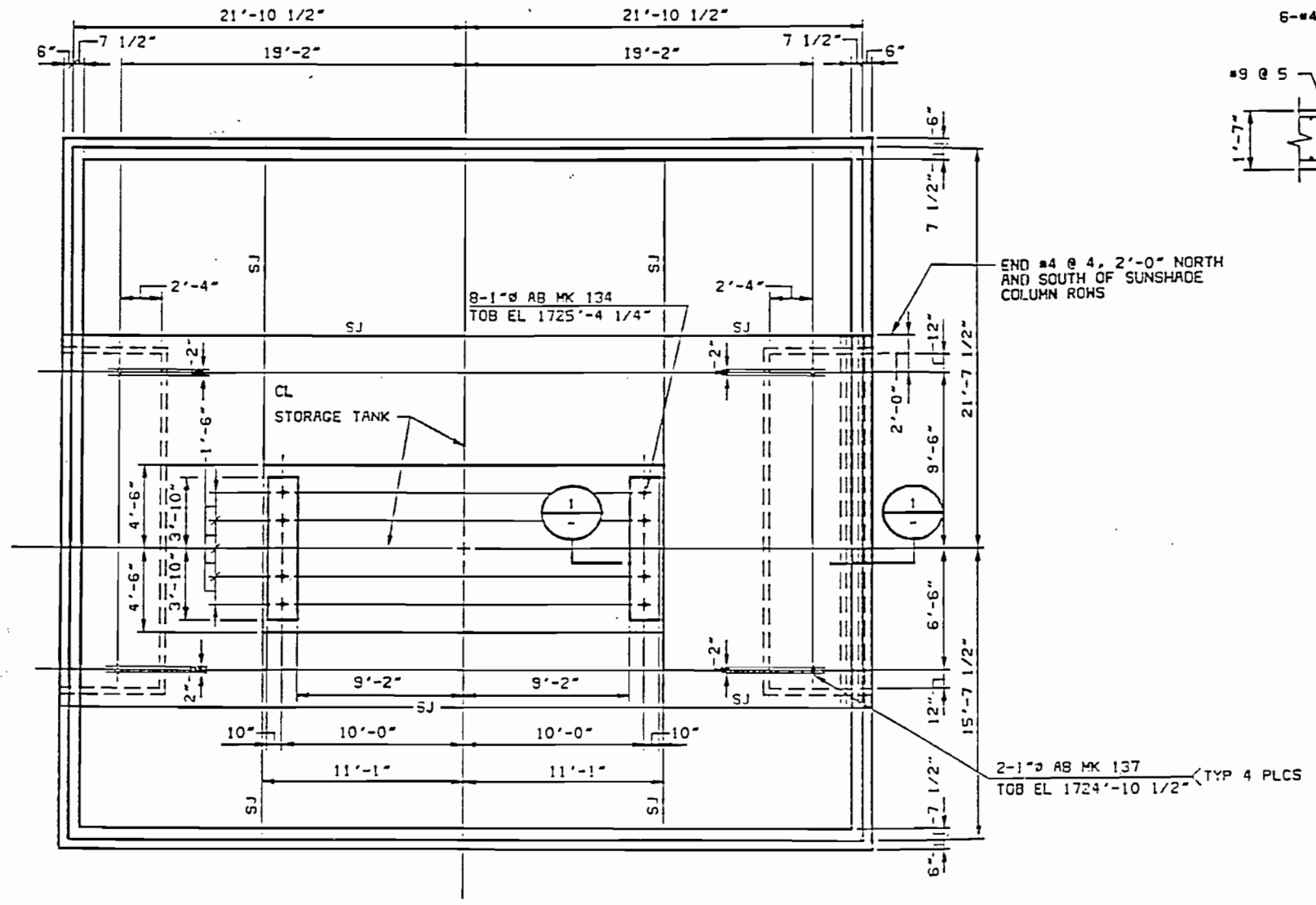

TYPICAL TANK FOUNDATION

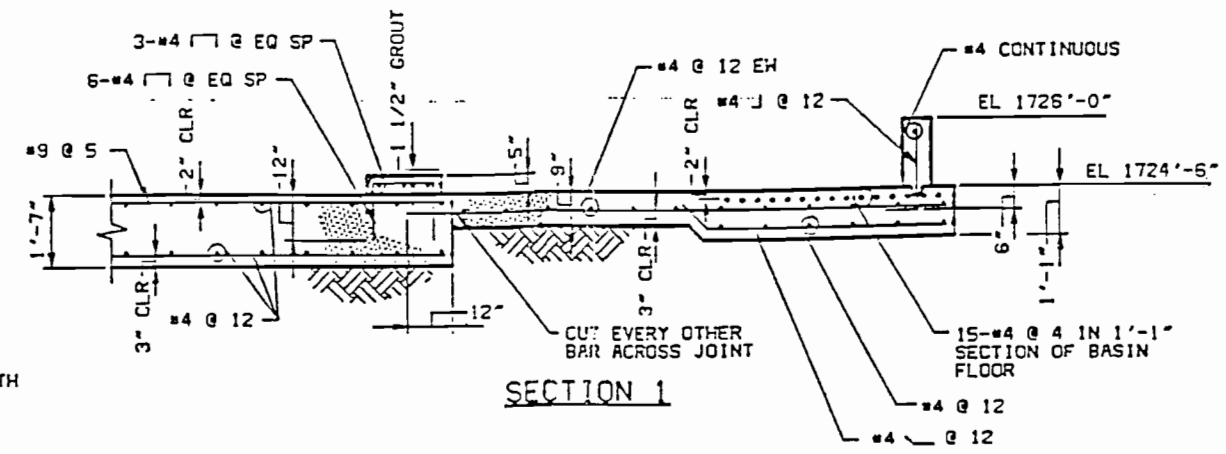

SECTION 1

NO	DATE	REVISIONS AND RECORD OF ISSUE	BY	CHK	APP	FLM

BLACK & VEATCH
ENGINEERS-ARCHITECTS

ENGINEER	PBV	DRAWN	TEB
CHECKED		DATE	

PROJECT	DRAWING NUMBER	REV
CODE	Figure D4.2-5	
AREA	TYPICAL TANK FDN	

USERNAME A01SL003 B1 ACAD 10
DATE TIME 1=1

D.4.2.3.4 Structural criteria. The foundation will be designed and constructed as a monolithic reinforced concrete structure using the criteria from Appendix C, Section C.3.1 Foundations and Appendix D, Section D.3.4 Concrete. The foundation will likely be a soil-supported rigid mat. The foundation will incorporate an integral containment basin capable of holding 130 percent of the tank's contents.

Environmental loadings will be determined in accordance with Appendix D, Section D.3.1 Natural Phenomena. Wind loads will be determined using the velocity pressures specified in Appendix D, Subsection D.3.2.3 Wind Loads multiplied by the appropriate pressure coefficient from Table No. 23-H of UBC.

Seismic loading will be calculated using equivalent lateral forces applied at the center of gravity of the tank or tank component in accordance with the criteria specified in Appendix D, Section D.3.6 Seismic Design Criteria.

Load combinations and their respective allowable strengths will be as indicated in Appendix D, Subsection D.3.2.7 Load Combinations and Subsection D.3.2.8 Allowable Stresses.

D.4.2.3.5 Analytical techniques. The tank foundations will be designed using static analysis techniques assuming a rigid mat. The mat will be sized such that the allowable settlement and bearing pressure criteria developed from a detailed subsurface investigation will not be exceeded. The foundation will be analyzed assuming a linear soil pressure distribution. The mat will be proportioned such that the resultant of the soil pressure coincides as nearly as possible with the resultant of the vertical loading. The factors of safety against overturning and sliding will be 1.5 and 1.1, respectively.

The tanks will be designed by a tank manufacturer in accordance with the ASME code, ANSI code, and the ASTM standards. Gravity and lateral loadings will be transferred to the foundation by integral legs or a saddle support system.

D.4.3 Equipment

D.4.3.1 Combustion and Steam Turbines. The combustion and steam turbines and accessories will be designed to resist all design loads. The combustion and steam turbines will be constructed of carbon and alloy steels as required by the manufacturer's standards and shall meet all applicable codes and standards.

The foundations will be designed to resist the loadings furnished by the manufacturer and will be constructed of reinforced concrete.

D.4.3.1.1 Equipment loads. Equipment loads will be determined by the manufacturer based on project performance criteria. Typical loadings used for design include the following:

- Dead loads.
- Live loads.
- Operating loads.
- Wind loads.
- Seismic loads.
- Temperature and pressure loads.
- Emergency loads such as turbine accident loads.

A typical combustion turbine arrangement is presented on Figures D.4.3-1 and D.4.3-2. Foundation loading magnitudes for a typical combustion turbine are indicated on Figure D.4.1-2.

D.4.3.1.2 Induced forces. The combustion and steam turbines and associated equipment will utilize steel anchor bolts, fasteners, welds, and other equipment anchorage devices to resist equipment induced forces.

D.4.3.1.3 Structural criteria. The combustion and steam turbines and generators and accessories will be designed to resist project specific design loads and UBC specified loads.

Environmental loading will be determined in accordance with Appendix D, Section D.3.1 Natural Phenomena. Wind loads will be determined using the velocity pressures specified in Appendix D, Subsection D.3.2.3 Wind Loads multiplied by the appropriate pressure coefficient from Table No. 23-H of UBC.

The seismic loading and design of the combustion and steam turbines and accessories will be in accordance with project specific criteria and UBC. Seismic loading will be calculated using equivalent lateral forces applied at the center of gravity of the equipment or component in accordance with the criteria specified in Appendix D, Section D.3.6 Seismic Design Criteria.

The inlet air filtration equipment and inlet air duct support structures shall be designed to resist the loading specified in UBC Chapter 23. For the purposes of resisting seismic lateral loads, the inlet air duct support structure will be classified as regular or irregular in accordance with the criteria established in UBC Chapter 23. The procedures for the analysis of regular and irregular structures will be as specified in UBC Chapter 23 and Appendix D, Subsection D.3.6.1 Buildings and Structures.

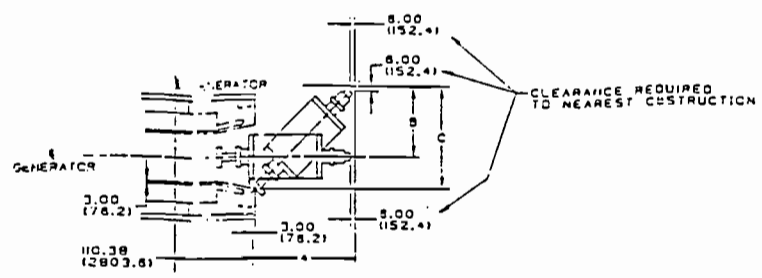

METHOD OF REMOVAL	DISTANCE REQUIRED TO REMOVE GENERATOR ROTOR A	B	C
STRAIGHT PULL	8.00 (15.2)		
CANTING (HCR12)	3.00 (5 [illegible])	10FT 10.00 (3302.0)	13FT 1.00 (3987.6)

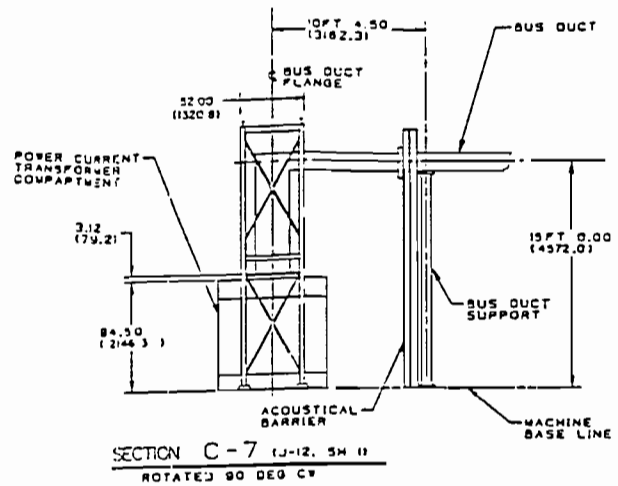

SECTION C-7 (J-12, SH 1)
ROTATED 90 DEG CW

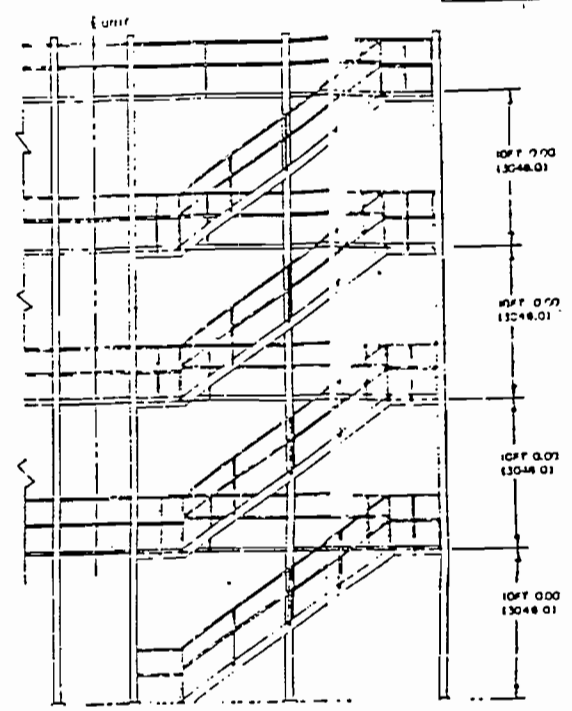

VIEW J-12 (F-11)

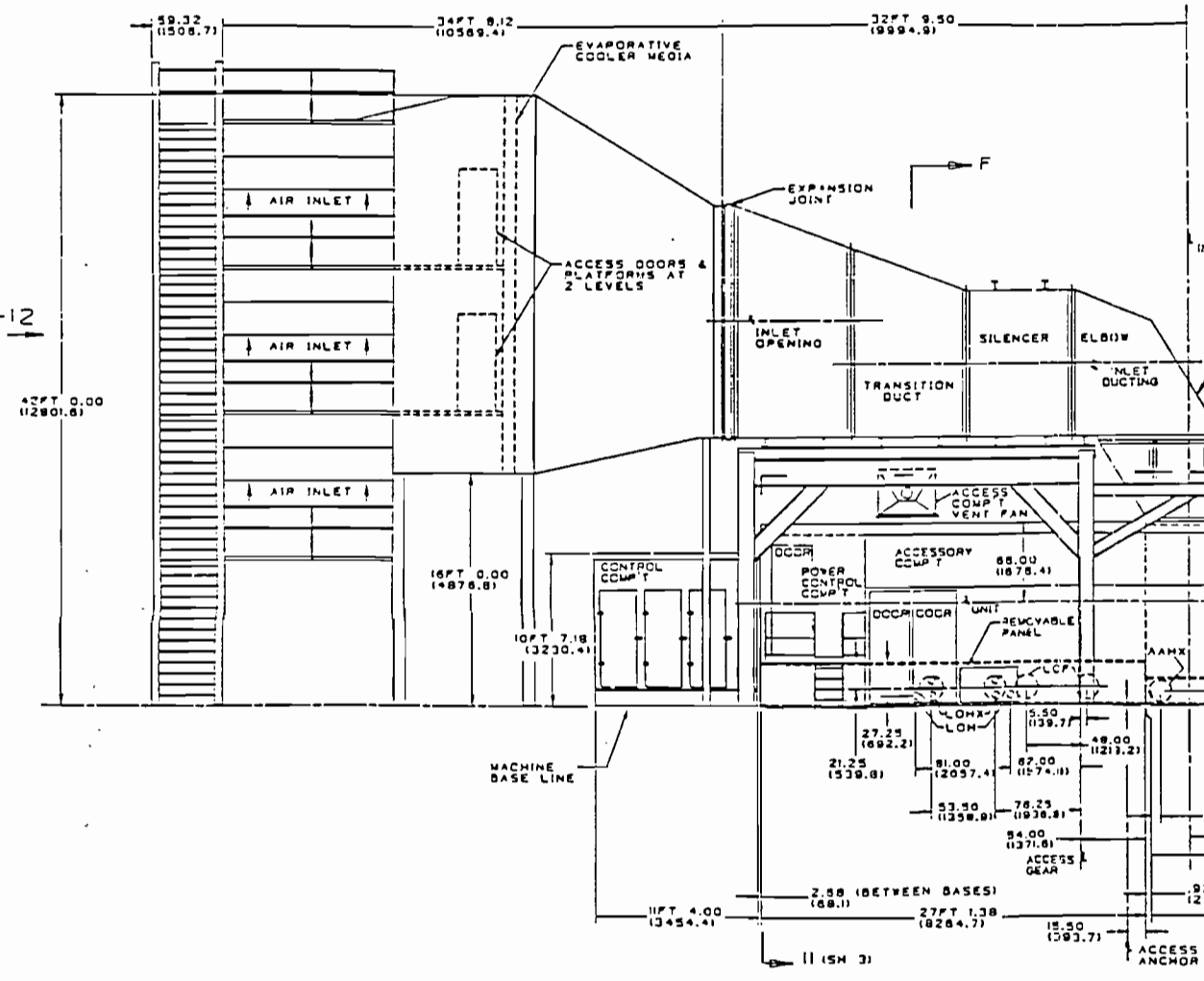

VIEW L-7 (K-1, SH 1)

986E479 2

BLV13582-62-1003-05-C0081

Figure D4.3-1
TYPICAL CT ARRANGEMENT

NOTES:

1. WHEN ORIENTING THE GAS TURBINE WITH THE STATION AND ENVIRONMENTAL CONSIDERATIONS, CONSIDERATION SHOULD BE GIVEN TO THE PREVAILING WINDS SO THAT THE POSSIBILITY OF EXHAUST GAS INTO THE INLET AIR MAY BE MINIMIZED.
2. FOR ELECTRICAL CONNECTIONS, SEE ELECTRICAL OUTLINE, ML [illegible] 3301.
3. DIMENSIONS IN BRACKETS [ ] ARE IN MILLIMETERS.

COMPONENTS REQUIRING REMOVAL SPACE	
ITEM NOMENCLATURE	REMOVAL DIA
LOH (LUBE OIL HEAT EXCHANGER)	12.50 (63.5) Ø
LOF (LUBE OIL FILTER)	120.50 (520.7) Ø
LOHX (LUBE OIL HEAT EXCHANGER)	121.62 (549.1) Ø
AAHX (ATMO AIR HEAT EXCHANGER)	118.62 (422.1) Ø

Figure D4.3-2
TYPICAL CT ARRANGEMENT

The air duct support structure will resist lateral seismic loading as a concentric braced frame or as an ordinary moment resisting space frame as defined by UBC. The design and detailing of the members and connections will comply with the provisions of UBC Chapter 27.

Lateral forces on elements of structural and nonstructural components will be in accordance with UBC Section 2336 with Z equal to 0.3, I equal to 1.25, and Cp in accordance with UBC Table 23-P. These seismic forces will be combined with forces due to normal operating loads.

Lateral forces on equipment will be determined in accordance with UBC Section 2336 with Z equal to 0.3, I equal to 1.25, and Cp in accordance with UBC Table 23-P. Equipment bases, foundations, support frames, and structural members used to transfer the equipment seismic forces to the main lateral load resisting system will be designed for the same seismic load as the equipment.

Load combinations will be as indicated in Appendix D, Subsection D.3.2.7 Load Combinations. These load combinations are in addition to those normally used in design and those specified in applicable codes and standards. For all load combinations, including seismic, the stresses in the structural supporting members and connections will remain in the elastic range.

D.4.3.1.4 Analytical techniques. The combustion and steam turbines and auxiliary equipment will be designed and constructed in accordance with applicable requirements of codes and standards referenced in this Appendix D. Stamps will be affixed to denote conformance to the appropriate codes.

D.4.3.2 Heat Recovery Steam Generator (HRSG). The HRSG and accessories will be provided with platforms, stairways, and handrails as required to provide access for operations and maintenance.

The HRSG and components will be designed to resist all design loads. The HRSG and components will be constructed of carbon and alloy steels as required by the manufacturer's standards and shall meet all applicable codes and standards.

The foundation will be designed to resist the loadings furnished by the manufacturer and will be constructed of reinforced concrete.

D.4.3.2.1 Equipment loads. Equipment loads will be determined by the manufacturer and will be based on project performance criteria and applicable codes and standards. Typical loadings used for design include the following:

- Dead loads.
- Live loads.
- Operating loads.

- Construction loads.
- Wind loads.
- Seismic loads.
- Hydrostatic loads.
- Temperature and pressure loads.

A typical HRSG arrangement is presented on Figure D.4.3-3. A typical HRSG with foundation loading magnitudes is indicated on Figure D.4.1-4.

D.4.3.2.2 Induced forces. The HRSG and associated equipment will utilize steel anchor bolts, fasteners, welds, and other equipment anchorage devices to resist equipment induced forces.

D.4.3.2.3 Structural criteria. The HRSG and associated equipment will be designed to resist project specific design loads and UBC specified loads.

Environmental loading will be determined in accordance with Appendix D, Section D.3.1 Natural Phenomena. Wind loads will be determined using the velocity pressures specified in Appendix D, Subsection D.3.2.3 Wind Loads multiplied by the pressure coefficients from Table No. 23-H of UBC.

The seismic loading and design of the HRSG and associated equipment will be in accordance with project specific criteria and the UBC. Seismic loading will be calculated using equivalent lateral forces applied at the center of gravity of the equipment or component in accordance with the criteria specified in Appendix D, Section D.3.6 Seismic Design Criteria.

The HRSG support structure will be designed to resist, at a minimum, the lateral forces specified in UBC Section 2338, Nonbuilding Structures and the applicable criteria of Appendix D, Section D.3.6 Seismic Design Criteria.

For the purpose of resisting lateral seismic forces, the HRSG support structure will be classified as regular or irregular in accordance with the criteria established in UBC Chapter 23. The procedures for the analysis of regular and irregular structures will be as specified in UBC Chapter 23 and Appendix D, Subsection D.3.6.1 Buildings and Structures.

Lateral forces on elements of structural and nonstructural components will be determined in accordance with UBC Section with Z equal to 0.3, I equal to 1.25, and Cp in accordance with UBC Table 23-P.

Lateral forces on equipment will be determined in accordance with UBC Section 2336 with Z equal to 0.3, I equal to 1.25, and Cp in accordance with UBC Table 23-P. Equipment bases, foundations, support frames, and structural members used

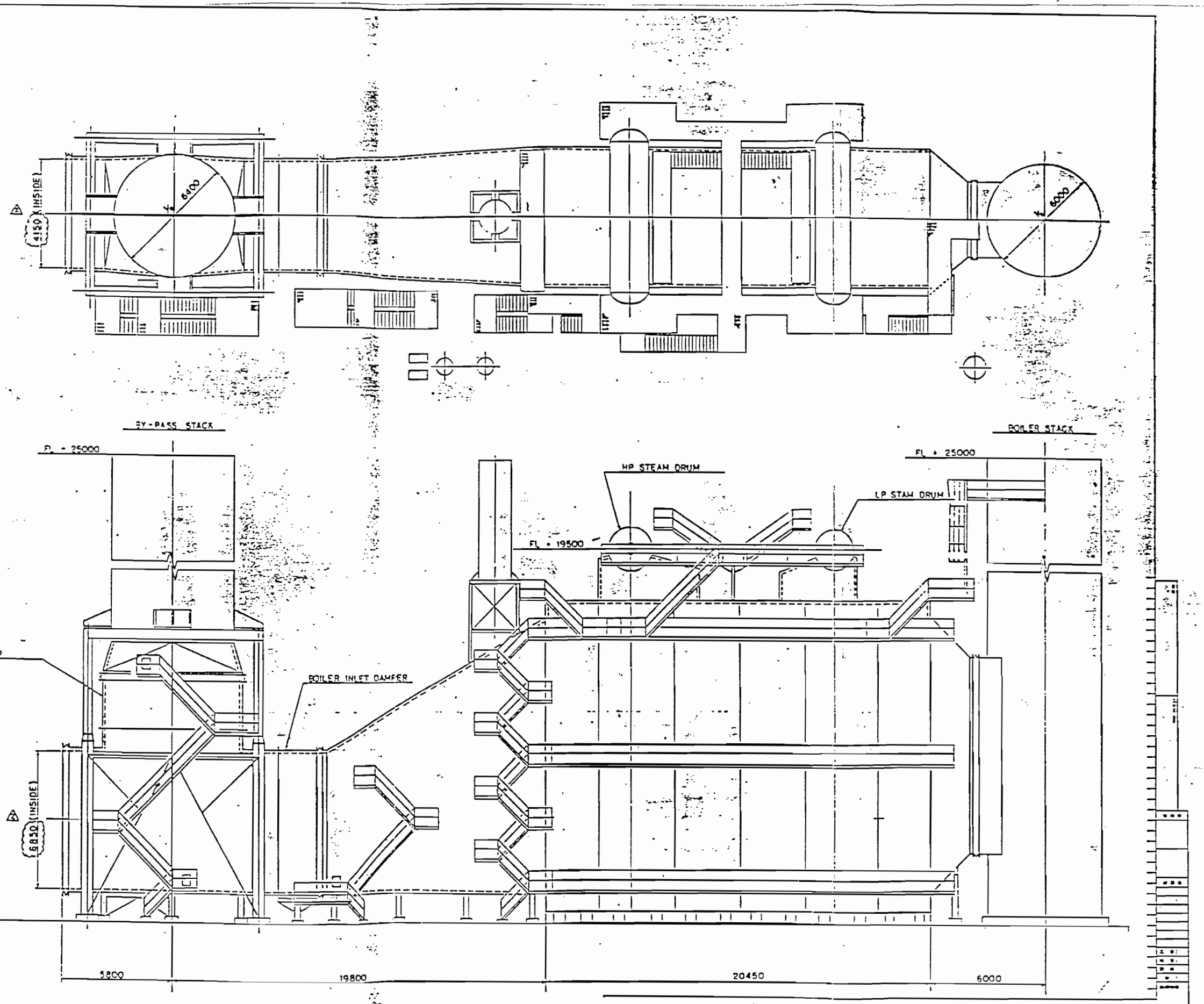

ASSEMBLY OF BOILER

Figure D4.3-3
TYPICAL HRSG ARRANGEMENT

to transfer the equipment seismic forces to the main lateral load resisting system will be designed for the same seismic load as the equipment.

Load combinations will be as indicated in Appendix D, Subsection D.3.2.7 Load Combinations. These load combinations are in addition to those normally used in design and those specified in applicable codes and standards. For all load combinations, including seismic, the stresses in the structural supporting members and connections shall remain in the elastic range.

D.4.3.2.4 Analytical techniques. The HRSG and associated equipment will be designed and constructed in accordance with applicable requirements of codes and standards referenced in Appendix D and Appendix B. Stamps will be affixed to denote conformance to the appropriate codes.

D.4.3.3 Transformers. The transformers, transformer equipment, material, and accessories will conform to the applicable standards of ANSI C57.12, NEMA TR1, ANSI/IEEE C59.94 and 98, and project specific criteria. The transformers will be designed, fabricated, and tested in accordance with ANSI C57.12 series, NEMA TR 1, and project specific criteria.

The foundations will be designed to resist the loadings furnished by the manufacturer and will be constructed of reinforced concrete.

D.4.3.3.1 Foundation loads. Foundation loads will be furnished by the transformer manufacturer and will be superimposed with loads for the foundation itself. Typical loadings supplied by the manufacturer include the following:

- Dead loads.
- Live loads.
- Wind loads.
- Seismic loads.

A typical transformer with foundation loading magnitudes is indicated on Figure D.4.3-4. A typical transformer foundation is indicated on Figure D.4.3-5.

D.4.3.3.2 Induced forces. The transformers, transformer equipment, and accessories will utilize steel anchor bolts, fasteners, welds, and other equipment anchorage devices to resist equipment induced forces.

D.4.3.3.3 Structural system. Refer to Figure D.4.3-4 for information regarding the specific structural system. The transformer will be regarded as a rigid body for foundation design purposes.

D.4.3.3.4 Structural criteria. The auxiliary power transformer, transformer equipment, and accessories will be designed to resist project specific design loads, UBC specified loads, and loads from applicable codes and standards.

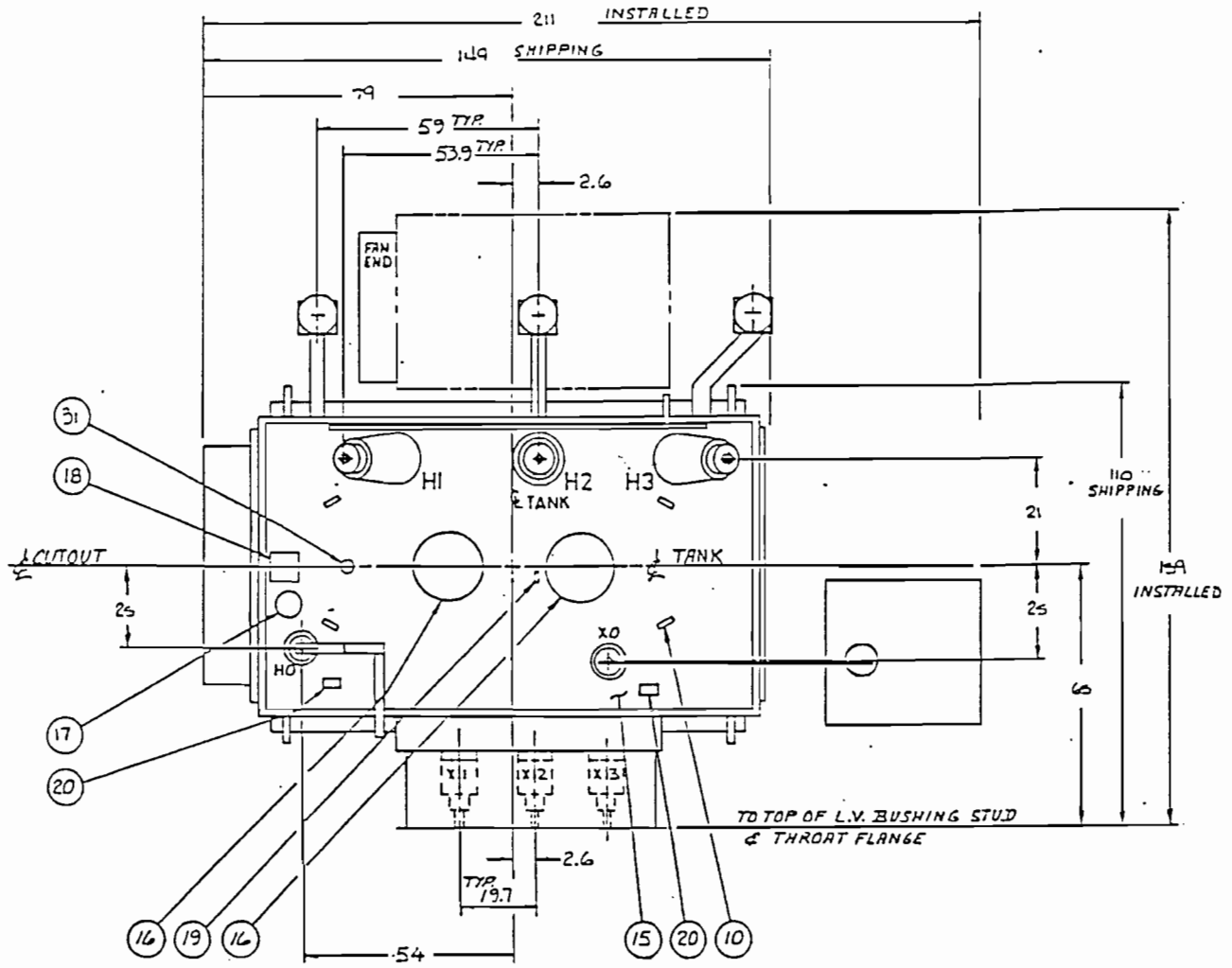

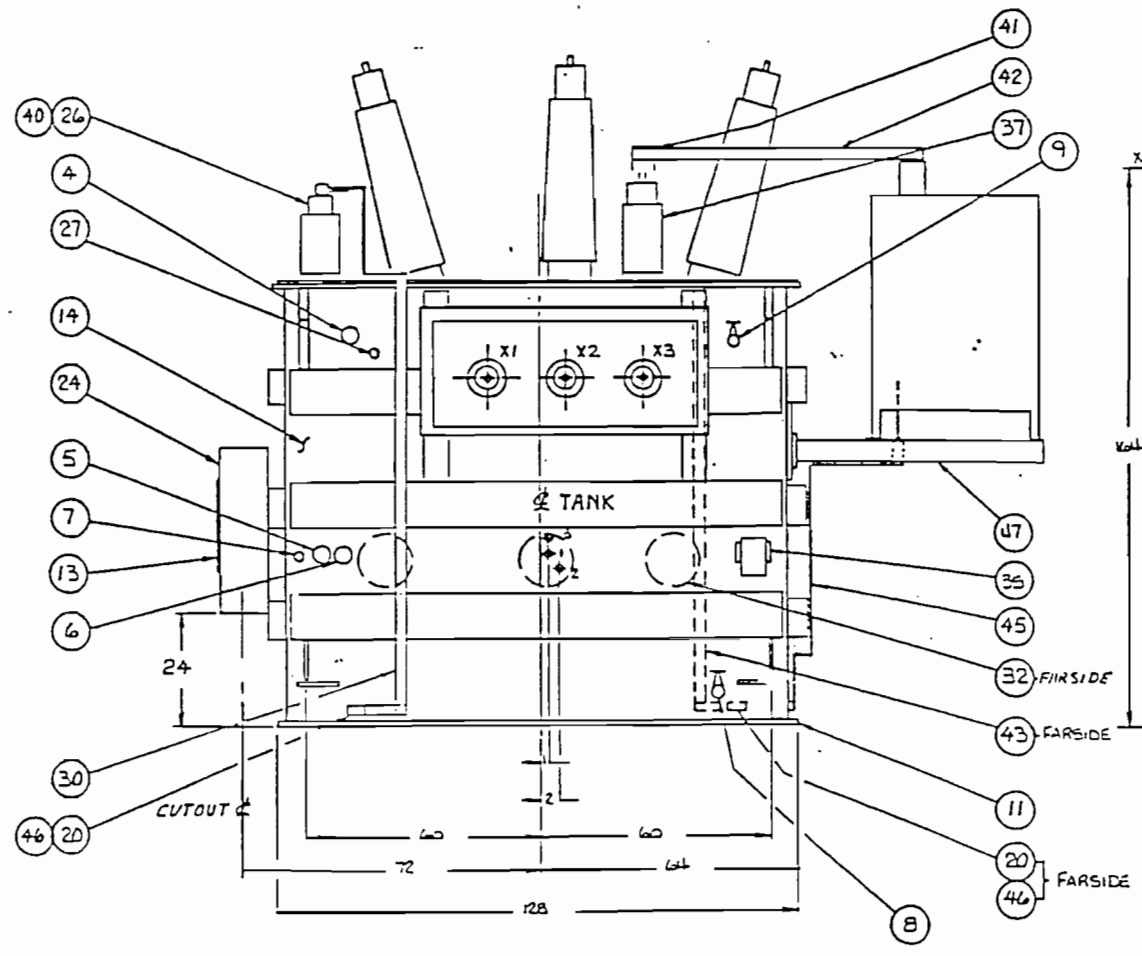

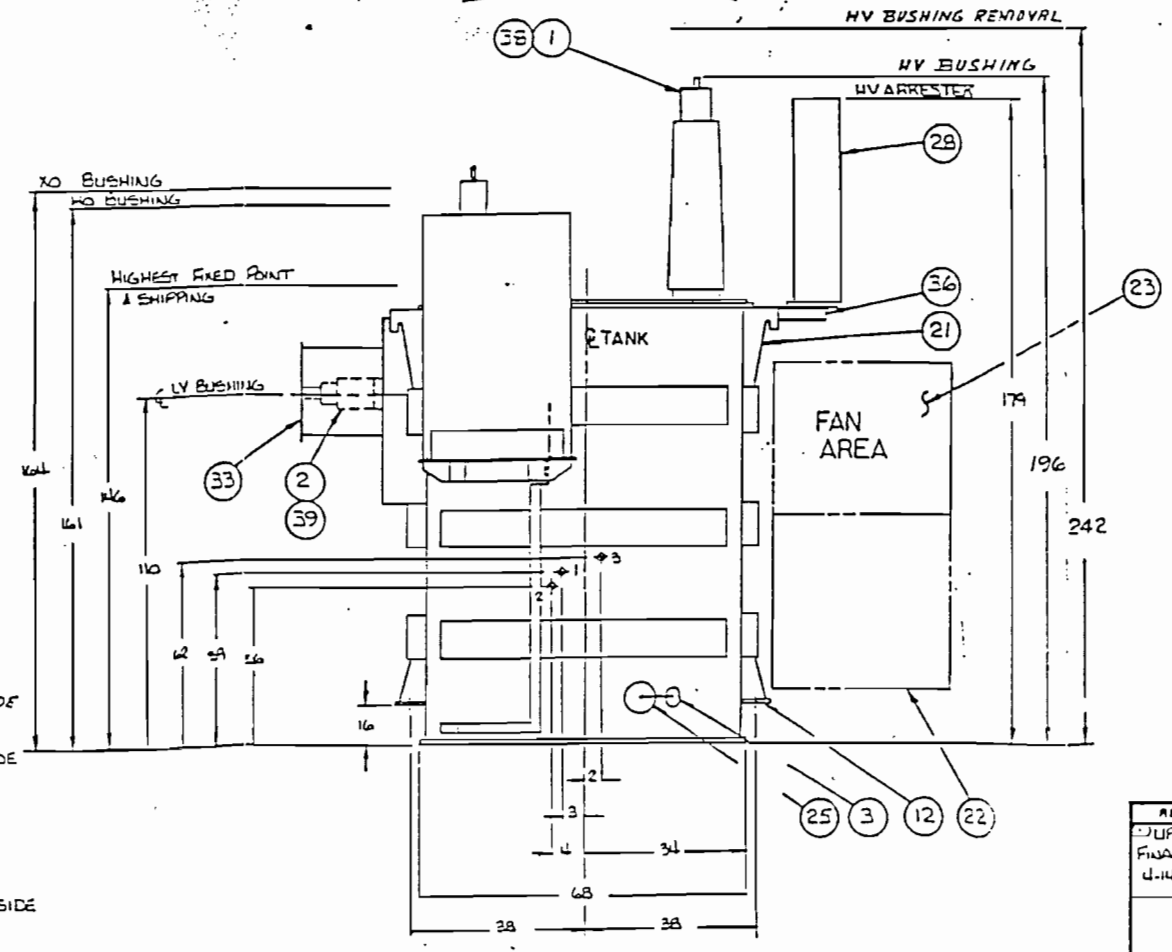

APPROXIMATE WEIGHTS			LBS.
CORE & COIL (UNTANKING WEIGHT)			40,300
TANK, FITTINGS & RADIATORS			25,600
RADS. (BOLT ON)	4,300	LBS.	
OIL-MAIN TANK	3,545	GALS.	
OIL-RADIATORS	175	GALS.	
OIL-TOTAL	3,720	GALS.	28,000
TOTAL WEIGHT			93,900

REVISIONS
UPDATED TO FINAL DESIGN 4-14-89 BAB

Figure D4.3-4

TYPICAL TRANSFORMER

OUTLINE

ALL DIMENSIONS ARE IN INCHES

2-27-89 | 2/27/89

2 of 2 | A0765T2844 88

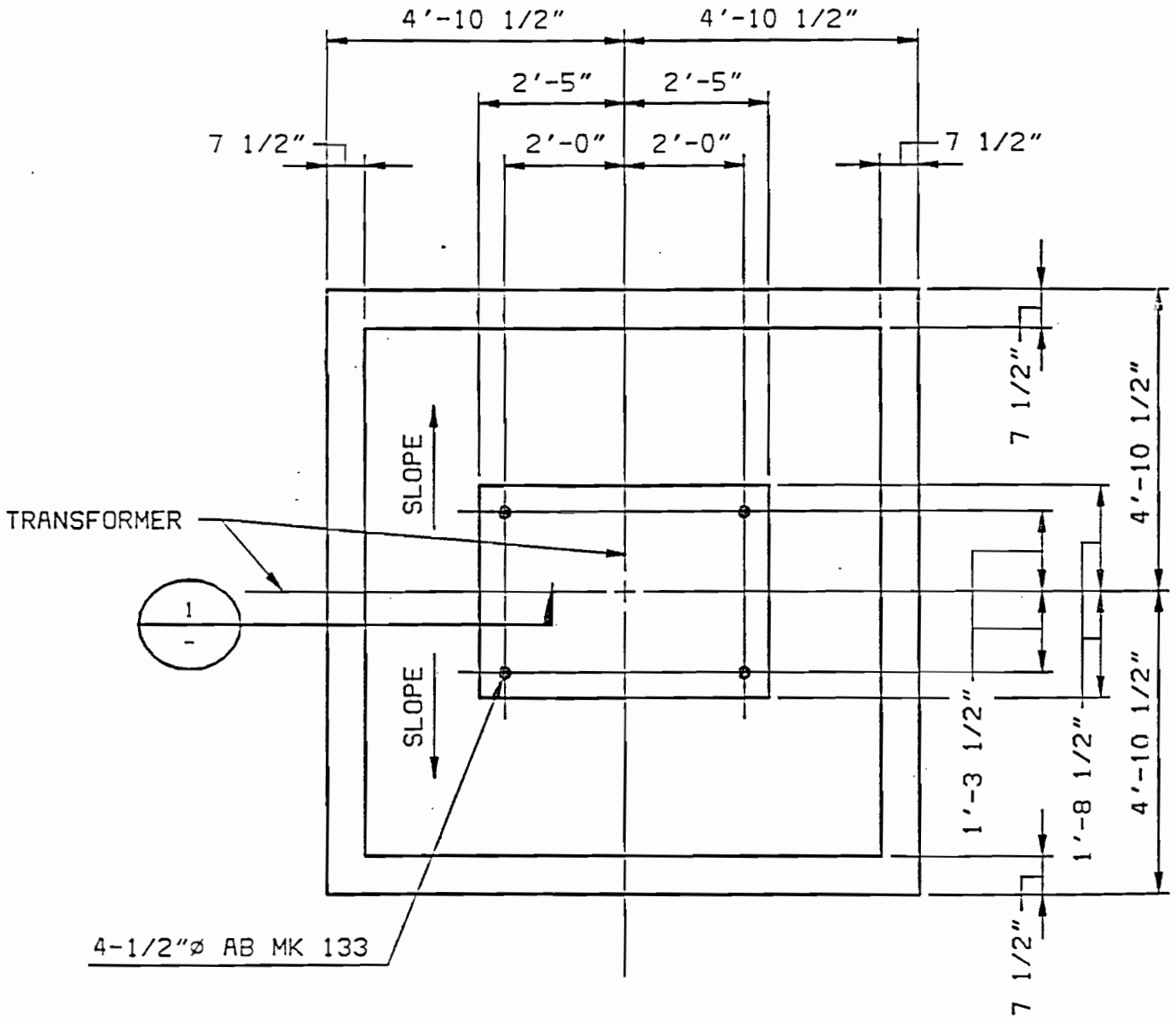

TYPICAL TRANSFORMER
FOUNDATION PLAN

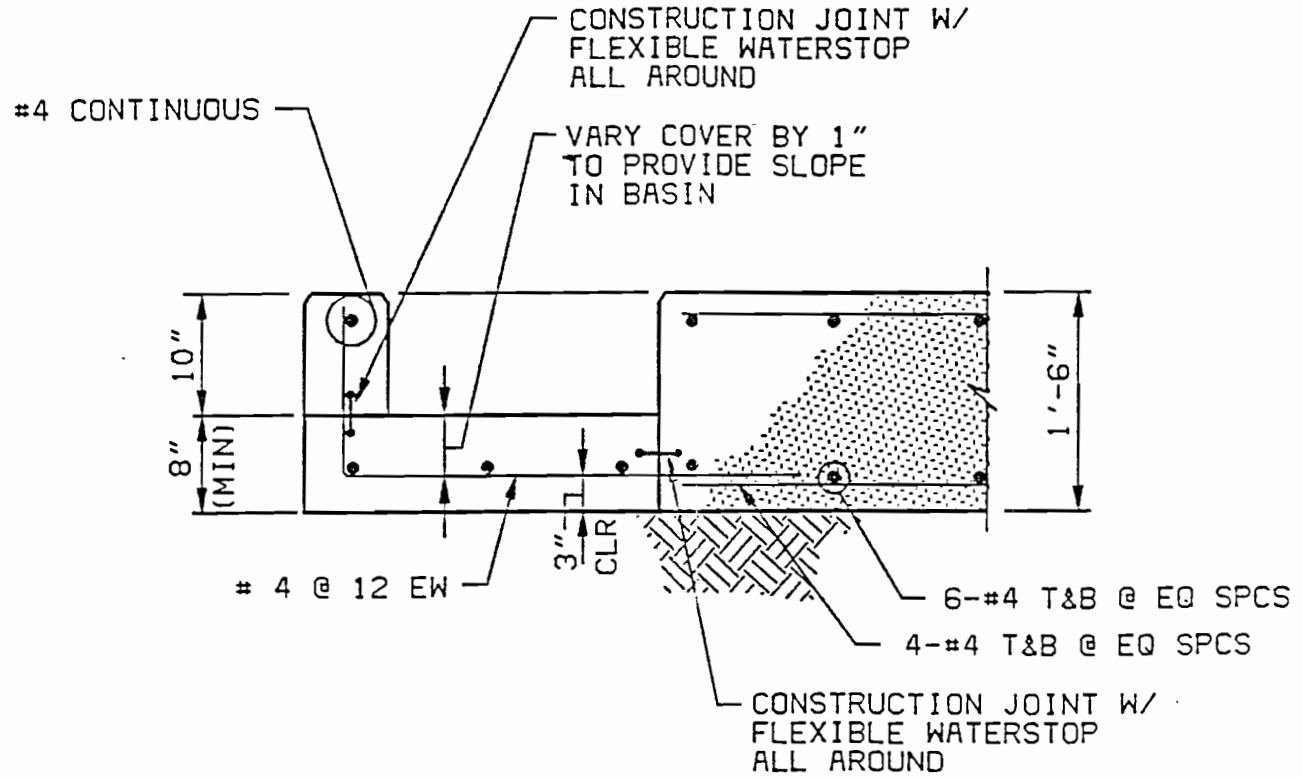

SECTION 1

NO	DATE	REVISIONS AND RECORD OF ISSUE	BY	CHK	APP	FLM

BLACK & VEATCH
ENGINEERS-ARCHITECTS

ENGINEER	PBV	DRAWN	TEB
CHECKED		DATE	

PROJECT	DRAWING NUMBER	REV

Figure D4.3-5
TYPICAL TRANSFORMER FDN

USERNAME
ACAD 10
A01SL003 B1 1=1
DATE TIME

The foundation will be designed and constructed as a monolithic reinforced concrete structure using the criteria from Appendix C, Section C.3.1 Foundations and Appendix D, Section D.3.4 Concrete. The foundation will likely be a soil-supported rigid mat. The foundation will incorporate an integral containment basin capable of holding 130 percent of the transformer coolant contents prior to passage through an oil/water separator.

Environmental loading will be determined in accordance with Appendix D, Section D.3.1 Natural Phenomena. Wind loads will be determined using the velocity pressures specified in Appendix D, Subsection D.3.2.3 Wind Loads, multiplied by the appropriate pressure coefficients from UBC Table No. 23-H.

The seismic loading and design of the auxiliary power transformer, transformer equipment, accessories, and foundations will be in accordance with project specific criteria and UBC Chapter 23. Loading will be approximated using equivalent lateral forces applied to the center of gravity of the equipment or component using the criteria specified in Appendix D, Section D.3.6 Seismic Design Criteria.

Lateral forces on equipment will be determined in accordance with UBC Section 2336 with Z equal to 0.3, I equal to 1.25, and Cp in accordance with UBC Table 23-P. Equipment bases, foundations, support frames, and structural members used to transfer the equipment seismic forces to the foundation system will be designed for the same seismic load as the equipment.

Load combinations will be as indicated in Appendix D, Subsection D.3.2.7 Load Combinations. These load combinations are in addition to those normally used in design and those specified in applicable codes and standards. For all load combinations, including seismic, the stresses in the structural supporting members and connections will remain in the elastic range. Structural allowable strengths will be as indicated in Appendix D, Subsection D.3.2.8 Allowable Stresses.

D.4.3.3.5 Analytical techniques. The transformers, transformer equipment, and accessories will be designed and constructed in accordance with applicable requirements of codes and standards referenced in Appendix F, Electrical Engineering Design Criteria.

The transformer foundations will be designed using static analysis techniques assuming a rigid mat. The mat will be sized such that the allowable settlements and bearing pressure criteria developed from a detailed subsurface investigation will not be exceeded. The foundation will be analyzed assuming a linear soil pressure distribution. The mat will be proportioned such that the resultant of the soil pressure

coincides as nearly as possible with the resultant of the vertical loading. The factors of safety against overturning and sliding will be 1.5 and 1.1, respectively.

D.4.3.4 Miscellaneous Equipment. Where possible, all miscellaneous equipment will be designed to project specific criteria. This miscellaneous equipment includes, but is not limited to, motor control centers, batteries, low voltage power and lighting systems, isolated bus ducts, pumps, lube oil cooling units, fire detection and protection systems, and switchgear. Standardized components such as motors, pumps, small fans, and other similar products that represent manufacturers' standard stock items will not be designed to meet project specific seismic loading criteria.

Miscellaneous equipment will meet all applicable codes and standards as well as the individual manufacturer's standards.

All equipment foundations and supports will be designed to resist project specific loadings and the loadings furnished by the equipment manufacturer.

D.4.3.4.1 Foundation loads. Foundation loads will be furnished by the equipment manufacturers and will be superimposed with loads for the foundation itself. Typical loadings supplied by the manufacturer include the following:

- Dead loads.
- Live loads.
- Wind loads.
- Seismic loads.
- Temperature and pressure loads (as applicable).

D.4.3.4.2 Induced forces. All miscellaneous equipment will utilize steel anchor bolts, fasteners, welds, and other equipment anchorage devices to resist equipment induced forces.

D.4.3.4.3 Structural system. Each individual piece of equipment will have its own unique structural system, and it is the responsibility of each manufacturer to assure its adequacy.

D.4.3.4.4 Structural criteria. All miscellaneous equipment will be designed to resist project specific and UBC specified loads where possible and loads from applicable codes and standards.

The seismic loading and design of miscellaneous equipment will be in accordance with project specific criteria and UBC Chapter 23, if possible.

Seismic loading will be calculated using equivalent lateral forces applied to the center of gravity of the equipment or component in accordance with the criteria specified in Appendix D, Section D.3.6 Seismic Design Criteria.

Lateral forces on equipment will be determined in accordance with UBC Section 2336, with Z equal to 0.3, I equal to 1.25, and Cp in accordance with UBC Table 23-P. Equipment bases, foundations, support frames, and structural members used to transfer the equipment seismic forces to the main lateral load resisting system will be designed for the same seismic load as the equipment.

Load combinations will be as indicated in Appendix D, Subsection D.3.2.7 Load Combinations. These load combinations are in addition to those normally used in design and those specified in applicable codes and standards. For all load combinations, including seismic, the stresses in the structural supporting members and connections shall remain in the elastic range. Structural allowable strengths will be as indicated in Appendix D, Subsection D.3.2.8 Allowable Stresses.

D.4.3.4.5 Analytical techniques. All miscellaneous equipment and accessories will be designed and constructed in accordance with applicable requirements of codes and standards.

All structural supports required for the miscellaneous equipment will be designed using static analysis techniques.

D.4.4 Piping

The Procter & Gamble Cogeneration Project will include all piping systems necessary for a complete installation.

Piping will include all high point vents, low point drains, instrument piping, lube oil piping, steam piping, and other piping as required for the complete system. Insulation, hangers, valves, and other piping accessories will also be provided. Piping, pipe supports, and pipe accessories will be constructed of carbon, alloy, and stainless steel.

The foundations and support superstructures will be designed to resist the loadings generated by the piping system.

D.4.4.1 Piping Loads. All piping loads will be determined using project specified loading and UBC specified loads. Typical loadings for a piping system include the following:

- Dead loads.
- Live loads.
- Wind loads.
- Seismic loads.
- Temperature and pressure loads.
- Test loads.

D.4.4.2 Induced Forces. The design and configuration of all hangers and accessories will utilize steel anchor bolts, fasteners, welds, and other pipe anchorage devices. All pipe anchorages will be designed to resist induced forces.

D.4.4.3 Structural Criteria. All piping, pipe supports, and pipe accessories will be designed to resist project specific loads, UBC specified loads, and loads from applicable codes and standards, and be in accordance with the criteria established in Appendix B.

Environmental loading will be determined in accordance with Appendix D, Section D.3.1 Natural Phenomena. Wind loads will be determined using the velocity pressures specified in Appendix D, Subsection D.3.2.3 Wind Loads multiplied by the appropriate pressure coefficients from Table No. 23-H of UBC.

The seismic loading and design of piping systems and pipe supports will be in accordance with project specific criteria. Seismic analysis of piping and components will be designed in accordance with Sections 2336 and 2337 of UBC 1991.

Load combinations will be as indicated in Appendix D, Subsection D.3.2.7 Load Combinations. These load combinations are in addition to those normally used in design and the applicable codes and standards specified in Appendix B. For all load combinations, including seismic, the stresses in the structural supporting members will remain in the elastic range. Structural allowable strengths will be as indicated in Appendix D, Subsection D.3.2.8 Allowable Stresses.

D.4.4.4 Analytical Techniques. All piping, piping supports, and pipe accessories will be designed and constructed in accordance with applicable requirements of the codes and standards referenced in Appendix B.

Structural supports required for piping will be designed using static analysis techniques.

D.5 Hazard Mitigation

The Procter & Gamble Cogeneration Project will be designed to mitigate natural and environmental hazards caused by seismic and meteorological events. This section addresses the structural design criteria used to mitigate such hazards.

D.5.1 Seismic Hazard Mitigation Criteria

Appendices C and D describe the civil and structural design criteria that will be applied to the project. The selection of the seismic design criteria for the project was based on the following considerations:

- Compliance with applicable laws, ordinances, regulations, and standards.

- Life safety.
- Structural behavior and performance.
- Reliability of the plant.
- Financial impacts from seismic induced outages.
- Seismic probability and magnitude.

The project seismic design criteria were developed to incorporate these considerations using a systematic approach to correlate performance criteria with assumed risk level. The following procedure was used to establish the design criteria:

- The seismic hazards were assessed by studying the geologic features of the surrounding area. Major faults were identified and information was collected regarding each fault's proximity, capability, recurrence, and magnitude.
- The seismic risk associated with each source was assessed considering historical magnitudes.
- A site ground acceleration of 0.3 g is appropriate for structural design. This ground acceleration is the maximum credible acceleration as stated in Geologic and Seismic Setting in Appendix C1.
- Acceleration levels for various structural frequencies will be based on UBC Figure No. 23-3, Normalized Response Spectra Shapes.
- Appropriate design criteria and analysis methods were established for each major plant structure, equipment, and component consistent with the seismic performance criteria.

Specific design features that will be incorporated into the plant to mitigate the identified seismic hazards include the following:

- Appropriate analysis techniques will be employed to calculate structure specific seismic loads.
- Plant structures, equipment, piping, and other components will be designed to resist the project specific seismic loads.
- All equipment will be positively anchored to its supporting structure. Nominal uplift capacity will be provided in the absence of calculated overturning forces.
- Anchorages will be designed to resist the project specific seismic loadings.
- Foundation systems will be selected and designed to minimize the effects of soil liquefaction.
- The design of piping connections to structures, tanks, and equipment will consider the differential seismic displacements between components.

- Adjacent structures will be seismically isolated from one another.
- Structural elements will be designed to comply with special detailing requirements intended to provide ductility.
- Connections for steel structures will have a minimum load carrying capability without regard to the calculated load.
- Lateral and vertical displacements of structures and elements of structures will be limited to specified values.

The foregoing design features are intended to provide the following degrees of safety for structures and equipment:

- Resist minor earthquakes without damage. Plant remains operational.
- Resist moderate earthquakes without structural damage but with some non-structural damage. Plant remains operational or is returned to service following visual inspection and/or minor repairs.
- Resist major earthquakes without collapse but with some structural and non-structural damage. Plant is returned to service following visual inspection and/or minor repairs.

D.5.2 Meteorological and Climatic Hazard Mitigation

Meteorological and climatic data will form the design basis for the project. Portions of the data and the design bases that pertain to structural engineering have been provided in this appendix.

Specific design features that will be incorporated into the plant to mitigate meteorological and climatic hazards include the following:

- Structures and cladding will be designed to resist the wind forces.
- Sensitive structures will be designed for wind induced vibrational excitation.
- Roofs will be sloped and equipped with drains to prevent accumulation of rainfall.
- Plant drainage systems will be designed to convey the runoff from a rainfall event with a 25 year recurrence interval.
- Ground floor levels of structures will be placed above probable flood levels.
- Building drainlines will be installed with backflow prevention devices.
- Plant mechanical and electrical equipment will be placed on elevated equipment bases.
- The plant site will be graded to convey runoff away from structures and equipment.

The foregoing design features will be incorporated in accordance with applicable codes and standards identified in this appendix.

The degree of safety offered by these features is consistent with the requirements of the applicable codes and standards and the economic benefits these features provide.

Appendix E
Chemical Engineering Design Criteria

Appendix E
Chemical Engineering Design Criteria

E.1 Introduction

Control of the design, engineering, procurement, and construction activities on the project will be completed in accordance with various predetermined standard practices and project specific programs/practices. An orderly sequence of events for the implementation of the project is planned consisting of the following major activities:

- Conceptual design.
- Licensing and permitting.
- Detailed design.
- Procurement.
- Construction and construction management.
- Startup, testing, and checkout.
- Project completion.

These appendices summarize the codes and standards and standard design criteria and practices that will be used during the project. The purpose of this appendix is to summarize the general chemical engineering design criteria for the project. These criteria form the basis of the design for the chemical components and systems of the project. More specific design information is developed during detailed design to support equipment and erection specifications. It is not the intent of this appendix to present the detailed design information for each component and system, but rather to summarize the codes, standards, and general criteria that will be used.

Section E.2 summarizes the applicable codes and standards and Section E.3 includes the general criteria for design water quality, chemical conditioning, chemical storage, and wastewater treatment.

E.2 Design Codes and Standards

The design and specification of all work will be in accordance with all applicable laws and regulations of the federal government and the State of California and applicable local codes and ordinances. The federal and state codes and standards requiring compliance under penalty of law are outlined in the Regulatory Requirements

Manual. Codes and standards partially unique to chemical engineering design to be used in design and construction are summarized below:

- Deluge showers and eyewashes will be provided in areas in which exposure to potentially injurious materials may occur, in accordance with the OSHA standards.
- Plant effluent to be discharged offsite will meet the limits for flow, temperature, pH, total chlorine residual, and total dissolved solids as set by the most stringent of the federal, state, or local standards.
- ANSI--American National Standards Institute.
  - -- ANSI B31.1--Power Piping Code.
- ASME--American Society of Mechanical Engineers.
  - -- ASME--Performance Test Code 31, Ion Exchange Equipment.
- ASTM--American Society for Testing and Materials.
  - -- ASTM D1888-78--Referee Method B for TDS.
  - -- ASTM D859-68--Referee Method B for Silica as SiO_2.
  - -- ASTM D888--Referee Method A for Dissolved Oxygen.
  - -- ASTM D513-71--Referee Method D for CO_2.
  - -- ASTM D3486--Practices for Installation of Vulcanizable Rubber Tank Linings and Pipe Linings.
- OSHA--Occupational Safety and Health Administration.
- SSPC--Steel Structures Painting Council Standards.
  - -- SSPC SP1--Solvent Cleaning.
  - -- SSPC SP3--Power Tool Cleaning.
  - -- SSPC SP5--White Metal Blast Cleaning.
  - -- SSPC SP6--Commercial Blast Cleaning.
  - -- SSPC SP7--Brush-Off Blast Cleaning.
- UL--Underwriters' Laboratories.

Other recognized standards will be used as required to serve as design, fabrication, and construction guidelines when not in conflict with the above listed standards.

The codes and industry standards used for design, fabrication, and construction will be the codes and industry standards, including all addenda in effect as stated in equipment and construction purchase or contract documents.

E.3 General Criteria

E.3.1 Design Water Quality

The main site water supply system will furnish all water required for plant operations and consumption. The source of water for this system is the City of Sacramento water supply.

City water will be used for all potable water and service water, as well as for the Circulating Water Makeup System.

The quality of the source to be used as the basis for design of water treatment facilities is given below in Subsection E.3.1.1.

E.3.1.1 Circulating Water. City water will serve as the source of water for the Circulating Water Makeup System. The design analysis of this source is as follows:

Constituent	Design City Water
Calcium, mg/l as $CaCO_3$	34
Magnesium, mg/l as $CaCO_3$	24
Sodium, mg/l as $CaCO_3$	22
Alkalinity, mg/l as $CaCO_3$	50
Sulfate, mg/l as $CaCO_3$	17
Chloride, mg/l as $CaCO_2$	13
Silica, mg/l as SiO_2	14
pH	8.3

E.3.1.2 Service Water. Service water will be used to supply all general water requir/ements. The service water will be of potable quality and will be used for sanitary and potable water uses and general hose bibbs, and to supply the Cycle Makeup Treatment System and Fire Protection Water Supply System.

The source of the service water will be city water.

The expected analysis of the service water will be as described earlier in Subsection E.3.1.1.

E.3.1.3 Cycle Makeup. Service water will be supplied to the Cycle Makeup Treatment System. The high quality effluent from the Cycle Makeup Treatment System will serve as makeup to the steam cycle and the Closed Cooling Water System and

as NO_x injection water to combustion turbines. In addition, cycle makeup water will be used also to supply water for various uses during unit startup.

Water for cycle makeup will be the highest quality practical. Minimum quality requirements for cycle makeup water will be as follows:

- Total Dissolved Solids--0.2 mg/l.
- Silica as SiO_2--0.02 mg/l.

E.3.1.4 Construction Water. Water for use during construction will be supplied from city water. The quality of the water supply is as described earlier in Subsection E.3.1.1.

The quality of this water is adequate without treatment for potable uses.

E.3.1.5 Fire Protection Water. The source of water for fire protection will be the City of Sacramento's water supply system.

E.3.2 Chemical Conditioning

E.3.2.1 Cycle Chemical Conditioning. Chemical feed pumps will provide water conditioning chemical to the main cycle. Corrosion control will be provided by chemical scavenging of residual oxygen in conjunction with mechanical deaeration and by maintaining an elevated pH.

Condensate-feedwater chemical feed will consist of an oxygen scavenger, supplemented, as required, by a volatile, alkaline material for pH control.

Boiler chemical feed will consist of a mixture of sodium phosphates to control boiler water pH and to minimize scale formation and provide boiler water buffering capacity.

E.3.2.2 Circulating Water System Chemical Conditioning. Chemical feed pumps will provide water conditioning chemicals to the Circulating Water System to minimize corrosion and to control the formation of mineral scale and biofouling. Corrosion and scaling will be controlled by the use of sulfuric acid for alkalinity adjustment in conjunction with inhibitors, as required, for scale and corrosion control. Shock chlorination will be used to minimize biofouling of the condenser tubes and the cooling tower.

E.3.2.3 Closed Cycle System Chemical Conditioning. Bypass chemical feeders will provide water conditioning chemicals to the Closed Cycle Cooling System. Makeup water to the closed systems will be condensate quality and an inhibitor will be used for corrosion control.

E.3.3 Chemical Storage

E.3.3.1 Storage Capacity. Chemical storage tanks will, in general, be sized to store a minimum of 1.5 times the normal bulk shipment. The minimum acceptable volume of the demineralizer acid and caustic storage tanks will provide at least 5 days storage.

E.3.3.2 Containment. Chemical storage tanks containing corrosive fluids will be surrounded by curbing. Curbing and drain piping design will allow a full tank capacity spill without overflowing the curbing. For multiple tanks located within the same curbed area, the largest single tank will be used to size the curbing and drain piping.

E.3.3.3 Closed Drains. Waste piping for chemical wastewaters which potentially produce obnoxious or toxic vapors will used closed drains.

E.3.3.4 Coatings. Tanks and curbing within chemical storage areas will be provided with a protective coating system. The specific requirements for selection of an appropriate coating will be identified prior to equipment and construction contract procurements.

E.3.4 Wastewater Treatment

Chemical wastes, other than metal cleaning wastes, will be directed to onsite neutralization facilities for adjustment of pH. Metal cleaning wastes from preoperational and operational chemical cleaning of the boiler and preboiler systems of the HRSG will be collected, treated, and disposed offsite by the chemical cleaning contractor.

Sanitary wastewater, neutralization facility effluent and other cogeneration plant process wastewaters will be collected in the plant wastewater collection system for offsite disposal to the City of Sacramento sewer system.

Appendix F
Electrical Engineering Design Criteria

Appendix F
Electrical Engineering Design Criteria

F.1 Introduction

Control of the design, engineering, procurement, and construction activities on the project will be completed in accordance with various predetermined standard practices and project specific programs/practices. An orderly sequence of events for the implementation of the project is planned consisting of the following major activities:

- Conceptual design.
- Licensing and permitting.
- Detailed design.
- Procurement.
- Construction and construction management.
- Startup, testing, and checkout.
- Project completion.

The purpose of this appendix is to summarize the codes and standards and standard design criteria and practices that will be used during the project. The general electrical design criteria defined herein form the basis of the design for the electrical components and systems of the project. More specific design information is developed during detailed design to support equipment and erection specifications. It is not the intent of this appendix to present the detailed design information for each component and system, but rather to summarize the codes, standards, and general criteria that will be used.

Section F.2 summarizes the applicable codes and standards and Section F.3 includes the general design criteria for motors, power and control wiring, protective relaying, classification of hazardous areas, grounding, lighting, freeze protection, lightning protection, raceway and conduit, and cathodic protection.

F.2 Design Codes and Standards

The design and specification of all work shall be in accordance with all applicable laws and regulations of the federal government and the State of California, and applicable local codes and ordinances. A listing of the codes and industry standards to be used in design and construction follows:

- The Antifriction Bearing Manufacturers Association (AFBMA).
- American National Standards Institute (ANSI).

- American Society for Testing and Materials (ASTM).
- Edison Electric Institute (EEI).
- Insulated Cable Engineers Association (ICEA).
- Institute of Electrical and Electronics Engineers (IEEE).
- Illuminating Engineering Society (IES).
- National Electrical Code (NEC).
- National Electrical Manufacturers Association (NEMA).
- National Electrical Safety Code (NESC).
- National Fire Protection Association (NFPA).
- Occupational Safety and Health Act (OSHA).
- Underwriters' Laboratories (UL).

In addition to the general codes and standards listed above, the following specific standards will be utilized:

- Batteries.
  - -- NEMA IB 4--Determination of Amperehour and Watthour Capacity of Lead-Acid Industrial Storage Batteries for Stationary Service.
  - -- IEEE 450--Recommended Practice for Maintenance, Testing, and Replacement of Large Lead Storage Batteries.
  - -- IEEE 484--Recommended Practice for Installation Design and Installation of Large Lead Storage Batteries for Generating Stations and Substations.
- Battery Chargers.
  - -- NEMA AB 1--Molded Case Circuit Breakers.
  - -- NEMA PV 5--Constant-Potential Type Electric Utility (Semiconductor Static Converter) Battery Charger.
- Cable, Low Voltage Power, Control, and Instrument.
  - -- ASTM B8--Concentric-Lay Stranded Copper Conductors, Hard, Medium-Hard, or Soft.
  - -- ASTM B33--Tinned Soft or Annealed Copper Wire for Electrical Purposes.
  - -- ICEA S-19-81, NEMA WC-3--Rubber-Insulated Wire and Cable for the Transmission and Distribution of Electrical Energy.
  - -- ICEA S-68-516, NEMA WC-8--Ethylene-Propylene-Rubber-Insulated Wire and Cable for the Transmission and Distribution of Electrical Energy.

- -- NFPA 258--Standard Test Method for Measuring the Smoke Generated by Solid Materials.
  - -- NFPA 70--National Electrical Code (NEC).
  - -- ANSI/UL 44--Safety Standard for Rubber-Insulated Wires and Cable.
- Cable, Medium Voltage Power.
  - -- AEIC 6--Ethylene Propylene Rubber Insulated Shielded Power Cables, Rated 5 through 69 kV.
  - -- ASTM B8--Concentric Lay-Stranded Copper Conductors, Hard, Medium-Hard, or Soft.
  - -- ASTM B33--Tinned Soft or Annealed Copper Wire for Electrical Purposes.
  - -- IPCEA S-68-516--Ozone-Resistant Ethylene-Propylene Rubber Insulation for Power Cables Rated 0 to 35,000 Volts.
  - -- IPCEA S-19-81, NEMA WC-3--Rubber Insulated Wire and Cable for the Transmission and Distribution of Electrical Energy.
  - -- NFPA 70--National Electrical Code (NEC).
- Cable Tray.
  - -- NEMA VE-1--Cable Tray Systems.
- Cathodic Protection Equipment.
  - -- ANSI B1.1--Unified Inch Screw Threads.
  - -- ANSI B2.1--Pipe Threads.
  - -- ASTM A518--Corrosion-Resistant High Silicon Cast Iron.
  - -- ASTM B418--Cast and Wrought Galvanic Zinc Anodes for Use in Saline Electrolytes.
  - -- NEMA AB-1--Molded Case Circuit Breakers.
  - -- NEMA ICS--Industrial Controls and Systems.
  - -- NEMA WC-5, ICEA S-61-402--Thermoplastic-Insulated Wire and Cable for the Transmission and Distribution of Electrical Energy.
  - -- NEMA WC-7, SS-66-524--Cross-Linked-Thermosetting, Polyethylene-Insulated Wire and Cable for the Transmission and Distribution of Electrical Energy.
- Circuit Breakers, High Voltage.
  - -- ANSI/IEEE C37.04--Rating Structure for AC High Voltage Circuit Breakers Rated on a Symmetrical Current Basis.

- -- ANSI C37.06--Preferred Ratings and Related Required Capabilities for AC High Voltage Circuit Breakers Rated on a Symmetrical Current Basis.
- -- ANSI/IEEE C37.09--Test Procedure for AC High Voltage Circuit Breakers Rated on a Symmetrical Current Basis.
- -- ANSI/IEEE C37.010--Application Guide for AC High Voltage Circuit Breakers Rated on a Symmetrical Current Basis.
- -- ANSI C37.11--Requirements for Electrical Control for AC High Voltage Circuit Breakers Rated on a Symmetrical Current Basis and a Total Current Basis.

- Conduit.
  - -- UL 6, ANSI C80.1--Rigid Steel Conduit.
  - -- UL 797, ANSI C80.3--Electrical Metallic Tubing.
  - -- UL 514, ANSI C80.4--All Fittings.
  - -- UL 886--Hazardous Area Fittings.
  - -- UL 360--Flexible Liquidtight Conduit.
  - -- NEMA TC6--PVC and ABS Plastic Utilities Duct for Underground Installation.
  - -- NEMA TC9--Fittings for ABS and PVC Plastic Utilities Duct for Underground Installation.
  - -- UL 651--Electrical Rigid Nonmetallic Conduit.
  - -- NEMA TC2, UL 514--Fittings for Electrical Rigid Nonmetallic Conduit.
- Distribution Panels.
  - -- ANSI C97.1--Low Voltage Cartridge Fuses, 600 volts or less.
  - -- NEMA AB1--Molded Case Circuit Breakers.
  - -- NEMA PB1--Panelboards.
  - -- UL 50--Electrical Cabinets and Boxes.
  - -- UL 67--Panelboards.
  - -- NEMA ICS--Industrial Controls and Systems.
  - -- NEMA KSI--Enclosed Switches.
- Grounding Cable.
  - -- ASTM B8--Specifications for Concentric-Lay Stranded Copper Conductors.
- Grounding Connectors and Accessories.
  - -- NEMA CC-1--Electrical Power Connectors for Substations.

- Lighting Fixtures.
  - -- NEMA FA1--Outdoor Floodlighting Equipment.
  - -- NEMA LE1--Fluorescent Luminaries.
  - -- UL 57--Standard for Safety, Electric Lighting Fixtures.
  - -- UL 844--Standard for Safety, Electric Lighting Fixtures for Use in Hazardous Locations.
  - -- UL 924--Standard for Safety, Emergency Lighting Equipment.
- Lightning Arresters.
  - -- ANSI/IEEE C62.1--Surge Arresters for AC Power Circuits.
- Heat Tracing.
  - -- ICEA S-61-402--Thermoplastic-Insulated Wire and Cable for the Transmission and Distribution of Electrical Energy.
  - -- NEMA AB-1--Molded Case Circuit Breakers.
  - -- NEMA ICS-1--General Standards for Industrial Control and Systems.
  - -- NEMA PB-1--Panelboards.
  - -- NEC--National Electrical Code.
  - -- UL 83--Thermoplastic-Insulated Wires.
  - -- UL 44--Rubber-Insulated Wire and Cable.
- Secondary Unit Substations.
  - -- ANSI C37.13--Low-Voltage AC Power Circuit Breakers Used in Enclosures.
  - -- ANSI C37.16--Preferred Ratings, Related Requirements, and Application Recommendations for Low-Voltage Power Circuit Breakers and AC Power Circuit Protectors.
  - -- ANSI/IEEE C37.20--Switchgear Assemblies.
  - -- ANSI C37.50--Test Procedures for Low-Voltage AC Power Circuit Breakers Used in Enclosures.
  - -- ANSI C37.51--Conformance Testing of Metal-Enclosed Low-Voltage AC Power Circuit Breaker Switchgear Assemblies.
  - -- ANSI C57.12.00--General Requirements for Distribution, Power, and Regulation Transformers.
  - -- ANSI/IEEE C57.12.01--General Requirements for Dry-Type Distribution and Power Transformer.
  - -- ANSI/IEEE C57.12.90--Test Code for Liquid Immersed Distribution, Power, and Regulating Transformers.

- -- ANSI/IEEE C57.12.91--Test Code for Dry-Type Distribution and Power Transformers.
  - -- ANSI C57.13--Requirements for Instrument Transformers.
  - -- NEMA CC-1--Electrical Power Connectors for Substations.
  - -- NEMA TR-1--Transformers, Regulators, and Reactors.
  - -- NEMA ICSI--General Standards for Industrial Control and Systems.
  - -- UL 44--Rubber-Insulated Wires and Cables.
  - -- NFPA 70--National Electrical Code.
- Metal-Clad Switchgear and Nonsegregated Phase Bus.
  - -- ANSI A58.1--Minimum Design Load in Buildings and Other Structures.
  - -- ANSI C37.04--Rating Structure for AC High-Voltage Circuit Breakers on a Symmetrical Current Basis.
  - -- ANSI C37.06--Preferred Ratings and Related Required Capabilities for AC High-Voltage Circuit Breakers Rated on a Symmetrical Current Basis.
  - -- ANSI C37.20--Switchgear Assemblies Including Metal-Enclosed Bus.
  - -- ANSI C57.13--Requirements for Instrument Transformers.
- Motor Control Centers.
  - -- NEMA ST-20--Dry-Type Transformers for NEMA General Purpose Applications.
  - -- NEMA AB-1--Molded Case Circuit Breakers.
  - -- NEMA PB-1--Panelboards.
  - -- NEMA ICS-1--General Standards for Industrial Controls and Systems.
  - -- NEMA ICS-2--Industrial Control Devices, Controllers, and Assemblies.
  - -- UL 44--Rubber-Insulated Wires and Cables.
  - -- UL 67--Electric Panelboards.
  - -- UL 489--Molded Case Circuit Breakers and Circuit Breaker Enclosures.
  - -- UL 508--Industrial Control Equipment.
  - -- UL 845--Motor Control Centers.
  - -- NFPA 70--National Electrical Code.
- Motors, Low Voltage.
  - -- NEMA MG1--Motors and Generators.
  - -- AFBMA 9/ANSI B3.15--Antrifriction Bearing Manufacturers Association.

- -- NEMA MG2 AFBMA 11/ANSI B3.16--Safety Standard for Construction and Guide for Selection Installation and Use of Electrical Motors and Generators.
  - -- NEMA MG13--Frame Assignment for Alternating Current Integral Horsepower Induction Motors.
- Motors, Medium Voltage.
  - -- ANSI/IEEE C50.41--Polyphase Induction Motors for Electric Power Generating Stations.
  - -- IEEE 112--Test Procedure for Polyphase Induction Motors and Generators.
  - -- NEMA MG1--Motors and Generators.
  - -- NEMA MG2--Safety Standard for Construction and Guide for Selection Installation and Use of Electrical Motors and Generators.
- Neutral Grounding Resistors.
  - -- ANSI C76.1--Requirements and Test Codes for Outdoor Apparatus Bushings.
  - -- IEEE 32--Requirements, Terminology, and Test Procedures for Neutral Grounding Devices.
  - -- NEMA CC1--Electric Power Connectors.
- Relay Panels.
  - -- ANSI C37.20--Switchgear Assemblies Including Metal-Enclosed Bus.
  - -- ANSI C37.90--Relays and Relay Systems associated with Electric Power Apparatus.
  - -- NEMA WC-3, ICEA S-19-81--Rubber-Insulated Wire and Cable for the Transmission and Distribution of Electrical Energy.
- Transformers, Dry-Type.
  - -- ANSI U1--General Requirements for Dry-Type Distribution and Power Transformers.
  - -- NEMA ST20--Dry-Type Transformers for General Application.
  - -- UL 506--Standard for Safety, Specialty Transformers.

Other recognized standards will be utilized as required to serve as design, fabrication, and construction guidelines when not in conflict with the above listed standards.

The codes and industry standards used for design, fabrication, and construction will be the codes and industry standards, including all addenda, in effect as stated in equipment and construction purchase or contract documents.

F.3 Electrical Design Criteria

F.3.1 Electric Motors

F.3.1.1 General Motor Design Criteria. These paragraphs outline basic motor design guide parameters for selection and purchase of electric motors.

The following design parameters shall be considered:

- Motor manufacturer.
- Environment, including special enclosure requirements.
- Voltage, frequency, and phases.
- Running and starting requirements and limitations and duty cycle.
- Motor type (synchronous, induction, dc, etc.) and construction.
- Power factor.
- Service factor.
- Speed and direction of rotation.
- Insulation.
- Bearing construction, rating life of rolling elements, and external lube oil system for sleeve or plate bearings.
- Ambient noise level and noise level for motor and driven equipment.
- Termination provisions for power, grounding, and accessories.
- Installation, testing, and maintenance requirements.
- Special features (shaft grounding, temperature and vibration monitoring, etc.)
- Motor space heater requirements.

F.3.1.1.1 Safety considerations for motors. The Occupational Safety and Health Act will be adhered to for personnel protection. Belt guards shall be specified for personnel safety and, when required, to prevent foreign objects from contacting belt surfaces. Guard screens will be provided over motor enclosure openings that would allow direct access to rotating parts. All electrical motors will be adequately grounded.

Motors which are located in hazardous areas will conform to all applicable regulatory requirements and be UL labeled. Motor electrical connections are to be terminated within oversized conduit boxes, mounted to the motor frame.

F.3.1.1.2 Codes and standards. All motors will be designed, manufactured, and tested in accordance with the latest applicable standards, codes, and technical definitions of ANSI, IEEE, NEMA, and AFBMA, and where supplemented by requirements of the specifications.

F.3.1.1.3 Testing requirements. Each type of alternating current and direct current machines will be tested in accordance with the manufacturer's routine tests at the factory to determine that it is free from electrical or mechanical defects and to provide assurance that it meets specified requirements. The following criteria and tests will be used in testing each type of machine:

- Fractional horsepower, single-phase induction motors (< 3/4 hp). Test procedures will be in accordance with IEEE 114, Test Procedure for Single-Phase Induction Motors.
- Integral horsepower, three-phase, 460 volt induction motors (3/4-250 hp).
  - -- Routine tests listed in NEMA MG1-12.51, Routine Tests for Polyphase Integral-Horsepower Induction Motors.
  - -- Test procedures will be in accordance with IEEE 112, Test Procedure for Polyphase Induction Motors and Generators.
- Induction motors rated above 600 volts (≥251 hp).
  - -- Routine tests listed in NEMA MG1-20.46, Polyphase Induction Motors for Power Generating Stations, will be performed on each motor.
  - -- The following additional tests and inspections will be performed on each motor larger than 500 horsepower.
    (1) Locked-rotor current at fractional voltage.
    (2) Current balance.
    (3) Length of time of bearing test and final temperature rise of bearing.
    (4) A statement that bearings have been inspected and approved for shipment.
    (5) Insulation resistance-time curve and polarization index for motors with formed-coil stators.
    (6) Final value of motor noise levels including statement that there is no objectionable single frequency noise.
    (7) Final air gap measurements (single air gap).
  - -- Motors that are specified to have complete tests performed on either the furnished motor or an electrically duplicate motor will require the following tests:
    (1) Temperature.
    (2) Percent slip.
    (3) No-load saturation curve.
    (4) Locked-rotor saturation curve, including locked-rotor torque, current, and power.

(5) Speed-torque and speed-current curves at rated voltage and at minimum starting voltage.
(6) Efficiency at full, three-fourths, and one-half loads.
(7) Power factor at full, three-fourths, and one-half loads.

- Direct current motors.
  -- The standard routine tests and inspections will be performed on each motor. These shall include the following:
     (1) High potential dielectric test.
     (2) Measurement of resistance of all windings.
     (3) Inspection of bearings and bearing lubrication system.
     (4) No-load running armature current, shunt field current, and speed in revolutions per minute, at rated voltage.
     (5) Full load armature current, shunt field current, and speed in revolutions per minute, at rated voltage.
  -- Test procedures will be in accordance with IEEE 113, Test Code for Direct Current Machines.

F.3.1.1.4 Electrical design criteria. Special requirements for individual motors and specifications for special application motors will be included in individual specification technical sections.

F.3.1.1.4.1 Rating. The motor nameplate horsepower multiplied by the motor nameplate service factor will be at least 15 percent greater than the driven equipment operating range maximum brake horsepower. For motors with 1.15 service factor, the maximum load horsepower will not exceed the motor nameplate horsepower.

Emergency motors will operate continuously at the nominal system voltage with any supply voltage between 84 percent and 112 percent of the nominal 125 volt dc system voltage.

Motors will be designed for full voltage starting and frequent starting where required and will be suitable for continuous duty in the specified ambient conditions. Where voltage regulation problems occur, reduced starting voltage motors will be specified. Intermittent duty motors will be selected where recognized and defined as standard by the equipment standards and codes.

The torque characteristics of all induction motors will be as required to accelerate the inertia loads of the motor and driven equipment to full speed without damage to the motor or the equipment at any voltage from 90 percent to 110 percent of motor nameplate voltage except those to be individually considered. A voltage

drop greater than 10 percent from the specified motor nameplate rating will be individually considered for proper motor starting and operating.

F.3.1.1.4.2 Temperature considerations. Integral horsepower motors will be designed for an ambient temperature of 40° C. Motors located in areas where the ambient temperatures exceed 40° C will be designed for that ambient condition.

F.3.1.1.4.3 Windings and insulation. Insulated windings will have Class F nonhygroscopic insulation systems with Class B temperature rise and ambient temperature in accordance with NEMA MG1 standards. When ambient temperatures greater than 40° C are specified, the allowable temperature rise will be reduced in accordance with NEMA MG1 standards.

All insulated stator winding conductors and wound-rotor motor secondary windings will be copper.

The insulation resistance corrected to 40° C will be not less than motor rated kV+1 megohms for all windings.

Where required, the windings will be treated with a resilient, abrasion resistant material.

F.3.1.1.4.4 Overspeeds. Squirrel-cage and wound-rotor induction motors, except crane motors, will be so constructed that, in an emergency of short duration, they will withstand, without mechanical injury, overspeeds above synchronous speed in accordance with the table as listed in NEMA MG1-12.48, Overspeeds for Motors.

F.3.1.1.4.5 Space heaters. Space heaters will be sized as required to maintain the motor internal temperature above the dew point when the motor is idle. Motor space heaters will not cause winding temperatures to exceed rated limiting values nor cause thermal protective device over-temperature indication when the motor is not energized.

In general, all motors 100 hp or larger will have 120 volt, single-phase, 60 hertz, space heaters. The voltage rating of the heaters shall be at least 240 volts. All 4000 volt motors will have space heaters. Heaters will be located and insulated so they do not damage motor components or finish.

Space heater leads will be stranded copper cable with 600 volt insulation and shall include terminal connectors. Space heater leads will be wired to a separate terminal housing on 4000 volt motors.

F.3.1.1.4.6 Nameplates. All motor nameplate data will conform to NEMA MG1-20.60 requirements. The following additional nameplate data will be included for 4000 volt rated motors:

- Manufacturer's identification number.

- Frame size number.
- Insulation system class designation.
- Maximum ambient temperature for which the motor is designed or the temperature rise by resistance.
- Service factor.
- Starting limitations.
- Direction of rotation and voltage sequence.
- AFBMA bearing identification number for motors furnished with rolling element bearings.
- For motors with connections to an external lubricant recirculating system or with an integral forced lubrication system, oil pressure, and oil flow required.
- For motors designed for service in hazardous areas.
  - -- Location class and group designation.
  - -- Maximum operating temperature value or operating temperature code number.

F.3.1.1.4.7 Environment. Location of individual motors within the plant will determine ambient temperature, corrosive environment, hazardous environment, and humidity to be experienced by the motors. These conditions will be considered in the purchase specification.

F.3.1.2 4000 Volt Squirrel-Cage Induction Motors.

F.3.1.2.1 Design and construction. Design and construction of 4000 volt motors will be coordinated with the driven equipment requirements.

All motor power lead terminal housings will be adequately sized to terminate the power conductors. For 4000 volt motors, the power lead terminal housing will also be large enough to provide working space for field fabrication of stress cones within the housing in addition to containing the stress cones after installation.

Separate terminal housings will be provided for the following:

- Motor power leads.
- Motor accessory leads.
- Motor temperature detector leads.

All leads will be wired into their respective terminal housings. All motor leads and their terminals will be permanently marked in accordance with the requirements of NEMA MG1, Part 2. Each lead marking will be visible after taping of the terminals.

All motors which are designed to rotate in only one direction will have the direction of rotation marked by an arrow mounted visibly on the stator frame near

the terminal housings or on the nameplate and the leads marked for phase sequence T1, T2, T3 to correspond to the direction of rotation and supply voltage sequence.

All outdoor motors will be TEFC with NEMA waterproof features or NEMA WPII. Indoor motors in wet areas will have outdoor motor features.

Motors for outdoor service will have all exposed metal surfaces protected with a corrosion-resistant coating.

In addition to the preceding requirements for outdoor service motors, totally enclosed motors will have enclosure interior surfaces and the stator and rotor air gap surfaces protected with a corrosion-resistant alkyd enamel or with polyester or epoxy paint or coating. Bolts, nuts, screws, and other hardware items will be corrosion-resistant or heavy cadmium plated metal. A rotating labyrinth shaft seal will be furnished on the shaft extension end of the motor.

Squirrel-cage induction motors will have rotors of fabricated copper alloy, cast aluminum, or fabricated aluminum alloy. Fabricated aluminum alloy will only be used where the manufacturer has demonstrated the reliability of his design.

F.3.1.2.2 Insulation. An insulation resistance time curve corrected to 40° C for determining the polarization index for motor stator windings will be taken immediately prior to making the final high potential ground test. Each stator phase will be tested separately to ground with other phases grounded. Motors will be tested at not less than 5000 volts dc. The ambient temperature, winding temperature, and relative humidity values will be included with the recorded data. The polarization index will not be less than 3.0. An insulation-to-ground dielectric test will be made on the motor windings at a value of two times rated voltage + 1,000.

F.3.1.2.3 Bearing. All horizontal motors will be provided with oil lubricated sleeve bearings unless required otherwise.

Sleeve bearings on horizontal motors will be designed and located centrally, with respect to running magnetic center, to prevent the rotor axial thrust from being continuously applied against either end of the bearing. The motors will be capable of withstanding without damage the axial thrusts that are developed when the motor is energized.

When sleeve bearings are not specified, horizontal motors will be furnished with antifriction bearings.

Thrust bearings for vertical motors will be capable of operating for extended periods of time at any of the thrust loadings imposed by the specific piece of driven equipment during starting and normal operation without damage to the bearings, the motor frame, or other motor parts.

Motors furnished with spherical roller thrust bearings will also be furnished with ball or roller guide bearings.

Bearing lubricants will contain a corrosion inhibitor. The type and grade of lubricant will be indicated on a nameplate attachment to the motor frame or end shield adjacent to the lubricant filling device.

Insulation will be provided on bearing temperature detectors and on oil piping connections when required to prevent circulation of shaft current through bearings.

Bearings and bearing housings will be designed to permit disassembly in the field for inspection of the bearings or removal of the rotor.

F.3.1.2.4 Bearing temperature detectors. Thermocouple type bearing temperature detectors, complete with detector head and holder assemblies as required, will be furnished when specified. Thermocouple lead wire insulation will be color coded with standard colors to represent the thermocouple metals.

F.3.1.2.5 Winding temperature detectors. Winding temperature detectors will be furnished, installed, and wired complete when specified. Temperature detectors will normally be 3 wire RTDs.

F.3.1.2.6 Temperature detector and terminal block requirements. All temperature detectors will be ungrounded with detector leads wired to terminal blocks furnished in the accessory terminal housings. A grounding terminal for each temperature detector will be included with the detector lead terminals. The grounding terminals will be provided with internal wiring to a common ground connection in each terminal box. The internal wiring will be removable.

F.3.1.3 460 Volt Integral Horsepower Motors.

F.3.1.3.1 Design and construction. Design and construction of each 460 volt integral horsepower motor will be coordinated with the driven equipment requirements and the requirements of NEMA MG1 standards.

Motors for service in hazardous areas will be individually considered for type of enclosure depending upon the classification, group, and division of the hazardous area in question.

Motors for outdoor service will have all exposed metal surfaces protected with a corrosion-resistant coating.

Motor power lead terminal housing will be sized to allow for ease in terminating the incoming power cable. Space heater leads will also be into this terminal housing.

F.3.1.3.2 Bearings. All horizontal motors will be provided with oil or grease lubricated sleeve or antifriction bearings unless otherwise required.

Bearings on horizontal motors will be designed and located centrally, with respect to the running magnetic center, to prevent the rotor axial thrust from being continuously applied against either end of the bearings. The motors will be capable of withstanding without damage the axial thrusts that are developed when the motor is energized.

Vertical motors furnished with spherical roller thrust bearings will also be furnished with ball or roller guide bearings.

Thrust bearings for vertical motors will be capable of operating for extended periods of time at any of the thrust loadings imposed by the specific piece of driven equipment during starting and normal operation without damage to the bearing, the motor frame, or other motor parts.

Bearings and bearing housings will be designed to permit disassembly in the field for inspection of the bearings or removal of the rotor.

F.3.1.4 Direct Current Machines.

F.3.1.4.1 Design and construction. All direct current machines will be designed and constructed for continuous operation and in accordance with the requirements of NEMA MG1.

Motors for operation on an ac rectified power source will be rated, designed, and factory tested in accordance with NEMA MG1 requirements for the form factor of the rectified power source. The rated form factor will be obtained from the rectifier manufacturer.

F.3.1.4.2 Service factor. For motors furnished with a service factor greater than 1.0, the motor nameplate will indicate the horsepower rating at 1.0 service factor and the service factor. The motor will be designed to provide a continuous horsepower capacity equal to the rated horsepower at 1.0 service factor without exceeding the total limiting temperature rise stated in these specifications for the insulation system and enclosure specified.

F.3.1.4.3 Insulation and windings. All insulated windings will have a minimum of Class B nonhygroscopic, or acceptable equivalent, sealed insulation system. All insulated winding conductors will be copper.

F.3.1.4.4 Armatures and brushes. Commutator bars will be fabricated of silver bearing copper, free of cracks, pits, slivers, and similar imperfections. Bars will be

insulated with mica segments, assembled and seasoned as a unit, properly undercut, and securely mounted on the shaft. The area in back of the armature commutator risers will be packed with an epoxy compound and cured. Coil end connections to the risers will be soldered with high temperature pure tin solder, brazed or tungsten inert-gas welded.

Brush holders will be fabricated of nonferrous materials, located accurately, and mounted securely to position the brushes on the armature. Brush holder pockets will be sized to permit proper movement of the brushes. Means for adjusting brush pressures and brush assembly ring will be provided. A stop device will be furnished to prevent the brush terminal from scoring the commutator.

Brushes will be carbon type and will be furnished with insulated shunts sized for the rated brush current.

Successful commutation in accordance with NEMA standards will be maintained over the load range encountered in service.

Openings will be provided for ease of inspection, pressure adjustment and replacement of brushes, and for brush assembly ring adjustment.

F.3.1.4.5 Bearings. Sleeve bearings for horizontal motors will be oil ring lubricated type unless otherwise required. The oil ring will be one-piece construction.

F.3.1.5 Fractional Horsepower Motors. Type, design, and construction of each general, special, and definite purpose fractional horsepower motor will be coordinated with the driven equipment requirements and will be in accordance with the requirements of NEMA MG1. Motors for service in hazardous areas will be individually considered for type of enclosure depending upon the classification, group, and division of the hazardous area in question.

Motors will be totally enclosed unless specified otherwise.

Motors for outdoor service will have all exposed metal surfaces protected, where practical, with a corrosion-resistant coating. Enclosure exterior and interior surfaces, air gap surfaces, and windings will be protected with a corrosion-resistant epoxy paint or coating.

All bearings will be self-lubricating and will be designed to operate in any position or at any angle.

F.3.1.6 Motor Operators for Nonmodulating Valve, Gate, or Damper Service. The following requirements are applicable to all electric operators required for nonmodulating motor operators.

F.3.1.6.1 Rating, design, and construction. Motors will be designed for high torque, reversing service in a 50° C ambient temperature. Motors will have Class B or higher nonhygroscopic standard insulation plus two coats of epoxy resin. Requirements of NEMA MG1 and MG2 will apply.

Motors will be rated 460 volts, three-phase, 60 hertz unless otherwise indicated. The dc motors will be rated 120 volts dc to operate from a nominal 125 volt battery.

The motor time rating for normal opening and closing service will be not less than whichever of the following is greater:

- As required for three successive open-close operations.
- As required for the service.
- Not less than 15 minutes.

Sufficient torque will be provided to operate against system torque at 90 percent nominal voltage for ac motors and at 84 percent nominal voltage for dc motors.

Motors will be totally enclosed unless specified otherwise.

Motors for service in hazardous areas will be individually considered for type of enclosure depending upon the classification, group, and division of the hazardous area in question.

F.3.1.6.2 Bearings. Double-shielded, grease prelubricated, antrifriction bearings will be furnished where commercially available. Motor leads will be terminated in the limit switch compartment.

F.3.1.6.3 Space heaters. All motor operators will be supplied with 240 volt rated space heaters energized at 120 volt ac. Space heater leads will be terminated in the limit switch compartment.

F.3.2 Power and Control Wiring

F.3.2.1 Design Conditions. In general, conductors will be insulated on the basis of a normal maximum conductor temperature of 90° C in 40° C ambient air with a maximum emergency overload temperature of 130° C and a short-circuit temperature of 250° C. In areas with higher ambient temperatures, larger conductors will be used or higher temperature rated insulation will be selected. Conductor size and ampacity will be coordinated with circuit protective devices. Cable feeders from 4.16 kV power equipment will be sized so that a short-circuit fault at the terminals of the load will not result in damage to the cable prior to normal operation of fault interrupting devices.

Instrument cable will be shielded to maximize electrical noise attenuation as follows:

- Aluminum-polyester tape with 100 percent coverage and copper drain wire will be used for shielding.
- Low-level analog signal cables will be made up of twisted and shielded pairs.
- Except where specific reasons dictate otherwise, cable shields will be electrically continuous. When two lengths of shielded cable are connected together at a terminal block, a point on the terminal block will be used for connecting the shields.
- For multi-pair cables utilizing individual pair shields, the shields will be isolated from each other.

To be effective, instrument cable shields will be grounded on one end as follows:

- The shields on grounded as well as ungrounded thermocouple circuits will be grounded at the thermocouple well.
- Multi-pair cables used with thermocouples will have individually isolated shields so that each shield will be maintained at the particular couple ground potential.
- Each RTD (resistance temperature detector) system will be a three wire system, consisting of one power supply and one or more RTDs and will be grounded at only one point.
- RTDs embedded in windings of transformers and rotating machines will be grounded at the frame of the respective equipment.
- The low or negative potential side of an instrument signal pair will be grounded at the same point where the shield is grounded. Where a common power supply is used, the low side of each signal pair and its shield will typically be grounded at the power supply.

F.3.2.2 Conductors.

F.3.2.2.1 Design basis. Electrical conductors will be selected with an insulation level applicable to the system voltage for which they are used and ampacities suitable for the load being served.

F.3.2.2.2 Cable ampacities. The maximum ampacities for any cable will be in accordance with the National Electrical Code. In addition to ampacity, special requirements such as voltage drop, fault current availability, and environment will be taken into consideration in sizing of cable.

F.3.2.3 Insulation. Cable insulation and construction will be as follows.

F.3.2.3.1 Flame retardance. To minimize the damage that can be caused by a cable fire, all cables will have insulations and jackets which have nonpropagating and

self-extinguishing characteristics. As a minimum, these cables will meet the flame test requirements of IEEE 383, using a gas-burner flame source. These characteristics are essential for all cables installed in electrical cable tray in the plant.

F.3.2.3.2 Medium voltage power cable. Power cable with minimum 5 kV class insulation will supply all 4.16 kV service and will be routed in trays, conduits, or ducts.

F.3.2.3.3 Low voltage power cable 600 volts. Power cable with 600 volt class insulation will supply power to loads at voltage levels of 480 volts ac and below, and 125 volts dc and below. Cables will be routed in trays, conduits, or ducts.

F.3.2.3.4 Control cable 600 volts. Nonshielded control cable with 600 volt class insulation will be used for control, metering, and relaying. Cables will be routed in trays, conduits, or ducts.

F.3.2.3.5 Instrument cable 300 or 600 volts. Instrument cable will be used for control and instrument circuits that require shielding to avoid induced currents and voltages.

The type of cable used will be determined by individual circuit requirements and individual equipment manufacturer's recommendations.

F.3.2.3.6 Thermocouple extension cable. Thermocouple extension cable will be used for extension leads from thermocouples to junction boxes and to instruments for measurements of temperature. Cables will be routed in trays, conduits, or ducts.

F.3.2.3.7 High temperature cable. High temperature cable will be used for wiring to devices located in areas with ambient temperatures normally above 75° C. Cables will be routed in conduit. Cable lengths will be minimized by terminating the cable at terminal boxes or conduit outlet fittings located outside the high temperature area and continuing the circuit with control or thermocouple extension cable.

F.3.2.3.8 Lighting and fixture cable. Lighting and fixture cable designations and conductor sizes will be identified on the drawings. The wire used for interior lighting and receptacles will be copper 600 volts, 75 degree Type THWN insulation or equal.

F.3.2.3.9 Grounding cable. Grounding cable will be insulated or uninsulated bare copper conductor sized as required.

F.3.2.3.10 Switchboard and panel cable. Switchboard and panel cable will be insulated to 600 volts. Cable will be NEC Type SIS or XHHW-2, meeting the UL VW-1 flame test.

F.3.2.3.11 Special cable. This type of cable will include cable supplied with equipment, prefabricated cable, coaxial cable, communication cable, etc. This cable will normally be supplied by a particular manufacturer.

Special cable will be routed in accordance with manufacturer's recommendations.

F.3.2.3.12 Miscellaneous cable. If other types and construction of cable are required as design and construction of the unit progress, they will be designated and routed as required.

F.3.2.4 Testing Requirements. Preoperational tests will be performed on insulated conductors after installation.

- Insulated conductors with insulation rated 5000 volts and above will be given a field dc insulation test after installation as specified in Part 6 of ICEA Standards S-68-516 and S-66-524.
- Low voltage cables will be either insulation resistance tested prior to connecting cables to equipment or functionally tested (at equipment operation voltage) as part of the checkout of the equipment system.
- Insulated conductors will be continuity tested for correct conductor identification.

F.3.2.5 Installation. Cable installation will be in accordance with the following general rules:

- Cables will be routed as indicated in the circuit list.
- The pulling tension of cable will not exceed the maximum tension recommended by the cable manufacturer, and the pulling tension in pounds at a bend will not exceed the cable manufacturer's recommendations for sidewall pressure. Minimum bend radii will not exceed the manufacturer's recommendations.
- Care will be exercised during the installation of all cable to prevent tension and bending conditions in violation of the manufacturer's recommendations.
- All cable supports and securing devices will have bearing surfaces located parallel to the surfaces of the cable sheath and will be installed to provide adequate support without cutting or deformation of the cable jackets or insulation.
- Nylon ties will be used to lace together conductors entering panelboards, control panels, and similar locations after the conductors have emerged from their supporting raceway and before they are attached to terminals.
- Both ends of all circuits will be identified.
- All spare conductors of a multi-conductor cable will be left at their maximum length for possible replacement of any other conductor in the cable.

- In addition to the above requirements, cables will be installed in accordance with manufacturer's requirements and recommendations.

F.3.2.6 Connectors. This subsection defines methods of connecting cable between electrical systems and equipment. In this subsection, the term "connector" is applied to devices that join two or more conductors or are used to terminate conductors at equipment terminals for the purpose of providing a continuous electrical path.

Connector material will be compatible with the conductor material to avoid the occurrence of electrolytic action between metals.

Connectors will meet the bolt hole requirements of Paragraph CC1-4.05 of NEMA Standard Publication for Electric Power Connectors, Publication CC1.

Medium voltage cables will have stress cones at the termination of the cables. Stress cones will be of the preformed type suitable for the cable to which they are to be applied.

Cables will not be spliced in conduits. Control and low-level instrument cable will be spliced only at pigtails and at the transition to high temperature wire. Connections will be made in condulet fittings or junction boxes utilizing terminal blocks or an appropriate connector.

F.3.3 Protective Relaying

The selection and application of protective relays are discussed in the following paragraphs. These relays protect equipment in the Auxiliary Power Supply System, Generator Terminal System, Primary Power Supply System, Turbine-Generator System, and the electrical loads powered from these systems.

The following general requirements apply to all protective relay applications:

- The protective relaying scheme will be designed to remove or alarm any of the following abnormal occurrences:
  - -- Overcurrent.
  - -- Undervoltage or overvoltage.
  - -- Frequency variations.
  - -- Overtemperature.
  - -- Abnormal pressure.
  - -- Open circuits and unbalanced current.
  - -- Abnormal direction of power flow.

- The protective relaying system will be a coordinated application of individual relays. For each monitored abnormal condition, there will exist a designated primary device for detection of that condition. A failure of any primary relay will result in the action of a secondary, overlapping scheme if possible to detect the effect of the same abnormal occurrence. The secondary relay may be the primary relay for a different abnormal condition. Alternate relays may exist which detect the initial abnormal condition but which have an inherent time delay so that the alternate relays will operate after the primary and secondary relays. Similar to secondary relays, the alternate relays may be primary relays for other abnormal conditions. All protective relays will be selected to coordinate with protective devices supplied by manufacturers of major items and the thermal limits of electrical equipment, such as transformers and motors.
- Secondary current produced by current transformers will be in the 0-5 ampere range, and voltage signals produced by potential transformers will normally be 120 volt.

F.3.3.1 Generator Protective Relays. Protective relay packages will be provided to minimize the effects from the following faults and malfunctions:

- Generator phase faults.
- Generator stator ground faults.
- Stator open circuits and unbalanced currents.
- Loss of excitation.
- Backup protection for external system faults.
- Reverse power.
- Generator potential transformer circuit monitoring.
- Underfrequency/overfrequency.
- Breaker failure.

Equipment furnished with the generator's excitation equipment will provide the following additional protection:

- Underexcitation.
- Overexcitation.
- Generator field ground faults.
- Excessive volts per hertz.

Additional generator protective monitoring equipment will be provided to protect against the following:

- High-bearing temperatures.

- Overspeed conditions.
- Excessive vibrations.
- Generator overheating.

A typical complement of protective relays for the turbine generator may be as follows. The actual protective relaying to be used will be similar and will be developed during design stages:

- Generator Differential Relay (Device 87-G1)--A generator differential relay will provide primary generator protection against three-phase and phase-to-phase faults within the generator. This relay will not detect ground faults within its zone of protection.
- Generator Ground Relays (Device 64-G)--Device 64-G will be a low voltage pickup, overvoltage relay which will sense voltage across the generator neutral grounding transformer secondary resistor when a ground fault occurs in the generator, nonsegregated phase bus duct, generator transformer low voltage windings, or the surge protection and potential transformer equipment.
- Negative Sequence Relay (Device 46)--The negative sequence relay provides protection against unbalanced phase currents which result from unbalanced loading, unbalanced faults, a turn-to-turn winding fault, and an open circuit. Negative sequence currents exceeding the generator allowable limits result in overheating of the generator rotor.
- Loss-of-Field Relays (Device 40)--The loss-of-field relay complete with timer will provide protection against thermal damage caused by underexcitation and loss of field. These relays provide backup protection for excitation system protective devices furnished with the generator.
- Reverse Power Relays (Device 32)--Reverse power relays (Device 32) will provide protection of the turbine generator by detection of reverse power flow and monitoring of the generator. Reverse power proven (Device 32) will initiate a normal sequential shutdown.
- Voltage Balance Relays (Device 60)--Voltage balance relays (Device 60) will monitor potential transformer circuits to the generator voltage regulator and protective relays. Upon loss of relaying potential, Device 60 will disable the loss-of-field relay (Device 40) to avoid false tripping of the unit. Upon loss of potential to the voltage regulator, Relay 60 will transfer the voltage regulator from the automatic to manual mode of operation. An alarm will be actuated upon loss of either potential.

- Underfrequency relays (Device 81)--Underfrequency conditions will be detected by Device 81.
- Overvoltage and undervoltage protection (Devices 27 and 59)--The voltage regulator and excitation system include interlocks and protective circuits to prevent operating the generator beyond its design limits. An undervoltage relay (Device 27) and an overvoltage relay (Device 59) will alarm if the voltage regulator fails to maintain voltage within design limits.
- Field ground fault protection (Device 64F)--Grounds on the generator field will be alarmed by Device 64F.
- Generator backup distance relay (Device 21G)--This relay will provide backup protection against external system faults. This relay will operate only if an external system fault persists after all other primary system relays, including breaker failure, have failed to operate. This relay will trip the generator lockout relay.

F.3.3.2 Power Transformer Relays

F.3.3.2.1 Generator transformer. The generator transformer is protected against the effects of the following conditions:

- Phase faults.
- Ground faults.

This protection will be provided by the relays which are discussed in the following paragraphs.

Device 87-T1 is a differential relay that provides transformer primary protection by detection of three-phase and phase-to-phase faults in the generator transformer low voltage delta-connected windings, and three-phase, phase-to-phase, and phase-to-ground faults in the generator transformer high voltage wye-connected windings.

Device 51-T1N will provide sensitive backup protection for ground faults in the external system.

A rapid increase in pressure within the transformer tank associated with an internal fault will be detected by a sudden-pressure relay, Device 63-T1. This relay will be furnished with the transformer.

Loss of cooling and resulting high temperature will be alarmed.

F.3.3.2.2 Auxiliary transformers. The auxiliary transformers are protected against the effects of the following conditions:

- Phase faults.
- Ground faults.
- Sudden pressure.

This protection will be provided by the following relays which are discussed in the following paragraphs.

Device 87 provides primary protection for the high voltage and low voltage windings of the auxiliary transformers and for the cable connecting each low voltage winding to each incoming main breaker in the plant metal-clad switchgear lineups. These relays offer protection against phase-to-phase and three-phase faults. Device 87 is relatively insensitive to ground faults on the secondary side of the transformer should the fault current magnitudes be less than the maximum available ground fault current.

One time overcurrent relay (Device 51N) is connected to the bushing current transformer on the neutral of the low voltage winding of the station auxiliary transformer. This relay provides primary overload protection to its neutral winding's resistor for ground faults on the switchgear buses or on feeders emanating from the switchgear lineups. This relay also provides backup protection for ground faults in the transformer low voltage winding, in the cable, on the switchgear buses, or on feeders emanating from the switchgear lineups.

A rapid increase in pressure within the transformer tank associated with an internal fault will be detected by a sudden-pressure relay, Device 63. This relay will be furnished with the transformer.

F.3.3.3 Metal-Clad Switchgear. The protective relays used in the 4160 volt metal-clad switchgear lineups are discussed in the following paragraphs.

F.3.3.3.1 Incoming breakers. Each incoming transformer breaker will be provided with time overcurrent relays (Device 51) and a time overcurrent ground detection relay (Device 51N). Device 51 would detect and trip the respective switchgear breaker for sustained overloads and short-circuit currents on the switchgear bus. These relays provide backup protection for faults on feeders emanating from the switchgear lineups. Device 51N is residually connected to switchgear current transformers and provides primary protection for ground faults on the switchgear bus and backup protection for ground faults in feeders emanating from the switchgear lineup.

The medium voltage switchgear bus will be provided with undervoltage relays (Device 27) which will detect bus voltage drops to a preset level.

Manual closure of the incoming breaker will be supervised by synchronism check relay (Device 25S), including deadline protection.

F.3.3.3.2 Secondary unit substation and motor feeders. Each secondary unit substation transformer and each single-speed induction motor will be protected by

main line fuses and a solid-state trip device (SSTD). The SSTD will provide primary equipment and cable time overcurrent, instantaneous overcurrent, open phase, and zero sequence protection. Both the long-time and instantaneous elements for phase protection will be adjustable.

F.3.3.4 480 Volt Secondary Unit Substations. Overload and fault protection for loads connected to the 480 volt secondary unit substations (SUS) will be provided by solid-state trip devices (SSTD), which are an integral part of the drawout type air circuit breakers.

Breakers supplying motors or other devices which do not require coordination with downstream trip devices will have adjustable long-time and instantaneous elements for phase protection and will include ground fault protection.

Main breakers, tie breakers, and breakers supplying motor control centers (MCCs) or other loads which contain trip devices will have adjustable long-time and short-time SSTD elements for phase protection and will include ground fault protection. The pickup point and time settings will be adjustable to allow for proper coordination with all downstream trip devices.

Sustained undervoltage in the 480 volt SUS bus will be detected by undervoltage relays (Device 27).

F.3.3.4.1 480 volt motor control centers. Motor control centers will be protected by secondary unit substation (SUS) feeder breakers having adjustable long-time and short-time SSTD elements for phase protection and ground fault protection in a manner similar to that described in F.3.3.4 480 Volt Secondary Unit Substations. The SSTD protects the MCC feeder circuit and the bus against sustained short-circuit currents and serves as backup protection for MCC feeder circuits.

Each magnetic starter within an MCC which supplies power to a motor will be equipped with an adjustable motor circuit protector and a thermal overload element in the starter.

Certain nonmotor loads will be fed from MCC feeder circuit breakers. The feeder breakers will be thermal magnetic molded case breakers sized to protect supply cable and individual loads.

Normally, large 480 volt motors 100 horsepower and above will be powered from SUS feeder circuit breakers. Small motors will be powered from MCC starters. When special applications exist such as frequent start/stop requirements, motor starters will be used for higher horsepower motors.

F.3.3.4.2 480 volt power panels. Power panels will be supplied with thermal-magnetic circuit breakers sized to protect supply cable and individual loads.

F.3.4 Classification of Hazardous Areas

Areas where flammable and combustible liquids, gases, and dusts are handled and stored will be classified for the purpose of determining the minimum criteria for design and installation of electrical equipment to minimize the possibility of ignition. The criteria for determining the appropriate classification are specified in Article 500 of the National Electrical Code (NFPA/ANSI C1).

In addition to defining hazardous areas by class and division, each hazardous element is also assigned a group classification (A, B, C, etc.). The group classifications of hazardous elements are specified in Article 500 of the NEC and in NFPA Standard 497M.

Electrical equipment in areas classified as hazardous will be constructed and installed in accordance with the requirements of Articles 501 and 502 of the National Electrical Code.

References for use in classification of areas, as well as specification of requirements for electrical installation in such areas, include the following:

- National Electrical Safety Code ANSI C2.
- National Electrical Code ANSI C1, NFPA 70/ANSI C1.
- National Fire Codes, National Fire Protection Association codes, standards, and recommendations.
- American Petroleum Institute Recommended Practices.

F.3.5 Grounding

The station grounding system will be in an interconnected network of bare copper conductor and copper-clad ground rods. The system will be provided to protect plant personnel and equipment from the hazards which can occur during power system faults and lightning strikes.

F.3.5.1 Design Basis. The station grounding grid will be designed for adequate capacity to dissipate energy from ground fault current under the most severe conditions, with grid spacing such that safe voltage gradients are maintained. The system will be in accordance with IEEE 80, IEEE 142, and the National Electrical Code, NFPA 70.

Bare conductors installed below grade will be spaced in a grid pattern to be indicated on the construction drawings. Each junction of the grid below grade will be bonded together by an exothermal welding process.

Grounding stingers will be brought through the ground floor and connected to the building steel and selected equipment. Also, the grounding system will be

extended, by way of stingers and conductor installed in cable tray, to the remaining plant equipment. Equipment grounds will conform to the following general guidelines:

- Grounds will conform to the NEC and NESC.
- Major items of equipment, such as switchgear, secondary unit substations, motor control centers, relay panels, and control panels, will have integral ground buses which will be connected to the station ground grid.
- Electronic panels and equipment, where required, will be grounded utilizing an insulated ground wire connected in accordance with the manufacturer's recommendations. Where practical, electronics ground loops will be avoided. Where this is not practical, isolation transformers will be furnished.
- Motor supply circuits to 460 volt motors, which utilize three-conductor cable with a ground in the interstices, will utilize this ground for the motor ground. For 460 volt motor supply circuits which utilize three single-conductor cables, a separate ground conductor will be utilized.
- All 4160 volt motors will have a minimum of one 1/0 AWG bare copper ground conductor connected between the motor frame and the station ground grid.
- All single-conductor ground wires installed in conduit will be insulated.

Remote buildings and outlying areas with electrical equipment will be grounded by establishing local subgrade ground grids and equipment grounding systems in a manner similar to the plant area. Remote grids, where practical, will be interconnected with the station ground grid to reduce the hazard of transferring large fault potentials to the remote area through interconnecting cable shields.

F.3.5.2 Materials. Grounding materials furnished are described as follows:

- Ground rods will be copper. Rod length and diameter will be determined by soil resistivity and subsurface mechanical properties. Where required ground rod length exceeds 10 feet, standard sections will be connected together.
- Cable will be soft-drawn copper with Class B stranding or copper-clad steel.
- Exothermal welds will use molds, cartridges, and materials as manufactured by Cadweld or equivalent.
- Clamps, connectors, and other hardware used with the grounding system will be designed for that use and purchased from an approved supplier.

- Ground wires installed in conduit will be soft-drawn copper with Class B stranding and green colored 600 volt insulation. Ground wires larger than No. 6 AWG may be marked green in lieu of green colored insulation.

F.3.6 Site Lighting

The site lighting system will provide personnel with illumination for the performance of general yard task, safety, and plant security. Power used to supply outdoor roadway and area lighting fixtures will be at 277 volts.

F.3.6.1 Light Sources. The lighting system will be designed to provide illumination levels recommended by the following standards and organizations:

- ANSI/IES RP-7, 1979, Industrial Lighting.
- ANSI/IES RP-8, 1977, Roadway Lighting.
- Occupational Safety and Health Act (OSHA).

Light source size and fixture selections will be based on the applicability of the luminaires for the area under consideration during detail design.

F.3.6.2 Roadway and Area. Roadway and area lighting will be designed using high-pressure sodium light sources. The light fixtures will be the cutoff type designed to control and direct light within the property line of the facilities. Roadway light fixtures will be installed on hot-dip galvanized steel poles. Local task lighting will be installed on buildings or equipment.

F.3.6.3 Lighting Control. Electric power to light fixtures located outdoors will be switched on and off with photoelectric controllers. Local task lighting will be controlled with photoelectric controllers and switches manually at the task.

F.3.7 Freeze Protection

A freeze protection system will be provided for outdoor equipment as required.

Parallel circuit type heating cable will be directly applied to pipe. These heating cable circuits can be assembled and installed in the field using the appropriate connection kits. Heating cable will withstand the maximum surface temperature of the pipe to which it is applied.

Power distribution panelboards will furnish power to the freeze protection circuits. Power to the freeze protection circuits will be controlled by ambient thermostats.

F.3.8 Lightning Protection

Lightning protection will be provided as required for all structures.

Lightning protection will consist of air terminals installed on the structure high points. The air terminals will be connected together with copper cable and connected to the plant ground grid with copper down conductors. Air terminals will be arranged to provide protection for penetrating devices, such as piping, air moving equipment, etc.

F.3.9 Raceway and Conduit

The design and specifications for the raceway and conduit systems used in supporting and protecting electrical cable will be in accordance with the provisions of the NEC.

F.3.9.1 Cable Tray. All material affecting structural integrity of the cable tray systems shall be designed in accordance with AISC and AISI for cold, formed steel.

All cable trays except electronic trays will be of the trough or ladder type construction with a maximum rung spacing of 6 inches, nominal depths of 4 to 6 inches, and various widths as required. There will be a maximum spacing of 10 feet between cable tray supports, except fittings (elbows, tees, etc.) which shall be supported in accordance with NEMA standards.

Cable tray fittings will have a radius equal to or greater than the minimum bending radius of the cables they contain.

Solid bottom trays will be provided for all electric systems such as special noise-sensitive circuits and analog instrumentation circuits.

The summation of the cross-sectional areas of cable in tray will be limited to 30 percent of the usable cross section of the tray for 4.16 kV power cables and to 40 percent for 480 volt power and control cables and electronic cables.

The minimum design vertical spacing for trays will be 12 inches, measured from the bottom of the upper tray to the top of the lower tray. At least a 9 inch clearance will be maintained between the top of a tray and beams, piping, or other obstacles to facilitate installation of cables in the tray. A working space of not less the 24 inches will be maintained on at least one side of each tray.

Covers which allow ventilation will be provided for vertical trays. Solid covers will be provided for all solid bottom tray and for all outdoor tray. Solid covers will also be provided for the top tray of horizontal tray runs located under floor grating.

All outside cable tray will be covered.

F.3.9.2 Conduit. Conduit will be used to protect conductors routed to individual devices, in hazardous areas, and where the quantity of cable does not economically justify the use of cable tray.

Electrical Metallic Tubing (EMT) will be used indoors in nonhazardous areas for lighting branch circuits and communication circuits.

PVC, EMT, and rigid galvanized steel conduit will be used for underground duct banks and some below grade concrete encased conduit.

Liquidtight flexible metallic conduit will be used for connections to accessory devices such as solenoid valves, limit switches, pressure switches, etc.; for connections to motors or other vibrating equipment; and across areas where expansion or movement of the conduit is required.

Exposed conduit, unless specific environmental requirements dictate the use of plastic or aluminum conduit, will be rigid galvanized steel.

Exposed conduit will be routed parallel or perpendicular to dominant surfaces.

Conduit in finished areas, such as the offices and control room, will normally be concealed. Conduit will be routed at least 6 inches from the insulated surfaces of hot water, steam pipes, and other hot surfaces. Where conduit must be routed parallel to hot surfaces, high temperature cable will be used.

Conduit will be sized in accordance with the requirements of the National Electrical Code.

Conduit will be securely supported within 3 feet of connections to boxes and cabinet.

F.3.9.3 Duct Bank and Manholes. Underground duct banks will be used for cable routed between outlying areas and other remote areas as necessary.

All underground duct banks will consist of PVC tubing, EMT, or rigid steel conduit encased in reinforced concrete. The nominal diameter of the ducts will be 4 inches. Galvanized steel conduit or EMT will be installed where required for analog low-level circuits requiring noise immunity from adjacent power circuits.

All underground duct banks will be installed in accordance with the following methods:

- Ducts will be sloped not less than 3 inches per 100 feet to manholes to provide adequate drainage. Low spots in duct runs will be avoided.
- Reinforcing steel will not form closed magnetic paths between ducts. Non-metallic spacers will be used to maintain duct spacing.

Reinforced concrete manholes and electrical vaults will be provided, where required, so that cable may be installed without exceeding allowable pulling tensions and cable sidewall pressures. Each manhole will have the following provisions:

- Provisions for attachment of cable pulling devices.
- Provisions for racking of cables.

- Manhole covers of sufficient size to loop feed the largest diameter cable through the manhole without splicing.
- Sealed bottoms and sumps.

Conduit from manholes to the equipment at remote locations will be changed to rigid steel prior to emerging from below grade. All below grade steel conduit will be encased in concrete.

Duct bank and manholes shall be designed in accordance with the seismic criteria defined in Appendix B, Structural Design Criteria.

F.3.10 Cathodic Protection System

Consideration will be given to the need for cathodic protection and other corrosion control measures for all plant structures, including the following structures:

- The exterior surface of underground welded carbon steel pipe, copper pipe, stainless steel pipe, cast iron and ductile iron pipe, and prestressed concrete cylinder pipe.
- Underground tanks and the bottoms of surface mounted steel tanks.

It is expected that buried bare copper ground grid components will be in close proximity to, but not in contact with, underground welded steel piping and welded steel tank bottoms.

Measures will be taken for the control of corrosion so as not to materially reduce the total effectiveness of the plant electrical safety grounding systems.

The detailed design will be determined after test to obtain minimum average soil resistivity or layer resistivity which may be expected in pipe burial zones.

The system will be designed to meet the requirements of National Association of Corrosion Engineers (NACE) RP-01-69 Revision 1983.

Appendix G
Control Engineering Design Criteria

Appendix G
Control Engineering

G.1 Introduction

Control of the design, engineering, procurement, and construction activities on the project will be completed in accordance with various predetermined standard practices and project specific programs/practices. An orderly sequence of events for the implementation of the project is planned consisting of the following major activities:

- Conceptual design.
- Licensing and permitting.
- Detailed design.
- Procurement.
- Construction and construction management.
- Startup, testing, and checkout.
- Project completion.

The purpose of this appendix is to summarize the codes and standards and standard design criteria and practices that will be used during the project. The general control design criteria defined herein form the basis of the design for the control systems of the project. More specific design information is developed during detailed design to support equipment and erection specifications. It is not the intent of this appendix to present the detailed design information for each component and system, but rather to summarize the codes, standards, and general criteria that will be used.

Section G.2 summarizes the applicable codes and standards, and Section G.3 includes the general design criteria for general conditions, instruments, modulating type control systems, motor controls, and control equipment locations.

G.2 Design Codes and Standards

The design specification of all work will be in accordance with the applicable laws and regulations of the federal government and the State of California, and applicable local codes and ordinances. A summary of codes and industry standards applicable to design and construction follows:

- American National Standards Institute (ANSI).
- American Society of Mechanical Engineers (ASME).
- The Institute of Electrical and Electronics Engineers (IEEE).

- Instrument Society of America (ISA).
- National Electrical Manufacturer's Association (NEMA).
- National Electrical Safety Code (NESC).
- National Fire Protection Association (NFPA).
- Scientific Apparatus Makers Association (SAMA).

Other recognized standards will be utilized as required to serve as design, fabrication, and construction guidelines when not in conflict with the above listed standards.

The codes and industry standards used for design, fabrication, and construction will be the codes and industry standards, including all addenda, in effect as stated in equipment and construction purchase or contract documents.

G.3 Control Design Criteria

G.3.1 General Requirements

G.3.1.1 Ambient Conditions. All field mounted instruments and control devices will be designed to withstand the outdoor ambient temperature extremes found at the site, indoor plant temperature extremes from 0° C to 50° C, and relative humidities up to 80 percent throughout the temperature range.

All instruments and control devices installed in air conditioned areas will be designed for an operating condition of 25° C ambient temperature and 50 percent relative humidity. In case of an air conditioning failure, they shall withstand temperatures ranging from 10° C to 40° C for extended periods of time and 50° C transient.

G.3.1.2 Power Supplies. All instruments and control devices will be designed to operate on power supplies as follows:

- Electric.
  - -- 120 volts ac, 60 hertz, single-phase for logic and low torque drives.
  - -- 125 volts dc for logic and low torque drives.
  - -- 480 volts ac, 60 hertz, three-phase for high torque drives.

Any voltage required other than the above will be furnished by the equipment supplier.

- Pneumatic--Clean, dry, and oil free instrument air from plant air compressors. All necessary pressure reducing controls, where required, will be furnished by the equipment supplier.

G.3.1.3 Standard Ranges of Analog Signals. The ranges of analog signals will normally be as follows:

- Electric--4 to 20 mA dc.
- Pneumatic--3 to 15 psig.

The use of any signal range other than the above will be avoided if possible.

G.3.1.4 Contact Ratings. The ratings of all instrument contacts used for alarms and interlocks will have a minimum rating sufficient for use on microprocessor-based systems.

The ratings of all microprocessor output contacts will be the manufacturer's standard rating.

G.3.2 Instruments

G.3.2.1 Instrument Primary Piping/Tubing (Impulse Lines). Instrument primary piping/tubing is defined as the piping directly connected to the process, beginning at the outlet of the root valve and terminating at the blowdown valve and at the point of connection to the instrument itself.

Piping will be used exclusively for instrument primary lines in high energy applications (above 800 psig) for all steam service and for all level measuring devices to be supported on connecting piping. Tubing may be used for instrument primary lines in nonhigh energy applications (less than or equal to 800 psig).

G.3.2.1.1 Sizes of instrument primary piping/tubing. Instrument primary piping/tubing will not be smaller than the connection at the process pipe root valve and/or the following:

- As required by ASME B31.1.
- Flow and level measurement by differential pressure will also use primary piping conforming to the above requirements; however, flange tap connections may be of 1/2 inch size.
- Float actuated level switch devices will be supported on connecting piping not smaller than 1 inch.
- Level controllers and transmitters of the displacement float type will be supported on connecting piping not smaller than 2 inches.
- Instrument columns for float actuated level switches and displacement float devices will be piping of not less than 2-1/2 inches.
- Primary piping internal diameter shall not be less than 0.30 inch between the process connection and instrument blowdown valve.

G.3.2.1.2 Materials for instrument primary piping/tubing. In high energy applications, material for instrument primary piping or tubing connecting to the root valve will preferably be the same as that used in the process system to which it is connected. In non-high energy applications, the material may be stainless steel, ASTM A213. Higher strength materials may be substituted in the interest of standardization; however, welding procedures at the point of joining the instrument primary piping to the process piping must be appropriate to the combination of materials involved. Copper or brass may be used only for compressed air or for water services that use copper or brass process piping.

G.3.2.1.3 Insulation and freeze protection of instrument primary piping/tubing. Instrument primary piping or tubing connecting to high temperature systems, which might become hot enough to injure personnel during blowdown of the instrument line, will be insulated where such hazard exists. Insulation materials, exterior finish, and metal lagging will conform to the standards adopted for the process piping.

All water-filled primary piping or tubing in plant areas subject to freezing will be insulated and freeze protected.

G.3.2.1.4 Criteria for routing of instrument primary piping. Routing of instrument primary piping, including piping from the process connection through the root valve and the instrument primary piping, will be in accordance with the following criteria.

Special fittings such as reservoirs and other devices will be installed at flow primary element connections as required by the design of the instrument, in accordance with instructions of the instrument supplier.

Instrument primary piping for steam flow, liquid flow, and manometer level measurement systems should preferably slope downward from the primary element connections to the instrument. Instrument primary piping for flue gas and airflow measurement systems should preferably slope upward from the primary element connections to the instrument. If these requirements cannot be met, special venting or drain provisions will be provided. Horizontal runs must have a slope of not less than 1/2 inch per foot and must be adequately supported to maintain a constant slope.

G.3.2.1.5 Support of instrument piping. Instrument primary piping and stainless steel tubing will be supported in accordance with support requirements for process piping.

G.3.2.2 Thermowells and Protecting Tubes. Fluid system temperature sensors will be equipped with thermowells and will be made of one-piece, solid bored Type

316 stainless steel of stepless tapered design. Thermowells and protecting tubes will be 1-1/4 inch minimum size.

Thermowells in main steam, hot and cold reheat steam, extraction steam, and feedwater piping will be designed to prevent vortex-induced vibration over the range of velocities encountered in normal service in accordance with ASME Performance Test Code 19.3, Temperature Measurements.

All thermowells in steam piping will be installed and welded after steam blow to avoid exposure to vibration damage. For steam blow, the connections will be plugged by screwed plugs. All other thermowells will be installed prior to hydrostatic testing.

Temperature detectors in exhaust gas ducts will be mounted in protecting tubes to provide mechanical support and to permit replacement while in operation. Duct connections will consist of screwed couplings or adapter flanges welded to the ducts, into which the bushings on the protecting tubes can be threaded. Duct connections will be located to minimize the effect of temperature stratification within the ducts.

G.3.2.3 Thermocouples and Resistance Temperature Detectors. Temperature detectors will preferably be thermocouples. Thermocouples will preferably be chromel-constantan type (ISA Type E) with Type EX extension cable or chromel-alumel (ISA Type K) with Type KX extension cable. Thermocouples and extension cable will comply with the standard limits of error in accordance with ANSI MC96.1-1975. The elements as a rule will be separate from ground (ungrounded).

Resistance temperature detectors (RTDs) will be of 3 wire copper or platinum type. All RTDs for measurement of fluid system temperature will be ungrounded, metal sheathed, ceramic packed, and suitable for the design temperature, pressure, and velocity of the fluid system.

Thermocouples and RTDs will have sheathed elements spring-loaded to provide good thermal contact with the well or protecting tube. The sheath will have magnesium oxide insulation. All connection heads will be weatherproof with screwed covers, and supported from the well by a stainless steel extension nipple.

G.3.2.4 Transmitters. Transmitters will be used to provide the required 4 to 20 mA dc signals for all control systems. Transmitters will be of the electronic 2 wire type, capable of driving a load up to 750 ohms, designed with provisions for tamper-proofed zero and span adjustments.

G.3.2.4.1 Static pressure and differential pressure transmitters. Sensing elements for static pressure and differential pressure transmitters will be of either the capacitance or strain gauge type.

For steam and water services, static pressure transmitters will be equipped with a two-valve manifold, and differential pressure transmitters will be equipped with a three-valve manifold.

G.3.2.4.2 Level transmitters. Sensing elements for level transmitters will be of the following types:

- Static head devices for vessels exposed to atmospheric pressure, capacitance type devices or air bubbler type devices if absorption of air by the liquid is not objectionable.
- Differential pressure type with constant head chamber for high-pressure and temperature applications where installation of float cage becomes impractical. (Level transmitters of this type are the same as differential pressure transmitters.)
- Displacement float type or differential pressure type for enclosed vessels.
- Moving float type for fuel oil storage tanks.
- Nuclear, RF admittance, or ultrasonic type for specialized applications.

G.3.2.4.3 Flow transmitters. Flow transmitters for general applications will be of the differential pressure type.

- Primary Elements--Flow nozzles will be used for feedwater flow and other critical measurements where weld-in construction is required. Installation of flow nozzles and pressure taps will be made in the pipe fabricator's shop.

  Paddle type orifice plates will be used for other flow measurements where flanged construction and higher pressure loss are acceptable. Orifice flanges will be of the raised face weld neck type with dual sets of taps.

  Construction and installation of flow nozzles and orifices will conform to the requirements of ASME Performance Test Code PTC-19.5, and discharge coefficients will be predicted in accordance with data published in ASME Research Report on Fluid Meters.

  Annubars, piezometers, and pitot tubes will be used for measuring flows in large pipes or ducts where installation of flow nozzles or orifice plates is impractical.
- Secondary Elements--Secondary elements for differential type flow sensors will be strain gauge or capacitance type differential pressure transmitters. Square root extraction required for the DP transmitters will be performed electronically in the control system which receives the transmitter output signal.

G.3.2.5 Temperature, Pressure, Level, and Flow Switches. Temperature, pressure, level, and flow switches will generally have double-pole, double-throw (two Form C) contacts for each actuation point and will be equipped with screw type terminal connections on a terminal block for terminating field wiring. Switch set points will be adjustable.

G.3.2.5.1 Temperature switches. Temperature switches will be actuated by filled-bulb type elements equipped with standard length armored capillary tubing.

G.3.2.5.2 Pressure switches. Pressure switches will be actuated by disk or diaphragm type elements.

G.3.2.5.3 Level switches. Level switches will be actuated by elements of the following types:

- Static head devices for vessels exposed to atmospheric pressure; air bubbler type devices may be used if absorption of air by the liquid is not objectionable. (Level switches of this type are the same as static pressure switches.)
- Differential type for high-pressure and high temperature applications. (Level switches of this type are the same as differential pressure switches.)
- Displacement float type or differential type for enclosed vessels.
- Moving float type for open tanks and sumps.
- Nuclear, admittance, or ultrasonic type for specialized applications.

G.3.2.5.4 Flow switches. Variable area or differential pressure type actuating elements will be used for low flow and low-pressure applications.

G.3.2.6 Local Indicators

G.3.2.6.1 Local temperature indicators (thermometers). Thermometers for local mounting will be 4-1/2 inch dial gas-actuated thermometers or acceptable equal. Dial scales will be such that the normal operating range is in the middle third of the dial range. The dials will be engraved with service legends, or the separate nameplates of engraved laminated phenolic will be furnished attached to the dial faces to identify the service. Thermowells will be furnished for all thermometers.

G.3.2.6.2 Local pressure indicators (pressure gauges). Gauges for control air supply and signal pressures integral to an instrument will be in accordance with the instrument manufacturer's standards. All other gauges will be 4-1/2 inch minimum dial size or acceptable equal. Dial scales will be such that the normal operating range is in the middle third of the dial range. Dials will be engraved with service legends, or the separate nameplates of engraved laminated phenolic will be attached to the gauge faces to identify the service. Gauges for fluids which may be corrosive

to the gauge internals will be furnished with glycerine filled cases and diaphragm seals. Pulsation dampeners will be furnished if required by the application.

G.3.2.6.3 Local level indicators (gauge glasses). Tubular gauge glasses will be used for low-pressure applications. Transparent or reflex gauges will be used for high-pressure applications. All gauge glasses will be equipped with gauge valves including a safety ball check.

G.3.2.6.4 Flow indicators. Sight flow and variable flow indicators will be used for low-pressure and low temperature applications. The use of sight and variable flow indicators will be restricted to applications where quantitative measure of flow is not required.

Flow indicators for high-pressure and high temperature applications are not anticipated.

G.3.2.7 Solenoid Valves. Solenoid coils will generally be of high temperature construction and will be designed for continuous duty. Three-way solenoid valves will be designed for universal operation so that the supply air may be connected to any port. Solenoid enclosures will be NEMA 4.

G.3.3 Modulating Type Control Systems

G.3.3.1 Electronic Control Systems. A distributed microprocessor-based control system will be used to implement plant controls strategies. This Distributed Control and Information System (DCIS) will integrate coordinated control, motor control, data acquisition, and annunciation functions.

Control systems supplied with individual vendor's equipment will, to the extent practical, be designed to be integrated into the plant DCIS.

G.3.3.2 Pneumatic Controllers. The use of pneumatic controllers will be minimized but may be used for the following applications:

- Control loops which require only proportional or proportional plus reset action, but require no remote manual positioning by the control room operator.
- Control loops that do not require any interface with any receiver installed in the control room.

G.3.4 Motor Controls.

G.3.4.1 Motor Interlocks. Motor interlocks will be designed in accordance with the following criteria and will be implemented in the DCIS.

G.3.4.1.1 Protective interlocks. The protective interlocks for each motor and its associated equipment will be designed as follows:

- To prevent the motor from being started if the starting permissives required for safe operation are not satisfied.
- To automatically stop the motor under unsafe operating conditions when any action by the operator may be too slow to prevent the motor and its associated equipment from being damaged.
- To automatically start any standby equipment as a result of a motor trip and/or as required by the process.
- To provide status information to inform the operator of the equipment status at all times.

G.3.4.1.2 Standby starts. Components in a system, such as turbine ac lube oil pumps, which are paired to back up each other will have a standby mode imposed upon the protective interlock scheme. If the redundant pump is in the standby mode when the operating pump is tripped, or a process parameter indicates that the operating pump has failed, the standby pump will start. After a pump has started in the standby mode, the pump will not stop automatically, except on a trip condition. An alarm will be sounded to alert the operator that the standby pump has started.

G.3.4.1.3 Automatic starts and stops. Equipment in some systems will operate in an automatic mode in which the starting and stopping of a motor are initiated automatically. An example of the automatic mode would be a tank fill pump that automatically starts at a low level and stops at a high level. Automatic motor actuations will not be alarmed unless the automatic action is initiated by a protective interlock.

G.3.4.2 Sequential Controls. Sequential controls apply control logic to a system or group. The basic functions are to coordinate the operation of all components within a functional group and to automatically start or stop all components in a predetermined sequence without the operator initiating any step-by-step control during the process. Sequential controls will be used on the various water treatment systems.

G.3.4.3 Hardware Selection.

G.3.4.3.1 Logic systems. The main plant controls will utilize DCIS type hardware data linked to the combustion turbine and steam turbine control systems. Controls purchased as part of an equipment package may utilize electromechanical or solid-state hardware, or may be hybrid.

G.3.4.3.2 Local control hardware. Small fans and pumps may be controlled by local control switches when DCIS control is not required or when required for startup or maintenance.

G.3.5 Location of Control Equipment

Control equipment refers to the control devices used to implement the modulating control and motor controls systems.

All pneumatic controllers will be field mounted locally. All other control devices will be either mounted on a control panel, in a control cabinet, or on local stands.

G.3.5.1 Control Areas. Control areas will include the control room, the electronic equipment room, and local areas in which local control stations and local control panels are located.

G.3.5.1.1 Control room. The control room will contain the desk type control consoles from which the operator will conduct all normal and emergency operations of the unit. In addition, the control room will also contain all auxiliary control panels.

The alarm, utility, and log printers will also be located in the control room.

G.3.5.1.2 Electronic equipment room. The electronic equipment room for the installation of control equipment, computer cabinets, turbine supervisory system, and other solid-state electronic equipment will be provided in an area adjacent to the control room. The electronic equipment room will be environmentally controlled.

G.3.5.1.3 Local control areas. Local control areas will be established for systems where it is advantageous to have operator control in the vicinity of the equipment being controlled.

Procter & Gamble Cogeneration Project

Application for Certification
Volume 4

September 1993

Submitted to

California Energy Commission

Submitted by

Sacramento Cogeneration Authority

Contents

Volume 1

List of Acronyms

1.0 Executive Summary 1-1
- 1.1 Project Description 1-1
- 1.2 Project Need 1-4
- 1.3 Project Reliability 1-4
- 1.4 Environmental Considerations 1-5
- 1.5 Conclusion 1-7

2.0 Project Need 2-1
- 2.1 Introduction 2-1
- 2.2 Project Objectives 2-1
- 2.3 Need for the Proposed Facility 2-2
- 2.4 References 2-3

3.0 Project Description and Engineering 3-1
- 3.1 Introduction 3-1
- 3.2 Project Location 3-9
- 3.3 Site Description 3-9
- 3.4 Combustion Turbine Generators 3-17
- 3.5 Heat Recovery Steam Generators 3-20
- 3.6 Steam Turbine Generator 3-21
- 3.7 Major Electrical Equipment 3-22
- 3.8 Fuel Gas System 3-25
- 3.9 Water Supply and Treatment Facilities 3-26
- 3.10 Wastewater Collection and Treatment Facilities 3-34
- 3.11 Waste Disposal and Management 3-37
- 3.12 Emissions Control and Monitoring Equipment 3-40
- 3.13 Auxiliary Systems 3-43
- 3.14 Roads 3-48
- 3.15 Transmission Line Engineering 3-48
- 3.16 Gas Pipeline 3-88
- 3.17 Engineering Design Criteria 3-88
- 3.18 Facility Construction 3-90

3.19 Facility Operation and Maintenance 3-96
3.20 Schedule 3-102

4.0 Project Schedule 4-1
4.1 Construction Schedule 4-1
4.2 Estimated Operating Life and Facility Closure 4-1

5.0 Reliability 5-1
5.1 Plant Availability 5-1
5.2 Equipment Redundancy 5-3
5.3 Fuel Availability 5-9
5.4 Water Availability 5-10
5.5 Project Quality Control 5-10

6.0 Environmental Setting, Impacts, and Mitigation 6.1-1
6.1 Air Quality (To Be Issued Separately) 6.1-1
6.2 Geology and Soils 6.2-1
6.3 Water Resources 6.3-1
6.4 Biological Resources 6.4-1

Tables

Table 3.3-1 Active and Potentially Active Faults Within a 60 Mile Radius of the Project Boundaries 3-16
Table 3.9-1 Estimated Average Daily Water Requirements--Cogeneration Facilities 3-29
Table 3.9-2 Estimated Peak Daily Water Requirements--Cogeneration Facilities 3-30
Table 3.9.3 Cycle Heat Rejection Design Criteria 3-33
Table 3.10-1 Wastewater Quality--Discharge to City Sewer 3-35
Table 3.11-1 Power Project Plant Chemicals 3-38
Table 3.15-1 Existing Transmission Facilities Information 3-53

Table 3.15-2	1992 Construction Cost Summary For SMUD Interconnection Alternatives--Two Plant Terminations	3-63
Table 3.15-3	Construction Cost to Interconnect With PG&E or WAPA	3-64
Table 3.15-4	PG&E and WAPA Wheeling Charges	3-65
Table 3.15-5	Net Change in 1996 SMUD System Capacity and Energy Losses	3-67
Table 3.15-6	Loss Comparisons of Alternatives	3-68
Table 3.15-7	1996 Capacity and Energy Losses For Conductor Sizing	3-80
Table 3.18-1	Procter & Gamble Cogeneration Project Equipment Onsite Monthly	3-93
Table 3.18-2	Rail Delivery of Major Equipment Components for Procter & Gamble Cogeneration Project	3-94
Table 3.18-3	Procter & Gamble Cogeneration Project Truck Deliveries Per Month	3-95
Table 3.18-4	Number of Craft Persons Per Month	3-97
Table 3.19-1	Projected Full-Time Operating and Maintenance Staff for Procter & Gamble Cogeneration Project	3-99
Table 3.19-2	Projected Hours of Operation for Procter & Gamble Cogeneration Project	3-100
Table 5.2-1	Major Equipment Redundancy Proctor & Gamble Cogeneration Project	5-4
Table 5.3-1	30 Year Forecast SMUD Delivered Weighted Average Cost of Gas	5-11
Table 6.2-1		6.2-6
Table 6.3-1	Source of Water for Local Water Agencies in Sacramento County	6.3-2
Table 6.3-2	Water Quality Data Averages City of Sacramento Water Treatment Plants and Well System 1991-1992	6.3-10
Table 6.4-1	Plants Observed on the Procter & Gamble Cogeneration Project Study Area, Sacramento, California	6.4-8
Table 6.4-2	Plant Species of Special Concern Occurring in Sacramento County, California	6.4-18

Table 6.4-3 Sensitive Terrestrial Wildlife Species Potentially Occurring in the Procter & Gamble Cogeneration Project Area, Sacramento County, California 6.4-20

Figures

Figure 1-1 Representative View of the Project Site 1-3
Figure 3.0-1 Combined Cycle Diagram 3-2
Figure 3.0-2 Simple Cycle Diagram 3-3
Figure 3.0-3 Cogeneration Process Diagram 3-4
Figure 3.1-1 Combined Cycle Baseload Operation 3-6
Figure 3.1-2 Combined Cycle Peak Load Operation 3-7
Figure 3.1-3 Simple Cycle Baseload Operation 3-8
Figure 3.2-1 Regional Location Map 3-10
Figure 3.3-1 Site Arrangement 3-12
Figure 3.3-2 Typical Elevations 3-13
Figure 3.3-3 Site Grading and Drainage 3-14
Figure 3.7-1 Overall One-Line Diagram 3-23
Figure 3.9-1 Daily Average Water Mass Balance 3-27
Figure 3.9-2 Peak Average Water Mass Balance 3-28
Figure 3.15-1 Transmission Routing Existing Facilities 3-49
Figure 3.15-2 SMUD's Existing Hedge Substation 3-50
Figure 3.15-3 SMUD's Existing Hurley Substation 3-51
Figure 3.15-4 Existing Tower Configuration Hedge/Hurley 230 kV Line and East City/Hedge 115 kV Line 3-52
Figure 3.15-5 Transmission Routing 115 kV Alternatives 3-54
Figure 3.15-6 Transmission Routing 230 kV Alternatives 3-55
Figure 3.15-7 SMUD Transmission System With No Project Generation 3-69
Figure 3.15-8 SMUD Transmission System With Project Generating 177 MW 3-70
Figure 3.15-9 SMUD Transmission System During Construction of Project Interconnection 3-71
Figure 3.15-10 Existing Transmission Facilities and Proposed Interconnection Route 3-74

Figure 3.15-11 Transmission Line Schedule 3-75
Figure 3.15-12 Procter & Gamble Project Interconnection Plan of Service 3-76
Figure 3.15-13 Proposed Pole Configuration Hedge/Hurley 230 kV Loop-In 3-78
Figure 3.15-14 Local Airports 3-82
Figure 3.16-1 SMUD Cogeneration Pipeline Project 3-89
Figure 3.18-1 Total Manpower by Month 3-98
Figure 6.2-1 Fault and Epicenter Map 6.2-2
Figure 6.3-1 Sacramento County Ground Water Contour Map Fall 1991 . . . . . 6.3-6
Figure 6.3-2 Sacramento County 3-D Ground Water Surface Plot Spring 1990 . . . . . 6.3-7
Figure 6.4-1 Representative View of the Project Site 6.4-2
Figure 6.4-2 Plant Communities and Wetlands in the Study Area 6.4-7
Figure 6.4-3 Locations of Fairy Shrimp in the Study Area 6.4-15

Volume 2

6.5 Transportation 6.5-1
6.6 Land Use 6.6-1
6.7 Socioeconomics 6.7-1
6.8 Cultural and Paleontological Resources 6.8-1
6.9 Aesthetics/Visual Resources 6.9-1
6.10 Noise 6.10-1
6.11 Waste Management 6.11-1
6.12 Public Health/Hazardous Material Handling 6.12-1
6.13 Worker Safety 6.13-1

7.0 Financial Impacts 7-1
7.1 Capital Cost Estimate 7-1
7.2 Fuel Costs 7-1
7.3 Operating and Maintenance Costs 7-1

Contents (Continued)

Volume 2 (Continued)

8.0 Alternatives 8-1
8.1 Introduction 8-1
8.2 Alternative Site Evaluation 8-1
8.3 Alternative Plant Configurations 8-5
8.4 Transmission Connection Alternatives 8-7
8.5 Applicable Laws, Ordinances, Regulations, and Standards . 8-7

9.0 List of Preparers 9-1

Tables

Table 6.5-1 Mileage of Maintained Public Roads in the Sacramento MSA (1980, 1985, and 1989) 6.5-2
Table 6.5-2 Segments of Major Highways at or Reaching Capacity in Sacramento County 6.5-5
Table 6.5-3 Interpretation of Level of Service (LOS) Ratings for Various Road Classifications 6.5-16
Table 6.5-4 Existing 1993 Level of Service (LOS) at Selected Intersections Along Primary Commuter Routes 6.5-18
Table 6.5-5 Expected Equipment Deliveries by Rail to the Procter & Gamble Cogeneration Site During Construction 6.5-23
Table 6.5-6 Peak Hour Level of Service Under Baseline and Project Conditions at Selected Locations During Peak Construction 6.5-27
Table 6.5-7 Projected Level of Service Under Baseline and Project Conditions at Selected Locations During Operation 6.5-31
Table 6.6-1 Zoning Categories in the Project Vicinity 6.6-12
Table 6.7-1 Population Estimates for California, the Sacramento MSA, and Selected Cities (1980-1992) 6.7-2
Table 6.7-2 Population Projections for California and the Sacramento MSA Counties (1995-2005) 6.7-5
Table 6.7-3 Civilian Labor Force, Employment, and Unemployment for the State and Sacramento MSA (1985-1992) 6.7-6

Table 6.7-4	Nonagricultural Wage and Salary Employment by Industry in the Sacramento MSA in Thousands (1980-1992)	6.7-9
Table 6.7-5	Nonagricultural Wage and Salary Employment Distribution in the Sacramento MSA and in California (1980 and 1992)	6.7-11
Table 6.7-6	Historical and Projected Nonagricultural Wage and Salary Employment for the Sacramento MSA	6.7-12
Table 6.7-7	Per Capita Income for the State and Sacramento MSA (1970-1990)	6.7-15
Table 6.7-8	Total Personal Income for the State and Sacramento MSA (1970-1990)	6.7-17
Table 6.7-9	Nonagricultural Personal Income by Major Industry for the Sacramento MSA (1980 and 1990)	6.7-18
Table 6.7-10	Average Hours and Earnings of Production Workers, by Selected Industry for California (1991)	6.7-19
Table 6.7-11	Housing Characteristics for the Sacramento MSA Area Counties and the State (1980 and 1992)	6.7-20
Table 6.7-12	Annual Median Resale Home Price in Sacramento County, California and the US (1980-1991)	6.7-22
Table 6.7-13	Number of Districts and Schools in California and the Sacramento MSA (1990-1991)	6.7-26
Table 6.7-14	Enrollment in Public School Grades by County, State, and the Sacramento MSA (1990-1991)	6.7-27
Table 6.7-15	Fall Enrollment for Selected Colleges in the Sacramento MSA (1985-1991)	6.7-29
Table 6.7-16	City of Sacramento Approved Budget Resources and Appropriations 1991-1992 and 1992-1993	6.7-31
Table 6.7-17	County of Sacramento Approved Budget Requirements and Financing Sources 1991-1992 and 1992-1993	6.7-32
Table 6.7-18	Estimated Procter & Gamble Cogeneration Project Construction Workforce by Major Craft/Occupation	6.7-36
Table 6.9-1	Cooling Tower Modeling Parameters	6.9-27
Table 6.10-1	Applicable Noise Limits	6.10-3
Table 6.10-2	Summary of Ambient Noise Data (dBA)	6.10-7
Table 6.10-3	Hourly L_{eq} Values	6.10-8

Table 6.10-4	Ambient Noise Survey Octave Band Levels	6.10-9
Table 6.10-5	Future Noise Producing Developments	6.10-12
Table 6.10-6	Construction Equipment Noise Emissions	6.10-15
Table 6.10-7	Cogeneration Facility Equipment Noise Emissions	6.10-20
Table 6.12-1	Census Tract Populations Within 3 Miles of the Project Site	6.12-6
Table 6.12-2	Characterization of the Air Toxic Health Risks	6.12-7
Table 6.12-3	Emission Factors and Emission Rates for the LM6000 Combined Cycles	6.12-8
Table 6.12-4	Emission Factors and Emission Rates for the LM6000 Simple Cycle	6.12-9
Table 6.12-5	Source Parameters	6.12-10
Table 6.12-6	Sensitive Receptors	6.12-11
Table 6.12-7	Maximum Annual Impacts for Carcinogenic Air Toxics	6.12-14
Table 6.12-8	Cancer Risk Assessment	6.12-15
Table 6.12-9	Comparison of Acute and Chronic Exposure Levels to the Adopted OEHHA and EPA AELs	6.12-16
Table 6.12-10	Vulnerable Zones for Hazardous Materials	6.12-22
Table 6.13-1	Locations of Potential Worker Hazards	6.13-2
Table 6.13-2	Basic Protective Equipment Guide	6.13-5
Table 6.13-3	Sample Emergency Response Plan Outline	6.13-13

Figures

Figure 6.5-1	Regional Transportation	6.5-4
Figure 6.5-2	Proposed Capital Improvements	6.5-8
Figure 6.5-3	HOV Segments Within and Near the City of Sacramento	6.5-9
Figure 6.5-4	Average Daily Traffic and Level of Service Locations on Local Transportation Network	6.5-13
Figure 6.5-5	Peak A.M. Project Worker Vehicle Projections on the Local Transportation Network	6.5-25
Figure 6.6-1	City of Sacramento	6.6-2

Figure 6.6-2	Aerial Photograph of the Project Vicinity	6.6-4
Figure 6.6-3	Existing Land Use in the Project Vicinity	6.6-5
Figure 6.6-4	Recreational Parks and Open Space in the Project Vicinity	6.6-6
Figure 6.6-5	Public and Private Land Ownership in the Project Vicinity	6.6-10
Figure 6.6-6	Zoning Designation in the Project Vicinity	6.6-11
Figure 6.6-7	General Land Use Element Designations in the Project Vicinity	6.6-16
Figure 6.6-8	County of Sacramento Urban Service Area	6.6-18
Figure 6.6-9	City of Sacramento New Growth Areas	6.6-21
Figure 6.6-10	New Growth Area Designations in the Project Study Area	6.6-22
Figure 6.6-11	Major Industrial Areas in the City of Sacramento	6.6-23
Figure 6.6-12	Specific Land Use Plan Designations in the Project Area	6.6-25
Figure 6.6-13	Community of South Sacramento Florin-Perkins Industrial Land Use Map	6.6-27
Figure 6.7-1	Total Man-Months of Employment During the Construction Period	6.7-35
Figure 6.8-1	Sacramento County Map	6.8-3
Figure 6.8-2	Procter & Gamble Cogeneration Project Site Location	6.8-11
Figure 6.8-3	Transmission Line Cultural Resources	6.8-16
Figure 6.9-1	Project Viewshed	6.9-4
Figure 6.9-2	Typical View from Fruitridge Road	6.9-10
Figure 6.9-3a	KOP 1--Existing Setting	6.9-14
Figure 6.9-3b	KOP 1--Project Simulation (Northern Portion of View)	6.9-16
Figure 6.9-4a	KOP 2--Existing Setting	6.9-19
Figure 6.9-4b	KOP 2--Project Simulation	6.9-20
Figure 6.9-5a	KOP 3--Existing Setting	6.9-21
Figure 6.9-5b	KOP 3--Project Simulation	6.9-22
Figure 6.10-1	Noise Monitoring Locations (NMLs)	6.10-6
Figure 6.10-2	Potential Construction Impacts	6.10-18

Contents (Continued)
Figures (Continued)

Figure 6.10-3	Potential Operation Impacts	6.10-21
Figure 6.12-1	Sensitive Receptors	6.12-3
Figure 6.12-2	Census Tracts Within 3 Miles of the Project Site	6.12-5
Figure 6.12-3	Storage Locations of Hazardous Materials	6.12-18
Figure 6.12-4	Maximum VZ and IDLH Areas	6.12-23
Figure 6.13-1	Locations of Fire Suppression and Fire Fighting Equipment	6.13-15

Volume 3

Appendix A1	Western Systems Coordinating Council Existing Generation and Changes to System Facilities
Appendix A2	SMUD's Reliability Criteria for Transmission System Planning
Appendix A3	Procter & Gamble Project Interconnection Study
Appendix A4	Transmission Alternatives Cost Estimates
Appendix A5	Loss Analysis
Appendix A6	Power Flow Analysis
Appendix A7	Short-Circuit Analysis
Appendix B	Mechanical Engineering Design Criteria
Appendix C	Civil Engineering Design Criteria
Appendix C1	Geotechnical Engineering Study
Appendix D	Structural/Seismic Engineering Design Criteria
Appendix E	Chemical Engineering Design Criteria
Appendix F	Electrical Engineering Design Criteria
Appendix G	Control Engineering Design Criteria

Volume 4

Appendix H	Letter from City of Sacramento
Appendix I	Traffic Counts at Level of Service Locations
Appendix J	Land Ownership by Parcel Number
Appendix K	Cultural and Paleontological Resources Correspondence
Appendix L	Phase I Archeological Survey

Appendix M Material Safety Data Sheets
Appendix N Injury and Illness Prevention Program
Appendix O Plant Maintenance Program

Appendix H
Letter from City of Sacramento

WALSH
CONSTRUCTION COMPANY

10365 OLD PLACERVILLE RD., STE. 210 SACRAMENTO, CALIFORNIA 95827 (916) 363-6200 FAX: (916) 363-6287

June 15, 1993
Ref: WCC Job No.: 4701
Serial Letter No.: WC-S/SCA-007

Sacramento Cogeneration Authority
P. O. Box 15830
Sacramento, CA 95852-1830

Attention: Mr. John Larsen

Subject: Procter and Gamble Cogeneration Project

Dear John,

I have included with this letter copies of all the correspondence between Walsh and the City and County concerning water supply and waste water. The correspondence includes a May 20, 1993 letter from me to Paul Favilla (City of Sacramento), a sewer use permit application from Glen Del Sarto (County of Sacramento) and a June 9, 1993 "will serve" letter from Gary Gosse (City of Sacramento).

Meetings have tentatively been scheduled for June 19, 1993 with Gary Gosse at 9:00 am and Glen Del Sarto at 11:00 am to further discuss the water supply and waste water requirements.

If you have any questions, please give me a call.

Very truly yours,

Ron Simms
Construction Manager

RS:jo

cc: R. Chapman (Attachments provided earlier)

Attachments

DEPARTMENT OF
UTILITIES

ENGINEERING SERVICES

CITY OF SACRAMENTO
CALIFORNIA

5770 FREEPORT BLVD.
SUITE 100
SACRAMENTO, CA
95822-2911

PH 916-433-6318
FAX 916-433-6652

June 9, 1993

Mr Ron Simms, Construction Manager
Walsh Construction Company
10365 Old Placerville Road, Suite 210
Sacramento, CA 95827

Subject: SMUD Procter and Gamble Cogeneration Project

Dear Mr Simms:

This is in response to your request for a "will serve" letter for the above cogeneration project. It is the City's intent to always be in a position of having sufficient water system capacity to provide a safe and reliable supply of water to meet the needs of the City's customers.

The site of the proposed SMUD Procter and Gamble cogeneration plant is located within the water service area of the City of Sacramento. That is the site lies within the City's water rights "place of use" for both the Sacramento and American Rivers. The capacity of the City's existing water treatment plants, storage reservoirs, and transmission mains are adequate to meet the water supply needs of the proposed cogeneration project. Water service to the site of the cogeneration plant will be made available upon payment of City water development and connection fees.

As discussed at the May 26, 1993 meeting, there may be a need for the construction of a second or larger water "distribution" main in 83rd Street or a water main extension in 21st Avenue to insure an adequate supply of water will be provided. The cost for any water distribution main extensions are to be borne by the cogeneration project.

Enclosed is a copy of the results of two fire hydrant flow tests performed recently on the 10-inch water main in 83rd Street north from Fruitridge Road. The hydrant flow test of March 15, 1993 indicates a flow rate of 1700 gallons per minute (gpm). The extrapolated flow rate at a residual pressure of 20 psi is 3400 gpm.

A run on the computer model of the City's water system using a point demand of 2500 gallons per minute to represent the demand of the SMUD Procter and Gamble cogeneration plant is anticipated to be performed within the next two to three weeks. The results of the computer model run will be sent to you when they become available. If you have any questions please contact me at 433-6611.

Sincerely,

Gary E Gosse

Gary E Gosse
Supervising Engineer

Enclosure

cc: Don Jacobs
Scott Boettcher
Paul Favilla

CITY OF SACRAMENTO
DIVISION OF WATER & SEWERS
FIRE FLOW TEST REPORT

WATER MAIN SIZE: 10 INCH — DATE: 3-15-93

TEST CONDUCTED BY: COLASANTI & RAMIREZ — TIME: 11:00 AM

LOCATION: 83rd ST. & 21st AVE. — Test No.: 93-6

	FIRE HYDRANT IDENTIFICATION		PRESSURES (psig)			Calc. Flow
	Hyd. No.	Map Page	Static Ps	Residual Pr	Pitot Pt	Q1 (gpm)
Hyd. Gaged	12	95	45	39		
Hyd. Flowed	13	95			14	1687
Hyd. Gaged						
Hyd. Flowed						0
Hyd. Gaged						
Hyd. Flowed						0

Q1 = 29.8*C*D^2*SQRT(Pt)

C = 0.9 for 2.5" hose outlets and flow tubes on 2.5" or 4.5" pumper outlets.

C - Variable when using 4.5" outlet only. See I.S.O. bulletin (AIA or NBFU), 1970 reprint for exact value.

	Outlet Dia.
Test 1	4.5
Test 2	
Test 3	

Available flow at 20 psi residual

Q2 = Q1*SQRT((Ps-20)/(Ps-Pr))

Test 1	Test 2	Test 3
Q2 = 3443gpm	0gpm	0gpm

Remarks:
C[redacted]: PER GARY GOSSE

DRWG. 9-89

GARY BERTSCH
Fire Protection & Loss Prevention Specialist

SMUD (916) 732-6325
FAX (916) 732-6563

SACRAMENTO MUNICIPAL UTILITY DISTRICT
6201 S St, Sac., CA 95817-1899
P.O. Box 15830, Sacramento CA 95852-1830

OF SACRAMENTO
OF WATER & SEWERS
LOW TEST REPORT

DATE:10-8-92

TEST CONDUCTED BY: WILSON & COLOSANTI TIME:9:00 AM

LOCATION: 83RD & FRUITRIDGE Test No.: 92-15

	FIRE HYDRANT IDENTIFICATION		PRESSURES (psig)			Calc. Flow
	Hyd. No.	Map Page	Static Ps	Residual Pr	Pitot Pt	Q1 (gpm)
Hyd. Gaged	12	95	40	36		
Hyd. Flowed	10	95			15	1746
Hyd. Gaged						
Hyd. Flowed						0
Hyd. Gaged						
Hyd. Flowed						0

Q1 = 29.8*C*D^2*SQRT(Pt)

C = 0.9 for 2.5" hose outlets and flow tubes on 2.5" or 4.5" pumper outlets.

C - Variable when using 4.5" outlet only. See I.S.O. bulletin (AIA or NBFU), 1970 reprint for exact value.

	Outlet Dia.
Test 1	4.5
Test 2	
Test 3	

Available flow at 20 psi residual

Q2 = Q1*SQRT((Ps-20)/(Ps-Pr))

	Test 1	Test 2	Test 3
Q2 =	3904gpm	0gpm	0gpm

Remarks:
BERTSCH 732-6325

Post-it™ brand fax transmittal memo 7671 # of pages ▸ 1

To Gary Bertsch	From Dave Wilson
Co. SMUD	Co. City of Sacramento
Dept.	Phone # 423-6329
Fax # 732-6563	Fax # 421-4596

DRWG. 9-89

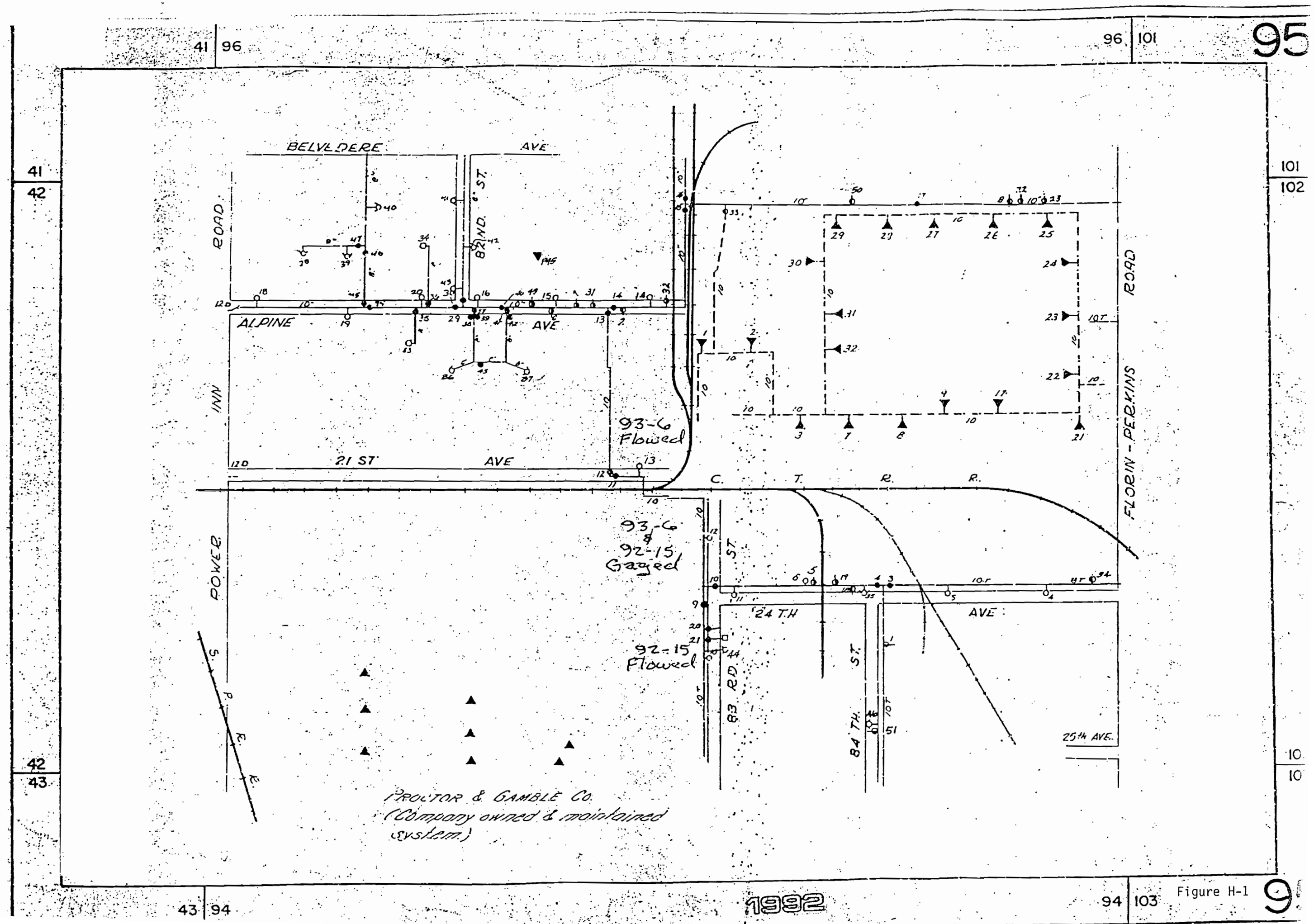

BELVEDERE AVE
ALPINE AVE
21 ST AVE
82 ND. ST.
INN ROAD
POWER
FLORIN - PERKINS ROAD
C. T. R. R.
24 TH AVE
83 RD ST.
84 TH. ST.
25th AVE.
93-6 Flowed
93-6 & 92-15 Gaged
92-15 Flowed
S. P. R. R.
PROCTOR & GAMBLE CO.
(Company owned & maintained system.)

Figure H-1

Appendix I
Traffic Counts at Level of Service Locations

NO. 1 POWER INN AT FOLSOM
EXISTING

SOUTHBOUND POWER INN

A.M. COUNTS	L	HR L	TH	HR TH	R	HR R	TOTAL	HOUR VOL
6:00-6:15	47	347	100	708	6	39	153	1094
6:15-6:30	71	421	185	811	7	67	263	1299
6:30-6:45	114	471	231	843	9	86	354	1400
6:45-7:00	115	472	192	789	17	117	324	1378
7:00-7:15	121	549	203	871	34	131	358	1551
7:15-7:30	121	571	217	874	26	120	364	1565
7:30-7:45	115	566	177	824	40	138	332	1528
7:45-8:00	192	559	274	811	31	123	497	1493
8:00-8:15	143	475	206	699	23	124	372	1298
8:15-8:30	116		167		44		327	=====
8:30-8:45	108		164		25		297	
8:45-9:00	108		162		32		302	
TOTAL TRAF	1371		2278		294		3943	3943

WESTBOUND FOLSOM

A.M. COUNTS	L	HR L	TH	HR TH	R	HR R	TOTAL	HOUR VOL
6:00-6:15	14	73	35	262	45	249	94	584
6:15-6:30	10	89	58	345	55	321	123	755
6:30-6:45	20	119	77	420	95	381	192	920
6:45-7:00	29	146	92	521	54	400	175	1067
7:00-7:15	30	164	118	659	117	486	265	1309
7:15-7:30	40	184	133	732	115	496	288	1412
7:30-7:45	47	188	178	769	114	501	339	1458
7:45-8:00	47	188	230	744	140	477	417	1409
8:00-8:15	50	190	191	691	127	463	368	1344
8:15-8:30	44		170		120		334	
8:30-8:45	47		153		90		290	
8:45-9:00	49		177		126		352	
TOTAL TRAF	427		1612		1198		3237	3237

NORTHBOUND POWER INN

A.M. COUNTS	L	HR L	TH	HR TH	R	HR R	TOTAL	HOUR VOL
6:00-6:15	11	61	85	596	9	74	105	731
6:15-6:30	12	96	136	711	19	92	167	899
6:30-6:45	16	137	187	801	17	121	220	1059
6:45-7:00	22	155	188	876	29	133	239	1164
7:00-7:15	46	207	200	1022	27	159	273	1388
7:15-7:30	53	222	226	1053	48	170	327	1445
7:30-7:45	34	237	262	1061	29	161	325	1459
7:45-8:00	74	266	334	1025	55	168	463	1459
8:00-8:15	61	244	231	894	38	141	330	1279
8:15-8:30	68		234		39		341	
8:30-8:45	63		226		36		325	
8:45-9:00	52		203		28		283	
TOTAL TRAF	268		1618		233		2119	2119

EASTBOUND FOLSOM

A.M. COUNTS	L	HR L	TH	HR TH	R	HR R	TOTAL	HOUR VOL
6:00-6:15	1	48	12	101	8	53	21	202
6:15-6:30	25	59	24	120	30	51	79	230
6:30-6:45	10	46	24	159	2	39	36	244
6:45-7:00	12	54	41	194	13	55	66	303
7:00-7:15	12	59	31	230	6	66	49	355
7:15-7:30	12	72	63	260	18	76	93	408
7:30-7:45	18	80	59	267	18	77	95	424
7:45-8:00	17	84	77	273	24	79	118	436
8:00-8:15	25	85	61	266	16	74	102	425
8:15-8:30	20		70		19		109	
8:30-8:45	22		65		20		107	
8:45-9:00	18		70		19		107	
TOTAL TRAF	107		331		119		557	557

NO. 1 POWER INN AT FOLSOM
EXISTING

SOUTHBOUND POWER INN

P.M. COUNTS	L	HR L	TH	HR TH	R	HR R	TOTAL	HOUR VOL
3:30-3:45	153	717	182	804	14	66	349	1587
3:45-4:00	195	732	210	792	18	73	423	1597
4:00-4:15	165	768	195	816	20	74	380	1658
4:15-4:30	204	814	217	845	14	69	435	1728
4:30-4:45	168	833	170	864	21	67	359	1764
4:45-5:00	231	826	234	860	19	57	484	1743
5:00-5:15	211	787	224	788	15	54	450	1629
5:15-5:30	223		236		12		471	
5:30-5:45	161		166		11		338	
5:45-6:00	192		162		16		370	
TOTAL TRAF	1550		1668		133		3351	3351

WESTBOUND FOLSOM

P.M. COUNTS	L	HR L	TH	HR TH	R	HR R	TOTAL	HOUR VOL
3:30-3:45	42	215	103	498	139	631	284	1344
3:45-4:00	51	247	144	515	175	637	370	1399
4:00-4:15	64	247	115	507	171	607	350	1361
4:15-4:30	58	237	136	522	146	610	340	1369
4:30-4:45	74	241	120	520	145	603	339	1364
4:45-5:00	51	217	136	486	145	544	332	1247
5:00-5:15	54	211	130	454	174	536	358	1201
5:15-5:30	62		134		139		335	
5:30-5:45	50		86		86		222	
5:45-6:00	45		104		137		286	
TOTAL TRAF	456		1018		1234		2708	2708

NORTHBOUND POWER INN

P.M. COUNTS	L	HR L	TH	HR TH	R	HR R	TOTAL	HOUR VOL
3:30-3:45	34	123	312	1134	47	189	393	1446
3:45-4:00	34	125	272	1124	45	203	351	1452
4:00-4:15	31	123	267	1094	54	186	352	1403
4:15-4:30	24	143	283	1000	43	181	350	1324
4:30-4:45	36	154	302	1114	61	181	399	1449
4:45-5:00	32	143	242	995	28	157	302	1295
5:00-5:15	51	145	173	937	49	172	273	1254
5:15-5:30	35		397		43		475	
5:30-5:45	25		183		37		245	
5:45-6:00	34		184		43		261	
TOTAL TRAF	277		2248		370		2895	2895

EASTBOUND FOLSOM

P.M. COUNTS	L	HR L	TH	HR TH	R	HR R	TOTAL	HOUR VOL
3:30-3:45	53	236	168	719	50	174	271	1129
3:45-4:00	62	245	168	730	34	176	264	1151
4:00-4:15	68	226	185	726	49	174	302	1126
4:15-4:30	53	243	198	714	41	180	292	1137
4:30-4:45	62	203	179	701	52	174	293	1078
4:45-5:00	43	190	164	714	32	147	239	1051
5:00-5:15	85	181	173	672	55	139	313	992
5:15-5:30	13		185		35		233	
5:30-5:45	49		192		25		266	
5:45-6:00	34		122		24		180	
TOTAL TRAF	439		1420		348		2207	2207

NO. 2 FLORIN PERKINS AT JACKSON HWY.
EXISTING

SOUTHBOUND FLORIN PERKINS

A.M. COUNTS	L	HR L	TH	HR TH	R	HR R	TOTAL	HOUR VOL
6:00-6:15	1	2	79	631	1	8	81	641
6:15-6:30	0	3	135	661	0	12	135	676
6:30-6:45	1	6	220	668	1	13	222	687
6:45-7:00	0	10	197	590	6	19	203	619
7:00-7:15	2	13	109	519	5	19	116	551
7:15-7:30	3	12	142	518	1	20	146	550
7:30-7:45	5	11	142	472	7	21	154	504
7:45-8:00	3	10	126	398	6	21	135	429
8:00-8:15	1	10	108	335	6	18	115	363
8:15-8:30	2		96		2		100	
8:30-8:45	4		68		7		79	
8:45-9:00	3		63		3		69	
TOTAL TRA	25		1485		45		1555	1555

WESTBOUND JACKSON

A.M. COUNTS	L	HR L	TH	HR TH	R	HR R	TOTAL	HOUR VOL
6:00-6:15	15	127	34	169	2	16	51	312
6:15-6:30	22	151	35	202	6	18	63	371
6:30-6:45	39	185	54	270	4	18	97	473
6:45-7:00	51	200	46	306	4	25	101	531
7:00-7:15	39	209	67	358	4	33	110	600
7:15-7:30	56	229	103	373	6	34	165	636
7:30-7:45	54	226	90	335	11	33	155	594
7:45-8:00	60	215	98	307	12	30	170	552
8:00-8:15	59	176	82	252	5	22	146	450
8:15-8:30	53		65		5		123	
8:30-8:45	43		62		8		113	
8:45-9:00	21		43		4		68	
TOTAL TRA	512		779		71		1362	1362

NORTHBOUND FLORIN PERKINS

A.M. COUNTS	L	HR L	TH	HR TH	R	HR R	TOTAL	HOUR VOL
6:00-6:15	16	77	30	225	8	35	54	337
6:15-6:30	13	87	42	300	6	37	61	424
6:30-6:45	19	119	63	404	8	38	90	561
6:45-7:00	29	142	90	526	13	46	132	714
7:00-7:15	26	169	105	616	10	54	141	839
7:15-7:30	45	184	146	678	7	58	198	920
7:30-7:45	42	167	185	665	16	68	243	900
7:45-8:00	56	159	180	581	21	71	257	811
8:00-8:15	41	133	167	487	14	63	222	683
8:15-8:30	28		133		17		178	
8:30-8:45	34		101		19		154	
8:45-9:00	30		86		13		129	
TOTAL TRA	246		841		89		1176	1176

EASTBOUND JACKSON

A.M. COUNTS	L	HR L	TH	HR TH	R	HR R	TOTAL	HOUR VOL
6:00-6:15	1	4	15	77	24	250	40	331
6:15-6:30	1	3	17	78	58	279	76	360
6:30-6:45	0	5	19	74	66	269	85	348
6:45-7:00	2	7	26	73	102	253	130	333
7:00-7:15	0	6	16	80	53	213	69	299
7:15-7:30	3	8	13	91	48	212	64	311
7:30-7:45	2	6	18	105	50	202	70	313
7:45-8:00	1	7	33	118	62	196	96	321
8:00-8:15	2	9	27	111	52	180	81	300
8:15-8:30	1		27		38		66	
8:30-8:45	3		31		44		78	
8:45-9:00	3		26		46		75	
TOTAL TRA	10		157		463		630	630

NO. 2 FLORIN PERKINS AT JACKSON H
EXISTING

SOUTHBOUND FLORIN PERKINS

P.M. COUNTS	L	HR L	TH	HR TH	R	HR R	TOTAL	HOUR VOL
3:30-3:45	4	28	74	295	3	15	81	338
3:45-4:00	4	30	67	311	4	15	75	356
4:00-4:15	12	40	73	334	5	12	90	386
4:15-4:30	8	36	81	353	3	7	92	396
4:30-4:45	6	32	90	361	3	4	99	397
4:45-5:00	14	32	90	338	1	3	105	373
5:00-5:15	8	22	92	319	0	3	100	344
5:15-5:30	4		89		0		93	
5:30-5:45	6		67		2		75	
5:45-6:00	4		71		1		76	
TOTAL TRA	60		656		19		735	735

WESTBOUND JACKSON

P.M. COUNTS	L	HR L	TH	HR TH	R	HR R	TOTAL	HOUR VOL
3:30-3:45	38	116	39	139	8	19	85	274
3:45-4:00	28	110	25	130	1	16	54	256
4:00-4:15	27	113	28	142	6	22	61	277
4:15-4:30	23	112	47	159	4	19	74	290
4:30-4:45	32	134	30	153	5	19	67	306
4:45-5:00	31	130	37	151	7	17	75	298
5:00-5:15	26	114	45	137	3	15	74	266
5:15-5:30	45		41		4		90	
5:30-5:45	28		28		3		59	
5:45-6:00	15		23		5		43	
TOTAL TRA	250		292		38		580	580

NORTHBOUND FLORIN PERKINS

P.M. COUNTS	L	HR L	TH	HR TH	R	HR R	TOTAL	HOUR VOL
3:30-3:45	47	173	278	798	55	188	380	1159
3:45-4:00	39	183	158	758	37	190	234	1131
4:00-4:15	48	175	195	785	45	193	288	1153
4:15-4:30	39	176	167	804	51	198	257	1178
4:30-4:45	57	165	238	754	57	172	352	1091
4:45-5:00	31	155	185	652	40	131	256	938
5:00-5:15	49	151	214	571	50	112	313	834
5:15-5:30	28		117		25		170	
5:30-5:45	47		136		16		199	
5:45-6:00	27		104		21		152	
TOTAL TRA	338		1552		360		2250	2250

EASTBOUND JACKSON

P.M. COUNTS	L	HR L	TH	HR TH	R	HR R	TOTAL	HOUR VOL
3:30-3:45	5	28	58	271	70	266	133	565
3:45-4:00	9	32	76	292	72	255	157	579
4:00-4:15	7	29	69	325	60	248	136	602
4:15-4:30	7	34	68	370	64	249	139	653
4:30-4:45	9	37	79	420	59	250	147	707
4:45-5:00	6	36	109	423	65	247	180	706
5:00-5:15	12	33	114	382	61	225	187	640
5:15-5:30	10		118		65		193	
5:45-5:45	8		82		56		146	
5:45-6:00	3		68		43		114	
TOTAL TRA	65		691		516		1272	1272

NO. 3 FRUITRIDGE AND M L KING JR.

EXISTING

SOUTHBOUND M L KING JR

A.M. COUNTS	L	HR L	TH	HR TH	R	HR R	TOTAL	HOUR VOL
6:00-6:15	12	54	6	74	3	43	21	171
6:15-6:30	14	54	16	92	9	55	39	201
6:30-6:45	16	58	24	119	21	79	61	256
6:45-7:00	12	60	28	133	10	83	50	276
7:00-7:15	12	84	24	158	15	104	51	346
7:15-7:30	18	101	43	185	33	108	94	394
7:30-7:45	18	105	38	192	25	90	81	387
7:45-8:00	36	114	53	191	31	77	120	382
8:00-8:15	29	103	51	167	19	65	99	335
8:15-8:30	22		50		15		87	
8:30-8:45	27		37		12		76	
8:45-9:00	25		29		19		73	
TOTAL TRA	241		399		212		852	852

WESTBOUND FRUITRIDGE

A.M. COUNTS	L	HR L	TH	HR TH	R	HR R	TOTAL	HOUR VOL
6:00-6:15	6	56	95	493	4	30	105	579
6:15-6:30	11	68	96	547	5	37	112	652
6:30-6:45	24	75	145	626	11	62	180	763
6:45-7:00	15	83	157	683	10	79	182	845
7:00-7:15	18	97	149	770	11	100	178	967
7:15-7:30	18	106	175	794	30	114	223	1014
7:30-7:45	32	123	202	832	28	106	262	1061
7:45-8:00	29	123	244	823	31	110	304	1056
8:00-8:15	27	125	173	734	25	102	225	961
8:15-8:30	35		213		22		270	
8:30-8:45	32		193		32		257	
8:45-9:00	31		155		23		209	
TOTAL TRA	278		1997		232		2507	2507

NORTHBOUND M.L. KING

A.M. COUNTS	L	HR L	TH	HR TH	R	HR R	TOTAL	HOUR VOL
6:00-6:15	9	66	24	115	10	51	43	232
6:15-6:30	22	75	26	126	9	62	57	263
6:30-6:45	19	76	26	165	19	74	64	315
6:45-7:00	16	93	39	251	13	69	68	413
7:00-7:15	18	116	35	319	21	93	74	528
7:15-7:30	23	119	65	355	21	123	109	597
7:30-7:45	36	117	112	347	14	144	162	608
7:45-8:00	39	96	107	280	37	170	183	546
8:00-8:15	21	78	71	213	51	159	143	450
8:15-8:30	21		57		42		120	
8:30-8:45	15		45		40		100	
8:45-9:00	21		40		26		87	
TOTAL TRA	182		434		144		760	760

EASTBOUND FRUITRIDGE

A.M. COUNTS	L	HR L	TH	HR TH	R	HR R	TOTAL	HOUR VOL
6:00-6:15	1	35	49	333	5	20	55	388
6:15-6:30	10	54	62	369	4	25	76	448
6:30-6:45	10	66	89	422	5	28	104	516
6:45-7:00	14	95	133	477	6	28	153	600
7:00-7:15	20	107	85	501	10	28	115	636
7:15-7:30	22	121	115	607	7	31	144	759
7:30-7:45	39	129	144	652	5	29	188	810
7:45-8:00	26	129	157	691	6	36	189	856
8:00-8:15	34	117	191	701	13	38	238	856
8:15-8:30	30		160		5		195	
8:30-8:45	39		183		12		234	
8:45-9:00	14		167		8		189	
TOTAL TRA	142		834		48		1024	1024

FRUITRIDGE AND M. L. KING
EXISTING

SOUTHBOUND M. L. KING

P.M. COUNTS	L	HR L	TH	HR TH	R	HR R	TOTAL	HOUR VOL
3:30-3:45	42	150	67	292	27	118	136	560
3:45-4:00	35	143	74	291	28	123	137	557
4:00-4:15	41	165	74	306	23	115	138	586
4:15-4:30	32	165	77	297	40	115	149	577
4:30-4:45	35	170	66	298	32	104	133	572
4:45-5:00	57	178	89	316	20	93	166	587
5:00-5:15	41	159	65	291	23	97	129	547
5:15-5:30	37		78		29		144	
5:30-5:45	43		84		21		148	
5:45-6:00	38		64		24		126	
TOTAL TRA	320		590		222		1132	1132

WESTBOUND FRUITRIDGE

P.M. COUNTS	L	HR L	TH	HR TH	R	HR R	TOTAL	HOUR VOL
3:30-3:45	39	161	230	998	30	141	299	1300
3:45-4:00	36	160	294	989	39	129	369	1278
4:00-4:15	43	167	222	921	34	133	299	1221
4:15-4:30	43	177	252	959	38	128	333	1264
4:30-4:45	38	172	221	938	18	127	277	1237
4:45-5:00	43	170	226	944	43	139	312	1253
5:00-5:15	53	164	260	969	29	128	342	1261
5:15-5:30	38		231		37		306	
5:30-5:45	36		227		30		293	
5:45-6:00	37		251		32		320	
TOTAL TRA	333		1936		268		2537	2537

NORTHBOUND M.L. KING

P.M. COUNTS	L	HR L	TH	HR TH	R	HR R	TOTAL	HOUR VOL
3:30-3:45	45	114	49	261	43	179	137	554
3:45-4:00	24	94	76	276	52	170	152	540
4:00-4:15	25	93	62	275	49	163	136	531
4:15-4:30	20	81	74	293	35	158	129	532
4:30-4:45	25	77	64	292	34	182	123	551
4:45-5:00	23	82	75	289	45	190	143	561
5:00-5:15	13	82	80	274	44	194	137	550
5:15-5:30	16		73		59		148	
5:30-5:45	30		61		42		133	
5:45-6:00	23		60		49		132	
TOTAL TRA	191		553		361		1105	1105

EASTBOUND FRUITRIDGE

P.M. COUNTS	L	HR L	TH	HR TH	R	HR R	TOTAL	HOUR VOL
3:30-3:45	28	118	261	1049	33	100	322	1267
3:45-4:00	33	120	262	1022	16	94	311	1236
4:00-4:15	21	120	231	1023	29	104	281	1247
4:15-4:30	36	140	295	1052	22	98	353	1290
4:30-4:45	30	138	234	989	27	105	291	1232
4:45-5:00	33	137	263	1006	26	106	322	1249
5:00-5:15	41	128	260	989	23	104	324	1221
5:15-5:30	34		232		29		295	
5:30-5:45	29		251		28		308	
5:45-6:00	24		246		24		294	
TOTAL TRA	256		2038		205		2499	2499

NO. 4 FRUITRIDGE AND STOCKTON
EXISTING

SOUTHBOUND STOCKTON

A.M. COUNTS	L	HR L	TH	HR TH	R	HR R	TOTAL	HOUR VOL
6:00-6:15	23	62	21	128	7	52	51	242
6:15-6:30	5	69	36	161	16	69	57	299
6:30-6:45	17	78	43	157	14	63	74	298
6:45-7:00	17	86	28	182	15	74	60	342
7:00-7:15	30	92	54	231	24	90	108	413
7:15-7:30	14	96	32	273	10	88	56	457
7:30-7:45	25	110	68	324	25	108	118	542
7:45-8:00	23	112	77	351	31	111	131	574
8:00-8:15	34	112	96	369	22	115	152	596
8:15-8:30	28		83		30		141	
8:30-8:45	27		95		28		150	
8:45-9:00	23		95		35		153	
TOTAL TRA	266		728		257		1251	1251

WESTBOUND FRUITRIDGE

A.M. COUNTS	L	HR L	TH	HR TH	R	HR R	TOTAL	HOUR VOL
6:00-6:15	9	23	61	243	12	61	82	327
6:15-6:30	4	24	40	271	12	66	56	361
6:30-6:45	2	31	68	325	18	77	88	433
6:45-7:00	8	47	74	406	19	83	101	536
7:00-7:15	10	55	89	481	17	103	116	639
7:15-7:30	11	61	94	511	23	123	128	695
7:30-7:45	18	68	149	579	24	124	191	771
7:45-8:00	16	85	149	558	39	118	204	761
8:00-8:15	16	96	119	535	37	121	172	752
8:15-8:30	18		162		24		204	
8:30-8:45	35		128		18		181	
8:45-9:00	27		126		42		195	
TOTAL TRA	174		1259		285		1718	1718

NORTHBOUND STOCKTON

A.M. COUNTS	L	HR L	TH	HR TH	R	HR R	TOTAL	HOUR VOL
6:00-6:15	13	84	41	206	10	40	64	330
6:15-6:30	23	95	46	227	10	45	79	367
6:30-6:45	24	108	49	284	12	48	85	440
6:45-7:00	24	127	70	356	8	70	102	553
7:00-7:15	24	147	62	418	15	99	101	664
7:15-7:30	36	160	103	493	13	116	152	769
7:30-7:45	43	177	121	516	34	137	198	830
7:45-8:00	44	172	132	471	37	138	213	781
8:00-8:15	37	171	137	423	32	131	206	725
8:15-8:30	53		126		34		213	
8:30-8:45	38		76		35		149	
8:45-9:00	43		84		30		157	
TOTAL TRA	231		624		139		994	994

EASTBOUND FRUITRIDGE

A.M. COUNTS	L	HR L	TH	HR TH	R	HR R	TOTAL	HOUR VOL
6:00-6:15	10	48	62	340	14	60	86	448
6:15-6:30	7	55	77	356	13	62	97	473
6:30-6:45	15	65	108	372	17	65	140	502
6:45-7:00	16	80	93	385	16	87	125	552
7:00-7:15	17	89	78	407	16	108	111	604
7:15-7:30	17	104	93	455	16	138	126	697
7:30-7:45	30	114	121	492	39	168	190	774
7:45-8:00	25	100	115	474	37	168	177	742
8:00-8:15	32	97	126	455	46	168	204	720
8:15-8:30	27		130		46		203	
8:30-8:45	16		103		39		158	
8:45-9:00	22		96		37		155	
TOTAL TRA	137		747		168		1052	1052

FRUITRIDGE AND STOCKTON
EXISTING

SOUTHBOUND STOCKTON

P.M. COUNTS	L	HR L	TH	HR TH	R	HR R	TOTAL	HOUR VOL
3:30-3:45	56	250	188	808	60	246	304	1304
3:45-4:00	69	256	218	833	59	234	346	1323
4:00-4:15	82	245	205	827	69	235	356	1307
4:15-4:30	43	223	197	836	58	207	298	1266
4:30-4:45	62	242	213	867	48	201	323	1310
4:45-5:00	58	241	212	865	60	202	330	1308
5:00-5:15	60	223	214	816	41	178	315	1217
5:15-5:30	62		228		52		342	
5:30-5:45	61		211		49		321	
5:45-6:00	40		163		36		239	
TOTAL TRA	492		1675		447		2614	2614

WESTBOUND FRUITRIDGE

P.M. COUNTS	L	HR L	TH	HR TH	R	HR R	TOTAL	HOUR VOL
3:30-3:45	39	130	188	646	30	131	257	907
3:45-4:00	29	123	187	642	40	137	256	902
4:00-4:15	25	122	136	628	36	132	197	882
4:15-4:30	37	130	135	647	25	121	197	898
4:30-4:45	32	118	184	711	36	135	252	964
4:45-5:00	28	116	173	675	35	137	236	928
5:00-5:15	33	114	155	633	25	127	213	874
5:15-5:30	25		199		39		263	
5:30-5:45	30		148		38		216	
5:45-6:00	26		131		25		182	
TOTAL TRA	248		1357		266		1871	1871

NORTHBOUND STOCKTON

P.M. COUNTS	L	HR L	TH	HR TH	R	HR R	TOTAL	HOUR VOL
3:30-3:45	75	325	176	641	24	122	275	1088
3:45-4:00	90	331	144	610	33	123	267	1064
4:00-4:15	84	306	154	623	39	109	277	1038
4:15-4:30	76	298	167	604	26	105	269	1007
4:30-4:45	81	309	145	607	25	113	251	1029
4:45-5:00	65	294	157	599	19	124	241	1017
5:00-5:15	76	306	135	565	35	127	246	998
5:15-5:30	87		170		34		291	
5:30-5:45	66		137		36		239	
5:45-6:00	77		123		22		222	
TOTAL TRA	634		1248		235		2117	2117

EASTBOUND FRUITRIDGE

P.M. COUNTS	L	HR L	TH	HR TH	R	HR R	TOTAL	HOUR VOL
3:30-3:45	30	146	149	528	62	306	241	980
3:45-4:00	44	151	145	492	98	310	287	953
4:00-4:15	33	143	117	476	75	295	225	914
4:15-4:30	39	142	117	475	71	295	227	912
4:30-4:45	35	135	113	465	66	291	214	891
4:45-5:00	36	125	129	506	83	304	248	935
5:00-5:15	32	118	116	481	75	287	223	886
5:15-5:30	32		107		67		206	
5:30-5:45	25		154		79		258	
5:45-6:00	29		104		66		199	
TOTAL TRA	281		993		597		1871	1871

NO. 5 FRUITRIDGE AND 65TH
EXISTING

SOUTHBOUND 65TH

A.M. COUNTS	L	HR L	TH	HR TH	R	HR R	TOTAL	HOUR VOL
6:00-6:15	11	78	22	138	10	44	43	260
6:15-6:30	12	85	28	184	8	52	48	321
6:30-6:45	23	93	32	239	5	60	60	392
6:45-7:00	32	106	56	299	21	76	109	481
7:00-7:15	18	111	68	350	18	78	104	539
7:15-7:30	20	130	83	415	16	94	119	639
7:30-7:45	36	131	92	461	21	120	149	712
7:45-8:00	37	117	107	453	23	125	167	695
8:00-8:15	37	102	133	419	34	133	204	654
8:15-8:30	21		129		42		192	
8:30-8:45	22		84		26		132	
8:45-9:00	22		73		31		126	
TOTAL TRA	291		907		255		1453	1453

WESTBOUND FRUITRIDGE

A.M. COUNTS	L	HR L	TH	HR TH	R	HR R	TOTAL	HOUR VOL
6:00-6:15	6	21	48	182	12	84	66	287
6:15-6:30	2	26	26	199	17	108	45	333
6:30-6:45	8	41	47	225	24	116	79	382
6:45-7:00	5	55	61	289	31	124	97	468
7:00-7:15	11	70	65	340	36	152	112	562
7:15-7:30	17	83	52	359	25	153	94	595
7:30-7:45	22	93	111	428	32	176	165	697
7:45-8:00	20	93	112	416	59	176	191	685
8:00-8:15	24	95	84	389	37	141	145	625
8:15-8:30	27		121		48		196	
8:30-8:45	22		99		32		153	
8:45-9:00	22		85		24		131	
TOTAL TRA	186		911		377		1474	1474

NORTHBOUND 65TH

A.M. COUNTS	L	HR L	TH	HR TH	R	HR R	TOTAL	HOUR VOL
6:00-6:15	4	25	55	366	10	48	69	439
6:15-6:30	7	31	64	449	11	47	82	527
6:30-6:45	5	27	123	547	12	47	140	621
6:45-7:00	9	58	124	612	15	55	148	725
7:00-7:15	10	71	138	719	9	68	157	858
7:15-7:30	3	80	162	789	11	95	176	964
7:30-7:45	36	111	188	843	20	102	244	1056
7:45-8:00	22	95	231	739	28	107	281	941
8:00-8:15	19	90	208	587	36	117	263	794
8:15-8:30	34		216		18		268	
8:30-8:45	20		84		25		129	
8:45-9:00	17		79		38		134	
TOTAL TRA	96		1085		116		1297	1297

EASTBOUND FRUITRIDGE

A.M. COUNTS	L	HR L	TH	HR TH	R	HR R	TOTAL	HOUR VOL
6:00-6:15	15	88	55	330	6	20	76	438
6:15-6:30	16	99	69	337	2	15	87	451
6:30-6:45	29	108	100	347	8	18	137	473
6:45-7:00	28	117	106	332	4	16	138	465
7:00-7:15	26	151	62	344	1	19	89	514
7:15-7:30	25	168	79	373	5	24	109	565
7:30-7:45	38	188	85	400	6	40	129	628
7:45-8:00	62	174	118	403	7	43	187	620
8:00-8:15	43	135	91	375	6	46	140	556
8:15-8:30	45		106		21		172	
8:30-8:45	24		88		9		121	
8:45-9:00	23		90		10		123	
TOTAL TRA	239		674		39		952	952

FRUITRIDGE AND 65TH
EXISTING

SOUTHBOUND 65TH

P.M. COUNTS	L	HR L	TH	HR TH	R	HR R	TOTAL	HOUR VOL
3:30-3:45	33	172	187	642	50	181	270	995
3:45-4:00	51	185	151	633	35	177	237	995
4:00-4:15	41	171	169	633	47	200	257	1004
4:15-4:30	47	173	135	668	49	210	231	1051
4:30-4:45	46	166	178	705	46	217	270	1088
4:45-5:00	37	183	151	729	58	219	246	1131
5:00-5:15	43	192	204	712	57	213	304	1117
5:15-5:30	40		172		56		268	
5:30-5:45	63		202		48		313	
5:45-6:00	46		134		52		232	
TOTAL TRA	338		1347		398		2083	2083

WESTBOUND FRUITRIDGE

P.M. COUNTS	L	HR L	TH	HR TH	R	HR R	TOTAL	HOUR VOL
3:30-3:45	42	158	172	647	66	174	280	979
3:45-4:00	45	155	184	609	44	145	273	909
4:00-4:15	32	145	135	584	30	135	197	864
4:15-4:30	39	137	156	692	34	149	229	978
4:30-4:45	39	134	134	603	37	148	210	885
4:45-5:00	35	125	159	611	34	133	228	869
5:00-5:15	24	118	243	582	44	122	311	822
5:15-5:30	36		67		33		136	
5:30-5:45	30		142		22		194	
5:45-6:00	28		130		23		181	
TOTAL TRA	292		1250		322		1864	1864

NORTHBOUND 65TH

P.M. COUNTS	L	HR L	TH	HR TH	R	HR R	TOTAL	HOUR VOL
3:30-3:45	38	113	116	407	39	117	193	637
3:45-4:00	23	93	84	403	20	108	127	604
4:00-4:15	25	97	125	394	35	111	185	602
4:15-4:30	27	92	82	380	23	109	132	581
4:30-4:45	18	80	112	421	30	103	160	604
4:45-5:00	27	89	75	398	23	103	125	590
5:00-5:15	20	95	111	449	33	105	164	649
5:15-5:30	15		123		17		155	
5:30-5:45	27		89		30		146	
5:45-6:00	33		126		25		184	
TOTAL TRA	193		828		220		1241	1241

EASTBOUND FRUITRIDGE

P.M. COUNTS	L	HR L	TH	HR TH	R	HR R	TOTAL	HOUR VOL
3:30-3:45	41	155	123	487	46	109	210	751
3:45-4:00	42	148	141	477	24	87	207	712
4:00-4:15	35	153	103	450	26	85	164	688
4:15-4:30	37	147	120	449	13	81	170	677
4:30-4:45	34	138	113	453	24	82	171	673
4:45-5:00	47	138	114	472	22	75	183	685
5:00-5:15	29	118	102	481	22	66	153	665
5:15-5:30	28		124		14		166	
5:30-5:45	34		132		17		183	
5:45-6:00	27		123		13		163	
TOTAL TRA	293		940		191		1424	1424

NO. 6 FRUITRIDGE AND POWER INN
EXISTING

SOUTHBOUND POWER INN

A.M. COUNTS	L	HR L	TH	HR TH	R	HR R	TOTAL	HOUR VOL
6:00-6:15	32	169	44	310	6	30	82	509
6:15-6:30	35	161	62	351	10	35	107	547
6:30-6:45	45	156	100	411	7	40	152	607
6:45-7:00	57	132	104	423	7	51	168	606
7:00-7:15	24	109	85	450	11	72	120	631
7:15-7:30	30	109	122	482	15	90	167	681
7:30-7:45	21	102	112	472	18	103	151	677
7:45-8:00	34	104	131	478	28	102	193	684
8:00-8:15	24	97	117	473	29	90	170	660
8:15-8:30	23		112		28		163	
8:30-8:45	23		118		17		158	
8:45-9:00	27		126		16		169	
TOTAL TRA	375		1233		192		1800	1800

WESTBOUND FRUITRIDGE

A.M. COUNTS	L	HR L	TH	HR TH	R	HR R	TOTAL	HOUR VOL
6:00-6:15	3	46	12	122	7	63	22	231
6:15-6:30	15	67	18	153	13	74	46	294
6:30-6:45	8	73	25	172	14	94	47	339
6:45-7:00	20	87	67	200	29	104	116	391
7:00-7:15	24	98	43	194	18	99	85	391
7:15-7:30	21	92	37	208	33	104	91	404
7:30-7:45	22	88	53	254	24	107	99	449
7:45-8:00	31	98	61	266	24	100	116	464
8:00-8:15	18	82	57	234	23	96	98	412
8:15-8:30	17		83		36		136	
8:30-8:45	32		65		17		114	
8:45-9:00	15		29		20		64	
TOTAL TRA	226		550		258		1034	1034

NORTHBOUND POWER INN

A.M. COUNTS	L	HR L	TH	HR TH	R	HR R	TOTAL	HOUR VOL
6:00-6:15	15	66	104	580	39	255	158	901
6:15-6:30	15	66	112	676	52	242	179	984
6:30-6:45	19	75	168	873	73	217	260	1165
6:45-7:00	17	72	196	1023	91	158	304	1253
7:00-7:15	15	89	200	1150	26	100	241	1339
7:15-7:30	24	104	309	1227	27	103	360	1434
7:30-7:45	16	110	318	1109	14	96	348	1315
7:45-8:00	34	127	323	984	33	108	390	1219
8:00-8:15	30	121	277	843	29	94	336	1058
8:15-8:30	30		191		20		241	
8:30-8:45	33		193		26		252	
8:45-9:00	28		182		19		229	
TOTAL TRA	155		1730		355		2240	2240

EASTBOUND FRUITRIDGE

A.M. COUNTS	L	HR L	TH	HR TH	R	HR R	TOTAL	HOUR VOL
6:00-6:15	19	104	57	342	16	86	92	532
6:15-6:30	21	113	59	342	17	87	97	542
6:30-6:45	26	126	99	365	19	90	144	581
6:45-7:00	38	143	127	340	34	102	199	585
7:00-7:15	28	148	57	306	17	100	102	554
7:15-7:30	34	163	82	320	20	110	136	593
7:30-7:45	43	166	74	285	31	115	148	566
7:45-8:00	43	156	93	274	32	120	168	550
8:00-8:15	43	143	71	241	27	104	141	488
8:15-8:30	37		47		25		109	
8:30-8:45	33		63		36		132	
8:45-9:00	30		60		16		106	
TOTAL TRA	252		648		186		1086	1086

NO. 6 FRUITRIDGE AT POWER INN
EXISTING

SOUTHBOUND POWER INN ROAD

P.M. COUNTS	L	HR L	TH	HR TH	R	HR R	TOTAL	HOUR VOL
3:30-3:45	27	87	246	866	57	186	330	1139
3:45-4:00	16	85	216	958	38	191	270	1234
4:00-4:15	22	82	219	951	58	193	299	1226
4:15-4:30	22	87	185	1043	33	184	240	1314
4:30-4:45	25	85	338	1197	62	187	425	1469
4:45-5:00	13	76	209	1143	40	169	262	1388
5:00-5:15	27	73	311	1169	49	163	387	1405
5:15-5:30	20		339		36		395	
5:30-5:45	16		284		44		344	
5:45-6:00	10		235		34		279	
TOTAL TRA	172		2063		373		2608	2608

WESTBOUND FRUITRIDGE

P.M. COUNTS	L	HR L	TH	HR TH	R	HR R	TOTAL	HOUR VOL
3:30-3:45	64	199	118	446	73	205	255	850
3:45-4:00	52	189	141	482	42	185	235	856
4:00-4:15	36	171	100	410	55	159	191	740
4:15-4:30	47	164	87	428	35	129	169	721
4:30-4:45	54	139	154	419	53	122	261	680
4:45-5:00	34	121	69	353	16	81	119	555
5:00-5:15	29	103	118	332	25	83	172	518
5:15-5:30	22		78		28		128	
5:30-5:45	36		88		12		136	
5:45-6:00	16		48		18		82	
TOTAL TRA	338		865		327		1530	1530

NORTBOUND POWER INN

P.M. COUNTS	L	HR L	TH	HR TH	R	HR R	TOTAL	HOUR VOL
3:30-3:45	55	198	183	642	29	82	267	922
3:45-4:00	52	187	152	679	15	83	219	949
4:00-4:15	57	161	162	663	15	80	234	904
4:15-4:30	34	152	145	693	23	86	202	931
4:30-4:45	44	151	220	676	30	81	294	908
4:45-5:00	26	154	136	566	12	66	174	786
5:00-5:15	48	161	192	568	21	72	261	801
5:15-5:30	33		128		18		179	
5:30-5:45	47		110		15		172	
5:45-6:00	33		138		18		189	
TOTAL TRA	349		1318		163		1830	1830

EASTBOUND FRUITRIDGE

P.M. COUNTS	L	HR L	TH	HR TH	R	HR R	TOTAL	HOUR VOL
3:30-3:45	31	144	93	305	48	155	172	604
3:45-4:00	34	151	78	296	43	162	155	609
4:00-4:15	41	145	74	272	33	153	148	570
4:15-4:30	38	133	60	273	31	168	129	574
4:30-4:45	38	119	84	284	55	170	177	573
4:45-5:00	28	106	54	276	34	145	116	527
5:00-5:15	29	102	75	266	48	153	152	521
5:15-5:30	24		71		33		128	
5:30-5:45	25		76		30		131	
5:45-6:00	24		44		42		110	
TOTAL TRA	263		589		325		1177	1177

NO. 7 FRUITRIDGE AND 83RD
EXISTING

SOUTHBOUND 83RD

A.M. COUNTS	L	HR L	TH	HR TH	R	HR R	TOTAL	HOUR VOL
6:00-6:15	1	2	0	0	4	16	5	18
6:15-6:30	0	2	0	0	3	20	3	22
6:30-6:45	1	3	0	0	4	21	5	24
6:45-7:00	0	3	0	0	5	22	5	25
7:00-7:15	1	5	0	0	8	20	9	25
7:15-7:30	1	8	0	0	4	16	5	24
7:30-7:45	1	8	0	0	5	22	6	30
7:45-8:00	2	8	0	0	3	23	5	31
8:00-8:15	4	7	0	0	4	26	8	33
8:15-8:30	1		0		10		11	
8:30-8:45	1		0		6		7	
8:45-9:00	1		0		6		7	
TOTAL TRA	14		0		62		76	76

WESTBOUND FRUITRIDGE

A.M. COUNTS	L	HR L	TH	HR TH	R	HR R	TOTAL	HOUR VOL
6:00-6:15	0	0	59	344	0	17	59	361
6:15-6:30	0	0	72	373	2	21	74	394
6:30-6:45	0	0	94	395	11	25	105	420
6:45-7:00	0	0	119	428	4	16	123	444
7:00-7:15	0	0	88	415	4	16	92	431
7:15-7:30	0	0	94	436	6	15	100	451
7:30-7:45	0	0	127	454	2	13	129	467
7:45-8:00	0	0	106	440	4	13	110	453
8:00-8:15	0	0	109	412	3	12	112	424
8:15-8:30	0		112		4		116	
8:30-8:45	0		113		2		115	
8:45-9:00	0		78		3		81	
TOTAL TRA	0		1171		45		1216	1216

DOES NOT APPLY

A.M. COUNTS	L	HR L	TH	HR TH	R	HR R	TOTAL	HOUR VOL
6:00-6:15		0		0		0	0	0
6:15-6:30		0		0		0	0	0
6:30-6:45		0		0		0	0	0
6:45-7:00		0		0		0	0	0
7:00-7:15		0		0		0	0	0
7:15-7:30		0		0		0	0	0
7:30-7:45		0		0		0	0	0
7:45-8:00		0		0		0	0	0
8:00-8:15		0		0		0	0	0
8:15-8:30							0	
8:30-8:45							0	
8:45-9:00							0	
TOTAL TRAFFIC							0	0

EASTBOUND FRUITRIDGE

A.M. COUNTS	L	HR L	TH	HR TH	R	HR R	TOTAL	HOUR VOL
6:00-6:15	2	69	81	476	0	0	83	545
6:15-6:30	12	80	64	476	0	0	76	556
6:30-6:45	27	78	132	502	0	0	159	580
6:45-7:00	28	62	199	487	0	0	227	549
7:00-7:15	13	43	81	400	0	0	94	443
7:15-7:30	10	46	90	428	0	0	100	474
7:30-7:45	11	43	117	423	0	0	128	466
7:45-8:00	9	42	112	385	0	0	121	427
8:00-8:15	16	42	109	355	0	0	125	397
8:15-8:30	7		85		0		92	
8:30-8:45	10		79		0		89	
8:45-9:00	9		82		0		91	
TOTAL TRA	112		876		0		988	988

NO. 7 FRUITRIDGE AND 83RD
EXISTING

SOUTHBOUND 83RD

P.M. COUNTS	L	HR L	TH	HR TH	R	HR R	TOTAL	HOUR VOL
3:30-3:45	4	14	0	0	27	71	31	85
3:45-4:00	5	13	0	0	21	56	26	69
4:00-4:15	3	11	0	0	14	47	17	58
4:15-4:30	2	11	0	0	9	42	11	53
4:30-4:45	3	11	0	0	12	36	15	47
4:45-5:00	3	8	0	0	12	43	15	51
5:00-5:15	3	7	0	0	9	39	12	46
5:15-5:30	2		0		3		5	
5:30-5:45	0		0		19		19	
5:45-6:00	2		0		8		10	
TOTAL TRA	25		0		107		132	132

WESTBOUND FRUITRIDGE

P.M. COUNTS	L	HR L	TH	HR TH	R	HR R	TOTAL	HOUR VOL
3:30-3:45	0	0	215	632	2	8	217	640
3:45-4:00	0	0	128	589	5	8	133	597
4:00-4:15	0	0	152	555	0	3	152	558
4:15-4:30	0	0	137	562	1	3	138	565
4:30-4:45	0	0	172	543	2	3	174	546
4:45-5:00	0	0	94	479	0	1	94	480
5:00-5:15	0	0	159	452	0	1	159	453
5:15-5:30	0		118		1		119	
5:30-5:45	0		108		0		108	
5:45-6:00	0		67		0		67	
TOTAL TRA	0		1175		11		1186	1186

DOES NOT APPLY

P.M. COUNTS	L	HR L	TH	HR TH	R	HR R	TOTAL	HOUR VOL
3:30-3:45		0		0		0	0	0
3:45-4:00		0		0		0	0	0
4:00-4:15		0		0		0	0	0
4:15-4:30		0		0		0	0	0
4:30-4:45		0		0		0	0	0
4:45-5:00		0		0		0	0	0
5:00-5:15		0		0		0	0	0
5:15-5:30							0	
5:30-5:45							0	
5:45-6:00							0	
TOTAL TRA	0		0		0		0	0

EASTBOUND FRUITRIDGE

P.M. COUNTS	L	HR L	TH	HR TH	R	HR R	TOTAL	HOUR VOL
3:30-3:45	7	22	174	538	0	0	181	560
3:45-4:00	5	18	116	522	0	0	121	540
4:00-4:15	5	16	111	506	0	0	116	522
4:15-4:30	5	13	137	515	0	0	142	528
4:30-4:45	3	9	158	491	0	0	161	500
4:45-5:00	3	10	100	414	0	0	103	424
5:00-5:15	2	11	120	398	0	0	122	409
5:15-5:30	1		113		0		114	
5:30-5:45	4		81		0		85	
5:45-6:00	4		84		0		88	
TOTAL TRA	31		1029		0		1060	1060

NO. 8 FRUITRIDGE AND S. WATT
EXISTING

SOUTHBOUND S. WATT

A.M. COUNTS	L	HR L	TH	HR TH	R	HR R	TOTAL	HOUR VOL
6:00-6:15	0	3	35	296	50	350	85	649
6:15-6:30	1	5	72	360	82	370	155	735
6:30-6:45	0	7	76	388	86	377	162	772
6:45-7:00	2	9	113	409	132	365	247	783
7:00-7:15	2	8	99	410	70	314	171	732
7:15-7:30	3	9	100	403	89	331	192	743
7:30-7:45	2	7	97	382	74	317	173	706
7:45-8:00	1	7	114	377	81	325	196	709
8:00-8:15	3	10	92	331	87	296	182	637
8:15-8:30	1		79		75		155	
8:30-8:45	2		92		82		176	
8:45-9:00	4		68		52		124	
TOTAL TRA	21		0		960		2018	981

WESTBOUND FRUITRIDGE

A.M. COUNTS	L	HR L	TH	HR TH	R	HR R	TOTAL	HOUR VOL
6:00-6:15	0	10	16	96	0	2	16	108
6:15-6:30	4	12	19	99	1	3	24	114
6:30-6:45	5	15	26	106	0	3	31	124
6:45-7:00	1	15	35	115	1	8	37	138
7:00-7:15	2	22	19	114	1	11	22	147
7:15-7:30	7	30	26	134	1	19	34	183
7:30-7:45	5	26	35	131	5	20	45	177
7:45-8:00	8	22	34	112	4	20	46	154
8:00-8:15	10	21	39	94	9	16	58	131
8:15-8:30	3		23		2		28	
8:30-8:45	1		16		5		22	
8:45-9:00	7		16		0		23	
TOTAL TRA	53		304		29		386	386

NORTHBOUND S. WATT

A.M. COUNTS	L	HR L	TH	HR TH	R	HR R	TOTAL	HOUR VOL
6:00-6:15	4	51	66	342	4	12	74	405
6:15-6:30	13	62	69	382	2	10	84	454
6:30-6:45	17	62	92	435	4	10	113	507
6:45-7:00	17	52	115	477	2	7	134	536
7:00-7:15	15	47	106	477	2	10	123	534
7:15-7:30	13	38	122	485	2	11	137	534
7:30-7:45	7	31	134	474	1	15	142	520
7:45-8:00	12	38	115	443	5	17	132	498
8:00-8:15	6	42	114	406	3	14	123	462
8:15-8:30	6		111		6		123	
8:30-8:45	14		103		3		120	
8:45-9:00	16		78		2		96	
TOTAL TRA	98		819		22		939	939

EASTBOUND FRUITRIDGE

A.M. COUNTS	L	HR L	TH	HR TH	R	HR R	TOTAL	HOUR VOL
6:00-6:15	25	88	5	43	2	14	32	145
6:15-6:30	19	100	6	49	0	20	25	169
6:30-6:45	25	116	16	61	2	25	43	202
6:45-7:00	19	125	16	78	10	27	45	230
7:00-7:15	37	134	11	83	8	21	56	238
7:15-7:30	35	126	18	87	5	19	58	232
7:30-7:45	34	122	33	87	4	21	71	230
7:45-8:00	28	140	21	69	4	29	53	238
8:00-8:15	29	150	15	58	6	32	50	240
8:15-8:30	31		18		7		56	
8:30-8:45	52		15		12		79	
8:45-9:00	38		10		7		55	
TOTAL TRA	222		126		35		383	383

NO. 8 FRUITRIDGE AND S. WATT
EXISTING

SOUTHBOUND S. WATT

P.M. COUNTS	L	HR L	TH	HR TH	R	HR R	TOTAL	HOUR VOL
3:30-3:45	3	14	85	382	42	216	130	612
3:45-4:00	5	12	95	404	62	221	162	637
4:00-4:15	4	12	100	425	67	196	171	633
4:15-4:30	2	10	102	451	45	196	149	657
4:30-4:45	1	12	107	472	47	204	155	688
4:45-5:00	5	12	116	500	37	212	158	724
5:00-5:15	2	8	126	477	67	194	195	679
5:15-5:30	4		123		53		180	
5:30-5:45	1		135		55		191	
5:45-6:00	1		93		19		113	
TOTAL TRA	26		854		420		1300	1300

WESTBOUND FRUITRIDGE

P.M. COUNTS	L	HR L	TH	HR TH	R	HR R	TOTAL	HOUR VOL
3:30-3:45	5	12	20	74	4	14	29	100
3:45-4:00	3	11	12	76	2	13	17	100
4:00-4:15	2	12	21	82	6	16	29	110
4:15-4:30	2	13	21	79	2	12	25	104
4:30-4:45	4	14	22	77	3	11	29	102
4:45-5:00	4	12	18	69	5	11	27	92
5:00-5:15	3	10	18	61	2	8	23	79
5:15-5:30	3		19		1		23	
5:30-5:45	2		14		3		19	
5:45-6:00	2		10		2		14	
TOTAL TRA	26		151		25		202	202

NORTHBOUND S. WATT

P.M. COUNTS	L	HR L	TH	HR TH	R	HR R	TOTAL	HOUR VOL
3:30-3:45	10	39	117	433	2	23	129	495
3:45-4:00	8	40	99	431	13	34	120	505
4:00-4:15	10	41	114	456	1	31	125	528
4:15-4:30	11	35	103	454	7	37	121	526
4:30-4:45	11	29	115	435	13	33	139	497
4:45-5:00	9	21	124	434	10	25	143	480
5:00-5:15	4	20	112	386	7	20	123	426
5:15-5:30	5		84		3		92	
5:30-5:45	3		114		5		122	
5:45-6:00	8		76		5		89	
TOTAL TRA	68		868		56		992	992

EASTBOUND FRUITRIDGE

P.M. COUNTS	L	HR L	TH	HR TH	R	HR R	TOTAL	HOUR VOL
3:30-3:45	82	312	23	88	16	67	121	467
3:45-4:00	77	307	17	103	15	76	109	486
4:00-4:15	80	297	23	116	19	74	122	487
4:15-4:30	73	282	25	118	17	79	115	479
4:30-4:45	77	264	38	121	25	84	140	469
4:45-5:00	67	244	30	105	13	66	110	415
5:00-5:15	65	201	25	91	24	55	114	347
5:15-5:30	55		28		22		105	
5:30-5:45	57		22		7		86	
5:45-6:00	24		16		2		42	
TOTAL TRA	576		209		151		936	936

Appendix J
Land Ownership by Parcel Number

Introduction

The following Appendix indicates property owners, by parcel numbers, in the project study area. The map at the end of the appendix provides a visual aid in determining the ownership of a specific parcel of land.

The list of land owners follows the maps and is fairly easy to read. The first three numbers represent the Parcel Book number. For example, 079 indicates that the land in question has been assigned to Parcel Book 79.

Next is a series of four numbers. For example, 0241 indicates that the piece of land in question can be found on page 24 of Parcel Book 79. the "1" at the end of the string of numbers represents the area or section of land on page 24. Some pages may have several sections such as 0241, 0242, 0243, etc. All of the ownerships can be identified by referring to page 24. Some pages may have only owe owner and will not have a numbering sequence. An example would be 0240. Land owned by the US Army Depot is an example of a large piece of land that is not sectioned on a page.

The next three numbers represent the individual lot of land in question. For example, 079-0241-004 is read as follows: Parcel Book 79, page 24, section 1, lot 4.

Finally, the last four numbers currently have very limited applications and are not relevant to any pieces of land on the project study area map. The sequence of numbers is reserved for future designations.

By referring to the map and listing of property owners, it can be seen that the example -- 079-0241-004-0000 -- belongs to the Southern Pacific Railroad Company.

Book 79

079-0241-001-0000 M2 S
Shaw, Maurice/Jacqueline
R. C. Powell Prop.
3610 American Riv. Dr. 150
Sacramento, CA 95864

079-0241-002-0000 M2 S
Shaw, Maurice/Jacqueline
R. C. Powell Prop.
3610 American Riv. Dr. 150
Sacramento, CA 95864

079-0241-003-0000 M2 S
Shaw, Maurice/Jacqueline
R. C. Powell Prop.
3610 American Riv. Dr. 150
Sacramento, CA 95864

079-0241-004-0000 M2 S
Southern Pacific Co.

Sacramento, CA 95826

079-0241-006-0000 M2 S
Saetes, Joan A./et al.
2940 Ramona Ave.
Sacramento, CA 95826

079-0241-007-0000 M2 S
Shaw, Maurice/Jacqueline
R. C. Powell Prop.
3610 American Riv. Dr.
Sacramento, CA 95864

079-0242-002-0000 M2 S
Wisner, John Nelson
7430 Brighton Ave.
Sacramento, CA 95826

079-0242-004-0000 M2 S
Hart, Robert L./Rosemary/et al.
2945 Ramona Ave.
Sacramento, CA 95826

079-0242-005-0000 M2 S
Tateishi, Seiko/et al.
39 Mossglen Circle
Sacramento, CA 95826

079-0242-006-0000 M2 S
Sacramento Regional Transit Dist.
0 Brighton Ave.
Sacramento, CA 95826

079-0242-007-0000 M2 S
City of Sacramento
Room 207 City Hall
Sacramento, CA 95814

079-0242-008-0000 M2 S
Tateishi, Seiko/et al.
39 Mossglen Circle
Sacramento, CA 95826

079-0251-003-0000 M2 S
Casselman, William C./Sally K.
2900 Heinz St.
Sacramento, CA 95826

079-0251-005-0000 M2 S
Brown, Clifford A./Cynthia A.
1411 Los Molinos Way
Sacramento, CA 95864

079-0251-007-0000 M2 S
Brown, Clifford A./Cynthia A.
1411 Los Molinos Way
Sacramento, CA 95864

079-0251-008-0000 M2 S
Pesce, William J. II/Elaine P.
705 Dunbarton Circle
Sacramento, CA 95825

079-0251-009-0000 M2 S
Pesce, William J. II
705 Dunbarton Circle
Sacramento, CA 95825

079-0251-010-0000 M2 S
Petta, Vito/Leone L.
2904 Hunt St.
Sacramento, CA 95826

079-0251-011-0000 M2 S
Northern California Youth Authority
Brighton Ave.
Sacramento, CA 95826

079-0251-012-0000 M2 S
Casselman, William C./Sally K.
2900 Heinz St.
Sacramento, CA 95826

079-0251-014-0000 M2 S
Marsalla, Fernando
2867 Heinz St.
Sacramento, CA 95826

079-0251-015-0000 M2 S
Walker, Robert A./Victoria R.
9860 Sheldon Rd.
Elk Grove, CA 95624

079-0252-001-0000 M2 S
Wisner, John N.
7822 Brighton Ave.
Sacramento, CA 95826

079-0252-002-0000 M2 S
Trejo, Johnny L.
103 Murata Ave.
Sacramento, CA 95823

079-0252-003-0000 M2 S
State of California
Del Monte Ave.
Sacramento, CA 95826

079-0252-004-0000 M2 S
State of California
Del Monte Ave.
Sacramento, CA 95826

079-0260-001-0000 M2 S
Northern California Youth Authority
Ramona Ave.
Sacramento, CA 95826

079-0260-005-0000 M2 S
Soper, Robert J./Carlene D.
7717 Cucamonga Ave.
Sacramento, CA 95826

079-0260-006-0000 M2 S
Herrera, Dorothy/Tr
1205 Greenhills Rd.
Sacramento, CA 95864

079-0260-008-0000 M2 S
City of Sacramento
Real Estate Div.
Room 207 City Hall
Sacramento, CA 95814

079-0260-009-0000 M2 S
City of Sacramento
Real Estate Div.
Room 207 City Hall
Sacramento, CA 95814

079-0260-011-0000 M2 S
Geremia Companies
1327 65th St.
Sacramento, CA 95819

079-0260-012-0000 M2 S
Geremia Companies
1327 65th St.
Sacramento, CA 95819

079-0270-001-0000 M2 S
State of California
Brighton Ave.
Sacramento, CA 95826

079-0270-002-0000 M2 S
American Industries Inc.
4033 N.W. Yeon Ave.
Portland, OR 97210

079-0270-003-0000 M2 S
American Industries Inc.
P.O. Box 10086
Portland, OR 97210

079-0270-004-0000 M2 S
Edelmayer/Haberman
3030 Power Inn Rd.
Sacramento, CA 95826

079-0270-005-0000 M2 S
Edelmayer/Haberman
3030 Power Inn Rd.
Sacramento, CA 95826

079-0270-006-0000 M2 S
Greule, Henry J./Matilda M.
5833 20th Ave.
Sacramento, CA 95820

079-0270-011-0000 M2 S
City of Sacramento
Real Estate Div.
Room 207 City Hall
Sacramento, CA 95814

079-0270-012-0000 M2 S
Rustic Brick Mfg. Co. Inc.
3150 Power Inn Rd.
Sacramento, CA 95826

079-0270-013-0000 M2 S
Rustic Brick Mfg. Co. Inc.
3150 Power Inn Rd.
Sacramento, CA 95826

079-0270-014-0000 M2 S
City of Sacramento
Real Estate Div.
Room 207 City Hall
Sacramento, CA 95814

079-0270-015-0000 M2 S
Williams, Kenneth A., Jr./Corsby, Billy
P.O. Box 41853
Sacramento, CA 95841

079-0270-016-0000 M2 S
City of Sacramento
Real Estate Div.
Room 207 City Hall
Sacramento, CA 95814

079-0270-017-0000 M2 S
Williams, Kenneth A., Jr./Corsby, Billy
P.O. Box 41853
Sacramento, CA 95841

079-0281-001-0000 M2 S
Sperry, Clark G./Ann L.
6344 Palm Dr.
Carmichael, CA 95608

079-0281-002-0000 M2 S
Geremia Companies
1327 65th St.
Sacramento, CA 95819

079-0281-003-0000 M2 S
Geremia Companies
1327 65th St.
Sacramento, CA 95819

079-0281-010-0000 M2 S
Southern Pacific Transportation Co.

Sacramento, CA 95826

079-0281-014-0000 M2 S
Cross, William R., Jr./Margaret D.
3300 Ramona Ave.
Sacramento, CA 95826

079-0281-015-0000 M2 S
Cross, William R., Jr./Margaret D.
3300 Ramona
Sacramento, CA 95826

079-0281-016-0000 M2 S
Bradshaw, Judy L./Patricia L. Wheeler/
Melanie Soares
8952 Sutters Gold Dr.
Sacramento, CA 95826

079-0281-017-0000 M2 S
Keller, Henry/Lillian G.
13116 Pellandini Rd.
Galt, CA 95632

079-0281-018-0000 M2 S
Kelbro Corp.
8952 Sutter Gold Dr.
Sacramento, CA 95826

079-0281-019-0000 M2 S
City of Sacramento
Real Estate Div.
Room 207 City Hall
Sacramento, CA 95814

079-0281-020-0000 M2 S
Kelbro Corp.
8952 Sutters Gold Dr.
Sacramento, CA 95826

079-0281-021-0000 M2 S
City of Sacramento
Real Estate Div.
Room 207 City Hall
Sacramento, CA 95814

079-0281-022-0000 M2 S
Keller, Henry/Lillian G.
13116 Pellandini Rd.
Galt, CA 95632

079-0281-023-0000 M2 S
City of Sacramento
927 10th St. 200
Sacramento, CA 95814

079-0281-024-0000 M2 S
Cross, William R., Jr./Margaret D.
519 Garden St.
Sacramento, CA 95815

079-0282-001-0000 M2 S
Utility Products Inc./Industrial Ladder Company
1212 Powell St.
Oakland, CA 94608

079-0282-002-0000 M2 S
Lukenbill-Ellis Properties
3600 Power Inn Rd. 140
Sacramento, CA 95826

079-0282-007-0000 M2 S
Simas Enterprises
3550 Power Inn Rd.
Sacramento, CA 95826

079-0282-013-0000 M2 S
Stein, Lewis A./Jean L.
3881 Crondall Dr.
Sacramento, CA 95864

079-0282-015-0000 M2 S
Bechtel Investments Inc.
W. R. Matteson
P.O. Box 3965
San Francisco, CA 94119

079-0282-016-0000 M2 S
Bechtel Investments Inc.
W. R. Matteson
P.O. Box 3965
San Francisco, CA 94119

079-0282-017-0000 M2 S
Bechtel Investments Inc.
W. R. Matteson
P.O. Box 3965
San Francisco, CA 94119

079-0262-018-0000 M2 S
Simas Enterprises
3550 Power Inn Rd.
Sacramento, CA 95826

079-0282-019-0000 M2 S
Inderkum, Carl P., Jr.
7949 Ramona Ave.
Sacramento, CA 95826

079-0282-020-0000 M2 S
Simas Enterprises
3500 Power Inn Rd.
Sacramento, CA 95826

079-0282-021-0000 M2 S
JJKD Enterprises
David G. Simas
3550 Power Inn Rd.
Sacramento, CA 95826

079-0282-023-0000 M2 S
City of Sacramento
Room 207 City Hall
Sacramento, CA 95814

079-0282-024-0000 M2 S
Stein Electric Co.
3881 Crondall Dr.
Sacramento, CA 95864

079-0282-025-0000 M2 S
City of Sacramento
Real Estate Div.
Room 207 City Hall
Sacramento, CA 95814

079-0282-026-0000 M2 S
Williams, Kenneth A., Jr.
7915 Cucamonga Ave.
Sacramento, CA 95826

079-0282-027-0000 M2 S
Western KU-MAC
3300 Power Inn Rd.
Sacramento, CA 95826

079-0282-028-0000 M2 S
City of Sacramento
Real Estate Div.
Room 207 City Hall
Sacramento, CA 95814

079-0291-001-0000 M2 S
Granite Construction (GRA)
P.O. Box 50085
Watsonville, CA 95077

079-0291-002-0000 M2 S
Granite Construction (GRA)
P.O. Box 50085
Watsonville, CA 95077

079-0291-003-0000 M2 S
Granite Construction (GRA)
P.O. Box 50085
Watsonville, CA 95077

079-0291-004-0000 M2 S
Granite Construction (GRA)
P.O. Box 50085
Watsonville, CA 95077

079-0291-005-0000 M2 S
Granite Construction (GRA)
P.O. Box 50085
Watsonville, CA 95077

079-0291-006-0000 M2 S
Granite Construction (GRA)
P.O. Box 50085
Watsonville, CA 95077

079-0291-007-0000 M2 S
Lone Star California
P.O. Box 5252
Pleasanton, CA 94566

079-0291-008-0000 M2 S
Lone Star California
P.O. Box 5252
Pleasanton, CA 94566

079-0291-009-0000 M2 S
Lone Star California
P.O. Box 5252
Pleasanton, CA 94566

079-0291-010-0000 M2 S
Pacific Gas/Electric Co.
John R. Johnson
77 Beale St. 8758
San Francisco, CA 94106

079-0300-003-0000 M2 S
Southern Pacific Transportation Co.

Sacramento, CA 95826

079-0300-006-0000 M2 S
Messner, James/Della
K/M Industries Inc.
P.O. Box 2996
Turlock, CA 95381

079-0300-008-0000 M2 S
Lukenbill Enterprises
3600 Power Inn Rd.
Sacramento, CA 95826

079-0300-009-0000 M2 S
Sacramento Utilities Supply Co.
7832 Ramona Ave.
Sacramento, CA 95826

079-0300-012-0000 M2 S
Gabriel/Zilha Casillas Family 1990 Revocable Trust/et al.
5301 Carneia Court
Carmichael, CA 95608

079-0300-014-0000 M2 S
Sacramento Ford Tractor
3850 Power Inn Rd.
Sacramento, CA 95826

079-0300-015-0000 M2 S
Cozzitorto, Michael C./Rena C.
7219 Pinegrove Way
Folsom, CA 95630

079-0300-016-0000 M2 S
Geremia Bros.
1327 65th St.
Sacramento, CA 95819

079-0300-017-0000 M2 S
Laurelwood Investors
Sierra Management Services
7916 Alta Sunrise Dr. 250
Citrus Heights, CA 95610

079-0300-018-0000 M2 S
Sacramento Utilities Supply Co.
3124 Auburn Blvd.
Sacramento, CA 95821

079-0300-019-0000 M2 S
City of Sacramento
Real Estate Div.
Room 207 City Hall
Sacramento, CA 95814

079-0300-020-0000 M2 S
City of Sacramento
Real Estate Div.
Room 207 City Hall
Sacramento, CA 95814

079-0300-021-0000 M2 S
Messner, James/Della
K/M Industries Inc.
P.O. Box 2996
Turlock, CA 95381

079-0310-002-0000 M2 S
Joseph Kapan 1990 Revocable Trust/et al.
8240 Folsom Blvd.
Sacramento, CA 95826

079-0310-003-0000 M2 S
Joseph Kapan 1990 Revocable Trust/et al.
8240 Folsom Blvd.
Sacramento, CA 95826

079-0310-006-0000 M2 S
Sacramento Regional Transit Dist.
Power Inn Rd.
Sacramento, CA 95826

079-0310-006-0080 M2 S
Pacific Gas/Electric Co.
John R. Johnson
77 Beale St. 8758
San Francisco, CA 94106

079-0310-013-0000 M2 S
Granite Construction (GRA)
P.O. Box 50085
Watsonville, CA 95077

079-0310-015-0000 M2 S
Granite Construction (GRA)
P.O. Box 50085
Watsonville, CA 95077

079-0310-016-0000 M2 S
Granite Construction (GRA)
P.O. Box 50085
Watsonville, CA 95077

079-0310-020-0080 M2 S
Southern Pacific Transportation
Jackson Rd.
Sacramento, CA 95826

079-0310-022-0000 M2 S
Granite Construction (GRA)
P.O. Box 50085
Watsonville, CA 95077

079-0310-024-0000 M2 S
Granite Construction (GRA)
P.O. Box 50085
Watsonville, CA 95077

079-0310-025-0000 M2 S
City of Sacramento
14th Ave.
Sacramento, CA 95826

079-0310-026-0000 M2 S
Granite Construction (GRA)
P.O. Box 50085
Watsonville, CA 95077

079-0310-028-0000 M2 S
Granite Construction (GRA)
P.O. Box 50085
Watsonville, CA 95077

079-0310-028-0080 M2 S
Southern Pacific Ind. Develop Co.
1 Market St.
San Francisco, CA 94105

079-0310-029-0000 M2 S
Nevada Cement Company
P.O. Box 840
Fermley, NV 89408

079-0310-030-0000 M2 S
Nevada Cement Company
P.O. Box 840
Fermley, NV 89408

079-0310-030-0080 M2 S
SPID Co. (Santa Fe Southern Pacific Co.)
1 Market Plaza
San Francisco, CA 94105

079-0310-034-0000 M2 S
Perkins, Thomas C.
Buzz Oates Ent.
8615 Elder Creek Rd. 100
Sacramento, CA 95828

079-0310-035-0000 M2 S
Perkins, Thomas C.
Buzz Oates Ent.
8615 Elder Creek Rd. 100
Sacramento, CA 95828

079-0310-036-0000 M2 S
Perkins, Thomas C.
Buzz Oates Ent.
8615 Elder Creek Rd. 100
Sacramento, CA 95828

079-0310-037-0000 M2 S
Pacific Gas/Electric Co.
John R. Johnson
77 Beale St. 8758
San Francisco, CA 94106

079-0310-038-0000 M2 S
Sacramento Regional Transit District
P.O. Box 2110
Sacramento, CA 95812

079-0310-038-0080 M2 S
Pacific Gas/Electric Co.
John R. Johnson
77 Beale St. 8758
San Francisco, CA 94106

079-0310-039-0000 M 2
Perkins, Thomas C.
8401 Jackson Rd.
Sacramento, CA 95826

079-0310-040-0000 M2 S
Southern Pacific Transportation Co.
Regional Transit
P.O. Box 2110
Sacramento, CA 95812

079-0310-041-0000 M2 S
Southern Pacific Transportation Co.
Regional Transit
P.O. Box 2110
Sacramento, CA 95812

079-0310-042-0000 M2 S
Southern Pacific Transportation Co.
Regional Transit
P.O. Box 2110
Sacramento, CA 95812

079-0310-043-0000 M2 S
Sacramento Regional Transit District
P.O. Box 2110
Sacramento, CA 95810

079-0310-043-0080 M2 S
Southern Pacific Transportation Co.
Regional Transit
P.O. Box 2110
Sacramento, CA 95812

079-0310-044-0000 M2 S
Sacramento Regional Transit District
P.O. Box 2110
Sacramento, CA 95810

079-0310-044-0080 M2 S
Southern Pacific Transportation Co.
Regional Transit
P.O. Box 2110
Sacramento, CA 95812

079-0310-045-0000 M2 S
Sacramento Regional Transit District
P.O. Box 2110
Sacramento, CA 95810

079-0310-045-0080 M2 S
Southern Pacific Transportation Co.
Regional Transit
P.O. Box 2110
Sacramento, CA 95812

079-0320-001-0000 M2 S
Perkins, Thomas C.
926 J Bldg. 608
Sacramento, CA 95814

079-0320-002-0000 M2 S
Perkins, Thomas C.
926 J Bldg. 608
Sacramento, CA 95814

079-0320-003-0000 M2 S
Hironaka, Mitsuji
6 Parklite Circle
Sacramento, CA 95831

079-0320-004-0000 M2 S
Nevada Cement Company
P.O. Box 840
Fermley, NV 89408

079-0320-005-0000 M2 S
Nevada Cement Company
P.O. Box 840
Fermley, NV 89408

079-0320-006-0000 M2 S
Chasko Family 1990 Revocable Living Trust/
et al.
8354 Folsom Blvd.
Sacramento, CA 95826

079-0320-007-0000 M2 S
Perkins Lumber/Supply Co./et al.
926 J St. 608
Sacramento, CA 95814

079-0320-008-0000 M2 S
Stephen Persic Family Revocable Living Trust
1335 39th St.
Sacramento, CA 95816

079-0320-009-0000 M2 S
Philipps, Frank J./Sally L.
8524 Bennington Way
Sacramento, CA 95826

079-0320-014-0000 M2 S
Ramos, David L./Carmen R.
8397 Jackson Rd.
Sacramento, CA 95826

079-0320-016-0000 M2 S
Manthei, David/Ruth
9304 Quesdada Way
Sacramento, CA 95826

079-0320-017-0000 M2 S
Manthei, David T./Ruth M.
9304 Quesdada Way
Sacramento, CA 95826

Book 78

078-0201-004-0000 M2 X
Southern Pacific Transportation Co.

Sacramento, CA 95826

078-0201-006-0000 M2 X
Apted, Wilbur Bruce/Josephine Mae
45323 Pk Sierra Dr. 565
Coarsegold, CA 93614

078-0201-007-0000 M2 X
Davis, Sally R./et al.
Nancy C. Cleavinger
5970 1st Ave.
Sacramento, CA 95817

078-0201-008-0000 M 2
Teichert Land Co.
P.O. Box 13308
Sacramento, CA 95813

078-0201-009-0000 M 2
Teichert Land Co.
P.O. Box 13308
Sacramento, CA 95813

078-0201-013-0000 M2 X
Davis, Sally R./et al.
Nancy C. Cleavinger
5970 1st Ave.
Sacramento, CA 95817

078-0201-014-0000 M2 X
Davis, Sally R./et al.
Nancy C. Cleavinger
5970 1st Ave.
Sacramento, CA 95817

078-0201-018-0000 M 2 T
Teichert Land Co.
P.O. Box 13308
Sacramento, CA 95813

078-0201-019-0000 M 2
Teichert Land Co.
P.O. Box 13308
Sacramento, CA 95813

078-0202-001-0000 M2 X
Davis, Sally R./et al.
Nancy C. Cleavinger
5970 1st Ave.
Sacramento, CA 95817

078-0202-002-0000 M2 X
Davis, Robert E./et al.
Nancy C. Cleavinger
5970 1st Ave.
Sacramento, CA 95817

078-0202-003-0000 M2 X
Davis, Sally R./et al.
Nancy C. Cleavinger
5970 1st Ave.
Sacramento, CA 95817

078-0202-003-0080 M2 X
Davis, Earl P./Byron B.
1501 Parkhead Way
Sacramento, CA 95822

078-0202-006-0000 M2 X
Davis, Sally R./et al.
Nancy C. Cleavinger
5970 1st Ave.
Sacramento, CA 95817

078-0202-007-0000 M2 X
Teichert Land Co.
P.O. Box 13308
Sacramento, CA 95813

078-0202-008-0000 M2 X
Teichert Land Co.
P.O. Box 13308
Sacramento, CA 95813

078-0202-009-0000
Teichert Land Co.
P.O. Box 13308
Sacramento, CA 95813

M2 X

078-0202-010-0000
Teichert Land Co.
P.O. Box 13308
Sacramento, CA 95813

M2 X

078-0202-011-0000
Maldonado, Robert/Monica
3940 Marsalla Court
Sacramento, CA 95820

M2 X

078-0202-012-0000
Maldonado, Robert/Monica
3940 Marsalla Court
Sacramento, CA 95820

M2 X

078-0202-013-0000
Teichert Land Co.
P.O. Box 13308
Sacramento, CA 95813

M2 X

078-0202-014-0000
Davis, Sally R./et al.
Nancy C. Cleavinger
5970 1st Ave.
Sacramento, CA 95817

M2 X

078-0202-015-0000
Davis, Sally R./et al.
Nancy C. Cleavinger
5970 1st Ave.
Sacramento, CA 95817

M2 X

078-0202-015-0080
Davis, Robert Earl/et al.
T. J. Labhard/Att
1127 11th St.
Sacramento, CA 95814

M2 X

078-0202-016-0000
G. C. Brown Family Trust/et al.
5970 First Ave.
Sacramento, CA 95817

M2 X

078-0202-017-0000
Davis, Sally R./et al.
Nancy C. Cleavinger
5970 1st Ave.
Sacramento, CA 95817

M2 X

Book 61

061-0010-001-0000 M2
Southern Pacific Transportation Co.

Sacramento, CA 95826

061-0010-002-0000 M2
Southern Pacific Transportation Co.

Sacramento, CA 95826

061-0010-003-0000 M2
Southern Pacific Transportation Co.

Sacramento, CA 95826

061-0010-004-0000 M2
Southern Pacific Transportation Co.

Sacramento, CA 95826

061-0010-005-0000 M2
Southern Pacific Transportation Co.

Sacramento, CA 95826

061-0010-006-0000 M2 S
Cent Calif Traction Co.

Sacramento, CA 95826

061-0010-009-0000 M2 S
Cent Calif Traction Co.

Sacramento, CA 95826

061-0010-011-0000
Southern Pacific Transportation Co. M2 S

Sacramento, CA 95826

061-0010-013-0000
Southern Pacific Transportation Co. M2 S

Sacramento, CA 95826

061-0010-014-0000 M2 S
Southern Pacific Transportation Co.

Sacramento, CA 95826

061-0010-015-0000 M2 S
Southern Pacific Transportation Co.

Sacramento, CA 95826

061-0010-016-0000 M2 S
Southern Pacific Transportation Co.

Sacramento, CA 95826

061-0010-017-0000 M2 S
Southern Pacific Transportation Co.

Sacramento, CA 95826

061-0010-018-0000 M2
Southern Pacific Transportation Co.

Sacramento, CA 95826

061-0010-019-0000 M2 S
Cent Calif Traction Co.

Sacramento, CA 95826

061-0010-020-0000 M2 S
Cent Calif Traction Co.

Sacramento, CA 95826

061-0010-022-0000 M2 S
Procter/Gamble Manufacturing Co.
P.O. Box 599 Tax Division
Cincinnati, OH 45201

061-0010-024-0000 M2 S
City of Sacramento
Room 207 City Hall
Sacramento, CA 95814

061-0010-027-0000 M2 S
Southern Pacific Transportation Company
One Market Plaza 200
San Francisco, CA 94105

061-0021-008-0000 M2
Langills General Machines Inc.
7850 14th Ave.
Sacramento, CA 95826

061-0021-011-0000 M2
Langills General Machines Inc.
7850 14th Ave.
Sacramento, CA 95826

061-0021-012-0000 M2
Langills General Machines Inc.
7850 14th Ave.
Sacramento, CA 95826

061-0021-013-0000 M2
Langills General Machines Inc.
7850 14th Ave.
Sacramento, CA 95826

061-0021-014-0000 M2
Bertagnini, Angelo/Charles Dillaway
7831 Clifton Rd.
Sacramento, CA 95826

061-0021-015-0000 M2
Bertagnini, Angelo/Charles Dillaway
7831 Clifton Rd. A
Sacramento, CA 95826

061-0021-017-0000 M2
Peter M. Stefanick Family Trust
10441 Georgetown Dr.
Rancho Cordova, CA 95670

061-0021-020-0000 M2
Langill, James L., Sr.
7850 14th Ave.
Sacramento, CA 95826

061-0021-021-0000 M2
Langills General Machines Inc.
7850 14th Ave.
Sacramento, CA 95826

061-0021-022-0000 M2
Minasian, Azad/Lorraine
4133 Marsalla Court
Sacramento, CA 95820

061-0021-023-0000 M2
Minasian, Azad/Lorraine
4133 Marsalla Court
Sacramento, CA 95820

061-0021-024-0000 M2
Minasian, Azad/Lorraine
4133 Marsalla Court
Sacramento, CA 95820

061-0022-001-0000 M2
Martinelli, Nick/Ann
1741 Vallejo Way
Sacramento, CA 95818

061-0022-002-0000 M2
Tankersley, Guy/Art/Leona
104 Oxbow Marina Dr.
Isleton, CA 95641

061-0022-003-0000 M2
Wishing Well Enterprises Inc.
5121 College Oak Dr.
Sacramento, CA 95841

061-0022-004-0000 M2
Wishing Well Enterprises Inc.
5121 College Oak Dr.
Sacramento, CA 95841

061-0022-005-0000 M2
Wishing Well Enterprises Inc.
5121 College Oak Dr.
Sacramento, CA 95841

061-0022-008-0000 M2
Urke, Gerald D./Kathleen D.
1505 Mendota Way
Carmichael, CA 95608

061-0022-009-0000 M2
Urke, Gerald D./Kathleen D.
1505 Mendota Way
Carmichael, CA 95608

061-0022-010-0000 M2
Urke, Gerald D./Kathleen D.
1505 Mendota Way
Carmichael, CA 95608

061-0022-014-0000 M2
Tankersley, Guy/Art/Leona
104 Oxbow Marina Dr.
Isleton, CA 95641

061-0022-015-0000 M2
Formanek, Rudolph H.
3602 Gold Creek Lane
Sacramento, CA 95827

061-0022-016-0000 M2
Wishing Well Enterprises
5121 College Oak Dr.
Sacramento, CA 95841

061-0023-003-0000 M2
Eudy, Jay U./Rose E.
10215 Wrangler Way
Elk Grove, CA 95624

061-0023-004-0000 M2
Smith, C. J./Palmer, Marquerite A.
N. J. Sinclair
P.O. Box 67451
Los Angeles, CA 90067

061-0023-007-0000 M2
Boaman, William E./Tr
2970 Cherry Lane
Walnut Creek, CA 94596

061-0023-008-0000 M2
Oliver Jr./Melba L. Johnson 1990 Revocable Trust
2317 22nd Ave.
Sacramento, CA 95822

061-0023-015-0000 M2
Oliver Jr./Melba L. Johnson 1990 Revocable Trust
2317 22nd Ave.
Sacramento, CA 95822

061-0023-025-0000 M2
Siddiqui, Javed T.
1808 J St.
Sacramento, CA 95814

061-0023-026-0000 M2
Eudy, Jay U./Rose E.
10215 Wrangler Way
Elk Grove, CA 95624

061-0023-027-0000 M2
Ham Kee Sook
3900 Power Inn Rd.
Sacramento, CA 95826

061-0023-028-0000 M2
Young, Samuel R./Gillian A.
9070 La Serena Dr.
Fair Oaks, CA 95628

061-0024-001-0000 M2
Leggio, Frank/Leslie/et al.
7935 A. Carlton Rd.
Sacramento, CA 95826

061-0024-002-0000 M2
Leggio, Frank/Leslie/et al.
7935 A. Carlton Rd.
Sacramento, CA 95826

061-0024-003-0000 M2
Leggio, Frank/Leslie/et al.
7935 A. Carlton Rd.
Sacramento, CA 95826

061-0024-004-0000 M2
Leggio, Frank/Leslie/et al.
7935 A. Carlton Rd.
Sacramento, CA 95826

061-0024-005-0000 M2
Leggio, Frank/Leslie/et al.
7935 A. Carlton Rd.
Sacramento, CA 95826

061-0024-006-0000 M2
Aldo Binotto Family Trust
9925 Florin Rd.
Sacramento, CA 95829

061-0024-007-0000 M2
Aldo Binotto Family Trust
9925 Florin Rd.
Sacramento, CA 95829

061-0024-008-0000 M2
Shanahan/Brown/von Hoffmann
10 Las Positas Circle
Sacramento, CA 95831

061-0024-009-0000 M2
Shanahan/Brown/von Hoffman
10 Las Positas Circle
Sacramento, CA 95831

061-0024-010-0000 M2
Nook, Robert M./Linda K.
P.O. Box 598
Sloughhouse, CA 95683

061-0024-011-0000 M2
Johnson, Louis
P.O. Box 915
Summit, MS 03966

061-0024-012-0000 M2
Shanahan/Brown/von Hoffmann
10 Las Positas Circle
Sacramento, CA 95831

061-0024-013-0000 M2
Shanahan/Brown/von Hoffman
10 Las Positas Circle
Sacramento, CA 95831

061-0024-014-0000 M2
Shanahan/Brown/von Hoffman
10 Las Positas Circle
Sacramento, CA 95831

061-0024-015-0000 M2
Shanahan/Brown/von Hoffman
10 Las Positas Circle
Sacramento, CA 95831

061-0024-016-0000 M2
Aldo Binotto Family Trust
9925 Florin Rd.
Sacramento, CA 95829

061-0024-017-0000 M2
Aldo Binotto Family Trust
9925 Florin Rd.
Sacramento, CA 95829

061-0024-018-0000 M2
Villasenor, Edward S.
P.O. Box 1074
Elk Grove, CA 95759

061-0024-019-0000 M2
Huff, Jake/Estate of
James A. Huff
1601 Newhart
Sacramento, CA 95832

061-0024-020-0000 M2
Leggio, Frank/Leslie/et al.
7935 A. Carlton Rd.
Sacramento, CA 95826

061-0024-021-0000 M2
Leggio, Frank/Leslie/et al.
7935 A. Carlton Rd.
Sacramento, CA 95826

061-0024-022-0000 M2
Leggio, Frank/Leslie/et al.
7935 A. Carlton Rd.
Sacramento, CA 95826

061-0031-003-0000 M2 S
Biundo, Mario
8196 Belvedere Ave. 150
Sacramento, CA 95826

061-0031-007-0000 M2 S
Cortopassi, Concetta
8196 14th Ave.
Sacramento, CA 95826

061-0031-011-0000 M2 S
Luscutoff, James A./Katherine G.
2264 Moorbrook Way
Sacramento, CA 95826

061-0031-014-0000 M2 S
Lee, Frank L./Cynthia G./et al.
814 A St.
Galt, CA 95632

061-0031-015-0000 M2 S
W H Q
3925 Power Inn Rd.
Sacramento, CA 95826

061-0031-016-0000 M2 S
W H Q
3925 Power Inn Rd.
Sacramento, CA 95826

061-0031-017-0000 M2 S
W H Q
3925 Power Inn Rd.
Sacramento, CA 95826

061-0031-018-0000 M2 S
Grimes, Terence
P.O. Box 15050
Sacramento, CA 95851

061-0031-022-0000 M2 S
Polloni, Mary/et al.
1072 57th St.
Sacramento, CA 95819

061-0031-023-0000 M2 S
Jackson, John H., Sr./Claudine/et al.
Jackson/Ekstrom
5665 Power Inn Rd. 140
Sacramento, CA 95824

061-0031-024-0000 M2 S
Jackson, John H., Sr./Claudine/et al.
5665 Power Inn Rd. 140
Sacramento, CA 95824

061-0031-025-0000 M2 S
5665 Power Inn Rd. 140
Sacramento, CA 95824

061-0031-026-0000 M2 S
Prater, Richard A./Carl B. Stein
3814 Auburn Blvd. 63
Sacramento, CA 95821

061-0031-027-0000 M2 S
Lee, Valen L./et al.
5534 Elvas Ave.
Sacramento, CA 95819

061-0031-028-0000 M2 S
Wynn, Sol H./Michelle H. N.
8125 Belvedere Ave. A
Sacramento, CA 95826

061-0041-001-0000 M2 S
Stommel, Martha M.
Carolyn M. Young
2830 I St. L-1
Sacramento, CA 95816

061-0041-002-0000 M2 S
G. I. Trucking Company
14727 Alcondra Blvd.
La Mirada, CA 90638

061-0041-003-0000 M2 S
Reed/Graham Inc.
P.O. Box 5940
San Jose, CA 95150

061-0041-004-0000 M2 S
Reed/Graham Inc.
P.O. Box 5940
San Jose, CA 95150

061-0041-005-0000 M2 S
Reed/Graham Inc.
P.O. Box 5940
San Jose, CA 95150

061-0041-007-0000 M2 S
Mao Ping Chi/Hseueh Li
2624 Squaw Valley Way
Sacramento, CA 95826

061-0041-008-0000 M2 S
Mao Ping-Chi/Hsueh-Li
2624 Squaw Valley Way
Sacramento, CA 95828

061-0041-009-0000 M2 S
Bjerke, Erwin M./Merna
8255 Belvedere Ave.
Sacramento, CA 95826

061-0041-011-0000 M2 S
G I Trucking Company
14727 Alcondra Blvd.
La Mirada, CA 90638

061-0041-012-0000 M2 S
Kunde, Armand F./Joan J.
P.O. Box 610190
San Jose, CA 95161

061-0051-006-0000 M2
Holweger, Gene F./Selma Z./Dane F.
18662 Meadowlark Court
Penn Valley, CA 95946

061-0051-007-0000 M2
Holweger, Gene F./Selma Z./et al.
18662 Meadowlark Court
Penn Valley, CA 95946

061-0051-008-0000 M2
Bujack, Jeffrey L.
4221 J St. 4
Sacramento, CA 95819

061-0051-009-0000 M2
Bujack, Jeffrey L.
4221 J St. 4
Sacramento, CA 95819

061-0051-010-0000 M2
Lopez, Christopher/Ida
8000 Carlton Rd.
Sacramento, CA 95826

061-0051-011-0000 M2
Lopez, Christopher/Ida
8000 Carlton Rd.
Sacramento, CA 95826

061-0051-012-0000 M2
Williamson, Cress
425 University Ave. 220
Sacramento, CA 95825

061-0051-013-0000 M2
Watkins, Douglas R./Sue Ann
1610 Arden Way 102
Sacramento, CA 95815

061-0051-014-0000 M2
Watkins, Douglas R./Sue Ann
1610 Arden Way 102
Sacramento, CA 95815

061-0051-015-0000 M2
Watkins, Douglas R./Sue Ann
1610 Arden Way 102
Sacramento, CA 95815

061-0051-016-0000 M2
Watkins, Douglas R./Sue Ann
1610 Arden Way 102
Sacramento, CA 95815

061-0051-017-0000 M2
Watkins, Douglas R./Sue Ann
1610 Arden Way 102
Sacramento, CA 95815

061-0051-023-0000 M2
Williamson, Cress
425 University Ave. 220
Sacramento, CA 95825

061-0051-024-0000 M2
Williamson, Cress/et al.
425 University Ave. 220
Sacramento, CA 95825

061-0051-025-0000 M2
Wilson, Doye P./Marian J.
1055 Dolecetto Rd.
Ranch Cordova, CA 95670

061-0051-026-0000 M2
Munich, Ann
1065 56th St.
Sacramento, CA 95819

061-0051-027-0000 M2
Fenton, Albert R./Margaret L.
4427 Kenneth Ave.
Fair Oaks, CA 95628

061-0051-028-0000 M2
Torix, Edward L./Doris R.
7929 Amador Ave.
Sacramento, CA 95826

061-0051-029-0000 M2
Robanser, Fred/Lorraie K./Tr
2220 Davis Dr.
Burlingame, CA 94010

061-0051-030-0000 M2
Trejo, Charles/Delores
7917 Amador Ave.
Sacramento, CA 95826

061-0051-031-0000 M2
Trejo, Charles/Delores
7917 Amador Ave.
Sacramento, CA 95826

061-0051-032-0000 M2
Mason, Douglas L.
2051 57th St.
Sacramento, CA 95817

061-0051-033-0000 M2
Mason, Douglas L.
2051 57th St.
Sacramento, CA 95817

061-0051-036-0000 M2
S M U D
Amador Ave.
Sacramento, CA 95826

061-0051-037-0000 M2
Tankersley, Arthur L./Leona G./et al.
104 Oxbow Marina Dr.
Isleton, CA 95641

061-0051-038-0000 M2
Johnson, John M.
3431 33rd Ave. G
Sacramento, CA 95824

061-0051-039-0000 M2
Williamson, Cress
425 University Ave.
Sacramento, CA 95825

061-0052-003-0000 M2
Eckles Family Trust
7313 Nob Hill Dr.
Carmichael, CA 95608

061-0052-004-0000 M2
Harvey, Victor C./Eileen J./et al.
5210 64th St.
Sacramento, CA 95820

061-0052-004-0080 M2
Curran Insurance Agency Inc.

Sacramento, CA 95826

061-0052-005-0000 M2
Maita, Steven Vincent
11350 Mother Lode Circle
Gold River, CA 95670

061-0052-005-0080 M2
Brosin, Isadore G.
21 Moonlit Circle
Sacramento, CA 95831

061-0052-006-0000 M2
Maita, Steven Vincent
11350 Mother Lode Circle
Gold River, CA 95670

061-0052-007-0000 M2
Rogers, Alice/Gerino Florence
Marsala Florence
1605 Cedar St.
Gridley, CA 95948

061-0052-008-0000 M2
Navarrete, Gus G./Dolores P.
2749 Sutterville Rd.
Sacramento, CA 95820

061-0052-009-0000 M2
Navarrete, Gus G./Dolores P.
2749 Sutterville Rd.
Sacramento, CA 95820

061-0052-010-0000 M2
Navarrette, Gus/Dolores
2749 Sutterville Rd.
Sacramento, CA 95820

061-0052-011-0000 M2
Mendoza, Mary
8004 Akador Ave.
Sacramento, CA 95826

061-0052-012-0000 M2
S M U D
Amador Ave.
Sacramento, CA 95826

061-0052-013-0000 M2
S M U D
Amador Ave.
Sacramento, CA 95826

061-0052-022-0000 M2
Hyde, James C., Jr./Clarice Irene/Tr
2809 Calle Vista Way
Sacramento, CA 95821

061-0052-023-0000 M2
Fisch, Andrew/Shirley/et al.
P.O. Box 22843
Sacramento, CA 95822

061-0052-030-0000 M2
Mowbray, Jack A./Sharron L./et al.
P.O. Box 2595
Elk Grove, CA 95759

061-0052-031-0000 M2
Hyde, James C., Jr./Clarice Irene/Tr
2809 Calle Vista Way
Sacramento, CA 95821

061-0052-032-0000 M2
Houck, Greg
7933 Butte Ave.
Sacramento, CA 95826

061-0052-033-0000 M2
Kemp, Frank/Mabelanne/et al.
P.O. Box 22843
Sacramento, CA 95822

061-0052-034-0000 M2
Yager, Marrie W.
607 Alsace Lorraine
Half Moon Bay, CA 94019

061-0052-035-0000 M2
Huffman, Robert Terry/James C. Gibson
700 Larkspur Landing Circle 100
Larkspur,CA 94939

061-0052-036-0000 M2
Rudy Chinco Living Trust/Chris M./Nancy
1711 Maple Glen Rd.
Sacramento, CA 95864

061-0053-001-0000 M2
Rodriguez, Joel T.
4115 73rd St.
Sacramento, CA 95820

061-0053-002-0000 M2
Rodriguez, Joel T.
4115 73rd St.
Sacramento, CA 95820

061-0053-005-0000 M2
Tolliver, Harvey I./Lillian
7934 Butte Ave.
Sacramento, CA 95826

061-0053-006-0000 M2
Tran, Liet
7600 38th Ave.
Sacramento, CA 95824

061-0053-007-0000 M2
Volkerts, Keith/Linda
44815 N. El Macero
El Macero, CA 95618

061-0053-008-0000 M2
Volkerts, Keith/Linda
44815 N. El Macero
El Macero, CA 95618

061-0053-009-0000 M2
Cox, Melvin/Patricia A.
5111 38th Ave.
Sacramento, CA 95824

061-0053-010-0000 M2
Sutton, Karen Saetes
8008 Butte Ave.
Sacramento, CA 95826

061-0053-013-0000 M2
Lundgren, Lester/Agnes
8020 Butte Ave.
Sacramento, CA 95826

061-0053-014-0000 M2
Lundgren, Lester/Agnes M.
8020 Butte Ave.
Sacramento, CA 95826

061-0053-014-0080 M2
Reche, C. E.
4216 Power Inn Rd.
Sacramento, CA 95826

061-0053-020-0000 M2
Wulf, Burdell L./Gloria J./et al.
7933 18th Ave.
Sacramento, CA 95826

061-0053-021-0000 M2
Wulf, Burdell L./Gloria J./et al.
7933 18th Ave.
Sacramento, CA 95826

061-0053-022-0000 M2
Wulf, Burdell L./Gloria J./et al.
7933 18th Ave.
Sacramento, CA 95826

061-0053-023-0000 M2
Wulf, Burdell L./Gloria J./et al.
7933 18th Ave.
Sacramento, CA 95826

061-0053-024-0000 M2
Wulf, Burdell L./Gloria J./et al.
7933 18th Ave.
Sacramento, CA 95826

061-0053-025-0000 M2
Rodriquez, Guadalupe F./Santos T.
4319 78th St.
Sacramento, CA 95820

061-0053-026-0000 M2
Rodriquez, Joel T./Felix T.
4115 73rd St.
Sacramento, CA 95820

061-0053-027-0000 M2
Rodriguez, Joel T.
4115 73rd St.
Sacramento, CA 95820

061-0053-028-0000 M2
Nichols, Ronald C./Barbara J.
16381 Rolling Oaks Court
Fiddletown, CA 95629

061-0053-029-0000 M2
Power Inn Investors
Forrest M. Blue
5556 Ridge Park Dr.
Rocklin, CA 95650

061-0053-030-0000 M2
Mason, Douglas L./Genevive P.
2051 57th St.
Sacramento, CA 95816

061-0061-003-0001 M2 S
Belvedere I/II Associates
8372 Carbide Court 2
Sacramento, CA 95828

061-0061-003-0002 M2 S
Belvedere I/II Associates
8372 Carbide Court 2
Sacramento, CA 95828

061-0061-003-0003 M2 S
Belvedere I/II Associates
8372 Carbide Court 2
Sacramento, CA 95828

061-0061-003-0004 M2 S
Belvedere I/II Associates
8372 Carbide Court 2
Sacramento, CA 95828

061-0061-003-0005 M2 S
Belvedere I/II Associates
8372 Carbide Court 2
Sacramento, CA 95828

061-0061-003-0006 M2 S
Belvedere I/II Associates
8372 Carbide Court 2
Sacramento, CA 95828

061-0061-003-0007 M2 S
Belvedere I/II Associates
8372 Carbide Court 2
Sacramento, CA 95828

061-0061-003-0008 M2 S
Belvedere I/II Associates
8372 Carbide Court 2
Sacramento, CA 95828

061-0061-003-0009 M2 S
Belvedere I/II Associates
8372 Carbide Court 2
Sacramento, CA 95828

061-0061-003-0010 M2 S
Belvedere I/II Associates
8372 Carbide Court 2
Sacramento, CA 95828

061-0061-025-0000 M2 S
Biundo, Mario
8196 Belvedere Ave.
Sacramento, CA 95826

061-0061-032-0000 M2 S
Ashwill, N. Bruce/Barbara E.
2934 Gold Pan Court 4
Rancho Cordova, CA 95670

061-0061-033-0000 M2 S
Ashwill, N. Bruce/Barbara E.
2934 Gold Pan Court 4
Rancho Cordova, CA 95670

061-0061-037-0000 M2 S
Frazer, Michael J./Betty B.
163 Ardith Dr.
Orinda, CA 94563

061-0061-039-0000 M2 S
Bechtel Investments Inc.
W. R. Matteson
P.O. Box 3965
San Francisco, CA 94119

061-0061-040-0000 M2 S
Anselno 1988 Revocable Trust/et al
P.O. Box 160265
Sacramento, CA 95816

061-0061-042-0000 M2 S
Bechtel Investments Inc.
W. R. Matteson
P.O. Box 3965
San Francisco, CA 94119

061-0061-043-0000 M2 S
Bechtel Investments Inc.
W. R. Matteson
P.O. Box 3965
San Francisco, CA 94119

061-0061-044-0000 M2 S
Jackson, John M./Claudine/Donald C. Ekstrom
5665 Power Inn Rd. 140
Sacramento, CA 95824

061-0061-045-0000 M2 S
Jackson, John M./Claudine/Donald C. Ekstrom
5665 Power Inn Rd. 140
Sacramento, CA 95824

061-0061-046-0000 M2 S
Fraser, Michael J./Betty B.
163 Ardith Dr.
Orindo, CA 94563

061-0061-047-0000 M2 S
Fraser, Michael J./Betty B.
163 Ardith Dr.
Orindo, CA 94563

061-0071-004-0080 M2 S
Bercut, Eva/et al.
870 Market St.
San Francisco, CA 94102

061-0071-008-0080 M2 S
Crocker National Bank Tr/et al.
870 Market St.
San Francisco, CA 94102

061-0071-009-0000 M2 S
Sayles, Roy M./Barbara A.
8154 Leafcrest Way
Fair Oaks, CA 95628

061-0071-010-0000 M2 S
Allen Howard Beckwith/Tr/et al.
P.O. Box 761
Bellvedere, CA 94920

061-0071-011-0000 M2 S
Alpine Properties
8251 Alpine Ave. A
Sacramento, CA 95826

061-0071-012-0000 M2 S
Connelley, L. Robert/Helene D.
35 Alamo Oaks Lane
Danville, CA 94526

061-0071-014-0000 M2 S
Sayles, Roy M./Barbara A.
8154 Leafcrest Way
Fair Oaks, CA 95628

061-0071-015-0000 M2 S
Yee, Bill Young/Saran Jane/et al.
8251 Alpine Ave.
Sacramento, CA 95826

061-0071-016-0000 M2 S
Connelley, L. Robert/Helene D.
35 Alamo Oaks Lane
Danville, CA 94526

061-0071-017-0000 M2 S
Numan, John D./et al.
1620 Day Dr.
Carmichael, CA 95608

061-0071-018-0000 M2 S
Thomson-Diggs Company
1481 River Park Dr. 100
Sacramento, CA 95815

061-0071-019-0000 M2 S
Thomson-Diggs Company
1481 River Park Dr. 100
Sacramento, CA 95815

061-0071-020-0000 M2 S
Belvedere Avenue Associates
5665 Power Inn Rd. 140
Sacramento, CA 95824

061-0071-022-0000 M2 S
Andrews, Terrance W./Laurene D./Tr
450 Crocker Rd.
Sacramento, CA 95864

061-0071-023-0000 M2 S
Walker Donant/Company
P.O. Box 255009
Sacramento, CA 95865

061-0071-024-0000 M2 S
Walker Donant/Company
P.O. Box 255009
Sacramento, CA 95865

061-0081-001-0000 M2
Gonzalez, Maria Teresa
4308 33rd St.
Sacramento, CA 95820

061-0081-002-0000 M2
Gonzales, Maria Teresa
4308 33rd St.
Sacramento, CA 95820

061-0081-003-0000 M2
Gonzalez, Maria Teresa
4308 33rd St.
Sacramento, CA 95820

061-0081-004-0000 M2
Weldon, Gregory F.
8005 Merced Ave.
Sacramento, CA 95826

061-0081-005-0000 M2
Weldon, Gregory F.
8005 Merced Ave.
Sacramento, CA 95826

061-0081-006-0000 M2
Gunning, Margaret I.
8005 Merced Ave.
Sacramento, CA 95826

061-0081-007-0000 M2
Gunning, Margaret I.
8005 Merced Ave.
Sacramento, CA 95826

061-0081-010-0000 M2
McAllister Partnership
7935 Carlton Rd. A.
Sacramento, CA 95826

061-0081-013-0000 M2
City of Sacramento
Power Inn Rd.
Sacramento, CA 95826

061-0081-014-0000 M2
Davis, Ada Mae
43054 36th St. W.
Lancaster, CA 93534

061-0081-015-0000 M2
Lewins, Hannah
8015 Merced Ave.
Sacramento, CA 95826

061-0081-018-0000 M2
Gunning, Margaret I.
8005 Merced Ave.
Sacramento, CA 95826

061-0081-019-0000 M2
Gunning, Margaret I.
8005 Merced Ave.
Sacramento, CA 95826

061-0081-020-0000 M2
Weldon, Gregory F.
8005 Merced Ave.
Sacramento, CA 95826

061-0081-021-0000 M2
Weldon, Gregory F.
8005 Merced Ave.
Sacramento, CA 95826

061-0081-022-0000 M2
Gonzalez, Maria Teresa
4308 33rd St.
Sacramento, CA 95820

061-0081-023-0000 M2
Gonzales, Maria Teresa
4308 33rd St.
Sacramento, CA 95820

061-0081-024-0000 M2
Gunning, Robert B./Estate of/Margaret I.
8005 Merced Ave.
Sacramento, CA 95826

061-0081-025-0000 M2
Gunning, Margaret I.
8005 Merced Ave.
Sacramento, CA 95826

061-0081-026-0000 M2
McAllister Partnership
7935 A. Carlton Rd.
Sacramento, CA 95826

061-0082-014-0000 M2
Sichel, Warren M. II/Estate of
1333 Jones St,
San Francisco, CA 94109

061-0083-001-0000 M2
Eugene/Pauline Gray Family Trust
7900 Napa Ave.
Sacramento, CA 95826

061-0083-002-0000 M2
Eugene/Pauline Gray Family Trust
7900 Napa Ave.
Sacramento, CA 95826

061-0083-003-0000 M2
Eugene/Pauline Gray Family Trust
7900 Napa Ave.
Sacramento, CA 95826

061-0083-004-0000 M2
Eugene/Pauline Gray Family Trust
7900 Napa Ave.
Sacramento, CA 95826

061-0083-005-0000 M2
Eugene/Pauline Gray Family Trust
7900 Napa Ave.
Sacramento, CA 95826

061-0083-006-0000 M2
Eugene/Pauline Gray Family Trust
7900 Napa Ave.
Sacramento, CA 95826

061-0083-007-0000 M2
Jelicich Family Living Trust
5800 55th St.
Sacramento, CA 95824

061-0083-008-0000 M2
Jelicich Family Living Trust
5800 55th St.
Sacramento, CA 95824

061-0083-009-0000 M2
Jelicich Family Living Trust
5800 55th St.
Sacramento, CA 95824

061-0083-010-0000 M2
Jelicich Family Living Trust
5800 55th St.
Sacramento, CA 95824

061-0083-011-0000 M2
Jelicich Family Living Trust
5800 55th St.
Sacramento, CA 95824

061-0083-012-0000 M2
Jelicich Family Living Trust
5800 55th St.
Sacramento, CA 95824

061-0083-013-0000 M2
Jelicich Family Living Trust
5800 55th St.
Sacramento, CA 95824

061-0083-014-0000 M2
Jelicich Family Living Trust
5800 55th St.
Sacramento, CA 95824

061-0083-015-0000 M2
Eugene/Pauline Gray Family Trust
7900 Napa Ave.
Sacramento, CA 95826

061-0083-016-0000 M2
Eugene/Pauline Gray Family Trust
7900 Napa Ave.
Sacramento, CA 95826

061-0083-017-0000 M2
Eugene/Pauline Gray Family Trust
7900 Napa Ave.
Sacramento, CA 95826

061-0083-018-0000 M2
Eugene/Pauline Gray Family Trust
7900 Napa Ave.
Sacramento, CA 95826

061-0083-019-0000 M2
Eugene/Pauline Gray Family Trust
7900 Napa Ave.
Sacramento, CA 95826

061-0091-004-0000 M2 X
Sozzi, Daniel L./Joyce
3044 Ridgeview Dr.
El Dorado Hills, CA 95762

061-0091-007-0000 M2 S
Stone Plumbing Co. Inc.
4401 Power Inn Rd.
Sacramento, CA 95826

061-0091-010-0000 M2 S
Capital Investment Trust
6728 Fair Oaks Blvd. 400
Carmichael, CA 95608

061-0091-012-0000 M2 S
Floor Covering Ent. Pension/Profit Sharing Plan
Simas Enterprises
3550 Power Inn Rd.
Sacramento, CA 95826

061-0091-013-0000 M2 S
Floor Covering Ent. Pension/Profit Sharing Plan
Simas Enterprises
3550 Power Inn Rd.
Sacramento, CA 95826

061-0091-015-0000 M2 S
Thomson-Diggs Company
1481 River Park Dr. 100
Sacramento, CA 95815

061-0091-017-0000 M2 S
Floor Covering Enterprises Pension/Profit Sharing Plan
3550 Power Inn Rd.
Sacramento, CA 95826

061-0091-018-0000 M2 S
Turner, Noel/Pauline
3913 Fotos Court
Sacramento, CA 95820

061-0091-019-0000 M2 S
Brown, Clifford A./Cynthia A.
1411 Los Molinos Way
Sacramento, CA 95864

061-0100-001-0000 M2 S
Warehouse Way Associates VIII
Frank Ribbel
1500 Park Ave.
Emeryville, CA 94608

061-0100-003-0000 M2 S
Bel Air Real Estate Inv. Co. 2
George Wong
P.O. Box 15677
Sacramento, CA 95852

061-0100-006-0000 M2 S
Parks, Robert S.
4041 Warren Ave.
Sacramento, CA 95822

061-0100-012-0000 M2 S
Bel Air Real Estate Inv. Co. 2
George Wong
P.O. Box 15677
Sacramento, CA 95852

061-0100-013-0000 M2 S
Moore Partnership
3030 Bridgeway 214
Sausalito, CA 94965

061-0100-014-0000 M2 S
Central Calif Traction Co.

Sacramento, CA 95826

061-0100-015-0000 M2 S
Bel Air Real Estate Inv. Co. 2
George Wong
P.O. Box 15677
Sacramento, CA 95852

061-0100-016-0000 M2 S
Bel Air Real Estate Inv. Co. 2
P.O. Box 15677
Sacramento, CA 95852

061-0100-017-0000 M2 S
Lynn Family Trust
P.O. Box 3141
El Macero, CA 95618

061-0100-018-0000 M2 S
Lynn Family Trust
P.O. Box 3141
El Macero, CA 95618

061-0100-019-0000 M2 S
Lynn Family Trust
P.O. Box 3141
El Macero, CA 95618

061-0100-020-0000 M2 S
Lynn Family Trust
P.O. Box 3141
El Macero, CA 95618

061-0100-021-0000 M2 S
Lynn Family Trust
P.O. Box 3141
El Macero, CA 95618

061-0100-022-0000 M2 S
Lynn Family Trust
P.O. Box 3141
El Macero, CA 95618

061-0100-023-0000 M2 S
Lynn Family Trust
P.O. Box 3141
El Macero, CA 95618

061-0111-006-0000 M2
Meraz Millie M.
8024 19th Ave.
Sacramento, CA 95826

061-0111-007-0000 M2
Meraz, John P./Millie M.
P.O. Box 444
Avila Beach, CA 93424

061-0111-012-0000 M2
Haynes, Ethel M.
2509 51st Ave.
Sacramento, CA 95822

061-0111-014-0000 M2
Garthwaite, Alan/Linda G.
8169 Alpine Ave.
Sacramento, CA 95826

061-0111-015-0000 M2
Grossman, Allan W./Karen L.
8007 Hickory Ave.
Sacramento, CA 95826

061-0111-016-0000 M2
Robert D./JoAnne M. Otway Revocable Trust
8255 Oak Knoll Dr.
Roseville, CA 95661

061-0111-017-0000 M2
Wisdom, Donald C./Mildred H./Tr
4540 Power Inn Rd.
Sacramento, CA 95826

061-0113-001-0000 M2
Central Calif Traction Co.
20th Ave.
Sacramento, CA 95826

061-0113-002-0000 M2
Fernandes, Ellen Shuey/et al.
Wells Fargo Bank
P.O. Box 63700
San Francisco, CA 94163

061-0113-003-0000 M2
Fernandes, Ellen Shuey/et al.
Wells Fargo Bank
P.O. Box 63700
San Francisco, CA 94163

061-0113-004-0000 M2
Fernandes, Ellen Shuey/et al.
Wells Fargo Bank
P.O. Box 63700
San Francisco, CA 94163

061-0113-005-0000 M2
Robbins Family 1989 Trust
Wells Fargo Bank
P.O. Box 63700
San Francisco, CA 94163

061-0113-006-0000 M2
Robbins Family 1989 Trust
Wells Fargo Bank
P.O. Box 63700
San Francisco, CA 94163

061-0113-007-0000 M2
Fernandes, Ellen Shuey/et al.
Wells Fargo Bank
P.O. Box 63700
San Francisco, CA 94163

061-0113-008-0000 M2
Fernandes, Ellen Shuey/et al.
Wells Fargo Bank
P.O. Box 63700
San Francisco, CA 94163

061-0113-009-0000 M2
Fernandes, Ellen Shuey/et al.
Wells Fargo Bank
P.O. Box 63700
San Francisco, CA 94163

061-0113-010-0000 M2
Fernandes, Ellen Shuey/et al.
Wells Fargo Bank
P.O. Box 63700
San Francisco, CA 94163

061-0113-011-0000 M2
Fernandes, Ellen Shuey/et al.
Wells Fargo Bank
P.O. Box 63700
San Francisco, CA 94163

061-0113-012-0000 M2
Fernandes, Ellen Shuey/et al.
Wells Fargo Bank
P.O. Box 63700
San Francisco, CA 94163

061-0113-013-0000 M2
Fernandes, Ellen Shuey/et al.
Wells Fargo Bank
P.O. Box 63700
San Francisco, CA 94163

061-0113-014-0000 M2
Fernandes, Ellen Shuey/et al.
Wells Fargo Bank
P.O. Box 63700
San Francisco, CA 94163

061-0121-001-0000 M2 S
Hokanson Building Block Co.
4751 Power Inn Rd.
Sacramento, CA 95826

061-0121-002-0000 M2 S
Hokanson Building Block Co.
4751 Power Inn Rd.
Sacramento, CA 95826

061-0121-003-0000 M2 S
Hokanson Building Block Co.
4751 Power Inn Rd.
Sacramento, CA 95826

061-0121-004-0000 M2 S
Hokanson Building Block Co.
4751 Power Inn Rd.
Sacramento, CA 95826

061-0131-001-0000 M2 S
Hokanson Building Block Co.
4751 Power Inn Rd.
Sacramento, CA 95826

061-0131-002-0000 M2 S
Hokanson Building Block Co.
4751 Power Inn Rd.
Sacramento, CA 95826

061-0131-003-0000 M2 S
A/B Asphalt Sealing Co.
8299 21st Ave.
Sacramento, CA 95826

061-0131-004-0000 M2 S
Central Calif Traction Co.
21st Ave.
Sacramento, CA 95826

061-0140-004-0000 M2 S
Safeway Stores Inc.
Property Dev. Assoc.
15115 S.W. Sequoia Parkway 200
Portland, OR 97224

061-0140-026-0000 M2 S
Central Calif Traction Co.
Alpine Ave.
Sacramento, CA 95826

061-0140-028-0000 M2 S
Safeway Stores Inc.
Property Dev. Assoc.
15115 S.W. Sequoia Parkway 200
Portland, OR 97224

061-0140-029-0000 M2S
Nimitz Investment Co.
Property Dev. Assoc.
15115 S.W. Sequoia Parkway 200
Portland, OR 97224

061-0140-030-0000 M2 S
Pacific Gas/Electric Co.
John R. Johnson
77 Beale St. 875B
San Francisco, CA 94106

061-0140-031-0000 M2 S
Safeway Stores Inc.
47400 Kato Rd.
Fremont, CA 94538

061-0140-032-0000 M2 S
Safeway Stores Inc.
Property Dev. Assoc.
15115 S.W. Sequoia Parkway 200
Portland, OR 97224

061-0140-033-0000 M2 S
Safeway Stores Inc.
1850 Mt. Diablo Boulevard 250
Walnut Creek, CA 94596

061-0140-034-0000 M2 S
Safeway Stores Inc.
Property Dev. Assoc.
15115 S.W. Sequoia Parkway 200
Portland, OR 97224

061-0140-035-0000 M2 S
Florin-Perkins Associates II
8413 Jackson Rd.
Sacramento, CA 95826

061-0140-037-0000 M2 S
DM Associates/et al.
Metro V
7700 College Town Dr. 201
Sacramento, CA 95826

061-0140-046-0000 M2 S
Shuper, Philip A.
132 Horse Ranch Rd.
Sedona, AZ 86336

061-0140-047-0000 M2 S
Eberhardt, Wallace C./Martha R./Tr
4105 Crondall Dr.
Sacramento, CA 95864

061-0140-048-0000 M2 S
Florin-Perkins Associates II
8413 Jackson Rd.
Sacramento, CA 95826

061-0140-051-0000 M2 S
DM Associates/et al.
Metro V
7700 College Town Dr. 201
Sacramento, CA 95826

061-0140-052-0000 M2 S
DM Associates/et al.
Metro V
7700 College Town Dr. 201
Sacramento, CA 95826

061-0140-053-0000 M2 S
DM Associates/et al.
Metro V Prop. Mgmt.
7700 College Town Dr. 201
Sacramento, CA 95826

061-0140-054-0000 M2 S
Belvedere Industrial Park
Panattoni Management Div.
8401 Jackson Rd.
Sacramento, CA 95826

061-0140-055-0000 M2 S
Belvedere Industrial Park
Panattoni Management Div.
8401 Jackson Rd.
Sacramento, CA 95826

061-0140-056-0000 M2 S
Swanston Properties
4124 Dena Way
Sacramento, CA 95821

061-0140-057-0000 M2 S
Swanston Properties
4124 Dema Way
Sacramento, CA 95821

061-0140-058-0000 M2 S
Kunishi, Alvin T./Dorothy
6377 Grangers Dairy Dr.
Sacramento, CA 95831

061-0140-059-0000 M2 S
Goodwin Cole Co. Inc.
8320 Belvedere Ave.
Sacramento, CA 95826

061-0140-060-0000 M2 S
Amos, Napoleon F./Reynalda M.
8486 Friar Tuck Way
Fair Oaks, CA 95628

061-0140-061-0000 M2 S
8310 Belvedere Avenue Partnership
Robert Stephenson
P.O. Box 2143
El Macero, CA 95618

061-0140-063-0000 M2 S
Safeway Stores Incorporated
Property Dev. Assoc.
15115 S.W. Sequoia Parkway 200
Portland, OR 97224

061-0140-064-0000 M2 S
Sutter Community Hospital
Finance
2800 L St.
Sacramento, CA 95816

061-0140-065-0000 M2 S
Sutter Community Hospital
Finance
2800 L St.
Sacramento, CA 95816

061-0140-066-0000 M2 S
Sutter Community Hospital
Finance
2800 L St.
Sacramento, CA 95816

061-0150-003-0000 M2 S
Teichert Land Co.
P.O. Box 13308
Sacramento, CA 95813

061-0150-004-0000 M2 S
Teichert Land Co.
P.O. Box 13308
Sacramento, CA 95813

061-0150-015-0000 M2 S
Teichert Land Co.
P.O. Box 13308
Sacramento, CA 95813

061-0150-016-0000 M2 S
Teichert Land Co.
P.O. Box 13308
Sacramento, CA 95813

061-0150-027-0000 M2 S
Teichert Land Co.
P.O. Box 13308
Sacramento, CA 95813

061-0150-028-0000 M2 S
Teichert Land Co.
P.O. Box 13308
Sacramento, CA 95813

061-0150-042-0000 M2 S
Davis, Sally R./et al.
Nancy C. Cleavinger
5970 1st Ave.
Sacramento, CA 95817

061-0150-045-0000 M2 S
Davis, Sally R./et al.
Nancy C. Cleavinger
5970 1st Ave.
Sacramento, CA 95817

061-0150-049-0000 M2 S
Davis, Sally R./et al.
Nancy C. Cleavinger
5970 1st Ave.
Sacramento, CA 95817

061-0150-054-0000 M2 S
Davis, Sally R./et al.
Nancy C. Cleavinger
5970 1st Ave.
Sacramento, CA 95817

061-0150-055-0000 M2 S
Davis, Sally R./et al.
Nancy C. Cleavinger
5970 1st Ave.
Sacramento, CA 95817

061-0150-056-0000 M2 S
Davis, Sally R./et al.
Nancy C. Cleavinger
5970 1st Ave.
Sacramento, CA 95817

061-0150-057-0000 M2 S
Davis, Sally R./et al.
Nancy C. Cleavinger
5970 1st Ave.
Sacramento, CA 95817

061-0150-058-0000 M2 S
Davis, Sally R./et al.
Nancy C. Cleavinger
5970 1st Ave.
Sacramento, CA 95817

061-0150-064-0000 M2 S
O. D./O/Marvin L. Gates
Buzz Oates Enterpr
8615 Elder Creek Rd. 100
Sacramento, CA 95828

061-0162-004-0000 M2 S
Air Products/Chemicals Inc.
7201 Hamilton Blvd.
Allentown, PA 18195

061-0162-006-0000 M2 S
Air Products/Chemicals Inc.
Box 538
Allentown, PA 18105

061-0162-007-0000 M2 S
Cooney, Michael L./John G. McLoughlin
5050 84th St.
Sacramento, CA 95826

061-0163-004-0000 M2 S
Dolan Building Materials Co.
5150 Florin Perkins Rd.
Sacramento, CA 95826

061-0163-007-0000 M2 S
Chair, P. E./Co
Westburne Supply
P.O. Box 65013
Anaheim, CA 92815

061-0163-011-0000 M2 S
Southern Pacific Company
65 Market St.
San Francisco, CA 94105

061-0163-013-0000 M2 S
Townsend, Robert E./Elma M./Tr
336 Claydon Way
Sacramento, CA 95864

061-0163-014-0000 M2 S
Southern Pacific Company
65 Market St.
San Francisco, CA 94105

061-0163-016-0000 M2 S
Ebco Invs
P.O. Box 277700
Sacramento, CA 95827

061-0163-019-0000 M2 S
Dolan Building Materials Co. Inc.
P.O. Box 277700
Sacramento, CA 95827

061-0163-020-0000 M2 S
Southern Pacific Transportation Co.
65 Market St.
San Francisco, CA 64105

061-0164-001-0000 M2 S
Procter/Gamble Manufacturing Co.
Tax Div.
P.O. Box 599
Cincinatti, OH 45201

061-0164-002-0000 M2 S
Procter/Gamble Manufacturing Co.
Tax Div.
P.O. Box 599
Cincinatti, OH 45201

061-0164-003-0000 M2 S
Procter/Gamble Manufacturing Co.
Tax Div.
P.O. Box 599
Cincinatti, OH 45201

061-0164-004-0000 M2 S
Procter/Gamble Manufacturing Co.
Tax Div.
P.O. Box 599
Cincinatti, OH 45201

061-0164-005-0000 M2 S
Procter/Gamble Manufacturing Co.
Tax Div.
P.O. Box 599
Cincinatti, OH 45201

061-0164-006-0000 M2 S
Procter/Gamble Manufacturing Co.
Tax Div.
P.O. Box 599
Cincinatti, OH 45201

061-0164-007-0000 M2 S
Tran Mai Thann
5034 83rd St.
Sacramento, CA 95826

061-0164-008-0000 M2 S
Central Calif Traction Co.
949 E. Channel St.
Stockton, CA 95202

061-0164-009-0000 M2 S
Eighty-third Street Investors
Van Valkenburgh
555 University Ave. 104
Sacramento, CA 95825

061-0164-010-0000 M2 S
Cole, Robert M./Tr
P.O. Box 73800
Davis, CA 95617

061-0164-011-0000 M2 S
Southern Pacific Transportation Co.
24th Ave.
Sacramento, CA 95826

061-0164-012-0000 M2 S
Southern Pacific Transportation Co.
24th Ave.
Sacramento, CA 95826

061-0164-013-0000 M2 S
Corp of President L D S Church
50 E. North Temple
Salt Lake City, UT 84103

061-0164-014-0000 M2 S
Corp of President L D S Church
50 E. North Temple
Salt Lake City, UT 84103

061-0164-015-0000 M2 S
Elwin F. Christophel Trust/et al.
1785 Racoon Hollow Lane
Auburn, CA 95603

061-0164-016-0000 M2 S
Christophel Elwin F./Tr/et al.
1651 Response Rd. 101
Sacramento, CA 95815

061-0164-017-0000 M2 S
Dumm, Irving/Frances G.
8297 Oak Knoll Dr.
Roseville, CA 95678

061-0164-018-0000 M2 S
Markel Bros. Plumbing Inc.
8455 24th Ave.
Sacramento, CA 95826

061-0164-019-0000 M2 S
Belshin, Leon/Joan E.
4800 Florin Prkns Rd.
Sacramento, CA 95826

061-0164-020-0000 M2 S
Chermit, George J./Mary
2610 Kadema Dr.
Sacramento, CA 95864

061-0164-021-0000 M2 S
Fruitridge Development Co.
0 Florin Prkns Rd.
Sacramento, CA 95826

061-0171-001-0000 M2 S
Redding Roofing Supply
P.O. Box 861
Redding, CA 96099

061-0171-005-0000 M2 S
Pacific Telephone/Telegraph Co.
Property Tax Room 818
140 New Montgomery St.
San Francisco, CA 94105

061-0171-007-0000 M2 S
Smith, Thomas W.
5400 83rd St.
Sacramento, CA 95826

061-0171-008-0000 M2 S
Redding Roofing Supply
P.O. Box 861
Redding, CA 96099

061-0171-009-0000 M2 S
Lippow Development Co.
P.O. Box 469
Martinez, CA 94553

061-0172-002-0000 M2 S
United Grocers Ltd. (Fleming Co. Inc.)
8301 Fruitridge Rd.
Sacramento, CA 95826

061-0172-003-0000 M2 S
United Grocers Ltd. (Fleming Co. Inc.)
8301 Fruitridge Rd.
Sacramento, CA 95826

061-0173-004-0000 M2 S
Gudgel, Janet M./Richard W., Sr.
13390 Orange Ave.
Wilton, CA 95693

061-0173-008-0000 M2 S
Fred/Mary Degen Revocable Trust/et al.
5421 84th St.
Sacramento, CA 95826

061-0173-010-0000 M2 S
Flohr, Lauretta M.
8921 Rosewood Dr.
Sacramento, CA 95826

061-0173-011-0000 M2 S
Fred/Mary Degen Revocable Trust/et al.
5421 84th St.
Sacramento, CA 95826

061-0173-012-0000 M2 S
Fred/Mary Degen Revocable Trust/et al.
5421 84th St.
Sacramento, CA 95826

061-0173-014-0000 M2 S
McCaffrey, Mildred/Earle Sylva
617 E. Ranch Rd.
Sacramento, CA 95825

061-0180-003-0000 M2 S
Fruitridge Road Land Co.
Robert H. Hamel
P.O. Box 13308
Sacramento, CA 95813

061-0180-004-0000 M2 S
Fruitridge Road Land Co.
Robert H. Hamel
P.O. Box 13308
Sacramento, CA 95813

061-0180-007-0000 M2 S
Fruitridge Road Land Co.
Robert H. Hamel
P.O. Box 13308
Sacramento, CA 95813

061-0180-012-0080 M2 S
Central Calif Traction
0 Fruitridge Rd.
Sacramento, CA 95826

061-0180-015-0000 M2 S
Fruitridge Road Land Co.
Robert H. Hamel
P.O. Box 13308
Sacramento, CA 95813

061-0180-016-0000 M2 S
Fruitridge Road Land Co.
Robert H. Hamel
P.O. Box 13308
Sacramento, CA 95813

061-0180-017-0000 M2 S
Fruitridge Road Land Co.
Robert H. Hamel
P.O. Box 13308
Sacramento, CA 95813

061-0180-019-0000 M2 S
Sargent, Warren G./Dema L.
11664 N. Carson Way
Gold River, CA 95742

061-0180-022-0000 M2 S
Central Calif Traction Co.
Fruitridge Rd.
Sacramento, CA 95826

061-0180-024-0000 M2 S
Fruitridge Road Land Co.
Robert H. Hamel
P.O. Box 13308
Sacramento, CA 95813

061-0180-025-0000 M2 S
Fruitridge Road Land Co.
Robert H. Hamel
P.O. Box 13308
Sacramento, CA 95813

061-0180-030-0000 M2 S
Pacific Gas/Electric Co.
John R. Johnson
77 Beale St. 875B
San Francisco, CA 94106

061-0180-038-0000 M2 S
Lippow Development Co.
P.O. Box 469
Martinez, CA 94553

061-0180-039-0000 M2 S
O K/B/et al.
Mark III
5101 Florin Prkns Rd.
Sacramento, CA 95826

061-0180-040-0000 M2 S
City of Sacramento
0 Fruitridge Rd.
Sacramento, CA 95826

061-0180-041-0000 M2 S
Central Calif Traction
0 Fruitridge Rd.
Sacramento, CA 95826

061-0180-042-0000 M2 5
City of Sacramento
915 I St. 300
Sacramento, CA 95814

061-0180-043-0000 M2 5
Pacific Gas/Electric Co.
John R. Johnson
77 Beale St. 875B
San Francisco, CA 94106

061-0180-044-0000 M2 S
Lippow Development Co.
P.O. Box 469
Martinez, CA 94553

061-0180-044-0080 M2 S
Central Cal Tradgion Co.
0 Florin Perkins Rd.
Sacramento, CA 95826

061-0180-046-0000 M2 S
Central Calif Traction Co.
0 Florin Perkins Rd.
Sacramento, CA 95826

061-0180-047-0000 M2 S
O K/B/et al.
5101 Florin Perkins Rd.
Sacramento, CA 95826

061-0191-001-0000 M2 S
Cherhit, Mary A.
2610 Kadema Dr.
Sacramento, CA 95864

061-0191-002-0000 M2 S
Cherhit, Mary A.
2610 Kadema Dr.
Sacramento, CA 95864

061-0191-015-0000 M2 S
Thomas F. Darzes Revocable Trust
4318 Surita St.
Sacramento, CA 95864

061-0191-016-0000 M2 S
Richard T./Barbara F. Winckler 1981 Trust/
et al.
17887 Vineland Ave.
Monte Sereno, CA 95030

061-0191-017-0000 M2 S
Thomas F. Darzes Revocable Trust
4318 Surita St.
Sacramento, CA 95864

061-0192-007-0000 M2 S
Central Calif Traction Co.

Sacramento, CA 95826

061-0192-008-0000 M2 S
O K/B (Howard M. Downs)
8615 Elder Creek Rd. 100
Sacramento, CA 95828

061-0192-009-0000 M2 S
Downs Howard M.
2022 California St.
San Francisco, CA 94109

061-0192-010-0000 M2 S
Kesich, Miro Anthony/Carmen Corine/Tr
8570 23rd Ave.
Sacramento, CA 95826

061-0192-011-0000 M2 S
Ryan, Ralph J./Edna M./et al.
2512 Morley Way
Sacramento, CA 95864

061-0192-012-0000 M2 S
Esirgs Manufacturing Co. Inc.
4901 Warehouse Way
Sacramento, CA 95826

061-0192-013-0000 M2 S
Esirgs Manufacturing Co. Inc.
4901 Warehouse Way
Sacramento, CA 95826

061-0193-004-0000 M2 S
Central Calif Traction Co.

Sacramento, CA 95826

061-0193-007-0000 M2 S
Sacto Associates
P.O. Box 640069
San Francisco, CA 94164

061-0193-008-0000 M2 S
Sacramento Business Park Venture
Tri-West Asset Management
3017 Kilgore Rd. 195
Rancho Cordova, CA 95670

Book 62

062-0010-002-0000 M2
Southern Pacific Transportation Co.

Sacramento, CA 95828

062-0010-003-0000 M2
United States of America
Fruitridge Rd.
Sacramento, CA 95828

062-0010-006-0000 M2
Southern Pacific Transportation Co.
Fruitridge Rd.
Sacramento, CA 95826

062-0010-008-0000 M2
Hall, W. E., Co.
P.O. Box 2450
Newport Beach, CA 92658

062-0010-011-0000 M2
Southern Pacific Transportation Co.
0 Elder Creek Rd.
Sacramento, CA 95828

062-0010-013-0000 M2
Van Der Boom, A. G./M. L.
P.O. Box 277377
Sacramento, CA 95827

062-0010-014-0000 M2
Southern Pacific Transportation Co.
R. E. Mesick
201 Mission St. 3rd Floor
San Francisco, CA 94105

062-0010-015-0000 M2
Southern Pacific Transportation Co.
0 Fruitridge Rd.
Sacramento, CA 95826

Book 38

038-0280-002-0000 M2 S
Thunderbird Moulding Company
6001 Power Inn Rd.
Sacramento, CA 95824

038-0280-010-0000 M2 S
City of Sacramento

Sacramento, CA 95824

038-0280-011-0000 M2 S
City of Sacramento

Sacramento, CA 95824

038-0280-013-0000 M2 S
Thunderbird Moulding Company
6001 Power Inn Rd.
Sacramento, CA 95824

038-0280-014-0000 M2 S
City of Sacramento
City Hall Room 207
Sacramento, CA 95814

038-0280-016-0000 M2 S
Smith, Troy E./Sue A.
652 Lake Willhaggin Dr.
Sacramento, CA 95864

038-0280-019-0000 M2 S
Thunderbird Moulding Company
6001 Power Inn Rd.
Sacramento, CA 95824

038-0280-022-0000 M2 S
Orton, Roger/Susan L.
6083 Power Inn Rd.
Sacramento, CA 95824

038-0280-024-0000 M2 S
City of Sacramento
Power Inn Rd.
Sacramento, CA 95824

038-0280-026-0000 M2 S
Bahr, Harvey J./Tr
6001 Power Inn Rd.
Sacramento, CA 95824

038-0290-004-0000 M2 S
Eastman, Orville W./Betty L.
P.O. Box 28128
Sacramento, CA 95828

Book 27

027-0081-011-0000 C2
Ajlouny, Paul A.
7900 Fruitridge Rd.
Sacramento, CA 95820

027-0081-002-0000 C2
Bailey, Alvern/Elder
5118 Angeles Vista Blvd.
Los Angeles, CA 90043

027-0081-003-0000 C2
Davis, Richard L./Shirlene
11206 Scarlet Oak Dr.
Oakdale, CA 95361

027-0081-004-0000 C2
DeFrank, Rosalie F.
2000 Vesta Way
Sacramento, CA 95864

027-0081-005-0000 C2
DeFrank, Rosalie F.
2000 Vesta Way
Sacramento, CA 95864

027-0081-008-0000 C2
Criner, Lee J./Geraldine/Etal
P.O. Box 278136
Sacramento, CA 95827

027-0081-009-0000 C2
Criner, Lee J./Geraldine
P.O. Box 278136
Sacramento, CA 95827

027-0081-016-0000 R1
Criner, Lamoine J./Geraldine
P.O. Box 278176
Sacramento, CA 95827

027-0081-017-0000 R1
Rodriguez, Guadalupe F./Santas
4319 78th St.
Sacramento, CA 95820

027-0081-018-0000 R1
Garrett, L. C./Gloria J.
7929 32nd Ave.
Sacramento, CA 95824

027-0081-019-0000 R1
Johnson, Tom L./Raynell
6317 Claussen
N. Highland, CA 95660

027-0081-020-0000 R1
Davis, Richard L./Shirlene
1900 Lolashore Dr.
Modesto, CA 95355

027-0081-023-0000 R1
Gonzalez, Miguel Jr./Diane Marie Richardson
7905 32nd Ave.
Sacramento, CA 95824

027-0081-024-0000 R1
Clark, James R.
1128 Lochbrae Rd.
Sacramento, CA 95815

027-0081-025-0000 R1
Chacon, Exiquio/Buenaventura P.
5651 79th St.
Sacramento, CA 95824

027-0081-026-0000 R1
Montoya, Louis/Isabel
5631 79th St.
Sacramento, CA 95824

027-0081-027-0000 R1
Montoya, Louis/Isabel
5631 79th St.
Sacramento, CA 95824

027-0081-028-0000 C2
Bailey, Elder/Alvern
5118 Angeles Vista
Los Angeles, CA 90043

027-0081-029-0000 C2
Bailey, Elder/Alvern
5611 79th St.
Sacramento, CA 95824

027-0081-030-0000 C2
Ajlouny, Paul A.
7900 Fruitridge Rd.
Sacramento, CA 95820

027-0081-033-0000 R1
Davis, Richard L./Shirlene
1900 Lakeshore Dr.
Modesto, CA 95355

027-0081-034-0000 R1
Tran Binn Am
7917 32nd Ave.
Sacramento, CA 95824

027-0081-035-0000 C2
Crimer, Lee J./Geraldine/et al.
7924 Fruitridge Rd.
Sacramento, CA 95820

027-0081-036-0000 C1 A
Vee, Sam/Helen
726 Bell Russell Way
Sacramento, CA 95831

027-0081-039-0000 C2
Van Ruiten, Bert/Antonia A./Co-Tr
LAL. Joe & Renu
7311 Greenhaven Dr. 270
Sacramento, CA 95831

027-0082-001-0000 R1
Patacsil, Magdalena
P.O. Box 28334
Sacramento, CA 95828

027-0082-002-0000 R1
Tam, Lewis/Carol
4315 Armadale Dr.
Sacramento, CA 95823

027-0082-003-0000 R1
St. Mark Missionary Baptist Church
7920 32nd Ave.
Sacramento, CA 95824

027-0082-004-0000 R1
St. Mark Missionary Baptist Church
7920 32nd Ave.
Sacramento, CA 95824

027-0082-005-0000 R1
St. Mark Missionary Baptist Church
7920 32nd Ave.
Sacramento, CA 95824

027-0082-008-0000 R1
Stanley, Steve, Dee
8004 32nd Ave.
Sacramento, CA 95824

027-0082-009-0000 R1
Stevens, Tom G./Sherry L.
8008 32nd Ave.
Sacramento, CA 95824

027-0082-010-0000 R1
Stanley, Sam/Diane E.
8012 32nd Ave.
Sacramento, CA 95824

027-0082-011-0000 R1
Stanley, David C./Linda M.
8016 32nd Ave.
Sacramento, CA 95824

027-0082-012-0000 R1
DeFrank, Rosalie F.
2000 Vesta Way
Sacramento, CA 95864

027-0082-013-0000 R1
DeFrank, Rosalie F.
2000 Vesta Way
Sacramento, CA 95864

027-0082-014-0000 R1
Hernandez, Eliseo A./Elena
2023 Eagle Ave.
Alameda, CA 94501

027-0082-015-0000 R1
Diamond, Edward Irwin
2936 26th St.
Sacramento, CA 95818

027-0082-015-0080 R1
Beulan, Jarvis/et al.
0 Power Inn Rd.
Sacramento, CA 95824

027-0082-016-0000 R1
Stokers Kings Bch Trailor Park/et al.
4621 Alma Ave.
Castro Valley , CA 94546

027-0082-017-0000 R1
Shannon, Edwin B., Sr./Evelyn D.
14 Maldonado Court
Sacramento, CA 95820

027-0082-018-0000 R1
Cale, George
2711 14th St.
Sacramento, CA 95818

027-0082-019-0000 R1
Shannon, Edwin B./Evelyn D.
14 Maldonado Court
Sacramento, CA 95820

027-0082-020-0000 R1
Woodson, Willie/Arnather
8009 33rd Ave.
Sacramento, CA 95824

027-0082-021-0000 R1
Oyana, Ayako
8005 33rd Ave.
Sacramento, CA 95824

027-0082-022-0000 R1
Wynne, Eugene
8001 33rd Ave.
Sacramento, CA 95824

027-0082-024-0000 R1
Hogan, James
1721 Chestnut St. 301
Sacramento, CA 94123

027-0082-025-0000 R1
Smith, Goldie E.
5880 Wilkinson St.
Sacramento, CA 95824

027-0082-026-0000 R1
Bowens, Guy/Janett
Lee Bowen
7812 37th Ave.
Sacramento, CA 95834

027-0082-027-0000 R1
Bowens, Guy/Janett
7812 37th Ave.
Sacramento, CA 95834

027-0082-028-0000 R1
Solorzano, Mauro C./Jimenez F. C.
7417 29th St.
Sacramento, CA 95822

027-0082-031-0000 R1
Von Schoech, Paul/Lydia E.
5695 79th St.
Sacramento, CA 95824

027-0082-032-0000 R1
Torres, Douglas Richard
5691 79th St.
Sacramento, CA 95824

027-0082-033-0000 R1
Johnson, Vonne Michele
5681 79th St.
Sacramento, CA 95824

027-0082-034-0000 R1
Martinez, Moe/Amelia
5675 79th St.
Sacramento, CA 95824

027-0082-035-0000 R1
Tran, Henry G./Deborah J.
2983 24th St.
Sacramento, CA 95818

027-0082-036-0000 R1
Foster, James, Jr./Delores Louise
7721 36th Ave.
Sacramento, CA 95824

027-0083-006-0000 M2 S
Jackson/Ekstrom
5665 Power Inn Rd. 140
Sacramento, CA 95824

027-0161-001-0000 R1
Tomasich, John
N1781 Riverside Dr.
Shawano, WI 54166

027-0161-002-0000 R1
Ortega, Ernest J./Rosaura
7908 33rd Ave.
Sacramento, CA 95824

027-0161-003-0000 R1
Reyes, Ruben V./Eleanor
Hibernia Bank
P.O. Box 6207
Concord, CA 94524

027-0161-004-0000 R1
Montoya, Ruth Allison
7916 33rd Ave.
Sacramento, CA 95824

027-0161-005-0000 R1
Alonso, Ysmael/Mario R.
7920 33rd Ave.
Sacramento, CA 95824

027-0161-006-0000 R1
First National Bank of Chicago/Tr
Chrysler Financial
2400 S. Peoria 208
Aurora, CO 80014

027-0161-007-0000 R1
Britton, John R./Marlene
2613 52nd Ave.
Sacramento, CA 95822

027-0161-008-0000 R1
Saechao Chiam Kouei/Kae Chiame Saetern
8000 33rd Ave.
Sacramento, CA 95824

027-0161-009-0000 R1
Walton, Mark A.
8006 33rd Ave.
Sacramento, CA 95824

027-0161-009-0080 R1
Rodriguez, Poncy F.
2561 23rd Ave.
Sacramento, CA 95820

027-0161-010-0000 R1
Woodson, Arnather
8010 33rd Ave.
Sacramento, CA 95824

027-0161-011-0000 R1
Nava, Jose/Julia C.
8018 33rd Ave.
Sacramento, CA 95824

027-0161-012-0000 R1
Nava, Jose/Julia C.
8018 33rd Ave.
Sacramento, CA 95824

027-0161-013-0000 R1
Shannon, Edwin B./Evelyn D. Robles
14 Maldonado Ct.
Sacramento, CA 95820

027-0161-016-0000 R1
Garcia, Humberto M./Juana I.
9265 Premier Way
Sacramento, CA 95826

027-0161-017-0000 R1
Garcia, Humberto M./Juana I.
9265 Premier Way
Sacramento, CA 95826

027-0161-018-0000 R1
Shannon, Edwin B./Evelyn D.R.
14 Maldonado Ct.
Sacramento, CA 95820

027-0161-019-0000 R1
Shannon, Edwin B./Evelyn D.R.
14 Maldonado Ct.
Sacramento, CA 95820

027-0161-020-0000 R1
Garcia, Antonio/Adela
8017 34th Ave.
Sacramento, CA 95824

027-0161-021-0000 R1
Carlson, Alfred J., Sr./Joanne P.
8013 34th Ave.
Sacramento, CA 95824

027-0161-022-0000 R1
Haneef, Ammad M./Martha R.
8009 34th Ave.
Sacramento, CA 95824

027-0161-023-0000 R1
Pena, Yolanda/Melissa P. Medina/Jorge Del-Toro Jr.
8005 34th Ave.
Sacramento, CA 95824

027-0161-024-0000 R1
Pickett, Winnie
8001 34th Ave.
Sacramento, CA 95824

027-0161-025-0000 R1
Taylor, Joyce Ann/Lorenzo
7929 34th Ave.
Sacramento, CA 95824

027-0161-026-0000 R1
Craft, Mary Lee/et al.
2445 Lowell Ave.
Memphis, TN 38114

027-0161-027-0000 R1
Alonso, Ysmael/Angie
7921 34th Ave.
Sacramento, CA 95824

027-0161-028-0000 R1
Alonso, Ysmael/Angie R.
7921 34th Ave.
Sacramento, CA 95824

027-0161-029-0000 R1
Saephan, Yao Fin/Houng K.
2035 Sonoma Way
Oakland, CA 94606

027-0161-030-0000 R1
Miles, William/Est of
7909 34th Ave.
Sacramento, CA 95824

027-0161-031-0000 R1
Lucero, Richard H./Tony A.
8946 Lake Elsinore Ct.
Elk Grove, CA 95624

027-0161-032-0000 R1
Migulae, Ion/Ecaterina Axinte
7394 Stratford St.
Sacramento, CA 95822

027-0161-033-0000 R1
Feltus, Willie D.
5735 79th St.
Sacramento, CA 95824

027-0161-034-0000 R1
Miles, William/Est of
Cora Willis
5816 Dewey Boulevard
Sacramento, CA 95824

027-0161-035-0000 R1
Lacebal, Charlotta M./Aldolfo Vargas
5725 79th St.
Sacramento, CA 95824

027-0161-036-0000 R1
R. F. Norman Corporation
5721 79th St.
Sacramento, CA 95824

027-0161-037-0000 R1
Engstrom, Robert E./Norma L.
5722 Power Inn Rd.
Sacramento, CA 95824

027-0162-001-0000 R1
GE Capital Mortgage Services Inc.
4180 La Jolla Village Drive 405
La Jolla, CA 92037

027-0162-002-0000 R1
Starks, Andrew
7825 34th Ave.
Sacramento, CA 95824

027-0162-003-0000 R1
Thich Quy Van/Cau Quoc Tran
7912 34th Ave.
Sacramento, CA 95824

027-0162-004-0000 R1
Martinez, Thomas M./Esther R.
7916 34th Ave.
Sacramento, CA 95824

027-0162-005-0000 R1
Rodriguez, Guadalupe F./Santos T.
4319 78th St.
Sacramento, CA 95820

027-0162-008-0000 R1
Harmon, Morris E.
7926 34th Ave.
Sacramento, CA 95824

027-0162-009-0000 R1
The Chu Quan/Chu Vinn
8004 34th Ave.
Sacramento, CA 95824

027-0162-010-0000 R1
Luong Xuong Dai
8010 34th Ave.
Sacramento, CA 95824

027-0162-011-0000 R1
Bordon, Edgar J./Pacita/et al.
117 Lakewood Rd.
Walnut Creek, CA 94598

027-0162-012-0000 R1
Sheckler, Ronald Bernard/Charlane Theresa
8400 Everglade Dr.
Sacramento, CA 95826

027-0162-012-0080 R1
Downey Savings/Loan Association
P.O. Box 6025
Costa Mesa, CA 92626

027-0162-013-0000 R1
Sullen, Roosevelt/Anjetter
7704 Blackwater Way
Sacramento, CA 95831

027-0162-016-0000 R1
Sullen, Roosevelt/Anjetter
7704 Blackwater Way
Sacramento, CA 95831

027-0162-017-0000 R1
Moore, Ellis P. O./Eaddie Mae
8001 35th Ave.
Sacramento, CA 95824

027-0162-021-0000 R1
Hitchcock, Juanita F.
7921 35th Ave.
Sacramento, CA 95824

027-0162-022-0000 R1
Hitchcock, Juanita F.
7921 35th Ave.
Sacramento, CA 95824

027-0162-023-0000 R1
Hitchcock, Juanita F.
7921 35th Ave.
Sacramento, CA 95824

027-0162-024-0000 R1
Hitchcock, Juanita F.
7921 35th Ave.
Sacramento, CA 95824

027-0162-025-0000 R1
Samaniego, Ariel C./Rowena D.
5805 79th St.
Sacramento, CA 95824

027-0162-026-0000 R1
Manistee, Laura D.
4640 Don Julio Blvd.
Sacramento, CA 95842

027-0162-027-0000 R1
Rodea, Margaret
5791 79th St.
Sacramento, CA 95824

027-0162-028-0000 R1
Rodea, Margaret
5791 79th St.
Sacramento, CA 95824

027-0162-029-0000 R1
Rodea, Margaret
5791 79th St.
Sacramento, CA 95824

027-0162-031-0000 R1
Rypstra, George
7704 Blackwater Way
Sacramento, CA 95831

027-0162-032-0000 R1
Rypstra, George
7704 Blackwater Way
Sacramento, CA 95831

027-0162-033-0000 R1
Harmon, Morris E.
7926 34th Ave.
Sacramento, CA 95824

027-0162-035-0000 R1
Modeste, Percy/Nellie
7929 35th Ave.
Sacramento, CA 95824

027-0162-036-0000 R1
Rocha, Lora G.
7925 35th Ave.
Sacramento, CA 95824

027-0162-037-0000 R1
Moore, Ellis P./Eaddie M.
8001 35th Ave.
Sacramento, CA 95824

027-0261-001-0000 R1
Deollas, Steven/Julia
6619 50th St.
Sacramento, CA 95823

027-0261-002-0000 R1
Voong, Cam A.
7908 35th Ave.
Sacramento, CA 95824

027-0261-003-0000 R1
Velasquez Family Living Trust
7916 35th Ave.
Sacramento, CA 95824

027-0261-004-0000 R1
Velasquez Family Living Trust
7916 35th Ave.
Sacramento, CA 95824

027-0261-005-0000 R1
Castro, Roy R./Betty D.
7920 35th Ave.
Sacramento, CA 95824

027-0261-006-0000 R1
Cortez, Alfonso H./Linda
7922 35th Ave.
Sacramento, CA 95824

027-0261-007-0000 R1
Cortez, Alfonso H./Linda R.
7922 35th Ave.
Sacramento, CA 95824

027-0261-008-0000 R1
Lytle, Walt/Les Hand
8812 Sam Badger Way
Elk Grove, CA 95624

027-0261-009-0000 R1
Tamayo, Jennie E.
8004 35th Ave.
Sacramento, CA 95824

027-0261-010-0000 R1
Lay, Cuong A.
8008 35th Ave.
Sacramento, CA 95824

027-0261-011-0000 R1
Jones, David A.
2441 Nowalk Dr.
Placerville, CA 95667

027-0261-012-0000 R1
Jones, David A.
2441 Nowalk Dr.
Placerville, CA 95667

027-0261-015-0000 R1
Velasquez, Jimmy E./Joe M.
5830 Power Inn Rd.
Sacramento, CA 95824

027-0261-016-0000 R1
Mohan, Chandra/Nirmala D. Sharma
13638 E. Dicky St.
Whittier, CA 90605

027-0261-017-0000 R1
Mohan, Chandra/Nirmala D. Sharma
13638 E. Dicky St.
Whittier, CA 90605

027-0261-018-0000 R1
Mohan, Chandra/Nirmala D. Sharma
13638 E. Dicky St.
Whittier, CA 90605

027-0261-019-0000 R1
Singh Prem/Shakuntala/Yaswant
8017 36th Ave.
Sacramento, CA 95824

027-0261-020-0000 R1
Aragon, Ramon/et al.
8015 36th Ave.
Sacramento, CA 95824

027-0261-021-0000 R1
Adams, Larry W./Arlene M. et al.
Knoll Ins. Agency
1390 S. Winchester Blvd. D
San Jose, CA 95123

027-0261-022-0000 R1
Nguyen Trung Van/Huong Thi Huyah/Cuu Dam
8003 36th Ave.
Sacramento, CA 95824

027-0261-023-0000 R1
Khang By/Phua Yang/et al.
8001 36th Ave.
Sacramento, CA 95824

027-0261-024-0000 R1
Khang GE
2967 Beeston Ave.
Sacramento, CA 95822

027-0261-025-0000 R1
Campbell, Roe E./Esther M.
278 Plum St.
Vacaville, CA 95688

027-0261-026-0000 R1
Unruh, Abe D./Eunice I./Tr
6920 Grand Tree Lane
Citrus Heights, CA 95621

027-0261-027-0000 R1
Jennings, Donald R./Bernice
8100 La Riviera Dr.
Sacramento, CA 95826

027-0261-028-0000 R1
Saffell, James T./Blanche N.
7911 36th Ave.
Sacramento, CA 95824

027-0261-029-0000 R1
Prasad, Ahdika/Usha Devi
28744 Etta Ave.
Hayward, CA 94544

027-0261-030-0000 R1
Hand, Leslie H./Janet L./Walter C.
Lytle/Cindy Lea
5839 79th St.
Sacramento, CA 95824

027-0261-031-0000 R1
Hand, Les/Walt Lytle
8740 Driskin Dr.
Elk Grove, CA 95825

027-0261-032-0000 R1
Howard, Garrett F./Melanie A.
7345 Pritchard Rd.
Sacramento, CA 95828

027-0261-033-0000 R1
McClintock, Kenneth D./Theresa G.
5821 79th St.
Sacramento, CA 95824

027-0261-034-0000 R1
Byrd, Ezra/Lois F.
5820 Power Inn Rd.
Sacramento, CA 95824

027-0262-001-0000 R1
McCauley, Thomas B./Catherine A.
P.O. Box 254480
Sacramento, CA 95825

027-0262-002-0000 R1
Pisarczyk, Andrew G.
P.O. Box 191426
Sacramento, CA 95819

027-0262-003-0000 R1
Ojma, Murari P./Sharada
7912 36th Ave.
Sacramento, CA 95824

027-0262-004-0000 R1
Campbell, Edgar W./Betty R.
7918 36th Ave.
Sacramento, CA 95824

027-0262-005-0000 R1
Seachao, Warn Fong/Lai Sen
7920 36th Ave.
Sacramento, CA 95824

027-0262-006-0000 R1
Cao Cho
7924 36th Ave.
Sacramento, CA 95824

027-0262-007-0000 R1
Gately, Robert E., Jr./Stacy L.
7928 36th Ave.
Sacramento, CA 95824

027-0262-008-0000 R1
Goerend, Fred
8004 36th Ave.
Sacramento, CA 95824

027-0262-010-0000 R1
Davalas, Jose H./Maria J.
8010 36th Ave.
Sacramento, CA 95824

027-0262-011-0000 R1
Botello, Arthur
8012 36th Ave.
Sacramento, CA 95824

027-0262-012-0000 R1
Arellano, Pearl E.
8016 36th Ave.
Sacramento, CA 95824

027-0262-013-0000 R1
Reyes, Paul M./Rosaura
8020 36th Ave.
Sacramento, CA 95824

027-0262-014-0000 R1
Morales, Simon O./Dolores S.
5874 Power Inn Rd.
Sacramento, CA 95824

027-0262-015-0000 R1
Arellano, Ben M./Bette D.
8510 Bader Rd.
Elk Grove, CA 95624

027-0262-016-0000 R1
Martinez, Miguel V.
5884 Power Inn Rd.
Sacramento, CA 95824

027-0262-019-0000 R1
Licon, Lisa
8017 37th Ave.
Sacramento, CA 95824

027-0262-020-0000 R1
Alfaro, Salvador Dias/Evangalina Ramirez
8013 37th Ave.
Sacramento, CA 95824

027-0262-021-0000 R1
Duo Nguyen Family Trust
8009 37th Ave.
Sacramento, CA 95824

027-0262-022-0000 R1
Soin Bal Krishan/Urmil
2514 21st Ave.
Sacramento, CA 95820

027-0262-023-0000 R1
Saechao Nai Veurn
7929 37th Ave.
Sacramento, CA 95824

027-0262-024-0000 R1
Severino, N./Lapaz A. Rivera 1990 Trust
7925 37th Ave.
Sacramento, CA 95824

027-0262-025-0000 R1
Chuong, Dia T./Ann M. Banh/Khristy
7921 37th Ave.
Sacramento, CA 95824

027-0262-026-0000 R1
Goerend, Fridolin J./Rose M.
7915 37th Ave.
Sacramento, CA 95824

027-0262-027-0000 R1
Goerend, Fridolin J./Rose Mary
7915 37th Ave.
Sacramento, CA 95824

027-0262-028-0000 R1
Chavez, Mayolo/Graciela Ortiz/Eucario
7909 37th Ave.
Sacramento, CA 95824

027-0262-031-0000 R1
Potter, Nadine B./Gertrude
5891 79th St.
Sacramento, CA 95824

027-0262-032-0000 R1
Dutt, Muneshwar/Bimla Wati
5877 79th St.
Sacramento, CA 95824

027-0262-033-0000 R1
Dutt, Muneshwar/Bimla/Vimlesh
5875 79th St.
Sacramento, CA 95824

027-0262-034-0000 R1
Potter, Nadine B./Gertrude
5891 79th St.
Sacramento, CA 95824

027-0262-035-0000 R1
Indrieri, Anthony/Connie/William Thomas/
Angela
2505 Castine Court
Sacramento, CA 95826

027-0341-001-0000 R1
Medina, Pete L./Emma D.
5915 79th St.
Sacramento, CA 95824

027-0341-002-0000 R1
Tang Phon
6307 Sunrise South Dr.
Sacramento, CA 95824

027-0341-003-0000 R1
Goerend, Fred
7915 37th Ave.
Sacramento, CA 95824

027-0341-004-0000 R1
Lorta, Ruben/Sadie
7916 37th Ave.
Sacramento, CA 95824

027-0341-005-0000 R1
Nelson, Georgia I./Yolanda E. Taber
7920 37th Ave.
Sacramento, CA 95824

027-0341-006-0000 R1
Brausch, Dannie/Barbara M.
6875 Villa Juares Circle
Sacramento, CA 95828

027-0341-007-0000 R1
Medina, Phillip/Margaret
8000 37th Ave.
Sacramento, CA 95824

027-0341-008-0000 R1
Simmons, Luther J./Lois W.
8004 37th Ave.
Sacramento, CA 95824

027-0341-009-0000 R1
Lange, Ruby J.
8008 37th Ave.
Sacramento, CA 95824

027-0341-010-0000 R1
Lange, Ruby J.
8008 37th Ave.
Sacramento, CA 95824

027-0341-011-0000 R1
Ferraren, Florencio C., Jr./Victoria V.
8012 37th Ave.
Sacramento, CA 95824

027-0341-012-0000 R1
Tameri, Abby
9718 Fair Oaks Blvd.
Fair Oaks, CA 95628

027-0341-013-0000 R1
Gilmette, Joseph A.
4400 Art Parkway
Sacramento, CA 95823

027-0341-016-0000 R1
Schultz, Charles W.
305 Anderson Court
Sacramento, CA 95838

027-0341-020-0000 R1
Harmon, Morris
7926 34th Ave.
Sacramento, CA 95824

027-0341-021-0000 R1
Soin, Chander M./et al.
7146 Murdock Way
Carmichael, CA 95608

027-0341-024-0000 R1
Schillianskey, Virgil R./Jill A.
8013 38th Ave.
Sacramento, CA 95824

027-0341-025-0000 R1
Niem, Duc C.
8005 38th Ave.
Sacramento, CA 95824

027-0341-028-0000 R1
Thomas, Leona E./et al.
7915 38th Ave.
Sacramento, CA 95824

027-0341-029-0000 R1
Krasnodemsky, Gregory
9830 Lincoln Village Dr. 7
Sacramento, CA 95827

027-0341-030-0000 R1
Church of the Living God Faith
Bishop Harrison R.W.
P.O. Box 21951
San Jose, CA 95151

027-0341-031-0000 R1
Church of the Living God Faith
Bishop Harrison R.W.
P.O. Box 21951
San Jose, CA 95151

027-0341-032-0000 R1
Church of the Living God Faith
Bishop Harrison R.W.
P.O. Box 21951
San Jose, CA 95151

027-0341-033-0000 R1
Church of the Living God Faith
Bishop Harrison R.W.
P.O. Box 21951
San Jose, CA 95151

027-0341-034-0000 R1
Nawal, Ram
5935 79th St.
Sacramento, CA 95824

027-0341-035-0000 R1
Garcia, John
4501 Franklin Blvd.
Sacramento, CA 95820

027-0341-036-0000 R1
McFarlane, Robert B.
6400 Westbrook Dr.
Citrus Heights, CA 95621

027-0341-037-0000 R1
Benioff, Robert
Dan Sanadeo
P.O. Box 653
Davis, CA 95617

027-0341-038-0000 R1
Nabel Steel Trust/et al.
9469 Erwin Ave.
Orangevale, CA 95662

027-0341-039-0000 R1
William C. Crosby Trust
11236 Skagit River Ct.
Rancho Cordova, CA 95670

027-0341-041-0000 R1
Remme, Stanley A./Lorraine
8232 Cedar Crest Way
Sacramento, CA 95826

027-0341-042-0000 R1
Morton, Jennie Bell
7925 38th St.
Sacramento, CA 95824

027-0342-001-0000 R1
Cantwell, Jesse L./Betty A.
5965 79th St.
Sacramento, CA 95824

027-0342-002-0000 R1
Dawson, Bobby L./Juliette
7908 38th Ave.
Sacramento, CA 95824

027-0342-002-0080 R1
Beel, Lora P.
Box 486
Greenville, CA 95947

027-0342-003-0000 R1
Surita, Manuel G.
7912 38th Ave.
Sacramento, CA 95824

027-0342-005-0000 R1
Bussey, Lucy E.
Amerson, Lucy
55 Aptos Ave.
San Francisco, CA 94127

027-0342-006-0000 R1
Sanchez, Guadalupe C.
7920 38th Ave.
Sacramento, CA 95824

027-0342-007-0000 R1
Thomas, Tom
8456 Country Greens Court
Sacramento, CA 95828

027-0342-008-0000 R1
Lu Sau P./Muoi Kim
5949 Lemon Hill Ave.
Sacramento, CA 95824

027-0342-009-0000 R1
Housing Authority, City of Sacramento
Tech Service Division
P.O. Box 1834
Sacramento, CA 95812

027-0342-010-0000 R1
Sharma, Rajesh P.
6334 25th St.
Sacramento, CA 95822

027-0342-011-0000 R1
Labeau, Ruby
7412 Garden Gate Dr.
Citrus Heights, CA 95621

027-0342-012-0000 R1
Thai Tai Thi
8016 38th Ave.
Sacramento, CA 95824

027-0342-013-0000 R1
Bailey, William B./Essie D.
2112 28th St.
Sacramento, CA 95818

027-0342-014-0000 R1
Villanueva, Antonio G./Maria P.
7725 36th Ave.
Sacramento, CA 95824

027-0342-015-0000 R1
Barajas, Fidel Sanchez/Deborah G.
4200 82nd St. E.
Sacramento, CA 95826

027-0342-016-0000 R1
Barajas, Fidel Sanchez/Deborah G.
4200 82nd St. E.
Sacramento, CA 95826

027-0342-017-0000 R1
Spease, David John/Karen E.
9666 Sheldon Rd.
Elk Grove, CA 95624

027-0342-018-0000 R1
Spease, David John/Karen E.
9666 Sheldon Rd.
Elk Grove, CA 95624

027-0342-019-0000 R1
Spease, David John/Karen E.
9666 Sheldon Rd.
Elk Grove, CA 95624

027-0342-020-0000 R1
Moore, Rachel L.
8017 39th Ave.
Sacramento, CA 95824

027-0342-021-0000 R1
Hoong Sin Ky
8013 39th Ave.
Sacramento, CA 95824

027-0342-022-0000 R1
Luong, Anthony P.
8009 39th Ave.
Sacramento, CA 95824

027-0342-023-0000 R1
Cardenas, Ruben G./Herminia D.
6932 Fruitridge Rd.
Sacramento, CA 95820

027-0342-024-0000 R1
Cardenas, Ruben G./Herminia D.
8001 39th Ave.
Sacramento, CA 95824

027-0342-025-0000 R1
Thielbahr, Charles J./Myrtle M.
3525 50th St.
Sacramento, CA 95820

027-0342-026-0000 R1
Co Thong Dat
1069 Andy Circle
Sacramento, CA 95838

027-0342-027-0000 R1
Westwood Concepts Inc.
P.O. Box 163718
Sacramento, CA 95816

027-0342-028-0000 R1
Lal, Sippy R./Hashat Ali/Rahat Buksh
83 Cache River Circle
Sacramento, CA 95831

027-0342-029-0000 R1
Buksh, Shamshad/Rahat
23 River Port Circle
Sacramento, CA 95831

027-0342-030-0000 R1
Stinnett, Jeff M./Renee J.
5991 79th St.
Sacramento, CA 95824

027-0342-031-0000 R1
Chandra, Angeline/Haresh
5613 Castleford Way
Elk Grove, CA 95758

027-0342-032-0000 R1
Stigall, Roy E., Jr.
7437 Henrietta Ave.
Sacramento, CA 95822

027-0342-033-0000 R1
Rodriquez, Rodolfo
5975 79th St.
Sacramento, CA 95824

027-0342-034-0000 R1
Linn, William Kurt
8467 Everglade Dr.
Sacramento, CA 95826

027-0342-035-0000 R1
Cantwell, Jesse L./Betty A.
5965 79th St.
Sacramento, CA 95824

027-0342-036-0000 R1
Morano, Carlo & Mary Jane
4460 B St.
Sacramento, CA 95819

027-0342-037-0000 R1
Allen, Albert & Joyce
7916 38th Ave.
Sacramento, CA 95824

027-0350-008-0000 M2 S
La Tona, Theodor C./JoAnne J./et al.
1424 Shirley Dr.
Sacramento, CA 95822

027-0350-009-0000 M2 S
Townsend, Robert E./Elma M./Tr
336 Claydon Way
Sacramento, CA 95864

027-0350-010-0000 M2 S
La Toma, Theodore C./JoAnne J./et al.
1424 Shriley Dr.
Sacramento, CA 95822

027-0350-013-0000 M2 S
Clarence/Elizabeth M. Hester 1990 Revocable Trust
6411 13th St.
Sacramento, CA 95831

027-0350-014-0000 M2 S
Emmick, Linda K.
5010 Kenneth Ave.
Fair Oaks, CA 95628

027-0350-015-0000 M2 S
Heskett, Robert D./Pamela G.
233 Cascade Falls Dr.
Folsom, CA 95630

027-0350-016-0000 M2 S
Jeffrey Partnership
161 Westcott Way
Sacramento, CA 95864

027-0350-017-0000 M2 S
Luellen, Stanley A./Caroline K.
5515 Sierra View Way
Sacramento, CA 95820

027-0350-018-0000 M2 S
Luellen, Stanley A./Caroline K.
5515 Sierra View Way
Sacramento, CA 95820

027-0350-020-0000 M2 S
Haase, E. Fred/Irene D.
7653 Fastbreeze Circle
Sacramento, CA 95820

027-0350-021-0000 M2 S
Moore, Andrew A./Helen A./Steve Powell/Patricia J.
8139 36th Ave.
Sacramento, CA 95824

027-0350-022-0000 M2 S
Fernandez, Delmar
2840 Berkshire Way
Sacramento, CA 95864

027-0350-023-0000 M2 S
Barge, Richard G.
8650 Pacific Hills Way
Sacramento, CA 95828

027-0350-024-0000 M2 S
Lawrence/JoAnne Graham Family Trust/et al.
4015 Pennsylvania Ave.
Fair Oaks, CA 95628

027-0350-025-0000 M2 S
Paine, Donald E./Carolyn
4055 Silver St.
Rocklin, CA 95677

027-0350-029-0000 M2 S
Townsend, Robert E./Elma M./Tr
336 Claydon Way
Sacramento, CA 95864

027-0350-030-0000 M2 S
Clarence/Elizabeth M. Hester 1990 Revocable Trust
6411 13th St.
Sacramento, CA 95831

027-0350-034-0000 M2 S
Emmick, Linda K.
5010 Kenneth Ave.
Fair Oaks, CA 95628

027-0350-035-0000 M2 K
Central Sanitation District County
0 36th Ave.
Sacramento, CA 95824

027-0350-036-0000 M2 K
Beatty Family Trust
P.O. Box 6899
Incline Village, NV 89450

027-0350-037-0000 M2 S
Jackson/Ekstrom
5665 Power Inn Rd. 140
Sacramento, CA 95824

027-0350-041-0000 M2 S
Jackson/Ekstrom
5665 Power Inn Rd. 140
Sacramento, CA 95824

027-0350-042-0000 M2 S
Jackson/Ekstrom
5665 Power Inn Rd. 140
Sacramento, CA 95824

027-0350-043-0000 M2 S
Jackson/Ekstrom
5665 Power Inn Rd. 140
Sacramento, CA 95824

027-0350-044-0000 M2 S
Jackson/Ekstrom
5665 Power Inn Rd. 140
Sacramento, CA 95824

027-0360-002-0000 M2 S
Wong, Jack P./Judy V.
1250 8th Ave.
Sacramento, CA 95818

027-0360-008-0000 M2 S
Biondi, Stephan E./Mary
8150 37th Ave.
Sacramento, CA 95824

027-0360-009-0000 M2 S
Web Service Company Inc.
3690 Freeman Blvd.
Redondo Beach, CA 90278

027-0360-010-0000 M2 S
Web Service Company Inc.
3690 Freeman Blvd.
Redondo Beach, CA 90278

027-0360-011-0000 M2 S
Pacoast Inc.
P.O. Box 292337
Sacramento, CA 95829

027-0360-012-0000 M2 S
Mayhew, Jay A./Lucille D.
8110 37th Ave.
Sacramento, CA 95824

027-0360-013-0000 M2 S
Marie J. Kniveton Trust
5931 Power Inn Rd.
Sacramento, CA 95824

027-0360-014-0000 M2 S
Marie J. Kniveton Trust
5941 Power Inn Rd.
Sacramento, CA 95824

027-0360-015-0000 M2 S
W. E. Hall Co.
P.O. Box 2450
Newport Beach, CA 92658

027-0360-016-0000 M2 S
W. E. Hall Co.
P.O. Box 2450
Newport Beach, CA 92658

027-0360-018-0000 M2 S
Wong, Jack P./Judy Y.
1250 8th Ave.
Sacramento, CA 95818

027-0360-019-0000 M2 S
Ross, John D./Rosemary
8111 37th Ave.
Sacramento, CA 95824

027-0360-020-0000 M2 S
Shanahan, Dennis J./Deborah S.
8141 37th Ave.
Sacramento, CA 95824

027-0360-023-0000 M2 S
Spanda Industrial Development Co.
7515 Reese Rd.
Sacramento, CA 95828

Book 23

023-0201-001-0000 R1
Jimenez, Edgardo E./Claudia M.
4990 79th St.
Sacramento, CA 95820

023-0202-001-0000 R1
Kafati, Jacob/Patti
4991 79th St.
Sacramento, CA 95820

023-0202-002-0000 R1
Gomez, Juan R./Delia L.
7951 25th Ave.
Sacramento, CA 95820

023-0202-003-0000 R1
Grimes, Ruth C./Delonge, Marian L.
7981 25th Ave.
Sacramento, CA 95820

023-0202-004-0000 R1
Cervantes, Raymond E./Mary R.
8001 25th Ave.
Sacramento, CA 95820

023-0202-005-0000 R1
Hawthorne, Arsenetta C.
8021 25th Ave.
Sacramento, CA 95820

023-0202-006-0000 R1
Mello, Frank/Betty J.
8041 25th Ave.
Sacramento, CA 95820

023-0203-001-0000 R1
Lawrence, Veronica D.
7850 25th Ave.
Sacramento, CA 95820

023-0203-002-0000 R1
Noero, Ron P./Jolene
4344 Heyer Ave.
Castro Valley, CA 94546

023-0203-003-0000 R1
Kafati, Nadim
7900 25th Ave.
Sacramento, CA 95820

023-0203-004-0000 R1
Peterson, Henry L./Margaret M.
7940 25th Ave.
Sacramento, CA 95820

023-0203-005-0000 R1
Snelling, Michael D./Maxine
7980 25th Ave.
Sacramento, CA 95820

023-0203-006-0000 R1
Gomes, Stephen A./Adele C.
5020 80th St.
Sacramento, CA 95820

023-0203-007-0000 R1
Collins, James W. Jr./Maureen J.
5040 80th St.
Sacramento, CA 95820

023-0203-008-0000 R1
Eiserman, Nancy/Sandra Enders
Sandra Enders
5999 Garden Highway
Sacramento, CA 95837

023-0203-009-0000 R1
Coleman, Andrew C./Alice B.
5080 80th St.
Sacramento, CA 95820

023-0203-010-0000 R1
Byrd, Raymond R.
5100 80th St.
Sacramento, CA 95820

023-0203-011-0000 R1
Davis, Brenda G.
5120 80th St.
Sacramento, CA 95820

023-0203-012-0000 R1
Byrd, Laurie C./Betty M.
5140 80th St.
Sacramento, CA 95820

023-0203-013-0000 R1
Koppinger, Anita I.
5170 80th St.
Sacramento, CA 95820

023-0203-014-0000 R1
Bock, James C./Patricia J.
5200 80th St.
Sacramento, CA 95820

023-0203-015-0000 R1
Kolbe, Ronald D.
5220 80th St.
Sacramento, CA 95820

023-0204-001-0000 R1
Hicks, Fredrick L./Martha J.
8000 25th Ave.
Sacramento, CA 95820

023-0204-002-0000 R1
Peterson, Milford A./Jeanne/Tr
8020 25th Ave.
Sacramento, CA 95820

023-0204-003-0000 R1
Gordy, Wilma
5000 Toronto Way
Sacramento, CA 95820

023-0204-004-0000 R1
Vallejos, John R./Elizabeth L.
5032 Toronto Way
Sacramento, CA 95820

023-0204-005-0000 R1
Chan, Tim C./Joyce L.
5048 Toronto Way
Sacramento, CA 95820

023-0204-006-0000 R1
Okino, Setsuo/Constance K.
5064 Toronto Way
Sacramento, CA 95820

023-0204-007-0000 R1
Watanabe, Takeo J./Amy I.
5080 Toronto Way
Sacramento, CA 95820

023-0204-008-0000 R1
Goodier, Lee H./Suzette G.
5096 Toronto Way
Sacramento, CA 95820

023-0204-009-0000 R1
Kawamura, Frank A./Lily Yurie
5112 Toronto Way
Sacramento, CA 95820

023-0204-010-0000 R1
Cano, Frank J./Alvida I.
5128 Toronto Way
Sacramento, CA 95820

023-0204-011-0000 R1
Kawamura, Katsuko
5144 Toronto Way
Sacramento, CA 95820

023-0204-012-0000 R1
Brida, Sergio F.
5160 Toronto Way
Sacramento, CA 95820

023-0204-013-0000 R1
Pasillas, Ezequiel/Consuelo/et al.
5184 Toronto Way
Sacramento, CA 95820

023-0204-014-0000 R1
Carl, Marlin L.
8021 Vandenberg Dr.
Sacramento, CA 95820

023-0204-015-0000 R1
Jones, Steven Lynn/Elizabeth June
8011 Vandenberg Dr.
Sacramento, CA 95820

023-0204-016-0000 R1
Crump, Carl J./Alice M.
5221 80th St.
Sacramento, CA 95820

023-0204-017-0000 R1
Loretta M. Fransham Family Trust
5201 80th St.
Sacramento, CA 95820

023-0204-018-0000 R1
Asher, Steven T./Janet Lynn
5181 80th St.
Sacramento, CA 95820

023-0204-019-0000 R1
Blum, Melvin H./Catherine G.
5161 80th St.
Sacramento, CA 95820

023-0204-020-0000 R1
Syas, Earl/Mildred L.
5141 80th St.
Sacramento, CA 95820

023-0204-021-0000 R1
Long, Douglas S./Viola
6139 Lucero Dr.
Sacramento, CA 95824

023-0204-022-0000 R1
Kaufman, Herbert/Ruth
S/D Investments
910 Florin Rd. 216
Sacramento, CA 95831

023-0204-023-0000 R1
Borders, James
5081 80th St.
Sacramento, CA 95820

023-0204-024-0000 R1
Robinson, Barbara A.
5061 80th St.
Sacramento, CA 95820

023-0204-025-0000 R1
Baba, Roy T./Yasuko
5041 80th St.
Sacramento, CA 95820

023-0204-026-0000 R1
Breen, Richard W./Clarece
5021 80th St.
Sacramento, CA 95820

023-0205-001-0000 R1
Kline, Harry E./Valerie J.
3976 Wildrose Way
Sacramento, CA 95826

023-0205-002-0000 R1
Smith, Mary Catherine
4991 Toronto Way
Sacramento, CA 95820

023-0205-003-0000 R1
Sanford, George E./Betty J.
5001 Toronto Way
Sacramento, CA 95820

023-0205-004-0000 R1
Smith, Philipp E./Jane C.
5017 Toronto Way
Sacramento, CA 95820

023-0205-005-0000 R1
Larson, Mona R.
5033 Toronto Way
Sacramento, CA 95820

023-0205-006-0000 R1
Pienado, Manuel J./Yolanda/Carlos Herrera/
Vitalina
2984 Frye St.
Oakland, CA 94602

023-0205-007-0000 R1
Collard, Charles E./Evelyn
5065 Toronto Way
Sacramento, CA 95820

023-0205-008-0000 R1
Deal, Edward J. Jr./Patricia A.
5081 Toronto Way
Sacramento, CA 95820

023-0205-009-0000 R1
Hunt, Darrel R./Gail J.
5097 Toronto Way
Sacramento, CA 95820

023-0205-010-0000 R1
Wares, Clyde A./Jean
5113 Toronto Way
Sacramento, CA 95820

023-0205-011-0000 R1
Yoshihara, Juanita M.
5129 Toronto Way
Sacramento, CA 95820

023-0205-012-0000 R1
Finsterbush, Jeffrey Allan/Roberta A.
5145 Toronto Way
Sacramento, CA 95820

023-0205-013-0000 R1
Carpenter, Herbert L./Hazel L.
5161 Toronto Way
Sacramento, CA 95820

023-0205-014-0000 R1
Clark, Chester D./Rose Marie
5177 Toronto Way
Sacramento, CA 95820

023-0205-015-0000 R1
Henry, Willie/Clara E.
4929 St. Augustine Drive
Elk Grove, CA 95758

023-0205-016-0000 R1
Petrie, Walter J./Julia M.
5209 Toronto Way
Sacramento, CA 95820

023-0281-001-0000 R1
Small, John G./Beverly J.
5230 79th St.
Sacramento, CA 95820

023-0281-002-0000 R1
Clifford/Virginia Cook Living Trust
8401 Bennington Way
Sacramento, CA 95826

023-0281-003-0000 R1
Trotter, Tracy M./Darrel G. Rochester
5310 79th St.
Sacramento, CA 95820

023-0281-004-0000 R1
Imperio, Sofia Q.
7931 Verna Mae Ave.
Sacramento, CA 95828

023-0281-005-0000 R1
Petersen, Kenneth L./Joanne S.
5350 79th St.
Sacramento, CA 95820

023-0281-006-0000 R1
Arroyo, Michael/Estate of
5370 79th St.
Sacramento, CA 95820

023-0281-007-0000 R1
Weegar, Mark D./Rebecca J. Riedel
11520 Tribuna Ave.
San Diego, CA 92131

023-0281-008-0000 R1
Wong, Tina A.
5400 79th St.
Sacramento, CA 95820

023-0281-009-0000 R1
Green, Donald S.
5408 79th St.
Sacramento, CA 95820

023-0281-010-0000 R1
Poon, Raymond/Miranda
5414 79th St.
Sacramento, CA 95820

023-0281-011-0000 R1
Garcia, Arthur C.
5669 La Campana Way
Sacramento, CA 95822

023-0281-012-0000 R1
Bodenhamer, Forest A./Anna J.
5407 78th St.
Sacramento, CA 95820

023-0281-013-0000 R1
Kowalski, Peter S./Elaine F.
3113 Huntsman Dr.
Sacramento, CA 95826

023-0281-014-0000 R1
James/Alice Gamble 1991 Revocable Trust
5391 78th St.
Sacramento, CA 95820

023-0281-015-0000 R1
Mayberry, Ronald W./Barbara J.
5371 78th St.
Sacramento, CA 95820

023-0281-016-0000 R1
Lange, Paul A.
5351 78th St.
Sacramento, CA 95820

023-0281-017-0000 R1
Sprigg, David L.
5331 78th St.
Sacramento, CA 95820

023-0281-018-0000 R1
Green, Stewart A./Janice M.
5311 78th St.
Sacramento, CA 95820

023-0281-019-0000 R1
Rousset, Hazel A./Tr
6935 Nova Parkway
Sacramento, CA 95823

023-0281-020-0000 R1
Guzman, Ramon P./Teresa M.
5231 78th St.
Sacramento, CA 95820

023-0282-011-0000 R1
Eiserman, Nancy Lee
5413 79th St.
Sacramento, CA 95820

023-0282-012-0000 R1
Parrott, Arnold C./L. E.
5407 79th St.
Sacramento, CA 95820

023-0282-013-0000 R1
Krause, Leonard W.
5401 79th St.
Sacramento, CA 95820

023-0282-014-0000 R1
Senteney, Samual S./Deborah J. Bell
5391 79th St.
Sacramento, CA 95820

023-0282-015-0000 R1
Carl E. Monson Family Trust
6600 Freeport Blvd.
Sacramento, CA 95822

023-0282-016-0000 R1
McAfee, David R.
5351 79th St.
Sacramento, CA 95820

023-0282-017-0000 R1
Cisneros, Raymond
5331 79th St.
Sacramento, CA 95820

023-0282-018-0000 R1
Helisek, Joseph J.
P.O. Box 292072
Sacramento, CA 95829

023-0282-019-0000 R1
Turner, Peggy D.
5251 79th St.
Sacramento, CA 95820

023-0282-020-0000 R1
Rawson, Leroy V./Katie E.
5231 79th St.
Sacramento, CA 95820

023-0282-021-0000 R1
Larios, Lawrence S./Debbie
5230 80th St.
Sacramento, CA 95820

023-0282-029-0000 R1
Hambrick, William S./Catherine J.
5470 80th St.
Sacramento, CA 95820

023-0282-030-0000 R1
Quintana, Ruby C.
5380 80th St.
Sacramento, CA 95820

023-0282-033-0000 R1
Velasquez, Edward/Ruth A.
5440 80th St.
Sacramento, CA 95820

023-0282-035-0000 R1
Albert G. Lonsway Revocable Trust
5260 80th St.
Sacramento, CA 95820

023-0282-036-0000 R1
Moitoso, Frank Silveira, Jr./Susan C.
52960 80th St.
Sacramento, CA 95820

023-0282-037-0000 R1
Perry, Allen C., Jr./Lena L.
5410 80th St.
Sacramento, CA 95820

023-0282-038-0000 R1
Ware, Billy F./Joan M.
5350 80th St.
Sacramento, CA 95820

023-0282-039-0000 R1
Hurley, Jerry R./Candyce A.
5320 80th St.
Sacramento, CA 95820

023-0285-001-0000 R1
Bone, Wayne M./Alice C.
5225 Toronto Way
Sacramento, CA 95820

023-0285-002-0000 R1
Mizusaka, William Y./Teri S.
8040 Vandenberg Dr.
Sacramento, CA 95820

023-0285-003-0000 R1
Russell, Delbert C./Roberta J.
8030 Vandenberg Dr.
Sacramento, CA 95820

023-0285-004-0000 R1
Hegglin, Virginia L.
8020 Vanderberg Dr.
Sacramento, CA 95820

023-0285-005-0000 R1
Brumley, Nicholas A./Sharon Philbin
8010 Vandenberg Dr.
Sacramento, CA 95820

023-0285-006-0000 R1
Carr, Pamela L./Morris L./Helen
5231 80th St.
Sacramento, CA 95820

023-0285-007-0000 R1
Dunivan, Velda
5261 80th St.
Sacramento, CA 95820

023-0285-008-0000 R1
Kurosaki, Randy M./Naomi
5291 80th St.
Sacramento, CA 95820

023-0285-009-0000 R1
Basos, Alex T./Rose B.
5321 80th St.
Sacramento, CA 95820

023-0285-010-0000 R1
Hess, Kenneth, Jr./Nancy J.
P.O. Box 1305
Ventura, CA 93001

023-0285-011-0000 R1
Saylor, Vivian
5381 80th St.
Sacramento, CA 95820

023-0285-012-0000 R1
Munyer, Donald G.
5411 80th St.
Sacramento, CA 95820

023-0285-013-0000 R1
Henkel, Kevin G./Nancy C.
Mike Tucker
3606 Cambridge Rd.
Cameron Park, CA 95682

023-0285-014-0000 R1
Williams, Roger, Jr./Candace C.
5471 80th St.
Sacramento, CA 95820

023-0285-015-0000 R1
Hass, Thomas J./Pamela R.
5501 80th St.
Sacramento, CA 95820

023-0285-016-0000 R1
Day, Dorothy M.
5531 80th St.
Sacramento, CA 95820

023-0286-001-0000 M2 S
Jackson/Ekstrom
5665 Power Inn Rd. 140
Sacramento, CA 95824

023-0311-005-0000 C2
Jackson, John M., Sr./Claudine/et al.
Jackson/Ekstrom
5665 Power Inn Rd. 140
Sacramento, CA 95824

023-0311-010-0000 C2
Jackson, John M., Sr./Claudine/et al.
Jackson/Ekstrom
5665 Power Inn Rd. 140
Sacramento, CA 95824

023-0311-011-0000 C2
Jackson, John M., Sr./Claudine/et al.
Jackson/Ekstrom
5665 Power Inn Rd. 140
Sacramento, CA 95824

023-0311-012-0000 C2
U.S. Mall Business Administration
660 J St. 215
Sacramento, CA 95814

023-0312-002-0000 M2 S
Pacific Gas/Electric Co.
John R. Johnson
77 Beale St. B758
San Francisco, CA 94106

023-0312-003-0000 M2 S
Jackson/Ekstrom
5665 Power Inn Rd. 140
Sacramento, CA 95824

023-0312-004-0000 M2 S
Jackson/Ekstrom
5665 Power Inn Rd. 140
Sacramento, CA 95824

023-0312-005-0000 M2 S
Euro-Asian Foods Inc.
8109-A Fruitridge Rd.
Sacramento, CA 95820

023-0321-002-0000 R1
Shintani, Roy H./Kazue
4891 Toronto Way
Sacramento, CA 95820

023-0321-003-0000 R1
Bowman, Jimmie E./Emma J.
4897 Toronto Way
Sacramento, CA 95820

023-0321-004-0000 R1
Vasquez, Ralph M./Lupe R.
4903 Toronto Way
Sacramento, CA 95820

023-0321-005-0000 R1
Rivera, Gaudencio S./Anita M.
4909 Toronto Way
Sacramento, CA 95820

023-0321-006-0000 R1
Pickett, Myron L./Mary L.
4915 Toronto Way
Sacramento, CA 95820

023-0321-007-0000 R1
Zepeda, Ramiro D./Alicia Z.
4921 Toronto Way
Sacramento, CA 95820

023-0321-008-0000 R1
Gibbs, Marcella M.
4927 Toronto Way
Sacramento, CA 95820

023-0321-009-0000 R1
Rodriguez, Manuela Acosta/Antonio M./
Michele
4933 Toronto Way
Sacramento, CA 95820

023-0321-010-0000 R1
Frank L. Gist Family Trust
4939 Toronto Way
Sacramento, CA 95820

023-0321-011-0000 R1
Sherling, Evelyn B.
Evelyn B. Younker
11845 Ijauna Ln.
Galt, CA 95632

023-0321-012-0000 R1
Bernardino, Catherine
4951 Toronto Way
Sacramento, CA 95820

023-0321-013-0000 R1
Masterson, Verlin D./Lilliem
4957 Toronto Way
Sacramento, CA 95820

023-0321-014-0000 R1
Martinez, Paul A.
4963 Toronto Way
Sacramento, CA 95820

023-0321-015-0000 R1
Rominger, Lee F.
4969 Toronto Way
Sacramento, CA 95820

023-0321-016-0000 R1
Matos, Manuel L./Evelyn K.
4973 Toronto Way
Sacramento, CA 95820

023-0321-017-0000 R1
City of Sacramento
21st Ave.
Sacramento, CA 95820

023-0321-018-0000 R1
George, Suzanne S.
7831 21st Ave.
Sacramento, CA 95820

023-0322-001-0000 R1
Eisel, Philip N.
4870 79th St.
Sacramento, CA 95820

023-0322-002-0000 R1
Barroso, Michael V./Carmen
4880 79th St.
Sacramento, CA 95820

023-0322-003-0000 R1
Bennefield, Gisela G.
4890 79th St.
Sacramento, CA 95820

023-0322-004-0000 R1
Moreno, Richard/Yasmin
4900 79th St.
Sacramento, CA 95820

023-0322-005-0000 R1
Bode, Walter F./Sally M.
4910 79th St.
Sacramento, CA 95820

023-0322-006-0000 R1
Askin, Kenneth Arnold
4920 79th St.
Sacramento, CA 95820

023-0322-007-0000 R1
Lewis, Joe L./Nancy L.
4930 79th St.
Sacramento, CA 95820

023-0322-008-0000 R1
Norris, Max P., Jr.
1290 Ridgeway Dr.
Sacramento, CA 95822

023-0322-009-0000 R1
Ramos, Teresa F./et al
4950 79th St.
Sacramento, CA 95820

023-0322-010-0000 R1
Garcia, Arleen
4960 79th St.
Sacramento, CA 95820

023-0322-013-0000 R1
Kincaid, Jeffery J./Suzanne M.
4970 79th St.
Sacramento, CA 95820

023-0322-016-0000 R1
Benoit, Douglas L./Kathleen S.
4980 79th St.
Sacramento, CA 95820

Book 15

015-0311-020-0000 M1
CHY Company
2555 3rd St. 200
Sacramento, CA 95818

015-0311-022-0000 M1
Southern Pacific Transportation Co.
14th Ave.
Sacramento, CA 95820

015-0311-024-0000 M1
Parsons, Hamer C., Jr./Enid L./Co Tr/et al.
7475 14th Ave.
Sacramento, CA 95820

015-0311-028-0000 M1
Pacific Coast Building Products Inc.
P.O. Box 160488
Sacramento, CA 95816

015-0311-029-0000 M1
Parsons, Hamer C., Jr./Enid L./Co-Tr/et al.
10320 Pleasant Grove School Rd.
Elk Grove, CA 95624

015-0311-031-0000 M1
Morrow, William L. II/Barbara J.
4391 Whispering Oaks Circle
Roseville, CA 95678

015-0311-032-0000 M1
Robert I./Dana L. Eggerts Family Trust/et al.
1887 Altair Ave.
Livermore, CA 94550

015-0311-033-0000 M1
14th Avenue Associates Inc.
5665 Power Inn Rd. 140
Sacramento, CA 95824

015-0311-034-0000 M1
14th Avenue Associates Inc.
5665 Power Inn Rd. 140
Sacramento, CA 95824

015-0311-035-0000 M1
CHY Company
2555 3rd St.
Sacramento, CA 95818

015-0311-041-0000 M1
Jackson Business Park
5665 Power Inn Rd. 140
Sacramento, CA 95824

015-0311-042-0000 M1
Jackson Business Park
5665 Power Inn Rd. 140
Sacramento, CA 95824

015-0311-043-0000 M1
Jackson Business Park
5665 Power Inn Rd. 140
Sacramento, CA 95824

015-0311-047-0000 M1
Jackson, John M., Jr./Lynda R.
5665 Power Inn Rd. 140
Sacramento, CA 95824

015-0311-048-0000 M1
Miner, Steven J./et al.
3741 Business Dr.
Sacramento, CA 95820

015-0311-049-0000 M1
McAuliffe, Daniel/et al.
Jackson Prop Inc.
5665 Power Inn Rd. 140
Sacramento, CA 95824

015-0311-050-0000 M1
McAuliffe Daniel/Etal
Jackson Prop Inc.
5665 Power Inn Rd. 140
Sacramento, CA 95824

015-0311-051-0000 M1
McAuliffe, Daniel/et al.
Jackson Prop Inc.
5665 Power Inn Rd. 140
Sacramento, CA 95824

015-0311-052-0000 M1
McAuliffe, Daniel/et al.
Jackson Prop Inc.
5665 Power Inn Rd. 140
Sacramento, CA 95824

015-0311-053-0000 M1
Jackson Business Park
5665 Power Inn Rd. 140
Sacramento, CA 95824

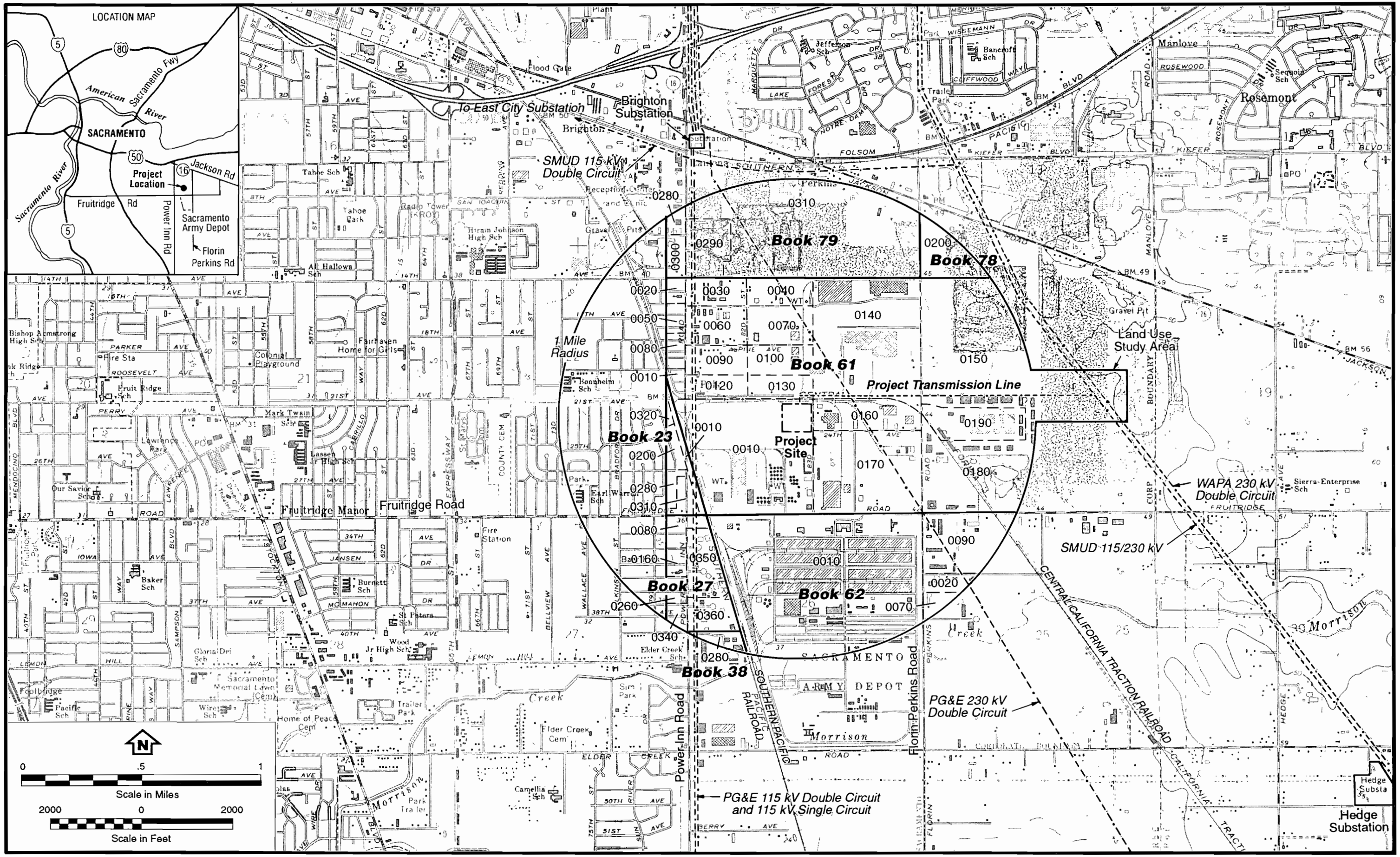

Base Map Source: USGS, Sacramento East and Carmichael, Calif, 1:24,000 scale quadrangles.

LAND PARCEL OWNERSHIP IN THE PROJECT VICINITY

Appendix K
Cultural and Paleontological Resources Correspondence

California Office of Historic Preservation

BLACK & VEATCH

8400 Ward Parkway, P.O. Box No. 8405, Kansas City, Missouri 64114, (913) 339-2000

Sacramento Municipal Utility District
Proctor & Gamble Cogeneration Facility

B&V Project 23933
B&V File 41.0608
April 22, 1993

Office of Historic Preservation
P. O. Box 942896
Sacramento, California 94296-0001

Subject: Historical/Archaeological Records

Attention: Mr. Steade R. Craigo, Acting SHPO

Gentlemen:

The Sacramento Municipal Utility District is planning to construct and operate a natural gas fired cogeneration steam electric facility. Black & Veatch has been retained by Sacramento Municipal Utility District to provide licensing and support services for the project. The project area is located in Section 23, T8N, R5E and is identified on the accompanying topographic map.

We would like to determine if the California Office of Historic Preservation has any site records of historical or archeological significance occurring in the area of the project or if there is any possibility of a significant site occurring in the area that may be affected by the proposed project.

In addition, I would like to determine what requirements must be met in order for me to conduct cultural resource investigations in the state of California, should a survey of the project area be required.

An expedient response to our requests would be appreciated. If you have any questions or other concerns associated with the project, please contact me at (913) 339-2840.

Very truly yours,

BLACK & VEATCH

Mark W. Kelly

rs
Enclosure

bcc: R. G. Chapman/File
D. M. Lefebvre
D. C. Timpe

BLACK & VEATCH

8400 Ward Parkway, P.O. Box No. 8405, Kansas City, Missouri 64114, (913) 339-2000

Sacramento Municipal Utility District
Proctor & Gamble Cogeneration Facility

B&V Project 23933
B&V File 41.0608
April 27, 1993

Office of Historic Preservation
P. O. Box 942896
Sacramento, California 94296-0001

Subject: Cultural Resources Investigation

Attention: Mr. Gene Itogawa

Gentlemen:

The Sacramento Municipal Utility District is planning to construct and operate a natural gas fired cogeneration steam electric facility. Black & Veatch has been retained by Sacramento Municipal Utility District to provide licensing and support services for the project. The project area contains approximately 10 acres and is located in Section 23, T8N, R5E and is identified as to accompanying topographic map.

I am sending you a copy of my resume and B&V bio-data sheet for the purpose of determining my ability to conduct a cultural resources investigation of the project area.

Please advise as soon as possible. If you have any questions, or other concerns associated with my credentials, please contact me at (913) 339-2840.

Very truly yours,

BLACK & VEATCH

Mark W. Kelly

brj
Enclosure

STATE OF CALIFORNIA — THE RESOURCES AGENCY

PETE WILSON, *Governor*

OFFICE OF HISTORIC PRESERVATION
DEPARTMENT OF PARKS AND RECREATION
P.O. BOX 942896
SACRAMENTO 94296-0001
(916) 653-6624
FAX: (916) 653-9824

18 May 1993

Reply to: **DoE 930426A**

Mark Kelly
Black & Veatch
8400 World Parkway
P.O. box 8405
KANSAS CITY, MO 64114

Subject: SMUD COGENERATION FACILITY, SACRAMENTO

Dear Mr. Kelly:

You have asked, on behalf of the Department of Energy, for my comments. Thank you for helping the Department of Energy meet its responsibilities under Section 106 of the National Historic Preservation Act.

The regional Archaeological Informaton Center is the best source of current information about histoic properties in your project's Area of Potential Effect, or APE. The Information Center will search their records and maps review the most current version of the National Register of Historic Places and other lists of historic properties, give you a listing of the sites within or near the project area, provide you with recommendations for additional work if needed, and furnish you with a directory of professionally qualified consulting archaeologists if one is needed. You can reach the Information Center by calling (916) 920-3955. Are there any structures on or near the APE? Could they be fifty or more years old? If so, please include photographs of each such structure and its surroundings. Will the project require or result in moving, altering, abandoning, or demolishing any structures fifty or more years old?

When replying to us, always use the reference number in the upper right corner of this page. Be sure to include a map which shows the area inventoried for historic properties and the Area of Potential Effect (36 CFR 800.2). If you have any questions, please telephone State Archaeologist Nicholas Del Cioppo at (916) 653-9696.

Sincerely,

Steade R. Craigo, AIA, Deputy
State Historic Preservation Officer

Native American Heritage Commission

BLACK & VEATCH

8400 Ward Parkway, P.O. Box No. 8405, Kansas City, Missouri 64114, (913) 339-2000

Sacramento Municipal Utility District
Procter & Gamble Cogeneration Facility

B&V Project 23933
B&V File 41.0608
May 12, 1993

California Native American Heritage Commission
915 Capital Mall
Room 288
Sacramento, California 95814

Subject: Sacred Sites/
Native American Land Use

Attention: Mr. Larry Myers

Gentlemen:

The Sacramento Municipal Utility District (SMUD) is planning to construct and operate a natural gas fired cogeneration steam electric facility. Black & Veatch has been retained by SMUD to provide licensing and environmental support services for the project. The project area encompasses approximately 10 acres, is located in Section 23, T8N, R5E, and is identified on the enclosed topographic map.

We would like to determine whether any properties, religiously or socially significant to Native Americans, have been identified on or near the project site. Please advise as soon as possible.

If you have any questions or other concerns associated with the project, please contact Mark Kelly at (913) 339-2840 or me at (913) 339-2164.

Very truly yours,

BLACK & VEATCH

Douglas C Fryé

David M. Lefebvre

MWK:rs
Enclosures

STATE OF CALIFORNIA PETE WILSON, Governor

NATIVE AMERICAN HERITAGE COMMISSION
915 CAPITOL MALL, ROOM 364
SACRAMENTO, CA 95814
(916) 653-4082

May 17, 1993

Mark Kelly
Black & Veatch
8400 Ward Parkway
P.O. Box 8405
Kanas City, Missouri 64114

RE: B & V Project 23933

Dear Mr. Kelly:

A record search of the sacred lands file has failed to indicate the presence of Native American cultural resources in the immediate project area. The absence of specific site information in the sacred lands file does not indicate the absence of cultural resources in any project area. Other sources of cultural resources should also be contacted for information regarding known and recorded sites.

CEQA, Appendix J gives directions to follow in the event any previously undetected archaeological sites are inadvertently discovered during any phase of construction. Use of the language in Appendix J, or reference to the standardized procedures therein, helps to eliminate costly delays and assures more adequate protection of such cultural resources. I recommend that you contact and work closely with the following Native American in the area during the initial planning stages. He may be able to offer input regarding sites in the area.

Bill Franklin
P.O. Box 687
Sloughhouse, CA 95683
(916) 351-0848

The Native American Heritage Commission has prepared a pamphlet for use by lead agencies, planners, developers, and property owners. It provides an easy-to-read breakdown of the California Codes pertaining to Native American human remains and their disposition. I have included a copy of this brochure for your information.

If you have any questions or need any additional information, please contact this office.

Sincerely,

Debbie Pilas-Treadway
Staff Analyst

California Archaeological Inventory

BLACK & VEATCH

8400 Ward Parkway, P.O. Box No. 8405, Kansas City, Missouri 64114, (913) 339-2000

Sacramento Municipal Utility District
Procter & Gamble Cogeneration Facility

B&V Project 23933
B&V File 41.0608
May 12, 1993

Ms. Mary Ann Russo, In-House Archaeologist
North Central Information Center
Department of Anthropology
California State University, Sacramento
6000 J Street
Sacramento, California 95819-6106

Subject: Literature Search

Dear Ms. Russo:

The Sacramento Municipal Utility District (SMUD) is planning to construct and operate a natural gas fired cogeneration steam electric facility. Black & Veatch has been retained by SMUD to provide licensing and environmental support services for the project. The project area encompasses approximately 10 acres and is located in Section 23, T8N, R5E, and is identified on the accompanying topographic map. Also enclosed is a copy of Mark Kelly's resume and biodata sheet.

We request that you provide us with a background literature review to determine the possibility of an archaeologically significant site occurring on the project site. In addition, we request a statement as to the intensity of onsite survey required for the project site. We understand that the literature review will require about two hours of effort, and that a fee of $90 per hour will be charged. We also understand that you will bill us for the materials.

If you have any questions or other concerns associated with the project, please contact Mark Kelly at (913) 339-2840.

Very truly yours,

BLACK & VEATCH

Douglas C Tapi

for David M. Lefebvre

MWK:rs
Enclosures

California
Archeological
Inventory

NORTH CENTRAL
INFORMATION
CENTER

AMADOR
EL DORADO
NEVADA
PLACER
SACRAMENTO
YUBA

Department of Anthropology
California State University, Sacramento
6000 J Street, Sacramento, CA 95819-6106
(916) 278-6217
FAX (916) 278-5162

May 13, 1993

Mark Kelly
Black & Veatch Engineering
11401 Lamar
Overland Park, KA 66211

RE: GENERAL INFORMATION REQUEST.

Dear Mark:

Enclosed are the various materials we spoke of the other day including the List of Information Centers, record search requirements and associated information, list of consultants, report guidelines, site record handbook, site forms, built environment forms and brochure from the Native American Heritage Commission. Please give me a call if you have any questions.

I received your record search request by FAX yesterday. I noticed that the address on the cover letter was different than this one. I will use that address (Ward Parkway in Kansas City) for my record search response unless I hear otherwise from you.

Sincerely,

Marianne L. Russo
Assistant Coordinator

California
Archeological
Inventory

NORTH CENTRAL
INFORMATION
CENTER

AMADOR
EL DORADO
NEVADA
PLACER
SACRAMENTO
YUBA

Department of Anthropology
California State University, Sacramento
6000 J Street, Sacramento, CA 95819-6106
(916) 278-6217
FAX (916) 278-5162

6/15/93

Mark -

I didn't hear from you by 2:30 so I went ahead + faxed it up. I tried to be as flexible as possible with the recommendations. Naturally, to be safe, both historical research + a field survey should be done but in actual practice other choices are often made. If you have to address Section 106 requirements your lead letter cover all bases. If you are only dealing with CEQA (Calif. Environ. Quality Act) then you may be under pressure to accommodate. In these cases, in this particular part of Sacramento County, you might be able to get away with either just a survey or just archival review (assuming no potentially historic features were discovered in the research)

over

I would certainly like to see ~~this~~ [illegible] done, but I can only advise not require. In addition we (the Info Center) have a history of not recommending surveys on all projects in the area south + southeast of Sacramento (an area which includes this project). This is based on the presence of numerous previous surveys and a very small # of sites. However in the last couple of years we have begun to realize that we are overlooking many historic buildings + features such as the railroad. ~~Unfortunately~~ Unfortunately though many of these are less than 100 years old (~~date~~ age listed in CEQA as cut off point). This is in contrast to federal standard of 50 years (45 for practical purposes). You can make a case for younger remains but it takes some effort! Anyway, its a long story. Call me if you want to discuss or whatever.

Melanie

California
Archeological
Inventory

NORTH CENTRAL
INFORMATION
CENTER

AMADOR
EL DORADO
NEVADA
PLACER
SACRAMENTO
YUBA

Department of Anthropology
California State University, Sacramento
6000 J Street, Sacramento, CA 95819-6106
(916) 278-6217
FAX (916) 278-5162

June 18, 1993

Mark Kelly
8400 Ward Parkway
P.O. Box No. 8405
Kansas City, MO 64114

RE: RECORD SEARCH FOR THE PROCTOR & GAMBLE COGENERATION FACILITY, SACRAMENTO COUNTY.

Dear Mr. Kelly:

In response to your request, received on May 12, 1993, a record search for the above project location (USGS Sacramento East 7.5' quad. T8N R5E Section 23) has been completed with the following results:

PREHISTORIC RESOURCES: No prehistoric sites have been recorded within or adjacent to the project location. The nearest such sites are located over two miles away along the American River.

HISTORIC RESOURCES: No historic archeological resources have been recorded within or adjacent to the project area. The closest feature of this type is the Davis Homesite and Winery (AF-34-5-H), dating to the 1860s. It is to the northwest, about 1 mile away.

Although not recorded during any previous archeological survey or mentioned in any of our historic references the California Central Traction Railroad should be considered a potential historic resource. It shows up on our 1952 map edition (making it a minimum of 41 years old). Archeologists in this area have only recently begun to address these types of linear historic resources. A little as 3 years ago the vast majority of railroads, canals, roads, etc. were ignored.

A review of the listed references mentioned no specific landmarks or other features within one mile of the project.

PREVIOUS ARCHAEOLOGICAL INVESTIGATIONS: According to our records there have been no surveys of the project area itself. The closest such studies include one done by Peak and Associates (1980) on transmission lines to the east and west of the project (report No. 488) and an overview of the Sacramento Army Depot (Cleland et al, 1987) to the south (report No. 379). Copies of the report library cards are attached and locations are shown on the USGS map.

SENSITIVITY AND RECOMMENDATIONS: Based upon the above information and the local topography the project area is estimated to be of rather low sensitivity for prehistoric cultural resources. Historic sensitivity should be considered generally moderate. If research suggests that the railroad is over 45 years of age then the zone along the northern boundary should be considered of moderate/high sensitivity. If there are any standing structures over 45 years of age elsewhere on the parcel then these areas may have a greater historic potential.

Research should be done to determine some specific information about the Calif. Traction Railroad (age, builders, etc.) as well as the history of any existing structure and parcel modifications. Based upon the results of this research and the current condition of the parcel a field survey strategy can be planned. On such a small parcel, if a survey is done, it is most practical to do as intensive a survey as the ground visibility allows. No great economy of time or funds is gained by performing a sample survey of some type. Naturally though, the historic research results can provide clues as to the most likely locations and types of features that may be encountered and efforts should be more concentrated in these areas if they occur. In addition, if the archival review suggests the strong likelihood of buried remains, some of subsurface testing or project monitoring may be advisable.

LITERATURE SEARCH: Reviewed were the official records and maps for archeological sites and surveys in Sacramento County, the National Register of Historic Places - Listed properties and Determinations of Eligibility - (1990 plus updates), the California Inventory of Historic Resources (1976), California Historical Landmarks (1990) plus updates), California Points of Historical Interest (1992), Gold Districts of California (1979), California Gold Camps (1975), California Place Names (1969), Caltrans Local Bridge Survey (1989), and Historic Spots in California (1966 and 1990).

As indicated on the attached agreement form the charge for this record search is **$90.30**. Payment instructions are included at the bottom of the form. Please sign where indicated and return the YELLOW with your payment. Thank you.

Sincerely,

Marianne L. Russo
Assistant Coordinator

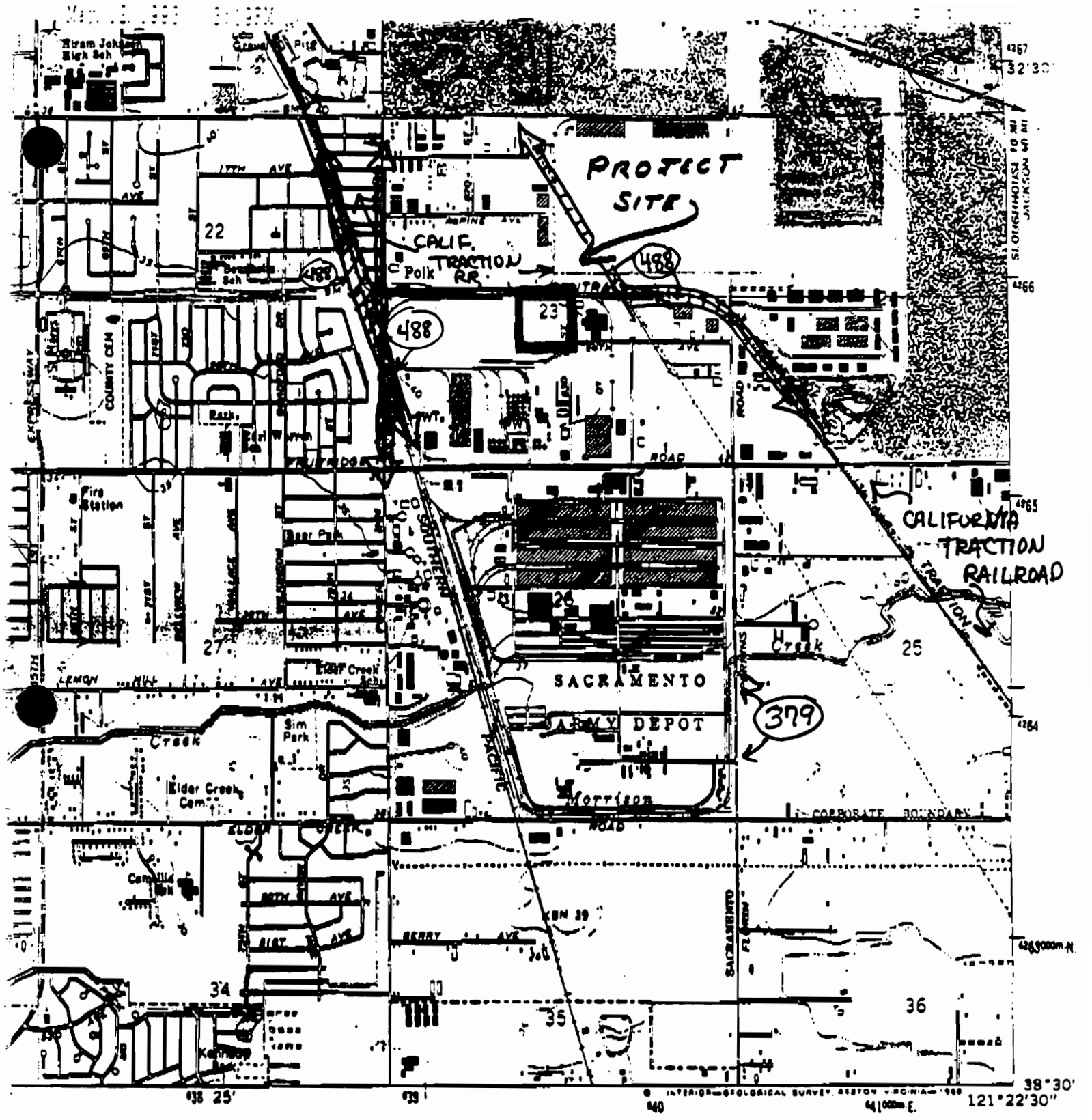

1 MILE

6000 7000 FEET

1 KILOMETER

ROAD CLASSIFICATION

Heavy-duty — Light-duty

Medium-duty — Unimproved dirt

Interstate Route — U. S. Route — State Route



QUADRANGLE LOCATION

Section 23 T8N R5E

SACRAMENTO EAST, CALIF.

SW/4 FAIR OAKS 15' QUADRANGLE

N3830—W12122.5/7.5

1967

PHOTOREVISED 1980

DMA 1761 III SW—SERIES V895

NDARDS
RESTON, VIRGINIA 22092
BLE ON REQUEST

Revision shown in purple and woodland compiled by the County of Sacramento from aerial photographs taken 1978 and other source data. This information not field checked. Map edited 1980

Purple tint indicates extension of urban areas

Cleland, James H., A. L. Christenson, C. M. Woods and J.C. Smith.

1987 An Archeological Overview and Management Plan for the Sacramento Army Depot, Sacramento, California.

OVERVIEW

USGS: Sacramento East 7.5' T8N R5E Sec. 26.
Area: 485 acres
Prepared For: National Park Service, U.S. Dept. of the Interior, Western Region
450 Golden Gate Ave. San Francisco, CA 94102
Cultural Resources: None recorded
(several possible historic sites noted)

Peak, Ann S. and Associates

1980 Cultural Resource Assessment of Sacramento Municipal Utility District's Project A, Phase II 230kV Transmission Line, Hurley to Hedge-Pocket Tap, Sacramento County, CA.

SURVEY

USGS: Carmichael 7.5' T8N R5E Sec. 24,25,36.
T8N R6E Sec. 19,30,31.
Sacramento East 7.5' T9N R5E Del Paso L.G. Sec.65
T8N R5E Del Paso L.G. Sec. 64&Unsec(& 66.)
Regular Sec. 11-15, 22-27, 34, 35.
Area: 28 miles linear (est. 150+acres)
Prepared For: Sac. Municipal Utility Dist. 6201 S St. Sacramento, CA 95813
Cultural Resources: None

Geology-Hydrogeology-Paleontology Resources and Services

BLACK & VEATCH

8400 Ward Parkway, P.O. Box No. 8405, Kansas City, Missouri 64114, (913) 339-2000

Sacramento Municipal Utility District
Proctor & Gamble Cogeneration Facility

B&V Project 23933
B&V File 41.0608
May 3, 1993

Dr. Gail Wiggett
7253 West Second Street
Rio Linda, California 95673

Subject: Palentological Resources

Dear Dr. Wiggett:

The Sacramento Municipal Utility District is planning to construct and operate a natural gas fired cogeneration steam electric facility. Black & Veatch has been retained by Sacramento Municipal Utility District to Provide licensing and support services for the project. The project area contains approximately 10 acres and is located in Section 23, T8N, R5E and is identified on the accompanying topographic map.

We would like an opinion, in your professional capacity as a paleontologist, as to the likelihood of palentological resources occurring in the project area. I have enclosed the sections pertaining to Palentological Resources from two AFCs that have been successfully reviewed by CEC staff, as examples of the depth of information required.

Please contact me if you have any questions at (913) 339-2840. Thank you for an expeditious response.

Very truly yours,

BLACK & VEATCH

Mark W. Kelly

rs
Enclosure

GWA
GEOLOGY–HYDROGEOLOGY–PALEONTOLOGY
resources*services

7253 West Second Street
Rio Linda CA 95673

18 May 1993

Mr. Mark Kelly
Black & Veatch Engineers - Architects
P.O. Box 8405
Kansas City, MO. 64114

Subject: Paleontological Resources Assessment, SMUD Cogeneration Project, Sacramento East Quadrangle, California (B&V Project 23933)

Dear Mr. Kelly:

As we discussed by telephone and in response to your letter of 3 May, I have prepared a short report on the potential for encountering fossils at the subject site, and a short discussion of the applicable geology.

I hope this will be useful in your work. Please contact me if I can be of further assistance, or if you have any questions.

Yours sincerely,

G. Wiggett

Gail Wiggett, Ph.D., R.G., C.E.G.

enc.

PALEONTOLOGICAL RESOURCES

The project site is flat, characterized dominantly by brown, non-calcic clayey silt (SC) soils of the San Joaquin series, containing some gravel and rounded, metamorphic cobbles. The geologic deposits underlying the site belong to the Riverbank Formation (Middle to Late Pleistocene) and were deposited by a former channel of the American River when it flowed south of its present location (Shlemon, 1967). The nearest present-day drainage is Morrison Creek, flowing approximately 1-1/2 miles south of the site.

The Riverbank Formation, together with the Modesto Formation, comprises the Victor Formation of some workers (e.g., California Department of Water Resources, 1974). Much of the greater Sacramento area is on the Victor Plain, which formed as a plain of aggradation during the Pleistocene and has been partially dissected. Victor Formation deposits are generally granitic sand, silt, and clay, and locally contain gravel lenses and stringers deposited in now-buried stream channels. As described by Shlemon (1967), in the Sacramento area, the American River of Pleistocene times changed its channel several times, leaving a series of channel and terrace deposits in its former courses. In the southeastern Sacramento area north of Morrison Creek the Riverbank formation consists of basal channel deposits.

Fossil remains constitute a nonrenewable resource that is often of significant scientific and/or popular interest. (See, for example, the Sacramento Bee, June 27 1989, Scene Section, which describes a find of vertebrate fossils from the Riverbank age deposits in northern Sacramento, approximately 20 miles from the site presently being considered). In part due to the nature of the fluviatile depositional environment and in part to the general infrequency of subsurface excavations in the flat Central Valley, discoveries of fossils in the Riverbank/Victor are rare (California Department of Water Resources, 1974,1978). Piper and others (1939) reported a shoulder blade (scapula) of a Pleistocene horse, and Shlemon (1967), reported horse teeth and a leg bone of a Pleistocene camel. These finds were from gravel pits a few miles south and east of the proposed SMUD site. They are not sufficiently diagnostic to permit dating of the Riverbank more precisely than Mid to Late Pleistocene. The fossil assemblage described in the Sacramento Bee (1989) and referred to by Hilton (1992, in SEPCO, 1992), is the most varied group of fossils representing the Pleistocene ecosystem in Riverbank/Victor deposits in the Sacramento area. The fossils include bison, sloth, wolf, clam shells, and plant material. In all of these occurrences, fossils were discovered at depths of approximately 3 to 17 feet, as a consequence of excavations.

While it is unlikely that any new discoveries will be made at the proposed project, any fossils that are found may be of interest to local educators. The most likely discoveries will be bones or bone fragments. On-site excavations should be observed, and any fossils should be reported to and collected by a qualified paleontologist.

REFERENCES CITED:

California Department of Water Resources, 1974, Evaluation of Ground Water Resources: Sacramento County. DWR Bulletin No. 118-3.

California Department of Water Resources, 1978, Evaluation of Ground Water Resources: Sacramento Valley. DWR Bulletin 118-6.

Piper, A.M. and others, 1939, Geology and Ground Water Hydrology of the Mokelumne Area, California. U.S. Geological Survey Water-Supply Paper 780.

Shlemon, R.J., 1967, Quaternary Geology of Northern Sacramento County, California. Geological Society of Sacramento, Field Trip Guidebook.

Sacramento Bee, 1989, When Beasts Ruled: Arco Park fossils offer a look at ancient Sacramento Valley. Scene section, June 27, 1989.

SEPCO, 1992, Application for facility certification to California Energy Commission. Docket No. 92-AFC-2.

Appendix L
Phase I Archaeological Survey

A Phase I Archaeological Survey
Procter & Gamble Cogeneration Project
Sacramento County, California
Township 8 North, Range 5 East, Section 23

Prepared for:
Sacramento Cogeneration Authority

Prepared by:
Black & Veatch

July 1993

Abstract

Through consultation with the California Archaeological Inventory (CAI), an archaeological investigation of the site of the Procter & Gamble Cogeneration Project was recommended because of the potential presence of historic buildings and features such as the Central California Traction Railroad near the project site.

This report contains the results of a Phase I cultural resources survey. No prehistoric or historic archaeological resources have been recorded within or adjacent to the project area. The nearest recorded prehistoric sites are located over two miles away along the American River. The closest recorded historic resource is the Davis Homesite and Winery to the northwest, about one mile away. These resources are located outside an Area of Potential Effects (APE). The project will not affect any recorded resources. There are no special circumstances pertaining to Native American or other public concerns, controversies, time constraints, or political sensitivity.

The investigation was conducted in May 1993. Methodology included a literature review, Native American consultation, and a pedestrian reconnaissance and surface inspection of the project site. The ground surface was clear of vegetation, being recently disced, and weather conditions were optimal. The investigation did not reveal the presence of unrecorded prehistoric or historic archaeologic resources on the project site.

Archaeological clearance is recommended because the construction and operation of the Procter & Gamble Cogeneration Facility will not impact any significant cultural resources.

Table of Contents

Abstract ii
Introduction 1
Federal LORS 4
State LORS 4
Local LORS 4
Environmental Context and Cultural Setting 5
Environmental Context 5
Climate and Precipitation 5
Temperature and Humidity 6
Water Resources 6
Wetlands 7
Botanical Resources 7
Wildlife Resources 10
Soils 11
Cultural and Paleontological Setting 12
Archaeological Resources 12
Ethnographic Resources 18
Historic Resources 18
Paleontological Resources 20
Research Design 22
Methodology 23
Archival Research 23
Field Investigation 23
Architectural Reconnaissance 24
Native American Consultation 24
Report of Findings 25
Archaeological Resources 25
Ethnographic Resources 25
Historic Resources 25
Paleontological Resources 25

Contents (Continued)

Management Considerations/Mitigation Plan 27
Archaeologist Responsibility 27
Notification of Resources Discovery 27
Significance Assessment of Resources 27
Report Preparation and Implementation 28
Treatment Recommendations 28
Treatment of Human Burials 29
References 30

List of Figures

Figure 1 Procter & Gamble Cogeneration Project Site Location 2
Figure 2 Plant Communities and Wetlands in the Study Area 8
Figure 3 Cultural Resources Sensitivity 13

List of Attachments

Attachment A Mark W. Kelly Statement of Qualification
Attachment B Project Correspondence
Attachment B1 California Office of Historic Preservation
Attachment B2 Native American Heritage Commission
Attachment B3 California Archaeological Inventory
Attachment B4 Geology-Hydrogeology-Paleontology Resources and Services

1.0 Introduction

The Sacramento Cogeneration Authority (SCA) will develop, design, construct, operate, and maintain the Procter & Gamble Cogeneration Project. The Procter & Gamble Cogeneration Project consists of a combined cycle power block, a simple cycle combustion turbine generator, a future simple cycle combustion turbine, and required auxiliary equipment. The project will burn natural gas to provide process steam for the adjacent Procter & Gamble (P&G) facility while simultaneously generating electricity for the Sacramento Municipal Utility District (SMUD) under a power sales agreement.

The Procter & Gamble Cogeneration Project will be located on a 10-acre site in Section 23, Township 8 N, Range 5 E in Sacramento, California (Figure 1). An additional 5 acres adjacent to the project site will be impacted as a temporary storage/laydown area. The project site is bordered by the Central California Traction Railroad to the north and East 83rd Street to the east. Power Inn Road is located approximately 0.4 mile west of the site. Fruitridge Road is located approximately 0.35 mile south of the site.

Because the project will require a Corps of Engineers (COE) Nationwide Permit to construct in a jurisdictional wetlands, the requirements of the National Historic Preservation Act (NHPA) must be satisfied (33 CFR Part 325, Appendix C).

The following laws, ordinances, regulations, and standards (LORS) apply to projects in which a federal agency is involved and are proposed to be applicable to the project.

1.1 Federal LORS

- National Environmental Policy Act of 1969, PL 91-190; 83 Stat. 852; 42 U.S.C. 4321-4327. The Act requires an analysis of potential environmental impacts of projects and requires the application of appropriate mitigation measures.



Source: USGS, portions of Sacramento East and Carmichael, CA 1:24,000 scale quadrangles.

PROCTER & GAMBLE
COGENERATION PROJECT SITE LOCATION

Figure 0-1

- National Historic Preservation Act of 1966, PL 89-665; 80 Stat. 915; 16 U.S.C. 470 et seq. (amended by PL 91-243, PL 94-458, PL 96-199, PL 96-244, and PL 96-515). Establishes a national policy to preserve for public use historic sites, buildings, and objects of national significance for the inspiration and benefit of the people of the U.S. Section 106 requires federal agencies to consider the effects of their actions on historic properties to determine the eligibility of the property for listing in the National Register of Historic Places.
- Native American Graves Protection and Repatriation Act, PL 101-601. Defines "cultural items," "sacred objects," and "objects of cultural patrimony;" establishes an ownership hierarchy; provides for review; allows excavation of human remains but stipulates return of the remains according to ownership; sets penalties; calls for inventories; and provides for return of specified cultural items.
- American Indian Religious Freedom Act, PL 95-341. Protects ethnic heritage sites and land uses.
- Executive Order 11593, Protection of the Cultural Environment (May 13, 1971) 36 CFR 8921, 16 U.S.C. 470. Orders the protection and enhancement of the cultural environment through the providing of leadership, establishment of state offices of historic preservation, and the development of criteria for assessing resource values.
- 36 CFR 60 "National Register of Historic Places." Specifies criteria for listing in the National Register of Historic Places.
- 360 CFR Part 800 "Protection of Historic Properties." Federal regulations for implementing the Section 106 process.

1.2 State LORS

- California Environmental Quality Act (CEQA) Statutes and Guidelines, 1986. CEQA and its implementing regulations state that public agencies should seek to avoid damaging effects on an archaeological resource whenever possible.
- California Public Resources Code, Section 5020.4. The state exercises its authority through the State Historical Resources Commission in the Department of Parks and Recreation. The Commission evaluates applications for entries in the National Register of Historic Places and the California Register of Historic Places. Section 5097.5 et seq. protects significant Native American cemeteries and ceremonial sites.
- California Penal Code, Section 622.5. This provision sets the penalties for damage or removal of archaeological resources.

1.3 Local LORS

- Sacramento County General Plan. The cultural resources section identifies problem areas to avoid; identifies the California Archaeological Inventory as the major clearinghouse for archaeological and historic information; identifies cultural resource sensitivity areas; identifies the agencies and interest groups to contact for the purpose of coordinating the preservation and stabilization of historic resources.

The project will comply will all directives contained within the applicable LORS, including Native American and agency consultation and report generation.

Personnel conducting the prehistoric and historic archaeological resources investigations included the principal investigator, Black & Veatch staff archeologist, Mark W. Kelly, who surveyed the project site on May 18, 1993 for cultural resources. Mr. Kelly's statement of qualification is attached in Attachment A. Dr. Gail Wiggett, paleontologist, investigated the site also in May 1993. In addition, Mr. Bill Franklin was designated by the California Native American Heritage Commission to monitor the construction activities.

2.0 Environmental Context and Cultural Setting

This section of the report describes the environmental and cultural setting for the project area and surrounding region. An evaluation of the environmental conditions is necessary for understanding past human adaptations to the area. Included here is a review of the natural diversity of the Sacramento Valley. Modern conditions will form the data base, and available information on environmental changes over the past 10,000 years will also be reviewed. Current information on prehistoric and historic inhabitants of the area are briefly summarized following the Environmental Context discussion.

2.1 Environmental Context

This section provides a description of the project area's physical environment, including climate and precipitation, temperature and humidity, water resources, wetlands, botanical resources, wildlife resources, and soils.

2.1.1 Climate and Precipitation

The City of Sacramento is part of the lower Sacramento Valley, which exhibits a relatively mild and temperate climate with abundant sunshine most of the year. The summers are dry, with warm to hot afternoons and mild nights. The average annual temperature is 60.6 F (NOAA 1991).

The rainy season generally occurs from November through March. The Sierra Nevada snow fields, only 70 miles east of Sacramento, usually provide an adequate water supply during the dry season. Heavy snows and torrential rains frequently fall on the Sierra slopes and occasionally result in flooding along the Sacramento River and its tributaries. The mean annual precipitation for the period 1962 to 1991 was 17.3 inches. The greatest 24 hour rainfall and snowfall on record were 5.59 inches (October 1962) and 2.0 inches (February 1976), respectively. Average annual pan evaporation rates range from 70 to 75 inches; this indicates that evaporation rates significantly exceed precipitation. Thunderstorms occur an average of 4.7 days per year (NOAA 1991).

2.1.2 Temperature and Humidity

The warmest month is July, when the mean monthly temperature is 75.4 F. Average daily minimum and maximum temperature averages for this month are 57.9 F and 92.9 F, respectively. The warmest temperature on record is 115 F, which occurred in June. January is the coolest month of the year with a mean monthly temperature of 45.3 F. The average daily minimum and maximum temperatures for this month are 37.5 F and 53.1 F, respectively. Minimum temperatures typically reach below freezing approximately 15 days of the year. Relative humidities can range from close to 90 percent in the early morning hours of winter to as low as 28 percent in the late afternoon hours of summer (NOAA 1991).

2.1.3 Water Resources

No perennial surface water bodies occur onsite. However, depressions and a drainage ditch onsite retain water during the rainy season. The nearest drainage is Morrison Creek, approximately 1.5 miles south of the site. Morrison Creek flows westward and empties into the Sacramento River. The site is a disturbed vacant lot that is nearly level. The soils onsite are San Joaquin soils, which are moderately deep and moderately well drained. The surface layer is silt loam; the subsoil is a claypan underlain by a strongly cemented hardpan. Permeability is very slow, and the soil has low or moderate available water capacity. Shallow depressions in the topography function as evaporative microbasins due to the presence of hardpan. Runoff from the site occurs when the surface soils become fully saturated above the hardpan and when surface flows exceed the capacity of the onsite depressions and ditches (USDA 1991).

The ground water level beneath the site is approximately 30 feet below mean sea level (County of Sacramento 1991). The water-bearing sequence beneath Sacramento County can be divided into two main saturation zones. The lower zone, referred to as the deep aquifer system, includes the black volcanic sands of the Mehrten Formation and those water-bearing sediments underlying it (Valley Springs and Ione Formations). The upper zone, referred to as the shallow aquifer system, includes the now-buried stream channel deposits of the Laguna and Victor Formations (DWR 1974).

The Laguna is non-volcanic and is composed of silt, clay, and lenticles deposited by meandering streams. Where fine grained, the Laguna Formation yields only moderate amounts of water to wells. In areas with soft, well-sorted granitic sands,

yields are high and can be as high as 50 gpm/ft of drawdown. The Arroyo Seco Gravels occur as a thin veneer that overlies the Laguna Formation. These gravels are relatively unimportant as a ground water source (DWR 1974).

The Victor Formation underlies the Victor Alluvial Plain, which covers the central portion of Sacramento County between the Sacramento River and the foothills. The City of Sacramento is located on the Victor Plain. This formation is composed of interbedded sand, silt, and clay with lenses of gravel. Included in this formation are buried meandering stream channel deposits composed of poorly sorted cobbles, gravel, and sand. When buried stream channels are tapped, the wells provide large quantities of water. Otherwise, wells yield little water (DWR 1974).

2.1.4 Wetlands

Wetlands are special environmental features that are considered to be important habitat for a variety of plants, waterfowl, and other wildlife. In addition, wetlands function to slow surface water runoff, contribute to groundwater recharge, aid in the removal of some pollutants from surface waters, and provide for a variety of recreational activities. The project site is a disturbed, grassy, vacant lot. No perennial water bodies occur onsite. No fish or other major aquatic resources are present. However, depressions, a drainage ditch, and roadside ditches onsite often contain water during the rainy season (November through March).

Surface water drainage on the site is facilitated by two small ditches at the east end of the site: one draining to the south and the other draining to the north. These two ditches meet and drain to the west across the center of the project site (Figure 2).

2.1.5 Botanical Resources

The proposed project site is located within the Sacramento Valley, which forms the northern half of the Great Central Valley of California. The Sacramento Valley today has been largely converted to agricultural and urban lands where bunchgrass prairies once existed.

The proposed study area consists entirely of a highly disturbed annual grassland containing several vernal pools, a drainage ditch, and several minor, unvegetated depressions that were created as a result of previous construction activities in the area. The project site includes only disturbed annual grassland and a portion of a drainage ditch. Vegetation in the study area occurs in two types of herbaceous

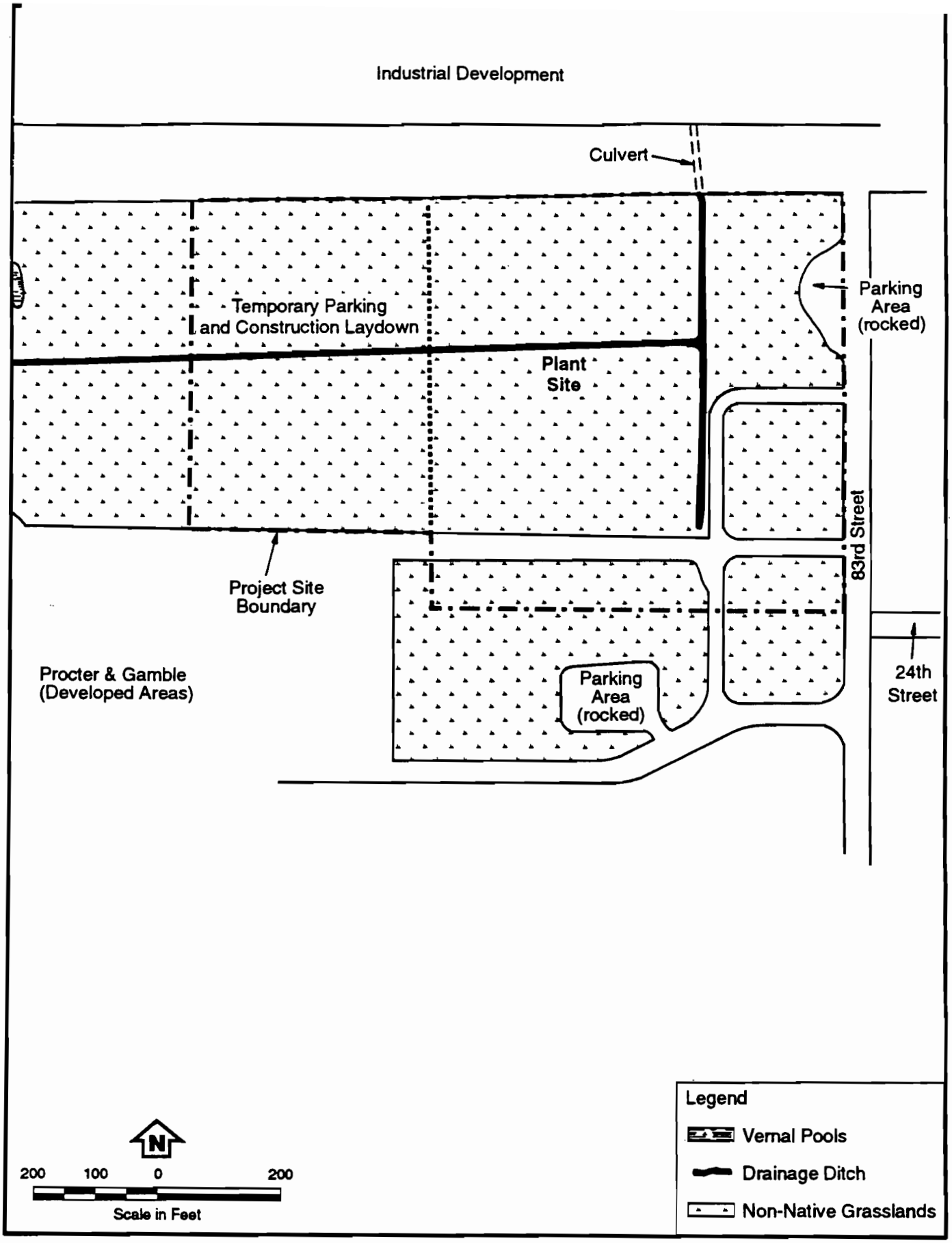

PLANT COMMUNITIES AND WETLANDS IN THE STUDY AREA

Figure 0-2

communities, according to the classification of the California Department of Fish and Game (Holland, 1986): (1) Non-native Grasslands Community, and (2) Northern Hardpan Vernal Pool Community. In addition, there are some areas void of vegetation. The non-native grasslands community is characterized by a dense to sparse cover of annual grasses with the cover generally not much more than 0.5 m in height. Seed germination occurs in late fall with the onset of late season rains. Flowering and seed production are completed in the spring.

The community in the study area is dominated by introduced (non-native) annual grasses, including soft brome (Bromus hordeaceus), slender wild oat (Avena barbata), and rat-tail fescue (Vulpia myuros). Dominant animal forbs in the area include storksbill (Erodium botrys), yellow star thistle (Centaurea solstitalis), and California burclover (Medicago polymorpha). A variety of other species occur in the grassland, but the majority are not native to the area (Black & Veatch, 1993).

The plant community present today is the result of repeated disturbance. The land is disced or plowed at least once a year towards the end of the spring growing season. During 1993, the entire area was plowed in May. This practice serves to reduce the potential for fires being accidentally set during the dry summer season. Consequently, the appearance of the area is usually that of a plowed field. Holland (1986) describes the Northern Hardpan Vernal Pool Community as a "low, amphibious, herbaceous community dominated by annual herbs and grasses." The life cycle of most plants in this community is initiated by winter rains. Vegetation encircles the water collected by these depressions in concentric bands. As the pools evaporate in the spring, the vegetation follows the receding waterline. By early summer, the vernal pools are usually completely dry and the vegetation withered and brown. The vernal pools are variable in size and shape. The depth of the pools varies, but is usually no more than a few feet lower than the surrounding landscape. In dry years, the pools may not contain any water (Black & Veatch, 1993).

The outermost vegetation around the vernal pools is similar to the Non-native Grassland described above, since the pool areas have been regularly plowed to reduce fire risk in the vicinity. The pool areas hold open water for a short period (several weeks to several months), but soon become covered by vegetation able to survive for a time with submerged roots. Flat-face downingia (Downingia pulchella), loosestrife (Lythrum spp.), and toad rush (Juncus bufonius) are usually abundant. As the pools dry, plants such as woolly-heads (Psilocarphus spp.), slender popcorn flower (Plagiobotrys stipitatus), and purselande speedwell (Veronica peregrina) begin

to grow vigorously as ground is exposed by evaporating water. Most of the species observed in and around the vernal pools are annuals. However, a few perennial species were present, including white brodiaea (Triteleia hyacinthina) and blue dicks (Dichelostemma capitatum). Several small areas on the project site contain areas that are bare of vegetation. Most notable is a shallow (1-3' depth), narrow (5-15' wide) drainage ditch that drains surface water to the west across the center of the project site. At the east end of the site a small ditch from the south and one from the north join to form the larger west drainage ditch (Black & Veatch, 1993).

At the east end of the proposed plant site are several minuscule depressions that may have resulted from the construction of the adjacent railroad or road. The areas remain clear of vegetation because they are regularly traversed by vehicles or they are incidentally cleared because of their proximity to areas maintained as railroad right-of-way.

2.1.6 Wildlife Resources

The Sacramento Valley of California historically supported a vast and diverse assemblage of wildlife habitat, including various wetlands, oak woodlands, and grasslands. Agriculture, grazing, and continued population growth and urban development have eliminated all but small vestiges of these habitats to select locations within Sacramento County. The Sacramento, American, and Cosumnes Rivers and the Sacramento Delta support the majority of the remaining marsh and riparian areas in Sacramento County (County of Sacramento 1992). These areas are used annually by thousands of waterfowl migrating along the Central Valley leg of the Pacific Flyway. The American and Cosumnes Rivers are located about 2 miles north and 7 miles south of the project site, respectively.

Sacramento County as well as other foothill counties serve as major breeding and wintering grounds for a number of raptor species, but the oak woodland and associated grasslands of the eastern portion of Sacramento County are the prime habitat area for species such as the golden eagle (Aquila chrysaetos), red-tailed hawk (Buteo lineatus) (County of Sacramento 1992). Several state protected or species of special concern such as the northern harrier (Circus cyaneus), Swainson's hawk (Buteo swainsoni), and burrowing owl (Athene cunicularia) occur throughout the county where sufficient grassland habitat, and in the case of the Swainson's hawk, associated trees are present for nesting and foraging (Black & Vatch 1993).

Characteristic of the City of Sacramento, most of the native natural habitat in the project vicinity has given way to urban sprawl and industrial development. Habitat types in the area consist mostly of urban habitat, some cropland, and non-native annual grassland. Some open grassland and cropland habitats occur over one mile east and south of the site. The area immediately surrounding the project consists of residential areas, heavy industry, and light commercial land uses. Active aggregate mining operations and mined out land currently used for agriculture and land filling occur to the north and east of the project site.

Urban habitat in the project area is of little value to wildlife because of the existing levels of human activity and habitat disturbance. Buildings, pavement, and landscaping have replaced native grasslands. In general, this urban habitat provides very little vegetation for foraging and nesting. Wildlife species adapted to the urban environment such as starlings (Sturnus vulgaris) and house finches (Carpodacus mexicanus) are common. Wildlife observed in the study area include species adapted to human disturbances and are common to annual grassland habitats in the Sacramento Valley. Species observed or potentially occurring in the project area include California quail, western meadowlark, blacktailed jackrabbit, and opossum (Black & Veatch 1993).

The grassland and vernal pool habitats found in the study area are of limited value to wildlife because of the limited area involved and the industrial and commercial activities that surround them. The land has been previously disturbed and is frequently disced. Free-roaming domestic dogs (Canis familiaris) and cats (Felis catus), common in urban settings such as the project vicinity, pose additional problems of predation and harassment for urban wildlife (Black & Veatch 1993).

2.1.7 Soils

The Sacramento County soil survey (USDA, 1991) identifies the following soils on the project site:

211 - San Joaquin fine sandy loam, 0-3 percent slopes

212 - San Joaquin fine sandy loam, 3-8 percent slopes

The San Joaquin fine sandy loam is a moderately deep, moderately well drained soil that formed in alluvium from granitic rocks. The subsoil is a 5-inch thick claypan that perches water for short periods after heavy storms. Below the claypan is an indurated hardpan approximately 11 inches thick over a strongly silica cemented

hardpan about 15 inches thick. Depth to claypan is approximately 20 to 36 inches and depth to hardpan is approximately 23 to 40 inches.

Shrink-swell potential is high, runoff is slow to medium, and erosion hazard is slight to moderate. The San Joaquin fine sandy loam is not considered to be a hydric soil but may contain inclusions of hydric soils that occur adjacent to drainageways and on floodplains. The San Joaquin fine sandy loams are moderately susceptible to sheet and rill erosion by water and not susceptible to wind erosion (USDA 1991).

2.2 Cultural and Paleontological Setting

Cultural resources include archaeological, historic, and ethnographic resources. Paleontological resources consist of fossilized evidence of prehistoric plants or animals preserved in soil or rock.

Both historic and archaeological sites tend to be scattered throughout Sacramento County, although both can potentially be found in greater concentration along the waterways. The areas likely to contain archaeological sites include the Cosumnes River area, the American River area, and the Delta and Sacramento River areas. Historic sites tend to be concentrated in currently developed areas (Figure 3).

Evidence of prehistoric human activity in Sacramento County extends back in time at least 11,000 years. Written historical sources document the Euro-American presence in Sacramento County for the past 200 years.

2.2.1 Archaeological Resources

The evidence of prehistoric peoples in the vicinity of Sacramento County is often difficult to detect. Most artifacts of prehistoric peoples were made primarily of natural materials; stone, fur, sticks, grasses and mud. However, several important archaeological sites have been discovered in Sacramento County, including an array of hand implements, middens rich in discarded objects, and structural remains. Archaeologists attempt to determine food gathering practices, societal structuring, and trading networks from the study of collected artifacts.

The general trend of prehistory in California has been established by archaeologists: an increase in population density over time, coupled with greater sedentism and the use of a greater diversity of food resources. The major periods of prehistory in the project area are: Paleo-Indian, Archaic, and Pacific. These periods are described below.

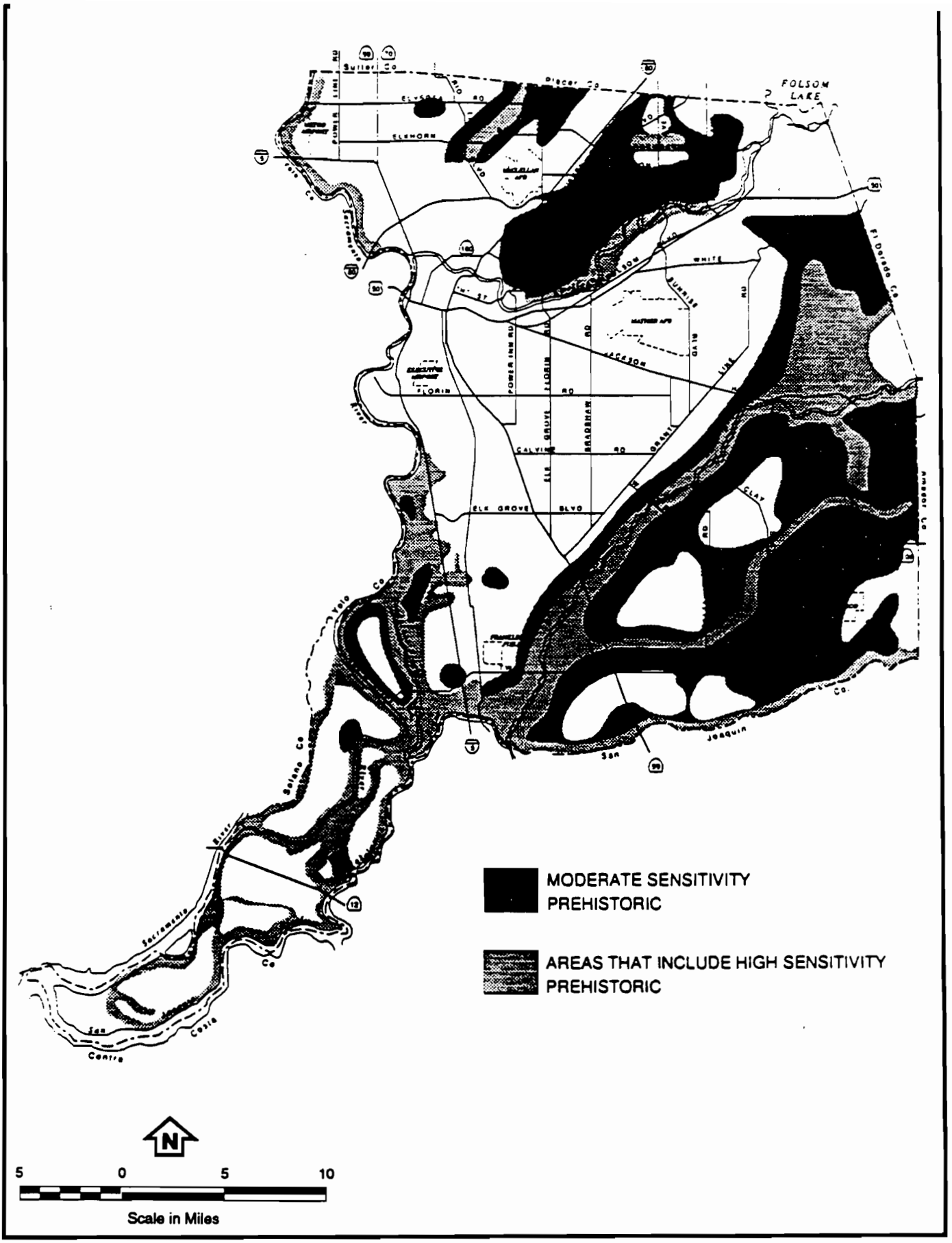

Source: Sacramento County Planning and Community Development Department

CULTURAL RESOURCES SENSITIVITY

Figure 0-3

2.2.1.1 Paleo-Indian Period (10,000-9,000 B.C.). Present evidence indicates an extremely sparse human population in western North America before about 9,000 B.C. Most recorded Paleo-Indian sites are little more than surface scatters of lithic artifacts. One of the earliest sites is the Borax Lake site near Clear Lake in northern California, which may date to as early as 10,000 B.C. Generally, Paleo-Indian subsistence strategies included the capture of big game, including now extinct large Pleistocene mammals (Fagan 1991:105-107). Grinding instruments are rare on Paleo-Indian sites, as if intensive exploitation of vegetable foods was unimportant (Fagan 1991:192).

If there is one overall trend in Paleo-Indian adaptations, it was toward increasing cultural diversity. At the end of the Paleo-Indian period, western hunter-gatherers were pursuing very diverse subsistence strategies, relying heavily on plants and non-migratory small game. Only in local areas where food resources were predictable and seasonally more abundant than usual did populations rise to higher levels (Fagan 1991:114). Research in the Great Basin indicates that the economies of the Paleo-Indian peoples of far western United States, as well as their immediate successors, were based on a wide-ranging hunting and gathering strategy tethered to local lake-marsh habitats (Davy 1992:5-90). The lower Sacramento Valley region supported the highest population densities in prehistoric California. Three staple food categories comprised the diet of prehistoric peoples along the West Coast and immediately inland--large and small game animals, edible plants, and sea foods (Fagan 1991:188-191).

Fluted projectile points, which are diagnostic of the Paleo-Indian Period, have been found at the Borax Lake site, the Tulare Lake Basin, and other places in California. Because a Clovis fluted point was found in a deeply buried stratum in Calaveras County at the Skyrocket site in the Sierra foothills (Davy 1992:5-90), archaeologists have suggested that very early sites may be buried in alluvial deposits in the Sacramento Valley.

2.2.1.2 Early and Middle Archaic Periods (9,000-4,000 B.C.). Archaeologists have indicated that, during the Early and Middle Archaic Periods, California prehistoric cultures shifted from a primary emphasis on hunting large game to subsistence reliance on a varied resource base. Along the California coast, people were exploiting fish and marine mammals, as well as shellfish, perhaps as early as 8,000 B.C. At that time, the Pacific shore was several miles further offshore, and is

now submerged under higher sea levels. As western environments became drier and resources more localized, Paleo-Indians developed more diverse local adaptations and greater cultural diversity, as well as highly varied population densities. In much of southern California, for example, drowned river valleys persisted until as late as 3,500 B.C., accounting for a continued human presence in these regions, while population densities apparently decreased further north (Fagan 1991:106-107).

The San Dieguito Complex hunter-gatherer culture may date to as early as 9,000 B.C. and flourished until after 8,000 B.C. (Fagan 1991:106). San Dieguito may have originated in the Great Basin and flourished over much of southern California as far north as the Death and Owens Valleys. Emerging in an area where drowned river valleys were commonplace along the coast, the exploitation of marshlands and lakeside resources was probably important (Fagan 1991:106).

Evidence of human occupation in the Sacramento Valley and adjacent areas during these periods is rare. The evidence for human occupation comes primarily from finds of large stemmed projectile points of the Western Stemmed tradition. This is because many of the key artifacts used for plant or shell gathering are perishable items like baskets, skin bags, or wooden digging tools. Recent finds of major Stemmed tradition components have occurred in Calaveras County in the Stanislaus River drainage at Clarks Flat and the nearby Skyrocket Site (Davy 1992:5-90). Many other Early Archaic sites may exist, perhaps deeply buried in alluvium deposits. Davy reports that two Gypsum Cave projectile points were found in Sacramento County beneath 9 feet of alluvium in the cut bank of Arcade Creek (1992:5-90).

2.2.1.3 Late Archaic Period (4,000-2,000 B.C.). Fagan (1991:194) reports that the size of local bands varied considerably during this period, with little of the elaboration found in later coastal and Sacramento Delta cultures. In the San Francisco Bay area, early sites were located not only on bay and ocean shores but in hill country, and considerable distances inland. Some groups collected shellfish, but others subsisted on vegetable foods, moving seasonally from one concentration of edible foods to another. Habitat flexibility enabled the people to accommodate plant distribution changes resulting from climatic fluctuations.

Coastal populations rose rapidly after 3,500 B.C., at a time coinciding with the first use of mortars and pestles, perhaps with more intensive acorn production. Fagan reports (1991:196-198,206) that the shift to acorn harvesting may have resulted

from rising sea levels, which drowned the seed-rich coastal plain and forced the people inland. The intensive exploitation of acorns and marine resources led to the great elaboration of technology, art, and social organization in some areas, especially in the San Francisco Bay-Sacramento-San Joaquin Delta regions. Davy also reports (1992:5-90) that trade networks began to diversify and develop during the Late Archaic, bringing raw materials and finished goods from one region to another.

About 2,500 B.C., people originally from the Columbia Plateau or western Great Basin settled in the Sacramento Delta region. The Windmiller economy was focused on hunting small game and waterfowl. The people fished with spears and nets and lines, as well as gathered and stored plant foods such as acorns. Many groups may have hunted in the nearby Sierras during the summer months. Coastal shells and ornaments from the Pacific were traded for obsidian and other exotic materials. Windmiller cemeteries show evidence of considerable ceremonial with the use of red ocher and body placement to the west. The Windmiller Pattern spread widely in the Central Valley and westward into the San Francisco Bay area.

The spear thrower or atlatl may have been introduced or increased in importance during this period, accounting for the change in projectile point styles to the Pinto and Humbolt series from the Western Stemmed series. The Pinto and Humbolt series are generally stemmed or have indented bases, or both (Davy 1992:5-90-91).

2.2.1.4 Early and Middle Pacific Periods (2,000 B.C.-A.D. 500). California's later prehistoric cultures were remarkable for their intensive and often highly specialized hunting, gathering, and fishing activities. After 3,000 to 2,000 B.C., the climate was essentially the same as today. The implements used on land and sea were basically the same all along the coast, with variations depending on local needs and challenges. Acorn crops were important everywhere. The people also enhanced the resources available to them by controlled burning, husbanding and managing wild foods, and occasionally planting wild grasses and other plants. They also developed complex social mechanisms to regulate long distance trade and the redistribution of resources (Fagan 1991:206).

By A.D. 1, Berkeley Pattern villages flourished throughout the Central Coast, associated with the exploitation of acorns and some shellfish collecting. Many Berkeley Pattern settlements were sited to take full advantage of the wide diversity of environments existing in the prehistoric Bay region, often lying near freshwater

streams and marshlands. Such locations enabled the people to exploit both inland and bayshore locations (Fagan 1991:210).

Between A.D. 300 and 500, the Berkeley Pattern gradually evolved into the Augustine Pattern, associated with technological innovations such as the bow and arrow, harpoons, tubular tobacco pipes, and an unusual custom of burning artifacts in a grave before the body was interred. Augustine communities supported large, dense populations in favored locations, intensifying hunting, gathering, and fishing to the point that their culture was much elaborated (Fagan 1991:210-211).

2.2.1.5 Late Pacific Period (A.D. 500-1400). There is evidence that this period was a time of cultural stress throughout the Central Valley and foothills (Davy 1992:5-91; Fagan 1991:210). Warfare was common and populations shifted away from the foothills into higher mountain elevations. Explanation for such activities have included rapid climatic fluctuations and a corresponding movement of vegetation zones (Davy 1992:5-91). Fagan reported (1991:210) that Berkeley Pattern settlements were sited in prime locations where few gaps existed in the annual harvest of different resources. Later, smaller camps were established in the interior, the result of dense populations splitting off to form satellite communities in more marginal lands. Eventually, each major community was surrounded by peripheral settlements, to the point that its territory was restricted, with warfare a probable result. The result would have been more formal social and political relationships, with the emergence of important kin leaders and non-egalitarian political systems.

2.2.1.6 Final Pacific Period (A.D. 1400-1789). Sedentary populations increased during this period, depending more on staple foods even though the diversity of foods exploited increased. The resource-rich Sacramento Valley contained permanent settlements with populations as high as 1,000 persons. Every available ecological niche was exploited (Davy 1992:5-91). After A.D. 1400, the number of Augustine settlements proliferated dramatically, fostered by kin leaders who maintained constant ties with neighboring communities. An elaborate ceremonial practice involving secret societies and cults came into being, as well as the use of clam shell disk "money." This increasingly complex cultural system survived until the arrival of the Europeans (Fagan 1991:211).

2.2.2 Ethnographic Resources

Some 300,000 Indians lived in California as late as 1769, when actual Spanish colonization began (Fagan 1991:206). The Sacramento and lower American Rivers were occupied in protohistoric times by the Valley Nisenan. The economic practices of the Valley Nisenan tended to be somewhat distinct from the Hill Nisenan, who occupied the lower Sierra foothills below 3,000 feet elevation. The Valley Nisenan lived in villages that sometimes reached a population of 500 or more. In 1808, Gabriel Moraga noted 11 villages on the lower American River and 7 on the Sacramento River in the general vicinity of Sacramento (Davy 1992:5-91-92).

Because of the disruption of aboriginal lifeways caused by the arrival of John Sutter at New Helvetia in 1839, little ethnographic information about the Valley Nisenan exists. A large Valley Nisenan village named Pusune was located near the mouth of the American River, but Sutter did not initially interact with its inhabitants, preferring instead to seek allies and laborers among the Miwok to the south. Sutter later befriended the Nisenan (Davy, 1992:5-91-92).

Interaction with Euro-Americans brought disease and displacement to the Nisenan. Several epidemics greatly reduced the Native American population in the Sacramento Valley. An 1833 epidemic of malaria or influenza killed an estimated 75 percent of the Sacramento Valley Native American population (Davy 1992:5-91-92).

2.2.3 Historic Resources

Sacramento County was the center of many interesting and important events which are historically significant, including the Gold Rush, the development of railroads, and the establishment of Sacramento as the seat of State Government. Historic sites are most likely to be found in areas still inhabited, such as the cities of Sacramento and Folsom, the Delta, old travel routes such as the Jackson Highway, Central California Traction Railroad, and Southern Pacific Railroad, and along river and stream beds. Comparatively fewer historic sites remain, however, due to continual changes to the area caused by successional use.

Recorded history in the project area began with the Spanish exploration attempts beyond the coastal zone. The coastal missions were always in need of manpower, and the search for Native American converts led the Spanish inland. Opposition to the Spanish presence in the early 1800s also led the Spanish inland, to punish the Indians. The 1808 Gabriel Moraga expedition, the first recorded Euro-American

penetration into the project region, was one of the first to travel beyond the tule marshes of the Sacramento Delta to the eastern side of the Sacramento Valley. Native Americans told members of this expedition, however, that similar-looking men had entered their country before (Davy 1992:5-91-92).

By 1820, the tribes of the coastal ranges and western Sacramento Valley had largely been missionized. However, many recent converts, captured from the interior, escaped, returning home to relate firsthand their experience with the Spanish. With such knowledge, the interior tribes began to raid the coastal ranchos to steal cattle and horses. The Spanish, in retaliation, sent several punitive expeditions inland, the most notable being those led by Jose Sanchez in 1819 and 1826, and Mariano Vallejo in 1828. The Indian casualties were always much higher than the Spanish, primarily due to Spanish armor and firearms. Nevertheless, the attacks on the Spanish ranchos continued. Indeed, raids were conducted from as far away as central Colorado, driving off up to 3,000 horses at a time (Davy 1992:5-91-92).

While the Spanish entered the interior of California primarily for military purposes, Americans began to make their own explorations into the interior. Jedediah Smith arrived in 1826 with a party of trappers and, in 1827, he made the first recorded crossing of the Sierra by a Euro-American, near Ebbetts Pass. Smith's reports of good fur trapping in the interior of California provided the impetus for the annual Hudson's Bay Fur Brigades, which entered the Sacramento Valley every year between 1829 and 1843 from their base at Fort Vancouver on the Columbia River. The Spanish regarded the American expeditions as intrusions into their territory. They also suspected the Americans of inciting the Indians against them. But, as the Spanish had not settled the area into which the Americans penetrated, they could do little to prevent it. In 1839, the new Mexican government granted John Sutter permission to settle in the Sacramento Valley, primarily to represent Mexico in the region. Sutter was made a Mexican citizen and accorded permission to explore the rivers and to select and take possession of any location that might please him (Zauner 1979:1-2).

The first attempt to emigrate to the region overland was the John Bidwell Party of 1841, consisting of thirty members. In 1843, another party of emigrants crossed the Sierras. By 1845, over 200 had come through, including Lt. John Fremont. Several members of these early emigrant parties later became prominent California citizens. The gold rush, however, temporarily disrupted the flow of prospective agriculturalists to California by turning it into a torrent of gold-seekers. There were

an estimated 4,000 miners in 1848, 200,000 in 1849, and 500,000 in 1850. By August, 1849, Sacramento had 2,000 inhabitants and about 200 houses, and lots were selling for $5,000. The new city had well-defined streets, hotels, stores, saloons and a theater, all within ten years (Zauner 1979:13).

After 1852, gold mining began to decline, because the price of gold had fallen sharply while the price of food and supplies in the mining towns remained high. Other local industries, chiefly agriculture, began to develop in Sacramento County. The 1882 Wright Act enabled farmers to organize into local irrigation districts, leading to large-scale planting in irrigated orchard crops. Early agricultural pursuits in Sacramento County included dairy, wheat, strawberry and fruit farming (Davy 1992:5-93).

The first railroad west of the Rockies was a short line that ran from Sacramento to Folsom (known as the Sacramento Valley Railroad, built by Theodore Judah). In October, 1863, construction began in Sacramento on the transcontinental Central Pacific Railway route (Zauner 1979:28-29).

On April 3, 1860, the first Pony Express rider left St. Joseph, Missouri for Sacramento. The route to Sacramento was 1,980 miles and took eight days to complete. It required 200 stations, 500 horses, and 80 riders. The first mail delivery pouch held 80 letters for Sacramento and San Francisco, sent at a rate of $5 a half-ounce. The modern advance that ended the life of the Pony Express was the completion of the Overland Telegraph Line, which reached Sacramento on October 4, 1861. Cost of a telegram from Sacramento to San Francisco was $2 for the first ten words, $0.75 for each additional five words (Zauner 1979:31-32).

2.2.4 Paleontological Resources

The project site is characterized by brown, non-calcic clayey silt (SC) soils of the San Joaquin series, containing some gravel and rounded, metamorphic cobbles. The geologic deposits underlying the site belong to the Riverbank Formation (Middle to Late Pleistocene) and were deposited by a former channel of the American River when it flowed south of its present location (Wiggett 1993: personal correspondence). The nearest present-day drainage is Morrison Creek, flowing approximately 1-1/2 miles south of the project site.

The Riverbank Formation, together with the Modesto Formation, comprises the Victor Formation. Much of the greater Sacramento area is on the Victor Plain, which formed during the Pleistocene as a plain of aggradation and his been partially

dissected. Victor Formation deposits are generally granitic sand, silt, and clay. Locally, Victor Formation deposits contain gravel lenses and stringers deposited in now-buried stream channels. In the Sacramento area, the American River of Pleistocene times changed its channel several times, leaving a series of channel and terrace deposits in its former courses. In the southeastern Sacramento area north of Morrison Creek, the Riverbank formation consists of basal channel deposits.

Fossil remains constitute a nonrenewable resource that is often of significant scientific and/or popular interest. A previous find of vertebrate fossils from the Riverbank Formation deposits in northern Sacramento, approximately 20 miles north of the project site, generated much interest. In part, due to the nature of the fluviatile depositional environment and in part to the general infrequency of subsurface excavations in the flat Central Valley, discoveries of fossils in the Riverbank/Victor are rare. Finds thus far include the scapula and teeth of Pleistocene horses and post-cranial bones of a Pleistocene camelid. These finds were from gravel pits a few miles south and east of the project site. They were not sufficiently diagnostic to permit dating of the Riverbank Formation more precisely than Middle to Late Pleistocene. An article published in the Sacramento Bee (1989:D-1) describes a recent fossil assemblage discovery in the Sacramento area as the most extensive and varied group of fossils representing the Pleistocene ecosystem in Riverbank/Victor deposits. The fossils include bison, sloth, wolf, clam shells, and plant material. In all instances, fossils were discovered at depths of approximately 3 to 17 feet, as a result of excavations.

3.0 Methodology

Project research methods to determine the existence of archaeological, ethnographic, historic, or paleontological resources included archival research, pedestrian field investigation, architectural reconnaissance, and consultation with the Native American Heritage Commission. Copies of all correspondence relating to the project site investigations, pertaining to both cultural and paleontological resources, are included in Attachment B.

3.1 Archival Research

A records search at the North Central Information Center of the California Archaeological Inventory (CAI) at California State University, Sacramento, California, was conducted by the CAI staff to determine whether significant cultural resources exist on or near the project site. The CAI records search findings are included in Attachment B. In addition, the National Register of Historic Places, the California Historic Landmarks and California Inventory of Historic Resources lists, and California Points of Historic Interest and California Landmark files were searched to locate historic and archaeological sites in the project area.

A records search was conducted by the Black & Veatch staff archeologist and by Dr. Gail Wiggett to ascertain the fossil-bearing potential of the underlying Victor Formation in the project vicinity.

3.2 Field Investigation

A Black & Veatch staff archeologist surveyed the project site on May 18, 1993. The project site included the power facilities area (10 acres) and the adjacent temporary storage/laydown area (approximately 5 acres). Based on environmental conditions, the project site was considered to have a relatively low potential for containing archaeological or historical sites. It lacked areas of obvious relief and was not in close proximity to major water sources or permanent water sources.

A pedestrian surface examination and subsurface testing were conducted to preclude the possibility of significant sites on the project site escaping detection. The entire project site was surveyed in parallel transects 10 meters apart. Subsurface test units were placed at approximately 20 meter intervals on the 10 meter transects to hardpan depth. Ground visibility was excellent during the field investigation, because

the entire project site (except for the existing roadways transecting the site) had recently been disced.

In addition, Dr. Gail Wiggett, paleontologist, visited the project site to assess the fossil-bearing potential of the site. The site investigation and record search indicates that no recorded or unrecorded paleontological finds are outcropping on the ground surface.

3.3 Architectural Reconnaissance

A pedestrian architectural reconnaissance was conducted around the perimeter of the project site to determine whether structures of potentially significant historic architecture were located near the project site and, if so, whether the views of the project facilities would significantly affect the structure's integrity of feeling and association.

3.4 Native American Consultation

Consultation with the Native American Heritage Commission (D. Pilas-Treadway, personal correspondence, Attaachment B) and a record search of the sacred lands file did not indicate the presence of Native American cultural resources in the immediate project area. Black & Veatch was advised to contact and work closely with a designated Native American during the initial project planning stages. Black & Veatch subsequently initiated consultation with the designated Native American.

4.0 Report of Findings

This section presents the information collected during the cultural and paleontological resources investigation.

4.1 Archaeological Resources

The archival research, field investigation, and Native American consultation conducted by the Black & Veatch staff archaeologist indicate that no archaeological resources exist on the project site. The nearest prehistoric sites are located over two miles away along the American River.

4.2 Ethnographic Resources

The archival research, field investigation, and Native American consultation conducted by the Black & Veatch staff archaeologist indicate that no ethnographic resources are exist on the project site. Consultation with the Native American Heritage Commission (D. Pilas-Treadway) and a record search of the sacred lands file did not indicate the presence of Native American cultural resources in the immediate project area. Black & Veatch was advised to contact and work closely with a designated Native American during the initial project planning stages. Black & Veatch subsequently initiated consultation with the designated Native American.

4.3 Historic Resources

The archival research, field investigation, and Native American consultation conducted by the Black & Veatch staff archaeologist indicate that no historic resources exist on the project site. The nearest historic archaeological resource is the Davis Homesite and Winery located to the northwest about 1 mile away. The Central California Traction Railroad trackage, adjacent to the project site on the north, may qualify as a historic property because it is more than 50 years old. However, because the ties and rails have been periodically replaced and because no associated structures are extant near the project site, construction and operation of the Procter & Gamble Cogeneration Project will not impact the Central California Traction Railroad.

4.4 Paleontological Resources

The archival research and field investigations conducted by the Black & Veatch staff archaeologist and Dr. Gail Wiggett indicate that there are no known or recorded paleontological finds outcropping on the ground surface in the project area. Significant fossils have been known to occur underground in the Victor formation, underlying the project site, though relatively low in fossil bearing potential. Onsite project excavations should be monitored, however, and any fossils discovered should be reported to and collected by a qualified paleontologist.

5.0 Management Considerations/Mitigation Plan

In the event that construction personnel identify cultural and/or paleontological resources in the project area during construction, work shall immediately stop work in the vicinity of the discovered cultural and/or paleontological resources. A qualified archaeologist and the appropriate regulating agencies shall be notified of the discovery within one working day of the cultural and/or paleontological resources discovery.

6.0 References

Published Materials

American Association for State and Local History

1991 National Register of Historic Places: 1966-1991, Nashville, Tennessee.

Black & Veatch Engineering

1993 Sacramento Cogeneration Authority, Draft Application for Facility Certification to California Energy Commission, Kansas City, Missouri.

California Department of Water Resources (DWR)

1974 Evaluation of Ground Water Resources: Sacramento County, DWR Bulletin No. 118-3, Sacramento.

California Department of Water Resources (DWR)

1978 Evaluation of Ground Water Resources: Sacramento Valley, DWR Bulletin No. 118-6, Sacramento.

Carlisle, Ronald C., ed.

1988 Americans Before Columbus: Ice-Age Origins, Cushing-Malloy, Inc., Ann Arbor, Michigan.

County of Sacramento, Department of Public Works, Water Resources Division

1991 Sacramento County Ground Water Contour Map: Fall, 1991, Sacramento.

County of Sacramento, Planning and Community Development Department, General

1992 and Advance Planning Section. Revised Draft Conservation Element of the County of Sacramento General Plan, Sacramento.

Davis, J.

1969 Trade Routes and Economic Exchange Among the Indians of California, University of California Archaeological Survey 54, Berkeley.

Davy, Douglas M.
1992 Cultural and Paleontological Resources Section, SEPCO Application for Certification to California Energy Commission, Docket No. 92-AFC-2. Ebasco Environmental, Sacramento.

Fagan, Brian M.
1991 Ancient North America, Thames and Hudson, London.

Fagan, Brian M.
1987 The Great Journey: The Peopling of Ancient America, Thames and Hudson, London.

Gibson, Arrell Morgan
1980 The American Indian: Prehistory to the Present, D. C. Heath and Company, Lexington, Kentucky.

Hofman, Jack L., ed.
1991 Paleo-Indian Hunters, University of Oklahoma, Norman.

Holland, R. F.
1986 Preliminary Descriptions of Terrestrial Natural Communities of California, California Department of Fish and Game, Sacramento.

Moratto, M.
1984 California Archeology, Academic Press, Orlando.

National Oceanic and Atmospheric Administration (NOAA)
1991 Local Climatological Data: Annual Summaries for 1991, Part IV, Western Region, Asheville, North Carolina.

Piper, A. M., et al.
1939 Geology and Ground Water Hydrology of the Mokelumne Area, California, U. S. Geological Survey Water-Supply Paper 780.

Sacramento Bee
1989 When Beasts Ruled: Arco Park Fossils Offer a Look at Ancient Sacramento Valley, Scene section, June 27.

Schlemon, R. J.
1967 Quaternary Geology of Northern Sacramento County, California, Geological Society of Sacramento, Field Trip Guidebook.

Shutler, Richard, Jr., ed.
1983 Early Man in the New World, Sage Publications, Beverly Hills.

U.S. Department of Agriculture (USDA), Soil Conservation Service
1991 Soil Survey of Sacramento County, California, preliminary draft.

Personal Communications

Steade R. Craigo
1993 Office of Historic Preservation, May 18.

Debbie Pilas-Treadway
1993 Native American Heritage Commission, May 17.

Marianne L. Russo
1993 California Archaeological Inventory, North Central Information, May 13.

Gail Wiggett
1993 Geology-Hydrogeology-Paleontology Resources and Services, May 18.

Attachment A

Mark W. Kelly Statement of Qualification

Mark William Kelly
P.O. Box 26354
Shawnee Mission, KS 66225
(913) 339-2840

Education

B.A. - University of Central Oklahoma,
Edmond - History/Museum Studies - 1986

M.A. - University of Central Oklahoma,
Edmond - History/Southwestern Studies - 1987

J.D. - University of Oklahoma, College of Law,
Norman - Environmental/Indian Law - 1990

Ph.D - University of Oklahoma,
Norman - Cultural Anthropology/Archeology
(in progress) - 1994

Employment Experience

Summary

Nine years of experience in archeology and cultural resources management including prehistoric and historic archeology, Native American consultation, and historic structures assessment for projects related to hydroelectric, petroleum, cogeneration, water resources, recreation, and mining development.

Three years legal experience in environmental regulatory review, federal and state agency consultation, preparation of Clean Water Act and associated permits for power plant construction and operation, and preparation of National Historic Preservation Act Section 106 compliance documents.

Specific Employment

Attorney/Cultural Resources Specialist Black & Veatch Engineering, Overland Park, Kansas - June 1992 to present.

Duties and Responsibilities: An Environmental Licensing Manager in the Energy Group's Power Division. Responsible for the coordination of permitting and licensing activities for power generation and landfill projects. Duties include the determination of permit requirements, agency/client liaison, preparation of permit

applications with coordination of required engineering input, and development and management of licensing budgets and schedules.

In addition, cultural resources expertise is provided relative to historic and archeological resources. Duties include drafting and organizing the major documents used to conclude project review under 36 CFR Part 800--Memoranda of Agreement, Programmatic Agreements, and agreement-based Determinations of No Adverse Effect. Technical input to power plant and transmission line environmental assessments and environmental impact studies through archive and literature searches is provided as well as onsite reconnaissance and intensive archeological surveys. Also, coordinate the activities of cultural resource subcontractors for project-specific studies often required after initial surveys and records research. Currently involved with environmental licensing projects in Florida, New Jersey, Iowa, Pennsylvania, Texas, Missouri, and California.

Accomplishments: (1) Following regulatory review, drafted memorandums pertaining to cultural resources for the purpose of keeping Black & Veatch Environmental Project Managers up-to-date on developments that may impact the permitting process. Topics include Clean Water Act Nationwide Permits and cultural resources, Native American participation in Section 106 review, Native American Graves Protection and Repatriation Act, etc., and (2) Provided cultural resources expertise for the following recent Black & Veatch projects:

Nekoosa Papers Inc. FERC License Application: Centralia, Nekoosa, and Port Edwards Hydroelectric Projects, Wood County, Wisconsin. Prepared Cultural Resources Programmatic Agreement for Federal Energy Regulatory Commission (FERC) License Application Exhibit E.

Department of Energy (DOE)-Midwest Power Des Moines Energy Center (DMEC) Repowering Project. Principal Cultural Resources Investigator. Completed Phase I archeological investigation and Native American consultation for a Clean Coal Technology demonstration project. Prepared Memorandum of Agreement for National Register eligible DMEC power house.

Sacramento Cogeneration Project Application for Certification, Sacramento Municipal Utility District. Cultural Resources Discipline Lead. Conducted Phase I archeological investigation and prepared a California Energy Commission license application for a natural gas fired cogeneration steam electric facility in Sacramento County, California.

Solid Waste Management Facility, City Management Corporation, Clay County, Missouri. Cultural Resources Discipline Lead. Conducted records/literature search and consulted with Native American groups and the Missouri State Historic Preservation Office.

EEA Development Inc., Best Foods Cogeneration Facility and Bayonne-Fox Hills Transmission Line, Bayonne, New Jersey. Cultural Resources Discipline Lead. Conducted records/literature search and consulted with National Oceanic and Atmospheric Administration for a Bayonne peninsula shoreline reconstruction project report.

Attorney Rick Moore Law Firm, Chickasha, Oklahoma - April 1991 to May 1992. Duties and Responsibilities: Practice limited to Indian Law. Coordinated efforts of the U.S. Environmental Protection Agency, Bureau of Indian Affairs, Oklahoma State Department of Health, and Tribal Administrator of the Kiowa Tribe to develop a comprehensive scheme of environmental protection. Assisted in the revision of the Caddo Constitution and the preparation of a proposal seeking to assess the success of the PL 100-472 Self-Governance Demonstration Project. Also participated in the investigation of various pollution-based tort cases on Indian land.

Accomplishments: (1) Succeeded in creating an awareness in multiple Oklahoma tribes of the need for tribal environmental regulations to adequately protect Indian lands, and (2) developed an outline of steps necessary to implement cultural resource management plans (funding procurement, siting, etc.).

Staff Archeologist Oklahoma Archeological Survey, Community Assistance Program, Norman, Oklahoma - August 1991 to June 1992.

Duties and Responsibilities: Conduct reconnaissance and intensive surveys on sites of possible historic/cultural value; review and update agency topographic maps and site records; respond to requests for information pertaining to evidence and location of historic sites in Oklahoma; document production.

Accomplishments: (1) Documented and completed site forms for many Cherokee family cemeteries in 3 Oklahoma counties, (2) Reviewed Government Land Office survey plat maps (1870s-1880s) documenting the location of multiple historic structures, the presence of physiographic features and noting the environmental conditions to provide baseline historic data for present in-house archeological projects.

Freelance Archeologist 1984 to 1992.

Duties and Responsibilities: Assisted various archeological consulting firms in conducting pedestrian surveys for energy-related clients of locations throughout Oklahoma, Texas, and Arkansas. In addition, volunteered on several Oklahoma Archeological Survey Paleo/Archaic site excavations to acquire excavation and laboratory experience.

Accomplishments: Gained experience in site form completion and report preparation and in supervision of personnel in grid formation, meter square excavation, collecting, preservation, and cataloging of artifacts.

Yard Conductor/Brakeman A.T.& S.F. Railroad - May 1972 to February 1991.

Duties and Responsibilities: Coordination and supervision of yard switching activity of railcars pertaining to destination routing and content placarding; main-line travel from Arkansas City, Kansas to Gainesville, Texas; responsible for safe handling of freight trains.

Accomplishments: Promoted Conductor.

Professional Affiliations

American Bar Association

Oklahoma Bar Association

American Anthropological Association

Oklahoma Anthropological Society

Oklahoma Archeological Survey

Licenses Held

Attorney - Oklahoma Bar Association, License No. 014760

Society of Professional Archeologists, Archeology Administration (certification pending)

Major Papers Completed

J.D.

- The Pueblo Water Rights Doctrine: Misunderstood and Misapplied
- The Immortal Aspects of Riparianism: Traced from Roman Law to Present-day Oklahoma
- The Navajo: A Legal Dilemma
- What Now? An Appraisal of the Native American Struggle to Protect Sacred Sites from Government Land Use Policies
- The Indian Child Welfare Act of 1978: A Legislative History

M.A. - An Historical Geography of the Mt. Taylor/ Laguna Reservation Area of New Mexico

Ph.D - Elite Existence in Chaco Canyon?

Scholastic Activities & Honors

Summa Cum Laude Graduate Degree - 1987

Edward Everett Dale Award Winner: Outstanding Graduate Student in History/Geography Dept. - 1987

Nominated by UCO Faculty: Outstanding Graduate Student of University of Central Oklahoma - 1987

President's Honor Roll: University of Central Oklahoma - Fall 1984 to Spring 1987, inclusive

Phi Alpha Theta: International History Fraternity, Rho Lambda Chapter

Phi Delta Phi: International Legal Fraternity, Holmes Inn

American Indian Law Review

Graduate Assistant: University of Oklahoma Anthropology Dept. - Fall 1991 to Summer 1992

Employment/Work Interests

National Historic Preservation Act, Section 106 Review/Compliance

Environmental Permitting/Licensing

Cultural Resource Development

Native American Rights: Legal, Political, Environmental, and Economic Issues

Indian Sovereignty/Jurisdiction

State/Tribal Agreements

References

Dr. Rennard Strickland
Director: American Indian Law and Policy Center
University of Oklahoma College of Law
300 Timberdell Road
Norman, OK 73019
(405) 325-4699 ext. 4688

Mr. Jon Faletto
Black & Veatch
11401 Lamar
Overland Park, KS 66211
(913) 339-2500

Dr. Diane Kremm
College of Liberal Arts
University of Central Oklahoma
100 N. University Drive
Edmond, OK 73034
(405) 341-2980 ext. 2837

Mr. Rick Moore
P.O. Box 2093
Chickasha, Ok 73023
(405) 224-0037

Dr. Jack Hofman
2009 Naismith
Lawrence, KS 66046
(914) 842-5095

Attachment B

Project Correspondence

Attachment B1

California Office of Historic Preservation

BLACK & VEATCH

8400 Ward Parkway, P.O. Box No. 8405, Kansas City, Missouri 64114, (913) 339-2000

Sacramento Municipal Utility District
Proctor & Gamble Cogeneration Facility

B&V Project 23933
B&V File 41.0608
April 22, 1993

Office of Historic Preservation
P. O. Box 942896
Sacramento, California 94296-0001

Subject: Historical/Archaeological Records

Attention: Mr. Steade R. Craigo, Acting SHPO

Gentlemen:

The Sacramento Municipal Utility District is planning to construct and operate a natural gas fired cogeneration steam electric facility. Black & Veatch has been retained by Sacramento Municipal Utility District to provide licensing and support services for the project. The project area is located in Section 23, T8N, R5E and is identified on the accompanying topographic map.

We would like to determine if the California Office of Historic Preservation has any site records of historical or archeological significance occurring in the area of the project or if there is any possibility of a significant site occurring in the area that may be affected by the proposed project.

In addition, I would like to determine what requirements must be met in order for me to conduct cultural resource investigations in the state of California, should a survey of the project area be required.

An expedient response to our requests would be appreciated. If you have any questions or other concerns associated with the project, please contact me at (913) 339-2840.

Very truly yours,

BLACK & VEATCH

Mark W. Kelly

rs
Enclosure

bcc: R. G. Chapman/File
D. M. Lefebvre
D. C. Timpe

BLACK & VEATCH

8400 Ward Parkway, P.O. Box No. 8405, Kansas City, Missouri 64114, (913)339-2000

Sacramento Municipal Utility District
Proctor & Gamble Cogeneration Facility

B&V Project 23933
B&V File 41.0608
April 27, 1993

Office of Historic Preservation
P. O. Box 942896
Sacramento, California 94296-0001

Subject: Cultural Resources Investigation

Attention: Mr. Gene Itogawa

Gentlemen:

The Sacramento Municipal Utility District is planning to construct and operate a natural gas fired cogeneration steam electric facility. Black & Veatch has been retained by Sacramento Municipal Utility District to provide licensing and support services for the project. The project area contains approximately 10 acres and is located in Section 23, T8N, R5E and is identified as to accompanying topographic map.

I am sending you a copy of my resume and B&V bio-data sheet for the purpose of determining my ability to conduct a cultural resources investigation of the project area.

Please advise as soon as possible. If you have any questions, or other concerns associated with my credentials, please contact me at (913) 339-2840.

Very truly yours,

BLACK & VEATCH

Mark W. Kelly

brj
Enclosure

STATE OF CALIFORNIA — THE RESOURCES AGENCY

PETE WILSON, *Governor*

OFFICE OF HISTORIC PRESERVATION
DEPARTMENT OF PARKS AND RECREATION
P.O. BOX 942896
SACRAMENTO 94296-0001
(916) 653-6624
FAX: (916) 653-9824

18 May 1993

Reply to: **DoE 930426A**

Mark Kelly
Black & Veatch
8400 World Parkway
P.O. box 8405
KANSAS CITY, MO 64114

Subject: SMUD COGENERATION FACILITY, SACRAMENTO

Dear Mr. Kelly:

You have asked, on behalf of the Department of Energy, for my comments. Thank you for helping the Department of Energy meet its responsibilities under Section 106 of the National Historic Preservation Act.

The regional Archaeological Informaton Center is the best source of current information about histoic properties in your project's Area of Potential Effect, or APE. The Information Center will search their records and maps review the most current version of the National Register of Historic Places and other lists of historic properties, give you a listing of the sites within or near the project area, provide you with recommendations for additional work if needed, and furnish you with a directory of professionally qualified consulting archaeologists if one is needed. You can reach the Information Center by calling (916) 920-3955. Are there any structures on or near the APE? Could they be fifty or more years old? If so, please include photographs of each such structure and its surroundings. Will the project require or result in moving, altering, abandoning, or demolishing any structures fifty or more years old?

When replying to us, always use the reference number in the upper right corner of this page. Be sure to include a map which shows the area inventoried for historic properties and the Area of Potential Effect (36 CFR 800.2). If you have any questions, please telephone State Archaeologist Nicholas Del Cioppo at (916) 653-9696.

Sincerely,

Steade R. Craigo, AIA, Deputy
State Historic Preservation Officer

Attachment B2

Native American Heritage Commission

BLACK & VEATCH

8400 Ward Parkway, P.O. Box No. 8405, Kansas City, Missouri 64114, (913) 339-2000

Sacramento Municipal Utility District
Procter & Gamble Cogeneration Facility

B&V Project 23933
B&V File 41.0608
May 12, 1993

California Native American Heritage Commission
915 Capital Mall
Room 288
Sacramento, California 95814

Subject: Sacred Sites/
Native American Land Use

Attention: Mr. Larry Myers

Gentlemen:

The Sacramento Municipal Utility District (SMUD) is planning to construct and operate a natural gas fired cogeneration steam electric facility. Black & Veatch has been retained by SMUD to provide licensing and environmental support services for the project. The project area encompasses approximately 10 acres, is located in Section 23, T8N, R5E, and is identified on the enclosed topographic map.

We would like to determine whether any properties, religiously or socially significant to Native Americans, have been identified on or near the project site. Please advise as soon as possible.

If you have any questions or other concerns associated with the project, please contact Mark Kelly at (913) 339-2840 or me at (913) 339-2164.

Very truly yours,

BLACK & VEATCH

Douglas C. Fryé

David M. Lefebvre

MWK:rs
Enclosures

STATE OF CALIFORNIA PETE WILSON, Governor

NATIVE AMERICAN HERITAGE COMMISSION
915 CAPITOL MALL, ROOM 364
SACRAMENTO, CA 95814
(916) 653-4082

May 17, 1993

Mark Kelly
Black & Veatch
8400 Ward Parkway
P.O. Box 8405
Kanas City, Missouri 64114

RE: B & V Project 23933

Dear Mr. Kelly:

A record search of the sacred lands file has failed to indicate the presence of Native American cultural resources in the immediate project area. The absence of specific site information in the sacred lands file does not indicate the absence of cultural resources in any project area. Other sources of cultural resources should also be contacted for information regarding known and recorded sites.

CEQA, Appendix J gives directions to follow in the event any previously undetected archaeological sites are inadvertently discovered during any phase of construction. Use of the language in Appendix J, or reference to the standardized procedures therein, helps to eliminate costly delays and assures more adequate protection of such cultural resources. I recommend that you contact and work closely with the following Native American in the area during the initial planning stages. He may be able to offer input regarding sites in the area.

Bill Franklin
P.O. Box 687
Sloughhouse, CA 95683
(916) 351-0848

The Native American Heritage Commission has prepared a pamphlet for use by lead agencies, planners, developers, and property owners. It provides an easy-to-read breakdown of the California Codes pertaining to Native American human remains and their disposition. I have included a copy of this brochure for your information.

If you have any questions or need any additional information, please contact this office.

Sincerely,

Debbie Pilas-Treadway
Staff Analyst

Attachment B3

California Archaeological Inventory

BLACK & VEATCH

8400 Ward Parkway, P.O. Box No. 8405, Kansas City, Missouri 64114, (913) 339-2000

Sacramento Municipal Utility District
Procter & Gamble Cogeneration Facility

B&V Project 23933
B&V File 41.0608
May 12, 1993

Ms. Mary Ann Russo, In-House Archaeologist
North Central Information Center
Department of Anthropology
California State University, Sacramento
6000 J Street
Sacramento, California 95819-6106

Subject: Literature Search

Dear Ms. Russo:

The Sacramento Municipal Utility District (SMUD) is planning to construct and operate a natural gas fired cogeneration steam electric facility. Black & Veatch has been retained by SMUD to provide licensing and environmental support services for the project. The project area encompasses approximately 10 acres and is located in Section 23, T8N, R5E, and is identified on the accompanying topographic map. Also enclosed is a copy of Mark Kelly's resume and biodata sheet.

We request that you provide us with a background literature review to determine the possibility of an archaeologically significant site occurring on the project site. In addition, we request a statement as to the intensity of onsite survey required for the project site. We understand that the literature review will require about two hours of effort, and that a fee of $90 per hour will be charged. We also understand that you will bill us for the materials.

If you have any questions or other concerns associated with the project, please contact Mark Kelly at (913) 339-2840.

Very truly yours,

BLACK & VEATCH

Douglas C Fuji

for David M. Lefebvre

MWK:rs
Enclosures

California
Archeological
Inventory

NORTH CENTRAL
INFORMATION
CENTER

AMADOR
EL DORADO
NEVADA
PLACER
SACRAMENTO
YUBA

Department of Anthropology
California State University, Sacramento
6000 J Street, Sacramento, CA 95819-6106
(916) 278-6217
FAX (916) 278-5162

May 13, 1993

Mark Kelly
Black & Veatch Engineering
11401 Lamar
Overland Park, KA 66211

RE: GENERAL INFORMATION REQUEST.

Dear Mark:

Enclosed are the various materials we spoke of the other day including the List of Information Centers, record search requirements and associated information, list of consultants, report guidelines, site record handbook, site forms, built environment forms and brochure from the Native American Heritage Commission. Please give me a call if you have any questions.

I received your record search request by FAX yesterday. I noticed that the address on the cover letter was different than this one. I will use that address (Ward Parkway in Kansas City) for my record search response unless I hear otherwise from you.

Sincerely,

Marianne L. Russo
Assistant Coordinator

California Archeological Inventory

NORTH CENTRAL INFORMATION CENTER

AMADOR
EL DORADO
NEVADA
PLACER
SACRAMENTO
YUBA

Department of Anthropology
California State University, Sacramento
6000 J Street, Sacramento, CA 95819-6106
(916) 278-6217
FAX (916) 278-5162

6/18/93

Mark -

I didnt hear from you by 2:30 so I went ahead + finished it up. I tried to be as flexible as possible with the recommendations. Naturally, to be safe, both historical research + a field survey should be done but in actual practice other choices are often made. If you have to address Section 106 requirements you had better cover all bases. If you are only dealing with CEQA (Calif. Environ. Quality Act) then you may be under pressure to economize. In these cases, in this particular part of Sacramento County, you might be able to "get away" with ~~any~~ either just a survey or just archival review (assuming no potentially historic features were discovered in the research)

over

I would certainly like to see ~~this~~ both done, but I can only advise not require. In addition we (the Info Center) have a history of not recommending surveys on all projects in the area south + southeast of Sacramento (area which includes this project). This is based on the presence of numerous previous surveys and a very small # of sites. However in the last couple of years we have begun to realize that we are overlooking many historic buildings + features such as the railroad. ~~Unfortunately~~ Unfortunately though many of these are less than 100 years old (~~date~~ age listed in CEQA as cut off point). This is in contrast to the federal standard of 50 years (45 for practical purposes). You can make a case for younger remains but it takes some effort! Anyway, its a long story. Call me if you want to discuss or whatever!

Melanie

California
Archeological
Inventory

NORTH CENTRAL
INFORMATION
CENTER

AMADOR
EL DORADO
NEVADA
PLACER
SACRAMENTO
YUBA

Department of Anthropology
California State University, Sacramento
6000 J Street, Sacramento, CA 95819-6106
(916) 278-6217
FAX (916) 278-5162

June 18, 1993

Mark Kelly
8400 Ward Parkway
P.O. Box No. 8405
Kansas City, MO 64114

RE: RECORD SEARCH FOR THE PROCTOR & GAMBLE COGENERATION FACILITY, SACRAMENTO COUNTY.

Dear Mr. Kelly:

In response to your request, received on May 12, 1993, a record search for the above project location (USGS Sacramento East 7.5' quad. T8N R5E Section 23) has been completed with the following results:

PREHISTORIC RESOURCES: No prehistoric sites have been recorded within or adjacent to the project location. The nearest such sites are located over two miles away along the American River.

HISTORIC RESOURCES: No historic archeological resources have been recorded within or adjacent to the project area. The closest feature of this type is the Davis Homesite and Winery (AF-34-5-H), dating to the 1860s. It is to the northwest, about 1 mile away.

Although not recorded during any previous archeological survey or mentioned in any of our historic references the California Central Traction Railroad should be considered a potential historic resource. It shows up on our 1952 map edition (making it a minimum of 41 years old). Archeologists in this area have only recently begun to address these types of linear historic resources. A little as 3 years ago the vast majority of railroads, canals, roads, etc. were ignored.

A review of the listed references mentioned no specific landmarks or other features within one mile of the project.

PREVIOUS ARCHAEOLOGICAL INVESTIGATIONS: According to our records there have been no surveys of the project area itself. The closest such studies include one done by Peak and Associates (1980) on transmission lines to the east and west of the project (report No. 488) and an overview of the Sacramento Army Depot (Cleland et al, 1987) to the south (report No. 379). Copies of the report library cards are attached and locations are shown on the USGS map.

SENSITIVITY AND RECOMMENDATIONS: Based upon the above information and the local topography the project area is estimated to be of rather low sensitivity for prehistoric cultural resources. Historic sensitivity should be considered generally moderate. If research suggests that the railroad is over 45 years of age then the zone along the northern boundary should be considered of moderate/high sensitivity. If there are any standing structures over 45 years of age elsewhere on the parcel then these areas may have a greater historic potential.

Research should be done to determine some specific information about the Calif. Traction Railroad (age, builders, etc.) as well as the history of any existing structure and parcel modifications. Based upon the results of this research and the current condition of the parcel a field survey strategy can be planned. On such a small parcel, if a survey is done, it is most practical to do as intensive a survey as the ground visibility allows. No great economy of time or funds is gained by performing a sample survey of some type. Naturally though, the historic research results can provide clues as to the most likely locations and types of features that may be encountered and efforts should be more concentrated in these areas if they occur. In addition, if the archival review suggests the strong likelihood of buried remains, some of subsurface testing or project monitoring may be advisable.

LITERATURE SEARCH: Reviewed were the official records and maps for archeological sites and surveys in Sacramento County, the National Register of Historic Places - Listed properties and Determinations of Eligibility - (1990 plus updates), the California Inventory of Historic Resources (1976), California Historical Landmarks (1990) plus updates), California Points of Historical Interest (1992), Gold Districts of California (1979), California Gold Camps (1975), California Place Names (1969), Caltrans Local Bridge Survey (1989), and Historic Spots in California (1966 and 1990).

As indicated on the attached agreement form the charge for this record search is **$90.30**. Payment instructions are included at the bottom of the form. Please sign where indicated and return the YELLOW with your payment. Thank you.

Sincerely,

Marianne L. Russo
Assistant Coordinator

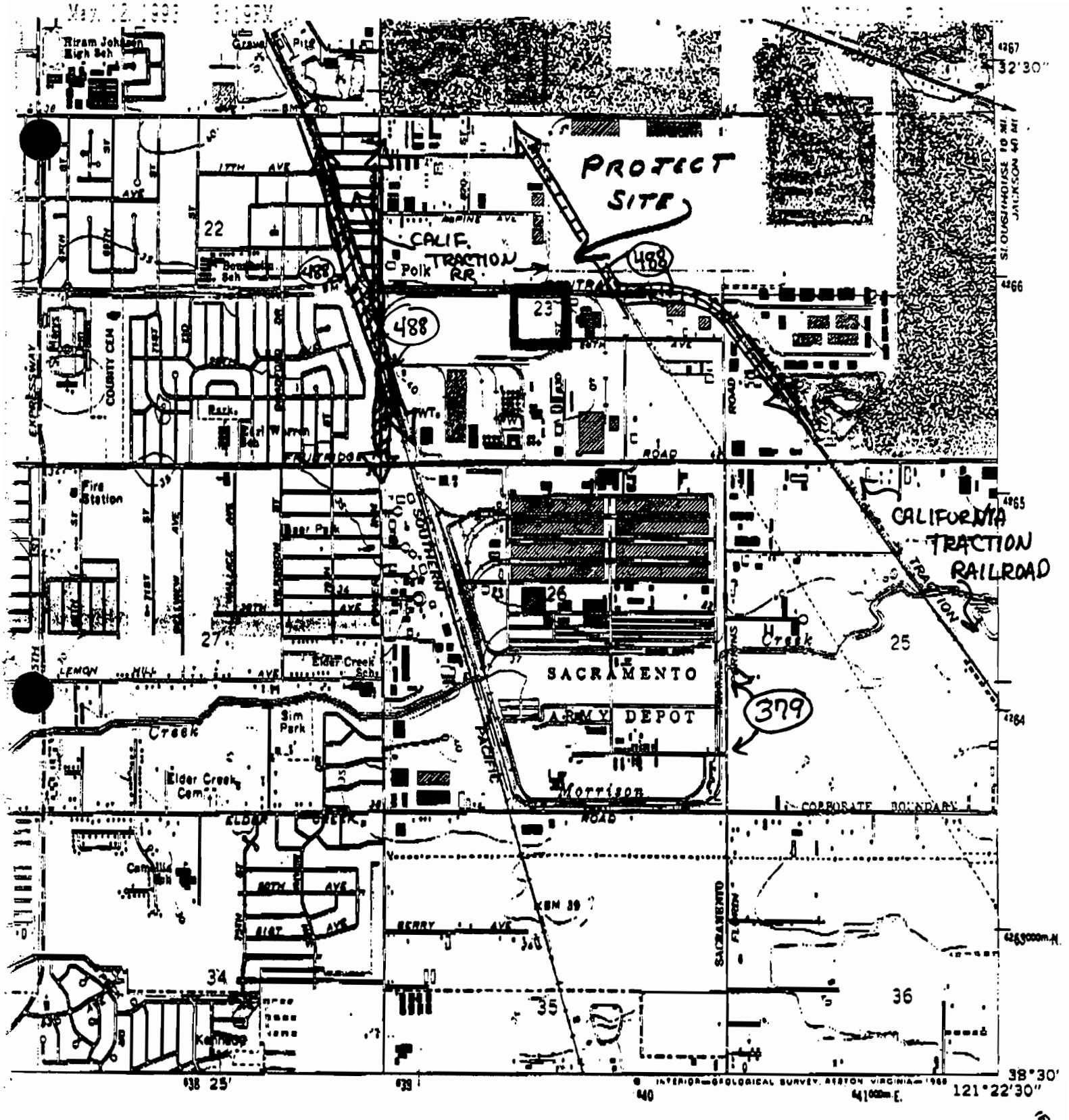

1 MILE

6000 7000 FEET

1 KILOMETER

ROAD CLASSIFICATION

Heavy-duty — Light-duty

Medium-duty — Unimproved dirt

Interstate Route — U. S. Route — State Route



QUADRANGLE LOCATION

Section 23 T8N R5E

SACRAMENTO EAST, CALIF.

SW/4 FAIR OAKS 15' QUADRANGLE

N3830—W12122.5/7.5

1967

PHOTOREVISED 1980

DMA 1241 (USW)—SERIES V895

NDARDS
RESTON, VIRGINIA 22092
BLE ON REQUEST

Revision shown in purple and woodland compiled by the County of Sacramento from aerial photographs taken 1978 and other source data. This information not field checked. Map edited 1980

Purple tint indicates extension of urban areas

Cleland, James H., A. L. Christenson, C. M. Woods and J.C. Smith.

1987 An Archeological Overview and Management Plan for the Sacramento Army Depot, Sacramento, California.

OVERVIEW

USGS: Sacramento East 7.5' T8N R5E Sec. 26.
Area: 485 acres
Prepared For: National Park Service, U.S. Dept. of the Interior, Western Region
450 Golden Gate Ave. San Francisco, CA 94102
Cultural Resources: None recorded
(several possible historic sites noted)

Peak, Ann S. and Associates

1980 Cultural Resource Assessment of Sacramento Municipal Utility District's Project A, Phase II 230kV Transmission Line, Hurley to Hedge-Pocket Tap, Sacramento County, CA.

SURVEY

USGS: Carmichael 7.5' T8N R5E Sec. 24,25,36.
T8N R6E Sec. 19,30,31.
Sacramento East 7.5' T9N R5E Del Paso L.G. Sec.65
T8N R5E Del Paso L.G. Sec. 64&Unsec(& 66.)
Regular Sec. 11-15, 22-27, 34, 35.
Area: 28 miles linear (est. 150+acres)
Prepared For: Sac. Municipal Utility Dist. 6201 S St. Sacramento, CA 95813
Cultural Resources: None

Attachment B4

Geology-Hydrogeology-Paleontology Resources and Services

BLACK & VEATCH

3400 Ward Parkway, P.O. Box No. 8405, Kansas City, Missouri 64114, (913) 339-2000

Sacramento Municipal Utility District
Proctor & Gamble Cogeneration Facility

B&V Project 23933
B&V File 41.0608
May 3, 1993

Dr. Gail Wiggett
7253 West Second Street
Rio Linda, California 95673

Subject: Palentological Resources

Dear Dr. Wiggett:

The Sacramento Municipal Utility District is planning to construct and operate a natural gas fired cogeneration steam electric facility. Black & Veatch has been retained by Sacramento Municipal Utility District to Provide licensing and support services for the project. The project area contains approximately 10 acres and is located in Section 23, T8N, R5E and is identified on the accompanying topographic map.

We would like an opinion, in your professional capacity as a paleontologist, as to the likelihood of palentological resources occurring in the project area. I have enclosed the sections pertaining to Palentological Resources from two AFCs that have been successfully reviewed by CEC staff, as examples of the depth of information required.

Please contact me if you have any questions at (913) 339-2840. Thank you for an expeditious response.

Very truly yours,

BLACK & VEATCH

Mark W. Kelly

rs
Enclosure

GWA
GEOLOGY–HYDROGEOLOGY–PALEONTOLOGY
*resources*services*

7253 West Second Street
Rio Linda CA 95673

18 May 1993

Mr. Mark Kelly
Black & Veatch Engineers - Architects
P.O. Box 8405
Kansas City, MO. 64114

Subject: Paleontological Resources Assessment, SMUD Cogeneration Project, Sacramento East Quadrangle, California (B&V Project 23933)

Dear Mr. Kelly:

As we discussed by telephone and in response to your letter of 3 May, I have prepared a short report on the potential for encountering fossils at the subject site, and a short discussion of the applicable geology.

I hope this will be useful in your work. Please contact me if I can be of further assistance, or if you have any questions.

Yours sincerely,

G. Wiggett

Gail Wiggett, Ph.D., R.G., C.E.G.

enc.

PALEONTOLOGICAL RESOURCES

The project site is flat, characterized dominantly by brown, non-calcic clayey silt (SC) soils of the San Joaquin series, containing some gravel and rounded, metamorphic cobbles. The geologic deposits underlying the site belong to the Riverbank Formation (Middle to Late Pleistocene) and were deposited by a former channel of the American River when it flowed south of its present location (Shlemon, 1967). The nearest present-day drainage is Morrison Creek, flowing approximately 1-1/2 miles south of the site.

The Riverbank Formation, together with the Modesto Formation, comprises the Victor Formation of some workers (e.g., California Department of Water Resources, 1974). Much of the greater Sacramento area is on the Victor Plain, which formed as a plain of aggradation during the Pleistocene and has been partially dissected. Victor Formation deposits are generally granitic sand, silt, and clay, and locally contain gravel lenses and stringers deposited in now-buried stream channels. As described by Shlemon (1967), in the Sacramento area, the American River of Pleistocene times changed its channel several times, leaving a series of channel and terrace deposits in its former courses. In the southeastern Sacramento area north of Morrison Creek the Riverbank formation consists of basal channel deposits.

Fossil remains constitute a nonrenewable resource that is often of significant scientific and/or popular interest. (See, for example, the Sacramento Bee, June 27 1989, Scene Section, which describes a find of vertebrate fossils from the Riverbank age deposits in northern Sacramento, approximately 20 miles from the site presently being considered). In part due to the nature of the fluviatile depositional environment and in part to the general infrequency of subsurface excavations in the flat Central Valley, discoveries of fossils in the Riverbank/Victor are rare (California Department of Water Resources, 1974,1978). Piper and others (1939) reported a shoulder blade (scapula) of a Pleistocene horse, and Shlemon (1967), reported horse teeth and a leg bone of a Pleistocene camel. These finds were from gravel pits a few miles south and east of the proposed SMUD site. They are not sufficiently diagnostic to permit dating of the Riverbank more precisely than Mid to Late Pleistocene. The fossil assemblage described in the Sacramento Bee (1989) and referred to by Hilton (1992, in SEPCO, 1992), is the most varied group of fossils representing the Pleistocene ecosystem in Riverbank/Victor deposits in the Sacramento area. The fossils include bison, sloth, wolf, clam shells, and plant material. In all of these occurrences, fossils were discovered at depths of approximately 3 to 17 feet, as a consequence of excavations.

While it is unlikely that any new discoveries will be made at the proposed project, any fossils that are found may be of interest to local educators. The most likely discoveries will be bones or bone fragments. On-site excavations should be observed, and any fossils should be reported to and collected by a qualified paleontologist.

REFERENCES CITED:

California Department of Water Resources, 1974, Evaluation of Ground Water Resources: Sacramento County. DWR Bulletin No. 118-3.

California Department of Water Resources, 1978, Evaluation of Ground Water Resources: Sacramento Valley. DWR Bulletin 118-6.

Piper, A.M. and others, 1939, Geology and Ground Water Hydrology of the Mokelumne Area, California. U.S. Geological Survey Water-Supply Paper 780.

Shlemon, R.J., 1967, Quaternary Geology of Northern Sacramento County, California. Geological Society of Sacramento, Field Trip Guidebook.

Sacramento Bee, 1989, When Beasts Ruled: Arco Park fossils offer a look at ancient Sacramento Valley. Scene section, June 27, 1989.

SEPCO, 1992, Application for facility certification to California Energy Commission. Docket No. 92-AFC-2.

Appendix M
Material Safety Data Sheets

Material Safety Data Sheets (MSDS)

1. Ammonium Hydroxide (Aqueous Ammonia),
2. Sulfuric Acid,
3. Hydrochloric Acid,
4. Ammonium Fluoride,
5. Sodium Hypochlorite
6. Hydrazine,
7. Cyclohexylamine.

MSDSs for all hazardous substances stored or used onsite will be kept in a logbook located in the plant's control room.

Genium Publishing Corporation
One Genium Plaza
Schenectady, NY 12304-4690 USA
(518) 377-8854

Sheet No. 1A
Ammonium Hydroxide

Issued: 4/80 Revision: B, 9/92

Section 1: Material Identification

Ammonium Hydroxide (NH_4OH) Description: Derived by reaction of hydrogen and nitrogen over a catalytic surface based on metallic iron, followed by addition of the resulting ammonia to water. Used in textiles, refrigeration, condensation polymerization processes, fertilizers, ink, bleach, calico printing, photography (development of latent images), pharmaceuticals, ammonia soaps, lubricants, explosives, ammonia compounds, detergents, food additives, household cleansers (10% ammonia); for saponifying fats and oils; manufacture of aniline dyes; in extracting metals such as copper, nickel, and molybdenum from their ores, and as a solvent for casein in the pulp and paper industry.

Other Designations: CAS No. 1336-21-6, ammonia aqua, ammonium hydrate, ammonia solution, ammonia water, Spirit-of-Hartshorn.

Manufacturer: Contact your supplier or distributor. Consult latest *Chemical Week Buyers' Guide*[73] for a suppliers list.

Cautions: Ammonium hydroxide liquid and vapor is immediately and extremely irritating and corrosive to the eyes, skin, and respiratory tract. High concentrations can cause severe respiratory tract burns and pulmonary edema if inhaled.

R	2
I	4
S	4
K	1

Genium



HMIS
H 3*
F 1
R 0
PPE-Sec. 8
*Chronic effects

Section 2: Ingredients and Occupational Exposure Limits

Ammonium Hydroxide, ca 100%; solution contains not more than 44 % ammonia.

1991 OSHA PEL*
15-min STEL: 35 ppm (27 mg/m³)

1990 IDLH Level*
500 ppm

1990 NIOSH REL*
TWA: 25 ppm (18 mg/m³)
STEL: 35 ppm (27 mg/m³)

1992-93 ACGIH TLV*
TWA: 25 ppm (17 mg/m³)
STEL: 35 ppm (24 mg/m³)

1990 DFG (Germany) MAK*
Ceiling: 50 ppm (35 mg/m³)
Category I: local irritants
Peak Exposure Limit: 100 ppm, 5 min momentary value, 8 per shift

1985-86 Toxicity Data†
Human, inhalation, TC_{Lo}: 408 ppm caused fibrosis and acute pulmonary edema.
Human, oral, LD_{Lo}: 43 mg/kg; toxic effects not yet reviewed
Rabbit, eye: 44 µg caused severe irritation.
Rat, oral, LD_{50}: 350 mg/kg; toxic effects not yet reviewed

* Values are for ammonia vapors
†See NIOSH, *RTECS* (BQ9625000), for additional irritation, mutation, and toxicity data.

Section 3: Physical Data

Boiling Point: 82.4 °F (28 °C) at 760 mm Hg
Freezing Point: -106.6 °F (-77 °C)
Vapor Pressure: 237.8 mm Hg at 32 °F (0 °C), 786 mm Hg at 80.6 °F (27 °C), 2601 mm Hg at 140 °F (60 °C)
Vapor Density (Air = 1): 1.2
pH: 13.6 at 77 °F (25 °C)

Molecular Weight: 35.06
Specific Gravity: 0.9 at 77 °F (25 °C)
Water Solubility: Soluble, with mild liberation of heat
Relative Evaporation Rate (Butyl Acetate = 1): >1
Odor Threshold (for ammonia): 0.043 to 53 ppm

Appearance and Odor: Colorless liquid with a strong, suffocating odor usually detectable below harmful levels and having an acrid taste.

Section 4: Fire and Explosion Data

Flash Point: None reported	Autoignition Temperature: 1202 °F (650 °C)*	LEL: 16 % v/v*	UEL: 25 % v/v*

Extinguishing Media: Ammonium hydroxide solution does not burn; the vapor will, but it does not ignite readily. For small fires, use dry chemical, water spray, carbon dioxide (CO_2), or regular foam. For large fires, use water spray, fog, or regular foam.
Unusual Fire or Explosion Hazards: Flammable, poisonous gases may accumulate in tank and hopper cars.
Special Fire-fighting Procedures: Because fire may produce toxic thermal decomposition products, wear a self-contained breathing apparatus (SCBA) with a full facepiece operated in pressure-demand or positive-pressure mode. Also, wear fully protective clothing. If possible without risk, move container from fire area. Apply cooling water to sides of container until well after fire is out. Stay away from ends of tanks. Do not release runoff from fire control methods to sewers or waterways.

* These values apply to ammonia vapors.

Section 5: Reactivity Data

Stability/Polymerization: Ammonium hydroxide is stable at room temperature in tightly closed glass bottles with plastic or rubber stoppers under normal storage and handling conditions. Hazardous polymerization cannot occur. **Chemical Incompatibilities:** Corrosive to copper, zinc, and galvinized surfaces; reacts exothermically (producing extreme heat) with sulfuric, hydrochloric and other mineral acids; forms explosive compounds with many heavy metals and halide salts; and is incompatible with acrolein, acrylic acid, chlorosulfonic acid, dimethyl sulfate, fluorine, gold and aqua regia, oleum, β-propiolactone, propylene oxide, silver oxide, silver nitrate, silver oxide + ethyl alcohol, nitromethane, silver permanganate, and halogens (i.e., bromine, chlorine, and iodine). **Conditions to Avoid:** Exposure to heat and contact with incompatibles. **Hazardous Products of Decomposition:** Thermal oxidative decomposition of ammonium hydroxide can produce toxic ammonia (NH_3) and nitrogen oxides (NO_x).

Section 6: Health Hazard Data

Carcinogenicity: The IARC,[160] NTP,[169] and OSHA[164] do not list ammonium hydroxide as a carcinogen. **Summary of Risks:** Ammonium hydroxide is extremely corrosive to the skin, eyes, and respiratory and digestive tracts in both its liquid and vapor forms. High concentrations can cause severe burns in a matter of seconds. From all exposure routes, convulsions and coma may occur if absorption is extensive. Brief exposure to 5000 ppm or ingestion of 3 to 4 mL may be fatal. **Medical Conditions Aggravated by Long-Term Exposure:** Chronic respiratory or skin disorders. **Target Organs:** Eyes, skin, respiratory and gastrointestinal tracts. **Primary Entry Routes:** Inhalation, ingestion, and eye and skin contact. **Acute Effects:** Inhalation of vapors causes irritation of the eyes, nose, and respiratory tract; sneezing, coughing, burning sensation in the throat, difficulty breathing, chemical bronchitis or pneumonia, pulmonary edema, convulsions and coma. Skin contact causes an itching and tingling sensation (skin may also feel slippery or soapy) followed by painful burning and ulceration, and possible state of shock. Eye contact causes immediate pain of the eyes and lids, intense watering, burns, and frequently irreparable damage to the mucous membranes of the eyes.

Continue on next page

Copyright © 1992 Genium Publishing Corporation. Any commercial use or reproduction without the publisher's permission is prohibited.

Section 6—Health Hazard Data, *continued*

There may also be corneal and conjunctival ulcers, corneal edema (fluid build-up), semidilated fixed pupils, and extensive destruction of the anterior chamber in the eye. Ingestion produces burning pain in the digestive tract, coughing, throat constriction, vomiting (sometimes of coffee grounds-like material due to digestive hemorrhage), loose bloody stools, difficulty breathing, convulsions, and shock. Chronic Effects: Repeated inhalation of vapor may cause bronchitis with cough, phlegm, and/or shortness of breath which may lead to chronic lung damage. Repeated skin contact can cause dryness, itching, and redness (dermatitis).

FIRST AID

Eyes: *Do not* allow victim to rub or keep eyes tightly shut. Gently lift eyelids and flush immediately and continuously with flooding amounts of water until transported to an emergency medical facility. Consult a physician immediately. Skin: *Quickly* remove contaminated clothing. Rinse with flooding amounts of water for at least 15 min. Wash exposed area with soap and water. For reddened or blistered skin, consult a physician. Inhalation: Remove exposed person to fresh air and support breathing as needed. Ingestion: Never give anything by mouth to an unconscious or convulsing person. Contact a poison control center and unless otherwise advised, have that *conscious and alert* person drink 1 to 2 glasses of water to dilute. *Do not* induce vomiting. Immediately lavage with water, lemon juice, milk, or emulsions; delay may cause perforation of the esophagus or stomach. Note to Physicians: After inhalation or ingestion exposures, check the glottis; swelling may necessitate a tracheotomy. Maintain normal body temperature. Observe for 24 to 48 hr as pulmonary edema may be delayed.

Section 7—Spill, Leak, and Disposal Procedures

Spill/Leak: Immediately notify safety personnel, isolate and ventilate area, deny entry, and stay upwind. Cleanup personnel should protect against inhalation and skin or eye contact. For small spills, take up with earth, sand, vermiculite, or other absorbent, noncombustible material and place in suitable containers for disposal. For large spills, dike far ahead of liquid spill for later disposal or reclamation. Spill can be neutralized with sodium bicarbonate. Follow applicable OSHA regulations (29 CFR 1910.120). Environmental Transport: In water, ammonium hydroxide will volatilize to an extent and will be slowly neutralized by carbon dioxide. Ecotoxicity Values: *Lepomis macrochirus* (bluegill), LC_{50} = 0.024 to 0.093 mg/L/48 hr; atlantic salmon smolt, LC_{50} = 5 to 8 mg/L/24 hr; goldfish, TLm = 2 to 2.5 mg/L/24-96 hr. Disposal: Treat NH_4OH waste with sodium hydroxide or calcium hydroxide to liberate the ammonia. The ammonia can then be collected, dissolved in water and reused. Contact your supplier or a licensed contractor for detailed recommendations. Follow applicable Federal, state, and local regulations.

EPA Designations
Listed as a SARA Toxic Chemical (40 CFR 372.65, *as ammonia*)
Listed as a SARA Extremely Hazardous Substance (40 CFR 355, *as ammonia*). TPQ: 500 lb
Listed as a RCRA Hazardous Waste (40 CFR 261.22): D002, Characteristic of corrosivity
Listed as a CERCLA Hazardous Substance* (40 CFR 302.4); Reportable Quantity (RQ), 1000 lb (454 kg) [* per RCRA, Sec. 3001]

OSHA Designations
Listed as an Air Contaminant
(29 CFR 1910.1000, Table Z-1-A)

Section 8—Special Protection Data

Goggles: Wear chemical safety goggles (effective against splashes from all angles), per OSHA eye- and face-protection regulations (29 CFR 1910.133). Because contact lens use in industry is controversial, establish your own policy. Respirator: Seek professional advice prior to respirator selection and use. Follow OSHA respirator regulations (29 CFR 1910.134) and, if necessary, wear a MSHA/NIOSH-approved respirator. For < 250 ppm, use any chemical cartridge respirator with protection against ammonium hydroxide, supplied air respirator (SAR), or SCBA. For < 500 ppm, use any powered air-purifying respirator with chemical cartridges protecting against NH_4OH, or any SAR or SCBA with a full facepiece. For emergency or nonroutine operations (cleaning spills, reactor vessels, or storage tanks), wear an SCBA. *Warning! Air-purifying respirators do not protect workers in oxygen-deficient atmospheres.* If respirators are used, OSHA requires a written respiratory protection program that includes at least: medical certification, training, fit-testing, periodic environmental monitoring, maintenance, inspection, cleaning, and convenient, sanitary storage areas. Other: Wear chemically protective gloves, boots, aprons, and gauntlets to prevent all skin contact. Neoprene, Viton, butyl rubber, nitrile rubber, chlorinated polyethylene, and polyvinyl chloride (PVC) are suitable materials for PPE. Polyvinyl alcohol (PVA) is not recommended. Ventilation: Provide general and local exhaust ventilation systems to maintain airborne concentrations below the OSHA PEL (Sec. 2). Local exhaust ventilation is preferred because it prevents contaminant dispersion into the work area by controlling it at its source.[103] Safety Stations: Make available in the work area emergency eyewash stations, safety/quick-drench showers, and washing facilities. Contaminated Equipment: Separate contaminated work clothes from street clothes and launder before reuse. Inform laundry personnel of the hazards associated with NH_4OH exposure. Remove this material from your shoes and clean PPE. Comments: Never eat, drink, or smoke in work areas. Practice good personal hygiene after using this material, especially before eating, drinking, smoking, using the toilet, or applying cosmetics.

Section 9—Special Precautions and Comments

Storage Requirements: Prevent physical damage to containers. Store in glass bottles with plastic or rubber stoppers in a cool, (below 77 °F/25 °C), dry, well-ventilated area out of direct sunlight and away from incompatibles (Sec. 5). Dike around storage tanks to retain contents at 110 to 120% capacity. To prevent static sparks, electrically ground and bond all equipment used in NH_4OH manufacture, use, storage, transfer, and shipping. Engineering Controls: To reduce potential health hazards, use sufficient dilution or local exhaust ventilation to control airborne contaminants and to maintain concentrations at the lowest practical level. Enclose all operations where possible. Where possible, *automatically* pump liquid NH_4OH from drums to storage or process containers. Carbon steel should be used for piping, valves, and hoses. *Do not* use copper, copper and aluminum alloys, or galvanized materials for processing equipment since NH_4OH will corrode these metals. Install remote shut-off or excess-flow valves on tank outlets and Class I, group D, electrical equipment. Administrative Controls: Consider preplacement and periodic medical exams of exposed workers that emphasize the respiratory tract. Lung function tests (FVC and FEV) are useful in detecting respiratory problems. Train employees in escape methods and the use of safety equipment. Constantly inspect equipment to prevent accidents. Label all valves to prevent accidental opening.

Transportation Data (49 CFR 172.101)

DOT Shipping Name: *,†,‡,§
DOT Hazard Class: 2.3 (*); 2.2 (†,§); 8 (‡)
ID No.: UN1005 (*,†); UN2672 (‡); UN2073 (¶)
DOT Packing Group: None (*, †, §); III (‡)
DOT Label: Poison Gas (*); Nonflammable Gas (†, §); Corrosive (‡)
Special Provisions (172.102): 4 (*); 13 (†); T14 (‡); None (§)

* Ammonia anhydrous, liquified or solutions *relative density < 0.88 at 15 °C in water,* with < 50% NH_4OH:
¶ Ammonia anhydrous, liquefied or solutions, relative density < 0.88 at 15 °C in water, with > 50% NH_4OH:
‡ Ammonia solutions, relative density of 0.88 to 0.957 at 15 °C in water with > 10% & < 50% NH_4OH:
§ Ammonia solutions, relative density < 0.88 at 15 °C in water with > 35% & < 50% NH_4OH.

Packaging Authorizations
a) Exceptions: None (*, †); 173.154 (‡); 173.306 (§)
b) Nonbulk Packaging: 173.304 (*, †, §); 173.203 (‡)
c) Bulk Packaging: 173.314, 173.315 (*, †, §); 173.241 (‡)

Quantity Limitations
a) Passenger Aircraft or Railcar: Forbidden (*,†, §); 5L (‡)
b) Cargo Aircraft Only: 25 kg (*, †); 60 L (‡); 150 kg (§)

Vessel Stowage Requirements
a) Vessel Stowage: D (*, †); A (‡); E (§)
b) Other: 40, 57 (*, †, §); 40, 85 (‡)

MSDS Collection References: 1, 73, 101, 103, 126, 127, 132, 133, 136, 140, 148, 149, 153, 159, 163, 168
Prepared by: M Gannon, BA; Industrial Hygiene Review: PA Roy, MPH, CIH; Medical Review: AC Darlington, MPH, MD

Copyright © 1992 by Genium Publishing Corporation. Any commercial use or reproduction without the publisher's permission is prohibited. Judgments as to the suitability of information herein for the purchaser's purposes are necessarily the purchaser's responsibility. Although reasonable care has been taken in the preparation of such information, Genium Publishing Corporation extends no warranties, makes no representations, and assumes no responsibility as to the accuracy or suitability of such information for application to the purchaser's intended purpose or for consequences of its use.

Genium Publishing Corporation
One Genium Plaza
Schenectady, NY 12304-4690 USA
(518) 377-8854

Material Safety Data Sheets Collection:

Sheet No. 9
Sulfuric Acid, Concentrated

Issued: 10/77 Revision: D, 9/92

Section 1. Material Identification

Sulfuric Acid Concentrated (H_2SO_4) Description: Prepared by the "Cat-Ox" process; by the contact process (vanadium pentoxide catalyst) with sulfur, pyrite (FeS_2), hydrogen sulfide, or sulfur-containing smelter gases; and from gypsum (calcium sulfate). Sulfuric acid is by far the most widely used industrial chemical. Its uses include: in the manufacture of fertilizers, chemicals, nitrate explosives, parchment paper, glue, dyes and pigments; as an etchant, a lab reagent, an electrolyte in lead/acid batteries, a dehydrating agent in the manufacture of ethers and esters, and an alkylation catalyst; in the purification of petroleum, the refining of mineral and vegetable oils, the leather industry, the carbonization of wool fabrics, the recuperation of fatty acids from soapworks waste water, the production of rayon and film, the extraction of uranium from pitchblende, and pickling of metal; in electroplating baths, gas drying and nonferrous metallurgy; and to obtain glucose by the hydrolysis of cellulose.

Other Designations: CAS No. 7664-93-9, battery acid, BOV, Caswell No 815, dipping acid, electrolyte acid, hydrogen sulfate, matting acid, oil of vitriol, sulphuric acid, vitriol brown oil.

Manufacturer: Contact your supplier or distributor. Consult latest *Chemical Week Buyers' Guide*[75] for a suppliers list.

Cautions: Handle concentrated sulfuric acid with extreme caution because it is corrosive to all body tissues. Vapor inhalation can cause severe lung damage. Skin or eye contact can produce severe burns; blindness may result.

R	1
I	3
S	4
K	0

NFPA



HMIS
H 3*
F 0
R 2
PPE†
* Chronic effects
† Sec. 8

Section 2. Ingredients and Occupational Exposure Limits

Sulfuric acid concentrated, 93-98% sulfuric acid; remainder is water. Impurities include nonvolatiles, 0.02-0.05 ppm; SO_2, 40-80 ppm; iron, 50-100 ppm; nitrate, 5-20 ppm.

1991 OSHA PEL
8-hr TWA: 1 mg/m³

1990 IDLH Level
80 mg/m³

1990 NIOSH REL
TWA: 1 mg/m³

1992-93 ACGIH TLVs
TWA: 1 mg/m³
STEL: 3 mg/m³

1990 DFG (Germany) MAK
TWA: 1 mg/m³
Category: Local irritants
Peak: 2 mg/m³, 5 min, momentary value †, 8 peaks per shift

1985-86 Toxicity Data*
Human, inhalation, TC_{Lo}: 3 mg/m³ for 24 weeks; toxic effects not yet reviewed.
Man, unreported route, LD_{Lo}: 135 mg/kg; toxic effects not yet reviewed.
Rat, oral, LD_{50}: 2140 mg/kg; toxic effects not yet reviewed.
Rabbit, eye: 100 mg rinse produced severe irritation.

* See *NIOSH, RTECS* (WS5600000), for additional toxicity data.
† The momentary value is a level which the concentration should never exceed.

Section 3. Physical Data

Boiling Point: 554 °F (290 °C); decomposes at 644 °F (340 °C) into sulfur trioxide and water.
Melting Point (100%): 50.65 °F (10.36 °C)
Vapor Pressure: <0.001 mm Hg at 20 °C
Saturated Vapor Density (air = 1.2 kg/m³): 1.2 kg/m³, 0.075 lbs/ft³
pH: 1 N sol = 0.3, 0.1 N sol = 1.2, 0.01 N sol = 2.1
Molecular Weight: 98.08
Density/Specific Gravity (96-98%): 1.841
Water Solubility: Soluble; reacts!*
Other Solubilities: Ethyl alcohol
Odor Threshold: 0.150 ppm

Appearance and Odor: Colorless (pure) to dark brown (impure), odorless, dense, oily liquid. Pure compound is a solid below 51 °F (11 °C).

* Sulfuric acid reacts violently with water with the evolution of heat. *Always add the acid to water or other diluent, not the water to acid!*

Section 4. Fire and Explosion Data

Flash Point: Not combustible	Autoignition Temperature: None reported	LEL: None reported	UEL: None reported

Extinguishing Media: Use extinguishing media appropriate to surrounding fire. Only use water if absolutely necessary and use with great caution. Water applied directly to sulfuric acid results in violent heat liberation and splattering of the material. Use water spray only to keep fire-exposed containers cool. **Unusual Fire or Explosion Hazards:** Sulfuric acid, a strong dehydrating agent, reacts with organic materials and produces enough heat ignition, chars wood, and may cause ignition of finely divided materials on contact. Reaction with metals may produce highly flammable, hydrogen gas. **Special Fire-fighting Procedures:** Because fire may produce toxic thermal decomposition products, wear a self-contained breathing apparatus (SCBA) with a full facepiece operated in pressure-demand or positive-pressure mode. Structural firefighter's protective clothing is *not* effective. Stay away from ends of tanks. Do not release runoff from fire control methods to sewers or waterways.

Section 5. Reactivity Data

Stability/Polymerization: Sulfuric acid is stable at room temperature in closed containers under normal storage and handling conditions. Hazardous polymerization cannot occur. **Chemical Incompatibilities:** Include acetic acid; acetone cyanohydrin; (acetone + nitric acid); (acetone + potassium dichromate); acetonitrile; acrolein; acrylonitrile; acrylonitrile + water; (alcohol + hydrogen peroxide); allyl alcohol; allyl chloride; ammonium hydroxide; 2-amino ethanol; ammonium; triperchromate; aniline; (bromates + metals); bromine pentafluoride; n-butyraldehyde; carbides; cesium acetylene carbide; chlorates; (chlorates + metals); chlorine trifluoride; chloromethonic acid; cuprous nitride; diisobutylene; (dimethylbenzylcarbinol + hydrogen peroxide); epichlorohydrin; ethylene cyanohydrin; ethylene diamine; ethylene glycol; ethylene imine; fulminates; hydrochloric acid; hydrogen; iodine heptafluoride; (indene + nitric acid); iron; isoprene; lithium silicide; mercuric nitride; mesityl oxide; powdered metals; (nitric acid + glycerides); p-nitrotoluene; permasilver trihydroxydiaminophosphate; perchlorates; perchloric acid; (permanganates + benzene); (1-phenyl-2-methylpropyl alcohol + hydrogen peroxide); phosphorus; phosphorus isocyanate; picrates; potassium tert-butoxide; potassium chlorate; (potassium permanganate + potassium chloride); (potassium permanganate + water); beta-propiolactone; propylene oxide; pyridine; rubidium acetylene carbide; silver permanganate; sodium; sodium carbonate; sodium chlorate; sodium hydroxide; steel; styrene monomer; (toluene + nitric acid); vinyl acetate; and water. **Conditions to Avoid:** Water, combustibles, heat, ignition sources, and other incompatibles. **Hazardous Products of Decomposition:** Thermal oxidative decomposition of sulfuric acid can produce sulfur oxides.

Section 6. Health Hazard Data

Carcinogenicity: The IARC,[166] NTP,[168] and OSHA[160] do not list sulfuric acid as a carcinogen. However, a number of studies have associated exposures to sulfuric acid or to acid mists in general with laryngeal cancer. In 50 confirmed cases there was an approximately four-fold increased risk among highly exposed individuals relative to matched controls. It is not known if sulfuric acid can act as a direct carcinogen, as a promoter, or in combination with other substances.[167] **Summary of Risks:** Concentrated sulfuric acid is a severe respiratory tract, skin, and eye irritant.

Continue on next page

Copyright © 1992 Genium Publishing Corporation

Section 6: Health Hazard Data, *continued*

Exposure can result in severe burns, tissue damage, scarring, functional inhibition, and blindness if splashed in the eye. Although ingestion is unlikely, it may cause severe injury and death. Medical Conditions Aggravated by Long-Term Exposure: Chronic respiratory, gastrointestinal, nervous, skin or eye diseases. Target Organs: Respiratory system, eyes, skin, and teeth. Primary Entry Routes: Inhalation, skin and eye contact. Acute Effects: Vapor or mist inhalation causes coughing, sneezing, nose irritation and nose bleeds, reflex bronchospasm, shortness of breath, pulmonary edema (fluid in lungs), emphysema, and permanent changes in pulmonary function. Ingestion causes corrosion of the mucous membranes of mouth, throat, and esophagus; and epigastric pain with nausea and vomiting of mucoid and "coffee ground" material. Skin contact produces severe burns; initially the zone of contact is bleached and turns brown prior to the formation of a clearly defined ulcer. These wounds are slow in healing and may cause extensive scarring that results in functional inhibition. If burns are extensive, the outcome may prove fatal. Circulatory collapse with clammy skin, weak and rapid pulse, shallow respirations, and scanty urine may follow ingestion or skin contact. Circulatory shock is often the immediate cause of death. Eye contact produces deep corneal ulceration, kerato-conjunctivitis, palpebral lesions, and possible blindness. Chronic Effects: Chronic effects may include dental erosion, conjunctivitis, tracheobronchitis, emphysema, stomatitis (inflammation of the mouth mucous membranes), gastritis (inflammation of stomach mucous membranes), and dermatitis. FIRST AID Eyes: *Do not* allow victim to rub or keep eyes tightly shut. Gently lift eyelids and flush immediately and continuously with flooding amounts of water until transported to an emergency medical facility. Consult an ophthalmologist immediately. Skin: *Quickly* remove contaminated clothing. Rinse with flooding amounts of water for at least 15 min. Use a 2% sodium bicarbonate solution to further neutralize any H_2SO_4 on the skin. Wash exposed area with soap and water. For reddened or blistered skin, consult a physician. Inhalation: Remove exposed person to fresh air and support breathing as needed. Ingestion: Never give anything by mouth to an unconscious or convulsing person. Contact a poison control center. Unless otherwise advised, have that *conscious and alert* person drink 1 to 2 glasses of water or milk to dilute. *Do not* induce vomiting! Do not attempt to neutralize the acid with sodium bicarbonate. Note to Physicians: Monitor arterial blood gases, chest x-ray, and pulmonary function tests if respiratory tract irritation or respiratory depression is evident. Treat dermal irritation or burns with standard topical therapy.

Section 7: Spill, Leak, and Disposal Procedures

Spill/Leak: Notify safety personnel of spill, evacuate all unnecessary personnel, remove all ignition sources, and provide adequate ventilation. Cleanup personnel should wear fully-encapsulating, vapor-protective clothing to protect against inhalation and skin or eye contact. Keep water and combustibles away from release. Stop or control leak if this can be done without undue risk. Neutralize small spills with sodium bicarbonate or a mixture of soda ash/slaked lime (50/50) and place into sealed containers for disposal. If a neutralizing agent is not available, absorb spilled sulfuric acid with vermiculite, dry sand, or earth. *Never* use organic material (e.g., sawdust) to absorb spill. For large spills, dike far ahead to contain for later disposal. Follow applicable OSHA regulations (29 CFR 1910.120). Report any release in excess of 1000 lbs. Disposal: Contact your supplier or a licensed contractor for detailed recommendations. Neutralize waste water pH between 5.5 and 8.5. Follow applicable Federal, state, and local regulations.

Aquatic Toxicity: LC_{50} *(saltwater, prawns):* 42.5 ppm for 48 hrs; lethal (freshwater, bluegill): 24.5 ppm/24 hr.

EPA Designations

Listed as a RCRA Hazardous Waste (40 CFR 261.33): Characteristic of corrosivity

Listed as a CERCLA Hazardous Substance* (40 CFR 302.4): Final Reportable Quantity (RQ), 1000 lb (454 kg) [* per CWA, Sec. 311(b)(4)]

Listed as a SARA Extremely Hazardous Substance (40 CFR 355), TPQ: 1000 lbs.

Listed as a SARA Toxic Chemical (40 CFR 372.65)

OSHA Designations

Listed as an Air Contaminant (29 CFR 1910.1000, Table Z-1-A)

Section 8: Special Protection Data

Goggles: Wear protective eyeglasses or chemical safety goggles, per OSHA eye- and face-protection regulations (29 CFR 1910.133). Because contact lens use in industry is controversial, establish your own policy. Respirator: Seek professional advice prior to respirator selection and use. Follow OSHA respirator regulations (29 CFR 1910.134) and, if necessary, wear a MSHA/NIOSH-approved respirator. For concentrations < 25 mg/m^3 use any powered, air-purifying respirator with acid gas cartridge(s) in combination with a high-efficiency particulate filter. For concentrations < 50 mg/m^3, use any chemical cartridge respirator with a full facepiece and acid gas cartridge(s) in combination with a high-efficiency particulate filter. For concentrations < 80 mg/m^3, use any supplied air-respirator with a full facepiece and operated in pressure-demand or other positive-pressure mode. For emergency or nonroutine operations (cleaning spills, reactor vessels, or storage tanks), wear an SCBA. If respirators are used, OSHA requires a respiratory protection program that includes at least: medical certification, training, fit-testing, periodic environmental monitoring, maintenance, inspection, cleaning, and convenient, sanitary storage areas. Other: Wear chemically protective gloves, boots, aprons, and gauntlets to prevent skin contact. H_2SO_4 has a minor to moderate effect on neoprene or rubber.[131] Ventilation: Provide general and local exhaust ventilation systems to maintain airborne concentrations below the OSHA PEL (Sec. 2). Local exhaust ventilation is preferred because it prevents contaminant dispersion into the work area by controlling it at its source.[102] Safety Stations: Make available in the work area emergency eyewash stations, safety/quick-drench showers, and washing facilities. Contaminated Equipment: Separate contaminated work clothes from street clothes and launder before reuse. Remove this material from your shoes and clean personal protective equipment. Comments: Never eat, drink, or smoke in work areas. Practice good personal hygiene after using this material, especially before eating, drinking, smoking, using the toilet, or applying cosmetics.

Section 9: Special Precautions and Comments

Storage Requirements: Store in clearly labelled, steel containers in a cool [below 50 °F (10 °C)], dry, well-ventilated location on an acid-resistant cement floor and away from direct sunlight, combustibles, and other reactive materials. Separate from carbides, chlorates, fulminates, nitrates, picrates, and powdered metals. Protect storage containers against damage and water. Use non-sparking tools near sulfuric acid carboys, drums, tank cars, or metal storage tanks because of the possible production of hydrogen during storage. Use hand pumps for the decanting and emptying of carboys. Engineering Controls: To reduce potential health hazards, use sufficient dilution or local exhaust ventilation to control airborne contaminants and to maintain concentrations at the lowest practical level. Total enclosures of processes and the mechanization of handling procedures are the most effective measures to prevent contact with sulfuric acid. Protect electrical installations against the corrosive action of acid vapors. Administrative Controls: Consider preplacement and periodic physical examinations with emphasis on the respiratory tract (including pulmonary function tests), skin, eyes, and teeth.

Transportation Data (49 CFR 172.101)

DOT Shipping Name: Sulfuric acid
DOT Hazard Class: 8
ID No.: UN1830
DOT Packaging Group: II
DOT Label: Corrosive
Special Provisions (172.102): A3, A7, B2, B83, B84, N34, T9, T27

Packaging Authorizations
a) Exceptions: 173.154
b) Non-bulk Packaging: 173.202
c) Bulk Packaging: 173.242

Quantity Limitations
a) Passenger, Aircraft, or Railcar: 1L
b) Cargo Aircraft Only: 30L

Vessel Stowage Requirements
a) Vessel Stowage: C
b) Other: 14

MSDS Collection References: 26, 73, 89, 100, 101, 103, 124, 126, 127, 131, 132, 139, 140, 148, 149, 153, 159, 165, 164, 167, 171, 174, 180
Prepared by: MJ Wurth, BS; Industrial Hygiene Review: DJ Wilson, CIH; Medical Review: AC Darlington, MPH

Copyright © 1992 by Chemtox Publishing Corporation. Any unauthorized use or reproduction without the publisher's permission is prohibited. Subject to any limitations of liability of information stated herein, for the government's purposes ... Chemtox Publishing Corporation ... makes no representations, makes no warranties ...

Genium Publishing Corporation
One Genium Plaza
Schenectady, NY 12304-4690 USA
(518) 377-8854

Material Safety Data Sheets Collection:

Sheet No. 30A
Hydrochloric Acid

Issued: 10/77 Revision: C, 9/92

Section 1—Material Identification

Hydrochloric Acid (HCl) Description: An aqueous solution of hydrogen chloride. Derived by dissolving hydrogen chloride gas in water at various concentrations. Hydrochloric acid is also formed as a byproduct from oxychlorination and/or oxyhydrochlorination of organic materials. Used in metal pickling and cleaning (boiler and heat exchange equipment scale removal), ore reduction, processing (corn syrup, hydrolyzing starch), dye and dye intermediate production, electroplating, leather tanning, in fertilizer, artificial silk, and paint pigment production, refining soaps and edible fats and oils, petroleum extraction, toilet bowl cleaners; as an alcohol denaturant, a chemical intermediate and solvent in organic synthesis, and in the photographic, textile, and rubber industries.

Other Designations: CAS No. 7647-01-0, Caswell No. 486, chlorohydric acid, Muriatic acid, spirits of salt.

Manufacturer: Contact your supplier or distributor. Consult latest *Chemical Week Buyers' Guide*[73] for a supplier list.

Cautions: Hydrochloric acid is highly corrosive and causes serious skin and eye burns as well as acute and chronic respiratory problems.

R	1
I	4
S	4
K	0

NFPA: 3 / 0 / 0 / -

HMIS
H 3*
F 0
R 0
PPE†

* Chronic effects
† Sec. 8

Section 2—Ingredients and Occupational Exposure Limits

Hydrochloric acid; ~38% (commercial), 20% ("azeotrope"). Trace impurities include ammonia, arsenic, iron, sulfate, free Cl_2, and heavy metals.

1991 OSHA PEL
Ceiling: 5 ppm (7 mg/m³)

1990 IDLH Level
100 ppm

1990 NIOSH REL
Ceiling: 5 ppm (7 mg/m³)

1992-93 ACGIH TLV
Ceiling: 5 ppm (7.5 mg/m³)

1990 DFG (Germany) MAK
Ceiling: 5 ppm (7 mg/m³)
Category 1: local irritants
Peak Exposure Limit: 10 ppm, 5 min momentary value/8 per shift

1985-86 Toxicity Data*
Human, inhalation, LC_{Lo}: 1300 ppm/30 min; toxic effects not yet reviewed
Rabbit, oral, LD_{50}: 900 mg/kg; toxic effects not yet reviewed
Rat, inhalation, TC_{Lo}: 450 mg/m³/1 hr (1 day prior to pregnancy) produced fetotoxicity (except death) & specific developmental abnormalities (homeostasis).
Rabbit, eye: 100 mg rinse caused mild irritation.

*See NIOSH, *RTECS* (MW4025000), for additional irritation, reproductive, and toxicity data.

Section 3—Physical Data

Boiling Point: -120.64 °F (-84.8 °C)*
Vapor Pressure: 4 atm at 64 °F (17.8 °C)
Vapor Density (Air = 1): 1.257
Surface Tension: 23 at 244.68 (118.16 °C)
Molecular Weight: 36.46
Odor Threshold: 0.1 to 5 ppm
Ionization Potential: 12.74 eV

Freezing Point: 1.1 °F (-17.14 °C) for 10.81%, -51.16 °F (-46.2 °C) for 31.24%
Density: 1.194 at -14.8 °F (-26 °C)
Water Solubility: Soluble, 823 g/L at 32 °F (0 °C); 561 g/L at 140 °F (60 °C).
Other Solubilities: Soluble in alcohol, benzene, and ether; insoluble in hydrocarbons.
pH: 1N (0.1), 0.1N (1.1), 0.01N (2.02), 0.001N (3.02), 0.0001N (4.01)
Refraction Index (1N solution): 1.34168 at 64.4 °F (18 °C/D)

Appearance and Odor: Colorless liquid that fumes in air and has a strong pungent odor. Can be slightly yellow from traces of iron, chlorine, or organic matter. Forms a constant boiling azeotrope at 20 % HCl, 108.58 °C and 760 mm Hg.

* Decomposes at 3239.6 °F (1782 °C).

Section 4—Fire and Explosion Data

Flash Point: Noncombustible	Autoignition Temperature: None reported	LEL: None reported*	UEL: None reported*

Extinguishing Media: Use extinguishing agents suitable for surrounding fire.
Unusual Fire or Explosion Hazards: *Extreme heat or contact with many metals liberates hydrogen gas which has explosion limits of 4 to 75%.
Special Fire-fighting Procedures: Because fire may produce toxic thermal decomposition products, wear a self-contained breathing apparatus (SCBA) with a full facepiece operated in pressure-demand or positive-pressure mode. Structural firefighter's protective clothing is *ineffective* for fires involving hydrochloric acid. Stay away from ends of tanks. Cool tanks with water spray until well after fire is out. *Do not* release runoff from fire control methods to sewers or waterways.

Section 5—Reactivity Data

Stability/Polymerization: Hydrochloric acid has high thermal stability (decomposes at 3239.6 °F/1782 °C). Hazardous polymerization does not occur unless exposed to aldehydes or epoxides.
Chemical Incompatibilities: Polymerizes on contact with aldehydes or epoxides; attacks most metals (except mercury, silver, gold, platinum, tantalum, and some alloys), some plastics, rubber, and coatings; reacts explosively with alcohols + hydrogen cyanide, potassium permanganate, tetraselenium tetranitride; ignites on contact with fluorine, hexalithium disilicide, metal acetylides or carbides (cesium acetylide, rubidium acetylide); and is incompatible with acetic anhydride, 2-amino ethanol, ammonium hydroxide, calcium phosphide, chlorosulfonic acid, 1,1-difluoroethylene, ethylene diamine, ethylene imine, oleum, perchloric acid, 3-propiolactone, propylene oxide, sodium hydroxide, silver perchlorate + carbon tetrachloride, sulfuric acid, uranium phosphide, acetone, calcium carbide, magnesium bromide, mercuric sulfate, and chlorine + dinitroaniline.
Conditions to Avoid: Avoid contact with incompatibles.
Hazardous Products of Decomposition: Thermal oxidative decomposition of HCl produces toxic chloride fumes and explosive hydrogen gas.

Section 6—Health Hazard Data

Carcinogenicity: The IARC,[126] NTP,[129] and OSHA[126] do not list HCl as a carcinogen.
Summary of Risks: HCl is a highly corrosive liquid and depending on concentration and duration of exposure, symptoms range from irritation to ulcerations and permanent injury. Target Organs: Eyes, skin, respiratory tract, and liver (in animals). Primary Entry Routes: Inhalation, skin and eye contact. Medical Conditions Aggravated by Long-Term Exposure: Respiratory disorders.

Continue on next page

Section 6: Health Hazard Data *continued*

Acute Effects: Inhalation of vapors or mists is corrosive to the respiratory tract and can cause tracheal and bronchial epithelium necrosis (tissue death), cough, choking, ulceration. Liquid aspiration can cause pulmonary edema, lung collapse, emphysema and damage to the pulmonary blood vessels. Skin contact with HCl solutions causes burns and ulcerations. Permanent eye damage may result from splashes. Ingestion is unlikely but if it occurs, symptoms include gray tongue color, corrosion of mucous membranes, esophagus, and stomach, nausea, vomiting, intense thirst, diarrhea, difficulty swallowing, circulatory collapse and possible death. **Chronic Effects:** Repeated or prolonged exposure can cause dermatitis, conjunctivitis, gastritis, photosensitization, tooth erosion, and repeated exposure to mists from heated-metal pickling solutions can cause nose and gum bleeds, ulceration of oral or nasal mucosa, and "renders facial skin so tender that shaving is painful."[1339]

FIRST AID

Eyes: *Do not* allow victim to rub or keep eyes tightly shut. Gently lift eyelids and flush immediately and continuously with flooding amounts of water until transported to an emergency medical facility. Consult a physician immediately. **Skin:** *Quickly* remove contaminated clothing. Rinse with flooding amounts of water for at least 15 min. Treat skin with a 5% triethanolamine solution. For reddened or blistered skin, consult a physician. **Inhalation:** Remove exposed person to fresh air and support breathing as needed. **Ingestion:** Never give anything by mouth to an unconscious or convulsing person. Contact a poison control center. Unless the poison control center advises otherwise, have that *conscious and alert* person drink 1 to 2 glasses of water to dilute. *Do not* induce vomiting!

After first aid, get appropriate in-plant, paramedic, or community medical support.

Note to Physicians: Consider a chest x-ray in acute overexposure. Gastric lavage with 5% sodium bicarbonate may be helpful.

Section 7: Spill, Leak, and Disposal Procedures

Spill/Leak: Notify safety personnel, isolate and ventilate area, deny entry, and stay upwind. Neutralize spills with crushed limestone, soda ash, lime, or sodium bicarbonate. After neutralizing, take up small spills with earth, sand, vermiculite, or other absorbent, noncombustible material and place in suitable containers for disposal; flush large spills to containment area and reclaim (if possible) or waste disposal. Follow applicable OSHA regulations (29 CFR 1910.120). **Environmental Transport:** In soil, HCl will infiltrate moving faster in the presence of moisture. It may dissolve some soil matter, particularly those of a carbonate base will be neutralized to some degree and will be transported to groundwater. **Ecotoxicity Values:** Chronic plant toxicity = 100 ppm; injurious to irrigatable crops at 350 mg/L; trout, LC_{100}, 10 mg/L/24 hr shrimp, LC_{50}, 100 to 330 ppm/starfish, LC_{50}, 100 to 330 mg/L/48 hr; shore crab, LC_{50}, 240 mg/L/48 hr. **Disposal:** Neutralize to between 5.5 & 8.5 before disposal. Contact your supplier or a licensed contractor for detailed recommendations. Follow applicable Federal, state, and local regulations.

EPA Designations

Listed as a RCRA Hazardous Waste (40 CFR 261.23, *0.01N solution or higher*): No. D002, Characteristic of corrosivity

Listed as a CERCLA Hazardous Substance[40] (40 CFR 302.4): Final Reportable Quantity (RQ), 5000 lb (2270 kg) [[a] per CWA, Sec. 311 (b)(4)]

SARA Extremely Hazardous Substance (40 CFR 355), TPQ: Not listed

Listed as a SARA Toxic Chemical (40 CFR 372.65)

OSHA Designations

Listed as an Air Contaminant (29 CFR 1910.1000, Table Z-1-A)

Section 8: Special Protection Data

Goggles: Wear chemical safety goggles, per OSHA eye- and face-protection regulations (29 CFR 1910.133). Because contact lens use in industry is controversial, establish your own policy. **Respirator:** Seek professional advice prior to respirator selection and use. Follow OSHA respirator regulations (29 CFR 1910.134) and, if necessary, wear a MSHA/NIOSH-approved respirator. For < 50 ppm, use a cartridge respirator with acid gas cartridges, or any supplied-air respirator (SAR) or SCBA. For < 100 ppm, use any chemical cartridge respirator with a full facepiece and cartridge that protects against HCl inhalation, or any SAR or SCBA with a full facepiece. For emergency or nonroutine operations (cleaning spills, reactor vessels, or storage tanks), wear an SCBA. *Warning! Air-purifying respirators do not protect workers in oxygen-deficient atmospheres.* If respirators are used, OSHA requires a written respiratory protection program that includes at least: medical certification, training, fit-testing, periodic environmental monitoring, maintenance, inspection, cleaning, and convenient, sanitary storage areas. **Other:** Wear chemically protective gloves, boots, aprons, and gauntlets to prevent skin contact. Polycarbonate, butyl rubber, polyvinyl chloride, and chlorinated polyethylene are recommended materials for PPE. Polyvinyl alcohol is not recommended. **Ventilation:** Provide general and local exhaust ventilation systems to maintain airborne concentrations below the OSHA PEL (Sec. 2). Local exhaust ventilation is preferred because it prevents contaminant dispersion into the work area by controlling it at its source.[1339] **Safety Stations:** Make available in the work area emergency eyewash stations, safety/quick-drench showers, and washing facilities. **Contaminated Equipment:** Separate contaminated work clothes from street clothes. Launder contaminated work clothing before wearing. Remove this material from your shoes and clean personal protective equipment. **Comments:** Never eat, drink, or smoke in work areas. Practice good personal hygiene after using this material, especially before eating, drinking, smoking, using the toilet, or applying cosmetics.

Section 9: Special Precautions and Comments

Storage Requirements: Prevent physical damage to containers. Store in a cool, dry, well-ventilated area on a cement floor away from direct sunlight and heat sources. Use decanting pumps or pouring frames to minimize spillage during loading and unloading operations.

Engineering Controls: To reduce potential health hazards, use sufficient dilution or local exhaust ventilation to control airborne contaminants and to maintain concentrations at the lowest practical level. HCl should be manufactured in closed systems. Pay close attention to leak detection. Aqueous scrubbers are used to control hydrogen chloride emissions from vent stacks and other sources. Workers shouldn't enter tanks previously containing HCl until they have been cleaned.

Administrative Controls: Consider preplacement and periodic medical exams of exposed workers with emphasis on the eyes, skin, and respiratory tract. Pulmonary function tests (FEV, FVC) are useful in determining lung disorders. Conduct difficult operations in fume hoods.

Transportation Data (49 CFR 172.101)

DOT Shipping Name: Hydrochloric acid, solution
DOT Hazard Class: 8
ID No.: UN1789
DOT Label: *Corrosive*
DOT Packing Group: II
Special provisions (172.102): A3, A6, B2, B15, N41, T9, T27

Packaging Authorizations
a) **Exceptions:** 173.154
b) **Non-bulk Packaging:** 173.202
c) **Bulk Packaging:** 173.242

Quantity limitations
a) **Passenger, Aircraft, or Railcar:** 1 L
b) **Cargo Aircraft Only:** 30 L

Vessel Stowage Requirements
a) **Vessel Stowage:** C
b) **Other:** 8

MSDS Collection References: 26, 73, 89, 100, 101, 103, 124, 126, 127, 132, 133, 136, 139, 148, 149, 152, 159, 163, 164, 167, 168, 171, 174, 180
Prepared by: M Gannon, BA; Industrial Hygiene Review: DJ Wilson, CIH; Medical Review: AC Darlington, MPH, MD

Copyright © 1992 by Chemical Publishing Corporation. Any unauthorized use or reproduction without the publisher's permission is prohibited. Responsibility of information herein for the purchaser's purposes is the purchaser's responsibility. Although the information herein has been taken in the preparation of such information, Chemical Publishing Corporation cannot warrant, and assumes no responsibility as to the accuracy or suitability of such information for application to the purchaser's intended purpose or for consequences of its use.

Material Safety Data Sheet

From Genium's Reference Collection
Genium Publishing Corporation
1145 Catalyn Street
Schenectady, NY 12303-1836 USA
(518) 377-8855

No. 111

AMMONIUM FLUORIDE
(Revision B)
Issued: August 1987
Revised: August 1987

SECTION 1. MATERIAL IDENTIFICATION

MATERIAL NAME: AMMONIUM FLUORIDE

DESCRIPTION (Origin/Uses): Prepared by passing ammonia gas into ice-cooled 40% hydrofluoric acid or by heating one part NH_4Cl with 2.25 parts NaF and separating the ammonium fluoride by sublimation. Used as an antiseptic in brewing beer; as a moth-proofing agent; in printing and dyeing textiles; and to etch and frost glass.

OTHER DESIGNATIONS: *Ammonium Fluorure* (French); Neutral Ammonium Fluoride; H_4NF; NIOSH *RTECS* #BQ6300000; CAS #12125-01-8

MANUFACTURER/SUPPLIER: Available from several suppliers, including:
Ashland Chemical Co., Ind'l. Chems and Solvents Div., PO Box 2219, Columbus, OH 43216
Telephone: (614) 889-3514

COMMENTS: Ammonium fluoride is a toxic solid.



HMIS
H 3
F 0 R 1
R 1 I 2
PPE* S 3
* See sect. 8 K 0

SECTION 2. INGREDIENTS AND HAZARDS

	%	HAZARD DATA
Ammonium Fluoride, CAS #12125-01-8; NIOSH *RTECS* #BQ6300000 F 51.3% by Weight	ca 100	ACGIH Values 1987-88 (as F) TLV-TWA: 2.5 mg/m^3 OSHA PEL 1986 (as F) 8-Hr TWA: 2.5 mg/m^3 NIOSH REL 1986 (as F) 10-Hr TWA: 2.5 mg/m^3 TOXICITY DATA (for Ammonium Fluoride) Rat, Intraperitoneal, LD_{50}: 32 mg/kg Prog, Subcutaneous, LD_{Lo}: 280 mg/kg IDLH* Level: 500 mg/m^3 (for fluorides as F)

The fluoride anion (F^-) has been assigned the CAS #16984-48-8 and the NIOSH *RTECS* #LM6290000. The toxicity data for the fluoride anion follows: Human, Oral, TD_{Lo}: 3 mg/kg; Human, Oral, LD_{Lo}: 50 mg/kg

* Immediately dangerous to life and health

SECTION 3. PHYSICAL DATA

Boiling Point ... Not Available
Vapor Pressure ... ca 0 Torr at 68°F (20°C)
Water Solubility ... 50% by Weight
Vapor Density ... Not Applicable
Evaporation Rate ... Not Applicable

Specific Gravity ... 1.0 - 1.31 at 68°F (20°C)
Melting Point ... Not Available
% Volatile by Volume ... ca 0
Molecular Weight ... 37.05 Grams/Mole
pH ... <7 (Acidic)

Appearance and odor: White, odorless, granular, deliquescent powder or crystals. Dusts are the major health hazard.

SECTION 4. FIRE AND EXPLOSION DATA

Flash Point and Method	Autoignition Temperature	Flammability Limits in Air	LOWER	UPPER
Not Combustible	Not Applicable	Not Applicable	Not Applicable	Not Applicable

EXTINGUISHING MEDIA: Ammonium fluoride does not burn. Use dry chemical, carbon dioxide, alcohol foam, water spray, or another appropriate extinguishing agent suitable to put out the surrounding fire. A water spray/fog can be effectively used to reduce the levels of dust, fumes, and the irritating and corrosive gases such as ammonium fluoride and hydrogen fluoride that can be produced by thermal dissociation during fire conditions.

OSHA Flammability Class (29 CFR 1910.106): Not Regulated

UNUSUAL FIRE/EXPLOSION HAZARDS: Ammonium fluoride can corrode metals at fire temperatures.

SPECIAL FIRE-FIGHTING PROCEDURES: Wear a self-contained breathing apparatus with a full facepiece operated in a pressure-demand or another positive-pressure mode.

DOT Flammability Class (49 CFR 173.115): Not Regulated

SECTION 5. REACTIVITY DATA

Ammonium fluoride is stable. Hazardous polymerization cannot occur.

CHEMICAL INCOMPATIBILITIES include acids and bases. Reactions with acids produce hydrogen fluoride (HF), while reactions with bases produce ammonia (NH_3).

CONDITIONS TO AVOID include elevated temperatures and direct contact with acids, bases, and strong oxidizing agents such as potassium chlorate and sodium nitrite.

HAZARDOUS PRODUCTS OF DECOMPOSITION include ammonia (NH_3), oxides of nitrogen, and hydrogen fluoride (HF), which are irritating, corrosive gases.

SECTION 6. HEALTH HAZARD INFORMATION

Ammonium fluoride is not listed as a carcinogen by the NTP, IARC, or OSHA. SUMMARY OF RISKS: Symptoms of exposure include irritation of the eyes, nose, and respiratory system; nausea; abdominal pain; diarrhea; excessive salivation; thirst; sweating; cleft spine; dermatitis; and calcification of the pelvic and rib ligaments. Inhalation of dust, mists, or fumes can cause coughing, labored breathing, chills, and fever. Contact with dust or solution causes irritation to the skin and can cause hydrofluoric acid (HF) burns. Contact with dilute hydrofluoric acid solutions (below 20% in water) may not produce immediate pain or visible damage, but the fluoride ions burning will continue with time, and the damage will penetrate deeper layers of skin as the intensity of the burn increases. TARGET ORGANS: Eyes, respiratory system, central nervous system, skeleton, kidneys, and skin. MEDICAL CONDITIONS AGGRAVATED BY LONG-TERM EXPOSURE: Impaired kidney function. PRIMARY ENTRY: Ingestion, inhalation. ACUTE EFFECTS: Ingestion produces diarrhea, hemorrhagic gastroenteritis, tremors, convulsions, muscular weakness, and vascular collapse. Severe poisoning (hypocalcemia) can occur with ingestion of less than 1 g of NH_4F. Eye or skin contact with solutions, mists, or dusts causes irritation and chemical burns. CHRONIC EFFECTS include mottling of tooth enamel, generalized osteosclerosis, and calcification of tendons and ligaments. FIRST AID: EYE CONTACT: Immediately flush eyes, including under the eyelids, gently but thoroughly with plenty of running water for at least 15 minutes. Get medical help.* SKIN CONTACT: Wash thoroughly with soap and water. Remove and launder contaminated clothing before wearing it again; clean material from shoes and equipment. After a thorough washing, immerse the burned skin area in 0.13% ice/2.6% calcium chloride solution or an alternate F^- neutralizing solution. Become familiar with the specific detailed protocols for burns and significant exposures that have been developed. Get medical help.* INHALATION: Remove victim to fresh air; restore and/or support his breathing as needed. Get medical help.* INGESTION: Call a poison control center. Never give anything by mouth to someone who is unconscious or convulsing. Do not induce vomiting. Give victim milk or several ounces of milk of magnesia to drink. Get medical help.*

* GET MEDICAL ASSISTANCE = IN PLANT, PARAMEDIC, COMMUNITY. Get prompt medical assistance for further treatment, observation, and support after first aid.

COMMENTS: Administer preplacement and biannual comprehensive medical examinations with urinalysis emphasizing respiratory, skeletal, pulmonary, and gastrointestinal symptoms and kidney dysfunctions.

SECTION 7. SPILL, LEAK, AND DISPOSAL PROCEDURES

SPILL/LEAK: Notify safety personnel of ammonium fluoride spill or leak. Remove sources of heat and provide adequate ventilation. Cleanup personnel should use protective measures against contact or inhalation of dust or solution mist. Sweep up spilled material and place it into containers while avoiding generation of dust. Flush residue with water but do not discharge the runoff into sewers or surface waters.

DISPOSAL: Consider reclamation, recycling, or destruction rather than disposal in a landfill. Contact a licensed disposal contractor or your supplier for additional recommendations.

Ammonium fluoride is designated as a hazardous substance by the EPA (40 CFR 116.4).

Ammonium fluoride is reported in the 1983 EPA TSCA Inventory.

EPA Hazardous Waste Number (40 CFR 261): Not Listed

EPA Reportable Quantity (40 CFR 117.3): 5000 lbs (2270 kgs)

Aquatic Toxicity Rating, TLm 96: Not Listed

SECTION 8. SPECIAL PROTECTION INFORMATION

GOGGLES: Always wear protective eyeglasses or chemical safety goggles. Follow the eye and face protection guidelines of 29 CFR 1910.133. GLOVES: Wear impervious gloves. RESPIRATOR: Use a NIOSH-approved respirator per the *NIOSH Guide to Chemical Hazards* (Genium ref. 88) for the maximum-use concentrations and/or the exposure limits cited in section 2 for fluorides as F. Follow the respirator guidelines in 29 CFR 1910.134. IDLH or unknown concentrations require an SCBA, full facepiece, and pressure-demand/positive-pressure modes. WARNING: Air-purifying respirators will not protect workers from oxygen-deficient atmospheres. OTHER EQUIPMENT: Use other personal-protection equipment suitable to the particular work conditions. VENTILATION: Local exhaust ventilation or fully enclosed processing operations must be used to maintain airborne concentrations of fluorides below the OSHA PEL standard for fluorides cited in section 2. Ventilation systems must conform to the requirements of 29 CFR 1910.94 for electroplating or other open-surface tanks containing solutions of fluorine or to those of 29 CFR 1910.252 for welding with electrodes having coatings containing fluorides. SAFETY STATIONS: Make eyewash stations, washing facilities, and safety showers available in areas of use and handling. CONTAMINATED EQUIPMENT: Contact lenses pose a special hazard; soft lenses may absorb irritants, and all lenses concentrate them. Particles may cling to contact lenses and cause corneal injury. OTHER SPECIAL MODIFICATIONS IN THE WORKPLACE: All working procedures including routine maintenance and cleaning operations, packaging and shipping procedures, and specifications testing must minimize the creation of dusty conditions. COMMENTS: Practice good personal hygiene. Keep material off of your clothes and equipment. Avoid transfer of material from hands to mouth while eating, drinking, or smoking. Adhere to the sanitation requirements of 29 CFR 1910.141-42. Clothes must be changed after each work shift, especially in dusty areas. Avoid wearing dust-laden clothes or using dusty equipment.

SECTION 9. SPECIAL PRECAUTIONS AND COMMENTS

STORAGE SEGREGATION: Store ammonium fluoride away from acids and bases. SPECIAL HANDLING/STORAGE: Store this material in tightly closed containers in a cool, dry, well-ventilated area. Prevent moisture contamination of storage vessels or holding tanks because highly corrosive hydrofluoric acid (HF) may form from decomposition of ammonium fluoride. This contact with water may lead to corrosion of metal and possibly the formation of highly explosive hydrogen gas. ENGINEERING CONTROLS IN THE WORKPLACE: Establish working procedures that minimize the creation of airborne ammonium fluoride. Install and maintain general and local exhaust ventilation systems of sufficient power to keep airborne concentrations of fluorides below the OSHA PEL standard cited in section 2. COMMENTS: Do not take this material out of your work area or to your home on your clothing or equipment. Do not eat ammonium fluoride and avoid contact with it. Use good housekeeping techniques and practice good personal hygiene. Wash hands thoroughly with soap and water after working with this material and before eating, drinking, smoking, or using toilet facilities.

TRANSPORTATION DATA (per 49 CFR 172.101-2):

DOT Hazard Class: ORM-B DOT ID No. UN2505 IMO Class: 6.1

IMO Label: St. Andrew's Cross (X)* DOT Shipping Name: Ammonium fluoride

Additional IMO Requirements: Stow away from acids.

*Harmful - Stow Away From Foodstuffs (IMO label, Materials of Class 6.1 Packaging Group III)

References: 1-12, 73, 87-94, PI

Judgments as to the suitability of information herein for purchaser's purpose are necessarily purchaser's responsibility. Therefore, although reasonable care has been taken in the preparation of such information, Genium Publishing Corp. extends no warranties, makes no representations and assumes no responsibility as to the adequacy or suitability of such information for application to purchaser's intended purposes or for consequences of its use.

Approvals

Indust. Hygiene/Safety 12/87

Medical Review 12/87

Copyright © August 1, 1987

Copyright © 1987 Genium Publishing Corporation. Any reproduction or use of this material without the permission of Genium Publishing Corporation is prohibited.

Genium Publishing Corporation
1145 Catalyn Street
Schenectady, NY 12303-1836 USA
(518) 377-8854

Material Safety Data Sheets Collection:

Sheet No. 115
Sodium Hypochlorite Aqueous Solution

Issued: 2/83 Revision: A, 11/90

Section 1 - Material Identification

Sodium Hypochlorite (NaOCl) Aqueous Solution Description: Sodium hypochlorite is derived by addition of chlorine to cold dilute solution of sodium hydroxide. Used as a swimming pool disinfectant; as an intermediate and a reagent; in bleaching paper pulp and textiles; in organic chemicals; in medicine, fungicides, germicides; and in laundering.
Other Designations: CAS No. 7681-52-9; Antiformin;[4] B-K Liquid;[4] bleach; Chlorox;[4] chlorox; Clorox;[4] Dakin's Solution;[4] Hychlorite;[4] hypochlorite solution; hypochlorous acid, sodium salt; Milton;[4] soda bleach liquor.
Manufacturer: Contact your supplier or distributor. Consult the latest *Chemicalweek Buyers' Guide*[73] for a suppliers list.

R	1
I	-
S	3
K	0

Genium



HMIS
H 3
F 0
R 0
PPG*
* Sec. 8

Cautions: Sodium hypochlorite is a strong eye, skin, and mucous membrane irritant. The extent of irritation depends on concentration of sodium hypochlorite and the duration of exposure. Although nonflammable, sodium hypochlorite presents a *dangerous fire and explosion hazard* since it may cause ignition when in contact with organic materials such as paper, wood, or oil.

Section 2 - Ingredients and Occupational Exposure Limits

Sodium hypochlorite aqueous solution*

1989 OSHA PEL	1990-91 ACGIH TLV	1988 NIOSH REL	1985-86 Toxicity Data†
None established	None established	None established	Human, cytogenetic analysis, lymphocyte:100 ppm/24 hr Rabbit, eye: 10 mg produces moderate irritation Rat, oral (12% solution), LD_{50}: ca 12 mg/kg

* The usual composition of an industrial sodium hypochlorite solution is 10.5% sodium hypochlorite and 0.8 to 2.4% sodium hydroxide. The available chlorine is ~10.0%. Solutions containing excess sodium hydroxide (NaOH) pose an increased alkalinity hazard.
† See NIOSH, *RTECS* (NH3486300), for additional reported data.

Section 3 - Physical Data

Boiling Point: Decomposes
Melting Point: Decomposes
Vapor Pressure: 17.5 mm Hg at 20 °C
pH: 9 to 10*
Molecular Weight: 74.45

Specific Gravity (20 °C/4 °C): 5.25% NaOCl (household bleach): 1.09
8.0% NaOCl: 1.15
12.0% NaOCl: 1.21
Water Solubility: Complete solubility

Appearance and Odor: Sodium hypochlorite is a white, crystalline solid. The aqueous solution is a clear, pale yellow or greenish liquid with a chlorine odor.

* This is the pH of a neutral solution. Some products may contain an excess of NaOH and have a higher pH.

Section 4 - Fire and Explosion Data

Flash Point: None reported	Autoignition Temperature: None reported	LEL: None reported	UEL: None reported

Extinguishing Media: Use dry chemical, CO_2, halon, water spray, or standard foam. Use water spray from a safe distance to cool fire-exposed containers, dilute liquid, and control vapors.
Unusual Fire or Explosion Hazards: Sodium hypochlorite is an oxidizing agent and vigorous reactions can occur with oxidizable materials in a fire situation.
Special Fire-fighting Procedures: Since fire may produce toxic fumes, wear a self-contained breathing apparatus (SCBA) with a full facepiece operated in the pressure-demand or positive-pressure mode and full protective gear. If feasible, remove containers from fire area to prevent pressure rupture. Be aware of runoff from fire control methods. Do not release to sewers or waterways.

Section 5 - Reactivity Data

Stability/Polymerization: Anhydrous material is unstable, but aqueous solutions can be satisfactorily stable for months under proper storage conditions. Rate of decomposition increases with concentration and temperature. A 12% sodium hypochlorite aqueous solution decomposes slowly at 104 °F (40 °C) to yield sodium chloride (NaCl) and sodium chlorate ($NaClO_3$). Hazardous polymerization cannot occur.
Chemical Incompatibilities: Sodium hypochlorite is incompatible with ammonia, urea, oxidizable materials, chlorine-liberating acids, and oxygen-liberating metals such as nickel, copper, tin, manganese and iron. Sodium hypochlorite has violent reactions with amines, ammonium nitrate, ammonium oxalate, ammonium phosphate, ammonium acetate, ammonium carbonate, cellulose, methanol, aziridine, phenyl acetonitrile, and ethylene imine. Sodium hypochlorite has hazardous reactions with soaps, and may be hazardous during mixing operations or if ignited. It is also incompatible with toilet bowl cleaners containing bisulfates.
Conditions to Avoid: Do not mix ammonia and bleach; chloramine gas may evolve.
Hazardous Products of Decomposition: Thermal oxidative decomposition of sodium hypochlorite can produce toxic fumes of sodium oxide (Na_2O) and chlorine (Cl).

Copyright © 1990 Genium Publishing Corporation.
Any commercial use or reproduction without the publisher's permission is prohibited.

Section 6. Health Hazard Data

Carcinogenicity: The NTP, IARC, and OSHA do not list sodium hypochlorite aqueous solution as a carcinogen.
Summary of Risks: Sodium hypochlorite aqueous solution is toxic primarily by its corrosive and irritant properties, which derive from its alkalinity, its potential as a chlorine generator, and salt's oxidizing potential. The solution's concentration and the exposure's duration affect the degree of toxicity. Inhalation injury may occur by exposure to the mist the solution forms, by exposure to chlorine gas, or from the heated solution's thermal degradation products. Skin contact is corrosive and irritating. Exposure through skin contact or ingestion may cause tissue destruction with permanent damage.
Medical Conditions Aggravated by Long-Term Exposure: Individuals with chronic respiratory disorder should minimize inhalation contact.
Target Organs: Skin, eyes, mucous membranes, and respiratory tract.
Primary Entry Routes: Inhalation, ingestion.
Acute Effects: Inhalation of mist or fumes can cause bronchial irritation, cough, difficulty breathing, stomatitis (inflammation of the mouth's mucous membrane), nausea, and pulmonary edema. Additional effects have included circulatory collapse and delirium. Ingestion of a few ounces (12% concentration) can cause corrosion of the mucous membranes, perforation of the esophagus and stomach, and laryngeal edema; may lead to convulsion, coma, or death. At smaller concentrations (5%), the effects are much less damaging. Liquid contact can produce irritation of the eyes or skin with blistering and eczema (especially at 12%).
Chronic Effects: Sodium hypochlorite is a constant irritant to eyes and throat.
FIRST AID
Eyes: Gently lift the eyelids and flush immediately and continuously with flooding amounts of water until transported to an emergency medical facility. Consult a physician immediately.
Skin: Quickly remove contaminated clothing. Rinse with flooding amounts of water for at least 15 min. For reddened or blistered skin, consult a physician. Wash affected area with soap and water.
Inhalation: Remove exposed person to fresh air and administer 100% humidified supplemental oxygen with assisted ventilation as required to patients with respiratory tract irritation.
Ingestion: Never give anything by mouth to an unconscious or convulsing person. If ingested, have that conscious person drink 1 to 2 glasses of water or milk. Consult a physician immediately. Avoid inducing vomiting and perform gastric lavage cautiously.
After first aid, get appropriate in-plant, paramedic, or community medical support.
Note to Physicians: Consider oral administration of sodium thiosulfate solutions if sodium hypochlorite is ingested. Do not administer neutralizing substances since the resultant exothermic reaction could further damage tissue. Endotracheal intubation could be needed if glottic edema compromises the airway. For individuals with significant inhalation exposure, monitor arterial blood gases and chest x-ray.

Section 7. Spill, Leak, and Disposal Procedures

Spill/Leak: Notify safety personnel and provide adequate ventilation. Cleanup personnel should protect against inhalation of mists and fumes and contact with liquid. Use noncombustible absorbents to pick up spills for disposal. Do not use combustible absorbents such as sawdust. For large spills, dike far ahead of spill to contain. Consider neutralizing with reducing agents. Keep on alkaline side and dilute with copious quantities of water. Do not flush to sewers or waterways since sodium hypochlorite can harm aquatic life in very low concentrations. Follow applicable OSHA regulations (29 CFR 1910.120).
Disposal: Contact your supplier or a licensed contractor for detailed recommendations. Follow applicable Federal, state, and local regulations.
EPA Designations
RCRA Hazardous Waste (40 CFR 261.33): Not listed
Listed as a CERCLA Hazardous Substance* (40 CFR 302.4), Reportable Quantity (RQ): 100 lb (45.4 kg) [* per Clean Water Act, Sec. 311(b)(4)]
SARA Extremely Hazardous Substance (40 CFR 355): Not listed
SARA Toxic Chemical (40 CFR 372.65): Not listed
OSHA Designations
Air Contaminant (29 CFR 1910.1000, Subpart Z): Not listed

Section 8. Special Protection Data

Goggles: Wear protective eyeglasses or chemical safety goggles, per OSHA eye- and face-protection regulations (29 CFR 1910.133).
Respirator: Seek professional advice prior to respirator selection and use. Follow OSHA respirator regulations (29 CFR 1910.134) and, if necessary, wear a NIOSH-approved respirator. For emergency or nonroutine operations (cleaning spills, reactor vessels, or storage tanks), wear an SCBA. *Warning! Air-purifying respirators do not protect workers in oxygen-deficient atmospheres.*
Other: Wear rubber gloves, boots, aprons, and gauntlets to prevent skin contact.
Ventilation: Provide general and local ventilation systems to maintain airborne concentrations that promote worker safety and productivity. Workers should not have irritation effects from exposure. Local exhaust ventilation is preferred since it prevents contaminant dispersion into the work area by controlling it at its source.[122]
Safety Stations: Make available in the work area emergency eyewash stations, safety/quick-drench showers, and washing facilities.
Contaminated Equipment: Never wear contact lenses in the work area; soft lenses may absorb, and all lenses concentrate, irritants. Remove this material from your shoes and equipment. Launder contaminated clothing before wearing.
Comments: Never eat, drink, or smoke in work areas. Practice good personal hygiene after using this material, especially before eating, drinking, smoking, using the toilet, or applying cosmetics.

Section 9. Special Precautions and Comments

Storage Requirements: Store in closed, vented, noncorrodable containers in a cool [<85 °F (29.5 °C)], dry, well-ventilated area away from direct sunlight, heat, incompatible materials, acids, and organics (wood, paper, or oil). "Empty" containers can retain hazardous product residues. Solutions in water are storage hazards due to oxygen evolution. Avoid long storage periods since the product degrades with age. Protect containers from physical damage.
Engineering Controls: Avoid inhalation of vapors, dusts, or fume and contact with skin and eyes. Protect workers against irritation effects of airborne exposure. Use adequate ventilation and appropriate personal protective gear. Institute a respiratory protection program that includes regular training, maintenance, inspection, and evaluation. Practice good personal hygiene and housekeeping procedures.

Transportation Data (49 CFR 172.101, .102)

DOT Shipping Name: Hypochlorite solution *containing >7% available chlorine by weight*
DOT Hazard Class: Corrosive material
ID No.: UN1791
DOT Label: Corrosive
DOT Packaging Exceptions: 173.244
DOT Packaging Requirements: 173.277

DOT Shipping Name: Hypochlorite solution *containing not more than 7% available chlorine by weight*
DOT Hazard Class: ORM-B
ID No.: NA1791
DOT Label: None
DOT Packaging Exceptions: 173.505
DOT Packaging Requirements: 173.510

IMO Shipping Name: Hypochlorite, solutions with >5% available chlorine
IMO Hazard Class: 8
ID No.: UN1791
IMO Label: Corrosive
IMDG Packaging Group: II/III

MSDS Collection **References:** 1, 3-11, 14, 25, 34, 37, 48, 49, 73, 84, 100, 101, 103, 109, 124, 126, 127, 132, 136, 139, 140
Prepared by: MJ Allison, BS; Industrial Hygiene Review: DJ Wilson, CIH; Medical Review: W Silverman, MD; Edited by: JR Stuart, MS

Copyright © 1990 by Genium Publishing Corporation. Any commercial use or reproduction without the publisher's permission is prohibited. Information in the MSDSs is supplied in good faith but its accuracy is not guaranteed. Genium Publishing Corporation shall not be liable for any claim for any loss or injury resulting from the use of the information in the MSDSs.

Genium Publishing Corporation
1145 Catalyn Street
Schenectady, NY 12303-1836 USA
(518) 377-8854

Material Safety Data Sheets Collection:

Sheet No. 126
Hydrazine

Issued: 6/84 Revision: A, 4/90 Errata Date: 7/91

Section 1 — Material Identification

Hydrazine Description: Prepared by a two-step process: 1) reaction of sodium hypochlorite and ammonia to yield sodium hydroxide and chloramine (NH_2Cl), then 2) reaction of chloramine, sodium hydroxide, and ammonia to yield hydrazine, sodium chloride, and water. These processes are carried out in the presence of such colloidal materials as glue or starch to prevent unwanted side reactions. There are two forms: anhydrous and hydrate. Hydrazine anhydrous is used as a reducing agent for many transition metals and some nonmetals, a high-energy rocket fuel, a corrosion inhibitor in boiler feedwater and reactor cooling water, a polymerization catalyst, a chemical intermediate for blowing agents, a scavenger for gases, an antioxidant, a shortstopping agent in electrolytic plating of metals on glass and plastics, wastewater treatment, nuclear fuel reprocessing, drugs, agricultural chemicals, photographic developer, fuel cells, dyes, explosives, metallurgy, spandex fibers, diving equipment, pesticides and solder fluxes. Hydrazine hydrate is used as a chemical intermediate, a catalyst, and a solvent for inorganic materials.

Other Designations: CAS No. 302-01-2 (anhydrous), H_2NNH_2; CAS No. 7803-57-8 (hydrate), $NH_2NH_2 \cdot H_2O$; hydrazine base; diamine; diamide hydrate.

Manufacturer: Contact your supplier or distributor. Consult the latest *Chemicalbook Buyers' Guide*[TM] for a suppliers list.

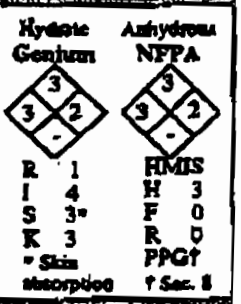

Section 2 — Hazardous Ingredients/Identity Information

Hydrazine, 99%

OSHA PEL (Skin)
8-hr TWA: 0.1 mg/m³

ACGIH TLV (Skin), 1989-90
TLV-TWA: 0.1 mg/m³

NIOSH REL, 1987
120-min ceiling: 0.04 mg/m³

Toxicity Data*
DNA inhibition, human: HeLa cell; 50 µmol/L
Rat, inhalation, TC_L: a 1-ppm dose administered intermittently within 6-hr periods over a year showed it is an equivocal tumorigenic agent causing olfaction tumors
Mouse, oral, TD_L: 1951 mg/kg ingested continuously over 2 yr affected the lungs, thorax, respiration (tumors), and blood (lymphomas)

* See NIOSH, *RTECS* (MU7175000, anhydrous; MV8050000, hydrate), for additional mutative, reproductive, tumorigenic, and toxicity data.

Section 3 — Physical Data

Boiling Point: 236.3 °F/113.5 °C,* 245.3 °F/118.5 °C at 740 mm†
Melting Point: 34.5 °F/1.4 °C,* -61.1 °F/-51.7 °C†
Vapor Pressure: 14.4 mm Hg at 77 °F/25 °C*
Vapor Density (Air = 1): 1.1*

Molecular Weight: 32.06 g/mol,* 50.08 g/mol†
Specific Gravity (H_2O = 1 at 39 °F/4 °C): 1.011 at 59 °F/15 °C,* 1.03 at 70 °F/21 °C†
Water Solubility: Both are miscible in water

Appearance and Odor: Colorless, fuming, oily, hygroscopic (moisture-absorbent) liquid or white crystals with a penetrating, fishy, ammonia-like odor.* Colorless, fuming (64% hydrazine hydrate fumes in air), refractive liquid with ammonia-like odor.† Both have a 3- to 4-ppm odor threshold. Sense of smell can be rapidly desensitized; not considered to have good warning properties. Take immediate protective action if odor or irritancy is detected.

* Anhydrous
† Hydrate (Various concentrations of hydrazine hydrate exist and their physical properties vary respectively).

Section 4 — Fire and Explosion Hazard Data

Flash Point	Autoignition Temperature	LEL	UEL
100 °F/37.8 °C OC,* 73 °F/163 °C OC† (64%), 89° F/192 °C OC† (54.4 %)	Can vary with contact surface‡	2.9% v/v*	98% v/v*

Extinguishing Media: If this material is afire or involved in a fire, do not extinguish unless the flow of material can be stopped. Use water in flooding amounts as fog, or alcohol foam, carbon dioxide, or dry chemical to dilute spills to nonflammable mixtures and to disperse vapors.
Unusual Fire or Explosion Hazards: Hydrazine is a severe explosion hazard when exposed to heat or by reaction with oxidizers. Its vapor is exceptionally hazardous because once ignited it continues to burn by exothermic decomposition in complete absence of air or oxidant. The vapor may also travel to an ignition source and flash back. The combustion of hydrazine yields 148.6 kcal/mol (heat), nitrogen and water are products. This material may also ignite spontaneously when in contact with porous materials such as wood, asbestos, earth, or cloth.
Special Fire-fighting Procedures: Since fire may produce toxic fumes, wear a self-contained breathing apparatus (SCBA) with a full facepiece operated in the pressure-demand or positive-pressure mode and wear a fully encapsulating suit. Apply water from as far a distance as possible. If fire becomes uncontrollable or if containers are exposed to direct flames, evacuate for a 2500-ft radius. Cool containers with flooding amounts of water. Be aware of runoff from fire control methods. Do not release to sewers or waterways.

* Anhydrous
† Hydrate
‡ The autoignition temperature for hydrazine (anhydrous) can vary from 74 °F/23 °C in contact with iron rust, to 270 °F/132 °C in contact with black iron, to 313 °F/156 °C in contact with stainless steel, and to 518 °F/270 °C in contact with glass.

Section 5 — Reactivity Data

Stability/Polymerization: Hydrazine is stable at room temperature in closed containers under normal storage and handling conditions under an inert atmosphere in the absence of UV radiation. Hazardous polymerization cannot occur. This material is neither shock or friction sensitive. Keep out of direct sunlight. **Chemical Incompatibilities:** Hydrazine is a highly active reducing agent, especially under basic conditions. It is incompatible with oxidizing agents (including air), acids, some metal oxides (such as iron, copper, lead, molybdenum) and some metals (carbon steel, copper, zinc). Solutions can attack glass, polyethylene, graphite, chrome plate, rubber, and cork. It ignites spontaneously in air in contact with porous materials. Ignites on contact with dinitrogen oxide, hydrogen peroxide, dinitrogen tetraoxide, N,2,4,6-tetranitroaniline, rhenium + aluminum, cotton waste + heavy metals, nitric acid, rust + heat, and catalysts. Violent reaction with thiocyanate, 1-chloro-2,4-dinitrobenzene, thiocarbonyl azide. Vigorous reaction with benzene-seleninic acid or anhydride, potassium peroxodisulfate, ruthenium (III) chloride, and carbon dioxide + stainless steel. Explodes on contact with uranium compounds (at 130 °C), dicyanofurazan, trioxygen difluoride, silver compounds, N-halomides, potassium, sodium hydroxide. Forms sensitive explosive mixtures with metal salts, methanol + nitromethane, 2-chloro-5-methylnitrobenzene, sodium, air, sodium perchlorate, and lithium perchlorate. **Hazardous Products of Decomposition:** Thermal oxidative decomposition of hydrazine can produce highly toxic fumes of nitrogen oxides (NO_x) and ammonia (NH_3).

[redacted]

Carcinogenicity: The ACGIH, NTP, and IARC list hydrazine as, respectively, a suspected, anticipated, and possible (Group 2B; based on sufficient animal evidence) human carcinogen. Summary of Risks: Hydrazine is poisonous by ingestion, skin contact, intravenous, intraperitoneal, and inhalation. The hydrazine concentration considered immediately dangerous to life and health (IDLH) is 50 ppm. In general, hydrazines are local irritants and convulsants that may damage the liver and destroy red blood cells. As well as a systemic poison, hydrazine is a skin sensitizer. This material is corrosive to the eyes, skin, and mucous membranes. Experimental studies show hydrazine is a possible carcinogen, mutagen (a cancer-causing agent, usually mutagenic), teratogen (a fetus-harming agent), and suspicious of the lungs, liver, kidney, nervous system, blood, hematopoietic (involved in formation of blood or its cells in the living body) organs, and subcutaneous (beneath the skin) tissue. It is reported that a worker who breathed hydrazine hydrate once a week for 6 months developed symptoms of fever, lethargy, dizziness, vomiting, abdominal pains, incoherency, and black vomit. He died 20 days after his last exposure due to kidney damage and pulmonary edema. Medical Conditions Aggravated by Long-Term Exposure: Damage to the liver, kidney, and blood (characterized by hemolysis and reduction of packed cell volume). Cancer, fetal malformations, and embryotoxicity are observed in laboratory animals. Target Organs: Central nervous system, respiratory system, liver, kidney, blood, skin, eyes. Primary Entry Routes: Inhalation, ingestion. Acute Effects: An acute exposure to hydrazine may cause vomiting, diarrhea, anuria, dizziness, cyanosis, and convulsions. Hydrazine inhalation causes severe irritation of the eyes, skin, and respiratory tract. Eye injection includes swelling, burning, redness, and discharge. Liquid contact can produce penetrating burns and possible permanent corneal opacity with visual impairment. Temporary blindness may occur with a severe exposure. Hydrazine can produce severe burns to the skin and possible dermatitis. Inflammation of the respiratory tract may lead to bronchitis, pulmonary edema, and even lung damage. Ingestion of hydrazine irritates and burns the entire gastrointestinal tract and is characterized by vomiting, abdominal pain, diarrhea, bleeding, and tissue ulceration. Chronic Effects: Repeated hydrazine inhalation produces inflammation of the nasal, tracheal, and bronchial tissue resulting in chronic bronchitis. Repeated skin exposure can cause dermatitis with a characteristic rash.

FIRST AID

Eyes: Flush immediately, including under the eyelids, gently but thoroughly with flooding amounts of running water for at least 15 min.
Skin: Quickly remove contaminated clothing. After rinsing affected skin with flooding amounts of water, wash it with soap and water.
Inhalation: Remove exposed person to fresh air and support breathing as needed. Ingestion: Never give anything by mouth to an unconscious or convulsing person. If ingested, have a conscious person immediately drink large quantities of water, then induce vomiting.
After first aid, get appropriate in-plant, paramedic, or community medical support.
Physician's Note: Unless the patient is comatose or convulsing, vomiting may be induced if initiated within 30 min after ingestion. If vomiting is unsuccessful after 2 doses of ipecac, the decision to lavage should be made on an individual basis. Pyridoxine may be antidotal for coma. Use IV diazepam to treat seizures.

[redacted]

Spill/Leak: Design and practice a spill control countermeasure plan (SCCP). Notify safety personnel of spills, evacuate all unnecessary personnel, remove heat and ignition sources, and provide optimum explosion-proof ventilation. To control the fire hazard, promptly dilute the spill to less than 40% hydrazine. Flush diluted hydrazine and contain and collect the liquid. Use sand or noncombustible absorbent to collect small spills. Place waste in closed disposal container. Flush spill area with water, but be aware of runoff to sewers and waterways. A 4.3-mg/l concentration of hydrazine during a 96-hr test period is the median tolerance limit (TLm 96) at which 50% of *Salmo gairdneri* survive. Follow applicable OSHA regulations (29 CFR 1910.120). Dispose: Contact your supplier or a licensed contractor for detailed recommendations. Follow applicable federal, state, and local regulations.

EPA Designations:
Listed as a RCRA Hazardous Waste (40 CFR 261.33); Hazardous Waste No. U133
Listed as a CERCLA Hazardous Substance* (40 CFR 302.4), Reportable Quantity (RQ): 1 lb (0.454 kg) [* per RCRA, Sec. 3001]
Listed as a SARA Extremely Hazardous Substance (40 CFR 355), Reportable Quantity (RQ): 1 lb; Threshold Planning Quantity (TPQ): 1000 lb
Listed as a SARA Toxic Chemical (40 CFR 372.65)
OSHA Designations
Air Contaminant (29 CFR 1910.1000, Subpart Z): Not listed

[redacted]

Goggles: Wear protective eyeglasses or chemical safety goggles, per OSHA eye- and face-protection regulations (29 CFR 1910.133). Respirator: Follow OSHA respirator regulations (29 CFR 1910.134) and, if necessary, wear a NIOSH-approved respirator. For emergency or nonroutine operations (cleaning spills, reactor vessels, or storage tanks), wear a SCBA. Warning: Air-purifying respirators do not protect workers in oxygen-deficient atmospheres. Other: Wear impervious gloves, boots, apron, and gauntlets to prevent skin contact. Butyl rubber is recommended for impervious body-covering protection. Ventilation: Provide general and local explosion-proof ventilation systems to maintain airborne concentrations below the established OSHA PEL, ACGIH TLV, and NIOSH REL. Local exhaust ventilation is preferred since it prevents contaminant dispersion into the work area by controlling it at its source. Safety Stations: Make available in the work area emergency eyewash stations, safety/quick-drench showers, and washing facilities. Contaminated Equipment: Never wear contact lenses in the work area; hard lenses may absorb, and all lenses concentrate, irritants. Remove this material from your shoes and equipment. Launder contaminated clothing before wearing. Contaminated clothing and equipment are a fire and health hazard. Comments: Never eat, drink, or smoke in work areas. Practice good personal hygiene after using this material, especially before eating, drinking, smoking, using the toilet, or applying cosmetics.

[redacted]

Storage Requirements: Store in tightly closed containers in a clean, cool, well-ventilated area with controlled drainage, away from oxidizing agents, acids, all incompatible materials (Sec. 5), direct sunlight, heat and ignition sources. Water sprinkler protected, sheltered, outside, or detached storage preferred. Protect containers from physical damage. All engineering systems should be of maximum explosion-proof design and electrically grounded and bonded to prevent static sparks. Maintain an inert atmosphere (nitrogen) over this material to avoid spontaneous oxidation. Prevent contamination of hydrazine. Engineering Controls: Prevent liquid contact with eyes, skin, or clothing. Avoid inhaling vapors. Use only with proper personal protective gear and adequate ventilation. Practice good personal hygiene procedures. Hydrazine is a very sensitive material that must not be used without full and complete information from the manufacturer.

Transportation Data (49 CFR 172.101, 102)

DOT Shipping Name: Hydrazine, anhydrous,* or Hydrazine, aqueous†
DOT Hazard Class: Flammable liquid,* Corrosive material†
ID No.: UN2029,* UN2030†
DOT Label: Flammable liquid and poison,* Corrosive†
DOT Packaging Requirements: 173.376 (Both)
DOT Packaging Exceptions: None (Both)

IMO Shipping Name: Hydrazine, anhydrous, or Hydrazine, aqueous solutions with more than 64% hydrazine by weight,* Hydrazine, hydrate, or Hydrazine, aqueous solutions with not more than 64% hydrazine by weight†
IMO Hazard Class: 8.3,* 8†
IMO Label: Flammable Liquid, Poison, Corrosive,* Corrosive, Poison†
IMO Packaging Group: I,* II†
ID No.: UN2029*, UN2030†

*Anhydrous
†Hydrate

MSDS Collection References: 1-12, 14, 16, 19, 23, 24, 25, 28, 31, 34, 42, 47-49, 52, 73, [illegible], 87, [illegible], 103, 109, 120, 121, 124, 126, 127, 129, 131-132

Prepared by: MJ Allison, BS; Industrial Hygiene Review: DJ Wilson, CIH; Medical Review: MJ Hurdle, MD

[redacted]

Genium Publishing Corporation
1145 Catalyn Street
Schenectady, NY 12303-1836 USA
(518) 377-8854

Material Safety Data Sheets Collection:

Sheet No. 537
Cyclohexylamine

Issued: 5/85 Revision: A, 8/90

Section 1: Material Identification

Cyclohexylamine [$CH_2(CH_2)_4CHNH_2$] **Description:** Prepared by catalytic hydrogenation of aniline at elevated temperatures and pressures. Used as a rubber accelerator or inhibitor; a corrosion inhibitor for water in boilers; a processing agent in nylon fiber production; an oxygen-absorbing compound; as an intermediate in organic chemical synthesis for manufacturing insecticides, herbicides, plasticizers, dyestuffs, emulsifying agents, dry cleaning soaps, and absorbents for acid gases; and in paints and pigments.

R 1
I 4
S 3
K 4

NFPA



HMIS
H 2
F 3
R 0
PPG*
* Sec. 8

Other Designations: CAS No. 0108-91-8, aminocyclohexane, aminohexahydrobenzene, CHA, cyclohexanamine, hexahydroaniline, hexahydrobenzenamine.

Manufacturer: Contact your supplier or distributor. Consult the latest *Chemicalweek Buyers' Guide*(™) for a suppliers list.

Cautions: Cyclohexylamine is a *caustic* skin, eye, and mucous membrane irritant and sensitizer. High concentrations cause nausea and narcotic effects. *It is a dangerous fire hazard when exposed to heat, flame, or oxidizers.*

Section 2: Ingredients and Occupational Exposure Limits

Cyclohexylamine, ca 100%

1989 OSHA PEL
8-hr TWA: 10 ppm, 40 mg/m³

1989-90 ACGIH
TLV-TWA: 10 ppm, 41 mg/m³

1988 NIOSH REL
None established

1985-86 Toxicity Data*
Human, skin: 125 mg administered for 48 hr produces severe irritation
Rat, oral, LD_{50}: 156 mg/kg
Mouse, intraperitoneal, TD_{Lo}: 77 mg/kg administered to a pregnant mouse for 11 days affected fertility (post-implantation mortality)

* See NIOSH, *RTECS* (GX0700000), for additional irritative, mutative, reproductive, and toxicity data.

Section 3: Physical Data

Boiling Point: 275 °F (135 °C)
Melting Point: 0.14 °F (-17.7 °C)
Vapor Pressure: 15 mm Hg at 86 °F (30 °C)
Vapor Density (Air = 1): 3.42
Molecular Weight: 99.17
Specific Gravity: 0.8647 at 25 °C
Water Solubility: Miscible
% Volatile by Volume: ca 100
Evaporation Rate (Ether = 1): <1

Appearance and Odor: Colorless to yellow liquid with an unpleasant, fishy odor.

Section 4: Fire and Explosion Data

Flash Point: 69.8 °F (21 °C), OC	Autoignition Temperature: 560 °F (293 °C)	LEL: None reported	UEL: None reported

Extinguishing Media: To fight fire, use alcohol foam, CO_2, or dry chemical. Do not use a solid stream of water, since the stream scatters and spreads the fire. Use water spray to cool fire-exposed tanks and containers.

Unusual Fire or Explosion Hazards: This material is a dangerous fire hazard when exposed to heat, flame, or oxidizers.

Special Fire-fighting Procedures: Isolate hazard area and deny entry. Since fire may produce toxic fumes, wear a self-contained breathing apparatus (SCBA) with a full facepiece operated in the pressure-demand or positive-pressure mode and a fully encapsulating suit. Cyclohexylamine vapors are heavier than air and may travel a considerable distance to an ignition source and flash back. Stay out of low areas. Be aware of runoff from fire control methods. Do not release to sewers or waterways.

Section 5: Reactivity Data

Stability/Polymerization: Cyclohexylamine is stable at room temperature in closed containers under normal storage and handling conditions. Hazardous polymerization cannot occur.

Chemical Incompatibilities: This flammable liquid can react vigorously with oxidizing materials. It is incompatible with acids, all copper alloys, and lead.

Conditions to Avoid: Avoid heat, flame, and oxidizers.

Hazardous Products of Decomposition: Thermal oxidative decomposition of cyclohexylamine can produce toxic fumes of nitrogen oxides (NO_x).

Copyright © 1990 Genium Publishing Corporation.
Any commercial use or reproduction without the publisher's permission is prohibited.

Section 6: Health Hazard Data

Carcinogenicity: The IARC does not list cyclohexylamine as a carcinogen. Experimental studies show that cyclohexylamine may have teratogenic and reproductive effects in laboratory animals. There are also reports of human mutagenic data.

Summary of Risks: Cyclohexylamine is a severe skin, eye, and mucous membrane irritant and possible skin sensitizer. Concentrations in air above 150 ppm are extremely irritating to the upper respiratory tract and eyes, and may cause corneal opacity. The liquid is a strong base that burns skin and severely damages eyes on contact. Deichman and Gerarde report cyclohexylamine is a weak methemoglobin-forming substance (decreases oxygen-carrying capacity) with cumulative properties capable of poisoning. In large acute exposures, cyclohexamine has the weak ability to stimulate the sympathetic nervous system, possibly resulting in a racing heart and elevated blood pressure.

Medical Conditions Aggravated by Long-Term Exposure: Long-term exposure may cause weight loss and corneal opacity.

Target Organs: Skin, eyes, mucous membranes.

Primary Entry Routes: Inhalation, percutaneous.

Acute Effects: Systemic effects of overexposure through inhalation, ingestion, or skin absorption include drowsiness, dizziness, anxiety, restlessness, nausea, and vomiting. In some cases slurred speech and dilated pupils were observed.

Chronic Effects: None reported.

FIRST AID

Eyes: Gently lift the eyelids and flush immediately and continuously with flooding amounts of water until transported to an emergency medical facility. Consult a physician immediately.

Skin: *Quickly* remove contaminated clothing. Rinse with flooding amounts of water for at least 15 min. For reddened or blistered skin, consult a physician. Wash affected area with soap and water. If skin is burned, cover with a dry, sterile bandage and get medical attention.

Inhalation: Remove exposed person to fresh air and support breathing as needed.

Ingestion: Never give anything by mouth to an unconscious or convulsing person. Call a poison control center. If ingested, have that *conscious* person drink 1 to 2 glasses of water or milk, then get medical attention immediately.

After first aid, get appropriate in-plant, paramedic, or community medical support.

Section 7: Spill, Leak, and Disposal Procedures

Spill/Leak: Notify safety personnel, evacuate all unnecessary personnel, provide maximum explosion-proof ventilation, and remove all heat and ignition sources. Cleanup personnel should protect against vapor inhalation and contact with skin and eyes. Absorb small spills with sand or other noncombustible material and place in a closed disposal container. Use nonsparking tools to clean up spills. Dike large spills and collect for reclamation or disposal. Do not flush to sewers. Follow applicable OSHA regulations (29 CFR 1910.120).

Disposal: Contact your supplier or a licensed contractor for detailed recommendations. Follow applicable Federal, state, and local regulations.

EPA Designations
RCRA Hazardous Waste (40 CFR 261.33): Not listed
CERCLA Hazardous Substance (40 CFR 302.4): Not listed
Listed as a SARA Extremely Hazardous Substance (40 CFR 355)
SARA Toxic Chemical (40 CFR 372.65): Not listed

OSHA Designations
Listed as an Air Contaminant (29 CFR 1910.1000, Table Z-1-A)

Section 8: Special Protection Data

Goggles: Wear protective eyeglasses or chemical safety goggles, per OSHA eye- and face-protection regulations (29 CFR 1910.133).

Respirator: Seek professional advice prior to respirator selection and use. Follow OSHA respirator regulations (29 CFR 1910.134) and, if necessary, wear a NIOSH-approved respirator. For emergency or nonroutine operations (cleaning spills, reactor vessels, or storage tanks), wear an SCBA. *Warning! Air-purifying respirators do not protect workers in oxygen-deficient atmospheres.*

Other: Wear impervious gloves, boots, aprons, and gauntlets to prevent skin contact.

Ventilation: Provide general and local explosion-proof ventilation systems to maintain airborne concentrations below the OSHA PEL and ACGIH TLV (Sec. 2). Local exhaust ventilation is preferred since it prevents contaminant dispersion into the work area by controlling it at its source.[102]

Safety Stations: Make available in the work area emergency eyewash stations, safety/quick-drench showers, and washing facilities.

Contaminated Equipment: Never wear contact lenses in the work area: soft lenses may absorb, and all lenses concentrate, irritants. Remove this material from your shoes and equipment. Launder contaminated clothing before wearing. Dispose of heavily contaminated clothing carefully, as it may be a fire hazard.

Comments: Never eat, drink, or smoke in work areas. Practice good personal hygiene after using this material, especially before eating, drinking, smoking, using the toilet, or applying cosmetics.

Section 9: Special Precautions and Comments

Storage Requirements: Store in tightly closed containers in a cool, dry, well-ventilated area away from acids, copper alloys, lead, oxidizing agents, and ignition sources. To prevent static sparks, electrically ground and bond all containers and equipment used in shipping, receiving, or transferring operations in production and storage areas.

Engineering Controls: Avoid vapor inhalation and skin and eye contact. Use only with adequate ventilation and appropriate personal protective gear. Institute a respiratory protection program that includes regular training, maintenance, inspection, and evaluation. Practice good personal hygiene and housekeeping.

Transportation Data (49 CFR 172.101, .102)

DOT Shipping Name: Cyclohexylamine
DOT Hazard Class: Flammable liquid
ID No.: UN2357
DOT Label: Flammable liquid
DOT Packaging Requirements: 173.119
DOT Packaging Exceptions: 173.118

IMO Shipping Name: Cyclohexylamine
IMO Hazard Class: 3.2
IMO Label: Flammable liquid, corrosive
IMDG Packaging Group: II
ID No.: UN2357

MSDS Collection References: 1-9, 12, 14, 25, 26, 34, 37, 48, 63, 65, 69, 70, 71, 73, 74, 75, 84, 85, 89, 100, 101, 103, 109, 124, 126, 127, 132, 133, 134, 136, 138
Prepared by: MJ Allison, BS; Industrial Hygiene Review: DJ Wilson, CIH; Medical Review: W Silverman, MD; Edited by: JR Stuart, MS

Copyright © 1990 by Genium Publishing Corporation. Any commercial use or reproduction without the publisher's permission is prohibited. Judgments as to the suitability of information herein for the purchaser's purposes are necessarily the purchaser's responsibility. Although reasonable care has been taken in the preparation of such information, Genium Publishing Corporation extends no warranties, makes no representations, and assumes no responsibility as to the accuracy or suitability of such information for application to the purchaser's intended purpose or for consequences of its use.

Appendix N
Injury and Illness Prevention Program

_____

(PLANT NAME)

SB198

INJURY AND ILLNESS PREVENTION PROGRAM

INJURY AND ILLNESS PREVENTION PROGRAM

AUTHORIZING SIGNATURES

HAZARD EVALUATION FORMS — APPENDIX A

- Maintenance and operations employees
- Administrative personnel
- General work areas

CODE OF SAFE PRACTICES — APPENDIX B

- Abrasive grinders
- Prevention of back problems
- Compressed air
- Confined spaces
- Prevention of cumulative trauma disorders
- Electrical safety
- Eye and face protection
- Fire prevention
- Gas cylinders
- Good housekeeping
- 'land protection
- Hand tools and equipment
- Hearing conservation
- Hoist/chain/wire rope/webs/rope slings
- Lockout/tagout procedures
- Portable electric power tools
- Portable ladders
- Preventing slips, trips and falls
- Respiratory protection
- Welding, cutting and brazing

WEEKLY INSPECTION REPORT — APPENDIX C

ACCIDENT, INJURY, AND ILLNESS INVESTIGATION FORM — APPENDIX D

EMPLOYEE SAFETY INFORMATION FORM — APPENDIX E

_____

(PLANT LOCATION)

INJURY AND ILLNESS PREVENTION PROGRAM

I. EMPLOYER INFORMATION

ORGANIZATION:
ADDRESS:
TELEPHONE NUMBER:
MAIN ACTIVITY: Operations and maintenance of cogeneration power plants and related equipment.

II. PERSON WITH AUTHORITY AND RESPONSIBILITY FOR IMPLEMENTING THE INJURY AND ILLNESS PREVENTION PROGRAM

TITLE: Plant Manager
RESPONSIBILITY: Establish, implement and maintain the Injury and Illness Prevention Program and all its related duties.

III. SYSTEM FOR IDENTIFYING, EVALUATING, AND PREVENTING OCCUPATIONAL SAFETY AND HEALTH HAZARDS

Review all applicable general industry safety orders and other safety orders that apply to the operation and maintenance of cogeneration power plant and related equipment.

Review Industry and general information (including Material Safety Data Sheets for chemicals used) on potential occupational safety and health hazards.

Investigation of all accidents, injuries, illnesses, and unusual events that have occurred at similar plants.

Periodic and scheduled inspections of general work areas and specific work stations.

Evaluation of information provided by employees.

Ongoing safety meetings.

IV. HARD EVALUATIONS HAVE BEEN CONDUCTED FOR THE FOLLOWING JOB SAFETY CLASSES

JOB SAFETY CLASS: Operations and maintenance personnel
JOB TITLES: Plant Manager, O&M Supervisor, I&E Technicians, Mechanics, Operators
GENERAL AREA: Entire plant

JOB SAFETY- CLASS: Office personnel
JOB TITLES: Administrative Assistant, Regional office staff
GENERAL AREA: Office

V. OCCUPATIONAL SAFETY AND HEALTH HAZARDS ARE IDENTIFIED AND DOCUMENTED IN THE FOLLOWING MANNER

Hazard evaluation form for specific Job Safety Classes. These are maintained as Appendix A at the end of this program.

VI. SAFE WORKING CONDITIONS, WORK PRACTICES AND PROTECTIVE EQUIPMENT REQUIREMENTS ARE DOCUMENTED AND COMMUNICATED IN THE FOLLOWING MANNER

1. Code of Safety Practices for Operations, Maintenance, and Administrative personnel. These are maintained as Appendix B at the end of this program.

2. Safety Handbook. This is provided to each employee when he or she begins employment.

3. Safety training and monthly safety meetings.

VII. INSPECTIONS ARE CONDUCTED TO VERIFY COMPLIANCE WITH CODES OF SAFE PRACTICES AND OTHER SAFETY REQUIREMENTS TO IDENTIFY ANY ADDITIONAL HAZARDS AND TO INVESTIGATE ACCIDENTS, INJURY AND ILLNESS CASES AND UNUSUAL OCCURRENCES

FREQUENCY AND RESPONSIBILITY FOR INSPECTIONS:

1. AREA: Total plant
   FREQUENCY: Weekly
   PERSON RESPONSIBLE: Assigned by plant manager on weekly basis

2. AREA: Total plant
   FREQUENCY: Annually
   PERSONS RESPONSIBLE: Corporate audit team members

3. AREA: Incident investigations
   FREQUENCY: As required
   PERSON RESPONSIBLE: Plant manager

DOCUMENTATION OF INSPECTIONS:

1. Weekly inspections are documented on the form entitled "Weekly Safety Inspection Report" which includes methods, and correction of hazards identified. Appendix C.

2. Annual - inspections are documented on forms entitled, "OPERATING PLANT REVIEW."

3. Inspections and investigations are conducted as soon as possible after an accident, occupational injury, illness or hazardous unusual occurrence is reported. These investigations are documented on forms entitled, "REPORT OF OCCUPATION INJURY OR ILLNESS". Appendix D.

   All forms are maintained in the office.

VIII. EMPLOYEE SAFETY TRAINING IS PROVIDED INITIALLY AND IN THE FOLLOWING CIRCUMSTANCES

New employees are provided initial training upon hiring prior to assignment.

Employees are provided training when assigned to a new task for which training has not been received.

Training includes general area safety, specific assignment of job safety class training, the potential occupational safety, health hazards, and the Code of Safe Practices for the area.

Documentation of training is maintained in the office.

Refresher training is provided annually.

Training is provided any time a new chemical or procedure is used at the plant.

IX. EFFECTIVE COMMUNICATIONS WITH EMPLOYEES HAS BEEN ESTABLISHED WHICH INCLUDES THE FOLLOWING METHODS TO MEET THE STANDARD'S REQUIREMENTS

Communication of safe working conditions, work practices, and required personal protection equipment is included in the initial and all subsequent training.

Monthly safety meetings specifically held so employees can express concerns and problems concerning safety matters.

Safety training in which employees are taught safe work practices and procedures.

Safety hand book was given to each employee upon hire to be used as reference for safe work practices.

The posting of all required OSHA and CALOSHA information.

Employees have been advised by the initial training that safety work conditions, safe work practices, and required personal protection are mandatory and will be enforced by discipline for non-compliance, including reprimand, suspension without pay, and termination.

The method of soliciting safety related information from employees includes:
-Immediately speaking with the O&M Supervisor or Plant manager.
-Relating information at monthly safety meetings.
-Submitting a Employee Safety Information Form. Appendix E.
-Annual regional questionnaire.

Employees have been advised upon initial hire and in all subsequent safety meetings and training that there will be no reprisals or other job discrimination for expressing any concern, comment, suggestion, or complaint about a safety related matter.

X. RECORD KEEPING REQUIREMENTS OF 8 CCR S3203(D) WILL BE ADHERED TO.

Maintenance of all written records for three years.

XI. REVIEW AND APPROVAL

THIS INJURY AND ILLNESS PREVENTION PROGRAM IS HEREBY APPROVED

_____ _____

PLANT MANAGER DATE

_____ _____

OPERATIONS MANAGER DATE

APPENDIX A

HAZARD EVALUATION FORM FOR SPECIFIC JOB SAFETY CLASSES

Specific Job Safety Class: Operations and maintenance employees
Date prepared: Preparer: Plant manager

DESCRIPTION OF JOB	POTENTIAL OCCUPATIONAL SAFETY/HEALTH HAZARD	PREVENTIVE SAFE WORK PRACTICES
On-line maintenance	Getting caught, pinched or injured by turning gears, couplings, fans or other machine parts.	Machines must be turned off and locked out and tagged out before any maintenance can proceed. The plant manager must approve all work done on energized machines.
	Electrical hazards	Only qualified personnel are permitted to work on energized circuits and only after all safety precautions have been followed. The plant manager must approve all work done on energized circuits.
Off-line maintenance	Exposure to hazardous air contaminants during welding.	Welding must be done in a well ventilated area.
	Eye flash burns due to welding.	Welding must be done wearing approved hoods and shields, and barriers must be erected to protect passers-by.
	Eye injuries due to flying particles or objects.	Appropriate eye protection must be worn when grinding, scraping, chipping, or when there is a chance a foreign object can enter the eye.

HAZARD EVALUATION FORM FOR SPECIFIC JOB SAFETY CLASSES

Specific Job Safety Class: Operations and maintenance employees
Date prepared: Preparer: Plant manager

DESCRIPTION OF JOB	POTENTIAL OCCUPATIONAL SAFETY/HEALTH HAZARD	PREVENTIVE SAFE WORK PRACTICES
Cleaning parts or equipment	Exposure to solvents or chemicals causing skin irritation or other health hazard.	Employees must wear gloves, goggles, face shield and apron when using solvents or chemicals that cause burns, irritations, or other problems upon contact.
Confined space entry	Exposure to hazardous vapors, chemicals or environments.	Before entering a confined space, a confined space entry permit must be filled out and evaluated to insure the space is safe to enter and what precautions must be taken before entry.
Mixing or doing chemical tests	Exposure to hazardous vapors or chemicals.	Employees must wear gloves, goggles, face shield and apron when using solvents or chemicals that cause burns, irritations, or other problems upon contact.
Filling of bulk chemical tanks.	Exposure to hazardous air contaminants or chemicals.	Employees must insure that the tank being filled can hold the amount being delivered. Employees must wear the appropriate safety protection while filling bulk chemical tanks.

HAZARD EVALUATION FORM FOR SPECIFIC JOB SAFETY CLASSES

Specific Job Safety Class: Operations and maintenance employees
Date prepared: Preparer: Plant manager

DESCRIPTION OF JOB	POTENTIAL OCCUPATIONAL SAFETY/HEALTH HAZARD	PREVENTIVE SAFE WORK PRACTICES
Inspections/Rounds	Exposure to hot surfaces	Employees should never touch or feel surfaces or equipment which they do not know the operating temperature.
	Exposure to high noise	Employees to wear hearing protection in and around all designated hearing protection areas.
	Electrical hazards	Employees should never enter the switchgear yard when it is humid or raining.
		Employees must always stand on approved rubber mat when opening, closing, or inspecting breakers.
	Slipping and falling	Employees must exercise care in climbing or accessing equipment. Ladders and safety harnesses must be used for work at high levels.
		Employees must have at least one hand on the railing when going up or down stairs.

HAZARD EVALUATION FORM FOR SPECIFIC JOB SAFETY CLASSES

Specific Job Safety Class: Operations and maintenance employees
Date prepared: Preparer: Plant manager

DESCRIPTION OF JOB	POTENTIAL OCCUPATIONAL SAFETY/HEALTH HAZARD	PREVENTIVE SAFE WORK PRACTICES
Bending, lifting and carrying.	Back strain due to improper lifting or trying to lift too much.	Employees should always use some type of device to move or lift heavy loads when possible such as a dolly or chain fall. Employees should always lift with their legs and not their back.

HAZARD EVALUATION FORM FOR SPECIFIC JOB SAFETY CLASSES

Specific Job Safety Class: Administrative employees
Date prepared: Preparer: Plant manager

DESCRIPTION OF JOB	POTENTIAL OCCUPATIONAL SAFETY/HEALTH HAZARD	PREVENTIVE SAFE WORK PRACTICES
Bending, lifting and carrying	Back strain due to improper lifting or trying to lift too much.	Employees should always use some type of device to move or lift heavy loads when possible, such as a dolly or chain fall. Employees should always lift with their legs and not their back.
Video Display Terminal operation	Visual stress due to improper lighting and work station design.	Background lighting should be compatible. "No glare" screens should be used. Screen position should be adjustable.
	Musculoskeletal injuries due to poor work station design.	Adjustable chairs should be used. Adjustable keyboards should be used.

HAZARD EVALUATION FORM FOR GENERAL WORK AREA

General Area: General plant area
Date prepared: Preparer: Plant manager

DESCRIPTION OF JOB	POTENTIAL OCCUPATIONAL SAFETY/HEALTH HAZARD	PREVENTIVE SAFE WORK PRACTICES
General plant area	Existence of unsafe conditions of which management may not be aware of.	Require reporting of all unsafe conditions to supervisor or plant manager. Report all accidents, injuries, illnesses, and unsafe actions to supervisor or plant manager.
	Exposure to hot surfaces or equipment.	Employees must exercise caution when walking around plant, placement of hands so as not to come in contact with hot surfaces.
	Hazards associated with fire and attempts to control fires.	If fire occurs, employees must call supervisor or trigger fire alarm. No employee should try to put out fires unless they have been specially trained to do so.
	Misconduct and substance abuse causing carelessness and unsafe operations.	Horseplay is prohibited. Employee use of intoxicants is forbidden on the premises or during working hours.
	Fire hazard and tobacco smoke exposure.	Smoking is permitted in smoking designated areas only.

HAZARD EVALUATION FORM FOR GENERAL WORK AREA

General Area: General plant area
Date prepared: Preparer: Plant manager

DESCRIPTION OF JOB	POTENTIAL OCCUPATIONAL SAFETY/HEALTH HAZARD	PREVENTIVE SAFE WORK PRACTICES
General plant area	Exposure to high noise.	Employees must wear hearing protection in designated areas.
	Exposure to toxic chemicals and vapors.	Employees must wear approved personal protective equipment when working in chemical areas.
		Employees must report all chemical spills, released, or threatened releases to supervisor or plant manager.
	Means of egress blocked	Employees shall keep means of egress open and clear of restrictions.

HAZARD EVALUATION FORM FOR GENERAL WORK AREA

General Area: Maintenance shops
Date prepared: Preparer: Plant manager

DESCRIPTION OF JOB	POTENTIAL OCCUPATIONAL SAFETY/HEALTH HAZARD	PREVENTIVE SAFE WORK PRACTICES
Maintenance Shop	Exposure to high noise.	Employees must wear hearing protection in designated areas.
	Exposure to toxic chemicals and vapors.	Employees must wear approved personal protective equipment when working in chemical areas.
		Employees must report all chemical spills, released, or threatened releases to supervisor or plant manager.
	Means of egress blocked	Employees shall keep means of egress open and clear of restrictions.
	Exposure to degreasing solvents causing skin irritations or problems.	Employees must wear protective gloves and aprons when degreasing equipment.
	Eye and other injuries due to flying parts, tools, or objects.	All grinding wheels must be equipped with safety shields and tool rests.
	Eye burns due to welding arcs.	Welding barriers must be erected to protect passers-by.

HAZARD EVALUATION FORM FOR GENERAL WORK AREA

General Area: Office area/control room
Date Prepared: Preparer: Plant manager

DESCRIPTION OF JOB	POTENTIAL OCCUPATIONAL SAFETY/HEALTH HAZARD	PREVENTIVE SAFE WORK PRACTICES
Office/Control Room	Means of egress blocked.	Employees shall keep means of egress open and clear of restrictions.
	Storage of excess combustibles may be fire hazard.	Employees shall not store excess amounts of combustibles in the work area.
	Aisles blocked with storage	Aisles and hallways shall be kept clear.

APPENDIX B

CODE OF SAFE PRACTICES FOR ABRASIVE WHEEL EQUIPMENT GRINDERS AND PORTABLE ABRASIVE GRINDERS

Job Class: Operations/Maintenance Employees
Date Prepared: Preparer: Plant Manager

Stationary Grinders

1. Safety glasses and goggles or face shields must always be worn when grinding.
2. The work rest must be kept adjusted to within one-eighth inch of the wheel.
3. Side guards must cover 75 percent of the wheel diameter.
4. The RPM of the abrasive wheel must be compatible with the RPM rating of the grinder motor.
5. Before new abrasive wheels are mounted, they must be visually inspected for cracks or wheel damage.
6. Cleanliness must be maintained around the grinder.

Portable Grinders

1. Always use safety glasses and goggles or face shield.
2. Never use an unguarded tool.
3. Never force a blade, wheel, or disk onto a tool or attempt to alter the hole size to fit the arbor. Never over-tighten the mounting nut.
4. Never use a blade, wheel or disk that has been dropped or otherwise damaged.
5. Avoid excessive tool force.
6. Never exceed the safe maximum operating speed marked on the blade wheel or disk.
7. Avoid breathing airborne dust caused by the abrasive wheel, blade, or disk. Use appropriate respirator.

CODE OF SAFE PRACTICES FOR PREVENTION OF BACK PROBLEMS

Job Class: Operations/Maintenance/Administrative Employees
Date Prepared: Preparer: Plant Manager

Back pain may be the result of:
1. Strain from poor sitting or standing posture.
2. Sudden strain on generally unused muscles.
3. Poor physical condition.
4. Sudden twisting of the back.
5. Being overweight.
6. Incorrect lifting.
7. Stress.

Sitting
1. Sit properly with your back against the back of a supportive chair, feet on the floor, knees slightly higher than your hips.
2. Turn your whole body to reach something that is off to one side.
3. Use your elbow to support your arm when you are on the phone.
4. Shift seating positions regularly during the day.
5. Get up and walk around periodically.

Lifting Precautions
1. Plan your lift before you start - where you will grip it, where it's going, the path you'll follow, and how you will put it down.
2. Lift an edge of the object to get an idea of its weight. If it's too heavy, get help or use a hand truck.
3. Stand close to the load, feet firm on the floor.
4. Squat down, back straight, knees bent, stomach muscles tight.
5. Grab your load firmly and make sure you can carry it before you start to move.
6. Stand up slowly, lifting with your legs and straightening your back as you stand.
7. Don't twist your body while carrying a heavy load.
8. Put the load down smoothly and slowly, again letting your legs do most of the work.

Other Precautions

1. Standing or sitting partly bent over for long periods of time can result in chronic back strain. Back strain can be prevented by changing position frequently, stretching and adjusting working heights to prevent slumping and excess reaching.
2. If you work on your back, keep your knees bents. It will help keep your back flat and relieve swayback. Try to get up and stretch frequently.
3. If you have to catch falling objects, plant your feet firmly on the ground, keep your back straight and knees bent. Let your legs absorb the impact.

4. Split big loads into smaller loads.
5. Bend your knees when you're working low.
6. Don't jump from short heights such as loading docks, trucks or platforms. Use a ladder or carefully lower yourself down.
7. Lifting high loads can be dangerous. Test the weight first. Then get as close as you can and let it slide down your body until you can grip it firmly. Use a ladder or get help if you can't reach the load comfortably.

CODE OF SAFE PRACTICES FOR COMPRESSED AIR

Job Class: Operations/Maintenance Employees
Date Prepared: Preparer: Plant Manager

1. It is strictly prohibited to direct compressed air towards a person.
2. If air pressure is being used to clean an area, the user must wear personal protective equipment. Ensure that other persons are clear of flying chips, scale, etc.
3. Do not use compressed air at greater than 30 psig for cleaning purposes. Use eye protection.
4. Never use compressed air for cleaning off clothing.
5. Never use compressed air to blow off your hair or skin.
6. Be aware that a disconnected air line can whip around forcefully.
7. Never leave air hoses or equipment pressurized when not in use.

CODE OF SAFE PRACTICES FOR CONFINED SPACES

Job Class: Operations/Maintenance Employees
Date Prepared: Preparer: Plant Manager

Definition

1. Existing ventilation is not sufficient to remove dangerous air contamination and/or oxygen deficiency may exist or develop.
2. Ready access or egress is difficult for removal of a suddenly disabled employee due to the location and/or size of the openings.
3. Not designed to be continually occupied by humans.
4. Any space, above or below ground, with poor natural ventilation should be treated as confined and dangerous.

Confined Space Entry Policy

1. Before entering a confined space, a confined space entry permit must be completed.
2. Always isolate and lock/tag out lines carrying hazardous substances.
3. Use natural or mechanical ventilation to purge space of hazardous substances.
4. Always test for oxygen content and presence of flammable and hazardous substances.
5. Continue testing the atmosphere frequently while work is in progress.
6. Keep written records of test results for duration of job.
7. If pre-entry atmosphere testing of a confined space indicates that dangerous air contamination exists, always use all safety precautions to make it a safe entry.

CODE OF SAFE PRACTICES FOR THE PREVENTION OF CUMULATIVE TRAUMA DISORDERS

Job Class: Operations/Maintenance/Administrative Employees
Date Prepared: Preparer: Plant Manager

The most common cause of CTD is repetitive, usually forceful, hand and forearm motions. It can also be a result of:

1. Excessive power tool vibration.
2. Poor handle grips.
3. Inappropriate or inadequate hand tool.
4. Staying too long in the same position.
5. Awkward reaching, stretching or twisting of arms and/or waist.

Safety Procedures

1. Choose the right tool for the task.
2. Use a power tool instead of a manual tool when possible.
3. Maintain tools properly to reduce vibration.
4. Use two hands for a task rather than one.
5. Switch tasks periodically to use different movements and muscles.
6. Reduce the number of repetitive movements in a task.
7. Keep wrists straight rather than bent or flexed.
8. Grasp objects with your full hand and all fingers.
9. Carry materials, especially if they are an awkward size, with a palm-down grip.
10. Take periodic schedule breaks from repetitive tasks.
11. Stretching your arms and upper body a few times before you start work will help prevent cumulative trauma disorders.

CODE OF SAFE PRACTICES FOR ELECTRICAL SAFETY

Job Class: Operations/Maintenance Employees
Date Prepared: Preparer: Plant Manager

1. Work in areas which dangerous electrical are likely to contain a recognizably hazard should be avoided.
2. Work must be performed by employees who have been trained to recognize and avoid the hazards to which they will be exposed.
3. Where work to be performed requires employees to work on or near exposed circuit parts or equipment, always de-energize, lockout and tagout the equipment or circuit.
4. When it is not feasible to de-energize and lock or tag out electric circuits and equipment, never work near or on exposed electric conductors and circuit parts unless you have been trained to do so and only with the permission of the Plant Manager.
5. Employees must be alert at all times when they are workings near exposed energized parts and in work situations in which-unexpected electrical hazards may exist.
6. Employees should not knowingly work, or be permitted to work when their alertness is recognizably impaired due to illness, fatigue, or other reasons.
7. Never reach blindly into areas which may contain energized equipment.
8. Never enter or work spaces containing exposed electrical parts unless adequate illumination is provided.
9. Never wear conductive articles of jewelry and clothing such as watch bands, bracelets, rings, necklaces, metalized aprons, cloth with conductive thread, or metal headgear where such items present an electrical contact hazard with exposed energized parts.
10. Always use suitably insulated tools or handling equipment when it is possible for these items to make accidental contact with energized equipment or parts. (This includes properly insulated fuse handling equipment).
11. Always use protective shields, barriers, or insulating materials to protect from electrically-induced injuries when working in the vicinity of or on exposed energized parts.
12. In all cases, use a insulated mat covering the floor in the work area when working on electrical equipment or circuits.
13. Janitorial duties should not be performed adjacent to exposed energized electrical present an electrical safety precautions are taken.
14. Water, steam, conductive cleaning fluid, steel wool, or metalized cloth are examples of materials not suitable for use in the vicinity of energized components.
15. When work is performed in locations containing energized overhead lines which are not guarded, isolated, or insulated, precautions shall be taken.
16. Always wear approved insulated gloves and eye protection when working with voltages in excess of 300 volts.

17. Always alert other employees that there are exposed energized parts or components in the area by using the following:
    A. Safety signs and tags.
    B. Barricades. Metal barricades should not be used where they are likely to contact the energized conductor.
    C. Manual signaling should be used when work areas prevent signs and barricades from being effective alert measures.
18. Only employees who have been trained to work safely with test instruments and equipment on energized circuits shall be permitted to perform testing work on electronic circuits or equipment.
19. Always visually inspect for internal defects or damage before each use all test instruments and equipment and associated test leads, cables, power cords, probes, and connectors.
20. Always make sure that test instruments and their accessories are rated for the circuits and equipment to which they will be connected, and suitable for the environment in which they will be used.
21. Always remove any personnel protective equipment and reinstall all permanent barriers and covers after the work on the energized system or equipment is finished.
22. Only use flexible cords and cables which contain an equipment grounding conductor for cord and plug connected electric equipment.
23. Never use adapters which interrupt the continuity of the equipment grounding connection.

CODE OF SAFE PRACTICES FOR EYE AND FACE PROTECTION

Job Class: Operations/Maintenance Employees
Date Prepared: Preparer: Plant Manager

Protects eyes and face from:
1. Impacts
2. Heat
3. Chemicals
4. Dust and airborne grit
5. Radiation

Precautions
1. Wear safety glasses to protect against flying objects while chipping, scrapping, grinding or when there is a chance something can get into the eye.
2. Wear safety goggles to protect against dust, splashes, flying objects or sparks coming from any direction. Indirectly ventilated goggles should be used to keep out dust and while doing chemical test to keep out chemical splashes.
3. Wear face shields to protect face and neck from hazardous chemical splashes, heat, glare and flying objects. Always wear safety classes or goggles with a face shield so splashes or objects cannot come from underneath the shield and get in the eyes.
4. Always wear a face shield and mono-goggles when handling or using chemicals.

CODE OF SAFE PRACTICES FOR FIRE PREVENTION

Job Class: Operations/Maintenance Employees
Date Prepared: Preparer: Plant Manager

General Fire Prevention and Control Management

1. Keep equipment and foundations free of oily film buildup.
2. Keep all work and storage areas clean and free of excessive combustible materials. Promptly discard all used boxes, papers, and packaging.
3. Place all oily rags in an approved storage container.
4. Maintain ample clearance around all heat producing equipment.
5. Promptly report or repair all leaks of flammable liquids and natural gas.
6. Matches and cigarette lighters should not be carried into any area that may have an explosive atmosphere.
7. After handling paints, solvents and other chemicals, hands should be washed before smoking.
8. Flammable and combustible liquids must be stored either in approved storage cabinets or in drums located 50 feet from all occupied buildings.
9. Dispensing of flammable and combustible liquids must be done in a well-ventilated area free of potential ignition sources.
10. DO NOT store materials inside electrical control panels or switchgear equipment.
11. Do not store anything under the floor panels or electrical control panels.
12. Smoke only in designated areas only.
13. Keep all areas in the MCC building free from any combustible materials.
14. Welding and cutting will be done only in the designated welding area. If welding and cutting is done away from this area, safety precautions for welding and cutting must be strictly enforced.
15. Become familiar with the classes of fire and the types of extinguishing agents which are effective on each class.
    - Class A: Fires involving ordinary combustible material such as wood, cloth, rubber of plastic. Generally combatted using water, although CO_2 and halon are also effective.
    - Class B: Fires involving flammable or combustible liquids or flammable gases. Should be combatted using CO_2 or halon. Water should not be used.
    - Class C: Fires involving energized electrical equipment. Should be combatted using CO_2 or halon. Water can be used after the circuit has been de-energized, but should be avoided if possible.
    - Class D: Fires involving certain combustible metals such as magnesium, sodium or potassium. Special extinguishing methods are required, such as smothering with sand.

CODE OF SAFE PRACTICES FOR GAS CYLINDERS

Job Class: Operations/Maintenance Employees
Date Prepared: Preparer: Plant Manager

1. Handle all cylinders of gas fittings carefully to avoid breaking the fittings.
2. Do not roll cylinders on their sides. If a cylinder must be moved, roll it on its bottom end or use an appropriate cart.
3. Secure all cylinders (empty or full) in an upright position so that they can not fall. Securing chains are usually provided for this purpose . . . use them!
4. A cage or cradle must be used when lifting cylinders with a crane or derrick.
5. The valve cover must be in place when a cylinder is not connected to a regulator and screwed down to the last thread.
6. Always use cylinders in the vertical position with valve end up.
7. Never take any type of cylinder into a confined air space.
8. Never attempt to use a cylinder that is damaged or defective
9. Never use cylinders as rollers to move or support other materials or equipment.
10. Valves must be closed off before a cylinder is moved, when the cylinder is empty, and at the completion of each job.
11. Cylinders without fixed hand wheels must have keys, handles or non-adjustable wrenches on stem valves when in service.
12. If cylinders are not in a movable cylinder cart, they must be tied up in their proper storage area with valve cover on and screwed down to the last thread.

CODE OF SAFE PRACTICES FOR GOOD HOUSEKEEPING

Job Class: Operations/Maintenance Employees
Date Prepared: Preparer: Plant Manager

1. Keep all tools and materials in their proper place when not in use.
2. Keep sharp edges sheathed.
3. Keep the floor clean at all times.
4. Keep cords, cables and air hoses above floor level.
5. Keep aisles and passageways clear.
6. Close all drawers.
7. Cover or sand off splinters.
8. Use permanent wiring, not extension cords, whenever possible.
9. Keep wires and cords untangled.
10. Keep cords away from heat and water.
11. Keep flammable liquids in approved airtight containers, away from ignition sources.
12. Clean up spills immediately.
13. Don't let dust or lint build up on machinery or work surfaces.
14. Remove only necessary quantities of chemicals from-containers.
15. Make sure all chemical containers are labeled.
16. Keep chemical containers closed when not in use.
17. Check chemical containers regularly for leaks.
18. Don't let grease or dirt build up on floors or surfaces.
19. Keep food, drinks and cigarettes out of the work area.
20. Keep lights clean.
21. Report holes, loose boards, and other flooring problems.
22. Place barricades around open manholes.
23. Throw away trash promptly and properly.

CODE OF SAFE PRACTICES FOR HAND PROTECTION

Job Class: Operations/Maintenance Employees
Date Prepared: Preparer: Plant Manager

1. Store tools so that no sharp edges are exposed.
2. Do not operate tools unless all guards are operable and in place.
3. Always disconnect the power source before changing blades, knives, bits or other sharp accessories.
4. Be alert for cuts and punctures from pointed tools, wires, nails, steel and masonry chips, wood splinters, etc.
5. Always lock-out all power sources and <u>test</u> them inoperable before working on any mechanical equipment.
6. Avoid pinch points when handling all materials.
7. NEVER place your fingers or hands through moveable equipment openings.
8. Follow manufacturer's and company instructions for using tools and equipment.
9. Feed material into moving machinery with a push stick, not your hand.
10. Always cut away from your body.
11. Use brushes, not hands, to sweep up metal or wood chips.
12. Check material for sharp edges, burrs, splinters, etc., before handling them.
13. Make sure you know how hot or cold an object is before handling it.
14. Wipe off greasy or slippery objects before handling them.
15. Keep fingers on the sides, not the top or bottom, of spacers when you're stacking material.
16. Put the material down carefully so you don't mash your fingers.
17. Pass tools handle first to other workers.
18. NEVER attempt to use or handle any chemical until you have reviewed its corresponding material safety data sheet.
19. Wear the proper gloves for welding and burning.
20. Wear chemical resistant gloves for handling acids, caustics, and other hazardous irritating substances.
21. Wear high-voltage gloves when performing work on energized electrical equipment.
22. DO NOT wear gloves when the possibility exists of the gloves becoming entangled in rotating or moving machinery.
23. DO NOT use strong solvents to clean your hands.

Avoid injuring your hands by staying alert and using the proper hand protection such as gloves, tapes, guards, barrier creams, and clean personal hygiene.

CODE OF SAFE PRACTICES FOR HAND TOOLS AND EQUIPMENT

Job Class: Operations/Maintenance Employees
Date Prepared: Preparer: Plant Manager

1. Before using any equipment, inspect to verify the tool or equipment is in good condition.
2. Make sure all tools such as chisel or punches are reconditioned or replaced as necessary.
3. Broken or fractured handles on hammers, axes and similar equipment must be replaced before using.
4. Worn or bent wrenches are to be replaced and not used.
5. Always use appropriate safety glasses and face shields when using hand tools or equipment which might produce flying material or be subject to breakage.
6. Jacks need inspecting periodically and before using to assure they are in good operating condition.
7. Tool handles must be checked for proper wedge tightness in the tool head before use.
8. Tool cutting edges must be sharp before using.
9. Store tools so the cutting edge is protected to avoid injury when retrieving.
10. Always select the proper hand tool for the job.
11. Use the tool correctly as the manufacturer intended the tool to be used.
12. Do not allow chisels, punches, or drift pins to develop mushroom heads.
13. Before storing, sharpen, clean, oil, repair or replace tool as necessary.

CODE OF SAFE PRACTICES FOR HEARING CONSERVATION

Job Class: Operations/Maintenance Employees
Date Prepared: Preparer: Plant Manager

Procedure

1. Hearing protection should be worn at all times in and around operating equipment outside of the Control Room and Maintenance Shop.
2. Hearing protection must be worn in all plant areas determined in the area survey to have noise levels over 85 dBA.
3. Double hearing protection must be worn in the GT Package when on line and in any plant areas having noise levels over 100 dBA. Personnel should limit their exposure to noise levels over 100 over 100 dBA.
4. Hearing protection should be provided to all employees and plant visitors. If ear plugs requiring fitting are selected, proper fit must be determined by a competent authority.
5. All areas requiring hearing protection shall be clearly marked. All areas requiring-double hearing protection shall be marked "Double Hearing Protection Required".

CODE OF SAFE PRACTICES FOR HOIST/CHAIN/WIRE ROPE/WEBS/ROPE SLINGS

Job Class: Operations/Maintenance Employees
Date Prepared: Preparer: Plant Manager

1. Before using hoist, make sure the hoist is rated for the job.
2. Stops must be in place on trolley hoists limit.
3. Choose the proper rigging equipment. If unfamiliar with the equipment, STOP and get guidance from your supervisor.
4. Always refer to load charts for proper equipment selection.
5. Never use chains or slings that are kinked or twisted.
6. Inspect all rigging equipment before use and immediately replace defective equipment.
7. Always protect slings from sharp edges.
8. Never use knots, bolts, or other makeshift devices to shorten sling length.
9. Never drag slings over rough, sharp or abrasive surfaces or attempt to pull them out from underneath any load.
10. Always balance the load to avoid material slippage.
11. Never overload or shock-load any rigging equipment.
12. Never get your body, fingers, or hands beneath any suspended load, or your body in a possible pinch point location.

CODE OF SAFE PRACTICES FOR LOCKOUT/TAGOUT

Job Class: Operations/Maintenance Employees
Date Prepared: Preparer: Plant Manager

1. Always lockout and tagout all equipment or systems that may cause any danger or harm to someone while doing maintenance to them.
2. Always fill out all applicable information concerning the maintenance action and the affected equipment or system is completed on the lockout/tagout record sheet.
2. The person conducting maintenance should always locate and identify all isolating tagged out in order to devices required to be locked or make the maintenance action safe. More than one energy source (electrical, mechanical, or others) may be involved.
3. For work on in-service steam and feedwater systems, every attempt should be made to provide two valve protection. A blank flange can be used to ensure two valve protection is provided.
4. Only upon approval of the lockout/tagout record sheet by the operator or plant manager should the maintenance actions start.
5. Always use the following information on each tag:
   identification of the isolating device
   tagged position (shut, tripped, etc.)
   tag number and tagout index number
   date and time of tagout
   initials of the person conducting the tagout.
9. Always insure all energy sources are secured, prior to beginning work, by operating the starting controls for the isolated piece of will not operate. For electrical equipment, the circuit should be checked with a multi-meter to ensure the circuit is de-energized. Always return operating controls to the "off" position after the test.
10. Never remove another persons lockout/tagout devices.

CODE OF SAFE PRACTICES FOR POOLE ELECTRIC POWER TOOLS

Job Class: Operations/Maintenance Employees
Date Prepared: Preparer: Plant Manager

Always wear eye protection.

1. If power tool was provided with a safety guard, the guard must be used.
2. Prior to each use, power tools must be inspected for damage to the plug, cord, and external case. Worn or defective electric tools must be repaired or replaced.
3. Never use an electric power tool's cord for raising or lowering the tool or pulling the plug from the socket.
4. Ensure that electrical outlets are not overloaded.
5. Never use an electric power tool in a manner which will expose it to water, steam, or excessive dust.
6. All electric power tools must be either double-insulated, or provided with a cord containing a grounding conductor. Adapters which interrupt the continuity of the grounding connection are not to be used.
7. Always select the proper power tool for the job and use it strictly as the manufacturer intended.
8. Never wedge a tool switch or guard in the open position.
9. Never use electric power tools while standing in water or in wet or explosive atmospheres.
10. Keep cutting edges of power tool sharp.
11. Always unplug the electrical source prior to changing accessories or performing any maintenance.
12. If power tool
13. When using the power tool,
14. Position your body in a comfortable and balanced manner to avoid falls with power tools.
15. Be alert for heat build-up on the power tool's bits or blades and wear the proper gloves to avoid burns.
16. Always keep electric cords from oils, heat, and sharp edges.
17. Always keep electric unnecessary damage.
18. Prior to <u>each use</u>, portable electric tools should be inspected for damage to the plug, cord, and the external case. Inspect for loose parts, cracks or tears, and wear that might prevent the insulation from functioning properly.

CODE OF SAFE PRACTICES FOR PORTABLE LADDERS

Job Class: Operations/Maintenance Employees
Date Prepared: Preparer: Plant Manager

1. Ladders must be maintained in good condition, joints between steps and side rails tight, all hardware and fittings securely attached, and moveable parts operating freely without binding or undue play.
2. When straight ladders are used on hard surfaces, they must be equipped with a nonskid footing or securely fastened at the bottom to prevent slipping.
3. Ladder rungs and steps must be free from grease and oil.
4. It is prohibited to place a ladder in front of doors opening towards the ladder except when the door is blocked open, locked or guarded.
5. Do not place ladder on boxes, barrels, or other unstable bases to obtain additional height.
6. Always face the ladder when ascending or descending. Do not carry tools or other objects in your hands as you climb.
7. The top of a portable ladder must be secured, or the ladder must be held by another person.
8. The base of a straight ladder should be placed away from the vertical, a distance of about one-fourth the working length of the ladder.
9. When ladders are used to climb from one level to another, the ladder top must extend three feet above the landing.
10. Use a wooden or fiberglass ladder for electrical work. Do not use a metal ladder.
11. When raising a ladder, be certain that it will not contact an electrical line.
12. Do not stand on the top two steps or the spreader of a step ladder or top four ladder rungs.
13. Be-certain all fixed, permanent ladders arc securely fastened.
14. Never paint ladders. Doing so can hide otherwise noticeable defects.
15. Only have one person on a ladder at a time.
16. Work with one hand on the ladder keeping your tools in a hanger or holder.
17. Don't move a ladder while you are on it.
18. Keep your own movements on a ladder slow and cautious.
19. Don't use or create makeshift ladders out of boxes, crates, etc.
20. Lock or block a door before placing a ladder in front of it.

CODE OF SAFE PRACTICES FOR PREVENTING SLIPS, TRIPS AND FALLS

Job Class: Operations/Maintenance Employees
Date Prepared: Preparer: Plant Manager

A. Ladder safety
1. Don't create makeshift ladders of boxes, etc.
2. Metal ladders and electricity don't mix.
3. Lock or block a door before placing a ladder in front of it.
4. Tie ladder at the bottom or have someone hold it.
5. Have the ladder extend at least three feet above top point of support.

B. Stair safety
1. Never run up or down stairs.
2. Always use one hand on the railing.
3. Don't carry anything that blocks your vision.
4. Don't block stairs with obstructions.
5. Keep one hand free for support or to break a fall.

C. Level Ground Safety
1. Keep everything in its proper place and put things away after use.
2. Fix any floor problems, loose or missing tiles, warped wood planks, etc.
3. Keep walkways and aisles clear of obstacles.
4. Keep drawers closed.
5. Dispose of trash promptly and properly.
6. Don't leave machines, tools, or other materials on the floor.
7. Block off and mark areas that are being cleaned or repaired.
8. Keep cords, power cables, or air hoses out of walkways.
9. Clean up spills and leaks right away.
10. Be sure there is enough lighting before you move ahead. If need be, use a flashlight.
11. Walk, don't run.
12. Wear shoes with nonskid soles.
13. Beware of loose pants cuffs; you could trip over them.
14. Don't carry a load you can't see over.
15. Keep your hands at your sides, not in your pockets, for balance.
16. When you sit, keep all chair legs on the floor.
17. Don't jump off platforms or loading docks.
18. Step around obstructions.
19. Don't fool around and engage in horseplay.
20. Pay attention to where you are going and what might be in your way.

CODE OF SAFE PRACTICES FOR RESPIRATORY PROTECTION

Job Class: Operations/Maintenance Employees
Date Prepared: Preparer: Plant Manager

Respiratory Protection Policy

1. Always determine if a tasks could result in personnel exposure to an atmosphere which is, or could rapidly become, hazardous.
2. Always read the Material Safety Data Sheet (MSDS) determine the appropriate level of respiratory protection is required when dealing with a specific chemical or product.
3. Always what respiratory protection is available and where it is, to protect against paint spray, dusts, mists, ammonia vapor, and acid gases.
4. Always make sure the respiratory protection equipment is NIOSH/MSHA approved for the required application.
5. Only use respiratory protection in the manner for which it was designed.
6. Always insure a good face seal is obtained before using respiratory protection equipment.
7. Do not pass respirators from one person to another until the respirator has been cleaned and sanitized.

CODE OF SAFE PRACTICES FOR WELDING, CUTTING AND BRAZING

Job Class: Operations/Maintenance Employees
Date Prepared: Preparer: Plant Manager

1. Only authorized and trained personnel are permitted to use welding, cutting or brazing equipment.
2. Compressed gas cylinders must be checked and examined regularly for obvious defects, rusting, and leakage.
3. All unused gas cylinders (full or empty) must be stored securely in the upright position with its valve cover in place and screwed to the last thread.
4. Keep cylinders and hoses away from heat sources.
5. Keep cylinders, cylinder valves, couplings, regulators, hoses and apparatus free from oily and greasy substances.
6. Before moving cylinders, regulators must be removed and valve caps in place and screwed to the last thread.
7. Cylinders without fixed hand wheels must have keys, handles or non-adjustable wrenches on stem valves when in service.
8. Never crack a fuel gas cylinder valve near sources of ignition.
9. Before removing regulators from cylinders, close the cylinder valve and bleed the regulator.
10. Ground of Electrical Welding Machines (EWM) must be checked periodically.
11. When the EWM is not in use, power must be turned off.
12. Fire extinguishing equipment must always be available for immediate use when welding or cutting.
13. Never coil or loop welding cable around your body.
14. Electrode lead cables must be inspected for wear and damage before use, and replaced if necessary.
15. Always use welding blankets over fire hazards when the object to be welded cannot be removed to a fire safe area.
16. Fire watchers must be assigned when welding or cutting is performed in locations where serious fires might develop. Watchers must remain one-half hour after the completion of the job to detect and extinguish fires.
17. Do not electric weld in the rain.
18. All available welding protective equipment must be worn.
19. Make sure adequate ventilation is available when welding or cutting is performed.

APPENDIX C

WEEKLY SAFETY INSPECTION REPORT	
GENERAL HOUSEKEEPING:	
STORAGE OF HAZARDOUS/FLAMMABLE MATERIALS & COMPRESSED GAS CYLINDERS:	
ELECTRICAL HAZARDS & LOCK-OUT/TAG-OUT:	
HOT WORK AREA:	
FIRST AID, FIRE PROTECTION, AND OTHER EMERGENCY EQUIPMENT:	
PORTABLE TOOLS, LADDERS, RIGGING:	
INSPECTED BY:	DATE:
REVIEWED BY (PLANT MANAGER):	DATE:

RETAIN AT PLANT SITE FOR 3 YEARS

APPENDIX D

OCCUPATIONAL ACCIDENT, INJURY, AND ILLNESS INVESTIGATION FORM

Person Conducting Investigation_____

Date of Accident/Injury/Illness_____

Name(s) of Affected Employee(s)_____

_____

Nature of Accident/Injury/Illness _____

_____

Description of Incident _____

_____

What Workplace Condition, Work Practice, or Protective Equipment

Contributed to the Incident? _____

_____

_____

Corrective action(s) to prevent recurrence

Interim_____

_____

_____

Long term _____

_____

_____

Person responsible for corrective action _____

Signature of Investigator _____

Date _____

FORWARD TO REGIONAL OFFICE WITHIN THREE WORKING DAYS OF INCIDENT

Regional Office Review_____
Date _____

APPENDIX E

EMPLOYEE SAFETY INFORMATION FORM

ThIS FORM IS TO BE USED BY EMPLOYEES WHO WISH TO PROVIDE SAFETY INFORMATION OR REPORT AN UNSAFE WORKPLACE CONDITION OR PRACTICE

DESCRIPTION OF UNSAFE CONDITION OR PRACTICE _____

_____

_____

_____

_____

_____

_____

CAUSES OR OTHER CONTRIBUTING FACTORS _____

_____

_____

EMPLOYEE'S SUGGESTION FOR IMPROVEMENT _____

_____

_____

_____

_____

_____

_____

HAS THIS BEEN REPORTED TO THE PLANT MANAGER OR O&M SUPERVISOR _____

EMPLOYEES NAME (OPTIONAL) _____

Employees are advised that the use of this form or reports of unsafe conditions or practices are protected by law. It is illegal for employers to take any action against an employee in reprisal for exercising their rights to participate in communications involving safety.

The Plant Manager or O&M Supervisor will investigate all reports or questions reported to them and will advise the employee or employees of their response.

Appendix O
Plant Maintenance Program

Appendix O
Plant Maintenance Program

The information contained in this appendix is "typical" of a plant maintenance program for a combined cycle project. This appendix does not necessarily describe the equipment and systems being provided for the cogeneration plant. This appendix describes a plant maintenance program for a "typical" project and is for reference only. The Operations and Maintenance contractor will develop a maintenance program specific to the Procter & Gamble Cogeneration Project.

The following information is included in this appendix:

- Plant maintenance criteria.
- Preventive maintenance schedule.
- Procedure List.

PLANT MAINTENANCE CRITERIA

CRITERIA CODE	LEAD PCT.	LEAD DAYS	CALENDAR DAYS	DESCRIPTION
WT	100%	6	6	WEEKLY TUESDAY
W1	14%	1	7	WEEKLY
W2	57%	4	7	WEEKLY
WF	28%	2	7	WEEKLY FRIDAY
WM	14%	1	7	WEEKLY MONDAY
WT1	100%	7	7	WEEKLY TUESDAY
WW	14%	1	7	WEEKLY WEDNESDAY
M1	25%	8	30	MONTHLY
M2	25%	8	30	MONTHLY
M3	23%	7	31	MONTHLY
3MO	13%	12	91	QUARTERLY
QTR	33%	30	91	QUARTERLY
TM1	8%	7	91	QUARTERLY
TM2	8%	7	91	QUARTERLY
TM3	8%	7	91	QUARTERLY
TM4	33%	30	91	QUARTERLY
T1	13%	16	120	EVERY 4 MONTHS
S1	11%	20	180	SEMI-ANNUAL
S2	17%	31	180	SEMI-ANNUAL
S3	10%	18	180	SEMI-ANNUAL
S4	10%	18	180	SEMI-ANNUAL
S5	4%	7	180	SEMI-ANNUAL
A1	8%	29	365	ANNUAL
A10	8%	29	365	ANNUAL
A2	8%	29	365	ANNUAL
A3	8%	29	365	ANNUAL
A4	8%	29	365	ANNUAL
A5	5%	18	365	ANNUAL
A6	8%	29	365	ANNUAL
A7	8%	29	365	ANNUAL
A8	8%	29	365	ANNUAL
A9	8%	29	365	ANNUAL
Y1	3%	11	365	VALVE MAINTENANCE
B1	4%	29	730	BI-ANNUAL MAINT.
B2	4%	29	730	BI-ANNUAL
4-1	2%	29	1461	EVERY FOUR YEARS
5-1	2%	37	1826	EVERY FIVE YEARS
5-2	2%	37	1826	EVERY FIVE YEARS

PREVENTIVE MAINTENANCE SCHEDULE

		PROCEDURES	
45AW100	AUX HEAT EXCHANGE A SYSTEM		
	ANNUALLY - SEE PROCEDURES	CW2A1	
	MONTHLY - SEE PROCEDURES	CWSM1	
	SEMI-ANNUALLY - SEE PROCEDURES	CW1S1	
45AW200	AUX HEAT EXCHANGE B SYSTEM		
	ANNUALLY - SEE PROCEDURES	CW2A1	
	MONTHLY - SEE PROCEDURES	CWSM1	
	SEMI-ANNUALLY - SEE PROCEDURES	CW1S1	
45AW300	AUX COOL WATER PUMP "A" SYSTEM		
	ANNUALLY - SEE PROCEDURES	CW1A1	CW2A1
	EVERY FOUR MONTHS	CW1S2	
45AW400	AUX COOL WATER PUMP "B" SYSTEM		
	ANNUALLY - SEE PROCEDURES	CW1A1	CW2A1
	EVERY FOUR MONTHS	CW1S2	
45BS100	BLACKSTART ENGINE		
	ANNUAL-SEE PROCEDURES	BSGA1	
	MONTHLY - SEE PROCEDURES	BSGM1	
	SEMI-ANNUALLY - SEE PROCEDURES	BSGS1	
	WEEKLY - WEDNESDAYS SEE PROCEDURES	BSGW1	
45BS200	BLACKSTART GENERATOR		
	ANNUAL-SEE PROCEDURES	BSGA2	
45CA100	AIR COMPRESSOR "A"		
	ANNUALLY - SEE PROCEDURES.	AC8A1	
	EVERY FOUR MONTHS - SEE PROCEDURES	ACT1	
	SEMI-ANNUAL SEE PROCEDURES	ACS1	
	WEEKLY-SEE PROCEDURES	ACW1	
45CA200	AIR COMPRESSOR "B"		
	ANNUALLY - SEE PROCEDURES	AC8A1	
	EVERY FOUR MONTHS - SEE PROCEDURES	ACT1	
	SEMI-ANNUAL SEE PROCEDURES	ACS1	
	WEEKLY-SEE PROCEDURES	ACW1	

		PROCEDURES	
45CA400	INSTRUMENT AIR DRYER SYSTEM		
	ANNUALLY - SEE PROCEDURES	ADA1	
	SEMI-ANNUALLY - SEE PROCEDURES	ADS1	
	WEDNESDAY - SEE PROCEDURES	AD1W1	
45CI000	CHEMICAL INJECTION BOILER		
	SEMI-ANNUAL - SEE PROCEDURES	CIM3	
45CL000	PLANT CLEAN UP		
	FRIDAY - SEE PROCEDURES	CL1W1	CL1W2
45CS400	CONDENSATE PUMP A SYSTEM		
	SEMI-ANNUAL SEE PROCEDURE	CSS1	MSA1
45CS500	CONDENSATE PUMP B SYSTEM		
	SEMI-ANNUAL SEE PROCEDURE	CSS1	MSA1
45CS800	BOILER MAKE-UP SYSTEM		
	SEMI-ANNUAL SEE PROCEDURES	MSA1	
45DC120	HARDWARE		
	ANNUAL - SEE PROCEDURES	DCA1	
	TRI-MONTHLY - SEE PROCEDURES	DCTM1	
	TRI-MONTHLY - SEE PROCEDURES	DCTM2	
	TRI-MONTHLY - SEE PROCEDURES	DCTM3	
	WEEKLY - SEE PROCEDURES	DCW1	
45DE000	DEMIN SYSTEM		
	MONTHLY - SEE PROCEDURES	DS2M1	
45DE100	TRAIN ONE SYSTEM		
	ANNUAL - SEE PROCEDURES	DS5S1	
45DE200	TRAIN TWO SYSTEM		
	ANNUAL - SEE PROCEDURES	DS5S1	
45DE500	ACID SYSTEM		
	ANNUALLY - SEE PROCEDURES	DS2A1	
	SEMI-ANNUAL - SEE PROCEDURES	MSA1	

		PROCEDURES
45DE600	CAUSTIC SYSTEM	
	ANNUALLY - SEE PROCEDURES	DS2A1
	SEMI-ANNUAL - SEE PROCEDURES	MSA1
45DE700	NEUTRALIZATION SYSTEM	
	ANNUALLY - SEE PROCEDURES	DS3A1
	MONTHLY - SEE PROCEDURE	DS3M1
	SEMI-ANNUAL SEE PROCEDURES	MSA1
45DE800	DEMIN MAKE-UP SYSTEM	
	ANNUALLY - SEE PROCEDURES	DS4A1
	SEMI-ANNUAL SEE PROCEDURES	MSA1
45ED000	ELECTRICAL DISTRIBUTION SYSTEM	
	BI-ANNUAL SEE PROCEDURES	ED1B1
	SEMI-ANNUALLY - SEE PROCEDURES	ED1S1
45ED100	TRANSFORMERS	
	ANNUALLY - SEE PROCEDURES	TRFA1 TR1A1 EDA1 TR3A1
	MONTHLY - SEE PROCEDURES	TRFM1
45ED200	13KV SWITCH GEAR	
	ANNUALLY - SEE PROCEDURES	ED2A1
	BI-ANNUAL SEE PROCEDURES	ED2B1
45ED300	480 SWITCH GEAR	
	ANNUALLY - SEE PROCEDURES	ED2A1
45ED400	AC DISTR. PANEL 225AF BREAKER	
	ANNUALLY - SEE PROCEDURES	ED4A1
45ED500	UPS SYSTEM	
	SEMI-ANNUALLY - SEE PROCEDURES	EDS1
45ED600	GT BATTERY SYSTEM	
	EVERY 3 MONTHS-SEE PROCEDURES	ED3MO
	SEMI-ANNUALLY - SEE PROCEDURES	EDS1
45FG000	FUEL GAS SYSTEM	
	ANNUAL - SEE PROCEDURES	FGNF
45FG100	GAS COMPRESSOR A SYSTEM	
	ANNUALLY - SEE PROCEDURES	FG1A1
	MONDAY - SEE PROCEDURES	FGWL
	SEMI-ANNUALLY - SEE PROCEDURES	FG1S1 MSA1 FGVS1

		PROCEDURES		
45FG200	GAS COMPRESSOR B SYSTEM			
	ANNUALLY - SEE PROCEDURES	FG1A1		
	MONDAY - SEE PROCEDURES	FGWL		
	SEMI-ANNUALLY - SEE PROCEDURES	FG1S1	MSA1	FGVS1
45FG500	GAS COMPRESSOR CONTROLS			
	SEMI-ANNUALLY - SEE PROCEDURES	FG3S1		
45FG600	GAS RECEIVER			
	MONDAY - SEE PROCEDURES	FG1W1		
45FO000	FUEL OIL SYSTEM			
	MONTHLY-SEE PROCEDURE	GTFM1		
	SEMI-ANNUAL SEE PROCEDURES	FOS1		
45FO100	FUEL OIL PUMP SYSTEM			
	ANNUALLY - SEE PROCEDURES	FOA1		
	SEMI-ANNUAL SEE PROCEDURES	MSA1		
45FS000	FIRE & SAFETY EQUIPMENT			
	ANNUAL - FLUSH BOTH FIRE HYDRANTS	HYDRN		
	ANNUALLY - SEE PROCEDURES	FSA1		
	MONDAY - SEE PROCEDURES	FSW1	FS2W	FS2W1
	MONTHLY - SEE PROCEDURES	FSM1	FS2M	FS3M
		FS4M	FS5M	
45FS100	SELF CONTAINED BREATHING APP.			
	MONTHLY - COMPLETE ALL PROCEDURES FOR EACH UNIT UNIT #1 CONTROL ROOM UNIT #2 MAINTENANCE SHOP	FS0M1	FS0M2	FS0M3
		FS0M4	FS0M5	
45FW100	FEED PUMP A SYSTEM			
	SEMI-ANNUAL SEE PROCEDURES	MSA1		
45FW200	FEED PUMP B SYSTEM			
	SEMI-ANNUAL SEE PROCEDURES	MSA1		
45FW300	FEED PUMP STBY BOILER 105			
	EVERY FOUR MONTHS - SEE PROCEDURES	BFWT1		
	SEMI-ANNUAL SEE PROCEDURES	MSA1		
45FW400	FEED PUMP STANDBY BOILER 106			
	EVERY FOUR MONTHS - SEE PROCEDURES	BFWT1		
	SEMI-ANNUAL SEE PROCEDURES	MSA1		
45FW700	D/A TANK SYSTEM			
	ANNUAL - SEE PROCEDURES	FW7A1		

		PROCEDURES	
45GT000	GAS TURBINE SYSTEM		
	WEEKLY WEDNESDAY - SEE PROCEDURE	GTMW	
	WEEKLY-SEE PROCEDURES	GTW1	
45GT100	HYDRAULIC START SYSTEM		
	ANNUAL - SEE PROCEDURES	GTFIL	
	MONTHLY - SEE PROCEDURE GTM2	GTM2	
	SEMI-ANNUALLY - SEE PROCEDURE	GTS1	MSA1
45GT1000	GAS TURBINE ANCILIARY EQUIP.		
	SEMI-ANNUAL SEE PROCEDURES	MSA1	
45GT200	LM6000		
	QUARTERLY - SEE PROCEDURE	GT3MO	
	SEMI-ANNUAL MAINTENANCE	RECOU	
	WEEKLY - THIS PROCEDURE MUST BE COMPLETED AND TURNED IN ON MONDAY TO GENERATE NEXT WEEK'S PM	GT2W1	
45GT210	LM6000 CONTROLS		
	ANNUAL - SEE PROCEDURE	PROBE	
	MONTHLY - SEE PROCEDURE	T5.4	
	SEMI-ANNUAL - SEE PROCEDURES	GT1S1	
45GT300	GT LUBE OIL SYSTEM		
	ANNUAL - SEE PROCEDURES	OILFT	
	MONTHLY-SEE PROCEDURES	GT1A1	
	QUARTERLY - SEE PROCEDURE	GTQTR	
	QUARTERLY - SEE PROCEDURES	GT3S1	
45GT400	GENERATOR LUBE OIL SYSTEM		
	SEMI-ANNUALLY - SEE PROCEDURES	GTG2S	MSA1
45GT500	G.T. FUEL SYSTEM		
	SEMI-ANNUAL SEE PROCEDURES	MSA1	
45GT510	GAS FUEL		
	QUARTERLY - SEE PROCEDURES	GTFLT	
45GT600	GT VENTILATION SYSTEM		
	MONTHLY - SEE PROCEDURE	GT0M1	
	QUARTERLY - SEE PROCEDURE	GT13M	
45GT700	GAS TURBINE GENERATOR		
	ANNUALLY - SEE PROCEDURES	GTG2A	
	SEMI-ANNUALLY - SEE PROCEDURES	GTGS1	

		PROCEDURES
45GT800	FIRE PROTECTION EVERY 3 MONTHS-SEE PROCEDURE	3MOGT
45GT900	WATER INJECTION SYSTEM SEMI-ANNUALLY - SEE PROCEDURE	GTS11 MSA1
45LP100	"A" OIL LUBRICATED PUMPS QUARTERLY - MAINTENANCE	LP3MO
45LP200	"B" OIL LUBRICATED PUMPS QUARTERLY - MAINTENANCE	LP3MO
45OS000	OIL SAMPLES QUARTERLY - SEE PROCEDURE	OST1 OST2 OST3
45PP0000	PHYSICAL PLANT, GENERAL QUARTERLY - SEE PROCEDURES	PP3MO
45PP2000	CONTROL RM A/C SYSTEM A EVERY FOUR MONTHS - SEE PROCEDURES	PPT1
	MONTHLY - SEE PROCEDURES	PPM1
	SEMI-ANNUAL SEE PROCEDURES	MSA1
45PP3000	CONTROL RM A/C SYSTEM B EVERY FOUR MONTHS - SEE PROCEDURES	PPT1
	MONTHLY - SEE PROCEDURES	PPM1
	SEMI-ANNUAL SEE PROCEDURES	MSA1
45PP4000	MCC AIR CONDITIONING EVERY FOUR MONTHS - SEE PROCEDURES	PPT2
	SEMI-ANNUAL SEE PROCEDURE	MSA1
45SB100	SB BOILER HX-002 SYSTEM ANNUALLY - SEE PROCEDURES	SB1A1 SB4A1 SBBA1 SB7A1 SB9A1
	EVERY FOUR MONTHS - SEE PROCEDURE	SBBT1
	SEMI-ANNUAL SEE PROCEDURES	MSA1
	WEDNESDAY - SEE PROCEDURE	SBMW1
45SB200	SB BOILER HX-003 SYSTEM ANNUALLY - SEE PROCEDURES	SB1A1 SB4A1 SB7A1 SBBA1 SB9A1
	EVERY FOUR MONTHS - SEE PROCEDURE	SBBT1
	SEMI-ANNUAL SEE PROCEDURES	MSA1

		PROCEDURES		
	WEDNESDAY - SEE PROCEDURE	SBMW1		
45SB600	STANDBY BOILER CONTROLS			
	ANNUALLY - SEE PROCEDURES	SB2A1	SB3A1	
	MONTHLY - SEE PROCEDURE	SBM1		
	SEMI-ANNUALLY - SEE PROCEDURES	SB1S1	SB2S1	SB3S1
		SB5S1		
45SC100	SCR CATALYST			
	MONTHLY - SEE PROCEDURE	SCRQT		
45SC200	AMMONIA DILUTION/INJECT.EQUIP.			
	SEMI-ANNUAL SEE PROCEDURES	MSA1		
45SC300	NOX ANALYZER SYSTEM			
	MONTHLY - SEE PROCEDURES	NAM1		
	QUARTERLY - SEE PROCEDURE	NAQ1		
	WEEKLY - SEE PROCEDURES	NA1W1	NAW1	OAW1
45SG000	HRSG SYSTEM			
	ANNUAL - SEE PROCEDURES	SG2A1	SG1A1	SG3A1
	SEMI-ANNUAL - SEE PROCEDURE	SG1M1		
45SG100	HP STEAM DRUM SYSTEM			
	ANNUALLY - SEE PROCEDURE	SGA1		
45SG200	IP STEAM DRUM SYSTEM			
	ANNUALLY - SEE PROCEDURES	SGA1		
45SG600	DUCTING			
	ANNUALLY - SEE PROCEDURE	SG8A1		
45SS000	STEAM SYSTEM			
	MONTHLY - SEE PROCEDURE	SSM1		
45ST000	STEAM TURBINE SYSTEM,GENERAL			
	ANNUALLY - SEE PROCEDURES.	ST0A1		
45ST100	TURBINE SYSTEM			
	QUARTERLY - SEE PROCEDURES	ST1-3		
45ST200	STEAM TURBINE LUBE OIL SYSTEM			
	ANNUAL - SEE PROCEDURES	ST2A2	ST3A2	
	ANNUALLY - SEE PROCEDURES	STA1	ST8A1	
	FRIDAY - SEE PROCEDURE STWF1	STWF1		
	MONDAY - SEE PROCEDURES	STW1		
	QUARTERLY - SEE PROCEDURES	ST2-3		
	SEMI-ANNUAL	STOIL		

		PROCEDURES
	SEMI-ANNUAL SEE PROCEDURES	MSA1
45ST300	REDUCTION GEAR	
	ANNUALLY - SEE PROCEDURES	ST9A1
	EVERY 3 MONTHS-SEE PROCEDURE	ST3MO
45ST400	STEAM TURBINE GENERATOR SYSTEM	
	ANNUALLY - SEE PROCEDURES	SG4A1
	MONTHLY - SEE PROCEDURE	CLGEN
	MONTHLY - SEE PROCEDURES	SG3T1
	SEMI-ANNUAL - SEE PROCEDURE	SG2T1
45ST500	TURNING GEAR SYSTEM	
	EVERY 3 MONTHS-SEE PROCEDURE	STQTR
	SEMI-ANNUAL SEE PROCEDURES	MSA1
45ST600	LOCAL & CNTRL RM PANEL SYSTEM	
	EVERY FOUR MONTHS - SEE PROCEDURES	STT1
	QUARTERLY - SEE PROCEDURES	ST6-3 ST3M
	SEMI-ANNUAL - SEE PROCEDURES	ST6MO
45WT000	WATER TREATMENT SYSTEM	
	QUARTERLY - SEE PROCEDURES	WTAUX
	WEEKLY - SEE PROCEDURES	WTW1 WTDRM

PROCEDURE LISTING

Equipment Group 45AW

Procedure Code: CW1A1

45AW300, 45AW400

A1

1. Check torque of blade clamp bolts
2. Check blade tracking. Mark fan ring at low point of leading edge of 1 blade. Rotate remaining blades past mark, if vertical variation exceeds 3/4" adjust offending blade(s)
3. Check blade pitch. Pitch should be 5.5 degrees at tip end

Procedure Code: CW1S1

45AW100, 45AW200

S1

1. Grease fan motor
   NOTE: MOTOR SHOULD BE GREASED WHILE AT REST
2. Check for proper belt tension
   NOTE: SEE TECHNICAL MANUAL FOR BELT TENSIONING PROCEDURE

Procedure Code: CW1S2

45AW300, 45AW400

T1

1. Grease pump motor
   NOTE: ENSURE BEARING CAVITY IS VENTED PRIOR TO ADDING GREASE TO AVOID SEAL DAMAGE
2. Grease pump bearings
   NOTE: ENSURE BEARING CAVITIES ARE VENTED PRIOR TO ADDING GREASE
3. Use Exxon Dolium Grease. (Unirex N2L)

Procedure Code: CW2A1

45AW100, 45AW200, 45AW300, 45AW400

A1

1. Meg motors
   Minimum insulation resistance = 1.5 M
2. Inspect motor control breaker for loose connections, dirt deposits, etc.

Procedure Code: CWSM1

45AW100, 45AW200

M1

Lubricate dodge bearings

NOTE: Add approximately 5 shots from grease gun.
Use Shell Super-Duty grease.

Equipment Group 45BS

Procedure Code: BSGA1

45BS100

A1

TAG OUT BLACKSTART ENGINE AND GENERATOR IN ACCORDANCE WITH PLANT LOCKOUT/TAGOUT PROCEDURES
REFER TO VENDOR MANUAL FOR SPECIFICATIONS ON FOLLOWING MAINTENANCE ITEMS.

1. Change fuel oil filters
2. Change lubricating oil and filters
3. Clean crank case breathers
4. Inspect turbo charges
5. Clean and inspect air filter

NOTE: RUN ENGINE TO OPERATING TEMPERATURE BEFORE DRAINING OIL

Procedure Code: BSGA2

45BS200

A1

TAG OUT BLACKSTART ENGINE AND GENERATOR IN ACCORDANCE WITH PLANT LOCKOUT/TAGOUT PROCEDU
REFER TO VENDOR MANUAL FOR SPECIFICATIONS ON FOLLOWING MAINTENANCE ITEMS.

1. Check space heaters for operation
2. Megger rotor field/exciter
3. Inspect generator windings for contamination
   Clean and dry as necessary
4. Clean rotating rectifier assembly

Procedure Code: BSGM1

45BS100

M1

[redacted]TION: TO PREVENT INADVERTANT START OF ENGINE WHILE MAINTENANCE IS BEING PERFORMED, PLACE THE ENGINE START CONTROL SWITCH IN THE "OFF" POSITION

1. Check fan V-belt for proper tension. Adjust as necessary
2. Inspect turbo charges for exhaust & oil leaks
3. Check battery terminal connections for tightness. Tighten as necessary
4. Clean engine and enclosure

Procedure Code: BSGS1

45BS100

S1

PERFORM THE FOLLOWING:

1. Grease fuel linkage connectors
2. Grease shutdown flapper linkage connectors
3. Remove and clean battery terminals and posts

Procedure Code: BSGW1

45BS100

W1

FUEL FILLED TANK/FUEL LEVEL:

1. Check fuel level. Fill tank to 3/4 full.
2. Check lubricating oil level
3. Visually inspect fuel and lube oil systems for leaks. Repair as necessary
4. Check radiator coolant level. Add coolant as necessary
5. Ensure jacket water and lube oil heaters are [redacted]perating
6. Check battery voltage. Should be approximately 25 VDC
7. Start and load generator in accordance with operating procedures. Run for approximately 15 minutes

---

Equipment Group 45CA

Procedure Code: AC8A1

45CA100, 45CA200

A1

Perform annual service on Air Compressor

1. Check & calibrate pressure & temperature measurement equipment.
2. Manually lift safety valves for test.
3. Change oil and fitler.
4. Disassemble and inspect float valve assembly.
5. Replace loading plunger diaphragm & rebuild solenoid.
6. Test temperature shutdown switches.
7. [redacted]Check condition of coupling & check for seal leakage at motor shaft.
8. Megger motor insulation resistence.

*MATERIALS NEEDED: 45CA1001, 45CA1002, 45CA1007

8 GAL T-68 OIL

Procedure Code: ACS1

45CA100, 45CA200

S1

1. Remove bearing cavity vent plugs
2. Grease compressor motor
3. Replace bearing cavity vent plugs
4. Clean air filters. Replace if badly damaged or contaminated.

Procedure Code: ACT1

45CA100, 45CA200

1. Remove air filter element
2. Clean by air jet and inspect

Procedure Code: ACW1

45CA100, 45CA200

W1

CHECK OIL LEVEL:

1. Fill as necessary using Benz Compressor Oil, Turbo #68 Oil, or SAE-20W Motor oil
   RECORD AMOUNT USED_____GAL.
   ($3.15/GAL)
2. Inspect for oil leaks. Report leaks to maintenance

Procedure Code: AD1W1

45CA400

WW

1. Check pressure drop across the prefilter and after filter.
   _____ PSID
2. Check moisture indicator: _____ blue/pink
3. Bypass air receiver, prefilter and afterfilter solenoid valves momentarily to check for excess fluid flow.
4. Cycle manual moisture trap drain valve.
5. Check system alignment of offline compressor. Change position of lead/lag switch. Ensure proper operation of oncoming unit.

Procedure Code: ADA1

45CA400

A1

1. Open and inspect prefilter cartridges
2. Open and inspect after filter cartridges
3. Remove and inspect pilot gas filter cartridge
4. Verify proper operation of inlet switching and purge exhaust switching valves
5. Remove fill plugs and dessicant screens from top of each dessicant. Inspect dessicant for oil contamination or damage.
6. Verify calibration of measurement instruments

Procedure Code: ADS1

45CA400

S1

Inspect the pilot gas filter cartridge.

Equipment Group 45CI

Procedure Code: CIM3

45CI000

S3

CLEAN O2 SCAVENGER TANK:

1) Stop on-line pump
2) Close pump suction
3) Drain tank
4) Flush with clean water
5) Place system back in service

NOTE: TO BE PERFORMED BETWEEN BATCHES

Equipment Group 45CL

Procedure Code: CL1W1

45CL000

A. Clean and wipe down the following skids & equipment of oil and check for leaks.

1. Steam Turbine Lube Oil Tank (around the vent, etc.)
2. GT Lube Oil Tank
3. Gas Compressors (extender case vent, etc.)
4. Demin Chemical Injection
5. Acid Pump
6. Caustic Pumps
7. Boiler Chemical Injection

Procedure Code: CL1W2

45CL000

WF

1. Make plant walk-through. Clean up any miscellaneous trash around plant
2. Stow any equipment that is lying out and not being used

Equipment Group 45CR

Procedure Code: CR3MO

45CR000

3MO

1. Clean vacuum pump suction strainers and inspect vacuum system
2. Shift transfer pump suction strainer and clean off line strainer

Procedure Code: MSA1

45CR000, 45CS100, 45CS400, 45CS500, 45CS800, 45DE500, 45DE600, 45DE700, 45DE800, 45FG100, 45FG200, 45FO100, 45FW100, 45FW200, 45FW300, 45FW400, 45GT100, 45GT400, 45GT500, 45GT900, 45GT1000, 45PP2000, 45PP3000, 45PP4000, 45SB100, 45SB200, 45SC200, 45ST200, 45ST500

S1

1. Open all motor controllers.
2. Inspect for loose/damaged connections.
3. Clean motor controller enclosures.
4. Megger motor windings with 500V megger. Record readings.

Motor Designator	Megohms
1. _____	_____
2. _____	_____
3. _____	_____
4. _____	_____

Equipment Group 45CS

Procedure Code: ACCS1

45CS100

1. Take oil sample first.
2. Change gear box oil.
3. Grease motor bearings.

MATERIALS: 5 GAL OMALA 220 OIL EACH

Procedure Code: CSS1

45CS400, 45CS500

S1

Grease motor with Dolium-R grease

Equipment Group 45DC

Procedure Code: DCA1

45DC120

A1

1. For each node:
   A) Power down node
   B) Remove each PC card individually, clean and inspect. Ensure proper slot is noted for each module removed.
   C) Clean card file and associated equipment
   D) Check for power supply failure indications or sim failure messages
   E) Check power supply fans for proper operation

Procedure Code: DCTM1

45DC120

TM1

** TAPE 1 **

1. Back-up hard disk (WC00) to streaming tape (TP00).
2. Back-up (WC01) report archive to streaming tape.

Procedure Code: DCTM2

45DC120

TM2

** TAPE 2 **

1. Back-up hard disk (WC00) to streaming tape (TP00).
2. Back-up (WC01) report archive to streaming tape.

NOTE: PRIOR TO COMMENCING DATABASE BACKUP, VERIFY THAT ALL HIGH LEVEL CONFIGURATOR TEMPLETS HAVE PROPER SOURCE/IMAGE REVISION. VERIFY THAT ENVIRONMENT IS READY FOR DOWNLOAD.

Procedure Code: DCTM3

45DC120

TM3

** TAPE 3 **

1. Back-up hard disk (WC00) to streaming tape (TP00).
2. Back-up (WC01) report archive to streaming tape.

Procedure Code: DCW1

45DC120

W1

Perform purge and op test of video copier.

Equipment Group 45DE

Procedure Code: DS2A1

45DE500, 45DE600

1. Open oil reservoir access covers, inspect sumps for contamination
2. Drain and replace hydraulic and gear oil

Materials: 8 gal Omala 150 oil ($8.44/gallon)

Procedure Code: DS2M1

45DE000

M1

1. Check control valve air filter regulators on the following systems for leakage and moisture accumulation. Drain as necessary:
   A) Train One D) Acid
   B) Train Two E) Caustic
   C) Mixed Bed F) Neutralization
2. Clean the following skids and repair any leaks present
   A) Acid Pump-201A/B
   B) Caustic Pumps P-202A/B
   C) Demineralizer Chemical Injection
   D) Neutralization Pump P-203A/B/C

Procedure Code: DS3A1

45DE700

A1

1. Remove coupling guards from each pump P-203 A,B,C
2. Grease bearings and bearing housing slides
3. Grease pump motors with Shell Super-Duty grease
4. Replace covers on coupling guards

Procedure Code: DS3M1

45DE700

M1

Check status of Neut Pump seals.

1) Check raw flush water pressure (75-80).
2) Isolate raw flush water.
3) Start each Neut Pump individually while monitoring the combined seal flush meter.

NOTE: AN INCREASE IN FLOW INDICATES SEAL LEAKAGE.

4) If seal leakage is indicated, tag out pump and report situation to maintenance. Generate a workorder for immediate attention.
5) Restore system to normal configuration.

Procedure Code: DS4A1

45DE800

A1

1. Open bottom drain on demin makeup tank to flush out sediments
2. Calibrate raw water turbine flow meter and transmitter

Procedure Code: DS5S1

45DE100, 45DE200

A2

1. Open cation vessel
2. Take resin sample for lab analysis
3. Back wash contaminants out top of vessel
4. Drain vessel top A level approximately 4-6 inches above resin
5. Add 25 gallons KI-2 Resin Cleaner
6. Agitate resin with air for 4 hours
7. Close vessel, back wash effluent to neut system
8. Perform double regeneration

Equipment Group 45ED

Procedure Code: ED1B1

45ED000

Safety relays tested and calibrated

Procedure Code: ED1S1

45ED000

S1

TOU Meter calibration and test.

Procedure Code: ED2A1

45ED200, 45ED300

A1

1) Rack out breakers
2) Remove breaker covers, inspect for cleanliness, loose/burned connections
3) Vacuum out breaker enclosure

CAUTION: USE PROPER ENERGIZED EQUIPMENT PROCEDURES AS SOME CIRCUITS REMAIN ENERGIZED INSIDE BREAKER ENCLOSURES EVEN WITH BREAKER PACKED OUT

Procedure Code: ED2A2

45ED000

A1

Safety relays tested and calibrated:

Procedure Code: ED2B1

45ED200

B1

V Switch Gear to be tested

Procedure Code: ED3MO

45ED600

3MO

1) Place both GT battery charges in boost simultaneously
2) Allow to run in this configuration for approximately 6 hrs to equalize cells
3) Place both GT charges in float simultaneously
4) Make entry in battery log

Procedure Code: ED4A1

45ED400

A1

Clean and inspect the following AC Distribution Panels:

1) DP-10
2) DP-11
3) DP-12
4) DP-13
5) DP-14
6) LP-01

Procedure Code: EDA1

45ED100

A1

Transformers TX01, TX02, & TX03

Oil and gas analysis to be done by:

Procedure Code: EDS1

45ED500, 45ED600

S

1. Clean batteries
2. Check electrolyte and record readings in battery log
3. Add distilled water as necessary to keep level in proper range

Procedure Code: TR1A1

45ED100

A1

Control wiring and circuits

Procedure Code: TR3A1

45ED100

A1

Insulator cleanliness inspection

Procedure Code: TRFA1

45ED100

A1

Fan operation, check manually

Procedure Code: TRFM1

45ED100

M1

GAUGE READINGS

Liquid Temp/Winding Temp/Press / Liq.Level

TX01 - _____ / _____ / _____ / _____

TXO2 - _____ / _____ / _____ / _____

TX03 - _____ / _____ / _____ / _____

Equipment Group 45FG

Procedure Code: FG1A1

45FG100, 45FG200

A1

Perform Annual Inspection of Gas Compressor

1) Remove suction and discharge valve. Check for broken plates, leaks, etc. Rebuild as necessary
2) Check piston rings for wear, cracks. Replace as necessary.
3) Inspect valve passages and cylinders for damage Record cylinder bore diameter.
4) Remove, clean, and inspect piston rod pressure packing rings and oil wiper rings. Replace as necessary.
5) Check main and connecting rod bearing clearances. Recrod readings.

Procedure Code: FG1S1

45FG100, 45FG200

S1

1) Take oil sample for analysis
2) Clean filter housing
3) Change filter element as required
4) Change frame lube oil
5) Check filter in lubricator discharge line Clean or replace as needed
6) Grease compressor motor bearings

Procedure Code: FG1W1

45FG600

WM

pty out discharge accumulator

Procedure Code: FG3S1

45FG500

S1

Check accuracy of compressor pressure gauge

	Suction Gauge	Discharge Gauge
K-400A	_____	_____
K-400B	_____	_____

Procedure Code: FGNF

45FG000

A1

Open/Inspect GT fuel gas filter

Replace cartridge filters and cover o'ring.

Procedure Code: FGVS1

45FG100, 45FG200

S1

Open and inspect vibration switches.

Verify proper operation of reset linkage.

Procedure Code: FGWL

45FG100, 45FG200

WM

1. Check gas compressor lube oil level
2. Fill as necessary with Morlina 150
3. Record amount on W/O:_____gal
   (price $;/gal)
   (' gal per inch)
4. Empty out suction accumulator

Equipment Group 45FO

Procedure Code: FOA1

45FO100

A1

1. Grease motor bearings (front bearing only)
2. Clean skid

Procedure Code: FOS1

45FO000

S1

1) Pull sample on fuel oil tank using theif sampler.
2) Visually inspect sample for water, sediment, etc.

Procedure Code: GTFM1

45FO000

M1

Inspect and test liquid fuel tank leak detectors

Equipment Group 45FS

Procedure Code: FS0M1

45FS100

1. Check cylinder pressure for full indication 2216 PSI. If necessary, replace cylinder
2. Examine the facepiece and breathing tube and replace damaged parts
3. Perform test always using spare bottle

UNIT #1_____ UNIT #2_____

Procedure Code: FS0M2

45FS100

M1

1. Designated personnel can test for air leaks between the cylinder and the regulator outlet by observing changes in gauge pressure First, open both cylinder and main-line regulator valves and note the indicated regulator pressure
   After observing the regulator pressure, close the cylinder valve and watch the regulator pressure gauge. If the indicator moves toward zero, leaks are present. They may be located by applying soapy water to connections and couplings. Expanding bubbles indicate leaks.

UNIT #1_____ UNIT #2_____

Procedure Code: FS0M3

45FS100

M1

1. Check audi-larm function. Globe recommends: designated personnel check the function of the whistle warning device at the proper pressure by observing the regulator gauge pressure at which the alarm blows.
   A. With the main-line regulator valve open and the cylinder valve closed, the alarm should not ring
   B. With the cylinder valve closed, partly open the regulator by-pass valve to permit the air to bleed out of the system

UNIT #1_____ UNIT #2_____

(CONTINUED ON FS0M4)

Procedure Code: FS0M4

45FS100

M1

CONTINUED FROM FS0M3

C. Observe the drop in pressure on the regulator gauge. The whistle should begin to blow at 450-550 psi on 2216 psi units. The whistle may continue for only a few seconds, until almost all of the air is exhausted in the system, between the cylinder valve and the demand regulator outlet. When the air is completely exhausted, close the by-pass valve.

UNIT #1_____ UNIT #2_____

Procedure Code: FS0M5

45FS100

M1

1. Operation of the main-line valve and by-pass valve is tested by putting on the device and operating it normally. Venting of safety valves, or continuing flow of air through the regulator when the user is not inhaling, indicates the regulator needs to be repaired.
2. In addition, any ususual sound, such as whistling, chattering, clicking or rattling means that the regulator should be further checked

NOTE: FACE MASK TO BE CLEANED WITH MILD DISH SOAP AND WATER, IF NECESSARY

UNIT #1_____ UNIT #2_____

Procedure Code: FS2M

45FS000

M3

INSPECTION ON ANSOL UNITS #1 & #2

1. Check seals to be sure they are not broken
   #1___ #2___
2. Check charge on gauge or by weight, if possible
   #1___ #2___
3. Check hoses for cracks or rot
   #1___ #2___
4. Make sure area is accessible and not blocked
   #1___ #2___
5. Date inspection tag
   #1___ #2___

Procedure Code: FS2W

45FS000

WM

EEKLY INSPECTION OF SAFETY GEAR IN CABINET

Be sure all equipment listed is present and in working order-cleaned, bagged and ready for use*

EQUIPMENT	MIN	MIN ON HAND	REORDER Y/N
Goggles	4	Y/N	_____
Face shield	2	Y/N	_____
Face shield windows	2	Y/N	_____
Acid respirators	2	Y/N	_____
Acid resp. cartridges	10	Y/N	_____
Ammonia cartridges	10	Y/N	_____
Organic vapor cart.	10	Y/N	_____
Acid hoods	2	Y/N	_____
Rubber rain gear	4	Y/N	_____
Rubber apron	1	Y/N	_____
Rubber boots (pairs)	2	Y/N	_____
Rubber globes (pairs)	4	Y/N	_____

Procedure Code: FS2W1

45FS000

WM

WEEKLY INSPECTION OF SAFETY GEAR IN CABINET-CONT.

EQUIPMENT	MIN	MIN. ON HAND	REORDER Y/N
Safety belt	1	Y/N	_____
Lanyard	2	Y/N	_____
Dust mask disposable	20	Y/N	_____
Dust 2 mist mask	5	Y/N	
AT CHEMICAL MIXING STATION:			
Face shield	1	Y/N	_____
Goggles	1	Y/N	_____
Apron	1	Y/N	_____
Rubber gloves	1	Y/N	_____
AT CSH:			
Face shield	1	Y/N	_____
Goggles	2	Y/N	_____
Apron	1	Y/N	_____
Rubber gloves	1	Y/N	_____
Respirator	1	Y/N	_____

Procedure Code: FS3M

45FS000

M3

INSPECTION OF FIRE HOSE CABINETS

CONTENTS:	CABINET #
A. 4 ea - 2 1/2" hoses	#1___ #2___
B. 2 ea - nozzles	#1___ #2___
C. 4 ea - spanner wrenches	#1___ #2___

Procedure Code: FS4M

45FS000

M3

INSPECTION OF NH3 SPRAY WATER

1. Check to see that SV-3606 is operational from D.C.S. by putting PI-3606 in manual and raise pressure until SV-3606 opens (240 lb.).
2. Check to be sure manual valve is accessible and operational
3. Drain containment area and close valve

Procedure Code: FS5M

45FS000

M3

HALON BOTTLES #1 -#5 LIST PSI READING ON EACH

#1 Control Room	psi	_____
#2 MCC Room	psi	_____
#3 Gas Turbine	psi	_____
#4 Gas Turbine	psi	_____
#5 Gas Turbine	psi	_____

Procedure Code: FSA1

45FS000

A1

ANNUAL INSPECTION OF FIRE EXTINQUISHERS #1 - 16

BY OUTSIDE CONTRACTOR:

1. Check seals to be sure they are not broken
2. Check charge on gauge or by weight if possible
3. Check hoses for cracks or rot
4. Make sure area is accessible and not blocked
5. Date inspection tag

Procedure Code: FSM1

45FS000

M

ECTION OF FIRE EXTINGUISHERS #1 - #16:
(CHECK OFF EACH ONE BELOW)

1. Check seals to be sure they are not broken
2. Check charge on gauge, or by weight if possible
3. Check hoses for cracks or rot
4. Make sure area is accessible and not blocked
5. Date inspection tag

****

1. 9.
2. 10.
3. 11.
4. 12.
5. 13.
6. 14.
7. 15.
8. 16.

Procedure Code: FSW1

45FS000

WM

INSPECTION OF SAFETY SHOWERS #1 - #5:

1. Make sure area is clear of obstacles and easily accessible
2. Make sure eye and shower are working. Run water to flush water lines
3. Be sure caps are on eye wash

WEEKLY INSPECTION OF CSH SAFETY SHOWER:

1. Same as above.

Procedure Code: HYDRN

45FS000

A5

lush all fire station hose connections for one
ute.

Equipment Group 45FW

Procedure Code: BFWT1

45FW300, 45FW400

T1

1) Grease motor bearing
2) Grease gear box bearings

USE DOLIUM-R GREASE

Procedure Code: FW7A1

45FW700

A1

TEST DEAERATOR LOW LEVEL TRIP:

1. Place observer at D/A sight to monitor actual level during test
2. Ensure all boiler feed pumps are stopped (P-105, 106, 100A/B)
3. Place D/A level control LC-4015 in manual control and close valve
4. Open D/A bottom drain slightly
5. On the DCS, verify that the low low alarm goes off at approx. 5%
6. On the DCS verify that the low low D/A level message generates
7. Return D/A to operational readiness

Equipment Group 45GT

Procedure Code: 3MOGT

45GT800

1. Test Gas Turbine Engine and Generator Enclosure halon vent dampers.
2. Repair as necessary.

Procedure Code: GT0M1

45GT600

M1

Remove, clean, and inspect Gas Turbine generator enclosure air filters

Procedure Code: GT13M

45GT600

3MO

1). Lubricate Gas Turbine and generator enclosure vent fans and motors.
2). Check V-belts for cracks and proper tension.
3). Grease intake scavenger fans.

Procedure Code: GT1A1

45GT300

M1

1) Check differential pressure for turbine supply filter
2) Check differential pressure for scavenger filter
3) When pressure begins to rise, change or schedule an element change as required

Procedure Code: GT1S1

45GT210

S1

SEMI-ANNUAL CALIBRATION CHECK

Verify calibration of the following:

1. N1 speed switches
2. N2 speed switches
3. Temperature switches
4. T5.4 temperature measurement chain

Test emergency stop push buttons:

1. On the GT control panel, depress the emergency stop push button
2. On the RAC PAC monitor D2 screen, ensure that the remote emergency stop message appears in the shutdown section
3. Depress the reset push button and ensure that the remote emergency stop clears from the RAC PAC.
4. Repeat Steps 2 and 3 for the 2 E-stops in the engine enclosure and 1 in the generator enclosure.

Procedure Code: GT2W1

45GT200

WT

PERFORM ON LINE WATER WASH:

1. Rinse with 2 tanks of water.

COMPLETED BY

Tuesday _____
Wednesday _____
Thursday _____
Friday _____
Saturday _____
Sunday _____
Monday _____

Procedure Code: GT3MO

45GT200

3MO

[redacted]oroscope combustor and HPT

2) Pull spark igniters and inspect for damage or wear

3) Inspect air filters for cleanliness or damage

Procedure Code: GT3S1

45GT300

TM1

1) Verify alignment of standby lube oil cooler

2) Shift Gas Turbine lube oil coolers

3) Make entry in plant operating log

Procedure Code: GT6M1

45GT000

M1

DONE ONLY DURING SHUTDOWN

Water wash GT two times:

1. Use 1 gallon Penetone each wash
2. Rinse twice after each wash

Procedure Code: GTFIL

45GT100

A5

Change GT starter filters.

Required parts:

(2) 45GT1001
(2) 45GT1002
(1) 45GT1003
(4) 45GT1007
(2) 45GT1008

Procedure Code: GTFLT

45GT510

3MO

Blowdown oil accumulated in GT gas fuel filter

[redacted]om section.

Procedure Code: GTG2A

45GT700

A1

1) De-energize and tag GT generator space heaters

2) Remove generator access manhole covers

3) Inspect stator windings for oil or dirt contamination

4) Clean as necessary-see GE technical manual for detailed cleaning procedure

5) Test water cooler leak detectors

Procedure Code: GTG2S

45GT400

S1

Auxiliary lube oil pump:

1. Lubricate A/C lube pump using installed grease cup
2. Use Dolium-R grease

Procedure Code: GTGS1

45GT700

S1

1. Open exciter inspection covers, clean rotating assembly
2. Megger field windings w/ 500V megger
3. Check/replace earth brush

[redacted]

Procedure Code: GTM2

45GT100

M2

heck GT starter hydraulic tank oil level

2. Fill as necessary with Tellus T-32
3. Record amount on W/O _____Gal.
($ gal)

Procedure Code: GTMW

45GT000

WW

PERFORM WEEKLY GAS TURBINE GENERATOR INSPECTIC

Check off items as accomplished:

LM2500 Enclosure:

1. Wipe down walls/floor ____
2. Identify any oil leaks for repair ____
3. Check engine wiring bundles for chafing ____
4. Check for integrity of engine plumbing ____

Brush Generator Enclosure:

1. Wipe down walls/floor ____
2. Verify proper oil flow at bearing sight glasses ____
3. Identify any oil leaks for repair ____

Check the operational condition and cleanliness of the following ancillary equipment:

1. Evaporator cooler skid ____
2. Hydraulic starter skid ____
3. Air filter intake room ____
4. Check evap cooler media for dry spots ____

Procedure Code: GTQTR

45GT300

Q

Remove and inspect turbine lube oil finger strainers

Parts required:

(1) 45GT2054
(2) 45GT2055
(3) 45GT2056

Procedure Code: GTS1

45GT100

S1

Repack grease in GT hydraulic starter spline housing. Use Poly 55 grease.

Procedure Code: GTS11

45GT900

S1

NOX Suppression Equipment:

Take water samples to be analyzed

Procedure Code: GTW1

45GT000

W1

ENGINE OIL LEVEL

1. Check oil level.
2. Add oil as necessary--Turbo 2380 @ $22.16 gal
   NOTE: 1 INCH = 5.406 GALLONS
3. Record amount of oil added: _____gal.

GENERATOR OIL LEVEL

1. Check oil level
2. Add oil as necessary--T-32 oil @ 3.20 gal.
   NOTE: 1 INCH = 7.2 GALLONS
3. Record amount of oil added: _____gal.
4. Wipe down generator enclosure walls & mop floor

Procedure Code: OILFT

45GT300

Change GT control oil filter.

Required parts:

(1) 45GT1001

Procedure Code: PROBE

45GT210

A1

Inspect thermocouple probes:

1) Remove each probe from engine
2) Inspect for wear, degradation
3) Check insulation resistance
4) Reinstall probe in engine

Procedure Code: RECOU

45GT200

S1

Check high pressure recoup startup.

Procedure Code: T5.4

45GT210

M1

Record individual thermocouple readings:

#1 _____	#7 _____	High _____
#2 _____	#8 _____	Low _____
#3 _____	#9 _____	Spread(H/L) _____
#4 _____	#10 _____	
#5 _____	#11 _____	
#6 _____		

Annotate any of the above sensors that are removed from the circuit with an asterisk (*).

Equipment Group 45LP

Procedure Code: LP3MO

45LP100, 45LP200

3MO

Change bearing box oil and clean oil jar

Pumps to be changed:

1. CSH Condensate Pump (P-103 A/B)
2. Boiler Feed Pump (P-100 A/B)
3. NOX Injection Pump (P-500 A/B)
4. Boiler M/U Pump (P-104 A/B)
5. Demin. M/U Pump (P-200 A/B)
6. Grease pump motor inboard and outboard gearings. Remove cavity vent prior to adding grease. Use Dolium-R Grease and Turbo 68 Oil

---

Equipment Group 45OS

Procedure Code: OST1

45OS000

LUBRICATING OIL: (Also see Procedure OST2)
In sending the PAR-TEST FLUID ANALYSIS Report, a consistent I.D. number must be used for each sample. Please use the following description according to the specific sample, with the I.D. number being the most important:
EQUIP. TYPE: GAS TURBINE EXXON TURBO 2380
MANUFACTURER: GENERAL ELECTRIC
ID#: 45GT300 6 MICRON
SYSTEM: BEARING LUBE PALL FILTER
LOCATION: PRESSURE
EQUIP. TYPE: GAS TURBINE GEN. SHELL TURBO 32
MANUFACTURER: GE
ID#: 45GT400 6 MICRON
SYSTEM: BEARING LUBE PALL FILTER
LOCATION: PRESSURE

Procedure Code: OST2

45OS000
3MO
*** CONTINUED FROM OST1 ***
EQUIP. TYPE: GAS TURBINE STARTER SHELL
MANUFACTURER: NEW YORK AIRBRAKE TELLUS-T32
ID#: 45GT100 10 MICRON
SYSTEM: HYDRAULIC HYCON FILTER
LOCATION: SUCTION
EQUIP. TYPE: STEAM TURBINE SHELL
MANUFACTURER: GE TURBO 46
ID#: 45ST200 10 MICRON
SYSTEM: "OTHER" TURBINE TAISEIKOGYO
& GEN BEARING LUBE
LOCATION: PRESSURE
*** CONTINUED TO OST3 ***

Procedure Code: OST3

45OS000
3MO
*** CONTINUED FROM OST2 ***
Take an oil sample from black start generator and perform a fuel dilution test.
Viscosity should be within 5% of new oil.
RESULTS _____ %

Equipment Group 45PP

Procedure Code: PP3MO

45PP0000
QTR
Pump out waste oil from GT and Gas Compressor collection barrels.

Procedure Code: PPM1

45PP2000, 45PP3000
M1
1. Check filters - change as needed
2. Check belts - change/adjust as needed
3. Check humidifier - clean as needed
4. Clean unit and check operation

Procedure Code: PPT1

45PP2000, 45PP3000

[redacted]n A/C unit air filters

Procedure Code: PPT2

45PP4000

T1

1) Tag out MCC air conditioner #1
2) Clean condenser coils
3) Clean air filters
4) Place unit back in service
5) Repeat steps 1-4 for unit #2

Equipment Group 45SB

Procedure Code: SB1A1

45SB100, 45SB200

A1

Inspect combustion air supply system

Procedure Code: SB1S1

45SB600

S1

Inspect fuel shutoff valve

1) Open HX002 control panel door. Deenergize and tag circuit breaker CB1.
2) Remove covers from gas shutoff valves.
3) Inspect for damaged linkage, etc.
4) Lubricate linkage with light oil/WD-40.
5) Replace covers.
6) Remove danger tags. Energize breaker CB1.
7) Repeat steps 1-6 for HX003.

Procedure Code: SB2A1

45SB600

A1

Inspect flame failure system

Procedure Code: SB2S1

45SB600

S1

Test low fire start interlock

1) Close manual gas fuel ball valve on HX002.
2) Take local manual control of firing rate - set at 50%.
3) Attempt to start boiler. Gas cutoff valves should not open and boiler start should fail.
4) If test fails, investigate the cause of failure
5) Restore boiler to normal standby configuration.
6) Repeat steps 1-5 for HX003.

Procedure Code: SB3A1

45SB600

A1

Inspect combustion control system

Procedure Code: SB3S1

45SB600

S1

Test high steam pressure interlock

1) Close and tag out main steam outlet valve for HX002.
2) Ensure boiler drum level is sufficient for start.
3) Start boiler with firing rate in local manual at 5%.
4) Let drum pressure rise to 45 PSI. Boiler should shut down and then refire when pressure decreases to 35 PSI.
5) Restore boiler to normal standby configuration

Procedure Code: SB4A1
45SB100, 45SB200
A1
Inspect piping, wiring and connections of all interlocks and shutoff valves.

Procedure Code: SB5S1
45SB600
S1
Test low gas pressure interlock
1) Close the manual gas fuel inlet ball valve on HX002 - vent downstream side of valve.
2) Align boiler for normal start with exception of gas valve.
3) Attempt to start boiler. It should follow low gas pressure.
4) Realign gas fuel system.
5) Restore boiler to normal standby configuration.
6) Repeat steps 1-5 for HX003.

Procedure Code: SB7A1
45SB100, 45SB200
A1
Inspect boiler for State of California

Procedure Code: SB9A1
45SB100, 45SB200
A1
1. Grease forced draft fan motor and fan bearings
2. Lubricate all damper and firing rate control linkage

Procedure Code: SBBA1
45SB100, 45SB200
B1
Inspect ignitor and burner component

Procedure Code: SBBT1
45SB100, 45SB200
T1
Inspect fan and airflow interlock

Procedure Code: SBM1
45SB600
M1
Calibrate oxygen analyzers

Procedure Code: SBMW1
45SB100, 45SB200
WW
Check operation of boiler.
**NOTE: DO NOT RUN BOILER LONG BECAUSE OF EMISSIONS.

Equipment Group 45SC

Procedure Code: NA1W1
45SC300
W1
Pump maintenance:
Check flow, repair as necessary

Procedure Code: NAM1
45SC300
M1
NOX Analyzer:
Replace charcoal and teflon filters
USE:
Teflon Filter Part #1140
Charcoal Refill #S-0189

Procedure Code: NAQ1

45SC300

[redacted]

Clean inlet and stack NOX analyzer reaction chambers:

1) Turn off power to inlet analyzer.
2) Remove analyzer from cabinet.
3) Remove reaction chamber from analyzer.
4) Rinse reaction chamber, ozone inlet tubing and exhaust tube with demin water.
5) Dry all parts w/instrument air (3 PSI MAX).
6) Reinstall reaction chamber/reinstall analyzer.
7) Calibrate analyzer: wait two to three hours and recalibrate analyzer.
8) Repeat steps 1 to 7 for stack analyzer.

NOTE: PUT AMMONIA FLOW LOOP IN MANUAL PRIOR TO BEGINNING ON STACK ANALYZER.

Procedure Code: NAW1

45SC300

W1

NOX Analyzer:

Calibrate zero and span

Procedure Code: OAW1

45SC300

W1

O2 Analyzers:

1. Check span
2. Check zero
3. Check loop gain- press loop gain push button, meter reading should change by less than 1 1/2% O2. If reading is out of tolerance, refer to vendor manual.

Procedure Code: SCRQT

45SC100

M1

Gather and analyze data for SCR performance for the past month.

Equipment Group 45SG

Procedure Code: SG1A1

45SG000

A1

Test HP and IP drum hi level trips:

1. With the Gas Turbine secured, perform the following:

A. Start a boiler feed pump IAW proper operating procedures

B. Fill HP drum until feed pump trips (approx +7 inches) NOTE: DO NOT EXCEED +10 INCHES WHILE PERFORMING THIS TEST

C. Restart boiler feed pump IAW proper operating procedures

D. Repeat step 1B for the IP drum

E. Return boiler to operational readiness

Procedure Code: SG1M1

45SG000

M1

Blowdown HP and IP magnetic drum level indicator columns. See procedure in operational procedure book.

Procedure Code: SG2A1

G000

t [redacted]nd IP drum low level trips as follows:
ower plant output IAW proper operating proc.
Vith Gas Turbine generator circuit breaker open
form the following:
solate the HP drum level column
)pen the column drain and blow down the column
'erify that the GT trips @ approx. 16 in. on
ıe column
Restore the level column to original alignment
)n the DCS GT group graphic page, reset the
S_TURB control block to normal
********** CONTINUED ON SG3A1 **********

Procedure Code: SG3A1

45SG000

********** CONTINUED FROM SG2A1 **********

4. With the GT engine stopped, perform the following:
a. Isolate the IP drum level column
b. Open the column bottom drain and blow down the column
c. Verify that the remote 86 trip activates on the GT control panel
d. Restore the IP drum level to original alignment
5. On the DCS GT group graphic, reset the GAS_TURB control block to normal

Procedure Code: SG8A1

SG600

form annual HRSG Inspection:
spect expansion joint for evidence of leaks.
spect transition duct for loose plates and
issing insulation.
spect SCR grid for obstructions.
s[redacted]all tube bundles and drain manifolds for
ridence of leaks.

Procedure Code: SGA1

45SG100, 45SG200

A1

Inspect boiler for State of California

ıuipment Group 45SS

Procedure Code: SSM1

SS000

eck and repair steam traps

ıuipment Group 45ST

Procedure Code: CLGEN

ST400

ean generator and generator room.

Procedure Code: SG2T1

45ST400

S1

1) Check rotor resistance
2) Clean rotating rectifier assembly

Procedure Code: SG3T1

45ST400
M2
Check steam turbine generator shaft voltage meter reading on steam turbine control panel.
2) If reading is above 20 MV, check earth brushes for wear.
3) Replace as necessary.

Procedure Code: SG4A1

45ST400
A1
1) Check space heater
2) Test water cooler leak detectors

Procedure Code: ST0A1

45ST000
A1
Check emergency stop valve & steam strainer

Procedure Code: ST1-3

45ST100
3MO
Grease HP and LP actuator linkages. Use Husky Extreme High Temperature Grease.

Procedure Code: ST2-3

45ST200
3MO
Check charge on Steam Turbine control oil accumulators.
1) Using charging assembly - verify accumulator charge is @ 65 psi (accumulator on oil skid).
2) If charge is not within 2 psi, charge as necessary.
Repeat steps 1 and 2 for accumulator inside steam turbine enclosure adjacent to LP actuator.

Procedure Code: ST2A2

45ST200
A2
Test Steam Turbine loss of lube oil pressure trip:
NOTE: THIS PROCEDURE IS PERFORMED WITH STEAM TURBINE ON OPEN CIRCUIT, JUST PRIOR TO SCHEDULED OUTAGE.
1. Station monitor at ST local control panel to monitor lube pressure and restart pumps if actual pressure falls below 7 PSI.
2. At the ST local panel, place the aux lube and emergency lube pump controls in OFF position.
3. On the DCS Steam Turbine lube oil page, manipulate the lube oil pressure input to read approximately 6.5 PSI.
**********CONTINUED ON ST3A2**********

Procedure Code: ST3A2

45ST200
A2
**********CONTINUED FROM ST2A2**********
4. Ensure that the ST trips and the appropriate messages are generated
5. Immediately after unit trips, local panel monitor place aux lube and emergency lube pump controls in auto and reset. At no time is the actual lube pressure to be allowed to drop below 7 PSI
6. Return Steam Turbine to operational readiness IAW proper operating procedures

Procedure Code: ST3M

45ST600
3MO
Test the operation of the Auxiliary Lube Pump logic.
1) Stop turning gear.
2) Monitor PI-2009 (Aux Pump discharge pressure).
3) Stop Aux Pump - watch pressure drop.
4) Aux lube pump should start at 8 PSI.
5) Re-engage and start turning gear.

Procedure Code: ST3MO

45ST300
3MO
Check steam turbine generator coupling oil level
2) Add oil as necessary
USE 90W140 OIL

Procedure Code: ST6-3

45ST600
3MO
Test the operation of the Steam Turbine hand trip device. This is to be done during start-up or shutdown.
With the generator on open circuit, move hand trip device to trip position. Allow Steam Turbine to coast down to at least 1/2 speed prior to resetting hand trip device.

Procedure Code: ST6MO

45ST600
S1
Test operation of ST emergency DC Lube Pump. This is done by manipulating the oil pressure input signal in the DCS. (This can be performed with Steam Turbine at rest.)

Procedure Code: ST8A1

45ST200
A1
Check oil cooler for deposits

Procedure Code: ST9A1

45ST300
A1
Inspect gear unit
Change oil in reduction gear coupling

Procedure Code: STA1

45ST200
A1
Check oil pressure control valve

Procedure Code: STOIL

45ST200
S5
Replace ST lube oil reservoir vent filter.
1) Remove captive nut and top cover.
2) Slide old filter out of housing.
3) Replace filter with new one from spares.
4) Check integrity of rubber caps on cover captive nut. Replace as necessary.
5) Reassemble filter housing cover.

Procedure Code: STQTR

45ST500
3MO
1) Check turning gear oil level
2) Check turning gear belts for proper tension, cracking, etc.
USE 80W90 OIL

Procedure Code: STT1

45ST600
T1
Test overspeed governor

Procedure Code: STW1

45ST200
WM
1. Check Steam Turbine lube oil level
2. Fill as necessary with Turbo 46
3. Record amount on W/O_____gal

Procedure Code: STWF1

45ST200

WF

[redacted] sample from oil sump with the appropriate glass container. Let sit for 1/2 hour and compare to standard.

Equipment Group 45WT

Procedure Code: WTAUX

45WT000

TM1

Take sample of aux cooling water. Perform tests IAW water sampling procedures.

Procedure Code: WTDRM

45WT000

W1

Perform bottom blowdown on HRSG drums.

1) Open outside HP blowdown isolation valve fully.
2) Open inside blowdown valve about 1/2 turn. Allow to blow for 10-15 seconds.
3) Close inside blowdown valve tightly.
4) Close outside blowdown valve tightly.
5) Repeat steps 1-4 for other leg of HP section.
6) Repeat steps 1-4 for IP section.

Procedure Code: WTW1

45WT000

W1

[redacted]ck oil level & condition of the following pumps

Chemical Injection Pumps: P-900 A/B, P-903, P-904, P-901 A/B, P-902 A/B

Acid Pumps: P-201 A/B

Caustic Pumps: P-202 A/B

Use lubricant for Chem. Inj. Pumps: Omala 150

Use lubricant for Acid & Caustic Pumps: Omala 150

Equipment Group 45WW

Procedure Code: WW0A1

45WW000

A1

A liter of neutralization water needs to be tested by BTC Labs, for our annual VRSD permit due August 1ST.
