EASTSHORE Docket 06-AFC-6 Public Comment

From: "Stephen H. Schneider" <shs@stanford.edu>
Subject: **Re: 1/14/08 CEC administrative proceeding re "need" for natural gas thermal power plants/alternatives**
Date: December 29, 2007 11:27:46 PM PST
To: Jewell Hargleroad <jewellhargleroad@mac.com>
Cc: Dan Kammen <kammen@berkeley.edu>

Hello and thanks for the request and thanks Dan for the suggestion--you might comment on my suggestions below. Indeed, gas-fired power plants do generate the greenhouse gas CO2 (though only half that of banned-in-CA coal fired power) a greenhouse gas that the State of California is legally committed to reduce by 80% relative to 1990 levels by 2050, and construction of any more CO2-emitting ventures is a step in the wrong direction, given that not nearly all efficiency and conservation measures that are cost effective have yet been implemented, nor has the Pavley bill gotten its court victory over the EPA--soon I believe--nor has the state committed enough resources for renewable energy like wind and solar thermal power, rapidly becoming competitors to fossil fueled plants.

Thus you could get witnesses to testify on any or all of these items.

On the conservation aspects Dr Jon Koomey at Lawrence Berkley National Lab would be excellent or Ralph Cavanagh of NRDC on the overall energy picture with figures on the various competitors for clean energy services or John O'Donnell of Ausra corporation--a designer/builder of solar thermal power--or my fellow IPCC (which won Nobel Peace Prize this year) author, Mike Mastrandrea at Stanford, who works with me on climate change and avoiding "dangerous" climate-disturbing emissions.

I unfortunately have three appointments and student presentations to deal with on the 14th of January and fly to DC the next day, so try some of these others--all would be effective in a witness box and are certified experts. It is very last minute to expect to get top people still free with only about 2 weeks notice, but hopefully some I named might be still available, or would have other suggestions that might pan out for you.

Good luck in your efforts, Steve S.

Stephen H. Schneider
Melvin and Joan Lane Professor for Interdisciplinary Environmental Studies,
Professor, Department of Biological Sciences
371 Serra Mall
Gilbert Building
Stanford University
Stanford, CA 94305-5020
Also: Senior Fellow, Woods Institute for the Environment
Ph: 650 725 9978
F: 650 725 4387
Websites: climatechange.net
patientfromhell.org

DOCKET
06-AFC-6

DATE
RECD. JAN 1 7 2008

Biography

Stephen H. Schneider is a professor in the Department of Biological Sciences, a Senior Fellow at the Center for Environment Science and Policy of the Institute for International Studies, and Professor by Courtesy in the Department of Civil and Environmental Engineering at Stanford University since September, 1992.

He was honored in 1992 with a MacArthur Fellowship for his ability to integrate and interpret the results of global climate research through public lectures, seminars, classroom teaching, environmental assessment committees, media appearances, Congressional testimony, and research collaboration with colleagues. He has served as a consultant to Federal Agencies and/or White House staff in the Nixon, Carter, Reagan, Bush Sr., Clinton and Bush Jr. administrations. He also received, in 1991, the American Association for the Advancement of Science/ Westinghouse Award for Public Understanding of Science and Technology, for furthering public understanding of environmental science and its implications for public policy. In 1998 he became a foreign member of the Academia Europaea, Earth and Cosmic Sciences Section. He was elected Chair of the American Association for the Advancement of Science's Section on Atmospheric and Hydrospheric Sciences (1999-2001). Schneider was elected to membership in the U.S. National Academy of Sciences in April 2002.

Schneider received his Ph.D. in Mechanical Engineering and Plasma Physics from Columbia University in 1971. He studied the role of greenhouse gases and suspended particulate material on climate as a postdoctoral fellow at NASA's Goddard Institute for Space Studies. He was awarded a postdoctoral fellowship at the National Center for Atmospheric Research in 1972 and was a member of the scientific staff of NCAR from 1973 - 1996, where he co-founded the Climate Project. In 1975, he founded the interdisciplinary journal, **Climatic Change**, and continues to serve as its Editor. He is also the Editor-in-Chief of the **Encyclopedia of Climate and Weather** and author of **The Genesis Strategy: Climate and Global Survival; The Coevolution of Climate and Life; Global Warming: Are We Entering the Greenhouse Century?** and **Laboratory Earth: The Planetary Gamble We Can't Afford to Lose**, among others. He has authored or co-authored over 450 scientific papers, proceedings, legislative testimonies, edited books and book chapters; some 140 book reviews, editorials, published newspaper and magazine interviews and popularizations. He is a frequent contributor to commercial and noncommercial print and broadcast media on climate and environmental issues, e.g., *NOVA, Planet Earth, Nightline, Today Show, Tonight Show, Good Morning America, Dateline, Discovery Channel, British, Canadian and Australian Broadcasting Corporations*, among many others. At Stanford University he teaches classes in a dozen different departments and courses in Earth Systems, Civil and Environmental Engineering, Biological Sciences, Human Biology, the Interdisclipinary Program in Environment and Resources, and a Senior Honors Seminar in Environmental Science, Technology and Policy.

Schneider's current global change research interests include: climatic change; global warming; food/climate and other environmental/science public policy issues; ecological and economic implications of climatic change; integrated assessment of global change; climatic modeling of paleoclimates and of human impacts on climate, e.g., carbon dioxide "greenhouse effect" or environmental consequences of nuclear war. He is also interested in advancing public understanding of science and in improving formal environmental education in primary and secondary schools. He was a Coordinating Lead Author in **Working Group II** of the **Intergovernmental Panel on Climate Change** (IPCC) (under the auspices of the World Meteorological Organization and the United Nations Environment Program) from 1997-2001, and was a Lead Author in **Working Group I** from 1994-1996. He was also a lead author of the **IPCC guidance paper on uncertainties.** He is currently a co-anchor of the Key Vulnerabilities (including Article 2) Cross-Cutting Theme for the Fourth Assessment Report (AR4) of the IPCC.

Professor Schneider is Co-Director of the **Center for Environmental Science and Policy (CESP)** and Co-Director of the **Interdisciplinary Program in Environment and Resources (IPER).**

See also:

- **Publications**
- **Courses**
- **Stanford University Department of Biological Sciences**
- **Institute for International Studies**
- **Stanford Civil and Environmental Engineering**
- **Stanford University Earth Systems Program**
- **Center for Environmental Science and Policy**
- **Stanford Environmental Studies - Climate and Atmosphere**
- **Stanford Environmental Studies - Env. Economics and Policy**
- **Stanford University Interdisciplinary Graduate Program in Environment and Resources**
- **National Academy of Sciences**
- **Academia Europaea**
- **Intergovernmental Panel on Climate Change**

- **Terry L. Root**

Home

EASTSHORE Docket 06-AFC-6 Public Comment
JANUARY 14, 2008

[illegible]

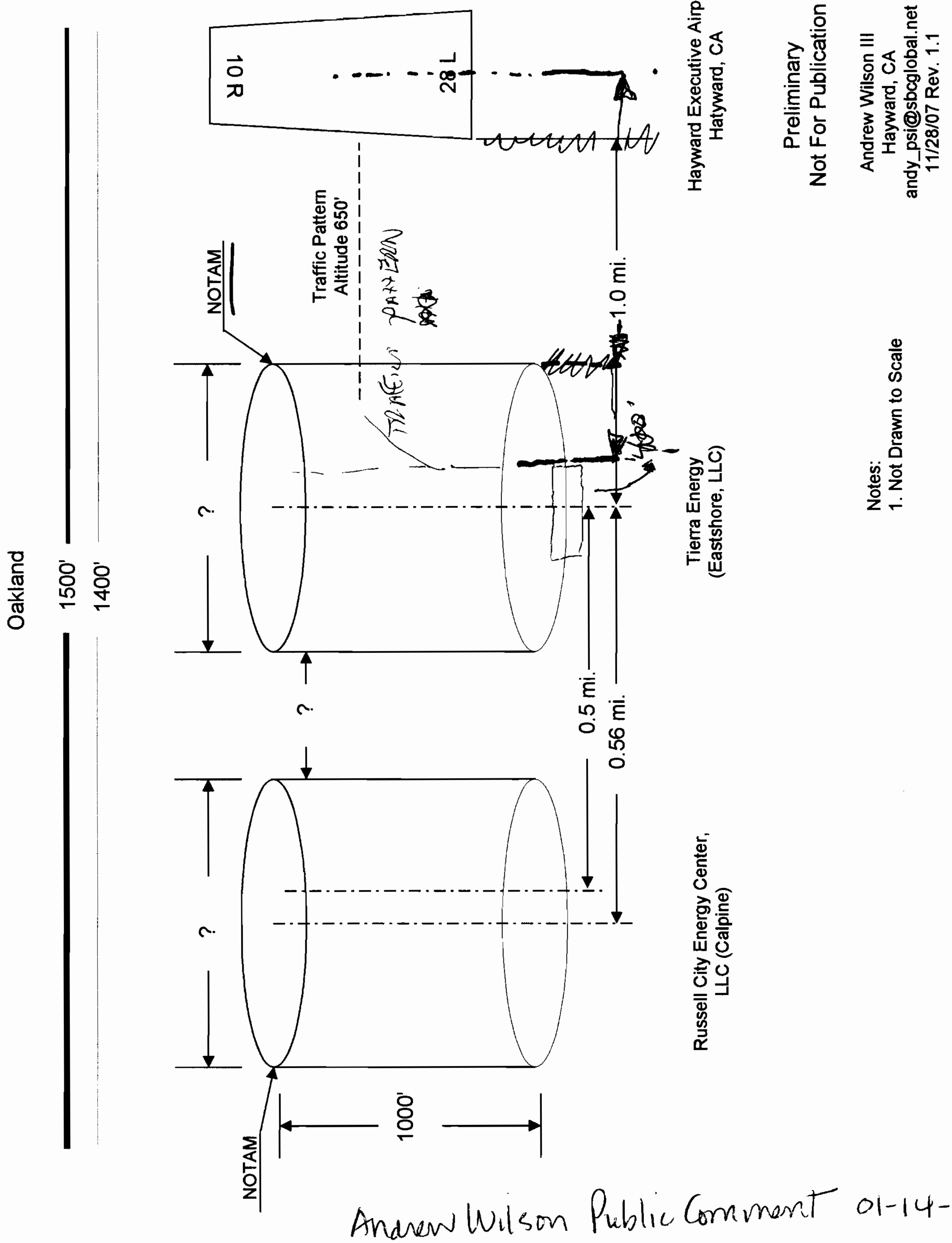

Andrew Wilson Public Comment 01-14-08

EASTSHORE Docket 06-AFC-6
Bob Sarvey's Exhibit 806 - Proposed Revision To AQ-SC6 - Real Time Emission Reduction Program

Revised condition AQSC-8

The applicant will model the impacts from the projects particulate matter emissions. The applicant will use advanced street sweeping, school bus retrofits, vehicle scrapage reductions, fireplace or wood burning stove retrofits, or any other CEC approved emission reduction program in the modeled area of impact with the highest impacted areas mitigated first. The applicant's liability will be limited by the average cost in the BAAQMD for PM-10 ERC's multiplied by the projects Particulate matter emissions of 40.31 tons. The applicant will achieve the reductions pursuant to the following time table

a. achieving 15% of the mitigation (~~3.1~~ 6.0 tons per year) of PM10 within six (6) months after start of construction,

b. achieving 30% of the mitigation (~~6.2~~ 12.09tons per year) of PM10 within nine (9) months after start of construction.

c. achieving 50% of the mitigation (~~10.2~~ 20.16tons per year) of PM10 within twelve (12) months after start of construction.

Sarvey
Exhibit 806 ; DATE DEC 18, 2007

SUBMITTED BY J.V McCARTHY
DURING 12/18/07 PUBLIC COMMENT PERIOD

EAST SHORE Docket 06-AFC-6
Public Comments J.V. McCarthy, dated 01/14/08

SFGOV san francisco

sfgov | residents | business | government | visitors | online services | search ☐ go !

New Search Advanced Search Search Tips

Searched for 'terminated lennar "ch2m hill"' Results **1** - **2** of about **2**. Search took **0.11** seconds.

Sort by date / Sort by relevance

San Francisco Redevelopment Agency: December 05, 2006 (Part 2)
... **Lennar terminated CH2M HILL**'s contract effective September 22, 2006, retaining Mactec to conduct the air monitoring under strict quality assurance/quality ...
www.sfgov.org/site/sfra_page.asp?id=50578 - 99k - Cached

[PDF] RESPONSE TO REQUEST FOR PROPOSALS
Page 1. RESPONSE TO REQUEST FOR PROPOSALS NAVAL STATION TREASURE ISLAND | TREASURE ISLAND COMMUNITY DEVELOPMENT, LLC Submitted to ...
www.sfgov.org/site/uploadedfiles/treasureisland/TI_RFP_pdf.pdf

Powered by Google™

contact us | accessibility policy | disclaimer | privacy policy implemented through the middle of October 2006. In each case, Lennar ceased operations immediately upon receiving air monitoring results that require shut down, in accordance with BAAQMD standards. These shut downs therefore provide additional protection against airborne asbestos exposures in the neighborhood. In all cases, grading operations resumed only when air-monitoring results for asbestos reached levels deemed acceptable by BAAQMD.

In July 2005, before construction activities began, Lennar began air monitoring for asbestos in ambient air on Parcel A in order to provide a baseline level for future sampling during construction. In a letter dated August 22, 2006, Lennar's air monitoring contractor, CH2M Hill, informed Lennar that the contractor "could not verify the accuracy of their reported results" through August 2, 2006. CH2M Hill explained that it had discovered possible errors in the collection of the air samples, due to improper use and maintenance of the air sampling equipment. Lennar gave notice to DPH and BAAQMD of this sampling failure and engaged Mactec Consulting and Engineering ("Mactec") to conduct peer review of CH2M HILL's air monitoring activities beginning in mid-August. Proper air sampling began on August 3, 2006.

Lennar did not commence cutting into serpentinite until May 23, 2006, and significant earthmoving activities began on April 25, 2006. Consequently, the potential for the release of airborne asbestos is minimal through April 25, 2006 and potentially until May 23, 2006. Due to the monitoring failures described above, however, Lennar does not have data for ambient levels of airborne asbestos on Parcel A, nor can it confirm the levels of airborne asbestos between April 2006 and August 2, 2006. Since monitoring of the workers during this same period of time demonstrated that standards were not exceeded; therefore, it is highly unlikely that levels of asbestos were unsafe.

On August 31, 2006, DPH staff, Lennar and CH2M HILL met with BAAQMD to discuss the actions taken by Lennar and CH2M HILL to address air monitoring quality assurance/quality control problems. On September 6, 2006, BAAQMD issued a Notice of Violation ("NOV") to Lennar as a result of two issues: (1) the air monitoring problems by CH2M HILL; (2) and concerns regarding dust on tires leaving the construction area. On September 18, 2006, Lennar responded to the BAAQMD NOV, clarifying CH2M HILL's activities, the period during which NOA may have been disturbed and describing Lennar's approach to address track out concerns. Lennar terminated CH2M HILL's contract effective September 22, 2006, retaining Mactec to conduct the air monitoring under strict quality assurance/quality control protocols.

b.) Dust Monitoring

Significant earthmoving activities began on April 25, 2006. In association with this work, Lennar was required to control dust, conduct visual monitoring and install particulate dust monitors. As required in the Dust Control Plan, Gordon Ball, Lennar's grading contractor, conducted dust control, and a second Lennar contractor, Luster International, conducted visual dust monitoring. The Dust Control Plan required Lennar to install particulate dust monitors by the date on which significant earthmoving activities began - in this case, April 25, 2006. Lennar did not do so until June 27, 2006. Therefore, as part of its regulatory oversight, DPH cited Lennar for failing to install particulate dust monitors when significant earthmoving began.

From the beginning of earthmoving activities in April 2006, Lennar and DPH received complaints about dust control issues at the site. Some complaints were received directly by Lennar and its contractors through a 24-hour telephone response line, 1-866-5LENNAR, while others were reported directly to DPH.

On July 7, 2006, Amy Brownell from DPH conducted a site inspection and issued a Notice of Violation ("NOV") due to Lennar's failure to control the dust. In response to the NOV, Lennar made improvements to its dust control program including installation of a sprinkler system on the haul road to supplement the water spraying to control the dust on the haul road; modification of sprayers on water trucks for more efficient coverage; implementation of a weekly dust control checklist; and more frequent reporting of particulate data to DPH.

On August 9, 2006, DPH conducted another site inspection and although improvements had been made, DPH did not consider them adequate and therefore issued another NOV for insufficient dust control. In response to the second NOV, Lennar made further improvements to its dust control and itself by accelerating air downward at an angle to the vertical. The helicopter is the most successful vertical takeoff and landing (VTOL) aircraft developed, by virtue of its relatively high efficiency in performing hovering and low-speed flight missions.

It was not until the 1930s that helicopters began to demonstrate practical capabilities. In 1937 Heinrich Focke built in Germany a twin-rotor helicopter, which ultimately demonstrated meaningful performance capabilities. In 1939 Igor Sikorsky built a relatively simple and controllable single-rotor helicopter, which evolved into the modern standard configuration. In 1946 a single-rotor machine developed by Lawrence Bell received the world's first commercial helicopter license.

Dynamics. The key to understanding the operation and control of a helicopter lies in a knowledge of the forces and resultant motion of each rotor blade as momentum is imparted to the air. Unlike a fixed-wing aircraft, which derives its lift from the translational motion of the fuselage and airfoil-shaped wing relative to the air, the helicopter rotates its wings (or rotor blades) about a vertical shaft and thus is able to generate lift while the fuselage remains stationary.

The rotational motion of the rotor blades creates additional forces that act on the blades as they revolve about the shaft. The principal additional force is the centrifugal force that arises from the circular motion of the blade mass. The centrifugal force creates an effective stiffening of the rotor blade so that a relatively limber blade structure can carry the aerodynamic forces necessary to lift the weight of the helicopter, similar to the phenomenon of supporting a rock attached to the end of a string by whirling it in the horizontal plane.

The major forces on an element of a rotor blade are the lift, drag, weight, and centrifugal force (**Fig. 1**). The forces of greatest interest are the lift, drag, and centrifugal forces, since the blade weight is small relative to the other forces. In order for the rotor to lift the helicopter in hovering flight, the average distributed lift from all blades must equal the weight of the helicopter. With these large lift forces distributed along a blade, it will cone upward until there is a balance of the moments created by the lift and centrifugal forces about the blade attachment point. In hovering flight, both the lift and drag forces are steady, and the blade cones to a constant, equilibrium position. In forward flight, these forces vary as the blade rotates; consequently, the blade's angular position relative to the hub, called the flapping angle (Fig. 1), is a function of these oscillatory aerodynamic forces. In essence, the rotor-blade flapping motion may be considered as a dynamics problem analogous to the forced response of a simple spring-mass-damper system, wherein the centrifugal force is equivalent to the restoring spring and the aerodynamic force provides both the damping and the forcing function for the blade mass.

A unique characteristic of the blade dynamic system just described is that the flapping natural frequency of the blade is approximately equal to the rotational frequency of the rotor. Since the aerodynamic forcing function is also proportional to the rotational frequency, the rotor blade represents one of the few dynamic systems that is forced at its natural frequency or in resonance. This can be a catastrophic occurrence for mechanical systems without damping due to the large amplitudes of motion that may be generated. In the case of a rotor blade, however, the aerodynamic damping generated by the blade flapping motion is so high that it limits the forced response to acceptable amplitudes.

A major consequence of operating at flapping resonance is the resulting relationship between the maximum force on the blade and its maximum displacement. When a dynamic system is forced at its natural frequency, there is a 90° phase lag between the phase angle of the maximum force and the phase angle at which the maximum amplitude of the response occurs. Thus, when a rotor blade experiences a change in the aerodynamic loading, the blade responds correspondingly one-quarter of a revolution (that is, 90°) later. This behavior is important for controlling the flight motion of the helicopter.

For example, to achieve forward flight, the rotor must be tilted in the direction of the desired flight path. This is achieved by decreasing the lift on a blade rotating toward the nose (advancing blade) and increasing the lift on a blade rotating toward the tail of the helicopter (retreating blade). This difference in lift on the advancing and retreating blades, which is maximum when the blades are arrayed laterally, will cause the advancing blade to flap to a lower amplitude when it arrives over the nose while the retreating blade with more lift flaps to a higher amplitude when it arrives over the tail, thus creating the forward tilt of the rotor.

The method for achieving the desired control of the rotor tilt is to vary the angle of the blade (pitch) as the rotor rotates. This variation is achieved by a

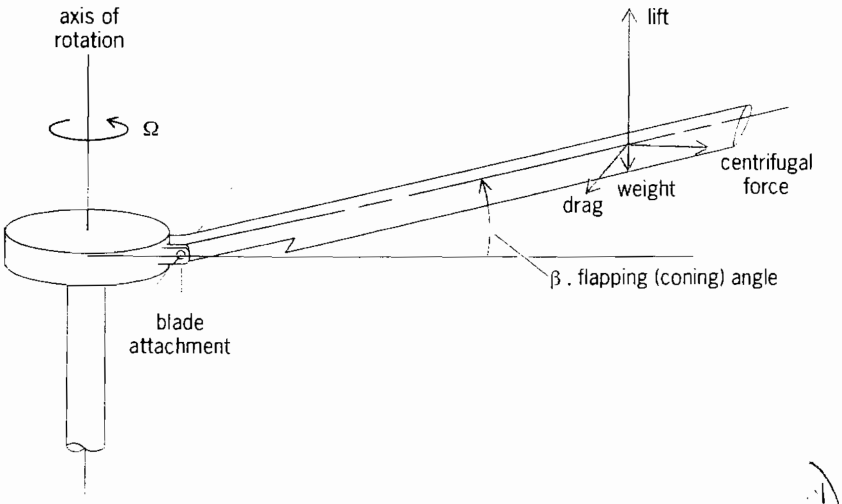

Fig. 1. Forces acting on a helicopter rotor blade.

(McGRAW HILL ENCYCLOPEDIA OF [illegible]) control device called a swash plate, which, when tilted, will cycle the blade pitch angle in a sinusoidal manner so that blade lift is alternately increased and decreased once every rotor revolution. As discussed below, this cyclic control is also required to accommodate the lift variations encountered when the rotor is in forward flight. *See* AERODYNAMIC FORCE.

Aerodynamics. The basic physics of rotor aerodynamics, particularly the aerodynamic relationships for a rotor in hover or vertical climb, closely parallels the physics of a propeller. In a climb, for example, the air flows through the rotor perpendicular to the rotor disk plane in the same manner that air flows into a propeller disk as it translates horizontally. Thus, the rotor or propeller blades experience the same aerodynamic environment as they rotate. *See* PROPELLER (AIRCRAFT).

As the helicopter translates into forward flight, significant differences occur. Because the rotor blades are mounted on a vertical axis and rotate in a horizontal plane, the translational velocity of the helicopter significantly alters the relative airspeed of a rotor blade element as the rotor blade revolves (Fig. 2). The blade moving in the direction of flight (advancing blade) encounters a relative airflow velocity which is equal to the vector sum of the helicopter's flight velocity V and the blade's rotational velocity. The rotational velocity is proportional to the radial distance along the blade, and at the tip is equal to the tip speed ΩR, where Ω is the angular velocity of the rotor and R is the radial distance to the blade tip. On the retreating side of the disk, the blade experiences a relative airflow velocity equal to the difference between the two velocities. When the blades are positioned fore and aft, the flight velocity does not contribute substantially to the relative airflow velocity across the blade.

This changing airflow velocity as the blades rotate produces a sinusoidal lift variation if the blade pitch angle is held constant. Since lift is proportional to the velocity squared, an advancing blade with its higher velocity will generate more lift than a retreating blade. Recalling the dynamic response characteristics of the blades discussed above, the blade with greater lift flaps to a larger angle than the blade with less lift, causing the rotor to tilt in a direction opposite to the direction of flight. To counter the difference in lift between the advancing and retreating blades, cyclic pitch control is again introduced to lower the pitch, and consequently the lift of the advancing blades, while increasing the pitch and lift of the retreating blades, thus maintaining the desired tilt of the rotor.

This difference in velocity between advancing and retreating blades is the principal reason that helicopters have a lower speed capability than a fixed-wing aircraft. Since helicopters generally operate with a tip speed ΩR in the range of 600–800 ft/s (180–240 m/s), it does not require much forward speed before the advancing blade is moving relative to the air at a speed approaching that of sound (1117 ft/s or 340 m/s). At these speeds, the airfoil sections of the blade experience compressible flow effects which drastically increase the blade drag and hence the power required. On the retreating blade, the situation is just the opposite. As the helicopter goes faster, the retreating blade experiences a relative airflow that is diminished by the forward velocity. Under these conditions, the blade tip would have no movement relative to the air if the forward velocity were equal to the tip speed of the rotor. Even at forward velocities much less than the tip speed of the rotor, there are regions where the forward velocity equals or exceeds the local velocity due to rotation. The diminishing velocity on the retreating blades is compensated for by increasing the blade pitch and thus the angle of attack of the blades' airfoil. However, an airfoil has a limiting angle that, if exceeded, will result in flow separation (stall). When stall occurs, there is an increase in drag and decrease in lift capability of the airfoil, which again causes an increase in the power required. These conditions make the design of a helicopter a compromise between compressibility effects on the advancing blades and retreating blade stall. *See* AERODYNAMICS; AIRFOIL.

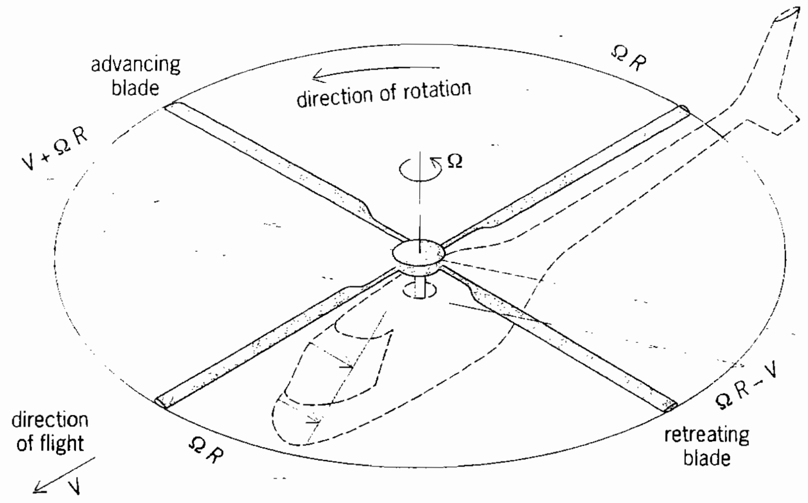

Fig. 2. Variations of relative airflow velocity of rotor blades in forward flight.

Performance. Helicopter performance is determined by the power required to achieve the desired flight condition. There are four primary functions associated with helicopter flight that require power: the power required to turn the rotor (profile power), the power required to lift the helicopter (induced power), the power required to propel the helicopter in forward flight (parasite power), and the power required to climb or descend (climb power). Each of these elements contributes in a different manner to the total power required as the flight speed varies.

Profile power. The profile power has a moderate value in hover that is a function of the area of the blades being turned, the drag characteristics of the airfoil sections of the blades, and the cube of the effective speed of the rotor. In hovering flight, the

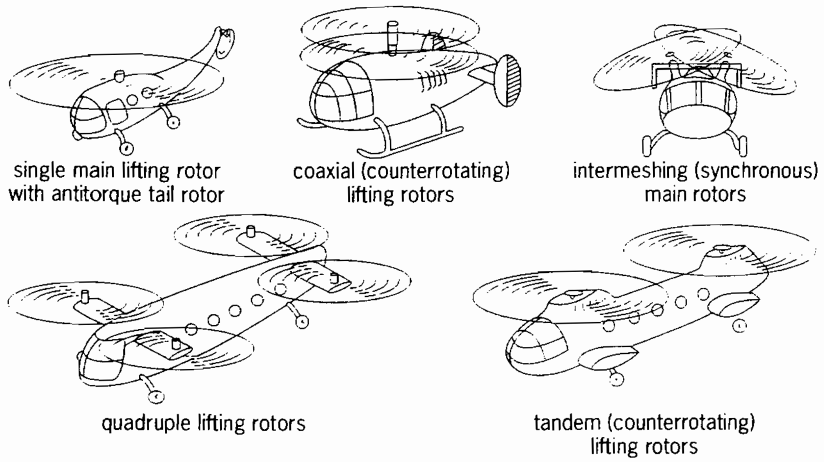

Fig. 3. Principal helicopter (rotor) configurations.

effective speed of the rotor is only a function of the tip speed at which the rotor operates. As the helicopter moves into forward flight, the effective speed of the rotor blades increases with a corresponding increase in profile power. For the example illustrated, the drag characteristics of the airfoil section are assumed to be constant. If the rotor encounters stall or compressibility effects, the drag characteristics will increase and, correspondingly, the profile power required will increase more dramatically with airspeed.

Induced power. The induced power has just the opposite trend, as shown by the decrease in induced power as airspeed is increased. Since induced power is associated with the generation of lift, increasing or decreasing the weight of a given helicopter will cause a corresponding change in induced power.

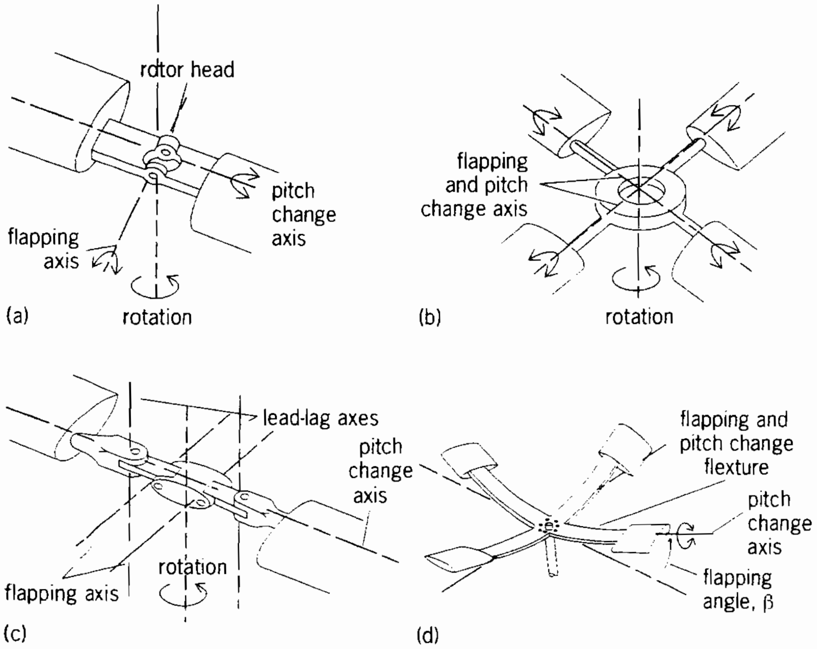

Fig. 4. Principal types of rotor hubs. (*a*) Teetering (semirigid) rotor head. (*b*) Gimbaled rigid rotor. (c) Fully articulated rotor head. (*d*) Hingeless rotor.

The size of the rotor also plays a major role in determining the induced power. A rotor generates lift by accelerating air downward or, in effect, increasing the momentum of the downward flow. The larger the rotor diameter, the greater the air mass it will act on, and the lower the velocity change required to produce a given lift. Induced power is directly proportional to this induced velocity, which, in turn, is related to the disk loading of the rotor, that is, the ratio of the lift generated to the area of the planar disk described by the blade radius. Helicopters, with their large-diameter rotors, are low disk-loading aircraft, which accounts for their relatively good efficiency in hovering flight compared to other means of achieving powered vertical lift. Even so, the power required is still sizable, which explains the difficulties encountered by the pioneers in providing an engine light enough and powerful enough to achieve vertical flight.

In forward flight, the mass flow of air through the rotor is increased; consequently, the blades do not have to induce as much velocity change to this higher mass flow in order to produce a given lift. This reduction in induced velocity decreases the induced power required as speed is increased.

Parasite power. The power required to propel the helicopter in forward flight (parasite power) is predominantly a function of the drag characteristics of the fuselage and rotor hub and the cube of the flight velocity. Therefore, the parasite power is zero in hovering flight but rises rapidly as airspeed is increased. At high speeds, the parasite power is the predominant cause of power expenditure, illustrating the need for fuselages and rotor hubs that possess very low drag characteristics.

Climb power. The climb power is proportional to the weight of the helicopter and its velocity of climb or descent. When a helicopter is climbing, more power is required; however, when it is descending, the helicopter requires less power than it does in level flight. If the rate of descent is high enough, the helicopter can achieve a condition called autorotation wherein no engine power is required. Autorotation for a helicopter is similar to the glide capability of fixed-wing aircraft. The helicopter, however, has a distinct advantage over an airplane in this regard since a helicopter can autorotate at much lower airspeeds than the glide speed of an airplane. By using the energy derived from the descent, the helicopter can produce the energy needed to generate the necessary lift and to maintain the desired rotational speed of the rotor. As the helicopter nears the ground, the pilot executes a maneuver, called a flare, which arrests any forward velocity, and the aircraft can be landed in a very small landing site.

Rotor configurations. Many different rotor arrangements have been used (**Fig. 3**), and most of the early attempts at vertical flight were made with machines having multiple or coaxial counterrotating rotors. Most modern helicopters employ the single rotor or the tandem rotor configurations.

In addition to the selection of the number and location of the lifting rotors, designers have developed varied methods for attaching the blades to the rotor hub. Very early experiments conducted with the blades rigidly attached to the hub were unsatisfactory because of the excessive moments applied to the rotor mast. The first satisfactory solution to this problem was applied by Juan de la Cierva in his development of the autogiro. Cierva incorporated a hinged blade attachment to allow the blades to flap freely and to relieve the undesired moments. *See* AUTOGIRO.

Teetering rotors. Based on the success achieved by the introduction of hinged attachments for the rotor blades, several configurations have been successfully manufactured (**Fig. 4**). The teetering rotor used on two-bladed configurations has one central hinge that allows the blades to move in unison (one up, one down) like a seesaw (Fig. 4*a*). Each blade also has pitch-change bearings to allow the blade pitch angle to be varied as required. The gimbaled rotor (Fig. 4*b*) is essentially equivalent to the teetering rotor and has been used on rotors with three or more blades. It allows the rotor disk to flap as a unit. In both the teetering and gimbaled arrangements, moments are reacted between the blades and are not transferred into the shaft.

Articulated rotor. The articulated rotor (Fig. 4*c*) has each blade attached to the hub by its own flapping hinge. In addition, a hinge is introduced to allow in-plane or lead-lag motion of the blade in order to relieve in-plane bending moments at the root end of the blade. The articulated rotor differs somewhat from the two preceding configurations in that the flapping hinge for each blade is offset from the center of rotation. This offset allows moments to be applied to the shaft and, by selection of a specific hinge offset, the magnitude of the moment is controlled, and is an aid in the control of the helicopter.

Hingeless rotor. The bearingless or hingeless rotor (Fig. 4*d*) is receiving renewed attention in research and development efforts. These efforts represent a closing of the loop in rotor development in that the earliest rotors were basically hingeless designs. There is, however, a major difference in the newer designs which makes them feasible. The early rotors were designed with relatively rigid blade attachments and, given the construction materials of the time, the only way to successfully deal with the large moments was to introduce hinges. With the availability of improved materials, current designs tailor the structural stiffness to allow flexing to take place without having a hinge. This concept provides a lower-weight rotor system and retains the ability to develop hub moments for control.

Flight control. In order to utilize fully the capabilities of a helicopter in hover, vertical, sideward, rearward, and forward flight, the flight controls are of necessity complex (**Fig. 5**).

Cyclic pitch control. The primary control, called cyclic pitch control, is introduced by a control stick located between the pilot's knees. Through a series of control linkages the motion of the stick is transferred to tilt the swash plate either longitudinally or laterally so that blade pitch is cyclically varied in a prescribed manner. The cyclic pitch control directs the

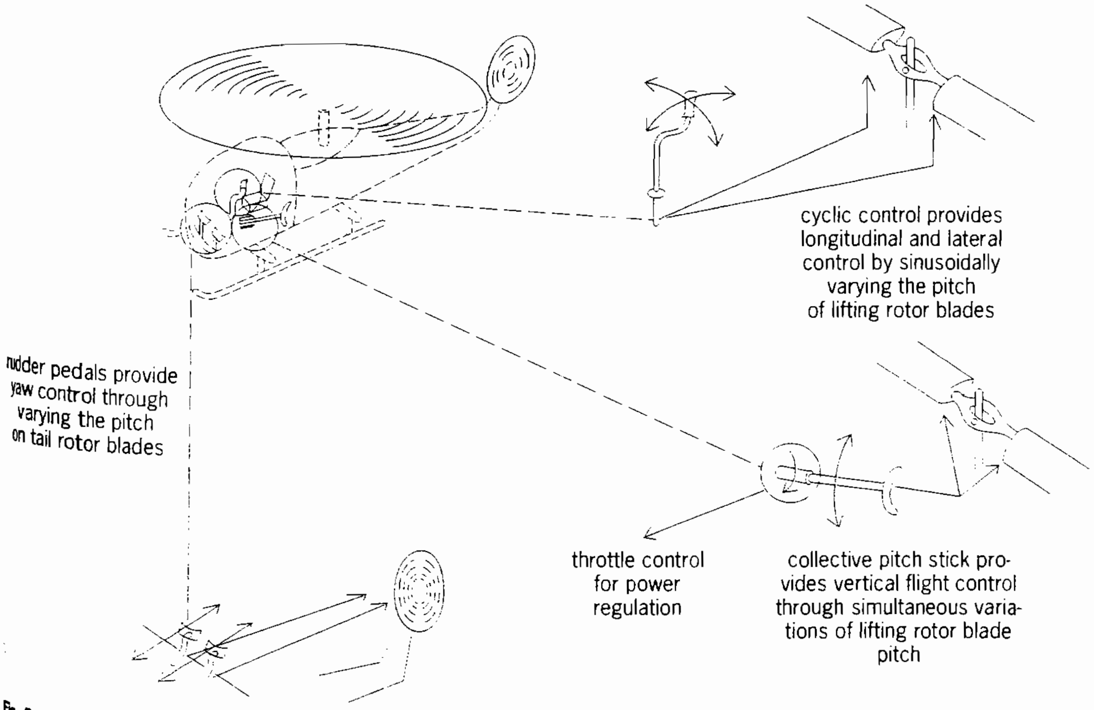

Fig. 5. Functions of helicopter flight controls.

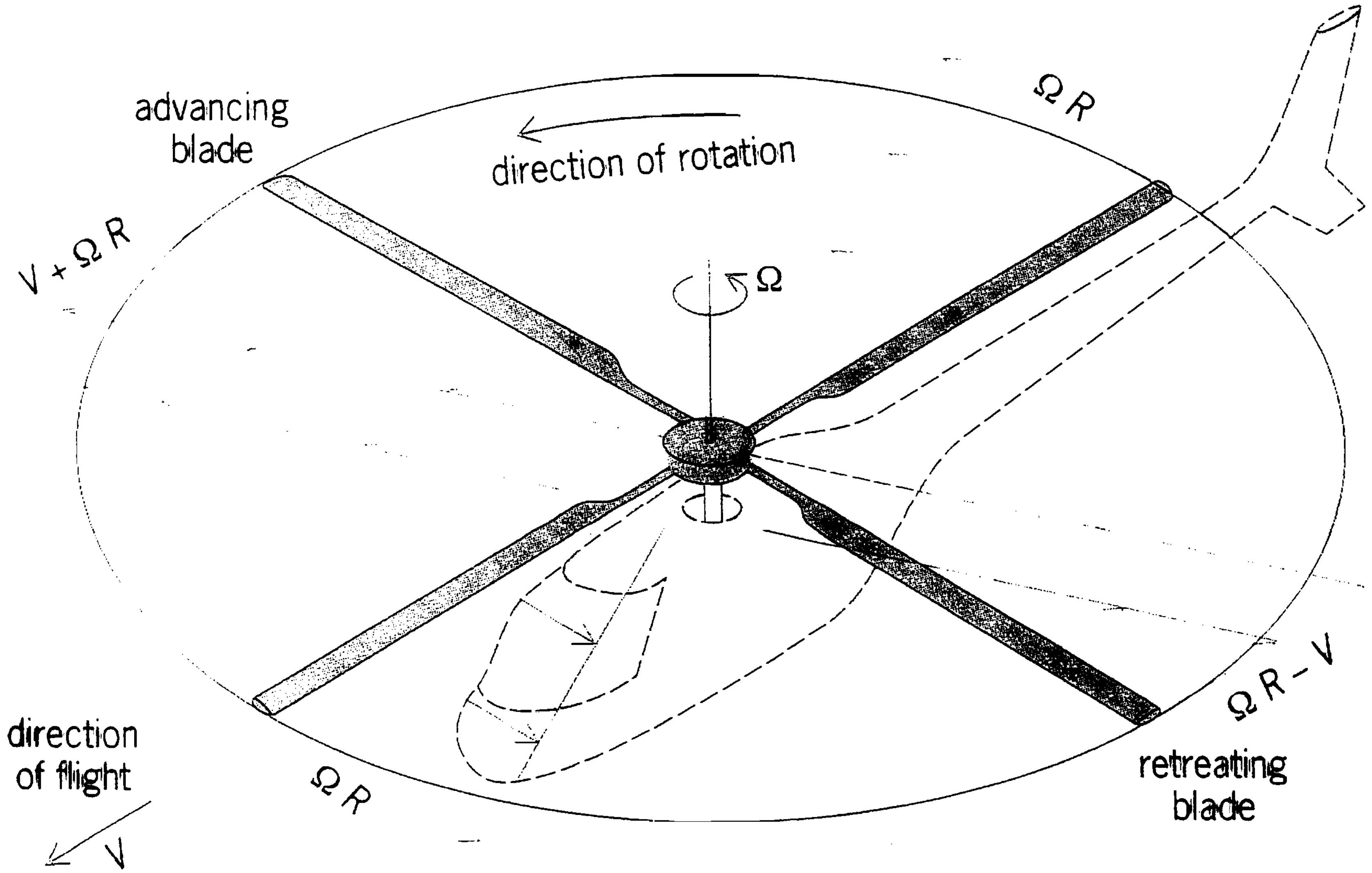

Fig. 2. Variations of relative airflow velocity of rotor blades in forward flight.

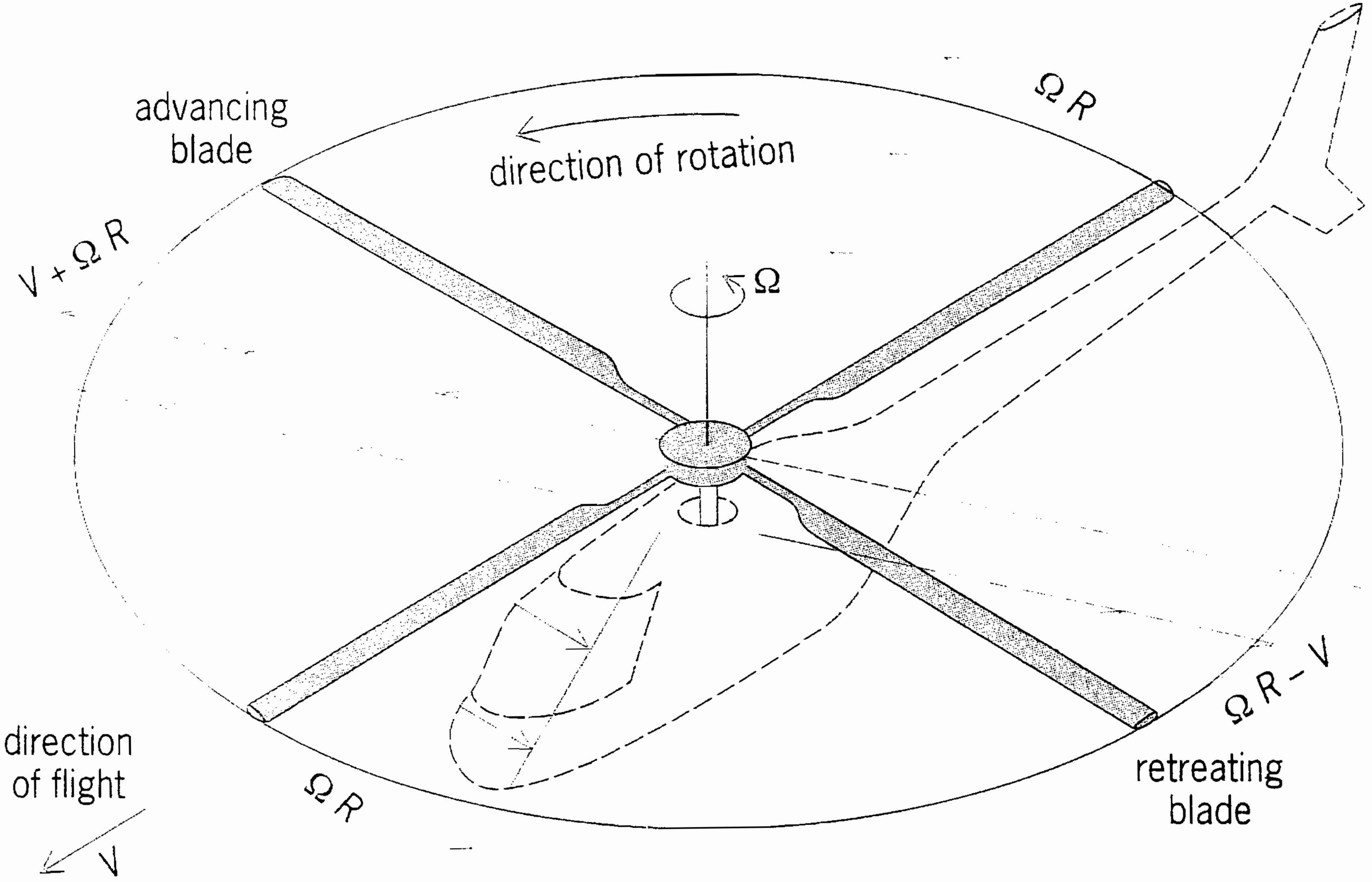

Fig. 2. Variations of relative airflow velocity of rotor blades in forward flight.