hydrogen energy

DOCKET	
08-AFC-8	
DATE	JUN 24 2009
RECD.	JUL 02 2009

June 24, 2009

Leonard Scandura
Permit Services Manager
San Joaquin Valley Air Pollution Control District
Southern Regional Office
34946 Flyover Court
Bakersfield, CA 93308

Subject: **Submittal of Application for Authority to Construct – Hydrogen Energy California**

Dear Mr. Scandura:

Hydrogen Energy International LLC (HEI) proposes to build a nominally rated 250 (approximate) net megawatt (MW) integrated gasification combined cycle power generation unit at a site in Kern County, California. The attached document is an Authority to Construct / Permit to Operate Application to the San Joaquin Valley Air Pollution Control District (SJVAPCD) for the "HECA" project.

HECA will be a state-of-the-art integrated gasification combined cycle gas turbine power plant, will produce low-carbon baseload electricity by capturing carbon dioxide (CO_2) and transporting to Elk Hills Oil Field for enhanced oil recovery (EOR) and sequestration, and will utilize the best available technology for environmental performance.

A Revised Application for Certification for this unit was filed with the California Energy Commission (Docket # 08-AFC-8 filed on May 28, 2009). A Prevention of Significant Deterioration (PSD) application will be filed with the United States Environmental Protection Agency, Region IX.

The attached application includes completed SJVAPCD forms and supporting information. Please contact me at (562) 276-1511 or Mark Strehlow at (510) 874-3055 if you have any questions or require additional information.

One World Trade Center, Suite 1600, Long Beach, CA 90831-1600 Main (+1) 562-276-1543 Fax (+1) 562-276-1571 www.hydrogenenergy.com

Sincerely,

Gregory D. Skannal
Manager, HSSE
Hydrogen Energy International LLC

Attachment: Application

Copy: Mark Strehlow, URS
California Energy Commission

Authority to Construct (ATC) Permit Application

Revised Application for Certification (08-AFC-8)

for

HYDROGEN ENERGY CALIFORNIA

Kern County, California

Prepared for:
Hydrogen Energy International LLC

hydrogen energy

Submitted to:
San Joaquin Valley Air Pollution Control District

Prepared by:

URS

June 2009

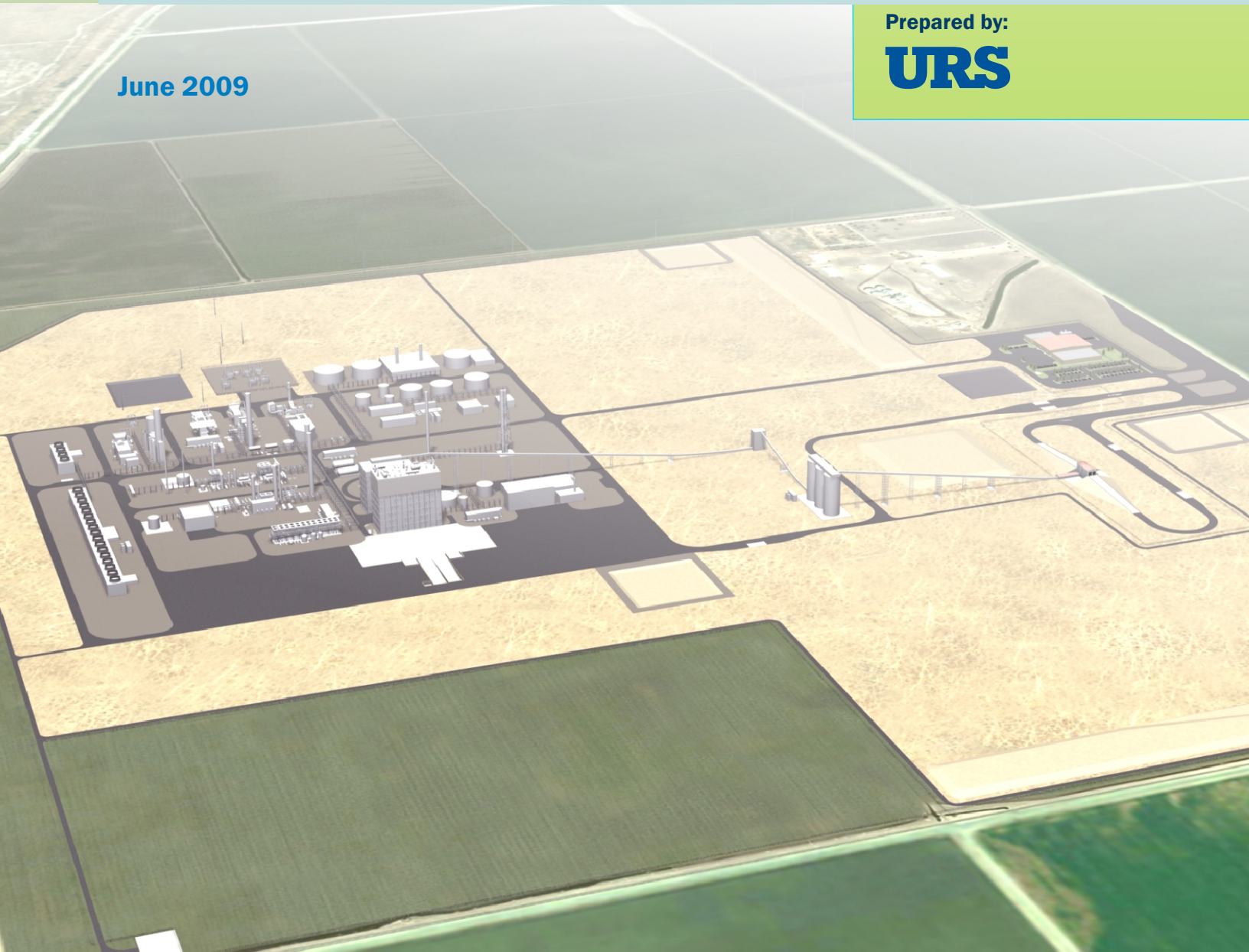

HYDROGEN ENERGY CALIFORNIA

ATC/PTO APPLICATION

KERN COUNTY, CALIFORNIA

Prepared for:

San Joaquin Valley Air Pollution Control District

Prepared on behalf of:

Hydrogen Energy International LLC

June 22, 2009

URS

URS Corporation
1333 Broadway, Suite 800
Oakland, CA 94612
510-893-3600

TABLE OF CONTENTS

Section 1 Introduction 1-1

1.1 Overview 1-1
1.2 Applicant Background Information 1-5
1.2.1 Business Name/Location 1-5
1.2.2 Nature of Business 1-6
1.2.3 Person to Contact Regarding Application 1-6
1.2.4 Type of Entitlement 1-6
1.2.5 Estimated Construction and Completion Dates 1-6
1.2.6 Application Status 1-7
1.2.7 Operating Schedule 1-7
1.2.8 Compliance Certification 1-7

Section 2 Project Description 2-1

2.1 Equipment 2-1
2.2 Site Plan Access, and Characteristic 2-3
2.3 On-Site Project Components Process Description 2-5
2.3.1 Solids Handling, Gasification, and Gas Treatment 2-5
2.3.2 Power Generation 2-11
2.3.3 Supporting Process Systems 2-16
2.4 Resource Input 2-24
2.4.1 Petroleum Coke and Western Bituminous Coal 2-25
2.4.2 Fluxant 2-25
2.4.3 Natural Gas 2-28
2.4.4 Water 2-29
2.4.5 Oxygen and Nitrogen 2-30
2.5 Product Output 2-30
2.5.1 Electricity and Transmission Line 2-30
2.5.2 Carbon Dioxide 2-31
2.5.3 Molten Sulfur 2-31
2.5.4 Gasification Solids 2-31
2.5.5 Wastewater Discharge 2-32

Section 3 Equipment Specifications 3-1

3.1 Equipment List 3-1
3.2 Cooling Towers 3-2
3.3 Emergency Engines 3-2
3.4 Combined Cycle Combustion Turbine (CTG/HRSG) 3-2
3.5 Auxiliary CTG 3-3
3.6 Auxiliary Boiler 3-4
3.7 Tail Gas Thermal Oxidizer 3-4
3.8 CO_2 Vent 3-5
3.9 Gasification Flare 3-5
3.10 Sru Flare 3-5

3.11 Rectisol Flare 3-5
3.12 Gasifier Refractory Heaters 3-5
3.13 Feedstock Handling System 3-6

Section 4 Expected Emissions 4-1

4.1 Cooling Towers Criteria Pollutant Emissions 4-1
4.1.1 Power Block Cooling Tower 4-1
4.1.2 ASU and Gasification Cooling Towers 4-1
4.2 Diesel Engines Criteria Pollutant Emissions 4-3
4.2.1 Emergency Generator Engine and Firewater Pump Engine 4-3
4.3 Combined Cycle Combustion Turbine (CTG/HRSG) Criteria Pollutant Emissions 4-3
4.4 Auxiliary Boilers Criteria Pollutant Emissions 4-10
4.5 Sulfur Recovery System Criteria Pollutant Emissions 4-11
4.6 CO_2 Vent Criteria Pollutant Emissions 4-11
4.7 Flares Criteria Pollutant Emissions 4-11
4.8 Gasifier Refractory Heaters Criteria Pollutant Emissions 4-12
4.9 Auxiliary Combustion Turbine Criteria Pollutant Emissions 4-12
4.10 Feedstock Handling System Criteria Pollutant Emissions 4-17
4.11 Plant Startup and Commissioning Criteria Pollutant Emissions 4-17

Section 5 Laws, Ordinances, and Regulations 5-1

5.1 Ambient Air Quality Standards 5-9
5.2 Prevention of Significant Deterioration Requirements 5-11
5.3 Acid Rain Program Requirements 5-13
5.4 New Source Performance Standards 5-13
5.5 Federally Mandated Operating Permits 5-13
5.6 Power Plants Siting Requirements 5-14
5.7 Air Toxic “Hot Spots” Program 5-14
5.8 Determination of Compliance, Authority to Construct and Permit to Operate 5-14
5.9 San Joaquin Valley Air Pollution Control District Requirements 5-15
5.9.1 Rules and Regulations 5-15

Section 6 Emission Offsets 6-1

6.1 Emission Reduction Credits Estimates 6-1
6.2 Emission Reduction Credits Availability 6-2

Section 7 Ambient Air Quality and PSD Analysis 7-1

7.1 Air Dispersion Modeling 7-1
7.2 Compliance With Ambient Air Quality Standards and PSD Requirements 7-9
7.2.1 Impacts On Air Quality Related Values In Class I Area 7-17

TABLE OF CONTENTS

Section 8 Health Risk Assessment 8-1

8.1 Public Health Impact Assessment Approach 8-2
8.2 Construction Phase Emissions 8-7
8.3 Operational Phase Emissions 8-8
8.4 Model Input Parameters 8-22
8.5 Calculation of Health Effects 8-23
8.6 Health Effects Significance Criteria 8-24
8.7 Estimated Lifetime Cancer Risk 8-24
8.8 Estimated Chronic and Acute Total Hazard Indices 8-25
8.9 Uncertainty In the Public Health Impact Assessment 8-25
8.10 Criteria Pollutants 8-26
8.11 Cumulative Impact Analysis 8-27
8.12 Mitigation Measures 8-27
8.13 Law, Ordinances, Regulations, and Standards for Public Health 8-27

Tables

1-1 Project Disturbed Acreage
2-1 Representative Heat and Material Balances
2-2 Maximum Feeds and Products
2-3 Project Linear Tie-In Location on Plot Plan
2-4 Site Characteristics
2-5 Primary Gasification Reactions
2-6 Components of Syngas from Oxygen-Blown Gasification
2-7 Petroleum Coke Design Range
2-8 Typical Analysis for Western Bituminous Coal
2-9 Example Fluxant Composition
2-10 Typical Natural Gas Composition
2-11 Electrical Specification
2-12 Sulfur Specification
2-13 Example Composition Range of Gasification Solids
4-1 Total Combined Annual Criteria Pollutant Emissions
4-2 Maximum CTG/HSRG Operating Schedule
4-3 1-Hour Operating Emission Rates for CTG/HSRG Operating Load Scenarios
4-4 CTG/HSRG Criteria Pollutant Emission Rates During Startup and Shutdown
4-5 Criteria Pollutant Sources and Emission Totals for the Worst Case CTG Emissions Scenario for All Averaging Time
4-6 Average Annual Emissions per Turbine Operating Scenario

4-7	Maximum Auxiliary CTG Operating Schedule
4-8	1-Hour Operating Emission Rates for Auxiliary CTG Operating Load Scenario
4-9	Auxiliary CTG Criteria Pollutant Emission Rates During Startup and Shutdown
4-10	Criteria Pollutant Sources and Emission Totals for the Worst-Case Auxiliary CTG Emissions Scenario for All Averaging Time
4-11	Duration and Criteria Pollutant Emissions for Commissioning of the CTG/HSRG on Natural Gas at 59ºf
4-12	Duration and Criteria Pollutant Emissions for Commissioning of the CTG/HSRG on Hydrogen-Rich Fuel at 59ºF
4-13	Duration and Criteria Pollutant Emissions for Commissioning of the Auxiliary CTG on Natural Gas at 59ºf
5-1	Laws, Ordinances, Regulations, and Standards – Air Quality
5-2	Relevant Ambient Air Quality Standards
5-3	Attainment Status for Kern County With Respect To Federal and California Ambient Air Quality Standards
5-4	PSD Emission Threshold Triggers for New Stationary Sources
5-5	Prevention of Significant Deterioration Allowable Increments (µg/M3)
5-6	Proposed BACT for the Project
6-1	HECA Annual Operating Emissions
6-2	Estimated ERCS Required
6-3	San Joaquin Valley Air Pollution Control District ERC Registry
7-1	Turbine Screening Results Normal Operations – Emissions and Stack Parameters per Turbine
7-2	Degadis Model Inputs and Parameters
7-3	Maximum Modeled Criteria Pollutant Impacts Due To Construction Emissions
7-4	AERMOD Modeling Results for Project Operations (All Project Sources Combined)
7-5	Commissioning Modeling Results
7-6	PSD Class I Increment Significance Analysis – CALPUFF Results
7-7	Visibility Analysis – CALPUFF Results
7-8	Total Nitrogen and Sulfur Deposit Analysis – CALPUFF Results
8-1	Summary of All Operational TACs and Toxicity Values Used To Characterize Health Risks
8-2	HSRG Combustion Turbine (GE 7fb) Stack TACs Emission Rates
8-3	Auxiliary CTG (GE Lms100) TACs Emission Rates

8-4 Cooling Tower TACs Emission Rates
8-5 Gasifier Refractory Heater TACs Emission Rates
8-6 Auxiliary Boiler TACs Emission Rates
8-7 Gasification Flare TACs Emission Rates
8-8 SRU Flare TACs Emission Rates
8-9 Rectisol Flare TACs Emission Rates
8-10 Tail Gas Thermal Oxidizer TACs Emission Rates
8-11 Carbon Dioxide Vent TACs Emission Rates
8-12 Emergency Generator TACs Emission Rates
8-13 Fire Water Pump TACs Emission Rates
8-14 Estimated Cancer Risk and Acute and Chronic Non-Cancer Thi Due To Project TACs Emissions
8-15 Estimated Cancer Risk and Acute and Chronic Non-Cancer Thi Due To HECA TACs Emissions When Carbon Dioxide Vent Operating
8-16 Summary of LORS – Public Health

Figures

1-1 Vicinity Map
1-2 Project Rendering
1-3 Preliminary Plot Plan
1-4 Project Location Map
2-1 Overall Block Flow Diagram
2-2 Flow Diagram Feedstock Handling and Storage
2-3 Gasification Process Sketch for Permits
2-4 Flow Diagram Sour Shift System
2-5 Flow Diagram Low Temperature Gas Cooling
2-6 Flow Diagram Wash Column and Mercury Removal
2-7 Flow Diagram Rectisol Acid Gas Removal/Fuel Gas Supply Systems
2-8 Flow Diagram Power Block Systems
2-9 Flow Diagram Natural Gas System
2-10 Air Separation Unit
2-11 Flow Diagram Sulfur Recovery Unit
2-12 Flow Diagram Tail Gas Treating Unit
2-13 Flow Diagram Sour Water Stripper

2-14	Flow Diagram Carbon Dioxide Compression and Venting Systems
2-15	Flow Diagram Cooling Water System
2-16	Flow Diagram Gasification & Rectisol Flare Systems
2-17	Flow Diagram SRU Flare System
7-1	Near-Field Model Receptor Grid
7-2	Far-Field Model Receptor Grid
7-3	Locations of Maximum Predicted Ground Level Pollutant Concentrations for the Operational Project Area
8-1	Sensitive Receptors Located Within 6 Miles of the Project Site
8-2	Other Receptors in the Vicinity of the Project Site
8-3	Locations ofMaximum Health Risks

Appendices

A	References
B	Application Forms
C	Air Modeling Protocol
D	Air Quality Emissions and Calculations
E	Public Health and Safety

Acronyms

$\mu g/m^3$	micrograms per cubic meter
°C	degrees Celsius
°F	degrees Fahrenheit
AAQS	Ambient Air Quality Standards
ACHE	Air-cooled heat exchanger
AGR	acid gas removal
AERMOD	American Meteorological Society/Environmental Protection Agency Regulatory Model
APCO	Air Pollution Control Officer
APN	Assessor's Parcel Number
AQRV	Air quality related values
ASU	air separation unit
ATC	Authority to construct

BACT	Best available control technology
BPIP-Prime	Building Parameter Input Program – Prime
BVWSD	Buena Vista Water Storage District
CAAA	Clean Air Act Amendments of 1990
CAAQS	California Ambient Air Quality Standards
CAISO	California Independent System Operator
CARB	California Air Resources Board
CCPP	Contra Costa Power Plant
CEC	California Energy Commission
CEMS	Continuous Emissions Monitoring System
CH_4	methane
CO	carbon monoxide
CO_2	carbon dioxide
CTG	combustion turbine generator
DAS	Data acquisition system
DEM	digital elevation models
DOC	Determination of compliance
DVD	digital versatile disk
ERC	emissions reduction credits
EOR	enhanced oil recovery
FLAG	Federal Land Managers' Air Quality Related Values Workgroup
FP10	Flex Plant 10
GE	General Electric
gpm	gallons per minute
H_2	hydrogen
HAP	hazardous air pollutant
HARP	Hotspots analysis and reporting program
HEI	Hydrogen Energy International (or Applicant)
HHV	higher heating value
HI	hazard index

HP	high pressure
HPC	high-pressure compressor
HPT	high-pressure turbine
HRA	Health risk assessment
HRSA	Health Risk Screening Analysis
HRSG	heat recovery steam generator
IGCC	Integrated Gasification Combined Cycle
ISCST3	Industrial Source Complex Short Term 3rd version
IWAQM	Interagency Workgroup on Air Quality Modeling
kg/ha-yr	kilogram per hectare per year
km	kilometers
LIN	liquid nitrogen
LOX	liquid oxygen
LP	low pressure
LORS	Laws, ordinances, regulations, and standards
LTGC	low temperature gas cooling
MAC	main air compressor
MLGS	Marsh Landing Generating Station
MMBtu	million British thermal units
MW	megawatt
NAAQS	National Ambient Air Quality Standards
NESHAPS	National Emission Standards for Hazardous Air Pollutants
NO_x	Nitrogen oxides
NOI	Notice of intention
NPS	National Park Service
NSPS	New Source Performance Standards
NSR	New source review
NWS	National Weather Service
O_3	ozone
OEHHA	Office of Environmental Health Hazard Assessment

OLM	ozone limiting method
Pb	lead
PG&E	Pacific Gas & Electric
PM_{10}	particulate matter less than 10 μm in diameter
$PM_{2.5}$	particulate matter less than 2.5 μm in diameter
ppb	parts per billion
ppm	parts per million
ppmv	parts per million by volume
ppmvd	parts per million volumetric dry
PSD	Prevention of significant deterioration
RPM	revolutions per minute
RH	relative humidity
ROC	Reactive organic compound
SCR	Selective catalytic reduction
SIL	Significant impact level
SIPs	State Implementation Plans
SJVAPCD	San Joaquin Valley Air Pollution Control District
SO_x	sulfur oxide
SRU	sulfur recovery unit
SSP	sulfur storage pits
STG	steam turbine generator
SWS	Sour Water Stripper
TAC	toxic air contaminants
TDS	total dissolved solids
TGTU	tail gas treating unit
THI	total hazard index
tpy	tons per year
ULN	Ultra Low NOx
UPS	uninterruptible power supply
USEPA	United States Environmental Protection Agency

USFS	United States Forest Service
USGS	United States Geological Survey
UTM	Universal Transverse Mercator
V	volt
VOC	volatile organic compounds
ZLD	Zero Liquid Discharge

Hydrogen Energy International LLC (HEI) proposes to build and operate an Integrated Gasification Combined Cycle (IGCC) project called Hydrogen Energy California (the "Project"). The facility will gasify 100 percent petroleum coke (or blends of petroleum coke and coal, as needed) to produce hydrogen to fuel a combustion turbine operating in combined cycle mode to produce 390 gross megawatts (MW) of electricity. HEI is jointly owned by BP Alternative Energy North America Inc. and Rio Tinto Hydrogen Energy LLC.

The Project will produce low carbon electricity while substantially reducing greenhouse gas emissions by capturing carbon dioxide (CO_2), transporting it by pipeline for enhanced oil recovery (EOR) and sequestration. This document is an Authority to Construct/Permit to Operate Application to the San Joaquin Valley Air Pollution Control District (SJVAPCD) for the HECA project. The proposed HECA project is classified as a major facility and will apply for a new Title V permit.

1.1 OVERVIEW

The Project Site is located near an oil producing area in Kern County, California, known as the Elk Hills Field. The 473-acre Project Site is located in a predominantly agricultural area, approximately 7 miles west of the outermost edge of the city of Bakersfield and 1.5 miles northwest of the unincorporated community of Tupman in western Kern County, California. The legal description is as follows: Section 10 of Township 30 South, Range 24 East in Kern County and the Assessor's Parcel Numbers (APN) are part of 159-040-16 and part of 159-040-18. HEI is also acquiring an additional 628 acres of land adjacent to the Project Site, herein referred to as the "Controlled Area." HEI will own this property and have control over public access and future land use. For the purposes of the Air Quality analysis, impacts were determined outside of both the Project Site and the Controlled Area. The associated APNs of the Controlled Area are as follows: 159-040-02, 159-040-04, 159-040-11, Remnant part of 159-040-16, Remnant part of 159-040-18, and 159-190-09.

The vicinity map and the artist's rendering of the proposed Project, and "Controlled Area" site Plan are shown on Figure 1-1 and Figure 1-2, respectively. The entire Project Site is presently used for agricultural purposes, including cultivation of cotton, alfalfa, and onions. Existing surface elevations vary from about 282 feet to 291 feet above mean sea level.

The Project is designed to operate with 100 percent petroleum coke from California refineries, and has the flexibility to operate with up to 75 percent thermal input (HHV) western bituminous coal. The net electrical generation output from the power plant will provide a nominal 250 megawatts (MW) of low carbon base load power to the grid; feeding major load sources to the north and to the south. In addition, approximately 100 MW of natural gas generated peaking power will be available from the power plant through the operation of the GE LMS100® simple cycle auxiliary combustion turbine

The feedstock will be gasified to produce a synthesis gas (syngas) that will be processed and purified to produce a hydrogen-rich gas, which will be used to fuel the combustion turbine for electric power generation. A portion of the product (hydrogen-rich gas) will also be used to supplementally fire the heat recovery steam generator (HRSG) that produces steam from the combustion turbine exhaust heat. At least 90 percent of the carbon in the raw syngas will be captured in a high-purity carbon dioxide stream during steady-state operation, which will be

compressed and transported by pipeline off site for injection into deep underground oil reservoirs for enhanced oil recovery and sequestration.

Project greenhouse gas emissions (e.g., CO_2) and sulfur emissions will be reduced through state-of-the-art emission control technology and carbon dioxide sequestration. The power produced by the power plant will have a low-carbon emission profile significantly lower than would otherwise be produced by traditional fossil-fueled sources, including natural gas.

The water source for the Project will be brackish groundwater supplied by the Buena Vista Water Storage District (BVWSD), and treated on site to meet Project standards. Potable water will be supplied by West Kern Water Bank for sanitary purposes. There will be no direct surface water discharge of industrial wastewater or storm water. Process wastewater will be treated on site and recycled within the gasification and power plant systems. Other wastewaters from cooling tower blowdown and raw water treatment will be collected and directed to one of two on-site plant wastewater Zero Liquid Discharge (ZLD) units.

The Project is designed with state-of-the-art emission-control technology. The gasification process will feature near zero sulfur emissions during steady-state operation. The Project is also designed to avoid flaring during steady-state operation, and to minimize flaring and sulfur emissions during startup and shut down operations.

Construction of the new power generation facility is expected to occur over a 44-month overall construction period (37 months of site preparation and construction and up to 10 months of commissioning and startup, with overlap). Estimated land disturbance for major construction activities is summarized in Table 1-1, Project Disturbed Acreage.

The Project Site and linear facilities comprise the affected study area and are entirely located in Kern County, California. Major on-site Project components, as shown on Figure 1-3, Preliminary Plot Plan, are described below:

- Solids Handling, Gasification, and Gas Treatment
  - Feedstock delivery, handling and storage
  - Gasification
  - Sour shift/gas cooling
  - Mercury removal
  - Acid gas removal
- Power Generation
  - Combined-cycle power generation
  - Auxiliary combustion turbine generator
  - Electrical switching facilities

- Supporting Process Systems
  - Natural gas fuel systems
  - Air separation unit (ASU)
  - Sulfur recovery unit/Tail Gas Treating unit
  - ZLD units for process and plant waste water streams
  - Carbon dioxide compression
  - Raw water treatment plant
  - Other plant systems

Table 1-1 Project Disturbed Acreage

Project Component	Size	Approx. Linear Length (miles)	ROW Construction	ROW Permanent	Temporary Disturbance	Permanent Disturbance
Project Site	473 acres	NA	NA	NA	473 acres	250
Electrical transmission line	25-foot diameter structural base (60 structures total)	8	175 FT[1]	150 FT	24 acres	0.67[2]
Natural gas pipeline	16-inch diameter	8	50 FT	25 FT	50[3]	0.33[4]
Process Water pipeline	20-inch diameter	15	50 FT	25 FT	93[5]	0.29[6]
Potable Water pipeline	6-inch diameter	7	Accounted for in Natural Gas Line ROW	Accounted for in Natural Gas Line ROW	Accounted for in Natural Gas Line ROW	Accounted for in Natural Gas Line ROW
CO_2 pipeline	12-inch diameter	4	50 FT	25 FT	25[3]	0.11[7]
Temporary Construction Areas	Accounted for in Project Site	NA	NA	NA	Accounted for in Project Site	None
Total Project Disturbance					665	251.4

Source: HECA Project

Notes:

~ = approximately

CO_2 = carbon dioxide

ROW = right of way

1 This is a maximum width required in areas where structures will be installed. However, total temporary disturbance along the entire route is calculated based on the following: (1) 150 FT x 150 FT area is required for each of the 60 structures, equaling 31 acres, and (2) 25-foot temporary roadway is required along the entire 8 mile line, equaling 24 acres.

2 Consists of permanent ground disturbance associated with the base of the 60 new structures.

3 Acreage includes the area required for the entry/exist pits.

4 Acreage includes permanent disturbance occupied by the gas metering station located within the Controlled Area southeast of the Project Site.

5 Acreage includes the 100 by 150 foot temporarily disturbed area required for the construction of each of five groundwater wells.

6 Acreage includes the 50 by 50 foot permanent disturbed area required for each of five groundwater wells.

7 Acreage includes two 50 by 50 valve boxes positioned along the pipeline route.

The Project also includes the following off-site facilities, as shown on Figure 1-4, Project Location Map:

- **Electrical Transmission Line** – An electrical transmission line will interconnect the Project to Pacific Gas & Electric's (PG&E) Midway Substation. Two alternative transmission line routes are proposed; both alternatives are approximately 8 miles in length.
- **Natural Gas Supply** – A natural gas interconnection will be made with either PG&E or Southern California Gas Company natural gas pipelines, each of which are located southeast of the Project Site. The natural gas pipeline is approximately 8 miles in length.
- **Water Supply Pipelines** – The Project will utilize brackish groundwater supplied from the BVWSD located to the northwest. The raw water supply pipeline will be approximately 15 miles in length. Potable water for drinking and sanitary use will be supplied by West Kern Water District to the southeast. The potable water supply pipeline is approximately 7 miles in length.
- **Carbon Dioxide Pipeline** – The carbon dioxide pipeline will transfer the carbon dioxide captured during gasification from the Project Site southwest to the custody transfer point. Two alternative carbon dioxide pipeline routes are proposed; each alternatives is approximately 4 miles in length

Details of the emissions increases as a result of the on-site Project components and offsets are discussed in Section 4.0 and Section 6.0, respectively. The proposed Project will trigger Best Available Control technology (BACT) requirements for nitrogen oxides (NO_x), sulfur oxides (SO_x), volatile organic compounds (VOCs), particulate matter (PM), and carbon monoxide (CO). Appendix D.2 describes the BACT analysis and proposed technologies that will be included to meet BACT as proposed in this application, based on the most current industry data and manufacturers' information.

Dispersion modeling was conducted to determine the potential impacts of criteria pollutant and hazardous air pollutant (HAP) emissions. The impacts from the Project will not exceed any of the California state or Federal Ambient Air Quality Standards (AAQS). However, the Project will trigger Prevention of Significant Deterioration (PSD) Review. Section 7.0 details the AAQS standards and the PSD analysis. The Project will not cause any exceedance of PSD significant ground level concentrations. The modeled health risk of toxic air emission increases are below significance levels as discussed in Section 8.0

1.2 APPLICANT BACKGROUND INFORMATION

1.2.1 Business Name/Location

Hydrogen Energy International LLC – Hydrogen Energy California

The Project will be located approximately 7 miles west of the outermost edge of the city of Bakersfield and 1.5 miles northwest of the unincorporated community of Tupman in western Kern County, California. The legal description is as follows: Section 10 of Township 30 South, Range 24 East in Kern County and the associated APNs are part of 159-040-16 and part of 159-040-18. HEI is also acquiring an additional 628 acres of land adjacent to the Project Site, herein referred to as "Controlled Area." HEI will own this property and have control over public access

and future land use. For the purposes of the Air Quality analysis, impacts were determined outside of both the Project Site and the Controlled Area. The associated APNs of the Controlled Area are as follows: 159-040-02, 159-040-04, 159-040-11, Remnant part of 159-040-16, Remnant part of 159-040-18, and 159-190-09.

HEI is jointly owned by BP Alternative Energy North America Inc. and Rio Tinto Hydrogen Energy LLC, HEI's prime objective is producing hydrogen for low-carbon power generation. HEI proposes to be the owner and operator of the IGCC facilities and has the option to purchase the 473-acre Project Site, as defined below, from the site owner. HEI also has the option to purchase the 628 acres that comprise the Controlled Area.

The transmission line will be owned by HEI up to the point of interconnect (Midway Substation) as stipulated by the California Independent System Operator (CAISO). HEI will own the CO_2 pipeline up to the custody transfer point. Natural gas supply lines will be owned by PG&E or Southern California Gas Company. The process water supply line will be owned by Buena Vista Water District. The potable water supply line will be owned by West Kern Water District.

1.2.2 Nature of Business

The proposed HECA facility is an electric power generation facility.

1.2.3 Person to Contact Regarding Application

Mark Strehlow
Leader, Air Quality and Public Health,
URS Corporation
1333 Broadway, Suite 800
Oakland, CA 94612
Phone: (510)893-3600
Fax: (510)874-3268
Mark_Strehlow@urscorp.com

Gregory D. Skannal
HSSE Manager
Hydrogen Energy International
One World Trade Center, Suite 1600
Long Beach, CA 90831-1600
Phone: (562)276-1511
gregory.skannal@hydrogenenergy.com

1.2.4 Type of Entitlement

This document is an application for an Authority to Construct /Permit to Operate for the Project to be issued by the SJVAPCD. The Project includes one gasification block (consisting of two main gasifiers and one spare gasifier), a single train gas processing and clean up system, one power generation block (one GE 7FB in combined-cycle mode and one simple cycle auxiliary combustion turbine GE LMS-100), and other plant supporting process systems as listed in Section 3.0.

1.2.5 Estimated Construction and Completion Dates

Construction of the new power generation facility is expected to occur over a 44-month overall construction period (37 months of site preparation and construction and up to 10 months of commissioning and startup, with overlap), from December 2011 through August 2015. Commercial full scale operation for the Project is expected by September 2015.

1.2.6 Application Status

This document is an original Authority to Construct /Permit to Operate application.

1.2.7 Operating Schedule

- Combustion Turbine (GE 7FB) is expected to operate at a specific operating schedule as specified in Section 4.3.
- Auxiliary CTG (GE LMS100®) is expected to operate at a specific operating schedule as specified in Section 4.9.
- Cooling Towers (power block, ASU, and gasification) are expected to operate 8,322 hours per year for each source.
- Gasifier Refractory Heaters are expected to have a combined operating duration of 1,800 hours per year.
- Auxiliary Boiler is expected to operate at full load for no more than 2,190 hours per year, or to consume the equivalent amount of fuel per year over a longer period of operation.
- Gasification Flare is expected to have 8,760 hours per year of pilot operation and approximately 134 hours per year of flaring events.
- SRU Flare is expected to have 8,760 hours per year of pilot operation and approximately 6 hours per year of flaring events.
- Rectisol Flare is expected to have 8,760 hours per year of pilot operation.
- Tail Gas Thermal Oxidizer is expected to operate 8,760 hours per year.
- Carbon Dioxide Vent is expected to have at most 504 hours of venting per year (21 days), or venting the equivalent quantity of gas over a longer period.
- Diesel Generator is expected to have 50 hours per year operation (non emergency) for each of the two generators.
- Fire Pump Engine is expected to have 100 operating hours (non emergency) per year.

1.2.8 Compliance Certification

HEI certifies that all facilities owned or operated by the Hydrogen Energy International LLC within the state are in compliance with applicable federal, state, and SJVAPCD emission limits and applicable environmental standards.

PROJECT VICINITY

May 2009
28067571

Hydrogen Energy California (HECA)
Kern County, California

URS

FIGURE 1-1

5/20/09 vsa..T:\HECA\GRAPHICS\2.0 Project Description\2-1_proj vicinity_8.5x11.ai

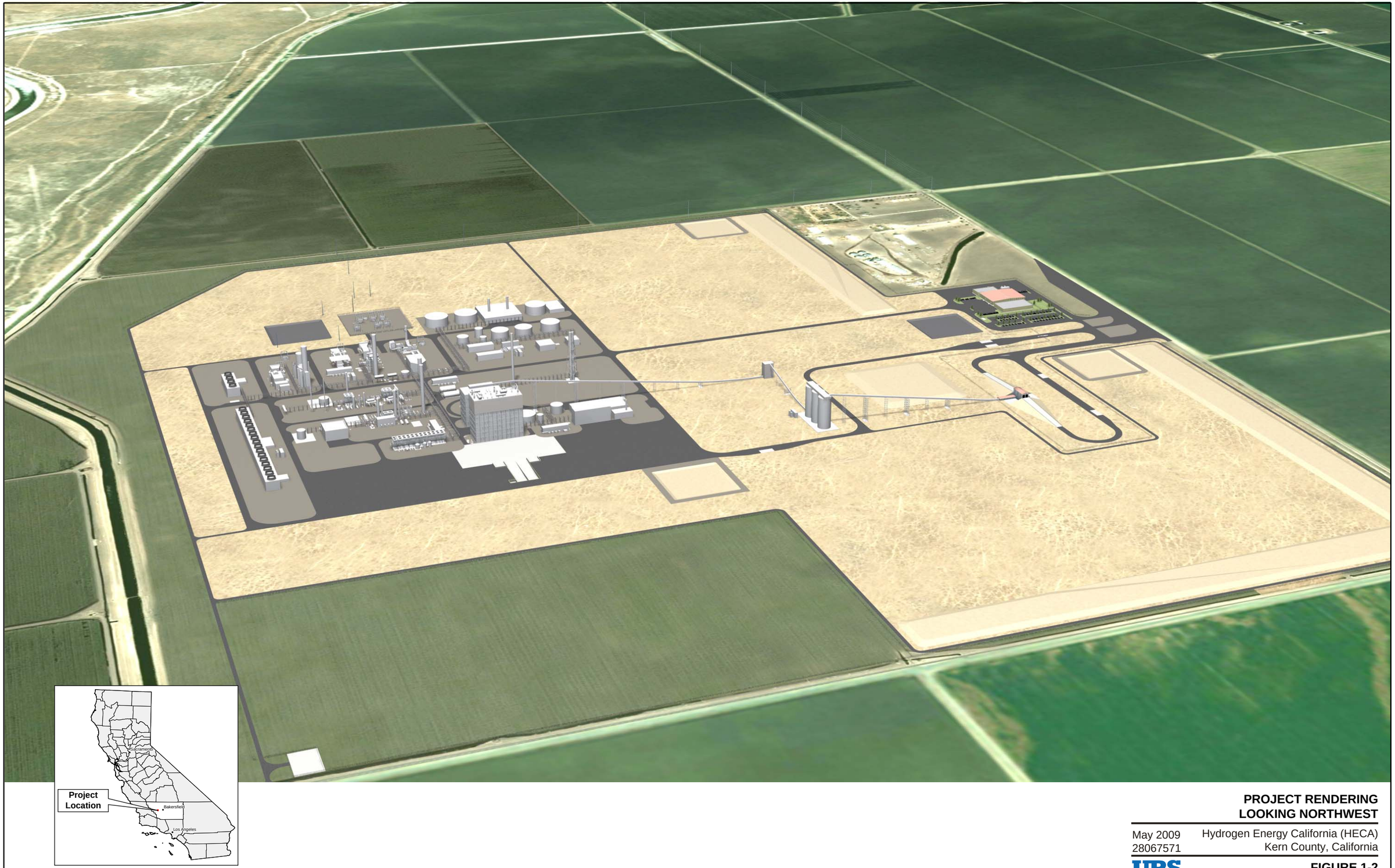

PROJECT RENDERING
LOOKING NORTHWEST

May 2009
28067571

Hydrogen Energy California (HECA)
Kern County, California

URS

FIGURE 1-2

5/08/09 vsa..T:\HECA\GRAPHICS\2.0 Project Description\2-2_Project Rendering_NW_05-08-09.ai

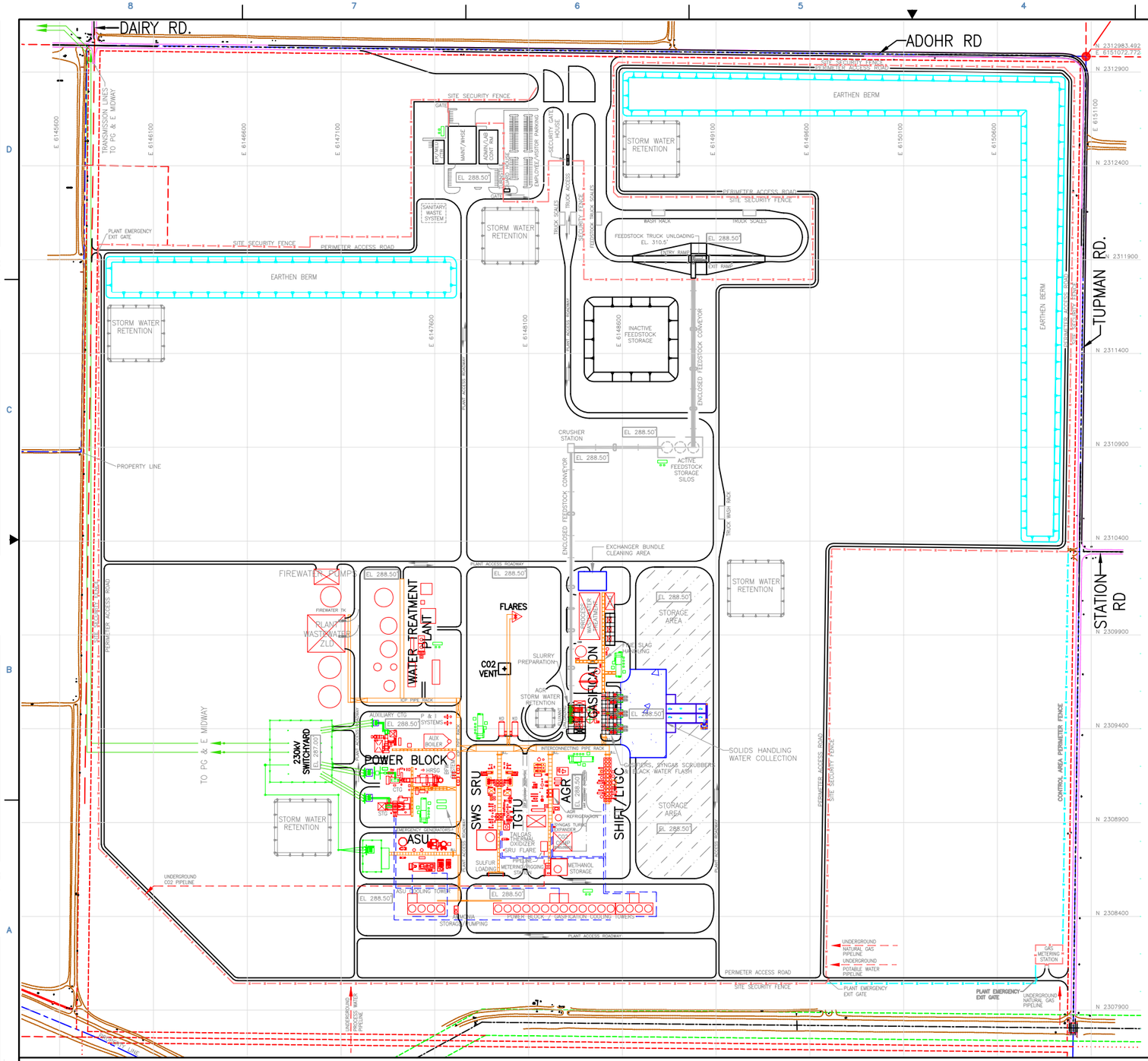

LEGEND

EL 288.50' = H.P. GRADE ELEVATION (FT.)

ASU = AIR SEPARATION UNIT
AGR = ACID GAS REMOVAL
SWS = SOUR WATER STRIPPING
SRU = SULFUR RECOVERY UNIT
TGTU = TAIL GAS TREATING UNIT
CTG = COMBUSTION TURBINE GENERATOR
HRSG = HEAT RECOVERY STEAM GENERATOR
STG = STEAM TURBINE GENERATOR
BFW = BOILER FEEDWATER SYSTEM
PDC = POWER DISTRIBUTION CENTER
LTGC = LOW TEMPERATURE GAS COOLING
ZLD = ZERO LIQUID DISCHARGE
P & I AIR = PLANT AND INSTRUMENT AIR

Source:
Fluor; Hydrogen Energy California, Kern County Power Project;
Preliminary Plot Plan; Drawing No: SK-250-1001, Rev. 0, 05/12/09

PRELIMINARY PLOT PLAN

May 2009
28067571

Hydrogen Energy California (HECA)
Kern County, California

URS

FIGURE 1-3

5/18/09 vsa..T:\HECA\GRAPHICS\2.0 Project Description\2-5_Prelim Plot Plan_051809.ai

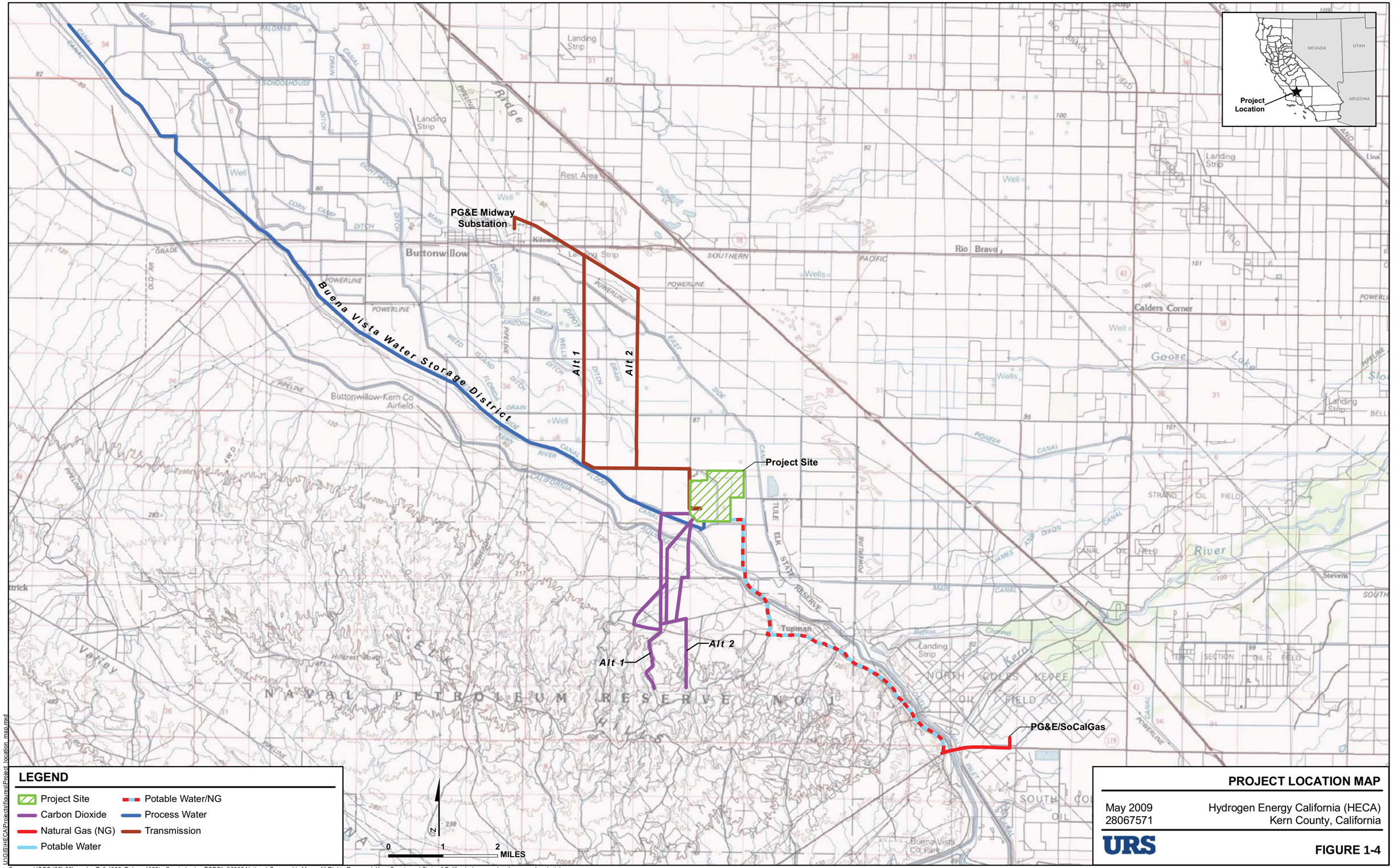

U:\GIS\HECA\Projects\figures\Project_location_map.mxd

Sources: USGS (30'x60' quads: Taft 1982, Delano 1982). Created using TOPO!, ©2006 National Geographic Maps, All Rights Reserved. Kern County and State of California (proposed and approved projects).

2.1 EQUIPMENT

The Project is a nominal 250 MW IGCC power generating facility consisting of a gasification block/syngas production with carbon capture capability and a combined-cycle power block. The gasification block will feature GE Quench gasifiers with sour shift, and a Rectisol acid gas removal (AGR) unit to remove sulfur components and recover carbon dioxide. The power block will feature one General Electric (GE) 7FB combustion turbine-generator (CTG) that can be fueled with hydrogen-rich syngas from the gasification plant, natural gas, or a mixture of the two; a heat recovery steam generator (HRSG) with duct firing of hydrogen-rich syngas or natural gas; a condensing steam turbine-generator; and a GE LMS100®simple cycle CTG fueled with natural gas as an auxiliary combustion turbine.

The operational emissions from the Project are mainly generated from the combustion of the hydrogen-rich syngas. Other emission sources include cooling towers, solids handling, and an auxiliary boiler and auxiliary CTG. For emission calculation purposes, each emission source is categorized as power block, gasification block, or ancillary equipment. The classification of the criteria pollutant emission sources from the Project is as follows.

Power Block

- Combustion Turbine (GE 7FB)
- Auxiliary CTG (GE LMS100®)
- Power Block Cooling Tower

Gasification Block

- Gasifier Refractory Heaters
- Auxiliary Boiler
- Gasification Flare
- SRU Flare
- Rectisol Flare
- Tail Gas Thermal Oxidizer
- ASU and Gasification Cooling Towers
- Carbon Dioxide Vent
- Dust collection (Feedstock)

Ancillary Equipment

- Diesel Generator
- Emergency Diesel Firewater Pump

Table 2-1 Representative Heat and Material Balances

Operating Case:	IGCC PG7321 (FB) Hydrogen-Rich Gas from: 100% Petroleum Coke	IGCC PG7321 (FB) Hydrogen-Rich Gas from: 75 % Coal/ 25% Petroleum Coke Blend [3]	Combined Cycle PG7321 (FB) Natural Gas			Auxiliary CTG LMS100® Natural Gas		
Ambient Temperature, °F	65 [1]	65 [1]	20	65	115	20	65	115
Feeds:								
Feedstock, stpd (AR)	2,820	3,197	0	0	0	0	0	0
Feedstock, MMBtu/hr [HHV]	3,240	3,255	0	0	0	0	0	0

Operating Case:	IGCC PG7321 (FB) Hydrogen-Rich Gas from: 100% Petroleum Coke	75 % Coal/ 25% Petroleum Coke Blend [3]	Combined Cycle PG7321 (FB) Natural Gas			Auxiliary CTG LMS100® Natural Gas		
Fluxant, stpd	60	32	0	0	0	0	0	0
Natural Gas, MMBtu/hr [HHV]	0	0	2,560	2,410	2,310	880	910	860
Water, gpm	2,900	2,810	1,080	1,450	2,130	160	240	390
Products & By-Products:								
Hydrogen, mmscfd [2]	177	177	0	0	0	0	0	0
Carbon Dioxide, stpd	7,400	7,300	0	0	0	0	0	0
Sulfur, stpd	130	40	0	0	0	0	0	0
Gasification Solids, stpd (wet)	140	470	0	0	0	0	0	0
Power Balance:								
Combustion Turbine, MW	232	232	201	183	169	101	103	96
Steam Turbine, MW	160	156	148	146	142	0	0	0
H_2-Rich Fuel Expander, MW	2	2	0	0	0	0	0	0
Gross Power, MW	394	390	349	329	311	101	103	96
Total Aux Load, MW	143	142	16	18	18	3	3	4
Air Separation Unit, MW	74	75	0	0	0	0	0	0
CO_2 Compression, MW	27	27	0	0	0	0	0	0
Other Internal Users, MW	42	40	16	18	18	3	3	4
Net Power, MW	251	248	333	311	293	98	100	92

Source: HECA Project

Notes:

1 Ambient temperature variations have minimal effect on hydrogen-rich gas fueled combustion turbine generator output and gasification operation. Results are nearly constant for plant output across the ambient temperature range.

2 Hydrogen contained in the hydrogen rich gas used to fuel power generation equipment.

3 Percentage is by thermal input (HHV) basis

AR = as received
CTG = combustion turbine generator
°F = degrees Fahrenheit
gpm = gallons per minute
HHV = higher heating value
IGCC = integrated gasification combined cycle
MMBtu/hr = million British thermal units per hour
Mmscfd = million standard cubic feet per day
MW = megawatt
stpd = short tons per day

Table 2-2 Maximum Feeds and Products

Feeds	Maximum Amounts
Feedstock (AR)	3,600 stpd
Fluxant	140 stpd
Water (High Ambient)	4,100 gpm
Products/By-products:	
Maximum Net Power	
Normal Baseload Low Carbon Power	250 MW
Maximum Peak Power Capability[1]	400 MW
Carbon dioxide	8,400 stpd
Sulfur	180 stpd
Gasification Solids (wet)	750 stpd

Source: HECA Project

Notes:

[1] Maximum peak power capacity as submitted in the CAISO Interconnection Request

AR = as received
gpm = gallons per minute
MW = megawatt
stpd = short tons per day

Further discussion of the on-site Project components, resource input, and product output are discussed in Section 2.3, Section 2.4, and Section 2.5, respectively.

2.2 SITE PLAN ACCESS, AND CHARACTERISTIC

Figure 1-3, Preliminary Plot Plan, presents a scaled, overall plot plan for the Project. The Preliminary Plot Plan also identifies the primary site access, which will be from Adohr Road on the northern side of the Project Site.

Table 2-3, Project Linear Tie-in Location on Plot Plan, provides a list of the currently anticipated Project pipelines, communication, and electrical interfaces at the site boundaries.

Table 2-4, Site Characteristics, summarizes site meteorology and other characteristics upon which the Project design has been based.

Table 2-3 Project Linear Tie-In Location on Plot Plan

Interface Description	Tie-In Location
Communications Conduit	Within other linear facility easements
Water Supply	South side of Plot
Potable Water Supply	Southeast side of Plot
Plant Wastewater Discharge	None (ZLDs)
Natural Gas Supply	Southeast side of Plot
Carbon Dioxide Export	Southwest side of Plot
Transmission Line	West side of Plot

Source: HECA Project

Table 2-4 Site Characteristics

Elevation	General site elevation varies slightly from the high point grade elevation of 291 ft above mean sea level (msl).	
Design Ambient Temperature & Humidity	Dry Bulb (F)	Relative Humidity (%)
Average Ambient	65°	55
Summer Design	97°	20
Winter	39°	82
Extreme Minimum Ambient	20	85
Extreme Maximum Ambient	115°	15
Design Ambient Barometric Pressure		14.54 psia
Rainfall		
Average Precipitation per year		5.7 inches (avg. 2000 – 2006)
24-hour Max Precipitation (50-year storm)		1.8 inches
Prevailing Wind Direction & Ave. Speed		Wind Rose

Source: Computed from Annual and Monthly Summaries (year span) of Bakersfield, CA Meteorological Data, NOAA, National Climate Data Center, Asheville, NC.

Notes:

The 25-year, 24-hour maximum precipitation is 1.8 inches

ºF = degrees Fahrenheit

msl = mean sea level

psia = pounds per square inch absolute

2.3 ON-SITE PROJECT COMPONENTS PROCESS DESCRIPTION

2.3.1 Solids Handling, Gasification, and Gas Treatment

Gasification typically involves two distinct processes, namely pyrolysis and gasification. In practice, the processes may either occur in two different reactors or be combined in one reactor. Definitions of pyrolysis and gasification are:

- **Pyrolysis** – The thermal degradation of carbon-based materials through the use of an indirect, external source of heat, typically at temperatures of 750 degrees Fahrenheit (°F) to 1,650°F, in the absence or almost complete absence of free oxygen (O_2). This thermally decomposes and drives off the volatile portions of the organic materials, generating syngas composed primarily of hydrogen (H_2), carbon monoxide (CO), carbon dioxide (CO_2), and methane (CH_4).
- **Gasification** – The thermal conversion of carbon-based materials in the presence of internally produced heat, typically at temperatures of 1,400°F to 3,000°F, and in a limited supply of air/oxygen (less than stoichiometric, or less than is needed for complete combustion) to produce syngas composed primarily of hydrogen and carbon monoxide.

Overall gasification reactions are shown in Table 2-5, Primary Gasification Reactions. Some of these reactions are actually endothermic, requiring heat input to go forward - unlike combustion, which is completely exothermic.

Table 2-5 Primary Gasification Reactions

Devolatilization/Pyrolysis = CH_4 + CO + Oils + Tars + C (char)	
$C + O_2 \rightarrow CO_2$	Oxidation – exothermic – rapid
$C + ½ O_2 \rightarrow CO$	Partial oxidation – exothermic – rapid
$C + H_2O \rightarrow CO + H_2$	Water/gas reaction – endothermic – slower than oxidation
$C + CO_2 \rightarrow 2CO$	Boudouard reaction – endothermic – slower than oxidation
$CO + H_2O \rightarrow CO_2 + H_2$	Water gas shift reaction – exothermic – rapid
$CO + 3H_2 \rightarrow CH_4$ + H2O	Methanation – exothermic
$C + 2H_2 \rightarrow CH_4$	Direct methanation – exothermic

Source: Multiple Publicly Available Sources

Notes:

C	=	carbon
CH_4	=	methane
CO	=	carbon monoxide
CO_2	=	carbon dioxide
H_2	=	hydrogen
H_2O	=	water
O_2	=	oxygen

Gasification is a chemical conversion process that occurs in a reducing environment. Gasification differs from combustion in that gasification produces syngas, an intermediate product that can then be used for other purposes such as generating electricity or producing

chemicals. Typical components of syngas from an oxygen-blown gasifier are shown in Table 2-6, Components of Syngas from Oxygen-Blown Gasification.

Table 2-6 Components of Syngas from Oxygen-Blown Gasification

Constituent	Percent by Volume
Hydrogen	24-40
Carbon monoxide	35-50
Carbon dioxide	2-30
Water	0.4-23
Methane	0-4
Hydrogen Sulfide	0.2-2.0
Carbonyl sulfide	0-0.1
Nitrogen + Argon	0.2-7
Ammonia + Hydrogen cyanide	0-0.3
Higher Heating Value	~200-300 Btu/scf

Notes:
Btu = British thermal unit
scf = standard cubic foot

2.3.1.1 Feedstock Delivery, Handling & Storage

A simplified process flow diagram of the Feedstock, Handling, and Storage system is shown in Figure 2-2, Flow Diagram Feedstock Handling and Storage.

The primary feedstocks for this Project are petroleum coke from California refineries and western bituminous coal. The feedstock will be transported via enclosed conveyors to one of three cone-bottom feedstock storage silos. Feedstock reclaimed from the silos will be transported via an enclosed conveyor to a pre-crushing system and then to the feedstock bins in the Grinding and Slurry Prep building. Feedstock blending (when required) will be accomplished by reclaiming appropriate amounts of feedstock simultaneously from multiple feedstock storage silos.

Tramp metal removal will be accomplished using magnets and metal detectors. A dust collection system consisting of hoods and baghouses will control particulate emissions.

Fluxant is added to the petroleum coke feedstock to achieve the proper molten flow characteristics of the gasification solids at acceptable gasifier operating temperatures. Fluxant will be delivered to the Project Site via truck from regional sources. The fluxant trucks will be unloaded using a pneumatic transport system into the fluxant storage bins. A dust collection system consisting of hoods and baghouses will control particulate emissions.

2.3.1.2 Gasification

Gasification Technology Selection

GE quench gasification technology was identified as the best fit to meet the specific requirements of the proposed Project, when taking into account key decision criteria, including the lifecycle cost of electricity and reducing technology risk through demonstrated commercial operation with similar (petcoke and coal) feedstocks, at similar capacity and operating conditions. As part of the design evaluation, both of GE's gasification designs were evaluated, these are referred to as radiant and quench. GE's radiant design has been incorporated in their IGCC reference plant, and GE considers it to be the preferred choice for IGCC power plants that do not require high levels of carbon capture. GE's quench design is simpler and has been applied widely in syngas generation for chemical production, particularly where sour shift is used to increase syngas hydrogen (and carbon dioxide) content. The Project uses GE's quench gasification technology because of the synergies with the sour shift process that increases hydrogen production and facilitates high levels of pre-combustion carbon capture (carbon dioxide removal).

GE's quench gasifier design routes the hot gasifier effluent directly into a water bath at the bottom of the gasifier without any high-level heat recovery. Molten gasification solids in the gasifier effluent are solidified in the water bath and removed, and the resultant gas is scrubbed to remove fine particulates. Both designs also have similar grinding and slurry preparation systems and gasification solids handling systems. Figure 2-3, Gasification Process Sketch for Permits, shows a schematic process sketch of GE's quench gasification technology.

Grinding and Slurry Preparation

Feedstock is continuously delivered from feed bins to the grinding mills. Fluxant is also continuously conveyed from feed bins to the grinding mills. The grinding mills crush the feedstock, fluxant, and recycled gasifier solids (fine slag/ash and unconverted carbon) with water to form slurry. The slurry is pumped into slurry tanks, which are sized to provide about 8 hours of storage.

Gasifiers

GE's quench gasifier is a slurry-fed, pressurized, entrained flow, slagging downflow gasifier, consisting of a refractory-lined pressure vessel capable of withstanding the required gasification process temperature and pressure range. For the gasification reaction, slurry and oxygen are introduced into the gasifier through a specialty equipment item called the feed injector.

All slagging gasifiers require that the mineral matter in the feedstock melt and flow by gravity out the bottom of the gasifier reaction chamber. When using petroleum coke feedstock and/or coal feedstocks containing ash that melts at high temperatures, the addition of a fluxant is required to achieve the proper molten "gasification solids" flow characteristics at acceptable gasifier operating temperatures, and thus facilitate gravity flow. Both the type and quantity of fluxant required is dependent upon the feedstock characteristics.

The slurry is pumped from the slurry tanks to each gasifier by a slurry charge pump. This high pressure metering pump supplies a steady, controlled flow of slurry to the feed injector. The slurry and a measured amount of high pressure oxygen from the Air Separation unit (ASU) react

in the gasifier reaction chamber at high temperatures to produce syngas. The feedstock is almost totally gasified in this environment to form syngas consisting principally of hydrogen, carbon monoxide, carbon dioxide, and water.

Hot syngas, along with ash, fluxant, and unconverted carbon from the gasifier reaction chamber flow down into the water-filled quench chamber located below the gasifier. The syngas is cooled in this water pool, and exits the quench chamber to be further washed. Molten ash and fluxant are solidified in the water pool. Coarse slag and a portion of the unconverted carbon settle to the bottom of the quench pool, where they enter the coarse slag handling section.

Syngas Scrubbing

The syngas from the gasifier enters the syngas scrubber, where solids are removed from the syngas. Raw syngas from the overhead of the syngas scrubber is routed to the downstream sour shift and low-temperature gas-cooling section.

Water condensed from the syngas in the downstream sour shift and low-temperature gas cooling section is returned as process condensate to the syngas scrubber. The syngas scrubber bottoms water contains solids removed from the raw syngas exiting the quench pool.

Gasification Solids and Water Handling

Gasification solids (slag as defined by GE) are comprised of ash and unconverted carbon that exit the gasifier. The coarse slag handling section removes coarse solid material from the gasifier. Coarse solid material exiting the bottom of the gasifier quench chamber flows into the lockhopper. After the solids enter the lockhopper, the particles settle to the bottom. The solids that have accumulated in the lockhopper are water-flushed into the slag collection sump, using process water return from the fine slag handling section.

In the slag collection sump, the gasification solids are separated from the water. The gasification solids are washed and the discharged washed low carbon gasification solids are transported by truck off-site for sale or disposal. The fine slag recycle from the slag collection sump is pumped to the fine slag handling section

Most or all of the settler bottoms are pumped to the grinding and slurry preparation section to recycle fines. Some of the settler bottoms can alternatively be sent to a fine gasification solids filter to produce filter cake, which can be either recycled to the grinding and slurry preparation section or transported by truck off-site for disposal.

Gasifier Refractory Heaters

Natural gas-fired gasification refractory heaters are required to preheat the gasifier refractory prior to startup if starting from cold conditions and also to keep the refractory warm when the gasification train is in hot standby. The combustion products from the gasification refractory heaters are released through vent stacks located on top of the gasifier structures.

2.3.1.3 Sour Shift/Low Temperature Gas Cooling

The Sour Shift/Low Temperature Gas Cooling (LTGC) unit performs several functions:

- Substantially increases the syngas hydrogen content using a 2-stage carbon monoxide shift process
- Cools the shifted syngas by generating steam for additional power production and for internal plant consumption
- Collects hot process condensate formed during the shifted syngas cooling process for recycle to the gasifier syngas scrubbing section
- Collects additional process condensate formed during the shifted syngas cooling process for recycle to Gasification and/or discharge to Sour Water Stripping
- Removes ammonia from the cooled syngas

The carbon monoxide shift process converts water vapor and carbon monoxide to hydrogen and carbon dioxide using the water-gas shift (a.k.a. CO shift) reaction, which can be expressed as follows:

$$CO + H_2O \leftrightarrow CO_2 + H_2 + \text{Heat}$$

The reaction is highly exothermic (i.e., releases heat). High reaction rates are favored by high temperatures; however, high conversion is favored by lower temperatures.

In addition to increasing the hydrogen content of the syngas, the carbon monoxide shift process substantially increases the fraction of carbon present as carbon dioxide in the syngas, and consequently the extent of pre-combustion carbon capture (e.g., as carbon dioxide removal) that can be achieved.

Selection of the carbon monoxide shift technology is dependent upon whether the process gas is essentially sulfur-free (“sweet”) or contains appreciable qualities of sulfur compounds (“sour”). Iron/chrome oxides (at higher temperatures) and copper/zinc oxides (at lower temperatures) are used as catalysts with sulfur-free gas streams, whereas cobalt-molybdenum oxides are used as catalysts if sulfur tolerance is required.

Sulfur-tolerant, sour shift technology was selected for the Project because the sour syngas produced by GE’s quench gasification process also contains a substantial amount of water vapor, which drives the carbon monoxide shift reaction to near completion, maximizing the potential for carbon capture. The many synergies between the two technologies yield a simple and cost effective means of achieving high carbon capture with only a single carbon dioxide absorption step. Additionally, the low concentration of carbon monoxide in the shifted syngas allows production of a carbon dioxide by-product gas with a carbon monoxide content of less than 800 parts per million by volume (ppmv). Examples of existing gasification plants with GE’s quench gasification and sour shift technology include the Shell Convent Refinery Hydrogen Plant in Louisiana and the Coffeyville Resources Ammonia Plant in Kansas.

The Sour Shift unit for the Project will be designed with two sour shift reactors in series to achieve a residual carbon monoxide concentration in the cooled, shifted syngas of about one volume percent. As a co-benefit, the carbon monoxide shift process will also substantially reduce carbonyls, formates, cyanides, and other impurities in the syngas.

Simplified process flow sketches of the Sour Shift/LTGC unit are included in Figure 2-4, Flow Diagram Sour Shift System and Figure 2-5, Flow Diagram Low Temperature Gas Cooling. The following discussion provides a brief description of the processing steps in this unit.

Scrubbed syngas from the Gasification unit is heated against hot reactor effluent and fed to the two sour shift reactors in series. The sour shift catalyst also promotes conversion of most of the carbonyl sulfide (COS) present in the syngas to hydrogen sulfide (H_2S) via the following reaction:

$$COS + H_2O \leftrightarrow CO_2 + H_2S$$

The shift reactions are highly exothermic, and the hot syngas is cooled in-between the two shift reactors by feed/effluent exchange and by raising steam for generating additional power and internal plant consumption.

The shifted syngas from the second shift reactor is cooled by generating steam at multiple pressure levels, and by heating boiler feedwater and vacuum condensate to efficiently utilize the available but relatively low-temperature heat. Final cooling of the shifted syngas to near ambient temperature is achieved with air and water coolers.

Water condenses from the shifted syngas as it is cooled. The majority of the ammonia (NH_3) and a small portion of the carbon dioxide and hydrogen sulfide present in the syngas are absorbed in this condensed water. A fraction of this process condensate is reheated against shifted syngas and returned as hot process condensate to the syngas scrubbers in the Gasification unit, and the rest is routed to the Sour Water Stripping unit.

The cooled shifted syngas is washed with cold water in a trayed column to remove residual ammonia, and then fed to the Mercury Removal unit.

A simplified process flow sketch of the Mercury Removal System is shown in Figure 2-6, Flow Diagram Wash Column and Mercury Removal.

2.3.1.4 Mercury Removal

Tests of petroleum coke sources show occasional trace levels of mercury in the elemental analyses. Western bituminous coals typically contain trace levels of mercury as well. In order to minimize potential mercury emission, the Project has elected to incorporate mercury capture technology. The petroleum coke and coal procurement requires purchase of spot market supplies, effectively limiting the potential for controlling the supplier's processes. However, the mercury capture technology will also ensure that spot market supplies do not introduce mercury emissions.

Downstream of the shift reactors and low-temperature gas cooling, the syngas passes through fixed beds of activated carbon that are prepared with special impregnate additives to remove mercury, if any is present. Multiple beds are used to obtain optimized adsorption. After mercury removal, the product syngas is treated in the Acid Gas Removal (AGR) unit.

2.3.1.5 Acid Gas Removal System

The term "acid gas" refers to materials containing significant concentrations of acidic gases such as hydrogen sulfide. This section describes how acid gas will be removed from the shifted syngas to produce the hydrogen-rich fuel for the power block.

Rectisol Process Description

The Rectisol process is shown in Figure 2-7, Flow Diagram Rectisol Acid Gas Removal/Fuel Gas Supply Systems. Shifted, hydrogen-rich sour syngas feed is chilled and enters the pre-wash section of the hydrogen sulfide absorber column where condensed or dissolved impurities are removed. The gas then flows up the column where it is contacted with carbon dioxide-laden methanol solvent for absorption of hydrogen sulfide and other sulfur compounds. The solvent preferentially absorbs sulfur while releasing carbon dioxide in the process. The now hydrogen sulfide-laden solvent is withdrawn from the chimney tray of the column and flashed, with the flash gas being recycled to the hydrogen sulfide absorber column and the separated liquid solvent is sent to a hot regenerator.

Overhead gas from the hydrogen sulfide absorber flows to the carbon dioxide absorber where it is contacted with cold regenerated solvent for carbon dioxide removal. The treated hydrogen-rich gas, now very low in hydrogen sulfide and carbon dioxide, exits the top of the carbon dioxide absorber and is heated before flowing to a turbo expander for energy conservation. The hydrogen-rich product gas is then heated and used as fuel in the combined cycle power block.

Carbon dioxide-laden solvent flows from the bottom of the carbon dioxide absorber column where a portion is diverted to the hydrogen sulfide absorber for hydrogen sulfide removal. The remainder is flashed, with the separated gases recycled to the hydrogen sulfide absorber, and chilled before being routed to the flash regenerator. In the flash regenerator, absorbed carbon dioxide is removed from the solvent by sequentially decreasing the pressure in multiple steps. Separated carbon dioxide flows to carbon dioxide compression equipment for transportation to the Elk Hills Field for CO_2 EOR and sequestration.

Carbon dioxide-free solvent from the bottom of the flash regenerator combines with solvent from the hydrogen sulfide absorber and flows to the hot regenerator where hydrogen sulfide and other sulfur compounds are released from the solvent by increasing the temperature and stripping with methanol vapor generated in a reboiler. The separated acid gas undergoes further processing for recovery of the sulfur. Most of the regenerated, now carbon dioxide- and hydrogen sulfide-free, solvent is cooled by heat exchange with cool solvent, chilled, and returned to the carbon dioxide absorber for reuse. A small portion of the regenerated solvent and the bottom liquid of the hydrogen sulfide absorber column which contains water from the feed gas are sent to the methanol-water column for separation of dissolved water and impurities from the methanol by distillation. The methanol overhead is retuned to the hot regenerator and the separated column bottoms water is cooled and sent to the gasification area.

2.3.2 Power Generation

The major equipment is described in the following sections, covering the topics of fundamental operation and the function within the power block and overall facility. Equipment highlights are provided. An overall sketch of the power block system is shown in Figure 2-8, Flow Diagram Power Block Systems.

2.3.2.1 Combined-cycle Power Generation

The combined cycle portion of the power block is similar to a state-of-the-art combined cycle power plant. Major equipment consists of a heavy duty gas turbine, a steam turbine and an

HRSG. Other power block equipment includes a condenser, cooling tower, deaerator, boiler feedwater, and condensate pumps.

Power is produced by the consumption of hydrogen-rich fuel and/or natural gas to meet the parasitic load for the accompanying gasification plant and for export to the PG&E electrical grid. Natural gas can be co-fired with hydrogen rich fuel when only one gasifier is operating. Natural gas firing also serves as a backup fuel to allow continued electrical power export when hydrogen rich fuel is not available. The power block integrates the process heat generated within the gasification plant by the exothermic water-gas shift reaction and the SRU hydrogen sulfide oxidation reaction. Boiler feedwater from the power block deaerator is supplied to generate saturated steam at multiple pressure levels utilizing this heat. Excess high pressure (HP), intermediate pressure (IP) and low pressure (LP) steam and that generated in the HRSG with gas turbine exhaust heat and duct burner heat release are superheated in the HRSG before being admitted to the reheat steam turbine generator (STG).

The STG exhausts into a water cooled condenser, where the heat is rejected to a multi-cell mechanical draft wet cooling tower via a circulating water system. The condensate leaving the condenser hot well is heated and deaerated before returning to the HRSG LP system and integrated process heat exchangers.

The power block also includes a single natural gas fired auxiliary gas turbine, an aeroderivative simple cycle machine, to provide backup power to the gasification plant during forced outage periods and to provide beneficial spot market power production to the grid.

Heavy Duty Gas Turbine

The heavy duty combustion turbine generator (CTG) is made up of an axial flow air compressor, diffusion-flame combustion system, an axial flow turbine, and a hydrogen cooled generator. Ambient air is filtered and cooled in an evaporative cooler before entering the compressor section. The compressor is multi-stage design, which nearly adiabatically compresses the air through a process of transferring the energy imparted by the rotating blade to pressure rise in the diffusing stationary blade. This compression process also raises the air temperature before discharging to the combustion system. The compressor has air extraction ports on the outer stationary shell and the inner rotor.

During startup, air is extracted from the shell side to balance the flow passing ability of the front stages with the later stages. During normal operation, air is extracted for cooling the hot gas path parts that make up the turbine section. Air extracted through the outer shell is used to cool the stationary turbine parts, including the nozzles, bucket stationary shrouds, and the turbine shell. Air extracted inward through the rotor supplies cooling air for the inner passages and rotating parts, including the buckets, the rotors, and the wheel spaces between the rotors.

Air leaves the compressor at elevated pressure and temperature, and enters the combustion section. The combustion system is made up of multiple combustion cans (chambers) that equally divide the flow, allowing for controlled combustion reaction zones. Each combustor can have a set of hydrogen fuel and natural gas fuel nozzles, as well as nitrogen and steam diluent injection nozzles. Dilution holes in the combustion liners are designed to control the combustion zone air, fuel, and diluent mixing in such a way as to suppress the combustion temperatures and thus limit the amount of nitrogen oxides formed. The hot combustion gases leave the combustion system through the transition piece and enter the turbine section.

The high pressure and temperature gas entering the turbine passes through the stationary nozzle to the rotating bucket. There are three such stages in the turbine which extracts energy from the expanding gases; providing the torque that drives the axial compressor and the generator. The machine is a cold-end drive design, where the shaft torque generated in the turbine section is transmitted through the compressor shaft to the generator. This allows for the turbine exhaust gas leaving the last rotating bucket to enter a long diffuser, where velocity or kinetic energy is converted to pressure or potential energy. The advantage of the diffuser is that it allows the turbine to operate at a lower back pressure, increasing power generation. Flow exiting the diffuser enters the HRSG transition duct upstream of the first superheater coils.

The hydrogen cooled generator shaft is connected through a coupling to the CTG shaft at the compressor end of the machine. The generator typically converts mechanical energy to electrical energy, with additional auxiliary loads required to energize the excitation system, operate the lubricating oil system, and other support systems. Mechanical losses from the bearings also take away from the net electrical generation. Hydrogen is used as the coolant, which requires carbon dioxide and compressed air purging systems to ready the generator for safe maintenance.

The CTG operation is supported by separate skids that house the lube oil system, the fuel, and diluent metering systems, and other services, including fire detection and protection, control system, and compressor wash system, etc. The enclosure around the CTG has a controlled operating environment, with a ventilation system designed to protect against undesirable outside temperatures and maintain safe conditions, with fire detection and protection.

Heat Recovery Steam Generator

The CTG exhausts into the HRSG after a short transition duct. The HRSG is a triple pressure level reheat design. The HRSG is comprised of a series of heat exchangers that utilize the CTG exhaust energy to heat boiler feedwater to saturation conditions, then vaporize and superheat the steam. Also, HP STG exhaust steam is reheated in the HRSG before being returned to the intermediate pressure (IP) section of the STG. The HRSG includes a duct burner to elevate the exhaust gas temperature, a selective catalytic reduction (SCR) system to control the stack nitrogen oxide emissions and a carbon monoxide catalyst system to control the stack carbon monoxide emissions.

Each HRSG pressure level system consists of economizing, evaporating, and superheating sections. The LP economizer is fed from the deaerator and the IP and HP economizers are fed from the LP drum. Condensate enters the HRSG feedwater heater section after leaving the condenser hotwell, combined with the make-up water and heated with process heat. The feedwater heater heats the feedwater to within 20°F of the deaerator saturation temperature at the deaerator operating pressure of 30 pounds per square inch absolute (psia). The off-base deaerator utilizes stripping steam from the LP drum to remove entrained oxygen before supplying the HRSG and the process LTGC system with boiler feedwater.

The LTGC system transfers heat from the hot syngas, leaving the shift converters to a multi-pressure level system that generates saturated steam from deaerated feedwater. This steam satisfies the requirements of the gas processing units and other users, with the excess HP, IP, and LP saturated steam sent to augment HRSG steam production.

Emissions Controls Systems

The Project is designed with state-of-the-art emission-control technology. Emissions control systems will be designed to meet the BACT levels of nitrogen oxides, carbon monoxide, sulfur dioxide, and volatile organic compounds (VOCs), as proposed in this application, based on the most current industry data and manufacturers' information. Project emission control systems are described in detail below.

SCR Emissions Control System

The SCR system reduces nitrogen oxide emissions from the HRSG stack gases by up to about 83 percent. Diluted 19 percent aqueous ammonia is injected into the stack gases upstream of a catalytic system which converts nitrogen oxide and ammonia to nitrogen and water.

The expected components in the SCR system are as follows:

Aqueous Ammonia Storage Tank – The aqueous ammonia storage tank is a horizontal or vertical vessel which stores 16,000 gallons of 19 weight percent aqueous ammonia for the SCR system. The storage tank will be complete with relief valves, level gauges, local audio alarms, and will also be located inside a containment area.

Aqueous Ammonia Forwarding Pumps – The aqueous ammonia forwarding pumps will transfer aqueous ammonia from the storage tank to the aqueous ammonia vaporizer.

Ammonia Vaporizer – The aqueous ammonia vaporizer atomizes and vaporizes the ammonia and water solution. Plant air or steam will atomize the aqueous ammonia to assist in the vaporization. The energy to vaporize the aqueous ammonia will come from a slip stream of hot stack gas or by heating ambient air with a heating element.

Vaporizer Blower – The vaporizer blower delivers fresh air or recycled hot stack gas from the HRSG into the aqueous ammonia vaporizer.

Ammonia Injection Grid – Once the aqueous ammonia is properly vaporized, the ammonia is sent to an injection grid where the ammonia stream is divided into various injection points upstream of a catalyst. The flow of ammonia to each injection point can be balanced to provide optimum nitrogen oxide reduction.

SCR Catalyst – The SCR catalyst provides the surface area and the catalyst to react ammonia and nitrogen oxide to form nitrogen and water. The SCR catalyst will be installed in a reactor housing located within the HRSG at the proper flue gas temperature-point for good nitrogen oxide conversion.

CO Oxidation System

A carbon monoxide catalyst will be installed in the HRSG casing upstream of the SCR ammonia injection location to reduce carbon monoxide emissions. The carbon monoxide catalyst will oxidize the carbon monoxide and VOCs produced from the CTG.

Continuous Emissions Monitoring System

The Continuous Emissions Monitoring System (CEMS) records the emissions out of the HRSG stack to comply with local, state, and federal emission requirements. The CEMS monitors the nitrogen oxide, oxygen, and carbon monoxide levels. It uses control system signals for CTG power output and fuel gas to the CTG to calculate the total mass rate of emissions released, and

may also be used as part of the ammonia injection controls for the SCR system. The CEMS will be designed, installed, and certified in accordance with the applicable San Joaquin Valley Air Pollution Control District (SJVAPCD) and USEPA standards for analyzer performance, data acquisition, and data reporting.

Steam Turbine Generator

The STG is a 160 MW (nominal) sliding-pressure reheat design, with the HP section discharge steam sent back to the HRSG to be reheated before admission to the IP section. The IP section discharges into the cross-over pipe where LP steam from the HRSG is admitted before entering the double flow LP section. The flow splits and expands through separate LP turbines before exhausting downward into the condenser. The turbine sections are on a common shaft, which connects through a coupling to a hydrogen cooled generator.

The STG has supporting systems, including a gland steam condenser, a steam seal regulator, lube oil and hydraulic oil systems, and control system. The steam seal system manages the use of leakages from the HP section seals to provide sealing for the lower pressure sections, as well as provide excess steam to the gland seal condenser.

Heat Rejection System

The excess thermal energy in the steam exhausted to the condenser is dissipated in the heat rejection system. This system is comprised of a condenser, a circulating water system, and a multi-cell cooling tower.

The condenser is a shell and tube heat exchanger with the steam condensing on the shell side under a vacuum and the cooling water flowing through the tubes in a single or double pass design. The condensate collects in the condenser hotwell, where it supplies the condensate pumps that feed the HRSG. The heat in the condenser is picked up by the circulating water system and transferred to the cooling tower. An auxiliary cooling water system also transfers heat to the cooling tower from the cooling duties of the hydrogen-cooled generators, the auxiliary CTG, and other power block equipment.

2.3.2.2 Auxiliary CTG

The auxiliary CTG is a natural gas fired GE LMS100® PA in a simple cycle configuration, equipped with water injection for nitrogen oxide control. Post combustion emissions controls will include SCR and carbon monoxide Catalyst systems to meet the permitted stack emissions requirements.

Unlike the 7FB heavy duty design, the LMS100® is a multi-shaft machine, with the LP compressor (LPC) and the IP turbine (IPT) on a common shaft, the HP compressor (HPC) and HP turbine (HPT) on a common shaft and an independent power turbine on a common shaft with the generator. The LPC is derived from an existing heavy duty frame machine design with several years of field experience. The HPC, HPT, and IPT sections, referred to as the super-core, are based on proven aeroderivative technology with many millions of operating hours. The power turbine, a new design optimized to operate in either the 50 Hz or 60 Hz market, is pneumatically coupled to the super-core and transmits power to the generator.

Featured also is an intercooler, between the LPC and the HPC, which cools the air entering the HPC, reducing compressor power demand, and increasing air flow and pressure ratio capability.

The intercooler rejects heat to the auxiliary cooling system and ultimately to the power block cooling tower.

A single annular combustor system, a common aeroderivative design, is utilized, with water injection to control nitrogen oxide emissions. Post combustion emission controls include an SCR and carbon monoxide catalyst.

The auxiliary CTG is equipped with the following accessories to provide safe and reliable operation: evaporative coolers, inlet air filters, metal acoustical enclosure, duplex shell; and tube lube oil coolers for the turbine and generator, compressor water wash system, fire detection and protection system, hydraulic starting system, and compressor variable bleed valve vent.

2.3.2.3 Major Electrical Equipment and Systems

The Project will have a 230 kV air insulated switchyard using a breaker and a half scheme with redundant 230 kV transmission lines for interconnection to the PG&E Midway Substation. The breaker and a half scheme allow each breaker to be isolated and also each 230 kV bus to be isolated without affecting the reliability of the Project.

The combined cycle power block has two prime movers: the GE Frame 7FB (CTG-1) and the associated steam turbine generator (STG-1). CTG-1 and STG-1 each have 18 kV generator breakers. The auxiliary simple cycle (CTG-2) provides an independent source of generation when the combined cycle gas turbine CTG-1 is not operating, or when additional peaking power is needed.

Startup power for the plant will be obtained by back feeding from the 230 kV grid through the main transformer to the unit auxiliary transformers which are tap connected to the CTG-1 and STG ISO phase buses.

2.3.3 Supporting Process Systems

2.3.3.1 Natural Gas Fuel System

Natural Gas Metering Station

The natural gas fuel system provides natural gas to all the Project components at the required pressure, temperature, and flow rates. The natural gas system is shown on Figure 2-9, Flow Diagram Natural Gas System.

High Pressure Natural Gas

The power block combined cycle CTG (GE Frame 7FB) is the largest high pressure natural gas user, although hydrogen rich gas is the primary fuel for this unit. All of the combined cycle startups are on natural gas and the power block can operate independently on natural gas when hydrogen-rich fuel is not available. The combined cycle CTG requires natural gas at about 400 psig which is near the pipeline minimum operating pressure. The auxiliary simple cycle CTG (GE LMS100®) requires a booster compressor to increase the natural gas pressure to about 960 psig at the fuel control skid. The heat of compression will ensure the gas is above the dew point and a filter separator is included to make sure only clean dry natural gas enters the CTG.

Low Pressure Natural Gas

Low pressure natural gas will be supplied from a letdown station located in the power block. A separate pressure reduction station and knockout drum are provided to supply the Project's other low pressure natural gas users. A list of the low pressure natural gas users follows:

- HRSG duct burners (when combined cycle plant is operating on natural gas fuel)
- Auxiliary boiler
- SRU reaction furnace (for refractory preheating and startup)
- Gasifier preheat burners (for refractory preheating during startup)
- Tail gas thermal oxidizer
- Gasification, Rectisol and SRU flare pilots
- Building space heating and miscellaneous users

2.3.3.2 Air Separation Unit

High purity oxygen and nitrogen are supplied from the ASU, which separates and purifies oxygen and nitrogen from the ambient air. The ambient air is filtered, compressed, dried, and cooled to cryogenic temperatures, and is then separated into purified oxygen and nitrogen streams.

Most of the high purity oxygen is supplied at high pressure to the gasification process as one of its feeds. The rest is supplied at low pressure to the oxygen-blown SRU as one of its feeds.

High-purity nitrogen (<1% oxygen) is supplied at medium pressure as a diluent to the combustion turbine, which uses it to reduce thermal nitrogen oxide formation when combusting the hydrogen-rich gas. Ultra-high purity nitrogen (< 100 ppmv oxygen) is used for purging and blanketing throughout the Project.

The oxygen and nitrogen are then separated by cryogenic distillation within a heavily insulated "cold box." Because operating temperatures for air separation are at cryogenic levels, distillation equipment is enclosed within cold boxes and insulated from heat leakage. A simple process flow diagram for the ASU is presented as Figure 2-10, Air Separation unit.

High pressure gaseous oxygen for gasification is normally supplied from the ASU by pumping liquid oxygen (LOX) to the required pressure and then vaporizing the oxygen. A LOX storage system provides a backup oxygen supply to the gasifiers during short-term trips of the ASU. The LOX system consists of a LOX storage tank, LOX pump, and LOX vaporizer. The gaseous oxygen exiting the vaporizer is at a pressure suitable for delivery to the gasifier without additional compression.

Gaseous nitrogen for combustion turbine nitrogen oxide control is compressed to delivery pressure in the ASU and sent to the power block. The compressor discharge is not cooled.

Gaseous ultra-high purity nitrogen for purging and inerting of equipment is normally supplied directly to the Project's nitrogen distribution system. A liquid nitrogen (LIN) storage system provides a backup supply of ultra-high purity nitrogen to the plant during ASU trips. The LIN system consists of a LIN tank, LIN pump, and LIN vaporizer. The gaseous nitrogen exits the vaporizer at a pressure suitable for feeding into the Project's nitrogen distribution system.

2.3.3.3 Sulfur Recovery Unit

Sulfur is removed from the processing facility through a sulfur complex which consisting of a Claus unit (thermal stage) plus catalytic converters otherwise known as the Sulfur Recovery unit (SRU), a Tail Gas Treatment unit (TGTU), and a tail gas thermal oxidizer. The sulfur process facility consists of 2 by 50 percent SRUs, 1 by 100 percent TGTU, and 1 by 100 percent thermal oxidizer. The Claus unit and TGTU give an overall sulfur recovery efficiency in the range of 99.8 to 99.9+ percent. The following is a process description of the SRU Claus unit, TGTU, and thermal oxidizer:

Claus Section

The acid gas stream from the Rectisol AGR unit, plus a low concentration acid gas stream from the gasification section and the carbon dioxide/ammonia/hydrogen sulfide stripped from sour water, are fed to two identical, parallel Claus-type SRUs. The total sulfur concentration in the SRU feed (H_2S plus COS) from the AGR will be 45 mol % (minimum). Pressure at the boundary limit will be 30 psia (minimum).

In the SRU, the hydrogen sulfide carried in the acid-gas streams is converted to elemental sulfur and water vapor based on the industry-standard Claus process. Each unit consists of a thermal stage and two catalytic reaction stages. The sulfur is selectively condensed and collected in molten form in the sulfur pits. The SRU is designed for both air and oxygen-blown Claus technologies. Figure 2-11, Flow Diagram Sulfur Recovery Unit, presents a simplified process flow sketch of the SRU.

The Rectisol AGR acid gas and recycle acid gas from the TGTU regenerator enter the SRU through the Acid Gas Wash Drum to remove any liquid from operating upsets of upstream units to protect the Claus reaction furnace and catalyst. Similarly, low concentration acid gas from the gasification section and sour water stripper gas are routed to a Sour Water Stripper (SWS) Acid Gas Knockout Drum.

The resulting acid gas streams are preheated using medium-pressure steam; the oxygen feed is pre-heated using medium-pressure stream prior to feeding the reaction furnace. All of the acid gas from the SWS Acid Gas Knockout Drum and the oxygen is sent to the main reaction furnace to ensure complete destruction of ammonia.

One-third of the hydrogen sulfide is combusted with oxygen to produce the proper ratio of hydrogen sulfide and sulfur dioxide, which then react to produce elemental sulfur vapor in a reaction furnace ($2H_2S + SO_2 \rightarrow 3S + 2H_2O$). A waste heat boiler is used to recover heat before the furnace off-gas is cooled to condense the first increment of sulfur. Gas exiting the first sulfur condenser is fed to a series of heaters, catalytic reaction stages, and sulfur condensers, where the hydrogen sulfide and sulfur dioxide are incrementally converted to elemental sulfur and condensed.

Sulfur Storage

Liquid sulfur from the SRU is collected in two fully enclosed subsurface sulfur storage pits (SSP). To provide for containment, the SSPs are constructed with structural concrete with a solid roof, built in accordance with applicable LORS. The liquid sulfur drains into the SSP which contain a pump well and Sulfur Transfer Pumps. Sweep air is introduced into the SSP to prevent the accumulation of hydrogen sulfide, and to control fugitive emissions. The sweep air inlet and

outlet are located at opposite ends of the SSP to ensure proper sweep of the vapor space. The sweep air is drawn through the SSP and will be routed back to the reaction furnace through the SSP ejector.

Liquid sulfur is pumped from sulfur storage to a sulfur degassing unit. The sulfur degassing unit strips dissolved hydrogen sulfide out of the liquid sulfur. The degassed sulfur is routed from the degassing unit to the sulfur storage SSP. The stripped hydrogen sulfide stream is routed to the Claus reaction furnace.

Sulfur loading involves pumping liquid sulfur from the sulfur storage to trucks. The sulfur loading equipment will have vapor recovery systems to control fugitive emissions by returning displaced vapors to the SRU. The SRU is a totally enclosed process with no discharges to the atmosphere.

Tail Gas Treating Unit

A process flow sketch for this unit is shown in Figure 2-12, Flow Diagram Tail Gas Treating Unit. The tail gas from the SRU is composed mostly of carbon dioxide, water vapor, and sulfur vapor with trace amounts of hydrogen sulfide, carbonyl sulfide, and sulfur dioxide. The tail gas from both SRU trains is sent to a single TGTU, where it is first preheated using high-pressure steam and then catalytically hydrogenated in the hydrogenation reactor to convert the remaining sulfur species to hydrogen sulfide. The resulting gas stream is then cooled, washed with caustic for unconverted sulfur dioxide removal, and finally contacted with lean amine in the absorber, where hydrogen sulfide is preferentially absorbed. The rich amine leaving the bottom of the absorber is pumped to the regenerator, where hydrogen sulfide and carbon dioxide are stripped from the amine. Overhead gas from the regenerator containing the separated hydrogen sulfide and carbon dioxide is recycled to the front of the Claus SRU section. The lean solvent from the bottom of the regenerator is cooled and pumped to the absorber.

The treated TGTU vent gas from the absorber overhead contains mostly carbon dioxide and trace levels of sulfur compounds. The treated tail gas is normally compressed, dried, and blended with the much larger product carbon dioxide from the AGR unit. The combined carbon dioxide stream is compressed for transportation to the Elk Hills Field for EOR and sequestration.

Sour Water Stripper (SWS)

The stripped gasses from the SWS containing ammonia, hydrogen sulfide, and carbon dioxide are sent to the Claus unit for sulfur recovery and ammonia destruction. The SWS is shown schematically in Figure 2-13, Flow Diagram Sour Water Stripper.

The majority of the SWS feed is produced in the Sour Shift/ Low Temperature Gas Cooling unit. Numerous other small sour water streams are collected from within the Project and sent to the SWS feed tank along with the cold condensate from the shifted syngas knockout drums.

The SWS feed pumps, which take suction from the feed tank, deliver sour water to the SWS. The stripper is injected with low pressure steam at the bottom of the column. The rising steam strips ammonia, carbon dioxide, and hydrogen sulfide out of the sour water. The overhead vapors are cooled in an air-cooler condenser. The condensate is refluxed back to the column and the overhead non-condensable gases are sent to the Claus unit. The stripped condensate is drawn off the bottom of the column and pumped to the Gasification Block for reuse.

Tail Gas Thermal Oxidizer

Associated with the operation of the sulfur recovery process is the integral use of a thermal oxidizer as a control device to provide for the safe and efficient destruction of the hydrogen sulfide contained in the TGTU vent gas during startup and shutdown. The miscellaneous oxidizing streams from the gasification area (e.g., atmospheric tank vents and miscellaneous equipment vents) are directed to the thermal oxidizer during normal operation to prevent nuisance odors.

In the thermal oxidizer, the TGTU tail gas and other oxidizing streams are subjected to a high temperature and a sufficient residence time to cause an essentially complete destruction of reduced sulfur compounds such as hydrogen sulfide. The thermal oxidizer uses natural gas to reach the necessary operating temperature for optimal thermal destruction.

2.3.3.4 Zero Liquid Discharge

A small fraction of the process water in the Gasification unit is blown down to the Process Wastewater Treatment/ZLD unit to maintain the gasification unit water chemistry within corrosion limits. The process wastewater from the Gasification unit will be treated (if required) and routed to a ZLD system which will include a mechanical vapor compression evaporator and crystallization unit. The pure distillate produced from the evaporator will be returned to the gasification unit for reuse. The solid material produced will be trucked to an approved off-site material disposal facility in accordance with applicable LORS.

2.3.3.5 Carbon Dioxide Compression and Pipeline

At least 90 percent of the carbon in the raw syngas will be captured, resulting in a high purity carbon dioxide stream during steady-state operation. The carbon dioxide is transported by pipeline to the custody transfer point at Elk Hills Field for CO_2 EOR and Sequestration. The Carbon Dioxide Compression System is shown in Figure 2-14, Flow Diagram Carbon Dioxide Compression and Venting Systems. In order for the carbon dioxide to be transported, it must first be compressed. The carbon dioxide that will be compressed comes from two sources: (1) the bulk of the carbon dioxide comes from the AGR unit; and (2) a small portion comes from the TGTU absorber. After processing by the AGR unit, the carbon dioxide is very dry, which avoids pipeline and equipment corrosion.

The AGR removal unit produces high purity carbon dioxide at two pressure levels: (1) the lower pressure level is near atmospheric pressure; and (2) the higher pressure carbon dioxide is available at about three atmospheres. The Rectisol process contacts the syngas with refrigerated methanol so the product carbon dioxide is dry at the compressor suction.

The TGTU carbon dioxide stream is near atmospheric pressure and contains moisture. It is compressed to the just above the higher carbon dioxide pressure from the AGR unit, dried, and then combined with the higher carbon dioxide pressure stream from the AGR unit.

The maximum pressure requirement for the carbon dioxide pipeline is about 2,800 psig at the compressor discharge. Once the carbon dioxide pressure reaches approximately about 1,200 psig it becomes super-critical[1]. The significance of this is that at high pressures the carbon dioxide

[1] Super-critical refers to a material at a temperature and pressure above its critical temperature pressure. At these conditions there is no defined phase difference between liquid and vapor.

exists as a dense single phase. Heating or cooling the fluid will change its density, but it will not develop into a separate liquid phase. So while the compression to high pressure is needed for carbon dioxide injection operations, it is also needed to keep the carbon dioxide in a super-critical phase throughout the carbon dioxide pipeline. Multi-stage centrifugal compressors have been selected for the Project. The compressors are inter-cooled between stages and provided with inlet guide vane capacity controls.

The captured and compressed carbon dioxide will be transported by pipeline at a pressure greater than 1,500 psig, but no greater than 2,800 psig. The stream will be approximately 97 percent pure carbon dioxide. The pipeline facilities will consist of a pipeline 12 inches in diameter, one metering facility at the pipeline origin and terminus/custody transfer point, one pig launcher, one pig receiver, cathodic protection system, two main block valves and two additional emergency shutdown valves, as specified by the California State Fire Marshal.

2.3.3.6 Other Plant Systems

Heat Rejection Systems

Waste heat (i.e., low-grade thermal energy that is impractical to recover and reuse) from the Project will be rejected to the atmosphere. Two types of heat rejection systems are used depending on the process requirements. Air coolers (fin-fan exchangers) are used for direct heat rejection to the atmosphere where low process outlet temperatures are not critical to efficiency. Mechanical draft cooling towers are used where indirect heat rejection is required and/or where low process outlet temperatures are critical to overall plant efficiency.

Air coolers are dedicated to specific services primarily within the Shift/LTGC, TGTU, and SWS units. Mechanical draft cooling towers serve multiple heat loads in more than one process unit. The Project has three mechanical draft cooling towers which are described below. Figure 2-15, Flow Diagram Cooling Water System, shows the power block cooling water system. The configuration shown in this figure is similar to the ASU and gasification cooling towers.

Power Block Cooling Tower

The largest heat rejection load in the Project is the steam turbine surface condenser in the combined cycle power block. The main cooling water pumps supply water from the cooling tower basin and pump it through the surface condenser tubes and back to the top of the cooling tower cells. The return water flows into distribution piping below high efficiency drift eliminators and above the cooling tower fill material. Electric motor driven induced draft fans move air up through the tower fill material, contacting the cooling water with air and promoting evaporative cooling. A separate set of auxiliary cooling pumps supply water from the cooling tower basin and pump it through plate type closed cooling water (CCW) exchangers and return the water to the cooling tower fill material. The CCW pumps circulate higher purity water through the CCW exchangers which cool the water before it removes heat from the closed circuit cooling water users. The closed circuit cooling water users include the CTG and STG generator coolers and lube oil coolers. The use of a separate closed cooling water system also reduces the electric power load by enabling the shutdown of the large, main circulating pumps when the power block is in standby, ready to start, or following an STG shutdown.

A chemical feed system will supply water conditioning chemicals to the circulating water to minimize corrosion and control the formation of mineral scale and biofouling. Sulfuric acid will

be fed into the circulating water system for alkalinity reduction to control the tendency for scaling. The acid feed system will consist of storage and two full-capacity metering pumps. A polyacrylate solution is also fed into the circulating water system as a sequestering agent to further inhibit scale formation. This system also requires storage and two full-capacity metering pumps. To prevent biofouling in the circulating water system, sodium hypochlorite is added to the system. The system requires storage and two full-capacity metering pumps.

Gasification Block Cooling Tower

The gasification block cooling water system design is similar to the power block, only the duty is substantially lower. The major heat rejection duties are from the carbon dioxide compressor and the AGR refrigeration unit. Cooling water is also supplied to the gasification, Shift/LTGC, SRU, TGTU, SWS units and some other miscellaneous users. Compressor lube oil systems, large motor cooling, and other services that require higher purity cooling water are supplied by the closed circuit cooling water loop.

Air Separation Unit Cooling Tower

The ASU cooling water system design is also similar to the power block and the duty is also substantially lower. The major heat rejection duties are from the main air compressor intercooler and aftercooler, the booster air compressor intercooler, and the nitrogen compressor intercooler. Compressor lube oil systems, large motor cooling, and other services that require higher purity cooling water are supplied by the closed circuit cooling water loop, which rejects heat to the ASU cooling tower. The ASU cooling tower is located in the ASU unit near the cooling loads. The ASU cooling tower has separate pumps and piping systems and is operated independently of the other cooling water systems.

Auxiliary Boiler

The auxiliary boiler is a pre-engineered package boiler that will provide steam for pre-startup equipment warm-up and for other miscellaneous purposes when steam from the gasification process or HRSG is not available. During normal operation, the auxiliary boiler may be kept in warm standby (steam sparged, no firing) or cold standby (no sparging), and will not have emissions. The boiler will produce a maximum of about 100,000 pounds per hour of steam and will be fueled only by pipeline natural gas. The boiler will be equipped with low nitrogen oxide burners and flue gas recirculation to minimize emissions.

Flares

Although the Project is designed to avoid flaring during steady state operations, flares are needed to protect the Project operators and equipment. The Project employs three pressure relief systems and their corresponding flares (Gasification, Rectisol, and SRU) for this purpose. All three flares are conventional pipe flares. The Rectisol and SRU flares are provided with natural gas assist. Vessels, towers, heat exchangers, and other equipment are connected to piping systems that will discharge gases and vapors to a relief system in order to prevent excessive pressure from building up in the equipment and to allow safe venting of equipment during routine startup, shutdown, or emergency operations.

During normal, non-startup plant operation the three flares will be operated in a standby mode with only “de minimis” emissions from the natural gas pilot flames. As explained below, two of the flares will be also be used to occasionally dispose of excess startup gases in a safe manner.

2.3.3.7 Gasification Flare

The gasification block will be provided with a relief system and associated gasification flare to safely dispose of gas streams during gasifier startup, shutdown, and unplanned upsets or emergency events; syngas during AGR startup; hydrogen-rich gas during short-term emergency combustion turbine outages; or other various streams within the Project during other unplanned upsets or equipment failures. The power block, shift, and gasification unit vents are collected in a HP flare header. A simplified process flow sketch of the gasification flare system is shown in Figure 2-16, Flow Diagram Gasification & Rectisol Flare Systems.

Reduced-pressure sour gas vents from the gasification and shift units during shutdown depressurizing operations are first scrubbed in the gasification amine absorber to remove essentially all the sour sulfur compounds and then fed to an LP flare header. Both the HP and LP flare headers are routed to a common flare knockout drum to remove condensed moisture and any potentially entrained liquids.

2.3.3.8 Sulfur Recovery Unit Flare

SRU flare will be used to safely dispose of gas streams containing sulfur during startup and shutdown (as described further in this section) and gas streams containing sulfur during unplanned upsets or emergency events. Acid gas derived from the AGR, gasification unit, and SWS overhead is normally routed to the SRU for recovery as elemental sulfur. During cold plant startup of the gasifiers, AGR, and Shift units, these acid-gas streams will be diverted to the SRU flare header for a short time. To reduce the emissions of sulfur compounds to the environment during SRU or TGTU shutdown, the acid gas is routed to the emergency caustic scrubber, where the sulfur compounds are absorbed with caustic solution. After scrubbing, the gas is then routed to the elevated SRU flare stack via the SRU flare knockout drum. Fresh and spent caustic tanks and pumps are provided to allow delivery of fresh caustic and disposal of spent caustic. A simplified process flow sketch of the SRU flare system is shown in Figure 2-17, Flow Diagram SRU Flare System.

2.3.3.9 Rectisol Flare

A Rectisol Flare will be used to safely dispose of low temperature gas streams during startup, shutdown, and unplanned upsets or emergency events. Cold reliefs and vents from the AGR unit and its associated Refrigeration unit are collected in the Rectisol flare header. The Rectisol flare header is used only in emergencies or upsets and contains gases that can be below the freezing point of water. For this reason the Rectisol flare header gases are segregated from the wet gases in the gasification flare header. A simplified process flow sketch of the Rectisol flare system is shown in Figure 2-16, Flow Diagram Gasification & Rectisol Flare Systems.

Emergency Engines

Diesel Generator
Two 60 Hz, 3-Phase, 2,000 kW, 0.8 PF standby diesel generator(s) in an outdoor enclosure will be connected to the 480 V switchgear to supply emergency essential service power to critical lube oil and cooling pumps, gasification and auxiliary steam systems, gasification quench system, station battery chargers, UPS, heat tracing, control room, and emergency exit lighting, and other critical plant loads.

A Local Control Panel (LCP) will be located on base with standard microprocessor-based engine and generator controls, interlocks, metering, alarms, and synchronizing system. Remote control of the diesel generator shall be from DCS operators via a fiber optic cable to Sellers control system.

Emergency Diesel Firewater Pump
One approximately 600 horsepower (hp), 415 kilowatts (kW) standby firewater pump, located adjacent to the firewater tank.

Emission Monitoring Systems

CEMS will be installed on several stack emission sources as required by applicable regulations and permit conditions. These analyzers will be designed, installed, certified, and calibrated in accordance with the applicable LORS. In general, it is expected that these systems will sample, analyze, and record stack emission data for several specified pollutants. CEMS will incorporate data handling and acquisition systems to automatically generate emissions data logs and compliance documentation. Alarms will alert operators if stack emissions exceed specified limits. Each CEMS system will undergo periodic calibration, audits, and testing to verify accuracy. It is anticipated that the following CEMS systems will be required for the indicated emissions:

- HRSG – nitrogen oxide, carbon monoxide, and oxygen
- Auxiliary CTG – nitrogen oxide, carbon monoxide, and oxygen
- Tail Gas Thermal Oxidizer – sulfur dioxide and oxygen
- Hydrogen-rich Fuel – Total sulfur

In addition to continuous monitoring, the Project will perform periodic stack emission tests to verify compliance with emission limits as required.

2.4 RESOURCE INPUT

Unlike most power plants in California, this Project uses domestic supplies of solid feedstock. The feedstocks for the Project include the following and are discussed below in more detail:

- Petroleum coke and western bituminous coal
- Fluxant (crushed aggregate, rock, or sand)
- Natural gas

- Water
- Oxygen and Nitrogen

2.4.1 Petroleum Coke and Western Bituminous Coal

2.4.1.1 Petcoke

Petcoke is expected to be the lowest cost feedstock available to the Project. Approximately 16,350 tpd (6.0 million tons per year [tpy]) of fuel grade petcoke are produced by major California refineries, including BP. Five of these refineries are located in the Los Angeles area, three are in the San Francisco area, and two are in central California. At steady state operation feeding 100% petcoke, the Project would consume about 17% of this total production (around 2,820 tpd, or 1.0 million tpy).

2.4.1.2 Bituminous Coal

The Project expects to obtain its necessary western bituminous coal from the Uinta Basin located in Utah and Colorado. Approximately 0.5 million tpy of Uinta Basin coal is delivered to a transloading facility in the Bakersfield area for use by small cogeneration facilities. Several western bituminous coal mines that can supply coal meeting Project technology requirements in terms of ash composition and other characteristics have already been identified. The Project is in the process of discussing possible contractual terms with the relevant entities.

2.4.1.3 Feedstock Quality and Plant Operations

Feedstock Flexibility

To maximize the number of potential fuel suppliers and to minimize fuel costs, the Project is designed to accept a range of feedstock blends. It incorporates a fluxant injection system to allow operation on 100% petcoke, but can also operate on a blend of as much as 75 percent thermal input (HHV) coal, with petcoke.

Sulfur Content

The sulfur recovery system will handle feedstock blends whose average sulfur content is within the range of the different assumed feedstocks. Western bituminous coal has an average sulfur content of approximately 1.0%. The average sulfur content of California's fuel grade petcoke is approximately 3.4% today, but is expected to climb to 4.5% by 2020.

A representative feedstock analysis is provided below for each of the feedstocks. The representative feedstock analysis for petroleum coke is provided in Table 2-7, Petroleum Coke Design Range. The representative feedstock analysis for western bituminous coal is provided in Table 2-8, Typical Analysis for Western Bituminous Coal.

2.4.2 Fluxant

Slagging gasifiers require that the mineral matter in the feedstock melt and flow by gravity out of the bottom of the gasifier reaction chamber. When using petroleum coke feedstock and/or coal feedstocks containing ash that melts at high temperatures, the addition of a fluxant is required to

achieve the proper molten "gasification solids" flow characteristics at acceptable gasifier operating temperatures; thus facilitating gravity flow. Both the type and quantity of fluxant required are dependent upon the feedstock characteristics.

Table 2-7 Petroleum Coke Design Range

Ultimate Analysis, wt% (dry)	
Carbon	84 – 91
Hydrogen	3 – 5
Nitrogen	1-4
Sulfur	0.8 – 6.0
Oxygen	<1.0
Ash	0.3 – 1.0
Moisture, wt% (AR)	5 – 15
Chloride Content, ppmw (dry)	100 - 300
Gross Heating Value, Btu/lb (dry)	14,500 – 15,500
Bulk Density, lb/ft3 (AR)	40 – 50
Ash Analysis, ppmw (dry)	
Vanadium	900 – 1,200
Nickel	700 – 1,250
Iron	500 – 1,000
Chromium	<10
Sodium	50 – 500
Calcium	50 – 500

Source: HECA Project

Notes:

AR = as received

ppmw = parts per million by weight

Table 2-8 Typical Analysis for Western Bituminous Coal

Ultimate Analysis, wt% (dry)	
Carbon	70 – 76
Hydrogen	4.4 – 6.7
Nitrogen	0.6 – 1.6
Sulfur	0.1 – 2.0
Oxygen	7.0 – 14.5
Ash	4.8 – 11.2
Moisture, wt% (AR)	5.0 – 12.0
Gross Heating Value, Btu/lb (dry)	11,300 – 13,600
Ash Analysis, ppmw (dry)	
Vanadium	8 – 9
Nickel	4 – 12
Chromium	7 – 12
Mercury	0.02 – 0.08

Source: HECA Project

Notes:

AR = as received (with delivered free moisture)

ppmw = parts per million by weight

Table 2-9 Example Fluxant Composition

Constituent	Dry wt%
Silicon Dioxide (SiO_2)	47
Aluminum Oxide (Al_2O_3)	14
Iron Oxide (Fe_2O_3)	16
Calcium Oxide (CaO)	8
Magnesium Oxide (MgO)	4
Sodium Oxide (Na_2O)	4
Potassium Oxide (K_2O)	1
Titanium Dioxide (TiO_2)	2
Manganese Dioxide (MnO_2)	0.4
Phosphorus Pentoxide (P_2O_5)	2
Strontium Oxide (SrO)	0.1
Barium Oxide (BaO)	0.1
Sulfur Trioxide (SO_3)	0.3
Balance	1.1
Total (dry)	100.00
Water, wt%	0.70 (normal) – 3 (max)

Source: HECA Project

2.4.3 Natural Gas

The natural gas supply meter station will be located within the Controlled Area, southeast of the Project Site. Two large natural gas pipelines systems (PG&E and SoCalGas) are available to supply natural gas to the Project. The distance between the main pipeline system headers and the Project Site is approximately 8 miles. The estimated minimum delivery pressure of the PG&E line is between a minimum of 335 pounds per square inch gauge (psig) and a maximum of 600 psig.

- The estimated minimum delivery pressure of the Southern California Gas Company pipeline is 350 psig. Historical data from 2008 shows that the pipeline pressure was at 500 psig or higher for 95.8 percent of the time which is sufficient for operation of the GE 7FB combustion turbine.

The interconnect will consist of one tap off the existing transmission line, one meter set, one service pipeline service connection, and a pressure limiting station located on the Project Site. The pipeline route is shown on Figure 1-4, Project Location Map.

Southern California Gas Company is proposed to be used by the Project.

Typical yearly averages for the natural gas composition and physical properties are given below in Table 2-10, Typical Natural Gas Composition.

Table 2-10 Typical Natural Gas Composition

Pressure, psig (for CTG startup and as a backup fuel)	>350 psig
Specific Gravity	0.588
Higher Heating Value, Btu/scf	1,035
Composition, mol%	
Hydrogen (H_2)	0.00
Methane (CH_4 or C_1)	95.165
Ethane (C_2)	2.52
Propane (C_3)	0.58
iso-Butane (i-C_4)	0.115
normal Butane (n-C_4)	0.1
iso Pentane (i-C_5)	0.035
normal Pentane (n-C_5)	0.025
Hexanes plus higher carbon compounds (C_6+)	0.025
Carbon Monoxide (CO)	0.00
Carbon Dioxide (CO_2)	0.885
Nitrogen (N_2)	0.565
Hydrogen Sulfide (H_2S)	<1/4 grain/100 scf
Total Sulfur	<3/4 - 1 grain/100 scf

Source: Southern California Gas Company

Notes:

Btu = British thermal units
CTG = combustion turbine generator
psig = pounds per square inch gauge
mol% = mole percent
N_2 = nitrogen
scf = standard cubic feet

2.4.4 Water

It is estimated that the Project will use about 2,900 gpm (4.2 million gallons a day) of brackish water on an average annual basis. This increases to about 4,100 gpm (5.9 mgd) during average summer afternoon conditions. The Project will utilize local brackish groundwater treated on-site to meet Project standards. The brackish groundwater will be supplied from the BVWSD, which is a local water district with impaired groundwater sources not suitable for agricultural or potable use. BVWSD has stated that it will be able to provide brackish groundwater with an average TDS concentration of approximately 2,000 mg/L, with an acceptable range from about 1,000 to 4,000 mg/L, to the Project for the estimated life of the Project. Potable water will be supplied by West Kern Water District located near the SR 119/Tupman Road intersection, southeast of the Project Site.

2.4.5 Oxygen and Nitrogen

The gasification process requires high pressure, high purity oxygen (95 volume percent). The oxygen is supplied from the ASU, which separates and purifies oxygen and nitrogen from the ambient air. The ambient air is filtered, compressed, dried, and cooled to cryogenic temperatures. The resultant oxygen is sent to the gasifier as one of the feeds. The ASU also supplies oxygen to the SRU.

The ASU supplies compressed nitrogen to the combustion turbine. The nitrogen is used as a diluent which reduces thermal nitrogen oxide (NO_x) produced when hydrogen-rich gas is combusted. The ASU also provides high purity nitrogen for purging equipment, piping and instrumentation.

2.5 PRODUCT OUTPUT

Unlike a typical power plant, an IGCC produces several products including the following which are discussed below in more detail:

- Electricity
- Carbon dioxide
- Molten sulfur
- Gasification solids
- Wastewater discharge

2.5.1 Electricity and Transmission Line

An electrical transmission line will interconnect the Project Site to PG&E Midway Substation. The interconnection voltage is expected to be 230 kV, to be verified by California Independent System Operator (CAISO). Each potential route is approximately 8 miles in length. While a preferred alternative has not been selected, the decision criteria for selecting the preferred route will include: environmental impact; engineering design and construction considerations; land availability; transmission loss; and future operation and maintenance requirements.

Table 2-11, Electrical Specification, describes the general specification for electricity delivery.

Table 2-11 Electrical Specification

Terminal Point	230 kV Plant Switchyard
Utility Interconnection Location	PG&E Midway 230 kV Substation
Line Voltage	230 kV
Frequency	60 Hz
Switchyard	Outdoor Switchyard

Source: HECA Project

Notes:

Hz = Hertz

kV = kilovolts

2.5.2 Carbon Dioxide

Carbon dioxide will be compressed and transported by pipeline to a custody transfer point in the Elk Hills Oil Field for enhanced oil recovery and sequestration. Two possible custody transfer points and associated pipeline routes are being evaluated in this ATC. Each route extends predominantly southwest to the respective custody transfer point and parallels existing private roads. The potential routes are approximately 4 miles in length. The preferred custody transfer point will be determined by Occidental of Elk Hills, Inc. (Oxy) Elk Hills. Based on the determined custody transfer point, only one pipeline route will be developed.

2.5.3 Molten Sulfur

As part of the gasification process, the Project will produce molten sulfur; which will be sold and transported by truck off-site for agricultural and other uses. Table 2-12, Sulfur Specification, describes the sulfur specification.

Table 2-12 Sulfur Specification

Maximum Quantity	180 stpd
Quality	Commercial Grade Degassed Liquid Sulfur
Degassed H_2S Content	<10 ppmw

Source: HECA Project

Notes:

H_2S = hydrogen sulfide
ppmw = parts per million by weight
stpd = short tons per day

2.5.4 Gasification Solids

The estimated production of gasification solids is estimated to average 140 stpd (wet) on a plant feedstock of 100% petcoke and is estimated to average 470 stpd (wet) on a plant feedstock of 75% coal/25% petcoke (thermal input HHV basis). The maximum gasification solids production rate is estimated to be 750 stpd (wet). The wide range of production estimates is due to the variability of the feed ratios and the resulting variation in the unreacted carbon content of the solids.

The exact composition of the gasification solids cannot be determined until the Project is in operation and typical gasification solids are generated. However, the composition can be projected, based on feed materials. Other operating solid feed gasification plants generate gasification solids for beneficial use. These plants are generally similar to the Project, with respect to gasification equipment, process specifications, and feed material blends. For this reason, Table 2-13, Example Composition Range of Gasification Solids, presents a typical range of compositions for the gasification solids. Options for potential uses of the gasifier solids are being evaluated by the Project and include applications in the cement industry, aggregate or road base industry, metal recovery (for vanadium and nickel recovery), and/or blending with petroleum coke to form a saleable solid fuel.

Table 2-13 Example Composition Range of Gasification Solids

Compound	Example Weight %, Wet		
	MIN	AVG	MAX
Vanadium Pentoxide (V_2O_5)	0.16	1.23	2.68
Nickel Sulfide (NiS)	0.03	0.09	0.23
Nickel (III) Oxide (Ni_2O_3)	0.00	0.80	1.86
Iron (II) Sulfide (FeS)	0.02	1.22	4.59
Iron (III) Oxide (Fe_2O_3)	0.00	3.65	7.46
Chromium (III) Oxide (Cr_2O_3)	0.00	0.02	0.05
Sodium Oxide (Na_2O)	0.54	1.21	2.00
Calcium Oxide (CaO)	1.61	2.69	3.71
Mercury (Hg)	0.00	0.00	0.00
Silicon Dioxide (SiO_2)	8.97	15.70	21.46
Aluminum Oxide (Al_2O_3)	2.59	6.26	12.82
Magnesium Oxide (MgO)	0.35	1.00	1.75
Potassium Oxide (K_2O)	0.15	0.32	0.51
Titanium Dioxide (TiO_2)	0.23	0.55	0.93
Manganese Dioxide (MnO_2)	0.00	0.07	0.14
Phosphorus Pentoxide (P_2O_5)	0.20	0.53	0.91
Strontium Oxide (SrO)	0.00	0.03	0.05
Barium Oxide (BaO)	0.00	0.02	0.05
Sulfur Trioxide (SO_3)	0.00	0.00	0.00
Unknowns	0.11	0.50	1.42
Water (H_2O)	49.84	52.57	57.93
Carbon (C)	1.42	11.54	25.99

Source: HECA Project

2.5.5 Wastewater Discharge

The Project has been designed for ZLD and therefore eliminates off-site discharge of surface water or wastewater. Project wastewater will primarily result from cooling tower blowdown, water supply treatment, and gasification process condensate blowdown. The cooling tower circulation water and the process condensate from gasification will be recycled to the maximum practical extent. Cooling tower blowdown that cannot be recycled and reject water from the water treatment plant will be sent to a plant wastewater zero liquid discharge (ZLD) unit. Gasification blowdown that cannot be recycled will be sent to a separate process wastewater ZLD unit. Sanitary wastewater from the Project restrooms, showers, and kitchens will be conveyed by an underground gravity collection system and discharged to a private on-site

sewage disposal system consisting of a conventional septic tank and leach field**.** No municipal system is available in the immediate area to serve the Project.

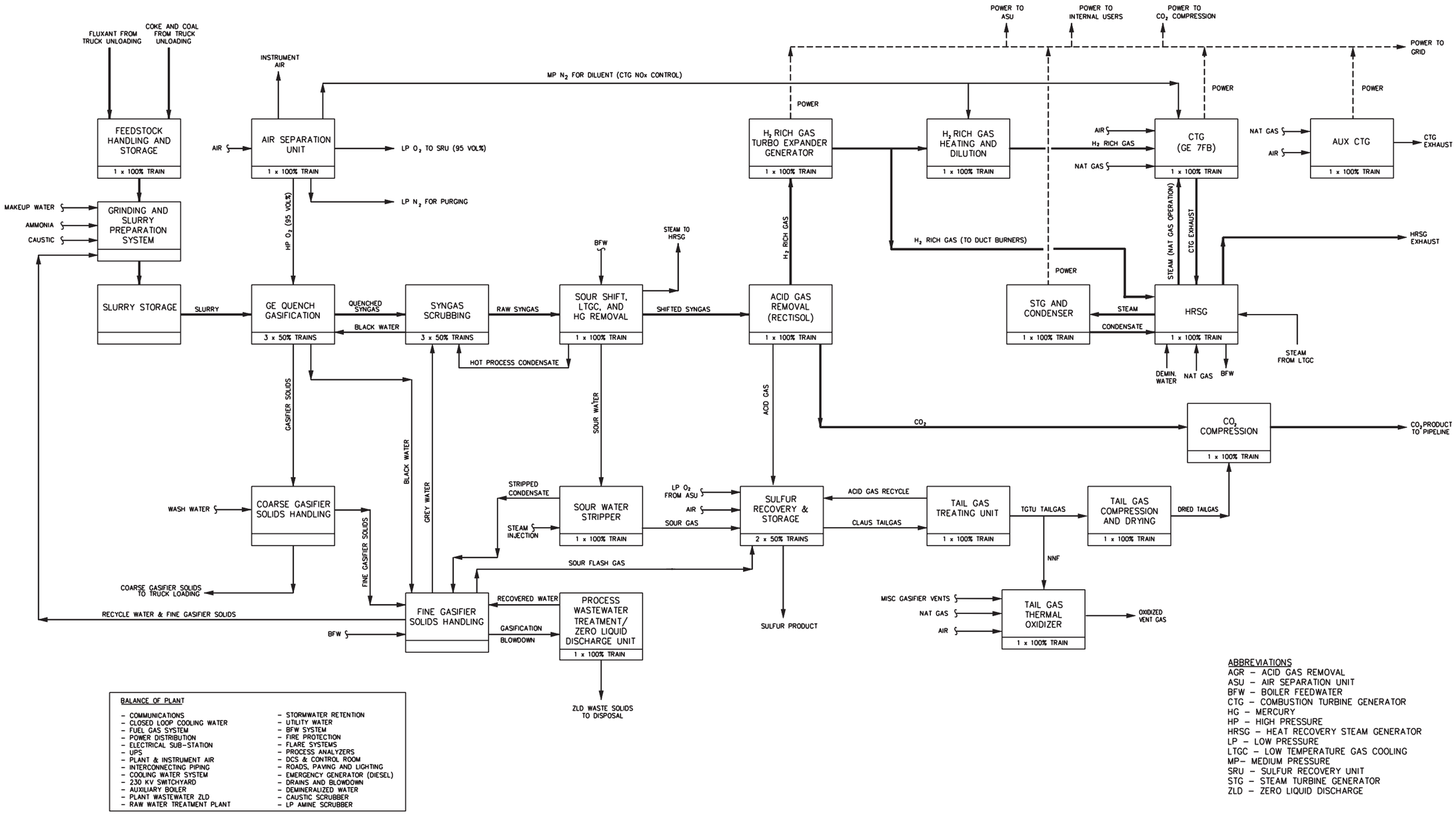

BALANCE OF PLANT

- COMMUNICATIONS
- CLOSED LOOP COOLING WATER
- FUEL GAS SYSTEM
- POWER DISTRIBUTION
- ELECTRICAL SUB-STATION
- UPS
- PLANT & INSTRUMENT AIR
- INTERCONNECTING PIPING
- COOLING WATER SYSTEM
- 230 KV SWITCHYARD
- AUXILIARY BOILER
- PLANT WASTEWATER ZLD
- RAW WATER TREATMENT PLANT
- STORMWATER RETENTION
- UTILITY WATER
- BFW SYSTEM
- FIRE PROTECTION
- FLARE SYSTEMS
- PROCESS ANALYZERS
- DCS & CONTROL ROOM
- ROADS, PAVING AND LIGHTING
- EMERGENCY GENERATOR (DIESEL)
- DRAINS AND BLOWDOWN
- DEMINERALIZED WATER
- CAUSTIC SCRUBBER
- LP AMINE SCRUBBER

ABBREVIATIONS

AGR – ACID GAS REMOVAL
ASU – AIR SEPARATION UNIT
BFW – BOILER FEEDWATER
CTG – COMBUSTION TURBINE GENERATOR
HG – MERCURY
HP – HIGH PRESSURE
HRSG – HEAT RECOVERY STEAM GENERATOR
LP – LOW PRESSURE
LTGC – LOW TEMPERATURE GAS COOLING
MP– MEDIUM PRESSURE
SRU – SULFUR RECOVERY UNIT
STG – STEAM TURBINE GENERATOR
ZLD – ZERO LIQUID DISCHARGE

Source:
Fluor; Hydrogen Energy California, Kern County Power Project;
Block Flow Diagram; Drawing No: A3RW-BFD-25-001, Rev. 4 (04/13/09)

OVERALL BLOCK FLOW DIAGRAM

May 2009 Hydrogen Energy California (HECA)
28067571 Kern County, California

URS

FIGURE 2-1

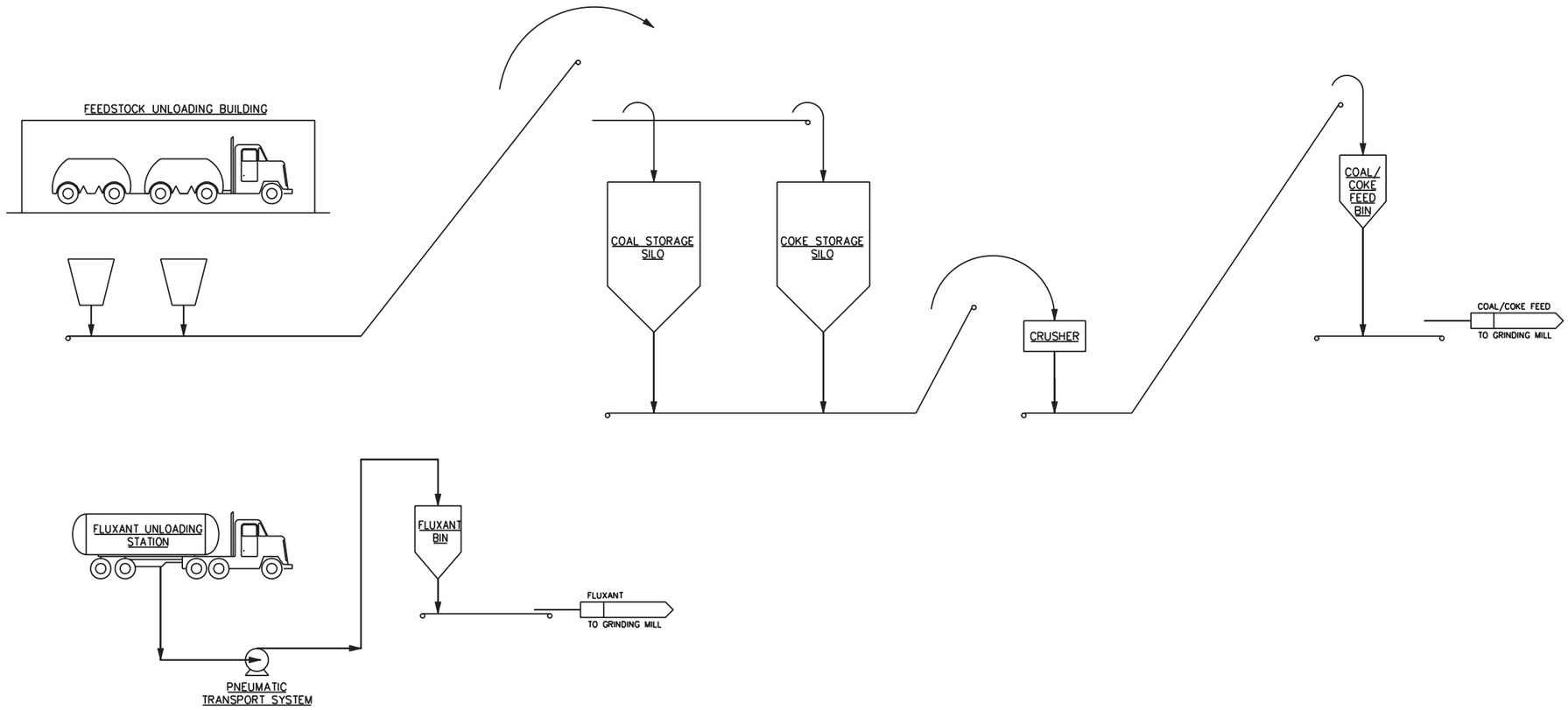

Source:
Fluor; Hydrogen Energy California, Kern County Power Project;
Flow Diagram Feedstock Handling and Storage; Drawing No: A3RW-PDF-25-003, Rev. 0 (06/04/08)

FLOW DIAGRAM
FEEDSTOCK HANDLING AND STORAGE

May 2009 Hydrogen Energy California (HECA)
28067571 Kern County, California

URS

FIGURE 2-2

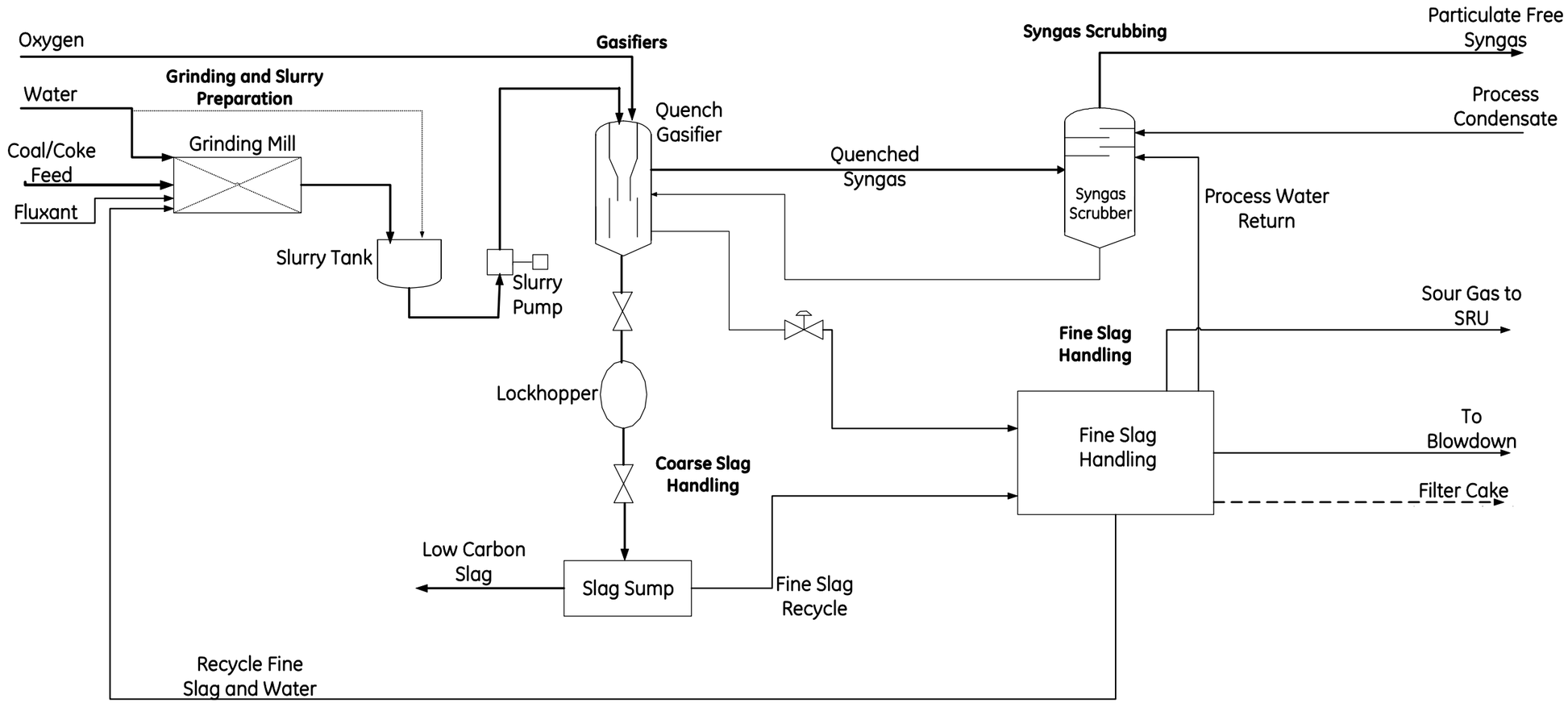

Source:
GE Energy (USA) LLC; Hydrogen Energy California Feasibility Study;
Gasification Process Sketch for Permits; Drawing No: 334A2456, Rev. 0 (05/15/08)

GASIFICATION PROCESS SKETCH FOR PERMITS

May 2009
28067571

Hydrogen Energy California (HECA)
Kern County, California

URS

FIGURE 2-3

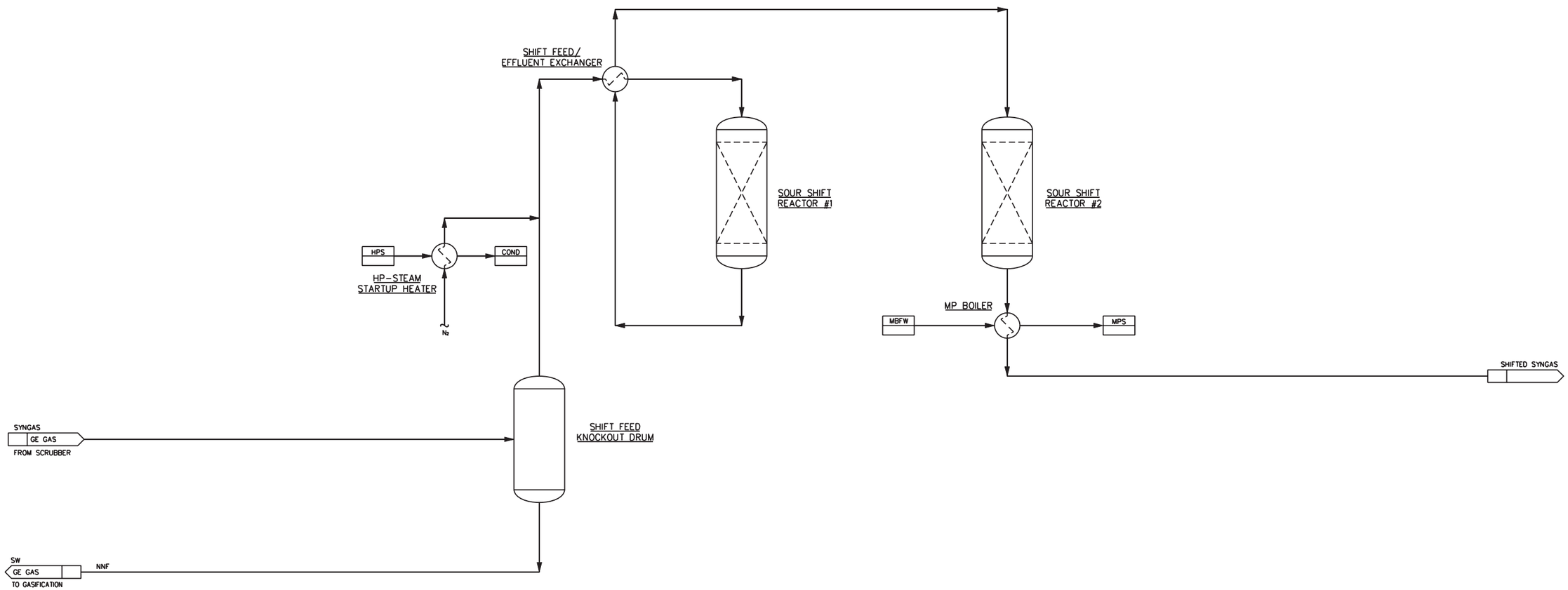

Source:
Fluor; Hydrogen Energy California, Kern County Power Project;
Flow Diagram, Sour Shift System; Drawing No: A3RW-PDF-24-006A, Rev. 1 (03/23/09)

FLOW DIAGRAM: SOUR SHIFT SYSTEM

May 2009
28067571

Hydrogen Energy California (HECA)
Kern County, California

URS

FIGURE 2-4

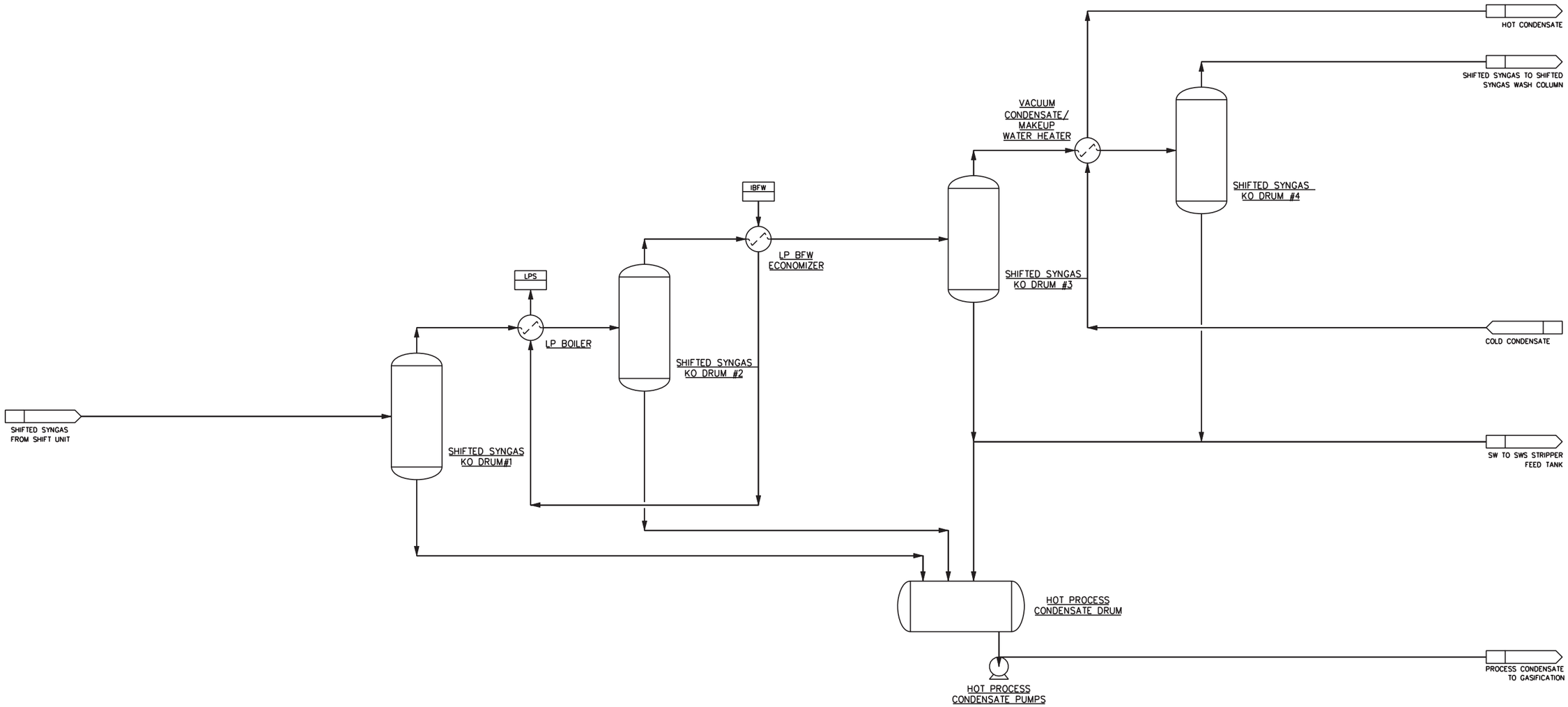

Source:
Fluor; Hydrogen Energy California, Kern County Power Project;
Flow Diagram, Low Temperature Gas Cooling (LTGC);
Drawing No: A3RW-PDF-25-006B, Rev. 1 (03/06/09)

FLOW DIAGRAM
LOW TEMPERATURE GAS COOLING

May 2009 Hydrogen Energy California (HECA)
28067571 Kern County, California

URS

FIGURE 2-5

5/18/09 vsa..T:\HECA\GRAPHICS\2.0 Project Description\2-15_LTGC.ai

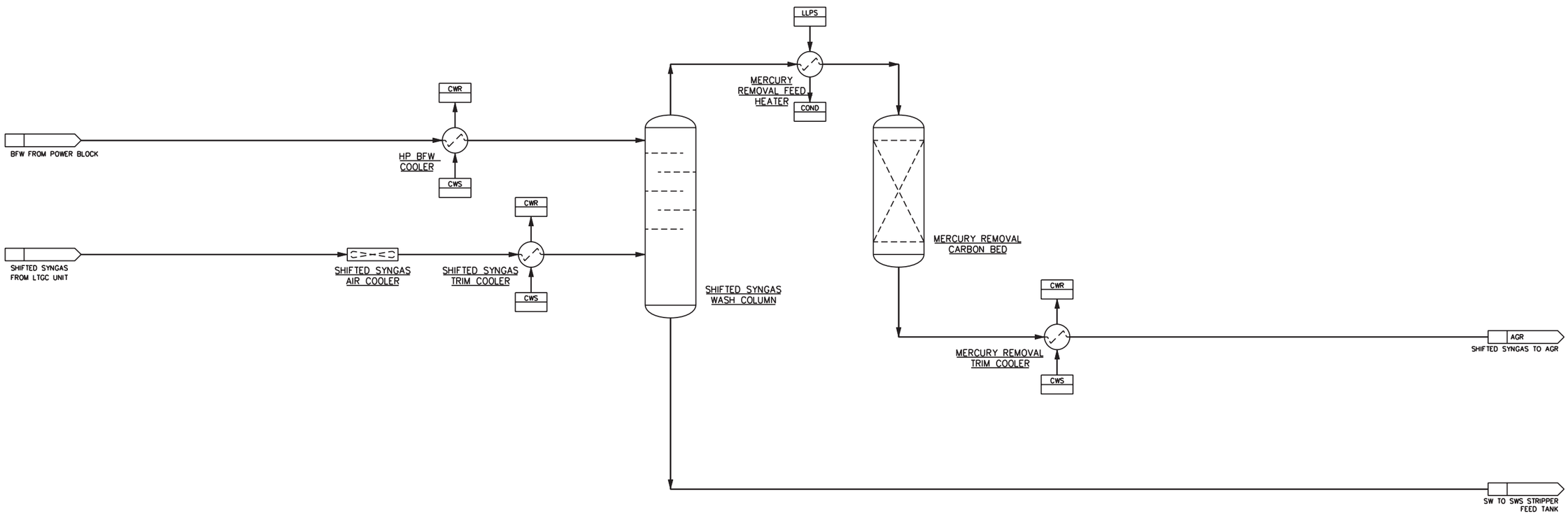

Source:
Fluor; Hydrogen Energy California, Kern County Power Project;
Flow Diagram, Wash Colum and Mercury Removal;
Drawing No: A3RW-PDF-25-006C, Rev. 0 (06/04/08)

FLOW DIAGRAM: WASH COLUMN AND MERCURY REMOVAL

May 2009
28067571

Hydrogen Energy California (HECA)
Kern County, California

URS

FIGURE 2-6

5/18/09 vsa..T:\HECA\GRAPHICS\2.0 Project Description\2-16_wash-mercury.ai

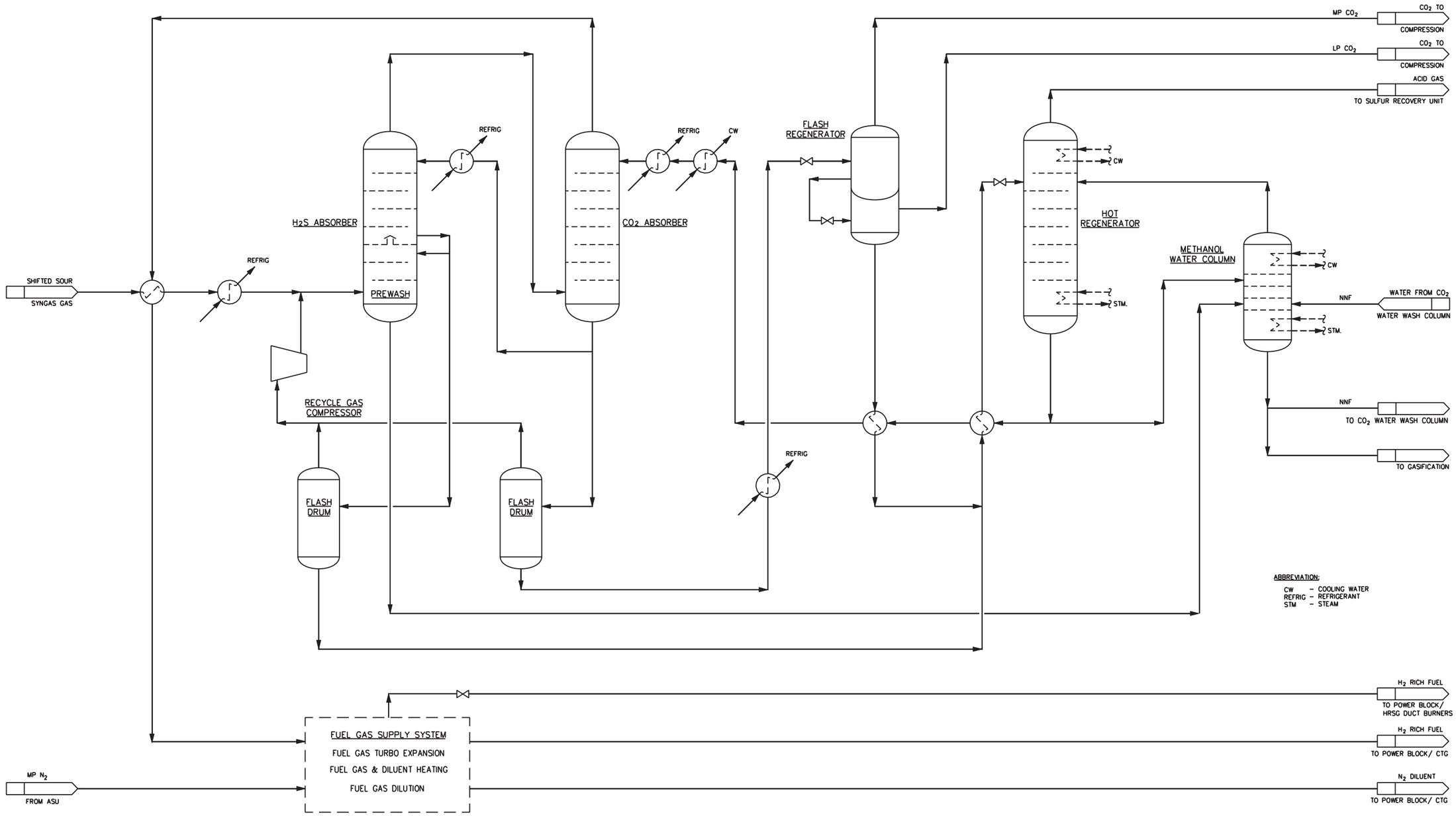

Source:
Fluor; Hydrogen Energy California, Kern County Power Project;
Flow Diagram, Rectisol Acid Gas Removal/Fuel Gas Supply Systems;
Drawing No: A3RW-PFD-25-007, Rev. 2 (04/13/09)

FLOW DIAGRAM
ACID GAS REMOVAL/
FUEL GAS SUPPLY SYSTEMS

May 2009
28067571

Hydrogen Energy California (HECA)
Kern County, California

URS

FIGURE 2-7

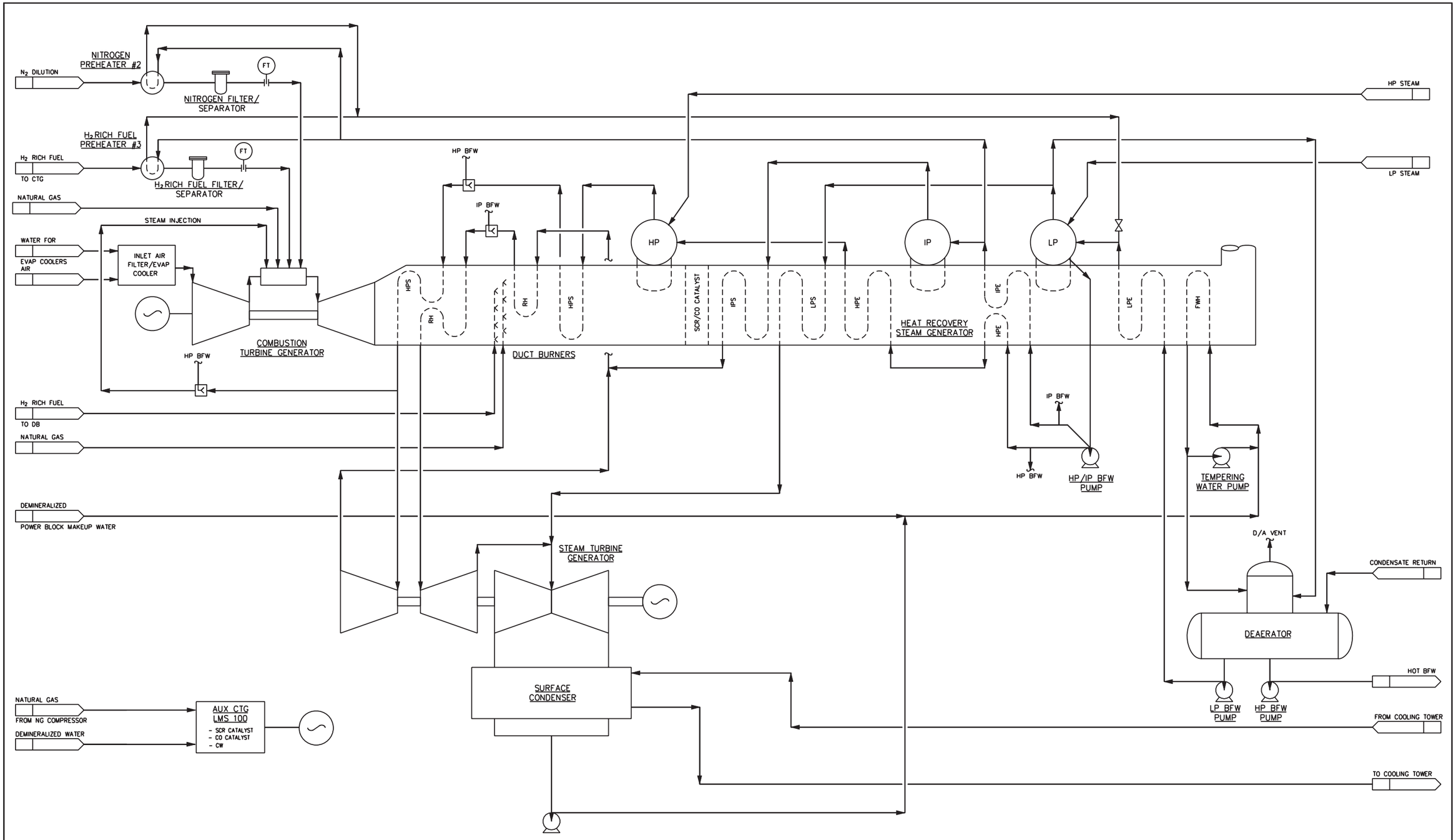

Source:
Fluor; Hydrogen Energy California, Kern County Power Project;
Flow Diagram, Power Block Systems;
Drawing No: A3RW-PDF-25-010, Rev. 1 (02/09/09)

FLOW DIAGRAM
POWER BLOCK SYSTEMS

May 2009
28067571

Hydrogen Energy California (HECA)
Kern County, California

URS

FIGURE 2-8

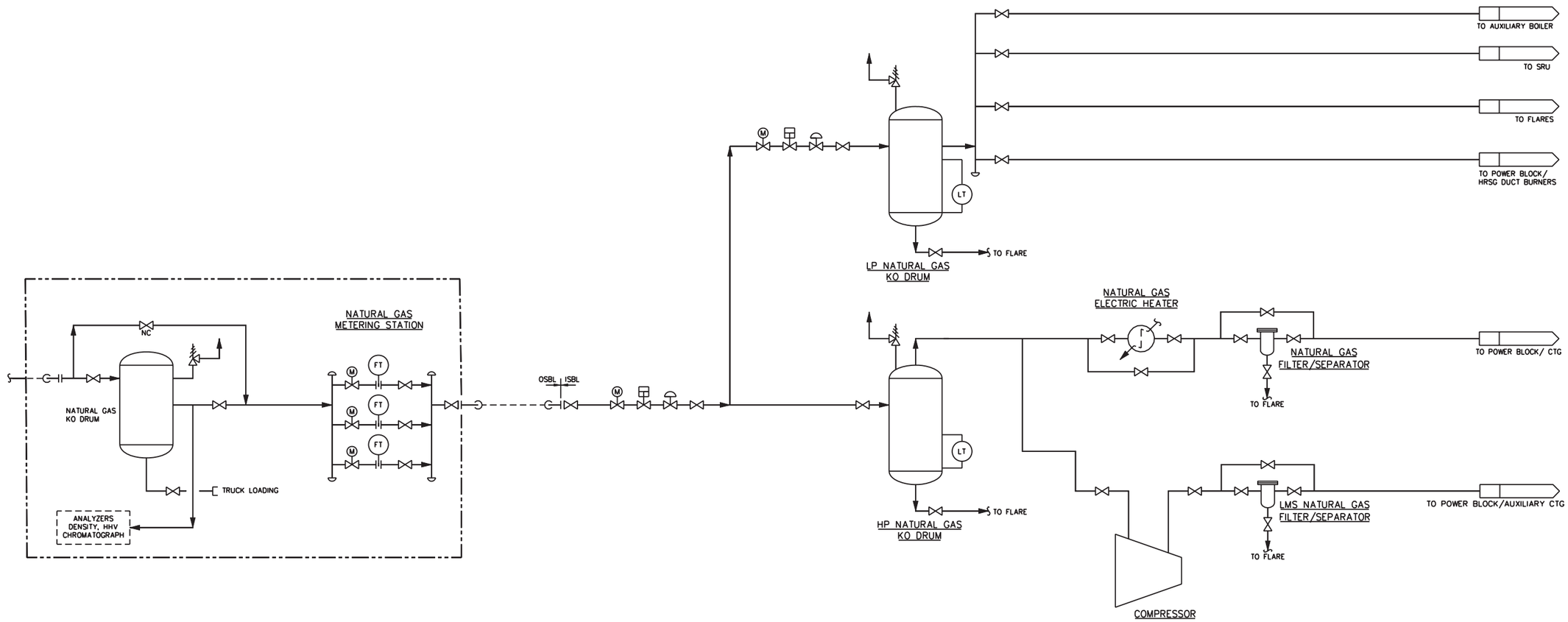

Source:
Fluor; Hydrogen Energy California, Kern County Power Project;
Flow Diagram, Natural Gas System;
Drawing No: A3RW-PFD-25-019, Rev. 2 (04/13/09)

FLOW DIAGRAM
NATURAL GAS SYSTEM

May 2009
28067571

Hydrogen Energy California (HECA)
Kern County, California

URS

FIGURE 2-9

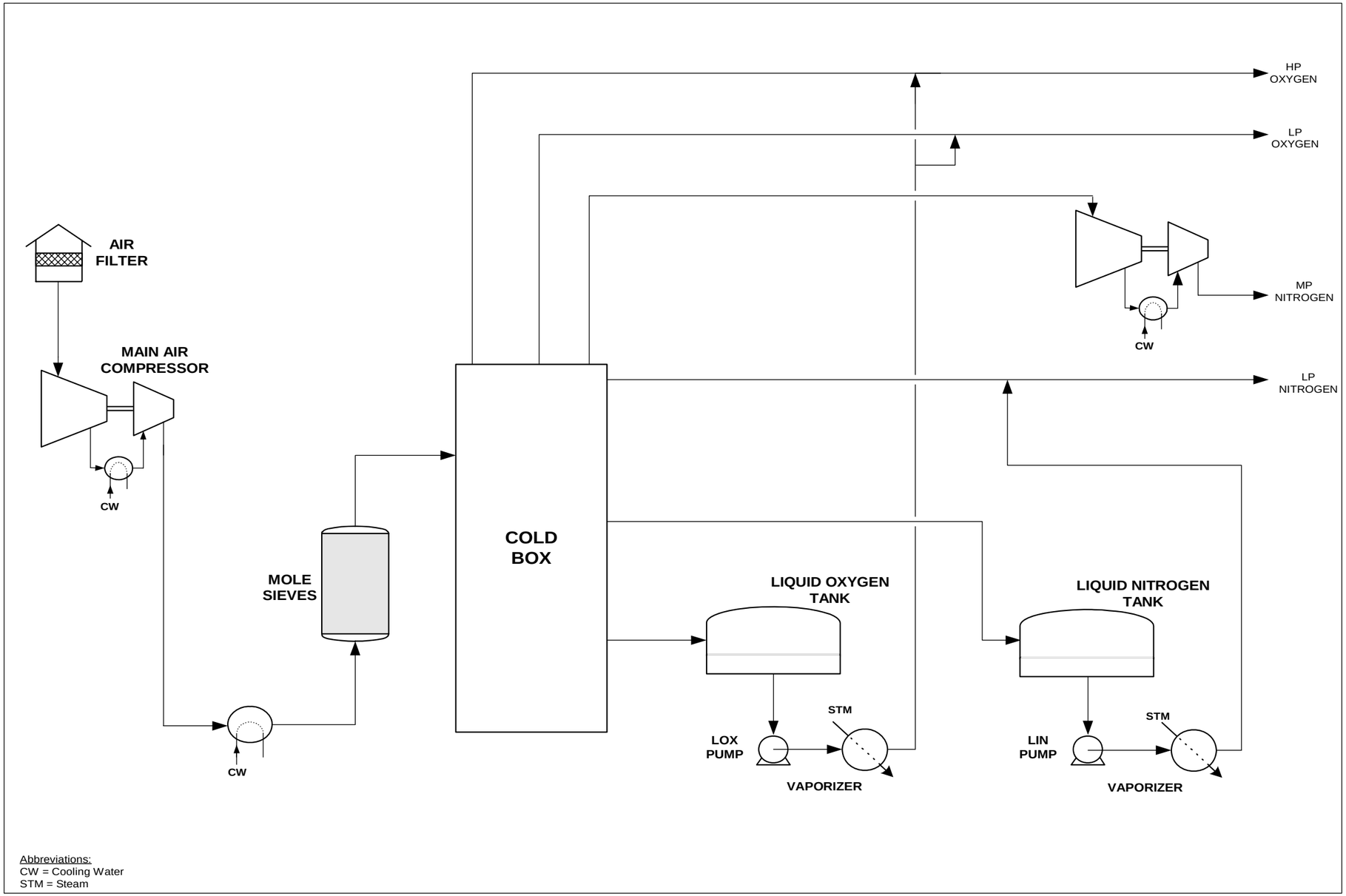

Source:
Fluor; Hydrogen Energy California, Kern County Power Project;
Air Separation Unit; Drawing No: A3RW-PDF-25-024 (06/04/08)

AIR SEPARATION UNIT

May 2009
28067571

Hydrogen Energy California (HECA)
Kern County, California

URS

FIGURE 2-10

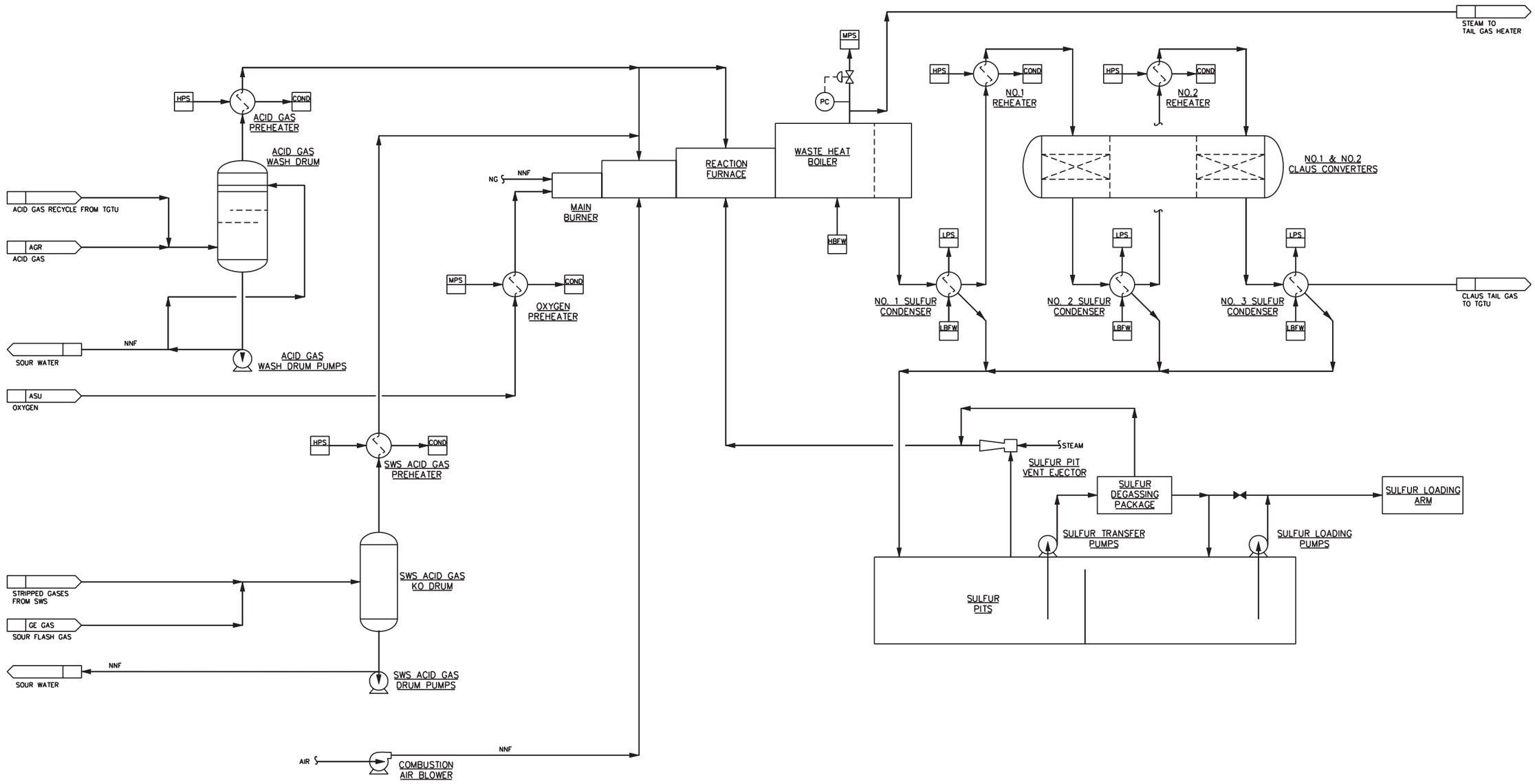

Source:
Fluor; Hydrogen Energy California, Kern County Power Project;
Flow Diagram, Sulfur Recovery Unit;
Drawing No: A3RW-PDF-25-008, Rev. 2 (06/04/08)

FLOW DIAGRAM
SULFUR RECOVERY UNIT

May 2009
28067571

Hydrogen Energy California (HECA)
Kern County, California

URS

FIGURE 2-11

5/20/09 vsa..T:\HECA\GRAPHICS\2.0 Project Description\2-25_sulfur.ai

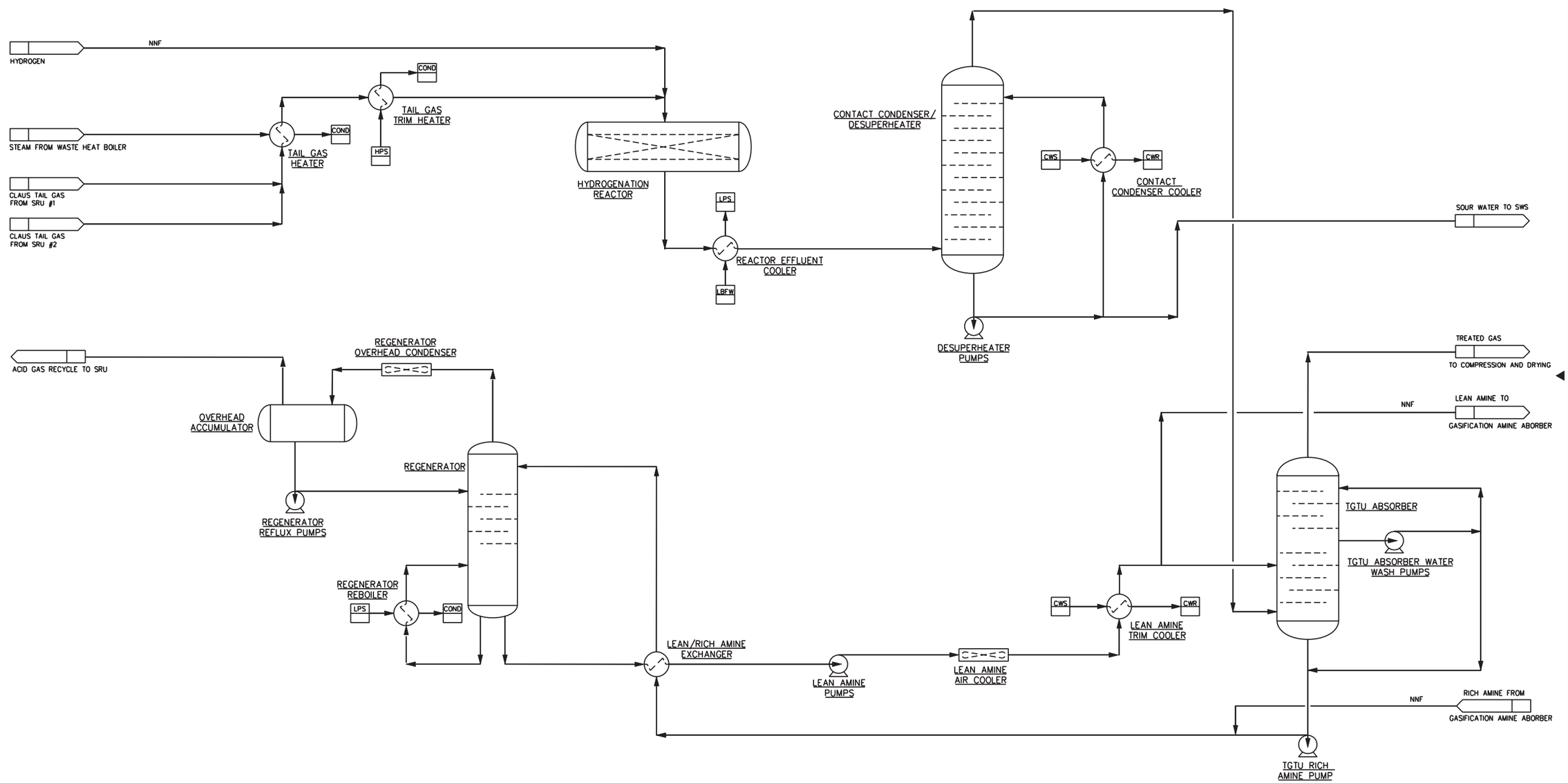

Source:
Fluor; Hydrogen Energy California, Kern County Power Project;
Flow Diagram, Tail Gas Treating Unit;
Drawing No: A3RW-PFD-25-009, Rev. 2 (04/13/09)

FLOW DIAGRAM
TAIL GAS TREATING UNIT

May 2009
28067571

Hydrogen Energy California (HECA)
Kern County, California

URS

FIGURE 2-12

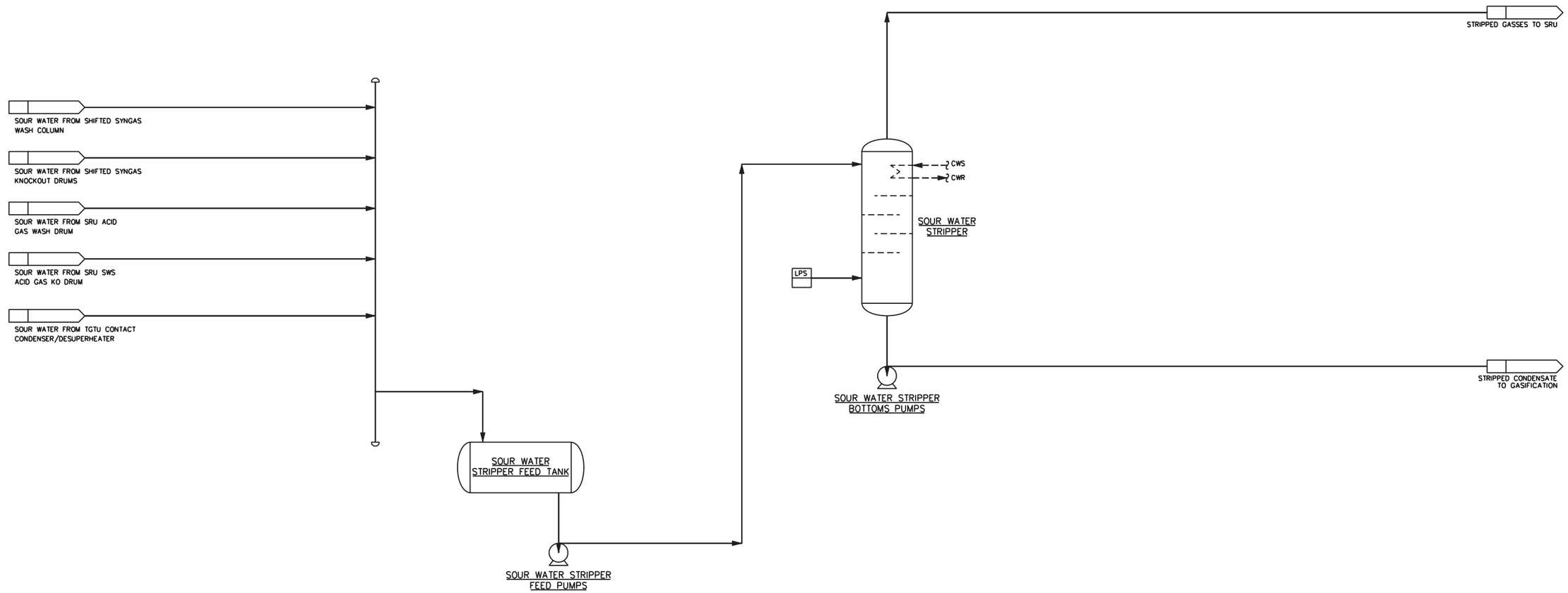

Source:
Fluor; Hydrogen Energy California, Kern County Power Project;
Flow Diagram, Sour Water Stripper;
Drawing No: A3RW-PDF-25-012, Rev. 1 (03/23/09)

FLOW DIAGRAM
SOUR WATER STRIPPER

May 2009
28067571

Hydrogen Energy California (HECA)
Kern County, California

URS

FIGURE 2-13

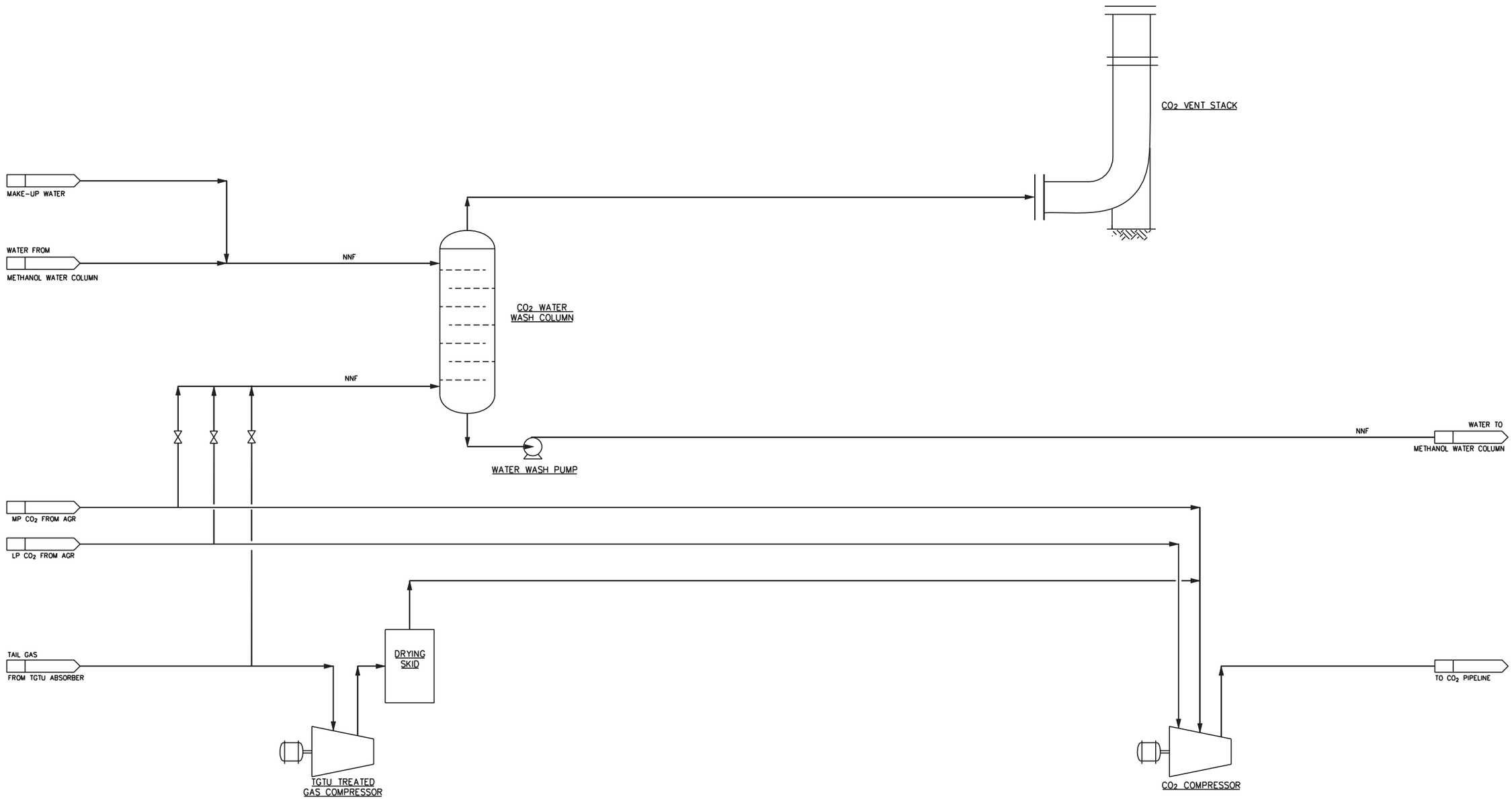

Source:
Fluor; Hydrogen Energy California, Kern County Power Project;
Flow Diagram, CO2 Compression & Venting Systems;
Drawing No: A3RW-PDF-25-011, Rev. 1 (03/06/09)

FLOW DIAGRAM
CARBON DIOXIDE COMPRESSION AND VENTING SYSTEMS

May 2009
28067571

Hydrogen Energy California (HECA)
Kern County, California

URS

FIGURE 2-14

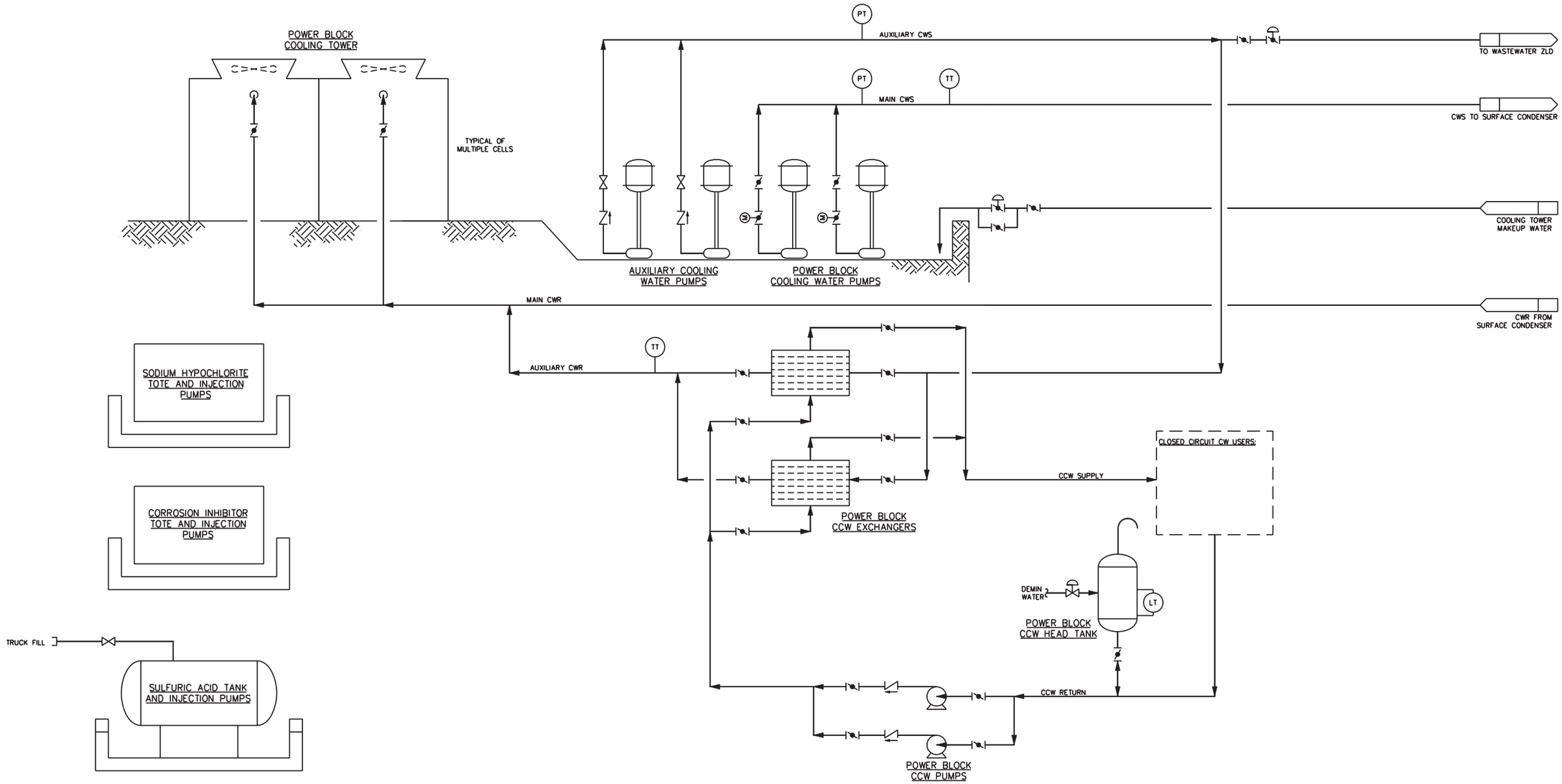

Source:
Fluor; Hydrogen Energy California, Kern County Power Project;
Flow Diagram, Cooling Water System;
Drawing No: A3RW-PDF-25-022, Rev. 1 (03/06/09)

FLOW DIAGRAM
COOLING WATER SYSTEM

May 2009
28067571

Hydrogen Energy California (HECA)
Kern County, California

URS

FIGURE 2-15

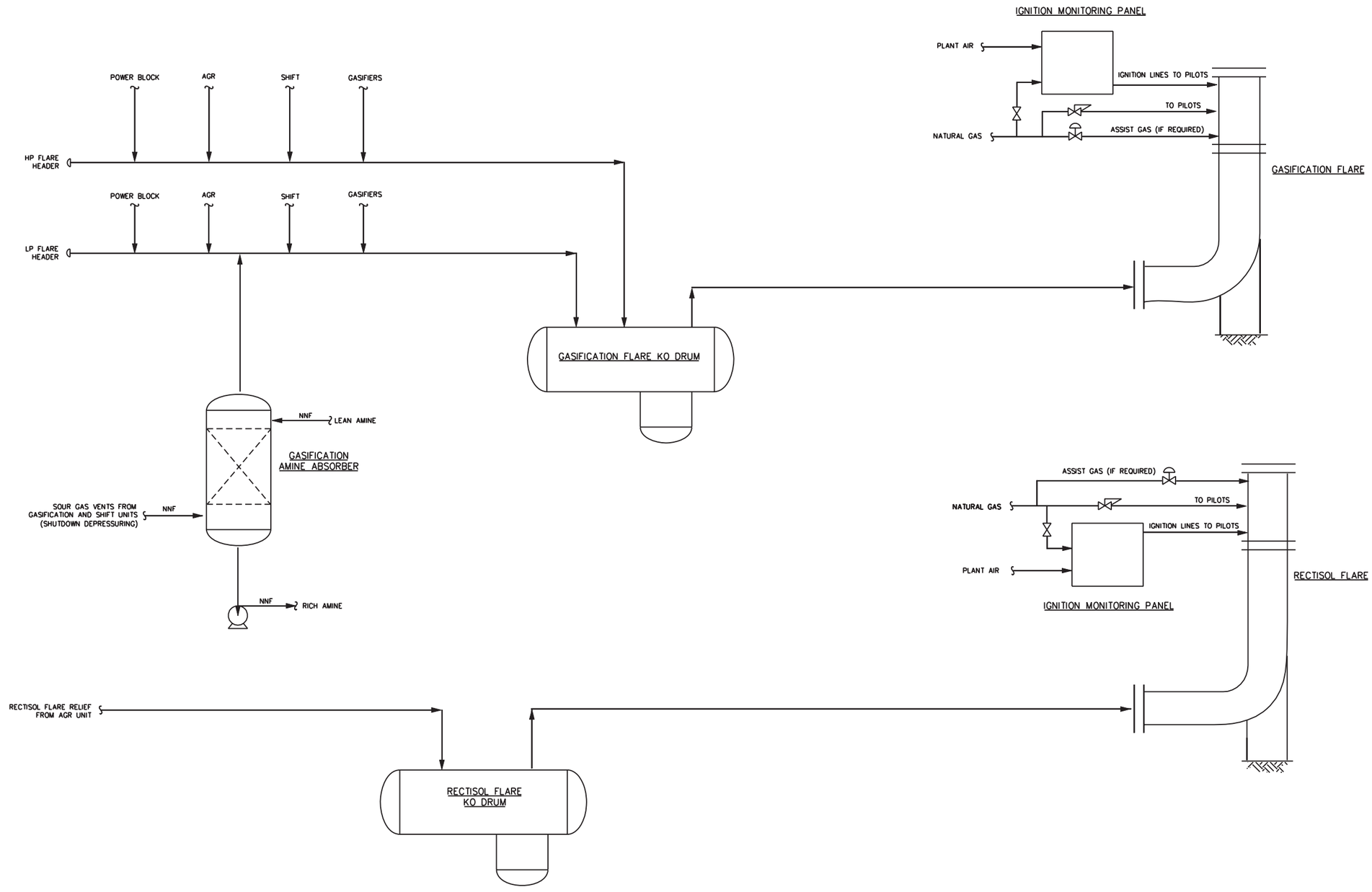

Source:
Fluor; Hydrogen Energy California, Kern County Power Project;
Flow Diagra, Gasification and Rectisol Flare Systems,
Drawing No: A3RW-PFD-25-025, Rev. 1 (03/23/09)

FLOW DIAGRAM
GASIFICATION AND RECTISOL
FLARE SYSTEMS

May 2009
28067571

Hydrogen Energy California (HECA)
Kern County, California

URS

FIGURE 2-16

5/18/09 vsa..T:\HECA\GRAPHICS\2.0 Project Description\2-32_gas-rec flare.ai

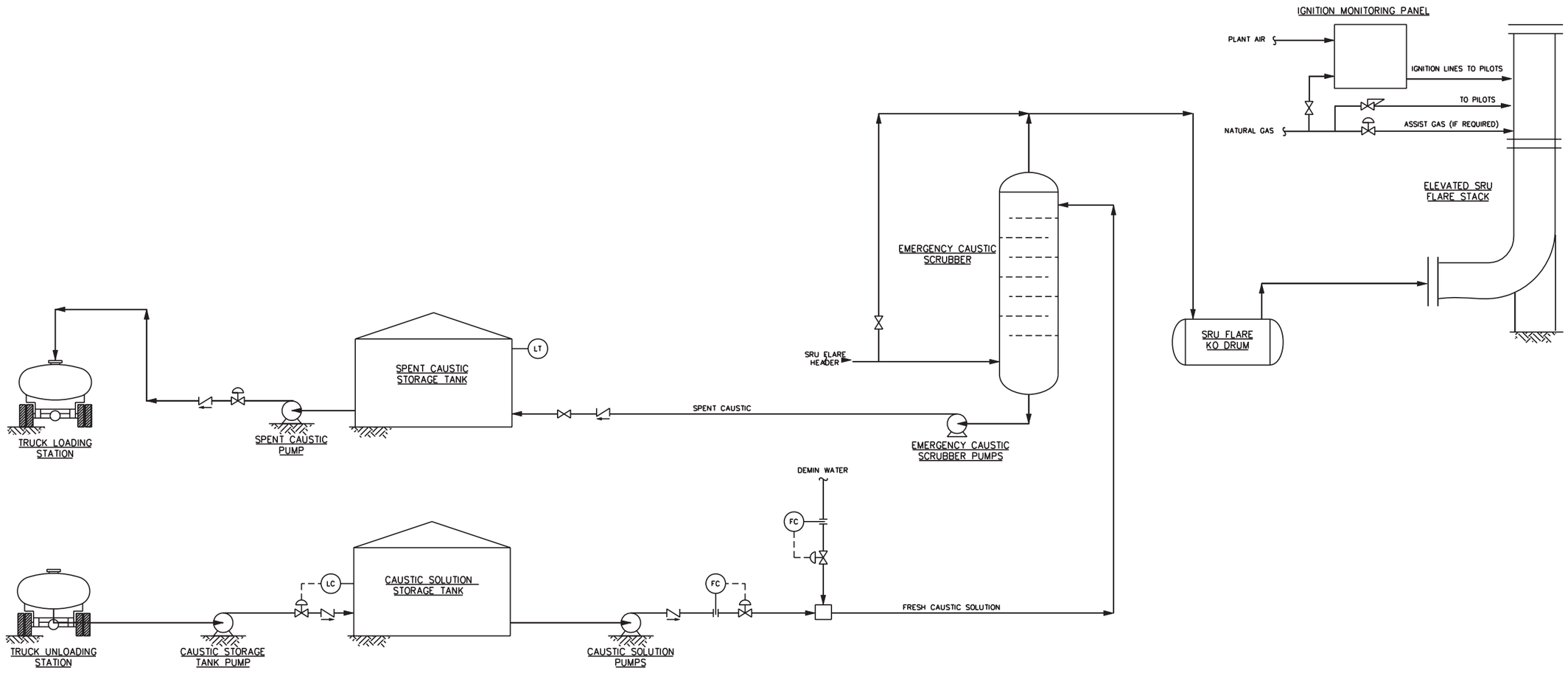

Source:
Fluor; Hydrogen Energy California, Kern County Power Project;
Flow Diagram, SRU Flare System;
Drawing No: A3RW-PDF-25-017, Rev. 2 (03/23/09)

FLOW DIAGRAM
SRU FLARE SYSTEM

May 2009
28067571

Hydrogen Energy California (HECA)
Kern County, California

URS

FIGURE 2-17

5/18/09 vsa..T:\HECA\GRAPHICS\2.0 Project Description\2-33_SRU flare.ai

3.1 EQUIPMENT LIST

This section summarizes specifications regarding the following criteria pollutant emitting equipment comprising the Hydrogen Energy California Project.

Source #	Source Description
1	Air Separation Unit Cooling Tower: 40,000 gallons per minute Multi-cell Mechanical-draft Cooling Towers with high efficiency drift eliminators; serving the Air Separation Unit.
2	Power Block Cooling Tower: 175,000 gallons per minute Multi-cell Mechanical-draft Cooling Towers with high efficiency drift eliminators; serving the power block
3	Gasification Cooling Tower: 42,000 gallons per minute Multi-cell Mechanical-draft Cooling Towers with high efficiency drift eliminators; serving the Air Separation Unit.
4	Standby Diesel Generator 1: 60 Hz, 3-Phase, 2,000 kW, 0.8 PF standby diesel fueled emergency generator
5	Standby Diesel Generator 2: 60 Hz, 3-Phase, 2,000 kW, 0.8 PF standby diesel fueled emergency generator
6	Combined-cycle Combustion Turbine (CTG/HRSG): The main power block unit consists of a Hydrogen-rich fuel and/or Natural Gas-fired General Electric (GE) 7FB Combustion Turbine Generator (CTG) with a Heat Recovery Steam Generators (HRSG) and one condensing Steam Turbine-Generator (STG) operating in combined cycle mode. The HRSG includes a duct burner, a selective catalytic reduction (SCR) system, and a carbon monoxide catalyst system.
7	Firewater Pump: a 600 hp, 415 kW diesel fueled standby firewater pump.
8	Auxiliary Boiler: a 142 MMBTU/hour natural gas fired boiler equipped with low nitrogen oxide burners and flue gas recirculation; with maximum steam production of 100,000 pounds per hour.
9	Sulfur Recovery System: A sulfur recovery system consists of a Sulfur Recovery Unit (SRU), a Tail Gas Treatment Unit (TGTU), and a tail gas thermal oxidizer (10 MMBtu/hr).
10	CO2 Vent: Alternative (intermittent, infrequent) venting system serving the release stream of CO_2 from the Acid Gas Removal Unit and the Tail gas Treatment Unit.
11	Gasification Flare: Elevated flare with 0.5 MMBtu/hr natural gas pilot.
12	SRU Flare: Elevated flare with 0.3 MMBtu/hr natural gas pilot and 36 MMBtu/hr natural gas assist.
13	Rectisol Flare: Elevated flare with 0.3 MMBtu/hr natural gas pilot.
14	Gasifier Refractory Heater 1: 18 MMBtu/hr refractory heater serving the gasification block.
15	Gasifier Refractory Heater 2: 18 MMBtu/hr refractory heater serving the gasification block.
16	Gasifier Refractory Heater 3: 18 MMBtu/hr refractory heater serving the gasification block.
17	Auxiliary Combustion Turbine GE LMS100®simple cycle CTG fueled with natural gas. Post combustion emissions controls will include SCR and oxidation catalyst systems to meet the specified emission limits.
18	Feedstock Handling System: Series of enclosed conveyors, feedstock storage silos, and feedstock preparation buildings equipped with six dust collection system consisting of hoods and baghouses.

3.2 COOLING TOWERS

	Power Block	Process Area	ASU	Basis
Cooling water (CW) circulation rate, gpm	175,000	42,300	40,200	Typical plant performance
CW circulation rate (million lb/hr)	88	21	20	
CW dissolved solids (ppmw)	9,000	9,000	9,000	(See note)
Drift, fraction of circulating CW	0.0005%	0.0005%	0.0005%	Expected BACT

Note:
Assumed maximum 9,000 ppm TDS in circulating cooling water, normally TDS will be less.
Each tower assumed to operate 95% of the year, or 8322 hrs/yr at full capacity.

3.3 EMERGENCY ENGINES

Emergency Generator, Unit 1	Emergency Generator, Unit 2	Emergency Fire Water Pump Engine
2,800 Bhp	2,800 Bhp	556 Bhp

3.4 COMBINED CYCLE COMBUSTION TURBINE (CTG/HRSG)

CTG/HRSG

Quantity	One Unit
Model	GE PG7321 (FB) w/IGCC Combustor
Fuels	H_2-Rich Fuel, Natural Gas, Co-Firing
Emissions Control Diluent	Nitrogen for H_2-rich fuel, Steam Injection for Natural Gas
Ambient Temperature Range	20°F to 115°F, Average 65°F

Source: General Electric

Control System

Diluent Injection	
Quantity:	**One Unit**
Mfg:	General Electric
Type:	Injection of nitrogen (hydrogen rich fuel) Injection of steam (natural gas)
Performance:	
NO_x Reduction @ the CTG exhaust	15 ppmvd at 15 percent O_2 (hydrogen-rich fuel) 25 ppmvd at 15 percent O_2 (natural gas or a combination of hydrogen-rich fuel and natural gas).
Differential Pressure	TBD

Selective Catalytic Reduction	
Quantity:	**One Unit**
Type:	Diluted 19 percent aqueous ammonia
NO_x Reduction @ HRSG Stack	4 ppmvd at 15 percent oxygen (hydrogen-rich fuel, natural gas, or a combination of hydrogen-rich fuel and natural gas)
Differential Pressure	TBD
Catalyst Life	7 to 10 years

CO Oxidation Catalyst	
Quantity:	**One Unit**
Mfg:	TBD
Type:	CO Oxidation Catalyst
CO Reduction	3.0 ppmvd at 15 percent O_2 (hydrogen-rich fuel) 5.0 ppmvd CO at 15 percent O_2 (natural gas)
Differential Pressure	TBD

3.5 AUXILIARY CTG

Model	GE LMS100® PA
Fuel	Natural Gas
Inlet Air Cooling	Evaporative Coolers, 85% Effectiveness
Emissions Control Diluent	Water Injection
Ambient Temperature Range	20°F to 115°F, Average 65°F
Exhaust Pressure Loss @ ISO	12.0″ H_2O
Compressor Intercooler	100°F Return Air Temperature
Base Load Generator Output	103.1 MW @ 65°F Ambient
Stack Emissions Control	SCR for NOx and CO Catalyst for CO & VOCs
Min Output in Compliance	50% of Base Load

Notes:
ISO = International Standards Organization standard ambient conditions (1 atm, 59 F, 60% relative humidity)
SCR = selective catalytic reduction

Selective Catalytic Reduction	
Quantity:	**One Unit**
Mfg:	TBD
Type:	TBD
Performance:	
NO_x Reduction	2.5 ppmvd at 15 percent O_2. (natural gas)
Catalyst Life	7 to 10 years

CO Oxidation Catalyst	
Quantity:	**One Unit**
Mfg:	TBD
Type:	CO Oxidation Catalyst
Performance:	
CO Reduction	6.0 ppmvd at 15 percent O_2. (natural gas)
VOC Reduction	2.0 ppmvd at 15 percent O_2. (natural gas)
Differential Pressure	TBD

3.6 AUXILIARY BOILER

Quantity:	**One Unit**
Steam Generation	100,000 pounds per hour
Maximum Heat Release	142 MMBTU/hour
Performance:	
Gas Flow	480 acfs
Gas Temperature	300 F
NO_x Reduction	9 ppm NO_x at 3 percent O_2 (natural gas) with low No_x burner. and FGR

3.7 TAIL GAS THERMAL OXIDIZER

Process Vent Disposal	
Operating Hours	8,760 hr/yr
Firing Rate	10 MMBtu/hr
SRU Startup Gas Disposal	
Operating Hours	300 hr/yr
Firing Rate	10 MMBtu/hr

3.8 CO_2 VENT

Quantity	One Unit
Total Days of Operation*	21 day/yr
Total Hours of Operation*	504 hr/yr
Total Flow	656,000 lb/hr
Total Flow	15,150 lbmol/hr

* Or for longer duration at reduced flowrates.

3.9 GASIFICATION FLARE

Quantity	One Unit
Total Hours of Operation (pilot)	8,760 hr/yr
Gasification Flare Pilot Fuel Use	0.5 MMBtu/hr
Approximate Operating Hours for Startup Relief Gas	134 hr/yr

3.10 SRU FLARE

Quantity	One Unit
Total Hours of Operation	8,760 hr/yr
SRU Flare Pilot Firing Rate	0.3 MMBtu/hr
Natural Gas Heat Rate (assist gas)	36.0 MMBtu/hr
Approximate Operating Hours for Startup Relief Gas	6.0 hr/yr
Approximate control efficiency of scrubber	99.6 percent
Gas Flow Rate	4,600 lb/hr SO_2

3.11 RECTISOL FLARE

Quantity	One Unit
Total Hours of Operation	8,760 hr/yr
Rectisol Flare Pilot Firing Rate	0.3 MMBtu/hr

3.12 GASIFIER REFRACTORY HEATERS

Quantity	Three Units
Total Hours of Operation (combined)	1,800 hr/yr
Gasifier Firing Rate (for each heater)	18 MMBtu/hr

3.13 FEEDSTOCK HANDLING SYSTEM

Quantity of Baghouses	6 Units
Outlet Dust Loading	0.005 grain/scf

Description	Dust Collector No.	Max Feed Handling Rate (ton/hr)	Air Flow to Collector (acfm)
Truck Unloading	DC-1	900	6,467
Coke/coal Silos (filling)	DC-2	900	16,376
Mass Flow Bins (in/out)	DC-3	170	7,620
Coke/coal Silos (loadout)	DC-4	170	4,872
Crusher Inlet/Outlet	DC-5	170	4,673
Fluxant Bins (filling)	DC-6	100	1,234

This section discusses the expected emissions from the proposed Project. Emissions of both criteria pollutants were estimated for each emitting source listed on Section 3.0. Hazardous air pollutant emissions for each emitting source are discussed in Section 8.0. These emission rates will be used to show that the Project will not cause an exceedance of PSD increments, California or Federal AAQS, or significant heath risk measures.

The total combined annual emissions from all emission sources of the Project are shown in Table 4-1, Total Combined Annual Criteria Pollutant Emissions.

4.1 COOLING TOWERS CRITERIA POLLUTANT EMISSIONS

4.1.1 Power Block Cooling Tower

Power cycle heat rejection will consist of a steam surface condenser, cooling tower, and cooling water system. The heat rejection system receives exhaust steam from the low pressure (LP) steam turbine and condenses it to water for reuse. Approximately 175,000 gallons per minute (gpm) of water will be circulated in the power block cooling tower with an hourly circulation rate of 88 million pounds per hour.

The cooling water will circulate through a mechanical draft-cooling tower, which uses electric motor-driven fans to move the air into contact with the flow of the cooling water. The heat removed in the condenser will be discharged to the atmosphere by heating the air and through evaporation of some of the cooling water. Maximum drift, that is, the fine mist of water droplets entrained in the warm air leaving the cooling tower, will be limited to 0.0005 percent of the circulating water flow. Circulating water could range from 3,000 to 9,000 ppm total dissolved solids (TDS) depending on makeup water quality and tower operation. Therefore, PM_{10} emissions would vary proportionately. For emission calculation purposes, it is assumed that 9,000 ppm TDS are dissolved in the circulating cooling water. A summary of the power block cooling tower emissions is presented in Table 4-1, Total Combined Annual Criteria Pollutant Emissions. Emissions and calculations are included in Appendix D.

4.1.2 ASU and Gasification Cooling Towers

The ASU and gasification block cooling water system designs are similar to the power block cooling design, but they have substantially lower duties. The ASU cooling tower is located in the ASU unit near the cooling loads. The ASU cooling tower has separate pumps and piping systems and is operated independently of the other cooling water systems. The ASU cooling tower circulation rate is approximately 40,200 gpm and the tower is supplied with high efficiency drift eliminators designed to reduce drift to less than 0.0005 percent of circulation.

The gasification unit cooling tower is collocated with the power block cooling tower. Each tower has a separate cooling water basin, pumps, and piping system, and operates independently. The gasification cooling tower circulation rate is about 42,300 gpm and the tower is supplied with high efficiency drift eliminators designed to reduce drift to less than 0.0005 percent of circulation. A summary of the ASU and gasification block cooling tower emissions is presented in Table 4-1, Total Combined Annual Criteria Pollutant Emissions. Emissions and calculations are included in Appendix D.

Table 4-1 Total Combined Annual Criteria Pollutant Emissions

Pollutant	Total Annual (ton/yr)	HRSG Stack Maximum (1) (ton/yr)	Auxiliary CTG (ton/yr)	Cooling Towers (2) (ton/yr)	Auxiliary Boiler (ton/yr)	Emergency Generators (3) (ton/yr)	Fire Water Pump (ton/yr)	Gasification Flare (ton/yr)	SRU Flare (ton/yr)	Rectisol Flare (ton/yr)	Tail Gas Thermal Oxidizer (ton/yr)	CO_2 Vent (ton/yr)	Gasifier Warmer (ton/yr)	Feedstock (4) (ton/yr)
NO_X	203.8	167.2	17.4	--	1.7	0.2	0.1	4.3	0.2	0.2	10.9	--	1.8	--
CO	350.3	150.2	27.6	--	5.8	0.1	0.2	48.8	0.1	0.1	9.1	106.9	1.5	--
VOC	40.7	32.5	4.6	--	0.6	0.03	0.01	0.003	0.002	0.002	0.3	2.4	0.1	--
SO_2	42.2	29.2	3.8	--	0.3	0.001	0.0003	0.004	0.055	0.003	8.8	--	0.03	--
PM_{10}	141.1	99.7	12.3	24.1	0.8	0.01	0.001	0.007	0.004	0.004	0.4	--	0.1	3.6
$PM_{2.5}$ (5)	128.9	99.7	12.3	14.5	0.8	0.01	0.001	0.007	0.004	0.004	0.4	--	0.1	1.0
NH_3	100.0	75.9	24.1	--	--	--	--	--	--	--	--	--	--	--
H_2S	1.3	--	--	--	--	--	--	--	--	--	--	1.3	--	--

Source: HECA Project

Notes:

(1) Total annual HRSG emissions represents the maximum emissions rate from a composite firing scenario (all three fuels)
(2) Includes contributions from all three cooling towers
(3) Includes contributions from both emergency generators
(4) Feedstock emissions are shown as the contribution of all dust collection points.
(5) Where $PM_{10} = PM_{2.5}$, it is assumed that PM_{10} is 100% $PM_{2.5}$

CO = carbon monoxide
CO_2 = carbon dioxide
CTG = combustion turbine generator
H_2S = hydrogen sulfide
NH_3 = ammonia
NO_X = nitrogen oxides
PM_{10} = particulate matter 10 microns in diameter
$PM_{2.5}$ = particulate matter 2.5 microns in diameter ($PM_{2.5}$ is assumed to equal PM_{10})
SO_2 = sulfur dioxide
SRU = sulfur recovery unit
VOC = volatile organic compounds

4.2 DIESEL ENGINES CRITERIA POLLUTANT EMISSIONS

4.2.1 Emergency Generator Engine and Firewater Pump Engine

The Project will include two 2,800 horsepower standby diesel generators and one 556 horsepower, standby firewater pump, located adjacent to the firewater tank. The diesel engines will exclusively combust ultra low sulfur (15 ppm) No. 2 diesel fuel.

The 2,800 horsepower diesel engines are installed in an outdoor enclosure and will be connected to the 480 volt (V) switchgear. The switchgear supplies essential service power to critical lube oil and cooling pumps, gasification and auxiliary steam systems, gasification quench system, station battery chargers, uninterruptible power supply (UPS), heat tracing, control room and emergency exit lighting, and other critical plant loads. Emissions were estimated based on hourly manufacturers' emission rates as well as USEPA Tier 4 emissions standards for 2011 model equipment. Sulfur dioxide emissions were estimated using ultra-low sulfur diesel fuel containing 15 ppm sulfur. Emissions estimates for the three diesel engines are shown in Table 4-1, Total Combined Annual Criteria Pollutant Emissions. The annual emissions from these engines are based on a maximum non-emergency use rate of 50 hours of operation per year each for the emergency generator engines and 100 hours of operation per year for the fire pump engine.

4.3 COMBINED CYCLE COMBUSTION TURBINE (CTG/HRSG) CRITERIA POLLUTANT EMISSIONS

The most significant emission source of the Project will be the CTG/HRSG train. The power block design will be optimized for performance on 100 percent hydrogen-rich fuel, 100 percent natural gas, or co-firing hydrogen-rich fuel and natural gas. Most of the hydrogen-rich syngas from the gasification plant will be used to fully load the CTG, with any excess (up to about 10 to 14%) duct fired in the HRSG. The CTG will operate on hydrogen-rich fuel, natural gas, or a mixture of the two (45% to 90% hydrogen-rich syngas) over the compliance load range of 60 to 100 percent. The CTG will be co-fired with natural gas as required to maintain baseload operation whenever the quantity of hydrogen-rich fuel is insufficient.

Maximum short-term operational emissions from the CTG/HRSG were determined from a comparative evaluation of potential emissions corresponding to normal operating conditions (including HRSG duct-firing), and CTG startup/shutdown conditions. The long-term operational emissions from the CTG/HRSG were estimated by summing the emissions contributions from normal operating conditions (including hours with and without duct-firing) and CTG/HRSG startup/shutdown conditions. Estimated annual emissions of air pollutants for the CTG/HRSG have been calculated based on the expected operating schedule for the CTG/HRSG presented below in Table 4-2, Maximum CTG/HRSG Operating Schedule.

Operational emissions from the CTG/HRSG were estimated for all applicable scenarios using base emission rates and startup/shutdown emissions. The base criteria pollutant emission rates provided by the turbine vendor and the engineer for three load conditions (60%, 80%, and 100%) and three ambient temperatures (20ºF, 65ºF, and 97ºF) when firing natural gas, syngas, or co-firing are presented in Table 4-3, 1-Hour Operating Emission Rates for CTG/HRSG Operating Load Scenarios.

Table 4-2 Maximum CTG/HSRG Operating Schedule

Operating Conditions	Annual Numbers
Total Hours of Operation	8,322
Total Number of Cold Starts	10
Cold Start Duration (hr)	3
Total Number of Hot Starts	10
Hot Start Duration (hr)	1
Total Number of Shutdowns	20
Shutdown Duration (hr)	0.5
Duct Burner Operation (hr)	8,272

Source: HECA Project

Notes:

CTG = combustion turbine generator

HRSG = heat recovery steam generator

Table 4-3 1-Hour Operating Emission Rates for CTG/HSRG Operating Load Scenarios

Ambient Temperature	UNITS	Winter Minimum, 20°F				Yearly Average, 65°F				Summer Maximum, 97°F			
CTG Load Level	% Load	100%	100%	80%	60%	100%	100%	80%	60%	100%	100%	80%	60%
Evap Cooling Status	off/on	N/A	N/A	N/A	N/A	N/A	N/A	N/A	N/A	N/A	N/A	N/A	N/A
Duct Burner Status	off/on	On	Off	Off	Off	On	Off	Off	Off	On	Off	Off	Off
Average Emission Rates from CTG (lbs/hr/turbine) - Normal Operation Natural Gas													
NO_x (@ 4.0 ppm)	lb/hr	36.3	29.0	24.8	20.8	35.1	27.0	23.1	19.4	33.3	26.1	22.4	18.7
CO (@ 5.0 ppm)	lb/hr	27.6	22.1	18.8	15.8	26.7	20.5	17.6	14.8	25.3	19.8	17.0	14.2
VOC (@ 2.0 ppm)	lb/hr	6.3	5.0	4.3	3.6	6.1	4.7	4.0	3.4	5.8	4.5	3.9	3.2
SO_2 (@ 12.65 ppmv in fuel)	lb/hr	5.1	4.1	3.5	3.0	4.8	3.8	3.3	2.8	4.7	3.7	3.2	2.7
$PM_{10} = PM_{2.5}$	lb/hr	18.0	18.0	18.0	18.0	18.0	18.0	18.0	18.0	18.0	18.0	18.0	18.0
NH_3 (@ 5.0 ppm slip)	lb/hr	16.7	13.4	11.4	9.6	16.2	12.5	10.7	9.0	15.4	12.1	10.3	8.6
Average Emission Rates from CTG(lbs/hr/turbine) - Normal Operation Syngas													
NO_x (@ 4.0 ppm)	lb/hr		37.2	31.5	26.1	39.7	36.9	31.0	25.6	39.7	38.0	30.9	25.6
CO (@ 3.0 ppm)	lb/hr		17.0	14.4	11.9	18.1	16.8	14.1	11.7	18.1	17.4	14.1	11.7
VOC (@ 1.0 ppm)	lb/hr		3.2	2.7	2.3	3.5	3.2	2.7	2.2	3.5	3.3	2.7	2.2
SO_2 (@ 5.0 ppmv in fuel)	lb/hr		6.1	5.2	4.4	6.8	6.1	5.1	4.3	6.8	6.0	5.1	4.3
$PM_{10} = PM_{2.5}$	lb/hr		24.0	24.0	24.0	24.0	24.0	24.0	24.0	24.0	24.0	24.0	24.0
NH_3 (@ 5.0 ppm slip)	lb/hr		17.2	14.6	12.0	18.4	17.0	14.3	11.8	18.4	17.6	14.3	11.8
Average Emission Rates from CTG (lbs/hr/turbine) - Normal Operation Co-firing													
NO_x (@ 4.0 ppm)	lb/hr	41.3	34.0			38.7	31.7						
CO (@ 5.0 ppm)	lb/hr	31.4	25.9			29.4	24.1						
VOC (@ 2.0 ppm)	lb/hr	7.2	5.9			6.7	5.5						

Table 4-3 1-Hour Operating Emission Rates for CTG/HSRG Operating Load Scenarios

Ambient Temperature	UNITS	Winter Minimum, 20°F				Yearly Average, 65°F				Summer Maximum, 97°F			
SO_2 (@ 6.7 ppmv in fuel)	lb/hr	7.4	5.2			7.0	4.8						
PM_{10} = $PM_{2.5}$	lb/hr	24.0	24.0			24.0	24.0						
NH_3 (@ 5.0 ppm slip)	lb/hr	19.1	15.7			17.9	14.6						

Source: HECA Project

Notes:

Co-firing emissions are controlled at the same amount as natural gas.

Emission rates not provided were not necessary to determine the maximum hourly, 3-hour, 8-hour, 24-hour emission rates, or the annual average emission rates.

CO = carbon monoxide
CTG = combustion turbine generator
HRSG = heat recovery steam generator
NH_3 = ammonia
NO_X = nitrogen oxides
ppm = parts per million
PM_{10} = particulate matter 10 microns in diameter and is assumed to equal $PM_{2.5}$ = particulate matter 2.5 microns in diameter
SO_2 = sulfur dioxide
VOC = volatile organic compound

CTG/HRSG Startup and Shutdown Emissions

Because startup and shutdown events typically had higher emission rates than operating conditions, they were incorporated into the short- and long-term emissions estimates for the CTG/HRSG for modeling purposes. When firing natural gas, hydrogen-rich fuel gas, or co-firing, the CTG/HRSG will always be started up using natural gas. Therefore, the expected emissions and duration of startup events summarized in Table 4-4, CTG/HRSG Criteria Pollutant Emission Rates During Startup and Shutdown, reflect the emission from natural gas startup and shutdown. Based on vendor information, a cold startup of the CTG and associated steam turbine is expected to take 180 minutes.

Similarly, the hot start for the CTG/HRSG will occur over intervals of 60 minutes, and shutdown will be completed in 30 minutes. During a shutdown event, the efficiency of the emission controls will continue to function at normal operating levels down to a load of 60 percent; thus, shutdown periods and emissions are measured from the time this load is reached.

Because hours that include startup and shutdown events will have higher NO_X, CO, and VOC emissions than the normal operating condition with fully functioning selective catalytic reduction (SCR) and CO oxidation catalyst, they were incorporated (as applicable) into the worst-case short- and long-term emissions estimates in the air quality dispersion modeling simulations for these pollutants.

CTG/HRSG Emissions Scenarios for Modeling

Reasonable worst-case short-term emissions from the turbines were calculated for use in the air quality modeling. For worst-case 1-hour emissions, the worst-case startup NO_X and CO emission rate was used. Based on the startup information, NO_X and CO emissions during a hot startup and a cold startup, respectively, are the worst-case conditions. Sulfur oxide (SO_X) emissions are maximized at peak fuel usage for all firing scenarios (natural gas, hydrogen-rich fuel, and co-firing).

The 3-hour SO_X emission rate for all firing scenarios (natural gas, hydrogen-rich fuel, and co-firing) was based on the scenario at peak fuel usage for corresponding firing scenario.

The 8-hour CO emission rate for all firing scenarios (natural gas, hydrogen-rich fuel, and co-firing) was calculated assuming two full cold starts, three shutdowns, and the balance (0.5 hour) operating at the worst-case operating condition (at peak fuel usage for corresponding firing scenario).

The 24-hour NO_X (for visibility) rate was calculated assuming 20 hours of natural gas firing at the winter minimum (20^oF) without duct firing and 4 hours of co-firing at the winter minimum (20^oF) without duct firing. PM_{10} and SO_2 worst-case 24-hour emission rates were calculated assuming the worst-case operating condition (at peak fuel usage for corresponding firing scenario)

Table 4-5, Criteria Pollutant Sources and Emission Totals for the Worst-Case CTG Emissions Scenario for All Averaging Times, summarizes the worst-case emissions scenarios adopted to assess maximum impacts to air quality and air quality-related values in the modeling analyses presented in Section 7.0, Dispersion Modeling. Note that modeling of turbine commissioning impacts was conducted separately due to the temporary, one-time nature of this activity.

Table 4-4 CTG/HSRG Criteria Pollutant Emission Rates During Startup and Shutdown

Cold Startup			Hot Startup			Shutdown		
180 (min. in cold startup)	**Max 1-hr. (lb/hr)**	**Total (lb/180 min.)**	**60 (min. in hot startup)**	**Max 1-hr. (lb/hr)**	**Total lb/60 min.)**	**30 (min. in shutdown)**	**Max 1-hr. (lb/hr)**	**Total (lb/30 min.)**
NOX	90.7	272.0	NO_x	167.0	167.0	NO_x	62.0	62.0
CO	1,679.7	5,039.0	CO	394.0	394.0	CO	126.0	126.0
VOC	266.7	800.0	VOC	98.0	98.0	VOC	21.0	21.0
SO2	5.1	15.3	SO2	5.1	5.1	SO2	2.6	2.6
PM10 = PM2.5	21.3	64.0	PM10 = PM2.5	23.0	23.0	PM10 = PM2.5	5.0	5.0

Source: HECA Project

Notes:

CTGs will always be started burning natural gas. Startup and shutdown emission rates above reflect natural gas.

Startup and shutdown SO_2 emissions will always be lower than normal operation SO_2 emissions. Startup and shutdown emissions are assumed equal to normal operations (burning natural gas) at the max emission rate.

Startup/shutdown duration defined as operation of CTG below 60 % load when gaseous emission rates (lb/hr basis) exceed the controlled rates defined as normal operation

CO = carbon monoxide
NO_X = nitrogen oxides
PM_{10} = particulate matter 10 microns in diameter and is assumed to equal $PM_{2.5}$ = particulate matter 2.5 microns in diameter
SO_2 = sulfur dioxide
VOC = volatile organic compounds

Table 4-5 Criteria Pollutant Sources and Emission Totals for the Worst Case CTG Emissions Scenario for All Averaging Time

Averaging Time	Worst-case Emission Scenarios by Operating Equipment	Pollutant	Emissions in pounds – Entire Period		
			CTG/HRSG (Natural Gas)	CTG/HRSG (Syngas)	CTG/HRSG (Co-firing)
1 hour	**NO_X:** Cold startup hour	NO_X	167.0	167.0	167.0
	CO: Cold startup hour	CO	1,679.7	1,679.7	1,679.7
	SO_X: Full-load turbine operation with duct firing at peak fuel usage	SO_X	5.1	6.8	7.4
3 hour	**SO_X:** Continuous full-load turbine operation with duct firing (both turbines) at peak fuel usage	SO_X	15.3	20.5	22.1
8 hour	**CO:** Two cold starts, three shutdowns, and remainder of period at full load operation with full duct firing (both turbines) at peak fuel usage	CO	10,469.8	10,465.1	10,471.7
24 hour	**NO_X:** 20 hours of natural gas firing at the winter minimum (20°F) without duct firing and 4 hours of co-firing at the winter minimum (20°F) without duct firing	NO_X	20 hrs = 580.5 Total = 716.5	n/a	4 hrs = 136.0 Total = 716.5
	SO_X, PM_{10}: Continuous full-load turbine operation with duct firing (both turbines) at peak fuel usage; except PM_{10} for natural gas: four cold starts, four shutdowns, and remainder of period at full load operation with full duct firing (both turbines) at peak fuel usage	PM_{10} = $PM_{2.5}$	432	576	576
		SO_X	122.4	163.8	177.2
Annual	**NO_X, CO, VOC, PM_{10}, and SO_X:** 10 hot starts, 10 cold starts, and 20 shutdowns, and remainder of turbine operates at full load with duct firing	NO_X	296,044.0	334,353.0	325,712.3
		CO	277,817.2	206,919.2	300,390.9
		VOC	59,906.8	37,984.6	65,066.5
		PM_{10} = $PM_{2.5}$	149,866.0	199,498.0	199,498.0
		SO_X	40,045.4	56,713.0	58,357.9

Source: HECA Project

Notes:

°F = degrees Fahrenheit
CO = carbon monoxide
CTG = combustion turbine generator
HRSG = heat recovery steam generator
NO_X = nitrogen oxides
PM_{10}: = particulate matter 10 microns in diameter and is assumed to equal $PM_{2.5}$ = particulate matter 2.5 microns in diameter
SO_X = sulfur oxides
VOC = volatile organic compounds

Estimated annual emission totals for all pollutants incorporate the maximum anticipated emissions related to startups and shutdowns, as well as the maximum steady-state operating emissions with and without duct firing. For purposes of developing the annual emission estimates, the contributions associated with all normal operating hours were calculated based on assumed 100 percent turbine load and ambient temperature of 65ºF for the specified number of hours per year. Emissions for normal operating hours with duct firing assumed the maximum duct burner fuel input rate at 65°F. The analysis is conservative because no credit was taken for downtime that would normally follow each shutdown. Estimated maximum annual emissions for the GE 7FB turbine are presented in Table 4-6, Average Annual Emissions per Turbine Operating Scenario. Emissions calculations for all scenarios are contained in Appendix D.

Table 4-6 Average Annual Emissions per Turbine Operating Scenario

Pollutant	HRSG Stack - Nat Gas (tons/yr/CT)	HRSG Stack - Hydrogen-Rich Fuel (tons/yr/CT)	HRSG Stack - Co Firing (tons/yr/CT)	Maximum (tons/yr/CT)
NO_X	148.0	167.2	162.9	167.2
CO	138.9	103.5	150.2	150.2
VOC	30.0	19.0	32.5	32.5
SO_2	20.0	28.4	29.2	29.2
$PM_{10} = PM_{2.5}$	74.9	99.7	99.7	99.7
NH_3	67.1	75.9	73.9	75.9

Source: HECA Project

Notes:

CT = combustion turbine
CO = carbon monoxide
HRSG = heat recovery steam generator
NH_3 = ammonia
NO_X = nitrogen oxides
PM_{10} = particulate matter 10 microns in diameter
$PM_{2.5}$ = particulate matter 2.5 microns in diameter ($PM_{2.5}$ is assumed to equal PM_{10})
SO_2 = sulfur dioxide
VOC = volatile organic compounds

4.4 AUXILIARY BOILERS CRITERIA POLLUTANT EMISSIONS

The auxiliary boiler will provide steam to facilitate CTG startup and for other industrial purposes. The auxiliary boiler will be designed to burn pipeline-quality natural gas at the design maximum fuel flow rate of 142 MMBtu/hour (higher heating value [HHV]). The auxiliary boiler emissions are based on 2,190 hours of operation per year. Emissions are based on vendor supplied emission factors. NO_X emissions are based on 9 parts per million volumetric dry (ppmvd) at 3 percent O_2 with installation of ultra-low NO_X combustors and flue gas recirculation. Carbon monoxide emissions are based on 50 ppmvd 3 percent O_2. A summary of auxiliary boiler emissions is presented in Table 4-1, Total Combined Annual Criteria Pollutant Emissions. Emissions and calculations are included in Appendix D.

4.5 SULFUR RECOVERY SYSTEM CRITERIA POLLUTANT EMISSIONS

Associated with the operation of the sulfur recovery process, the Project will incorporate a thermal oxidizer on the tail gas treating unit (TGTU). The thermal oxidizer will serve as a control device to oxidize any remaining H_2S (after scrubbing) and other vent gas that are generated during startup, shutdown, and times of non-delivery of carbon dioxide product. In addition, miscellaneous oxidizing streams from the gasification area (e.g., atmospheric tank vents and miscellaneous equipment vents) are directed to the thermal oxidizer during normal operation to prevent nuisance odors. The thermal oxidizer operates at high temperate and provides sufficient residence time in order to ensure essentially complete destruction of reduced sulfur compounds like H_2S to SO_2. The thermal oxidizer fires natural gas continually to reach and maintain the required operating temperature for proper thermal destruction. Pollutant emissions are generated from the firing of natural gas and the periodic oxidation of vent gas during system upset. A summary of the tail gas oxidizer emissions is presented in Table 4-1, Total Combined Annual Criteria Pollutant Emissions. Emissions and calculations are included in Appendix D.

4.6 CO_2 VENT CRITERIA POLLUTANT EMISSIONS

A carbon dioxide vent stack will allow for start-up and intermittent emergency venting of produced carbon dioxide when the carbon dioxide injection system is unavailable. The carbon dioxide vent will enable the Project to operate, rather than be disabled, by brief periods when the carbon dioxide injection system is unavailable, and in doing so, prevents gasifier shutdown and subsequent gasifier restart with associated emissions. The Project design indicates that the carbon dioxide vent stack will be located beyond the downwash zones caused by the structures associated with the Project. However, the physical height of the carbon dioxide vent stack of 79.3 meters (260 feet) is greater than the *de-minimus* good engineering practice height of 65 meters.

A 260-foot stack height was chosen to satisfy HEI's inherently safe design practices to minimize ground-level carbon dioxide concentrations in the event of a carbon dioxide vent under very low wind speeds.

The carbon dioxide vent exhaust stream will be nearly all carbon dioxide, with small amounts of CO and H_2S. A summary of the carbon dioxide vent stack emissions is presented in Table 4-1, Total Combined Annual Criteria Pollutant Emissions. Emissions and calculations are included in Appendix D

4.7 FLARES CRITERIA POLLUTANT EMISSIONS

The Project will incorporate three flares for operation; gasification flare, SRU flare, and Rectisol flare. The gasification block will operate a Gasification flare to safely dispose of gasifier startup gases (see previous discussion) and syngas, generated during short-term combustion turbine outages and other unplanned power plant upsets or equipment failures. In addition, there will be an SRU flare installed to safely dispose of gas emissions from the AGR source during startup (after passing via a scrubber) or to oxidize releases during emergency or upset events. The Rectisol flare will be used to safely dispose of low temperature gas streams during startup, shutdown, and unplanned upsets or emergency events.

During normal operation, the three flares will have pilot lights that will operate continuously. Emissions from the flares are generated from the continual operation of the natural gas fired pilot lights and from periodic vent gas that are oxidized during unsteady state operation of the gasification and power blocks. A summary of each flare emissions is presented in Table 4-1, Total Combined Annual Criteria Pollutant Emissions. Emissions and calculations are included in Appendix D.

4.8 GASIFIER REFRACTORY HEATERS CRITERIA POLLUTANT EMISSIONS

The gasification plant consists of three gasifiers. The plant will be capable of continuous operation of one or two gasifiers, each at maximum flow (each at 100 percent of rated operation). Each of the three gasification trains will have one natural gas fired burner used to warm the gasification refractory to facilitate startup. These burners will not operate when the gasification train is operating.

The only criteria pollutant emissions from the gasifier units are the by-products of the natural gas fired burners (3 total, 1 per gasifier) during start-up. The gasifier warming burners operate at 18 million British thermal units (MMBtu)/hour firing natural gas for a total of 1,800 hours of normal operation per year. A summary of the gasifier warming emissions is presented in Table 4-1, Total Combined Annual Criteria Pollutant Emissions. Emissions and calculations are included in Appendix D.

4.9 AUXILIARY COMBUSTION TURBINE CRITERIA POLLUTANT EMISSIONS

In addition to the main GE 7FB combined cycle turbine, the power block also includes a single natural gas fired auxiliary gas turbine to provide backup power to the gasification plant during forced outage periods and to provide beneficial spot market power production to the grid. The auxiliary CTG will be equipped with water injection and SCR for the control of NO_x emissions and an oxidation catalyst for control of emissions of CO and VOC. The auxiliary CTG is a natural gas fired GE LMS100® in a simple cycle configuration.

The auxiliary simple cycle CTG is designed to operate independently from the rest of the facility and can be used to supply additional export power when needed. The auxiliary CTG requires high pressure natural gas,, and the natural gas compressor will be operated whenever the auxiliary CTG is operated. Estimated annual emissions of air pollutants for the auxiliary CTG have been calculated based on the expected operating schedule presented below in Table 4-7, Maximum Auxiliary CTG Operating Schedule.

Operational emissions from the auxiliary CTG were estimated for all applicable scenarios using base emission rates and startup/shutdown emissions. The base criteria pollutant emission rates provided by the turbine vendor and the engineer for three load conditions (50%, 75%, and 100%) and three ambient temperatures (20ºF, 65ºF, and 97ºF) when firing natural gas are presented in Table 4-8, 1-Hour Operating Emission Rates for CTG/HRSG Operating Load Scenarios. Table 4-9, Auxiliary CTG Criteria Pollutant Emission Rates During Startup and Shutdown, summarizes the expected emissions and duration of startup and shutdown from the auxiliary CTG.

Table 4-7 Maximum Auxiliary CTG Operating Schedule

Total Hours of Operation	4,110
Total Number of Cold Starts	325
Cold Start Duration (hr)	0.2
Total Number of Shutdowns	325
Shutdown Duration (hr)	0.2
Evaporative Cooling Operation (hr)	4,000

Source: HECA Project
Assumptions: Average annual operational emissions are calculated using yearly average: 65°F, at 100% load, with evaporative cooling.
Note:
CTG = combustion turbine generator

Table 4-8 1-Hour Operating Emission Rates for Auxiliary CTG Operating Load Scenario

Ambient Temperature	UNITS	Winter Minimum, 20°F				Yearly Average, 65°F				Summer Maximum, 97°F			
CTG Load Level	% Load	100%	100%	75%	50%	100%	100%	75%	50%	100%	100%	75%	50%
Evap Cooling Status	off/on	Off	Off	Off	Off	On	Off	Off	Off	On	Off	Off	Off
Average Emission Rates from CTG (lbs/hr/turbine) - Normal Operation Natural Gas													
NO_x (@ 2.5 ppm)	lb/hr		7.9	6.4	4.7	8.1		6.5	4.7	7.9		6.2	4.6
CO (@ 6.0 ppm)	lb/hr		11.5	9.3	6.9	11.9		9.4	6.9	11.5		9.1	6.8
VOC (@ 2.0 ppm)	lb/hr		2.2	1.8	1.3	2.3		1.8	1.3	2.2		1.7	1.3
SO_2 (@ 12.65 ppmv)	lb/hr		1.8	1.4	1.1	1.9		1.5	1.1	1.8		1.4	1.0
$PM_{10} = PM_{2.5}$	lb/hr		6.0	6.0	6.0	6.0		6.0	6.0	6.0		6.0	6.0
NH_3 (@ 10.0 ppm slip)	lb/hr		11.6	9.5	7.0	12.0		9.5	7.0	11.7		9.2	6.8

Source: HECA Project

Notes:

CO = carbon monoxide
CTG = combustion turbine generator
NH_3 = ammonia
NO_X = nitrogen oxides
ppm = parts per million
PM_{10} = particulate matter 10 microns in diameter
$PM_{2.5}$ = particulate matter 2.5 microns in diameter ($PM_{2.5}$ is assumed to equal PM_{10})
SO_2 = sulfur dioxide
VOC = volatile organic compound

Table 4-9 Auxiliary CTG Criteria Pollutant Emission Rates During Startup and Shutdown

Cold Startup			Shutdown		
10 (min. in cold startup)	**Max 1-hr. (lb/hr)**	**Total (lb/10 min.)**	**10.3 (min. in shutdown)**	**Max 1-hr. (lb/hr)**	**Total (lb/10.3 min.)**
NO_X	9.0	3.0	NOx	12.0	4.0
CO	30.6	10.2	CO	39.6	13.2
VOC	0.5	0.2	VOC	0.6	0.2
SO_2 (@ 12.65 ppmv)	1.9	0.3	SO_2	1.9	0.3
$PM_{10} = PM_{2.5}$	6.0	1.7	$PM_{10} = PM_{2.5}$	6.0	1.7

Source: HECA Project

Notes:

NOx, CO, and VOC startup and shutdown emissions (max 1-hr) assume 3 startups and 3 shut downs.

Startup and shutdown SO_2 and PM_{10} emissions will always be lower than normal operational emissions. Startup and shutdown emissions are assumed equal to normal operations max emission rate, with evaporative cooling.

CTG = combustion turbine generator
CO = carbon monoxide
NO_X = nitrogen oxides
PM_{10} = particulate matter 10 microns in diameter
$PM_{2.5}$ = particulate matter 2.5 microns in diameter ($PM_{2.5}$ is assumed to equal PM_{10})
SO_2 = sulfur dioxide
VOC = volatile organic compounds

Auxiliary CTG Emissions Scenarios for Modeling

Reasonable worst-case short-term emissions from the auxiliary CTG were calculated for use in the air quality modeling. For worst-case 1-hour emissions, the worst-case startup scenario for NO_X and CO was used. Based on the startup information, NO_X and CO emissions were conservatively estimated as the contribution from three startups and three shutdowns over a 1-hour period. SO_X emissions are maximized at normal operating scenario.

The 3-hour SO_X emission rate is maximized at normal operating scenario.

The 8-hour CO emission rate was calculated assuming four cold starts and four shutdowns.

The 24-hour NO_X, emission rate was calculated assuming four cold starts, four shutdowns and the balance (10 hours) normal operation at maximum emission rate. PM_{10} and SO_X worst-case 24-hour emission rates were calculated assuming normal operation at the maximum emission rate

Table 4-10, Criteria Pollutant Sources and Emission Totals for the Worst-Case Auxiliary CTG Emissions Scenario for All Averaging Time, summarizes the worst-case emissions scenarios adopted to assess maximum impacts to air quality and air quality-related values in the modeling analyses presented in Section 7.0.

Table 4-10 Criteria Pollutant Sources and Emission Totals for the Worst-Case Auxiliary CTG Emissions Scenario for All Averaging Time

Averaging Time	Worst-case Emission Scenarios by Operating Equipment	Pollutant	Emissions in pounds – Entire Period
1 hour	**NO_X:** Contribution from three startups and three shutdowns over a 1-hour period.	NO_X	20.7
	CO: Contribution from three startups and three shutdowns over a 1-hour period.	CO	69.0
	SO_X: Normal Operation at maximum emission rate.	SO_X	1.9
3 hour	**SO_X:** Normal Operation at maximum emission rate.	SO_X	5.6
8 hour	**CO:** Four cold startups and four shutdowns.	CO	172.6
24 hour	**NO_X:** four cold starts, four shutdowns, and remainder of normal operation at maximum emission rate.	NO_X	212.4
	SO_X, PM_{10}: Normal Operation at maximum emission rate.	$PM_{10} = PM_{2.5}$	144.0
		SO_X	44.6
Annual	**NO_X, CO, VOC, PM_{10}, and SO_X :** 325 cold starts and 325 shutdowns, and remainder of turbine operates with evaporative cooling.	NO_X	34,840.6
		CO	55,179.1
		VOC	9,182.0
		$PM_{10} = PM_{2.5}$	24,660.0
		SO_X	7,644.4

Source: HECA Project

Notes:

CO = carbon monoxide
CTG = combustion turbine generator
NO_X = nitrogen oxides
SO_X = sulfur oxides
PM_{10} = particulate matter 10 microns in diameter
$PM_{2.5}$ = particulate matter 2.5 microns in diameter ($PM_{2.5}$ is assumed to equal PM_{10})
VOC = volatile organic compounds

4.10 FEEDSTOCK HANDLING SYSTEM CRITERIA POLLUTANT EMISSIONS

In addition to the sources above, there will be emissions of PM_{10} from feedstock and gasifier solids materials handling operations. These operations include bulk material unloading, loading, belt conveying, belt transfer points, silo loading, and reclaim. A summary of the dust collection system emissions is presented in Table 4-1, Total Combined Annual Criteria Pollutant Emissions. Emissions and calculations are included in Appendix D

4.11 PLANT STARTUP AND COMMISSIONING CRITERIA POLLUTANT EMISSIONS

Plant Startup Emissions

This section describes a plant-wide "cold" startup. If the Project is being restarted after a short outage, where little or no maintenance is required, the durations of each step will be much shorter than indicated in the following description. This sequence assumes that all the necessary utility and support systems are already in service (plant distributed control system, fire protection and other safety systems, electrical switchyard and in-plant electrical distribution, water treatment, wastewater deep well injection, natural gas, steam, instrument and plant air, purge nitrogen, etc.).

The power block startup sequence on natural gas is similar to a conventional natural gas combined cycle plant. Once all the startup permissives are met, GE's Frame 7FB start signal is given and the gas turbine generator is used as a motor to rotate the gas turbine and accelerate it until the operation is self sustaining (static start). The gas turbine compressor is first partially loaded to provide enough air flow and duration to purge the HRSG. Following the purge, natural gas is introduced into the CTG combustors and the gas turbine operation becomes self sustaining and the static start is discontinued. When the gas turbine reaches 3,600 revolutions per minute (rpm), or "full speed, no load," it is synchronized with the electrical grid and the main breaker is closed. Shortly after the CTG is synchronized it is loaded to a minimum or "spinning reserve" load. All the preceding steps are executed automatically by the CTG's control computer. At this point the HRSG begins warming up and rapidly begins to produce steam. The steam is initially vented to the atmosphere and as pressure builds in the steam system the atmospheric vents close and the steam flow is diverted to the surface condenser.

Once dry steam is available, the steam turbine startup sequence can be initiated. The steam turbine metal temperature determines how quickly the steam turbine can be loaded. If the steam turbine has been down for an extended period of time, it will follow the "cold start" sequence. The cold start sequence requires the CTG to operate at reduced load (below the emission compliance level) for up to 3 hours. During this time, the gas turbine load is slowly increased to match the steam temperature to the steam turbine metal temperature to heat the steam turbine while minimizing thermal stress. Once the gas turbine reaches the required load, steam is introduced to control NO_x formation. Once the SCR catalyst reaches the required temperature, ammonia injection is initiated and the HRSG stack emissions will fall to the required compliance levels. The CTG can then be loaded normally to baseload and the steam turbine will reach a load based on the available steam. At this point, the power block is producing more than enough power to support the rest of the Project.

The ASU will require about 4 days to start up and reach full capacity. Because the ASU operates at cryogenic conditions, the startup sequence includes an extensive cool down and drying period. During this time, the main air compressor (MAC) and booster air compressor (BAC) will be operated to provide the "auto refrigeration" necessary to cool and dry the ASU. Near the end of the startup sequence, the ASU will begin producing liquid oxygen (LOX) and liquid nitrogen (LIN). The LOX is stored to provide a backup oxygen supply to cover a compressor trip or other short ASU outage. The LIN storage is provided as a backup supply for the purge nitrogen system. Once the ASU is producing enough oxygen to operate at least one gasifier, the LOX pumping and vaporization system can be started to make high pressure O_2 vapor available to the gasification block.

The AGR unit is assumed to be ready to start (purged with N_2 and with startup methanol levels established in the circulating system). Methanol circulation is started and the refrigeration system is started to begin cooling the methanol to normal operating temperature (approximately -40°F). This sequence is expected to take about 2 days and will complete at about the same time that sufficient O_2 is available to start a gasifier.

The SRU includes two conventional Claus reactor trains. Operation of the second Claus reactor train is not required if only one gasifier is operating, or if both gasifiers are operating on low sulfur coal/coke blends. This sequence assumes that both trains will be needed and that the first train is started up along with the single TGTU. The SRU reactor furnace is refractory lined. After an extended outage, both the refractory and the SRU catalyst require a gradual heating program that will take about 3 days. The heating is provided by firing natural gas with air in the reaction furnace. The combustion products flow through the reactor furnace, catalyst beds, and boilers to the tail gas thermal oxidizer. During the refractory dryout/cure period, the hydrogenation reactor in the TGTU will also be preheated. The hydrogenation reactor catalyst requires pre-sulfiding which will be timed to complete when the SRU is feed ready and the first gasifier is feed ready. At the end of this sequence, the amine circulation in the TGTU will be established and operating conditions will be established.

The gasifier vessels are refractory lined and require about 1 to 2 days to heat up to the temperature that allows O_2 and the feedstock to be introduced.

The shift reactors require warm-up and pre-sulfiding before sour syngas can be introduced. The shift reactor catalyst is heated by circulating hot nitrogen across the catalyst beds for about 2 days. The nitrogen is heated indirectly with a high pressure steam heater. Once the catalyst is hot, a small amount of sulfur-containing compound is added to the circulating N_2. The pre-sulfiding is completed when traces of sulfur are detected in the effluent of the second shift reactor. The shift reactors are then isolated hot and ready for feed.

The carbon dioxide compression system will be purged and ready to compress carbon dioxide. The carbon dioxide compressor startup sequence will be timed to coincide with the time the AGR is producing CO_2 in sufficient quantity to allow sustained operation of the carbon dioxide compressor.

When the gasifier refractory reaches operating temperature, the gasifier can be started by introducing oxygen and a sulfur-free feedstock, then switching to the petroleum coke and/or petroleum coke-coal blend feedstock. Raw syngas produced is sent to ground flare until the system pressure and flow are stabilized. For normal start-up, the syngas sent to flare is essentially sulfur-free.

Syngas is diverted through the shift reactors and low-temperature gas cooling sections and then to AGR. The AGR unit solution will begin absorbing the carbon dioxide in the syngas. Once the carbon dioxide concentration in the "rich" solution reaches the required level, the flash drums will begin separating carbon dioxide vapor. This carbon dioxide will be washed to remove any traces of methanol and vented to the atmosphere at the top of the absorber column.

Once sufficient hydrogen-rich fuel production is available, GE's Frame 7FB can initiate a switch either to co-firing or to 100 percent hydrogen-rich syngas. At this point the startup is complete and normal operation begins.

Commissioning

Commissioning will be completed by system with the utilities (power, water, natural gas, steam, etc.) completed first. In general, the major process units will be commissioned in a sequence that begins with the feed producing units and ends with the product producing units and systems.

The commissioning sequence will begin with the auxiliary CTG operating in commissioning mode for up to 356 hours. After this, the auxiliary CTG and auxiliary boiler will run in normal mode for 892 hours while the HRSG operates in commissioning mode on natural gas.

Commissioning, the major process units will be commissioned sequentially. The major gasification block units consume substantial amounts of electrical power. Therefore, the power block needs to be highly reliable and functioning on natural gas prior to commissioning on hydrogen-rich syngas. For this reason, the power block will be commissioned about 6 months ahead of the gasification block. The commissioning for the Project will require four distinct phases which are described as follows.

- Combined cycle unit commissioning on natural gas;
- Commissioning of the auxiliary simple cycle CTG on natural gas;
- Gasification block, including ASU, and balance of plant commissioning; and
- Commissioning the combined cycle unit on hydrogen-rich fuel.

The startup and commissioning period of the Project is expected to be completed within one year from mechanical completion. Commercial operation will start when the commissioning and startup activities are completed and the licensor/contractor guarantees and milestones have been achieved. The ramp-up period to maturity is estimated to be 3 years from the start of commercial operation. The hydrogen-rich fuel availability for mature operation is estimated to be greater than 80 percent. The power availability for mature operation is estimated to be greater than 90 percent.

While considerable data exists on commissioning periods on power generation involving natural gas, and mature operation is reached within a few months for NGCC type systems, the power generation involving hydrogen-rich fuel from solid feedstock such as petroleum coke or coal requires a longer ramping duration due to the shakedown periods involved in the various technologies employed in the process block; in particular, the solid feedstock gasification. For this reason, the process block is expected to have an availability much less than 80 percent during the first 3 years.

After the one-year initial Startup and basic Commissioning Phase, there will be multiple gasifier starts per year. These will occur over the lifespan of the Project, and therefore, can be considered as part of the 'normal' operations of the Project, from an air quality standpoint. Consequently, these gasifier startup emissions from the gasification flare are no greater than the emissions from the gasification flare from normal gasifier start-ups. However, the frequency and duration of gasification flare operations are speculative. Although each individual unit and technology has been demonstrated, the integration of the technologies in this Project is unique. Therefore, total gasifier commissioning emissions are speculative.

Combined Cycle Unit Commissioning on Natural Gas

The natural gas commissioning procedure for the combined cycle unit (CTG/HRSG) is similar to that used for conventional natural gas fired combined cycle plants. The GE Frame 7FB uses diffusion combustors with steam injection, rather than dry-low NO_x combustors, so the NO_x tuning procedure is the primary difference between this Project and conventional natural gas fired combined cycle turbines. The following list briefly describes the steps for commissioning on natural gas:

- First fire
- Green rotor run-in
- Support of steam blows
- Initial steam turbine roll
- NO_x tuning with steam injection
- Water wash and simple cycle CTG performance and emissions testing
- Duct burner testing
- Installation of SCR and oxidation catalyst
- Continuous emissions monitoring system (CEMS) drift test and source testing
- Combined cycle functional testing
- Water wash and combined cycle performance testing and continuous operation test

The emissions associated with the sequence above are shown in Table 4-13, Duration and Criteria Pollutant Emissions for Commissioning of the CTG/HRSG on Natural Gas at 59°F.

The duration of all tests may be affected by unforeseen events, and therefore can only be estimated in advance. A maximum of 892 hours of operation during commissioning of the combustion turbine with partially abated emissions is expected over a period not to exceed 5 months. The annual frequency of turbine starts during the year when commissioning occurs is not expected to exceed the frequency of turbine starts during operation (see Table 4-11, Duration and Criteria Pollutant Emissions for Commissioning of the CTG/HRSG on Natural Gas at 59°F). Fuel flow monitoring will be conducted for all tests.

Table 4-11 Duration and Criteria Pollutant Emissions for Commissioning of the CTG/HSRG on Natural Gas at 59ºf

Test Phase	Hours of Operation	CTG Load	SCR/CO Status	SO_X (lb)	NO_X (lb)	CO (lb)	VOC (lb)	PM_{10} (lb)
First Fire	4	FSNL	Not Operating	4	232	8,800	1,380	72
Green Rotor Run-In	12	10%	Not Operating	16	1,320	14,400	780	216
Steam Blows	168	30%	Not Operating	365	57,960	8,400	1,680	3,024
Restoration	N/A	N/A	N/A	N/A	N/A	N/A	N/A	N/A
Initial Steam Turbine Roll	24	10%	Not Operating	31	2,640	28,800	1,560	432
NO_X Tuning with Steam Injection and initial STG loading	16	60%	Not Operating	44	1,936	936	54	288
NO_X Tuning with Steam Injection and initial STG loading	16	100%	Not Operating	59	2,688	1,282	75	288
Finalize NO_X Control Constants	40	60%	Not Operating	109	4,840	2,340	136	720
Finalize NO_X Control Constants	40	80%	Not Operating	129	5,800	2,732	160	720
Finalize NO_X Control Constants	96	100%	Not Operating	357	16,128	7,690	451	1,728
CTG Water Wash and Contractor's Emission and Simple Cycle Performance Testing	16	100%	Not Operating	59	2,688	1,282	75	288
Duct Burner Testing	96	100%	Not Operating	453	19,488	12,490	1,171	1,728
Install SCR and Oxidation Catalyst	24	100%	Testing	89	4,032	1,922	113	432
CEMS Drift and Source Testing	64	100%	Operating	238	2,157	1,312	301	1,152
Functional Testing Demonstration Hours	12	Various	Operating	10	500	5,560	920	100
Functional Testing Steady State Hours	48	100%	Operating	178	1,618	984	226	864
CTG Water Wash and Preparation for Performance Testing	N/A	N/A	N/A	N/A	N/A	N/A	N/A	N/A

Table 4-11 Duration and Criteria Pollutant Emissions for Commissioning of the CTG/HSRG on Natural Gas at 59ºf

Test Phase	Hours of Operation	CTG Load	SCR/CO Status	SO_X (lb)	NO_X (lb)	CO (lb)	VOC (lb)	PM_{10} (lb)
Combined Cycle Performance Testing	24	100%	Operating	113	1,054	641	180	432
Continuous Operation Test	192	100%	Operating	713	6,470	3,936	902	3,456
	892			2,966	131,550	103,506	10,165	15,940
				1.5	65.8	51.8	5.1	8.0

Source: HECA Project

Notes:

CEMS = continuous emissions monitoring system
CO = carbon monoxide
CTG = combustion turbine generator
HRSG = heat recovery steam generator
N/A = not applicable
NO_X = nitrogen oxides
PM_{10} = particulate matter 10 microns in diameter
SCR = selective catalytic reduction
SO_X = sulfur oxides
VOC = volatile organic compound

The gas turbine commissioning periods begin when the turbines first burn natural gas. The Applicant will make every effort to minimize emissions of CO, VOCs, and NOx during the commissioning period. However, not all of the equipment to abate these emissions will be fully operational at the start of the commissioning period. The Applicant requests a maximum of 552 hours of partially abated emissions for the gas turbine train.

Once it has been installed, the oxidation catalyst will abate CO and VOC emissions from the gas turbine and the duct burners because it is essentially a passive device. Although the SCR catalyst is in some cases able to be installed prior to initial startup of the combustion turbine, it may not be installed until later in the commissioning period, after completion of steam blows, which could deposit debris and otherwise damage the catalyst. The SCR catalyst may not be installed at the same time as the oxidation catalyst. Nitrogen oxide emissions from the gas turbines and the duct burners may be only partially abated during times that the gas turbine burners are being tuned and the SCR system is being tested.

Commissioning emissions were very conservatively estimated as worst case by assuming that the control efficiency of the applicable abatement systems is essentially zero during significant portions of the commissioning phase. Where applicable, emission offsets will be the mitigation of these emissions.

The CEMS will also be undergoing commissioning at this time. Once the CEMS is commissioned, it will record emissions of NO_x and CO. Emissions of SO_2 and PM_{10} may be quantified by using emission factors based on fuel flow.

Combined Cycle Block Commissioning on Hydrogen Rich Fuel

The combined cycle block will require additional testing and NO_x tuning with hydrogen-rich fuel. The testing will cover the range of natural gas/hydrogen-rich syngas blends and allowable load ranges. The combined cycle block is assumed to have been commissioned first on natural gas. The oxidation catalysts are assumed to be in service and active when the HRSG operating temperature is sufficient. The SCR catalyst and ammonia injection system are assumed to be operating whenever the SCR catalyst temperature is in the required range, and operation is sufficiently stable. Ammonia injection may be off-line during the initial phases of NO_x tuning. The key activities and events that are expected to produce air emissions are listed below:

- Startup and shutdown of GE's Frame 7FB on natural gas,
- Standby operation of the combined cycle block on natural gas,
- CTG NO_x tuning on co-firing,
- CTG NO_x tuning on 100 percent hydrogen-rich fuel,
- CTG NO_x tuning on part load,
- Water wash and performance testing on hydrogen-rich fuel,
- Duct burner testing on hydrogen-rich fuel,
- Source testing on hydrogen-rich fuel blends across the load range,
- Functional testing including fuel transfers and load changes,

- Plant-wide performance test,
- Plant-wide operational reliability test.

The emissions associated with the sequence above are shown in Table 4-12, Duration and Criteria Pollutant Emissions for Commissioning of the CTG/HRSG on Hydrogen-Rich Fuel at 59°F.

The duration of all tests may be affected by unforeseen events, and therefore can only be estimated in advance. A maximum of 644 hours of operation during commissioning of the auxiliary combustion turbine with partially abated emissions is expected over a period not to exceed 5 months. The annual frequency of turbine starts during the year when commissioning occurs is not expected to exceed the frequency of turbine starts during operation. Fuel flow monitoring will be conducted for all tests.

Table 4-12 Duration and Criteria Pollutant Emissions for Commissioning of the CTG/HSRG on Hydrogen-Rich Fuel at 59ºF

Test Phase	Hours of Operation	CTG Load	SCR/CO Status	SO_X (lb)	NO_X (lb)	CO (lb)	VOC (lb)	PM_{10} (lb)
CTG Starts on Natural Gas	30	Various	Not Operating	84	5,010	11,820	2,940	690
CTG Fired Shutdowns	30	Various	Not Operating	30	1,860	3,780	630	300
CTG/HRSG Standby Operation on Natural Gas	120	60%	Operating	327	2,904	1,776	408	2,160
CTG NO_X Tuning @ 45% Hydrogen-Rich Fuel Co-firing	16	100%	50% SCR, 90% CO (*)	49	1,584	692	88	576
CTG NO_X Tuning @ 90% Hydrogen-Rich Fuel Co-firing	16	100%	50% SCR, 90% CO (*)	38	1,832	744	48	576
CTG NO_X Tuning @ 100% Hydrogen-Rich Fuel	16	100%	50% SCR, 90% CO (*)	38	928	146	45	576
CTG NO_X Tuning @ 100% Hydrogen-Rich Fuel Min Load	16	60%	50% SCR, 90% CO (*)	27	768	102	37	576
CTG Water Wash and Contractor's Emission and Simple Cycle Performance Testing on Hydrogen-Rich Fuel	24	100%	Operating	57	1,106	403	77	864
Duct Burner Testing on Hydrogen-Rich Fuel	48	100%	Operating	128	2,386	869	168	1,728
Source Testing @ 100% Hydrogen-Rich Fuel	16	100%	Operating	38	738	269	51	576
Source Testing @ 100% Hydrogen-Rich Fuel	16	100%	Operating	43	795	290	56	576
Source Testing @ 45% Hydrogen-Rich Fuel Co-firing	16	100%	Operating	49	634	386	88	576

Table 4-12 Duration and Criteria Pollutant Emissions for Commissioning of the CTG/HSRG on Hydrogen-Rich Fuel at 59ºF

Test Phase	Hours of Operation	CTG Load	SCR/CO Status	SO_X (lb)	NO_X (lb)	CO (lb)	VOC (lb)	PM_{10} (lb)
Source Testing @ 90% Hydrogen-Rich Fuel Co-firing	16	100%	Operating	38	774	470	107	576
Functional Testing Steady State Hours	48	100%	Operating	128	2,386	869	168	1,728
CTG Water Wash and Preparation for Performance Testing	N/A	N/A	N/A	N/A	N/A	N/A	N/A	N/A
IGCC Performance Testing	24	100%	Operating	64	1,193	434	84	864
Continuous Operation Test	192	100%	Operating	512	9,542	3,475	672	6,912
Notes: During weeks 44 through 53, none of the emissions overlap	644			1,650	34,440	26,525	5,667	19,854
				0.8	17.2	13.3	2.8	9.9

Source: HECA Project

Notes:

CO = carbon monoxide
CTG = combustion turbine generator
HRSG = heat recovery steam generator
N/A = not applicable
NO_X = nitrogen oxides
PM_{10} = particulate matter less than10 microns in diameter
SCR = selective catalytic reduction
SO_X = sulfur oxides
VOC = volatile organic compounds

Commissioning the Auxiliary Simple Cycle CTG on Natural Gas

The auxiliary simple cycle CTG (GE LMS100®) is exclusively fueled by natural gas and is provided with water injection for primary NO_x control. The following list briefly describes the steps for commissioning on natural gas:

- First fire
- NO_x tuning with water injection
- Installation of SCR and oxidation catalyst
- CEMS drift test and source testing
- Water wash and performance and functional testing

The emissions associated with the sequence above are shown in Table 4-13, Duration and Criteria Pollutant Emissions for Commissioning of the Auxiliary CTG on Natural Gas at 59°F.

The duration of all tests may be affected by unforeseen events, and therefore can only be only estimated in advance. A maximum of 356 hours of operation during commissioning of the

auxiliary combustion turbine with partially abated emissions is expected over a period not to exceed 5 months.

The gas turbine commissioning periods begin when the turbines first burn natural gas. The Applicant will make every effort to minimize emissions of CO, VOCs, and NO_x during the commissioning period. However, not all of the equipment to abate these emissions will be fully operational at the start of the commissioning period. The Applicant requests a maximum of 236 hours of partially abated emissions for the gas turbine train.

Table 4-13 Duration and Criteria Pollutant Emissions for Commissioning of the Auxiliary CTG on Natural Gas at 59ºf

Test Phase	Hours of Operation	CTG Load	SCR/CO Status (3)	SO_X (lb)	NO_X (lb)	CO (lb)	VOC (lb)	PM_{10} (lb)
First Fire	4	FSNL	Not Operating	2	282	1,500	12	24
NO_X Tuning with Water Injection	16	50%	Not Operating	17	1,128	2,616	48	96
NO_X Tuning with Water Injection	16	100%	Not Operating	29	1,944	4,512	82	9696
Finalize NO_X Control Constants	40	50%	Not Operating	42	1,880	4,360	80	240
Finalize NO_X Control Constants	40	75%	Not Operating	57	2,600	5,960	108	240
Finalize NO_X Control Constants	96	100%	Not Operating	176	7,776	18,048	326	576
Install SCR and Oxidation Catalyst	24	100%	Testing	44	1,944	4,512	82	144
CEMS Drift and Source Testing	64	100%	Operating	117	531	762	147	384
Functional Testing Steady State Hours	48	100%	Operating	88	398	571	110	288
Preparation for Performance Testing	N/A	N/A	N/A	N/A	N/A	N/A	N/A	N/A
Contract Performance Test	8	100%	Operating	15	66	95	18	48
	356			587	18,550	42,936	1,014	2,136
				0.3	9.3	21.5	0.5	1.1

Source: HECA Project

Notes:

CO = carbon monoxide
CTG = combustion turbine generator
HRSG = heat recovery steam generator
N/A = not applicable
NO_X = nitrogen oxides
PM_{10} = particulate matter 10 microns in diameter
SCR = selective catalytic reduction
SO_X = sulfur oxides
VOC = volatile organic compound

USEPA has ultimate responsibility for ensuring, pursuant to the Clean Air Act Amendments of 1990 (CAAA), that all areas of the U.S. meet, or are making progress toward meeting, the federal AAQS. The state of California falls under the jurisdiction of USEPA Region 9, which is headquartered in San Francisco. USEPA requires that all states submit State Implementation Plans (SIPs) for non-attainment areas that describe how the federal AAQS will be achieved and maintained. Attainment plans must be approved by CARB before they are submitted to USEPA.

Regional or local air quality management districts (or air districts), such as SJVAPCD are responsible for preparation of plans for attainment of federal and state standards. CARB is responsible for overseeing attainment of the CAAQS, implementation of nearly all phases of California's motor vehicle emissions program, and oversight of the operations and programs of the regional air districts.

Each air district is responsible for establishing and implementing rules and control measures to achieve air quality attainment within its district boundaries. The air district also prepares an air quality management plan (AQMP) that includes an inventory of all emission sources within the district (both man-made and natural), a projection of future emissions growth, an evaluation of current air quality trends, and an assessment of any rules or control measures needed to attain the AAQS. This AQMP is submitted to CARB, which then compiles AQMPs from all air districts within the state into the SIP. The responsibility of the air districts is to maintain an effective permitting system for existing, new, and modified stationary sources, to monitor local air quality trends, and to adopt and enforce such rules and regulations as may be necessary to achieve the AAQS.

Applicable LORS related to the potential air quality impacts from the Project are described below, and shown in Table 5-1, Laws, Ordinances, Regulations, and Standards – Air Quality. These LORS are administered (either independently or cooperatively) by the SJVAPCD, USEPA Region 9, the CEC, and CARB. The area of responsibility for each of these agencies is described below.

Table 5-1 Laws, Ordinances, Regulations, and Standards – Air Quality

Laws, Ordinances, Regulations, and Standards	Applicability	Administering Agency
Federal		
Clean Air Act 160-169A and implementing regulations, Title 42 United States Code (USC) 7470-7491 (42 USC 7470-7491; Title 40 Code of Federal Regulations (CFR) Parts 51 and 52 (40 CFR Parts 51 and 52) Prevention of Significant Deterioration Program)	Requires prevention of significant deterioration (PSD) review and facility permitting for construction of new or modified major stationary sources of air pollution. PSD review applies to pollutants for which ambient concentrations are lower than NAAQS.	USEPA Region 9
CAA 171-193, 42 USC 7501 et seq. (New Source Review)	Requires new source review (NSR) facility permitting for construction or modification of stationary sources. NSR applies to pollutants for which ambient concentrations are higher than NAAQS.	USEPA Region 9
CAA 401 (Title IV), 42 USC 7651 (Acid Rain Program); SJVAPCD Regulation IV, Rule 2540	Requires reductions in NO_X and SO_2 emissions.	SJVAPCD, with USEPA Region 9 oversight
CAA 501 (Title V), 42 USC 7661 (Federal Operating Permits Program)	Establishes comprehensive permit program for major stationary sources.	SJVAPCD, with USEPA Region 9 oversight
CAA 111, 42 USC 7411, 40 CFR Part 60 (New Source Performance Standards, or NSPS)	Establishes national standards of performance for new stationary sources. This rule incorporates the New Source Performance Standards from Part 60, Chapter 1, Title 40, CFR.	SJVAPCD, with USEPA Region 9 oversight

Table 5-1 Laws, Ordinances, Regulations, and Standards – Air Quality

Laws, Ordinances, Regulations, and Standards	Applicability	Administering Agency
State		
H&SC 44300-44384; Title 17 of The California Code of Regulations (17 CCR 93300-93300.5) Toxic "Hot Spots" Act	Requires preparation and biennial updating of facility emission inventory of hazardous substances; health risk assessments.	CARB
H&SC 41700	Provides that no person shall discharge from any source quantities of air contaminants of material which cause injury, detriment, nuisance, or annoyance to considerable number of persons or to the public which endanger the comfort, repose, health or safety or which can cause injury or damage to business or property.	CARB
California Public Resources Code 25523(a); 20 CCR 1752, 2300 2309 and Div. 2, Chap. 5, Art. 1, Appendix B, Park (k) (CEC and CARB Memorandum of Understanding)	Requires that CEC's decision on the AFC include requirements to assure protection of environmental quality; AFC is required to address air quality protection.	CEC
The California Global Warming Solutions Act of 2006	Requires new baseload generation power plants to not exceed the rate of greenhouse gas emissions	CARB
California Code of Regulation. Title 20, §2902, Greenhouse Gases Emission Performance Standard.	The greenhouse gases emission performance standard (EPS) applicable to this chapter is 1,100 pounds of carbon dioxide per megawatt hour of electricity.	CARB
California Code of Regulation. Title 20, §2903, Compliance with the Emission Performance Standard	A power plant's compliance with the EPS shall be determined by dividing the power plant's annual average carbon dioxide emissions in pounds by the power plant's annual average net electricity production in MWh.	CARB

Table 5-1 Laws, Ordinances, Regulations, and Standards – Air Quality

Laws, Ordinances, Regulations, and Standards	Applicability	Administering Agency
California Code of Regulation. Title 20, §2904, Annual Average Carbon Dioxide Emissions	Except as provided in Subsections (b) and (c), a power plant's annual average carbon dioxide emissions are the amount of carbon dioxide produced on an annual average basis by each fuel used in any component directly involved in electricity production, including, but not limited to, the boiler, combustion turbine, reciprocating or other engine, and fuel cell. The fuels used in this calculation shall include, but are not limited to, primary and secondary fuels, backup fuels, and pilot fuels, and the calculation shall assume that all carbon in the fuels is converted to carbon dioxide. Fuels used in ancillary equipment, including, but not limited to, fire pumps, emergency generators, and vehicles shall not be included. (b) [not presented in this report because it pertains to biomass fuels and does not affect the Project] (c) For covered procurements that employ geological formation injection for CO_2 sequestration, the annual average carbon dioxide emissions shall not include the carbon dioxide emissions that are projected to be successfully sequestered. The EPS for such power plants shall be determined based on projections of net emissions over the life of the power plant. Carbon dioxide emissions shall be considered successfully sequestered if the sequestration project meets the following requirements: (1) Includes the capture, transportation, and geologic formation injection of CO_2 emissions; (2) Complies with all applicable laws and regulations; and (3) Has an economically and technically feasible plan that will result in the permanent sequestration of CO_2 once the sequestration project is operational.	CARB

Table 5-1 Laws, Ordinances, Regulations, and Standards – Air Quality

Laws, Ordinances, Regulations, and Standards	Applicability	Administering Agency
Local		
SJVAPCD Regulation II, Rule 2201	This rule shall apply to all new stationary sources and all modifications to existing stationary sources which are subject to the District permit requirements and after construction emit or may emit one or more affected pollutant. The requirements of this rule in effect on the date the application is determined to be complete by the Air Pollution Control Officer (APCO) shall apply to such application except as provided in Section 2.1.	SJVAPCD
SJVAPCD Regulation II, Rule 2520	The purpose of this rule is to provide for the following: 1.1 An administrative mechanism for issuing operating permits for new and modified sources of air contaminants in accordance with requirements of 40 CFR Part 70. 1.2 An administrative mechanism for issuing renewed operating permits for sources air contaminants in accordance with requirements of 40 CFR Part 70. 1.3 An administrative mechanism for revising, reopening, revoking, and terminating operating permits for sources of air contaminants in accordance with requirements of 40 CFR Part 70. 1.4 An administrative mechanism for incorporating requirements authorized preconstruction permits issued under District Rule 2201 (New and Modified Stationary Source Review) in a Part 70 permit as administrative amendments, provided that such permits meet procedural requirements substantially equivalent the requirements of 40 CFR 70.7 and 70.8, and compliance requirements substantially equivalent to those contained in 40 CFR 70.6. 1.5 The applicable federal and local requirements to appear on a single permit.	SJVAPCD

Table 5-1 Laws, Ordinances, Regulations, and Standards – Air Quality

Laws, Ordinances, Regulations, and Standards	Applicability	Administering Agency
SJVAPCD Regulation II, Rule 2540	All stationary sources subject to Part 72, Title 40, CFR	SJVAPCD
SJVAPCD Regulation II, Rule 2550	The provisions of this rule shall only apply to applications to construct or reconstruct a major air toxics source with Authority to Construct issued on or after 28 June 1998. Requirements for other projects that result in increases in emissions of hazardous air pollutants are addressed in the District's Risk Management Policy for Permitting New and Modified Sources.	SJVAPCD
SJVAPCD Regulation III	Identifies fees that are applicable to permit modifications, new facilities, and permitted emissions	SJVAPCD
SJVAPCD Regulation IV, Rule 4001	All new sources of air pollution and modification of existing sources of air pollution shall comply with the standards, criteria, and requirements set forth therein.	SJVAPCD
SJVAPCD Regulation IV, Rule 4002	This rule incorporates the National Emission Standards for Hazardous Air Pollutants from Part 61, Chapter I, Subchapter C, Title 40, CFR and the National Emission Standards for Hazardous Air Pollutants for Source Categories from Part 63, Chapter I, Subchapter C, Title 40, CFR.	SJVAPCD
SJVAPCD Regulation IV, Rule 4101	The provisions of this rule shall apply to any source operation which emits or may emit air contaminants.	SJVAPCD
SJVAPCD Regulation IV, Rule 4102	This rule shall apply to any source operation which emits or may emit air contaminants or other materials.	SJVAPCD
SJVAPCD Regulation IV, Rule 4201	PARTICULATE MATTER CONCENTRATION 0.1 grain/scf of gas at dry standard conditions.	SJVAPCD
SJVAPCD Regulation IV, Rule 4202	Particulate Matter Emission - this rule provides a table emission rates in lbs/hr, based on process feed rates.	SJVAPCD

Table 5-1 Laws, Ordinances, Regulations, and Standards – Air Quality

Laws, Ordinances, Regulations, and Standards	Applicability	Administering Agency
SJVAPCD Regulation IV, Rule 4301	The purpose of this rule is to limit the emission of air contaminants from fuel burning equipment. This rule limits the concentration of combustion contaminants and specifies maximum emission rates for sulfur dioxide, nitrogen oxides and combustion contaminant emissions.	SJVAPCD
SJVAPCD Regulation IV, Rule 4304	The purpose of this rule is to provide an equipment tuning procedure for boilers, steam generators and process heaters to control visible emissions and emissions of both nitrogen oxides (NOx) and carbon monoxide (CO).	SJVAPCD
SJVAPCD Regulation IV, Rule 4305-4308	The purpose of this rule is to limit emissions of NOx and CO from boilers, steam generators, and process heaters.	SJVAPCD
SJVAPCD Regulation IV, Rule 4311	Potential conflicts with SJVAPCD flaring regulations	SJVAPCD
SJVAPCD Regulation IV, Rule 4701	Except as provided in Section 4.0, the provisions of this rule apply to any internal combustion engine, rated greater than 50 brake horsepower that requires a Permit to Operate (PTO).	SJVAPCD
SJVAPCD Regulation IV, Rule 4702	This rule applies to any internal combustion engine with a rated brake horsepower greater than 50 horsepower.	SJVAPCD
SJVAPCD Regulation IV, Rule 4703	Stationary Gas Turbines - will affect NO_x and CO emissions.	SJVAPCD
SJVAPCD Regulation IV, Rule 4801	Sulfur Compounds - 0.2 % by volume calculated as SO_2	SJVAPCD

Table 5-1 Laws, Ordinances, Regulations, and Standards – Air Quality

Laws, Ordinances, Regulations, and Standards	Applicability	Administering Agency
SJVAPCD Regulation VIII	The purpose of Regulation VIII (Fugitive PM_{10} Prohibitions) is to reduce ambient concentrations of fine particulate matter (PM_{10}) by requiring actions to prevent, reduce, or mitigate anthropogenic fugitive dust emissions. The Rules contained in this Regulation have been developed pursuant to U.S. Environmental Protection Agency guidance for Serious PM_{10} Nonattainment Areas. The rules are applicable to specified anthropogenic fugitive dust sources. Fugitive dust contains PM_{10} and particles larger than PM_{10}. Controlling fugitive dust emissions when visible emissions are detected will not prevent all PM_{10} emissions, but will substantially reduce PM_{10} emissions.	SJVAPCD
SJVAPCD Regulation IX	This Rule specifies the criteria and procedures for determining the conformity of federal actions with the San Joaquin Valley Air Pollution Control District's air quality implementation plan.	SJVAPCD
Industry		
None Applicable	None Applicable	

5.1 AMBIENT AIR QUALITY STANDARDS

USEPA, in response to the federal CAA of 1970, established federal AAQS in Title 40 CFR Part 50. The federal AAQS include both primary and secondary standards for six "criteria" pollutants. These criteria pollutants are O3, CO, NO2, SO2, PM_{10}, and Pb. Primary standards were established to protect human health, and secondary standards were designed to protect property and natural ecosystems from the effects of air pollution.

The 1990 CAAA established attainment deadlines for all designated areas that were not in attainment with the federal AAQS. In addition to the federal AAQS described above, a new federal standard for $PM_{2.5}$ and a revised O_3 standard were promulgated in July 1997. The new federal standards were challenged in a court case during 1998. The court required revisions in both standards before USEPA can enforce them. The U.S. Supreme Court upheld an appeal of the District Court decision in February 2001. These issues were resolved and the 1-hour O3 standard revoked in 2005 while the revised $PM_{2.5}$ standard was made effective in 2006. The state of California has adopted CAAQS that are in some cases more stringent than the federal AAQS. The state and federal AAQS relevant to the Project are summarized in Table 5-2, Relevant Ambient Air Quality Standards.

USEPA, CARB, and the local air pollution control districts determine air quality attainment status by comparing local ambient air quality measurements from the state or local ambient air monitoring stations with the federal and CAAQS. Those areas that meet ambient air quality standards are classified as "attainment" areas; areas that do not meet the standards are classified as "non-attainment" areas. Areas that have insufficient air quality data may be identified as unclassifiable areas. These attainment designations are determined on a pollutant-by-pollutant basis. The area around the Project Site is classified as attainment with respect to the NAAQS for NO_2, PM_{10}, CO, and SO_2, and non-attainment for O_3 and $PM_{2.5}$. With respect to CAAQS, the area around the Project Site is classified as attainment for NO_2, CO, sulfates, Pb, H_2S, and SO_2, and non-attainment for O_3, PM_{10}, and $PM_{2.5}$. Nitrogen dioxide and SO_2 are regulated as PM_{10} precursors, and NO_2 and VOCs as O_3 precursors. Table 5-3, Attainment Status for Kern County with Respect to Federal and California Ambient Air Quality Standards, presents the attainment status (both federal and state) for SJVAB.

As mentioned above, both USEPA and CARB are involved with air quality management in the SJVAB area along with SJVAPCD.

Table 5-2 Relevant Ambient Air Quality Standards

Pollutant	Averaging Time	NAAQS[1]		CAAQS[2]
		Primary[3,4]	Secondary[3,5]	Concentration[3]
Ozone (O_3)	1-Hour	Revoked [8]	Same as Primary Standard	0.09 ppm (180 µg/m^3)
	8-Hour	0.075 ppm		0.07 ppm (137 µg/m^3)
Carbon Monoxide (CO)	8-Hour	9 ppm (10 mg/m^3)	None	9.0 ppm (10 mg/m^3)
	1-Hour	35 ppm (40 mg/m^3)		20 ppm (23 mg/m^3)
Nitrogen Dioxide (NO_2)[9]	Annual Average	0.053 ppm (100 µg/m^3)	Same as Primary Standard	0.030 ppm (57 µg/m^3)
	1-Hour	-		0.18 ppm (339 µg/m^3)
Sulfur Dioxide (SO_2)	Annual Average	0.03 ppm (80 µg/m^3)	-	-
	24-Hour	0.14 ppm (365 µg/m^3)	-	0.04 ppm (105 µg/m^3)
	3-Hour	-	0.5 ppm (1,300 µg/m^3)	-
	1-Hour	-	-	0.25 ppm (655 µg/m^3)
Suspended Particulate Matter (PM_{10})	24-Hour	150 µg/m^3	Same as Primary Standard	50 µg/m^3
	Annual Arithmetic Mean	Revoked [6]		20 µg/m^3
Fine Particulate Matter ($PM_{2.5}$) [7]	24-Hour	35 µg/m^3	Same as Primary Standard	-
	Annual Arithmetic Mean	15 µg/m^3		12 µg/m^3
Lead (Pb)	30-Day Average	-	-	1.5 µg/m^3
	Quarterly Average	1.5 µg/m^3	Same as Primary Standard	-
	Rolling 3-Month[9]	0.15 µg/m^3	Same as Primary Standard	-
Hydrogen Sulfide (H_2S)	1-Hour	No Federal Standards		0.03 ppm (42 µg/m^3)
Sulfates (SO_4)	24-Hour			25 µg/m^3
Visibility Reducing Particles	8-Hour (10 am to 6 pm, Pacific Standard Time)			In sufficient amount to produce an extinction coefficient of 0.23 per kilometer due to particles when the relative humidity is less than 70 percent.

Source: USEPA-NAAQS (http://www.epa.gov/air/criteria.html); CARB-CAAQS (http://www.arb.ca.gov/aqs/aaqs2.pdf)

Notes:

1 National standards (other than ozone, particulate matter, and those based on annual averages or annual arithmetic mean) are not to be exceeded more than once a year. The ozone standard is attained when the fourth highest 8-hour concentration in a year, averaged over 3 years, is equal to or less than the standard. For PM_{10}, the 24-hour standard is attained when the expected number of days per calendar year with a 24-hour average concentration above 150 µg/m^3 is equal to or less than one. For $PM_{2.5}$, the 24-hour standard is attained when 98 percent of the daily concentrations, averaged over 3 years, are equal to or less than the standard. Contact USEPA for further clarification and current federal policies.

2 California standards for ozone, carbon monoxide (except Lake Tahoe), sulfur dioxide (1 and 24 hour), nitrogen dioxide, suspended particulate matter—PM_{10}, $PM_{2.5}$, and visibility-reducing particles, are values that are not to be exceeded. All others are not to be equaled or exceeded. California ambient air quality standards are listed in the Table of Standards in § 70200 of Title 17 of the California Code of Regulations.

Pollutant	Averaging Time	NAAQS[1]		CAAQS[2]
		Primary[3,4]	Secondary[3,5]	Concentration[3]

[3] Concentration expressed first in units in which it was promulgated. Equivalent units given in parentheses are based upon a reference temperature of 25°C and a reference pressure of 760 torr. Most measurements of air quality are to be corrected to a reference temperature of 25°C and a reference pressure of 760 torr; ppm in this table refers to ppm by volume, or micromoles of pollutant per mole of gas.

[4] National Primary Standards: The levels of air quality necessary, with an adequate margin of safety to protect the public health.

[5] National Secondary Standards: The levels of air quality necessary to protect the public welfare from any known or anticipated adverse effects of a pollutant.

[6] Due to a lack of evidence linking health problems to long-term exposure to coarse particle pollution, the agency revoked the annual PM_{10} standard in 2006 (effective 17 December 2006).

[7] To attain this standard, the 3-year average of the 98th percentile of 24-hour concentrations at each population-oriented monitor within an area must not exceed 35 $\mu g/m^3$ (effective 17 December 2006)

[8] On 15 June 2005, the 1-hour ozone standard (0.12 ppm) was revoked for all areas except the 8-hour ozone nonattainment Early Action Compact Areas (EAC) areas.

[9] National lead standard, rolling 3-month average: final rule signed October 15, 2008.

$\mu g/m^3$ = micrograms per cubic meter
CAAQS = California Ambient Air Quality Standards
mg/m^3 = milligram per cubic meter
NAAQS = National Ambient Air Quality Standards
ppm = parts per million [3]

Table 5-3 Attainment Status for Kern County With Respect To Federal and California Ambient Air Quality Standards

Pollutant	Federal Attainment Status	State Attainment Status
Ozone	Non-attainment	Non-attainment
CO	Attainment	Attainment
NO_2	Attainment	Attainment
SO_2	Attainment	Attainment
PM_{10}	Attainment[1]	Non-attainment
$PM_{2.5}$	Non-attainment	Non-attainment
Lead	Unclassified	Attainment

Source: CARB-CAAQS (http://www.arb.ca.gov/aqs/aaqs2.pdf)

Notes:

1 = On 25 September 2008, USEPA redesignated the San Joaquin Valley to attainment for the PM10 National Ambient Air Quality Standard (NAAQS) and approved the PM10 Maintenance Plan.

CO = carbon monoxide
NO_2 = nitrogen dioxide
PM_{10} = particulate matter less than 10 microns in diameter
$PM_{2.5}$ = particulate matter less than 2.5 microns in diameter
SO_2 = sulfur dioxide

5.2 PREVENTION OF SIGNIFICANT DETERIORATION REQUIREMENTS

The federal PSD program has been established to protect deterioration of air quality in those areas that already meet NAAQS. The PSD program specifies allowable concentration increases for attainment pollutants due to new emission sources. These increases allow economic growth while preserving the existing air quality, protecting public health and welfare, and protecting Class I areas (national parks and wilderness areas). The PSD regulations require major stationary sources to undergo a pre-construction review that includes an analysis and implementation of

BACT, a PSD increment consumption analysis, an ambient air quality impact analysis, and analysis of AQRVs (impacts on visibility). The Project is subject to these requirements.

The significant emission PSD triggers for CO, SO_2, NO_X, PM_{10}, VOCs, and Pb are as shown in Table 5-4, PSD Emission Threshold Triggers for New Stationary Sources. For Project emissions of CO, NO_X, and PM_{10} above these PSD triggers, the Applicant must demonstrate through modeling that such emissions will not interfere with the attainment or maintenance of the applicable NAAQS and will not cause an exceedance of the applicable PSD increments shown in Table 5-5, Prevention of Significant Deterioration Allowable Increments ($\mu g/m^3$). For all Project emissions, the Applicant must demonstrate through modeling that the increase in emissions will not interfere with the attainment or maintenance of the NAAQS.

Table 5-4 PSD Emission Threshold Triggers for New Stationary Sources

Pollutant	Significant Thresholds (tpy)	Project Emissions (tpy)	PSD Triggered by Project?
CO	100	350	Yes
SO_2	100	42.2	No
NO_X	100	204	Yes
PM_{10}	100	141	Yes
VOCs	100	32.5	No
Pb	0.6	<0.6	No

Source: 40 CFR § 52.21 and HECA Project.

Notes:

Project emissions include all emissions from natural gas.

CO = carbon monoxide
NO_x = nitrogen dioxide
Pb = lead
PM_{10} = particulate matter less than 10 microns in diameter
SO_2 = sulfur dioxide
VOC = volatile organic compound

Table 5-5 Prevention of Significant Deterioration Allowable Increments (µg/M3)

Standard	Class I Area	Class II Area	Class III Area
PM_{10} Annual Arithmetic Mean	4	17	34
PM_{10} 24-Hour Maximum	8	30	60
SO_2 Annual Arithmetic Mean	2	20	40
SO_2 24-Hour Maximum	5	91	182
SO_2 3-Hour Maximum	25	512	700
NO_2 Annual Arithmetic Mean	2.5	25	50

Source: 40 CFR § 52.21.

$\mu g/m^3$ = micrograms per cubic meter
NO_2 = nitrogen dioxide
PM_{10} = particulate matter less than 10 microns in diameter
SO_2 = sulfur dioxide

5.3 ACID RAIN PROGRAM REQUIREMENTS

Title IV of the CAAA applies to sources of air pollutants that contribute to acid rain formation, including certain sources of SO2 and NOX emissions. The SJVAPCD has been delegated the authority by USEPA to administer Title IV requirements under its Title V Operating Permit program in Regulation II. Title IV is implemented by USEPA under 40 CFR 72, 73, and 75. The Acid Rain Program provisions of 40 CFR Part 72, Subparts A through I are incorporated in SJVAPCD Rule 2540. Allowances of SO2 emissions are set aside in 40 CFR 73. Sources subject to Title IV are required to obtain SO2 allowances, to monitor their emissions, and obtain SO2 allowances when a new source is permitted. Sources such as the Project Site that utilize fossil-derived fuel are required to comply with the acid rain program requirements. Under this program, the Applicant is subject to the following requirements:

- Submittal of an Acid Rain permit application
- Remain in compliance with SO_2 and NOx limitations/allowances
- Preparation and maintenance of an Acid Rain Compliance Plan
- Installation and maintenance of emission monitoring system

The Project is a new facility: therefore, an Acid Rain Permit application will be submitted to SJVAPCD at least 24 months before the date of initial operation of the unit.

To meet the NOx and SO_2 requirements, the Project must estimate SO2 and carbon dioxide emissions, and monitor NOX emissions with certified CEMSs.

5.4 NEW SOURCE PERFORMANCE STANDARDS

New Source Performance Standards (NSPS) have been established by USEPA to limit air pollutant emissions from certain types of new and modified stationary sources. The NSPS regulations are contained in 40 CFR 60 and cover nearly 70 source categories. CTG/HRSG is regulated under Subpart Da.

In general, local emission limitation rules or BACT requirements are more restrictive than the NSPS requirements. A case-by-case applicability of NSPS regulations for the sources are further discussed in BACT section (Appendix D2).

5.5 FEDERALLY MANDATED OPERATING PERMITS

Title V of the CAAA requires USEPA to develop a federal operating permit program that is implemented under 40 CFR 70. This program is administered by SJVAPCD under Regulation II, Rule 2520. Each major source, Phase II acid rain facility, and other source types designated by USEPA must obtain a Part 70 permit. Permits must contain emission estimates based on potential-to-emit, identification of all emission sources and controls, a compliance plan, and a statement indicating each source's compliance status. The permits must also incorporate all applicable federal, state, or SJVAPCD orders, rules and regulations.

Because the Project will constitute a new stationary source, the Applicant will submit a complete Title V permit application for a Title V permit to operate within 12 months after Power Block startup.

5.6 POWER PLANTS SITING REQUIREMENTS

Under CEQA, CEC has been charged with assessing the environmental impacts of each new power plant and considering the implementation of feasible mitigation measures to prevent potential significant impacts. CEQA Guidelines (Title 14, California Administrative Code, §15002(a)(3)) state that the basic purpose of CEQA is to "prevent significant, avoidable damage to the environment by requiring changes in projects through the use of alternatives or mitigation measures when the governmental agency finds the changes to be feasible."

CEC's siting regulations require that, except under certain conditions, a new power plant can only be approved if the project complies with all federal, state, and local air quality rules, regulations, standards, guidelines, and ordinances that govern the construction and operation of the project. A project must demonstrate that project emissions will be appropriately controlled to mitigate significant impacts from the project and that it will not jeopardize attainment and maintenance of the AAQS. Cumulative impacts, impacts due to pollutant interaction, and impacts from non-criteria pollutants must also be considered.

5.7 AIR TOXIC "HOT SPOTS" PROGRAM

As required by the California Health and Safety Code §44300, all facilities with criteria air pollutant emissions in excess of 10 tons per year are required to submit air toxic "Hot Spots" emissions information. The operational Project will be required to provide quantitative information to SJVAPCD on the Project's emissions of toxic air contaminants. This requirement is applicable only after the start of operation. Section 8.0, Public Health, demonstrates that the Project's emissions of toxic air contaminants impacts from the Project will be less than significant.

5.8 DETERMINATION OF COMPLIANCE, AUTHORITY TO CONSTRUCT AND PERMIT TO OPERATE

Under Regulation II, Rule 2010, 2070, and 2201, SJVAPCD administers the air quality regulatory program for the construction, alteration, replacement, and operation of new power plants. As part of the permitting process, the Project will be required to obtain a pre-construction DOC from the SJVAPCD. Regulation II, Rule 2201 incorporates other SJVAPCD rules that pertain to sources that may emit air contaminants through the issuance of air permits (i.e., ATC and Permit to Operate [PTO]). This permitting process allows the SJVAPCD to adequately review new and modified air pollution sources to ensure compliance with all applicable prohibitory rules and to ensure that appropriate emission controls are used. An ATC allows for the construction of the air pollution source and remains in effect until the PTO application is granted, denied, or cancelled. Projects that are reviewed under the CEC application process must obtain an ATC from the local air district (in this case, SJVAPCD) prior to construction of the new power plant. For power plants under the siting jurisdiction of the CEC, the SJVAPCD issues a DOC in lieu of an ATC. The DOC is incorporated into the CEC license. The ATC remains in effect until the PTO application is granted, denied, or cancelled. Once the Project commences operations and demonstrates compliance with the DOC, SJVAPCD will issue a PTO. The PTO specifies conditions that the air pollution source must meet to comply with other air quality

standards, and will incorporate applicable DOC requirements. An application for the DOC will be submitted to the SJVAPCD simultaneously with the filing of the AFC.

5.9 SAN JOAQUIN VALLEY AIR POLLUTION CONTROL DISTRICT REQUIREMENTS

The SJVAPCD has been delegated responsibility for implementing the federal, state, and local regulations on air quality in Kern County to achieve and maintain both state and federal air quality standards; implementing permit programs established for the construction, modification, and operation of sources of air pollution; enforcing air pollution statutes, regulations and prohibitory rules governing non-vehicular sources; and developing programs to reduce emissions from indirect sources. The Project is subject to SJVAPCD regulations that apply to new sources of emissions, to the prohibitory regulations that specify emissions standards, and to the requirements for evaluation of air pollutant impacts for both criteria and toxic air pollutants. The following sections include the evaluation of the Project's compliance with the applicable SJVAPCD requirements.

5.9.1 Rules and Regulations

Rule 1080, Stack Monitoring

Outlines facility requirements for continuous monitoring equipment from any facility emitting pollutants for which emission limits have been established. The Project will be constructed and operated to comply with the requirements of Rule 1080.

Rule 1081, Source Sampling

Outlines facility design requirements for source sampling from any facility emitting pollutants for which emission limits have been established. The Project will be constructed and operated to comply with the requirements of Rule 1081.

Rule 1100, Equipment Breakdown

This rule details the notification and corrective action requirements necessary in an equipment breakdown situation. As operator of the Project, the Applicant will comply with these requirements.

Rule 2010, Permits Required

An ATC and PTO will be required for the Project. The Applicant will submit the required application materials for these permits to SJVAPCD.

Rule 2201, New and Modified Stationary Source Review

This rule outlines the emission standards, the offset requirements and conditions, the required demonstrations that the new source or modification will not cause or contribute to violations of the ambient air quality standards, procedures for power plants under the CEC process, methods for calculating project emissions, and required air quality analysis procedures. Compliance with the specific provisions of this rule is discussed below.

Section 4.1, BACT. An Applicant must apply BACT to any new or modified emissions unit that has a potential to emit 2.0 pounds per day or more of any pollutant. The SJVAPCD maintains a list of current BACT standards for specific source categories, which is posted on the District's website. Appendix D-2, provides a formal BACT evaluation for the Project. The proposed BACT levels for the Project turbines are shown in Table 5-6, Proposed BACT for the Project.

Table 5-6 Proposed BACT for the Project

Pollutant	Technology	Emission Limit
CTG./HRSG Combustion Turbine (excluding Start up/Shutdown conditions).		
NO_x	Diluent Injection, Selective Catalytic Reduction	4 ppm NO_x @ 15 percent O_2 on hydrogen-rich fuel and natural gas fuel, 3-hour average
CO	Good Combustion Practice (GCP), CO Catalyst	3 ppm CO @ 15 percent O_2 on hydrogen-rich fuel, 5 ppm CO @ 15 percent O_2 on natural gas fuel
PM/PM_{10}	GCP, Gas Cleanup, Gaseous Fuels	24 lb/hr on hydrogen-rich fuel, 18 lb/hr on natural gas fuel
SO_2	Hydrogen-rich Gas cleanup, pipeline quality natural gas	≤ 5 ppmv in undiluted total sulfur (hydrogen-rich fuel) ≤ 0.75 grain/100 SCF (12.65 ppm for natural gas)
VOC	CO Catalyst	1 ppm VOC @ 15 percent O_2 on hydrogen-rich fuel, 2 ppm VOC @ 15 percent O_2 on natural gas fuel
NH_3	Selective Catalytic Reduction	5 ppm NH_3 slip on hydrogen-rich fuel and natural gas fuel
Auxiliary CTG (excluding Start up/Shutdown conditions). Natural Gas fired.103.3 MW		
NO_x	Diluent Injection	2.5 ppm NO_x @ 15 percent O_2 on natural gas fuel, 3-hour average
	Selective Catalytic Reduction	
CO	CO Catalyst	6.0 ppm CO @ 15 percent O_2
PM/PM_{10}	PUC regulated natural gas	6 lb/hr on natural gas fuel
SO_2		≤ 0.75 grain/100 SCF (12.65 ppm for natural gas)
VOC	CO Catalyst	2 ppm VOC @ 15 percent O_2 on natural gas fuel
NH_3	Selective Catalytic Reduction	10 ppm NH_3 slip on natural gas fuel
Cooling Towers		
PM/PM_{10}	High Efficiency Drift Eliminators, total dissolved solids (TDS) limit in circulating water, and Good Operating Practice	0.0005 percent drift as percent of the circulating water
Auxiliary Boiler, Natural Gas 142 MMBTU/hr		
NO_x	Low NO_x Combustor with FGR	9 ppm NO_x @ 3 percent O_2 on natural gas fuel
CO	GCP	50 ppmvd @ 3 percent O_2
PM/PM_{10}	GCP, PUC grade natural gas fuel	0.005 lb/MMBtu heat input
SO_2		≤ 0.75 grain/100 SCF (12.65 ppm for natural gas)
VOC		0.004 lb/MMBtu heat input

Table 5-6 Proposed BACT for the Project

Pollutant	Technology	Emission Limit
Emergency Diesel Engines (2 Emergency Generators)		
NO_x	Combustion controls, restricted operating hours	0.5 g/brake horsepower (bhp)-hr
CO		0.29 g/bhp-hr
PM/PM_{10}	Combustion controls, Low Sulfur Diesel fuel, restricted operating hours	0.03 g/bhp-hr
SO_2		N/A
VOC		0.11 g/bhp-hr
Emergency Diesel Engines (Fire Pump)		
NO_x	Combustion controls, restricted operating hours	1.5 g/bhp-hr
CO		2.60 g/bhp-hr
PM/PM_{10}	Combustion controls, Low Sulfur Diesel fuel, restricted operating hours	0.015 g/bhp-hr
SO_2		N/A
VOC		0.14 g/bhp-hr
Gasification Flare		
NO_x. CO, PM/PM_{10}, SO_2, VOC	GCP, gaseous fuel only, Gas cleanup/Limit on reduced sulfur in hydrogen-rich fuel	
Thermal Oxidizer (Sulfur Recovery System)		
NO_x	GCP	4.8 lb/hr 24-hour average
CO		4.0 lb/hr, 1-hour average
PM/PM_{10}		0.16 lb/hr 24-hour average
SO_2	GCP, Gas cleanup	2.02 lb/hr, 3-hour average
VOC	GCP	32.84 lb/hr, annual average
SRU Flare with natural gas assist (Sulfur Recovery System)		
NO_x	GCP	
CO		
PM/PM_{10}	GCP, gaseous fuel only	
SO_2	GCP, Caustic Scrubber	
VOC	GCP	
CO_2 Vent		
CO	Gas Cleanup	1000 ppmv
VOC	Gas Cleanup	40 ppmv
Gasifier Warming (refractory heater)		
NO_x	GCP	0.11 lb/MMBtu, higher heating value (HHV)
CO	GCP	0.09 lb/MMBtu, HHV
PM/PM_{10}	GCP, gaseous fuel only	0.008 lb/MMBtu, HHV

Table 5-6 Proposed BACT for the Project

Pollutant	Technology	Emission Limit
SO_2	GCP, PUC grade Natural gas	0.002 lb/MMBtu, HHV (12.65 ppm)
VOC	GCP	0.007 lb/MMBtu, HHV
Feedstock		
PM/PM_{10}	Dust Collector	0.005 grain/scf outlet dust loading

Source: HECA Project

Notes:

BACT = best available control technology
bhp = brake horsepower
CO = carbon monoxide
CPUC = California Public Utility Commission
CTG = combustion turbine generator
FGR = flue gas recirculation
g = gallon(s)
hr = hour
lb = pound
MMBtu = million British thermal units
NO_x = nitrogen dioxide
NH_3 = ammonia O_2 = oxygen
PM/PM_{10} = particulate matter/particulate matter less than 10 microns
ppm = parts per million
ppmvd = parts per million volumetric dry
scf = standard cubic feesdat
SO_2 = sulfur dioxide
VOC = volatile organic compound
HHV = higher heating value

Section 4.5, Emissions Offset Requirements. This section of Rule 2201 requires that offsets be provided for a new stationary source with a potential to emit equal to or exceeding the levels shown in Section 6.0. Section 6.0 describes the methods for determining the quantities of emission reduction credits needed to offset emissions from the Project. The discussion includes information on the required offset amounts for the Project and on the progress to date in obtaining the required numbers of ERCs.

Section 4.14, Ambient Air Quality Standards. Emissions from a new or modified Stationary Source may not cause or make worse the violation of an AAQS. Modeling used for the purposes of demonstrating compliance with this rule must be consistent with the requirements contained in the most recent edition of USEPA's *Guidelines on Air Quality Models*, unless the Air Pollution Control Officer finds that such model is inappropriate for use. After making such a finding, the Air Pollution Control Officer may designate an alternate model only after allowing for public comments and only with the concurrence of CARB or the USEPA.

As described in Section 5.2.2.4, Modeling Results – Compliance with Ambient Air Quality Standards, an air quality modeling analysis has been conducted to demonstrate that the Project will not cause or make worse the violation of any air quality standard.

Section 5.8, Power Plants. This section applies to all power plants proposed to be constructed in the SJVAPCD and for which a Notice of Intention (NOI) or AFC has been accepted by the CEC. It describes the actions to be taken by SJVAPCD to provide information to CEC and CARB to ensure that the project will conform to the District's rules and regulations. After the application has been submitted to CEC and other responsible agencies, including SJVAPCD, the Air Pollution Control Officer is required to conduct a DOC review. This determination consists of a review identical to that which would be performed if an application for an ATC had been received for the power plant. If the information contained in the AFC does not meet the requirements of this regulation, then the Air Pollution Control Officer is required to so inform

the CEC within 20 calendar days following receipt of the AFC. In such an instance, the AFC is considered to be incomplete, and is returned to the Applicant for re-submittal.

Section 6.0, Certification of Conformity. This section describes how a new or modified source that is subject to the requirements of Rule 2520 may choose to apply for a certificate of conformity with the procedural requirements of 40 CFR Part 70 for a Federal Operating Permit. A certificate of conformity will allow changes authorized by the ATC permit to be incorporated in the Part 70 permit as administrative permit amendments.

Rule 2520, Federally Mandated Operating Permits

Provides an administrative mechanism for issuing operating permits for new and modified sources of air contamination accordance with the federal requirements of 40 CFR Part 70. Under this rule, the Project will be required to obtain an operating permit, because it will include emission units that are subject to recently promulgated NSPS and because it will also require an acid rain permit.

Rule 3010/3020, Permit Fees

This rule and the fee schedules in rule 3020 establish the filing and permit review fees for specific types of new sources, as well as annual renewal fees and penalty fees for existing sources.

Rule 3110, Air Toxics Fees

This rule applies to facilities subject to the requirements of the Air Toxics “Hot Spots” Information and Assessment Act (§§ 44340 and 44383 of the California Health and Safety Code) and to facilities subject to National Emission Standards for Hazardous Air Pollutants (NESHAPs) issued pursuant to §112 of the federal CAA.

Rule 3135, Dust Control Plan Fee

This rule recovers the District’s cost for reviewing Dust Control Plans and conducting site inspections to verify compliance with such plans.

Rule 3170, Federally Mandated Ozone Non-attainment Fee

The purpose of this rule is to satisfy requirements specified in §185 and §1 82(f) of the CAA. This rule applies to major sources of NOx and VOC. The fees required pursuant to this section are additional to the permit fees and other fees required under other Rules and Regulations. This rule will cease to be effective when the Administrator of USEPA designates the SJVAPCD to be in attainment of the federal 1-hour standard for O_3. The Project will be a major source under either the federal or SJVAPCD definitions, and is subject to Rule 3170.

Rule 4001, New Source Performance Standards

This rule incorporates the federal NSPS from 40 CFR Part 60.

Rule 4002, National Emission Standards for Hazardous Air Pollutants

This rule incorporates the federal NESHAPs from Part 61 and Part 63, Chapter I, Subchapter C, Title 40 CFR.

Rule 4101, Visible Emissions

This rule applies to the opacity of discharges from any single source. Emissions from the sources of the Project will be below threshold opacity levels described in this rule.

Rule 4102, Nuisance

This rule states that there shall be no discharge of such quantities of any pollutant or material which could cause injury, detriment, nuisance, or annoyance to any considerable number of persons or to the public, or which endanger the comfort, repose, health, or safety of any such persons or the public, or which cause or have a natural tendency to cause injury or damage to business or property.

Rule 4201, Particulate Matter Concentration

This rule applies to the discharge of particulate matter into the atmosphere. The relevant limit for the Project is expressed in Rule 4201, which states that no person shall release or discharge into the atmosphere from any single-source operation dust, fumes, or total suspended particulate matter, in excess of 0.1 grain per dry standard cubic foot of natural gas as determined by following test methods: Particulate matter concentration – USEPA Method 5; Stack gas velocity – USEPA Method 2; Stack gas moisture – USEPA Method 4. The Project natural gas turbines will easily comply with this requirement, with a maximum PM10 emission rate of approximately 0.045 grain per dry standard foot of natural gas consumption.

Rule 4301, Fuel-burning Equipment

This rule limits the emission levels of NOx, SO2, and fuel combustion contaminants (particulates) from any fuel burning equipment unit. The specific limits are 140 pounds per hour of NOx, calculated as NO2, 200 pounds per hour of SO2, 0.1 grain per cubic foot of gas calculated to 12 percent of carbon dioxide at dry standard conditions, and 10 pounds per hour of combustion contaminants.

Rule 4703, Stationary Gas Turbines

This rule limits the NOx and CO emissions from gas turbines with ratings greater than 0.3 MW. NOx emissions concentrations shall be averaged over a 3-hour period using consecutive 15-minute sampling periods, or if CEMS are used, all applicable requirements of 40 CFR Part 60 must be met.

Rule 4801 – Sulfur Compounds

This rule limits the emissions of sulfur compounds to less than 0.2 percent by volume on a dry basis averaged over 15 consecutive minutes by using USEPA Method 8 and CARB Method 1 through 100.

Rule 8021, Construction, Demolition, Excavation, Extraction, and Other Earthmoving Activities

This rule limits fugitive dust emissions from construction, demolition, excavation, extraction, and other earthmoving activities such that opacity levels are kept to no more than 20 percent.

Rule 8041, Carryout and Trackout

This rule requires the limiting of carryout and trackout dust emissions from sites is applicable to construction of the project.

Rule 8051, Open Areas

This rule applies to any open area of 3.0 acres or more in rural areas with at least 1,000 square feet of disturbed surface area. Dust emissions must be kept below 20 percent opacity.

Rule 8061, Paved and Unpaved Roads

This rule limits the emission of fugitive dust from roads to no more than 20 percent opacity through different control measures. Depending on traffic levels, the road must meet certain width requirements.

Rule 8071, Unpaved Vehicle/Equipment Traffic Areas

This rule limits the emission of fugitive dust to no more than 20 percent opacity through different control measures.

Section 4.5.3 of San Joaquin Valley Air Pollution Control District (SJVAPCD) Rule 2201 requires a project with operational emissions above 10 tons per year of nitrogen oxide (NOx) or volatile organic compounds (VOC), 100 tons per year (tpy) of carbon monoxide (CO), 14.6 tpy of particulate matter less than 10 microns in diameter (PM_{10}) and 27.375 tpy of sulfur oxides (SO_x) to provide offsets for net emissions increases resulting from the project as project mitigation. Pursuant to the rule, the Hydrogen Energy California project (HECA or Project) is required to provide emission offsets in the form of emissions reduction credits (ERC) for increases in emissions of non-attainment pollutants in excess of specified thresholds that will result from the operation of the Project on a pollutant-specific basis.

Section 4.6.1 of SJVAPCD Rule 2201 exempts projects from the offset requirement for increases in carbon monoxide in attainment areas if the Applicant demonstrates to the satisfaction of the Air Pollution Control Officer (APCO), that the Ambient Air Quality Standards (AAQS) are not violated in the areas to be affected, and such emissions will be consistent with Reasonable Further Progress, and will not cause or contribute to a violation of Ambient Air Quality Standards. Modeling results presented in Section 7.0 provide this demonstration for carbon monoxide. Thus, offsets for this pollutant are not proposed.

Based on operational emissions data presented in Section 4.0, and summarized in Table 6-1, HECA Annual Operating Emissions, the annual Project emissions exceed the offset thresholds for four criteria pollutants. According to Rule 2201 Section 4.7.2, offsets need to be provided for the quantity of emissions above the offset thresholds described above.

Table 6-1 HECA Annual Operating Emissions

Pollutant	Annual Operational Emissions (tons/year)	Annual Operational Emission (pounds/year)	Offset Requirement Threshold (Lbs/yr)
VOC	40.7	81,338.08	20,000
NO_x	203.8	407,682.18	20,000
SO_x	42.2	84,357.12	54,750
PM_{10}	141.1	282,102.88	29,200

Source: HECA Project
Notes:
NO_x = nitrogen oxide(s)
PM10 = particulate matter less than 10 microns in diameter
SO_x = sulfur oxides
VOC = volatile organic compounds

6.1 EMISSION REDUCTION CREDITS ESTIMATES

Hydrogen Energy International LLC (HEI or Applicant) will obtain sufficient ERCs to comply with SJVAPCD and CEC requirements. ERCs are required to be provided at an appropriate distance offset ratio to determine the final quantity of offsets required.

Section 4.5.3 of Rule 2201 states that the required offset amounts for stationary sources that remain constant throughout the year are expressed in pounds per year, whereas offsets for quarterly potential to emit that is not constant throughout the year and seasonal sources are

calculated in pounds per quarter. The Project will not be a seasonal source (a source with more than 90 percent of annual emissions occurring within a consecutive 120-day period, as stated in Rule 2201 Section 3.35).

Table 6-2, Estimated ERCs Required, lists the estimated offset requirements for the operation of the Project. Annual Project emissions from Table 6-2 have been apportioned equally among the four calendar quarters. The quantity of ERCs needed to offset emissions for each pollutant will depend on the distance from the Project Site at which the offsetting emission reductions occurred. Rule 2201 Section 4.8 specifies distance ratios that must be applied in determining the quantity of ERCs to be provided for a new source. If the location of the offsetting emission reduction is less than 15 miles from the new source, the ratio for a major source is 1.3 to 1. If the location of the offsetting emission reduction is 15 miles or more from the new source, the applicable offset ratio is 1.5 to 1. Note that the Project will be a major source as defined in Section 3.24 of Rule 2201 (25 tpy of NOx or VOC, 15 tons of PM10 or SOx, 100 tpy of CO).

Due to the very rural character of the Project Site and the lack of significant nearby emission sources, it is probable that the maximum distance ratio of 1.5 to 1 will be applicable for most of the ERCs used to offset Project emissions. Accordingly, the ERC amounts presented in Table 6-2, Estimated ERCs Required, reflects an assumed 1.5 distance ratio.

Table 6-2 Estimated ERCS Required

Pollutant	Total Annual Offset Requirement (pounds/year)	Total Quarterly Offset Requirement (pounds/quarter)	Annual ERC* (pounds/year)	Quarterly ERC* (pound/quarter)
VOC	61,334	15,334	92,002	23,000
NO_X	378,674	94,669	568,011	142,003
SO_2	31,535	7,884	47,303	11,826
PM_{10}	272,053	68,013	408,080	102,020

*assumed 1.5 distance ratio
Notes:
ERC = emission reduction credits
NO_X = nitrogen oxide(s)
VOC = volatile organic compounds
SO_2 = sulfur oxides

6.2 EMISSION REDUCTION CREDITS AVAILABILITY

The Applicant has been active in pursuing ERCs for the Project, and has determined that sufficient ERCs are available to cover the offset requirements shown in Table 6-2, estimated ERCs Required. Discussions are ongoing with various ERC owners and ERC brokers. Table 6-3, San Joaquin Valley Air Pollution Control District ERC Registry, shows the simplified ERC registry from SJVAPCD showing a sufficient amount of ERCs available for purchase to provide the required emission offsets for the Project. The table includes the locations of the offset sources and the nature of their source reduction activities, as well as ERC certificate numbers. As shown in Table 6-3, San Joaquin Valley Air Pollution Control District ERC Registry, the Applicant is capable of providing the required emission offsets for the Project.

Table 6-3 San Joaquin Valley Air Pollution Control District ERC Registry

Region	Facility Name	Certificate	Pollutant	1st QTR	2nd QTR	3rd QTR	4th QTR	Total Annual	Facility City
S	AERA ENERGY LLC	S-843-6	H2S	11,097	11,220	11,344	11,344	45,005	BAKERSFIELD
C	VENDO COMPANY	C-6-6	H2S	30	38	23	16	107	FRESNO
S	BIG WEST	S-2183-2	NOx	219,700	222,089	224,530	224,530	890,849	BAKERSFIELD
S	PASTORIA ENERGY FACILITY, LLC	S-3114-2	NOx	178,929	181,004	183,080	184,561	727,574	LEBEC
S	CHEVRON USA INC	S-2041024/401	NOx	151,178	149,517	149,517	152,840	603,052	BAKERSFIELD
S	AERA ENERGY LLC	S-162-2	NOx	128,454	152,970	128,743	130,786	540,953	BAKERSFIELD
S	AERA ENERGY LLC	S-2958-2	NOx	92,377	104,409	103,047	99,014	398,847	BAKERSFIELD
S	AERA ENERGY LLC	S-163-2	NOx	96,698	107,197	101,158	78,678	383,731	BAKERSFIELD
S	CHEVRON USA INC	S-1584-2	NOx	78,972	79,850	80,728	80,728	320,278	BAKERSFIELD
N	GALLO GLASS COMPANY	N-278-2	NOx	83,525	66,849	77,176	81,929	309,479	MODESTO
N	CANTORCO2E LP	N-767-2	NOx	75,000	75,000	75,000	75,000	300,000	SAN JUAN CAPISTRANO
S	AERA ENERGY LLC	S-1030-2	NOx	93,295	83,665	32,600	77,083	286,643	BAKERSFIELD
N	GALLO GLASS COMPANY	N-276-2	NOx	69,524	70,655	72,080	67,173	279,432	MODESTO
S	CHEVRON USA INC	S-1100-2	NOx	62,167	62,857	63,548	63,548	252,120	BAKERSFIELD
S	CHEVRON USA INC	S-1102-2	NOx	57,160	57,795	58,430	58,430	231,815	BAKERSFIELD
S	TURLOCK IRRIGATION DISTRICT	S-3113-2	NOx	55,800	55,800	55,800	55,800	223,200	TURLOCK
S	OCCIDENTAL OF ELK HILLS, INC (OEHI)	S-2761-2	NOx	53,738	54,477	55,216	55,214	218,645	TUPMAN
S	FEDERAL POWER AVENAL, LLC	S-2955-2	NOx	51,000	51,000	51,000	51,000	204,000	OAKLAND
S	CHEVRON USA INC	S-2448-2	NOx	45,847	46,388	46,930	46,930	186,095	BAKERSFIELD
S	CHEVRON USA INC	S-1256-2	NOx	45,238	45,741	46,244	46,244	183,467	BAKERSFIELD

Table 6-3 San Joaquin Valley Air Pollution Control District ERC Registry

Region	Facility Name	Certificate	Pollutant	1st QTR	2nd QTR	3rd QTR	4th QTR	Total Annual	Facility City
S	AERA ENERGY LLC	S-1437-2	NOx	42,372	49,588	46,800	43,954	182,714	BAKERSFIELD
S	AERA ENERGY LLC	S-140-2	NOx	36,695	46,397	47,292	36,806	167,190	BAKERSFIELD
C	CALPINE CORPORATION	C-942-4	PM10	50,845	67,976	8,408	841	128,070	SAN JOSE
S	CHEVRON USA INC	S-3084-4	PM10	25,396	19,774	26,397	22,818	94,385	BAKERSFIELD
N	GALLO GLASS COMPANY	N-161-4	PM10	23,150	22,909	24,274	22,565	92,898	MODESTO
N	BERRY SEED & FEED COMPANY	N-773-4	PM10	17,630	15,335	16,869	18,974	68,808	KEYES
N	CALPINE CORPORATION	N-297-4	PM10	0	0	101	66,394	66,495	SAN JOSE
N	PARAMOUNT FARMS	N-206-4	PM10	0	0	65	52,685	52,750	LOST HILLS
C	PARAMOUNT FARMS, INC.	C-288-4	PM10	1,000	1,000	36,000	12,000	50,000	LOST HILLS
S	EVOLUTION MARKETS LLC	S-2876-4	PM10	0	0	0	46,954	46,954	WHITE PLAINS
N	LA PALOMA GENERATING COMPANY	N-500-4	PM10	11,695	16,203	9,929	8,254	46,081	SAN FRANCISCO
C	CHEVRON USA INC	C-339-4	PM10	11,300	11,300	11,301	11,301	45,202	BAKERSFIELD
C	EVOLUTION MARKETS LLC	C-941-4	PM10	0	0	0	41,215	41,215	WHITE PLAINS
C	OLDUVAI GORGE, LLC	C-789-4	PM10	0	0	0	40,000	40,000	NEW YORK
N	CE2 ENVIRONMENTAL MARKETS LP	N-696-4	PM10	5,973	10,000	10,000	14,027	40,000	SOLANA BEACH
S	PARAMOUNT FARMS,INC ATTN D.LEE	S-1350-4	PM10	0	0	0	37,321	37,321	LOST HILLS
C	BRITZ AG FINANCE CO., INC.	C-559-4	PM10	0	0	0	35,897	35,897	FRESNO
C	WESTSIDE FARMERS COOP GIN	C-352-4	PM10	0	0	0	33,444	33,444	SAN JOAQUIN
C	CE2 ENVIRONMENTAL MARKETS LP	C-957-4	PM10	0	0	0	29,978	29,978	SAN DIEGO

Table 6-3 San Joaquin Valley Air Pollution Control District ERC Registry

Region	Facility Name	Certificate	Pollutant	1st QTR	2nd QTR	3rd QTR	4th QTR	Total Annual	Facility City
S	FRITO-LAY NORTH AMERICA INC	S-3002-4	PM10	7,136	7,320	7,507	7,506	29,469	BAKERSFIELD
C	OLDUVAI GORGE, LLC	C-887-4	PM10	0	0	0	29,243	29,243	NEW YORK
S	BUTTONWILLOW GINNING CO	S-2937-4	PM10	0	0	0	28,460	28,460	BUTTONWILLOW
C	FARMERS FIREBAUGH GINNING CO.	C-956-4	PM10	6,374	0	0	20,615	26,989	FIREBAUGH
C	ANDERSON CLAYTON CORP	C-959-4	PM10	0	0	0	26,896	26,896	FRESNO
N	CE2 ENVIRONMENTAL OPPORTUNITIES I LP	N-697-4	PM10	0	8,185	13,499	5,136	26,820	SOLANA
C	UNITED STATES GYPSUM COMPANY	C-847-4	PM10	0	0	0	26,284	26,284	CHICAGO
S	NORTHERN CALIFORNIA POWER AGENCY	S-2844-4	PM10	5,830	5,830	4,500	9,830	25,990	ROSEVILLE
N	CASTLE AIRPORT AVIATION & DEVELOP CENTER	N-109-4	PM10	6,262	6,332	6,402	6,402	25,398	ATWATER
S	FRITO-LAY NORTH AMERICA INC	S-3000-5	SOx	71,703	71,500	75,296	75,296	293,795	BAKERSFIELD
S	AERA ENERGY LLC	S-1337-5	SOx	127,827	90,500	22,163	48,838	289,328	BAKERSFIELD
S	KERN OIL & REFINING COMPANY	S-3106-5	SOx	78,598	78,599	51,520	78,598	287,315	BAKERSFIELD
S	FEDERAL POWER AVENAL, LLC	S-2791-5	SOx	92,179	23,666	69,157	96,288	281,290	OAKLAND
S	AERA ENERGY LLC	S-2008-5	SOx	85,594	40,615	57,148	91,993	275,350	BAKERSFIELD
S	AERA ENERGY LLC	S-2962-5	SOx	66,569	67,318	68,066	68,066	270,019	BAKERSFIELD
S	BIG WEST	S-2177-5	SOx	55,479	65,755	62,724	69,141	253,099	BAKERSFIELD

Table 6-3 San Joaquin Valley Air Pollution Control District ERC Registry

Region	Facility Name	Certificate	Pollutant	1st QTR	2nd QTR	3rd QTR	4th QTR	Total Annual	Facility City
N	EVOLUTION MARKETS LLC	N-771-5	SOx	88,068	87,945	37,822	37,822	251,657	WHITE PLAINS
N	GWF POWER SYSTEMS INC	N-575-5	SOx	50,000	50,000	50,000	50,000	200,000	PITTSBURG
S	TURLOCK IRRIGATION DISTRICT	S-3129-5	SOx	55,614	40,150	0	84,936	180,700	TURLOCK
S	AERA ENERGY LLC	S-1339-5	SOx	102,863	63,756	0	10,468	177,087	BAKERSFIELD
S	AERA ENERGY LLC	S-1032-5	SOx	28,371	72,172	48,856	9,900	159,299	BAKERSFIELD
N	CORN PRODUCTS	N-264-5	SOx	39,050	39,050	39,050	39,050	156,200	STOCKTON
S	CHEVRON U S A INC	S-2080-5	SOx	35,848	36,301	36,756	36,756	145,661	BAKERSFIELD
S	AERA ENERGY LLC	S-457-5	SOx	24,881	31,082	33,126	32,380	121,469	BAKERSFIELD
S	AERA ENERGY LLC	S-841-5	SOx	26,339	26,631	26,924	26,924	106,818	BAKERSFIELD
S	GULF CAPITAL PARTNERS, INC.	S-2999-5	SOx	24,000	24,000	24,000	24,000	96,000	HOUSTON
S	CHEVRON PIPE LINE-MIDDWAY	S-1542-5	SOx	25,189	21,032	18,790	30,130	95,141	TAFT
S	CHEVRON USA INC	S-2061-5	SOx	23,027	23,282	23,538	23,538	93,385	BAKERSFIELD
S	BERRY PETROLEUM COMPANY	S-3025-5	SOx	22,500	22,500	22,500	22,500	90,000	BAKERSFIELD
S	CHEVRON USA INC	S-2454-5	SOx	9,938	15,295	38,474	24,993	88,700	BAKERSFIELD
S	CHEVRON USA INC	S-2934-5	SOx	11,539	16,868	23,727	33,544	85,678	BAKERSFIELD
S	CHEVRON USA INC	S-411-5	SOx	10,304	20,626	26,873	26,303	84,106	BAKERSFIELD
N	FEDERAL POWER AVENAL, LLC	N-762-5	SOx	21,000	21,000	21,000	21,000	84,000	OAKLAND
S	OLDUVAI GORGE, LLC	S-2692-5	SOx	22,146	30,918	8,240	22,190	83,494	NEW YORK
N	GRIMMIUS CATTLE COMPANY	N-636-5	SOx	21,307	28,000	6,627	20,577	76,511	HANFORD
N	EVOLUTION MARKETS LLC	N-700-5	SOx	762	72,578	0	0	73,340	WHITE PLAINS
S	AERA ENERGY LLC	S-260-5	SOx	19,004	28,541	13,717	8,240	69,502	BAKERSFIELD

Table 6-3 San Joaquin Valley Air Pollution Control District ERC Registry

Region	Facility Name	Certificate	Pollutant	1st QTR	2nd QTR	3rd QTR	4th QTR	Total Annual	Facility City
S	VANDERHAM WEST	S-2401-5	SOx	16,875	16,875	16,875	16,875	67,500	TIPTON
N	MODESTO IRRIGATION DISTRICT	N-392-5	SOx	26,443	26,370	13,765	0	66,578	MODESTO
N	BULLARD ENERGY CENTER LLC	N-717-5	SOx	0	0	64,800	0	64,800	S JORDAN
N	BULLARD ENERGY CENTER LLC	N-718-5	SOx	21,899	23,000	0	14,704	59,603	S JORDAN
N	EVOLUTION MARKETS LLC	N-698-5	SOx	55,742	2,294	0	0	58,036	WHITE PLAINS
S	AERA ENERGY LLC	S-1825-5	SOx	19,164	21,001	4,803	11,650	56,618	BAKERSFIELD
S	AERA ENERGY LLC	S-284-5	SOx	19,831	12,103	6,514	16,106	54,554	BAKERSFIELD
N	GULF CAPITAL PARTNERS, INC	N-744-5	SOx	0	0	0	52,748	52,748	HOUSTON
S	NORTHERN CALIFORNIA POWER AGENCY	S-2843-5	SOx	13,298	10,631	12,619	13,452	50,000	ROSEVILLE
N	GILROY FOODS	N-485-5	SOx	7,118	18,526	23,007	910	49,561	MODESTO
S	PASTORIA ENERGY FACILITY, LLC	S-2744-5	SOx	11,324	11,450	11,576	11,576	45,926	LEBEC
S	EVOLUTION MARKETS LLC	S-2632-5	SOx	11,102	11,225	11,348	11,348	45,023	WHITE PLAINS
S	BIG WEST	S-3118-1	VOC	894,225	886,448	916,875	916,878	3,614,426	BAKERSFIELD
S	AERA ENERGY LLC	S-3104-1	VOC	219,197	221,785	224,428	224,481	889,891	BAKERSFIELD
S	CHEVRON USA INC	S-1432-1	VOC	135,357	136,861	138,364	138,364	548,946	BAKERSFIELD
S	AERA ENERGY LLC	S-1082-1	VOC	130,768	132,221	133,675	133,675	530,339	BAKERSFIELD
S	CHEVRON USA INC	S-2887-1	VOC	113,431	114,707	116,073	116,094	460,305	BAKERSFIELD
S	OCCIDENTAL OF ELK HILLS, INC. (OEHI)	S-2822-1	VOC	83,976	85,157	86,339	86,339	341,811	TUPMAN
S	CHEVRON USA INC	S-620-1	VOC	83,316	84,241	85,167	85,167	337,891	BAKERSFIELD

Table 6-3 San Joaquin Valley Air Pollution Control District ERC Registry

Region	Facility Name	Certificate	Pollutant	1st QTR	2nd QTR	3rd QTR	4th QTR	Total Annual	Facility City
S	OCCIDENTAL OF ELK HILLS, INC (OEHI)	S-3065-1	VOC	69,169	77,848	80,424	75,737	303,178	TUPMAN
S	CHEVRON USA INC	S-2766-1	VOC	72,796	73,747	74,664	74,698	295,905	BAKERSFIELD
S	AERA ENERGY LLC	S-2725-1	VOC	65,082	65,830	66,578	66,578	264,068	BAKERSFIELD
S	AER GLAN ENERGY	S-3052-1	VOC	61,750	61,750	61,750	61,750	247,000	SAN FRANCISCO
S	AERA ENERGY LLC	S-2395-1	VOC	59,410	59,839	60,983	61,950	242,182	BAKERSFIELD
S	BIG WEST	S-2452-1	VOC	53,758	54,557	54,966	54,874	218,155	BAKERSFIELD
C	PACIFIC GAS & ELECTRIC CO.	C-280-1	VOC	21,981	68,020	71,348	53,244	214,593	WALNUT CREEK
S	AERA ENERGY LLC	S-1142-1	VOC	39,631	39,976	40,411	40,489	160,507	BAKERSFIELD
S	CHEVRON USA INC (REFINERY)	S-657-1	VOC	35,011	35,399	35,788	35,788	141,986	BAKERSFIELD
S	CHEVRON USA INC	S-3063-1	VOC	34,635	35,052	35,469	35,469	140,625	BAKERSFIELD
S	SAN JOAQUIN FACILITIES MGMT	S-2148-1	VOC	34,024	28,739	32,822	38,107	133,692	BAKERSFIELD
N	CASTLE AIRPORT AVIATION & DEVELOP CENTER	N-523-1	VOC	31,801	32,175	32,549	32,549	129,074	ATWATER
S	CLEAN HARBORS BUTTONWILLOW, LLC	S-685-1	VOC	31,195	31,541	31,888	31,888	126,512	BUTTONWILLOW
C	DART CONTAINER CORPORATION	C-555-1	VOC	30,481	26,626	14,213	50,680	122,000	MASON
N	PACTIV CORPORATION	N-339-1	VOC	27,192	27,192	27,192	27,192	108,768	BAKERSFIELD
S	AERA ENERGY LLC	S-2964-1	VOC	25,277	26,605	25,902	25,800	103,584	BAKERSFIELD

7.1 AIR DISPERSION MODELING

The purpose of the air quality impact analyses is to evaluate whether or not criteria pollutant emissions resulting from the Project will cause or contribute significantly to a violation of a California or national AAQS or contribute significantly to degradation of air quality-related values in Class I areas. Mathematical models, designed to simulate the atmospheric transport and dispersion of airborne pollutants, are used to quantify the maximum expected impacts of Project emissions for comparison with applicable regulatory criteria. Potential impacts of toxic air contaminant emissions from the Project are evaluated in Section 8.0, Public Health.

Separate criteria pollutant modeling analyses were conducted to address the air quality effects of emissions from Project construction activities and operations, because these activities will occur at different times. Impacts from construction activities include fugitive dust from road travel and excavation of disturbed areas and exhaust combustion products from diesel and gasoline fueled construction equipment and vehicles. The impacts from operations will be associated with the operation of the gasification block, power block, and ancillary equipment.

The air quality modeling methodology described in this section has been documented in a formal modeling protocol, which has been submitted for comment to CEC, SJVAPCD, and USEPA Region 9. A copy of this protocol is provided in Appendix C. The modeling approaches used to assess various aspects of the Project's potential impacts to air quality are discussed below. The approaches discussed below follow the Modeling Protocol. Copies of the modeling files are included on the digital versatile disks (DVD) entitled HECA Air Quality and Public Health Modeling Files provided with the ATC.

Model and Model Option Selections

The impacts of Project construction and operations on criteria pollutant concentrations in receptor areas within 31 miles (50 km) from the Project Site and Controlled Area were evaluated using the American Meteorological Society/Environmental Protection Agency Regulatory Model (AERMOD) (Version 07026). AERMOD is appropriate for this ATC because it has the ability to assess dispersion of emission plumes from multiple point, area, or volume sources in flat, simple, and complex terrain, and to use sequential hourly meteorological input data. The regulatory default options were used, including building and stack tip downwash, default wind speed profiles, exclusion of deposition and gravitational settling, consideration of buoyant plume rise, and complex terrain.

Compliance with SJVAPCD Rule 2201 modeling requirements for attainment pollutants will be demonstrated by modeling the maximum ground level concentrations of the Project at any receptor and adding conservative background concentrations, based on recent data from the most representative air quality monitoring stations. The Project will not be considered to cause or contribute to a near-field ambient air quality violation unless impacts from these sources combined with the background concentration exceed the most stringent AAQS.

Note that emissions reduction credits will be obtained by the Applicant to offset Project emissions increases of the following pollutants: NO_x, VOC, PM_{10}, and SO_2. They are above the SJVAPCD emission offset triggering levels specified in the District's Rule 2201.4.5.3.

Evaluation of construction, commissioning, and operational NO_2 concentrations (1-hour and annual averaging times) was accomplished using the OLM option in AERMOD. The OLM option accounts for the role of ambient O_3 in limiting the conversion of emitted NO_X (which occurs mostly in the form of nitrogen oxides [NO]) to NO_2, the pollutant regulated by ambient standards. The input data to the AERMOD-OLM model includes representative hourly O_3 monitoring data for the years corresponding to the meteorological input record.

To evaluate whether urban or rural dispersion parameters should be used in model simulations, an analysis of land use adjacent to the Project Site was conducted in accordance with Section 8.2.8 of the *Guideline on Air Quality Models* (USEPA 2003) and Auer (1978),USEPA AERMOD implementation guide (2004), and its addendum (2006a). Based on the Auer land use procedure, more than 50 percent of the area within a 1.9 mile (3 km) radius of the Project is classified as rural. Since the Auer classification scheme requires more than 50 percent of the area within the 1.9 mile (3 km) radius around a proposed new source to be non-rural for an urban classification, the rural mode will be used in the AERMOD modeling analyses. All regulatory default options will be used, including building and stack tip downwash, default wind speed profiles, exclusion of deposition and gravitational settling, consideration of buoyant plume rise, and complex terrain.

Building Wake Effects

The effects of building wakes (i.e., downwash) on plumes from the Project's operational sources were evaluated in accordance with USEPA guidance (USEPA 1985). Data on the buildings on the Project Site that could potentially cause plume downwash effects for the sources were determined for different wind directions using the USEPA Building Profile Input Program – Prime (BPIP-Prime) (Version 98086) (USEPA 1995a). Forty-two structures were identified within the Project Site to be included in the downwash analysis, including 21 buildings and 21 tanks. A table listing all the structures evaluated in the downwash analysis is included in Appendix C.

The results of the BPIP-Prime analysis were included in the AERMOD input files to enable downwash effects to be simulated. Input and output electronic files for the BPIP-Prime analysis are included with those from all other dispersion modeling analyses on the DVDs that are being submitted with this Application.

Meteorological Data

Meteorological data suitable for direct input to AERMOD were obtained from the SJVAPCD website. Hourly surface data for calendar years 2000, 2001, 2002, 2003, and 2004 were obtained from the SJVAPCD at the Bakersfield Airport meteorological station which is located in the city of Bakersfield, within 20 miles (32.2 km) east-northeast of the Project Site. These data have been pre-processed by the SJVAPCD with the Oakland upper air data to create an input data set specifically tailored for input to AERMOD. The SJVAPCD prepared this data specifically for applicants use for locations such as the Project site.

The meteorological data recorded at Bakersfield Airport are acceptable for use at the Project Site for two reasons – proximity and terrain similarity. The terrain immediately surrounding the Project Site can be categorized as a fairly flat, or gradually sloping rural area in a region with developed oil wells. The terrain around the Bakersfield Airport also consists of relatively flat, or gradually sloping rural or suburban areas. Thus, the land use and the location with respect to

near-field terrain features are similar. Both are located in areas of medium surface roughness (as opposed to low surface roughness like bodies of water or grassy prairies, or high surface roughness like highly urbanized cities or forests). Both locations are on the valley floor and are approximately the same elevation. Additionally, there are no significant terrain features separating the Bakersfield Airport from the Project Site that would cause significant differences in wind or temperature conditions between these respective areas. Therefore, the 5 years of meteorological data selected from the Bakersfield Airport were determined to be representative for the purposes of evaluating the Project's air quality impacts. The Bakersfield Airport is the closest full-time meteorological recording station to the Project Site, and thus meteorological conditions at the sites will be very similar.

Seasonal and annual wind roses based on the 5 years of Bakersfield Airport surface meteorological data are provided in the modeling protocol in Appendix C. Winds for all seasons and all years blow predominantly from the sector between northwest and north, although the directional pattern is more variable during the fall and winter seasons.

Receptor Locations

The receptor grids used in the AERMOD modeling analyses for operational sources were as follows:

- 25-meter spacing along the fenceline and extending from the fenceline out to 100 meters beyond the Project Site and Controlled Area line
- 50-meter spacing from 100 to 250 meters beyond the Project Site and Controlled Area line
- 100-meter spacing from 250 to 500 meters beyond the Project Site and Controlled Area line
- 250-meter spacing from 500 meters to 1 km beyond the Project Site and Controlled Area line
- 500-meter spacing within 1 to 2 km of Project sources
- 1,000-meter spacing within 2 to 10 km of Project sources

Figures 7-1, Near-Field Model Receptor Grid and 7-2, Far-Field Model Receptor Grid, show the placement of near-field and far-field receptor points, respectively. Terrain heights at receptor grid points were determined from U.S. Geological Survey (USGS) digital elevation model (DEM) files. During the refined modeling analysis for operational Project emissions, if a maximum predicted concentration for a particular pollutant and averaging time is located within the portion of the receptor grid with spacing greater than 25 meters, a supplemental dense receptor grid will be placed around the original maximum concentration point, and the model will be rerun. The dense grid will use 25-meter spacing and will extend to the next grid point in all directions from the original point of maximum concentration.

Consistent with accepted practice, this AERMOD receptor grid, with the additional dense nested grid points, was determined to best balance the need to predict maximum pollutant concentrations and allow all operational modeling runs to be completed in less than 1 week.

Because construction emission sources release pollutants to the atmosphere from small equipment exhaust stacks or from soil disturbances at ground level, maximum predicted construction impacts for all pollutants and averaging times will occur within the first kilometer

from the Project Site boundary. Accordingly, only the portion of the above grid with 25-meter spacing out to a distance of 200 meters was used for the construction modeling.

The same receptor grid used in the criteria pollutant modeling for the operational Project will be used in the health risk assessment (HRA) modeling, with additional receptors placed at all sensitive locations (e.g., schools, hospitals, etc.) out to 10 km (6 miles). Finally, discrete receptors will be placed at the locations of all nearby residences.

Construction Impacts Modeling

Appendix D1.1, Construction Emissions, details the development of the Project construction emissions estimates over the 44-month construction and commissioning period. For purposes of evaluating construction air quality impacts, it is useful to break the construction schedule into a sequence of essentially non-overlapping phases, each occurring on specific areas of the Project Site and with characteristic equipment and vehicle requirements. An Excel spreadsheet was created to estimate pollutant emissions from construction activities, with separate worksheets for equipment exhaust and fugitive dust emissions associated with short-term and annual construction activities. Emissions from worker commuter trips to and from the Project Site during construction period were also included.

All construction activities were assumed to occur during a 10-hour work day. Calculation of annual emissions was based on a summation of overall construction activities for the consecutive 12-month period that will produce the highest emissions of all pollutants.

Turbine Impact Screening Modeling

As described previously, a screening modeling analysis was performed to determine which CTG/HRSG operating mode and stack parameters produced worst-case off-site impacts (i.e., maximum ground level concentrations for each pollutant and averaging time). Only the emissions from the CTGs with and without duct firing and evaporative cooling were considered in this preliminary modeling step. The screening modeling used AERMOD, as described in the previous sections. Building wake information and the receptor grid described above were also used. All 5 years of meteorological data were used in the screening analysis.

The AERMOD model simulated natural gas combustion emissions from the 20-foot-diameter (6.10 meters), 213-foot-tall (65 meters) stack for the CTG/HRSG unit and the 16-foot diameter (4.88 meters), 110-foot tall (33.5 meters) auxiliary CTG unit. The stacks were modeled as point sources at their proposed locations within the Project Site. Table 7-1, Turbine Screening Results Normal Operations – Emissions and Stack Parameters per Turbine, summarizes the combustion CTG screening results for the different CTG operating load conditions. First, the model was run with unit emissions (1.0 grams per second) from each stack to obtain normalized concentrations that are not specific to any pollutant. CTG vendor data used to derive the stack parameters for the different operating conditions evaluated in this screening analysis are included in Appendix D1.

The maximum ground level concentrations predicted to occur off site with unit turbine emission rates for each of the seven operating conditions shown in Table 7-1, Turbine Screening Results Normal Operations – Emissions and Stack Parameters per Turbine, were then multiplied by the corresponding turbine emission rates for specific pollutants. The highest resulting concentration values for each pollutant and averaging time were then identified (see bolded values in the table).

The stack parameters associated with these maximum predicted impacts were used in all subsequent simulations of the refined AERMOD analyses described in the next subsection. (Note that the lower exhaust temperatures and flow rates at reduced turbine loads correspond to reduced plume rise, in some cases resulting in higher off-site pollutant concentrations than the higher baseload emissions.) Model input and output files for the screening modeling analysis are included with those from all other modeling tasks on the Air Quality and Public Health modeling DVDs that are provided separately with this Application.

1-Hour Startup Scenarios

The worst-case 1-hour NO_2 and CO impacts will occur during an hour with a startup, thus the results of the screening analysis were not used to determine the turbine stack parameters. The results in Table 7-1, Turbine Screening Results Normal Operations – Emissions and Stack Parameters per Turbine, indicate that maximum hourly NO_2 and CO concentrations during normal operations will occur with the stack parameters corresponding to 60 percent load. However, the magnitude of the emissions for both these pollutants during the worst-case 60 minutes of the turbine startup sequence will be higher than those during normal operations at any ambient temperature condition. Since a startup is a transition from non-operation to full-load operation, the stack exhaust velocity and temperature during most of this operation are lower than the values indicated as “worst-case” by the turbine screening modeling. Accordingly, modeling simulations were conducted to estimate the maximum 1-hour NO_2 and CO concentrations during a startup with reduced stack exhaust velocity and temperature.

Table 7-1 Turbine Screening Results Normal Operations – Emissions and Stack Parameters per Turbine

Case	Case 1A	Case 1B	Case 1C	Case 2A	Case 2B	Case 2C	Case 3	Case 4A	Case 4B	Case 4C
Scenario Description	**HRSG Stack, Hydrogen-rich Fuel**			**HRSG Stack, Natural Gas Fuel**			**HRSG Stack Co-Firing**	**Auxiliary CTG**		
HRSG/CTG Load Level	100% Load	80% Load	60% Load	100% Load	80% Load	60% Load	100% Load	100% Load	75% Load	50% Load
Stack Outlet Temperature (°F)	200.0	190.0	180.0	180.0	170.0	160.0	190.0	740.0	740.0	760.0
Stack Outlet Temperature (°K)	366.48	360.93	355.37	355.37	349.82	344.26	360.93	666.48	666.48	677.59
Stack Exit Velocity (ft/s)	63.3	51.8	42.7	53.1	45.6	37.7	58.4	70.2	61.7	50.2
Stack Exit Velocity (m/s)	19.3	15.8	13	16.2	13.9	11.5	17.8	21.4	18.8	15.3
NO_X as NO_2 (lb/hr)	166.7	166.7	166.7	166.7	166.7	166.7	166.7	20.6	20.6	20.6
CO (lb/hr)	1,679.4	1,679.4	1,679.4	1,679.4	1,679.4	1,679.4	1,679.4	69.0	69.0	69.0
SO_2 (lb/hr)	8.7	8.7	8.7	8.7	8.7	8.7	8.7	2.4	2.4	2.4
PM_{10} (lb/hr)	35.7	35.7	35.7	35.7	35.7	35.7	35.7	10.3	10.3	10.3
NO_X (g/s)	21	21	21	21	21	21	21	2.6	2.6	2.6
CO (g/s)	211.6	211.6	211.6	211.6	211.6	211.6	211.6	8.7	8.7	8.7
SO_2 (g/s) (based on 0.4 grain total S/100 scf) (grain of total sulfur per 100 standard cubic feet of gas)	1.1	1.1	1.1	1.1	1.1	1.1	1.1	0.3	0.3	0.3
PM_{10} (g/s)	4.5	4.5	4.5	4.5	4.5	4.5	4.5	1.3	1.3	1.3
Model Results – Maximum X/Q concentration ($\mu g/m^3/(g/s)$) predicted from AERMOD (all receptors)										
1–hour	3.682	4.114	4.483	4.191	4.668	6.536	3.966	3.250	3.655	4.530
3–hour [1]	3.313	3.703	4.035	3.771	4.201	5.882	3.569	2.925	3.289	4.077
8–hour [1]	2.577	2.880	3.138	2.933	3.268	4.575	2.776	2.275	2.558	3.171
24–hour [1]	1.473	1.646	1.793	1.676	1.867	2.614	1.586	1.300	1.462	1.812
annual [1]	0.295	0.329	0.359	0.335	0.373	0.523	0.317	0.260	0.292	0.362

Table 7-1 Turbine Screening Results Normal Operations – Emissions and Stack Parameters per Turbine

Case	Case 1A	Case 1B	Case 1C	Case 2A	Case 2B	Case 2C	Case 3	Case 4A	Case 4B	Case 4C
Scenario Description	**HRSG Stack, Hydrogen-rich Fuel**			**HRSG Stack, Natural Gas Fuel**			**HRSG Stack Co-Firing**	**Auxiliary CTG**		
Maximum Concentration (µ g/m^3) Predicted per Pollutant Normal Operations (all receptors)										
NO_X 1 hour	77.313	86.394	94.140	88.001	98.030	137.252	83.280	8.450	9.502	11.779
NO_x annual	6.185	6.911	7.531	7.040	7.842	10.980	6.662	0.676	0.760	0.942
CO 1 hour	779.024	870.518	948.575	886.714	987.766	1382.977	839.142	28.276	31.795	39.414
CO 8 hour	545.317	609.363	664.003	620.700	691.436	968.084	587.399	19.793	22.256	27.590
SO_2 1 hour	4.050	4.525	4.931	4.610	5.135	7.189	4.362	0.975	1.096	1.359
SO_2 3 hour	3.645	4.073	4.438	4.149	4.621	6.470	3.926	0.878	0.987	1.223
SO_2 24 hour	1.620	1.810	1.972	1.844	2.054	2.876	1.745	0.390	0.439	0.544
SO_2 annual	0.324	0.362	0.394	0.369	0.411	0.575	0.349	0.078	0.088	0.109
PM_{10} 24 hour	6.627	7.405	8.069	7.543	8.403	11.764	7.138	1.690	1.900	2.356
PM_{10} annual	1.325	1.481	1.614	1.509	1.681	2.353	1.428	0.338	0.380	0.471
	Case 1A	Case 1B	Case 1C	Case 2A	Case 2B	Case 2C	Case 3	Case 4A	Case 4B	Case 4C

Source: HECA Project

[1] Only 1-hour impacts were modeled. Impact concentrations for other averaging times were estimated with USEPA Screening Factors: 0.9 for a 3-hour avg. time, 0.7 for an 8-hour avg. time, 0.4 for a 24-hr avg. time, and 0.08 for an annual average.

Notes:

°F = degrees Fahrenheit
CO = carbon monoxide
µ g/m^3 = micrograms per cubic meter
HRSG = heat recovery steam generator
NO_X = nitrogen oxides
SCR = selective catalytic reduction
°K = degrees Kelvin
CTG = combustion turbine generator
g/s = grams per second
NO_2 = nitrogen dioxide
PM_{10} = particulate matter 10 microns in diameter
SO_2 = sulfur dioxide

Refined Modeling

A refined modeling analysis was performed to estimate off-site criteria pollutant impacts from operational emissions of the Project. The modeling was performed as described in the previous sections, using 5 years of hourly meteorological input data. The new Project CTG/HRSG was modeled assuming the worst-case emissions corresponding to each averaging time and the turbine stack parameters that were determined in the turbine screening analysis (see previous subsection). The maximum mass emission rates that will occur over any averaging time, whether during turbine startups, normal operations, turbine shutdowns, or a combination of these activities, were used in all refined modeling analyses (see Table 7-1, Turbine Screening Results Normal Operations – Emissions and Stack Parameters per Turbine). Emissions from the other sources were also included in the refined modeling runs. Emission rate calculations and assumptions used for all pollutants and averaging times are documented in Appendix D1.

The DEGADIS model was used to calculate CO and H_2S impacts from the carbon dioxide vent because the plume from the carbon dioxide vent is denser than air and could not be modeled with AERMOD. The DEGADIS model is a USEPA-approved screening model for dense gas plumes. As a screening model, it cannot use hourly meteorological data; it uses worst-case meteorology and can model 1-hour and 8-hour averaging times. The model calculates downwind concentrations until the plume centerline reaches ground level; at that point the model stops calculating concentrations. The SCREEN3 model was used to extend the then neutral density plume downwind to locations offsite when DEGADIS predicted a ground-level maximum within the Project Site and Controlled Area boundary. Model inputs and CO and H_2S emission rates are summarized in Table 7-2, DEGADIS Model Inputs and Parameters, below.

Table 7-2 Degadis Model Inputs and Parameters

Max Value at Exit of Stack	100% Flow
Molecular Weight of vent gas	44.0
Flow, pounds/hour	656,000
Flow, kilograms/second	82.656
Temp, F	65
Temp, K	291.6
Stack diameter, inches	42
Stack diameter, meters	1.067
Stack height, feet	260
Stack height, meters	79.3
H2S Concentration (ppm)	10
H2S Emission Rate (lb/hr)	5.15
CO Concentration (ppm)	1,000
CO Emission Rate (lb/hr)	418.5
Stability Class	D
Wind speed, meters	1

Source: HECA Project

Notes:

CO = carbon monoxide
F = Fahrenheit
K = Kelvin
H_2S = hydrogen sulfide

Fumigation Analysis

Fumigation can occur when a stable layer of air lies a short distance above the release point of a plume and unstable air lies below. Especially on sunny mornings with light winds, the heating of the earth's surface causes a layer of turbulence, which grows in depth over time and may intersect an elevated exhaust plume. The transition from stable to unstable surroundings can rapidly draw a plume down to ground level and create relatively high pollutant concentrations for a short period. Typically, a fumigation analysis is conducted using the USEPA model SCREEN3 when the Project Site is rural and the stack height is greater than 10 m.

A fumigation analysis was performed using SCREEN3 to calculate concentrations from inversion breakup fumigation. A unit emission rate was used (1 gram per second) in the fumigation modeling to obtain a maximum unit concentration (x/Q), and the model results were scaled to reflect expected Project emissions for each pollutant. Inversion breakup fumigation concentrations were calculated for 1- and 3-hour averaging times using USEPA-approved conversion factors. These multiple-hour model predictions are conservative, since inversion breakup fumigation is a transitory condition that would most likely affect a given receptor location for only a few minutes at a time.

Since SCREEN3 only models the impacts from one source, the model was run for each combustion source: the CTG/HRSG unit, auxiliary CTG, tail gas thermal oxidizer, and gasifier refractory heater. To calculate the inversion breakup fumigation, the default thermal internal boundary layer factor of 6 in the SCREEN3 model was used.

Fumigation impacts were determined for each source, then summed over all sources using peak predicted fumigation concentrations regardless of location. Since fumigation impacts can affect concentrations longer than 1 hour, the procedures described in Section 4.5.3 of "Screening Procedures for Estimating the Air Quality Impact of Stationary Sources" (USEPA 1992) were used to determine the 3- and 8-hour average concentrations.

7.2 COMPLIANCE WITH AMBIENT AIR QUALITY STANDARDS AND PSD REQUIREMENTS

Air dispersion modeling was performed according to the methodology described in Section 7.1, Air Dispersion Modeling. This was done to evaluate the maximum increase in ground level pollutant concentrations resulting from Project emissions, and to compare the maximum predicted impacts, including background pollutant levels, with applicable short-term and long-term CAAQS and NAAQS. The impacts from construction activities and operations were analyzed separately because they will occur during different time periods. The same 5-year record of hourly meteorological data described in Section Section 7.1 was used in the AERMOD modeling to evaluate both construction and operational impacts.

In evaluating both construction and operational impacts, AERMOD was used to predict the increases in criteria pollutant concentrations at all receptor locations due to Project emissions only. Next, the maximum modeled incremental increases for each pollutant and averaging time were added to the maximum background concentrations, based on air quality data collected at the most representative monitoring stations during the last 3 years (i.e., 2006 through 2008). The resulting total pollutant concentrations were then compared with the most stringent CAAQS or NAAQS.

Construction Impacts

Section Appendix D1.1, Construction Emissions, described that Month 21 of the construction schedule was identified as the worst-case emission conditions for the purpose of analyzing peak short-term impacts to local air quality. Annual impacts were modeled with all emissions that would occur during the first 12 months of construction, from month 17 to month 28, since this period will have a higher intensity of construction activity than any subsequent part of the schedule.

Worst-case modeling was conducted for short-term averaging times using all construction equipment from Month 21 (the worst month). Annual (12-month) emissions were modeled for Months 17-28 of the construction schedule. These Project construction results of the modeling are presented in Table 7-3, Maximum Modeled Criteria Pollutant Impacts Due to Construction Emissions.

Table 7-3 Maximum Modeled Criteria Pollutant Impacts Due To Construction Emissions

Pollutant	Averaging Period	Maximum Modeled Impact ($\mu g/m^3$)	Background[1] ($\mu g/m^3$)	Maximum Total Predicted Concentration ($\mu g/m^3$)	Most Stringent AAQS ($\mu g/m^3$)	UTM Coordinates	
						East (m)	North (m)
Construction Impacts							
CO	1 hour	130.14	4025	4,155	23,000	292,199	3,911,835
	8 hour	31.19	2444	2,475	10,000	282,024	3,911,946
NO_2	1 hour[2]	39.29	190.1	229.4	339	282,461	3,913,059
	Annual[2]	0.65	39.6	40.33	57	282,675	3,911,638
PM_{10}	24 hour	27.69	267.43	295.1	50	282,508	3,913,081
	Annual	0.34	56.53	56.84	20	282,675	3,911,638
$PM_{2.5}$	24 hour	5.94	1543	160.0	35	282,508	3,913,081
	Annual	0.28	25.23	25.48	12	282,675	3,911,638
SO_2	1 hour	0.28	340.6	340.9	655	282,199	3,911,835
	3 hour	0.18	195	195.2	1,300	282,024	3,911,946
	24 hour	0.026	81.38	81.41	105	282,024	3,911,946
	Annual	0.005	26.7	26.7	80	282,675	3,911,638

Source: HECA Project

Notes:

1 Background represents the maximum values , 2005 - measured 2005 - 2008.

2 Results for NO2 during construction used ozone limiting method (OLM) with ambient O3 data.

3 PM10 and PM2.5 background levels exceed ambient standards.

$\mu g/m^3$ = micrograms per cubic meter

AAQS = Ambient Air Quality Standard

CO = carbon monoxide

NO_2 = nitrogen dioxide

PM_{10} = particulate matter less than 10 microns in diameter

$PM_{2.5}$ = particulate matter less than 2.5 microns in diameter

SO_2 = sulfur dioxide

As reflected in the construction modeling results presented in Table 7-3, Maximum Modeled Criteria Pollutant Impacts Due to Construction Emissions, high PM_{10} and $PM_{2.5}$ background concentrations have been recorded frequently at representative monitoring stations during recent years. Because of the land use characteristics of this area, it is highly probable that these conditions result primarily from high wind episodes and mobile pollution sources. The predicted contribution of the construction activities will be minor by comparison with these sources, but will have the potential to temporarily contribute to existing violations of the state and federal PM_{10} and $PM_{2.5}$ standards if construction occurs during a period of high background concentrations.

AERMOD with OLM predicted maximum 1-hour and annual NO_2 concentration due to Project construction emissions which, when added to conservative background values from the nearest monitoring stations, are below the 1-hour California standard. Predicted maximum impacts for CO and SO_2 are also less than the most stringent ambient standards.

Operational Impacts

As described previously, the emissions used in the AERMOD simulations for the Project operations were selected to ensure that the maximum potential impacts will be addressed for each pollutant and averaging time corresponding to an AAQS. The emissions used for each pollutant and averaging time are explained and quantified in Section 4.0, Operational Emissions. This subsection describes the maximum predicted operational impacts of the Project for normal combined cycle operating conditions. Commissioning impacts, which will occur on a temporary, one-time basis and will not be representative of normal operations, were addressed separately, as described in the next subsection.

Table 7-4, AERMOD Modeling Results for Project Operations (All Project Sources Combined), summarizes the maximum predicted criteria pollutant concentrations due to Project emissions. The incremental impacts of Project emissions will be below the federal PSD significant impact levels (SILs) for all attainment pollutants, despite the use of worst-case emissions scenarios for all pollutants and averaging times. Although maximum predicted values for PM_{10} are below the SILs, these thresholds do not apply to this pollutant because the SJVAB is designated non-attainment with respect to the federal ambient standards. No SILs have been established yet for $PM_{2.5}$.

Table 7-4, AERMOD Modeling Results for Project Operations (All Project Sources Combined), also shows that the modeled impacts due to the Project emissions, in combination with conservative background concentrations, will not cause a violation of any NAAQS and will not significantly contribute to the existing violations of the federal and state PM_{10} and $PM_{2.5}$ standards. In addition, as described later, all of the Project's operational emissions of non-attainment pollutants and their precursors will be offset to ensure a net air quality benefit.

The locations of predicted maximum impacts will vary by pollutant and averaging time. Figure 7-3, Locations of Maximum Predicted Ground Level Pollutant Concentrations for the Operational Project Area, shows the locations of the maximum predicted operational impacts for all pollutants and averaging times. The peak 24-hour PM_{10} and $PM_{2.5}$ concentrations are predicted to occur on the western boundary of the Project Site, while the peak annual PM_{10}, $PM_{2.5}$, SO_2, and NO_x concentrations are predicted to occur on the southern boundary of the Project Site. The peak SO_2 1- and 3-hour concentrations, peak CO 1- and 8-hour concentrations,

and peak NO_x 1-hour concentration are predicted to occur within approximately 1.5 miles south of the Project Site.

Carbon monoxide impacts from the carbon dioxide vent were predicted to be 2,934 $\mu g/m^3$ at a point off of the Project Site and Controlled Area at 778 meters from the source. This value is below the CAAQS for CO and below the 8-hour CO SIL, but above the 1-hour CO SIL. A stability class of D combined with one meter per second wind speed was found to calculate the worst-case results. The 1-hour CO SIL exceedence is not significant because the ensuing AAQS evaluation estimated total estimated CO levels at less than 20 percent of the applicable AAQS and there are no PSD increments for CO.

Hydrogen sulfide impacts from the carbon dioxide vent were predicted to be 35.84 $\mu g/m^3$ at the maximum impact point off of the Project Site and Controlled Area at 778 meters from the source. This value is below the 1-hour CAAQS of 42 $\mu g/m^3$.

Table 7-4 AERMOD Modeling Results for Project Operations (All Project Sources Combined)

Pollutant	Averaging Period	2000	2001	2002	2003	2004	Max	Class II Significance Level	% of SIL	Background Conc. [5]	Monitoring Station Description [5]	CAAQS	NAAQS	Total Conc.
		(µg/m^3)	(µg/m^3)	(µg/m^3)	(µg/m^3)	(µg/m^3)	(µg/m^3)	(µg/m^3)		(µg/m^3)		(µg/m3)	(µg/m3)	(µg/m^3)
NO_2 [1]	1-hour (OLM) [1,6]	96.84	97.45	100.50	96.28	97.07	100.50	NA	NA	190.1	1	339	NA	291
	Annual (OLM) [1]	0.83	0.87	0.82	0.87	0.79	0.87	1	87%	39.6	1	57	100	40
CO [3]	1-hour [6]	1231.13	1133.15	1422.59	1053.30	1091.04	1422.59	2,000	71%	4025	2	23,000	40000	5448
	8-hour [6]	213.28	169.18	187.52	181.40	151.98	213.28	500	43%	2444	2	10,000	10000	2657
SO_2	1-hour [6]	21.46	16.81	21.45	16.55	19.95	21.46	NA	NA	340.6	3	655	NA	362
	3-hour [6]	7.84	6.24	7.15	7.31	7.11	7.84	25	31%	195	3	NA	1300	203
	24-hour [6]	0.62	0.65	0.50	0.66	0.91	0.91	5	18%	81.38	3	105	365	82
	Annual	0.13	0.13	0.13	0.14	0.14	0.14	1	14%	26.7	3	NA	80	27
PM10	24-hour [6]	2.56	2.39	2.90	2.64	2.58	2.90	5	58%	267.4	4	50	150	-
	Annual	0.53	0.53	0.56	0.58	0.59	0.59	1	59%	56.5	4	20	Revoked	-
PM2.5 [4]	24-hour [6]	1.65	1.63	1.74	1.67	2.22	2.22	5	44%	154	5	NA	35	-
	Annual	0.41	0.41	0.43	0.44	0.45	0.45	1	45%	25.2	5	12	15	-
H_2S [7]	1-hour	35.84	35.84	35.84	35.84	35.84	35.84	NA	NA	NA	NA	42	NA	35.84

Table 7-4 AERMOD Modeling Results for Project Operations (All Project Sources Combined)

Source: HECA Project

Notes:

[1] Ozone Limiting Method (OLM) was applied using hourly O3 data.

[3] CO2 Vent was not included in the AERMOD analysis; it was modeled using DEGADIS/SCREEN3, which predicted maximum impacts of 2,934 µg/m3 for the 1-hour average. The current assumption is that only one gasifier heater is expected to be operational at any time. Aux Boiler does not operate with HRSG at the same time for short -term average period. Therefore, the Aux Boiler was not included in the modeling analysis while HRSG was included because HRSG gives more impact on off-Project Site and Controlled Area concentration.

[5] Monitoring station for the maximum background concentration is described below:

1 CARB, Maximum of last three years (2006-2008), Bakersfield Golden State Highway, 2006

2 CARB, Maximum of last three years (2006-2008), Bakersfield Golden State Highway, 2007

3 CARB, Maximum of last three years (2006-2008), Bakersfield Golden State Highway, 2008

4 CARB, Maximum of last three years (2006-2008), Shafter-Walker Street, 2007

5 CARB, Maximum of last three years (2006-2008), Fresno – 1st Street, 2007

[6] For short-term (1, 3, 8, and 24-hour) modeling, only one emergency generator will be operational at any one time and the current assumption is that only one gasifier heater is expected to be operational at any one time.

[7] H_2S was modeled using DEGADIS (its only source is the CO2 vent). DEGADIS is a screening model that uses worst-case meteorology rather than actual monitored hourly meteorological data.

µg/m3 = micrograms per cubic meter
CAAQ = California Ambient Air Quality
CO = carbon monoxide
H_2S = hydrogen sulfide
NAAQ = National Ambient Air Quality
NO_2 = nitrogen dioxide
OLM = ozone limiting method
PM_{10} = particulate matter less than 10 microns in diameter
$PM_{2.5}$ = particulate matter less than 2.5 microns in diameter
SO_2 = sulfur dioxide

Fumigation

The predicted peak concentrations from inversion fumigation from Project emissions, including background, are predicted to be below the CAAQS and are as follows:

- NO_x 1-hour = 271.73 µg/m^3
- SO_2 1-hour = 32.91 µg/m^3
- SO_2 3-hour = 21.77 µg/m^3
- CO 1-hour = 5,236.56 µg/m^3

Turbine Commissioning

The Project turbines operated with partially-abated emissions for purposes of commissioning. The expected sequence of commissioning tests and the associated emissions during each stage of each CTG commissioning are presented in Section 4.0, Operational Emissions. Separate modeling was conducted using AERMOD to evaluate maximum short-term effects of these activities in terms of the impacts on off-site 1-hour NO_2 concentrations and 1-hour and 8-hour CO concentrations. These are the pollutants (along with VOCs, which are not modeled) for which emissions will be expected to be significantly higher than during normal operations, owing to the non-operability of the SCR and oxidation catalyst emission control systems during some of the commissioning tests. Emissions of SO_X and particulate matter depend primarily on the rate of fuel combustion and are unaffected by the availability or non-availability of the SCR and oxidation catalyst. Thus, emissions of these pollutants during commissioning are not expected to exceed the levels that will occur during full-load normal operations of the turbines and separate modeling for commissioning impacts on SO_X and particulate matter levels is unnecessary.

Table 7-5, Commissioning Modeling Results, shows the results of the model simulations for the two phases of turbine commissioning. The tabulated impacts are the highest concentrations for the indicated averaging that are predicted by AERMOD to occur for the worst-case condition using 5 years of hourly meteorological input data. Table 7-5 demonstrates that when the maximum incremental commissioning impacts are added to applicable background concentrations and compared with the most stringent state or national ambient standards, no violations of the applicable standards for these pollutants are predicted to occur.

Impacts from commissioning were modeled with AERMOD, based on the emissions from the auxiliary CTG and the CTG/HRSG unit during commissioning, as described previously. The results from the commissioning modeling are presented below in Table 7-5, Commissioning Modeling Results.

Table 7-5 Commissioning Modeling Results

Modeling Scenario	Pollutant	Averaging Period	Maximum Estimated Impact ($\mu g/m^3$)	Background[1] ($\mu g/m^3$)	Total Predicted Concentration ($\mu g/m^3$)	Most Stringent Standard ($\mu g/m^3$) [2]
Auxiliary CTG commissioning only	CO	1 hour	213.9	4,025	4,238.9	23,000
		8 hours	46.7	2,444	2,490.7	10,000
	NO_2[3]	1 hour	56.3	190.1	246.4	339
Aux CTG and Aux Boiler running in normal operating mode, HRSG Commissioning (no other sources operating)	CO	1 hour	1,827.8	4,025	5,852.8	23,000
		8 hours	335.4	2,444	2,779.4	10,000
	NO_2[3]	1 hour	120.9	190.1	311.0	339

Source: HECA Project

Notes:

[1] Background represents the maximum values measured at the monitoring stations presented in Modeling Protocol.

[2] In February 2007, the CARB approved new, more stringent CAAQS for NO_2. The new standards of 339 $\mu g/m^3$ (1 hour) and 57 $\mu g/m^3$ (annual) became effective in March 2008.

[3] NO_2 modeling for commissioning was conducted with the OLM algorithm.

CO = carbon monoxide

$\mu g/m^3$ = micrograms per cubic meter

NO_2 = nitrogen dioxide

Impacts for Non-attainment Pollutants and their Precursors

The emission offset program described in the SJVAPCD Rules and Regulations was developed to facilitate net air quality improvement when new sources locate within the District. Project impacts of non-attainment pollutants (PM_{10}, $PM_{2.5}$, and O_3) and their precursors (NO_X, SO_2, and VOC) will be fully mitigated by emission offsets. The emission reductions associated with these offsets have not been accounted for in the modeled impacts noted above. Thus, the impacts indicated in the foregoing presentation of model results for the Project may be significantly overestimated.

Effects on Visibility from Plumes

Modern combined cycle power plants burning natural gas fuel emit particulate matter at levels far below the concentration corresponding to visible smoke. Combustion sources also emit water vapor that sometimes may condense in the atmosphere to form visible plumes. However, the generally warm, dry conditions in Kern County are not conducive to lengthy visible stack plumes.

7.2.1 Impacts on Air Quality Related Values in Class I Area

Specific national parks, wilderness areas, and national monuments are designated as Class I areas and are protected by the most stringent PSD requirements. A Major Source must evaluate impacts to visibility and other AQRV at all Class I areas that are located within a 100-km radius of the Project Site. All pollutants for which Project emissions are above the Major Source threshold (in this case, 100 tons per year [tpy]) and all pollutants for which emissions are above the PSD Significant Emissions Rates must be evaluated.

An evaluation of potential impacts in Class I areas within 62.1 miles (100 km) of the Project Site was conducted, because the Project's potential emissions increases of some pollutants are large enough to be considered a Major Source, thus triggering the federal PSD program. This section summarizes the dispersion models and modeling techniques that were used in performing the Class I area air quality analyses. A complete description of the modeling performed in support of the impacts to Class I areas is contained in Appendix C. The objectives of the modeling are to demonstrate whether air emissions from the Project will cause or contribute to a PSD increment exceedance or cause a significant impact on visibility, regional haze or sulfur, or nitrogen deposition in any Class I area.

Three Class I areas are located within the region of the Project Site: Dome Land Wilderness Area, Sequoia National Park, and San Rafael Wilderness Area. However, Dome Land Wilderness Area and Sequoia National Park are greater than 62.1 miles (100 km) from the Project Site. Therefore, these two Class I areas do not meet the criterion of being within 62.1 miles (100 km) and will not be included in this analysis. The nearest parts of the San Rafael Wilderness are located beyond 31.1 miles (50 km) and within 62.1 miles (100 km) from the Project Site, thus, only this Class I area and only far-field AQRV analyses were completed. PSD increment analysis for the San Rafael Wilderness Class I area are shown in Table 7-6, PSD Class I Increment Significance Analysis – CALPUFF Results. No Class I PSD increments will be exceeded.

Table 7-6 PSD Class I Increment Significance Analysis – CALPUFF Results

Class I Area	Pollutant	Annual NO_x	3-hour SO_2	24-hour SO_2	Annual SO_2	24-hour Particulate Matter	Annual Particulate Matter
	Unit	**µg/m³**	**µg/m³**	**µg/m³**	**µg/m³**	**µg/m³**	**Annual**
	Threshold	**0.1**	**1**	**0.2**	**0.08**	**0.32**	**0.16**
San Rafael Wilderness Area	2001	4.09E-03	2.23E-01	2.78E-02	8.06E-04	1.14E-01	4.17E-03
	2002	4.48E-03	2.43E-01	2.98E-02	9.54E-04	1.09E-01	4.76E-03
	2003	4.62E-03	2.84E-01	3.05E-02	9.54E-04	1.23E-01	4.68E-03
Exceed?		No	No	No	No	No	No

Source: HECA Project
µg/m³ = micrograms per cubic meter
NO_x = nitrogen oxides
SO_2 = sulfur dioxide

Effects on Visibility. The Clean Air Act (CAA) established the importance of visibility for Class I areas by declaring a goal to prevent future visibility impairment and remedy existing visibility impairment due to man-made air pollution. The CAA also specifically requires that visibility be addressed as an AQRV within all Class I areas. However, visibility is not uniformly affected by air pollution. Visibility varies on a site-by-site basis and is affected by meteorology, topography, the relative position of the viewer and the sun, and other variables. In addition, the assessment of visibility depends on subjective human perceptions. As a result, it is often difficult to assess the condition of the visibility AQRV.

This analysis was conducted using the CALPUFF model. Applicable recommendations from the CALPUFF Reviewer's Guide (Draft) of September 2005 prepared for the National Park Service (NPS) and the U.S. Forest Service (USFS) were implemented in the screening version of CALPUFF AQRV modeling.

Using weather from a 3-year meteorological data set developed using a combination of surface station and mesoscale meteorological (MM5) data for 2001-2003 in CALPUFF resulted in no days per year with 10 percent extinction change. Visibility impact results for the San Rafael Wilderness Class I area are shown in Table 7-7, Visibility Analysis – CALPUFF Results. No maximum extinction change exceeds 10 percent with only 2-4 days of exceedance of 5% despite the conservative operating scenario. A detailed description of the conservative modeling scenario is contained in Appendix C. Therefore, the Project screening successfully passed all screening criteria.

Table 7-7 Visibility Analysis – CALPUFF Results

Class I Area	Pollutant	No. of Days > 5%	No. of Days >10%	Maximum Extinction Change	Day of Maximum Extinction Change
	Unit	Days	Days	%	Day
	Threshold	0	0	5	
San Rafael Wilderness Area	2001	2	0	9.64	308
	2002	4	0	8.09	287
	2003	2	0	6.58	247
Exceed?				No	

Source: HECA Project

Terrestrial Resources. Maximum modeled annual NO2 and SO2 impacts from normal plant operations, as well as estimates of total nitrogen and sulfur deposition estimated by CALPUFF, were compared against Deposition Analysis Threshold for individual sources established by the NPS for vegetation and ecosystems for Class I Wilderness Areas. Table 7-8, Total Nitrogen and Sulfur Deposit Analysis – CALPUFF Results, summarizes the maximum modeled impacts versus the NPS and the USFS significance criteria. All impacts are below the significance criteria.

Table 7-8 Total Nitrogen and Sulfur Deposit Analysis – CALPUFF Results

Class I Area	Pollutant	Deposition Nitrogen	Deposition Sulfur
	Unit	$g/m^2/s$	$g/m^2/s$
	Threshold	1.59E-11	1.59E-11
San Rafael Wilderness Area	2001	1.04E-12	4.23E-13
	2002	1.30E-12	5.57E-13
	2003	1.32E-12	4.97E-13
Exceed?		No	No

Source: HECA Project

Notes:

$g/m^2/s$ = grams per square meter per second.

Aquatic Resources. A significant effect of NOx and SO2 emissions on aquatic resources is nitrogen and sulfur deposition and subsequent acidification. However, because any increased nitrogen and sulfur deposition due to the Project will be minimal, impacts to water acid neutralizing capacity and pH, and, therefore, acidification or eutrophication, are not likely to occur.

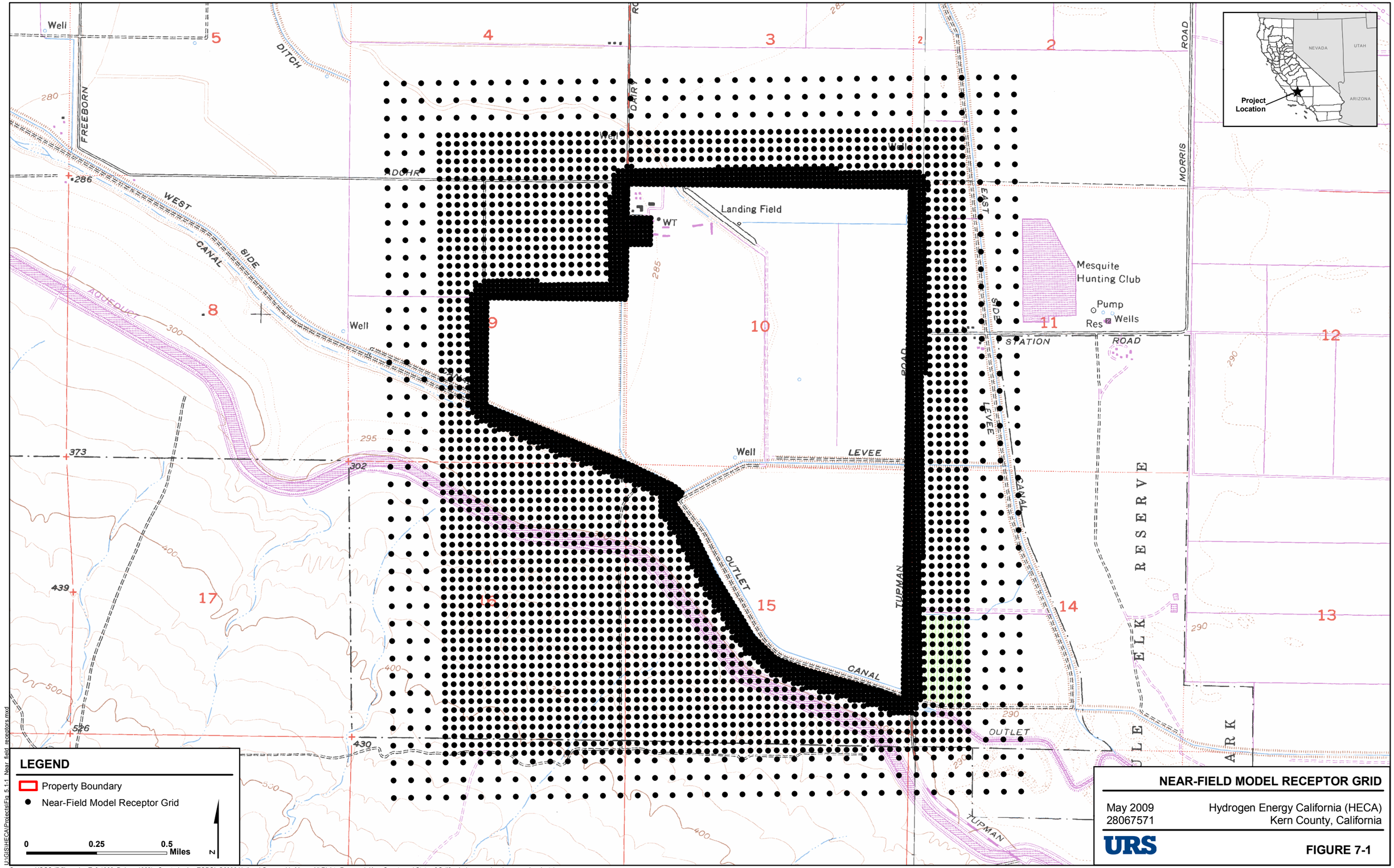

Sources: USGS (7.5' quads: Taft 1982, Delano 1982). Created using TOPO!, ©2006 National Geographic Maps, All Rights Reserved. Kern County and State of California (proposed and approved projects).

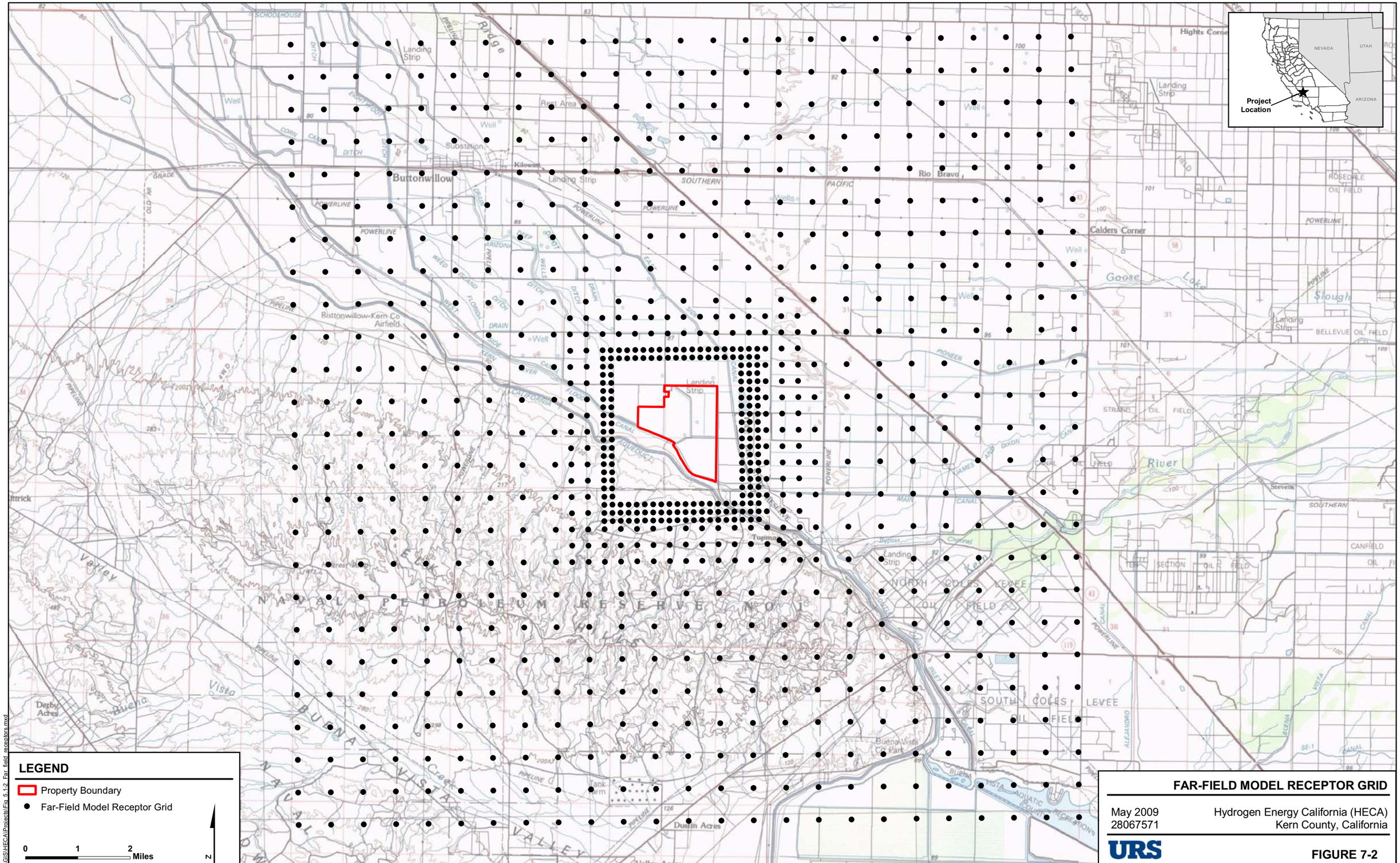

FAR-FIELD MODEL RECEPTOR GRID

May 2009
28067571

Hydrogen Energy California (HECA)
Kern County, California

URS

FIGURE 7-2

U:\GIS\HECA\Projects\Fig 5.1-2 Far field receptors.mxd

Sources: USGS (30' x 60' quads: Taft 1982, Delano 1982). Created using TOPO!, ©2006 National Geographic Maps, All Rights Reserved. Kern County and State of California (proposed and approved projects).

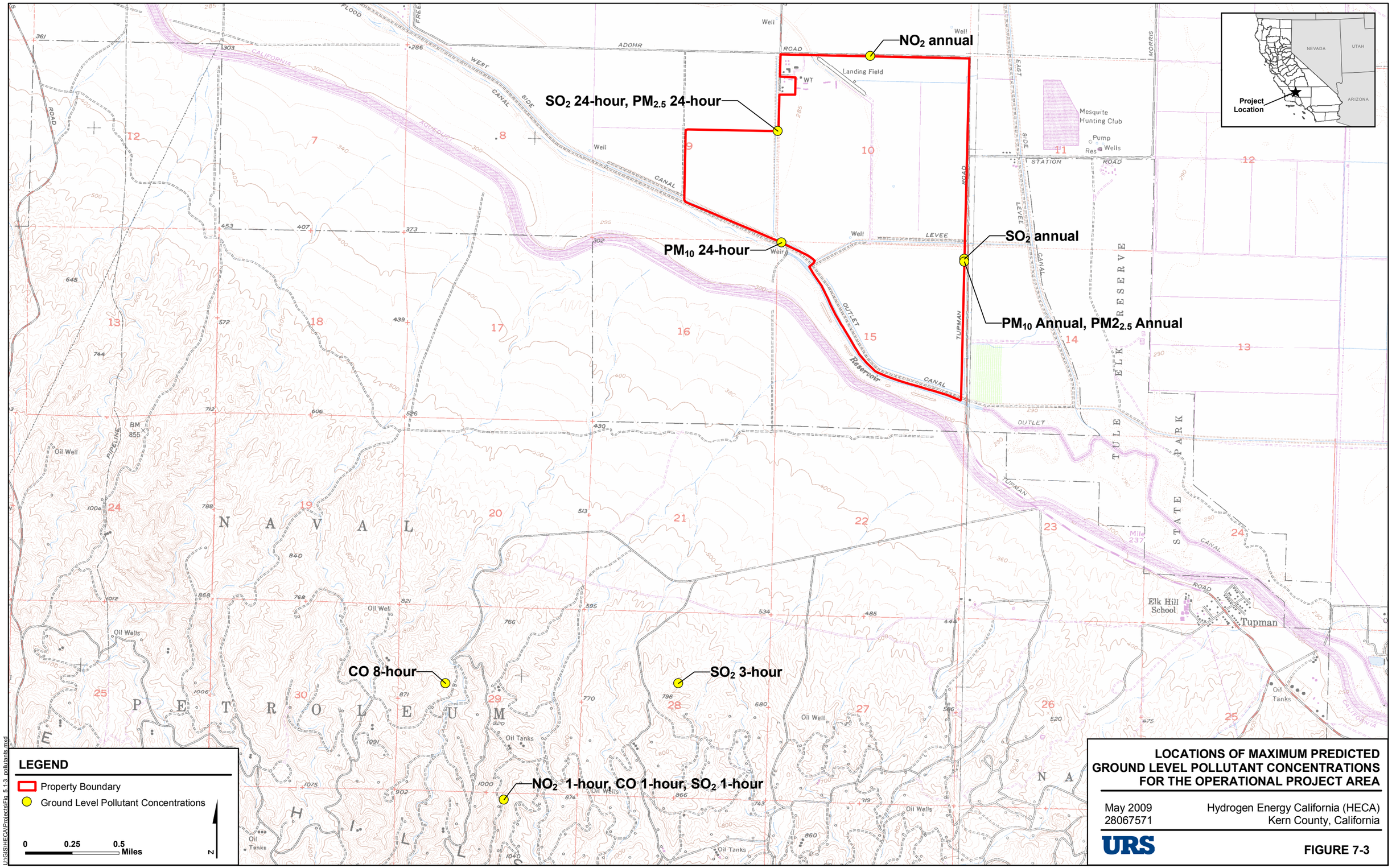

LOCATIONS OF MAXIMUM PREDICTED GROUND LEVEL POLLUTANT CONCENTRATIONS FOR THE OPERATIONAL PROJECT AREA

May 2009
28067571

Hydrogen Energy California (HECA)
Kern County, California

URS

FIGURE 7-3

U:\GIS\HECA\Projects\Fig_5.1-3_pollutants.mxd

Sources: USGS (7.5' quads: Taft 1982, Delano 1982). Created using TOPO!, ©2006 National Geographic Maps, All Rights Reserved. Kern County and State of California (proposed and approved projects).

This section describes the evaluation of potential public health risks due to construction and operation of the power plant generation facility as well as the methodology and results of the HRA. A significant impact is defined as a maximum incremental cancer risk greater than 10 in 1 million, a chronic total hazard index (THI) greater than 1.0, or an acute THI greater than 1.0. Also, uncertainties in the HRA are discussed and other potential health impacts of the Project are described.

For the purposes of this analysis, sensitive receptors are defined as the locations occupied by groups of individuals that may be more susceptible than the general population to health risks from a chemical exposure. These individuals include infants and children, the elderly, and the chronically ill. Sensitive receptor locations therefore include schools (public and private), day care facilities, convalescent homes, parks, and hospitals. There are two sensitive receptors within six miles of the Project (6 miles is the extent of the modeling receptor grid): Elk Hills elementary school, located 1.3 miles to the southeast, and the Tule Elk State Natural Reserve located as described above. The Universal Transverse Mercator (UTM) coordinates of Elk Hills elementary school are 285,959.4 meters east and 3,908,409.0 meters north. Figure 8-1, Sensitive Receptors Located within 6 miles of the Project Site, shows the location of these sensitive receptors; however, the HRA approach treats all receptors as sensitive receptors. The closest residential neighborhood is in the unincorporated community of Tupman, 1.5 miles southeast of the Project boundary. There are also additional single-family residences in the Project vicinity, including residences located approximately 370 feet to the northwest; 1,400 feet to the east; and 3,300 feet to the southeast of the Project Site.

After communicating with the local public health department at Kern County, health studies could not be identified concerning the potentially affected population(s) within a 6-mile radius of the power plant site related to respiratory illnesses, cancers, or related diseases (Chung 2008).

The *Kern County Department of Public Health: Health Status Report – 2003* calculated average cancer mortality rates from 1993 to 2002 in Kern County as 183.0 per 100,000 people, compared to California's average of 185.0/100,000 people (Jinadu 2003). The leading causes of death have remained consistent, with diseases of the heart and cancer as first and second leading causes of death, accounting for more than 60 percent of all deaths. The report compares the county's performance to the National objectives outlined in the U.S. Department of Health and Human Services' report, "Healthy People 2010: Understanding and Improving Health" (US Department of Health and Human Services 2000). "Kern County has made appreciable progress towards the 2010 goals in many areas of health. Yet, in other areas, there is still substantial work to be done to improve the health of our residents." In 2001, the Kern County death rate from heart disease was nearly 20 percent higher than California's rate.

Recent data from the California Department of Public Health, 2007 County Profiles, using data averaged from the start of 2003 through the end of 2004 show Kern County ranked 58 out of 58 counties in age-adjusted death rates from Coronary Heart Disease with 1,320.7 deaths per 100,000 people, compared to the California average of 163.1 per 100,000 people (CDPH 2008). Kern County also ranked last in overall mortality with 5,347.3 deaths per 100,000 people compared to the state average of 716.7 deaths per 100,000.

Kern County is endemic to *Coccidioides immites*, a fungus that lives in the soils in southwestern U.S. and northwestern Mexico. The tiny spores become wind-borne and inhaled into the lungs where it can cause Coccidioidomycosis or "Valley Fever." About 60 percent of the people who

breathe in the spores do not get sick at all. For some it may feel like the cold or flu, and for some, pneumonia-like symptoms may occur requiring medication and bed rest. Approximately 1 out of 200 who do get sick, develop the disseminated form (the disease spreads past the lungs to the blood system), and can be fatal. The Health Officer recommends taking the following precautions for construction projects in Kern County:

1. When the top soil of undeveloped land is to be disturbed for construction, the standard precautionary measure of wetting the soil should be aggressively carried out.
2. It is advisable to perform work on non-windy days.
3. Workers doing soil excavation should wear simple dust masks for protection against exposure.

Further information on Valley Fever can be found in the "Valley Fever Task Force Report on the Control of *Coccidioides immites"* produced by the Kern County Department of Public Health (Jinadu 1995).

8.1 PUBLIC HEALTH IMPACT ASSESSMENT APPROACH

The potential human health risks posed by the Project's emissions were assessed following the Office of Environmental Health Hazard Assessment (OEHHA) Air Toxics Hot Spots Program Risk Assessment Guidelines (Cal/EPA/OEHHA 2003). The OEHHA guidelines were developed to provide risk assessment procedures, as required under the Air Toxics Hot Spots Information and Assessment Act of 1987, Assembly Bill 2588 (Health and Safety Code §§ 44360 *et seq*.). The Hot Spots law established a statewide program to inventory air toxics emissions from individual facilities, as well as guidance for execution of risk assessments and requirements for public notification of potential health risks.

As recommended by the OEHHA guidelines, the California Air Resources Board (CARB) Hotspots Analysis and Reporting Program (HARP) was used to perform an OEHHA Tier 1 HRA for the Project. HARP includes two modules: a dispersion module and a risk module. The HARP dispersion module incorporates the U.S. Environmental Protection Agency (USEPA) ISCST3 air dispersion model. The HARP risk module implements the latest Risk Assessment Guidelines developed by OEHHA. For consistency with the criteria pollutant modeling, the dispersion modeling was conducted with AERMOD software. CARB has created a software package called HARP On Ramp to convert AERMOD dispersion results into a format that can be read into the HARP risk module. Thus, HARP with AERMOD was used for this HRA.

One exception from AERMOD was required because the carbon dioxide vent source emits a plume that will be essentially all carbon dioxide and emitted at ambient temperature. The result is a plume that is approximately 50 percent denser than ambient air. AERMOD is not suitable for modeling dense plumes. The USEPA-approved dense plume dispersion model DEGADIS was used to model the carbon dioxide vent. The only air toxic compounds in the inventory for the carbon dioxide vent are hydrogen sulfide (H_2S) and carbonyl sulfide (COS)). Additional discussion on the modeling of the carbon dioxide vent is provided later in this section.

The HRA was conducted in four steps using the HARP:

1. Hazard identification and emission quantification
2. Exposure assessment

3. Dose-response assessment
4. Risk characterization

First, hazard identification was performed to determine the potential health effects that could be associated with Project emissions. The purpose was to identify whether or not pollutants emitted during power plant operation could be characterized as potential human carcinogens, or associated with other types of adverse health effects. Based on OEHHA guidelines, a list of pollutants with potential cancer and non-cancer health effects associated with the emissions from the Project has been constructed in Table 8-1, Summary of all Operational TACs and Toxicity Values Used to Characterize Health Risks. Three compounds in this table are not carcinogens, nor do they have chronic or acute health effects: carbonyl sulfide, cobalt, and zinc. These compounds are included in the table for completeness in the disclosure of all toxic compounds emitted from Project operations. However, they do not contribute to the calculation of health risks. The sources emitting the TACs listed in Table 8-1 are summarized below, immediately following the table.

Second, an exposure assessment was conducted to estimate the extent of public exposure to the Project emissions. Public exposure is quantified based on the predicted maximum short- and long-term ground level concentrations resulting from project emissions, the exposure pathway(s), and the duration of exposure to those emissions. Dispersion modeling was performed using the AERMOD model to estimate the highest ground level concentrations near the Project Site and Controlled Area boundary. The methods used in the dispersion modeling were consistent with the approach described in Section 7.0, and the modeling protocol in Appendix C (URS 2009).

Third, a dose-response assessment was performed in HARP incorporating the maximum 1-hour and annual ground level concentrations predicted by AERMOD to characterize the relationship between pollutant exposure and the potential incidence of an adverse health effect in the exposed populations. The dose-response relationship is expressed in terms of potency factors for cancer risk and reference exposure levels (RELs) for acute and chronic non-cancer risks. The OEHHA guidelines provide potency factors and RELs for an extensive list of TACs, including those listed in Table 8-1, Summary of all Operational TACs and Toxicity Values Used to Characterize Health Risks. All exposure pathways were included in this analysis except the fish ingestion and drinking water consumption pathways, no unenclosed water storage reservoirs exist near the site.

For the calculation of cancer risk, the duration of exposure to Project emissions was assumed to be 24 hours per day, 365 days per year, for 70 years, at all receptors. For the calculation of acute risk, it was assumed that acute exposure is one that occurs over a one hour or less time period. For the calculation of chronic risk, it was assumed that chronic exposure is one that occurs over more than 12 percent of a 70-year lifetime. The cancer risk was calculated in HARP using the Derived (Adjusted) Method, and the chronic THI was calculated in HARP using the Derived (OEHHA) Method.

Fourth, risk characterization was performed to integrate the health effects and public exposure information and provide quantitative estimates of health risks resulting from Project emissions. Risk modeling was performed using HARP to estimate cancer and non-cancer health risks due to Project operational emissions. The HARP model uses OEHHA equations and algorithms to calculate health risks based on input parameters such as emissions, ground level concentrations, and toxicological data.

The plume from the intermittent carbon dioxide vent is denser than air; as such, it was necessary to model the impacts from the carbon dioxide vent using DEGADIS rather than AERMOD. DEGADIS is a dense gas dispersion model supported by USEPA. The SCREEN3 model was used to extend the then neutral density plume downwind to locations offsite when DEGADIS predicted a ground-level maximum within the Project Site and Controlled Area boundary.

Hydrogen sulfide is the only toxic compound in the carbon dioxide vent stream associated with chronic and acute health effects and is not a carcinogen; therefore, this was the only toxic compound modeled with DEGADIS /SCREEN3. Carbon monoxide would also be emitted from the CO2 vent; this was modeled in the air quality analysis in Section 7.0. Carbonyl sulfide may also be present in the carbon dioxide vent stream, but only hydrogen sulfide was considered for purposes of the HRA because no potency factors for cancer risk or RELs for acute and chronic non-cancer risks are available for carbonyl sulfide.

The location of the maximum chronic and acute health risks from all toxic compounds associated with Project operations was identified. The method with which impacts from all toxic compounds (including hydrogen sulfide) were combined is discussed below.

The point of maximum acute impact was predicted at a point approximately 3.6 kilometers (km) southwest of the Project Site and Controlled Area boundary. DEGADIS/SCREEN3 was run to calculate hydrogen sulfide impacts at this location. The DEGADIS/SCREEN3 acute hydrogen sulfide impact was then added to the HARP maximum impact. In addition, the point of maximum chronic impact was predicted at a point on the southern Project Site and Controlled Area boundary, and DEGADIS/SCREEN3 was run to calculate hydrogen sulfide impacts at this location as well. The DEGADIS/SCREEN3 chronic hydrogen sulfide impact was then added to the HARP maximum impact.

To complete the analysis, DEGADIS/SCREEN3 modeled the location of maximum hydrogen sulfide ground level concentration at a point along the northwestern interior corner which is the closest Project Site and Controlled Area boundary to the carbon dioxide vent. HARP modeled the chronic and acute health effects for all other toxic compounds at this maximum DEGADIS/SCREEN3 location, and the chronic and acute risks from DEGADIS/SCREEN3 and HARP were added together at this point.

Detailed descriptions of the model input parameters and results of the HRA are given in Section 8.4, Model Input Parameters.

Table 8-1 Summary of All Operational TACs and Toxicity Values Used To Characterize Health Risks

Compound	CAS #	Acute REL ($\mu g/m^3$)	Chronic REL ($\mu g/m^3$)	Inhalation Cancer Potency Factor $(mg/kg\text{-}day)^{-1}$
1,3-Butadiene	106-99-0	--	2.1E+01	6.0E-01
Acetaldehyde	75-07-0	--	9.0E+00	1.0E-02
Acrolein	107-02-8	1.9E-01	6.0E-02	--
Ammonia	7664-41-7	3.2E+03	2.0E+02	--
Antimony	7440-36-0	--	--	--
Arsenic	7440-38-2	1.9E-01	3.0E-02	1.2E+01
Barium	7440-39-3	--	--	--
Benzene	71-43-2	1.3E+03	6.0E+01	1.0E-01
Beryllium	7440-41-7	--	7.0E-03	8.4E+00
Cadmium	7440-43-9	--	2.0E-02	1.5E+01
Carbon Disulfide	75-15-0	6.2E+03	8.0E+02	--
Carbonyl Sulfide	463-58-1	--	--	--
Chromium	7440-47-3	--	2.0E-01	5.1E+02
Chromium, (hexavalent)	18540-29-9	--	2.0E-01	5.1E+02
Chromium, Total	0-00-5	--	2.0E-01	5.1E+02
Cobalt	7440-48-4	--	--	--
Copper	7440-50-8	1.0E+02	--	--
Cyanides	57-12-5	3.4E+02	9.0E+00	--
Dichlorobenzene	25321226	--	1.0E+03	--
Ethylbenzene	100-41-4	--	2.0E+03	8.7E-03
Fluoride	--	2.4E+02	1.3E+01	--
Formaldehyde	50-00-0	9.4E+01	3.0E+00	2.1E-02
Hexane	110-54-3	--	7.0E+03	--
Hydrochloric Acid	7647-01-0	2.1E+03	9.0E+00	--
Hydrogen Fluoride (Hydrofluoric Acid)	7664-39-3	2.4E+02	1.4E+01	--
Hydrogen Sulfide	7783-06-4	4.2E+01	1.0E+01	--
Lead	7439-92-1	--	--	4.2E-02
Manganese	7439-96-5	--	2.0E-01	--

Table 8-1 Summary of All Operational TACs and Toxicity Values Used To Characterize Health Risks

Compound	CAS #	Acute REL ($\mu g/m^3$)	Chronic REL ($\mu g/m^3$)	Inhalation Cancer Potency Factor $(mg/kg\text{-}day)^{-1}$
Mercury	7439-97-6	1.8E+00	9.0E-02	--
Methyl Bromide (Bromomethane)	74-83-9	3.9E+03	5.0E+00	--
Methylene Chloride (Dichloromethane)	75-09-2	1.4E+04	4.0E+02	3.5E-03
Naphthalene	91-20-3	--	9.0E+00	1.2E-01
n-Hexane	110-54-3	--	7.0E+03	--
Nickel	7440-02-0	6.0E+00	5.0E-02	9.1E-01
Phenol	108-95-2	5.8E+03	2.0E+02	--
Propylene	115-07-1	--	3.0E+03	--
Propylene Oxide	75-56-9	3.1E+03	3.0E+01	1.3E-02
Selenium	7782-49-2	--	2.0E+01	--
Sulfuric Acid and Sulfates	7664-93-9	1.2E+02	1.0E+00	--
Toluene	108-88-3	3.7E+04	3.0E+02	--
Vanadium	7440-62-2	3.0E+01	--	--
Xylenes	1330-20-7	2.2E+04	7.0E+02	--
Zinc	7440-66-6	--	--	--
Diesel Particulate Matter	DPM	--	5.0E+00	1.1E+00--
2-Methylnaphthalene	PAH	--	--	--
3-Methylchloranthrene	PAH	--	--	2.2E+01
7,12-Dimethylbenz(a)anthracene	PAH	--	--	2.5E+02
Acenaphthene	PAH	--	--	--
Acenaphthylene	PAH	--	--	--
Anthracene	PAH	--	--	--
Benz(a)anthracene	PAH	--	--	3.9E-01
Benzo(a)pyrene	PAH	--	--	3.9E+00
Benzo(b)fluoranthene	PAH	--	--	3.9E-01
Benzo(g,h,i)perylene	PAH	--	--	--
Benzo(k)fluoranthene	PAH	--	--	3.9E-01

Table 8-1 Summary of All Operational TACs and Toxicity Values Used To Characterize Health Risks

Compound	CAS #	Acute REL ($\mu g/m^3$)	Chronic REL ($\mu g/m^3$)	Inhalation Cancer Potency Factor $(mg/kg\text{-}day)^{-1}$
Chrysene	PAH	--	--	3.0E-02
Dibenzo(a,h)anthracene	PAH	--	--	4.1E+00
Fluoranthene	PAH	--	--	--
Fluorene	PAH	--	--	--
Indeno(1,2,3-cd)pyrene	PAH	--	--	3.9E-01
PAH (excluding Naphthalene)	PAH	--	--	3.9E+00
Phenanathrene	PAH	--	--	--
Pyrene	PAH	--	--	--

Source: HECA Project

Notes:

1) Data from California Air Resources Board (2008)

2) No REL established

CAS # = Chemical Abstracts Service Registry Number
DPM = diesel particulate matter
PAH = polycyclic aromatic hydrocarbons
REL = reference exposure level
$\mu g/m^3$ = micrograms per cubic meter
Mg/kg-day = milligrams per kilogram per day

8.2 CONSTRUCTION PHASE EMISSIONS

Due to the relatively short duration of Project construction (i.e., 37 months), significant long-term exposure is not expected to occur as a result of Project construction emissions. Of air pollutants emitted during the construction period, diesel particulate matter has the largest potential for human health risk. Diesel particulate matter has been classified by CARB and OEHHA as a TAC and a carcinogen. However, the exposure assessment conducted for carcinogens is typically 70 years. Due to the short duration of the construction effort, significant carcinogenic health risks are not predicted for the construction period.

To ensure worker safety during construction, safe work practices will be followed. Appendix D1.1 presents a detailed analysis of the potential environmental impacts due to criteria pollutant emissions during construction and a discussion of measures that will be implemented to control or reduce these emissions.

8.3 OPERATIONAL PHASE EMISSIONS

The following operational sources associated with the Project will generate emissions of TACs. These emissions will be generated from the combustion of natural gas, syngas, diesel fuel, and process vent gasses, in addition to the operation of the cooling towers.

Power Block

- HRSG Combustion Turbine (GE 7FB)
- Auxiliary CTG (GE LMS100® PA)
- Power Block Cooling Towers

Gasification Block

- Gasifier Refractory Heaters
- Auxiliary Boiler
- Gasification Flare
- SRU Flare
- Rectisol Flare
- Tail Gas Thermal Oxidizer
- ASU and Gasification Cooling Towers
- Carbon Dioxide Vent

Ancillary Equipment

- Diesel Generator
- Fire Pump Engine

A summary of the TACs that are expected to be emitted as a result of operations and the corresponding toxicity values used for evaluation are shown in Table 8-1, Summary of Operational TACs and Toxicity Values Used to Characterize Health Risks.

Tables 8-2 – 8-13 outline the estimated TAC emission rates for each source listed above. These rates were determined based on the size, capacity, and expected annual operating hours of each piece of equipment. Emission factors for these calculations were derived from a variety of sources including: *California Air Toxics Emission Factor* (CATEF), USEPA AP-42, Wabash River test data, Air District Guidance, and analytical water tests. In addition, emissions resulting from ammonia slip from the heat recovery steam generator (HRSG) and auxiliary combustion turbine generator (CTG) selective catalytic reduction (SCR) systems were included.

Table 8-2 HSRG Combustion Turbine (GE 7fb) Stack TACs Emission Rates

Compound	CAS #	Emission Factor ($lb/10^{12}$ Btu fuel)	Hourly (lb/hr)	Annual (lb/yr)
Acetaldehyde	75-07-0	1.8	4.41E-03	3.64E+01
Ammonia	7664-41-7		1.84E+01	1.53E+05
Antimony	7440-36-0	1.1	2.69E-03	2.23E+01
Arsenic	7440-38-2	2.4	5.88E-03	4.86E+01
Benz(a)anthracene	56-55-3	0.0023	5.63E-06	4.66E-02
Benzene	71-43-2	2.4	5.88E-03	4.86E+01
Beryllium	7440-41-7	0.26	6.37E-04	5.26E+00
Cadmium	7440-43-9	9.6	2.35E-02	1.94E+02
Carbon Disulfide	75-15-0	46	1.13E-01	9.31E+02
Chromium, (hexavalent)	18540-29-9	0.15	3.75E-04	3.10E+00

Table 8-2 HSRG Combustion Turbine (GE 7fb) Stack TACs Emission Rates

Compound	CAS #	Emission Factor ($lb/10^{12}$ Btu fuel)	Hourly (lb/hr)	Annual (lb/yr)
Chromium, Total	0-00-5	0.51	1.25E-03	1.03E+01
Cobalt	7440-48-4	0.26	6.37E-04	5.26E+00
Cyanides	57-12-5	5.7	1.40E-02	1.15E+02
Formaldehyde	50-00-0	17	4.16E-02	3.44E+02
Hydrochloric Acid	7647-01-0	13	3.18E-02	2.63E+02
Hydrogen fluoride (Hydrofluoric acid)	7664-39-3	50	1.22E-01	1.01E+03
Lead	7439-92-1	0.56	1.37E-03	1.13E+01
Manganese	7439-96-5	1.0	2.55E-03	2.11E+01
Mercury	7439-97-6	1.2	2.94E-03	2.43E+01
Methyl Bromide (Bromomethane)	74-83-9	47.7	1.17E-01	9.66E+02
Methylene Chloride (Dichloromethane)	75-09-2	2.2	5.39E-03	4.45E+01
Naphthalene	91-20-3	2.5	6.12E-03	5.06E+01
Nickel	7440-02-0	0.39	9.55E-04	7.90E+00
Phenol	108-95-2	36.8	9.01E-02	7.45E+02
Selenium	7782-49-2	0.56	1.37E-03	1.13E+01
Sulfuric Acid and Sulfates	7664-93-9	572	1.40E+00	1.16E+04
Toluene	108-88-3	0.033	8.08E-05	6.68E-01

Source: HECA Project

Notes:

1) HRSG (Firing Syngas) Operating Hours = 8,322 hr/yr
2) Hourly emissions based on 100% load at winter minimum temperature (20 °F)
3) Annual emissions based on 100% load at annual average temperature (65 °F)
4) Emission rates are taken from Wabash River test data and the National Energy Technology Laboratory, U.S. Dept of Energy, Major Environmental Aspects of Gasification-based Power Generation Technologies, Final Report, December 2002.
5) Ammonia slip from the SCR (5 parts per million volumetric dry [ppmvd] @ 15% oxygen) – provided by Fluor – see Criteria Pollutant emission spreadsheet for details

CAS # = Chemical Abstracts Service Registry Number
HRSG = heat recovery steam generator
TAC = toxic air contaminant
lb/hr = pounds per hour
lb/yr = pounds per year

Table 8-3 Auxiliary CTG (GE Lms100) TACs Emission Rates

Compound	CAS #	Emission Factor ($lb/10^6$ Btu fuel)	Hourly (lb/hr)	Annual (lb/yr)
1,3-Butadiene	106-99-0	1.24E-07	1.13E-04	4.64E-01
Acetaldehyde	75-07-0	1.34E-04	1.22E-01	5.02E+02
Acrolein	107-02-8	3.62E-06	3.30E-03	1.36E+01
Ammonia	7664-41-7		1.20E+01	4.95E+04
Benzene	71-43-2	3.26E-06	2.97E-03	1.22E+01
Ethylbenzene	100-41-4	1.75E-05	1.59E-02	6.55E+01
Formaldehyde	50-00-0	3.60E-04	3.28E-01	1.35E+03
Hexane	110-54-3	2.53E-04	2.30E-01	9.47E+02
Propylene	115-07-1	7.53E-04	6.86E-01	2.82E+03
Propylene Oxide	75-56-9	4.67E-05	4.25E-02	1.75E+02
Toluene	108-88-3	6.93E-05	6.31E-02	2.59E+02
Xylenes	1330-20-7	2.55E-05	2.32E-02	9.55E+01
Benzo(a)anthracene	PAH	2.21E-08	2.01E-05	8.27E-02
Benzo(a)pyrene	PAH	1.36E-08	1.24E-05	5.09E-02
Benzo(b)fluoranthene	PAH	1.10E-08	1.00E-05	4.12E-02
Benzo(k)fluoranthene	PAH	1.07E-08	9.75E-06	4.01E-02
Chrysene	PAH	2.46E-08	2.24E-05	9.21E-02
Dibenzo(a,h)anthracene	PAH	2.29E-08	2.09E-05	8.57E-02
Indeno(1,2,3-cd)pyrene	PAH	2.29E-08	2.09E-05	8.57E-02
Naphthalene	PAH	1.62E-06	1.48E-03	6.06E+00

Notes:

1) Aux CTG Operating Hours = 4,110
2) Hourly and annual emissions based on 100% load at annual average temperature (65 °F) with evaporative cooling. This scenario represents worst-case heat input for both averaging periods.
3) Emission factors obtained from the CATEF database for natural-gas–fired combustion turbines. Formaldehyde, benzene, and acrolein emission factors are from the background document for AP-42, Section 3.1, Table 3.1-3, because these factors are for turbines equipped with CO catalyst.
4) Ammonia emission rate based on an exhaust ammonia limit of 10 parts per million volumetric dry at 15 % oxygen.

Btu = British thermal units
CAS = Chemical Abstracts Service Registry Number
CATEF = California Air Toxics Emission Factor
CTG = combustion turbine generator
PAH = polycyclic aromatic hydrocarbons
TAC = toxic air contaminant

Table 8-4 Cooling Tower TACs Emission Rates

Compound	CAS #	Emission Factor (ppm)	Hourly (lb/hr)	Annual (lb/yr)
Power Block				
Arsenic	7440-38-2	0.026	1.13E-05	9.38E-02
Copper	7440-50-8	0.005	2.19E-06	1.82E-02
Fluoride		0.45	1.97E-04	1.64E+00
Manganese	7439-96-5	1.29	5.63E-04	4.68E+00
Selenium	7782-49-2	0.02	9.36E-06	7.79E-02
Zinc	7440-66-6	0.01	4.38E-06	3.64E-02
Process Area				
Arsenic	7440-38-2	0.026	2.72E-06	2.27E-02
Copper	7440-50-8	0.005	5.29E-07	4.40E-03
Fluoride		0.45	4.76E-05	3.96E-01
Manganese	7439-96-5	1.29	1.36E-04	1.13E+00
Selenium	7782-49-2	0.02	2.26E-06	1.88E-02
Zinc	7440-66-6	0.01	1.06E-06	8.80E-03
ASU				
Arsenic	7440-38-2	0.026	2.59E-06	2.15E-02
Copper	7440-50-8	0.005	5.03E-07	4.18E-03
Fluoride		0.45	4.52E-05	3.76E-01
Manganese	7439-96-5	1.29	1.29E-04	1.08E+00
Selenium	7782-49-2	0.02	2.15E-06	1.79E-02
Zinc	7440-66-6	0.01	1.01E-06	8.36E-03

Notes:
1) Cooling Tower Operating Hours = 8,322 hr/yr
2) Arsenic ppm value shown taken as average of analytical test results (Fruit Growers Laboratory)
3) Copper ppm value shown is one-half of stated detection limit
4) Fluoride ppm value shown taken as average of analytical test results (Fruit Growers Laboratory)
5) Manganese ppm value shown taken as average of analytical test results (Fruit Growers Laboratory)
6) Selenium ppm value shown taken as average of analytical test results (California Department of Water Resources)
7) Zinc ppm value shown is one-half of stated detection limit

ASU = air separation unit
CAS = Chemical Abstracts Service Registry Number
ppm = parts per million
TAC = toxic air contaminant

Table 8-5 Gasifier Refractory Heater TACs Emission Rates

Compound	CAS #	Emission Factor ($lb/10^6$ scf)	Hourly (lb/hr)	Annual (lb/yr)
Arsenic	7440-38-2	2.00E-04	3.43E-06	6.17E-03
Benzene	71-43-2	2.10E-03	3.60E-05	6.48E-02
Beryllium	7440-41-7	1.20E-05	2.06E-07	3.70E-04
Cadmium	7440-43-9	1.10E-03	1.89E-05	3.39E-02
Chromium	7440-47-3	1.40E-03	2.40E-05	4.32E-02
Cobalt	7440-48-4	8.40E-05	1.44E-06	2.59E-03
Copper	7440-50-8	8.50E-04	1.46E-05	2.62E-02
Formaldehyde	50-00-0	7.50E-02	1.29E-03	2.31E+00
Hexane	110-54-3	1.80E+00	3.09E-02	5.55E+01
Manganese	7439-96-5	3.80E-04	6.51E-06	1.17E-02
Mercury	7439-97-6	2.60E-04	4.46E-06	8.02E-03
Naphthalene	91-20-3	6.10E-04	1.05E-05	1.88E-02
Nickel	7440-02-0	2.10E-03	3.60E-05	6.48E-02
Selenium	7782-49-2	2.40E-05	4.11E-07	7.41E-04
Toluene	108-88-3	3.40E-03	5.83E-05	1.05E-01
Vanadium	7440-62-2	2.30E-03	3.94E-05	7.10E-02
Benzo(a)pyrene	PAH	1.20E-06	2.06E-08	3.70E-05
Benz(a)anthracene	PAH	1.80E-06	3.09E-08	5.55E-05
Benzo(b)fluoranthene	PAH	1.80E-06	3.09E-08	5.55E-05
Chrysene	PAH	1.80E-06	3.09E-08	5.55E-05
Dibenzo(a,h)anthracene	PAH	1.20E-06	2.06E-08	3.70E-05
Indeno(1,2,3-cd)pyrene	PAH	1.80E-06	3.09E-08	5.55E-05
2-Methylnaphthalene	PAH	2.40E-05	4.11E-07	7.41E-04
3-Methylchloranthrene	PAH	1.80E-06	3.09E-08	5.55E-05
7,12-Dimethylbenz(a)anthracene	PAH	1.60E-05	2.74E-07	4.94E-04
Acenaphthene	PAH	1.80E-06	3.09E-08	5.55E-05
Acenaphthylene	PAH	1.80E-06	3.09E-08	5.55E-05
Anthracene	PAH	2.40E-06	4.11E-08	7.41E-05
Benzo(g,h,i)perylene	PAH	1.20E-06	2.06E-08	3.70E-05
Benzo(k)fluoranthene	PAH	1.80E-06	3.09E-08	5.55E-05

Table 8-5 Gasifier Refractory Heater TACs Emission Rates

Compound	CAS #	Emission Factor ($lb/10^6$ scf)	Hourly (lb/hr)	Annual (lb/yr)
Fluoranthene	PAH	3.00E-06	5.14E-08	9.26E-05
Fluorene	PAH	2.80E-06	4.80E-08	8.64E-05
Phenanathrene	PAH	1.70E-05	2.91E-07	5.25E-04
Pyrene	PAH	5.00E-06	8.57E-08	1.54E-04

Source: HECA Project

Notes:

1) Gasifier Operating Hours = 1,800 hr/yr
2) Emission factor source USEPA AP-42 Section 1.4
3) Calculation assumes a typical fuel heating value, ranging from 1,020 to 1,050 Btu/scf.
4) Please note that there are three gasifier heaters. However, the current assumption is that only one gasifier heater is expected to operate at any one time. The health risk assessment included the operation of only one gasifier heater.

Btu = British thermal units
CAS Number = Chemical Abstracts Service Registry
USEPA = US Environmental Protection Agency
HHV = higher heating value
scf = standard cubic feet
TAC = toxic air contaminant

Table 8-6 Auxiliary Boiler TACs Emission Rates

Compound	CAS #	Emission Factor ($lb/10^6$ scf)	Hourly (lb/hr)	Annual (lb/yr)
Arsenic	7440-38-2	2.00E-04	2.70E-05	5.92E-02
Benzene	71-43-2	2.10E-03	2.84E-04	6.22E-01
Beryllium	7440-41-7	1.20E-05	1.62E-06	3.55E-03
Cadmium	7440-43-9	1.10E-03	1.49E-04	3.26E-01
Chromium	7440-47-3	1.40E-03	1.89E-04	4.15E-01
Cobalt	7440-48-4	8.40E-05	1.14E-05	2.49E-02
Copper	7440-50-8	8.50E-04	1.15E-04	2.52E-01
Formaldehyde	50-00-0	7.50E-02	1.01E-02	2.22E+01
Hexane	110-54-3	1.80E+00	2.43E-01	5.33E+02
Manganese	7439-96-5	3.80E-04	5.14E-05	1.13E-01
Mercury	7439-97-6	2.60E-04	3.52E-05	7.70E-02
Naphthalene	91-20-3	6.10E-04	8.25E-05	1.81E-01
Nickel	7440-02-0	2.10E-03	2.84E-04	6.22E-01
Selenium	7782-49-2	2.40E-05	3.25E-06	7.11E-03
Toluene	108-88-3	3.40E-03	4.60E-04	1.01E+00
Vanadium	7440-62-2	2.30E-03	3.11E-04	6.81E-01
Benzo(a)pyrene	PAH	1.20E-06	1.62E-07	3.55E-04

Table 8-6 Auxiliary Boiler TACs Emission Rates

Compound	CAS #	Emission Factor ($lb/10^6$ scf)	Hourly (lb/hr)	Annual (lb/yr)
Benz(a)anthracene	PAH	1.80E-06	2.43E-07	5.33E-04
Benzo(b)fluoranthene	PAH	1.80E-06	2.43E-07	5.33E-04
Chrysene	PAH	1.80E-06	2.43E-07	5.33E-04
Dibenzo(a,h)anthracene	PAH	1.20E-06	1.62E-07	3.55E-04
Indeno(1,2,3-cd)pyrene	PAH	1.80E-06	2.43E-07	5.33E-04
2-Methylnaphthalene	PAH	2.40E-05	3.25E-06	7.11E-03
3-Methylchloranthrene	PAH	1.80E-06	2.43E-07	5.33E-04
7,12-Dimethylbenz(a)anthracene	PAH	1.60E-05	2.16E-06	4.74E-03
Acenaphthene	PAH	1.80E-06	2.43E-07	5.33E-04
Acenaphthylene	PAH	1.80E-06	2.43E-07	5.33E-04
Anthracene	PAH	2.40E-06	3.25E-07	7.11E-04
Benzo(g,h,i)perylene	PAH	1.20E-06	1.62E-07	3.55E-04
Benzo(k)fluoranthene	PAH	1.80E-06	2.43E-07	5.33E-04
Fluoranthene	PAH	3.00E-06	4.06E-07	8.89E-04
Fluorene	PAH	2.80E-06	3.79E-07	8.29E-04
Phenanathrene	PAH	1.70E-05	2.30E-06	5.03E-03
Pyrene	PAH	5.00E-06	6.76E-07	1.48E-03

Source: HECA Project

Notes:

1) Aux Boiler Operating Hours = 2,190 hr/yr
2) Emission factor source USEPA AP-42 Section 1.4
3) Calculation assumes a typical fuel heating value, ranging from 1,020 to 1,050 Btu/scf.

Btu = British thermal units
CAS = Chemical Abstracts Service Registry Number
USEPA = US Environmental Protection Agency
HHV = higher heating value
PAH = polycyclic aromatic hydrocarbons
scf = standard cubic feet
TAC = toxic air contaminant

Table 8-7 Gasification Flare TACs Emission Rates

Compound	CAS #	Emission Factor ($lb/10^6$ scf)	Hourly (lb/hr)	Annual (lb/yr)
Acetaldehyde	75-07-0	0.043	9.07E-02	4.91E+00
Acrolein	107-02-8	0.01	2.11E-02	1.14E+00
Benzene	71-43-2	0.159	3.35E-01	1.82E+01
Ethylbenzene	100-41-4	1.444	3.05E+00	1.65E+02
Formaldehyde	50-00-0	1.169	2.47E+00	1.33E+02
Naphthalene	91-20-3	0.011	2.32E-02	1.26E+00
n-Hexane	110-54-3	0.029	6.12E-02	3.31E+00
PAH (excluding Naphthalene)	PAH	0.003	6.33E-03	3.43E-01
Propylene	115-07-1	2.44	5.15E+00	2.79E+02
Toluene	108-88-3	0.058	1.22E-01	6.62E+00
Xylenes	1330-20-7	0.029	6.12E-02	3.31E+00
Arsenic	7440-38-2	2.00E-04	4.22E-04	2.28E-02
Beryllium	7440-41-7	1.20E-05	2.53E-05	1.37E-03
Cadmium	7440-43-9	1.10E-03	2.32E-03	1.26E-01
Chromium	7440-47-3	1.40E-03	2.95E-03	1.60E-01
Cobalt	7440-48-4	8.40E-05	1.77E-04	9.59E-03
Copper	7440-50-8	8.50E-04	1.79E-03	9.70E-02
Lead	7439-92-1	5.00E-04	1.05E-03	5.71E-02
Manganese	7439-96-5	3.80E-04	8.02E-04	4.34E-02
Mercury	7439-97-6	2.60E-04	5.49E-04	2.97E-02
Nickel	7440-02-0	2.10E-03	4.43E-03	2.40E-01
Selenium	7782-49-2	2.40E-05	5.06E-05	2.74E-03
Vanadium	7440-62-2	2.30E-03	4.85E-03	2.63E-01
Zinc	7440-66-6	2.90E-02	6.12E-02	3.31E+00

Source: HECA Project

Notes:

1) Annual operation assumes total pilot operation of 8,760 hr/yr and 115,500 10^6 Btu/yr during gasifier startup and shutdown.
2) Emission factors based on AP-42 Chpt. 1.4 (for metals) and Ventura County Air Pollution Control District AB2588 (for non-metals).
3) Calculation assumes a typical fuel heating value, ranging from 1,020 to 1,050 Btu/scf.

Btu = British thermal units
CAS = Chemical Abstracts Service Registry Number
HHV = higher heating value
scf = standard cubic feet
TAC = toxic air contaminant

Table 8-8 SRU Flare TACs Emission Rates

Compound	CAS #	Emission Factor ($lb/10^6$ scf)	Hourly (lb/hr)	Annual (lb/yr)
Acetaldehyde	75-07-0	0.043	1.49E-03	1.16E-01
Acrolein	107-02-8	0.01	3.46E-04	2.71E-02
Benzene	71-43-2	0.159	5.50E-03	4.31E-01
Ethylbenzene	100-41-4	1.444	4.99E-02	3.91E+00
Formaldehyde	50-00-0	1.169	4.04E-02	3.17E+00
Naphthalene	91-20-3	0.011	3.80E-04	2.98E-02
n-Hexane	110-54-3	0.029	1.00E-03	7.85E-02
PAH (excluding Naphthalene)	PAH	0.003	1.04E-04	8.13E-03
Propylene	115-07-1	2.44	8.44E-02	6.61E+00
Toluene	108-88-3	0.058	2.01E-03	1.57E-01
Xylenes	1330-20-7	0.029	1.00E-03	7.85E-02
Arsenic	7440-38-2	2.00E-04	6.91E-06	5.42E-04
Beryllium	7440-41-7	1.20E-05	4.15E-07	3.25E-05
Cadmium	7440-43-9	1.10E-03	3.80E-05	2.98E-03
Chromium	7440-47-3	1.40E-03	4.84E-05	3.79E-03
Cobalt	7440-48-4	8.40E-05	2.90E-06	2.28E-04
Copper	7440-50-8	8.50E-04	2.94E-05	2.30E-03
Lead	7439-92-1	5.00E-04	1.73E-05	1.35E-03
Manganese	7439-96-5	3.80E-04	1.31E-05	1.03E-03
Mercury	7439-97-6	2.60E-04	8.99E-06	7.04E-04
Nickel	7440-02-0	2.10E-03	7.26E-05	5.69E-03
Selenium	7782-49-2	2.40E-05	8.30E-07	6.50E-05
Vanadium	7440-62-2	2.30E-03	7.95E-05	6.23E-03
Zinc	7440-66-6	2.90E-02	1.00E-03	7.85E-02

Source: HECA Project

Notes:

1) Annual operation assumes total pilot operation of 8,760 hr/yr and 6 hr/yr during SRU startup and shutdown with assist gas.
2) Emission factors based on AP-42 Chpt. 1.4 (for metals) and Ventura County Air Pollution Control District AB2588 (for non-metals).
3) Calculation assumes a typical fuel heating value, ranging from 1,020 to 1,050 Btu/scf

CAS = Chemical Abstracts Service Registry Number
HHV = higher heating value
scf = standard cubic feet
TAC = toxic air contaminant

Table 8-9 Rectisol Flare TACs Emission Rates

Compound	CAS Number	Emission Factor ($lb/10^6$ scf)	Hourly (lb/hr)	Annual (lb/yr)
2-Methylnaphthalene	91576	2.40E-05	7.06E-09	6.18E-05
3-Methylchloranthrene	56495	1.80E-06	5.29E-10	4.64E-06
7,12-Dimethylbenz(a)anthracene	57976	1.60E-05	4.71E-09	4.12E-05
Acenaphthene	83329	1.80E-06	5.29E-10	4.64E-06
Acenaphthylene	208968	1.80E-06	5.29E-10	4.64E-06
Anthracene	120127	2.40E-06	7.06E-10	6.18E-06
Benz(a)anthracene	56553	1.80E-06	5.29E-10	4.64E-06
Benzene	71432	2.10E-03	6.18E-07	5.41E-03
Benzo(a)pyrene	50328	1.20E-06	3.53E-10	3.09E-06
Benzo(b)fluoranthene	205992	1.80E-06	5.29E-10	4.64E-06
Benzo(g,h,i)perylene	191242	1.20E-06	3.53E-10	3.09E-06
Benzo(k)fluoranthene	205823	1.80E-06	5.29E-10	4.64E-06
Butane	106978	2.10E+00	6.18E-04	5.41E+00
Chrysene	218019	1.80E-06	5.29E-10	4.64E-06
Dibenzo(a,h)anthracene	53703	1.20E-06	3.53E-10	3.09E-06
Dichlorobenzene	25321226	1.20E-03	3.53E-07	3.09E-03
Ethane	74840	3.10E+00	9.12E-04	7.99E+00
Fluoranthene	206440	3.00E-06	8.82E-10	7.73E-06
Fluorene	86737	2.80E-06	8.24E-10	7.21E-06
Formaldehyde	50000	7.50E-02	2.21E-05	1.93E-01
Hexane	110543	1.80E+00	5.29E-04	4.64E+00
Indeno(1,2,3-cd)pyrene	193395	1.80E-06	5.29E-10	4.64E-06
Naphthalene	91203	6.10E-04	1.79E-07	1.57E-03
Pentane	109660	2.60E+00	7.65E-04	6.70E+00
Phenanthrene	85018	1.70E-05	5.00E-09	4.38E-05
Propane	74986	1.60E+00	4.71E-04	4.12E+00
Pyrene	129000	5.00E-06	1.47E-09	1.29E-05
Toluene	108883	3.40E-03	1.00E-06	8.76E-03
Arsenic	7440382	2.00E-04	5.88E-08	5.15E-04
Barium	7440393	4.40E-03	1.29E-06	1.13E-02

Table 8-9 Rectisol Flare TACs Emission Rates

Compound	CAS Number	Emission Factor ($lb/10^6$ scf)	Hourly (lb/hr)	Annual (lb/yr)
Beryllium	7440417	1.20E-05	3.53E-09	3.09E-05
Cadmium	7440439	1.10E-03	3.24E-07	2.83E-03
Chromium	7440473	1.40E-03	4.12E-07	3.61E-03
Cobalt	7440484	8.40E-05	2.47E-08	2.16E-04
Copper	7440508	8.50E-04	2.50E-07	2.19E-03
Manganese	7439965	3.80E-04	1.12E-07	9.79E-04
Mercury	7439976	2.60E-04	7.65E-08	6.70E-04
Molybdenum	7439987	1.10E-03	3.24E-07	2.83E-03
Nickel	7440020	2.10E-03	6.18E-07	5.41E-03
Selenium	7782492	2.40E-05	7.06E-09	6.18E-05
Vanadium	7440622	2.30E-03	6.76E-07	5.93E-03
Zinc	7440666	2.90E-02	8.53E-06	7.47E-02

Notes:

1) Emission factors ($lb/10^6$ scf) are from AP-42, Chapter 1.4, Table 1.4-3 and 1.4-4. Factors in lb/10E+06 scf were converted to factors in MMBtu/hr by dividing by the design base fuel heating value in Btu/scf.
2) Rectisol Flare Pilot Firing Rate = 0.3 MMBtu/hr
3) Annual Operating Hours = 8760 hr/yr

Table 8-10 Tail Gas Thermal Oxidizer TACs Emission Rates

Compound	CAS #	Emission Factor ($lb/10^6$ scf)	Hourly (lb/hr)	Annual (lb/yr)
Arsenic	7440-38-2	2.00E-04	1.90E-06	1.67E-02
Benzene	71-43-2	2.10E-03	2.00E-05	1.75E-01
Beryllium	7440-41-7	1.20E-05	1.14E-07	1.00E-03
Cadmium	7440-43-9	1.10E-03	1.05E-05	9.18E-02
Chromium	7440-47-3	1.40E-03	1.33E-05	1.17E-01
Cobalt	7440-48-4	8.40E-05	8.00E-07	7.01E-03
Copper	7440-50-8	8.50E-04	8.10E-06	7.09E-02
Formaldehyde	50-00-0	7.50E-02	7.14E-04	6.26E+00
Hexane	110-54-3	1.80E+00	1.71E-02	1.50E+02
Manganese	7439-96-5	3.80E-04	3.62E-06	3.17E-02
Mercury	7439-97-6	2.60E-04	2.48E-06	2.17E-02
Naphthalene	91-20-3	6.10E-04	5.81E-06	5.09E-02
Nickel	7440-02-0	2.10E-03	2.00E-05	1.75E-01
Selenium	7782-49-2	2.40E-05	2.29E-07	2.00E-03
Toluene	108-88-3	3.40E-03	3.24E-05	2.84E-01
Vanadium	7440-62-2	2.30E-03	2.19E-05	1.92E-01
Benzo(a)pyrene	PAH	1.20E-06	1.14E-08	1.00E-04
Benz(a)anthracene	PAH	1.80E-06	1.71E-08	1.50E-04
Benzo(b)fluoranthene	PAH	1.80E-06	1.71E-08	1.50E-04
Chrysene	PAH	1.80E-06	1.71E-08	1.50E-04
Dibenzo(a,h)anthracene	PAH	1.20E-06	1.14E-08	1.00E-04
Indeno(1,2,3-cd)pyrene	PAH	1.80E-06	1.71E-08	1.50E-04
2-Methylnaphthalene	PAH	2.40E-05	2.29E-07	2.00E-03
3-Methylchloranthrene	PAH	1.80E-06	1.71E-08	1.50E-04
7,12-Dimethylbenz(a)anthracene	PAH	1.60E-05	1.52E-07	1.33E-03
Acenaphthene	PAH	1.80E-06	1.71E-08	1.50E-04
Acenaphthylene	PAH	1.80E-06	1.71E-08	1.50E-04
Anthracene	PAH	2.40E-06	2.29E-08	2.00E-04
Benzo(g,h,i)perylene	PAH	1.20E-06	1.14E-08	1.00E-04
Benzo(k)fluoranthene	PAH	1.80E-06	1.71E-08	1.50E-04

Table 8-10 Tail Gas Thermal Oxidizer TACs Emission Rates

Compound	CAS #	Emission Factor ($lb/10^6$ scf)	Hourly (lb/hr)	Annual (lb/yr)
Fluoranthene	PAH	3.00E-06	2.86E-08	2.50E-04
Fluorene	PAH	2.80E-06	2.67E-08	2.34E-04
Phenanathrene	PAH	1.70E-05	1.62E-07	1.42E-03
Pyrene	PAH	5.00E-06	4.76E-08	4.17E-04

Source: HECA Project

Notes:

1) Tail Gas Thermal Oxidizer Operating Hours = 8,760 (accounting for both process vent and SRU startup)
2) Emission factor source USEPA AP-42 Section 1.4
3) Calculation assumes a typical fuel heating value, ranging from 1,020 to 1,050 Btu/scf.

Btu = British thermal units
CAS = Chemical Abstracts Service Registry Number
USEPA = US Environmental Protection Agency
HHV = higher heating value
PAH = polycyclic aromatic hydrocarbons
scf = standard cubic feet
SRU = sulfur recovery unit
TAC = toxic air contaminant

Table 8-11 Carbon Dioxide Vent TACs Emission Rates

Compound	CAS #	Emission Factor (ppm)	Hourly (lb/hr)	Annual (lb/yr)
Hydrogen Sulfide	7783-06-4	10	5.15E+00	2.60E+03
Carbonyl Sulfide	463-58-1	Up to 55	2.82E+01	14.20E+03

Source: HECA Project

Notes:

1) Emission rates based on power plant design and 21 day/yr full venting.

CAS = Chemical Abstracts Service Registry Number
ppm = parts per million
TAC = toxic air contaminant

Table 8-12 Emergency Generator TACs Emission Rates

Compound	CAS #	Emission Factor (g/Bhp/hr)	Hourly (lb/hr)	Annual (lb/yr)
Diesel Particulate Matter	DPM	0.03	1.60E-01	8.02E+00

Source: HECA Project

Note:

1) Emergency Generator operating hours = 50 hr/yr per generator.
2) Emissions factor shown is site specific diesel emission rate based on vendor data.
3) Emission rate shown is for individual generator.

Bhp = Brake horsepower
CAS = Chemical Abstracts Service Registry Number
DPM = diesel particulate matter
g = grams
TAC = toxic air contaminant

Table 8-13 Fire Water Pump TACs Emission Rates

Compound	CAS #	Emission Factor (g/Bhp/hr)	Hourly (lb/hr)	Annual (lb/yr)
Diesel Particulate Matter	DPM	0.015	1.84E-02	1.84E+00

Source: HECA Project
Note:
1) Fire Water Pump operating hours = 100 hr/yr.
2) Emission factor shown is from Tier 4 requirements.

Bhp = Brake horsepower
CAS = Chemical Abstracts Service Registry Number
DPM = diesel particulate matter
g = gram
TAC = toxic air contaminant

TAC emission estimates were made using the following assumptions for each source:

- HRSG Combustion Turbine (GE 7FB) – TAC emissions from the combustion turbine were assumed based on operating conditions firing hydrogen-rich fuel. Hourly emission rates were calculated based on the hourly heat input required for operation at 100 percent load at winter minimum temperature (20°F) with duct firing. Annual emissions rates were calculated based on 8,322 hours per year at 100 percent load at annual average temperature (65°F) with duct firing. Emission factors were taken from the references cited and are considered the most representative because of the use of similar technology.
- Auxiliary CTG (GE LMS100®) – Hourly emissions were calculated based on the maximum hourly heat input, which corresponds to 100 percent load at annual average temperature (65 ^{o}F) with evaporative cooling. Annual emissions rates were calculated based on 4,110 hours per year at 100 percent load at annual average temperature (65°F) with duct firing.
- Cooling Towers (power block, ASU, and gasification) – Hourly emissions were calculated based on the circulation rates, drift fractions and expected concentrations parts per million [ppm]) of TACs in cooling water. Annual emission rates were calculated based on 8,322 hours per year.
- Gasifier Refractory Heaters– There are three gasifiers present at the site. Under normal operating conditions, only one gasifier will be in warming mode at any given time, as required. Hourly emission rates were calculated based on the required standard cubic feet of natural gas required per hour based on gasifier design. Annual emission rates were calculated based on 1,800 hours per year.
- Auxiliary Boiler – Hourly emission rates were calculated based on the required standard cubic feet of natural gas required per hour based on boiler design. Annual emission rates were calculated based on 2,190 hours per year.
- Gasification Flare – Hourly emissions were calculated based on the hourly heat input rate required for pilot flame operation and the heat content of fuels flared; contributions of both were accounted for in the hourly rates. Annual emission rates were calculated assuming 8,760 hours per year of pilot operation and approximately 134 hours per year of flaring events. This scenario represents the maximum allowable firing scenario.

- SRU Flare – Hourly emissions were calculated based on the hourly heat input rate required for pilot flame operation and the heat content required for assist gas; contributions of both were accounted for in the hourly rates. Annual emission rates were calculated assuming 8,760 hours per year of pilot operation and approximately 6 hours per year of flaring events.
- Rectisol Flare – TACs would be emitted from the flare pilot only. Emissions were calculated based on the hourly heat input rate required for pilot flame operation. Annual emission rates were calculated assuming 8,760 hours per year of pilot operation.
- Tail Gas Thermal Oxidizer – Hourly emission rates were calculated based on the standard cubic feet of natural gas required per hour based on oxidizer design. Annual emission rates were calculated based on 8,760 hours per year.
- Carbon Dioxide Vent – Hourly emission rates were calculated based on maximum hourly flow (by mass) of the vent and the concentration of TACs in the vent stream. This carbon dioxide vent is used during start up and emergency upset conditions, which are, by definition, unplanned and difficult to predict. While the carbon dioxide centrifugal compressor and other injection equipment have historically been very reliable, as a worst-case scenario, annual emission rates were calculated based on 504 hours of venting per year (21 days).
- Diesel Generator – Hourly emission rates were calculated based on the horse power rating of the generator and the manufacturer-specified particulate emission rate. Annual emissions were calculated based on 50 hours per year operation for each of two generators.
- Fire Pump Engine – Hourly emission rates were calculated based on the horse power rating of the generator and the Tier 4 Standard requirements for equipment manufactured in 2014. Annual emissions were calculated based on 100 operating hours per year.
- These emission parameter combinations for the numerous turbine operating cases were determined from the turbine screening modeling to produce the highest ground level impacts outside the Project Site and Controlled Area boundary. This parameter combination ensures that impacts from the HRA will not be underestimated for any operating condition.

SJVAPCD Rule 2520 requires adherence to federally-mandated operating permits. As such, it is important to designate whether or not the project is a major source of HAPs or not. Under the Clean Air Act, §112, a major source is defined as a source that emits 10 tons per year or more of any HAP or 25 tons per year or more of any combination of HAPs. The Project is not a major source of HAPs, as determined by the list of federal HAPs and the Project's total annual HAP emissions. Appendix E, Public Health and Safety, provides a summary of the annual HAP emissions. All HARP and AERMOD model files are provided electronically on a DVD that is supplied separately with this Application package.

8.4 MODEL INPUT PARAMETERS

The HRA was conducted using the hourly and annual emissions listed for each source in Tables 8-2 through 8-13. Cancer and chronic non-cancer health effects were evaluated using the HARP model with estimated annual average emission rates, and acute non-cancer health effects were analyzed based on maximum hourly emission rates.

Dispersion modeling was performed using the AERMOD model and methods consistent with the approach described in Section 7.0 (e.g., building downwash and meteorological input data), and

the modeling protocol (URS 2009). The AERMOD model is run with unit emission rates (1 gram per second emissions) for each source to calculate the concentration of TACs per unit emission rate from each source. HARP then uses this information along with the estimated source emission rates for specific TAC compounds (as described above) to calculate ground level concentrations for each chemical species. Meteorological data for the years 2000, 2001, 2002, 2004, and 2005 (the same years used in the air quality modeling analysis described in Section 7) were used in the HRA. Risk values were modeled for the sensitive receptor within 3 miles of the Project Site, receptors at the Tule Elk State Natural Reserve (1,700 feet east of the Project Site), receptors at the Buena Vista Lakebed (6 miles southeast of the Project Site), and at all grid and census receptors within 6 miles (10 km) of the site. Figure 8-2, Other Receptors in the Vicinity of the Project Site, shows the location of the Tule Elk State Natural Reserve receptors and the Buena Vista Lakebed. These locations were included in the analysis at the request of the SJVAPCD. The same grid and refined receptors used in the air quality modeling were used in the HRA (see Section 5.1 for more details). The grid receptors extend 10 km in all directions from the Project boundary, including receptors spaced every 25 meters along the site Project Site and Controlled Area line and out to 100 meters. To be certain that the maximum potential risks resulting from Project emissions will be addressed, all receptors were treated as sensitive receptors.

Toxicological data, cancer potency factors, and RELs for specific chemicals are built into the CARB's HARP model. The pollutant-specific cancer potency factors and RELs used in the HRA are listed in Table 8-1, Summary of all Operational TACs and Toxicity Values Used to Characterize Health Risks. The HARP model uses the toxicological data in conjunction with the other input data described above to perform health risk estimates based on OEHHA equations and algorithms.

8.5 CALCULATION OF HEALTH EFFECTS

Adverse health effects are expressed in terms of cancer or non-cancer health risks. Cancer risk is typically reported as "lifetime cancer risk," which is the estimated maximum increase in the risk of developing cancer caused by long-term exposure to a pollutant suspected of being a carcinogen. The calculation of cancer risk conservatively assumes an individual is exposed continuously to the maximum pollutant concentrations 24 hours per day for 70 years. Although such continuous lifetime exposure to maximum TAC levels is highly unlikely, the goal of the approach is to produce a conservative worst-case estimate of potential cancer risk.

Non-cancer risk is typically reported as a THI. The THI is calculated for each target organ as a fraction of the maximum acceptable exposure level or REL for an individual pollutant. The REL is generally the level at (or below) which no adverse health effects are expected. The THIs are calculated for both short-term (acute) and long-term (chronic) exposures to non-carcinogenic substances by adding the ratios of predicted concentrations to RELs for all pollutants.

Both cancer and non-cancer risk estimates produced by the HRA represent incremental risks (i.e., risks due to the modeled sources only) and do not include potential health risks posed by existing background concentrations. The HARP model performs all of the necessary calculations to estimate the potential lifetime cancer risk and the acute and chronic non-cancer THIs due to the Project's TAC emissions.

8.6 HEALTH EFFECTS SIGNIFICANCE CRITERIA

Various state and local agencies provide different significance criteria for cancer and non-cancer health effects. For the Project, the SJVAPCD *Guidelines for Assessing and Mitigating Air Quality Impacts* (January 2002) provide the significance criteria for potential cancer and non-cancer health effects due to Project-related emissions. For carcinogenic health effects, an exposure is considered significant when the predicted increase in lifetime cancer risk exceeds 10 in 1 million (10×10^{-6}). For non-carcinogenic acute and chronic health effects, an exposure that affects each target organ is considered significant when the corresponding THI exceeds a value of 1.0.

8.7 ESTIMATED LIFETIME CANCER RISK

Table 8-14, Estimated Cancer Risk and Acute and Chronic Non-cancer THI Due to Project TAC Emissions, presents the detailed cancer risk results of the HRA for Project operations.

Table 8-14 Estimated Cancer Risk and Acute and Chronic Non-Cancer Thi Due To Project TACs Emissions

Location	Cancer Risk	Chronic Hazard Index	Acute Hazard Index
Point of maximum impact	3.01 excess risk in 1 million	0.262 total hazard index	0.0288 total hazard index
Peak risk at a sensitive receptor (Elk Hills Elementary School)	0.43 excess risk in 1 million	0.036 total hazard index	0.0025 total hazard index
Peak risk at nearest residence	0.70 excess risk in 1 million	0.050 total hazard index	0.0050 total hazard index

Source: HECA Project

The maximum incremental cancer risk resulting from Project emissions was estimated to be 3.01 in 1 million, at a location on the southeastern Project Site and Controlled Area boundary (receptor located at 283,960 meters east, 3,911650,650 meters north[2]). The peak cancer risk predicted at a sensitive receptor was 0.43 in 1 million, at the Elk Hills Elementary School, 1.5 miles southeast of the Project Site and Controlled Area boundary (285,878 meters east, 3,908,605 meters north). The peak cancer risk predicted at the nearest residence to the northwest of the Project Site (282,480 meters east, 3,913,177 meters north) is 0.70 in one million

The estimated cancer risks at all locations are well below the significance criterion of 10 in 1 million. Thus, the Project emissions are expected to pose a less-than-significant increase in terms of carcinogenic health risk.

[2] Coordinates are provided in accordance with the Universal Transverse Mercator and North American Datum, 1927, Zone 11.

8.8 ESTIMATED CHRONIC AND ACUTE TOTAL HAZARD INDICES

Table 8-14, Estimated Cancer Risk and Acute and Chronic Non-cancer THI Due to Project TAC Emissions, presents the detailed non-cancer results of the HRA for the Project operations without the Carbon Dioxide Vent operating. Table 8-15 presents the detailed non-cancer results of the HRA for the project operations with the Carbon Dioxide Vent operating.

Table 8-15 Estimated Cancer Risk and Acute and Chronic Non-Cancer Thi Due To HECA TACs Emissions When Carbon Dioxide Vent Operating

Location	Cancer Risk	Chronic Hazard Index	Acute Hazard Index
Point of maximum impact	3.01 excess risk in 1 million	0.275275 total hazard index	0.8610 total hazard index
Peak risk at a sensitive receptor (Elk Hills Elementary School)	0.43 excess risk in 1 million	0.39039 total hazard index	0.1206 total hazard index
Peak risk at nearest residence	0.70 excess risk in 1 million	0.068 total hazard index	0.6658 total hazard index

Source: HECA Project

The maximum chronic THI resulting from Project's operational emissions was estimated to be 0.262 at a location on the southeastern Project Site and Controlled Area boundary (283,960 meters east, 3,911650,650 meters north) – the same location as the predicted cancer risk maximum. The maximum predicted chronic THI at the Elk Hills Elementary School sensitive receptor was 0.036 (285,878 meters east, 3,908,605 meters north). DEGADIS results added to these two locations will increase the maximum chronic THI to 0.275 and the predicted chronic THI at the Elk Hills Elementary School to 0.039. The maximum chronic THI at the nearest residence is 0.068.

The maximum acute THI resulting from Project emissions was estimated to be 0.0288 at a location approximately 4.7 kilometers southwest of the Project Site and Controlled Area boundary (280,000 meters east, 3,9070,000 meters north). The maximum acute THI at the Elk Hills Elementary School sensitive receptor was estimated to be 0.0025 (285,878 meters east, 3,908,605 meters north). DEGADIS results added to these will increase the maximum acute THI to 0.8610 (282,356 meters east, 3,912,749 meters north) and the predicted acute THI at the Elk Hills Elementary School to 0.1206. The maximum acute THI at the nearest residence is 0.6658.

The estimated chronic THIs are well below the significance criterion of 1. The estimated acute THIs are below the significance criterion of 1. Thus, the Project emissions of non-carcinogenic TACs will not be expected to pose a significant risk.

Figure 8-3, Locations of Maximum Health Risks, shows the locations of the maximum health risks.

8.9 UNCERTAINTY IN THE PUBLIC HEALTH IMPACT ASSESSMENT

Sources of uncertainty in the results of HRAs include emissions estimates, dispersion modeling, exposure characteristics, and extrapolation of toxicity data in animals to humans. For this reason,

assumptions used in HRAs are typically designed to provide sufficient health protection to avoid underestimation of risk to the public. Some sources of uncertainty applicable to this HRA and the procedures and assumptions used to ensure health-protective results are discussed below.

The turbine emission rates were derived using vendor data regarding ammonia slip rates and emission factors from California Air Toxics Emission Factor (CATEF) and AP-42 for the other air toxics. Both the short and long term turbine emissions estimates were developed assuming that all turbines will operate continuously at the same time and at the maximum fuel energy input rate. Under actual operating conditions, the turbines will typically operate fewer hours per year and at lower loads. Consequently, the emissions used for this HRA are likely to be higher than what would be experienced under normal power plant operation.

Dispersion models approved for regulatory applications contain assumptions that lead to over prediction of ground level concentrations. For example, the modeling performed in the HRA assumed a conservation of mass (i.e., all of the pollutants emitted from the sources remained in the atmosphere while being transported downwind). During the transport of pollutants from sources toward receptors, none of the emitted material was assumed to be removed from the source plumes by means of chemical reactions or losses at the ground surface due to reactions, gravitational settling, or turbulent impaction. In reality, these mechanisms work to reduce the level of pollutants remaining in the atmosphere during plume travel.

The exposure characteristics assessed in the HRA included the assumption that residents will be exposed to turbine emissions continuously at the same location for 24 hours per day, 365 days per year, for 70 years. It is extremely unlikely that any resident will actually experience such exposure to the maximum predicted concentrations of TACs over this period. The conservative exposure assumption leads to over predicted risk estimates in the HRA modeling.

The toxicity data used in the HRA contain uncertainties due to the extrapolation of health effects data from animals to humans. Typically, safety factors are applied when doing the extrapolation. Furthermore, the human population is much more diverse, both genetically and culturally, than bred experimental animals. The intraspecies variability is expected to be much greater among humans than in laboratory animals. With all of the uncertainty in the assumptions used to extrapolate toxicity data, significant measures are taken to ensure that sufficient health protection is built into the available health effects data.

Conservative measures to compensate for all of these uncertainties and ensure that potential health risks are not underestimated are compounded in the final HRA predictions. Therefore, the actual risk numbers are expected to be well below the values presented in this analysis.

8.10 CRITERIA POLLUTANTS

The dispersion of the Project's emissions of criteria pollutants (nitrogen dioxide, carbon monoxide, sulfur dioxide, and particulate matter with an aerodynamic diameter of 10 and 2.5 microns or less [PM_{10} and $PM_{2.5}$]) was modeled, and an evaluation of their impacts on air quality is presented in Section 7.0. The federal and state AAQS set limits on the allowable levels of air pollutants in the ambient air necessary to protect public health. The results of the air quality analysis show that the Project will not cause a violation of any state or federal AAQS and will not significantly contribute to existing violations of federal standards. Therefore, no

significant adverse health effects are anticipated to result from the Project's criteria pollutant emissions.

8.11 CUMULATIVE IMPACT ANALYSIS

A cumulative HRA is not presented in this application. There are no major sources of HAPs nearby the Project Site and none are known to be proposed or under development.

8.12 MITIGATION MEASURES

Strict controls for fugitive dust during construction will mitigate the potential for Valley Fever by reducing the amount of airborne dust particles potentially containing the spores. The criteria pollutant emissions from the Project will be mitigated by the use of Best Available Control Technology (BACT) and through emissions offsets. These measures are described in Appendix D2. In addition, pollution control technologies employed to control criteria pollutants (for example, the oxidation catalysts on the turbines and the high efficiency drift eliminators on the cooling towers) will further reduce emissions of TACs listed in Table 8-1, Summary of all Operational TACs and Toxicity Values Used to Characterize Health Risks. These measures satisfy the SJVAPCD requirements for toxics (TBACT).

The HRA presented in the foregoing subsections shows that the health effects impacts of the Project will be well below the significance thresholds identified in Section 8.6, Health Effects Significance Criteria. Therefore, no further mitigation of emissions from the Project is required to protect public health.

8.13 LAW, ORDINANCES, REGULATIONS, AND STANDARDS FOR PUBLIC HEALTH

The Project will be constructed and operated in accordance with all laws, ordinances, regulations, and standards (LORS) applicable to protecting public health. This section briefly discusses the identified LORS. Table 8-16, Summary of LORS – Public Health, provides a summary of the requirements of the applicable LORS, the agencies that are principally responsible for public health, and the locations in this document where each of these issues is addressed.

Table 8-16 Summary of LORS – Public Health

Authority	Administering Agency	Requirement	Application Section(s)
Federal			
Clean Air Act (CAA)	USEPA CARB SJVAPCD	Protect public from unhealthful exposure to air pollutants.	8.0, 5.0
State			
California Public Resource Code § 25523(a); 20 CCR § 1752.5, 2300-2309, and Division 2 Chapter 5, Article 1, Appendix B, Part (1)	CEC	Ensure protection of environmental quality; requires quantitative HRA.	8.0.
California Clean Air Act, TAC Program, H&SC § 39650, et seq.	SJVAPCD with CARB oversight	Requires quantification of TAC emissions, use of BACT, and preparation of an HRA.	8.0, 5.0
H&SC, Part 6, § 44300 et seq. (Air Toxics "Hot Spots")	SJVAPCD with CARB/OEHHA oversight	Requires inventorying of TACs and HRA, as well as public notification of predicted health risks.	8.3.
H&SC § 41700	SJVAPCD with CARB oversight	Prohibits emissions in quantities that adversely affect public health, other businesses, or property.	5.0
Local			
SJVAPCD Rule 2520, Section 2.1	SJVAPCD	Requires Federally Mandated Operating Permit for major sources of air toxics	The Project will not be a major source of HAPs, thus this regulation does not apply.
SJVAPCD Rule 2550	SJVAPCD	Requires use of TBACT for major HAP sources to achieve MACT.	8.0
SJVAPCD Rule 4102, Section 4.1 and Policy APR 1905	SJVAPCD	Requires sources to not discharge air toxics detrimental to public health and prepare a HRA.	8.0

Notes:

BACT = Best Available Control Technology
CARB = California Air Resources Board
CCR = California Code of Regulations
CEC = California Energy Commission
H&SC = Health and Safety Code
HAP = hazardous air pollutant
HRA = Health Risk Assessment
LORS = laws, ordinances, regulations, and standards
MACT = Maximum Available Control Technology
OEHHA = Office of Environmental Health Hazard Assessment
SJVAPCD = San Joaquin Valley Air Pollution Control District
TAC = toxic air contaminant
TBACT = Toxic Best Available Control Technology
USEPA = U.S. Environmental Protection Agency

Federal

The federal Clean Air Act of 1970, 42 USC 7401 *et seq*., as amended in 1977 and 1990, requires that the public be protected from unhealthful exposure to air pollutants. Based on the results of the risk assessment, health risks due to Project emissions of air toxics will not exceed acceptable levels. Emissions of criteria pollutants will be minimized by applying BACT to the facility. Increases in emissions of criteria pollutants will be fully offset.

State

California Public Resource Code § 25523(a); 20 CCR § 1752.5, 2300-2309, and Division 2 Chapter 5, Article 1, Appendix B, Part (1), requires that protection of environmental quality be ensured and that a quantitative HRA be performed. The HRA discussed in this section satisfies this requirement.

The California Clean Air Act, TAC Program, HSC § 39650, *et seq*. requires quantification of TAC emissions, use of BACT, and preparation of an HRA. The Project will not cause unsafe exposure to TACs based on results of the HRA discussed in this section and a BACT assessment for the Project has been performed (see Appendix D2).

California Health & Safety Code, Part 6, § 44300 *et seq*. (Air Toxics "Hot Spots") requires inventorying of TACs and HRA, as well as public notification of predicted health risks. The HRA discussed in this section satisfies this requirement.

California Health & Safety Code § 41700 prohibits emissions in quantities that adversely affect public health, other businesses, or property. Section 7.0, and the HRA discussed in this section satisfy this requirement.

Local

SJVAPCD Rule 2550 requires use of TBACT for major HAP sources to achieve Maximum Available Control Technology. The Project will not be a major source of HAPs. Therefore, this regulation does not apply.

SJVAPCD Rule 4102, Section 4.1 requires an HRA to estimate the maximum potential public exposure and health risk for purpose of approving the permit to operate and issuing public notice if necessary. The HRA discussed in this section satisfies this requirement.

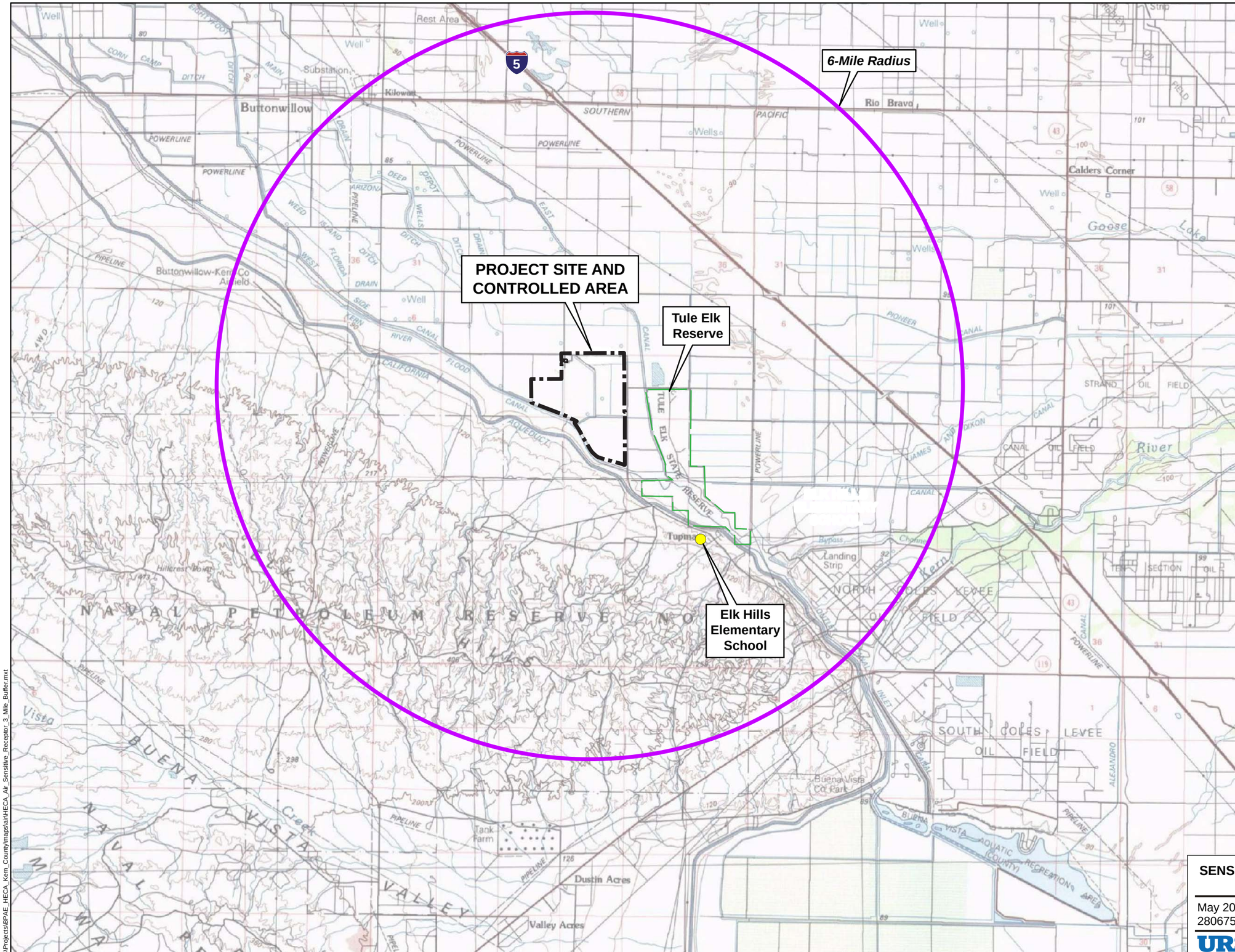

LEGEND

- Project Site and Controlled Area
- 6-Mile Radius
- Sensitive Receptor

N

0 0.75 1.5 3
Scale in Miles

Sources:
USGS (30'x60' quads: Taft 1982). Created using TOPO!, ©2006 National Geographic Maps, All Rights Reserved.
Sensitive Receptor (Appendix M).

Note:
The Taft, CA Quad (1982) has been edited to reflect current condition.

SENSITIVE RECEPTORS LOCATED WITHIN 6 MILES OF THE PROJECT SITE

May 2009 — Hydrogen Energy California (HECA)
28067571 — Kern County, California

URS

FIGURE 8-1

G:\Projects\BPAE_HECA_Kern_County\maps\air\HECA_Air_Sensitive_Receptor_3_Mile_Buffer.mxt

5/21/09 vsa..T:\HECA\GRAPHICS\5.06 Pub Health\5.6-1_Air_Sensitve_Receptor_6_Mile_Buffer_052109.ai

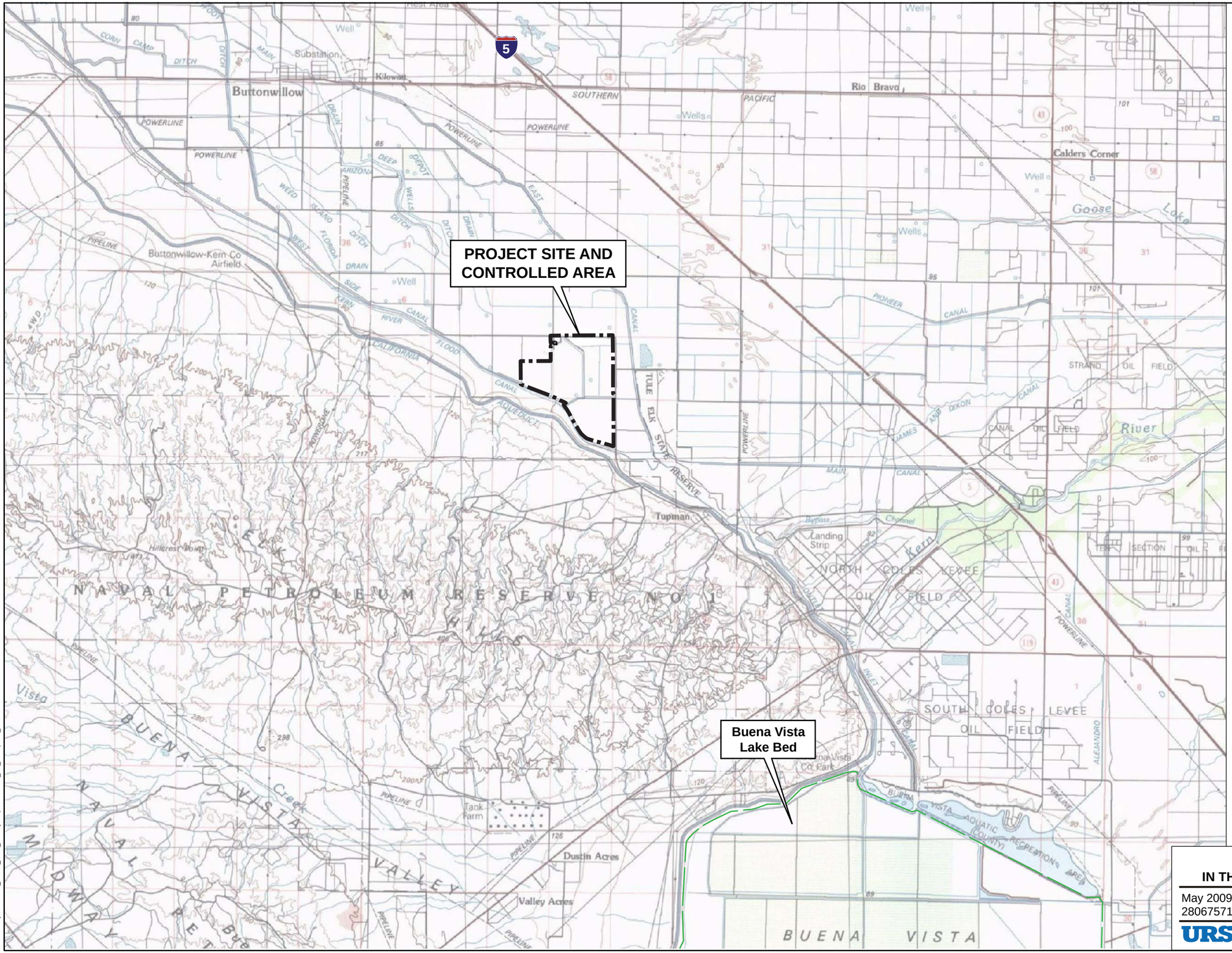

LEGEND

Project Site and Controlled Area

Sensitive Receptor

N

0 0.75 1.5 3

Scale in Miles

Sources:
USGS (30'x0' quads: Taft 1982). Created using TOPO!, ©2006 National Geographic Maps, All Rights Reserved.

Note:
The Taft, CA Quad (1982) has been edited to reflect current condition.

RECEPTOR OF INTEREST IN THE VICINITY OF THE PROJECT SITE

May 2009 Hydrogen Energy California (HECA)
28067571 Kern County, California

URS

FIGURE 8-2

Y:\GIS\Projects\BPAE_HECA_Kern_County\maps\air\HECA_Air_Receptors_Interest.mxt

5/14/09 vsa..T:\HECA\GRAPHICS\5.06 Pub Health\5.6-2_Air_Receptors_Interest_051409.ai

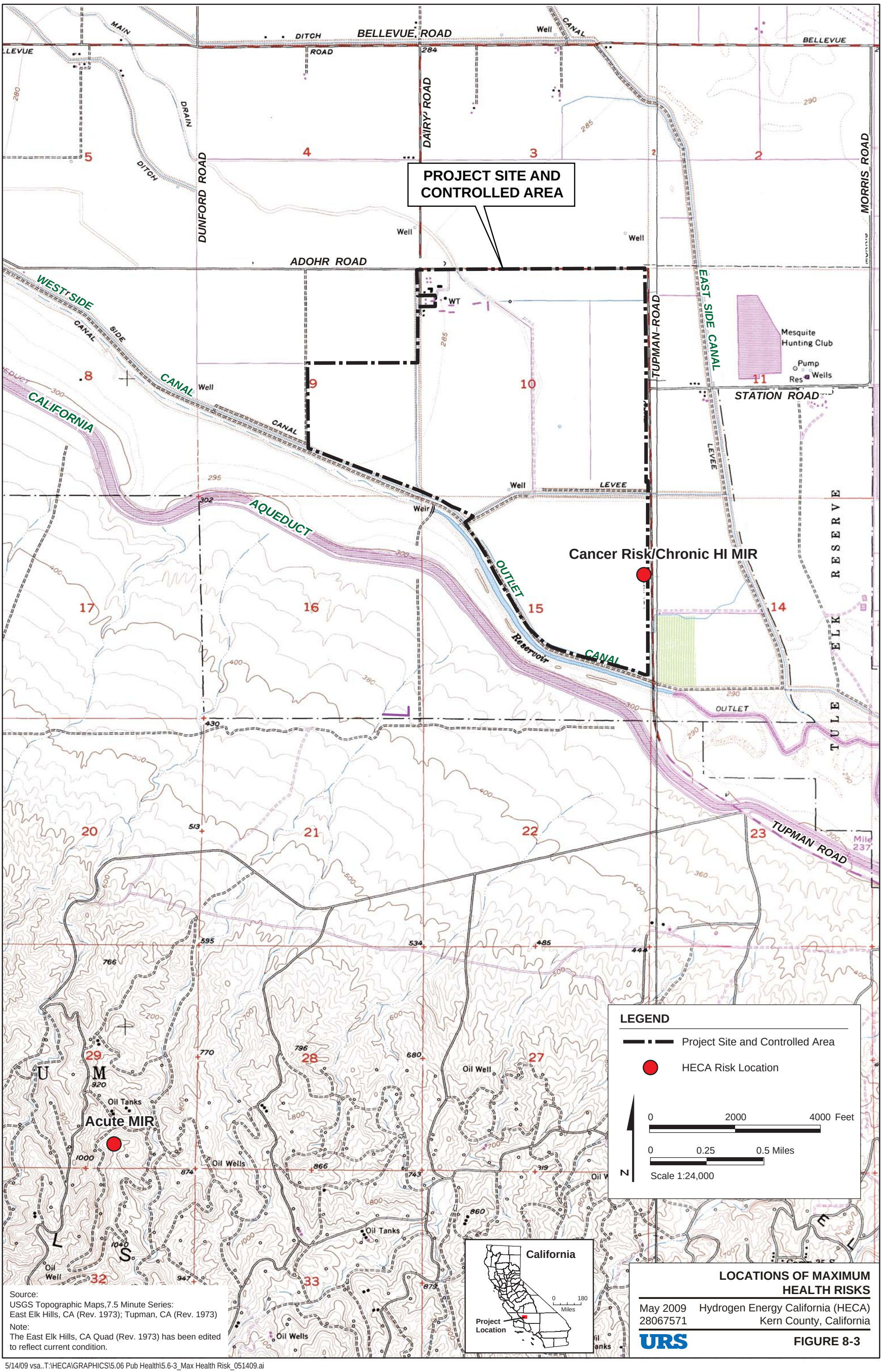

Source:
USGS Topographic Maps,7.5 Minute Series:
East Elk Hills, CA (Rev. 1973); Tupman, CA (Rev. 1973)

Note:
The East Elk Hills, CA Quad (Rev. 1973) has been edited to reflect current condition.

LOCATIONS OF MAXIMUM HEALTH RISKS

May 2009 Hydrogen Energy California (HECA)
28067571 Kern County, California

URS

FIGURE 8-3

5/14/09 vsa..T:\HECA\GRAPHICS\5.06 Pub Health\5.6-3_Max Health Risk_051409.ai

Appendix A
References

Auer, August H., Jr. 1978. American Meteorological Society. Journal of Applied Meteorology, 17(5): 636-643. "Correlation of Land Use and Cover with Meteorological Anomalies," May 1978.

Breiner, Joan; Benjamin Gimeno, and Mark Fenn, 2007. "Calculation of Theoretical and Empirical Nutrient N Critical Loads in the Mixed Confier Ecosystems of Southern California," March 2007.

Cal/EPA/OEHHA (California Environmental Protection Agency and Office of Environmental Health Hazard Assessment). 1999. Air Toxics Hot Spots Program Risk Assessment Guidelines, Part I. Technical Support Document for the Determination of Acute Reference Exposure Levels for Airborne Toxicants.

Cal/EPA/OEHHA (California Environmental Protection Agency and Office of Environmental Health Hazard Assessment). 2000. Air Toxics Hot Spots Program Risk Assessment Guidelines, Part III: Technical Support Document for the Determination of Noncancer Chronic Reference Exposure Levels.

Cal-EPA/OEHHA (California Environmental Protection Agency and Office of Environmental Health Hazard Assessment). 2003. Air Toxics Hot Spots Program Risk Assessment Guidelines: The Air Toxics Hot Spots Program Guidance Manual for Preparation of Health Risk Assessments. August.

Cal/EPA/OEHHA (California Environmental Protection Agency and Office of Environmental Health Hazard Assessment). 2005. Air Toxics Hot Spots Risk Assessment Guidelines, Part II: Technical Support Document for Describing Available Cancer Potency Factors.

California Air Resources Board (CARB). 1996. California Air Toxics Emission Factor (CATEF) Database, Version 1.2.

CARB (California Air Resources Board), 2000. *Risk Management Guidance for the Permitting of New Stationary Source Diesel-Fueled Engines*, October 2000.

CARB (California Air Resources Board). 2003. HARP User Guide – Software for Emission Inventory Database Management, Air Dispersion Modeling Analyses, and Health Risk Assessment version 1.3, Air Resources, Board, California Environmental Protection Agency. December 2003.

CARB (California Air Resources Board), 2007. *Off-Road Mobile Source Emission Factors, Off-Road* Emissions Inventory Program.

CARB (California Air Resources Board). 2009. Top 4 Air Quality Data Summaries, http://www.arb.ca.gov/adam/cgi-bin/db2www/adamtop4b.d2w/start. Accessed April 1, 2009.

California Department of Public Health. 2007. 2007 County Profiles, REF at http://ww2.cdph.ca.gov/programs/OHIR/Documents/kern.xls

CCAR (California Climate Action Registry). 2009. California Climate Action Registry General Reporting Protocol, ver. 3.1. January 2009

CEC (California Energy Commission). 1997. "Regulations Pertaining to the Rules of Practice and Procedure and Plant Site Certification." Title 20, California Code of Regulations. Chapters 1, 2, and 5.

CEC (California Energy Commission). 2006. Rules of Practice and Procedure and Power Plant Site Certification Regulations Revisions, 04-SIT-2, December 14, 2006.

Chung, V. 2008. Personal Communication, California Department of Environmental Health. June 6, 2008

Jinadu, B.A., M.D., M.P.H. 1995. Valley Fever Task Force Report on the Control of *Coccidioides Imitis* REF at http://www.co.kern.ca.us/health/publications.asp

Jinadu, B.A. M.D., M.P.H., 2003. *Kern County Department of Public Health: Health Status Report – 2003*. http://www.co.kern.ca.us/health/epivital.asp

Kern County Department of Public Health. 2003. Health Status Report – 2003. http://www.co.kern.ca.us/health/epivital.asp.MRI (Midwest Research Institute). 1996. Improvement of Specific Emission Factors (BACM Project No. 1), Final Report. Prepared by Midwest Research Institute for South Coast AQMD.

National Park Service, 2007. Particulate Matter Speciation: http://www2.nature.nps.gov/air/permits/ect/index.cfm.

SCAQMD (South Coast Air Quality Management District). 1993. *CEQA Air Quality Handbook.* April 1993.

URS Corporation. 2009. Air Quality Modeling Protocol for the Hydrogen Energy California (HECA) Project, Kern County. Prepared by URS for San Joaquin Valley Air Pollution Control District, California Energy Commission, U.S. Environmental Protection Agency Region IX and National Park Service.

USEPA (U.S. Environmental Protection Agency), 1985. *Guideline for Determination of Good Engineering Stack Height (Technical Support Document for the Stack Height Regulation*) (Revised), EPA-450/4-80-023R. Office of Air Quality Planning and Standards, U.S. Environmental Protection Agency, Research Triangle Park, North Carolina. June 1985.

USEPA (U.S. Environmental Protection Agency), 1988. *Workbook for Plume Visual Impact Screening and Analysis*, U.S. Environmental Protection Agency, Research Triangle Park, NC. September 1988.

USEPA (U.S. Environmental Protection Agency), 1992b. *Addendum to Workbook for Plume Visual Impact Screening and Analysis*, U.S. Environmental Protection Agency, Research Triangle Park, NC. October 1992.

USEPA (U.S. Environmental Protection Agency). 1990. *New Source Review Workshop Manual Prevention of Significant Deterioration and Nonattainment Area Permitting* (Draft), Office of Air Quality Planning and Standards, U.S. Environmental Protection Agency, Research Triangle Park, NC 27711. October 1990.

USEPA (U.S. Environmental Protection Agency). 1992. *Screening Procedures for Estimating the Air Quality Impact of Stationary Sources, Revised*. EPA-454/R-92-019. October 1992.

USEPA (U.S. Environmental Protection Agency). 1995a. *Building Profile Input Program-Prime*. Version 98086.

USEPA (U.S. Environmental Protection Agency). 1995b. *Screen3 Model User's Guide*. EPA-454/B-95-004. September 1995.

USEPA (U.S. Environmental Protection Agency), 1998. Interagency Workgroup On Air Quality Modeling (IWAQM) Phase 2 Summary Report and Recommendations for Modeling Long Range Transport Impacts (EPA-454/R-98-019), U.S. Environmental Protection Agency, Research Triangle Park, NC. December 1998.

USEPA (U.S. Environmental Protection Agency), 2000. Meteorological Monitoring Guidance for Regulatory Modeling Applications. February 2000.

USEPA (U.S. Environmental Protection Agency), 2003. Guideline on Air Quality Models. 40 CFR51 Appendix W. July 1, 2003 Edition.

USEPA (U.S. Environmental Protection Agency), 2004. User's Guide for the AMS/EPA Regulatory Model-AERMOD. (EPA-454/B-03-001). September 2004.USEPA (U.S. Environmental Protection Agency). 2004. *Guidance for Quantifying and Using Long Duration Switch Yard Locomotive Idling Emission Reductions in State Implementation Plans*. EPA420-B-04-002. January 2004

USEPA (U.S. Environmental Protection Agency). 2005. *Average Carbon Dioxide Emissions Resulting from Gasoline and Diesel Fuel*. EPA 420-F-05-001. February 2005.

USEPA (U.S. Environmental Protection Agency), 2005. AERMOD Implementation Guide. September 2005.

USEPA (U.S. Environmental Protection Agency), 2006a. Addendum to User's Guide for the AMS/EPA Regulatory Model-AERMOD. December 2006.

USEPA (U.S. Environmental Protection Agency), 2006b. U.S. EPA AirData.

(U.S. Environmental Protection Agency), 2008a. AERMOD Implementation Guide. January 2008.

USEPA (U.S. Environmental Protection Agency), 2008b. AERSURFACE User's Guide. January 2008.

USEPA ((U.S. Environmental Protection Agency). 2009a. AIRS Air Quality Monitoring Data Reports, www.epa.gov/air/data/index.html, accessed April 1, 2009.

U.S. Forest Service and National Park Service. 2005. CALPUFF Reviewer's Guide (DRAFT), prepared by Howard Gebhart. U.S. Department of Agriculture. September 2005.

U.S. Forest Service et al. 2000. Federal Land Managers Air Quality Related Values Workgroup (FLAG) Phase 1 Report. Prepared by U.S. Forest Service Air Quality Program, National Park Service Air Resources Division, U.S. Fish and Wildlife Service Air Quality Branch. December 2000.

SJVAPCD (San Joaquin Valley Air Pollution Control District). 2002. Guidelines for Assessing and Mitigating Air Quality Impacts. January.

U.S. Department of Energy, National Energy Technology Laboratory, Major Environmental Aspects of Gasification-based Power Generation Technologies, Final Report, December 2002.

U.S. Department of Health and Human Services. 2000. Healthy People 2010: Understanding and Improving Health. 2nd ed. Washington, DC: U.S. Government Printing Office, November 2000.

USEPA (U.S. Environmental Protection Agency). 1995. AP-42 Compilation of Air Pollutant Emission Factors, Volume 1: Stationary Point and Area Sources, Fifth Edition.

Western Regional Climate Center. 2008. Desert Research Institute, Las Vegas, NV. (http://www.wrcc.dri.edu/).

Western Regional Climate Center. 2009. Buttonwillow, CA, http://www.wrcc.dri.edu/cgi-bin/cliMAIN.pl?ca1244, accessed February 2009.

❖❖❖

Appendix B
Application Forms

❖❖❖

1 Authority to Construct/Permit to Operate Application Form

1 CEQA Information Supplemental Form

3 Emergency Low-Use IC Engines (Non-Ag Operations) Supplemental Forms (2 Standby Diesel Generators and 1 Fire Pump Engine)

2 Gas Turbines Supplemental Forms (1 GE 7FB CTG and 1 Aux CTG)

4 Boilers, Steam Generators, Dryers, and Process Heaters Supplemental Forms (1 Aux Boiler and 3 Refractory Heaters)

6 Baghouses Supplemental Forms (Dust Collector 1 to 6)

3 Flares Supplemental Forms (1 Gasification Flare, 1 SRU Flare and, 1 Rectisol Flare)

1 Flare Gas Data Sheet

❖❖❖

San Joaquin Valley Air Pollution Control District

www.valleyair.org

Permit Application For:

[X] AUTHORITY TO CONSTRUCT (ATC) - New Emission Unit
[ ] AUTHORITY TO CONSTRUCT (ATC) - Modification Of Emission Unit With Valid PTO/Valid ATC
[ ] AUTHORITY TO CONSTRUCT (ATC) - Renewal of Valid Authority to Construct
[ ] PERMIT TO OPERATE (PTO) - Existing Emission Unit Now Requiring a Permit to Operate

1. PERMIT TO BE ISSUED TO: Hydrogen Energy International, LLC

2. MAILING ADDRESS:
STREET/P.O. BOX: One World Trade Center, Suite 1600
CITY: Long Beach STATE: CA ZIP CODE: 90831-1600 (9-DIGIT)

3. LOCATION WHERE THE EQUIPMENT WILL BE OPERATED:
STREET: _____ CITY: _____
Section 10 of Township 30 South, Range 24 East in Kern County (APNs : part of 159-040-16 and part of 159-040-18)

WITHIN 1,000 FT OF A SCHOOL? [ ] YES [X] NO

S.I.C. CODE(S) OF FACILITY (*If known*):

4. GENERAL NATURE OF BUSINESS: Integrated Gasification Combined Cycle Power Plant

INSTALL DATE:

5. TITLE V PERMIT HOLDERS ONLY: Do you request a COC (EPA Review) prior to receiving your ATC (*If yes, please complete and attach a Compliance Certification form (TVFORM-009)*? [ ] YES [ ] NO

6. DESCRIPTION OF EQUIPMENT OR MODIFICATION FOR WHICH APPLICATION IS MADE (include Permit #'s if known, and use additional sheets if necessary)
See Section 3.0 of the Application Package

7. PERMIT REVIEW PERIOD: Do you request a three- or ten-day period to review the draft Authority to Construct permit? Please note that checking "YES" will delay issuance of your final permit by a corresponding number of working days. See instructions for more information on this review process.
[ ] 3-day review
[ ] 10-day review
[ ] No review requested

8. HAVE YOU EVER APPLIED FOR AN ATC OR PTO IN THE PAST? [ ] YES [X] NO
If yes, ATC/PTO #:_____

9. IS THIS APPLICATION FOR THE CONSTRUCTION OF A NEW FACILITY? [X] YES [ ] NO
(If "Yes" is checked, please complete the CEQA Information form)

10. IS THIS APPLICATION SUBMITTED AS THE RESULT OF EITHER A NOTICE OF VIOLATION OR A NOTICE TO COMPLY? [ ] YES [X] NO
If yes, NOV/NTC #:_____

Optional Section

11. DO YOU WANT TO PARTICIPATE IN EITHER OF THE FOLLOWING VOLUNTARY PROGRAMS:

"HEALTHY AIR LIVING (HAL)"
[ ]Yes, please send info

"INSPECT"
[ ] Yes, please send info

12. TYPE OR PRINT NAME OF APPLICANT:
Mark Strehlow and Gregory D Skannal

TITLE OF APPLICANT: Leader, Air Quality and Public Health

13. SIGNATURE OF APPLICANT: DATE:

PHONE #: ( )
FAX #: ( )
E-MAIL:

FOR APCD USE ONLY:

DATE STAMP:

FILING FEE RECEIVED: $_____ CHECK #:_____

DATE PAID: _____

PROJECT #: _____ FACILITY ID:_____

San Joaquin Valley Air Pollution Control District
Supplemental Application Form

CEQA Information

The San Joaquin Valley Air Pollution Control District (District) is required by state law, the California Environmental Quality Act (CEQA), to review discretionary permit project applications for potential air quality and other environmental impacts. This form is a screening tool to assist the District in clarifying whether or not the project has the potential to generate significant adverse environmental impacts that might require preparation of a CEQA document (CEQA Guidelines §15060(a).

PERMIT TO BE ISSUED TO: Hydrogen Energy International LLC
LOCATION WHERE THE EQUIPMENT WILL BE OPERATED: Section 10 of Township 30 South, Range 24 East in Kern County (APNs : part of 159-040-16 and part of 159-040-18)

Section 1:	**Agency Approvals**		
	Check "Yes" or "No" as applicable.	**Yes**	**No**
1.	Has a Lead Agency prepared an environmental review document (Environmental Impact Review, Mitigated Negative Declaration, Negative Declaration, or Notice of Exemption) for this project?	☐ *Note 1*	☒
2.	Is a Lead Agency in the process of preparing an environmental review document (Environmental Impact Review, Mitigated Negative Declaration, Negative Declaration, or Notice of Exemption) for this project?	☒ *Note 1*	☐
3.	*If "**Yes**" is checked for <u>either</u> question 1 or 2, please provide the following information:* - *Lead Agency name : California Energy Commission* - *Name of Lead Agency contact person: Rod Jones* - *Type of CEQA document prepared: Application for Certification* - *Project reference number: 08-AFC-8* - *If a CEQA Environmental Review document has been prepared for this project, **please attach a <u>copy of the Notice of Determination or the Notice of Exemption</u>*** *If "**No**" is checked for <u>both</u> question 1 and 2, please attach an explanation*:		

<u>Note 1</u>: If you answered YES to question 1 OR 2 do not complete Section 2 of this form, and please return the completed form to the Air Pollution Control District.

Section 2:	**Project Information**		
Note: If you answered YES to question 1 OR 2 of Section 1 do not complete this section, and please return the completed form to the Air Pollution Control District.		**Yes**	**No**
1.	Would this project result in more than 47 heavy-duty truck (HD) one-way trips per day to and from the facility? (23 heavy-duty truck (HD) round trips per day).	☐	☐
2.	Would this project result in a need for more than 350 new employees?	☐	☐
3.	Would this project result in more than 700 customer trips per day to and from the facility?	☐	☐
4.	Would this project increase the demand for water at the facility by more than 5,000,000 gallons per day?	☐	☐
5.	Would this project require construction of new water conveyance infrastructure *Post-project facility water demand exceeding the capacity of local water purveyor.*	☐	☐
6.	Would this project create a permanent need for new or additional public services for Solid Waste Disposal or Hazardous Waste Disposal? *Post-project waste discharge exceeding the capacity of the local Solid Waste Disposal or Hazardous Waste Disposal.*	☐	☐
7.	Would this project result in noticeable off-site odors that have the potential to generate nuisance complaints?	☐	☐
8.	Would this project include equipment with a noise specification greater than 90 decibels (db)?	☐	☐
9.	Has this project generated any known public concern regarding potential adverse impacts? *Public concern may be interpreted as concerns by local groups at public meetings, adverse media attention such as negative newspapers or other periodical publications, local news programs, environmental justice issues, etc.*	☐	☐
10.	Would this project result in any demolition, excavation, and/or grading/construction activities outside the perimeter of the existing facility?	☐	☐
11.	Would this project result in any demolition, excavating, and/or grading construction activities that encompass an area exceeding 20,000 Square feet (inside or outside the perimeter of the existing facility)?	☐	☐
12.	Is this project part of a larger development activity at the facility that collectively would result in answering YES to any of the questions listed above?	☐	☐

FOR DISTRICT USE ONLY – CEQA ANALYSIS REQUEST

PERMIT	**PIC**
Permit Engineer Name:	AQS Name:
Facility #: Facility Name:	CEQA #:
Project #:	Project with potential public concern?: ☐ Yes ☐ No
Project subject to Public Notice?: ☐ Yes ☐ No	Detailed CEQA analysis required?: ☐ Yes ☐ No
Please summarize or attach the following: - ☐ Copy of application form - ☐ Project Location - ☐ SSIPE calculation - ☐ Project Description - ☐ Expected date of ATC(s) issuance: _____	- ☐ CEQA paragraph sent to permit engineer - ☐ NOD prepared - ☐ County filing fees District check prepared - ☐ Game and Fish fees District check or proof of payment *(District check prepared after receiving applicant check)* - ☐ Ok to issue ATC
Date form is forwarded to PIC SVr:	Date form is forwarded to permit engineer:

San Joaquin Valley Air Pollution Control District
Supplemental Application Form

Emergency/Low-Use IC Engines for Non-Agricultural Operations

Please complete one form for each engine.

This form must be accompanied by a completed Application for Authority to Construct and Permit to Operate form

PERMIT TO BE ISSUED TO:	Hydrogen Energy International LLC
LOCATION WHERE THE EQUIPMENT WILL BE OPERATED:	Section 10 of Township 30 South, Range 24 East in Kern County

EQUIPMENT DESCRIPTION (Standby Diesel Generator 1)

Engine Details	Engine Manufacturer: TBD		Number of Cylinders:
	Engine Model: TBD		Engine Year of Manufacture: TBD
	Engine Serial Number: TBD		Engine Tier Rating: TBD
	Engine Certification Family Number: TBD		
	Engine's Type of Combustion: ☐ Rich-Burn ☐ Lean-Burn ☒ 4-Stroke ☐ 2-Stroke		
	Engine Manufacturer's Maximum Rated Power Output (per the data plate): _____ bhp		
	Engine's Rated Power Output for the Process the Engine Serves: 2800 bhp		
Process Data	Process the Engine Serves:		
	Electrical Power Generation Only	Generator Manufacturer: TBD	Model: TBD
		Power Output: 2000 kW	
	Will this equipment be used in an electric utility rate reduction program? ☐ Yes ☒ No		
Fuel Data	Fuel Type: ☒ Diesel ☐ Natural Gas ☐ LPG/Propane ☐ Gasoline ☐ Other: _____		
	For "Other" fuels only: Higher Heating Value: _____ Btu/scf, or _____ Btu/gal, For "Other" fuels only: An Ultimate Fuel Analysis or the combustion F-Factor _____dscf/MMBtu		
	Sulfur Content: _____ gr/100 scf (gaseous fuel) or 15 ppm by weight (liquid fuel)		
	Fuel Consumption at Maximum Rated Output: 140 gal/hr, or _____ scf/hr		
Rule 4702 Type of Use	☒ Emergency Standby - Limited exclusively to power primary mechanical or an electrical generator during periods of unscheduled power outages beyond the control of the operator, and limited from 20 to 100 hrs/yr (depending on the engine's PM_{10} emission factor) for maintenance and testing purposes only. ☐ This engine is specifically used to power a pump for a municipal water supply. ☐ I request the higher opacity limit of 40% with the corresponding operational limits of 30 minutes per week and 2 hours per month for maintenance and testing. (CH&SC 41701.6) ☐ I request the lower opacity limit of 20%. ☐ This engine is specifically used to provide power at a health care facility. (CH&SC 1250) ☐ This engine is subject to Office of Statewide Health Planning and Development (OSHPD) requirements. ☐ Special Case Emergency - Limited exclusively to preserve or protect property, human life, or public health during a disaster or a state emergency (e.g. fire or flood) and limited to 20 to 100 hrs/yr (depending on the engine's PM_{10} emission factor) for maintenance and testing purposes only. ☐ This engine is specifically used to power a direct-drive firewater pump. ☐ This firewater pump engine is subject to National Fire Protection Association (NFPA) requirements. ☐ Low Use - Limited to ≤ 200 hrs/yr of operation for **ALL** purposes combined, including maintenance and testing.		
Hour Meter	Note: All engines are required to have either a nonresettable elapsed time meter or an alternate device, method, or technique, approved by the APCO, for determining elapsed operating time. ☐ Equipped with a Nonresettable Elapsed Operating Time Meter ☒ Alternate Method (please provide details): TBD		

EMISSIONS CONTROL

Emissions Control Equipment (Check all that apply)	☐ Positive Crankcase Ventilation System	☐ 90% Efficient crankcase emission control device
	☐ Turbocharger	☐ Intercooler/Aftercooler
	☐ Automatic Air/Fuel Ratio or O_2 Controller - Manufacturer: _____	
	☐ Non-Selective Catalytic Reduction: Manufacturer: _____ Model: _____ Control Efficiencies: NO_X _____ %, SO_X _____ %, PM_{10} _____ %, CO _____ %, VOC _____ %	
	☐ Particulate Filter - Manufacturer: _____ Model: _____ Control Efficiency: _____ %	
	☐ Other (please specify):	

EMISSIONS DATA

Note: See District BACT and District Rule 4702 requirements for applicability to proposed engine at http://www.valleyair.org/busind/pto/bact/chapter3.pdf and http://www.valleyair.org/rules/currntrules/r4702.pdf.

	Pollutant	(g/bhp-hr)	(g/kW-hr)	(ppmvd)
Emissions Data	Nitrogen Oxides (NO_x)	0.5		
	Volatile Organic Compounds (VOC)	0.11		
	NO_x + NMHC			
	Particulate Matter (PM_{10})	0.03		
	Carbon Monoxide	0.29		
	% O_2, dry basis, if corrected to other than 15%: _____ %			
Source of Data	☒ Manufacturer's Specifications ☐ Emissions Source Test ☐ CARB/EPA Certification ☒ Other _USEPA Tier 4 standards for 2011 model equipment_ **Note: please provide copies of all sources of emissions data.**			

HEALTH RISK ASSESSMENT DATA

Operating Hours	Maximum Operating Schedule: _4_ hours per day, and _50_ hours per year		
Receptor Data	Distance to nearest Residence	_____ feet	Distance is measured from the proposed stack location to the nearest boundary of the nearest apartment, house, dormitory, etc.
	Direction to nearest Residence	_____	Direction from the stack to the receptor, i.e. Northeast or South.
	Distance to nearest Business	_____ feet	Distance is measured from the proposed stack location to the nearest boundary of the nearest office building, factory, store, etc.
	Direction to nearest Business	_____	Direction from the stack to the receptor, i.e. North or Southwest.
Stack Parameters	Release Height	_20_ feet above grade	
	Stack Diameter	_14_ inches at point of release	
	Rain Cap	☐ Flapper-type ☐ Fixed-type ☐ None ☐ Other: _____	
	Direction of Flow	☐ Vertically Upward ☐ Horizontal ☐ Other: _____ ° from vert. or _____ ° from horiz.	
Exhaust Data	Flowrate: _15000_ acfm	Temperature: _760_ °F	
Transportable	Is this engine transportable? ☐ Yes ☒ No Note: This is used for health risk assessment purposes only.		
Facility Location	☐ Urban (area of dense population) ☒ Rural (area of sparse population)		

San Joaquin Valley Air Pollution Control District
Supplemental Application Form

Emergency/Low-Use IC Engines for Non-Agricultural Operations

Please complete one form for each engine.

This form must be accompanied by a completed Application for Authority to Construct and Permit to Operate form

PERMIT TO BE ISSUED TO:	Hydrogen Energy International LLC
LOCATION WHERE THE EQUIPMENT WILL BE OPERATED:	Section 10 of Township 30 South, Range 24 East in Kern County

EQUIPMENT DESCRIPTION (Standby Diesel Generator 2)

Engine Details	Engine Manufacturer: TBD		Number of Cylinders:
	Engine Model: TBD		Engine Year of Manufacture: TBD
	Engine Serial Number: TBD		Engine Tier Rating: TBD
	Engine Certification Family Number: TBD		
	Engine's Type of Combustion: ☐ Rich-Burn ☐ Lean-Burn ☒ 4-Stroke ☐ 2-Stroke		
	Engine Manufacturer's Maximum Rated Power Output (per the data plate): _____ bhp		
	Engine's Rated Power Output for the Process the Engine Serves: 2800 bhp		
Process Data	Process the Engine Serves:		
	Electrical Power Generation Only	Generator Manufacturer: TBD	Model: TBD
		Power Output: 2000 kW	
	Will this equipment be used in an electric utility rate reduction program? ☐ Yes ☒ No		
Fuel Data	Fuel Type: ☒ Diesel ☐ Natural Gas ☐ LPG/Propane ☐ Gasoline ☐ Other: _____		
	For "Other" fuels only: Higher Heating Value: _____ Btu/scf, or _____ Btu/gal, For "Other" fuels only: An Ultimate Fuel Analysis or the combustion F-Factor _____dscf/MMBtu		
	Sulfur Content: _____ gr/100 scf (gaseous fuel) or 15 ppm by weight (liquid fuel)		
	Fuel Consumption at Maximum Rated Output: 140 gal/hr, or _____ scf/hr		
Rule 4702 Type of Use	☒ Emergency Standby - Limited exclusively to power primary mechanical or an electrical generator during periods of unscheduled power outages beyond the control of the operator, and limited from 20 to 100 hrs/yr (depending on the engine's PM_{10} emission factor) for maintenance and testing purposes only. ☐ This engine is specifically used to power a pump for a municipal water supply. ☐ I request the higher opacity limit of 40% with the corresponding operational limits of 30 minutes per week and 2 hours per month for maintenance and testing. (CH&SC 41701.6) ☐ I request the lower opacity limit of 20%. ☐ This engine is specifically used to provide power at a health care facility. (CH&SC 1250) ☐ This engine is subject to Office of Statewide Health Planning and Development (OSHPD) requirements. ☐ Special Case Emergency - Limited exclusively to preserve or protect property, human life, or public health during a disaster or a state emergency (e.g. fire or flood) and limited to 20 to 100 hrs/yr (depending on the engine's PM_{10} emission factor) for maintenance and testing purposes only. ☐ This engine is specifically used to power a direct-drive firewater pump. ☐ This firewater pump engine is subject to National Fire Protection Association (NFPA) requirements. ☐ Low Use - Limited to ≤ 200 hrs/yr of operation for **ALL** purposes combined, including maintenance and testing.		
Hour Meter	Note: All engines are required to have either a nonresettable elapsed time meter or an alternate device, method, or technique, approved by the APCO, for determining elapsed operating time. ☐ Equipped with a Nonresettable Elapsed Operating Time Meter ☒ Alternate Method (please provide details): TBD		

EMISSIONS CONTROL

Emissions Control Equipment (Check all that apply)	☐ Positive Crankcase Ventilation System	☐ 90% Efficient crankcase emission control device
	☐ Turbocharger	☐ Intercooler/Aftercooler
	☐ Automatic Air/Fuel Ratio or O_2 Controller - Manufacturer: _____	
	☐ Non-Selective Catalytic Reduction: Manufacturer: _____ Model: _____ Control Efficiencies: NO_X _____ %, SO_X _____ %, PM_{10} _____ %, CO _____ %, VOC _____ %	
	☐ Particulate Filter - Manufacturer: _____ Model: _____ Control Efficiency: _____ %	
	☐ Other (please specify):	

EMISSIONS DATA

Note: See District BACT and District Rule 4702 requirements for applicability to proposed engine at http://www.valleyair.org/busind/pto/bact/chapter3.pdf and http://www.valleyair.org/rules/currntrules/r4702.pdf.

	Pollutant	(g/bhp-hr)	(g/kW-hr)	(ppmvd)
Emissions Data	Nitrogen Oxides (NO_x)	0.5		
	Volatile Organic Compounds (VOC)	0.11		
	NO_x + NMHC			
	Particulate Matter (PM_{10})	0.03		
	Carbon Monoxide	0.29		
	% O_2, dry basis, if corrected to other than 15%: _____ %			
Source of Data	☒ Manufacturer's Specifications ☐ Emissions Source Test ☐ CARB/EPA Certification ☒ Other _USEPA Tier 4 standards for 2011 model equipment_ **Note: please provide copies of all sources of emissions data.**			

HEALTH RISK ASSESSMENT DATA

Operating Hours	Maximum Operating Schedule: _4_ hours per day, and _50_ hours per year		
Receptor Data	Distance to nearest Residence	_____ feet	Distance is measured from the proposed stack location to the nearest boundary of the nearest apartment, house, dormitory, etc.
	Direction to nearest Residence	_____	Direction from the stack to the receptor, i.e. Northeast or South.
	Distance to nearest Business	_____ feet	Distance is measured from the proposed stack location to the nearest boundary of the nearest office building, factory, store, etc.
	Direction to nearest Business	_____	Direction from the stack to the receptor, i.e. North or Southwest.
Stack Parameters	Release Height	_20_ feet above grade	
	Stack Diameter	_14_ inches at point of release	
	Rain Cap	☐ Flapper-type ☐ Fixed-type ☐ None ☐ Other: _____	
	Direction of Flow	☐ Vertically Upward ☐ Horizontal ☐ Other: _____ ° from vert. or _____ ° from horiz.	
Exhaust Data	Flowrate: _15000_ acfm	Temperature: _760_ °F	
Transportable	Is this engine transportable? ☐ Yes ☒ No Note: This is used for health risk assessment purposes only.		
Facility Location	☐ Urban (area of dense population) ☒ Rural (area of sparse population)		

San Joaquin Valley Air Pollution Control District
Supplemental Application Form

Emergency/Low-Use IC Engines for Non-Agricultural Operations

Please complete one form for each engine.

This form must be accompanied by a completed Application for Authority to Construct and Permit to Operate form

PERMIT TO BE ISSUED TO:	Hydrogen Energy International LLC
LOCATION WHERE THE EQUIPMENT WILL BE OPERATED:	Section 10 of Township 30 South, Range 24 East in Kern County

EQUIPMENT DESCRIPTION (Diesel Emergency Firewater Pump)

Engine Details	Engine Manufacturer: TBD		Number of Cylinders:
	Engine Model: TBD		Engine Year of Manufacture: TBD
	Engine Serial Number: TBD		Engine Tier Rating: TBD
	Engine Certification Family Number: TBD		
	Engine's Type of Combustion: ☐ Rich-Burn ☐ Lean-Burn ☒ 4-Stroke ☐ 2-Stroke		
	Engine Manufacturer's Maximum Rated Power Output (per the data plate): _____ bhp		
	Engine's Rated Power Output for the Process the Engine Serves: 556 bhp		
Process Data	Process the Engine Serves: Standby Firewater Pump		
	Electrical Power Generation Only	Generator Manufacturer:	Model:
		Power Output: _____ kW	
	Will this equipment be used in an electric utility rate reduction program? ☐ Yes ☒ No		
Fuel Data	Fuel Type: ☒ Diesel ☐ Natural Gas ☐ LPG/Propane ☐ Gasoline ☐ Other: _____		
	For "Other" fuels only: Higher Heating Value: _____ Btu/scf, or _____ Btu/gal, For "Other" fuels only: An Ultimate Fuel Analysis or the combustion F-Factor _____dscf/MMBtu		
	Sulfur Content: _____ gr/100 scf (gaseous fuel) or 15 ppm by weight (liquid fuel)		
	Fuel Consumption at Maximum Rated Output: 28 gal/hr, or _____ scf/hr		
Rule 4702 Type of Use	☒ Emergency Standby - Limited exclusively to power primary mechanical or an electrical generator during periods of unscheduled power outages beyond the control of the operator, and limited from 20 to 100 hrs/yr (depending on the engine's PM_{10} emission factor) for maintenance and testing purposes only. ☒ This engine is specifically used to power a pump for a municipal water supply. ☐ I request the higher opacity limit of 40% with the corresponding operational limits of 30 minutes per week and 2 hours per month for maintenance and testing. (CH&SC 41701.6) ☐ I request the lower opacity limit of 20%. ☐ This engine is specifically used to provide power at a health care facility. (CH&SC 1250) ☐ This engine is subject to Office of Statewide Health Planning and Development (OSHPD) requirements. ☐ Special Case Emergency - Limited exclusively to preserve or protect property, human life, or public health during a disaster or a state emergency (e.g. fire or flood) and limited to 20 to 100 hrs/yr (depending on the engine's PM_{10} emission factor) for maintenance and testing purposes only. ☐ This engine is specifically used to power a direct-drive firewater pump. ☐ This firewater pump engine is subject to National Fire Protection Association (NFPA) requirements. ☐ Low Use - Limited to ≤ 200 hrs/yr of operation for **ALL** purposes combined, including maintenance and testing.		
Hour Meter	Note: All engines are required to have either a nonresettable elapsed time meter or an alternate device, method, or technique, approved by the APCO, for determining elapsed operating time. ☐ Equipped with a Nonresettable Elapsed Operating Time Meter ☒ Alternate Method (please provide details): TBD		

EMISSIONS CONTROL

Emissions Control Equipment (Check all that apply)	☐ Positive Crankcase Ventilation System	☐ 90% Efficient crankcase emission control device
	☐ Turbocharger	☐ Intercooler/Aftercooler
	☐ Automatic Air/Fuel Ratio or O_2 Controller - Manufacturer: _____	
	☐ Non-Selective Catalytic Reduction: Manufacturer: _____ Model: _____ Control Efficiencies: NO_X _____ %, SO_X _____ %, PM_{10} _____ %, CO _____ %, VOC _____ %	
	☐ Particulate Filter - Manufacturer: _____ Model: _____ Control Efficiency: _____ %	
	☐ Other (please specify):	

EMISSIONS DATA

Note: See District BACT and District Rule 4702 requirements for applicability to proposed engine at http://www.valleyair.org/busind/pto/bact/chapter3.pdf and http://www.valleyair.org/rules/currntrules/r4702.pdf.

	Pollutant	(g/bhp-hr)	(g/kW-hr)	(ppmvd)
Emissions Data	Nitrogen Oxides (NO_x)	1.5		
	Volatile Organic Compounds (VOC)	0.14		
	NO_x + NMHC			
	Particulate Matter (PM_{10})	0.015		
	Carbon Monoxide	2.6		
	% O_2, dry basis, if corrected to other than 15%: _____ %			
Source of Data	☐ Manufacturer's Specifications ☐ Emissions Source Test ☐ CARB/EPA Certification ☒ Other _USEPA Tier 4 standards_ **Note: please provide copies of all sources of emissions data.**			

HEALTH RISK ASSESSMENT DATA

Operating Hours	Maximum Operating Schedule: 4 hours per day, and 50 hours per year		
Receptor Data	Distance to nearest Residence	_____ feet	Distance is measured from the proposed stack location to the nearest boundary of the nearest apartment, house, dormitory, etc.
	Direction to nearest Residence	_____	Direction from the stack to the receptor, i.e. Northeast or South.
	Distance to nearest Business	_____ feet	Distance is measured from the proposed stack location to the nearest boundary of the nearest office building, factory, store, etc.
	Direction to nearest Business	_____	Direction from the stack to the receptor, i.e. North or Southwest.
Stack Parameters	Release Height	20 feet above grade	
	Stack Diameter	8 inches at point of release	
	Rain Cap	☐ Flapper-type ☐ Fixed-type ☐ None ☐ Other: _____	
	Direction of Flow	☐ Vertically Upward ☐ Horizontal ☐ Other: _____ ° from vert. or _____ ° from horiz.	
Exhaust Data	Flowrate: 3600 acfm	Temperature: 850 °F	
Transportable	Is this engine transportable? ☐ Yes ☒ No Note: This is used for health risk assessment purposes only.		
Facility Location	☐ Urban (area of dense population) ☒ Rural (area of sparse population)		

San Joaquin Valley Air Pollution Control District
Supplemental Application Form

Gas Turbines

Please complete one form for each gas turbine.

This form must be accompanied by a completed Application for Authority to Construct and Permit to Operate form

PERMIT TO BE ISSUED TO: Hydrogen Energy International LLC (HEI)

EQUIPMENT DESCRIPTION

Equipment Details	☒ Industrial Frame ☐ Aero Derivative ☐ Other: _____		
	Manufacturer: GE	Model: PG7321 (FB)	Serial Number: TBD
	☐ Simple Cycle ☒ Combined Cycle ☐ Co-generation ☐ Other: _____		
	Nominal (ISO) Rating: 232 MW (at 1 atm, 59°F, 60% Relative Humidity)		
	Is the unit equipped with an auxiliary/duct burner? ☒ Yes ☐ No (Note: If yes, please complete a *Boiler, Steam Generator, Dryer, and Process Heater Supplemental Application form* for the unit.)		
Rule 4703 Type of Use and Emissions Monitoring Provisions	☐ Peaking Unit - limited to no more than 877 hrs/yr of operation ☐ Emergency Standby - limited to less than 200 hrs/yr of operation ☒ Full Time - must have either a Continuous Emission Monitoring System (CEMS) or an alternate emissions monitoring plan (must be approved by the APCO) ☒ CEMS, please specify all pollutants monitored: ☒ NO_x ☒ CO ☒ O_2 ☐ Other: _____ ☐ Alternate Emissions Monitoring Plan (please provide details in additional documentation)		
Fuel Use Meter	☒ Gaseous Fuel Meter ☐ Liquid Fuel Meter ☐ None		
Process Data	Will this unit be used in an electric utility rate reduction program? ☐ Yes ☒ No		
Combustor(s)	Manufacturer: GE	Model: PG7321 (FB, MNQC)	Number of Combustors: 1
	Maximum Heat Input Rating (for all combustors @ ISO standard conditions): _____ Btu/hr		
	Water Injection: ☐ Yes ☐ No	Dry Low NO_x Technology: ☐ Yes ☒ No	
	Steam Injection: ☒ Yes ☐ No For natural gas	Other NO_x Control Technology: Direct nitrogen injection (H2 rich fuel); Selective Catalytic Reduction	

EMISSIONS DATA

Note: See District BACT and District Rule 4703 requirements for applicability to proposed unit at http://www.valleyair.org/busind/pto/bact/chapter3.pdf and http://www.valleyair.org/rules/currntrules/r4703.pdf

Primary Fuel	Fuel Type: ☐ Natural Gas ☐ LPG/Propane ☐ Diesel ☒ Other: Hydrogen-Rich Fuel	
	Higher Heating Value: _____ Btu/gal or _____ Btu/scf	Sulfur Content: < 5 ppmv
	Maximum Fuel Use @ HHV: _____ scf/hr or _____gal/hr	Rated Efficiency (EFF_{Mfg}): _____ %

	Operational Mode	Steady State (ppmv)	Steady State (lb/hr)	Cold Start-up (ppmv)	Cold Start-up (lb/hr)	Shutdown (ppmv)	Shutdown (lb/hr)
Primary Fuel Emissions Data	Nitrogen Oxides		39.7		90.7		62
	Carbon Monoxide		18.1		1,680		126
	Volatile Organic Compounds		3.5		267		21
	Duration			3 hr/day	30 hr/yr	0.5 hr/day	10 hr/yr

% O_2, dry basis, if corrected to other than 15%: 15 % Note that the CTG will also have Hot Startup (Appendix D)

EMISSIONS DATA (continued)

Secondary Fuel	When will the secondary fuel be used? ☒ Primary fuel curtailment ☒ Simultaneously with primary fuel ☐ Other: The CTG have three firing scenarios:burning Hydrogen-Rich Fuel (Primary), Natural gas, or both (co-firing)					
	Fuel Type: ☒ Natural Gas ☐ LPG/Propane ☐ Diesel ☐ Other:_____					
	Higher Heating Value: _____ Btu/gal or _____ Btu/scf			Sulfur Content: < = 12.65 ppmv		
	Maximum Fuel Use @ HHV: _____ scf/hr or _____gal/hr			Rated Efficiency (EFF_{Mfg}): _____ %		
Secondary Fuel Emissions Data	Operational Mode	Steady State (ppmv)	Steady State (lb/hr)	Cold Start-up (ppmv)	Cold Start-up (lb/hr)	Shutdown (ppmv)	Shutdown (lb/hr)
	Nitrogen Oxides		35.1		90.7		62
	Carbon Monoxide		26.7		1,680		126
	Volatile Organic Compounds		6.1		267		21
	Duration (please provide justification)			3 hr/day	30 hr/yr	0.5 hr/day	10 hr/yr
	% O_2, dry basis, if corrected to other than 15%: 15 %						
Source of Data	☒ Manufacturer's Specifications ☐ Emission Source Test ☐ Other _____ (please provide copies)						

EMISSIONS CONTROL

Emissions Control Equipment (Check all that apply)	☒ Inlet Air Filter/Cooler	☒ Lube Oil Vent Coalescer
	☒ Selective Catalytic Reduction - Manufacturer: TBD Model: TBD ☒ Ammonia (NH_3) ☐ Urea ☐ Other: _____	
	☒ Oxidation Catalyst - Manufacturer: TBD Model: TBD	
	Control Efficiencies: NO_x 5 ppmv @ 15% O_2, CO 3 ppmv @ 15% O_2 (H_2 rich); 5 ppmv @ 15% O (nat gas)$_2$	
	☐ Other (please specify):	
	For units equipped with exhaust gas NO_x control equipment and rated < 10 MW, or rated ≥ 10 MW but operated < 4,000 hr/yr, one may choose at least one of the following alternate emission monitoring schemes in lieu of a CEMS (each option below must be approved by APCO on a case-by-case basis. Please include a detailed proposal for each option chosen): ☐ Periodic NO_x emission concentration ☐ Turbine exhaust O_2 concentration ☐ Air-to-Fuel ratio ☐ Flow rate of reducing agents added to turbine exhaust ☐ Catalyst inlet and outlet temperature ☐ Catalyst inlet and exhaust O_2 conc. ☐ Other operational characteristics as approved by the APCO (specify on attached sheet)	

HEALTH RISK ASSESSMENT DATA

Operating Hours	Maximum Operating Schedule: 24 hours per day, and 8,322 hours per year		
Receptor Data	Distance to nearest Residence	_____ feet	Distance is measured from the proposed stack location to the nearest boundary of the nearest apartment, house, dormitory, etc.
	Direction to nearest Residence	_____	Direction from the stack to the receptor, i.e. Northeast or South.
	Distance to nearest Business	_____ feet	Distance is measured from the proposed stack location to the nearest boundary of the nearest office building, factory, store, etc.
	Direction to nearest Business	_____	Direction from the stack to the receptor, i.e. North or Southwest.
Stack Parameters	Release Height	213 feet above grade	
	Stack Diameter	240 inches at point of release	
	Rain Cap	☐ Flapper-type ☐ Fixed-type ☒ None ☐ Other: _____	
	Direction of Flow	☒ Vertically Upward ☐ Horizontal ☐ Other: _____° from vert. or _____° from horiz.	
Exhaust Data	Flowrate: 714,000-1,194,000 acfm	Temperature: 160-200 °F	
Facility Location	☐ Urban (area of dense population) ☒ Rural (area of sparse population)		

FOR DISTRICT USE ONLY

Date:	**FID:**	**Project:**	**Public Notice: [ ] Yes [ ] No**
Comments:			

San Joaquin Valley Air Pollution Control District
Supplemental Application Form

Gas Turbines

Please complete one form for each gas turbine.

This form must be accompanied by a completed Application for Authority to Construct and Permit to Operate form

PERMIT TO BE ISSUED TO: Hydrogen Energy International LLC

EQUIPMENT DESCRIPTION (Aux CTG)

Equipment Details	☐ Industrial Frame ☒ Aero Derivative ☐ Other: _____		
	Manufacturer: GE	Model: LMS100® PA	Serial Number:
	☒ Simple Cycle ☐ Combined Cycle ☐ Co-generation ☐ Other: _____		
	Nominal (ISO) Rating:_____103.1 MW @ 65°F ___MW (at 1 atm, 59°F, 60% Relative Humidity)		
	Is the unit equipped with an auxiliary/duct burner? ☐ Yes ☒ No (Note: If yes, please complete a *Boiler, Steam Generator, Dryer, and Process Heater Supplemental Application form* for the unit.)		
Rule 4703 Type of Use and Emissions Monitoring Provisions	☐ Peaking Unit - limited to no more than 877 hrs/yr of operation ☐ Emergency Standby - limited to less than 200 hrs/yr of operation ☒ Full Time - must have either a Continuous Emission Monitoring System (CEMS) or an alternate emissions monitoring plan (must be approved by the APCO) ☒ CEMS, please specify all pollutants monitored: ☒ NO_x ☒ CO ☒ O_2 ☐ Other: _____ ☐ Alternate Emissions Monitoring Plan (please provide details in additional documentation)		
Fuel Use Meter	☒ Gaseous Fuel Meter ☐ Liquid Fuel Meter ☐ None		
Process Data	Will this unit be used in an electric utility rate reduction program? ☐ Yes ☒ No		
Combustor(s)	Manufacturer:	Model:	Number of Combustors:
	Maximum Heat Input Rating (for all combustors @ ISO standard conditions): _____ Btu/hr		
	Water Injection: ☒ Yes ☐ No	Dry Low NO_x Technology: ☐ Yes ☐ No	
	Steam Injection: ☐ Yes ☐ No	Other NO_x Control Technology: Diluent Injection	

EMISSIONS DATA

Note: See District BACT and District Rule 4703 requirements for applicability to proposed unit at http://www.valleyair.org/busind/pto/bact/chapter3.pdf and http://www.valleyair.org/rules/currntrules/r4703.pdf

Primary Fuel	Fuel Type: ☒ Natural Gas ☐ LPG/Propane ☐ Diesel ☐ Other: none					
	Higher Heating Value: __Btu/gal or 1020-1050 Btu/scf		Sulfur Content: 12.65 ppm by weight or ___gr/scf			
	Maximum Fuel Use @ HHV: _____ scf/hr or _____gal/hr		Rated Efficiency (EFF_{Mfg}): _____ %			
Primary Fuel Emissions Data	Operational Mode	Steady State (ppmv)	Steady State (lb/MMBtu)	Start-up (ppmv)	Start-up (lb/hr)	Shutdown (ppmv)	Shutdown (lb/hr)
	Nitrogen Oxides	2.5			9		12
	Carbon Monoxide	6.0			30.6		39.6
	Volatile Organic Compounds	2.0			0.5		0.6
	Duration			Duration	_____ hr/day	54.2 hr/yr	_____ hr/day
	% O_2, dry basis, if corrected to other than 15%: _____ %						

EMISSIONS DATA (continued)

Secondary Fuel	When will the secondary fuel be used? ☐ Primary fuel curtailment ☐ Simultaneously with primary fuel ☐ Other: _____					
	Fuel Type: ☐ Natural Gas ☐ LPG/Propane ☐ Diesel ☐ Other: _____					
	Higher Heating Value: _____ Btu/gal or _____ Btu/scf		Sulfur Content: _____ % by weight or _____ gr/scf			
	Maximum Fuel Use @ HHV: _____ scf/hr or _____gal/hr		Rated Efficiency (EFF_{Mfg}): _____ %			
Secondary Fuel Emissions Data	Operational Mode	Steady State (ppmv)	Steady State (lb/MMBtu)	Start-up (ppmv)	Start-up (lb/hr)	Shutdown (ppmv)	Shutdown (lb/hr)
	Nitrogen Oxides						
	Carbon Monoxide						
	Volatile Organic Compounds						
	Duration (please provide justification)			_____ hr/day	_hr/yr	_____ hr/day	_hr/yr
	% O_2, dry basis, if corrected to other than 15%: _____ %						
Source of Data	☒ Manufacturer's Specifications ☐ Emission Source Test ☐ Other _____ (please provide copies)						

EMISSIONS CONTROL

Emissions Control Equipment (Check all that apply)	☐ Inlet Air Filter/Cooler ☐ Lube Oil Vent Coalescer
	☒ Selective Catalytic Reduction - Manufacturer: TBD Model: TBD ☒ Ammonia (NH_3) ☐ Urea ☐ Other: _____
	☒ Oxidation Catalyst - Manufacturer: TBD Model: _____
	Control Efficiencies: NO_x 2.5 ppm, SO_x __%, PM_{10} _____%, CO 6 ppm, VOC 2.0 ppm
	☐ Other (please specify):
	For units equipped with exhaust gas NO_x control equipment and rated < 10 MW, or rated ≥ 10 MW but operated < 4,000 hr/yr, one may choose at least one of the following alternate emission monitoring schemes in lieu of a CEMS (each option below must be approved by APCO on a case-by-case basis. Please include a detailed proposal for each option chosen): ☐ Periodic NO_x emission concentration ☐ Turbine exhaust O_2 concentration ☐ Air-to-Fuel ratio ☐ Flow rate of reducing agents added to turbine exhaust ☐ Catalyst inlet and outlet temperature ☐ Catalyst inlet and exhaust O_2 conc. ☐ Other operational characteristics as approved by the APCO (specify on attached sheet)

HEALTH RISK ASSESSMENT DATA

Operating Hours	Maximum Operating Schedule: 24 hours per day, and 4110 hours per year		
Receptor Data	Distance to nearest Residence	_____ feet	Distance is measured from the proposed stack location to the nearest boundary of the nearest apartment, house, dormitory, etc.
	Direction to nearest Residence	_____	Direction from the stack to the receptor, i.e. Northeast or South.
	Distance to nearest Business	_____ feet	Distance is measured from the proposed stack location to the nearest boundary of the nearest office building, factory, store, etc.
	Direction to nearest Business	_____	Direction from the stack to the receptor, i.e. North or Southwest.
Stack Parameters	Release Height	120 feet above grade	
	Stack Diameter	192 inches at point of release	
	Rain Cap	☐ Flapper-type ☐ Fixed-type ☒ None ☐ Other: _____	
	Direction of Flow	☒ Vertically Upward ☐ Horizontal ☐ Other: _____° from vert. or _____° from horiz.	
Exhaust Data	Flowrate: 14100-10100 acfs	Temperature: 740-760 °F	
Facility Location	☐ Urban (area of dense population) ☒ Rural (area of sparse population)		

FOR DISTRICT USE ONLY

Date:	**FID:**	**Project:**	**Public Notice: [ ] Yes [ ] No**
Comments:			

San Joaquin Valley Air Pollution Control District
Supplemental Application Form

Boilers, Steam Generators, Dryers, and Process Heaters

Please complete one form for each different piece of equipment.

This form must be accompanied by a completed Application for Authority to Construct and Permit to Operate form

PERMIT TO BE ISSUED TO: *Hydrogen Energy International LLC (HEI)*
LOCATION WHERE THE EQUIPMENT WILL BE OPERATED: Section 10 of Township 30 South, Range 24 East in Kern County

EQUIPMENT DESCRIPTION (Aux Boiler)

Equipment Details	☒ Boiler ☐ Steam Generator ☐ Dryer ☐ Process Heater ☐ Refinery Unit ☐ Other: _____	
	Manufacturer: *TBD*	
	Model: *TBD*	Serial Number: *TBD*
	Steam: *100,000* pph, at 600 psig 750ºF	
	Is this a "Load-Following" unit? ☐ Yes ☒ No (Note: A load following unit is a unit with normal operational load fluctuations and requirements which exceed the operational response range of an Ultra-Low NO_X burner system operating at 9 ppmv NO_X.)	
	☐ Indirect-Fired ☒ Direct-Fired	
	Flue Gas Recirculation: ☒ Forced FGR ☐ Induced FGR ☐ None	
	Is an O_2 Controller present? ☒ No ☐ Yes, Manufacturer:	
Rules 4305/4306 Type of Use and Emissions Monitoring Provisions	☐ Low Use - limited to less than 9 billion Btu/year, must have fuel use meter ☐ Tune the unit at least twice per calendar year in accordance with District Rule 4304 ☐ Operate the unit in a manner that maintains exhaust O_2 concentration ≥ 3.00% by volume on a dry basis ☐ Limited Use - limited from 9 billion Btu/year to 30 billion Btu/year, must have fuel use meter ☒ Full Time - limited from greater than 30 billion Btu/year to full time operation (8,760 hrs/year)	
	Note: Low Use units must identify operational characteristics recommended by the manufacturer, which can be monitored on a monthly basis (please provide details in additional documentation).	
	Note: Limited Use or Full Time units must have either a Continuous Emission Monitoring System (CEMS) or one of the following alternate emissions monitoring plans ☐ CEMS, please specify all pollutants monitored: ☐ NO_x ☐ CO ☐ O_2 ☐ Other: _____ ☒ Monitoring of NO_x, CO, and O_2 concentrations ☐ Periodic determination of flue gas recirculation rate by temperature measurement ☐ Periodic determination of flue gas recirculation rate by O_2 measurement ☐ Monitoring of burner mechanical adjustments and O_2 concentration ☐ Monitoring of the flue gas recirculation valve(s) setting ☐ Other Alternate Monitoring Plan (approved on a case by case basis), attach details	
	Note: See District policy (SSP-1105) for additional details of pre-approved alternate emissions monitoring plans, at: http://www.valleyair.org/policies_per/Policies/SSP 1105.pdf	
Fuel Use Meter	☒ Gaseous Fuel Meter ☐ Liquid Fuel Meter ☐ None	
Primary Burner	Manufacturer: *TBD*	Type: ☐ Standard ☐ Low NO_x ☒ Ultra Low NO_x
	Model: *TBD*	Serial Number: *TBD*
	Maximum Heat Input Rating: *142* MMBtu/hr	Annual Heat Input: *311* billion Btu/year
Secondary Burner (if more than one burner is present)	Manufacturer:	Type: ☐ Standard ☐ Low NO_x ☐ Ultra Low NO_x
	Model:	Serial Number:
	Maximum Heat Input Rating: _____ MMBtu/hr	Annual Heat Input: _____ billion Btu/year

EMISSIONS DATA

Note: See District BACT and District Rules 4305 and 4306 requirements for applicability to proposed unit at http://www.valleyair.org/busind/pto/bact/chapter1.pdf, http://www.valleyair.org/rules/currntrules/r4305.pdf, and http://www.valleyair.org/rules/currntrules/r4306.pdf.

Primary Fuel	Fuel Type: ☒ Natural Gas ☐ LPG/Propane ☐ Diesel ☐ Other: _____					
	Higher Heating Value: _____ Btu/gal or *1,020-1050* Btu/scf			Sulfur Content: *</ = 0.75 gr/ 100scf*		
Primary Fuel Emissions Data	Operational Mode	Steady State (ppmv)	Steady State (lb/MMBtu)	Start-up (ppmv)	Start-up (lb/hr)	Shutdown (ppmv) / Shutdown (lb/hr)
	Nitrogen Oxides		*0.011*			
	Carbon Monoxide		*0.037*			
	Volatile Organic Compounds		*0.004*			
	Duration (please provide justification)			_____ hr/day	*2,190* hr/yr	_____ hr/day / _____ hr/yr
	% O_2, dry basis, if corrected to other than 3%: *3* %					
Secondary Fuel	Fuel Type: ☐ Natural Gas ☐ LPG/Propane ☐ Diesel ☐ Other: _____					
	Higher Heating Value: _____ Btu/gal or _____ Btu/scf			Sulfur Content: _____ % by weight or _____ gr/scf		
	How will the secondary fuel be used? ☐ Secondary full-time fuel ☐ Backup for primary fuel ☐ Other: _____					
Secondary Fuel Emissions Data	Operational Mode	Steady State (ppmv)	Steady State (lb/MMBtu)	Start-up (ppmv)	Start-up (lb/hr)	Shutdown (ppmv) / Shutdown (lb/hr)
	Nitrogen Oxides					
	Carbon Monoxide					
	Volatile Organic Compounds					
	Duration (please provide justification)			_____ hr/day	_____ hr/yr	_____ hr/day / _____ hr/yr
	% O_2, dry basis, if corrected to other than 3%: _____ %					
Source of Data	☒ Manufacturer's Specifications ☐ Emission Source Test ☐ Other _____ (please provide copies)					
Additional Emissions Control Equipment	☐ Selective Catalytic Reduction - Manufacturer: _____ Model: _____ ☐ Ammonia (NH_3) ☐ Urea ☐ Other: _____					
	☐ Non-Selective Catalytic Reduction - Manufacturer: _____ Model: _____					
	Control Efficiencies: NO_x _____ %, SO_x _____ %, PM_{10} _____ %, CO _____ %, VOC _____ %					
	☐ Other (please specify):					

HEALTH RISK ASSESSMENT DATA

Operating Hours	Maximum Operating Schedule: _____ hours per day, and 2,190 hours per year		
Receptor Data	Distance to nearest Residence	_____ feet	Distance is measured from the proposed stack location to the nearest boundary of the nearest apartment, house, dormitory, etc.
	Direction to nearest Residence	_____	Direction from the stack to the receptor, i.e. Northeast or South.
	Distance to nearest Business	_____ feet	Distance is measured from the proposed stack location to the nearest boundary of the nearest office building, factory, store, etc.
	Direction to nearest Business	_____	Direction from the stack to the receptor, i.e. North or Southwest.
Stack Parameters	Release Height	*80* feet above grade	
	Stack Diameter	*54* inches at point of release	
	Rain Cap	☐ Flapper-type ☐ Fixed-type ☒ None ☐ Other: _____	
	Direction of Flow	☒ Vertically Upward ☐ Horizontal ☐ Other: _____° from vert. or _____° from horiz.	
Exhaust Data	Flowrate: *28,800* acfm	Temperature: *300* °F	
Facility Location	☐ Urban (area of dense population) ☒ Rural (area of sparse population)		

FOR DISTRICT USE ONLY

Date:	**FID:**	**Project:**	**Public Notice: [ ] Yes [ ] No**
Comments:			

San Joaquin Valley Air Pollution Control District
Supplemental Application Form

Boilers, Steam Generators, Dryers, and Process Heaters

Please complete one form for each different piece of equipment.

This form must be accompanied by a completed Application for Authority to Construct and Permit to Operate form

PERMIT TO BE ISSUED TO: Hydrogen Energy International LLC
LOCATION WHERE THE EQUIPMENT WILL BE OPERATED: Section 10 of Township 30 South, Range 24 East in Kern County

EQUIPMENT DESCRIPTION (Gasifier Refractory Heater-1)

Equipment Details	☐ Boiler ☐ Steam Generator ☐ Dryer ☐ Process Heater ☒ Other: Refractory Heater	
	Manufacturer: TBD	
	Model: TBD	Serial Number: TBD
	Steam: _____ pph, at _____ psig _____ bhp	
	Is this a "Load-Following" unit? ☐ Yes ☒ No (Note: A load following unit is a unit with normal operational load fluctuations and requirements which exceed the operational response range of an Ultra-Low NO_X burner system operating at 9 ppmv NO_X.)	
	☐ Indirect-Fired ☒ Direct-Fired	
	Flue Gas Recirculation: ☐ Forced FGR ☐ Induced FGR ☒ None	
	Is an O_2 Controller present? ☒ No ☐ Yes, Manufacturer:	
Rules 4305/4306 Type of Use and Emissions Monitoring Provisions	☐ Low Use - limited to less than 9 billion Btu/year, must have fuel use meter ☐ Tune the unit at least twice per calendar year in accordance with District Rule 4304 ☐ Operate the unit in a manner that maintains exhaust O_2 concentration ≥ 3.00% by volume on a dry basis ☒ Limited Use - limited from 9 billion Btu/year to 30 billion Btu/year, must have fuel use meter ☐ Full Time - limited from greater than 30 billion Btu/year to full time operation (8,760 hrs/year)	
	Note: Low Use units must identify operational characteristics recommended by the manufacturer, which can be monitored on a monthly basis (please provide details in additional documentation).	
	Note: Limited Use or Full Time units must have either a Continuous Emission Monitoring System (CEMS) or one of the following alternate emissions monitoring plans ☐ CEMS, please specify all pollutants monitored: ☐ NO_x ☐ CO ☐ O_2 ☐ Other: _____ ☐ Monitoring of NO_x, CO, and O_2 concentrations ☐ Periodic determination of flue gas recirculation rate by temperature measurement ☐ Periodic determination of flue gas recirculation rate by O_2 measurement ☐ Monitoring of burner mechanical adjustments and O_2 concentration ☐ Monitoring of the flue gas recirculation valve(s) setting ☒ Other Alternate Monitoring Plan (approved on a case by case basis), attach details	
	Note: See District policy (SSP-1105) for additional details of pre-approved alternate emissions monitoring plans, at: http://www.valleyair.org/policies_per/Policies/SSP 1105.pdf	
Fuel Use Meter	☒ Gaseous Fuel Meter ☐ Liquid Fuel Meter ☐ None	
Primary Burner	Manufacturer: TBD	Type: ☒ Standard ☐ Low NO_x ☐ Ultra Low NO_x
	Model: TBD	Serial Number:
	Maximum Heat Input Rating: 18 MMBtu/hr	Annual Heat Input: ~ 11 billion Btu/year
Secondary Burner (if more than one burner is present)	Manufacturer:	Type: ☐ Standard ☐ Low NO_x ☐ Ultra Low NO_x
	Model:	Serial Number:
	Maximum Heat Input Rating: _____ MMBtu/hr	Annual Heat Input: _____ billion Btu/year

EMISSIONS DATA

Note: See District BACT and District Rules 4305 and 4306 requirements for applicability to proposed unit at http://www.valleyair.org/busind/pto/bact/chapter1.pdf, http://www.valleyair.org/rules/currntrules/r4305.pdf, and http://www.valleyair.org/rules/currntrules/r4306.pdf.

Primary Fuel	Fuel Type: ☒ Natural Gas ☐ LPG/Propane ☐ Diesel ☐ Other: _____					
	Higher Heating Value: _____ Btu/gal or 1020 -1050 Btu/scf			Sulfur Content: 12.65 PPM by weight or _____ gr/scf		
Primary Fuel Emissions Data	Operational Mode	Steady State (ppmv)	Steady State (lb/MMBtu)	Start-up (ppmv)	Start-up (lb/hr)	Shutdown (ppmv) / Shutdown (lb/hr)
	Nitrogen Oxides		0.11			
	Carbon Monoxide		0.09			
	Volatile Organic Compounds		0.007			
	Duration (please provide justification)			_____ hr/day	_____ hr/yr	_____ hr/day / _____ hr/yr
	% O_2, dry basis, if corrected to other than 3%: _____ %					
Secondary Fuel	Fuel Type: ☐ Natural Gas ☐ LPG/Propane ☐ Diesel ☐ Other: _____					
	Higher Heating Value: _____ Btu/gal or _____ Btu/scf			Sulfur Content: _____ % by weight or _____ gr/scf		
	How will the secondary fuel be used? ☐ Secondary full-time fuel ☐ Backup for primary fuel ☐ Other: _____					
Secondary Fuel Emissions Data	Operational Mode	Steady State (ppmv)	Steady State (lb/MMBtu)	Start-up (ppmv)	Start-up (lb/hr)	Shutdown (ppmv) / Shutdown (lb/hr)
	Nitrogen Oxides					
	Carbon Monoxide					
	Volatile Organic Compounds					
	Duration (please provide justification)			_____ hr/day	_____ hr/yr	_____ hr/day / _____ hr/yr
	% O_2, dry basis, if corrected to other than 3%: _____ %					
Source of Data	☐ Manufacturer's Specifications ☐ Emission Source Test ☒ Other USEPA AP-42 Section 1.4					
Additional Emissions Control Equipment	☐ Selective Catalytic Reduction - Manufacturer: _____ Model: _____ ☐ Ammonia (NH_3) ☐ Urea ☐ Other: _____					
	☐ Non-Selective Catalytic Reduction - Manufacturer: _____ Model: _____					
	Control Efficiencies: NO_x _____ %, SO_x _____ %, PM_{10} _____ %, CO _____ %, VOC _____ %					
	☐ Other (please specify):					

HEALTH RISK ASSESSMENT DATA

Operating Hours	Maximum Operating Schedule: 24 hours per day, and 1800 (combined 3 refractory heaters) hours per year		
Receptor Data	Distance to nearest Residence	_____ feet	Distance is measured from the proposed stack location to the nearest boundary of the nearest apartment, house, dormitory, etc.
	Direction to nearest Residence	_____	Direction from the stack to the receptor, i.e. Northeast or South.
	Distance to nearest Business	_____ feet	Distance is measured from the proposed stack location to the nearest boundary of the nearest office building, factory, store, etc.
	Direction to nearest Business	_____	Direction from the stack to the receptor, i.e. North or Southwest.
Stack Parameters	Release Height	210 feet above grade	
	Stack Diameter	12 inches at point of release	
	Rain Cap	☐ Flapper-type ☐ Fixed-type ☐ None ☐ Other: _____	
	Direction of Flow	☐ Vertically Upward ☐ Horizontal ☐ Other: _____° from vert. or _____° from horiz.	
Exhaust Data	Flowrate: 4080 acfm	Temperature: 150 °F	
Facility Location	☐ Urban (area of dense population) ☒ Rural (area of sparse population)		

FOR DISTRICT USE ONLY

Date:	**FID:**	**Project:**	**Public Notice: [ ] Yes [ ] No**
Comments:			

San Joaquin Valley Air Pollution Control District
Supplemental Application Form

Boilers, Steam Generators, Dryers, and Process Heaters

Please complete one form for each different piece of equipment.

This form must be accompanied by a completed Application for Authority to Construct and Permit to Operate form

PERMIT TO BE ISSUED TO: Hydrogen Energy International LLC	
LOCATION WHERE THE EQUIPMENT WILL BE OPERATED: Section 10 of Township 30 South, Range 24 East in Kern County	

EQUIPMENT DESCRIPTION (Gasifier Refractory Heater-2)

Equipment Details	☐ Boiler ☐ Steam Generator ☐ Dryer ☐ Process Heater ☒ Other: Refractory Heater	
	Manufacturer: TBD	
	Model: TBD	Serial Number: TBD
	Steam: _____ pph, at _____ psig _____ bhp	
	Is this a "Load-Following" unit? ☐ Yes ☒ No (Note: A load following unit is a unit with normal operational load fluctuations and requirements which exceed the operational response range of an Ultra-Low NO_X burner system operating at 9 ppmv NO_X.)	
	☐ Indirect-Fired ☒ Direct-Fired	
	Flue Gas Recirculation: ☐ Forced FGR ☐ Induced FGR ☒ None	
	Is an O_2 Controller present? ☒ No ☐ Yes, Manufacturer:	
Rules 4305/4306 Type of Use and Emissions Monitoring Provisions	☐ Low Use - limited to less than 9 billion Btu/year, must have fuel use meter ☐ Tune the unit at least twice per calendar year in accordance with District Rule 4304 ☐ Operate the unit in a manner that maintains exhaust O_2 concentration ≥ 3.00% by volume on a dry basis ☒ Limited Use - limited from 9 billion Btu/year to 30 billion Btu/year, must have fuel use meter ☐ Full Time - limited from greater than 30 billion Btu/year to full time operation (8,760 hrs/year)	
	Note: Low Use units must identify operational characteristics recommended by the manufacturer, which can be monitored on a monthly basis (please provide details in additional documentation).	
	Note: Limited Use or Full Time units must have either a Continuous Emission Monitoring System (CEMS) or one of the following alternate emissions monitoring plans ☐ CEMS, please specify all pollutants monitored: ☐ NO_x ☐ CO ☐ O_2 ☐ Other: _____ ☐ Monitoring of NO_x, CO, and O_2 concentrations ☐ Periodic determination of flue gas recirculation rate by temperature measurement ☐ Periodic determination of flue gas recirculation rate by O_2 measurement ☐ Monitoring of burner mechanical adjustments and O_2 concentration ☐ Monitoring of the flue gas recirculation valve(s) setting ☒ Other Alternate Monitoring Plan (approved on a case by case basis), attach details	
	Note: See District policy (SSP-1105) for additional details of pre-approved alternate emissions monitoring plans, at: http://www.valleyair.org/policies_per/Policies/SSP 1105.pdf	
Fuel Use Meter	☒ Gaseous Fuel Meter ☐ Liquid Fuel Meter ☐ None	
Primary Burner	Manufacturer: TBD	Type: ☒ Standard ☐ Low NO_x ☐ Ultra Low NO_x
	Model: TBD	Serial Number:
	Maximum Heat Input Rating: 18 MMBtu/hr	Annual Heat Input: ~ 11 billion Btu/year
Secondary Burner (if more than one burner is present)	Manufacturer:	Type: ☐ Standard ☐ Low NO_x ☐ Ultra Low NO_x
	Model:	Serial Number:
	Maximum Heat Input Rating: _____ MMBtu/hr	Annual Heat Input: _____ billion Btu/year

EMISSIONS DATA

Note: See District BACT and District Rules 4305 and 4306 requirements for applicability to proposed unit at http://www.valleyair.org/busind/pto/bact/chapter1.pdf, http://www.valleyair.org/rules/currntrules/r4305.pdf, and http://www.valleyair.org/rules/currntrules/r4306.pdf.

Primary Fuel	Fuel Type: ☒ Natural Gas ☐ LPG/Propane ☐ Diesel ☐ Other: _____					
	Higher Heating Value: _____ Btu/gal or 1020 -1050 Btu/scf			Sulfur Content: 12.65 PPM by weight or _____ gr/scf		
Primary Fuel Emissions Data	Operational Mode	Steady State (ppmv)	Steady State (lb/MMBtu)	Start-up (ppmv)	Start-up (lb/hr)	Shutdown (ppmv) / Shutdown (lb/hr)
	Nitrogen Oxides		0.11			
	Carbon Monoxide		0.09			
	Volatile Organic Compounds		0.007			
	Duration (please provide justification)			_____ hr/day	_____ hr/yr	_____ hr/day / _____ hr/yr
	% O_2, dry basis, if corrected to other than 3%: _____ %					
Secondary Fuel	Fuel Type: ☐ Natural Gas ☐ LPG/Propane ☐ Diesel ☐ Other: _____					
	Higher Heating Value: _____ Btu/gal or _____ Btu/scf			Sulfur Content: _____ % by weight or _____ gr/scf		
	How will the secondary fuel be used? ☐ Secondary full-time fuel ☐ Backup for primary fuel ☐ Other: _____					
Secondary Fuel Emissions Data	Operational Mode	Steady State (ppmv)	Steady State (lb/MMBtu)	Start-up (ppmv)	Start-up (lb/hr)	Shutdown (ppmv) / Shutdown (lb/hr)
	Nitrogen Oxides					
	Carbon Monoxide					
	Volatile Organic Compounds					
	Duration (please provide justification)			_____ hr/day	_____ hr/yr	_____ hr/day / _____ hr/yr
	% O_2, dry basis, if corrected to other than 3%: _____ %					
Source of Data	☐ Manufacturer's Specifications ☐ Emission Source Test ☒ Other USEPA AP-42 Section 1.4					
Additional Emissions Control Equipment	☐ Selective Catalytic Reduction - Manufacturer: _____ Model: _____ ☐ Ammonia (NH_3) ☐ Urea ☐ Other: _____					
	☐ Non-Selective Catalytic Reduction - Manufacturer: _____ Model: _____					
	Control Efficiencies: NO_x _____ %, SO_x _____ %, PM_{10} _____ %, CO _____ %, VOC _____ %					
	☐ Other (please specify):					

HEALTH RISK ASSESSMENT DATA

Operating Hours	Maximum Operating Schedule: 24 hours per day, and 1800 (combined 3 refractory heaters) hours per year		
Receptor Data	Distance to nearest Residence	_____ feet	Distance is measured from the proposed stack location to the nearest boundary of the nearest apartment, house, dormitory, etc.
	Direction to nearest Residence	_____	Direction from the stack to the receptor, i.e. Northeast or South.
	Distance to nearest Business	_____ feet	Distance is measured from the proposed stack location to the nearest boundary of the nearest office building, factory, store, etc.
	Direction to nearest Business	_____	Direction from the stack to the receptor, i.e. North or Southwest.
Stack Parameters	Release Height	210 feet above grade	
	Stack Diameter	12 inches at point of release	
	Rain Cap	☐ Flapper-type ☐ Fixed-type ☐ None ☐ Other: _____	
	Direction of Flow	☐ Vertically Upward ☐ Horizontal ☐ Other: _____° from vert. or _____° from horiz.	
Exhaust Data	Flowrate: 4080 acfm	Temperature: 150 °F	
Facility Location	☐ Urban (area of dense population) ☒ Rural (area of sparse population)		

FOR DISTRICT USE ONLY

Date:	**FID:**	**Project:**	**Public Notice: [ ] Yes [ ] No**
Comments:			

San Joaquin Valley Air Pollution Control District
Supplemental Application Form

Boilers, Steam Generators, Dryers, and Process Heaters

Please complete one form for each different piece of equipment.

This form must be accompanied by a completed Application for Authority to Construct and Permit to Operate form

PERMIT TO BE ISSUED TO: Hydrogen Energy International LLC	
LOCATION WHERE THE EQUIPMENT WILL BE OPERATED: Section 10 of Township 30 South, Range 24 East in Kern County	

EQUIPMENT DESCRIPTION (Gasifier Refractory Heater-3)

Equipment Details	☐ Boiler ☐ Steam Generator ☐ Dryer ☐ Process Heater ☒ Other: Refractory Heater	
	Manufacturer: TBD	
	Model: TBD	Serial Number: TBD
	Steam: _____ pph, at _____ psig _____ bhp	
	Is this a "Load-Following" unit? ☐ Yes ☒ No (Note: A load following unit is a unit with normal operational load fluctuations and requirements which exceed the operational response range of an Ultra-Low NO_X burner system operating at 9 ppmv NO_X.)	
	☐ Indirect-Fired ☒ Direct-Fired	
	Flue Gas Recirculation: ☐ Forced FGR ☐ Induced FGR ☒ None	
	Is an O_2 Controller present? ☒ No ☐ Yes, Manufacturer:	
Rules 4305/4306 Type of Use and Emissions Monitoring Provisions	☐ Low Use - limited to less than 9 billion Btu/year, must have fuel use meter ☐ Tune the unit at least twice per calendar year in accordance with District Rule 4304 ☐ Operate the unit in a manner that maintains exhaust O_2 concentration ≥ 3.00% by volume on a dry basis ☒ Limited Use - limited from 9 billion Btu/year to 30 billion Btu/year, must have fuel use meter ☐ Full Time - limited from greater than 30 billion Btu/year to full time operation (8,760 hrs/year)	
	Note: Low Use units must identify operational characteristics recommended by the manufacturer, which can be monitored on a monthly basis (please provide details in additional documentation).	
	Note: Limited Use or Full Time units must have either a Continuous Emission Monitoring System (CEMS) or one of the following alternate emissions monitoring plans ☐ CEMS, please specify all pollutants monitored: ☐ NO_x ☐ CO ☐ O_2 ☐ Other: _____ ☐ Monitoring of NO_x, CO, and O_2 concentrations ☐ Periodic determination of flue gas recirculation rate by temperature measurement ☐ Periodic determination of flue gas recirculation rate by O_2 measurement ☐ Monitoring of burner mechanical adjustments and O_2 concentration ☐ Monitoring of the flue gas recirculation valve(s) setting ☒ Other Alternate Monitoring Plan (approved on a case by case basis), attach details	
	Note: See District policy (SSP-1105) for additional details of pre-approved alternate emissions monitoring plans, at: http://www.valleyair.org/policies_per/Policies/SSP 1105.pdf	
Fuel Use Meter	☒ Gaseous Fuel Meter ☐ Liquid Fuel Meter ☐ None	
Primary Burner	Manufacturer: TBD	Type: ☒ Standard ☐ Low NO_x ☐ Ultra Low NO_x
	Model: TBD	Serial Number:
	Maximum Heat Input Rating: 18 MMBtu/hr	Annual Heat Input: ~ 11 billion Btu/year
Secondary Burner (if more than one burner is present)	Manufacturer:	Type: ☐ Standard ☐ Low NO_x ☐ Ultra Low NO_x
	Model:	Serial Number:
	Maximum Heat Input Rating: _____ MMBtu/hr	Annual Heat Input: _____ billion Btu/year

EMISSIONS DATA

Note: See District BACT and District Rules 4305 and 4306 requirements for applicability to proposed unit at http://www.valleyair.org/busind/pto/bact/chapter1.pdf, http://www.valleyair.org/rules/currntrules/r4305.pdf, and http://www.valleyair.org/rules/currntrules/r4306.pdf.

Primary Fuel	Fuel Type: ☒ Natural Gas ☐ LPG/Propane ☐ Diesel ☐ Other: _____					
	Higher Heating Value: _____ Btu/gal or 1020 -1050 Btu/scf			Sulfur Content: 12.65 PPM by weight or _____ gr/scf		
Primary Fuel Emissions Data	Operational Mode	Steady State (ppmv)	Steady State (lb/MMBtu)	Start-up (ppmv)	Start-up (lb/hr)	Shutdown (ppmv) / Shutdown (lb/hr)
	Nitrogen Oxides		0.11			
	Carbon Monoxide		0.09			
	Volatile Organic Compounds		0.007			
	Duration (please provide justification)			_____ hr/day	_____ hr/yr	_____ hr/day / _____ hr/yr
	% O_2, dry basis, if corrected to other than 3%: _____ %					
Secondary Fuel	Fuel Type: ☐ Natural Gas ☐ LPG/Propane ☐ Diesel ☐ Other: _____					
	Higher Heating Value: _____ Btu/gal or _____ Btu/scf			Sulfur Content: _____ % by weight or _____ gr/scf		
	How will the secondary fuel be used? ☐ Secondary full-time fuel ☐ Backup for primary fuel ☐ Other: _____					
Secondary Fuel Emissions Data	Operational Mode	Steady State (ppmv)	Steady State (lb/MMBtu)	Start-up (ppmv)	Start-up (lb/hr)	Shutdown (ppmv) / Shutdown (lb/hr)
	Nitrogen Oxides					
	Carbon Monoxide					
	Volatile Organic Compounds					
	Duration (please provide justification)			_____ hr/day	_____ hr/yr	_____ hr/day / _____ hr/yr
	% O_2, dry basis, if corrected to other than 3%: _____ %					
Source of Data	☐ Manufacturer's Specifications ☐ Emission Source Test ☒ Other USEPA AP-42 Section 1.4					
Additional Emissions Control Equipment	☐ Selective Catalytic Reduction - Manufacturer: _____ Model: _____ ☐ Ammonia (NH_3) ☐ Urea ☐ Other: _____					
	☐ Non-Selective Catalytic Reduction - Manufacturer: _____ Model: _____					
	Control Efficiencies: NO_x _____ %, SO_x _____ %, PM_{10} _____ %, CO _____ %, VOC _____ %					
	☐ Other (please specify):					

HEALTH RISK ASSESSMENT DATA

Operating Hours	Maximum Operating Schedule: 24 hours per day, and 1800 (combined 3 refractory heaters) hours per year		
Receptor Data	Distance to nearest Residence	_____ feet	Distance is measured from the proposed stack location to the nearest boundary of the nearest apartment, house, dormitory, etc.
	Direction to nearest Residence	_____	Direction from the stack to the receptor, i.e. Northeast or South.
	Distance to nearest Business	_____ feet	Distance is measured from the proposed stack location to the nearest boundary of the nearest office building, factory, store, etc.
	Direction to nearest Business	_____	Direction from the stack to the receptor, i.e. North or Southwest.
Stack Parameters	Release Height	210 feet above grade	
	Stack Diameter	12 inches at point of release	
	Rain Cap	☐ Flapper-type ☐ Fixed-type ☐ None ☐ Other: _____	
	Direction of Flow	☐ Vertically Upward ☐ Horizontal ☐ Other: _____° from vert. or _____° from horiz.	
Exhaust Data	Flowrate: 4080 acfm	Temperature: 150 °F	
Facility Location	☐ Urban (area of dense population) ☒ Rural (area of sparse population)		

FOR DISTRICT USE ONLY

Date:	**FID:**	**Project:**	**Public Notice: [ ] Yes [ ] No**
Comments:			

San Joaquin Valley Air Pollution Control District

Supplemental Application Form

PROCESSES SERVED BY A BAGHOUSE/DUST COLLECTOR

This form must be accompanied by a completed Application for Authority to Construct and Permit to Operate form.

PERMIT TO BE ISSUED TO: Hydrogen Energy International LLC
LOCATION WHERE THE EQUIPMENT WILL BE OPERATED: Section 10 of Township 30 South, Range 24 East in Kern County

BAGHOUSE/DUST COLLECTOR DESCRIPTION (DC-1)

Baghouse/Dust Collector Data	Manufacturer: TBD	
	Model No.: TBD	Serial No.: TBD
	PM_{10} Control Efficiency: expected 99.95(%)	
	Exhaust PM_{10} Emission expected 0.005 Concentration(gr/dscf):	
	Differential Pressure Gage [ ] Yes [ ] No	Manufacturer's Recommended Differential Pressure Operating Range: _____ to _____ inches W.C.
Filter Data	Type: [X] Bag/Tube [ ] Cartridge [ ] Envelope [ ] HEPA/Flat [ ] Sock Filter [ ] Other:_____	
	Fabric: [ ] Cotton [ ] Polypropylene [ ] Polyester [ ] Fiberglass [ ] Nomex [ ] Teflon [X] Other:__TBD_____	
	Number of Bags/Filters:	Total Cloth Area: (sq. ft.)
	Diameter or Width of Bag/Filter: (in.)	Length of Bag/Filter: (in.)
	Filter Cleaning Method: [ ] Mechanical Shaker [ ] Reverse Air Flow [ ] Pulse Jet	
Blower/Fan Data	Manufacturer:	Model No.
	Power Rating: (Horsepower)	Air Flow Rate: (dscfm)

PROCESS INFORMATION

Process served by baghouse/duct collector: Feedstock Delivery, Handling and Storage (Truck Unloading)
Type of material collected by the baghouse/dust collector:: feedstock dust (coal, pet coke)
Maximum quantity of material collected by the baghouse/dust collector: _____11,440_____lb/day
Maximum process weight for operation served by the baghouse/dust collector: _____18,600_____tons/day
Please note, each permit is required by District Rule 2201 to have a daily emission limit (DEL). The information provided above for maximum process rate and operating schedule may be used as an enforceable limiting condition for each Authority to Construct or Permit to Operate that will be issued for the proposed project.

Please Continue on Reverse Side

EQUIPMENT SERVED BY THE BAGHOUSE/DUST COLLECTOR

Description Indicate the type of equipment that will be served by the baghouse/dust collector, such as: Rip saw, drill, router, hammermill, grain cleaner, storage bin, etc. (attach additional sheets if needed.	**Manufacturer**	**Model No.**	**Power Rating (Horsepower) or Storage Capacity (Cubic Feet)** Indicate the horsepower rating if the equipment is powered by an electric motor or indicate the maximum storage capacity if the equipment is a storage bin/silo.

HEALTH RISK ASSESSMENT DATA

Operating Hours	Maximum Operating Schedule: 24 hours per day, and 8760 hours per year		
	☒ Outdoors ☐ Indoors (if indoors, see note 1)		
Receptor Data	Distance to nearest Residence	_____ feet	Distance is measured from the proposed stack location to the nearest boundary of the nearest apartment, house, dormitory, etc.
	Direction to nearest Residence	_____	Direction from the stack to the receptor, i.e. Northeast or South.
	Distance to nearest Business	_____ feet	Distance is measured from the proposed stack location to the nearest boundary of the nearest office building, factory, store, etc.
	Direction to nearest Business	_____	Direction from the stack to the receptor, i.e. North or Southwest.
Stack Parameters	Release Height	45 feet above grade	
	Stack Diameter	20 inches at point of release	
	Rain Cap	☐ Flapper-type ☐ Fixed-type ☐ None ☐ Other: _____	
	Direction of Flow	☐ Vertically Upward ☐ Horizontal ☐ Other: _____° from vert. or _____° from horiz.	
Exhaust Data	Flowrate: 6467 acfm	Temperature: ambient °F	
Facility	☐ Urban (area of dense population) ☒ Rural (area of sparse population)		

Note 1: If baghouse is located inside a building, attach a dimensioned building plan indicating building height, floorplan with dimensions, location of the baghouse plus the height and location/dimension of all doors, windows or ventilation openings which remain open during operation. The plan shall include an arrow indicating the direction of True North. If the building is equipped with a forced air ventilation system, identify all vent locations and fan capacities in CFM.

San Joaquin Valley Air Pollution Control District

Supplemental Application Form

PROCESSES SERVED BY A BAGHOUSE/DUST COLLECTOR

This form must be accompanied by a completed Application for Authority to Construct and Permit to Operate form.

PERMIT TO BE ISSUED TO: Hydrogen Energy International LLC
LOCATION WHERE THE EQUIPMENT WILL BE OPERATED: Section 10 of Township 30 South, Range 24 East in Kern County

BAGHOUSE/DUST COLLECTOR DESCRIPTION (DC-2)

Baghouse/Dust Collector Data	Manufacturer: TBD	
	Model No.: TBD	Serial No.: TBD
	PM_{10} Control Efficiency: expected 99.95(%)	
	Exhaust PM_{10} Emission expected 0.005 Concentration(gr/dscf):	
	Differential Pressure Gage [ ] Yes [ ] No	Manufacturer's Recommended Differential Pressure Operating Range: _____ to _____ inches W.C.
Filter Data	Type: [X] Bag/Tube [ ] Cartridge [ ] Envelope [ ] HEPA/Flat [ ] Sock Filter [ ] Other:_____	
	Fabric: [ ] Cotton [ ] Polypropylene [ ] Polyester [ ] Fiberglass [ ] Nomex [ ] Teflon [X] Other:__TBD_____	
	Number of Bags/Filters:	Total Cloth Area: (sq. ft.)
	Diameter or Width of Bag/Filter: (in.)	Length of Bag/Filter: (in.)
	Filter Cleaning Method: [ ] Mechanical Shaker [ ] Reverse Air Flow [ ] Pulse Jet	
Blower/Fan Data	Manufacturer:	Model No.
	Power Rating: (Horsepower)	Air Flow Rate: (dscfm)

PROCESS INFORMATION

Process served by baghouse/duct collector: Feedstock Delivery, Handling and Storage (Coke/coal Silos (filling))
Type of material collected by the baghouse/dust collector:: feedstock dust (coal, pet coke)
Maximum quantity of material collected by the baghouse/dust collector: _____29,016_____lb/day
Maximum process weight for operation served by the baghouse/dust collector: _____18,600_____tons/day
Please note, each permit is required by District Rule 2201 to have a daily emission limit (DEL). The information provided above for maximum process rate and operating schedule may be used as an enforceable limiting condition for each Authority to Construct or Permit to Operate that will be issued for the proposed project.

Please Continue on Reverse Side

EQUIPMENT SERVED BY THE BAGHOUSE/DUST COLLECTOR

Description Indicate the type of equipment that will be served by the baghouse/dust collector, such as: Rip saw, drill, router, hammermill, grain cleaner, storage bin, etc. (attach additional sheets if needed.	**Manufacturer**	**Model No.**	**Power Rating (Horsepower) or Storage Capacity (Cubic Feet)** Indicate the horsepower rating if the equipment is powered by an electric motor or indicate the maximum storage capacity if the equipment is a storage bin/silo.

HEALTH RISK ASSESSMENT DATA

Operating Hours	Maximum Operating Schedule: 24 hours per day, and 8760 hours per year		
	☒ Outdoors ☐ Indoors (if indoors, see note 1)		
Receptor Data	Distance to nearest Residence	_____ feet	Distance is measured from the proposed stack location to the nearest boundary of the nearest apartment, house, dormitory, etc.
	Direction to nearest Residence	_____	Direction from the stack to the receptor, i.e. Northeast or South.
	Distance to nearest Business	_____ feet	Distance is measured from the proposed stack location to the nearest boundary of the nearest office building, factory, store, etc.
	Direction to nearest Business	_____	Direction from the stack to the receptor, i.e. North or Southwest.
Stack Parameters	Release Height	170 feet above grade	
	Stack Diameter	32 inches at point of release	
	Rain Cap	☐ Flapper-type ☐ Fixed-type ☐ None ☐ Other: _____	
	Direction of Flow	☐ Vertically Upward ☐ Horizontal ☐ Other: _____° from vert. or _____° from horiz.	
Exhaust Data	Flowrate: 16376 acfm	Temperature: ambient °F	
Facility	☐ Urban (area of dense population) ☒ Rural (area of sparse population)		

Note 1: If baghouse is located inside a building, attach a dimensioned building plan indicating building height, floorplan with dimensions, location of the baghouse plus the height and location/dimension of all doors, windows or ventilation openings which remain open during operation. The plan shall include an arrow indicating the direction of True North. If the building is equipped with a forced air ventilation system, identify all vent locations and fan capacities in CFM.

San Joaquin Valley Air Pollution Control District

Supplemental Application Form

PROCESSES SERVED BY A BAGHOUSE/DUST COLLECTOR

This form must be accompanied by a completed Application for Authority to Construct and Permit to Operate form.

PERMIT TO BE ISSUED TO: Hydrogen Energy International LLC
LOCATION WHERE THE EQUIPMENT WILL BE OPERATED: Section 10 of Township 30 South, Range 24 East in Kern County

BAGHOUSE/DUST COLLECTOR DESCRIPTION (DC-3)

Baghouse/Dust Collector Data	Manufacturer: TBD	
	Model No.: TBD	Serial No.: TBD
	PM_{10} Control Efficiency: expected 99.95(%)	
	Exhaust PM_{10} Emission expected 0.005 Concentration(gr/dscf):	
	Differential Pressure Gage [ ] Yes [ ] No	Manufacturer's Recommended Differential Pressure Operating Range: _____ to _____ inches W.C.
Filter Data	Type: [X] Bag/Tube [ ] Cartridge [ ] Envelope [ ] HEPA/Flat [ ] Sock Filter [ ] Other:_____	
	Fabric: [ ] Cotton [ ] Polypropylene [ ] Polyester [ ] Fiberglass [ ] Nomex [ ] Teflon [X] Other:__TBD_____	
	Number of Bags/Filters:	Total Cloth Area: (sq. ft.)
	Diameter or Width of Bag/Filter: (in.)	Length of Bag/Filter: (in.)
	Filter Cleaning Method: [ ] Mechanical Shaker [ ] Reverse Air Flow [ ] Pulse Jet	
Blower/Fan Data	Manufacturer:	Model No.
	Power Rating: (Horsepower)	Air Flow Rate: (dscfm)

PROCESS INFORMATION

Process served by baghouse/duct collector: Feedstock Delivery, Handling and Storage (Mass Flow Bins (in/out))
Type of material collected by the baghouse/dust collector:: feedstock dust (coal, pet coke)
Maximum quantity of material collected by the baghouse/dust collector: _____15,664_____lb/day
Maximum process weight for operation served by the baghouse/dust collector: _____4080_____tons/day
Please note, each permit is required by District Rule 2201 to have a daily emission limit (DEL). The information provided above for maximum process rate and operating schedule may be used as an enforceable limiting condition for each Authority to Construct or Permit to Operate that will be issued for the proposed project.

Please Continue on Reverse Side

EQUIPMENT SERVED BY THE BAGHOUSE/DUST COLLECTOR

Description Indicate the type of equipment that will be served by the baghouse/dust collector, such as: Rip saw, drill, router, hammermill, grain cleaner, storage bin, etc. (attach additional sheets if needed.	**Manufacturer**	**Model No.**	**Power Rating (Horsepower) or Storage Capacity (Cubic Feet)** Indicate the horsepower rating if the equipment is powered by an electric motor or indicate the maximum storage capacity if the equipment is a storage bin/silo.

HEALTH RISK ASSESSMENT DATA

Operating Hours	Maximum Operating Schedule: ___24 hours per day, and _____8760 hours per year		
	☒ Outdoors ☐ Indoors (if indoors, see note 1)		
Receptor Data	Distance to nearest Residence	_____ feet	Distance is measured from the proposed stack location to the nearest boundary of the nearest apartment, house, dormitory, etc.
	Direction to nearest Residence	_____	Direction from the stack to the receptor, i.e. Northeast or South.
	Distance to nearest Business	_____ feet	Distance is measured from the proposed stack location to the nearest boundary of the nearest office building, factory, store, etc.
	Direction to nearest Business	_____	Direction from the stack to the receptor, i.e. North or Southwest.
Stack Parameters	Release Height	___176 feet above grade	
	Stack Diameter	___22 inches at point of release	
	Rain Cap	☐ Flapper-type ☐ Fixed-type ☐ None ☐ Other: _____	
	Direction of Flow	☐ Vertically Upward ☐ Horizontal ☐ Other: _____° from vert. or _____° from horiz.	
Exhaust Data	Flowrate: ___7620 acfm	Temperature: ___ambient °F	
Facility	☐ Urban (area of dense population) ☒ Rural (area of sparse population)		

Note 1: If baghouse is located inside a building, attach a dimensioned building plan indicating building height, floorplan with dimensions, location of the baghouse plus the height and location/dimension of all doors, windows or ventilation openings which remain open during operation. The plan shall include an arrow indicating the direction of True North. If the building is equipped with a forced air ventilation system, identify all vent locations and fan capacities in CFM.

San Joaquin Valley Air Pollution Control District

Supplemental Application Form

PROCESSES SERVED BY A BAGHOUSE/DUST COLLECTOR

This form must be accompanied by a completed Application for Authority to Construct and Permit to Operate form.

PERMIT TO BE ISSUED TO: Hydrogen Energy International LLC
LOCATION WHERE THE EQUIPMENT WILL BE OPERATED: Section 10 of Township 30 South, Range 24 East in Kern County

BAGHOUSE/DUST COLLECTOR DESCRIPTION (DC-4)

Baghouse/Dust Collector Data	Manufacturer: TBD	
	Model No.: TBD	Serial No.: TBD
	PM_{10} Control Efficiency: expected 99.95(%)	
	Exhaust PM_{10} Emission expected 0.005 Concentration(gr/dscf):	
	Differential Pressure Gage [ ] Yes [ ] No	Manufacturer's Recommended Differential Pressure Operating Range: _____ to _____ inches W.C.
Filter Data	Type: [X] Bag/Tube [ ] Cartridge [ ] Envelope [ ] HEPA/Flat [ ] Sock Filter [ ] Other:_____	
	Fabric: [ ] Cotton [ ] Polypropylene [ ] Polyester [ ] Fiberglass [ ] Nomex [ ] Teflon [X] Other:__TBD_____	
	Number of Bags/Filters:	Total Cloth Area: (sq. ft.)
	Diameter or Width of Bag/Filter: (in.)	Length of Bag/Filter: (in.)
	Filter Cleaning Method: [ ] Mechanical Shaker [ ] Reverse Air Flow [ ] Pulse Jet	
Blower/Fan Data	Manufacturer:	Model No.
	Power Rating: (Horsepower)	Air Flow Rate: (dscfm)

PROCESS INFORMATION

Process served by baghouse/duct collector: Feedstock Delivery, Handling and Storage (Coke/coal Silos (loadout))
Type of material collected by the baghouse/dust collector:: feedstock dust (coal, pet coke)
Maximum quantity of material collected by the baghouse/dust collector: _____10,027_____lb/day
Maximum process weight for operation served by the baghouse/dust collector: _____4080_____tons/day
Please note, each permit is required by District Rule 2201 to have a daily emission limit (DEL). The information provided above for maximum process rate and operating schedule may be used as an enforceable limiting condition for each Authority to Construct or Permit to Operate that will be issued for the proposed project.

Please Continue on Reverse Side

EQUIPMENT SERVED BY THE BAGHOUSE/DUST COLLECTOR

Description Indicate the type of equipment that will be served by the baghouse/dust collector, such as: Rip saw, drill, router, hammermill, grain cleaner, storage bin, etc. (attach additional sheets if needed.	**Manufacturer**	**Model No.**	**Power Rating (Horsepower) or Storage Capacity (Cubic Feet)** Indicate the horsepower rating if the equipment is powered by an electric motor or indicate the maximum storage capacity if the equipment is a storage bin/silo.

HEALTH RISK ASSESSMENT DATA

Operating Hours	Maximum Operating Schedule: 24 hours per day, and 8760 hours per year		
	☒ Outdoors ☐ Indoors (if indoors, see note 1)		
Receptor Data	Distance to nearest Residence	_____ feet	Distance is measured from the proposed stack location to the nearest boundary of the nearest apartment, house, dormitory, etc.
	Direction to nearest Residence	_____	Direction from the stack to the receptor, i.e. Northeast or South.
	Distance to nearest Business	_____ feet	Distance is measured from the proposed stack location to the nearest boundary of the nearest office building, factory, store, etc.
	Direction to nearest Business	_____	Direction from the stack to the receptor, i.e. North or Southwest.
Stack Parameters	Release Height	170 feet above grade	
	Stack Diameter	17 inches at point of release	
	Rain Cap	☐ Flapper-type ☐ Fixed-type ☐ None ☐ Other: _____	
	Direction of Flow	☐ Vertically Upward ☐ Horizontal ☐ Other: _____° from vert. or _____° from horiz.	
Exhaust Data	Flowrate: 4872 acfm	Temperature: ambient °F	
Facility	☐ Urban (area of dense population) ☒ Rural (area of sparse population)		

Note 1: If baghouse is located inside a building, attach a dimensioned building plan indicating building height, floorplan with dimensions, location of the baghouse plus the height and location/dimension of all doors, windows or ventilation openings which remain open during operation. The plan shall include an arrow indicating the direction of True North. If the building is equipped with a forced air ventilation system, identify all vent locations and fan capacities in CFM.

San Joaquin Valley Air Pollution Control District

Supplemental Application Form

PROCESSES SERVED BY A BAGHOUSE/DUST COLLECTOR

This form must be accompanied by a completed Application for Authority to Construct and Permit to Operate form.

PERMIT TO BE ISSUED TO: Hydrogen Energy International LLC
LOCATION WHERE THE EQUIPMENT WILL BE OPERATED: Section 10 of Township 30 South, Range 24 East in Kern County

BAGHOUSE/DUST COLLECTOR DESCRIPTION (DC-5)

Baghouse/Dust Collector Data	Manufacturer: TBD	
	Model No.: TBD	Serial No.: TBD
	PM_{10} Control Efficiency: expected 99.95(%)	
	Exhaust PM_{10} Emission expected 0.005 Concentration(gr/dscf):	
	Differential Pressure Gage [ ] Yes [ ] No	Manufacturer's Recommended Differential Pressure Operating Range: _____ to _____ inches W.C.
Filter Data	Type: [X] Bag/Tube [ ] Cartridge [ ] Envelope [ ] HEPA/Flat [ ] Sock Filter [ ] Other:_____	
	Fabric: [ ] Cotton [ ] Polypropylene [ ] Polyester [ ] Fiberglass [ ] Nomex [ ] Teflon [X] Other:__TBD_____	
	Number of Bags/Filters:	Total Cloth Area: (sq. ft.)
	Diameter or Width of Bag/Filter: (in.)	Length of Bag/Filter: (in.)
	Filter Cleaning Method: [ ] Mechanical Shaker [ ] Reverse Air Flow [ ] Pulse Jet	
Blower/Fan Data	Manufacturer:	Model No.
	Power Rating: (Horsepower)	Air Flow Rate: (dscfm)

PROCESS INFORMATION

Process served by baghouse/duct collector: Feedstock Delivery, Handling and Storage (Coke/coal Silos (loadout))
Type of material collected by the baghouse/dust collector:: feedstock dust (coal, pet coke)
Maximum quantity of material collected by the baghouse/dust collector: _____9,619_____lb/day
Maximum process weight for operation served by the baghouse/dust collector: _____4080_____tons/day
Please note, each permit is required by District Rule 2201 to have a daily emission limit (DEL). The information provided above for maximum process rate and operating schedule may be used as an enforceable limiting condition for each Authority to Construct or Permit to Operate that will be issued for the proposed project.

Please Continue on Reverse Side

EQUIPMENT SERVED BY THE BAGHOUSE/DUST COLLECTOR

Description Indicate the type of equipment that will be served by the baghouse/dust collector, such as: Rip saw, drill, router, hammermill, grain cleaner, storage bin, etc. (attach additional sheets if needed.	**Manufacturer**	**Model No.**	**Power Rating (Horsepower) or Storage Capacity (Cubic Feet)** Indicate the horsepower rating if the equipment is powered by an electric motor or indicate the maximum storage capacity if the equipment is a storage bin/silo.

HEALTH RISK ASSESSMENT DATA

Operating Hours	Maximum Operating Schedule: 24 hours per day, and 8760 hours per year		
	☒ Outdoors ☐ Indoors (if indoors, see note 1)		
Receptor Data	Distance to nearest Residence	_____ feet	Distance is measured from the proposed stack location to the nearest boundary of the nearest apartment, house, dormitory, etc.
	Direction to nearest Residence	_____	Direction from the stack to the receptor, i.e. Northeast or South.
	Distance to nearest Business	_____ feet	Distance is measured from the proposed stack location to the nearest boundary of the nearest office building, factory, store, etc.
	Direction to nearest Business	_____	Direction from the stack to the receptor, i.e. North or Southwest.
Stack Parameters	Release Height	79 feet above grade	
	Stack Diameter	17 inches at point of release	
	Rain Cap	☐ Flapper-type ☐ Fixed-type ☐ None ☐ Other: _____	
	Direction of Flow	☐ Vertically Upward ☐ Horizontal ☐ Other: _____° from vert. or _____° from horiz.	
Exhaust Data	Flowrate: 4673 acfm	Temperature: ambient °F	
Facility	☐ Urban (area of dense population) ☒ Rural (area of sparse population)		

Note 1: If baghouse is located inside a building, attach a dimensioned building plan indicating building height, floorplan with dimensions, location of the baghouse plus the height and location/dimension of all doors, windows or ventilation openings which remain open during operation. The plan shall include an arrow indicating the direction of True North. If the building is equipped with a forced air ventilation system, identify all vent locations and fan capacities in CFM.

San Joaquin Valley Air Pollution Control District

Supplemental Application Form

PROCESSES SERVED BY A BAGHOUSE/DUST COLLECTOR

This form must be accompanied by a completed Application for Authority to Construct and Permit to Operate form.

PERMIT TO BE ISSUED TO: Hydrogen Energy International LLC
LOCATION WHERE THE EQUIPMENT WILL BE OPERATED: Section 10 of Township 30 South, Range 24 East in Kern County

BAGHOUSE/DUST COLLECTOR DESCRIPTION (DC-6)

Baghouse/Dust Collector Data	Manufacturer: TBD	
	Model No.: TBD	Serial No.: TBD
	PM_{10} Control Efficiency: expected 99.95(%)	
	Exhaust PM_{10} Emission expected 0.005 Concentration(gr/dscf):	
	Differential Pressure Gage [ ] Yes [ ] No	Manufacturer's Recommended Differential Pressure Operating Range: _____ to _____ inches W.C.
Filter Data	Type: [X] Bag/Tube [ ] Cartridge [ ] Envelope [ ] HEPA/Flat [ ] Sock Filter [ ] Other:_____	
	Fabric: [ ] Cotton [ ] Polypropylene [ ] Polyester [ ] Fiberglass [ ] Nomex [ ] Teflon [X] Other:__TBD_____	
	Number of Bags/Filters:	Total Cloth Area: (sq. ft.)
	Diameter or Width of Bag/Filter: (in.)	Length of Bag/Filter: (in.)
	Filter Cleaning Method: [ ] Mechanical Shaker [ ] Reverse Air Flow [ ] Pulse Jet	
Blower/Fan Data	Manufacturer:	Model No.
	Power Rating: (Horsepower)	Air Flow Rate: (dscfm)

PROCESS INFORMATION

Process served by baghouse/duct collector: Feedstock Delivery, Handling and Storage (Fluxant Bins (filling))
Type of material collected by the baghouse/dust collector: Fluxant dust
Maximum quantity of material collected by the baghouse/dust collector: _____996_____lb/day
Maximum process weight for operation served by the baghouse/dust collector: _____940_____tons/day
Please note, each permit is required by District Rule 2201 to have a daily emission limit (DEL). The information provided above for maximum process rate and operating schedule may be used as an enforceable limiting condition for each Authority to Construct or Permit to Operate that will be issued for the proposed project.

Please Continue on Reverse Side

EQUIPMENT SERVED BY THE BAGHOUSE/DUST COLLECTOR

Description Indicate the type of equipment that will be served by the baghouse/dust collector, such as: Rip saw, drill, router, hammermill, grain cleaner, storage bin, etc. (attach additional sheets if needed.	**Manufacturer**	**Model No.**	**Power Rating (Horsepower) or Storage Capacity (Cubic Feet)** Indicate the horsepower rating if the equipment is powered by an electric motor or indicate the maximum storage capacity if the equipment is a storage bin/silo.

HEALTH RISK ASSESSMENT DATA

Operating Hours	Maximum Operating Schedule: 24 hours per day, and 8760 hours per year		
	☒ Outdoors ☐ Indoors (if indoors, see note 1)		
Receptor Data	Distance to nearest Residence	_____ feet	Distance is measured from the proposed stack location to the nearest boundary of the nearest apartment, house, dormitory, etc.
	Direction to nearest Residence	_____	Direction from the stack to the receptor, i.e. Northeast or South.
	Distance to nearest Business	_____ feet	Distance is measured from the proposed stack location to the nearest boundary of the nearest office building, factory, store, etc.
	Direction to nearest Business	_____	Direction from the stack to the receptor, i.e. North or Southwest.
Stack Parameters	Release Height	176 feet above grade	
	Stack Diameter	9 inches at point of release	
	Rain Cap	☐ Flapper-type ☐ Fixed-type ☐ None ☐ Other: _____	
	Direction of Flow	☐ Vertically Upward ☐ Horizontal ☐ Other: _____° from vert. or _____° from horiz.	
Exhaust Data	Flowrate: 1234 acfm	Temperature: ambient °F	
Facility	☐ Urban (area of dense population) ☒ Rural (area of sparse population)		

Note 1: If baghouse is located inside a building, attach a dimensioned building plan indicating building height, floorplan with dimensions, location of the baghouse plus the height and location/dimension of all doors, windows or ventilation openings which remain open during operation. The plan shall include an arrow indicating the direction of True North. If the building is equipped with a forced air ventilation system, identify all vent locations and fan capacities in CFM.

San Joaquin Valley Unified Air Pollution Control District
Supplemental Application Form

Flares

Please complete one form for each flare.

This form must be accompanied by a completed Application for Authority to Construct and Permit to Operate form.

PERMIT TO BE ISSUED TO: Hydrogen Energy International LLC (HEI)
FLARE LOCATION (STREET ADDRESS or ¼ SECTION, TOWNSHIP, & RANGE): Section 10 of Township 30 South, Range 24 East in Kern County

PROCESS DESCRIPTION

Process Data	Gas Streams/Processes the Flare Serves (include permit number(s), if applicable): Gasification Block including startup and shutdown; short term combustion turbine outages; other unplanned events	
	Is the flare gas pressure ≥ 5 psig? ☒ Yes ☐ No	
	Maximum Potential Flare Gas Flowrate: 4.42 x10^6 acf/hr, _____ acf/day, _____ acf/year	
	Is this a municipal landfill flare? ☐ Yes ☒ No	Is this an emergency flare? ☐ Yes ☒ No

EQUIPMENT DESCRIPTION (Gasification Flare)

Tip Data	Tip Manufacturer: TBD	Tip Model: TBD
	Serial No.: TBD	Tip Manufacturer's rated capacity: TBD (MMcf/hr)
	Tip Opening Cross Sectional Area: TBD (ft2)	
	Is this a ground level flare? ☐ Yes ☒ No	Is this an enclosed flare? ☐ Yes ☒ No
Flare Design and Emission Control Equipment	☐ Air-assist flare, _____ scfm of assist air	
	☐ Steam assist flare, _____ lb/min of assist steam	
	☐ Coanda effect flare	
	☒ Other type of flare (please provide details): Gas Assist (if required)	
	Smokeless Operation? ☒ Yes ☐ No, Source: Supplier's experience	
Flare Emissions Data	NO_X Emission Factor: 0.12/ 0.07 (lb/MMBtu)	
	PM_{10} Emission Factor: 0.003 (lb/MMBtu)	
	CO Emission Factor: 0.08/ 1.00/0.37 (lb/MMBtu)	
	VOC Emission Factor: 0.0013 (lb/MMBtu)	
	VOC destruction efficiency: _____ %	
Source of Data	☒ Manufacturer's Specifications ☐ Emissions Source Test ☐ AP-42 ☐ Other _____ **Note: please provide copies of all sources of emissions data.**	

FLARED GAS DATA

Flared Gas Data	Fuel Type:	
	Flare Gas Fuel Flow Meter? ☐ Yes ☒ No	
	Higher Heating Value: 97 Btu/scf	Sulfur Content: _____ gr/100 scf
	Carbon to Hydrogen ratio:	
	Percent weight of hydrocarbons heavier than pentane (please attach gas analysis):	

PILOT EQUIPMENT AND FUEL DATA

Pilot Type	Intermittent ☐	Continuous ☒	Automatic (Flow Sensing) Ignition System ☐	Heat Sensing Ignition System ☐
Pilot Fuel Data	Type of pilot gas fuel (e.g., LPG/propane, methane, or process gas stream): Natural gas			
	Pilot Fuel Consumption: 0.5 MMbtu/hr (scf/hr)		Sulfur Content: </=0.75 gr/100 scf	
	Pilot Gas Fuel Flow Meter: ☐ Yes ☐ No			

GAS SULFUR TREATMENT (if applicable)

Sulfur Treatment System	Type of system (submit manufacturer's documentation):
	Control Efficiency:_____ %, Source:
	Outlet sulfur concentration: _____ ppmw or gr-S/100 scf, Source:

HEALTH RISK ASSESSMENT DATA

Operating Hours	Maximum Operating Schedule: 24 hours per day, and 96 (wet) and 38 (dry) hours per year		
Receptor Data	Distance to nearest Residence	_____ feet	Distance is measured from the proposed flare location to the nearest property line of the nearest apartment, house, dormitory, etc.
	Direction to nearest Residence	_____	Direction from the flare to the receptor, i.e. Northeast or South.
	Distance to nearest Business	_____ feet	Distance is measured from the proposed flare location to the nearest property line of the nearest office building, factory, store, etc.
	Direction to nearest Business	_____	Direction from the flare to the receptor, i.e. North or Southwest.
Exhaust Parameters	Release Height	250 feet above grade	
	Direction of Flow	☒ Vertically Upward ☐ Horizontal ☐ Other: _____ ° from vert. or _____ ° from horiz.	
Exhaust Data	Flowrate: 0.5/900 acfm	Temperature: (N/A) °F	
Facility Location	☐ Urban (area of dense population) ☒ Rural (area of sparse population)		

San Joaquin Valley Unified Air Pollution Control District
Supplemental Application Form

Flares

Please complete one form for each flare.

This form must be accompanied by a completed Application for Authority to Construct and Permit to Operate form.

PERMIT TO BE ISSUED TO: Hydrogen Energy International LLC (HEI)
FLARE LOCATION (STREET ADDRESS or ¼ SECTION, TOWNSHIP, & RANGE): Section 10 of Township 30 South, Range 24 East in Kern County

PROCESS DESCRIPTION

Process Data	Gas Streams/Processes the Flare Serves (include permit number(s), if applicable): Gas streams during start up, shutdown, and pressure relief streams during unplanned events.	
	Is the flare gas pressure ≥ 5 psig? ☐ Yes ☒ No	
	Maximum Potential Flare Gas Flowrate: _____ acf/hr, _____ acf/day, _____ acf/year	
	Is this a municipal landfill flare? ☐ Yes ☒ No	Is this an emergency flare? ☐ Yes ☒ No

EQUIPMENT DESCRIPTION (SRU Flare)

Tip Data	Tip Manufacturer: TBD	Tip Model: TBD
	Serial No.: TBD	Tip Manufacturer's rated capacity: TBD (MMcf/hr)
	Tip Opening Cross Sectional Area: TBD (ft2)	
	Is this a ground level flare? ☐ Yes ☒ No	Is this an enclosed flare? ☐ Yes ☒ No
Flare Design and Emission Control Equipment	☐ Air-assist flare, _____ scfm of assist air	
	☐ Steam assist flare, _____ lb/min of assist steam	
	☐ Coanda effect flare	
	☒ Other type of flare (please provide details): Natural Gas Assist, Heat Rate = 36 MMBtu/hr	
	Smokeless Operation? ☒ Yes ☐ No, Source: Supplier's experience	
Flare Emissions Data	NO_X Emission Factor: 0.12 (lb/MMBtu)	
	PM_{10} Emission Factor: 0.003 (lb/MMBtu)	
	CO Emission Factor: 0.08 (lb/MMBtu)	
	VOC Emission Factor: 0.0013 (lb/MMBtu)	
	VOC destruction efficiency: _____ %	
Source of Data	☒ Manufacturer's Specifications ☐ Emissions Source Test ☐ AP-42 ☐ Other _____ **Note: please provide copies of all sources of emissions data.**	

FLARED GAS DATA

Flared Gas Data	Fuel Type:	
	Flare Gas Fuel Flow Meter? ☐ Yes ☐ No	
	Higher Heating Value: _____ Btu/scf	Sulfur Content: _____ gr/100 scf
	Carbon to Hydrogen ratio:	
	Percent weight of hydrocarbons heavier than pentane (please attach gas analysis):	

PILOT EQUIPMENT AND FUEL DATA

Pilot Type	Intermittent ☐	Continuous ☒	Automatic (Flow Sensing) Ignition System ☐	Heat Sensing Ignition System ☐
Pilot Fuel Data	Type of pilot gas fuel (e.g., LPG/propane, methane, or process gas stream): Natural Gas			
	Pilot Fuel Consumption: 0.3 mmbtu/hr (scf/hr)		Sulfur Content: <=0.75 gr/100 scf	
	Pilot Gas Fuel Flow Meter: ☐ Yes ☐ No			

GAS SULFUR TREATMENT (if applicable)

Sulfur Treatment System	Type of system (submit manufacturer's documentation): Caustic Scrubber
	Control Efficiency: > 99 %, Source:
	Outlet sulfur concentration: _____ ppmw or gr-S/100 scf, Source:

HEALTH RISK ASSESSMENT DATA

Operating Hours	Maximum Operating Schedule: _____ hours per day, and 8,760 hours per year		
Receptor Data	Distance to nearest Residence	_____ feet	Distance is measured from the proposed flare location to the nearest property line of the nearest apartment, house, dormitory, etc.
	Direction to nearest Residence	_____	Direction from the flare to the receptor, i.e. Northeast or South.
	Distance to nearest Business	_____ feet	Distance is measured from the proposed flare location to the nearest property line of the nearest office building, factory, store, etc.
	Direction to nearest Business	_____	Direction from the flare to the receptor, i.e. North or Southwest.
Exhaust Parameters	Release Height	250 feet above grade	
	Direction of Flow	☒ Vertically Upward ☐ Horizontal ☐ Other: _____ ° from vert. or _____ ° from horiz.	
Exhaust Data	Flowrate: 0.3/36 acfm	Temperature: (N/A) °F	
Facility Location	☐ Urban (area of dense population) ☒ Rural (area of sparse population)		

San Joaquin Valley Unified Air Pollution Control District
Supplemental Application Form

Flares

Please complete one form for each flare.

This form must be accompanied by a completed Application for Authority to Construct and Permit to Operate form.

PERMIT TO BE ISSUED TO: Hydrogen Energy International LLC (HEI)
FLARE LOCATION (STREET ADDRESS or ¼ SECTION, TOWNSHIP, & RANGE): Section 10 of Township 30 South, Range 24 East in Kern County

PROCESS DESCRIPTION

Process Data	Gas Streams/Processes the Flare Serves (include permit number(s), if applicable): Low-temperature gas streams during unplanned upsets or emergency events	
	Is the flare gas pressure ≥ 5 psig? ☐ Yes ☒ No	
	Maximum Potential Flare Gas Flowrate: _____ acf/hr, _____ acf/day, _____ acf/year	
	Is this a municipal landfill flare? ☐ Yes ☒ No	Is this an emergency flare? ☒ Yes ☐ No

EQUIPMENT DESCRIPTION (Rectisol Flare)

Tip Data	Tip Manufacturer: TBD	Tip Model: TBD
	Serial No.: TBD	Tip Manufacturer's rated capacity: TBD (MMcf/hr)
	Tip Opening Cross Sectional Area: TBD (ft2)	
	Is this a ground level flare? ☐ Yes ☒ No	Is this an enclosed flare? ☐ Yes ☒ No
Flare Design and Emission Control Equipment	☐ Air-assist flare, _____ scfm of assist air	
	☐ Steam assist flare, _____ lb/min of assist steam	
	☐ Coanda effect flare	
	☒ Other type of flare (please provide details): Gas Assist (if required)	
	Smokeless Operation? ☒ Yes ☐ No, Source: Supplier's Experience	
Flare Emissions Data	NO_X Emission Factor: 0.12 (lb/MMBtu)	
	PM_{10} Emission Factor: 0.003 (lb/MMBtu)	
	CO Emission Factor: 0.08 (lb/MMBtu)	
	VOC Emission Factor: 0.0013 (lb/MMBtu)	
	VOC destruction efficiency: _____ %	
Source of Data	☒ Manufacturer's Specifications ☐ Emissions Source Test ☐ AP-42 ☐ Other _____ **Note: please provide copies of all sources of emissions data.**	

FLARED GAS DATA

Flared Gas Data	Fuel Type:	
	Flare Gas Fuel Flow Meter? ☐ Yes ☐ No	
	Higher Heating Value: _____ Btu/scf	Sulfur Content: _____ gr/100 scf
	Carbon to Hydrogen ratio:	
	Percent weight of hydrocarbons heavier than pentane (please attach gas analysis):	

PILOT EQUIPMENT AND FUEL DATA

Pilot Type	Intermittent ☐	Continuous ☒	Automatic (Flow Sensing) Ignition System ☐	Heat Sensing Ignition System ☐
Pilot Fuel Data	Type of pilot gas fuel (e.g., LPG/propane, methane, or process gas stream): Naturak Gas			
	Pilot Fuel Consumption: 0.3 MMbtu/hr (scf/hr)		Sulfur Content: <= 0.75 gr/100 scf	
	Pilot Gas Fuel Flow Meter: ☐ Yes ☐ No			

GAS SULFUR TREATMENT (if applicable)

Sulfur Treatment System	Type of system (submit manufacturer's documentation):
	Control Efficiency:_____ %, Source:
	Outlet sulfur concentration: _____ ppmw or gr-S/100 scf, Source:

HEALTH RISK ASSESSMENT DATA

Operating Hours	Maximum Operating Schedule: 24 hours per day, and 8760 (pilot only) hours per year		
Receptor Data	Distance to nearest Residence	_____ feet	Distance is measured from the proposed flare location to the nearest property line of the nearest apartment, house, dormitory, etc.
	Direction to nearest Residence	_____	Direction from the flare to the receptor, i.e. Northeast or South.
	Distance to nearest Business	_____ feet	Distance is measured from the proposed flare location to the nearest property line of the nearest office building, factory, store, etc.
	Direction to nearest Business	_____	Direction from the flare to the receptor, i.e. North or Southwest.
Exhaust Parameters	Release Height	250 feet above grade	
	Direction of Flow	☒ Vertically Upward ☐ Horizontal ☐ Other: _____ ° from vert. or _____ ° from horiz.	
Exhaust Data	Flowrate: 0.3 acfm	Temperature: (N/A) °F	
Facility Location	☐ Urban (area of dense population) ☒ Rural (area of sparse population)		

FLUOR

SPECIFICATION SHEETS

Contract	A3RW
Item No.	TBD
Revision	A Date 11/06/2008
By	TD Chk: JR App: GS
Unit	640 - FLARE SYSTEM
P.O. No.	
Inquiry No.	
Sheet	1 Of 4

CONFIDENTIAL : This document contains confidential and proprietary information not to be published, disclosed to others, reproduced or used for any purpose other than purpose for which it is furnished without prior written permission of the Fluor Corporation.

Client: HYDROGEN ENERGY INTERNATIONAL, LLC (HEI)
Service: ELEVATED RECTISOL COLD FLARE (notes 4 & 6)
Tag No.: FLARE TIP
LABYRINTH SEAL
FLARE STACK RISER
IGNITION & MONITORING PANEL

Plant: HECA PROJECT
Site: KERN COUNTY, CA
Type: Self Supported Elevated Flare
Manufacturer : TBD

PROCESS DATA

VAPOR COMPOSITION:		Blocked Discharge		
CO	Vol %	0.917		
H2	Vol %	25.450		
CO2	Vol %	70.367		
H2O	Vol %	0.000		
CH4	Vol %	0.048		
Ar	Vol %	0.859		
N2	Vol %	1.188		
H2S	Vol %	1.145		
COS	Vol %	0.001		
NH3	Vol %	0.000		
O2	Vol %	0.000		
CH3OH	Vol %	0.025		
Average Molecular Weight of HC Vapor relief		32.82		
Condensed Liquid ..... Sp. Gr./ Temp.,°F				/
Relief Rate	lb/hr	33543		
Temperature of HC relief	°F	-27		
Estimated Exit Velocity... (Actual exit velocity by Vendor)	ft/sec	*		
Maximum Available Flare Inlet Pressure (at Inlet Stack Flange)	psig	5.0		
Max. Back Pressure (liquid seal requirement)	PSIG	*		
Maximum Calculated Pressure Drop, Tip	psi	*		/
Gas Seal	psi	*		/
Stack	psi	*		/
Total Calculated Maximum Flare Pressure Drop	psi	*		
Smokeless Capacity..Not required	lb/hr	N/A		
Steam Consumption (Smokeless).....	lb/hr	N/A		
Gross Heat Release..... (@ 924 Btu/lb, LHV)	MM Btu/hr	31		

SITE - Elevation Above MSL 300 ft.
Temp.: Maximum 115 °F, Minimum 20 °F
Seismic Zone: Section 1613A of CBC 2007
Wind: Design 85 miles/hr Normal 10 miles/hr Direction: South to North

MAXIMUM RADIATION (From Cold Flare)
(Using Prevailing Wind of 20 MPH & Stack Height = 250 feet))
(Solar radiation of 300 Btu/h.ft2 is included)

Dist. from stack @ Grade	Btu/(Hr.ft²) (by Fluor)	Btu/(Hr.ft²) (by Seller)
50 feet		*
100 feet		*
200 feet		*
300 feet		*
400 feet		*
500 feet		*

NOISE LEVEL (Note 5)

@ Continuous:	* dBA @ 100 ft;	* dBA @ 225 ft
@ Maximum Smokeless Rate:	* dBA @ 100 ft;	* dBA @ 225 ft
@ Maximum Flare Rate:	* dBA @ 100 ft;	* dBA @ 225 ft

UTILITY DATA

Purge Gas-Mol Wt	(Note3) , Temp 85 °F	Press. 40 psig	*11300 SCF/H;	Vel. Thru Seal * N/A	
Pilot Gas-Mol Wt	(Note 3) , Temp 85 °F	Press. 40 psig	*640 SCF/H;	LHV 930 Btu/SCF	
Ignitor Gas-Mol Wt	(Note 3) , Temp 85 °F	Press. 40 psig	* SCF/H;		

Steam-Pressure n/a PSIG; Temp n/a °F; Required Flow to:

	Maximum	Minimum (Continuous)
External Ring	N/A lb/h	n/a lb/h
Center	N/A	n/a lb/h
Total:	N/A lb/h	n/a lb/h

Min. /Normal/ Max.
Plant Air for Flame Front Generatc 85 / 95 / 100 psig Instrument Air Pressure 60/115 psig
Electrical: Hazardous NEC Area Classification CLASS I GR D DIV 2 ; V 110 Ph 1 Hz 60

NOTES:
1) Items marked " * " are by Vendor.
2) Deleted
3) See attached Sheet 3 for Natural Gas composition & heating values; Continuous purge, pilot and ignitor gas is to be natural gas.
4) This flare will be located at minimum distance from the Elevated Warm Flare in a derrick structure.
5) Noise levels to be measured at an elevation of 5 feet from grade at specified horizontal distance from base of stack.
6) The flare stack shall be transported in pieces not exceeding 60 feet in length due to acess limitations.

Notice: This drawing has not been published and is the sole property of the Fluor Corp., and is lent to the borrower for his confidential use only: and in consideration of the loan of this drawing, the borrower promises and agrees to return it upon request and agrees that it shall not be reproduced, copied, lent or otherwise disposed of directly or indirectly, nor used for any purpose other than that for which it is specifically furnished.

FLUOR

SPECIFICATION SHEETS

Contract	A3RW
Item No.	TBD
Revision	A Date 11/03/2008
By	KM Chk: JR App: GS
Unit	640 - FLARE SYSTEM
P.O. No.	
Inquiry No.	
Sheet	1 Of 4

CONFIDENTIAL : This document contains confidential and proprietary information not to be published, disclosed to others, reproduced or used for any purpose other than purpose for which it is furnished without prior written permission of the Fluor Corporation.

Client: HYDROGEN ENERGY INTERNATIONAL, LLC (HEI)
Service: ELEVATED GASIFICATION FLARE (notes 4 & 6)
Tag No.: FLARE TIP
VELOCITY SEAL
FLARE STACK RISER
IGNITION & MONITORING PANEL
LIQUID SEAL DRUM Note 11

Plant: HECA PROJECT
Site: KERN COUNTY, CA
Type: Self Supported Elevated Flare
Manufacturer : TBD

Gasification Flare

PROCESS DATA

VAPOR COMPOSITION:		Blocked Discharge	Startup Case	
CO	Vol %	17.40000	13.20	
H2	Vol %	13.50000	19.00	
CO2	Vol %	6.70000	3.90	
H2O	Vol %	60.70000	63.70	
CH4	Vol %	0.00000	0.00	
Ar	Vol %	0.40000	0.10	
N2	Vol %	0.70000	0.10	
H2S	Vol %	0.60000	0.00	
COS	Vol %	0.00000	0.00	
NH3	Vol %	0.00000	0.00	
O2	Vol %	0.00000	0.00	
HCN	Vol %	0.00000	0.00	
Average Molecular Weight of HC Vapor relief		19.6	17.34	
Condensed Liquid ..... Sp. Gr./ Temp.,°F		0.98/ 140	0.98 / 140	/
Relief Rate	lb/hr	1,256,659	523,975	
Temperature of HC relief	°F	474	474	
Estimated Exit Velocity... (Actual exit velocity by Vendor)	ft/sec	* 160	*	
Maximum Available Flare Inlet Pressure (at Inlet Stack Flange)	psig	5.0	*	
Max. Back Pressure (liquid seal requirement)	PSIG	* 10	*	
Maximum Calculated Pressure Drop, Tip	psi	* 1.25	*	/
Gas Seal	psi	* 0.75	*	/
Stack	psi	* 1.5	*	/
Total Calculated Maximum Flare Pressure Drop	psi	*	*	
Smokeless Capacity..Not required	lb/hr	N/A	N/A	
Steam Consumption (Smokeless).....	lb/hr	N/A	N/A	
Gross Heat Release..... (@ 1,868 Btu/lb, LHV)	MM Btu/hr	2,347	1082	

SITE - Elevation Above MSL 300 ft.
Temp.: Maximum 115 °F, Minimum 20 °F
Seismic Zone: Section 1613A of CBC 2007
Wind: Design 85 miles/hr Normal 10 miles/hr Direction: South to North

MAXIMUM RADIATION (From Large 118" Flare)
(Using Prevailing Wind of 20 MPH & Stack Height = 250 feet))
(Solar radiation of 300 Btu/h.ft2 is included)

Dist. from stack @ Grade	Btu/(Hr.ft²) (by Fluor)	Btu/(Hr.ft²) (by Seller)
50 feet	458	*
100 feet	469	*
200 feet	473	*
300 feet	454	*
400 feet	423	*
500 feet	394	*

NOISE LEVEL (Note 5)

@ Continuous:	* dBA @ 100 ft;	* dBA @ 225 ft
@ Maximum Smokeless Rate:	* dBA @ 100 ft;	* dBA @ 225 ft
@ Maximum Flare Rate:	* dBA @ 100 ft;	* dBA @ 225 ft

UTILITY DATA

Purge Gas-Mol Wt	(Note3) , Temp 85 °F	Press. 40 psig	*11300 SCF/H;	Vel. Thru Seal * N/A	
Pilot Gas-Mol Wt	(Note 3) , Temp 85 °F	Press. 40 psig	*640 SCF/H;	LHV 930 Btu/SCF	
Ignitor Gas-Mol Wt	(Note 3) , Temp 85 °F	Press. 40 psig	* SCF/H;		

		Maximum	Minimum (Continuous)
Steam-Pressure	n/a PSIG; Temp n/a °F; Required Flow to:	External Ring N/A lb/h	n/a lb/h
		Center N/A	n/a lb/h
		Total: N/A lb/h	n/a lb/h

Min. /Normal/ Max.
Plant Air for Flame Front Generatc 85 / 95 / 100 psig Instrument Air Pressure 60/115 psig
Electrical: Hazardous NEC Area Classification CLASS I GR D DIV 2 ; V 110 Ph 1 Hz 60

NOTES:
1) Items marked " * " are by Vendor.
2) At design relief rate, the back pressure at the inlet of Liquid Seal Drum is 10 psig.
3) See attached Sheet 3 for Natural Gas composition & heating values; Continuous purge, pilot and ignitor gas is to be natural gas.
4) This flare will have an external Liquid Seal Drum and will be self supported.
5) Noise levels to be measured at an elevation of 5 feet from grade at specified horizontal distance from base of stack.
6) The flare stack shall be transported in pieces not exceeding 60 feet in length due to acess limitations.

Notice: This drawing has not been published and is the sole property of the Fluor Corp., and is lent to the borrower for his confidential use only: and in consideration of the loan of this drawing, the borrower promises and agrees to return it upon request and agrees that it shall not be reproduced, copied, lent or otherwise disposed of directly or indirectly, nor used for any purpose other than that for which it is specifically furnished.

no, caustic scrubber

Design Case Data

(Full flow, blocked discharge)

	SRU/Acid Gas Flare Data
Number of Flares	1 x 100%
Process Flaring Location	
Temperature (F)	105
Relief Set Pressure (psig)	15
Process Gas Molecular Weight	38.54
Process Gas Mass Total Flow (lb/h)	34,065

Process Gas Composition	*Mol %*
H2	0.000
Ar	0.000
N2	0.000
CO	0.000
CO2	50.500
H2S	45.900
COS	0.000
H2O	3.600
CH4	-----
H2S	-----
NH3	-----
HCL	-----
HCN	-----
NH3 (ppmvw)	-----
COS (ppmvw)	-----

Process Gas HHV	(Btu/SCF)	
	(Btu/lb)	
Process Gas LHV	(Btu/SCF)	270.2000
	(Btu/lb)	2658.000

Nitrogen Sweep Flow to Flares, scfh	advise
Natural Gas Flow per Pilot, scfh	advise
Number of Pilots	advise
Natural Gas Total Pilot Flow, scfh	advise
Natural Gas Compostion	*Mol %*
Methane	97.787
Ethane	1.3144
Porpane	0.0744
Normal Butane	0.0085
Iso Butane	0.0056
Iso Pentane	0.0023
Normal Pentane	0.0023
Hexanes	0.0019
Heptanes	0.0000
Nitrogen	0.5503
Carbon Dioxide	0.2534
Sulfur	0.8 grains / 100scf
Natural Gas Specific Gravity	0.5671
Natural Gas HHV, BTU/scf	1016
Natural Gas as "Assist Gas" Flow to Flares, scfh	advise

Emission Factors for Total Gas Flow (Process Gas Flow, Pilot Flow, and Assist Gas Flow to Flare)		
NOx	lb/mmbtu	advise
CO	lb/mmbtu	advise
VOC	% Destruction	advise
PM	lb/mmbtu	advise
COS	% Destruction	advise
H2S	% Destruction	advise

Estimated Flare Stack Diameter, ft	advise
Estimated Stack Height, feet	advise
Radiation Safety Zone, feet	100
Flare model no.	
Budget Quote	

Appendix C
Air Modeling Protocol

Appendix C1

Modeling Protocol

Appendix C1

Modeling Protocol

The following Modeling Protocol was submitted for review to the California Energy Commission (CEC), the U.S. Environmental Protection Agency (U.S. EPA) and the San Joaquin Valley Air Pollution Control District (SJVAPCD) on April 22, 2008, and resubmitted to the same three agencies on February 6, 2009. Since development of the Protocol, the Project has undergone certain refinements. Please refer to Section 2, Project Description, of the Revised Application for Certification for the comprehensive description of the Project and its operations. None of the refinements made to the Project subsequent to development of the Modeling Protocol affect the appropriateness of the Modeling Protocol for use in analyzing Project impacts. Comments on the February 2009 submittal of the Modeling Protocol were received from the CEC and U.S. EPA. Those comments, and Applicant's responses thereto, are also included in Appendix C2.

AIR QUALITY MODELING PROTOCOL FOR THE HECA POWER PROJECT KERN COUNTY, CALIFORNIA

Prepared For:

- San Joaquin Valley Air Pollution Control District
- California Energy Commission
- U.S. Environmental Protection Agency Region IX
- U.S. Forest Service
- National Park Service

Prepared on behalf of

Hydrogen Energy International LLC

February 6, 2009

URS

1333 Broadway, Suite 800
Oakland, CA 94612

TABLE OF CONTENTS

Section 1 Introduction 1-1

1.1 Background 1-1
1.2 Purpose 1-4

Section 2 Project Description 2-1

2.1 Project Location 2-1
2.2 Description of The Proposed Sources 2-1

Section 3 Regulatory Setting 3-1

3.1 California Energy Commission Requirements 3-1
3.2 San Joaquin Valley Air Pollution Control District Requirements 3-1
3.3 U.S. Environmental Protection Agency Requirements 3-2

Section 4 Air Quality Impact Analysis for Class II Areas 4-1

4.1 Turbine Screening Modeling 4-1
4.2 Refined Modeling 4-1
4.2.1 PSD Modeling Analyses 4-3
4.2.2 Ambient Air Quality Standards Analysis 4-3
4.2.3 Health Risk Assessment Analysis 4-3
4.3 Modeling Emissions Inventory 4-4
4.3.1 Operational Project Sources 4-4
4.3.2 Project Construction Sources 4-6
4.3.3 Toxic Air Contaminant Sources 4-6
4.3.4 Cumulative Impact Analysis Including Off-Property Sources 4-7
4.4 Building Wake Effects 4-7
4.5 Receptor Grid 4-7
4.6 Meteorological and Air Quality Data 4-8
4.6.1 Meteorological Data 4-8
4.6.2 Air Quality Monitoring Data 4-9
4.7 Fumigation modeling 4-11

Section 5 Air Quality Impact Analysis For Class I Areas 5-1

5.1 Near-Field Class I Areas Air Quality Impact Analysis 5-4
5.2 Far-field Class I Area Air Quality Impact Analysis: CALPUFF Modeling 5-4
5.2.1 CALPUFF/CALMET Description 5-5
5.2.2 Far-Field Class I Areas Visibility and Regional Haze Analysis 5-6
5.2.3 PSD Class I Significance Analysis 5-7
5.2.4 Deposition Analysis 5-8
5.2.5 Soils and Vegetation 5-8

Section 6 Presentation of Modeling Results 6-1

6.1 PSD, NAAQS and CAAQS Analyses 6-1
6.2 Health Risk Assessment Analysis 6-1

6.3 Class I Analysis 6-1
6.4 Data Submittal 6-1

Section 7 References 7-1

Tables

Table 4-1 Relevant Ambient Air Quality Standards and Significance Levels
Table 4-2 Approximate Annual Pollutant Emissions for the HECA Turbine/HRSG, Auxiliary CTG, Auxiliary Boiler and the Cooling Towers at Steady State Operation
Table 4-3 Highest Monitored Pollutant Concentrations Near the Proposed HECA Site (2004 – 2006)
Table 5-1 Class I Areas Evaluated with Respect to 100-km Radius of the Proposed HECA Facility
Table 5-2 Scattering Coefficients used in CALPUFF Analysis for the San Rafael Wilderness Class I Area
Table 5-3 FLAG (Proposed) Class I Significance Impact Levels

Figures

Figure 1 General Vicinity – Hydrogen Energy California
Figure 2 HECA Facility Plot Plan
Figure 3 HECA Process Diagram
Figure 4 Calpuff Domain and Receptor For the Class I Area Surrounding HECA

Appendices

Appendix A Annual and Seasonal Windroses for the Bakersfield International Airport (2000-2004)

$\mu g/m^3$	Micrograms per cubic meter
AAQS	Ambient Air Quality Standards
AERMOD	American Meteorological Society/Environmental Protection Agency Regulatory Model
AFC	Application for certification
APN	Assessor Parcel Number
AQRV	Air quality related values
ARB	Air Resources Board
ARM	Ambient Ratio Method
ATC	Authority to construct
BACT	Best available control technology
BART	Best available retrofit technology
BPAE	BP Alternative Energy
BPIP	Building profile input program
BPIP-Prime	Building Parameter Input Program – Prime
CAAQS	California Ambient Air Quality Standards
CARB	California Air Resources Board
CEC	California Energy Commission
CO	Carbon monoxide
CO_2	Carbon dioxide
CTG	Combustion turbine generator
°C	degrees Celsius
DAT	Deposition analysis threshold
DCS	Distributed Control System
DEGADIS	Dense gas dispersion model
DEM	Digital elevation model
DOC	Determination of compliance
EC	Element carbon
ERC	Emission reduction credit
FLAG	Federal land manager air quality related values group
FLM	Federal Land Manager
°F	Degree Fahrenheit
GEP	Good engineering practice
g/s	Gram per second
H_2S	Hydrogen Sulfide
HARP	Hotspots analysis and reporting program
HECA	Hydrogen Energy California
HEI	Hydrogen Energy Inc
HHV	Higher heating value
HI	Hazard Indices
HNO_3	Nitric acid
HRA	Health risk assessment
HRSG	Heat recovery steam generator
IGCC	Integrated gasification combined cycle
ISCST3	Industrial Source Complex Short Term 3rd version

ISO	International Organization for Standardization
IWAQM	Interagency Workgroup on Air Quality Modeling
km	Kilometers
LAC	Level of acceptable change
LCC	Lambert Conformal Conic
LORS	Laws, ordinances, regulations, and standards
LULC	Land use land cover
MEI	Maximally exposed individual
m	Meters
mm	Millimeters
MICR	Minimum individual cancer risk
MM5	Mesoscale meteorological
MMBtu/hr	Million British thermal unit per hour
MW	Megawatt
NAAQS	National Ambient Air Quality Standards
NH_4NO_3	Ammonium nitrate
$(NH_4)_2SO_4$	Ammonium sulfate
NNSR	Non-attainment New Source Review
NO_2	Nitrogen dioxide
NO_3	Nitrate
NO_x	Nitrogen oxides
NPS	National Park Service
NSR	New source review
NWS	National Weather Service
O_3	Ozone
OEHHA	Office of Environmental Health Hazard Assessment
OLM	Ozone limiting method
Pb	Lead
$PM_{2.5}$	Particulate matter less than 2.5 μm in diameter
PM_{10}	Particulate matter less than 10 μm in diameter
ppb	Parts per billion
ppm	Parts per million
PMS	Particulate Matter Speciation
PSD	Prevention of significant deterioration
PTE	Potential to emit
RH	Relative humidity
ROC	Reactive organic compound
SCR	Selective catalytic reduction
SIL	Significant impact level
SJVAPCD	San Joaquin Valley Air Pollution Control District
SO_2	Sulfur dioxide
SO_x	Sulfur oxides
SOA	Secondary organic aerosol
STG	Steam turbine generator
TAC	Toxic air contaminants

T-BACT	Best available control technology for toxics
TGT	Tail gas treatment
tpy	Tons per year
TSP	Total suspended particles
USEPA	United States Environmental Protection Agency
USFS	United States Forest Service
USGS	United States Geological Survey
UTM	Universal Transverse Mercator
VOC	Volatile organic compound
WRAP	Western regional air partnership
ZOI	Zone of impact

SECTION 1 INTRODUCTION

1.1 BACKGROUND

This document is being submitted to your agency for review and approval. Your agency received a similar document in April 2008 which was commented on and approved. This document was modified from the 2008 version because a new site location about 2.5 km north of the previous site has been selected for the project. All agency comments received for the previous version have been incorporated into this modification. The modeling methodology is unchanged. Ambient monitoring data has been updated.

Hydrogen Energy California (HECA) will be a nominal net 250-megawatt (MW) integrated gasification combined cycle (IGCC) power plant to be constructed on an approximately 1,100-acre parcel near an oil producing area in Kern County, Southern California. The Project will be owned and operated by Hydrogen Energy International LLC, a joint venture of BP Alternative Energy (BPAE) and Rio Tinto. HECA will integrate a gasification block consisting of two active gasification trains (and one spare in hot standby mode) and associated equipment and a power block consisting of one hydrogen-fired or natural gas-fired, or a combination of hydrogen and natural gas, combustion turbine-electrical generator (CTG), duct-fired heat recovery steam generator (HRSG), one condensing steam turbine generator (STG) and associated equipment. HECA will be permitted as a base loaded facility. A blend of petroleum coke and coal or 100 percent petroleum coke will be the primary feedstock to the gasifier. The Carbon Dioxide (CO_2) gas exiting the gasifier will be separated from the hydrogen stream and injected into the nearby oil fields to reduce greenhouse gas emissions from the project and for enhanced recovery of oil. Natural gas will be used in the CTG during startups and at other times in the CTG and the HRSG to supplement the hydrogen fuel. The project will also include an auxiliary CTG for electrical power production for on-site and off-site use. This will be a natural gas-fired simple cycle gas turbine GE model number LMS-100 with an output of approximately 100 MW.

The HECA site area is approximately 543 security fenced acres within a 1,100 acre property located near an oil producing area in Kern County, Southern California. It is 34 km southwest of Bakersfield near Buttonwillow. The parcel is just west of Tupman Road and southeast of the town of Buttonwillow. The legal description of the property is as follows: Southeast ¼ of Section 9 (only the portion north of the West Side Canal), Section 10 (excluding 5 acres in the northwest quadrant), and Section 15 (only the portion north of the West Side Canal) within Township 30 South, Range 24 East in Kern County. The Assessor's Parcel Numbers (APN) are:

- 159-040-02
- 159-040-04
- 159-040-11
- 159-040-16
- 159-040-18
- 159-190-09

The project is subject to the site licensing requirements of the California Energy Commission (CEC). The CEC will coordinate its independent air quality evaluations with the San Joaquin Valley Air Pollution Control District (SJVAPCD) through the Determination of Compliance (DOC) process. The HECA will

be a Major Source as this term is defined in the United States Environmental Protection Agency's (USEPA) Prevention of Significant Deterioration (PSD) regulations, because it is a categorical source (fossil-fuel fired steam electric plant of more than 250 MMBtu/hr heat input), and will have a potential to emit more than 100 tons per year (tpy) of nitrogen oxides (NO_x), particulate matter of diameter less than or equal to 10 microns (PM_{10}) and carbon monoxide (CO). Volatile Organic Compounds (VOC) and sulfur oxides (SO_x) will be emitted in lesser amounts. Because the project will emit more than 100 tpy of at least one attainment pollutant, PSD analyses are also required for any other criteria pollutants for which the proposed facility's Potential to Emit exceeds PSD significant emission levels.

The annual emissions estimates described above are based on the following annual operating parameters:

- One gasification block cold startup and shutdown each year;
- Up to 12 gasifier hot restarts per year;
- Up to 3 cold power block starts, 2 warm power block starts and 5 shutdowns per year of the CTG;
- Up to 7,500 hours/year at steady state operation of the power block;
- Up to 8,520 hours/year operation of the cooling towers;
- Up to 4,000 hours per year operation of the Auxiliary CTG
- Up to 25 percent annual capacity of the auxiliary boiler; and
- Intermittent testing of the emergency diesel generator and the emergency diesel fire pump.

Because the project triggers PSD review, the air dispersion modeling for this project will be conducted in conformance with PSD requirements. For example, worst-case predicted impacts will be compared with the applicable monitoring exemption limits to demonstrate that the project will be exempt from the requirements relating to pre-construction ambient air quality monitoring. The PSD regulations apply only to those pollutants for which the project area is in attainment of the National Ambient Air Quality Standards (NAAQS). State and local new source review (NSR) and non-attainment NSR (NNSR) regulations potentially apply to all criteria pollutants, depending on the quantity of pollutants emitted.

Figure 1
General Vicinity – Hydrogen Energy California

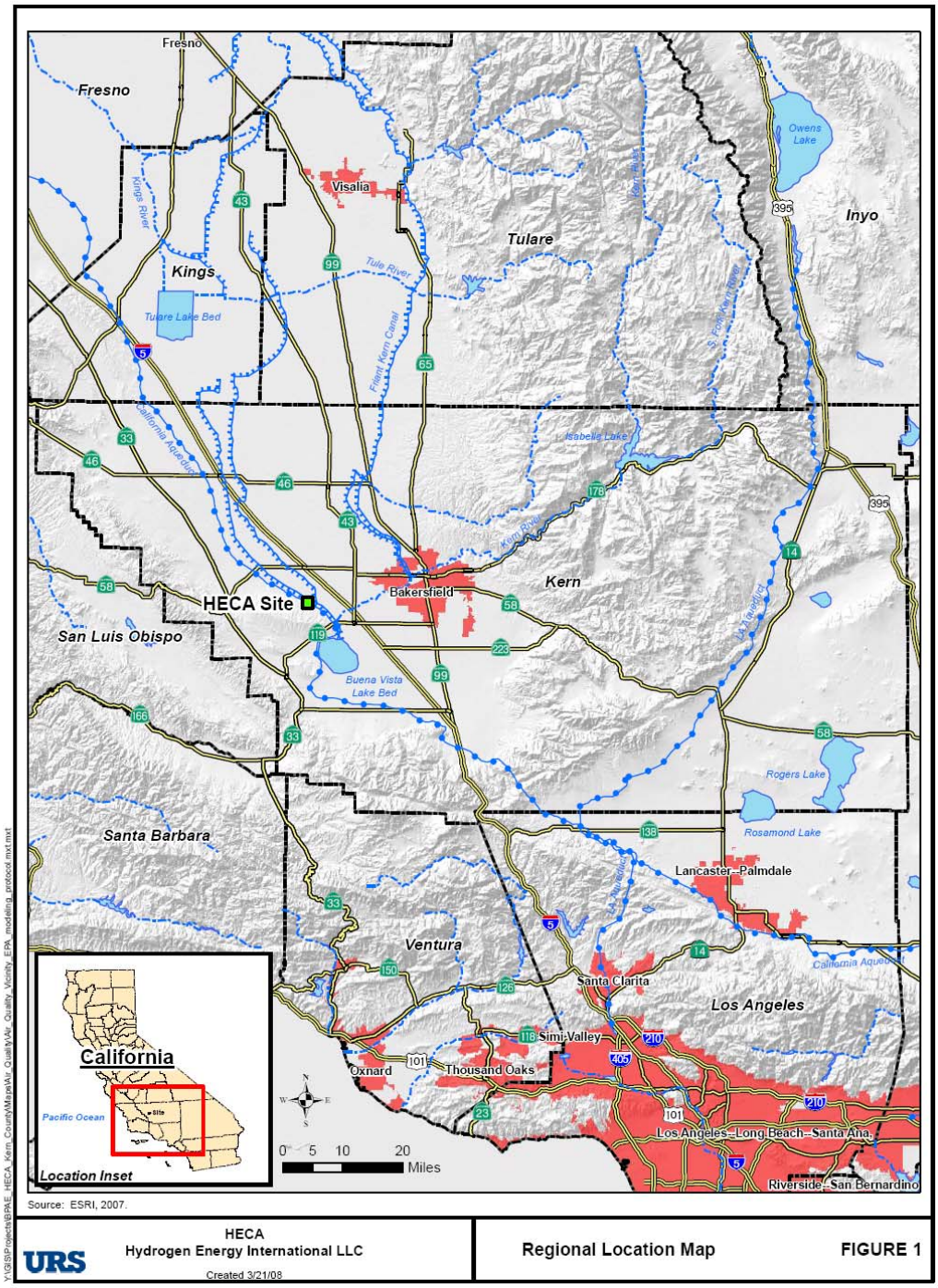

The area around HECA is classified as attainment with respect to the NAAQS for nitrogen dioxide (NO_2), particulate matter with diameter less than 10 micrometers (PM_{10}), CO, and SO_2, and non-attainment for ozone (O_3) and particulate matter with diameter less than 2.5 micrometers ($PM_{2.5}$). With respect to the California Ambient Air Quality Standards (CAAQS), the area around HECA is classified as attainment for NO_2, CO, sulfates, lead (Pb), hydrogen sulfide, and SO_2, and non-attainment for O_3, PM_{10}, and $PM_{2.5}$. NO_2 and SO_2 are regulated as PM_{10} precursors, and NO_2 and volatile organic compounds (VOC) as O_3 precursors. Project emissions of non-attainment pollutants and their precursors will be offset to satisfy federal and local NNSR regulations.

1.2 PURPOSE

The CEC, SJVAPCD and USEPA all require the use of atmospheric dispersion modeling to demonstrate that a new power generation facility or modification to an existing facility will comply with applicable air quality standards. These agencies also require an assessment of the potential impacts on human health from the toxic air contaminants that may be emitted by such projects. In addition, CEC power plant siting regulations require modeling to evaluate the cumulative impacts of the proposed project with other new and reasonably foreseeable projects within 10 km (6 miles) of the project site.

This document summarizes the procedures that are proposed for the air dispersion modeling for project certification and permitting. Modeling of both operation and construction emissions due to the proposed power plant will be performed in accordance with CEC and SJVAPCD guidance. This Protocol is being submitted to the CEC and SJVAPCD for their review and comment prior to completion of the applicable permit applications. The Protocol is also being provided to USEPA Region IX, U.S. Forest Service and National Park Service, because of the need to obtain a separate PSD permit for the proposed project. The proposed model selection and modeling approach is based on review of applicable regulations and agency guidance documents, and recent discussions with staffs of the responsible agencies.

SECTION 2 PROJECT DESCRIPTION

2.1 PROJECT LOCATION

The location of the proposed project is shown on Figure 1, which also illustrates the project site, and nearby roads and other features. The HECA site is approximately 1,100 acres in size. The site is accessible from Bakersfield via State Highway 119 westbound and west of Tupman Road.

2.2 DESCRIPTION OF THE PROPOSED SOURCES

Figure 2 shows the preliminary layout of the proposed power plant, including property lines and the locations of all major equipment. The process diagram of the project is shown in Figure 3. Emission points are identified on Figure 2 by number and shown in the legend. These numbers are used in the discussions below.

The proposed power generation facility (power block) will consist of one GE Model 7FB or equivalent Siemens CTG with an ISO base load gross output of approximately 230 MW. The CTG will be designed and constructed to burn multiple fuels (i.e., a combination of fuels ranging from hydrogen to pipeline-quality natural gas and mixtures of the two) with an evaporative cooling system installed on the inlet air for use when the ambient temperatures exceed 59°F. The CTG will be followed by a Heat Recovery Steam Generator (HRSG). The HRGS will also be designed to burn the same multiple fuels as the CTG. The maximum fuel flow rate for the CTG and HRSG will be approximately 1,850 MMBtu/hr and 500 MMBtu/hr (higher heating value, HHV), respectively. Exhaust from the CTG/HRSG will exit through a stack with a height of 213 feet (Emission Point No. 4).

An air/nitrogen mixture is supplied to the CTG through an inlet air filter, inlet air evaporative cooling system, compressor section of the combustion turbine and then exits through the compressor discharge casing to the combustion chambers. Fuel is also supplied to the combustion chambers where it is ignited with the compressed air/nitrogen mixture, expanding through the turbine blades, driving the turbine, electricity generator, and the CTG compressor. Exhaust gas from the CTG is directed through internally insulated ductwork to the HRSG. Steam generated in the HRSG is admitted to a steam turbine generator (STG) for electric power generation. The STG system, rated at approximately 150 MW consists of a steam turbine, gland steam system, lube oil system, hydraulic control system, and a hydrogen cooled generator with all required accessories.

A diffusion combustor system using nitrogen as a diluent when firing hydrogen and using steam as a diluent when firing natural gas will be used to control the NO_X emissions from the CTG. A selective catalytic reduction (SCR) system will be provided in the HRSG to further reduce the NO_X emissions to the atmosphere. The SCR system for the HRSG will inject aqueous ammonia into the exhaust gas stream upstream of a catalyst bed to reduce NO_X to inert nitrogen and water. An oxidation catalyst system will also be incorporated into the air quality control system to control emissions of CO and ROGs.

The auxiliary CTG will be fired exclusively on natural gas and will be equipped with water injection and selective catalytic reduction (SCR) for the control of NO_x emissions and an oxidation catalyst for control

emissions of CO and ROGs. The auxiliary CTG will operate in simple cycle mode and will have an exhaust stack with a height of 110 feet (Emission Point No. 12).

An auxiliary boiler (Emission Point No. 6) will provide steam to facilitate CTG startup and for other purposes. The auxiliary boiler will be designed to burn a single fuel (i.e., pipeline-quality natural gas) at the design maximum fuel flow rate of 142 MMBtu/hr HHV. The auxiliary boiler will be equipped with ultra-low NO_X combustors and will have an estimated annual capacity of 25 percent.

HECA will also incorporate a thermal oxidizer (Emission Point No. 7) on the tail gas treatment (TGT) unit to control emissions during startup of the TGT unit. After the TGT unit is started, emissions from the TGT thermal oxidizer will cease being emitted and will be returned to the process. A Gasification Flare (Emission Point No. 10) will be used to safely dispose of gas streams during startup, shutdown and unplanned upsets or emergency events. A Sulfur Recovery Unit (SRU) Flare (Emission Point No. 9) will be used to safely dispose of gas streams containing sulfur during startup and shutdown (such streams having first passed through an absorber or scrubbing unit for sulfur removal) and gas streams containing sulfur during unplanned upsets or emergency events. A Rectisol Flare (Emission Point No. 13) will be used to safely dispose of low temperature gas streams during unplanned upsets or emergency events.

Each of the three gasification trains will have one natural-gas fired burner used to warm up the gasification train upon start-up (Emission Point Nos. 11a -11c). These burners will not operate when the gasification train is operating.

A 16-celled mechanical draft cooling tower (Emission Point No. 2) will be installed to perform the required cooling for the CTGs, STG, and associated equipment. Other sources of emissions will include a 4-celled mechanical draft cooling tower for the air separation unit (Emission Point No. 1), diesel-fired internal combustion engine drivers for an emergency fire pump rated at about 550 horsepower (Emission Point No. 5), and two 1 MW each emergency generators (Emission Point No. 3).

A CO_2 vent stack (Emission Point No. 8) will provide an alternative operating scenario for releasing the produced CO_2 when the CO_2 injection system is unavailable. The CO_2 vent will enable HECA to operate for brief periods rather than be disabled by a gasifier shutdown and subsequent gasifier restart. The CO_2 vent exhaust stream will be nearly all CO_2, with small amounts of CO and Hydrogen Sulfide (H_2S).

In addition to the sources above, there will be emissions of PM_{10} from feedstock and gasifier solids materials handling operations. These operations include bulk material unloading, loading, belt conveying, belt transfer points, silo loading and reclaim. The PM_{10} emissions will be controlled with the help of a dust collection system consisting of hoods and baghouses.

Figure 2
HECA Facility Plot Plan

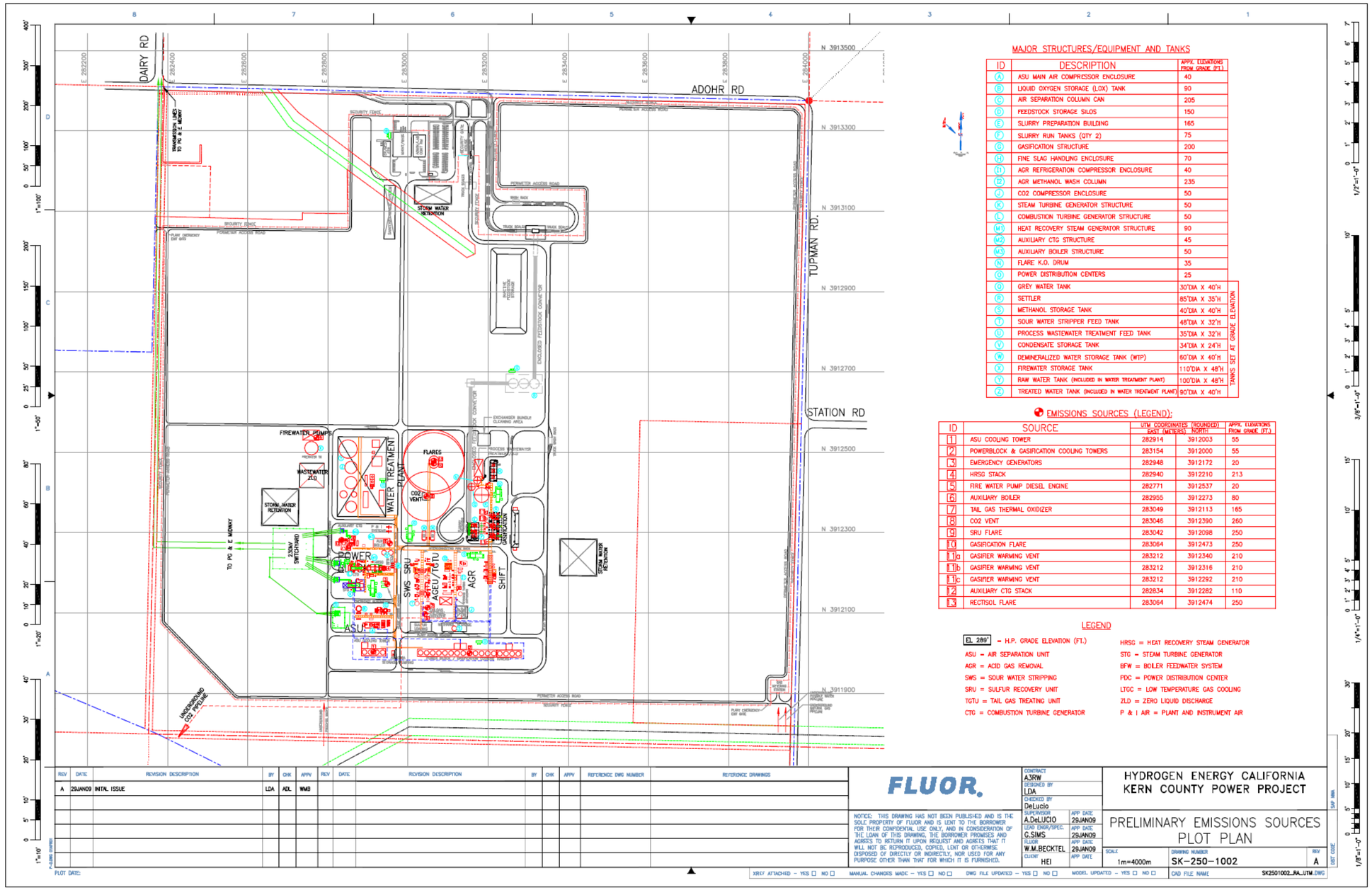

Figure 3
HECA Process Diagram

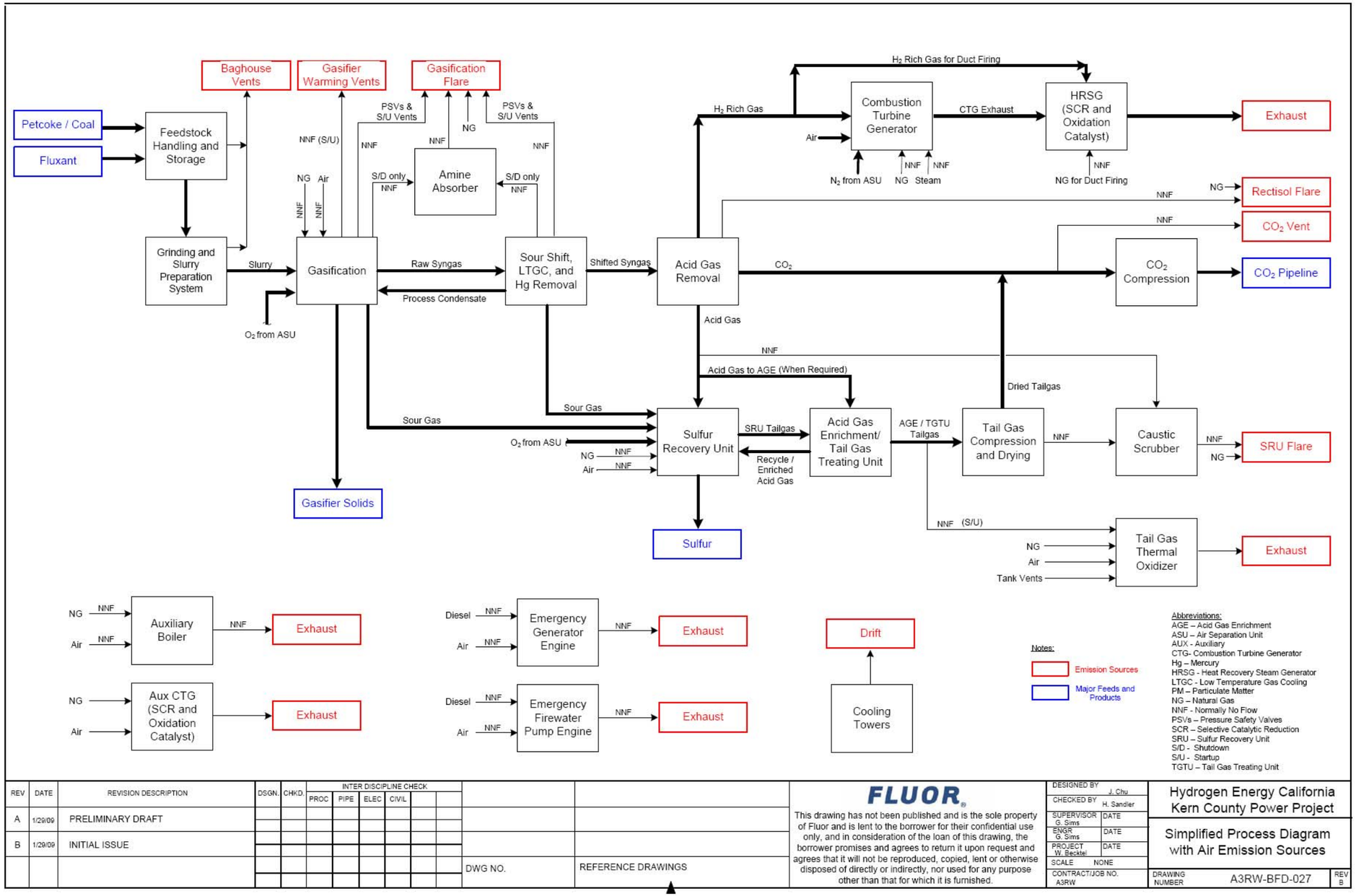

SECTION 3 REGULATORY SETTING

3.1 CALIFORNIA ENERGY COMMISSION REQUIREMENTS

For projects with electrical power generation capacity greater than 50 MW, CEC requires that applicants prepare a comprehensive Application for Certification (AFC) document addressing the proposed project's environmental and engineering features. An AFC must include the following air quality information (CEC, 1997):

- A description of the project, including project emissions of air pollutants and greenhouse gases, fuel type(s), control technologies and stack characteristics;
- The basis for all emission estimates and/or calculations;
- An analysis of Best Available Control Technology (BACT) according to San Joaquin Valley Air Pollution Control District (SJVAPCD) Rules;
- Existing baseline air quality data for all regulated pollutants;
- Existing meteorological data, including temperature, wind speed and direction, and mixing height;
- A listing of applicable laws, ordinances, regulations, standards (LORS), and a determination of compliance with all applicable LORS;
- An emissions offset strategy;
- An air quality impact assessment (i.e., national and state ambient air quality standards [AAQS] and PSD review) and protocol for the assessment of cumulative impacts of the proposed project along with permitted and under construction projects within a 10 km radius; and
- An analysis of human exposure to air toxics (i.e., health risk assessment [HRA]).

For HECA, the air quality impact assessment, the cumulative impacts assessment, and the HRA will be performed using dispersion models.

3.2 SAN JOAQUIN VALLEY AIR POLLUTION CONTROL DISTRICT REQUIREMENTS

The SJVAPCD has promulgated NSR requirements under Rule 2201. In general, all equipment with the potential to emit air pollutants is subject to the requirements of this rule, which has the following major requirements that potentially apply to new sources such as HECA:

- Installation of BACT,
- Ambient air quality impact modeling to demonstrate compliance with NAAQS and CAAQS and to evaluate impacts to plume visibility in Class I areas near the proposed source(s),
- Emission offsets,
- Statewide compliance for all applicant-owned or operated facilities in California,

Assembly Bill 2588, California Air Toxics Hot Spots Program and SJVAPCD Rule 3110 establish allowable incremental health risks for new or modified sources of toxic air contaminant (TAC) emissions This rule specifies limits for maximum individual cancer risk (MICR), cancer burden, and non-carcinogenic acute and chronic hazard indices (HI) for new or modified sources of TAC emissions. The health risks resulting from project emissions, as demonstrated by means of an approved health risk assessment, must not exceed established threshold values.

3.3 U.S. ENVIRONMENTAL PROTECTION AGENCY REQUIREMENTS

USEPA has promulgated PSD regulations applicable to new Major Sources and Major Modifications to existing Major Sources. HECA will be a Major Source because it is a fossil-fuel fired steam electric plant of more than 250 MMBtu/hr heat input and will have the potential to emit more than 100 tpy of NO_x, and CO. Many of the PSD requirements are the same as the AFC and SJVAPCD Rule 2201 requirements described above (e.g., project description, BACT, ambient air quality standards analysis). However, PSD requires the following additional analyses:

- An analysis of the potential impacts from the new emissions from HECA relative to PSD Significant Impact Levels (SILs) and PSD Increments;
- An analysis of air quality related values (AQRV) to ensure the protection of visibility in federal Class I National Parks and National Wilderness Areas within 100 km of the proposed project;
- An evaluation of potential impacts on soils and vegetation of commercial and recreational value; and
- An evaluation of potential growth-inducing impacts.

SECTION 4 AIR QUALITY IMPACT ANALYSIS FOR CLASS II AREAS

This section describes the dispersion models and modeling techniques that will be used in performing the near-field criteria pollutant impact analysis for HECA. The objectives of the modeling are to demonstrate that air emissions from HECA will not cause incremental impacts that exceed the Class II PSD Significant Impact Levels (SILs), nor contribute to exceedances of state and federal ambient air quality standards. A discussion of the Class II visibility analysis for the visible plumes from the cooling towers and the HRSG will be provided in the Visual Resources Section (Section 5.11) of the AFC.

In November 2005, the USEPA officially recognized the American Meteorological Society/ Environmental Protection Agency Regulatory Model (AERMOD) as the preferred dispersion model for regulatory applications, replacing the Industrial Source Complex Short Term 3 (ISCST3) model. Also, both CEC staff recommendations and the SJVAPCD guidance for air dispersion modeling (SJVAPCD, 2006) support the use of AERMOD for power plant licensing/permitting analyses. Accordingly, AERMOD (Version 07026) will be used for the dispersion modeling associated with HECA.

4.1 TURBINE SCREENING MODELING

An initial screening modeling analysis will be conducted to determine the turbine stack parameters for the most important project source, i.e., the CTG/HRSG that correspond to maximum ground-level pollutant concentrations. This information will be obtained by running a series of AERMOD simulations with the full meteorological input data set (see Section 4.6) with source inputs representing a range of different load conditions and ambient temperatures. The stack parameters that align with the highest offsite impact from these sources for each pollutant and averaging time period will be used in the subsequent refined modeling simulations.

4.2 REFINED MODELING

The purpose of the refined modeling analysis is to demonstrate that air emissions from HECA will not cause or contribute to an ambient air quality violation. The AERMOD model (version 07026) will be used for the refined modeling of criteria pollutants. Specific modeling procedures that will be used for evaluating project impacts versus the state and federal ambient air quality standards, PSD significance thresholds and applicable health risk criteria are discussed below. Table 4-1 shows the regulatory criteria that will be used to evaluate the significance of predicted pollutant concentrations.

Analysis of land uses adjacent to HECA was conducted in accordance with Section 8.2.8 of the Guideline on Air Quality Models (EPA-450/2-78-027R and Auer [1978]), EPA AERMOD implementation guide (2004), and its addendum (2006).

Based on the Auer land use procedure, more than 50 percent of the area within a 3-km radius of HECA power plant is classified as rural. Since the Auer classification scheme requires more than 50 percent of the area within the 3-km radius around a proposed new source to be non-rural for an urban classification, the rural mode will be used in the AERMOD modeling analyses. All regulatory default options will be used, including building and stack tip downwash, default wind speed profiles, exclusion of deposition and gravitational settling, consideration of buoyant plume rise, and complex terrain.

Table 4-1
Relevant Ambient Air Quality Standards and Significance Levels

Pollutant	Averaging Time	CAAQS (a, b)	NAAQS (b, c)	PSD Class II Significance Impact Levels ($\mu g/m^3$)	PSD Significant Emission Rates (tpy)	PSD Increments ($\mu g/m^3$)	
						Class I	Class II
CO	8-hour	9.0 ppm (10,000 $\mu g/m^3$)	9.0 ppm (10,000 $\mu g/m^3$)	500	100		
	1-hour	20 ppm (23,000 $\mu g/m^3$)	35 ppm (40,000 $\mu g/m^3$)	2,000			
NO_2[d]	Annual	0.030 ppm (57 $\mu g/m^3$)	0.053 ppm (100 $\mu g/m^3$)	1	40	2.5	25
	1-hour	0.18 ppm (339 $\mu g/m^3$)					
SO_2	Annual		0.03 ppm (80 $\mu g/m^3$)	1	40	2	20
	24-hour	0.04 ppm[e] (105 $\mu g/m^3$)	0.14 ppm (365 $\mu g/m^3$)	5		5	91
	3-hour		0.5 ppm (1,300 $\mu g/m^3$)	25		25	512
	1-hour	0.25 ppm (655 $\mu g/m^3$)					
PM_{10}	Annual	20 $\mu g/m^3$	See footnote[e]	1	15	4	17
	24-hour	50 $\mu g/m^3$	150 $\mu g/m^3$	5		8	30
$PM_{2.5}$	Annual	12 $\mu g/m^3$	15 $\mu g/m^3$				
	24-hour		35 $\mu g/m^3$				
O_3	8-hour	0.07 ppm (137 $\mu g/m^3$)	0.075 ppm (147 $\mu g/m^3$)	See footnote[f]			
	1-hour	0.09 ppm (180 $\mu g/m^3$)	See footnote[g]				
H_2S	1-hour	0.03 ppm[h]					

Notes:

a. California standards for ozone (as volatile organic compound), carbon monoxide, sulfur dioxide (1-hour), nitrogen dioxide, and PM_{10}, are values that are not to be exceeded. The visibility standard is not to be equaled or exceeded.

b. Concentrations are expressed first in units in which they were promulgated. Equivalent units are given in parentheses and based on a reference temperature of 25°C and a reference pressure of 760 mm of mercury. All measurements of air quality area to be corrected to a reference temperature of 25°C and a reference pressure of 760 mm of mercury (1,013.2 millibars).

c. National standards, other than those for ozone and based on annual averages, are not to be exceeded more than once a year. The ozone standard is attained when the expected number of days per calendar year with maximum hourly average concentrations above the standard is ≤ 1.

d. NO_2 is the compound regulated as a criteria pollutant; however, emissions are usually based on the sum of all NO_x.

e. The federal annual PM_{10} standard was revoked by USEPA on October 17, 2006.

f. Modeling is required for any net increase of 100 tons per year or more of ROC subject to PSD.

g. New federal 8-hour ozone and fine particulate matter ($PM_{2.5}$) standards were promulgated by USEPA on July 18, 1997. The federal 1-hour ozone standard was revoked by USEPA on June 15, 2005.

h. The Hydrogen Sulfide ambient air quality standard is an odor based threshold instead of health based.

4.2.1 PSD Modeling Analyses

As the proposed project will trigger PSD as a Major Source, modeling will be required to determine whether its incremental impacts on ambient levels of attainment pollutants (NO_2, SO_2 and CO) will exceed Class II significant impact levels, or SILs. If these SILs were predicted to be exceeded, then an analysis of increment consumption due to all new sources that commenced operation since the local PSD baseline date would be required. However, it is anticipated that the increased emissions of these pollutants due to HECA will not cause incremental effects above the federal SILs.

4.2.2 Ambient Air Quality Standards Analysis

Compliance with the SJVAPCD Rule 2201 modeling requirements for attainment pollutants will be demonstrated by modeling the maximum ground-level concentrations of the proposed Project at any receptor and adding conservative background concentrations, based on recent data from the most representative SJVAPCD air quality monitoring station. HECA will not be considered to cause or contribute to a near-field ambient air quality violation unless impacts from these sources combined with the background concentration exceed the most stringent ambient air quality standard.

NO_2 impact estimates for both the 1-hour and annual averaging times will be modeled by executing AERMOD with the USEPA ozone limiting method (OLM) option for both hourly and annual impacts. Please note that OLM will use ozone data from 2000-2004, which corresponds to the same range of years that was used for the meteorological data.

Note that emissions reduction credits will be obtained by the applicant to offset Project emissions increases of all non-attainment pollutants and their precursors, i.e. NO_x, ROG, PM_{10} and SO_2 that are above the SJVAPCD offset triggering levels specified in the Districts Rule 2201.4.5.3.

4.2.3 Health Risk Assessment Analysis

Both CEC and SJVAPCD require a health risk assessment (HRA) to evaluate potential health effects of TAC emissions from the operation of the project. Contaminants emitted by the project with potential carcinogenic effects or chronic and/or acute non-carcinogenic effects will be considered. This health risk assessment will be performed following the Office of Environmental Health Hazard Assessment (OEHHA), *Air Toxics Hot Spots Program Risk Assessment Guidelines (OEHHA, 2003)*. As recommended by the *Guidelines*, the California Air Resources Board (CARB) Hotspots Analysis and Reporting Program (HARP) (CARB, 2005) will be used to perform an OEHHA Tier 1 health risk assessment for the project. HARP includes two modules: a dispersion module and a risk module. The HARP dispersion module incorporates the USEPA ISCST3 air dispersion model, and the HARP risk module implements the latest Risk Assessment Guidelines developed by OEHHA. For consistency with the criteria pollutant modeling, the dispersion modeling will be conducted with AERMOD. ARB has created a beta version software package, HARP File Converter, to convert AERMOD dispersion results into a format that can be read into the HARP risk module. Thus HARP with AERMOD will be used for this HRA.

First, ground-level concentrations from HECA emissions will be estimated using the AERMOD dispersion model. The dispersion modeling analysis will be consistent with, and use input parameters that are similar to those discussed above for the criteria pollutant analyses using AERMOD. The same five-year Bakersfield meteorological data set that will be used for the criteria pollutant air quality impact assessment will also be used in the HRA. The maximum 1-hour and annual impacts determined by AERMOD will be used in the HARP model to estimate the corresponding health risks. Receptor spacing will be the same as for the criteria pollutant modeling described later in this Protocol. The HARP simulations will also include the census receptors out to 10 km, and additional receptors will be placed at all sensitive locations (e.g., schools, hospitals, etc.) out to a distance of 5 km (3 miles). Receptors will also be placed at all nearby residents.

Incremental cancer risk will be estimated using the "Derived (Adjusted)" calculation method in HARP. For the calculation of cancer risk, the duration of exposure to project emissions will be assumed to be 24 hours per day, 365 days per year, for 70 years, at all receptors. Chronic non-cancer risks will be calculated by means of the "Derived (OEHHA)" method. No bodies of water are near HECA , thus fish ingestion and drinking water consumption pathways will not be included in this analysis.

The HRA performed by means of the HARP model will follow the following steps:

- Define the location of the maximally exposed individual (MEI) (i.e., the location where the highest carcinogenic risk may occur);
- Define the locations of the maximum chronic non-carcinogenic health effects and the maximum acute health effects;
- Calculate concentrations and health effects at locations of maximum impact for each pollutant; and
- Calculate cancer burden if the maximum cancer risk is predicted to be greater than one in a million.

4.3 MODELING EMISSIONS INVENTORY

4.3.1 Operational Project Sources

Operational emissions from the project will be dominated by the CTG with HRSG. Conceptual plant design includes SCR for NO_x and oxidation catalysts for CO that will comply with recent BACT determinations for similar IGCC projects recently permitted in United States. Emissions of SO_2 and PM_{10} will be maintained at low levels, owing to HECA commitment to have SO_2 and PM_{10} emissions comparable to a similarly sized integrated gasification combined cycle power plant having exclusive use of hydrogen as fuel for the gas turbine. Table 4-2 summarizes the estimated annual emissions from the main project sources for each criteria pollutant. The CTG and HRSG emissions estimates reflect the assumed operating hours and numbers of turbine startups described in Section 1.1. Table 4-2 does not include the small contributions to project emissions that will come from the one emergency diesel generator and the one emergency firewater pump engine, or the startup emissions from the thermal oxidizer and the three flares. The engines will normally be operated only a few hours per year in order to test their operability in the event of an emergency situation. The thermal oxidizer and the three flares will

have only pilot flame emissions during normal operation. However, non-emergency emissions from these engines, the thermal oxidizer and the three flares will be included in the dispersion modeling conducted for HECA. A more detailed explanation of the sources and their operations including startup will be provided in AFC Section 2: Project Description and Section 5.1: Air Quality and in the Air Quality Appendix C.

Table 4-2
Approximate Annual Pollutant Emissions for HECA Turbine/HRSG, Auxiliary CTG, Auxiliary Boiler, and the Cooling Towers at Steady State Operation

Pollutant	Annual Emissions (tpy)				
	Turbine/HRSG (1)	Auxiliary CTG	Auxiliary Boiler	Cooling Towers(2)	Total HECA Emission Approximation *
NO_x	169	17	2	0	< 250
CO	132	28	6	0	> 250
SO_2	28	2	0	0	<50
PM_{10}	99	21	0	24	< 250
VOC	31	5	1	0	<50

Note: * Total HECA emission approximations include bulk materials handling dust emissions and fixed duration events such as startups and shutdown

Note: Auxiliary CTG is used to supply additional peaking power for HECA and for external use.

(1) Total annual HRSG emissions represents the maximum emissions rate from a composite firing scenario (all three fuels)

(2) Includes contributions from all three cooling towers

4.3.2 Project Construction Sources

Temporary construction emissions will result from heavy equipment exhaust (primarily NO_x and diesel particulate emissions) and fugitive dust (PM_{10}) from earthmoving activities and vehicle traffic on paved and unpaved surfaces. A detailed Excel Workbook will be created to estimate criteria pollutant emissions for non-overlapping phases of Project construction, based on information from the Project design engineers on the equipment use by month throughout the construction schedule and the area extent of ground disturbance that will occur during different construction phases. Depending on the magnitude of emissions for different pollutants and the proximity of construction activities to the property boundary for each phase, one or more emission scenarios representing reasonable worst-case equipment activity and ground disturbance for each averaging time will be selected for subsequent dispersion modeling to ensure that maximum off-site air quality impacts due to these temporary activities will be assessed. The selected emissions scenarios will be modeled using AERMOD with the same near-field receptor grids and the same meteorological input data used for the modeling of the Project's operational emissions. Fugitive dust emissions from the construction site, including the corridors for new transmission lines, gas lines or water pipelines, parking areas and lay-down areas will be modeled as area or volume sources. Equipment exhaust emissions of gaseous pollutants and particulates will be modeled as a series of point sources distributed over the site and linears corridors, as appropriate. Ultra-low sulfur diesel fuel (15 ppm by weight or less) will be utilized on any emission calculations for construction equipment used at HECA site.

4.3.3 Toxic Air Contaminant Sources

TACs will also be emitted from the operational HECA project due to combustion of natural gas, hydrogen gas and diesel fuels. Only small quantities of TACs will be emitted from these sources - primarily benzene, formaldehyde, and polycyclic aromatic hydrocarbons, when natural gas will be used as fuel for

the CTG/HRSG train and the auxiliary boiler. Two new diesel-fired engines are proposed as part of the project. These include one fire pump engine and two standby emergency generator engine drivers. Emission estimates for TACs from these sources will be based on diesel particulate mater (DPM) emission factors obtained from standard SJVAPCD, CARB and EPA factors and/or vendor data, if available. The cooling towers' TAC emissions will be estimated using cooling tower feedwater quality data and drift calculations. Emissions of TACs from the CTG/HRSG train when hydrogen is being used and from the flares and the tailgas incinerator during periods of startup and shutdown will be estimated using a combination of emission factors, inventories from other IGCC facilities and vendor data, if available.

4.3.4 Cumulative Impact Analysis Including Off-Property Sources

A cumulative modeling analyses will be performed using AERMOD to evaluate the combined impacts of HECA Project emissions increases with those of any other new sources within 10 km (6 miles) from HECA that are currently either under construction, undergoing permitting or expected to be permitted in the near future. Requests will be made to the SJVAPCD, Kern County Planning Department, the City of Bakersfield, and adjacent cities to request information that will be used to develop lists of all such new or planned emission sources. When received, these lists will be forwarded to CEC for review. Based on this information, and the CEC response, additional sources may be included in the cumulative source modeling analysis. However, because of the relative remoteness and rural nature of the project site area, few recent new sources are expected to be identified.

4.4 BUILDING WAKE EFFECTS

The effect of building wakes (i.e., downwash) upon the stack plumes of emission sources at the facility will be evaluated in accordance with USEPA guidance (USEPA, 1985). Direction-specific building data will be generated for stacks below good engineering practice (GEP) stack height using the most recent version of USEPA Building Parameter Input Program – Prime (BPIP-Prime). Appropriate information will be provided in the AFC and other permit applications that describe the input assumptions and output results from the BPIP-Prime model.

4.5 RECEPTOR GRID

The receptor grids that will be used in the AERMOD modeling analyses described in this Protocol for operational sources will be as follows:

- 25-m spacing along the fenceline and extending from the fenceline out to 100 m beyond the property line;
- 50-m spacing from 100 to 250 m beyond the property line;
- 100-m spacing from 250 to 500 m beyond the property line;
- 250-m spacing from 500 m to 1 km beyond the property line;
- 500-m spacing within 1 to 2 km of project sources; and
- 1,000-m spacing within 2 to 10 km of project sources.

During the refined modeling analysis for operational Project emissions, if a maximum predicted concentration for a particular pollutant and averaging time is located within the portion of the receptor grid with spacing greater than 25 m, a supplemental dense receptor grid will be placed around the original maximum concentration point and the model will be rerun. The dense grid will use 25-m spacing and will extend to the next grid point in all directions from the original point of maximum concentration.

Due to the large computation time required to run AERMOD, this receptor grid, with the additional dense nested grid points, was determined to best balance the need to predict maximum pollutant concentrations and allow the all operational modeling runs to be completed in less than one week.

Because construction emission sources release pollutants to the atmosphere from small equipment exhaust stacks or from soil disturbances at ground level, maximum predicted construction impacts for all pollutants and averaging times will occur within the first kilometer from the HECA site boundary. Accordingly, only the portion of the above grid with 25 m spacing out to a distance of 1 km will be used for the construction modeling.

The same receptor grid used in the criteria pollutant modeling for the operational project will be used in the HRA modeling, with additional receptors placed at all sensitive locations (e.g., schools, hospitals, etc.) out to 5 km (3 miles). Census receptors out to 10 km will also be included in the populated areas nearest to the proposed HECA facility. Finally, discrete receptors will be placed at the locations of all nearby residences.

A detailed project map and a 7 ½- minute U.S Geological Survey (USGS) map will be provided in the AFC showing the locations of the grid receptors. Actual Universal Transverse Mercator (UTM) coordinates will be used. The CAAQS and NAAQS apply to all locations outside the applicant's facility, i.e. everywhere where public access is not under the control of the applicant. Therefore, the fenceline will be placed along the facility's property boundary, and the receptors will be placed on and outside of the fenceline.

4.6 METEOROLOGICAL AND AIR QUALITY DATA

4.6.1 Meteorological Data

According to the Guidance for Air Dispersion Modeling – San Joaquin Valley Air Pollution Control District (08/06 Rev 1.2), the SJVAPCD prepared regional meteorological data sets for use in AERMOD. The SJVAPCD expressed that "The availability of standard meteorological data will reduce inconsistencies in data quality and requests to the regulatory agency on obtaining data." The SJVAPCD used the following meteorological elements in AERMET processing for the 5 year period from 2000 to 2004: ceiling height, wind speed, wind direction, air temperature, total cloud opacity, and total cloud amount. Hourly surface data for calendar years 2000, 2001, 2002, 2003, and 2004 were obtained from the SJVAPCD for the Bakersfield Airport meteorological station which is located, in the City of Bakersfield approximately 32.2 km (20 miles) ENE of the HECA site. Also, these data have been pre-processed by the SJVAPCD with the Oakland upper air data to create an input data set specifically tailored for input to AERMOD.

The "Bakersfield" meteorological data set is available from the SJVAPCD webpage: http://www.valleyair.org/busind/pto/Tox_Resources/AirQualityMonitoring.htm. The guidance describes that the meteorological data provides a standard data set that can be used for air quality studies using AERMOD. The regional data set should not be modified. Therefore, the HECA project site used the SJVAPCD's model-ready AERMET data set.

In addition, the meteorological data recorded at Bakersfield Airport are acceptable for use at HECA facility for two reasons, proximity and terrain similarity. The terrain immediately surrounding the Project site can be categorized as a fairly flat, or gradually sloping rural area in an area with developed oil wells. The terrain around the Bakersfield Airport also consists of relatively flat, or gradually sloping rural or suburban areas. Thus the land use and the location with respect to near-field terrain features are similar. Additionally, there are no significant terrain features separating the Bakersfield Airport from the HECA facility site that would cause significant differences in wind or temperature conditions between these respective areas. Therefore the five years of meteorological data selected from the Bakersfield Airport were determined to be representative for purposes of evaluating the Project's air quality impacts. The Bakersfield Airport is the closest full-time meteorological recording station to the HECA facility site, and thus meteorological conditions at the sites will be very similar.

Seasonal and annual wind roses based on the five years of Bakersfield Airport surface meteorological data are provided as Appendix A to this Protocol. Winds for all seasons and all years blow predominantly from the sector between northwest and north, although the directional pattern is more variable during the fall and winter seasons.

4.6.2 Air Quality Monitoring Data

Air quality monitoring data to represent existing air quality in the Project area were obtained from the USEPA AirData (2008) and the CARB-California Air Quality Data website (2008). The most recent three years of data (2006-2008) from the Taft-College, Shafter, Bakersfield Golden State Highway, and Bakersfield 5558 California Avenue monitoring stations were collected to determine the most representative baseline concentrations for each air pollutant and averaging period addressed in the California and National ambient air quality standards. The maximum concentration recorded at these monitoring stations over the three-year period will be used as a conservative representation of existing air quality condition at the proposed Project site. Please note that the background monitoring data from 2006-2008 is used to estimate criteria pollutant impacts using the highest reported values from the most recent three years of available data. This data should not be confused with the ozone data used in the OLM, where the ozone data was obtained from 2000-2004.

The Taft-College monitoring station is located approximately 21 km to the southwest of the HECA facility site. The Taft-College station only monitors PM_{10}, and TSP (until 2005). The Bakersfield Golden Highway station monitors all the criteria pollutants, except SO_2, and is located approximately 56 km to the southeast of the HECA facility site. The Bakersfield 5558 California Avenue station also measures all pollutants except CO and SO_2. This station is located about 30 km east of the HECA site. The only station in the San Joaquin Valley Air Basin that monitors SO_2 is the CARB station at First Street in Fresno, located approximately 163 km to the north. SO_2 data have only been recorded in Fresno County for the

last two years (2007 and 2008), a practice that is justified by the low levels that have been recorded for this pollutant when measurements have been made.

The selected maximum baseline concentrations for all pollutants are summarized in Table 4-3. These data will be added to the modeled maximum impacts due to project emissions for each pollutant and averaging time, and the totals will then be compared with the applicable AAQS. This is a conservative approach because it assumes that the highest recorded background values and the modeled maximum impacts occur at the same time and location for each pollutant and averaging time, a highly unlikely scenario. Note that the maximum background concentrations of PM_{10} and $PM_{2.5}$ in the project area currently exceed the corresponding CAAQS and NAAQS.

Table 4-3
Highest Monitored Pollutant Concentrations Near the Proposed HECA Site (2006 – 2008)

Pollutant	Averaging Time	Highest Monitoring Concentration	Monitoring Station Address	Year
CO	8-hour	2.2 ppm (2,444 μg/m^3)	Bakersfield Golden State Highway	2006
	1-hour	3.5 ppm (4,025 μg/m^3)	Bakersfield Golden State Highway	2008
NO_2	Annual	0.021 ppm (39.6 μg/m^3)	Bakersfield Golden State Highway	2006
	1-hour	0.101 ppm (190.1 μg/m^3)	Shafter-Walker Street	2007
SO_2	Annual	0.010 ppm (26.7 μg/m^3)	Fresno – 1st Street	2008
	24-hour	0.031 ppm (81.38 μg/m^3)[a]	Fresno – 1st Street	2007
	3-hour	0.075 ppm (195.0 μg/m^3)[b]	Fresno – 1st Street	2007
	1-hour	0.130 ppm (340.6 μg/m^3)[b]	Fresno – 1st Street	2007
PM_{10}[c] (Non-attainment area)	Annual	56.5 μg/m^3	Bakersfield Golden State Highway	2006
	24-hour	267.4 μg/m^3	Bakersfield Golden State Highway	2008
$PM_{2.5}$[d] (Non-attainment area)	Annual	25.2 μg/m^3	Bakersfield Golden State Highway	2007
	24-hour	154 μg/m^3	Bakersfield Golden State Highway	2007

Source: CARB ADAM website (Last access: February, 2009).

[a] The highest SO_2 monitoring concentration occurred at the Fresno – 1st Street station on July 5, 2007, and was found to be 0.067 ppm. This value was assumed to fall into the category of the EPA Rule 40 CFR 50.14 "Treatment of air quality monitoring data influenced by exceptional events." Because this value occurred on the day after the Independence Day holiday and was twice as high as the next highest monitored 24-hour SO_2 value, it was assumed to have been caused by fireworks. Therefore, the concentration on July 5 2007 was not considered for Table 4-3 and the second highest 24-hour value was used instead. Confirmed in an email from Leland Villalvazo on February 4, 2009

[b] It was observed that higher monitoring concentrations were observed at the Fresno -1st Street station on July 4 and July 5, 2007 (the day of and the day after Independence Day). Because these values are much higher than concentrations observed during the rest of the year, they were assumed to have been caused by fireworks. These values will fall into the category EPA Rule 40 CFR 50.14. Therefore, concentrations on July 4 and Jul 5, 2007 were not considered for Table 4-3 and the next highest 1-hour and 3-hour concentrations were used instead. Confirmed in an email from Leland Villalvazo on February 4, 2009

[c] Although EPA has determined that the San Joaquin Valley Air Basin has attained the federal PM_{10} standards, their determination does not constitute a redesignation to attainment per section 107(d)(3) of the Federal Clean Air Act. The Valley will continue to be designated nonattainment until all of the Section 107(d)(3) requirements are met. This area will be treated as the federal PM_{10} non-attainment area until future redesignation.

[d] The Valley is designated nonattainment for the 1997 $PM_{2.5}$ federal standards. EPA designations for the 2006 $PM_{2.5}$ standards will be finalized in December 2009. The District has determined, as of the 2004-06 PM 2.5 data, that the Valley has attained the 1997 24-Hour $PM_{2.5}$ standard. . This area will be treated as the federal $PM_{2.5}$ non-attainment area until future redesignation.

4.7 FUMIGATION MODELING

Fumigation can occur when a stable layer of air lies a short distance above the release point of a plume and unstable air lies below. Especially on sunny mornings with light winds, the heating of the earth's surface causes a layer of turbulence, which grows in depth over time and may intersect an elevated exhaust plume. The transition from stable to unstable surroundings can rapidly draw a plume down to ground level and create relatively high pollutant concentrations for a short period. Typically, a fumigation analysis is conducted using the USEPA model SCREEN3 when the project site is rural and the stack height is greater than 10 m.

A fumigation analysis will be performed using SCREEN3 to calculate concentrations from inversion breakup fumigation; no shoreline fumigation modeling will be performed for the HECA location. A unit emission rate will be used (1 gram per second) in the fumigation modeling simulations to represent the plant emissions, and the model results will be scaled to reflect expected plant emissions for each pollutant. Inversion breakup fumigation concentrations will be calculated for 1- and 3-hour averaging times using USEPA-approved conversion factors. These multiple-hour model predictions are conservative, since inversion breakup fumigation is a transitory condition that would most likely affect a given receptor location for only a few minutes at a time.

SECTION 5 AIR QUALITY IMPACT ANALYSIS FOR CLASS I AREAS

An evaluation of potential impacts in Class I areas within 100 km of the HECA site will be conducted, because HECA's potential emissions increases of some pollutants will be sufficiently high to be considered a Major Source, thus triggering the federal PSD program. A Major Source must evaluate impacts to visibility and other air quality related values (AQRV) at all Class I areas that are located within a 100-km radius of the facility. All pollutants for which Project emissions are above the Major Source threshold (in this case, 100 tpy) and all pollutants for which emissions are above the PSD Significant Emissions Rates must be evaluated. This section describes the dispersion models and modeling techniques that will be used in performing the Class I area air quality analyses for HECA. The objectives of the modeling are to demonstrate whether air emissions from HECA would cause or contribute to a PSD increment exceedance or cause a significant impact on visibility, regional haze or sulfur or nitrogen deposition in any Class I area.

Three Class I areas are located within the region of the HECA site and require further evaluation: Dome Land Wilderness Area, Sequoia National Park, and San Rafael Wilderness Area. However, detailed review of the locations of these Class I areas relative to the HECA site shows that Dome Land Wilderness Area and Sequoia National Park are greater than 100 km from HECA. Therefore, these two Class I areas do not meet the screening criterion of being within 100 km and will not be included in the HECA analysis. NPS has confirmed in comments submitted on a previous version of this document that given the distance and low emissions, they do not believe there will be any significant air quality impacts at Sequoia National Park. The nearest parts of the San Rafael Wilderness are located beyond 50 km and within 100 km from the proposed facility, thus only this Class I area and only far-field AQRV analyses will need to be completed. The CALMET/CALPUFF (full-CALPUFF) model will be used to evaluate potential impacts in the far-field Class I area, including potential air quality impacts, sulfur and nitrogen deposition, and impacts to visibility.

Figure 3 shows the locations of the Class I areas relative to the proposed site for HECA and Table 5-1 lists the distances from HECA to the closest and farthest points in each Class I area. Figure 3 also shows the domain to be used for CALPUFF modeling of the San Rafael Wilderness Area (indicated by the blue rectangle). The federal authority in charge of the two Wilderness Areas is the United States Forest Service (USFS) and the National Park Service (NPS) has jurisdiction in Sequoia National Park. The AQRV analyses for the San Rafael Wilderness area will be conducted in a manner consistent with guidance from the NPS and USFS following the procedures set forth in the Federal Land Managers' Air Quality Related Values Workgroup (FLAG) Phase I Report (USFS, 2000) and the Calpuff Reviewer's Guideline (USFS and NPS, 2005).

Table 5-1
Class I Areas Evaluated with Respect to 100-km Radius of the Proposed HECA Facility

Class I areas	Distance from HECA (km)	
Dome Land Wilderness Area	Closest	110
	Farthest	132
Sequoia National Park	Closest	125
	Farthest	181
San Rafael Wilderness Area	Closest	62
	Farthest	81

Figure 4
Calpuff Domain and Receptor For the Class I Area Surrounding HECA

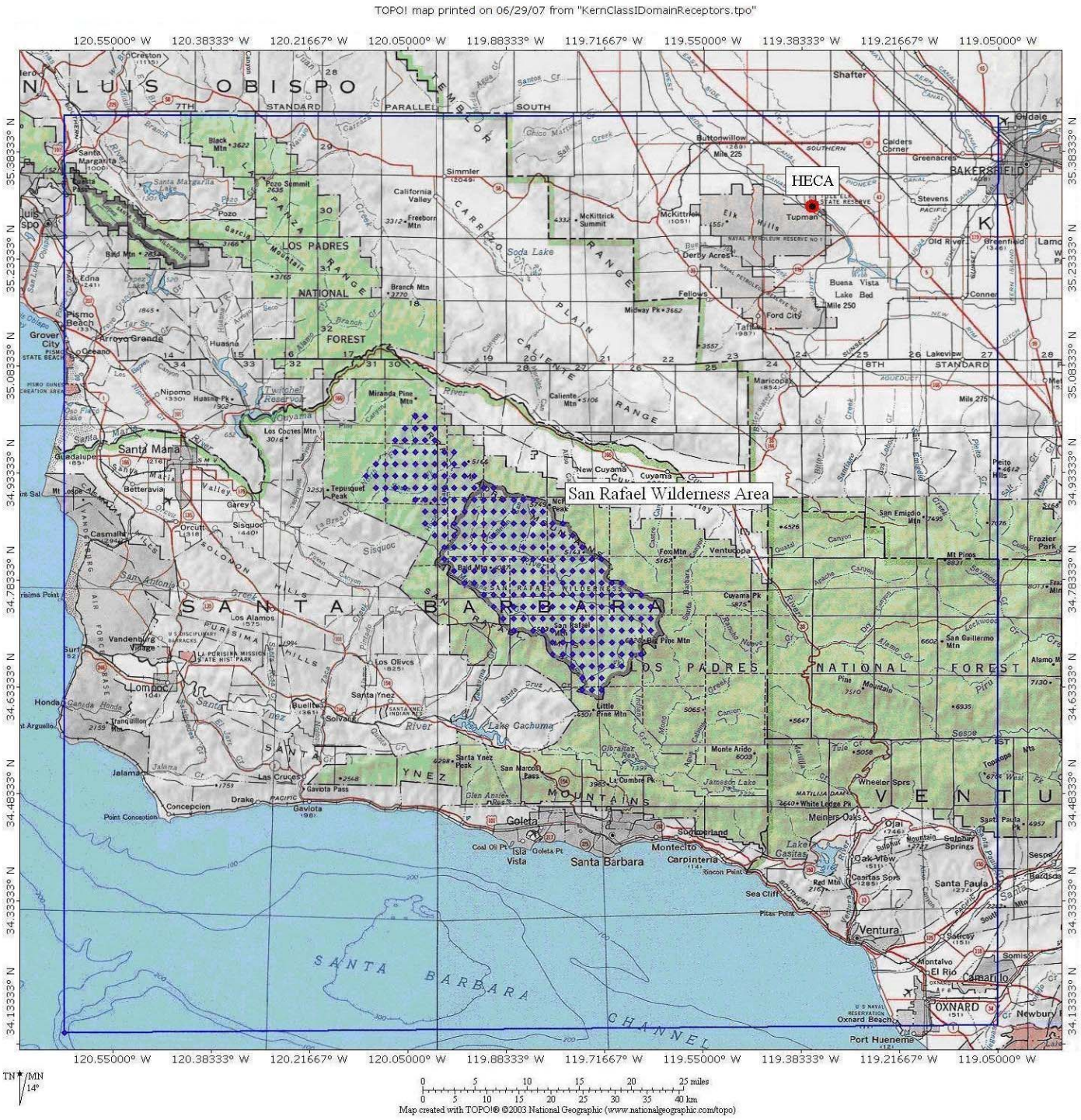

The CALPUFF modeling domain selected for the modeling analyses will extend at least 50 km past the farthest edge in all directions from any of the Class I area being analyzed in order to reduce the probability that mass will be lost due to possible wind recirculation (Figure 3).

5.1 NEAR-FIELD CLASS I AREAS AIR QUALITY IMPACT ANALYSIS

There are no Class I Areas within 50 km of the proposed project location; therefore, no near field AQRV analyses are necessary.

5.2 FAR-FIELD CLASS I AREA AIR QUALITY IMPACT ANALYSIS: CALPUFF MODELING

To analyze potential impact of project emissions to visibility, PSD increment and sulfur and nitrogen deposition in the Class I area located within 100 km from the proposed project site, the CALPUFF model will be used in conjunction with the CALMET diagnostic meteorological model. CALPUFF is a transport and dispersion model that simulates the advection and dispersion of "puffs" of material emitted from modeled sources. CALPUFF can incorporate three-dimensionally varying wind fields, wet and dry deposition, and atmospheric gas and particle phase chemistry. The CALMET model is used to prepare the necessary gridded wind fields for use in the CALPUFF model. CALMET can also accept as input; mesoscale meteorological (MM5) data, surface station, upper air, precipitation, cloud cover, and over-water meteorological data (all in a variety of input formats). These data are merged and the effects of terrain and land cover types are simulated. This process results in the generation of gridded 3-dimensional wind fields that account for the effects of slope flows, terrain blocking effects, flow channeling, and spatially varying land uses.

The USEPA-approved regulatory air quality dispersion model CALPUFF (version 5.8) will be used for all far-field Class I area impact analyses. In addition, all supporting Version 5.8 editions of the pre- and post-processors will be used. Recommendations from the regulatory guidance documents listed below will be followed.

- *Federal Land Managers Air Quality Related Values Workgroup (FLAG) Phase 1 Report. (USEPA December 2000),*
- *Interagency Workgroup on Air Quality Modeling (IWAQM), Phase 2 Summary Report and Recommendations for Modeling Long Range Transport Impacts. (USEPA December 1998)*, and
- *Calpuff Reviewer's Guide (Draft), (USFS and NPS, 2005).*

Model options will be based on FLM guidance from the above documents and direct discussions with NPS and USFS air quality staff.

Copies of the model input and output files generated in the preparation of this and all other modeling analyses described in this Protocol will be provided with the final application.

5.2.1 CALPUFF/CALMET Description

5.2.1.1 Location and Land-Use

The CALMET and CALPUFF models incorporate assumptions regarding land-use classification, leaf-area index, and surface roughness length to estimate deposition of emitted materials during atmospheric transport. U.S. Geological Survey (USGS) 1:250,000 scale digital elevation models (DEMs) and Land Use Land Cover (LULC) classification files will be used to develop the geophysical input files required by the CALMET model. Outputs of the terrain pre-processor (TERREL) and land use pre-processor (CTGPROC) will be combined in the geo-physical preprocessor (MAKEGEO) to prepare the CALMET geo-physical input file. The CALMET model will incorporate the necessary parameters in the CALMET output files for use in the CALPUFF model.

The CALPUFF modeling domain will extend from the HECA site 150 km to the west, 180 km to the north, 125 km to the east, and 150 km to the south. The grid-cells over this domain will be 4 km wide. The modeling domain will be specified using the Lambert Conformal Conic (LCC) projection system.

5.2.1.2 Meteorological Data

Pursuant to FLM guidance, a three-year meteorological data set will be developed using a combination of surface station and mesoscale meteorological (MM5) data for 2001-2003. Hourly CALMET data derived from the MM5 data for these three years will be obtained from the WRAP BART modeling for the Nevada-Utah domain. Surface meteorological, precipitation and ozone data will also be obtained from the WRAP BART modeling for the Nevada-Utah domain. No upper air stations will be used, since there are none within the domain shown in Figure 3 and the MM5 data provide a good first approximation of the vertical profile of the atmosphere.

CALMET wind fields will be generated using a combination of the MM5 data sets augmented with the surface data from the National Weather Service (NWS) stations described above. Per IWAQM guidance, the MM5 data will be interpolated to the CALMET fine-scale grid to create the “initial-guess” wind fields (IPROG = 14 for MM5).

5.2.1.3 Other Model Options

Size parameters for dry deposition of nitrate, sulfate, and PM_{10} particles will be based on default CALPUFF model options. Chemical parameters for gaseous dry deposition and wet scavenging coefficients will be based on default values presented in the CALPUFF User’s Guide. For the CALPUFF runs that incorporate deposition and chemical transformation rates (i.e. deposition and visibility), the full chemistry option of CALPUFF will be activated (MCHEM = 1). The nighttime loss for SO_2, NO_x and nitric acid (HNO_3) will be set at 0.2 percent per hour, 2 percent per hour and 2 percent per hour, respectively. CALPUFF will also be configured to allow predictions of SO_2, sulfate (SO_4), NO_x, HNO_3, nitrate (NO_3) and PM_{10} using the MESOPUFF II chemical transformation module.

Hourly ozone concentration files for the CALPUFF modeling will be obtained from the WRAP BART modeling data for the Nevada-Utah domain. Only data from the ozone monitoring stations within the HECA domain will be used.

The background ammonia concentration will be set to 10 ppb, which is representative for a grassland or agricultural site, per the FLAG guidelines.

The regulatory default setting for MDISP=3 which utilizes the Pasquill-Gifford dispersion coefficients will be used in the CALPUFF modeling.

5.2.1.4 Receptors

Discrete receptors for the CALPUFF modeling within the San Rafael Wilderness Area will be obtained from the NPS Class One Area receptor database. No modifications to the receptor locations or heights provided in the database will be made. Latitude/Longitude coordinates of the Class I receptors will be converted to Lambert Conformal Conic (LCC) coordinates, based on the domain setup shown in CALMET options. These receptor points are shown in Figure 3.

5.2.2 Far-Field Class I Area Visibility and Regional Haze Analysis

For the analysis of visibility effects due to emissions of air pollutants, CALPUFF requires project emission rate inputs for six pollutant species, i.e., directly emitted PM_{10}, NO_x, and SO_2, and secondary SO_4, HNO_3, and NO_3. The maximum 24-hour averaged emission rates of PM_{10}, NO_x and SO_2 from all sources of HECA will be used for the visibility analysis. The turbine/HRSG emissions of SO_2 will be specified to SO_2 and SO_4 as indicated in the NPS Particulate Matter Speciation (PMS) guidelines for gas fired combustion turbines (NPS, 2008). The total turbine/HRSG PM_{10} emissions will be specified to elemental carbon and organic carbon [emitted as Secondary Organic Aerosol (SOA)] per the PMS. Direct emissions of PM_{10}, NO_x, and SO_2 from the auxiliary boiler, emergency generators and fire pump will be modeled without speciation. The cooling towers will emit only PM_{10}. Direct emissions of the remaining species, HNO_3 and NO_3, are assumed to be zero for the natural gas burning sources of HECA.

Modeled impacts will be converted to visibility impacts using the CALPOST post processor. CALPOST will be used to post-process estimated 24-hour averaged concentrations of ammonium nitrate, ammonium sulfate, EC, and SOA into extinction coefficient values for each day at each modeled receptor.

CALPUFF also requires a background light extinction reference level. The analysis will be run using the FLAG recommended background extinction values for the Class I area. The background extinction coefficient is composed of hygroscopic scattering components, wherein the addition of water enhances particle light-scattering efficiencies, non-hygroscopic scattering components and Rayleigh scattering. Ammonium sulfate and ammonium nitrate compose the hygroscopic scattering components, while organic aerosols, soils, coarse particles, particle absorption from elemental carbon and absorption from gases (primarily from nitrogen dioxide) compose the non-hygroscopic scattering components.

In accordance with the FLAG guideline the total background extinction coefficient is calculated for the Class I area using the following equation:

$$b_{ext} = b_{hygro} \cdot f(RH) + b_{non\text{-}hygro} + b_{Ray}$$

where:

b_{hygro} = the hygroscopic scattering component (Mm^{-1})
= $3[(NH_4)_2SO_4 + NH_4NO_3]$
$b_{non\text{-}hygro}$ = the non-hygroscopic scattering component (Mm^{-1})
= $b_{OC} + b_{Soil} + b_{Course} + b_{ap} + b_{ag}$
b_{Ray} = the Rayleigh scattering component (Mm^{-1}) = 10 Mm^{-1} (FLAG)
f(RH) = relative humidity adjustment factor

In the CALPOST post-processing program, the monthly background concentration of ammonium sulfate is set to one-third of the hygroscopic scattering component, and the monthly background concentration of soil particles is set to the non-hygroscopic scattering component, as recommended in the FLAG report. The scattering coefficients that will be used in CALPUFF for the Class I areas are presented in Table 5-2.

The FLAG relative humidity (RH) adjustment factors (MVISBK=2) and the RHMAX = 95 % will be used as suggested by the NPS FLM.

The extinction coefficient percent change (background extinction coefficient vs. modeled extinction coefficient), predicted by CALPUFF will be compared to the level of acceptable change (LAC) of 5%. If the change in extinction is greater than 5%, but less than 10%, the conditions surrounding that prediction will be examined to determine if inclement weather may obscure actual viewing of the plume in the Class I area.

Table 5-2
Scattering Coefficients used in CALPUFF Analysis for the San Rafael Wilderness Class I Area

Class I Area	Total Background Extinction (Mm^{-1})				Hygroscopic Scattering Component (Mm^{-1}) = BKSO4	Non-hygroscopic Scattering Component (Mm^{-1}) = BKSOIL	Rayleigh Scattering (Mm^{-1})
	Winter	Spring	Summer	Fall			
San Rafael Wilderness Area	16.1	16.0	16.0	16.0	0.6	4.5	10.0

5.2.3 PSD Class I Significance Analysis

A PSD analysis of incremental air pollutant concentrations in the Class I area due to project emissions will be required, because HECA will be a Major Source as defined in the PSD regulations. Accordingly, the maximum predicted incremental criteria pollutant concentrations from HECA sources in the Class I area will be compared with the Proposed PSD significant impact level for Class I areas (see Table 5-3) for each pollutant.

Table 5-3
FLAG (Proposed) Class I Significance Impact Levels

Pollutant and Averaging Time	NO_x	PM_{10}		SO_2		
	Annual	24-hour	Annual	3-hour	24-hour	Annual
Concentration Threshold (µg/m³)	0.1	0.3	0.2	1	0.2	0.1

All NO_2 and PM_{10}, sources of the proposed project will be modeled at the full potential-to-emit (PTE) in the CALPUFF PSD modeling for each averaging time. The facility SO_2 emission rate will be portioned into SO_2 and SO_4 emissions according to the NPS PMS guidance for natural gas combustion turbines. The full chemistry option of CALPUFF will be activated (MCHEM =1, MESOPUFF II scheme), and deposition options will also be turned on (MWET = 1 and MDRY = 1).

5.2.4 Deposition Analysis

For the Class I area beyond 50 km from the facility, CALPUFF will be used to evaluate the potential for nitrogen and sulfur deposition due to HECA emissions of nitrogen and sulfur oxides emissions. Total deposition rates for each pollutant will be obtained by summing the modeled wet and/or dry deposition rates. The annual average pollutant emission rates for Project sources will be used in this analysis, since annual deposition rates are to be estimated.

For sulfur deposition, the wet and dry fluxes of sulfur dioxide (SO_2) and sulfate (SO_4) are calculated, normalized by the molecular weight of sulfur, and expressed as total sulfur. Total nitrogen deposition is the sum of nitrogen contributed by wet and dry fluxes of nitric acid (HNO_3), nitrate (NO_3^-), ammonium nitrate (NH_4NO_3), ammonium sulfate ($(NH_4)_2SO_4$) and the dry flux of NO_x.

The total modeled nitrogen and sulfur deposition rates will be compared to the NPS/USFS deposition analysis thresholds (DAT) for western states. The DAT values for nitrogen and sulfur are each 0.005 kilogram per hectare per year (kg/ha-yr), which converts to 1.59E-11 $g/m^2/s$.

5.2.5 Soils and Vegetation

The designated Class I area contains vegetative ecosystems that are identified by the Federal Land Managers (FLM) (USFS, 1992). For each ecosystem, sensitive species or groups of species will be designated to represent potential impacts to each vegetative species in the ecosystem. These species are impacted primarily by ozone but may also be impacted by nitrogen and sulfur compounds. Acidity in rain, snow, cloudwater, and dry deposition can affect soil fertility and nutrient cycling processes in watersheds, and can result in acidification of lakes and streams with low buffering capacity. Therefore, the soil and vegetation analysis will be conducted using the CALPUFF model to predict total sulfur and nitrogen deposition rates and monitored ozone concentrations at the nearest air quality monitoring stations. In order to protect sensitive species, the USFS (1992) recommends that short-term maximum SO_2 levels should not exceed 40 to 50 parts per billion (ppb). Annual average SO_2 concentrations should not exceed 8 to 12 ppb, and annual average NO_2 concentration should not exceed 15 ppb.

SECTION 6 PRESENTATION OF MODELING RESULTS

6.1 PSD, NAAQS AND CAAQS ANALYSES

The results of the PSD and AAQS analyses to evaluate the construction and operational impacts of the HECA facility will be presented in summary tables. A figure indicating the locations of the maximum predicted pollutant concentrations for each applicable pollutant and averaging time will be provided. The maximum modeled values of NO_2, SO_2 and CO will be compared with current Class II and proposed Class I SILs. If the model impact exceeds the SILs, the background concentrations (see Section 4.6.2) will be added to the maximum modeled values from the HECA sources to yield total concentrations, which will be compared with the NAAQS and CAAQS. The cumulative impact values from combination of project sources in HECA and new sources within 10 km (6 miles) of the proposed project site will be added to the background concentrations for the corresponding pollutants and averaging times and will be compared with the NAAQS and CAAQS.

6.2 HEALTH RISK ASSESSMENT ANALYSIS

Maps depicting the following data will be prepared:

- Elevated terrain within a 10-km radius of the project;
- The locations of sensitive receptors, including schools, pre-schools, hospitals, etc., within a 5 - km (3 miles) radius of the project, and the nearby residences included in the HRA;
- Isopleths for any areas where predicted exposures to air toxics result in estimated chronic non-cancer impacts and acute impacts equal to or exceeding a hazard index of 1; and
- Isopleths for any areas where exposures to air toxics lead to an estimated carcinogenic risk equal to or greater than one in one million.

Health risk assessment modeling results will be summarized to include maximum annual (chronic, carcinogenic, and non-carcinogenic) and hourly (acute) adverse health effects from HECA's toxic air contaminant emissions. The estimated cancer burden will be presented if the maximum off-site cancer risk is predicted to be greater than one in a million. Health risk values will be calculated and presented in the summary table for the points of maximum impact and the sensitive receptors with the maximum risk values.

6.3 CLASS I ANALYSIS

The results of the visibility, PSD and deposition analyses to evaluate the operational impacts of the HECA facility will be presented in summary tables and compared with all relevant significance thresholds. Isopleth drawing showing the predicted spatial distributions of criteria pollutant concentrations in the Class I areas due to the proposed project emissions will also be prepared.

6.4 DATA SUBMITTAL

Electronic copies of the modeling input and output files for all the analyses described in this Protocol will be provided to SJVAPCD, CEC and EPA Region IX, U.S. Forest Service and National Park Service.

SECTION 7 REFERENCES

American Meteorological Society. Journal of Applied Meteorology, 17(5): 636-643. "Correlation of Land Use and Cover with Meteorological Anomalies", August Auer Jr., May 1978.

ARB 2003. HARP User Guide – Software for Emission Inventory Database Management, Air Dispersion Modeling Analyses, and Health Risk Assessment version 1.3, Air Resources, Board, California Environmental Protection Agency. December 2003.

CEC, 1997. "Regulations Pertaining to the Rules of Practice and Procedure and Plant Site Certification". Title 20, California Code of Regulations. Chapter 1, 2, 5.

CEC, 2006. Rules of Practice and Procedure & Power Plant Site Certification Regulations Revisions, 04-SIT-2, December 14, 2006.

National Park Service, 2008. Particulate Matter Speciation: http://www.nature.nps.gov/air/Permits/ect/ectGasFiredCT.cfm

Office of Environmental Health Hazard Assessment (OEHHA), 2003. Air Toxics Hot Spots Program Risk Assessment Guidelines, August 2003.

San Joaquin Valley Air Pollution Control District, 2006. Guidelines for Air Dispersion Modeling, (Rev. 1.2), August 2006.

United States Environmental Protection Agency, 1988. Workbook for Plume Visual Impact Screening and Analysis, U.S. Environmental Protection Agency, Research Triangle Park, NC. September 1988.

United States Environmental Protection Agency, 1990. New Source Review Workshop Manual, Prevention of Significant Deterioration and Nonattainment Area Permitting (Draft), Office of Air Quality Planning and Standards, U.S. Environmental Protection Agency, Research Triangle Park, NC 27711. October 1990.

United States Environmental Protection Agency, 1992. Addendum to Workbook for Plume Visual Impact Screening and Analysis, U.S. Environmental Protection Agency, Research Triangle Park, NC. October 1992.

United States Environmental Protection Agency, 1998. Interagency Workgroup on Air Quality Modeling (IWAQM), Phase 2 Summary Report and Recommendations for Modeling Long Range Transport Impacts. EPA-454/R-98-019. December 1998.

United States Environmental Protection Agency, 2004. User's Guide for the AMS/EPA Regulatory Model-AERMOD. September 2004.

United States Environmental Protection Agency, 2005. AERMOD Implementation Guide. September 2005.

United States Environmental Protection Agency, 2006. Addendum to User's Guide for the AMS/EPA Regulatory Model-AERMOD. December 2006.

United States Environmental Protection Agency, 2006. USEPA AirData

United States Forest Service et al. 2000. Federal Land Managers Air Quality Related Values Workgroup (FLAG) Phase 1 Report. Prepared by U.S. Forest Service Air Quality Program, National Park Service Air Resources Division, U.S. Fish and Wildlife Service Air Quality Branch. December 2000.

USDA Forest Service and National Park Service, 2005. CALPUFF Reviewer's Guide (DRAFT) prepared by Howard Gebhart. September 2005

2000-2004 Annual (Jan - Dec)

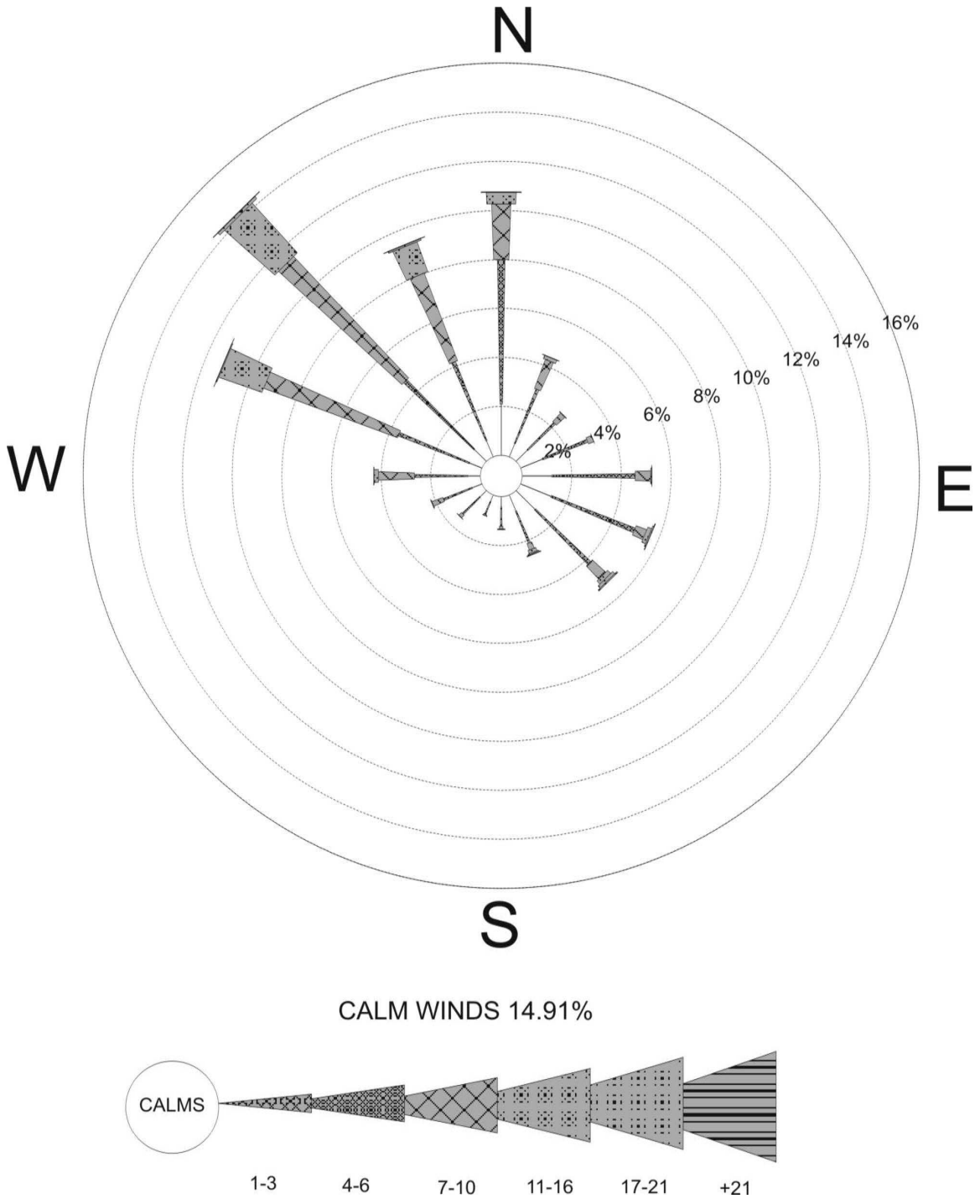

Figure A-1 Annual Windrose for Bakersfield Airport based on Surface Data for 2000-2004

2000-2004 Spring (Mar, Apr, May)

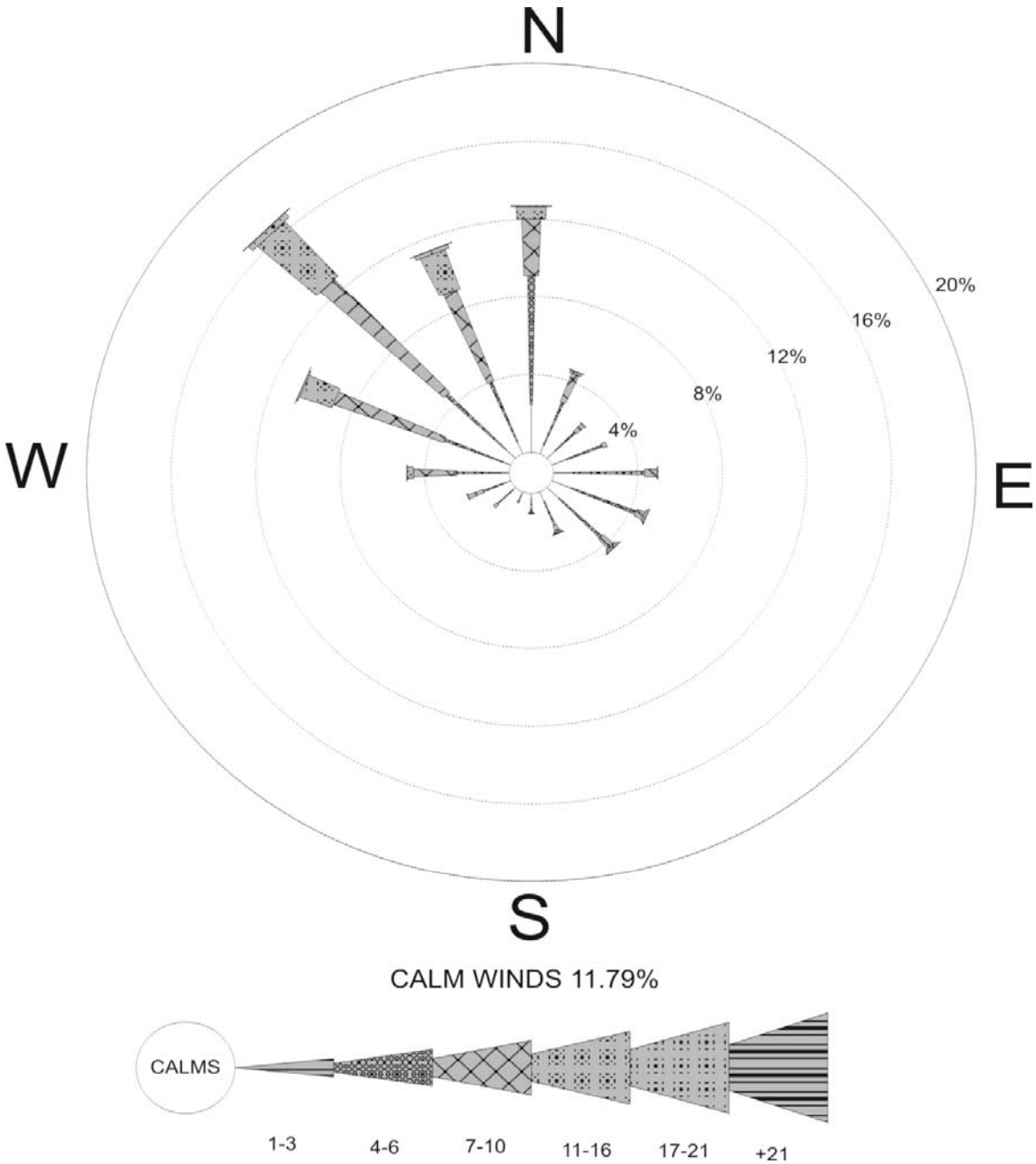

Figure A-2 Spring Season Windrose for Bakersfield Airport based on Surface Data for 2000-2004

2000-2004 Summer (Jun, July, Aug)

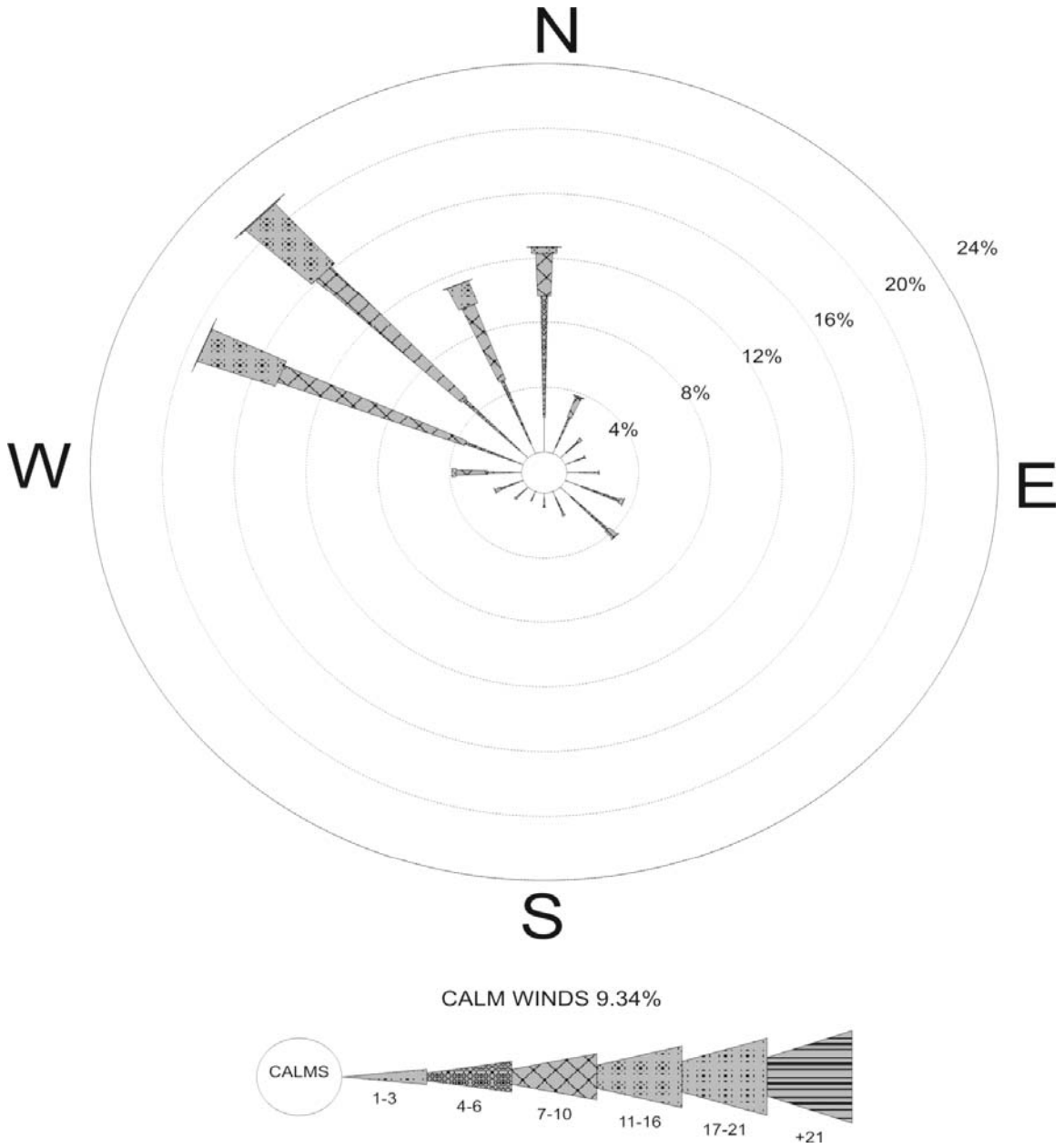

Figure A-3 Summer Season Windrose for Bakersfield Airport based on Surface Data for 2000-2004

2000-2004 Fall (Sep, Oct, Nov)

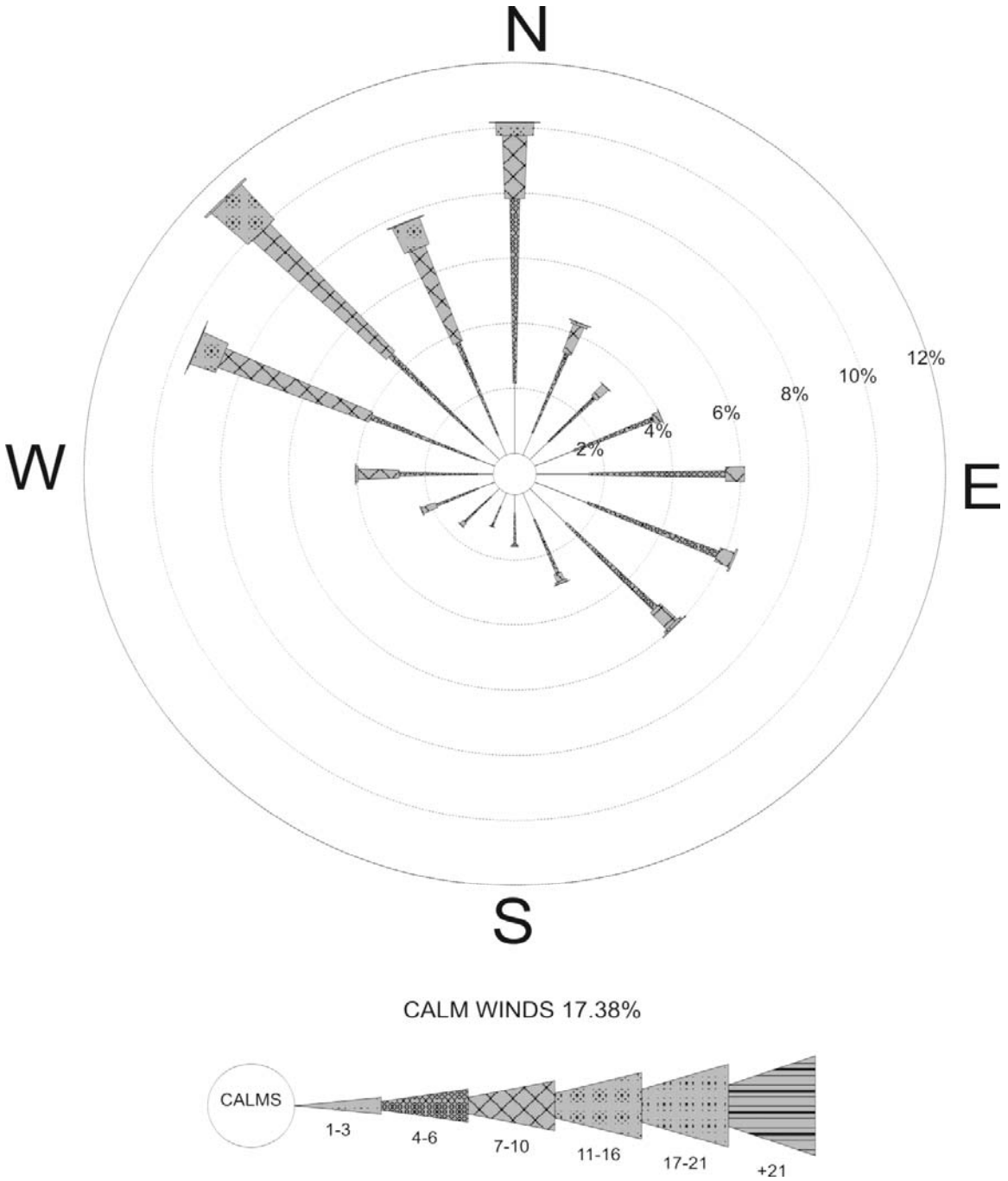

Figure A-4 Fall Season Windrose for Bakersfield Airport based on Surface Data for 2000-2004

2000-2004 (Dec, Jan, Feb)

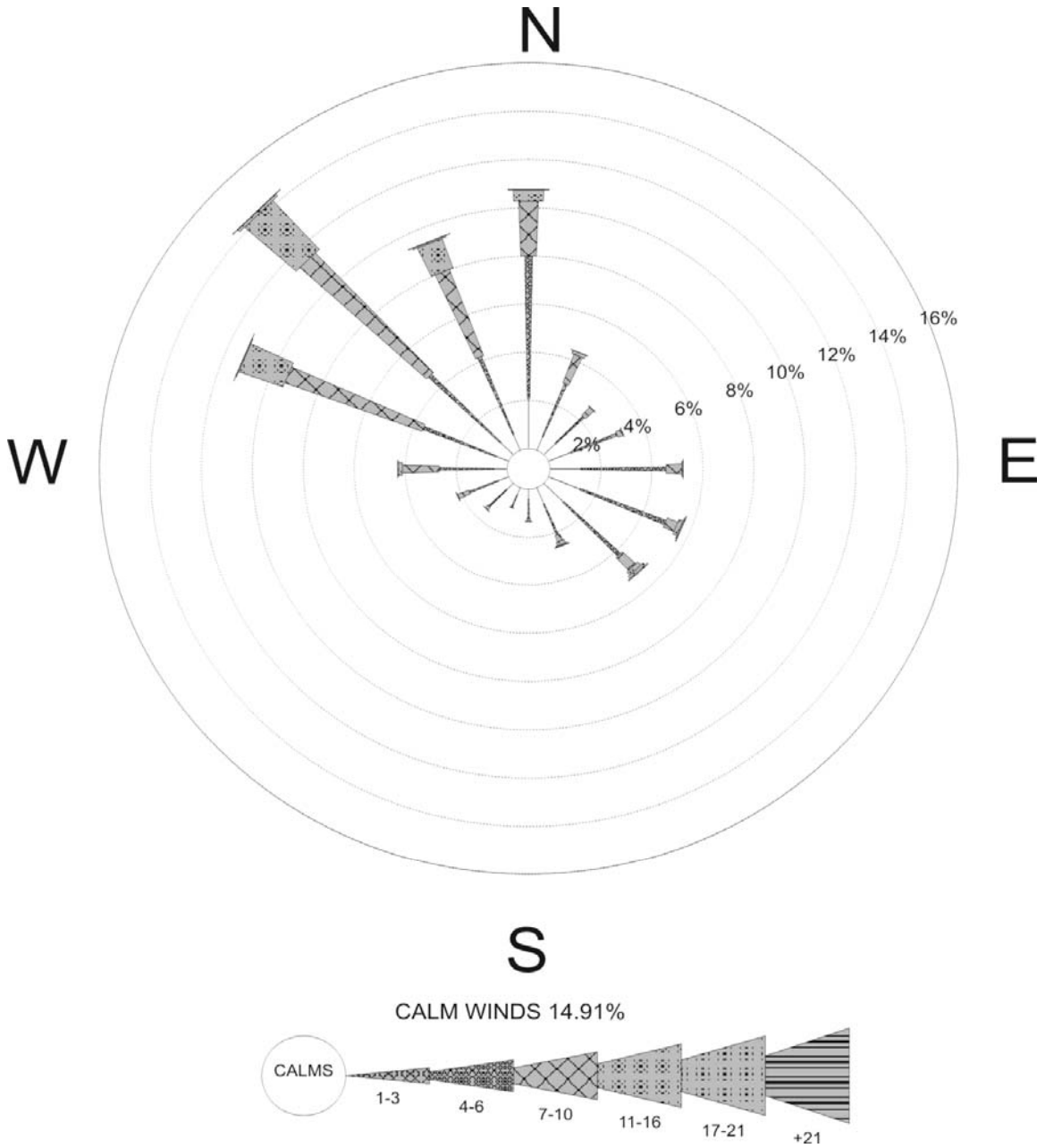

Figure A-5 Winter Season Windrose for Bakersfield Airport based on Surface Data for 2000-2004

Appendix C2

Agency Comments on Modeling Protocol

California Energy Commission and U.S. Environmental Protection Agency

CEC Written Comments on the Modeling Protocol for Hydrogen Energy California Project

Note: Applicant's Response provided in italic font following comment.

HECA Modeling Protocol Comments

1) Section 4.2.2 Page 4-3. If any of the construction modeling analyses show 1-hour NO_2 values greater than 339 µg/m^3 with the maximum NO_2 background added, we request that an hourly NO_2 background comparison using 2000-2004 data from the same monitoring site as the ozone data be performed to determine if any hours would still exceed 339 µg/m^3.

   Applicant acknowledges this approach but it was not necessary in this case.

2) Section 4.3.1 – Due to the unusually high fuel delivery/handling requirements for this project, staff requests that operational emission modeling analysis include the dedicated onsite vehicle emissions and onsite fuel haul truck and/or train emissions, and the onsite paved/unpaved road dust.

   These emissions sources have been included in the modeling analysis.

3) Section 4.3.1 – The expected flaring and other expected upset/emergency emissions should be modeled to determine worst-case short-term impacts. This section of the protocol should discuss how these potential short-term worst-case events will be included in the operational project sources modeling analysis. Analysis of acute air toxic exposures from these events should also be discussed.

   Two of the three flares are expected to operate during normal startup and shutdown of the facility and their emissions during these times have been included in the modeling analysis. The third flare is not expected to operate during normal startup and shutdown so there are no emissions from this flare to include in the modeling. There will be no air quality impacts from operations of the flares during "other expected" upset/emergency operations because there are no other expected upset/emergency operations of the flares. Unexpected operation of the flares may occur, but it's too speculative to quantify the nature and frequency of these occurrences in the detail required to provide meaningful input to the model. Impacts to air quality based on speculative input also would be speculative. The approach to modeling the flares is

therefore consistent with the approach used to model the diesel generator engines and diesel fire water pump engine. Modeling of operations of these diesel engines during, expected, routine testing is included because these are planned operations, emissions from which may be quantified. Modeling of the emergency operations of the engines is not required because the forecast of their emergency operation is too speculative. The flares and the diesel engines are each included in the project as prudent safety measures and to comply with applicable codes and regulations. It is conceivable (and also desirable) that neither the flares nor the diesel engines would operate in an upset/emergency situation during the year.

4) Section 4.3.1 – A modeling analysis of the CO2 vent should be completed to show it is properly designed to keep potentially harmful CO2 concentrations from impacting facility employees or any offsite receptors. The modeled concentration levels should be compared to appropriate NIOSH and OSHA worker exposure limits and any other relevant sensitive receptor exposure limits.

   The DEGADIS modeling estimated the worst case hourly (D stability and 1 meter per second wind speed) maximum ground level concentrations of CO2 during intermittent CO2 venting to be 6,131 ppm. This value is about 15 percent of the IDLH concentration of 40,000 ppm and less than 20 percent of the NIOSH short-term exposure limit of 30,000 ppm. Therefore it is well below potentially harmful concentrations.

5) Section 4.3.2 – Please identify the basic source input modeling parameters that will be used for the area, volume, and point sources used for the construction modeling (i.e. initial height, temperature, initial lateral and vertical dimensions, etc. as appropriate for each source type).

   This information has been included in the modeling analysis.

6) Table 4-3 page 4-11. We believe that footnote "c" in this table is now dated as the final redesignation appears to have been noticed in the Federal Register on November 12th 2008.

   Comment noted. The designation of PM10 under the National Standards is shown in the AFC as "Attainment."

7) Section 4.7 – Please indicate the emission sources that will be included in the fumigation modeling analysis.

The sources included in the fumigation model are identified in Section 5.1.2.4.

Additional Note:

1) In order to try to minimize additional modeling run corrections/requests during project discovery, we would like to point out that several emission sources are inconsistent with other similar equipment staff has experience in licensing, including: a) the PM10 emission rate for the cooling towers is based on a very high TDS content so we suggest reviewing whether such a high TDS is reasonable considering normal TDS limiting issues such as silica content; b) the PM10 emission rate from the LMS100 auxiliary turbine is much higher than any other similar LMS100 project licensed (10.5 lb/hour vs. 6 lb/hour for Panoche and Walnut Creek); c) the PM10 emission rate for the main CTG/HRSG appears high in comparison to other licensed plants on a fuel input basis and 4 ppm for NOx may be too high to meet BACT for a large gas turbine, certainly when operating on natural gas. We suggest a review of these emission sources be performed prior to modeling, because if they are not revised they will certainly be data requests topics.

   The applicant has revised the BACT emission limit for PM_{10} from the LMS100 auxiliary combustion turbine to 6 lb/hr per the determinations identified above. The cooling tower TDS has not been modified due to the resulting implications on water usage it would create. The CTG/HRSG BACT limit for NO_x when firing natural gas has not been modified due to vendor guarantee limitations. For a complete discussion of the proposed BACT technologies and emission limits see Appendix D-2.

Appendix C3

HECA Downwash Structure Information

Downwash Structures

HECA

Buildings

	Building Name	Comment	Number of Tiers	Tier Number	Base Elevation (ft)	Tier Height (ft)	Number of Corners	Corner 1 East (X) (m)	Corner 1 North (Y) (m)
1	FINESLAG	Fine Slag Handling Enclosure	1	1	288.5	70	4	283221.4	3912479.6
2	SLRYPREP	Slurry Preparation Building	1	1	288.5	165	4	283149.2	3912325.7
3	GASIFIER	Gasifier Structure	1	1	288.5	200	4	283204	3912352.1
4	AGR	AGR Refrigeration Compressor Enclosure	1	1	288.5	40	4	283132.3	3912194.1
5	CO2	CO2 Compressor Enclosure	1	1	288.5	50	4	283148.9	3912117
6	ASU_COOL	ASU Cooling Tower	1	1	288.5	50	4	282884	3912012
7	STG	Steam Turbine Generator Structure	1	1	288.5	50	12	282851	3912173.3
8	CTG	Combustion Turbine Generator	1	1	288.5	50	10	282851.4	3912218.2
9	AUX_CTG	Auxiliary CTG Structure	1	1	288.5	45	20	282856.5	3912256
10	HRSG	Heat Recovery Steam Generator	1	1	288.5	90	4	282934.2	3912219.4
11	KO_DRUM	Flare KO Drum	1	1	288.5	35	8	283056.8	3912303.9
12	PWR_COOL	Power Block and Gasification Cooling To	1	1	288.5	50	4	283024.1	3912009.6
13	ASU_COMP	ASU Main Air Compressor Enclosure	1	1	288.5	40	4	282893.5	3912076.4
14	AUX_BOIL	Auxiliary Boiler	1	1	288.5	50	4	282913.4	3912285.6
15	EMER_GN1	Emergency Generator - 1	1	1	288.5	20	4	282933.4	3912178.4
16	EMER_GN2	Emergency Generator - 2	1	1	288.5	20	4	282933.3	3912169.2
17	AIR_SEP	Air Separation Column Can	1	1	288.5	85	22	282918.2	3912110.2
18	AGR_METH	AGR Methanol Wash Column	1	1	288.5	235	4	283091.7	3912224
19	LOX_TANK	LOx Tank	1	1	288.5	90	8	282870.4	3912113.7
20	DEMIN1	Demineralized Storage Tank 1	1	1	288.5	45	4	282965.9	3912233.9
21	DEMIN2	Demineralized Storage Tank 2	1	1	288.5	45	4	282965.9	3912215

Tanks

	Tank Name	Description	Base Elevation (ft)	Center East (X) (m)	Center North (Y) (m)	Tank Height (ft)	Tank Diameter (ft)
1	PROC_WTR	Process Water Treatment Feed Tank	288.5	283173.3	3912429.9	32	35
2	GREY_WTR	Grey Water Tank	288.5	283158.5	3912414.5	40	30
3	SETTLER	Settler	288.5	283184.2	3912394.2	35	85

4	SLURTK_N	Slurry Run Tank - N	288.5	283184	3912318	75	38
5	SLURTK_S	Slurry Run Tank - S	288.5	283183.4	3912301.5	75	38
6	SOUR_WTR	Sour Water Stripper Feed Tank	288.5	283022.5	3912123.8	32	48
7	CONDENSA	Condensate Storage Tank	288.5	282957	3912249.6	24	34
8	FIREWATR	Firewater Storage Tank	288.5	282758.5	3912509.6	48	110
9	RAWWATER	Raw Water Tank	288.5	282850.6	3912507.3	48	100
10	TREATD_W	Treated Water Tank	288.5	282857.4	3912461.7	40	90
11	SILO_W	Feedstock Storage Silos - West	288.5	283261.6	3912671.8	150	80
12	SILO_C	Feedstock Storage Silos - Central	288.5	283290.1	3912671.4	150	80
13	SILO_E	Feedstock Storage Silos - East	288.5	283316.9	3912670.5	150	80
14	METHNL	Methanol Storage Tank	288.5	283115.2	3912061.2	40	40
15	AIR_CAN	Air Separation Can	288.5	282943.5	3912106.5	205	33
16	DEMINERA	Demineralized Storage Tank	288.5	282857.3	3912364.3	40	60
17	PURH2O_1	Purified Water Tank	288.5	282857.4	3912424.4	48	90
18	PURH2O_2	Purified Water Tank	288.5	282839.4	3912395.2	48	42.5
19	PURH2O_3	Purified Water Tank	288.5	282865.6	3912395.5	32	35
20	WATERT_N	Water Treatment Tank North	288.5	282761	3912394.8	48	120
21	WATERT_S	Water Treatment Tank South	288.5	282760.9	3912346.9	48	120

Appendix C4

CALMET/CALPUFF Air Quality Modeling Impact Analysis

APPENDIX C4

CALMET/CALPUFF

AIR QUALITY MODELING IMPACT ANALYSIS FOR FAR-FIELD CLASS I AREAS

KERN COUNTY, CALIFORNIA

Prepared For:

U.S. Environmental Protection Agency Region IX

U.S. Forest Service

Prepared on behalf of

Hydrogen Energy International LLC

URS

May 2009

Table of Contents

1. Background C4-1

1.1 Model Selection and Setup C4-1
1.2 Domain C4-2

2. CALMET Processing C4-5

2.1 MM5 Data C4-5
2.2 Hourly Surface and Precipitation Data C4-5
2.3 Upper Air Data C4-6
2.4 CALMET ZFACE and ZIMAX Settings C4-7
2.5 Wind Field Model Options C4-7
2.6 LULC and TERREL processing C4-8

3. CALPUFF Processing C4-11

3.1 Sources Included in CALPUFF Modeling C4-11
3.2 CALPUFF Parameters C4-21
3.3 PSD Class I Increment Significance Analysis C4-22
3.4 Class I Area Visibility Reduction Analysis C4-22
3.5 Total Nitrogen and Sulfur Deposition Analysis C4-23

4. Modeling Results C4-24

5. References C4-27

List of Figures

Figure 1 CALMET/CALPUFF Modeling Domain
Figure 2 MM5 and CALMET/CALPUFF Modeling Domain
Figure 3 Locations of Surface and Precipitation Data Stations
Figure 4 3-D Terrain Elevation Contours
Figure 5 Land Use Land Cover

List of Tables

Table 1 Class I Areas near the Project Site
Table 2 Maximum Emission Rates of Each Averaging Time Period
Table 3 Source Location and Parameters
Table 4 3-Hour Averaged Emission Inventory for CALPUFF (3-hour SO_2 Increment Analysis)
Table 5 24-Hour Averaged Emission Inventory for CALPUFF (24-hour NO_x, SO_2, and PM_{10} Increment and Visibility Analyses)
Table 6 Annual Averaged Emission Inventory for CALPUFF (Annual NO_x, SO_2, and PM_{10} Increment and Deposition Analyses)

Table 7 Size Distribution of SOA
Table 8 PSD Class I Increment Significance Analysis – CALPUFF Results
Table 9 Visibility Analysis – CALPUFF Results
Table 10 Total Nitrogen and Sulfur Deposition Analysis – CALPUFF Results

1.0 BACKGROUND

In accordance with comments from the National Park Service (NPS), U.S. Forest Service (USFS) and U.S. Environmental Protection Agency (USEPA) Region IX regarding far-field air quality modeling analysis for the proposed Hydrogen Energy California (HECA) project (the Project), a refined CALPUFF modeling analysis was performed in conjunction with the CALMET diagnostic meteorological model. Based on the written comments from the NPS and EPA and verbal comments from the USFS, the refined CALPUFF modeling considered only the San Rafael Wilderness Class I PSD area for the analysis, described in Section 3.0.

1.1 MODEL SELECTION AND SETUP

The CALPUFF air dispersion model is the preferred model for long-range transport recommended by the Federal Land Managers' Air Quality Related Value Workgroup (FLAG) guidance and the Interagency Work group on Air Quality Modeling (IWAQM) Phase 2 Summary Report. To estimate air quality impacts at distances greater than 50 kilometers, the CALPUFF model was used in conjunction with the CALMET diagnostic meteorological model. CALPUFF is a puff-type model that can incorporate three-dimensionally varying wind fields, wet and dry deposition, and atmospheric gas and particle-phase chemistry.

The CALMET model is used to prepare the necessary gridded wind fields for use in the CALPUFF model. CALMET can accept as input, mesoscale meteorological data (MM5 data), surface, upper air, precipitation, cloud cover, and over-water meteorological data (all in a variety of input formats). These data are merged and the effects of terrain and land cover types are estimated. This process results in the generation of a gridded three-dimensional (3-D) wind field that accounts for the effects of slope flows, terrain blocking effects, flow channelization, and spatially varying land use types.

The development of model inputs and options for CALMET/CALPUFF processor was based on guidance provided in the following references:

- Federal Land Managers' Air Quality Related Values Workgroup (FLAG) Phase I Report (December 2000);
- Inter-agency Working Group on Air Quality Modeling (IWAQM) Phase 2 Summary Report and Recommendations for Modeling Long-Range Transport Impacts (December 1998);
- CALMET/CALPUFF Protocol for BART Exemption Screening Analysis for Class I Areas in the Western United States (August 15, 2006);
- CALPUFF Reviewer's Guide (DRAFT) prepared for the United States Department of Agriculture (USDA) Forest Service and NPS (September 2005); and
- Permit application PSD particulate matter speciation methodology developed by Don Shepherd, NPS (2009).

Key input and model options selected are discussed in the following sections.

The most recent EPA-approved versions of the CALMET, CALPUFF, CALPOST system (version 5.8, version 5.8 and version 5.6394, respectively) were used.

1.2 DOMAIN

For this Project, the CALMET/CALPUFF modeling domain was specified using the Lambert Conformal Conic (LCC) Projection system in order to capture the earth curvature of the large modeling domain more accurately for this Project.. The false easting and northing at the projection origin were both set to zero. The latitude and longitude of the projection origin were set to 35.057 N and 119.643 W, respectively. Matching parallels of latitude 1 and 2 were defined as 34.38 N and 35.67 N, respectively. The choice of the matching parallels was made according to the latitudinal extent of the modeling domain, and therefore the parallels should be contained within the modeling domain in order to minimize distortion. An accepted rule-of-thumb is the rule of sixths which calls for one parallel to be placed 1/6th of the domain's north-south extent south of the domain's north edge, and an identical distance north of the domain's south edge (WDEQ 2006). The modeling domain was defined using a grid-cell arrangement that is 52 cells in X (easting) direction and 54 cells in Y (northing) direction. The grid-cells are 4 kilometers wide. Therefore, the southwestern corner of the gird cell (1,1) was set to -101 kilometer and -110 kilometer.

At least 50 kilometers of buffer distance was set between the most outer-boundary of all Class I areas within the modeling domain in order to prevent the loss of mass outside the boundary under some meteorological scenarios that might be associated with transport to nearby Class I areas. The total CALMET/CALPUFF modeling domain is shown in Figure 1. The entire MM5 data set domain is shown for information only in Figure 2.

Figure 1
CALMET/CALPUFF Modeling Domain

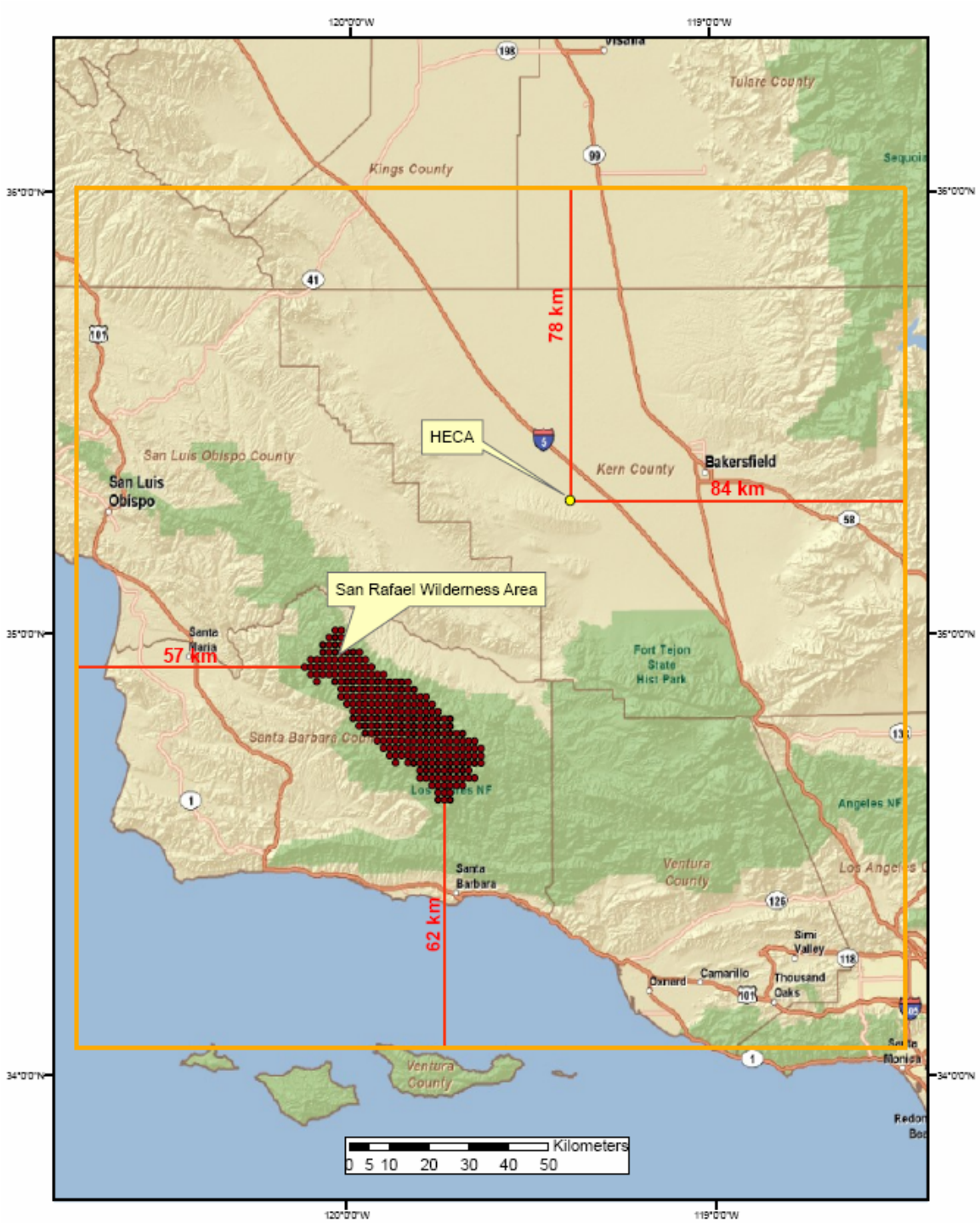

Figure 2
MM5 and CALMET/CALPUFF Modeling Domain

2.0 CALMET PROCESSING

2.1 MM5 DATA

An MM5 data set was used in conjunction with the actual surface and precipitation meteorological data observations. Three years (2001 through 2003) of MM5 data were obtained from Western Regional Air Partnership (WRAP). These MM5 data were used for Utah and Nevada's Best Available Retrofit Technology (BART) analysis by WRAP (WRAP 2006). The MM5 data had a 36 kilometer resolution. Initial-guess wind fields based on hourly 36-kilometer MM5 meteorological fields for 2001, 2002 and 2003 (IPROG = 14) were used. MM5 domain is shown in Figure 2.

2.2 HOURLY SURFACE AND PRECIPITATION DATA

CALMET pre-processed hourly surface data were obtained from WRAP's CALPUFF BART website (WRAP 2008). WRAP used approximately 190 different surface meteorological data stations for a 3-year period (2001 through 2003) for BART analysis. Although thirteen stations are located within the HECA CALPUFF modeling domain, all surface stations were used for this modeling analysis.

This modeling analysis considered the effects of chemical transformations and deposition processes on ambient pollutant concentrations; therefore, observation of precipitation was included in the CALMET analysis. CALMET pre-processed precipitation data were also collected from WRAP's BART website (WRAP 2008). The precipitation stations are co-located with surface meteorological data stations. The inverse-distance-squared interpolation scheme was used to generate a gridded precipitation field with hourly precipitation data. The radius of influence for the interpolation method was set to 100 kilometers.

The locations of both surface and precipitation stations used in this analysis are illustrated in Figure 3.

Figure 3
Locations of Surface and Precipitation Data Stations

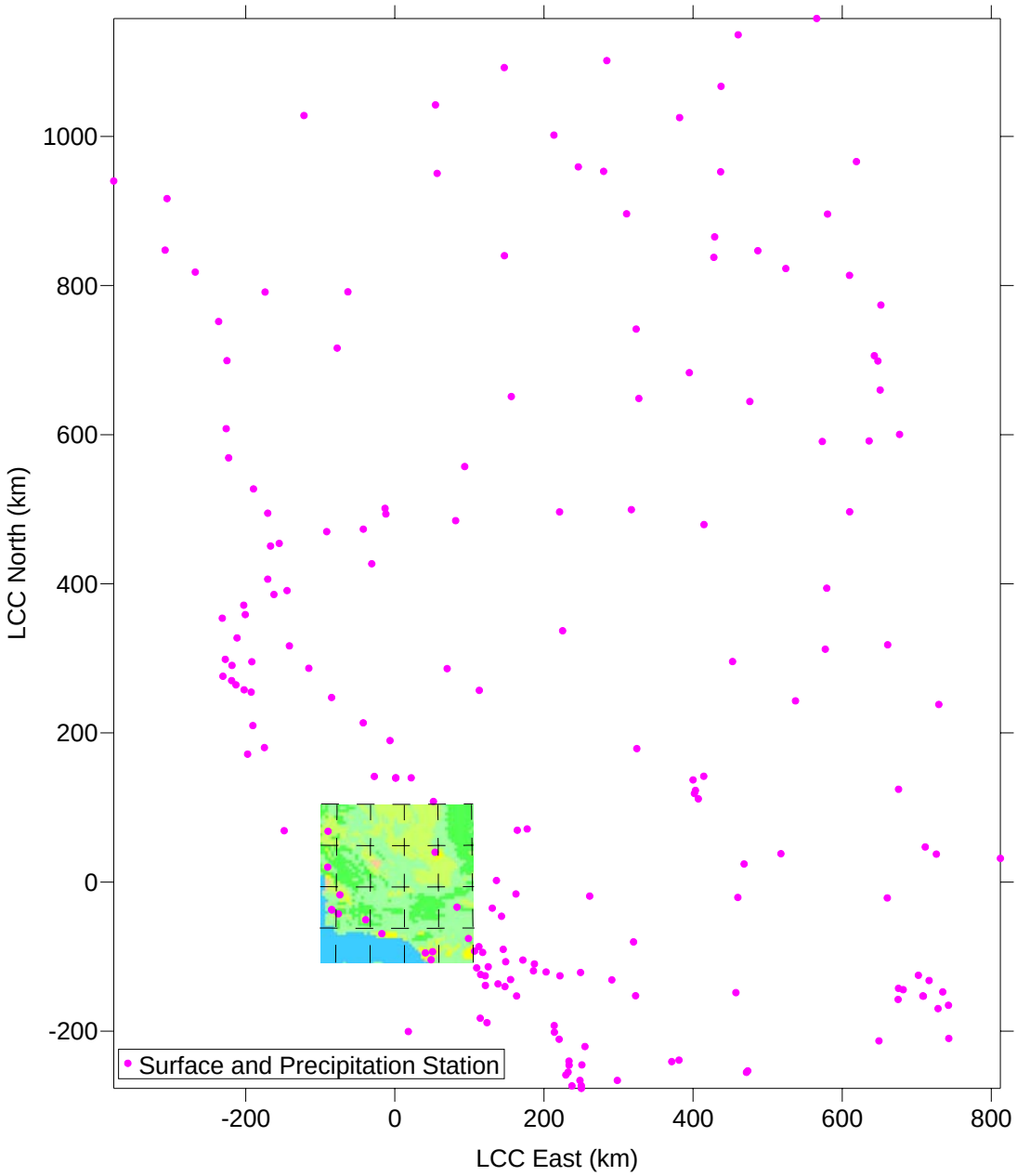

2.3 UPPER AIR DATA

No observed upper-air meteorological observations were used because they are redundant to the MM5 data and may introduce spurious artifacts in the wind field (WRAP 2006). WRAP explains that the twice-daily upper-air meteorological observations are used as input, with the MM5 model estimates nudged to the observations as part of the Four Dimensional Data Assimilation (FDDA) in the application of the MM5. This results in higher temporal (hourly versus 12-hour) and spatial (36-kilometer versus approximately 300-kilometer) resolution upper-

air meteorology in the MM5 field that is dynamically balanced, than contained in the upper-air observations. Therefore, the use of the upper-air observations with CALMET is not needed and in fact will upset the dynamic balance of the meteorological fields potentially producing spurious vertical velocities (WRAP 2006).

2.4 CALMET ZFACE AND ZIMAX SETTINGS

Eleven vertical layers were used with vertical cell face (ZFACE) heights at 0, 20, 100, 200, 350, 500, 750, 1,000, 2,000, 3,000, 4,000, and 5,000 meters. Maximum mixing height (ZIMAX) was set to 4,500 meters based on the WRAP modeling analysis. WRAP introduced Colorado Department of Public Health and Environment analyses of soundings for summer ozone events in the Denver area (CDPHE 2005). The CDPHE analysis suggests mixing heights in the Denver area are often well above the CALMET default value of 3,000 meters during the summer. A 3,000-meter AGL maximum mixing height might be appropriate in the eastern U.S.; however, in the western U.S. in the summer, mixing heights may exceed this value. WRAP expected that mixing heights in excess of the 3,000-meter above-ground-level CALMET default maximum would occur in the western U.S. (WRAP 2006).

2.5 WIND FIELD MODEL OPTIONS

In general, CALMET involves two steps in developing the final wind field. First, the prognostic wind field (such as MM5) is introduced into CALMET as the initial-guess field. CALMET then adjusts this field by accounting for the kinematic terrain effects, slope flows, blocking effects, and 3-D divergence minimization. The wind field resulting from this step is called the Step 1 wind field. Second, CALMET further adjusts the Step 1 wind field by applying an objective analysis procedure with observational data from selected surface, upper air, and precipitation stations. This step generates the final (Step 2) wind field. The “Diagnostic Wind Module” (DWM) option follows this two-step procedure. In this analysis, the DWM option was chosen in order to reflect the terrain effects in the wind field. Because several mountain ranges occur within the modeling domain, it was expected that terrain effects would be significant.

The MM5 data were used as the initial-guess wind field. The extrapolation of the surface wind data aloft (IEXTRP = -4) was used as recommended by the USEPA.

Wind speed and wind direction data from observation stations were only allowed to influence the Step 1 wind field at a distance determined by setting the radius-of-influence parameter. The radius of influence for the surface (RMAX1) was set to 100 kilometers as recommended by the Federal Land Managers. The distance from a surface observation station at which the observations and Step 1 wind field were weighted was set to 50 kilometers, which is within the FLM’s recommended range of 20 to 80 kilometers. Radius of influence for terrain features was set to 10 kilometer. All of these radius-of-influence parameters were set based on CALPUFF Reviewer’s Guide (2005).

2.6 LULC AND TERREL PROCESSING

The CALMET and CALPUFF models incorporate assumptions regarding land-use classification, leaf-area index, and surface roughness length to estimate deposition during transport. These parameters were calculated with a 4 kilometer grid spacing for the modeling domain. U.S. Geological Survey (USGS) 1:250,000-scale digital elevation models (DEMs) and Land Use Land Cover (LULC) classification files were obtained and used to develop the geophysical input files required by the CALMET model. USGS 1:250,000-scale (1-degree) DEMs data with 90-meters resolution were obtained from the USGS ftp site: http://edcftp.cr.usgs.gov/pub/data/DEM/250/. Using nine 1-degree DEM data files obtained, terrain pre-processor (TERREL) was processed to produce gridded fields of terrain elevation in the formats compatible with the CALMET. The names of 1 degree DEM quadrangles are as follows: Bakersfield-e, Bakersfield-w, Fresno-e, Fresno-w, Los_angeles-e, Los_angeles-w, Montery-e, San_luis_obispo-e, Santa_maria-e. Figure 4 shows the elevation contours calculated within the model domain.

LULC data (*.gz) were obtained from USGS 250K site, http://edcftp.cr.usgs.gov/pub/data/LULC/. Land Use Data Preprocessors, CTGCOMP, and CTGPROC were processed to compress six 250K LULC data files obtained. After processing, the data were quality checked to ensure land use was accurately represented. USGS land use data contain 38 land use categories. These were mapped to 14 categories read by CALMET. The names of 250K LULC quadrangles are as follows: Bakersfield, Fresno, Los_Angeles, Montery, San_Luis_Obispo, and Santa_Maria. Figure 5 shows the plot of land use data.

The outputs of TERREL and CTGPROC were combined in the geo-physical preprocessor (MAKEGEO) to prepare the CALMET geo-physical input file. These inputs include land use type, elevation, surface parameters (surface roughness, length, albedo, bowen ratio, soil heat flux parameter, and vegetation leaf area index) and anthropogenic heat flux.

Figure 4
3-D Terrain Elevation Contours

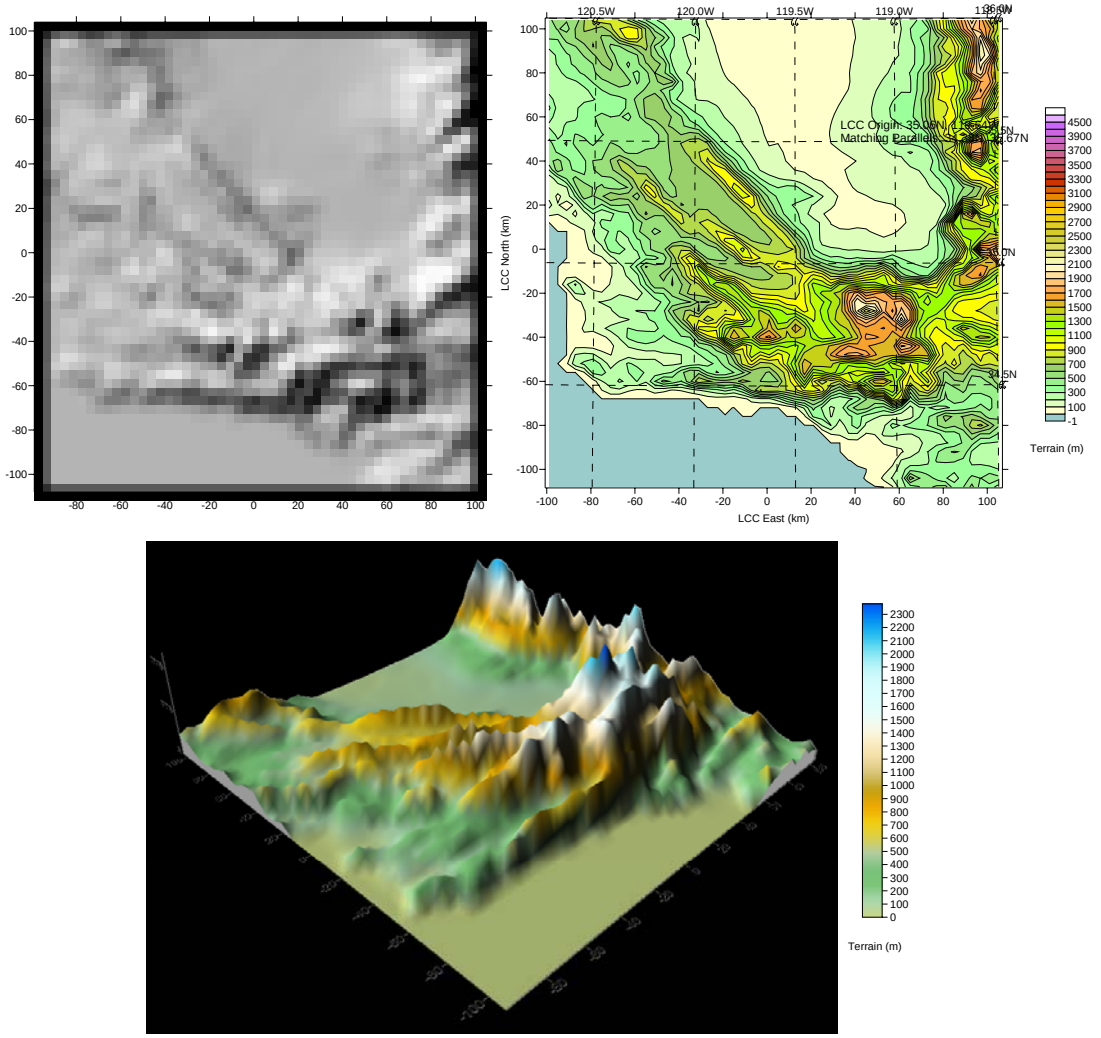

Figure 5
Land Use Land Cover

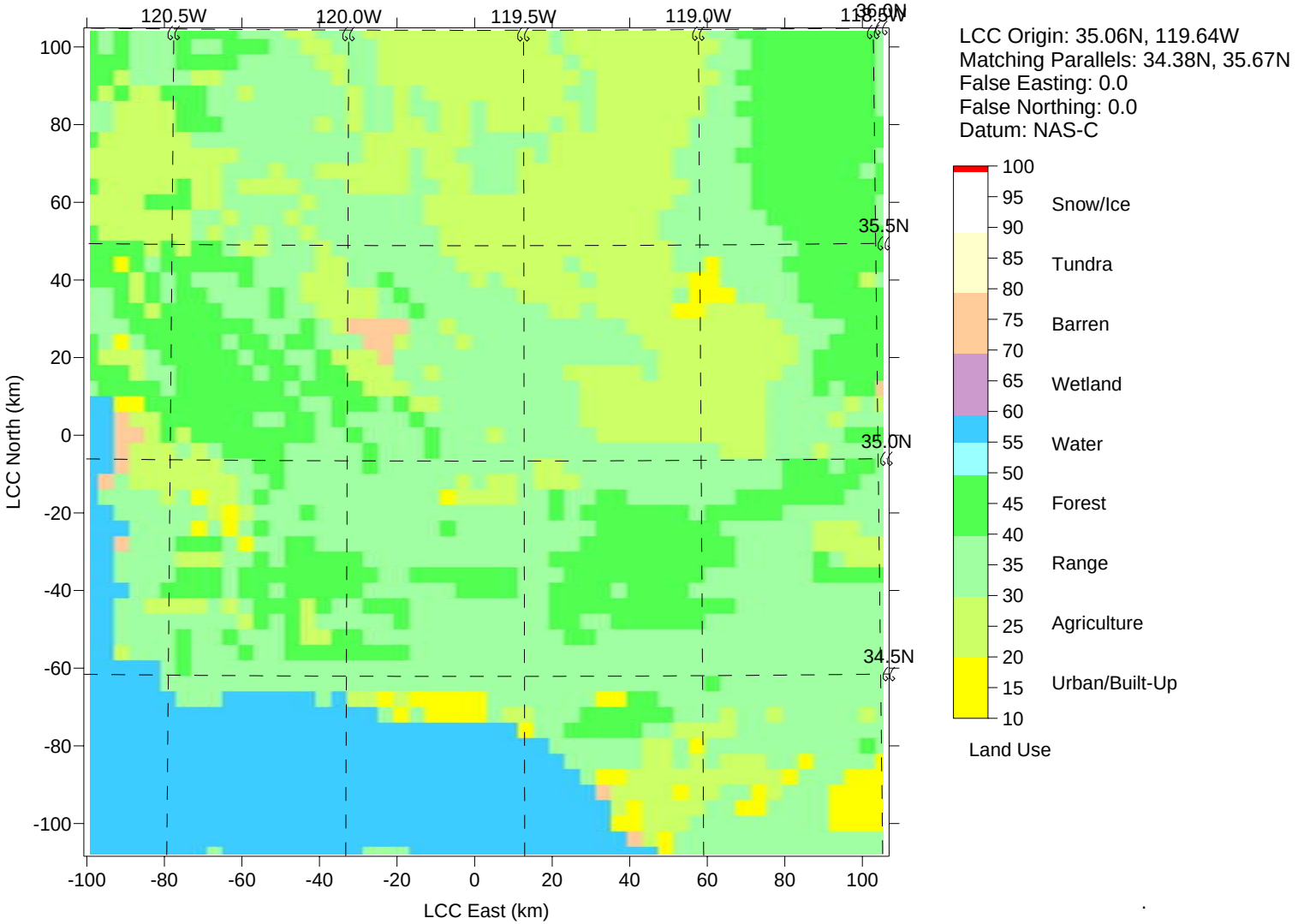

3.0 RECEPTORS OF CLASS I AREAS

Receptors for all refined CALPUFF modeling of each Class I area were obtained from the NPS' Class I Areas Receptor database (NPS, 2008). No modifications were made to the receptor locations or heights, as provided in the database. The Latitude/Longitude of the Class I receptor coordinates were converted to Lambert Conformal Conic (LCC) coordinates based on domain setup, described in Section 1.2.

Three Class I areas are located within the region of the Project site: Dome Land Wilderness Area, Sequoia National Park, and San Rafael Wilderness Area. Table 1 lists the distances from the Project Site to the closest and farthest points of each Class I area.

Table 1
Class I Areas near the Project Site

Class I Areas	Distance from the Project Site (km)		Model Included?
San Rafael Wilderness Area	Closest	63	Yes
	Farthest	84	Yes
Dome Land Wilderness Area	Closest	110	No
	Farthest	169	No
Sequoia National Park	Closest	123	No
	Farthest	177	No

The NPS does not anticipate any significant air quality impact at Sequoia National Park based on the distance (123 kilometers) from the Project facility, and the low emissions from proposed Project facility. Dome Land Wilderness Area is located in the range of 110 kilometers to 169 kilometer distance from the Project Site. Based on the distance, the low emissions from the proposed Project facility, and the dominant wind direction at Bakersfield monitoring station (dominant wind is blowing from the northwest, while the Dome Land Wilderness Area is located northeast of the Project Site), it was not anticipated that there will be any significant air quality impacts at Dome Land Wilderness Area; therefore, these two Class I areas were not included in the Project analysis. The nearest parts of the San Rafael Wilderness are located beyond 31.1 miles (50 kilometer) and within 62.1 miles (100 kilometer) from the proposed facility; thus, only San Rafael Wilderness Class I area was included in the Air Quality Relative Values (AQRV) analysis.

3.1 SOURCES INCLUDED IN CALPUFF MODELING

Required emissions in CALPUFF correspond with the needed analysis and include maximum short-term rates for increment and visibility impacts, as well as maximum annual emissions for species deposition and increment comparison. Because of the various operations involved and potential occurrence during a specific period, the CALPUFF modeled sources and emissions included potential overlapping operations.

The maximum, Potential-to-Emit (PTE) emission rate for each averaging time period is shown in Table 2. The maximum emission rates shown in Table 2 in units of grams per second were converted from the corresponding maximum emission rates expressed in units of either pounds per hour, pounds per day, or tons per year contained in the emissions inventory. The maximum PTE rates are conservatively estimated based on simultaneous worst-case operation of all sources at the facility (please note that the auxiliary boiler was exempted in the modeling analysis because the auxiliary boiler is not operating when the HRSG turbine is operating). For example, for the 24-hour analysis, it was assumed that the gasification flare operates for 24 hours of wet flaring. This could happen during a cold gasification plant startup, which is anticipated to occur only one time per year and last up to about 26 hours. However, the 24-hour analysis model conservatively assumed that a full 24 hours of this event happens every day, to make sure a worst case scenario was considered. Otherwise, the gasification flare operates on pilot only. In addition, for the 24-hour analysis, the sulfur recovery unit (SRU) flare emissions were estimated assuming 3 hours of startup/shutdown flaring, and the remainder of the day in pilot operation. This startup/shutdown is anticipated to occur only 6 hours total per year; otherwise, the SRU flare operates on pilot only. However, the model conservatively assumed that a full 3 hours of this flaring event happens every day.

Not only was each source above modeled individually using emission rates based on the worst-case scenario, the modeling approach conservatively assumed that cumulatively all the sources will be operated at those emission rates every day. This is a highly improbable operating scenario and results in a very conservative modeling approach. More details of the conservative nature of the modeling approach may be found in Section 4.1 of this appendix.

The stack parameters of all sources are shown in Table 3.

The CALPUFF modeling included speciation of emissions according to the NPS' Particulate Matter Speciation (PMS) method for natural gas combustion turbines. Applying the PMS methodology, 67 percent of total (SO_2) start speciated into SO_2, and 33 percent of total SO_2 were speciated into SO_4. Also, the total particulate matter 10 microns in diameter or less (PM_{10}) emission from HRSG/Turbine was speciated into Elemental Carbon (EC) and Secondary Organic Aerosol (SOA). The SOA was speciated again into $PM_{0.05}$, $PM_{0.01}$, $PM_{0.15}$, $PM_{0.20}$, $PM_{0.25}$, and $PM_{1.0}$ (indicated as PM0005, PM0010, PM0015, PM0020, PM0025, and PM0100 in the modeling, respectively). The PM_{10} emissions from other sources were modeled directly as PM_{10}. Direct emissions of the remaining species, nitric acid (HNO_3) and nitrate (NO_3), were assumed to be zero for the natural gas burning sources of the project. The modeled emissions are shown in Table 4 (3-hour averaged), Table 5 (24-hour averaged), and Table 6 (annual averaged). The SOA size distribution is shown in Table 7. In addition, total PM emission was separately modeled as INCPM without speciation for incremental PM analysis.

The 3-hour averaged emission rate was used for the 3-hour SO_2 impact analysis. The 24-hour averaged emission rate was used for the 24-hour SO_2 and 24-hour PM_{10} impact analyses, and visibility impairment impact analysis. The annual emission rate was used for the annual NO_x, annual SO_2, and annual PM_{10} impact analyses, as well as nitrogen and sulfur deposition analyses.

Table 2
Maximum Emission Rates of Each Averaging Time Period

Source	3-hr (g/s)	24-hr (g/s)			Annual (g/s)		
	SO_2	NO_x	SO_2	PM_{10}	NO_x	SO_2	PM_{10}
ASUCOOL1	-	-	-	0.0285	-	-	0.0271
ASUCOOL2	-	-	-	0.0285	-	-	0.0271
ASUCOOL3	-	-	-	0.0285	-	-	0.0271
ASUCOOL4	-	-	-	0.0285	-	-	0.0271
PWCOOL1	-	-	-	0.0382	-	-	0.0363
PWCOOL2	-	-	-	0.0382	-	-	0.0363
PWCOOL3	-	-	-	0.0382	-	-	0.0363
PWCOOL4	-	-	-	0.0382	-	-	0.0363
PWCOOL5	-	-	-	0.0382	-	-	0.0363
PWCOOL6	-	-	-	0.0382	-	-	0.0363
PWCOOL7	-	-	-	0.0382	-	-	0.0363
PWCOOL8	-	-	-	0.0382	-	-	0.0363
PWCOOL9	-	-	-	0.0382	-	-	0.0363
PWCOOL10	-	-	-	0.0382	-	-	0.0363
PWCOOL11	-	-	-	0.0382	-	-	0.0363
PWCOOL12	-	-	-	0.0382	-	-	0.0363
PWCOOL13	-	-	-	0.0382	-	-	0.0363
GASCOOL1	-	-	-	0.0300	-	-	0.0285
GASCOOL2	-	-	-	0.0300	-	-	0.0285
GASCOOL3	-	-	-	0.0300	-	-	0.0285
GASCOOL4	-	-	-	0.0300	-	-	0.0285
EMERGEN1 [a]	0.0024	0.0324	0.0003	0.0017	0.0022	0.00002	0.0001
EMERGEN2 [a]	-	-	-	-	-	-	-
HRSGSTK	0.9302	6.5718	0.9302	3.0239	4.8092	0.8394	2.8695
FIREPUMP	0.0005	0.0193	0.0001	0.0002	0.0026	0.000008	0.000026
AUX_BOIL [b]	-	-	-	-	0.0492	0.0091	0.0224
TAIL_TO	0.2546	0.6048	0.2546	0.0202	0.3128	0.2521	0.0104
CO_2_VENT	-	-	-	-	-	-	-
SRUFLARE	2.1933	0.0720	0.2742	0.0018	0.0049	0.0016	0.0001
GF_FLARE	0.0001	7.9380	0.0001	0.0002	0.1239	0.0001	0.0002
GASVENTA [c]	-	-	-	-	-	-	-

Table 2
Maximum Emission Rates of Each Averaging Time Period (Continued)

Source	3-hr (g/s)	24-hr (g/s)			Annual (g/s)		
	SO_2	NO_x	SO_2	PM_{10}	NO_x	SO_2	PM_{10}
GASVENTB [c]	0.0046	0.2495	0.0046	0.0181	0.0513	0.0010	0.0037
GASVENTC [c]	-	-	-	-	-	-	-
AUX_CTG	0.2343	1.1149	0.2343	0.7560	0.5011	0.1100	0.3547
DC1	-	-	-	0.0301	-	-	0.0058
DC2	-	-	-	0.0761	-	-	0.0147
DC3	-	-	-	0.0411	-	-	0.0363
DC4	-	-	-	0.0263	-	-	0.0232
DC5	-	-	-	0.0252	-	-	0.0223
DC6	-	-	-	0.0027	-	-	0.0004
RC_FLARE	0.0001	0.0045	0.0001	0.0001	0.0045	0.0001	0.0001

Notes:
a. The analysis also assumed that all emissions from two emergency generators are released to the emergency generator 1, which has worst-dispersion characteristics.
b. Auxiliary boiler is not fired at the same time that the HRSG is operating.
c. There are three gasifiers. Only one gasifier warming will be operated at any one time. The emission is from GASVENTB, which results in the worst impact among three gasifiers. SO_2 = sulfur dioxide
g/s = grams per second
NO_x = oxides of nitrogen
PM_{10} = particulate matter 10 microns in diameter

Table 3
Source Location and Parameters

Source ID	Source Description	UTM Easting (m)	UTM Northing (m)	LCC X (km)	LCC Y (km)	Base Elevation (m)	Stack Height (m)	Stack Temperature (K)	Stack Velocity (m/s)	Stack Diameter (m)
ASUCOOL1	ASU Cooling Tower	282891.3	3912002.1	23.21883	30.06171	87.93	16.76	299.9	7.98	9.14
ASUCOOL2	ASU Cooling Tower	282906.2	3912002.4	23.23371	30.06243	87.93	16.76	299.9	7.98	9.14
ASUCOOL3	ASU Cooling Tower	282922.2	3912002.1	23.24975	30.06254	87.93	16.76	299.9	7.98	9.14
ASUCOOL4	ASU Cooling Tower	282937.3	3912001.4	23.26486	30.06224	87.93	16.76	299.9	7.98	9.14
PWCOOL1	Power Block Cooling Tower	283031.9	3912001.1	23.35941	30.06445	87.93	16.76	299.9	7.98	9.14
PWCOOL2	Power Block Cooling Tower	283046.3	3912000.9	23.37385	30.06469	87.93	16.76	299.9	7.98	9.14
PWCOOL3	Power Block Cooling Tower	283061.6	3912001.0	23.38915	30.06519	87.93	16.76	299.9	7.98	9.14
PWCOOL4	Power Block Cooling Tower	283076.9	3912000.0	23.40443	30.06463	87.93	16.76	299.9	7.98	9.14
PWCOOL5	Power Block Cooling Tower	283092.1	3912000.0	23.4196	30.06494	87.93	16.76	299.9	7.98	9.14
PWCOOL6	Power Block Cooling Tower	283107.9	3912000.0	23.4354	30.06545	87.93	16.76	299.9	7.98	9.14
PWCOOL7	Power Block Cooling Tower	283122.7	3911999.4	23.45019	30.06518	87.93	16.76	299.9	7.98	9.14
PWCOOL8	Power Block Cooling Tower	283137.8	3911999.3	23.46529	30.06555	87.93	16.76	299.9	7.98	9.14
PWCOOL9	Power Block Cooling Tower	283153.5	3911999.5	23.481	30.06609	87.93	16.76	299.9	7.98	9.14
PWCOOL10	Power Block Cooling Tower	283168.8	3911999.2	23.49627	30.06622	87.93	16.76	299.9	7.98	9.14
PWCOOL11	Power Block Cooling Tower	283183.7	3911999.6	23.51118	30.06702	87.93	16.76	299.9	7.98	9.14
PWCOOL12	Power Block Cooling Tower	283199.5	3911999.0	23.52698	30.0669	87.93	16.76	299.9	7.98	9.14
PWCOOL13	Power Block Cooling Tower	283275.2	3911998.1	23.60261	30.068	87.93	16.76	299.9	7.98	9.14
GASCOOL1	Gasification Cooling Tower	283214.6	3911999.4	23.54206	30.06768	87.93	16.76	299.9	7.98	9.14
GASCOOL2	Gasification Cooling Tower	283228.6	3911998.4	23.5561	30.06699	87.93	16.76	299.9	7.98	9.14
GASCOOL3	Gasification Cooling Tower	283244.7	3911998.9	23.57215	30.06791	87.93	16.76	299.9	7.98	9.14
GASCOOL4	Gasification Cooling Tower	283259.1	3911998.1	23.5866	30.06755	87.93	16.76	299.9	7.98	9.14
EMERGEN1	Emergency Generator1	282948.3	3912172.0	23.2713	30.23302	87.93	6.10	677.6	67.38	0.37
EMERGEN2	Emergency Generator2	282948.3	3912172.0	23.2713	30.23302	87.93	6.10	677.6	67.38	0.37
HRSGSTK	HRSG Stack	282940	3912211.5	23.262	30.27232	87.93	65.00	344.3	11.55	6.10
FIREPUMP	Fire Water Pump Diesel Engine	282770.9	3912535.5	23.08432	30.59164	87.93	6.10	727.6	47.52	0.21

Table 3
Source Location and Parameters (Continued)

Source ID	Source Description	UTM Easting (m)	UTM Northing (m)	LCC X (km)	LCC Y (km)	Base Elevation (m)	Stack Height (m)	Stack Temperature (K)	Stack Velocity (m/s)	Stack Diameter (m)
AUX_BOIL	Auxiliary Boiler	282955.1	3912273.0	23.27539	30.33414	87.93	24.38	422.0	9.20	1.37
TAIL_TO	Tail Gas Thermal Oxidizer	283049.1	3912112.7	23.37362	30.1765	87.93	50.29	922.0	7.45	0.76
CO_2_VENT	CO_2 Vent	283045.7	3912389.7	23.36286	30.45327	87.93	79.25	291.5	55.92	1.07
SRUFLARE	SRU Flare	283042.4	3912097.7	23.36739	30.16128	87.93	76.20	1273.0	20.00	1.09
GF_FLARE	Gasification Flare	283064.5	3912472.6	23.37946	30.53658	87.93	76.20	1273.0	20.00	5.47
GASVENTA	Gasifier Warming Vent A	283212.7	3912342.0	23.531	30.41005	87.93	64.01	338.7	26.39	0.30
GASVENTB	Gasifier Warming Vent B	283211.7	3912316.6	23.53075	30.38457	87.93	64.01	338.7	26.39	0.30
GASVENTC	Gasifier Warming Vent C	283211.2	3912291.0	23.53085	30.35898	87.93	64.01	338.7	26.39	0.30
AUX_CTG	AuxiliaryCombustionGasTurbine	282833.9	3912281.9	23.15408	30.33984	87.93	33.53	677.6	15.31	4.88
DC1	FeedStock-DustCollection	283365.3	3913058.7	23.6644	31.13031	87.93	13.87	291.9	15.06	0.51
DC2	FeedStock-DustCollection	283356.0	3912740.9	23.66358	30.81248	87.93	51.97	291.9	14.90	0.81
DC3	FeedStock-DustCollection	283150.4	3912310.2	23.46956	30.37655	87.93	53.79	291.9	14.66	0.56
DC4	FeedStock-DustCollection	283298.0	3912740.9	23.60564	30.81094	87.93	51.97	291.9	15.70	0.43
DC5	FeedStock-DustCollection	283150.4	3912749.0	23.45789	30.81511	87.93	24.23	291.9	15.06	0.43
DC6	FeedStock-DustCollection	283149.9	3912324.5	23.46876	30.39085	87.93	53.79	291.9	14.19	0.23
RC_FLARE	Rectisol Flare	283064.7	3912479.1	23.3795	30.54304	87.93	76.20	1,273	20.00	0.10

Notes:
Assumed that the temperature of cooling tower is 8 Kelvin degrees higher than the annual averaged temperature value from the AERMET meteorological data at Bakersfield monitoring station.
Assumed that the temperature of dust collection is the annual averaged value from the AERMET meteorological data at Bakersfield Monitoring Station B.
K = Kelvin
km = kilometer
LCC = Lambert Conformal Conic
m = meter
m/s = meters per second
CO_2 = carbon dioxide
UTM = Universal Transverse Mercator

Table 4
3-Hour Averaged Emission Inventory for CALPUFF (3-hour SO_2 Increment Analysis)

Sources (g/s)	SO_2	SO_4	NO_x	HNO_3	NO_3	INCPM	PM_{10}	SOA						EC
								PM0005	PM0010	PM0015	PM0020	PM0025	PM0100	
EMERGEN1	2.35E-03	-	3.89E-01	-	-	1.69E-03	1.69E-03	-	-	-	-	-	-	-
HRSGSTK	6.20E-01	4.65E-01	2.10E+01	-	-	3.02E+00	-	2.70E-01	4.51E-01	4.15E-01	2.70E-01	1.98E-01	1.98E-01	7.56E-01
FIREPUMP	4.70E-04	-	2.32E-01	-	-	1.93E-04	1.93E-04	-	-	-	-	-	-	-
TAIL_TO	2.55E-01	-	6.05E-01	-	-	2.02E-02	2.02E-02	-	-	-	-	-	-	-
SRUFLARE	2.19E+00	-	5.44E-01	-	-	1.80E-03	1.80E-03	-	-	-	-	-	-	-
GF_FLARE	1.29E-04	-	7.94E+00	-	-	1.89E-04	1.89E-04	-	-	-	-	-	-	-
GASVENTB	4.63E-03	-	2.49E-01	-	-	1.81E-02	1.81E-02	-	-	-	-	-	-	-
AUX_CTG	1.56E-01	1.17E-01	2.60E+00	-	-	7.56E-01	-	6.75E-02	1.12E-01	1.03E-01	6.75E-02	4.95E-02	4.95E-02	1.89E-01
RC_FLARE	7.72E-05	-	4.54E-03	-	-	1.13E-04	1.13E-04	-	-	-	-	-	-	-

Notes:
(g/s) = grams per second
EC = Elemental Carbon
HNO_3 = nitric acid
INCPM = total particulate matter emission
NO_x = oxides of nitrogen
NO_3 = nitrate
PM0005 = particulate matter 0.05 microns or less in diameter
PM0010 = particulate matter 0.1 microns or less in diameter
PM0015 = particulate matter 0.15 microns or less in diameter
PM0020 = particulate matter 0.2 microns or less in diameter
PM0025 = particulate matter 0.25 microns or less in diameter
PM0100 = particulate matter 1 microns or less in diameter
PM_{10} = particulate matter 10 microns or less in diameter
SO_2 = sulfur dioxide
SO_4 = sulfate compound
SOA = Secondary Organic Aerosol

Table 5
24-Hour Averaged Emission Inventory for CALPUFF (24-hour NO_x, SO_2, and PM_{10} Increment and Visibility Analyses)

Sources (g/s)	SO_2	SO_4	NO_x	HNO_3	NO_3	INCPM	PM_{10}	SOA						EC
								PM0005	PM0010	PM0015	PM0020	PM0025	PM0100	
ASUCOOL1	-	-	-	-	-	2.85E-02	2.85E-02	-	-	-	-	-	-	-
ASUCOOL2	-	-	-	-	-	2.85E-02	2.85E-02	-	-	-	-	-	-	-
ASUCOOL3	-	-	-	-	-	2.85E-02	2.85E-02	-	-	-	-	-	-	-
ASUCOOL4	-	-	-	-	-	2.85E-02	2.85E-02	-	-	-	-	-	-	-
PWCOOL1	-	-	-	-	-	3.82E-02	3.82E-02	-	-	-	-	-	-	-
PWCOOL2	-	-	-	-	-	3.82E-02	3.82E-02	-	-	-	-	-	-	-
PWCOOL3	-	-	-	-	-	3.82E-02	3.82E-02	-	-	-	-	-	-	-
PWCOOL4	-	-	-	-	-	3.82E-02	3.82E-02	-	-	-	-	-	-	-
PWCOOL5	-	-	-	-	-	3.82E-02	3.82E-02	-	-	-	-	-	-	-
PWCOOL6	-	-	-	-	-	3.82E-02	3.82E-02	-	-	-	-	-	-	-
PWCOOL7	-	-	-	-	-	3.82E-02	3.82E-02	-	-	-	-	-	-	-
PWCOOL8	-	-	-	-	-	3.82E-02	3.82E-02	-	-	-	-	-	-	-
PWCOOL9	-	-	-	-	-	3.82E-02	3.82E-02	-	-	-	-	-	-	-
PWCOOL10	-	-	-	-	-	3.82E-02	3.82E-02	-	-	-	-	-	-	-
PWCOOL11	-	-	-	-	-	3.82E-02	3.82E-02	-	-	-	-	-	-	-
PWCOOL12	-	-	-	-	-	3.82E-02	3.82E-02	-	-	-	-	-	-	-
PWCOOL13	-	-	-	-	-	3.82E-02	3.82E-02	-	-	-	-	-	-	-
GASCOOL1	-	-	-	-	-	3.00E-02	3.00E-02	-	-	-	-	-	-	-
GASCOOL2	-	-	-	-	-	3.00E-02	3.00E-02	-	-	-	-	-	-	-
GASCOOL3	-	-	-	-	-	3.00E-02	3.00E-02	-	-	-	-	-	-	-
GASCOOL4	-	-	-	-	-	3.00E-02	3.00E-02	-	-	-	-	-	-	-
EMERGEN1	2.94E-04	-	3.24E-02	-	-	1.69E-03	1.69E-03	-	-	-	-	-	-	-
HRSGSTK	6.20E-01	4.65E-01	6.57E+00	-	-	3.02E+00	-	2.70E-01	4.51E-01	4.15E-01	2.70E-01	1.98E-01	1.98E-01	7.56E-01
FIREPUMP	5.88E-05	-	1.93E-02			1.93E-04	1.93E-04							
TAIL_TO	2.55E-01	-	6.05E-01	-	-	2.02E-02	2.02E-02	-	-	-	-	-	-	-
SRUFLARE	2.74E-01	-	7.20E-02	-	-	1.80E-03	1.80E-03	-	-	-	-	-	-	-
GF_FLARE	1.29E-04	-	7.94E+00	-	-	1.89E-04	1.89E-04	-	-	-	-	-	-	-
GASVENTB	4.63E-03	-	2.49E-01	-	-	1.81E-02	1.81E-02	-	-	-	-	-	-	-
AUX_CTG	1.56E-01	1.17E-01	1.11E+00	-	-	7.56E-01	-	6.75E-02	1.12E-01	1.03E-01	6.75E-02	4.95E-02	4.95E-02	1.89E-01
DC1	-	-	-	-	-	3.01E-02	3.01E-02	-	-	-	-	-	-	-
DC2	-	-	-	-	-	7.61E-02	7.61E-02	-	-	-	-	-	-	-
DC3	-	-	-	-	-	4.11E-02	4.11E-02	-	-	-	-	-	-	-
DC4	-	-	-	-	-	2.63E-02	2.63E-02	-	-	-	-	-	-	-
DC5	-	-	-	-	-	2.52E-02	2.52E-02	-	-	-	-	-	-	-
DC6	-	-	-	-	-	2.67E-03	2.67E-03	-	-	-	-	-	-	-
RC_FLARE	7.72E-05	-	4.54E-03	-	-	1.13E-04	1.13E-04	-	-	-	-	-	-	-

Notes:
(g/s) = grams per second
EC = Elemental Carbon
HNO_3 = nitric acid
INCPM = total particulate matter emission
NO_x = oxides of nitrogen
NO_3 = nitrate
PM0005 = particulate matter 0.05 microns or less in diameter
PM0010 = particulate matter 0.1 microns or less in diameter
PM0015 = particulate matter 0.15 microns or less in diameter
PM0020 = particulate matter 0.2 microns or less in diameter
PM0025 = particulate matter 0.25 microns or less in diameter
PM0100 = particulate matter 1 microns or less in diameter
PM_{10} = particulate matter 10 microns or less in diameter
SO_2 = sulfur dioxide
SO_4 = sulfate compound
SOA = Secondary Organic Aerosol

Table 6
Annual Averaged Emission Inventory for CALPUFF (Annual NO_x, SO_2, and PM_{10} Increment and Deposition Analyses)

Sources (g/s)	SO_2	SO_4	NO_x	HNO_3	NO_3	INCPM	PM_{10}	SOA						EC
								PM0005	PM0010	PM0015	PM0020	PM0025	PM0100	
ASUCOOL1	-	-	-	-	-	2.71E-02	2.71E-02	-	-	-	-	-	-	-
ASUCOOL2	-	-	-	-	-	2.71E-02	2.71E-02	-	-	-	-	-	-	-
ASUCOOL3	-	-	-	-	-	2.71E-02	2.71E-02	-	-	-	-	-	-	-
ASUCOOL4	-	-	-	-	-	2.71E-02	2.71E-02	-	-	-	-	-	-	-
PWCOOL1	-	-	-	-	-	3.63E-02	3.63E-02	-	-	-	-	-	-	-
PWCOOL2	-	-	-	-	-	3.63E-02	3.63E-02	-	-	-	-	-	-	-
PWCOOL3	-	-	-	-	-	3.63E-02	3.63E-02	-	-	-	-	-	-	-
PWCOOL4	-	-	-	-	-	3.63E-02	3.63E-02	-	-	-	-	-	-	-
PWCOOL5	-	-	-	-	-	3.63E-02	3.63E-02	-	-	-	-	-	-	-
PWCOOL6	-	-	-	-	-	3.63E-02	3.63E-02	-	-	-	-	-	-	-
PWCOOL7	-	-	-	-	-	3.63E-02	3.63E-02	-	-	-	-	-	-	-
PWCOOL8	-	-	-	-	-	3.63E-02	3.63E-02	-	-	-	-	-	-	-
PWCOOL9	-	-	-	-	-	3.63E-02	3.63E-02	-	-	-	-	-	-	-
PWCOOL10	-	-	-	-	-	3.63E-02	3.63E-02	-	-	-	-	-	-	-
PWCOOL11	-	-	-	-	-	3.63E-02	3.63E-02	-	-	-	-	-	-	-
PWCOOL12	-	-	-	-	-	3.63E-02	3.63E-02	-	-	-	-	-	-	-
PWCOOL13	-	-	-	-	-	3.63E-02	3.63E-02	-	-	-	-	-	-	-
GASCOOL1	-	-	-	-	-	2.85E-02	2.85E-02	-	-	-	-	-	-	-
GASCOOL2	-	-	-	-	-	2.85E-02	2.85E-02	-	-	-	-	-	-	-
GASCOOL3	-	-	-	-	-	2.85E-02	2.85E-02	-	-	-	-	-	-	-
GASCOOL4	-	-	-	-	-	2.85E-02	2.85E-02	-	-	-	-	-	-	-
EMERGEN1	2.01E-05	-	2.22E-03	-	-	1.15E-04	1.15E-04	-	-	-	-	-	-	-
HRSGSTK	5.60E-01	4.20E-01	4.81E+00	-	-	2.87E+00	-	2.60E-01	4.33E-01	3.98E-01	2.60E-01	1.91E-01	1.91E-01	7.17E-01
FIREPUMP	8.05E-06	-	2.64E-03	-	-	2.64E-05	2.64E-05	-	-	-	-	-	-	-
AUX_BOIL	9.13E-03	-	4.92E-02	-	-	2.24E-02	2.24E-02	-	-	-	-	-	-	-
TAIL_TO	2.52E-01	-	3.13E-01	-	-	1.04E-02	1.04E-02	-	-	-	-	-	-	-
SRUFLARE	1.58E-03	-	4.91E-03	-	-	1.23E-04	1.23E-04	-	-	-	-	-	-	-
GF_FLARE	1.29E-04	-	1.24E-01	-	-	1.89E-04	1.89E-04	-	-	-	-	-	-	-
GASVENTB	9.51E-04	-	5.13E-02	-	-	3.73E-03	3.73E-03	-	-	-	-	-	-	-
AUX_CTG	7.33E-02	5.50E-02	5.01E-01	-	-	3.55E-01	-	3.17E-02	5.28E-02	4.85E-02	3.17E-02	2.32E-02	2.32E-02	8.87E-02
DC1	-	-	-	-	-	5.82E-03	5.82E-03	-	-	-	-	-	-	-
DC2	-	-	-	-	-	1.47E-02	1.47E-02	-	-	-	-	-	-	-

Table 6
Annual Averaged Emission Inventory for CALPUFF (Annual NO_x, SO_2, and PM_{10} Increment and Deposition Analyses) (Continued)

Sources (g/s)	SO_2	SO_4	NO_x	HNO_3	NO_3	INCPM	PM_{10}	SOA						EC
								PM0005	PM0010	PM0015	PM0020	PM0025	PM0100	
DC3	-	-	-	-	-	3.63E-02	3.63E-02	-	-	-	-	-	-	-
DC4	-	-	-	-	-	2.32E-02	2.32E-02	-	-	-	-	-	-	-
DC5	-	-	-	-	-	2.23E-02	2.23E-02	-	-	-	-	-	-	-
DC6	-	-	-	-	-	4.00E-04	4.00E-04	-	-	-	-	-	-	-
RC_FLARE	7.72E-05	-	4.54E-03	-	-	1.13E-04	1.13E-04	-	-	-	-	-	-	-

Notes:
(g/s) = grams per second
EC = Elemental Carbon
HNO_3 = nitric acid
INCPM = total particulate matter emission
NO_x = oxides of nitrogen
NO_3 = nitrate
PM0005 = particulate matter 0.05 microns or less in diameter
PM0010 = particulate matter 0.1 microns or less in diameter
PM0015 = particulate matter 0.15 microns or less in diameter
PM0020 = particulate matter 0.2 microns or less in diameter
PM0025 = particulate matter 0.25 microns or less in diameter
PM0100 = particulate matter 1 microns or less in diameter
PM_{10} = particulate matter 10 microns or less in diameter
SO_2 = sulfur dioxide
SO_4 = sulfate compound
SOA = Secondary Organic Aerosol

Table 4
3-Hour Averaged Emission Inventory for CALPUFF (3-hour SO_2 Increment Analysis)

Sources (g/s)	SO_2	SO_4	NO_x	HNO_3	NO_3	INCPM	PM_{10}	SOA						EC
								PM0005	PM0010	PM0015	PM0020	PM0025	PM0100	
EMERGEN1	2.35E-03	-	3.89E-01	-	-	1.69E-03	1.69E-03	-	-	-	-	-	-	-
HRSGSTK	6.20E-01	4.65E-01	2.10E+01	-	-	3.02E+00	-	2.70E-01	4.51E-01	4.15E-01	2.70E-01	1.98E-01	1.98E-01	7.56E-01
FIREPUMP	4.70E-04	-	2.32E-01	-	-	1.93E-04	1.93E-04	-	-	-	-	-	-	-
TAIL_TO	2.55E-01	-	6.05E-01	-	-	2.02E-02	2.02E-02	-	-	-	-	-	-	-
SRUFLARE	2.19E+00	-	5.44E-01	-	-	1.80E-03	1.80E-03	-	-	-	-	-	-	-
GF_FLARE	1.29E-04	-	7.94E+00	-	-	1.89E-04	1.89E-04	-	-	-	-	-	-	-
GASVENTB	4.63E-03	-	2.49E-01	-	-	1.81E-02	1.81E-02	-	-	-	-	-	-	-
AUX_CTG	1.56E-01	1.17E-01	2.60E+00	-	-	7.56E-01	-	6.75E-02	1.12E-01	1.03E-01	6.75E-02	4.95E-02	4.95E-02	1.89E-01
RC_FLARE	7.72E-05	-	4.54E-03	-	-	1.13E-04	1.13E-04	-	-	-	-	-	-	-

Notes:
(g/s) = grams per second
EC = Elemental Carbon
HNO_3 = nitric acid
INCPM = total particulate matter emission
NO_x = oxides of nitrogen
NO_3 = nitrate
PM0005 = particulate matter 0.05 microns or less in diameter
PM0010 = particulate matter 0.1 microns or less in diameter
PM0015 = particulate matter 0.15 microns or less in diameter
PM0020 = particulate matter 0.2 microns or less in diameter
PM0025 = particulate matter 0.25 microns or less in diameter
PM0100 = particulate matter 1 microns or less in diameter
PM_{10} = particulate matter 10 microns or less in diameter
SO_2 = sulfur dioxide
SO_4 = sulfate compound
SOA = Secondary Organic Aerosol

Table 5
24-Hour Averaged Emission Inventory for CALPUFF (24-hour NO_x, SO_2, and PM_{10} Increment and Visibility Analyses)

Sources (g/s)	SO_2	SO_4	NO_x	HNO_3	NO_3	INCPM	PM_{10}	SOA						EC
								PM0005	PM0010	PM0015	PM0020	PM0025	PM0100	
ASUCOOL1	-	-	-	-	-	2.85E-02	2.85E-02	-	-	-	-	-	-	-
ASUCOOL2	-	-	-	-	-	2.85E-02	2.85E-02	-	-	-	-	-	-	-
ASUCOOL3	-	-	-	-	-	2.85E-02	2.85E-02	-	-	-	-	-	-	-
ASUCOOL4	-	-	-	-	-	2.85E-02	2.85E-02	-	-	-	-	-	-	-
PWCOOL1	-	-	-	-	-	3.82E-02	3.82E-02	-	-	-	-	-	-	-
PWCOOL2	-	-	-	-	-	3.82E-02	3.82E-02	-	-	-	-	-	-	-
PWCOOL3	-	-	-	-	-	3.82E-02	3.82E-02	-	-	-	-	-	-	-
PWCOOL4	-	-	-	-	-	3.82E-02	3.82E-02	-	-	-	-	-	-	-
PWCOOL5	-	-	-	-	-	3.82E-02	3.82E-02	-	-	-	-	-	-	-
PWCOOL6	-	-	-	-	-	3.82E-02	3.82E-02	-	-	-	-	-	-	-
PWCOOL7	-	-	-	-	-	3.82E-02	3.82E-02	-	-	-	-	-	-	-
PWCOOL8	-	-	-	-	-	3.82E-02	3.82E-02	-	-	-	-	-	-	-
PWCOOL9	-	-	-	-	-	3.82E-02	3.82E-02	-	-	-	-	-	-	-
PWCOOL10	-	-	-	-	-	3.82E-02	3.82E-02	-	-	-	-	-	-	-
PWCOOL11	-	-	-	-	-	3.82E-02	3.82E-02	-	-	-	-	-	-	-
PWCOOL12	-	-	-	-	-	3.82E-02	3.82E-02	-	-	-	-	-	-	-
PWCOOL13	-	-	-	-	-	3.82E-02	3.82E-02	-	-	-	-	-	-	-
GASCOOL1	-	-	-	-	-	3.00E-02	3.00E-02	-	-	-	-	-	-	-
GASCOOL2	-	-	-	-	-	3.00E-02	3.00E-02	-	-	-	-	-	-	-
GASCOOL3	-	-	-	-	-	3.00E-02	3.00E-02	-	-	-	-	-	-	-
GASCOOL4	-	-	-	-	-	3.00E-02	3.00E-02	-	-	-	-	-	-	-
EMERGEN1	2.94E-04	-	3.24E-02	-	-	1.69E-03	1.69E-03	-	-	-	-	-	-	-
HRSGSTK	6.20E-01	4.65E-01	6.57E+00	-	-	3.02E+00	-	2.70E-01	4.51E-01	4.15E-01	2.70E-01	1.98E-01	1.98E-01	7.56E-01
FIREPUMP	5.88E-05	-	1.93E-02			1.93E-04	1.93E-04							
TAIL_TO	2.55E-01	-	6.05E-01	-	-	2.02E-02	2.02E-02	-	-	-	-	-	-	-
SRUFLARE	2.74E-01	-	7.20E-02	-	-	1.80E-03	1.80E-03	-	-	-	-	-	-	-
GF_FLARE	1.29E-04	-	7.94E+00	-	-	1.89E-04	1.89E-04	-	-	-	-	-	-	-
GASVENTB	4.63E-03	-	2.49E-01	-	-	1.81E-02	1.81E-02	-	-	-	-	-	-	-
AUX_CTG	1.56E-01	1.17E-01	1.11E+00	-	-	7.56E-01	-	6.75E-02	1.12E-01	1.03E-01	6.75E-02	4.95E-02	4.95E-02	1.89E-01
DC1	-	-	-	-	-	3.01E-02	3.01E-02	-	-	-	-	-	-	-
DC2	-	-	-	-	-	7.61E-02	7.61E-02	-	-	-	-	-	-	-
DC3	-	-	-	-	-	4.11E-02	4.11E-02	-	-	-	-	-	-	-
DC4	-	-	-	-	-	2.63E-02	2.63E-02	-	-	-	-	-	-	-
DC5	-	-	-	-	-	2.52E-02	2.52E-02	-	-	-	-	-	-	-
DC6	-	-	-	-	-	2.67E-03	2.67E-03	-	-	-	-	-	-	-
RC_FLARE	7.72E-05	-	4.54E-03	-	-	1.13E-04	1.13E-04	-	-	-	-	-	-	-

Notes:
(g/s) = grams per second
EC = Elemental Carbon
HNO_3 = nitric acid
INCPM = total particulate matter emission
NO_x = oxides of nitrogen
NO_3 = nitrate
PM0005 = particulate matter 0.05 microns or less in diameter
PM0010 = particulate matter 0.1 microns or less in diameter
PM0015 = particulate matter 0.15 microns or less in diameter
PM0020 = particulate matter 0.2 microns or less in diameter
PM0025 = particulate matter 0.25 microns or less in diameter
PM0100 = particulate matter 1 microns or less in diameter
PM_{10} = particulate matter 10 microns or less in diameter
SO_2 = sulfur dioxide
SO_4 = sulfate compound
SOA = Secondary Organic Aerosol

Table 6
Annual Averaged Emission Inventory for CALPUFF (Annual NO_x, SO_2, and PM_{10} Increment and Deposition Analyses)

Sources (g/s)	SO_2	SO_4	NO_x	HNO_3	NO_3	INCPM	PM_{10}	SOA						EC
								PM0005	PM0010	PM0015	PM0020	PM0025	PM0100	
ASUCOOL1	-	-	-	-	-	2.71E-02	2.71E-02	-	-	-	-	-	-	-
ASUCOOL2	-	-	-	-	-	2.71E-02	2.71E-02	-	-	-	-	-	-	-
ASUCOOL3	-	-	-	-	-	2.71E-02	2.71E-02	-	-	-	-	-	-	-
ASUCOOL4	-	-	-	-	-	2.71E-02	2.71E-02	-	-	-	-	-	-	-
PWCOOL1	-	-	-	-	-	3.63E-02	3.63E-02	-	-	-	-	-	-	-
PWCOOL2	-	-	-	-	-	3.63E-02	3.63E-02	-	-	-	-	-	-	-
PWCOOL3	-	-	-	-	-	3.63E-02	3.63E-02	-	-	-	-	-	-	-
PWCOOL4	-	-	-	-	-	3.63E-02	3.63E-02	-	-	-	-	-	-	-
PWCOOL5	-	-	-	-	-	3.63E-02	3.63E-02	-	-	-	-	-	-	-
PWCOOL6	-	-	-	-	-	3.63E-02	3.63E-02	-	-	-	-	-	-	-
PWCOOL7	-	-	-	-	-	3.63E-02	3.63E-02	-	-	-	-	-	-	-
PWCOOL8	-	-	-	-	-	3.63E-02	3.63E-02	-	-	-	-	-	-	-
PWCOOL9	-	-	-	-	-	3.63E-02	3.63E-02	-	-	-	-	-	-	-
PWCOOL10	-	-	-	-	-	3.63E-02	3.63E-02	-	-	-	-	-	-	-
PWCOOL11	-	-	-	-	-	3.63E-02	3.63E-02	-	-	-	-	-	-	-
PWCOOL12	-	-	-	-	-	3.63E-02	3.63E-02	-	-	-	-	-	-	-
PWCOOL13	-	-	-	-	-	3.63E-02	3.63E-02	-	-	-	-	-	-	-
GASCOOL1	-	-	-	-	-	2.85E-02	2.85E-02	-	-	-	-	-	-	-
GASCOOL2	-	-	-	-	-	2.85E-02	2.85E-02	-	-	-	-	-	-	-
GASCOOL3	-	-	-	-	-	2.85E-02	2.85E-02	-	-	-	-	-	-	-
GASCOOL4	-	-	-	-	-	2.85E-02	2.85E-02	-	-	-	-	-	-	-
EMERGEN1	2.01E-05	-	2.22E-03	-	-	1.15E-04	1.15E-04	-	-	-	-	-	-	-
HRSGSTK	5.60E-01	4.20E-01	4.81E+00	-	-	2.87E+00	-	2.60E-01	4.33E-01	3.98E-01	2.60E-01	1.91E-01	1.91E-01	7.17E-01
FIREPUMP	8.05E-06	-	2.64E-03	-	-	2.64E-05	2.64E-05	-	-	-	-	-	-	-
AUX_BOIL	9.13E-03	-	4.92E-02	-	-	2.24E-02	2.24E-02	-	-	-	-	-	-	-
TAIL_TO	2.52E-01	-	3.13E-01	-	-	1.04E-02	1.04E-02	-	-	-	-	-	-	-
SRUFLARE	1.58E-03	-	4.91E-03	-	-	1.23E-04	1.23E-04	-	-	-	-	-	-	-
GF_FLARE	1.29E-04	-	1.24E-01	-	-	1.89E-04	1.89E-04	-	-	-	-	-	-	-
GASVENTB	9.51E-04	-	5.13E-02	-	-	3.73E-03	3.73E-03	-	-	-	-	-	-	-
AUX_CTG	7.33E-02	5.50E-02	5.01E-01	-	-	3.55E-01	-	3.17E-02	5.28E-02	4.85E-02	3.17E-02	2.32E-02	2.32E-02	8.87E-02
DC1	-	-	-	-	-	5.82E-03	5.82E-03	-	-	-	-	-	-	-
DC2	-	-	-	-	-	1.47E-02	1.47E-02	-	-	-	-	-	-	-

Table 6
Annual Averaged Emission Inventory for CALPUFF (Annual NO_x, SO_2, and PM_{10} Increment and Deposition Analyses) (Continued)

Sources (g/s)	SO_2	SO_4	NO_x	HNO_3	NO_3	INCPM	PM_{10}	SOA						EC
								PM0005	PM0010	PM0015	PM0020	PM0025	PM0100	
DC3	-	-	-	-	-	3.63E-02	3.63E-02	-	-	-	-	-	-	-
DC4	-	-	-	-	-	2.32E-02	2.32E-02	-	-	-	-	-	-	-
DC5	-	-	-	-	-	2.23E-02	2.23E-02	-	-	-	-	-	-	-
DC6	-	-	-	-	-	4.00E-04	4.00E-04	-	-	-	-	-	-	-
RC_FLARE	7.72E-05	-	4.54E-03	-	-	1.13E-04	1.13E-04	-	-	-	-	-	-	-

Notes:
(g/s) = grams per second
EC = Elemental Carbon
HNO_3 = nitric acid
INCPM = total particulate matter emission
NO_x = oxides of nitrogen
NO_3 = nitrate
PM0005 = particulate matter 0.05 microns or less in diameter
PM0010 = particulate matter 0.1 microns or less in diameter
PM0015 = particulate matter 0.15 microns or less in diameter
PM0020 = particulate matter 0.2 microns or less in diameter
PM0025 = particulate matter 0.25 microns or less in diameter
PM0100 = particulate matter 1 microns or less in diameter
PM_{10} = particulate matter 10 microns or less in diameter
SO_2 = sulfur dioxide
SO_4 = sulfate compound
SOA = Secondary Organic Aerosol

Table 7
Size Distribution of SOA
(NPS, 2009)

Species Name	Size Distribution (%)	Geometric Mass Mean Diameter (microns)	Geometric Std. Deviation (microns)
SO_4	100	0.48	0.50
NO_3	100	0.48	0.50
PM0005	15	0.05	0.00
PM0010	40	0.10	0.00
PM0015	63	0.15	0.00
PM0020	78	0.20	0.00
PM0025	89	0.25	0.00
PM0100	100	1.00	0.00

Notes:
NO_3 = nitrate
NPS = National Park Service
PM0005 = particulate matter 0.05 microns or less in diameter
PM0010 = particulate matter 0.1 microns or less in diameter
PM0015 = particulate matter 0.15 microns or less in diameter
PM0020 = particulate matter 0.2 microns or less in diameter
PM0025 = particulate matter 0.25 microns or less in diameter
PM0100 = particulate matter 1 microns or less in diameter
SO_4 = sulfate compound
SOA = Secondary Organic Aerosol

3.2 CALPUFF PARAMETERS

The CALPUFF options were selected to follow the EPA's recommended settings for regulatory modeling or WRAP's BART modeling.

Size parameters for dry deposition of nitrate, sulfate, and PM_{10} particles were based on default CALPUFF model options. Chemical parameters for gaseous dry deposition and wet scavenging coefficients were based on default values presented in the CALPUFF User's Guide. Calculation of total nitrogen deposition includes the contribution of nitrogen resulting from the ammonium ion of the ammonium sulfate compound. For the CALPUFF runs that incorporate deposition and chemical transformation rates (i.e., deposition and visibility), the full chemistry option of CALPUFF was turned on (MCHEM = 1). The nighttime loss for SO_2, NO_x, and HNO_3 was set at 0.2 percent per hour, 2 percent per hour, and 2 percent per hour, respectively. CALPUFF was also configured to allow predictions of SO_2, sulfate (SO_4), NO_x, HNO_3, NO_3 and PM_{10} using the MESOPUFF II chemical transformation module.

Hourly ozone concentration files (OZONE.DAT) were obtained from the WRAP's BART modeling website for the same years (2001 through 2003) as the meteorological data. Monthly background ozone concentration for missing data from the hourly ozone concentration file was

set to 80 parts per billion (ppb). The monthly background ammonia concentration was set to 10 ppb.

As described in Section 3.2, emissions were speciated in accordance with the NPS' PMS guideline (http://www2.nature.nps.gov/air/permits/ect/index.cfm). In doing so, the sulfur emissions were speciated to relative sulfur constituents of SO_2 and SO_4 to better account for gas-to-particulate conversion and visibility effects.

3.3 PSD CLASS I INCREMENT SIGNIFICANCE ANALYSIS

CALMET/CALPUFF (Refined CALPUFF) was used to model ambient air impacts of NO_2, PM_{10}, and SO_2 from the emission sources, and the modeling results were compared to PSD Class I Increment modeling significance thresholds. The sources were modeled at full PTE for this analysis. The full chemistry option of CALPUFF was turned on (MCHEM = 1, MESOPUFF II scheme), and a deposition option was turned on (MWET = 1 and MDRY = 1). The 3-hour averaged maximum SO_2 emission rates were modeled for 3-hour SO_2 increment analysis. Emissions of total SO_2 from the natural gas combustion turbines was speciated based on the NPS' PMS guideline. The 24-hour averaged maximum emission rates were modeled for 24-hour SO_2 and PM_{10} increment analyses. The annual averaged emission rates were modeled for annual averaged NO_x, SO_2, and PM_{10} increment analyses. For 24-hour and annual PM incremental analyses, the total PM emission ("INCPM" in the modeling) was modeled without speciation, and the INCPM was treated as fine particulate matter in terms of geometric characteristics.

3.4 CLASS I AREA VISIBILITY REDUCTION ANALYSIS

Refined CALPUFF was used to evaluate the potential for visibility reduction. All sources were modeled at the full PTE for this analysis. Emissions of total SO_2 and PM_{10} from the natural gas combustion turbines were speciated based on NPS' PMS guideline as described.

The emissions of thirteen chemical species, SO_2, SO_4, NO_x, HNO_3, NO_3, $PM_{0.05}$, $PM_{0.01}$, $PM_{0.15}$, $PM_{0.20}$, $PM_{0.25}$, $PM_{1.0}$, EC, and PM_{10}, were modeled in CALPUFF to predict the visibility impact based on PMS for natural gas turbine. Because only SO_2 emissions estimates were provided, one-third of the estimated SO_2 emission was assumed to be SO_4 emissions, and the remaining two-thirds remained as SO_2 emissions. For HRSG and Turbine, the total PM_{10} emissions were speciated into EC and SOA. The SOA is speciated again into $PM_{0.05}$, $PM_{0.01}$, $PM_{0.15}$, $PM_{0.20}$, $PM_{0.25}$, and $PM_{1.0}$ (indicated as PM0005, PM0010, PM0015, PM0020, PM0025, and PM0100 in the modeling, respectively). For the other sources such as cooling towers, the total PM_{10} emissions were modeled as PM_{10} without speciation.

CALPOST was used to post-process the estimated 24-hour averaged ammonium nitrate, ammonium sulfate, elemental carbon, SOA, and PM_{10} concentrations into an extinction coefficient value for each day at each modeled receptor, using the 3 years of CALMET meteorological data. To do so required the use of extinction efficiency values.

All the PM species ($PM_{0.05}$, $PM_{0.01}$, $PM_{0.15}$, $PM_{0.20}$, $PM_{0.25}$, and $PM_{1.0}$) were grouped as SOA. Default extinction efficiencies of PM_{10} (Coarse Particulate), SOA, EC, soil, ammonium sulfate, and ammonium nitrate were used.

Background visibility and extinction coefficient values from the FLAG Phase I Report (December 2000) were used for the visibility reduction analysis. Background values for hygroscopic concentration, without adjustment for relative humidity (RH), (0.6 micrograms per cubic meter [$\mu g/m^3$]) and the non-hygroscopic concentration (4.5 $\mu g/m^3$) are reported for the western wilderness areas. Therefore, BKSO4 = hygroscopic 0.6/3 = 0.2 and BKSOIL = non-hygroscopic = 4.5 were used. Modeled visibility reductions for each modeled year were compared to the level of acceptable change (LAC) of 5.0 percent and 10.0 percent.

3.5 TOTAL NITROGEN AND SULFUR DEPOSITION ANALYSIS

Refined CALPUFF was used to evaluate the potential for nitrogen and sulfur deposition. All sources were modeled at full PTE for this analysis. The annual average emission rates were used for the annual averaged nitrogen and sulfur deposition analyses. The NPS' PMS for natural gas combustion turbines was applied to speciate the emissions of SO_2 and PM from HRSG and turbine as it was done for increment and visibility analyses.

The total deposition rates for each pollutant were obtained by summing the modeled wet and/or dry deposition rates as follows.

For sulfur (S) deposition, the wet and dry fluxes of sulfur dioxide and sulfate are calculated, normalized by the molecular weight of S, and expressed as total S. Total nitrogen (N) deposition is the sum of N contributed by wet and dry fluxes of HNO_3, NO_3, ammonium sulfate ($(NH_4)_2SO_4$), and ammonium nitrate (NH_4NO_3), and the dry flux of oxides of NO_x.

The total modeled nitrogen and sulfur deposition rates were compared to the NPSUSFWS Deposition Analysis Threshold (DAT) for western states. The DAT for nitrogen and sulfur are each 0.005 kilogram per hectare per year (kg/ha-yr), which is equal to 1.59E-11 $g/m^2/s$.

4.0 CALPUFF MODELING RESULTS

Three years of CALPUFF modeling results are provided in Tables 8 through 10. The model-predicted criteria pollutant increment concentrations were compared to the proposed Class I area Significant Impact Levels (SIL). Each criteria pollutant concentration is less than the corresponding SIL for the San Rafael Wilderness Class I area.

Modeled visibility reductions for each modeled year were compared to the level of acceptable extinction change (LAC) of 5.0 percent. The visibility impact is greater than 5 percent, but less than 10 percent of cumulative modeling threshold. The modeled number of days that exceeds 5 percent of extinction change is 2 days for 2001 and 2003, and 4 days for 2002.

The visibility modeling analysis was performed based on emission rates corresponding to the following very conservative operating scenario:

- It was assumed that the gasification flare operates for the full 24 hours using the wet flaring emission rate. This could happen in a cold gasification plant startup, and is anticipated to occur only one time per year and last up to about 26 hours. Otherwise, the gasification flare operates on pilot only. NO_x emissions from wet flaring are about 1,000 times greater than pilot operation and make the gasification flare during wet flaring the largest source of NO_x on the site. However, the 24 hour analysis model conservatively assumed that a full 24 hours of this event happens every day, a worst case scenario.

- SRU flare emissions for the 24-hour period were estimated assuming 3 hours of startup/ shutdown flaring and the remainder of the day in pilot operation. This startup/shutdown is anticipated to occur only 6 hours total per year; otherwise, the SRU flare operates on pilot only. However, the model conservatively assumed that a full 3 hours of this flaring event happens every day.

- The Emergency generator and firewater pump will be operated for 50 hours per year and 100 hours per year, respectively. However, the model conservatively assumed that a full 24 hours of this event happens every day.

- HRSG NO_x emissions were estimated based on 1 cold startup and one hot startup, and the balance of the day at full load using natural gas for a 24 hour period. The model conservatively assumed that a full 24 hours of this event happens every day.

Not only was each source above modeled individually using emission rates based on the worst-case scenario, the modeling approach conservatively assumed that cumulatively all the sources will be operated at those emission rates every day. Based on this very conservative modeling approach, it is expected that no significant visibility impact would occur due to the Proposed Project.

Deposition thresholds of total N and total S are both 0.005 kg/ha/yr, which is equal to 1.59E-11 $g/m^2/s$. Total N and S deposition impact do not exceed the threshold.

None of the results of criteria pollutant increment and deposition analyses exceeded the threshold, and the maximum visibility impact was less than 10 percent with only 2 to 4 days of exceedance of 5 percent despite conservative operating scenario; therefore, the proposed Project sources will not have a significant impact on the ambient air quality of the San Rafael Wilderness Class I area. Because the criteria pollutant concentration and deposition is less than its corresponding significance level, the Project sources will not have a significant impact on either terrestrial resources such as soil and vegetation, or on aquatic resources. Therefore, no further analyses were conducted, including additional AQRV impacts.

Table 8
PSD Class I Increment Significance Analysis – CALPUFF Results

Class I Area	Pollutant	Annual NO_x	3-hr SO_2	24-hr SO_2	Annual SO_2	24-hr PM_{10}	Annual PM_{10}
	Unit	**µg/m^3**	**µg/m^3**	**µg/m^3**	**µg/m^3**	**µg/m^3**	**Annual**
	Threshold	**0.1**	**1**	**0.2**	**0.08**	**0.32**	**0.16**
San Rafael Wilderness Area	2001	4.09E-03	2.23E-01	2.78E-02	8.06E-04	1.14E-01	4.17E-03
	2002	4.48E-03	2.43E-01	2.98E-02	9.54E-04	1.09E-01	4.76E-03
	2003	4.62E-03	2.84E-01	3.05E-02	9.54E-04	1.23E-01	4.68E-03
Exceed?		No	No	No	No	No	No

Notes:
µg/m^3 = micrograms per cubic meter
NO_x = oxides of nitrogen
PM_{10} = particulate matter 10 microns or less in diameter
PSD = Prevention of Significant Deterioration
SO_2 = sulfur dioxide

Table 9
Visibility Analysis – CALPUFF Results

Class I Area	Pollutant	No. of Days > 5%	No. of Days >10%	Max Extinction Change	Day of Maximum Extinction Change
	Unit	**Days**	**Days**	**%**	**Day**
	Threshold	**0**	**0**	**10**	
San Rafael Wilderness Area	2001	2	0	9.64	308
	2002	4	0	8.09	287
	2003	2	0	6.58	247
Exceed?				No	

Table 10
Total Nitrogen and Sulfur Deposition Analysis – CALPUFF Results

Class I Area	Pollutant	Deposition N	Deposition S
	Unit	**g/m^2/s**	**g/m^2/s**
	Threshold	**1.59E-11**	**1.59E-11**
San Rafael Wilderness Area	2001	1.04E-12	4.23E-13
	2002	1.30E-12	5.57E-13
	2003	1.32E-12	4.97E-13
Exceed?		No	No

CDPHE, 2005. CALMET/CALPUFF BART Protocol for Class I federal Area Individual Source Attribution Visibility Impairment Modeling Analysis. Colorado Department of Public Health and Environment, Air Pollution Control District, Denver, Colorado. October 24.

FLAG, 2000. U.S. Federal Land Managers' Air Quality Related Values Workgroup (FLAG) Phase I Report, U.S. Forest Service (FS), National Park Service (NPS), U.S. Fish and Wildlife Service, December 2000.

Howard Gebhart, 2005. CALPUFF Reviewer's Guide (DRAFT) prepared for USDA Forest Service (Rich Fisher) and National Park Service (John Notar) (September, 2005).

IWAQM, 1998. Interagency Workgroup on Air Quality Modeling (IWAQM) Phase 2 Summary Report and Recommendations for Modeling Long Range Transport Impact. EPA-454/R-98-019, December 1998.

National Park Service (NPS), 2009. Permit application PSD particulate matter speciation methodology developed by Don Shepherd, found at: http://www2.nature.nps.gov/air/permits/ect/index.cfm.

National Park Service (NPS), 2008. Class I Area Receptor Data, found at: http://www2.nature.nps.gov/air/Maps/Receptors/index.cfm.

U.S. Environmental Protection Agency (EPA), 1998. Interagency Working Group on Air Quality Modeling (IWAQM) Phase 2 Summary Report and Recommendations for Modeling Long Range Transport Impacts (December 1998).

Western Regional Air Partnership (WRAP), 2006. CALMET/CALPUFF Protocol for BART Exemption Screening Analysis for Class I Areas in the Western United States (August 15, 2006).

Western Regional Air Partnership (WRAP), 2008. BART CALPUFF Modeling, found at: http://pah.cert.ucr.edu/aqm/308/bart.shtml.

Wyoming Department of Environmental Quality (WDEQ), 2006. Conversation with Josh Nall.

Appendix D
Air Quality Emissions and Calculations

Appendix D1

Emissions Calculations

Appendix D1.1

Construction Emissions

Total Short-Term Construction Emissions — Summary

Hydrogen Energy, Inc — *5/21/2009*
HECA Project

Estimated Daily Maximum Construction Emissions of Criteria Pollutants (lbs/day)										
Activity	**PM_{10}**	**$PM_{2.5}$**	**CO**	**ROC**	**NO_x**	**SO_x**	**CO_2**	**CH_4**	**N_2O**	**CO_2e**
On-Site Construction Emissions										
On-Site Combustion Emissions										
Construction Equipment	600.33	552.31	4931	1484	11208	10.81	996392	133.86	26.95	1007558
Construction Trucks (Concrete, Dump Trucks, Flatbed Trucks, …)	56.37	50.77	451.64	148.69	917.54	0.92	97909	1.41	1.70	98465
Worker Vehicles	0.46	0.08	30.58	2.36	2.35	0.06	6062	0.28	0.23	6155
Delivery Trucks	1.00	0.92	7.48	4.26	17.52	0.01	1422	0.02	0.02	1429
Subtotal of On-site Combustion Emissions	**658.16**	**604.08**	**5421**	**1639**	**12146**	**11.81**	**1101785**	**135.58**	**28.90**	**1113607**
On-Site Fugitive Dust Emissions										
Construction Equipment	16.08	3.41								
Construction Trucks (Concrete, Dump Trucks, Flatbed Trucks, …)	5.96	1.01								
Worker Vehicles	8.23	1.39								
Delivery Trucks	2.09	0.35								
Subtotal of On-Site Fugitive Dust	**32.36**	**6.16**								
Subtotal of On-Site Emissions	**690.52**	**610.24**	**5421.10**	**1639**	**12146**	**11.81**	**1101785**	**135.58**	**28.90**	**1113607**
Off-Site On-Highway Emissions										
Off-Site Combustion Emissions										
Construction Equipment and Trucks	116.17	106.18	932.76	327.11	1591	1.65	150118	21.89	3.17	151561
Worker Vehicles	5.89	5.42	392.44	30.27	30.13	0.73	77800	3.64	2.91	78989
Delivery Trucks	1.00	0.92	7.48	4.26	17.52	0.01	1422	0.02	0.02	1429
Subtotal of Off-Site Combustion Emissions	**123.06**	**112.52**	**1333**	**361.65**	**1639**	**2.39**	**229340**	**25.55**	**6.11**	**231979**
Off-Site Paved Road Fugitive Dust Emissions										
Construction Equipment and Trucks	113.31	19.15								
Worker Vehicles	211.25	35.70								
Delivery Trucks	39.66	6.70								
Subtotal of Off-Site Fugitive Dust	**364.22**	**61.55**								
Subtotal of Off-Site Emissions	**487.28**	**174.08**	**1333**	**361.65**	**1639**	**2.39**	**229340**	**25.55**	**6.11**	**231979**
Total Maximum Daily Emissions	**1177.80**	**784.31**	**6754**	**2001**	**13785**	**14.19**	**1331125**	**161.13**	**35.00**	**1345586**

Total Annual Construction Emissions — Summary

Hydrogen Energy, Inc — *5/21/2009*
HECA Project

Estimated Maximum Annual Construction Emissions of Criteria Pollutants (tons/year)										
Activity [1]	**PM_{10}**	**$PM_{2.5}$**	**CO**	**ROC**	**NO_x**	**SO_x**	**CO_2**	**CH_4**	**N_2O**	**CO_2e**
On-Site Construction Emissions										
On-Site Combustion Emissions										
Construction Equipment	2.00	1.84	16.20	4.99	36.01	0.04	3179	0.45	0.09	3215
Construction Trucks (Concrete, Dump Trucks, Flatbed Trucks, …)	0.20	0.18	1.65	0.52	3.33	3.36E-03	357.32	0.00	0.01	359.36
Worker Vehicles	0.06	0.01	4.04	0.31	0.31	0.01	800.23	0.04	0.03	812.46
Delivery Trucks	0.01	0.01	0.05	0.03	0.12	9.49E-05	9.88	0.00	0.00	9.93
Subtotal of On-site Combustion Emissions	**2.27**	**2.04**	**21.94**	**5.85**	**39.77**	**0.05**	**4347**	**0.49**	**0.12**	**4397**
On-Site Fugitive Dust Emissions										
Construction Equipment	0.03	0.01								
Construction Trucks (Concrete, Dump Trucks, Flatbed Trucks, …)	0.07	0.02								
Worker Vehicles	1.09	0.18								
Delivery Trucks	0.28	0.05								
Subtotal of On-Site Fugitive Dust	**1.46**	**0.25**								
Subtotal of On-Site Emissions (tpy)	**3.73**	**2.29**	**21.94**	**5.85**	**39.77**	**0.05**	**4347**	**0.49**	**0.12**	**4397**
Off-Site On-Highway Emissions										
Off-Site Combustion Emissions										
Construction Trucks (Concrete, Dump Trucks, Flatbed Trucks, …)	0.13	0.12	1.03	0.41	2.16	2.11E-03	223.34	0.01	0.00	224.80
Worker Vehicles	0.78	0.72	51.80	4.00	3.98	0.10	10270	0.48	0.38	10427
Delivery Trucks	0.13	0.12	0.99	0.56	2.31	1.80E-03	187.64	0.00	0.00	188.63
Subtotal of Off-Site Combustion Emissions	**1.04**	**0.96**	**53.81**	**4.97**	**8.45**	**0.10**	**10681**	**0.49**	**0.39**	**10840**
Off-Site Paved Road Fugitive Dust Emissions										
Construction Trucks (Concrete, Dump Trucks, Flatbed Trucks, …)	14.96	2.53								
Worker Vehicles	27.88	4.71								
Delivery Trucks	5.24	0.88								
Subtotal of Off-Site Fugitive Dust	**48.08**	**8.13**								
Subtotal of Off-Site Emissions	**49.12**	**9.08**	**53.81**	**4.97**	**8.45**	**0.10**	**10681**	**0.49**	**0.39**	**10840**
Total Maximum Annual Emissions	**52.85**	**11.37**	**75.75**	**10.82**	**48.22**	**0.15**	**15027**	**0.98**	**0.51**	**15237**

(1) Onsite and offsite construction equipment totals incorporates a 66% annual average load operating factor.

On-Site Construction Equipment Emission Factors

Hydrogen Energy, Inc *4/30/2009*
HECA Project

Emission Factors (lbs/hr)												
Equipment Description	**EMFAC designation**	**Horsepower**	**CO**	**CO_2**	**CH_4**	**N_2O**	**NO_x**	**PM_{10}**	**$PM_{2.5}$**	**SO_x**	**ROG (1)**	**CO_2e**
On-Road Vehicles												
Concrete Pumper Truck	HHD-DSL		0.320	69.786	0.0013	0.001	0.694	0.043	0.039	0.001	0.151	70.16
Dump Truck	HHD-DSL		0.320	69.786	0.0013	0.001	0.694	0.043	0.039	0.001	0.151	70.16
Service Truck - 1 ton	HHD-DSL		0.320	69.786	0.0013	0.001	0.694	0.043	0.039	0.001	0.151	70.16
Pile Driver Truck	HHD-DSL		0.320	69.786	0.0013	0.001	0.694	0.043	0.039	0.001	0.151	70.16
Truck - Fuel/Lube	MHD-DSL		0.155	33.180	0.0002	0.001	0.279	0.017	0.015	3.09E-04	0.014	33.39
Tractor Truck 5th Wheel	HHD-DSL		0.320	69.786	0.0013	0.001	0.694	0.043	0.039	0.001	0.151	70.16
Trucks - Pickup 3/4 ton	MHD-DSL		0.155	33.180	0.0002	0.001	0.279	0.017	0.015	3.09E-04	0.014	33.39
Trucks - 3 ton	HHD-DSL		0.320	69.786	0.0013	0.001	0.694	0.043	0.039	0.001	0.151	70.16
Truck - Water	HHD-DSL		0.320	69.786	0.0013	0.001	0.694	0.043	0.039	0.001	0.151	70.16
Off Road Vehicles	**Fuel Type**											
Air Compressor 185 CFM	D	50	0.287	22.271	0.011	0.0006	0.242	0.027	0.0253	0.0003	0.1220	22.68
Air Compressor 750 CFM	D	120	0.338	46.950	0.010	0.0014	0.625	0.056	0.0518	0.0006	0.1066	47.57
Articulating Boom Platform	D	120	0.252	38.072	0.007	0.0014	0.472	0.037	0.0345	0.000	0.074	38.63
Bulldozer D10R	D	250	0.810	183.487	0.026	0.0028	2.561	0.112	0.1034	0.002	0.289	184.91
Bulldozer D4C	D	120	0.508	65.811	0.015	0.0014	0.952	0.086	0.0792	0.001	0.164	66.54
Concrete Trowel Machine	D	50	0.156	14.108	0.006	0.0006	0.147	0.015	0.0138	0.000	0.063	14.40
Concrete Vibrators	D	50	0.156	14.108	0.006	0.0006	0.147	0.015	0.0138	0.000	0.063	14.40
Cranes - Mobile 35 ton	D	120	0.376	50.148	0.011	0.0014	0.690	0.063	0.0583	0.001	0.119	50.79
Cranes - Mobile 45 ton	D	175	0.491	80.345	0.012	0.0020	0.985	0.056	0.0519	0.001	0.128	81.20
Crane - Mobile 65 ton	D	175	0.491	80.345	0.012	0.0020	0.985	0.056	0.0519	0.001	0.128	81.20
Cranes 100 / 150 ton cap	D	250	0.366	112.159	0.012	0.0028	1.310	0.050	0.0461	0.001	0.131	113.28
Diesel Powered Welder	D	25	0.0685	11.2861	0.0024	0.0003	0.111	0.008	0.0074	0.0001	0.0268	11.42
Backhoe/loader	D	120	0.366	51.728	0.009	0.0014	0.607	0.055	0.0510	0.001	0.099	52.34
Earth Scraper	D	250	0.775	209.470	0.025	0.0028	2.616	0.106	0.0980	0.002	0.275	210.86
Loader	D	120	0.431	58.914	0.012	0.0014	0.766	0.070	0.0643	0.001	0.129	59.58
Motor Grader	D	120	0.552	74.965	0.015	0.0014	0.982	0.090	0.0827	0.001	0.166	75.70
Excavator - Trencher	D	120	0.490	64.895	0.014	0.0014	0.951	0.081	0.0742	0.001	0.159	65.62
Fired Heaters	D	25	0.055	13.217	0.002	0.0003	0.107	0.006	0.0055	0.0002	0.0167	13.34
Forklift	D	50	0.192	14.672	0.007	0.0006	0.157	0.018	0.0163	0.000	0.076	14.99
Fusion Welder	D	50	0.303	27.990	0.010	0.0006	0.283	0.028	0.0260	0.0004	0.1136	28.38
Heavy Haul / Cranes	D	750	1.200	303.045	0.029	0.0084	3.235	0.124	0.1136	0.003	0.324	306.28
Light Plants	D	25	0.055	13.217	0.002	0.0003	0.107	0.006	0.0055	0.000	0.017	13.34
Portable Compaction Roller	D	120	0.422	58.989	0.012	0.0014	0.778	0.067	0.0618	0.001	0.128	59.65
Portable Compaction - Vibratory Plate	D	15	0.026	4.314	0.000	0.0002	0.032	0.002	0.0016	0.000	0.005	4.38
Portable Compaction - Vibratory Ram	D	50	0.156	14.108	0.006	0.0006	0.147	0.015	0.0138	0.000	0.063	14.40
Pumps	D	25	0.055	13.2173	0.0015	0.0003	0.107	0.006	0.0055	0.0002	0.017	13.34

On-Site Construction Equipment Emission Factors

Hydrogen Energy, Inc *4/30/2009*
HECA Project

Emission Factors (lbs/hr)												
Equipment Description	**EMFAC designation**	**Horsepower**	**CO**	**CO_2**	**CH_4**	**N_2O**	**NO_x**	**PM_{10}**	**$PM_{2.5}$**	**SO_x**	**ROG (1)**	**CO_2e**
Portable Power Generators	D	50	0.297	30.6230	0.0107	0.0006	0.311	0.030	0.0273	0.0004	0.118	31.02
Truck Crane - Greater than 300 ton	D	500	0.716	180.101	0.017	0.0056	1.877	0.073	0.0668	0.002	0.191	182.21
Truck Crane - Greater than 200 ton	D	250	0.366	112.159	0.012	0.0028	1.310	0.050	0.0461	0.001	0.131	113.28
Vibratory Roller 20 ton	D	175	0.630	108.146	0.014	0.0020	1.271	0.069	0.0632	0.001	0.156	109.05

Notes:

(1) Assuming ROGs are equivalent to VOCs

(2) Emission factors for on-road vehicles are based on results from Emfac Emissions Model 2007 Version 2.3 (HHDT-DSL=heavy heavy-duty trucks-diesel; MHD-DSL=medium heavy duty-diesel). EMFAC scenario year was 2010 and the selected area was Kern County. PM_{10} values include break wear and tire wear.

(3) Emission factors for off-road vehicles are based on the maximum emission factors from 2009 to 2012 of the South Coast Air Quality Management District (AQMD) data.

(4) $PM_{2.5}$ emission factors were determined by multiplying PM_{10} numbers by a "$PM_{2.5}$ fraction of PM_{10}" value. Fractional values for $PM_{2.5}$ were taken from the SCAQMD guidance: Final - Methodology to Calculate $PM_{2.5}$ and $PM_{2.5}$ Significance Thresholds, October 2006: Appendix A - Updated CEIDARS Table with $PM_{2.5}$ Fractions.

On-Road Vehicles:

- $PM_{2.5}$ Fraction of PM_{10}, Brake wear: 0.429
- $PM_{2.5}$ Fraction of PM_{10}, Diesel: 0.920
- PM2.5 Fraction of PM10, Tire wear: 0.250

Off-Road Vehicles:

- PM2.5 Fraction of PM10, Diesel: 0.920

trucks in the San Joaquin Valley Air Basin (MHD =HHD). These emissions are in g/mile. On-road vehicles are limited to 10 mph, which is used to convert to lb/hr. (See GHG Reference Info tab)

(6) N_2O factors for off-road vehicles are derived from California Climate Action Registry General Reporting Protocol Version 3.0 (April 2008), Table C.5 (distillate fuel factors for the industrial sector) using the following to convert from kg/gallon to lb/hp-hour, and then multiplying by the rated horsepower rating: 1 gallon/137,000 Btu, 7,000 Btu/hp-hour, and 2.2046 lb/kg. CH_4 factors are from the SCAQMD data.

CO_2 GWP (SAR, 1996)	=	1
CH_4 GWP (SAR, 1996)	=	21
N_2O GWP (SAR, 1996)	=	310

On-Site Construction Equipment Schedule

Hydrogen Energy, Inc *5/21/2009*
HECA Project

Month

EQUIPMENT	# of units	1	2	3	4	5	6	7	8	9	10	11	12	13	14	15	16	17	18	19	20	21	22	23	24	25	26	27	28	29	30	31	32	33	34	35	36	37	38	39	40	41	42	43	44	# units in months 17-28
On Road Vehicles																																														
Concrete Pumper Truck	20	0	0	0	0	0	0	0	0	1	1	2	2	2	2	2	2	2	1	1	1	1	0	0	0	0	0	0	0	0	0	0	0	0	0	0	0	0	0	0	0	0	0	0	0	6
Dump Truck	32	3	3	3	3	3	3	3	3	3	3	1	1	0	0	0	0	0	0	0	0	0	0	0	0	0	0	0	0	0	0	0	0	0	0	0	0	0	0	0	0	0	0	0	0	0
Service Truck - 1 ton	0																																													0
Pile Driver Truck	12	0	0	0	1	3	3	3	2	0	0	0	0	0	0	0	0	0	0	0	0	0	0	0	0	0	0	0	0	0	0	0	0	0	0	0	0	0	0	0	0	0	0	0	0	0
Truck - Fuel/Lube	0																																													0
Tractor Truck 5th Wheel	0																																													0
Trucks - Pickup 3/4 ton	220	5	5	5	5	5	5	5	5	5	5	5	5	5	5	5	5	5	5	5	5	5	5	5	5	5	5	5	5	5	5	5	5	5	5	5	5	5	5	5	5	5	5	5	5	60
Trucks - 3 ton	67	0	1	1	1	1	1	1	1	2	2	2	2	2	2	2	2	2	2	2	2	2	2	2	2	2	2	2	2	2	2	2	2	2	2	2	2	1	1	1	1	0	0	0	0	24
Truck - Water	58	4	4	4	4	2	2	2	2	2	2	2	2	2	2	2	1	1	1	1	1	1	1	1	1	1	1	1	1	1	1	1	1	1	1	1	0	0	0	0	0	0	0	0	0	12
Off Road Vehicles																																														0
Air Compressor 185 CFM	0																																													0
Air Compressor 750 CFM	94	1	1	1	1	1	1	1	1	2	2	2	2	2	2	2	3	4	4	4	4	4	4	4	4	4	4	4	4	2	2	2	2	2	1	1	1	1	1	1	1	1	1	1	1	48
Articulating Boom Platform	0																																													0
Bulldozer D10R	24	3	3	3	3	2	2	2	2	2	1	1	0	0	0	0	0	0	0	0	0	0	0	0	0	0	0	0	0	0	0	0	0	0	0	0	0	0	0	0	0	0	0	0	0	0
Bulldozer D4C	26	3	3	3	3	2	2	2	2	2	2	1	1	0	0	0	0	0	0	0	0	0	0	0	0	0	0	0	0	0	0	0	0	0	0	0	0	0	0	0	0	0	0	0	0	0
Concrete Trowel Machine	26	0	0	0	0	0	0	0	0	2	2	2	2	2	2	2	0	0	0	0	0	0	0	2	2	2	2	2	2	0	0	0	0	0	0	0	0	0	0	0	0	0	0	0	0	12
Concrete Vibrators	36							1	2	3	3	3	3	3	3	3	3	3	2	2	1	1																									9
Cranes - Mobile 35 ton	163	0	0	0	0	0	0	1	1	1	4	4	4	4	7	7	7	7	7	7	7	7	7	7	7	7	7	5	5	5	5	5	5	5	5	2	2	2	1	1	1	1	1	1	1	80
Cranes - Mobile 45 ton	0																																													0
Crane - Mobile 65 ton	116													1	2	4	4	5	5	6	6	6	6	6	6	6	6	6	6	5	5	5	5	4	4	3	2	2								70
Cranes 100 / 150 ton cap	79	0	0	0	0	0	0	0	0	0	0	0	2	4	4	4	4	4	4	4	4	4	4	4	4	4	4	4	4	2	2	2	2	2	1	1	1	0	0	0	0	0	0	0	0	48
Diesel Powered Welder	101	0	0	0	0	1	1	1	1	1	1	1	1	1	1	1	2	2	2	2	2	3	3	3	4	5	5	5	5	5	5	5	5	5	4	4	4	2	2	1	1	1	1	1	1	41
Backhoe/loader	54	2	2	3	3	4	4	4	4	4	4	4	2	2	2	2	2	1	1	1	1	1	1	0	0	0	0	0	0	0	0	0	0	0	0	0	0	0	0	0	0	0	0	0	0	6
Earth Scraper	26	8	8	5	5	0	0	0	0	0	0	0	0	0	0	0	0	0	0	0	0	0	0	0	0	0	0	0	0	0	0	0	0	0	0	0	0	0	0	0	0	0	0	0	0	0
Loader	24	2	2	2	2	2	2	2	2	2	2	2	2	0	0	0	0	0	0	0	0	0	0	0	0	0	0	0	0	0	0	0	0	0	0	0	0	0	0	0	0	0	0	0	0	0
Motor Grader	14	2	2	2	2	2	2	2	0	0	0	0	0	0	0	0	0	0	0	0	0	0	0	0	0	0	0	0	0	0	0	0	0	0	0	0	0	0	0	0	0	0	0	0	0	0
Excavator - Trencher	0																																													0
Fired Heaters	113	0	0	0	0	1	2	2	3	3	3	5	5	5	5	5	5	5	5	5	5	5	4	4	4	4	4	4	4	4	4	4	4	0	0	0	0	0	0	0	0	0	0	0	0	53
Forklift	75	0	0	0	0	0	0	0	1	1	1	2	2	2	3	3	3	3	3	3	3	3	3	3	3	3	3	3	3	2	2	2	2	2	1	1	1	1	1	1	1	1	1	1	1	36
Fusion Welder	0																																													0
Heavy Haul / Cranes	32	0	0	0	0	0	0	0	0	0	0	0	0	0	0	0	0	0	0	0	4	5	4	4	4	4	4	3	0	0	0	0	0	0	0	0	0	0	0	0	0	0	0	0	0	32
Light Plants	217	0	0	0	2	2	2	2	2	2	2	2	2	6	6	6	6	6	6	6	6	6	6	8	8	8	8	8	8	8	8	8	8	8	8	8	8	4	4	4	3	3	3	3	3	84
Portable Compaction Roller	49	0	0	2	3	3	3	3	3	0	0	0	2	2	2	2	2	2	2	2	2	2	0	0	0	0	0	0	0	2	2	2	2	2	2	0	0	0	0	0	0	0	0	0	0	10
Portable Compaction - Vibratory Plate	45	0	0	0	0	0	0	0	3	3	3	3	3	3	3	3	3	3	3	3	3	3	3	0	0	0	0	0	0	0	0	0	0	0	0	0	0	0	0	0	0	0	0	0	0	18
Portable Compaction - Vibratory Ram	0																																													0
Pumps	93	3	3	3	3	3	3	3	3	3	3	3	2	2	2	2	2	2	2	2	2	2	2	2	2	2	2	2	2	2	2	2	2	3	3	3	3	1	1	1	1	1	1	0	0	24
Portable Power Generators	131	0	0	1	1	1	1	1	2	2	2	4	4	4	4	4	4	5	5	5	5	5	5	5	5	5	5	5	5	5	4	4	4	3	3	3	2	2	1	1	1	1	1	1	0	60
Truck Crane - Greater than 200 ton	72	0	0	0	0	0	0	0	0	0	0	0	1	1	1	1	1	2	2	3	3	4	4	4	4	4	4	4	4	4	4	4	3	3	2	2	2	1	0	0	0	0	0	0	0	42
Truck Crane - Greater than 300 ton	38															1	1	1	1	1	2	2	2	3	3	3	3	3	3	3	2	2	1	1												27
Vibratory Roller 20 ton	31	3	3	3	2	2	2	2	2	2	2	2	2	2	2	0	0	0	0	0	0	0	0	0	0	0	0	0	0	0	0	0	0	0	0	0	0	0	0	0	0	0	0	0	0	0
Misc equip for off plot construction (2)																																														0
on road total	409	12	13	13	14	14	14	14	13	13	13	12	12	11	11	11	10	10	9	9	9	9	8	8	8	8	8	8	8	8	8	8	8	8	8	8	7	6	6	6	6	5	5	5	5	
off road total	1679	27	27	28	30	26	27	29	34	35	37	41	42	46	51	52	52	55	54	56	60	63	58	59	60	61	61	58	55	49	47	47	45	40	34	28	26	16	11	10	9	9	9	8	7	
Project Total	**2088**	**39**	**40**	**41**	**44**	**40**	**41**	**43**	**47**	**48**	**50**	**53**	**54**	**57**	**62**	**63**	**62**	**65**	**63**	**65**	**69**	**72**	**66**	**67**	**68**	**69**	**69**	**66**	**63**	**57**	**55**	**55**	**53**	**48**	**42**	**36**	**33**	**22**	**17**	**16**	**15**	**14**	**14**	**13**	**12**	

Schedule

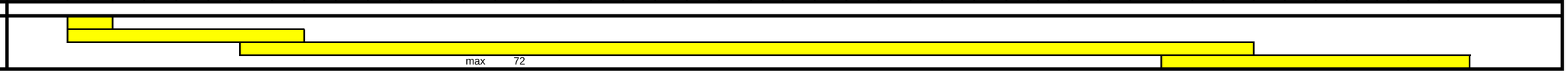

Notes: Preliminary and Confidential
(1) These are approximate values
(2) Misc. equip for off plot include preliminary estimates for work that may be performed outside of the plot (plot linears, facility upgrades, site interfaces, etc.
(3).Month with most onsite equipment is represented by

Maximum Monthly On-Site Construction Exhaust Emissions

Emissions Summary

Hydrogen Energy, Inc
HECA Project

4/30/2009

Emissions Per Month (lbs/month)												
Equipment Description		**# of Eq**	**CO**	**CO_2**	**CH_4**	**N_2O**	**NO_2**	**PM_{10}**	**$PM_{2.5}$**	**SO_2**	**ROG[1]**	**CO_2e**
On-Road Vehicles												
Concrete Pumper Truck		1	70	15353	0	0	153	9	9	0	33	15434
Dump Truck		0	0	0	0	0	0	0	0	0	0	0
Service Truck - 1 ton		0	0	0	0	0	0	0	0	0	0	0
Pile Driver Truck		0	0	0	0	0	0	0	0	0	0	0
Truck - Fuel/Lube		0	0	0	0	0	0	0	0	0	0	0
Tractor Truck 5th Wheel		0	0	0	0	0	0	0	0	0	0	0
Trucks - Pickup 3/4 ton		5	170	36498	0	1	307	18	17	0	16	36728
Trucks - 3 ton		2	141	30706	1	0	305	19	17	0	66	30868
Truck - Water		1	70	15353	0	0	153	9	9	0	33	15434
Off Road Vehicles		0										
Air Compressor 185 CFM		0	0	0	0	0	0	0	0	0	0	0
Air Compressor 750 CFM		4	297	41316	8	1	550	50	46	0	94	41863
Articulating Boom Platform		0	0	0	0	0	0	0	0	0	0	0
Bulldozer D10R		0	0	0	0	0	0	0	0	0	0	0
Bulldozer D4C		0	0	0	0	0	0	0	0	0	0	0
Concrete Trowel Machine		0	0	0	0	0	0	0	0	0	0	0
Concrete Vibrators		1	34	3104	1	0	32	3	3	0	14	3168
Cranes - Mobile 35 ton		7	580	77228	17	2	1063	98	90	1	183	78220
Cranes - Mobile 45 ton		0	0	0	0	0	0	0	0	0	0	0
Crane - Mobile 65 ton		6	647	106055	15	3	1300	74	68	1	168	107181
Cranes 100 / 150 ton cap		4	322	98700	10	2	1153	44	41	1	116	99687
Diesel Powered Welder		3	45	7449	2	0	73	5	5	0	18	7540
Backhoe/loader		1	81	11380	2	0	134	12	11	0	22	11514
Earth Scraper		0	0	0	0	0	0	0	0	0	0	0
Loader		0	0	0	0	0	0	0	0	0	0	0
Motor Grader		0	0	0	0	0	0	0	0	0	0	0
Excavator - Trencher		0	0	0	0	0	0	0	0	0	0	0
Fired Heaters		5	60	14539	2	0	118	7	6	0	18	14670
Forklift		3	127	9683	5	0	103	12	11	0	50	9893
Fusion Welder		0	0	0	0	0	0	0	0	0	0	0
Heavy Haul / Cranes		5	1320	333349	32	9	3558	136	125	3	356	336905
Light Plants		6	72	17447	2	0	141	8	7	0	22	17604
Portable Compaction Roller		2	186	25955	5	1	342	30	27	0	56	26246
Portable Compaction - Vibratory Plate		3	17	2847	0	0	21	1	1	0	3	2888
Pumps		2	24	5816	1	0	47	3	2	0	7	5868
Portable Power Generators		5	327	33685	12	1	343	33	30	0	130	34124
Truck Crane - Greater than 300 ton		4	630	158489	15	5	1652	64	59	2	168	160345
Truck Crane - Greater than 200 ton		2	161	49350	5	1	577	22	20	1	58	49844
Vibratory Roller 20 ton		0	0	0	0	0	0	0	0	0	0	0
Misc equip for off plot construction		0	0	0	0	0	0	0	0	0.00	0	0
On Road Total		9	451.6	97909.3	1.4	1.7	917.5	56.4	50.8	0.92	148.7	98465
Off Road Total		63	4931.4	996392.1	133.9	27.0	11208.5	600.3	552.3	10.81	1483.6	1007558
Project Total		72	**5383.0**	**1094301**	**135.27**	**28.65**	**12126.0**	**656.70**	**603.1**	**11.74**	**1632.3**	**1106023**

max month 1-30		5383	1094301	135.27	28.65	12126	656.70	603.08	11.74	1632.28	1106023
max month 31-44		3212	616428	80.18	15.65	6825	402.02	368.96	6.74	991.66	622965

CH_4 and N_2O emission factors for the onroad vehicles are from reference source 2: Table C.5, California Climate Action Registry General Reporting Protocol Version 3.0, April 2007

		MODEL INPUTS	CO	NO_2	PM_{10}	$PM_{2.5}$	SO_2	construction
CO_2 GWP (SAR, 1996) =	1	Max monthly value	5383	12126	656.70	603.08	11.74	days per month
CH_4 GWP (SAR, 1996) =	21	(lb/month)						22
N_2O GWP (SAR, 1996) =	310	Max daily value	244.7	551.2	29.9	27.4	0.5	construction
		(lb/day)						hours per day
		Max 1-hour, 3-hour, 8-hour emission rate	**0.34**	**0.77**	2.99	2.74	**7.41E-04**	10
		(lb/hour)						pieces of equipment
		Max 24-hour emission rate			**0.017**	**0.016**	**3.09E-04**	72
		(lb/hour)						

Maximum Rolling 12 Monthly On-Site Construction Exhaust Emissions

Emissions Summary

Hydrogen Energy, Inc
HECA Project

5/21/2009

Month	CO Monthly Emissions (tons)	CO 12-Month Total (tons)	CO_2 Monthly Emissions (tons)	CO_2 12-Month Total (tons)	CH_4 Monthly Emissions (tons)	CH_4 12-Month Total (tons)	N_2O Monthly Emissions (tons)	N_2O 12-Month Total (tons)	NO_2 Monthly Emissions (tons)	NO_2 12-Month Total (tons)	PM_{10} Monthly Emissions (tons)	PM_{10} 12-Month Total (tons)	$PM_{2.5}$ Monthly Emissions (tons)	$PM_{2.5}$ 12-Month Total (tons)	SO_2 Monthly Emissions (tons)	SO_2 12-Month Total (tons)	ROG [1] Monthly Emissions (tons)	ROG [1] 12-Month Total (tons)	CO_2e Monthly Emissions (tons)	CO_2e 12-Month Total (tons)
1	2.01	NA	424.63	NA	0.0505	NA	0.0069	NA	5.19	NA	0.280	NA	0.257	NA	0.0047	NA	0.671	NA	427.82	NA
2	2.04	NA	432.31	NA	0.0506	NA	0.0070	NA	5.27	NA	0.284	NA	0.261	NA	0.0048	NA	0.688	NA	435.54	NA
3	1.95	NA	385.22	NA	0.0472	NA	0.0066	NA	4.68	NA	0.273	NA	0.251	NA	0.0042	NA	0.649	NA	388.24	NA
4	1.98	NA	390.40	NA	0.0474	NA	0.0067	NA	4.72	NA	0.279	NA	0.256	NA	0.0043	NA	0.666	NA	393.46	NA
5	1.46	NA	256.15	NA	0.0306	NA	0.0049	NA	2.99	NA	0.207	NA	0.189	NA	0.0028	NA	0.481	NA	258.31	NA
6	1.47	NA	257.61	NA	0.0308	NA	0.0049	NA	3.00	NA	0.207	NA	0.190	NA	0.0028	NA	0.483	NA	259.77	NA
7	1.53	NA	264.67	NA	0.0326	NA	0.0051	NA	3.09	NA	0.216	NA	0.198	NA	0.0029	NA	0.503	NA	266.94	NA
8	1.45	NA	249.92	NA	0.0320	NA	0.0050	NA	2.89	NA	0.199	NA	0.183	NA	0.0027	NA	0.482	NA	252.13	NA
9	1.40	NA	240.27	NA	0.0311	NA	0.0049	NA	2.75	NA	0.188	NA	0.172	NA	0.0026	NA	0.472	NA	242.43	NA
10	1.44	NA	236.64	NA	0.0318	NA	0.0050	NA	2.70	NA	0.197	NA	0.180	NA	0.0026	NA	0.479	NA	238.85	NA
11	1.45	NA	232.98	NA	0.0335	NA	0.0050	NA	2.62	NA	0.193	NA	0.176	NA	0.0026	NA	0.482	NA	235.22	NA
12	1.52	19.70	257.43	3,628.23	0.0355	0.454	0.0059	0.0676	2.86	42.75	0.201	2.725	0.184	2.496	0.0028	0.0399	0.505	6.562	259.99	3,658.70
13	1.50	19.19	268.88	3,472.47	0.0357	0.439	0.0063	0.0670	2.96	40.52	0.191	2.637	0.175	2.415	0.0030	0.0382	0.492	6.383	271.57	3,502.45
14	1.69	18.84	295.88	3,336.04	0.0413	0.430	0.0070	0.0670	3.31	38.56	0.220	2.573	0.202	2.356	0.0033	0.0367	0.554	6.249	298.91	3,365.82
15	1.70	18.59	302.10	3,252.92	0.0420	0.424	0.0073	0.0677	3.39	37.28	0.223	2.523	0.205	2.310	0.0034	0.0359	0.562	6.162	305.24	3,282.82
16	1.68	18.29	297.73	3,160.24	0.0419	0.419	0.0072	0.0683	3.36	35.92	0.222	2.466	0.204	2.258	0.0033	0.0349	0.546	6.041	300.85	3,190.21
17	1.84	18.67	329.22	3,233.31	0.0463	0.435	0.0081	0.0715	3.71	36.65	0.240	2.499	0.220	2.289	0.0037	0.0358	0.595	6.155	332.71	3,264.61
18	1.79	19.00	319.99	3,295.69	0.0456	0.449	0.0079	0.0746	3.62	37.27	0.233	2.525	0.214	2.314	0.0036	0.0365	0.571	6.244	323.41	3,328.25
19	1.92	19.39	348.64	3,379.65	0.0487	0.465	0.0088	0.0782	3.94	38.12	0.248	2.557	0.227	2.343	0.0039	0.0375	0.607	6.347	352.38	3,413.69
20	2.47	20.41	492.76	3,622.50	0.0623	0.496	0.0127	0.0860	5.49	40.72	0.306	2.6633	0.281	2.442	0.0053	0.0401	0.757	6.622	498.02	3,659.58
21 max short-term	2.69	21.70	547.15	3,929.38	0.0676	0.532	0.0143	0.0955	6.06	44.03	0.328	2.803	0.302	2.571	0.0059	0.0433	0.816	6.967	553.01	3,970.16
22	2.41	22.67	490.16	4,182.90	0.0609	0.561	0.0129	0.1034	5.43	46.77	0.293	2.899	0.269	2.660	0.0053	0.0460	0.727	7.214	495.43	4,226.74
23	2.45	23.67	501.39	4,451.31	0.0627	0.591	0.0132	0.1116	5.55	49.70	0.296	3.003	0.272	2.755	0.0054	0.0488	0.746	7.478	506.79	4,498.31
24	2.45	24.60	502.63	4,696.52	0.0630	0.618	0.0132	0.1189	5.57	52.40	0.297	3.099	0.273	2.844	0.0054	0.0513	0.749	7.722	508.05	4,746.37
25	2.46	25.57	503.87	4,931.51	0.0632	0.645	0.0132	0.1259	5.58	55.02	0.298	3.206	0.274	2.943	0.0054	0.0538	0.752	7.982	509.31	4,984.10
26	2.46	26.33	503.87	5,139.51	0.0632	0.667	0.0132	0.1322	5.58	57.29	0.298	3.284	0.274	3.014	0.0054	0.0559	0.752	8.181	509.31	5,194.50
27	2.25	26.87	459.51	5,296.92	0.0577	0.683	0.0120	0.1369	5.07	58.97	0.271	3.331	0.249	3.058	0.0050	0.0575	0.691	8.310	464.44	5,353.70
28 max 12 month perio	1.85	27.04	359.50	5,358.70	0.0480	0.689	0.0092	0.1389	4.00	59.61	0.230	3.339	0.211	3.065	0.0040	0.0581	0.584	8.347	363.37	5,416.22
29	1.68	26.88	323.92	5,353.40	0.0426	0.685	0.0082	0.1390	3.59	59.49	0.210	3.308	0.193	3.038	0.0036	0.0580	0.523	8.275	327.36	5,410.87
30	1.61	26.70	308.21	5,341.62	0.0401	0.680	0.0078	0.1388	3.41	59.28	0.201	3.276	0.184	3.008	0.0034	0.0578	0.496	8.200	311.48	5,398.94
31	1.61	26.38	308.21	5,301.20	0.0401	0.671	0.0078	0.1379	3.41	58.75	0.201	3.229	0.184	2.965	0.0034	0.0573	0.496	8.089	311.48	5,358.04
32	1.49	25.40	276.07	5,084.50	0.0369	0.646	0.0069	0.1320	3.06	56.33	0.188	3.111	0.172	2.857	0.0030	0.0550	0.460	7.793	278.98	5,139.00
33	1.38	24.09	259.50	4,796.85	0.0339	0.612	0.0065	0.1242	2.88	53.15	0.176	2.959	0.162	2.717	0.0028	0.0520	0.428	7.404	262.23	4,848.22
34	1.16	22.83	206.99	4,513.68	0.0274	0.579	0.0050	0.1164	2.29	50.01	0.148	2.814	0.136	2.583	0.0023	0.0490	0.355	7.032	209.13	4,561.92
35	0.89	21.27	168.63	4,180.92	0.020	0.536	0.0041	0.1073	1.78	46.24	0.106	2.624	0.097	2.408	0.0018	0.0454	0.273	6.559	170.31	4,225.45
36	0.76	19.59	148.74	3,827.03	0.017	0.491	0.0037	0.0978	1.56	42.23	0.092	2.418	0.084	2.220	0.0016	0.0416	0.230	6.040	150.25	3,867.65
37	0.56	17.68	97.71	3,420.87	0.013	0.440	0.0024	0.0869	1.04	37.70	0.068	2.188	0.062	2.008	0.0011	0.0373	0.161	5.449	98.72	3,457.06
38	0.30	15.52	51.34	2,968.34	0.006	0.382	0.0011	0.0748	0.51	32.63	0.037	1.927	0.034	1.768	0.0006	0.0324	0.086	4.782	51.81	2,999.57
39	0.29	13.56	50.10	2,558.93	0.006	0.330	0.0011	0.0639	0.50	28.06	0.037	1.693	0.033	1.553	0.0005	0.0280	0.083	4.174	50.55	2,585.68
40	0.28	12.00	48.65	2,248.07	0.005	0.288	0.0011	0.0558	0.49	24.54	0.036	1.499	0.033	1.375	0.0005	0.0245	0.081	3.671	49.09	2,271.40
41	0.25	10.57	40.97	1,965.12	0.005	0.250	0.0009	0.0485	0.41	21.36	0.031	1.321	0.028	1.211	0.0004	0.0214	0.064	3.212	41.37	1,985.41
42	0.25	9.21	40.97	1,697.88	0.005	0.215	0.0009	0.0416	0.41	18.35	0.031	1.151	0.028	1.055	0.0004	0.0185	0.064	2.781	41.37	1,715.30
43	0.24	7.85	39.52	1,429.18	0.005	0.180	0.0009	0.0347	0.40	15.34	0.030	0.980	0.028	0.898	0.0004	0.0156	0.062	2.347	39.90	1,443.72
44	0.21	6.57	36.15	1,189.26	0.004	0.147	0.0008	0.0286	0.36	12.64	0.027	0.820	0.025	0.751	0.0004	0.0129	0.049	1.936	36.49	1,201.23
Maximum (100 % load)	**2.69**	**27.04**	**547.15**	**5,358.70**	**0.0676**	**0.689**	**0.0143**	**0.1390**	**6.06**	**59.61**	**0.328**	**3.339**	**0.302**	**3.065**	**0.0059**	**0.0581**	**0.816**	**8.347**	**553.01**	**5,416.22**
Average (66 % load)	**1.78**	**17.85**	**361.12**	**3,536.74**	**0.04**	**0.455**	**0.0095**	**0.0917**	**4.00**	**39.34**	**0.217**	**2.203**	**0.199**	**2.023**	**0.0039**	**0.04**	**0.539**	**5.509**	**364.99**	**3,574.71**
	66.27		**12,557.18**		**1.61**		**0.29**		**141.50**		**8.54**		**7.83**		**0.14**		**20.98**		**12,682.02**	

Note:
(1) Assuming ROGs are equivalent to VOCs
(2) Assuming 66% operational average load

MODEL INPUTS	NO2	PM10	PM2.5	SO2	
Max annual value (tons)	39.34	2.203	2.023	0.04	hours per year 8760
Max annual value (pounds)	78686.6	4406.9	4046.4	76.7	
Max annual emission rate (lb/hr)	8.98	0.50	0.46	0.0088	

Off-Site Construction Equipment Emission Factors

Hydrogen Energy, Inc *4/30/2009*
HECA Project

Emission Factors (lbs/hr)												
Equipment Description	**EMFAC designation**	**Horsepower**	**CO**	**CO_2**	**CH_4**	**N_2O**	**NO_x**	**PM_{10}**	**$PM_{2.5}$**	**SO_x**	**ROG (1)**	**CO_2e**
On-Road Vehicles												
Dump Truck	HHD-DSL		0.320	69.786	0.0018	0.001	0.694	0.043	0.039	0.001	0.151	70.165
Service Truck	HHD-DSL		0.320	69.786	0.0018	0.001	0.694	0.043	0.039	0.001	0.151	70.165
Pipe Haul Truck and Trailer (HHDT-DSL)	HHD-DSL		0.320	69.786	0.0018	0.001	0.694	0.043	0.039	0.001	0.151	70.165
Trucks - Pickup 3/4 ton	MHD-DSL		0.155	33.180	0.0018	0.001	0.279	0.017	0.015	0.000	0.014	33.558
Truck - Water	HHD-DSL		0.320	69.786	0.0018	0.001	0.694	0.043	0.039	0.001	0.151	70.165
Off Road Vehicles	**Fuel Type**											
Air Compressor	D	50	0.287	22.271	0.011	0.0006	0.242	0.027	0.0253	0.000	0.122	22.677
Bore Machine (Hydraulic)	D	50	0.261	31.037	0.006	0.0006	0.286	0.022	0.0204	0.000	0.067	31.338
Crane	D	250	0.366	112.159	0.012	0.0028	1.310	0.050	0.0461	0.001	0.131	113.281
Backhoe	D	120	0.366	51.728	0.009	0.0014	0.607	0.055	0.0510	0.001	0.099	52.335
Excavator	D	120	0.537	73.623	0.014	0.0014	0.900	0.084	0.0774	0.001	0.152	74.330
Forklift	D	50	0.227	31.225	0.006	0.0006	0.376	0.037	0.0343	0.000	0.066	31.525
Generator (Welding)	D	50	0.297	30.623	0.011	0.0006	0.311	0.030	0.0273	0.000	0.118	31.021
Roller	D	50	0.326	25.983	0.012	0.0006	0.279	0.031	0.0283	0.000	0.135	26.414
Pipe Bending Machine	D	50	0.303	27.990	0.010	0.0006	0.283	0.028	0.0260	0.000	0.114	28.379

Notes:

(1) Assuming ROGs are equivalent to VOCs

(2) Emission factors for on-road vehicles are based on results from Emfac Emissions Model 2010 Version 2.3 (LDT-DSL=light duty class II trucks-diesel; HHDT-DSL=heavy heavy-duty trucks-diesel; MHD-DSL=medium heavy duty-diesel). EMFAC scenario year was 2010.

(3) Emission factors for off-road vehicles are based on the maximum emission factors from 2009 to 2012 of the South Coast Air Quality Management District (AQMD) data.

(4) $PM_{2.5}$ emission factors were determined by multiplying PM_{10} numbers by a "$PM_{2.5}$ fraction of PM_{10}" value. Fractional values for $PM_{2.5}$ were taken from the SCAQMD guidance: Final - Methodology to Calculate $PM_{2.5}$ and $PM_{2.5}$ Significance Thresholds, October 2006: Appendix A - Updated CEIDARS Table with $PM_{2.5}$ Fractions.

On-Road Vehicles:

- $PM_{2.5}$ Fraction of PM_{10}, Brake wear: 0.429
- $PM_{2.5}$ Fraction of PM_{10}, Diesel: 0.920
- PM2.5 Fraction of PM10, Tire wear: 0.250

Off-Road Vehicles:

- PM2.5 Fraction of PM10, Diesel: 0.920

(5) CH_4 and N_2O factors are derived from California Climate Action Registry General Reporting Protocol Version 3.0 (April 2008), Table C.5 for LDT, MHD, and HHD diesel fueled trucks in the San Joaquin Valley Air Basin (MHD =HHD). These emissions are in g/mile. On-road vehicles are limited to 10 mph, which is used to convert to lb/hr. (See GHG Reference Info tab)

(6) N_2O factors for off-road vehicles are derived from California Climate Action Registry General Reporting Protocol Version 3.0 (April 2008), Table C.5 (distillate fuel factors for the industrial sector) using the following to convert from kg/gallon to lb/hp-hour, and then multiplying by the rated horsepower rating: 1 gallon/137,000 Btu, 7,000 Btu/hp-hour, and 2.2046 lb/kg. CH_4 factors are from the SCAQMD data.

CO_2 GWP (SAR, 1996) =	1
CH_4 GWP (SAR, 1996) =	21
N_2O GWP (SAR, 1996) =	310

Construction Schedule for Off-Site Construction Equipment

Hydrogen Energy, Inc *5/21/2009*
HECA Project

Miscellaneous equipment for off plot construction [2]																																															
month		*1*	*2*	*3*	*4*	*5*	*6*	*7*	*8*	*9*	*10*	*11*	*12*	*13*	*14*	*15*	*16*	*17*	*18*	*19*	*20*	*21*	*22*	*23*	*24*	*25*	*26*	*27*	*28*	*29*	*30*	*31*	*32*	*33*	*34*	*35*	*36*	*37*	*38*	*39*	*40*	*41*	*42*	*43*	*44*
EQUIPMENT	*# of units*																																														
ON ROAD																																															
Dump Truck	12	1	1	1	1	1	1	1	1	1	1	1	1																																		
Service Truck (MHD-DSL)																																															
Pipe Haul Truck and Trailer (HHDT-DSL	12	1	1	1	1	1	1	1	1	1	1	1	1																																		
Truck (Pickup 3/4 Ton) - MHD-DSL	17	1	1	1	1	1	2	2	2	2	2	1	1																																		
Truck - water	12	1	1	1	1	1	1	1	1	1	1	1	1																																		
OFF ROAD																																															
Air Compressor				1	1	1	1	1	1	1	1	1	1																																		
Bore Machine (Hydraulic)	5						1	1	1	1	1																																				
Crane	5						1	1	1	1	1																																				
Backhoe	12	1	1	1	1	1	1	1	1	1	1	1	1																																		
Excavator	12	1	1	1	1	1	1	1	1	1	1	1	1																																		
Forklift	4									1	1	1	1																																		
Welding Generator	4									1	1	1	1																																		
Roller	12	1	1	1	1	1	1	1	1	1	1	1	1																																		
Pipe Bending Machine	12	1	1	1	1	1	1	1	1	1	1	1	1																																		
TOTAL	**129**	**8**	**8**	**9**	**9**	**9**	**12**	**12**	**12**	**14**	**14**	**11**	**11**	**0**	**0**	**0**	**0**	**0**	**0**	**0**	**0**	**0**	**0**	**0**	**0**	**0**	**0**	**0**	**0**	**0**	**0**	**0**	**0**	**0**	**0**	**0**	**0**	**0**	**0**	**0**	**0**	**0**	**0**	**0**

Notes: Preliminary and Confidential

(1) These are approximate values

(2) Misc. equip for off plot include preliminary estimates for work that may be performed outside of the plot (plot linears, facility upgrades, site interfaces, etc.)

(3) Construction Equipment Assumptions - Water and Natural Gas line work begins in month 1 and ends in month 4. Process Water line work begins in month 5 and ends in month 8. CO_2 line work begins in month 9 and ends in month 12. Transmission line work begins in month 6 and ends in month 10.

Hydrogen Energy, Inc *4/30/2009*
HECA Project

		Emissions Per Month (lbs/month)										
Equipment Description		**# of Eq**	**CO**	**CO_2**	**CH_4**	**N_2O**	**NO_x**	**PM_{10}**	**$PM_{2.5}$**	**SO_x**	**ROG[1]**	**CO_2e**
ON ROAD												
Dump Truck		1	70	15353	0	0	153	9	9	0	33	15436
Service Truck (MHD-DSL)		0	0	0	0	0	0	0	0	0	0	0
Pipe Haul Truck and Trailer (HHDT-DSL)		1	70	15353	0	0	153	9	9	0	33	15436
3/4 Ton Pickup (MHD-DSL)		2	68	14599	1	0	123	7	7	0	6	14766
Truck - water		1	70	15353	0	0	153	9	9	0	33	15436
OFF ROAD		0	0	0	0	0	0	0	0	0	0	0
Air Compressor (185 CFM)		1	63	4900	2	0	53	6	6	0	27	4989
Bore Machine (Hydraulic)		1	57	6828	1	0	63	5	4	0	15	6894
12 Ton Hydra Crane		1	81	24675	3	1	288	11	10	0	29	24922
Backhoe/loader		1	81	11380	2	0	134	12	11	0	22	11514
Excavator - Trencher		1	118	16197	3	0	198	19	17	0	33	16353
Forklift		1	50	6869	1	0	83	8	8	0	15	6935
Welding Generator		1	65	6737	2	0	69	7	6	0	26	6825
3 to 5 Ton AC Roller		1	72	5716	3	0	61	7	6	0	30	5811
Pipe Bending Machine		1	67	6158	2	0	62	6	6	0	25	6243
On Road Total		5	279.1	60658	1.9	1.2	580.6	35.8	32.3	0.6	106.0	61075
Off Road Total		9	653.7	89461	19.9	2.0	1011	80.4	73.9	1.1	221.1	90486
Project Total		**14**	**932.8**	**150118**	**21.9**	**3.2**	**1591**	**116.2**	**106.2**	**1.6**	**327.1**	**151561**
ON ROAD												
Dump Truck		1	70	15353	0	0	153	9	9	0	33	15436
Service Truck (MHD-DSL)		0	0	0	0	0	0	0	0	0	0	0
Pipe Haul Truck and Trailer (HHDT-DSL)		1	70	15353	0	0	153	9	9	0	33	15436
3/4 Ton Pickup (MHD-DSL)		2	68	14599	1	0	123	7	7	0	6	14766
Truck - water		1	70	15353	0	0	153	9	9	0	33	15436
OFF ROAD		0	0	0	0	0	0	0	0	0	0	0
Air Compressor (185 CFM)		1	63	4900	2	0	53	6	6	0	27	4989
Bore Machine (Hydraulic)		1	57	6828	1	0	63	5	4	0	15	6894
12 Ton Hydra Crane		1	81	24675	3	1	288	11	10	0	29	24922
Backhoe/loader		1	81	11380	2	0	134	12	11	0	22	11514
Excavator - Trencher		1	118	16197	3	0	198	19	17	0	33	16353
Forklift		1	50	6869	1	0	83	8	8	0	15	6935
Welding Generator		1	65	6737	2	0	69	7	6	0	26	6825
3 to 5 Ton AC Roller		1	72	5716	3	0	61	7	6	0	30	5811
Pipe Bending Machine		1	67	6158	2	0	62	6	6	0	25	6243
On Road Total		5	279.1	60658	1.9	1.2	580.6	35.8	32.3	0.6	106.0	61075
Off Road Total		9	653.7	89461	19.9	2.0	1011	80.4	73.9	1.1	221.1	90486
Project Total		**14**	**932.8**	**150118**	**21.9**	**3.2**	**1591**	**116.2**	**106.2**	**1.6**	**327.1**	**151561**

Maximum Rolling 12 Monthly Off-Site Construction Exhaust Emissions

Emissions Summary

Hydrogen Energy, Inc
HECA Project

5/21/2009 5/21/2009

	CO		CO_2		CH_4		N_2O		NO_x		PM_{10}		$PM_{2.5}$		SO_x		ROG [1]	
Month	Monthly Emissions (tons)	12-Month Total (tons)	Monthly Emissions (tons)	12-Month Total (tons)	Monthly Emissions (tons)	12-Month Total (tons)	Monthly Emissions (tons)	12-Month Total (tons)	Monthly Emissions (tons)	12-Month Total (tons)	Monthly Emissions (tons)	12-Month Total (tons)	Monthly Emissions (tons)	12-Month Total (tons)	Monthly Emissions (tons)	12-Month Total (tons)	Monthly Emissions (tons)	12-Month Total (tons)
1	0.29	NA	46.40	NA	0.01	NA	0.0009	NA	0.49	NA	0.038	NA	0.035	NA	0.0005	NA	0.11	NA
2	0.29	NA	46.40	NA	0.01	NA	0.0009	NA	0.49	NA	0.038	NA	0.035	NA	0.0005	NA	0.11	NA
3	0.32	NA	48.85	NA	0.01	NA	0.0010	NA	0.51	NA	0.041	NA	0.037	NA	0.0005	NA	0.12	NA
4	0.32	NA	48.85	NA	0.01	NA	0.000968	NA	0.51	NA	0.041	NA	0.037	NA	0.0005	NA	0.120	NA
5	0.32	NA	48.85	NA	0.01	NA	0.0010	NA	0.51	NA	0.041	NA	0.037	NA	0.0005	NA	0.12	NA
6	0.41	NA	68.26	NA	0.01	NA	0.0015	NA	0.72	NA	0.051	NA	0.046	NA	0.0007	NA	0.14	NA
7	0.41	NA	68.26	NA	0.01	NA	0.0015	NA	0.72	NA	0.051	NA	0.046	NA	0.0007	NA	0.14	NA
8	0.41	NA	68.26	NA	0.01	NA	0.0015	NA	0.72	NA	0.051	NA	0.046	NA	0.0007	NA	0.14	NA
9	0.47	NA	75.06	NA	0.01	NA	0.0016	NA	0.80	NA	0.058	NA	0.053	NA	0.0008	NA	0.16	NA
10 max short term	0.47	NA	75.06	NA	0.01	NA	0.001585	NA	0.80	NA	0.058	NA	0.053	NA	0.0008	NA	0.164	NA
11	0.38	NA	55.66	NA	0.01	NA	0.001092	NA	0.59	NA	0.048	NA	0.044	NA	0.0006	NA	0.140	NA
12 max 12 month period	0.38	4.47	55.66	705.58	0.01	0.099	0.001092	0.0145	0.59	7.45	0.048	0.563	0.044	0.514	0.0006	0.0076	0.140	1.610
13	0.00	4.18	0.00	659.17	0.00	0.093	0.000000	0.0135	0.00	6.96	0.000	0.526	0.000	0.480	0.0000	0.0071	0.000	1.503
14	0.00	3.89	0.00	612.77	0.00	0.0877	0.00	0.01264	0.00	6.47	0.00	0.488	0.00	0.445	0.00	0.0066	0.00	1.397
15	0.00	3.56	0.00	563.91	0.00	0.0807	0.00	0.01167	0.00	5.96	0.00	0.447	0.00	0.408	0.00	0.0061	0.00	1.277
16	0.00	3.24	0.00	515.06	0.00	0.0737	0.00	0.0107	0.00	5.44	0.00	0.406	0.00	0.371	0.00	0.0056	0.00	1.157
17	0.00	2.92	0.00	466.20	0.00	0.067	0.00	0.0097	0.00	4.93	0.00	0.365	0.00	0.333	0.00	0.005	0.00	1.037
18	0.00	2.51	0.00	397.95	0.00	0.058	0.00	0.0083	0.00	4.21	0.00	0.314	0.00	0.287	0.00	0.004	0.00	0.894
19	0.00	2.10	0.00	329.69	0.00	0.049	0.00	0.0068	0.00	3.49	0.00	0.263	0.00	0.241	0.00	0.004	0.00	0.751
20	0.00	1.69	0.00	261.43	0.00	0.039	0.00	0.0054	0.00	2.77	0.00	0.213	0.00	0.194	0.00	0.003	0.00	0.607
21	0.00	1.23	0.00	186.38	0.00	0.029	0.00	0.0038	0.00	1.97	0.00	0.155	0.00	0.141	0.00	0.002	0.00	0.444
22	0.00	0.76	0.00	111.32	0.00	0.018	0.00	0.0022	0.00	1.18	0.00	0.097	0.00	0.088	0.00	0.001	0.00	0.280
23	0.00	0.38	0.00	55.66	0.00	0.009	0.00	0.0011	0.00	0.59	0.00	0.048	0.00	0.044	0.00	0.001	0.00	0.140
24	0.00	0.00	0.00	0.00	0.00	0.000	0.00	0.0000	0.00	0.00	0.00	0.000	0.00	0.000	0.00	0.000	0.00	0.000
25	0.00	0.00	0.00	0.00	0.00	0.000	0.00	0.0000	0.00	0.00	0.00	0.000	0.00	0.000	0.00	0.000	0.00	0.000
26	0.00	0.00	0.00	0.00	0.00	0.000	0.00	0.0000	0.00	0.00	0.00	0.000	0.00	0.000	0.00	0.000	0.00	0.000
27	0.00	0.00	0.00	0.00	0.00	0.000	0.00	0.0000	0.00	0.00	0.00	0.000	0.00	0.000	0.00	0.000	0.00	0.000
28	0.00	0.00	0.00	0.00	0.00	0.000	0.00	0.0000	0.00	0.00	0.00	0.000	0.00	0.000	0.00	0.000	0.00	0.000
29	0.00	0.00	0.00	0.00	0.00	0.000	0.00	0.0000	0.00	0.00	0.00	0.000	0.00	0.000	0.00	0.000	0.00	0.000
30	0.00	0.00	0.00	0.00	0.00	0.000	0.00	0.0000	0.00	0.00	0.00	0.000	0.00	0.000	0.00	0.000	0.00	0.000
31	0.00	0.00	0.00	0.00	0.00	0.000	0.00	0.0000	0.00	0.00	0.00	0.000	0.00	0.000	0.00	0.000	0.00	0.000
32	0.00	0.00	0.00	0.00	0.00	0.000	0.00	0.0000	0.00	0.00	0.00	0.000	0.00	0.000	0.00	0.000	0.00	0.000
33	0.00	0.00	0.00	0.00	0.00	0.000	0.00	0.0000	0.00	0.00	0.00	0.000	0.00	0.000	0.00	0.000	0.00	0.000
34	0.00	0.00	0.00	0.00	0.00	0.000	0.00	0.0000	0.00	0.00	0.00	0.000	0.00	0.000	0.00	0.000	0.00	0.000
35	0.00	0.00	0.00	0.00	0.00	0.000	0.00	0.0000	0.00	0.00	0.00	0.000	0.00	0.000	0.00	0.000	0.00	0.000
36	0.00	0.00	0.00	0.00	0.00	0.000	0.00	0.0000	0.00	0.00	0.00	0.000	0.00	0.000	0.00	0.000	0.00	0.000
37	0.00	0.00	0.00	0.00	0.00	0.000	0.00	0.0000	0.00	0.00	0.00	0.000	0.00	0.000	0.00	0.000	0.00	0.000
38	0.00	0.00	0.00	0.00	0.00	0.000	0.00	0.0000	0.00	0.00	0.00	0.000	0.00	0.000	0.00	0.000	0.00	0.000
39	0.00	0.00	0.00	0.00	0.00	0.000	0.00	0.0000	0.00	0.00	0.00	0.000	0.00	0.000	0.00	0.000	0.00	0.000
40	0.00	0.00	0.00	0.00	0.00	0.000	0.00	0.0000	0.00	0.00	0.00	0.000	0.00	0.000	0.00	0.000	0.00	0.000
41	0.00	0.00	0.00	0.00	0.00	0.000	0.00	0.0000	0.00	0.00	0.00	0.000	0.00	0.000	0.00	0.000	0.00	0.000
42	0.00	0.00	0.00	0.00	0.00	0.000	0.00	0.0000	0.00	0.00	0.00	0.000	0.00	0.000	0.00	0.000	0.00	0.000
43	0.00	0.00	0.00	0.00	0.00	0.000	0.00	0.0000	0.00	0.00	0.00	0.000	0.00	0.000	0.00	0.000	0.00	0.000
44	0.00	0.00	0.00	0.00	0.00	0.000	0.00	0.0000	0.00	0.00	0.00	0.000	0.00	0.000	0.00	0.000	0.00	0.000
Maximum (100 % load)	**0.47**	**4.47**	**#**	**75.06**	**705.58**	**#**	**0.01**	**0.0991**	**#**	**0.001585**	**0.0145**	**#**	**0.80**	**7.45**	**#**	**0.058**	**0.563**	**#**	**0.053**	**0.514**	**#**	**0.0008**	**0.0076**	**#**	**0.164**	**1.610**
Average (66 % load)	**0.31**	**2.95**	**#**	**49.54**	**465.68**	**#**	**0.01**	**0.07**	**#**	**0.0010**	**0.0095**	**#**	**0.53**	**4.91**	**#**	**0.038**	**0.372**	**#**	**0.035**	**0.340**	**#**	**0.0005**	**0.01**	**#**	**0.11**	**1.06**

Note:
(1) Assuming ROGs are equivalent to VOCs
(2) Assuming 66% operational average load

Maximum Rolling 12 Monthly Exhaust Emissions

Emissions Summary

Hydrogen Energy, Inc
HECA Project

5/21/2009

Month	CO Monthly Emissions (tons)	CO 12-Month Total (tons)	CO_2 Monthly Emissions (tons)	CO_2 12-Month Total (tons)	CH_4 Monthly Emissions (tons)	CH_4 12-Month Total (tons)	N_2O Monthly Emissions (tons)	N_2O 12-Month Total (tons)	NO_x Monthly Emissions (tons)	NO_x 12-Month Total (tons)	PM_{10} Monthly Emissions (tons)	PM_{10} 12-Month Total (tons)	$PM_{2.5}$ Monthly Emissions (tons)	$PM_{2.5}$ 12-Month Total (tons)	SO_x Monthly Emissions (tons)	SO_x 12-Month Total (tons)	ROG[1] Monthly Emissions (tons)	ROG[1] 12-Month Total (tons)
1	2.30	NA	471.04	NA	0.0562	NA	0.0078	NA	5.68	NA	0.318	NA	0.291	NA	0.00518	NA	0.78	NA
2	2.33	NA	478.72	NA	0.0564	NA	0.0079	NA	5.75	NA	0.322	NA	0.295	NA	0.00525	NA	0.79	NA
3	2.28	NA	434.08	NA	0.0541	NA	0.0075	NA	5.19	NA	0.314	NA	0.288	NA	0.00477	NA	0.77	NA
4	2.30	NA	439.25	NA	0.0543	NA	0.0076	NA	5.24	NA	0.320	NA	0.293	NA	0.00482	NA	0.79	NA
5	1.78	NA	305.01	NA	0.0376	NA	0.0058	NA	3.50	NA	0.248	NA	0.226	NA	0.00331	NA	0.60	NA
6	1.88	NA	325.86	NA	0.0399	NA	0.0064	NA	3.72	NA	0.258	NA	0.236	NA	0.00355	NA	0.63	NA
7	1.93	NA	332.93	NA	0.0417	NA	0.0066	NA	3.81	NA	0.267	NA	0.244	NA	0.00363	NA	0.65	NA
8	1.86	NA	318.17	NA	0.0411	NA	0.0064	NA	3.61	NA	0.250	NA	0.229	NA	0.00349	NA	0.62	NA
9	1.87	NA	315.33	NA	0.0421	NA	0.0064	NA	3.55	NA	0.247	NA	0.226	NA	0.00347	NA	0.64	NA
10	1.91	NA	311.70	NA	0.0428	NA	0.0066	NA	3.49	NA	0.255	NA	0.233	NA	0.00343	NA	0.64	NA
11	1.83	NA	288.64	NA	0.0422	NA	0.0061	NA	3.21	NA	0.241	NA	0.220	NA	0.00320	NA	0.62	NA
12	1.90	24.17	313.08	4,334	0.0443	0.553	0.00696	0.0820	3.45	50.20	0.249	3.289	0.228	3.011	0.00345	0.048	0.65	8.172
13	1.50	23.37	268.88	4,132	0.0357	0.532	0.00626	0.0805	2.957	47.48	0.191	3.163	0.175	2.895	0.00298	0.045	0.49	7.887
14	1.69	22.73	295.88	3,949	0.0413	0.517	0.00698	0.0796	3.310	45.03	0.220	3.061	0.202	2.802	0.00330	0.043	0.55	7.646
15	1.70	22.16	302.10	3,817	0.0420	0.505	0.0073	0.0794	3.39	43.24	0.223	2.969	0.205	2.718	0.00337	0.042	0.56	7.439
16	1.68	21.53	297.73	3,675	0.0419	0.493	0.0072	0.0790	3.36	41.36	0.222	2.871	0.204	2.629	0.00333	0.041	0.55	7.199
17	1.84	21.59	329.22	3,700	0.0463	0.501	0.0081	0.0813	3.71	41.58	0.240	2.864	0.220	2.623	0.00366	0.041	0.60	7.193
18	1.79	21.51	319.99	3,694	0.0456	0.507	0.0079	0.0829	3.62	41.48	0.233	2.839	0.214	2.601	0.00357	0.041	0.57	7.138
19	1.92	21.49	348.64	3,709	0.0487	0.514	0.0088	0.0851	3.94	41.61	0.248	2.820	0.227	2.584	0.00386	0.041	0.61	7.098
20	2.47	22.11	492.76	3,884	0.0623	0.535	0.0127	0.0914	5.49	43.49	0.306	2.876	0.281	2.636	0.00532	0.043	0.76	7.230
21	2.69	22.93	547.15	4,116	0.0676	0.561	0.0143	0.0993	6.06	46.00	0.328	2.958	0.302	2.712	0.00587	0.045	0.816	7.410
22	2.41	23.43	490.16	4,294	0.0609	0.579	0.0129	0.1056	5.43	47.94	0.293	2.996	0.269	2.748	0.00527	0.047	0.73	7.495
23	2.45	24.05	501.39	4,507	0.0627	0.599	0.0132	0.1127	5.55	50.29	0.296	3.051	0.272	2.800	0.00540	0.049	0.75	7.618
24	2.45	24.60	502.63	4,697	0.0630	0.618	0.0132	0.1189	5.57	52.40	0.297	3.099	0.273	2.844	0.00541	0.051	0.75	7.722
25	2.46	25.57	503.87	4,932	0.0632	0.645	0.0132	0.1259	5.58	55.02	0.298	3.206	0.274	2.943	0.00543	0.054	0.75	7.982
26	2.46	26.33	503.87	5,140	0.0632	0.667	0.0132	0.1322	5.58	57.29	0.298	3.284	0.274	3.014	0.00543	0.056	0.75	8.181
27	2.25	26.87	459.51	5,297	0.0577	0.683	0.0120	0.1369	5.07	58.97	0.271	3.331	0.249	3.058	0.00496	0.058	0.69	8.310
28	1.85	27.04	359.50	5,359	0.0480	0.689	0.0092	0.1389	4.00	59.61	0.230	3.339	0.211	3.065	0.00396	0.058	0.58	8.347
29	1.68	26.88	323.92	5,353	0.0426	0.685	0.0082	0.1390	3.59	59.49	0.210	3.308	0.193	3.038	0.00355	0.058	0.52	8.275
30	1.61	26.70	308.21	5,342	0.0401	0.680	0.0078	0.1388	3.41	59.28	0.201	3.276	0.184	3.008	0.00337	0.058	0.50	8.200
31	1.61	26.38	308.21	5,301	0.0401	0.671	0.0078	0.1379	3.41	58.75	0.201	3.229	0.184	2.965	0.00337	0.057	0.50	8.089
32	1.49	25.40	276.07	5,085	0.0369	0.646	0.0069	0.1320	3.06	56.33	0.188	3.111	0.172	2.857	0.00303	0.055	0.46	7.793
33	1.38	24.09	259.50	4,797	0.0339	0.612	0.0065	0.1242	2.88	53.15	0.176	2.959	0.162	2.717	0.00284	0.052	0.43	7.404
34	1.16	22.83	206.99	4,514	0.0274	0.579	0.0050	0.1164	2.29	50.01	0.148	2.814	0.136	2.583	0.00227	0.049	0.35	7.032
35	0.89	21.27	168.63	4,181	0.0200	0.536	0.0041	0.1073	1.78	46.24	0.106	2.624	0.097	2.408	0.00182	0.045	0.27	6.559
36	0.76	19.59	148.74	3,827	0.0174	0.491	0.0037	0.0978	1.56	42.23	0.092	2.418	0.084	2.220	0.00161	0.042	0.23	6.040
37	0.56	17.68	97.71	3,421	0.0126	0.440	0.0024	0.0869	1.04	37.70	0.068	2.188	0.062	2.008	0.00106	0.037	0.16	5.449
38	0.30	15.52	51.34	2,968	0.0058	0.382	0.0011	0.0748	0.51	32.63	0.037	1.927	0.034	1.768	0.00056	0.032	0.09	4.782
39	0.29	13.56	50.10	2,559	0.0055	0.330	0.0011	0.0639	0.50	28.06	0.037	1.693	0.033	1.553	0.00054	0.028	0.08	4.174
40	0.28	12.00	48.65	2,248	0.0054	0.288	0.0011	0.0558	0.49	24.54	0.036	1.499	0.033	1.375	0.00052	0.025	0.08	3.671
41	0.25	10.57	40.97	1,965	0.0052	0.250	0.0009	0.0485	0.41	21.36	0.031	1.321	0.028	1.211	0.00045	0.021	0.06	3.212
42	0.25	9.21	40.97	1,698	0.0052	0.215	0.0009	0.0416	0.41	18.35	0.031	1.151	0.028	1.055	0.00045	0.019	0.06	2.781
43	0.24	7.85	39.52	1,429	0.0050	0.180	0.0009	0.0347	0.40	15.34	0.030	0.980	0.028	0.898	0.00043	0.016	0.06	2.347
44	0.21	6.57	36.15	1,189	0.0039	0.147	0.0008	0.0286	0.36	12.64	0.027	0.820	0.025	0.751	0.00039	0.013	0.05	1.936
Maximum (100 % load)	**2.69**	**27.04**	**547.15**	**5,359**	**0.0676**	**0.689**	**0.0143**	**0.1390**	**6.063**	**59.61**	**0.328**	**3.339**	**0.302**	**3.065**	**0.00587**	**0.058**	**0.816**	**8.347**
Average (66 % load)	**1.78**	**17.85**	**361.12**	**3,537**	**0.045**	**0.45**	**0.0095**	**0.0917**	**4.00**	**39.34**	**0.217**	**2.203**	**0.199**	**2.023**	**0.004**	**0.04**	**0.54**	**5.51**

Note:
(1) Assuming ROGs are equivalent to VOCs
(2) Assuming 66% operational average load

Hydrogen Energy, Inc *5/21/2009*
HECA Project

Short term fugitive Dust Emissions
Maximum construction activity occurs in month 21.

1 month of dirt moving
22 construction days per month
10 construction hours per day

Dirt Piling or Material Handling
$E = 0.00112 * (G/5)^{1.3} / (H/2)^{1.4}$

PM_{10} Emissions from Dirt Piling or Material Handling (lb/hr) from SCAQMD Table A9-9-G

12 G = Mean Wind speed (mph) default
15 H = Moisture content of surface material (%) (from Table A9-9-G-1 for moist dirt)
0.00021 lb/ton of PM_{10}

Equipment	Quantity	Hours/Day	Material Handled (ton/day)	Material Handled (ton)	Watering Control Efficiency	PM_{10} Emissions (lb/hr)	PM_{10} Emissions (lb/day)	$PM_{2.5}$ Emissions (lb/hr)	$PM_{2.5}$ Emissions (lb/day)
Backhoe	1	10	34851	766,729	67%	0.2394	2.3941	0.0498	0.4980
					Total	**0.2394**	**2.3941**	**0.0498**	**0.4980**

Water efficiency from CEQA Table 11-4 watering 3 times daily or using chemical suppressants

29535 yd^3/day 34851 ton/day
649,770 yd^3 766,729 tons 2360 density of soil (lb/yd^3)
(USDA NRCS Physical Soil Properties from Kern County
for Lockern-Buttonwillow clay)
134.25 acres = 649,770 cubic yds, assume depth of soils moved is 1 yd
(assume 25% of entire site in month 21)

Cover Storage Pile
SCAQMD Table A9-9-E
E = 1.7 * G/1.5 * (365-H)/235 * I/15 * J
PM_{10} Emission factor from wind erosion of storage piles per day per acre

15 G = Silt content (%) (from Table A9-9-E-1 for blended ore and dirt)
37 H = Mean number of days per year with at least 0.01 inches of precipitation (from WRCC for Bakersfield Airport Station)
0.3 I = Percentage of time that the unobstructed wind speed exceeds 12 mph at mean pile height
0.5 J = Fraction of TSP that is PM10 = 0.5
0.237 lb/acre/day

wind speed percentage based on 2000-04 (5 yrs) of wind speed data as recorded at Bakersfield Airport station

Source	Quantity	Size of Pile (acre)	Hours/Day	Watering Control Efficiency	PM_{10} Emissions (lb/hr)	PM_{10} Emissions (lb/day)	$PM_{2.5}$ Emissions (lb/hr)	$PM_{2.5}$ Emissions (lb/day)
Cover Storage Pile	25	0.25	24	67%	0.02	0.49	0.004	0.102

Water efficiency from CEQA Table 11-4 watering 3 times daily or using chemical suppressants
pile size and number are assumed

Monthly On-Site Fugitive Dust Emissions

Emissions Summary

Hydrogen Energy, Inc
HECA Project

5/21/2009

Travel on unpaved road

F = 2.1 * G/12 * H/30 * $(J/3)^{0.7}$ * $(I/4)^{0.5}$ * (365-K)/365 SCAQMD Table A9-9-D

Emission factor for vehicle travel on unpaved roads (lb/VMT)

4 G = Surface silt loading (%) (value for gravel road)
5 H = Mean vehicle speed (mph)
value listed in table I = Mean number of wheels on vehicle
value listed in table J = Mean vehicle weight (ton)
37 K = Mean number of days per year with at least 0.01 inches of precipitation (from WRCC for Bakersfield Airport Station)

Vehicle Type	No. Of Unit	Round Trips /Day/ Unit	Round Trip Distance (mile)	Daily VMT (all units)	Mean Vehicle Weight (tons)	Number of Wheels on Vehicle	PM10 EF (lbs/VMT)	Watering Control Efficiency	PM_{10} Emissions (lb/hr)	PM_{10} Emissions (lb/day)	$PM_{2.5}$ Emissions (lb/hr)	$PM_{2.5}$ Emissions (lb/day)
Concrete Pumper Truck	1	2	1	2.0	30	10	0.83	67%	0.05	0.55	0.01	0.12
Dump Truck	0			0.0	15	10	0.51	67%	0.00	0.00	0.00	0.00
Service Truck - 1 ton	0			0.0	15	10	0.51	67%	0.00	0.00	0.00	0.00
Pile Driver Truck	0			0.0	15	10	0.51	67%	0.00	0.00	0.00	0.00
Truck - Fuel/Lube	0			0.0	15	10	0.51	67%	0.00	0.00	0.00	0.00
Tractor Truck 5th Wheel	0			0.0	11	10	0.41	67%	0.00	0.00	0.00	0.00
Trucks - Pickup 3/4 ton	5	10	0.5	25.0	3	4	0.10	67%	0.09	0.86	0.02	0.18
Trucks - 3 ton	2	2	1	4.0	11	10	0.41	67%	0.05	0.54	0.01	0.12
Truck - Water	1	4	10	40.0	25	10	0.73	67%	0.97	9.65	0.20	2.05
Air Compressor 185 CFM	0			0.0	0.5	2	0.02	67%	0.00	0.00	0.00	0.00
Air Compressor 750 CFM	4	1	0.1	0.4	0.5	2	0.02	67%	0.00	0.00	0.00	0.00
Articulating Boom Platform	0			0.0	5	10	0.24	67%	0.00	0.00	0.00	0.00
Bulldozer D10R	0			0.0	35	2	0.41	67%	0.00	0.00	0.00	0.00
Bulldozer D4C	0			0.0	15	2	0.23	67%	0.00	0.00	0.00	0.00
Concrete Trowel Machine	0			0.0	15	8	0.46	67%	0.00	0.00	0.00	0.00
Concrete Vibrators	1	0	0	0.0	0.25	0	0.00	67%	0.00	0.00	0.00	0.00
Cranes - Mobile 35 ton	7	1	0.5	3.5	25	12	0.80	67%	0.09	0.93	0.02	0.20
Cranes - Mobile 45 ton	0			0.0	35	2	0.41	67%	0.00	0.00	0.00	0.00
Crane - Mobile 65 ton	6	1	0.5	3.0	45	2	0.49	67%	0.05	0.49	0.01	0.10
Cranes 100 / 150 ton cap	4	1	0.5	2.0	50	12	1.30	67%	0.09	0.86	0.02	0.18
Diesel Powered Welder	3	0	0	0.0	0.5	2	0.02	67%	0.00	0.00	0.00	0.00
Backhoe/loader	1	5	0.5	2.5	11	4	0.26	67%	0.02	0.21	0.00	0.05
Earth Scraper	0			0.0	40	4	0.64	67%	0.00	0.00	0.00	0.00
Loader	0			0.0	25	4	0.46	67%	0.00	0.00	0.00	0.00
Motor Grader	0			0.0	20	6	0.48	67%	0.00	0.00	0.00	0.00
Excavator - Trencher	0			0.0	17	4	0.35	67%	0.00	0.00	0.00	0.00
Fired Heaters	5	0	0	0.0	0.25	0	0.00	67%	0.00	0.00	0.00	0.00
Forklift	3	5	0.5	7.5	10	4	0.24	67%	0.06	0.60	0.01	0.13
Fusion Welder	0			0.0	0.25	2	0.01	67%	0.00	0.00	0.00	0.00
Heavy Haul / Cranes	5	1	0	0.0	75	2	0.71	67%	0.00	0.00	0.00	0.00
Light Plants	6	1	0	0.0	0.5	4	0.03	67%	0.00	0.00	0.00	0.00
Portable Compaction Roller	2	1	0.5	1.0	3	3	0.09	67%	0.00	0.03	0.00	0.01
Portable Compaction - Vibratory Plate	3	1	0.1	0.3	0.1	0	0.00	67%	0.00	0.00	0.00	0.00
Portable Compaction - Vibratory Ram	0			0.0	0.25	0	0.00	67%	0.00	0.00	0.00	0.00
Pumps	2	1	0	0.0	0.1	0	0.00	67%	0.00	0.00	0.00	0.00
Portable Power Generators	5	0	0	0.0	0.5	4	0.03	67%	0.00	0.00	0.00	0.00
Truck Crane - Greater than 200 ton	4	1	0.5	2.0	50	12	1.30	67%	0.09	0.86	0.02	0.18
Truck Crane - Greater than 300 ton	2	1	0.5	1.0	60	12	1.48	67%	0.05	0.49	0.01	0.10
Vibratory Roller 20 ton	0			0.0	20	3	0.34	67%	0.00	0.00	0.00	0.00
								Total	**1.61**	**16.08**	**0.34**	**3.41**

worker personal vehicles	857	1	0.5	428.7	3	4	0.10	85%	0.67	6.74	0.14	1.43

Assumed maximum travel speed is 5 mph
Equipment weight from SCAQMD Table A9-9-D-3 and various websites
Water efficiency from CEQA Table 11-4 watering 3 times daily or using chemical suppressants. Parking area will be graveled and main onsite road will be paved.
$PM_{2.5}$ emission factors from updated CEIDARS List with PM2.5 fractions.
$PM_{2.5}$ numbers obtained by multiplying the PM_{10} values by fraction in CEIDARS list for appropriate fugitive dust sources.
Water trucks operate at least 4 times per day.
10 Maximum number of construction work hours per day

Hydrogen Energy, Inc
HECA Project

5/21/2009

Model Input:

LAY123

Total MODEL EMISSION RATE (lb/hr)	
PM_{10} 24hr	$PM_{2.5}$ 24hr
1.168	0.247

Main

MODEL EMISSION RATE (lb/hr)	
PM_{10} 24hr	$PM_{2.5}$ 24hr
0.496	0.105

Parking

MODEL EMISSION RATE (lb/hr)	
PM_{10} 24hr	$PM_{2.5}$ 24hr
0.203	0.043

Roads (18 road segments)

MODEL EMISSION RATE (lb/hr)	
PM_{10} 24hr	$PM_{2.5}$ 24hr
3.7E-02	7.9E-03

Location	X (m)	Y (m)	AREA (m^2)	percent of total area
LAY123	1400	450	630000	0.626
main	575	465	267375	0.266
parking	215	510	109650	0.109
Total Construction Area			1007025	1.000

MODEL EMISSION RATE per Source (g/s-m2)

PM_{10} 24hr	$PM_{2.5}$ 24hr
2.34E-07	4.95E-08
2.34E-07	4.95E-08
2.34E-07	4.95E-08

Hydrogen Energy, Inc *5/21/2009*
HECA Project

Annual Fugitive Dust Emissions
Maximum annual fugitive dust activity occurs in months 17-28.

12 months of soil disturbance
10 total construction hours per work day
22 construction days per month

Dirt Piling or Material Handling
$E = 0.00112 * (G/5)^{1.3} / (H/2)^{1.4}$ PM_{10} Emissions from Dirt Piling or Material Handling (lb/hr) from SCAQMD Table A9-9-G
12 G = Mean Wind speed (mph) default
15 H = Moisture content of surface material (%) (from Table A9-9-G-1 for moist dirt)
0.00021 lb/ton of PM10

Equipment	Quantity/ year	Hours/ Day	Annual Material Handled (ton)	Watering Control Efficiency	PM_{10} Emissions (tons/yr)	$PM_{2.5}$ Emissions (tons/yr)
Backhoe	1	10	383,364	67%	0.0132	0.0027
				Total	**0.0132**	**0.0027**

Water efficiency from CEQA Table 11-4 watering 3 times daily or using chemical suppressants

2461 yd^3/day 2904 ton/day
649,770 yd^3 766,729 tons 2360 density of soil (lb/yd^3)
(USDA NRCS Physical Soil Properties from Kern County
Lockern-Buttonwillow clay soil)
134.25 acres = 649,770 cubic yds, assume depth of soils moved is 1 yd
(assume 25% of entire site in 12 month period)

Cover Storage Pile
SCAQMD Table A9-9-E
E = 1.7 * G/1.5 * (365-H)/235 * I/15 * J
PM10 Emission factor from wind erosion of storage piles per day per acre
15 G = Silt content (%) (from Table A9-9-E-1 for blended ore and dirt)
37 H = Mean number of days per year with at least 0.01 inches of precipitation (from WRCC for Bakersfield Airport Station)
0.3 I = Percentage of time that the unobstructed wind speed exceeds 12 mph at mean pile height
0.5 J = Fraction of TSP that is PM10 = 0.5
0.237 lb/acre/day

wind speed percentage based on 2000-04 (5 yrs) of wind speed data as recorded at Bakersfield Airport station

Source	Quantity	Size of Pile (acre)	Days / year	Watering Control Efficiency	PM_{10} Emissions (tons/yr)	$PM_{2.5}$ Emissions (tons/yr)
Cover Storage Pile	40	0.25	365	67%	0.14	0.030

Water efficiency from CEQA Table 11-4 watering 3 times daily or using chemical suppressants
pile size and number are assumed
Days per year accounts for weekend days also, not just work days

Hydrogen Energy, Inc *5/21/2009*
HECA Project

Travel on unpaved road

$F = 2.1 * G/12 * H/30 * (J/3)^{0.7} * (I/4)^{0.5} * (365-K)/365$ SCAQMD Table A9-9-D

Emission factor for vehicle travel on unpaved roads (lb/VMT)

4 G = Surface silt loading (%) (value for gravel road)

5 H = Mean vehicle speed (mph)

value listed in table I = Mean number of wheels on vehicle

value listed in table J = Mean vehicle weight (ton)

37 K = Mean number of days per year with at least 0.01 inches of precipitation (from WRCC for Bakersfield Airport Station)

Vehicle Type	Quantity per year	Round Trips /Day/ Unit	Round Trip Distance (mile)	Annual VMT (all units)	Mean Vehicle Weight (tons)	Number of Wheels on Vehicle	PM_{10} EF (lbs/VMT)	Watering Control Efficiency	PM_{10} Emissions (tons/yr)	$PM_{2.5}$ Emissions (tons/yr)
Concrete Pumper Truck	6	2	1	12.0	30	10	0.83	67%	0.002	0.000
Dump Truck	0			0.0	15	10	0.51	67%	0.000	0.000
Service Truck - 1 ton	0			0.0	15	10	0.51	67%	0.000	0.000
Pile Driver Truck	0			0.0	15	10	0.51	67%	0.000	0.000
Truck - Fuel/Lube	0			0.0	15	10	0.51	67%	0.000	0.000
Tractor Truck 5th Wheel	0			0.0	11	10	0.41	67%	0.000	0.000
Trucks - Pickup 3/4 ton	60	10	0.5	300.0	3	4	0.10	67%	0.005	0.001
Trucks - 3 ton	24	4	1	96.0	11	10	0.41	67%	0.007	0.001
Truck - Water	12	4	10	480.0	25	10	0.73	67%	0.058	0.012
Air Compressor 185 CFM	0			0.0	0.5	2	0.02	67%	0.000	0.000
Air Compressor 750 CFM	48	1	0.1	4.8	0.5	2	0.02	67%	0.000	0.000
Articulating Boom Platform	0			0.0	5	10	0.24	67%	0.000	0.000
Bulldozer D10R	0			0.0	35	2	0.41	67%	0.000	0.000
Bulldozer D4C	0			0.0	15	2	0.23	67%	0.000	0.000
Concrete Trowel Machine	12	2	0.5	12.0	15	8	0.46	67%	0.001	0.000
Concrete Vibrators	9	1	0.1	0.9	0.25	0	0.00	67%	0.000	0.000
Cranes - Mobile 35 ton	80	1	0.5	40.0	25	12	0.80	67%	0.005	0.001
Cranes - Mobile 45 ton	0			0.0	35	2	0.41	67%	0.000	0.000
Crane - Mobile 65 ton	70	1	0.5	35.0	45	2	0.49	67%	0.003	0.001
Cranes 100 / 150 ton cap	48	1	0.5	24.0	50	12	1.30	67%	0.005	0.001
Diesel Powered Welder	41	1	0.1	4.1	0.5	2	0.02	67%	0.000	0.000
Backhoe/loader	6	5	0.5	15.0	11	4	0.26	67%	0.001	0.000
Earth Scraper	0			0.0	40	4	0.64	67%	0.000	0.000
Loader	0			0.0	25	4	0.46	67%	0.000	0.000
Motor Grader	0			0.0	20	6	0.48	67%	0.000	0.000
Excavator - Trencher	0			0.0	17	4	0.35	67%	0.000	0.000
Fired Heaters	53	1	0.1	5.3	0.25	0	0.00	67%	0.000	0.000
Forklift	36	5	0.5	90.0	10	4	0.24	67%	0.004	0.001
Fusion Welder	0			0.0	0.25	2	0.01	67%	0.000	0.000
Heavy Haul / Cranes	32	1	0.25	8.0	75	2	0.71	67%	0.001	0.000
Light Plants	84	1	0.1	8.4	0.5	4	0.03	67%	0.000	0.000
Portable Compaction Roller	10	1	0.5	5.0	3	3	0.09	67%	0.000	0.000
Portable Compaction - Vibratory Plate	18	1	0.1	1.8	0.1	0	0.00	67%	0.000	0.000
Portable Compaction - Vibratory Ram	0			0.0	0.25	0	0.00	67%	0.000	0.000
Pumps	24	1	0	0.0	0.1	0	0.00	67%	0.000	0.000
Portable Power Generators	60	1	0.1	6.0	0.5	4	0.03	67%	0.000	0.000
Truck Crane - Greater than 200 ton	42	1	0.5	21.0	50	12	1.30	67%	0.005	0.001
Truck Crane - Greater than 300 ton	27	1	0.5	13.5	60	12	1.48	67%	0.003	0.001
Vibratory Roller 20 ton	0			0.0	20	3	0.34	67%	0.000	0.000
								Total	**0.099**	**0.021**

worker personal vehicles	946	1	0.5	473.0	3	4	0.10	85%	0.004	0.001

worker personal vehicle data from Table 2-26, Estimated Monthly Construction Workforce from AFC, average for months 17-28 divided by 1.25 employees per vehicle

Assumed maximum travel speed is 5 mph
Equipment weight from SCAQMD Table A9-9-D-3 and various websites
Water efficiency from CEQA Table 11-4 watering 3 times daily or using chemical suppressants
except for worker vehicles - parking area will be graveled and main road onsite will be paved
$PM_{2.5}$ emission factors from updated CEIDARS List with PM2.5 fractions.
$PM_{2.5}$ numbers obtained by multiplying the PM_{10} values by fraction in CEIDARS list for appropriate fugitive dust sources.
Water trucks operate at least 4 times per day.
Truck quantity based on monthly maximums

Hydrogen Energy, Inc
HECA Project

5/21/2009

Model Inputs:

	Main		Parking		Lay123	
	Total MODEL EMISSION RATE (lb/hr)		**Total MODEL EMISSION RATE (lb/hr)**		**Total MODEL EMISSION RATE (lb/hr)**	
	PM_{10}	**$PM_{2.5}$**	**PM_{10}**	**$PM_{2.5}$**	**PM_{10}**	**$PM_{2.5}$**
Emission location	**Annual**	**Annual**	**Annual**	**Annual**	**Annual**	**Annual**
Various	0.0371	0.0078	0.0152	0.0032	0.0873	0.0183

Location	**X (m)**	**Y (m)**	**AREA (m^2)**	**percent of total area**
LAY123	1400	450	630000	0.626
main	575	465	267375	0.266
parking	215	510	109650	0.109
Total Construction Area			1007025	1.000

MODEL EMISSION RATE per Source (g/s-m2)

PM_{10}	**$PM_{2.5}$**
Annual	**Annual**
1.75E-08	3.66E-09
1.75E-08	3.66E-09
1.75E-08	3.66E-09

Roads (per 18 road segments)

Total MODEL EMISSION RATE (lb/hr)	
PM_{10}	**$PM_{2.5}$**
Annual	**Annual**
1.13E-04	2.40E-05

Hydrogen Energy, Inc *5/21/2009*
HECA Project

Emission Factor for On-Site On Road Vehicles

Onroad Vehicle	Fuel Type	Vehicle Count	Weight (lbs)	Vehicle Type	EF (lbs/mile) TOC	CO	NOx	PM_{10}	SO_2	CO_2	N_2O	CH_4	CO_2e
Passenger Vehicles	G/D	857.333333	4000	LDA	0.0009	0.0119	0.0009	0.0002	2.20E-05	2.36E+00	8.82E-05	1.10E-04	2.393

Emission factors from EMFAC2007 (version 2.3) for 2010

Emission Calculation for On Road Vehicles

	Total Op. Hours / Project	Trips or Hours/Day/ Unit	Round Trip Distance (miles)	Daily Total VMT	Daily Emissions (lbs) TOC	CO	NO_x	PM_{10}	SO_2	$PM_{2.5}$	CO_2	N_2O	CH_4	CO_2e
Highway Vehicles	**Total Days**													
Passenger Vehicles	264	2	1.5	2572	2.4	30.6	2.3	0.5	0.06	0.1	6062.35	0.23	0.28	6155
					Annual Emission Rate (tons/year)									
					TOC	**CO**	**NO_x**	**PM_{10}**	**SO_2**	**$PM_{2.5}$**	**CO_2**	**N_2O**	**CH_4**	**CO_2e**
					0.31	4.04	0.31	0.06	0.01	0.01	800.23	0.03	0.04	812.46

grams to pounds conversion = 0.0022046

Passenger vehicle travel on paved roads

Equipment	Monthly Average Number of Employee Vehicles	Hours/Day	Days/year (mos 1-12)	Miles traveled per trip	Total miles traveled per year	PM_{10} Emissions (lb/hr)	PM_{10} Emissions (lb/day)	PM_{10} Emissions (tons/yr)	$PM_{2.5}$ Emissions (lb/hr)	$PM_{2.5}$ Emissions (lb/day)	$PM_{2.5}$ Emissions (tons/yr)
All Employee Vehicles	857	2	264	1.5	339504	4.12	8.23	1.09	0.70	1.39	0.18

0.0064 PM_{10} lb/VMT (from Table A9-9-B-1 for major streets/highways) CEQA Table A9-9-B

Employee numbers based on total employees on site during Month 21 (1286)
Assumed 1.5 employees per vehicle
onsite distance measured from draft plot plan for worker vehicles

Hydrogen Energy, Inc
HECA Project

5/21/2009

Emission Calculations for On Road Vehicles

	Total Days / Year	Daily VMT / Vehicle	Annual VMT	Daily Emissions (lbs/day)									
				PM_{10}	$PM_{2.5}$	CO	VOC	NOx	SO_2	CO_2	N_2O	CH_4	CO_2e
Heavy Truck (concrete, water, dump trucks)	264	2	10,560	0.25	0.23	1.74	1.08	4.04	0.00	339.10	0.00	0.01	340.83
Light Truck (service truck)	264	2	1,584	0.01	0.01	0.13	0.01	0.20	0.00	19.91	0.00	0.00	19.96
Personal Commuting Vehicles	264	1.5	339,504	0.23	0.21	15.29	1.18	1.17	0.03	3031.18	0.11	0.14	3077.50
Light delivery truck (e.g. Fed-Ex)	264	2	1,584	0.00	0.00	0.05	0.01	0.11	0.00	7.00	0.00	0.00	7.05
Heavy delivery truck (e.g. flat beds carrying construction eqp)	264	2	2,112	0.05	0.05	0.35	0.22	0.81	0.00	67.82	0.00	0.00	68.17
			Total	0.55	0.50	17.55	2.50	6.34	0.03	3465.00	0.12	0.15	3513.50
Onroad Vehicle Combustion				**Annual Emission Rate (tons/year)**									
				PM_{10}	$PM_{2.5}$	CO	VOC	NOx	SO_2	CO_2	N_2O	CH_4	CO_2e
Heavy Truck (concrete, water, dump trucks)				0.03	0.03	0.23	0.14	0.53	0.00	44.76	0.00	0.00	44.99
Light Truck (service truck)				0.00	0.00	0.02	0.00	0.03	0.00	2.63	0.00	0.00	2.63
Personal Commuting Vehicles				0.03	0.03	2.02	0.16	0.15	0.00	400.12	0.01	0.02	406.23
Light delivery truck (e.g. Fed-Ex)				0.00	0.00	0.01	0.00	0.02	0.00	0.92	0.00	0.00	0.93
Heavy delivery truck (e.g. flat beds carrying construction eqp)				0.01	0.01	0.05	0.03	0.11	0.00	8.95	0.00	0.00	9.00
			Total	**0.07**	**0.06**	**2.27**	**0.30**	**0.71**	**0.00**	**447.50**	**0.02**	**0.02**	**453.85**

Onroad Vehicle Fugitive	Daily PM_{10} Emissions (lb/day)	Annual PM_{10} Emissions (tons/yr)	Daily $PM_{2.5}$ Emissions (lb/day)	Annual $PM_{2.5}$ Emissions (tons/yr)
Heavy Truck (concrete, fuel, water, dump trucks)	6.0	0.79	1.01	0.13
Light Truck (service truck)	0.9	0.12	0.15	0.02
Personal Commuting Vehicles	8.2	1.09	1.39	0.18
Light delivery truck (e.g. Fed-Ex)	0.9	0.12	0.15	0.02
Heavy delivery truck (e.g. flat beds carrying construction eqp)	1.2	0.16	0.20	0.03
Total	**17.18**	**2.27**	**2.90**	**0.38**

Combustion Emission Factor for Off-Site On Road Vehicles

Onroad Vehicle Combustion	Fuel Type	Daily Vehicle	Vehicle Type	EF (lbs/mile)[1]									
				PM_{10}	$PM_{2.5}$	CO	VOC	NOx	SO_2	CO_2	N_2O	CH_4	CO_2e
Heavy Truck (concrete, water, dump trucks)	Diesel	20	HHD	0.0063	0.0058	0.0434	0.0271	0.1010	0.0001	8.4774	0.000110229	0.000132	8.521
Light Truck (service truck)	Diesel	3	MHD	0.0021	0.0020	0.0225	0.0018	0.0337	0.0000	3.3179	6.61376E-05	2.2E-05	3.326
Personal Commuting Vehicles	Gasoline	857	Passenger	0.0002	0.0002	0.0119	0.0009	0.0009	0.0000	2.3571	8.81834E-05	0.00011	2.393
Light delivery truck (e.g. Fed-Ex)	Diesel	3	LHD2	0.0004	0.0003	0.0078	0.0013	0.0190	0.0000	1.1661	6.61376E-05	2.2E-05	1.174
Heavy delivery truck (e.g. flat beds carrying construction eqp)	Diesel	4	HHD	0.0063	0.0058	0.0434	0.0271	0.1010	0.0001	8.4774	0.000110229	0.000132	8.521
			Total	0.0152	0.0140	0.1289	0.0582	0.2556	0.0002	23.7959	0.0004	0.0004	23.935

Daily vehicle count based on 40 truck trips per day during construction (data from client).

Hydrogen Energy, Inc *5/21/2009*
HECA Project

Emission Calculation for On Road Vehicles

	Total Days / Year	Daily VMT / Vehicle	Annual VMT	Daily Emissions (lbs/day)									
				PM_{10}	$PM_{2.5}$	CO	VOC	NOx	SO_2	CO_2	N_2O	CH_4	CO_2e
Heavy Truck (concrete, water, dump trucks)	264	38	200,640	4.78	4.39	32.97	20.57	76.77	0.06	6442.84	0.08	0.10	6475.77
Light Truck (service truck)	264	38	30,096	0.24	0.22	2.56	0.21	3.84	0.00	378.24	0.01	0.00	379.18
Personal Commuting Vehicles	264	38.5	8,713,936	5.89	5.42	392.44	30.27	30.13	0.73	77800.16	2.91	3.64	78989.18
Light delivery truck (e.g. Fed-Ex)	264	38	30,096	0.04	0.04	0.88	0.15	2.16	0.00	132.94	0.01	0.00	133.88
Heavy delivery truck (e.g. flat beds carrying construction eqp)	264	38	40,128	0.96	0.88	6.59	4.11	15.35	0.01	1288.57	0.02	0.02	1295.15
			Total	11.91	10.96	435.44	55.32	128.25	0.81	86042.76	3.03	3.76	87273.16
Onroad Vehicle Combustion				Annual Emission Rate (tons/year)									
				PM_{10}	$PM_{2.5}$	CO	VOC	NOx	SO_2	CO_2	N_2O	CH_4	CO_2e
Heavy Truck (concrete, water, dump trucks)				0.63	0.58	4.35	2.72	10.13	0.01	850.46	0.01	0.01	854.80
Light Truck (service truck)				0.03	0.03	0.34	0.03	0.51	0.00	49.93	0.00	0.00	50.05
Personal Commuting Vehicles				0.78	0.72	51.80	4.00	3.98	0.10	10269.62	0.38	0.48	10426.57
Light delivery truck (e.g. Fed-Ex)				0.01	0.00	0.12	0.02	0.29	0.00	17.55	0.00	0.00	17.67
Heavy delivery truck (e.g. flat beds carrying construction eqp)				0.13	0.12	0.87	0.54	2.03	0.00	170.09	0.00	0.00	170.96
			Total	**1.44**	**1.33**	**56.49**	**6.74**	**14.62**	**0.10**	**11170.00**	**0.40**	**0.49**	**11331.43**

Note 1: SCAQMD Prepared - Highest (Most Conservative) Emfac 2007 (version 2.3)
Emission Factors for On-Road Personal Commuting Vehicles and Trucks
Scenario Year: 2010
All model years in the range 1965 to 2010

Hydrogen Energy, Inc *5/21/2009*
HECA Project

Fugitive Emission Factor for On Road Vehicles				
Onroad Vehicle Fugitive	**Daily PM_{10} Emissions (lb/day)**	**Annual PM_{10} Emissions (tons/yr)**	**Daily $PM_{2.5}$ Emissions (lb/day)**	**Annual $PM_{2.5}$ Emissions (tons/yr)**
Heavy Truck (concrete, fuel, water, dump trucks)	113.3	14.96	19.15	2.53
Light Truck (service truck)	17.0	2.24	2.87	0.38
Personal Commuting Vehicles	211.2	27.88	35.70	4.71
Light delivery truck (e.g. Fed-Ex)	17.0	2.24	2.87	0.38
Heavy delivery truck (e.g. flat beds carrying construction eqp)	22.7	2.99	3.83	0.51
Total	**381.22**	**50.32**	**64.43**	**8.50**

Personal Commuting Vehicles EF= 0.0064 PM10 lb/VMT (from CEQA Handbook, Table A9-9-B-1 for major streets/highways)
Truck Travel on paved roads EF = 0.1491 PM10 lb/VMT (from CEQA Handbook Table A9-9-C-1 for major streets/highways)

Assumptions:

"Heavy Truck" assumes the average number of concrete, water, & dump trucks onsite for the daily vehicle count, which are used during an average 12 month period per the equip. schedule
"Light Truck" assumes the average number of service trucks for the daily vehicle count, which are used during a traveling 12 month period per the equip. schedule

Assumed average distance traveled off site for all employees commuting will be 20 miles
times 2 for return trip = 40 miles
22 days per month of construction, average

Employee numbers based on average employees on site in Month 21 1286 data from Table 2-26, Estimated Monthly Construction Workforce from AFC
Average daily vehicles 857
Number of workers per commuter vehicle = 1.5

CO_2 GWP (SAR, 1996) = 1
CH_4 GWP (SAR, 1996) = 21
N_2O GWP (SAR, 1996) = 310

Appendix D1.2

Operating Emissions
Stationary Sources

Modeling Parameters for Emission Sources — Summary

Hydrogen Energy, Inc — *5/21/2009*
HECA Project

Parameter		CTG/HRSG , H2-rich Fuel			CTG/HRSG , Natural Gas Fuel			CTG/HRSG Co-Firing **	Auxiliary CTG		
		100% Load [2]	80% Load	60% Load	100% Load[3]	80% Load	60% Load	100% Load	100% Load	75% Load	50% Load
English Units											
Stack height above grade[1]	ft	213	213	213	213	213	213	213	110	110	110
Stack diameter	ft	20	20	20	20	20	20	20	16	16	16
Stack outlet temperature	^oF	200	190	180	180	170	160	190	740	740	760
Stack exit flow, act	ft^3/s	19,900	16,300	13,400	16,700	14,300	11,900	18,300	14,100	12,400	10,100
Metric Units											
Stack height above grade[1]	m	65.0	65.0	65.0	65.0	65.0	65.0	65.0	33.5	33.5	33.5
Stack diameter	m	6.1	6.1	6.1	6.1	6.1	6.1	6.1	4.9	4.9	4.9
Stack outlet temperature	K	366.5	360.9	355.4	355.4	349.8	344.3	360.9	666.5	666.5	677.6
Stack exit flow, act	m^3/s	563.5	461.6	379.4	472.9	404.9	337.0	518.2	399.3	351.1	286.0
Stack Area	m^2	29.2	29.2	29.2	29.2	29.2	29.2	29.2	18.7	18.7	18.7
Stack exit velocity, act	m/s	19.3	15.8	13.0	16.2	13.9	11.5	17.8	21.4	18.8	15.3

Parameter		Aux Boiler	Gasification Flare(4)	SRU Flare(6)	Rectisol Flare (6)	Tail Gas Oxidizer[7]	Gasifier Warming Vent (ea.)	Cooling Towers (per cell)[5]	Diesel Generator (ea.)	Fire Pump Engine	CO_2 Vent
English Units											
Stack height above grade[1]	ft	80	250	250	250	165	210	55	20	20	260
Stack diameter	ft	4.5	9.8	2	1.3	2.5	1.0	30	1.2	0.7	3.5
Stack outlet temperature	^oF	300	(NA)	(NA)	(NA)	1200	150	75	760	850	65
Stack exit flow, act	ft^3/s	480	0.5/900	0.3/36	0.3	120	68	18,500	250	60	1,765
Metric Units											
Stack height above grade[1]	m	24.4	76.2	76.2	76.2	50.3	64.0	16.8	6.1	6.1	79.2
Stack diameter	m	1.4	3.0	0.6	0.4	0.8	0.3	9.1	0.4	0.2	1.1
Stack outlet temperature	K	422.0	(NA)	(NA)	(NA)	922.0	338.7	297.0	677.6	727.6	291.5
Stack exit flow, act	m^3/s	13.6	0.01/25.49	0.01/1.02	0.01	3.4	1.9	523.9	7.1	1.7	50.0
Stack Area	m^2	1.5	7.0	0.3	0.1	0.5	0.1	65.7	0.1	0.0	0.9
Stack exit velocity, act	m/s	9.2	0.001/3.64	0.03/3.4	0.1	7.5	26.4	8.0	67.4	47.5	55.9

Notes:

(1) Minimum stack height assumed for worst-case dispersion.

(2) Volume Flow Value shown in table for H2-rich fuel is based on full load syn gas combustion (relatively constant for varying ambient temperatures). Duct firing of the HSRG changes the stack volumetric flow by about 1% or less.

(3) Full load stack flow for natural gas combustion will vary from the value shown in the table during warm summer ambient temperatures to about 18,000 act ft3/sec for winter ambient temperatures. Stack flow rates for co-firing of H2-rich gas and natural gas will range between the values shown for the two fuels separately.

(4) Based on gasifier startup; stack parameters estimated from a previous project, to be confirmed by current flare suppliers.

(5) Thirteen cells estimated for power block cooling tower; four cells estimated for process cooling tower, and four cells estimated for the ASU cooling tower.

(6) Waste gas heat release, 10^6 Btu/hr, HHV. First exit flow value is normal pilot gas, the second value is the maximum startup heat release (Rectisol Flare has no planned operation than standby with pilot on)

(7) Estimated oxidizer stack outlet flow for normal operating case of miscellaneous vent gas disposal; SRU startup case will be about 50% greater.

** HRSG Stack Cofiring is estimated assuming 47% Syngas and the balance natural gas

Parameter		Feed Stock - Dust Collection Units								
		DC-1	**DC-2**	**DC-3**	**DC-4**	**DC-5**	**DC-6**			
English Units										
Ground elevation	ft	289	289	289	289	289	289			
Stack elevation	ft	314	459	428	314	368	428			
Stack height above grade	ft	25	170	139	25	79	139			
Stack diameter	ft	1.7	2.7	1.8	1.4	1.4	0.8			
Stack outlet temperature (1)	^{o}F	Ambient	Ambient	Ambient	Ambient	Ambient	Ambient			
Stack exit flow, act	ft^3/s	108	273	127	81	78	21			
Metric Units										
Stack height above grade	m	7.6	51.8	42.4	7.6	24.1	42.4			
Stack diameter	m	0.5	0.8	0.6	0.4	0.4	0.2			
Stack outlet temperature (1)	K	Ambient	Ambient	Ambient	Ambient	Ambient	Ambient			
Stack exit flow, act	m^3/s	3.1	7.7	3.6	2.3	2.2	0.6			
Stack Area	m^2	0.2	0.5	0.2	0.1	0.1	0.0			
Stack exit velocity, act	m/s	15.0	14.9	14.7	15.7	15.1	14.2			

(1) Assume ambient temperature

Total Project Modeling Emission Rates

Summary

Hydrogen Energy, Inc *5/21/2009*
HECA Project

Modeling Worst-Case 1 hr Emissions

	CTG/HRSG Maximum (1)	Auxiliary CTG	Cooling Towers (2)			Auxiliary Boiler	Emergency Generators (3)	Fire Water Pump	Gasification Flare	SRU Flare	Rectisol Flare	Tg Thermal Oxidizer	CO_2 Vent	Gasifier (4)	Feedstock					
			Power Block	Process Area	ASU										DC-1	DC-2	DC-3	DC-4	DC-5	DC-6
	(g/sec)	(g/sec)	(g/sec/cell)	(g/sec/cell)	(g/sec/cell)	(g/sec)	(g/sec/gen)	(g/sec)	(g/sec)	(g/sec)	(g/sec)	(g/sec)	(g/sec)	(g/sec)	(g/sec)	(g/sec)	(g/sec)	(g/sec)	(g/sec)	(g/sec)
NOx	21.0	2.6	--	--	--	0.2	0.4	0.2	7.9	0.544	0.005	0.6	--	0.2	--	--	--	--	--	--
CO	211.6	8.7	--	--	--	0.7	0.2	0.4	113.4	0.363	0.003	0.5	53.4	0.2	--	--	--	--	--	--
SO_2	0.9	0.2	--	--	--	0.04	0.004	0.0007	0.0001	2.19	0.0001	0.3	--	0.00	--	--	--	--	--	--
H_2S	--	--	--	--	--	--	--	--	--	--	--	--	0.6	--	--	--	--	--	--	--

(1) HRSG modeling emission rates represents the maximum emissions rate from a composite firing scenario (all three fuels)
(2) There are three separate cooling towers. The modeling rates are per cell.
(3) There are two separate generators. Modeling rates are shown per individual generator.
(4) There are three gasifiers. The modeling rate shown is per individual gasifier. However, only one gasifier warming will be operational at any one time.

Modeling Worst-Case 3 hr Emissions

	CTG/HRSG Maximum (1)	Auxiliary CTG	Cooling Towers (2)			Auxiliary Boiler	Emergency Generators (3)	Fire Water Pump	Gasification Flare	SRU Flare	Rectisol Flare	Tg Thermal Oxidizer	CO_2 Vent	Gasifier (4)	Feedstock					
			Power Block	Process Area	ASU										DC-1	DC-2	DC-3	DC-4	DC-5	DC-6
	(g/sec)	(g/sec)	(g/sec/cell)	(g/sec/cell)	(g/sec/cell)	(g/sec)	(g/sec/gen)	(g/sec)	(g/sec)	(g/sec)	(g/sec)	(g/sec)	(g/sec)	(g/sec)	(g/sec)	(g/sec)	(g/sec)	(g/sec)	(g/sec)	(g/sec)
SO_2	0.9	0.2	--	--	--	0.04	0.002	0.0005	0.0001	2.19	0.00	0.3	--	0.00	--	--	--	--	--	--

(1) HRSG modeling emission rates represents the maximum emissions rate from a composite firing scenario (all three fuels)
(2) There are three separate cooling towers. The modeling rates are per cell.
(3) There are two separate generators. Modeling rates are shown per individual generator.
(4) There are three gasifiers. The modeling rate shown is per individual gasifier. However, only one gasifier warming will be operational at any one time.

Modeling Worst-Case 8 hr Emissions

	CTG/HRSG Maximum (1)	Auxiliary CTG	Cooling Towers (2)			Auxiliary Boiler	Emergency Generators (3)	Fire Water Pump	Gasification Flare	SRU Flare	Rectisol Flare	Tg Thermal Oxidizer	CO_2 Vent	Gasifier (4)	Feedstock					
			Power Block	Process Area	ASU										DC-1	DC-2	DC-3	DC-4	DC-5	DC-6
	(g/sec)	(g/sec)	(g/sec/cell)	(g/sec/cell)	(g/sec/cell)	(g/sec)	(g/sec/gen)	(g/sec)	(g/sec)	(g/sec)	(g/sec)	(g/sec)	(g/sec)	(g/sec)	(g/sec)	(g/sec)	(g/sec)	(g/sec)	(g/sec)	(g/sec)
CO	164.9	2.7	--	--	--	0.7	0.06	0.1	113.4	0.138	0.003	0.5	53.4	0.2	--	--	--	--	--	--

(1) HRSG modeling emission rates represents the maximum emissions rate from a composite firing scenario (all three fuels)
(2) There are three separate cooling towers. The modeling rates are per cell.
(3) There are two separate generators. Modeling rates are shown per individual generator.
(4) There are three gasifiers. The modeling rate shown is per individual gasifier. However, only one gasifier warming will be operational at any one time.

Total Project Modeling Emission Rates

Summary

Hydrogen Energy, Inc *5/21/2009*
HECA Project

Modeling Worst-Case 24 Hour Emission Rate

	CTG/HRSG Maximum (1)	Auxiliary CTG	Cooling Towers (2)			Auxiliary Boiler	Emergency Generators (3)	Fire Water Pump	Gasification Flare	SRU Flare	Rectisol Flare	Tg Thermal Oxidizer	CO_2 Vent	Gasifier (4)	Feedstock					
			Power Block	Process Area	ASU										DC-1	DC-2	DC-3	DC-4	DC-5	DC-6
	(g/sec)	(g/sec)	(g/sec/cell)	(g/sec/cell)	(g/sec/cell)	(g/sec)	(g/sec/gen)	(g/sec)	(g/sec)	(g/sec)	(g/sec)	(g/sec)	(g/sec)	(g/sec)	(g/sec)	(g/sec)	(g/sec)	(g/sec)	(g/sec)	(g/sec)
SO_2	0.9	0.2	--	--	--	0.04	0.0003	0.0001	0.0001	0.2742	0.0001	0.3	--	0.00	--	--	--	--	--	--
PM_{10}	3.0	0.8	0.038	0.030	0.028	0.09	0.002	0.0002	0.0002	0.0018	0.0001	0.02	--	0.02	0.030	0.076	0.041	0.026	0.025	0.003
$PM_{2.5}$ (5)	3.0	0.8	0.023	0.018	0.017	0.09	0.002	0.0002	0.0002	0.0018	0.0001	0.02	--	0.02	0.009	0.022	0.012	0.008	0.007	0.001

(1) HRSG modeling emission rates represents the maximum emissions rate from a composite firing scenario (all three fuels)
(2) There are three separate cooling towers. The modeling rates are per cell.
(3) There are two separate generators. Modeling rates are shown per individual generator.
(4) There are three gasifiers. The modeling rate shown is per individual gasifier. However, only one gasifier warming will be operational at any one time.
(5) Where PM_{10} = $PM_{2.5}$, it is assumed that PM_{10} is 100% $PM_{2.5}$

Modeling Annual Average Emission Rate

	CTG/HRSG Maximum (1)	Auxiliary CTG	Cooling Towers (2)			Auxiliary Boiler	Emergency Generators (3)	Fire Water Pump	Gasification Flare	SRU Flare	Rectisol Flare	Tg Thermal Oxidizer	CO_2 Vent	Gasifier (4)	Feedstock					
			Power Block	Process Area	ASU										DC-1	DC-2	DC-3	DC-4	DC-5	DC-6
	(g/sec)	(g/sec)	(g/sec/cell)	(g/sec/cell)	(g/sec/cell)	(g/sec)	(g/sec/gen)	(g/sec)	(g/sec)	(g/sec)	(g/sec)	(g/sec)	(g/sec)	(g/sec)	(g/sec)	(g/sec)	(g/sec)	(g/sec)	(g/sec)	(g/sec)
NO_X	4.8	0.5	--	--	--	0.05	0.002	0.003	0.1	0.005	0.005	0.3	--	0.05	--	--	--	--	--	--
CO	4.3	0.8	--	--	--	0.2	0.001	0.005	1.4	0.003	0.003	0.26	3.1	0.04194	--	--	--	--	--	--
VOC	0.9	0.1	--	--	--	0.02	0.0005	0.0002	0.0001	0.00005	0.00005	0.01	0.1	0.00326	--	--	--	--	--	--
SO_2	0.8	0.1	--	--	--	0.01	0.00002	0.00001	0.0001	0.0016	0.0001	0.3	--	0.00095	--	--	--	--	--	--
PM_{10}	2.9	0.4	0.036	0.028	0.027	0.02	0.0001	0.00003	0.0002	0.0001	0.0001	0.01	--	0.004	0.006	0.015	0.036	0.023	0.022	0.0004
$PM_{2.5}$ (5)	2.9	0.4	0.022	0.017	0.016	0.02	0.0001	0.00003	0.0002	0.0001	0.0001	0.01	--	0.004	0.002	0.004	0.011	0.0068	0.007	0.0001
H_2S	--	--	--	--	--	--	--	--	--	--	--	--	0.0	--	--	--	--	--	--	--

(1) HRSG modeling emission rates represents the maximum emissions rate from a composite firing scenario (all three fuels)
(2) There are three separate cooling towers. The modeling rates are per cell.
(3) There are two separate generators. Modeling rates are shown per individual generator.
(4) There are three gasifiers. The modeling rate shown is per individual gasifier. However, only one gasifier warming will be operational at any one time.
(5) Where PM_{10} = $PM_{2.5}$, it is assumed that PM_{10} is 100% $PM_{2.5}$

Total Annual Project Emissions — Emissions Summary

Hydrogen Energy, Inc — *5/21/2009*
HECA Project

Pollutant	Total Annual (ton/yr)	CTG/HRSG Maximum (1) (ton/yr)	Auxiliary CTG (ton/yr)	Cooling Towers (2) (ton/yr)	Auxiliary Boiler (ton/yr)	Emergency Generators (3) (ton/yr)	Fire Water Pump (ton/yr)	Gasification Flare (ton/yr)	SRU Flare (ton/yr)	Rectisol Flare (ton/yr)	Tg Thermal Oxidizer (ton/yr)	CO_2 Vent (ton/yr)	Gasifier Warming (ton/yr)	Feedstock (4) (ton/yr)
NO_X	203.8	167.2	17.4	--	1.7	0.2	0.1	4.3	0.2	0.2	10.9	--	1.8	--
CO	350.3	150.2	27.6	--	5.8	0.1	0.2	48.8	0.1	0.1	9.1	106.9	1.5	--
VOC	40.7	32.5	4.6	--	0.6	0.03	0.01	0.003	0.002	0.002	0.3	2.4	0.1	--
SO_2	42.2	29.2	3.8	--	0.3	0.001	0.0003	0.004	0.055	0.003	8.8	--	0.03	--
PM_{10}	141.1	99.7	12.3	24.1	0.8	0.01	0.001	0.007	0.004	0.004	0.4	--	0.1	3.6
$PM_{2.5}$ (5)	128.9	99.7	12.3	14.5	0.8	0.01	0.001	0.007	0.004	0.004	0.4	--	0.1	1.0
NH_3	100.0	75.9	24.1	--	--	--	--	--	--	--	--	--	--	--
H_2S	1.3	--	--	--	--	--	--	--	--	--	--	1.3	--	--
CO_2e (6)	383,317	5,290	198,200	--	16,466	146	29	6,348	176	139	4,797	150,011	1,716	--

(1) Total annual HRSG emissions represents the maximum emissions rate from a composite firing scenario (all thee fuels)
(2) Includes contributions from all three cooling towers
(3) Includes contributions from both emergency generators
(4) Feedstock emissions are shown as the contribution of all dust collection points.
(5) Where PM_{10} = $PM_{2.5}$, it is assumed that PM_{10} is 100% $PM_{2.5}$
(6) CO_2e emission rates are shown as metric tons (tonnes)

CTG/HRSG Stack - Comparison of all Firing Scenarios — Emissions Summary

Hydrogen Energy, Inc — *5/21/2009*
HECA Project

Summary of CTG/HRSG Emission Rates Under the Three Different Firing Scenarios

Average Annual Emissions per Turbine				
	CTG/HRSG - Nat Gas (ton/yr/CT)	**CTG/HRSG - Syn Gas** (ton/yr/CT)	**CTG/HRSG - Co Firing** (ton/yr/CT)	**Maximum** (ton/yr/CT)
NO_X	148.0	167.2	162.9	167.2
CO	138.9	103.5	150.2	150.2
VOC	30.0	19.0	32.5	32.5
SO_2	20.0	28.4	29.2	29.2
$PM_{10} = PM_{2.5}$	74.9	99.7	99.7	99.7
NH_3	67.1	75.9	73.9	75.9

Modeling Worst-Case 1 hr Emissions per Turbine				
	CTG/HRSG - Nat Gas (g/sec/CT)	**CTG/HRSG - Syn Gas** (g/sec/CT)	**CTG/HRSG - Co Firing** (g/sec/CT)	**Maximum** (g/sec/CT)
NOx	21.0	21.0	21.0	21.0
CO	211.6	211.6	211.6	211.6
SO_2	0.6	0.86	0.93	0.9

Modeling Worst-Case 3 hr Emissions per Turbine				
	CTG/HRSG - Nat Gas (g/sec/CT)	**CTG/HRSG - Syn Gas** (g/sec/CT)	**CTG/HRSG - Co Firing** (g/sec/CT)	**Maximum** (g/sec/CT)
SO_2	0.6	0.86	0.93	0.9

CTG/HRSG Stack - Comparison of all Firing Scenarios — Emissions Summary

Hydrogen Energy, Inc — *5/21/2009*
HECA Project

Modeling Worst-Case 8 hr Emissions per Turbine				
	CTG/HRSG - Nat Gas (g/sec/CT)	**CTG/HRSG - Syn Gas** (g/sec/CT)	**CTG/HRSG - Co Firing** (g/sec/CT)	**Maximum** (g/sec/CT)
CO	164.9	164.8	164.9	164.9

Modeling Worst-Case 24 Hour Emission Rate				
	CTG/HRSG - Nat Gas (g/sec/CT)	**CTG/HRSG - Syn Gas** (g/sec/CT)	**CTG/HRSG - Co Firing** (g/sec/CT)	**Maximum** (g/sec/CT)
SO_2	0.6	0.86	0.93	0.9
$PM_{10} = PM_{2.5}$	2.4	3.0	3.0	3.0

Modeling Annual Average Emission Rate per Turbine				
	CTG/HRSG - Nat Gas (g/sec/CT)	**CTG/HRSG - Syn Gas** (g/sec/CT)	**CTG/HRSG - Co Firing** (g/sec/CT)	**Maximum** (g/sec/CT)
NO_X	4.3	4.8	4.7	4.8
CO	4.0	3.0	4.3	4.3
VOC	0.9	0.5	0.9	0.9
SO_2	0.6	0.82	0.84	0.8
$PM_{10} = PM_{2.5}$	2.2	2.9	2.9	2.9

CTG/HRSG Stack - Natural Gas

Emissions Summary

Hydrogen Energy, Inc
HECA Project

5/21/2009

CTG Operating Parameters

Ambient Temperature	UNITS	Winter Minimum - 20°F				Yearly Average- 65°F				Summer Maximum - 97°F			
CTG Load Level	Percent Load (%)	100%	100%	80%	60%	100%	100%	80%	60%	100%	100%	80%	60%
Evap Cooling Status	off / on	N/A	N/A	N/A	N/A	N/A	N/A	N/A	N/A	N/A	N/A	N/A	N/A
Duct Burner Status	off / on	On	Off	Off	Off	On	Off	Off	Off	On	Off	Off	Off

Average Emission Rates from CTG (lbs/hr/turbine) - Normal Operation

	UNITS	Winter Minimum - 20°F				Yearly Average- 65°F				Summer Maximum - 97°F			
NO_x (@ 4.0 ppm)	lbm/hr	36.3	29.0	24.8	20.8	35.1	27.0	23.1	19.4	33.3	26.1	22.4	18.7
CO (@ 5.0 ppm)	lbm/hr	27.6	22.1	18.8	15.8	26.7	20.5	17.6	14.8	25.3	19.8	17.0	14.2
VOC (@ 2.0 ppm)	lbm/hr	6.3	5.0	4.3	3.6	6.1	4.7	4.0	3.4	5.8	4.5	3.9	3.2
SO_2 (@ 12.65 ppmv)	lbm/hr	5.1	4.1	3.5	3.0	4.8	3.8	3.3	2.8	4.7	3.7	3.2	2.7
PM_{10} = $PM_{2.5}$	lbm/hr	18.0	18.0	18.0	18.0	18.0	18.0	18.0	18.0	18.0	18.0	18.0	18.0
NH_3 (@ 5.0 ppm slip)	lbm/hr	16.7	13.4	11.4	9.6	16.2	12.5	10.7	9.0	15.4	12.1	10.3	8.6

All turbine operating parameters and emissions data provided by FLUOR based on expected operating parameters.

Startup / Shutdown Emissions from Turbine (1CT)

Cold Startup			Hot Startup			Shutdown		
180 (min. in cold startup)	Max 1-hr. (lb/hr)	Total (lb/180min)	60 (min. in hot startup)	Max 1-hr. (lb/hr)	Total (lb/60min)	30 (min. in shutdown)	Max 1-hr. (lb/hr)	Total (lb/30min)
NO_X	90.7	272.0	**NOx**	167.0	167.0	**NOx**	62.0	62.0
CO	1,679.7	5,039.0	**CO**	394.0	394.0	**CO**	126.0	126.0
VOC	266.7	800.0	**VOC**	98.0	98.0	**VOC**	21.0	21.0
SO_2 (@ 12.65 ppmv)	5.1	15.3	**SO_2**	5.1	5.1	**SO_2**	2.6	2.6
PM_{10} = $PM_{2.5}$	21.3	64.0	**PM_{10} = $PM_{2.5}$**	23.0	23.0	**PM_{10} = $PM_{2.5}$**	5.0	5.0

All turbine operating parameters and emissions data provided by FLUOR based on expected operating parameters.
Startup and shutdown SO_2 emissions will always be lower than normal operation SO_2 emissions. Startup and shutdown emissions are assumed equal to the normal operations max emission rate.

Average Annual Emissions

			Pollutant	Turbine Emissions lb/yr/CT	Emissions ton/yr/CT	Emissions g/sec/CT
Total Hours of Operation	8,322.0					
Total Number of Cold Starts	10.0					
Cold Start Duration (hr)	3.0		NO_X	296,044.0	148.0	4.3
Total Number of Hot Starts	10.0		CO	277,817.2	138.9	4.0
Hot Start Duration (hr)	1.0		VOC	59,906.8	30.0	0.9
Total Number of Shutdowns	20.0		SO_2	40,045.4	20.0	0.6
Shutdown Duration (hr)	0.5		PM_{10} = $PM_{2.5}$	149,866.0	74.9	2.2
Duct Burner Operation (hr)	8,272.0		NH_3	134,158.6	67.1	1.9
Average Normal Operation (hr)	0.0					

Assumptions:
Average annual normal operational emissions are calculated using yearly average- 65°F, at 100 % load.
Duct burner emissions are calculated using yearly average- 65°F, at 100 % load with duct burners.

Parameters

Days per year:	365
Hours per day:	24
Minutes per hour:	60
Seconds per minute:	60

Hydrogen Energy, Inc
HECA Project

5/21/2009

First Quarter Emissions (Jan, Feb, Mar)

			Pollutant	Turbine Emissions lb/yr/CT	Emissions ton/yr/CT
Total Hours of Operation	2,080.5				
Total Number of Cold Starts	2.5				
Cold Start Duration (hr)	3.0		NO_X	74,011.0	37.0
Total Number of Hot Starts	2.5		CO	69,454.3	34.7
Hot Start Duration (hr)	1.0		VOC	14,976.7	7.5
Total Number of Shutdowns	5.0		SO_2	10,011.4	5.0
Shutdown Duration (hr)	0.5		$PM_{10} = PM_{2.5}$	37,466.5	18.7
Duct Burner Operation (hr)	2,068.0		NH_3	33,539.7	16.8
Average Normal Operation (hr)	0.0				

Assumptions:
Quarterly normal operational emissions are calculated using yearly average- 65°F, at 100 % load.
Duct burner emissions are calculated using yearly average- 65°F, at 100 % load with duct burners.

Second Quarter Emissions (Apr, May, Jun)

			Pollutant	Turbine Emissions lb/yr/CT	Emissions ton/yr/CT
Total Hours of Operation	2,080.5				
Total Number of Cold Starts	2.5				
Cold Start Duration (hr)	3.0		NO_X	74,011.0	37.0
Total Number of Hot Starts	2.5		CO	69,454.3	34.7
Hot Start Duration (hr)	1.0		VOC	14,976.7	7.5
Total Number of Shutdowns	5.0		SO_2	10,011.4	5.0
Shutdown Duration (hr)	0.5		$PM_{10} = PM_{2.5}$	37,466.5	18.7
Duct Burner Operation (hr)	2,068.0		NH_3	33,539.7	16.8
Average Normal Operation (hr)	0.0				

Assumptions:
Quarterly normal operational emissions are calculated using yearly average- 65°F, at 100 % load.
Duct burner emissions are calculated using yearly average- 65°F, at 100 % load with duct burners.

Third Quarter Emissions (Jul, Aug, Sep)

			Pollutant	Turbine Emissions lb/yr/CT	Emissions ton/yr/CT
Total Hours of Operation	2,080.5				
Total Number of Cold Starts	2.5				
Cold Start Duration (hr)	3.0		NO_X	74,011.0	37.0
Total Number of Hot Starts	2.5		CO	69,454.3	34.7
Hot Start Duration (hr)	1.0		VOC	14,976.7	7.5
Total Number of Shutdowns	5.0		SO_2	10,011.4	5.0
Shutdown Duration (hr)	0.5		$PM_{10} = PM_{2.5}$	37,466.5	18.7
Duct Burner Operation (hr)	2,068.0		NH_3	33,539.7	16.8
Average Normal Operation (hr)	0.0				

Assumptions:
Quarterly normal operational emissions are calculated using yearly average- 65°F, at 100 % load.
Duct burner emissions are calculated using yearly average- 65°F, at 100 % load with duct burners.

Fourth Quarter Emissions (Oct, Nov, Dec)

			Pollutant	Turbine Emissions lb/yr/CT	Emissions ton/yr/CT
Total Hours of Operation	2,080.5				
Total Number of Cold Starts	2.5				
Cold Start Duration (hr)	3.0		NO_X	74,011.0	37.0
Total Number of Hot Starts	2.5		CO	69,454.3	34.7
Hot Start Duration (hr)	1.0		VOC	14,976.7	7.5
Total Number of Shutdowns	5.0		SO_2	10,011.4	5.0
Shutdown Duration (hr)	0.5		$PM_{10} = PM_{2.5}$	37,466.5	18.7
Duct Burner Operation (hr)	2,068.0		NH_3	33,539.7	16.8
Average Normal Operation (hr)	0.0				

Assumptions:
Quarterly normal operational emissions are calculated using yearly average- 65°F, at 100 % load.
Duct burner emissions are calculated using yearly average- 65°F, at 100 % load with duct burners.

Modeling Worst-Case 1 hr Emissions per Turbine

Pollutant	lb/hr/CT	g/sec/CT
NOx	167.0	21.0
CO	1,679.7	211.6
SO_2	5.1	0.6

Assumptions:
Startup emissions represent worst case hr for NOx and CO.
NOx emissions are from hot start
CO emissions are from cold start
Calculation assumes that startup and shutdown SO_2 emissions will always be lower than normal operational SO_2 emissions.

Modeling Worst-Case 3 hr Emissions per Turbine

	hr	emission rate lb/hr	Emissions lb/CT	
Total Hours of Operation	3.0			
Startup Duration	0.0		0.0	contribution over 3 hr from start up
Shutdown Duration	0.0		0.0	contribution over 3 hr from shut down
Hours of Normal Operation (burning natural gas)	3.0	5.1	15.3	contribution over 3 hr from normal operation
SO_2 worst-case 3 hr emissions per turbine	15.3	lb/3 hr		
SO_2 worst-case 1 hr emissions per turbine	5.1	lb/hr		
SO_2 modeling worst-case emissions per turbine	0.6	g/sec		

Assumptions:
Only SO_2 is considered for an average 3-hour Ambient Air Quality Standard.
Normal operation assumes max emission rate
Worst-case 3 hr emissions assumes a total start up of : 0
Worst-case 3 hr emissions assumes a total shut down of : 0
Calculation assumes that startup and shutdown SO_2 emissions will always be lower than normal operational SO_2 emissions

Hydrogen Energy, Inc *5/21/2009*
HECA Project

Modeling Worst-Case 8 hr Emissions per Turbine

	hr	emission rate lb/hr	Emissions lb/CT	
Total Hours of Operation	8.0			
Startup Duration (cold start)	6.0		10,078.0	contribution over 8 hr from start up
Shutdown Duration	1.5		378.0	contribution over 8 hr from shut down
Hours of Normal Operation (burning natural gas)	0.5	27.6	13.8	contribution over 8 hr from normal operation
CO worst-case 8 hr emissions per turbine	10,469.8	lb/8 hr		
CO worst-case 1 hr emissions per turbine	1,308.7	lb/hr		
CO modeling worst-case emissions per turbine	164.9	g/sec		

Assumptions:
Only CO is considered for an average 8-hour Ambient Air Quality Standard.
Normal operation assumes max emission rate
Worst-case 8 hr emissions assumes a total COLD start up of : 2
Worst-case 8 hr emissions assumes a total shut down of : 3

Worst-Case Daily Emissions per Turbine and Modeling Worst-Case 24 Hour Emission Rate

SO_2 (lb/day/CT)	122.4
SO_2 (g/s/CT) (burning natural gas)	0.6
PM_{10} = $PM_{2.5}$ (lb/day/CT)	
PM_{10} = $PM_{2.5}$ (g/s/CT) (burning natural gas)	

Assumptions:
Only SO_2 and PM are considered for an average 24-hour Ambient Air Quality Standard.
For SO_2 24 hrs of normal operation at max emission rate
For PM emissions are calculated below assuming startup and shutdown contributions.

Worst-Case Daily Emissions per Turbine and Modeling Worst-Case 24 Hour Emission Rate

Pollutant	Time in Startup hr	Startup Emission Rate lb/start	Time in Shut Down hr	Shutdown Emission Rate lb/shutdown	Time in Normal Operation hr	Normal Operation Emission Rate lb/start	Worst-Case Daily Emissions lb/day/CT	Modeling Worst-Case 24 Hr Emission g/s/CT
Nox (1 COLD start up and I shut down)	3.0	272.0	0.5	62.0	17.5	36.3	1,426.4	7.5
Nox (2 HOT start ups and 2 shut downs)	2.0	167.0	1.0	62.0				
CO	12.0	5,039.0	2.0	126.0	10.0	27.6	20,935.8	
VOC	12.0	800.0	2.0	21.0	10.0	6.3	3,347.0	
SO_2								
PM_{10} = $PM_{2.5}$	12.0	64.0	2.0	5.0	10.0	18.0	456.0	2.4

Assumptions:
For CO, VOC, and PM -- emissions are calculated assuming:
Worst-case daily emissions assumes a total COLD start up of : 4
Worst-case daily emissions assumes a total shut down of : 4
Remainder of time is spent in normal operation at winter minimum - 20°F; 100% load

For CALPUFF modeling purposes, NOx emissions are calculated assuming:
Worst-case daily emissions assumes a total COLD start up of : 1 and a total HOT start up of: 2
Worst-case daily emissions assumes a total shut down of : 3
Remainder of time is spent in normal operation at winter minimum - 20°F; 100% load

See above calculation for worst-case daily SO_2:calculated as 24 hrs of normal operation at max emissions rate

CTG/HRSG Stack - SynGas

Emissions Summary

Hydrogen Energy, Inc
HECA Project

5/21/2009

CTG Operating Parameters

Ambient Temperature	UNITS	Winter Minimum - 20°F				Yearly Average- 65°F				Summer Maximum - 97°F			
CTG Load Level	Percent Load (%)	100%	100%	80%	60%	100%	100%	80%	60%	100%	100%	80%	60%
Evap Cooling Status	off / on	N/A	N/A	N/A	N/A	N/A	N/A	N/A	N/A	N/A	N/A	N/A	N/A
Duct Burner Status	off / on	On	Off	Off	Off	On	Off	Off	Off	On	Off	Off	Off

Average Emission Rates from CTG (lbs/hr/turbine) - Normal Operation

	UNITS	Winter Minimum - 20°F				Yearly Average- 65°F				Summer Maximum - 97°F			
NO_x (@ 4.0 ppm)	lbm/hr		37.2	31.5	26.1	39.7	36.9	31.0	25.6	39.7	38.0	30.9	25.6
CO (@ 3.0 ppm)	lbm/hr		17.0	14.4	11.9	18.1	16.8	14.1	11.7	18.1	17.4	14.1	11.7
VOC (@ 1.0 ppm)	lbm/hr		3.2	2.7	2.3	3.5	3.2	2.7	2.2	3.5	3.3	2.7	2.2
SO_2 (@ 5.0 ppmv)	lbm/hr		6.1	5.2	4.4	6.8	6.1	5.1	4.3	6.8	6.0	5.1	4.3
PM_{10} = $PM_{2.5}$	lbm/hr		24.0	24.0	24.0	24.0	24.0	24.0	24.0	24.0	24.0	24.0	24.0
NH_3 (@ 5.0 ppm slip)	lbm/hr		17.2	14.6	12.0	18.4	17.0	14.3	11.8	18.4	17.6	14.3	11.8

All turbine operating parameters and emissions data provided by FLUOR based on expected operating parameters.

Startup / Shutdown Emissions from Turbine (1CT)

Cold Startup			Hot Startup			Shutdown		
180 (min. in cold startup)	Max 1-hr. (lb/hr)	Total (lb/180min)	60 (min. in hot startup)	Max 1-hr. (lb/hr)	Total (lb/60min)	30 (min. in shutdown)	Max 1-hr. (lb/hr)	Total (lb/30min)
NO_X	90.7	272.0	**NOx**	167.0	167.0	**NOx**	62.0	62.0
CO	1,679.7	5,039.0	**CO**	394.0	394.0	**CO**	126.0	126.0
VOC	266.7	800.0	**VOC**	98.0	98.0	**VOC**	21.0	21.0
SO_2 (@ 12.65 ppmv)	5.1	15.3	**SO2**	5.1	5.1	**SO2**	2.6	2.6
PM_{10} = $PM_{2.5}$	21.3	64.0	**PM_{10} = $PM_{2.5}$**	23.0	23.0	**PM_{10} = $PM_{2.5}$**	5.0	5.0

All turbine operating parameters and emissions data provided by FLUOR based on expected operating parameters.
CTGs will always be started burning natural gas. Startup and shutdown emission rates above reflect natural gas.
Startup and shutdown SO_2 emissions will always be lower than normal operation SO_2 emissions. Startup and shutdown emissions are assumed equal to normal operations (burning natural gas) at the max emission rate.

Average Annual Emissions

			Pollutant	Turbine Emissions lb/yr/CT	Emissions ton/yr/CT	Emissions g/sec/CT
Total Hours of Operation	8,322.0					
Total Number of Cold Starts	10.0					
Cold Start Duration (hr)	3.0		NO_X	334,353.0	167.2	4.8
Total Number of Hot Starts	10.0		CO	206,919.2	103.5	3.0
Hot Start Duration (hr)	1.0		VOC	37,984.6	19.0	0.5
Total Number of Shutdowns	20.0		SO_2	56,713.0	28.4	0.8
Shutdown Duration (hr)	0.5		PM_{10} = $PM_{2.5}$	199,498.0	99.7	2.9
Duct Burner Operation (hr)	8,272.0		NH_3	151,855.7	75.9	2.2
Average Normal Operation (hr)	0.0					

Assumptions:
Average annual normal operational emissions are calculated using yearly average- 65°F, at 100 % load.
Duct burner emissions are calculated using yearly average- 65°F, at 100 % load with duct burners.

Parameters

Days per year:	365
Hours per day:	24
Minutes per hour:	60
Seconds per minute:	60

Hydrogen Energy, Inc
HECA Project
5/21/2009

First Quarter Emissions (Jan, Feb, Mar)

			Pollutant	Turbine Emissions lb/yr/CT	Emissions ton/yr/CT
Total Hours of Operation	2,080.5				
Total Number of Cold Starts	2.5				
Cold Start Duration (hr)	3.0		NO_X	83,588.3	41.8
Total Number of Hot Starts	2.5		CO	51,729.8	25.9
Hot Start Duration (hr)	1.0		VOC	9,496.2	4.7
Total Number of Shutdowns	5.0		SO_2	14,178.3	7.1
Shutdown Duration (hr)	0.5		$PM_{10} = PM_{2.5}$	49,874.5	24.9
Duct Burner Operation (hr)	2,068.0		NH_3	37,963.9	19.0
Average Normal Operation (hr)	0.0				

Assumptions:
Quarterly normal operational emissions are calculated using yearly average- 65°F, at 100 % load.
Duct burner emissions are calculated using yearly average- 65°F, at 100 % load with duct burners.

Second Quarter Emissions (Apr, May, Jun)

			Pollutant	Turbine Emissions lb/yr/CT	Emissions ton/yr/CT
Total Hours of Operation	2,080.5				
Total Number of Cold Starts	2.5				
Cold Start Duration (hr)	3.0		NO_X	83,588.3	41.8
Total Number of Hot Starts	2.5		CO	51,729.8	25.9
Hot Start Duration (hr)	1.0		VOC	9,496.2	4.7
Total Number of Shutdowns	5.0		SO_2	14,178.3	7.1
Shutdown Duration (hr)	0.5		$PM_{10} = PM_{2.5}$	49,874.5	24.9
Duct Burner Operation (hr)	2,068.0		NH_3	37,963.9	19.0
Average Normal Operation (hr)	0.0				

Assumptions:
Quarterly normal operational emissions are calculated using yearly average- 65°F, at 100 % load.
Duct burner emissions are calculated using yearly average- 65°F, at 100 % load with duct burners.

Third Quarter Emissions (Jul, Aug, Sep)

			Pollutant	Turbine Emissions lb/yr/CT	Emissions ton/yr/CT
Total Hours of Operation	2,080.5				
Total Number of Cold Starts	2.5				
Cold Start Duration (hr)	3.0		NO_X	83,588.3	41.8
Total Number of Hot Starts	2.5		CO	51,729.8	25.9
Hot Start Duration (hr)	1.0		VOC	9,496.2	4.7
Total Number of Shutdowns	5.0		SO_2	14,178.3	7.1
Shutdown Duration (hr)	0.5		$PM_{10} = PM_{2.5}$	49,874.5	24.9
Duct Burner Operation (hr)	2,068.0		NH_3	37,963.9	19.0
Average Normal Operation (hr)	0.0				

Assumptions:
Quarterly normal operational emissions are calculated using yearly average- 65°F, at 100 % load.
Duct burner emissions are calculated using yearly average- 65°F, at 100 % load with duct burners.

Fourth Quarter Emissions (Oct, Nov, Dec)

			Pollutant	Turbine Emissions lb/yr/CT	Emissions ton/yr/CT
Total Hours of Operation	2,080.5				
Total Number of Cold Starts	2.5				
Cold Start Duration (hr)	3.0		NO_X	83,588.3	41.8
Total Number of Hot Starts	2.5		CO	51,729.8	25.9
Hot Start Duration (hr)	1.0		VOC	9,496.2	4.7
Total Number of Shutdowns	5.0		SO_2	14,178.3	7.1
Shutdown Duration (hr)	0.5		$PM_{10} = PM_{2.5}$	49,874.5	24.9
Duct Burner Operation (hr)	2,068.0		NH_3	37,963.9	19.0
Average Normal Operation (hr)	0.0				

Assumptions:
Quarterly normal operational emissions are calculated using yearly average- 65°F, at 100 % load.
Duct burner emissions are calculated using yearly average- 65°F, at 100 % load with duct burners.

Modeling Worst-Case 1 hr Emissions per Turbine

Pollutant	lb/hr/CT	g/sec/CT
NOx	167.0	21.0
CO	1,679.7	211.6
SO_2	6.8	0.9

Assumptions:
Startup emissions represent worst case hr for NOx and CO. Startup and shutdown only burn natural gas.
NOx emissions are from hot start
CO emissions are from cold start
Normal operation burning syngas represents worst case SO_2.
Calculation assumes that startup and shutdown SO_2 emissions will always be lower than normal operational (burning natural gas) SO_2 emissions.

Modeling Worst-Case 3 hr Emissions per Turbine

	hr	emission rate lb/hr	Emissions lb/CT	
Total Hours of Operation	3.0			
Startup Duration	0.0		0.0	contribution over 3 hr from start up
Shutdown Duration	0.0		0.0	contribution over 3 hr from shut down
Hours of Normal Operation (burning syngas)	3.0	6.8	20.5	contribution over 3 hr from normal operation
SO_2 worst-case 3 hr emissions per turbine	20.5	lb/3 hr		
SO_2 worst-case 1 hr emissions per turbine	6.8	lb/hr		
SO_2 modeling worst-case emissions per turbine	0.9	g/sec		

Assumptions:
Only SO_2 is considered for an average 3-hour Ambient Air Quality Standard.
Normal operation burning syngas represents worst case SO_2.
Worst-case 3 hr emissions assumes a total start up of : 0
Worst-case 3 hr emissions assumes a total shut down of : 0
Calculation assumes that startup and shutdown SO_2 emissions will always be lower than normal operational (burning natural gas) SO_2 emissions.

Hydrogen Energy, Inc
HECA Project

5/21/2009

Modeling Worst-Case 8 hr Emissions per Turbine

	hr	emission rate lb/hr	Emissions lb/CT	
Total Hours of Operation	8.0			
Startup Duration	6.0		10,078.0	contribution over 8 hr from start up
Shutdown Duration	1.5		378.0	contribution over 8 hr from shut down
Hours of Normal Operation (burning syngas)	0.5	18.1	9.1	contribution over 8 hr from normal operation
CO worst-case 8 hr emissions per turbine	10,465.1	lb/8 hr		
CO worst-case 1 hr emissions per turbine	1,308.1	lb/hr		
CO modeling worst-case emissions per turbine	164.8	g/sec		

Assumptions:
Only CO is considered for an average 8-hour Ambient Air Quality Standard.
Normal operation assumes max rate.
Worst-case 8 hr emissions assumes a total COLD start up of : 2
Worst-case 8 hr emissions assumes a total shut down of : 3

Worst-Case Daily Emissions per Turbine and Modeling Worst-Case 24 Hour Emission Rate

SO_2 (lb/day/CT)	163.8
SO_2 (g/s/CT) (burning syngas)	0.9
PM_{10} = $PM_{2.5}$ (lb/day/CT)	576.0
PM_{10} = $PM_{2.5}$ (g/s/CT) (burning syngas)	3.0

Assumptions:
Only SO_2 and PM are considered for an average 24-hour Ambient Air Quality Standard.
For SO_2 24 hrs of normal operation max emission rate
For PM 24 hrs of normal operation max emission rate

Worst-Case Daily Emissions per Turbine and Modeling Worst-Case 24 Hour Emission Rate

Pollutant	Time in Startup hr	Startup Emission Rate lb/start	Time in Shut Down hr	Shutdown Emission Rate lb/shutdown	Time in Normal Operation hr	Normal Operation Emission Rate lb/start	Worst-Case Daily Emissions lb/day/CT	Modeling Worst-Case 24 Hr Emission g/s/CT
NOx	12.0	272.0	2.0	62.0	10.0	39.7	1,733.4	
CO	12.0	5,039.0	2.0	126.0	10.0	18.1	20,841.4	
VOC	12.0	800.0	2.0	21.0	10.0	3.5	3,318.6	
SO_2								
PM_{10} = $PM_{2.5}$								

Assumptions:
For NOx, CO, and VOC -- emissions are calculated assuming:
Worst-case daily emissions assumes a total start up of : 4
Worst-case daily emissions assumes a total shut down of : 4
Remainder of time is spent in normal operation at max emission rate
See above calculation for worst-case daily SO_2 and PM: calculated as 24 hrs of normal operationat max emissions rate

CTG/HRSG Stack - Co Firing

Emissions Summary

Hydrogen Energy, Inc
HECA Project

5/21/2009

CTG Operating Parameters

Ambient Temperature	UNITS	Winter Minimum - 20°F				Yearly Average- 65°F				Summer Maximum - 97°F			
CTG Load Level	Percent Load (%)	100%	100%	80%	60%	100%	100%	80%	60%	100%	100%	80%	60%
Evap Cooling Status	off / on	N/A	N/A	N/A	N/A	N/A	N/A	N/A	N/A	N/A	N/A	N/A	N/A
Duct Burner Status	off / on	On	Off	Off	Off	On	Off	Off	Off	On	Off	Off	Off

Average Emission Rates from CTG (lbs/hr/turbine) - Normal Operation

	UNITS	Winter Minimum - 20°F				Yearly Average- 65°F				Summer Maximum - 97°F			
NO_x (@ 4.0 ppm)	lbm/hr	41.3	34.0			38.7	31.7						
CO (@ 5.0 ppm)	lbm/hr	31.4	25.9			29.4	24.1						
VOC (@ 2.0 ppm)	lbm/hr	7.2	5.9			6.7	5.5						
SO_2 (@ 6.7 ppmv, average) (12.65 ppm duct firing)	lbm/hr	7.4	5.2			7.0	4.8						
PM_{10} = $PM_{2.5}$	lbm/hr	24.0	24.0			24.0	24.0						
NH_3 (@ 5.0 ppm slip)	lbm/hr	19.1	15.7			17.9	14.6						

All turbine operating parameters and emissions data provided by FLUOR based on expected operating parameters. 5.0659
Co-firing emissions are controlled at the same amount as natural gas.

Startup / Shutdown Emissions from Turbine (1CT)

Cold Startup			Hot Startup			Shutdown		
180 (min. in cold startup)	Max 1-hr. (lb/hr)	Total (lb/180min)	60 (min. in hot startup)	Max 1-hr. (lb/hr)	Total (lb/60min)	30 (min. in shutdown)	Max 1-hr. (lb/hr)	Total (lb/30min)
NO_X	90.7	272.0	**NOx**	167.0	167.0	**NOx**	62.0	62.0
CO	1,679.7	5,039.0	**CO**	394.0	394.0	**CO**	126.0	126.0
VOC	266.7	800.0	**VOC**	98.0	98.0	**VOC**	21.0	21.0
SO_2 (@ 12.65 ppmv)	5.1	15.3	**SO2**	5.1	5.1	**SO2**	2.6	2.6
PM_{10} = $PM_{2.5}$	21.3	64.0	**PM_{10} = $PM_{2.5}$**	23.0	23.0	**PM_{10} = $PM_{2.5}$**	5.0	5.0

All turbine operating parameters and emissions data provided by FLUOR based on expected operating parameters.
CTGs will always be started burning natural gas. Startup and shutdown emission rates above reflect natural gas.
Startup and shutdown SO_2 emissions will always be lower than normal operation SO_2 emissions. Startup and shutdown emissions are assumed equal to normal operations (burning natural gas) at the max emission rate.

Average Annual Emissions

			Pollutant	Turbine Emissions lb/yr/CT	Emissions ton/yr/CT	Emissions g/sec/CT
Total Hours of Operation	8,322.0					
Total Number of Cold Starts	10.0					
Cold Start Duration (hr)	3.0		NO_X	325,712.3	162.9	4.7
Total Number of Hot Starts	10.0		CO	300,390.9	150.2	4.3
Hot Start Duration (hr)	1.0		VOC	65,066.5	32.5	0.9
Total Number of Shutdowns	20.0		SO_2	58,357.9	29.2	0.8
Shutdown Duration (hr)	0.5		PM_{10} = $PM_{2.5}$	199,498.0	99.7	2.9
Duct Burner Operation (hr)	8,272.0		NH_3	147,864.1	73.9	2.1
Average Normal Operation (hr)	0.0					

Assumptions:
Average annual normal operational emissions are calculated using yearly average- 65°F, at 100 % load.
Duct burner emissions are calculated using yearly average- 65°F, at 100 % load with duct burners.

Parameters

Days per year:	365
Hours per day:	24
Minutes per hour:	60
Seconds per minute:	60

Hydrogen Energy, Inc
HECA Project
5/21/2009

First Quarter Emissions (Jan, Feb, Mar)

			Pollutant	Turbine Emissions lb/yr/CT	Emissions ton/yr/CT
Total Hours of Operation	2,080.5				
Total Number of Cold Starts	2.5				
Cold Start Duration (hr)	3.0		NO_X	81,428.1	40.7
Total Number of Hot Starts	2.5		CO	75,097.7	37.5
Hot Start Duration (hr)	1.0		VOC	16,266.6	8.1
Total Number of Shutdowns	5.0		SO_2	14,589.5	7.3
Shutdown Duration (hr)	0.5		$PM_{10} = PM_{2.5}$	49,874.5	24.9
Duct Burner Operation (hr)	2,068.0		NH_3	36,966.0	18.5
Average Normal Operation (hr)	0.0				

Assumptions:
Quarterly normal operational emissions are calculated using yearly average- 65°F, at 100 % load.
Duct burner emissions are calculated using yearly average- 65°F, at 100 % load with duct burners.

Second Quarter Emissions (Apr, May, Jun)

			Pollutant	Turbine Emissions lb/yr/CT	Emissions ton/yr/CT
Total Hours of Operation	2,080.5				
Total Number of Cold Starts	2.5				
Cold Start Duration (hr)	3.0		NO_X	81,428.1	40.7
Total Number of Hot Starts	2.5		CO	75,097.7	37.5
Hot Start Duration (hr)	1.0		VOC	16,266.6	8.1
Total Number of Shutdowns	5.0		SO_2	14,589.5	7.3
Shutdown Duration (hr)	0.5		$PM_{10} = PM_{2.5}$	49,874.5	24.9
Duct Burner Operation (hr)	2,068.0		NH_3	36,966.0	18.5
Average Normal Operation (hr)	0.0				

Assumptions:
Quarterly normal operational emissions are calculated using yearly average- 65°F, at 100 % load.
Duct burner emissions are calculated using yearly average- 65°F, at 100 % load with duct burners.

Third Quarter Emissions (Jul, Aug, Sep)

			Pollutant	Turbine Emissions lb/yr/CT	Emissions ton/yr/CT
Total Hours of Operation	2,080.5				
Total Number of Cold Starts	2.5				
Cold Start Duration (hr)	3.0		NO_X	81,428.1	40.7
Total Number of Hot Starts	2.5		CO	75,097.7	37.5
Hot Start Duration (hr)	1.0		VOC	16,266.6	8.1
Total Number of Shutdowns	5.0		SO_2	14,589.5	7.3
Shutdown Duration (hr)	0.5		$PM_{10} = PM_{2.5}$	49,874.5	24.9
Duct Burner Operation (hr)	2,068.0		NH_3	36,966.0	18.5
Average Normal Operation (hr)	0.0				

Assumptions:
Quarterly normal operational emissions are calculated using yearly average- 65°F, at 100 % load.
Duct burner emissions are calculated using yearly average- 65°F, at 100 % load with duct burners.

Fourth Quarter Emissions (Oct, Nov, Dec)

			Pollutant	Turbine Emissions lb/yr/CT	Emissions ton/yr/CT
Total Hours of Operation	2,080.5				
Total Number of Cold Starts	2.5				
Cold Start Duration (hr)	3.0		NO_X	81,428.1	40.7
Total Number of Hot Starts	2.5		CO	75,097.7	37.5
Hot Start Duration (hr)	1.0		VOC	16,266.6	8.1
Total Number of Shutdowns	5.0		SO_2	14,589.5	7.3
Shutdown Duration (hr)	0.5		$PM_{10} = PM_{2.5}$	49,874.5	24.9
Duct Burner Operation (hr)	2,068.0		NH_3	36,966.0	18.5
Average Normal Operation (hr)	0.0				

Assumptions:
Quarterly normal operational emissions are calculated using yearly average- 65°F, at 100 % load.
Duct burner emissions are calculated using yearly average- 65°F, at 100 % load with duct burners.

Modeling Worst-Case 1 hr Emissions per Turbine

Pollutant	lb/hr/CT	g/sec/CT
NOx	167.0	21.0
CO	1,679.7	211.6
SO_2	7.4	0.93

Assumptions:
Startup emissions represent worst case hr for NOx and CO. Startup and shutdown only burn natural gas.
NOx emissions are from hot start
CO emissions are from cold start
Normal operation co firing represents worst case SO_2.
Calculation assumes that startup and shutdown SO_2 emissions will always be lower than normal operational (burning natural gas) SO_2 emissions.

Modeling Worst-Case 3 hr Emissions per Turbine

	hr	emission rate lb/hr	Emissions lb/CT	
Total Hours of Operation	3.0			
Startup Duration	0.0		0.0	contribution over 3 hr from start up
Shutdown Duration	0.0		0.0	contribution over 3 hr from shut down
Hours of Normal Operation (co firing)	3.0	7.4	22.1	contribution over 3 hr from normal operation
SO_2 worst-case 3 hr emissions per turbine	22.1	lb/3 hr		
SO_2 worst-case 1 hr emissions per turbine	7.4	lb/hr		
SO_2 modeling worst-case emissions per turbine	0.9	g/sec		

Assumptions:
Only SO_2 is considered for an average 3-hour Ambient Air Quality Standard.
Normal operation co firing represents worst case SO_2.
Worst-case 3 hr emissions assumes a total start up of : 0
Worst-case 3 hr emissions assumes a total shut down of : 0
Calculation assumes that startup and shutdown SO_2 emissions will always be lower than normal operational (burning natural gas) SO_2 emissions.

Hydrogen Energy, Inc
HECA Project
5/21/2009

Modeling Worst-Case 8 hr Emissions per Turbine

	hr	emission rate lb/hr	Emissions lb/CT	
Total Hours of Operation	8.0			
Startup Duration	6.0		10,078.0	contribution over 8 hr from start up
Shutdown Duration	1.5		378.0	contribution over 8 hr from shut down
Hours of Normal Operation (co firing)	0.5	31.4	15.7	contribution over 8 hr from normal operation
CO worst-case 8 hr emissions per turbine	10,471.7	lb/8 hr		
CO worst-case 1 hr emissions per turbine	1,309.0	lb/hr		
CO modeling worst-case emissions per turbine	164.9	g/sec		

Assumptions:
Only CO is considered for an average 8-hour Ambient Air Quality Standard.
Normal operation assumes max rate.
Worst-case 8 hr emissions assumes a total COLD start up of : 2
Worst-case 8 hr emissions assumes a total shut down of : 3

Worst-Case Daily Emissions per Turbine and Modeling Worst-Case 24 Hour Emission Rate

SO_2 (lb/day/CT)	177.2
SO2 (g/s/CT) (co firing)	0.9
PM_{10} = $PM_{2.5}$ (lb/day/CT)	576.0
PM_{10} = $PM_{2.5}$ (g/s/CT) (cofiring)	3.0

Assumptions:
Only SO_2 and PM are considered for an average 24-hour Ambient Air Quality Standard.
For SO_2 24 hrs of normal operation max emission rate
For PM 24 hrs of normal operation max emission rate

Worst-Case Daily Emissions per Turbine and Modeling Worst-Case 24 Hour Emission Rate

Pollutant	Time in Startup hr	Startup Emission Rate lb/start	Time in Shut Down hr	Shutdown Emission Rate lb/shutdown	Time in Normal Operation hr	Normal Operation Emission Rate lb/start	Worst-Case Daily Emissions lb/day/CT	Modeling Worst-Case 24 Hr Emission g/s/CT
NOx	12.0	272.0	2.0	62.0	10.0	41.3	1,748.8	
CO	12.0	5,039.0	2.0	126.0	10.0	31.4	20,974.1	
VOC	12.0	800.0	2.0	21.0	10.0	7.2	3,355.8	
SO_2								
PM_{10} = $PM_{2.5}$								

Assumptions:
For NOx, CO, and VOC -- emissions are calculated assuming:
Worst-case daily emissions assumes a total start up of : 4
Worst-case daily emissions assumes a total shut down of : 4
Remainder of time is spent in normal operation at max emission rate
See above calculation for worst-case daily SO_2 and PM: calculated as 24 hrs of normal operationat max emissions rate

Auxiliary CTG — Emissions Summary

Hydrogen Energy, Inc
HECA Project

5/21/2009

CTG Operating Parameters

Ambient Temperature	UNITS	Winter Minimum - 20°F				Yearly Average- 65°F				Summer Maximum - 97°F			
CTG Load Level	Percent Load (%)	100%	100%	75%	50%	100%	100%	75%	50%	100%	100%	75%	50%
Evap Cooling Status	off / on	Off	Off	Off	Off	On	Off	Off	Off	On	Off	Off	Off

Average Emission Rates from CTG (lbs/hr/turbine) - Normal Operation

	UNITS	Winter Minimum - 20°F				Yearly Average- 65°F				Summer Maximum - 97°F			
NO_x (@ 2.5 ppm)	lbm/hr		7.9	6.4	4.7	8.1		6.5	4.7	7.9		6.2	4.6
CO (@ 6.0 ppm)	lbm/hr		11.5	9.3	6.9	11.9		9.4	6.9	11.5		9.1	6.8
VOC (@ 2.0 ppm)	lbm/hr		2.2	1.8	1.3	2.3		1.8	1.3	2.2		1.7	1.3
SO_2 (@ 12.65 ppmv)	lbm/hr		1.8	1.4	1.1	1.9		1.5	1.1	1.8		1.4	1.0
PM_{10} = $PM_{2.5}$	lbm/hr		6.0	6.0	6.0	6.0		6.0	6.0	6.0		6.0	6.0
NH_3 (@ 10.0 ppm slip)	lbm/hr		11.6	9.5	7.0	12.0		9.5	7.0	11.7		9.2	6.8

All turbine operating parameters and emissions data provided by FLUOR based on expected operating parameters.

Startup / Shutdown Emissions from Turbine (1CT)

Cold Startup			Hot Startup			Shutdown		
10.0 (min. in cold startup)	Max 1-hr. (lb/hr)	Total (lb/10min)	0 (min. in hot startup)	Max 1-hr. (lb/hr)	Total (lb/60min)	10.3 (min. in shutdown)	Max 1-hr. (lb/hr)	Total (lb/10.3min)
NO_X	9.0	3.0	**NOx**			**NOx**	12.0	4.0
CO	30.6	10.2	**CO**			**CO**	39.6	13.2
VOC	0.5	0.2	**VOC**			**VOC**	0.6	0.2
SO_2 (@ 12.65 ppmv)	1.9	0.3	**SO_2**			**SO_2**	1.9	0.3
PM_{10} = $PM_{2.5}$	6.0	1.0	**PM_{10} = $PM_{2.5}$**			**PM_{10} = $PM_{2.5}$**	6.0	1.0

All turbine operating parameters and emissions data provided by FLUOR based on expected operating parameters.
NOx, CO, and VOC startup and shutdown emissions (max 1-hr) assume 3 startup and 3 shut down
Startup and shutdown SO2 and PM10 emissions will always be lower than normal operational emissions. Startup and shutdown emissions are assumed equal to normal operations max emission rate, with evap cooling.

Average Annual Emissions and Modeling Rates

			Pollutant	Turbine Emissions lb/yr/CT	Emissions ton/yr/CT	Emissions g/sec/CT
Total Hours of Operation	4,110					
Total Number of Cold Starts	325.0					
Cold Start Duration (hr)	0.2		NO_X	34,840.6	17.4	0.5
Total Number of Hot Starts	0.0		CO	55,179.1	27.6	0.8
Hot Start Duration (hr)	0.0		VOC	9,182.0	4.6	0.1
Total Number of Shutdowns	325.0		SO_2	7,644.4	3.8	0.1
Shutdown Duration (hr)	0.2		PM_{10} = $PM_{2.5}$	24,660.0	12.3	0.4
Evaporative Cooling Operation (hr)	4,000		NH_3	48,140.5	24.1	0.7
Average Normal Operation (hr)	0.0					

Assumptions:
Average annual operational emissions are calculated using yearly average- 65°F, at 100 % load, with evaporative cooling.

Parameters

Days per year:	365
Hours per day:	24
Minutes per hour:	60
Seconds per minute:	60

Hydrogen Energy, Inc
HECA Project

5/21/2009

First Quarter Emissions (Jan, Feb, Mar)

			Pollutant	Turbine Emissions lb/yr/CT	Emissions ton/yr/CT
Total Hours of Operation	1,027.5				
Total Number of Cold Starts	81.3				
Cold Start Duration (hr)	0.2		NO_X	8,710.2	4.4
Total Number of Hot Starts	0.0		CO	13,794.8	6.9
Hot Start Duration (hr)	0.0		VOC	2,295.5	1.1
Total Number of Shutdowns	81.3		SO_2	1,911.1	1.0
Shutdown Duration (hr)	0.2		$PM_{10} = PM_{2.5}$	6,165.0	3.1
Evaporative Cooling Operation (hr)	1,000.0		NH_3	12,035.1	6.0
Average Normal Operation (hr)	0.0				

Assumptions:
Quarterly operational emissions are calculated using yearly average- 65°F, at 100 % load, with evaporative cooling.

Second Quarter Emissions (Apr, May, Jun)

			Pollutant	Turbine Emissions lb/yr/CT	Emissions ton/yr/CT
Total Hours of Operation	1,027.5				
Total Number of Cold Starts	81.3				
Cold Start Duration (hr)	0.2		NO_X	8,710.2	4.4
Total Number of Hot Starts	0.0		CO	13,794.8	6.9
Hot Start Duration (hr)	0.0		VOC	2,295.5	1.1
Total Number of Shutdowns	81.3		SO_2	1,911.1	1.0
Shutdown Duration (hr)	0.2		$PM_{10} = PM_{2.5}$	6,165.0	3.1
Evaporative Cooling Operation (hr)	1,000.0		NH_3	12,035.1	6.0
Average Normal Operation (hr)	0.0				

Assumptions:
Quarterly operational emissions are calculated using yearly average- 65°F, at 100 % load, with evaporative cooling.

Third Quarter Emissions (Jul, Aug, Sep)

			Pollutant	Turbine Emissions lb/yr/CT	Emissions ton/yr/CT
Total Hours of Operation	1,027.5				
Total Number of Cold Starts	81.3				
Cold Start Duration (hr)	0.2		NO_X	8,710.2	4.4
Total Number of Hot Starts	0.0		CO	13,794.8	6.9
Hot Start Duration (hr)	0.0		VOC	2,295.5	1.1
Total Number of Shutdowns	81.3		SO_2	1,911.1	1.0
Shutdown Duration (hr)	0.2		$PM_{10} = PM_{2.5}$	6,165.0	3.1
Evaporative Cooling Operation (hr)	1,000.0		NH_3	12,035.1	6.0
Average Normal Operation (hr)	0.0				

Assumptions:
Quarterly operational emissions are calculated using yearly average- 65°F, at 100 % load, with evaporative cooling.

Fourth Quarter Emissions (Oct, Nov, Dec)

			Pollutant	Turbine Emissions lb/yr/CT	Emissions ton/yr/CT
Total Hours of Operation	1,027.5				
Total Number of Cold Starts	81.3				
Cold Start Duration (hr)	0.2		NO_X	8,710.2	4.4
Total Number of Hot Starts	0.0		CO	13,794.8	6.9
Hot Start Duration (hr)	0.0		VOC	2,295.5	1.1
Total Number of Shutdowns	81.3		SO_2	1,911.1	1.0
Shutdown Duration (hr)	0.2		$PM_{10} = PM_{2.5}$	6,165.0	3.1
Evaporative Cooling Operation (hr)	1,000.0		NH_3	12,035.1	6.0
Average Normal Operation (hr)	0.0				

Assumptions:
Quarterly operational emissions are calculated using yearly average- 65°F, at 100 % load, with evaporative cooling.

Modeling Worst-Case 1 hr Emissions per Turbine

Pollutant	lb/hr/CT	g/sec/CT
NOx	20.7	2.6
CO	69.0	8.7
SO_2	1.9	0.2

Assumptions:
Startup emissions represent worst case hr for NOx and CO.
NOx, and CO worst case 1 hr assume the contribution over 1 hr from 3 startup and 3 shut down
Calculation assumes that startup and shutdown SO_2 emissions will always be lower than normal operational SO_2 emissions.

Modeling Worst-Case 3 hr Emissions per Turbine

	hr	emission rate lb/hr	Emissions lb/CT	
Total Hours of Operation	3.0			
Startup Duration	0.0		0.0	contribution over 3 hr from start up
Shutdown Duration	0.0		0.0	contribution over 3 hr from shut down
Hours of Normal Operation	3.0	1.9	5.6	contribution over 3 hr from normal operation
SO_2 worst-case 3 hr emissions per turbine	5.6	lb/3 hr		
SO_2 worst-case 1 hr emissions per turbine	1.9	lb/hr		
SO_2 modeling worst-case emissions per turbine	0.2	g/sec		

Assumptions:
Only SO_2 is considered for an average 3-hour Ambient Air Quality Standard.
Normal operation assumes max emission rate
Worst-case 3 hr emissions assumes a total start up of : 0
Worst-case 3 hr emissions assumes a total shut down of : 0
Calculation assumes that startup and shutdown SO_2 emissions will always be lower than normal operational SO_2 emissions

Hydrogen Energy, Inc *5/21/2009*
HECA Project

Modeling Worst-Case 8 hr Emissions per Turbine

	hr	emission rate lb/hr	Emissions lb/CT	
Total Hours of Operation	8.0			
Startup Duration	0.7		40.8	contribution over 8 hr from start up
Shutdown Duration	0.7		52.8	contribution over 8 hr from shut down
Hours of Normal Operation	6.6	11.9	79.0	contribution over 8 hr from normal operation
CO worst-case 8 hr emissions per turbine	172.6	lb/8 hr		
CO worst-case 1 hr emissions per turbine	21.6	lb/hr		
CO modeling worst-case emissions per turbine	2.7	g/sec		

Assumptions:
Only CO is considered for an average 8-hour Ambient Air Quality Standard.
Normal operation assumes annual average - 65°F; 100% load, with evap cooling.
Worst-case 8 hr emissions assumes a total start up of : 4
Worst-case 8 hr emissions assumes a total shut down of : 4

Worst-Case Daily Emissions per Turbine and Modeling Worst-Case 24 Hour Emission Rate

SO_2 (lb/day/CT)	44.6
SO_2 (g/s/CT)	0.2
PM_{10} = $PM_{2.5}$ (lb/day/CT)	144.0
PM_{10} = $PM_{2.5}$ (g/s/CT)	0.8

Assumptions:
Only SO_2 and PM are considered for an average 24-hour Ambient Air Quality Standard.
For SO_2 24 hrs of normal operation at maximum emission rate
For PM 24 hrs of normal operation at maximum emission rate

Worst-Case Daily Emissions per Turbine and Modeling Worst-Case 24 Hour Emission Rate

Pollutant	Time in Startup hr	Startup Emission Rate lb/start	Time in Shut Down hr	Shutdown Emission Rate lb/shutdown	Time in Normal Operation hr	Normal Operation Emission Rate lb/start	Worst-Case Daily Emissions lb/day/CT	Modeling Worst-Case 24 Hr Emission g/s/CT
NOx	0.7	3.0	0.7	4.0	22.6	8.1	212.4	
CO	0.7	10.2	0.7	13.2	22.6	11.9	362.9	
VOC	0.7	0.2	0.7	0.2	22.6	2.3	52.8	
SO_2								
PM_{10} = $PM_{2.5}$								

Assumptions:
For NOx, CO, and VOC -- emissions are calculated assuming:
Worst-case daily emissions assumes a total start up of : 4
Worst-case daily emissions assumes a total shut down of : 4
Remainder of time is spent in normal operation at max emission rate
See above calculation for worst-case daily SO_2 and PM: calculated as 24 hrs of normal operationat max emission rate

Hydrogen Energy, Inc *5/21/2009*
HECA Project

Auxiliary Boiler - Annual Operating Emissions

Total Hours of Operation	2,190	hr/yr
Firing Rate	142	MMBtu/hr

Hours per Qtr			
Q1	**Q2**	**Q3**	**Q4**
547.5	547.5	547.5	547.5

Assuming equal operation in each quarter

Auxiliary Boiler Emission Factors

NOx (low NOx burner and flue gas recirculation, 9 ppmvd (3% O2))	0.011	lb/MMBtu
CO (50 ppmvd (3% O2))	0.037	lb/MMBtu
VOC	0.004	lb/MMBtu
SO_2 (12.65 ppmv total sulfur in pipeline natural gas)	0.00204	lb/MMBtu
$PM_{10} = PM_{2.5}$	0.005	lb/MMBtu

Auxiliary Boiler Pollutant Emission Rates

	Auxiliary Boiler Emissions				
Pollutant	**lb/hr**	**lb/day**	**lb/yr**	**ton/qtr**	**ton/yr**
NOx	1.56	37.49	3,420.78	0.43	1.7
CO	5.25	126.10	11,506.26	1.44	5.8
VOC	0.57	13.63	1,243.92	0.16	0.6
SO_2	0.29	6.96	635.09	0.08	0.3
$PM_{10} = PM_{2.5}$	0.71	17.04	1,554.90	0.19	0.8

Auxiliary Boiler — Emissions Summary

Hydrogen Energy, Inc
HECA Project

5/21/2009

Modeling Worst-Case 1 hr Emissions

NOx (g/sec)	0.2
CO (g/sec)	0.7
SO_2 (g/sec)	0.04

Only NOx, CO, and SO_2 are considered for an average 1-hour Ambient Air Quality Standard.

Parameters

Days per year:	365
Hours per day:	24
Minutes per hour:	60
Seconds per minute:	60

Modeling Worst-Case 3 hr Emissions

SO_2 (lb/3-hr)	0.87
SO_2 (g/sec)	0.04

Only SO_2 is considered for an average 3-hour Ambient Air Quality Standard.

Modeling Worst-Case 8 hr Emissions

CO (lb/8-hr)	42.03
CO (g/sec)	0.7

Only CO is considered for an average 8-hour Ambient Air Quality Standard.

Modeling Worst-Case 24 Hour Emissions

SO_2 (lb/24-hr)	6.96
SO_2 (g/sec)	0.04
PM_{10} = $PM_{2.5}$ (lb/24-hr)	17.04
PM_{10} = $PM_{2.5}$ (g/sec)	0.09

Only SO_2 and PM are considered for an average 24-hour Ambient Air Quality Standard.

Modeling Annual Average Emissions

NOx (g/sec)	0.05
CO (g/sec)	0.2
VOC (g/sec)	0.02
SO_2 (g/sec)	0.01
PM_{10} = $PM_{2.5}$ (g/sec)	0.02

Hydrogen Energy, Inc *5/21/2009*
HECA Project

Gasification Flare - Normal Operating Emissions From Pilot

Total Hours of Operation	8,760	hr/yr
Gasification Flare Pilot Fuel Use =	0.5	MMBtu/hr

Hours per Qtr			
Q1	**Q2**	**Q3**	**Q4**
2190	2190	2190	2190

Assuming equal operation in each quarter

Pilot Pollutant Emission Factors

NOx (lb/MMBtu, HHV)	0.12
CO (lb/MMBtu, HHV)	0.08
VOC (lb/MMBtu, HHV)	0.0013
SO_2 (lb/MMBtu, HHV) (12.65 ppm)	0.002
VOC (lb/MMBtu, HHV)	0.0013
PM_{10} = $PM_{2.5}$ (lb/MMBtu, HHV)	0.003

Pilot Pollutant Emission Rates

	Pilot Emissions				
Pollutant	**lb/hr**	**lb/day**	**lb/yr**	**ton/qtr**	**ton/yr**
NOx	0.060	1.44	525.60	0.07	0.26
CO	0.040	0.96	350.40	0.04	0.18
VOC	0.001	0.02	5.69	0.0007	0.003
SO_2	0.001	0.02	8.94	0.0011	0.004
PM_{10} = $PM_{2.5}$	0.002	0.04	13.14	0.00	0.007

Hydrogen Energy, Inc *5/21/2009*
HECA Project

Gasification Flare - Operating Emissions During Gasifier Startup and Shutdown

Total Flare SU/SD Operation	115,500	MMBtu/yr
Wet Unshifted Gas Heat Rate	900	MMBtu/hr
Dry Shifted Gas Heat Rate	768	MMBtu/hr
Approximate Operating Hours (wet)	96	hr/yr
Approximate Operating Hours (dry)	38	hr/yr

Startup and shutdown flared gas scenario

Cold plant startup =	30,000	MMBtu/yr (1 event)	(assume 20% unshifted)
Plant shutdown =	500	MMBtu/yr (1 event)	(assume 100% unshifted)
Gasifier outages =	60,000	MMBtu/yr (24 events)	(assume 100% unshifted)
Gasifier hot restarts =	25,000	MMBtu/yr (12 events)	(assume 100% unshifted)
Total	**115,500**	**MMBtu/yr**	(approx 75% unshifted)

SU/SD Flare Pollutant Emission Factors

NOx (lb/MMBtu, HHV)	0.07
CO (lb/MMBtu, HHV) (wet)	1.00
CO (lb/MMBtu, HHV) (dry)	0.37
VOC (lb/MMBtu, HHV)	0
SO_2 (lb/MMBtu, HHV)	0
PM_{10} = $PM_{2.5}$ (lb/MMBtu, HHV)	0

SU/SD Flare Pollutant Emission Rates

	SU/SD Flare Emissions						
Pollutant	**lb/hr (wet)**	**lb/hr (dry)**	**% Wet**	**% Dry**	**lb/hr (wet/dry)**	**ton/qtr (wet/dry)**	**ton/yr (wet/dry)**
NOx	63.0	53.8	75.0%	25.0%	60.70	1.01	4.04
CO	900.0	284.3	75.0%	25.0%	746.08	12.16	48.65
VOC	0	0	0	0	0	0	0
SO_2	0	0	0	0	0	0	0
PM_{10} = $PM_{2.5}$	0	0	0	0	0	0	0

Total emissions are determined based on the fractional amount of wet and dry gas burned.

Gasification Flare — Emissions Summary

Hydrogen Energy, Inc — *5/21/2009*
HECA Project

Total Gasification Flare Emissions

Pollutant	Emissions Pilot (ton/yr)	SU/SD (ton/yr)	Total (ton/qtr)	Total (ton/yr)
NOx	0.26	4.04	1.08	4.3
CO	0.18	48.65	12.21	48.8
VOC	0.003	0.00	0.001	0.003
SO_2	0.004	0.00	0.001	0.004
$PM_{10} = PM_{2.5}$	0.01	0.00	0.002	0.01

Modeling Worst-Case 1 hr Emissions

NOx (g/sec)	7.9
CO (g/sec)	113.4
SO_2 (g/sec)	0.0001

Only NOx, CO, and SO_2 are considered for an average 1-hour Ambient Air Quality Standard.
NOx and CO rates are taken from the SU/SD flaring events
SO_2 rate is from pilot operation

Parameters

Days per year:	365
Hours per day:	24
Minutes per hour:	60
Seconds per minute:	60

Modeling Worst-Case 3 hr Emissions

SO_2 (lb/3-hr)	0.003
SO_2 (g/sec)	0.0001

Only SO_2 is considered for an average 3-hour Ambient Air Quality Standard.
SO_2 pounds per 3-hr assumes three (3) hours of pilot operation.

Modeling Worst-Case 8 hr Emissions

CO (lb/8-hr)	7,200.00
CO (g/sec)	113.4

Only CO is considered for an average 8-hour Ambient Air Quality Standard.
Pounds per 8-hr assumes eight (8) hours of SU/SD flaring events.

Hydrogen Energy, Inc *5/21/2009*
HECA Project

Modeling Worst-Case 24 Hour Emissions

SO_2 (lb/24-hr)	0.02
SO_2 (g/sec)	0.0001
PM_{10} = $PM_{2.5}$ (lb/24-hr)	0.04
PM_{10} = $PM_{2.5}$ (g/sec)	0.0002

Only SO_2 and PM are considered for an average 24-hour Ambient Air Quality Standard.
Pounds per 24-hr assumes 24 hours of pilot operation.

Modeling Annual Average Emissions

NOx (g/sec)	0.1
CO (g/sec)	1.4
VOC (g/sec)	0.0001
SO_2 (g/sec)	0.0001
PM_{10} = $PM_{2.5}$ (g/sec)	0.0002

Pounds per year assumes contributions from both pilot operation and SU/SD flaring

Hydrogen Energy, Inc *5/21/2009*
HECA Project

SRU Flare - Normal Operating Emissions from Pilot

Total Hours of Operation	8,760	hr/yr
SRU Flare Pilot Firing Rate	0.3	MMBtu/hr

Hours per Qtr			
Q1	**Q2**	**Q3**	**Q4**
2190	2190	2190	2190

Assuming equal operation in each quarter

Pilot Pollutant Emission Factors

NOx (lb/MMBtu, HHV)	0.12
CO (lb/MMBtu, HHV)	0.08
VOC (lb/MMBtu, HHV)	0.0013
SO_2 (lb/MMBtu, HHV) (12.65 ppm)	0.002
PM_{10} = $PM_{2.5}$ (lb/MMBtu, HHV)	0.003

Pilot Pollutant Emission Rates

	Pilot Emissions				
Pollutant	**lb/hr**	**lb/day**	**lb/yr**	**ton/qtr**	**ton/yr**
NOx	0.036	0.86	315.36	0.04	0.2
CO	0.024	0.58	210.24	0.03	0.1
VOC	0.0004	0.01	3.42	0.0004	0.002
SO_2	0.0006	0.01	5.37	0.0007	0.003
PM_{10} = $PM_{2.5}$	0.0009	0.02	7.88	0.00	0.004

Hydrogen Energy, Inc *5/21/2009*
HECA Project

SRU - Operating Emissions During Gasifier Startup and Shutdown

Natural Gas Heat Rate (assist gas)	36.0	MMBtu/hr			
Approximate Operating Hours	6.0	hr/yr	approximately	2	events
Control efficiency of scrubber =	99.62%				
Acid gas lb/hr SO2 =	4,600	lb/hr scrubbed SO2=	17.3		

SU/SD Flare Pollutant Emission Factors

NOx (lb/hr)	4.32
CO (lb/hr)	2.88
VOC (lb/hr)	0.05
SO_2 (lb/hr) from natural gas	0.07
SO_2 (lb/hr) from sour flaring	17.33
PM_{10} = $PM_{2.5}$(lb/hr)	0.11

Natural gas emissions are the same as those listed for the pilot multiplied by the heat rate of the assist gas

SU/SD Flare Pollutant Emission Rates

	SU/SD Flare Emissions				
Pollutant	**lb/hr**	**lb/day**	**lb/yr**	**ton/qtr**	**ton/yr**
NOx	4.32	13.0	25.9	0.00324	0.0130
CO	2.88	8.6	17.3	0.00216	0.0086
VOC	0.05	0.1	0.3	0	0.0001
SO_2	17.41	52.2	104.4	0.01	0.0522
PM_{10} = $PM_{2.5}$	0.11	0.3	0.6	0	0.0003

SRU Flare - Total Annual Emissions

	Emissions			
Pollutant	**Pilot (ton/yr)**	**SU/SD (ton/yr)**	**Total (ton/qtr)**	**Total (ton/yr)**
NOx	0.16	0.0130	0.04	0.2
CO	0.11	0.0086	0.03	0.1
VOC	0.002	0.0001	0.000	0.002
SO_2	0.003	0.05	0.014	0.1
PM_{10} = $PM_{2.5}$	0.004	0.0003	0.001	0.004

Hydrogen Energy, Inc *5/21/2009*
HECA Project

Modeling Worst-Case 1 hr Emissions

NOx (g/sec)	0.544
CO (g/sec)	0.363
SO_2 (g/sec)	2.19

Only NOx, CO, and SO2 are considered for an average 1-hour Ambient Air Quality Standard.
NOx, CO, and SO2 one (1) hr rates are from taken from the SU/SD flaring events

Parameters

Days per year:	365
Hours per day:	24
Minutes per hour:	60
Seconds per minute:	60

Modeling Worst-Case 3 hr Emissions

SO_2 (lb/3-hr)	52.22
SO_2 (g/sec)	2.19

Only SO_2 is considered for an average 3-hour Ambient Air Quality Standard.
Pounds per 3-hr assumes aproximately 3 hours (1 event) from SU/SD flaring.

Modeling Worst-Case 8 hr Emissions

CO (lb/8-hr)	8.76
CO (g/sec)	0.138

Only CO is considered for an average 8-hour Ambient Air Quality Standard.
Pounds per 8-hr assumes aproximately 3 hours (1 event) from SU/SD flaring and the remainder in pilot operation.

Modeling Worst-Case 24 Hour Emissions

SO_2 (lb/24-hr)	52.23
SO_2 (g/sec)	0.27
PM_{10} = $PM_{2.5}$ (lb/24-hr)	0.34
PM_{10} = $PM_{2.5}$ (g/sec)	0.0018

Only SO_2 and PM are considered for an average 24-hour Ambient Air Quality Standard.
SO_2 and PM pounds per 24-hr assume aproximately 3 hours (1 event) from SU/SD flaring and the remainder in pilot operation.

Hydrogen Energy, Inc *5/21/2009*
HECA Project

Modeling Annual Average Emissions

NOx (g/sec)	0.005
CO (g/sec)	0.003
VOC (g/sec)	0.00005
SO_2 (g/sec)	0.002
PM_{10} = $PM_{2.5}$ (g/sec)	0.0001

Pounds per year assumes contributions from both pilot operation and SU/SD flaring

Hydrogen Energy, Inc *5/21/2009*
HECA Project

Rectisol - Normal Operating Emissions from Pilot

Total Hours of Operation	8,760	hr/yr
Rectisol Flare Pilot Firing Rate	0.3	MMBtu/hr

Hours per Qtr			
Q1	**Q2**	**Q3**	**Q4**
2190	2190	2190	2190

Assuming equal operation in each quarter

Pilot Pollutant Emission Factors

NOx (lb/MMBtu, HHV)	0.12
CO (lb/MMBtu, HHV)	0.08
VOC (lb/MMBtu, HHV)	0.0013
SO_2 (lb/MMBtu, HHV) (12.65 ppm)	0.002
PM_{10} = $PM_{2.5}$ (lb/MMBtu, HHV)	0.003

Pilot Pollutant Emission Rates

Pollutant	**Pilot Emissions lb/hr**	**lb/day**	**lb/yr**	**ton/qtr**	**ton/yr**
NOx	0.036	0.86	315.36	0.04	0.2
CO	0.024	0.58	210.24	0.03	0.1
VOC	0.0004	0.01	3.42	0.0004	0.002
SO_2	0.0006	0.01	5.37	0.0007	0.003
PM_{10} = $PM_{2.5}$	0.0009	0.02	7.88	0.00	0.004

Rectisol Flare - Total Annual Emissions

Pollutant	**Emissions Pilot (ton/yr)**	**Total (ton/qtr)**	**Total (ton/yr)**
NOx	0.16	0.04	0.2
CO	0.11	0.03	0.1
VOC	0.002	0.000	0.002
SO_2	0.003	0.001	0.003
PM_{10} = $PM_{2.5}$	0.004	0.001	0.004

Modeling Worst-Case 1 hr Emissions

NOx (g/sec)	0.005
CO (g/sec)	0.003
SO_2 (g/sec)	0.0001

Only NOx, CO, and SO2 are considered for an average 1-hour Ambient Air Quality Standard.
NOx, CO, and SO2 one (1) hr rates are from taken from the natural gas pilot emissions

Parameters

Days per year:	365
Hours per day:	24
Minutes per hour:	60
Seconds per minute:	60

Modeling Worst-Case 3 hr Emissions

SO_2 (lb/3-hr)	0.0018
SO_2 (g/sec)	0.0001

Only SO_2 is considered for an average 3-hour Ambient Air Quality Standard.
Pounds per 3-hr assumes aproximately 3 hours the natural gas pilot emissions.

Hydrogen Energy, Inc *5/21/2009*
HECA Project

Modeling Worst-Case 8 hr Emissions

CO (lb/8-hr)	0.19
CO (g/sec)	0.003

Only CO is considered for an average 8-hour Ambient Air Quality Standard.
Pounds per 8-hr assumes aproximately 8 hours of pilot operation.

Modeling Worst-Case 24 Hour Emissions

SO_2 (lb/24-hr)	0.01
SO_2 (g/sec)	0.0001
PM_{10} = $PM_{2.5}$ (lb/24-hr)	0.02
PM_{10} = $PM_{2.5}$ (g/sec)	0.0001

Only SO_2 and PM are considered for an average 24-hour Ambient Air Quality Standard.
SO_2 and PM pounds per 24-hr assume aproximately 32 hoursof pilot operation.

Modeling Annual Average Emissions

NOx (g/sec)	0.005
CO (g/sec)	0.003
VOC (g/sec)	0.00005
SO_2 (g/sec)	0.0001
PM_{10} = $PM_{2.5}$ (g/sec)	0.0001

Pounds per year assumes contributions from both pilot operation and SU/SD flaring

Tail Gas Thermal Oxidizer — Emissions Summary

Hydrogen Energy, Inc
HECA Project

5/21/2009

Thermal Oxidizer - Process Vent Disposal Emissions

Total Hours of Operation	8,760	hr/yr
Thermal Oxidizer Firing Rate	10	MMBtu/hr

Hours per Qtr			
Q1	**Q2**	**Q3**	**Q4**
2190	2190	2190	2190

Assuming equal operation in each quarter

Process Vent Gas Pollutant Emission Factors

NOx (lb/MMBtu, HHV)	0.24
CO (lb/MMBtu, HHV)	0.20
VOC (lb/MMBtu, HHV)	0.0070
SO_2 (lb/MMBtu, HHV)	See Below
$PM_{10} = PM_{2.5}$ (lb/MMBtu, HHV)	0.008

Assume an allowance of 2 lb/hr SO_2 emission to account for sulfur in the various vent streams plus fuel.

Process Vent Gas Pollutant Emission Rates

	Process Vent Gas Emissions				
Pollutant	**lb/hr**	**lb/day**	**lb/yr**	**ton/qtr**	**ton/yr**
NOx	2.40	57.60	21,024.00	2.63	10.5
CO	2.00	48.00	17,520.00	2.19	8.8
VOC	0.07	1.68	613.20	0.0767	0.3
SO_2	2.00	48.00	17,520.00	2.1900	8.8
$PM_{10} = PM_{2.5}$	0.08	1.92	700.80	0.09	0.4

Assume an allowance of 2 lb/hr SO_2 emission to account for sulfur in the various vent streams plus fuel.

Thermal Oxidizer - SRU Startup Waste Gas Disposal

Total Hours of Operation	300	hr/yr
Thermal Oxidizer Firing Rate	10	MMBtu/hr

Hours per Qtr			
Q1	**Q2**	**Q3**	**Q4**
75	75	75	75

Assuming equal operation in each quarter

SRU Startup Waste Gas Disposal Emission Factors

NOx (lb/MMBtu, HHV)	0.24
CO (lb/MMBtu, HHV)	0.20
VOC (lb/MMBtu, HHV)	0.007
SO_2 (lb/MMBtu, HHV) (12.65 ppm)	0.002
PM_{10} = $PM_{2.5}$ (lb/MMBtu, HHV)	0.008

SRU Startup Waste Gas Disposal Pollutant Emission Rates

	SRU Startup Waste Gas Disposal Emissions				
Pollutant	**lb/hr**	**lb/day**	**lb/yr**	**ton/qtr**	**ton/yr**
NOx	2.40	57.60	720.00	0.09	0.36
CO	2.00	48.00	600.00	0.08	0.30
VOC	0.07	1.68	21.00	0.003	0.011
SO_2	0.02	0.49	6.17	0.001	0.003
PM_{10} = $PM_{2.5}$	0.08	1.92	24.00	0.003	0.012

Thermal Oxidizer - Total Annual Emissions

	Emissions			
Pollutant	**Vent (ton/yr)**	**SU/SD (ton/yr)**	**Total (ton/qtr)**	**Total (ton/yr)**
NOx	10.51	0.36	2.72	10.9
CO	8.76	0.30	2.27	9.1
VOC	0.31	0.011	0.08	0.3
SO_2	8.76	0.003	2.19	8.8
PM_{10} = $PM_{2.5}$	0.35	0.012	0.09	0.4

Tail Gas Thermal Oxidizer — Emissions Summary

Hydrogen Energy, Inc
HECA Project

5/21/2009

Modeling Worst-Case 1 hr Emissions

NOx (g/sec)	0.6
CO (g/sec)	0.50
SO_2 (g/sec)	0.25

Only NOx, CO, and SO_2 are considered for an average 1-hour Ambient Air Quality Standard.
NOx, CO, and SO_2 one (1) hr rates include contributions from both process venting and SRU startup.

Parameters

Days per year:	365
Hours per day:	24
Minutes per hour:	60
Seconds per minute:	60

Modeling Worst-Case 3 hr Emissions

SO_2 (lb/3-hr)	6.06
SO_2 (g/sec)	0.3

Only SO_2 is considered for an average 3-hour Ambient Air Quality Standard.
SO_2 pounds per 3-hr assumes three (3) hours of oxidation from both process venting and SRU startup.

Modeling Worst-Case 8 hr Emissions

CO (lb/8-hr)	32.00
CO (g/sec)	0.5

Only CO is considered for an average 8-hour Ambient Air Quality Standard.
Pounds per 8-hr assumes eight (8) hours of oxidation from both process venting and SRU startup.

Modeling Worst-Case 24 Hour Emissions

SO_2 (lb/24-hr)	48.49
SO_2 (g/sec)	0.3
PM_{10} = $PM_{2.5}$ (lb/24-hr)	3.84
PM_{10} = $PM_{2.5}$ (g/sec)	0.02

Only SO_2 and PM are considered for an average 24-hour Ambient Air Quality Standard.
Pounds per 24-hr assumes 24 hours of oxidation from both process venting and SRU startup.

Modeling Annual Average Emissions

NOx (g/sec)	0.3
CO (g/sec)	0.26
VOC (g/sec)	0.01
SO_2 (g/sec)	0.3
PM_{10} = $PM_{2.5}$ (g/sec)	0.01

Pounds per year assumes all contributions from annual waste gas oxidation and periodic SRU startup.

Hydrogen Energy, Inc *5/21/2009*
HECA Project

Gasifier Warming Emissions - Normal Operation

Total Hours of Operation	1,800	hr/yr
Gasifier Firing Rate	18	MMBtu/hr

Hours per Qtr			
Q1	**Q2**	**Q3**	**Q4**
450	450	450	450

Assuming equal operation in each quarter

Gasifier Pollutant Emission Factors

NOx (lb/MMBtu, HHV)	0.11
CO (lb/MMBtu, HHV)	0.09
VOC (lb/MMBtu, HHV)	0.007
SO_2 (lb/MMBtu, HHV) (12.65 ppm)	0.002
PM_{10} = $PM_{2.5}$ (lb/MMBtu, HHV)	0.008

Gasifier Pollutant Emission Rates

	Gasifier Emissions				
Pollutant	**lb/hr**	**lb/day**	**lb/yr**	**ton/qtr**	**ton/yr**
NOx	1.98	47.52	3,564.00	0.45	1.8
CO	1.62	38.88	2,916.00	0.36	1.5
VOC	0.13	3.02	226.80	0.03	0.1
SO_2	0.04	0.88	66.10	0.01	0.0
PM_{10} = $PM_{2.5}$	0.14	3.46	259.20	0.03	0.1

Please Note That There Are Three Gassifiers; However, Under Normal Operations, Only One Operates At A Time.

Gasifier Warming — Emissions Summary

Hydrogen Energy, Inc — *5/21/2009*
HECA Project

Modeling Worst-Case 1 hr Emissions

NOx (g/sec)	0.2
CO (g/sec)	0.2
SO_2 (g/sec)	0.0046

Only NOx, CO, and SO_2 are considered for an average 1-hour Ambient Air Quality Standard.
NOx, CO, and SO_2 one (1) hr rates assume normal operation.

Parameters

Days per year:	365
Hours per day:	24
Minutes per hour:	60
Seconds per minute:	60

Modeling Worst-Case 3 hr Emissions

SO_2 (lb/3-hr)	0.11
SO_2 (g/sec)	0.0046

Only SO_2 is considered for an average 3-hour Ambient Air Quality Standard.
SO_2 pounds per 3-hr assumes three (3) hours of normal operation.

Modeling Worst-Case 8 hr Emissions

CO (lb/8-hr)	12.96
CO (g/sec)	0.2

Only CO is considered for an average 8-hour Ambient Air Quality Standard.
Pounds per 8-hr assumes eight (8) hours of normal operation.

Modeling Worst-Case 24 Hour Emissions

SO_2 (lb/24-hr)	0.88
SO_2 (g/sec)	0.0046
PM_{10} = $PM_{2.5}$ (lb/24-hr)	3.46
PM_{10} = $PM_{2.5}$ (g/sec)	0.02

Only SO_2 and PM are considered for an average 24-hour Ambient Air Quality Standard.
Pounds per 24-hr assumes 24 hours of normal operation.

Gasifier Warming — Emissions Summary

Hydrogen Energy, Inc *5/21/2009*
HECA Project

Modeling Annual Average Emissions

NOx (g/sec)	0.1
CO (g/sec)	0.0419
VOC (g/sec)	0.0033
SO_2 (g/sec)	0.0010
PM_{10} = $PM_{2.5}$ (g/sec)	0.0037

Pounds per year assumes 1,800 hours of annual normal operation.

Hydrogen Energy, Inc *5/21/2009*
HECA Project

Cooling Towers - Annual Operating Emissions

Total Hours of Operation	8,322	hr/yr

Hours per Qtr			
Q1	**Q2**	**Q3**	**Q4**
2080.5	2080.5	2080.5	2080.5

Assuming equal operation in each quarter

Cooling Tower Operating Parameters

	Power Block	Process Area	ASU	Basis
Cooling water (CW) circulation rate, gpm	175,000	42,300	40,200	Typical plant performance
CW circulation rate (million lb/hr)	88	21	20	
CW dissolved solids (ppmw)	9,000	9,000	9,000	(See note)
Drift, fraction of circulating CW	0.0005%	0.0005%	0.0005%	Expected BACT

Note: Assumed 9,000 ppm TDS in circulating cooling water. Circulating water could range from 1200 to 90,000 ppm TDS depending on makeup water quality and tower operation. PM10 emissions would vary proportionately.

Cooling Tower PM_{10} Emissions

	Cooling Tower PM_{10} Emissions				
	lb/hr	**lb/day**	**lb/yr**	**ton/qtr**	**ton/yr**
Power Block Cooling Tower PM_{10} Emissions	3.94	94.50	32,767.88	4.10	16.38
Process Area Cooling Tower PM_{10} Emissions	0.95	22.84	7,920.46	0.99	3.96
ASU Cooling Tower PM_{10} Emissions	0.90	21.71	7,527.25	0.94	3.76

Hydrogen Energy, Inc *5/21/2009*
HECA Project

Total Cooling Tower PM_{10} Emissions

	(ton/yr)
PM_{10}	24.11
$PM_{2.5}$	14.46

$PM_{2.5}$ emission factors were determined by multiplying PM_{10} numbers by a "$PM_{2.5}$ fraction of PM_{10}" value. Fractional values for $PM_{2.5}$ were taken from the SCAQMD guidance: Final - Methodology to Calculate $PM_{2.5}$ and $PM_{2.5}$ Significance Thresholds, October 2006: Appendix A - Updated CEIDARS Table with $PM_{2.5}$ Fractions.

Parameters

Days per year:	365
Hours per day:	24
Minutes per hour:	60
Seconds per minute:	60

Modeling Worst-Case 24 Hour Emissions	Power Block	Process Area	ASU
Cells per Cooling Tower	13	4	4
PM_{10} (lb/24-hr)	94.50	22.84	21.71
PM_{10} (g/sec/cell)	0.038	0.030	0.028
$PM_{2.5}$ (lb/24-hr)	56.70	13.71	13.02
$PM_{2.5}$ (g/sec/cell)	0.023	0.018	0.017

PM is considered for an average 24-hour Ambient Air Quality Standard.

Pounds per 24-hr assumes 24 hours of continual operation.

Modeling Worst-Case Annual Emissions	Power Block	Process Area	ASU
Cells per Cooling Tower	13	4	4
PM_{10} (ton/yr)	16.38	3.96	3.76
PM_{10} (g/sec/cell)	0.036	0.028	0.027
$PM_{2.5}$ (lb/24-hr)	9.830	2.376	2.258
$PM_{2.5}$ (g/sec/cell)	0.022	0.017	0.016

PM is considered for an annual average Ambient Air Quality Standard.

Assumes continual annual operation.

Emergency Diesel Generators — Emissions Summary

Hydrogen Energy, Inc — *5/21/2009*
HECA Project

Emergency Generator - Expected Emergency Operation and Maintenance

Total Hours of Operation	50	hr/yr
Generator Specification	2,800	Bhp

Hours per Qtr			
Q1	**Q2**	**Q3**	**Q4**
12.5	12.5	12.5	12.5

Assuming equal operation in each quarter

Generator Pollutant Emission Factors (per generator)

NOx (g/Bhp/hr)	0.50
CO (g/Bhp/hr)	0.29
VOC (g/Bhp/hr)	0.11
SO_2 (g/Bhp/hr)	N/A
$PM_{10} = PM_{2.5}$ (g/Bhp/hr)	0.03

Generator Pollutant Emission Rates (per generator)

	Generator Emissions				
Pollutant	**lb/hr**	**lb/day**	**lb/yr**	**ton/qtr**	**ton/yr**
NOx	3.09	6.17	154.32	0.02	0.1
CO	1.79	3.58	89.51	0.01	0.04
VOC	0.68	1.36	33.95	0.00	0.02
SO_2	0.03	0.06	1.40	0.00	0.001
$PM_{10} = PM_{2.5}$	0.16	0.32	8.02	0.00	0.00

Fuel sulfur content =	15	ppmw
SO_2 emissions =	0.20	lb SO_2/1000 gal
Fuel flow	140.00	gal/hr

Pounds per day assumes two (2) hours of operation for maintenance and testing.

Please note that there are two generators; all emissions are shown for individual generators

Modeling Worst-Case 1 hr Emissions (per generator)

NOx (g/sec)	0.4
CO (g/sec)	0.2
SO_2 (g/sec)	0.004

Only NOx, CO, and SO_2 are considered for an average 1-hour Ambient Air Quality Standard.

Parameters

Days per year:	365
Hours per day:	24
Minutes per hour:	60
Seconds per minute:	60

Hydrogen Energy, Inc *5/21/2009*
HECA Project

Modeling Worst-Case 3 hr Emissions (per generator)

SO_2 (lb/3-hr)	0.06
SO_2 (g/sec)	0.002

Only SO_2 is considered for an average 3-hour Ambient Air Quality Standard.
Pounds per 3-hr assumes two (2) hours of operation.

Modeling Worst-Case 8 hr Emissions (per generator)

CO (lb/8-hr)	3.58
CO (g/sec)	0.06

Only CO is considered for an average 8-hour Ambient Air Quality Standard.
Pounds per 8-hr assumes two (2) hours of operation.

Modeling Worst-Case 24 Hour Emissions (per generator)

SO_2 (lb/24-hr)	0.06
SO_2 (g/sec)	0.0003
PM_{10} = $PM_{2.5}$ (lb/24-hr)	0.32
PM_{10} = $PM_{2.5}$ (g/sec)	0.002

Only SO_2 and PM are considered for an average 24-hour Ambient Air Quality Standard.
Pounds per 24-hr assumes two (2) hours of operation.

Modeling Annual Average Emissions (per generator)

NOx (g/sec)	0.002
CO (g/sec)	0.001
VOC (g/sec)	0.000
SO_2 (g/sec)	0.00002
PM_{10} = $PM_{2.5}$ (g/sec)	0.0001

Pounds per year assumes 50 hours of operation.

Emergency Diesel Firewater Pump — Emissions Summary

Hydrogen Energy, Inc — *5/21/2009*
HECA Project

Fire Water Pump - Expected Emergency Operation and Maintenance

Total Hours of Operation	100	hr/yr
Fire Water Pump Specification	556	Bhp

Hours per Qtr			
Q1	**Q2**	**Q3**	**Q4**
25	25	25	25

Assuming equal operation in each quarter

Fire Water Pump Pollutant Emission Factors

NOx (g/Bhp/hr)	1.50
CO (g/Bhp/hr)	2.60
VOC (g/Bhp/hr)	0.14
SO_2 (g/Bhp/hr)	N/A
$PM_{10} = PM_{2.5}$ (g/Bhp/hr)	0.015

Fire Water Pump Pollutant Emission Rates

	Fire Water Pump Emissions				
Pollutant	**lb/hr**	**lb/day**	**lb/yr**	**ton/qtr**	**ton/yr**
NOx	1.84	3.68	183.86	0.02	0.1
CO	3.19	6.37	318.69	0.04	0.2
VOC	0.17	0.34	17.16	0.00	0.01
SO_2	0.01	0.01	0.56	0.0001	0.0003
$PM_{10} = PM_{2.5}$	0.02	0.04	1.84	0.00	0.00

Fuel sulfur content =	15	ppmw
SO_2 emissions =	0.20	lb SO_2/1000 gal
Fuel flow	28.00	gal/hr

Pounds per day assumes two (2) hours of operation for maintenance and testing.

Emergency Diesel Firewater Pump — Emissions Summary

Hydrogen Energy, Inc — *5/21/2009*
HECA Project

Modeling Worst-Case 1 hr Emissions

NOx (g/sec)	0.2
CO (g/sec)	0.4
SO_2 (g/sec)	0.0007

Only NOx, CO, and SO_2 are considered for an average 1-hour Ambient Air Quality Standard

Parameters

Days per year:	365
Hours per day:	24
Minutes per hour:	60
Seconds per minute:	60

Modeling Worst-Case 3 hr Emissions

SO_2 (lb/3-hr)	0.01
SO_2 (g/sec)	0.0005

Only SO_2 is considered for an average 3-hour Ambient Air Quality Standard.
Pounds per 3-hr assumes two (2) hours of operation.

Modeling Worst-Case 8 hr Emissions

CO (lb/8-hr)	6.37
CO (g/sec)	0.1

Only CO is considered for an average 8-hour Ambient Air Quality Standard.
Pounds per 8-hr assumes two (2) hours of operation.

Emergency Diesel Firewater Pump — Emissions Summary

Hydrogen Energy, Inc — *5/21/2009*
HECA Project

Modeling Worst-Case 24 Hour Emissions

SO_2 (lb/24-hr)	0.01
SO_2 (g/sec)	0.0001
PM_{10} = $PM_{2.5}$ (lb/24-hr)	0.04
PM_{10} = $PM_{2.5}$ (g/sec)	0.0002

Only SO_2 and PM are considered for an average 24-hour Ambient Air Quality Standard.
Pounds per 24-hr assumes two (2) hours of operation.

Modeling Annual Average Emissions

NOx (g/sec)	0.003
CO (g/sec)	0.005
VOC (g/sec)	0.0002
SO_2 (g/sec)	0.00001
PM_{10} = $PM_{2.5}$ (g/sec)	0.00003

Pounds per year assumes 100 hours of operation.

Intermittent CO_2 Vent — Emissions Summary

Hydrogen Energy, Inc — *5/21/2009*
HECA Project

Intermittent CO_2 Vent - Venting Operation

Total Days of Operation	21	day/yr
Total Hours of Operation	504	hr/yr
Total Flow	656,000	lb/hr
Total Flow	15,150	lbmol/hr

Hours per Qtr			
Q1	**Q2**	**Q3**	**Q4**
5.25	5.25	5.25	5.25

Assuming equal operation in each quarter

Vent Gas Pollutant Emission Factors

CO (ppmv)	1000
VOC (ppmv)	40
H_2S (ppmv)	10

Molecular weight

H_2S	34	lb/lbmol
CO	28	lb/lbmol
VOC	16	lb/lbmol

Vent Gas Pollutant Emission Rates

	Vent Gas Emissions				
Pollutant	**lb/hr**	**lb/day**	**lb/yr**	**ton/qtr**	**ton/yr**
CO	424.20	10,180.88	213,798.43	26.72	106.9
VOC	9.70	232.71	4,886.82	0.61	2.4
H_2S	5.15	123.62	2,596.12	0.32	1.3

Intermittent CO_2 Vent — Emissions Summary

Hydrogen Energy, Inc
HECA Project

5/21/2009

Modeling Worst-Case 1 hr Emissions

CO (g/sec)	53.4
H_2S (g/sec)	0.6

Only H_2S and CO are considered for an average 1-hour Ambient Air Quality Standard.
H_2S and CO one (1) hr rates assume normal venting operation.

Parameters

Days per year:	365
Hours per day:	24
Minutes per hour:	60
Seconds per minute:	60

Modeling Worst-Case 8 hr Emissions

CO (lb/8-hr)	3,393.63
CO (g/sec)	53.4

Only CO is considered for an average 8-hour Ambient Air Quality Standard.
Pounds per 8-hr assumes eight (8) continuous hours of venting.

Modeling Annual Average Emissions

CO	3.1
VOC	0.1
H2S	0.0

Pounds per year assumes normal venting averaged over the entire year.

Feedstock - Dust Collection

Emissions Summary

Hydrogen Energy, Inc
HECA Project

5/21/2009

Operation

Total Hours of Operation	8,760	hr/yr

Hours per Qtr			
Q1	**Q2**	**Q3**	**Q4**
2190	2190	2190	2190

Assuming equal operation in each quarter

Description	Dust Collector No.	Max Feed Handling Rate (ton/hr)	Air Flow to Collector (acfm)	Max Collector PM Emission Rate (lb/hr)	Emission Factor (lb/ton)	Max 24-hr Average		Annual Average	
						Feed Rate (ton/hr)	PM Emission (lb/hr)	Feed Rate (ton/hr)	PM Emission (lb/hr)
Truck Unloading	DC-1	900	6,463	0.277	0.00031	775	0.239	150	0.046
Coke/coal Silos (filling)	DC-2	900	16,376	0.702	0.00078	775	0.604	150	0.117
Mass Flow Bins (in/out)	DC-3	170	7,620	0.327	0.00192	170	0.327	150	0.288
Coke/coal Silos (loadout)	DC-4	170	4,872	0.209	0.00123	170	0.209	150	0.184
Crusher Inlet/Outlet	DC-5	170	4,673	0.200	0.00118	170	0.200	150	0.177
Fluxant Bins (filling)	DC-6	100	1,234	0.053	0.00053	40	0.021	6	0.003

Maximum dust collector PM emission rate based on expected supplier guarantee of 0.005 grain/scf outlet dust loading.

The maximum 24-hr feed rate to the gasifiers is limited by the grinding mill capacity.

Duct Collector Emission Rates

Pollutant	Collector Emissions				
	lb/hr	lb/day	lb/yr	ton/qtr	ton/yr
Dust Collecter 1 (DC-1)	0.24	5.72	404.40	0.05	0.2
Dust Collecter 2 (DC-2)	0.60	14.50	1,024.67	0.13	0.5
Dust Collecter 3 (DC-3)	0.33	7.84	2,524.21	0.32	1.3
Dust Collecter 4 (DC-4)	0.21	5.01	1,613.90	0.20	0.8
Dust Collecter 5 (DC-5)	0.20	4.81	1,547.98	0.19	0.8
Dust Collecter 6 (DC-6)	0.02	0.51	27.80	0.00	0.0

Pounds per hour and pounds per day calculated based on the maximum 24-hr average emission rate.

Pounds per year calculated based on the annual average emission rate.

	lb/yr	ton/qtr	ton/yr
PM_{10}	**7,143.0**	**0.9**	**3.6**
$PM_{2.5}$	**2085.7**	**0.3**	**1.0**

$PM_{2.5}$ emission factors were determined by multiplying PM_{10} numbers by a "$PM_{2.5}$ fraction of PM_{10}" value. Fractional values for $PM_{2.5}$ were taken from the SCAQMD guidance: Final - Methodology to Calculate $PM_{2.5}$ and $PM_{2.5}$ Significance Thresholds, October 2006: Appendix A - Updated CEIDARS Table with $PM_{2.5}$ Fractions.

Feedstock - Dust Collection

Emissions Summary

Hydrogen Energy, Inc
HECA Project

5/21/2009

Parameters

Days per year:	365
Hours per day:	24
Minutes per hour:	60
Seconds per minute:	60

Modeling Worst-Case 24 Hour Emissions	DC-1	DC-2	DC-3	DC-4	DC-5	DC-6
PM_{10} (lb/day)	5.72	14.50	7.84	5.01	4.81	0.51
PM_{10} (g/sec)	0.030	0.076	0.041	0.026	0.025	0.003
$PM_{2.5}$ (lb/24-hr)	1.672	4.235	2.289	1.463	1.404	0.148
$PM_{2.5}$ (g/sec)	0.009	0.022	0.012	0.008	0.007	0.001

PM is considered for an average 24-hour Ambient Air Quality Standard.

Pounds per hour calculated based on the maximum 24-hr average emission rate.

Modeling Annual Average Emissions	DC-1	DC-2	DC-3	DC-4	DC-5	DC-6
PM_{10} (lb/yr)	404.40	1,024.67	2,524.21	1,613.90	1,547.98	27.80
PM_{10} (g/sec)	0.006	0.015	0.036	0.023	0.022	0.000
$PM_{2.5}$ (lb/24-hr)	118.085	299.204	737.068	471.259	452.010	8.117
$PM_{2.5}$ (g/sec)	0.002	0.004	0.011	0.007	0.007	0.000

Pounds per year calculated based on the annual average emission rate.

Hydrogen Energy, Inc *5/21/2009*
HECA Project

GHG emissions are numerically depicted as metric tons (tonne) of carbon dioxide equivalents (CO_2e). CO_2e represents CO_2 plus the additional warming potential from CH_4 and N_2O. CH_4 and N_2O have 21 and 310 times the warming potential of CO_2, respectively.

Natural Gas GHG Emission Factors						Diesel GHG Emission Factors				
CO_2 =	52.78	kg/MMBtu =	116.36	lb/MMBtu		CO_2 =	10.15	kg/gal =	22.38	lb/gal
CH_4 =	0.0059	kg/MMBtu =	0.013	lb/MMBtu		CH_4 =	0.0003	kg/gal =	0.001	lb/gal
N_2O =	0.0001	kg/MMBtu =	0.00022	lb/MMBtu		N_2O =	0.0001	kg/gal =	0.0002	lb/gal

CO_2, CH_4, and N_2O emission factors are taken from Appendix C of the California Climate Action Registry (CCAR) General Reporting Protocol Version 2.2 (March 2007)

HRSG Stack

Operating Hours		50	hr/yr			
HRSG Heat Input		1,998	MMBtu/hr			
CO_2 =	5,274	tonne/yr				
CH_4 =	1	tonne/yr =	12	tonne CO_2e/yr		
N_2O =	0.01	tonne/yr =	3	tonne CO_2e/yr	Total tonne CO_2e/yr =	5,290

During mature operation of the HRSG, the unit will fire only syngas, except during periods of startup and shutdown.
Startup and shutdown of the HRSG will be accomplished using natural gas. The total startup and shutdown operating hours are estimated at 50 hr/yr.
HRSG heat input rate is assumed to be the maximum heat input rate firing natural gas, which corresponds to winter minimum (20 F).

Auxiliary CTG

Operating Hours		4,110	hr/yr			
HRSG Heat Input		911	MMBtu/hr			
CO_2 =	197,620	tonne/yr				
CH_4 =	22	tonne/yr =	464	tonne CO_2e/yr		
N_2O =	0.4	tonne/yr =	116	tonne CO_2e/yr	Total tonne CO_2e/yr =	198,200

Average annual GHG operational emissions are calculated using yearly average (65 F) at 100 % load, with evaporative cooling.

Hydrogen Energy, Inc *5/21/2009*
HECA Project

GHG emissions are numerically depicted as metric tons (tonne) of carbon dioxide equivalents (CO_2e). CO_2e represents CO_2 plus the additional warming potential from CH_4 and N_2O. CH_4 and N_2O have 21 and 310 times the warming potential of CO_2, respectively.

Auxiliary Boiler

Operating Hours		2,190	hr/yr			
HRSG Heat Input		142	MMBtu/hr			
CO_2 =	16,418	tonne/yr				
CH_4 =	2	tonne/yr =	39	tonne CO_2e/yr		
N_2O =	0.03	tonne/yr =	10	tonne CO_2e/yr	Total tonne CO_2e/yr =	16,466

Emergency Generators

Operating Hours		50	hr/yr			
HRSG Heat Input		2,800	Bhp			
CO_2 =	3,201	lb/hr =	73	tonne CO_2/yr		
CH_4 =	0.09	lb/hr =	0.045	tonne CO_2e/yr		
N_2O =	0.03	lb/hr =	0.2218	tonne CO_2e/yr	Total tonne CO_2e/yr* =	146

The following conversions were used to convert from lb/gallon to lb/hp-hour; and then multiplying by the rated horsepower rating: 1 gallon/137,000 Btu; and 7,000 Btu/hp-hour.

* Total tonnes CO_2e per year represent the contributions from both generators.

Fire Water Pump

Operating Hours		100	hr/yr			
HRSG Heat Input		556	Bhp			
CO_2 =	636	lb/hr =	29	tonne CO_2/yr		
CH_4 =	0.02	lb/hr =	0.018	tonne CO_2e/yr		
N_2O =	0.01	lb/hr =	0.0881	tonne CO_2e/yr	Total tonne CO_2e/yr =	29

The following conversions were used to convert from lb/gallon to lb/hp-hour; and then multiplying by the rated horsepower rating: 1 gallon/137,000 Btu; and 7,000 Btu/hp-hour.

Hydrogen Energy, Inc *5/21/2009*
HECA Project

GHG emissions are numerically depicted as metric tons (tonne) of carbon dioxide equivalents (CO_2e). CO_2e represents CO_2 plus the additional warming potential from CH_4 and N_2O. CH_4 and N_2O have 21 and 310 times the warming potential of CO_2, respectively.

Gasification Flare

Pilot Operation						
Operating Hours		8,760	hr/yr			
HRSG Heat Input		0.5	MMBtu/hr			
CO_2 =	231	tonne/yr				
CH_4 =	0.03	tonne/yr =	0.5	tonne CO_2e/yr		
N_2O =	0.0004	tonne/yr =	0.1	tonne CO_2e/yr	Total tonne CO_2e/yr =	232
Flaring Events						
Total Operation		115,500	MMBtu/yr			
CO_2 =	6,098	tonne/yr				
CH_4 =	0.7	tonne/yr =	14	tonne CO_2e/yr		
N_2O =	0.01	tonne/yr =	4	tonne CO_2e/yr	Total tonne CO_2e/yr =	6,116

GHG emissions from flaring events are conservatively estimated using GHG emission factors for natural gas combustion.

SRU Flare

Pilot Operation						
Operating Hours		8,760	hr/yr			
HRSG Heat Input		0.3	MMBtu/hr			
CO_2 =	139	tonne/yr				
CH_4 =	0.02	tonne/yr =	0.3	tonne CO_2e/yr		
N_2O =	0.0003	tonne/yr =	0.08	tonne CO_2e/yr	Total tonne CO_2e/yr =	139

Hydrogen Energy, Inc *5/21/2009*
HECA Project

GHG emissions are numerically depicted as metric tons (tonne) of carbon dioxide equivalents (CO_2e). CO_2e represents CO_2 plus the additional warming potential from CH_4 and N_2O. CH_4 and N_2O have 21 and 310 times the warming potential of CO_2, respectively.

Flaring Events (assist gas)

Operating Hours	6	hr/yr
HRSG Heat Input	36	MMBtu/hr

CO_2 =	11	tonne/yr				
CH_4 =	0.001	tonne/yr =	0.03	tonne CO_2e/yr		
N_2O =	0.00002	tonne/yr =	0.007	tonne CO_2e/yr	Total tonne CO_2e/yr =	11

Throughput (inerts)

H_2S =	25	%
CO_2 (inerts) =	75	%
H_2S =	72	lbmol/hr
CO_2 (inerts) =	216	lbmol/hr
CO_2 (inerts) =	9,488	lb/hr
Operating Hours	6	hr/yr

Total tonne CO_2e/yr =	26

GHG emissions from flaring events are conservatively estimated using GHG emission factors for natural gas combustion.
Throughtput (inerts) amount calculated from the relationship of CO2 to H2S in the SRU Flare.

Hydrogen Energy, Inc *5/21/2009*
HECA Project

GHG emissions are numerically depicted as metric tons (tonne) of carbon dioxide equivalents (CO_2e). CO_2e represents CO_2 plus the additional warming potential from CH_4 and N_2O. CH_4 and N_2O have 21 and 310 times the warming potential of CO_2, respectively.

Rectisol Flare

Pilot Operation						
Operating Hours		8,760	hr/yr			
HRSG Heat Input		0.3	MMBtu/hr			
CO_2 =	139	tonne/yr				
CH_4 =	0.02	tonne/yr =	0.3	tonne CO_2e/yr		
N_2O =	0.0003	tonne/yr =	0.08	tonne CO_2e/yr	Total tonne CO_2e/yr =	139

GHG emissions from flaring events are conservatively estimated using GHG emission factors for natural gas combustion.

Tail Gas Thermal Oxidizer

Process Vent Disposal Emissions						
Operating Hours		8,760	hr/yr			
HRSG Heat Input		10	MMBtu/hr			
CO_2 =	4,625	tonne/yr				
CH_4 =	0.52	tonne/yr =	10.9	tonne CO_2e/yr		
N_2O =	0.0088	tonne/yr =	2.7	tonne CO_2e/yr	Total tonne CO_2e/yr =	4,638
SRU Startup Waste Gas Disposal						
Operating Hours		300	hr/yr			
HRSG Heat Input		10	MMBtu/hr			

Hydrogen Energy, Inc *5/21/2009*
HECA Project

GHG emissions are numerically depicted as metric tons (tonne) of carbon dioxide equivalents (CO_2e). CO_2e represents CO_2 plus the additional warming potential from CH_4 and N_2O. CH_4 and N_2O have 21 and 310 times the warming potential of CO_2, respectively.

CO_2 =	158	tonne/yr				
CH_4 =	0.018	tonne/yr =	0.37	tonne CO_2e/yr		
N_2O =	0.00030	tonne/yr =	0.093	tonne CO_2e/yr	Total tonne CO_2e/yr =	159

GHG emissions from flaring events are conservatively estimated using GHG emission factors for natural gas combustion.

Intermittent CO_2 Vent

Operating Hours	504	hr/yr		
CO_2 Emission Rate	656,000	lb/hr		
			Total tonne CO_2e/yr =	150,011

Assumes 21 days per year venting at full rate.

Gasifier Warming

Operating Hours	1,800	hr/yr				
HRSG Heat Input	18	MMBtu/hr				
CO_2 =	1,711	tonne/yr				
CH_4 =	0	tonne/yr =	4	tonne CO_2e/yr		
N_2O =	0.00	tonne/yr =	1	tonne CO_2e/yr	Total tonne CO_2e/yr =	1,716

Total tonne CO_2e/yr =	**383,317**

Calculations for Trucks Operation Modeling

Data Supplied By Client				
Parameter	**Coke and Coal Trucks (@ 10 mph)**		**Onsite Gasifier Solids Handling (@ 5 mph)**	
	Running Emissions	**Idling Emissions**	**Running Emissions**	**Idling Emissions**
Distance Traveled (mi)	0.9659		0.568	
Per Truck Idle Time (hr)		0.117		0.083
Maximum number of trucks or loads:				
1-hr	18	18	2	2
3-hr	54	54	7	7
8-hr	144	144	13	13
24-hr	180	180	38	37.5
Annual average trucks or loads	35,500	35500	2,900	2900

Emission Factor based on equation from AP-42, Chapter 13 (Paved Roads)

$$E = k\left(\frac{sL}{2}\right)^{0.65} \times \left(\frac{W}{3}\right)^{1.5} - C$$

E = particulate emission factor
k = particle size multiplier for particle size range and units of interest
sL = road surface silt loading
W = average weight (tons) of the vehicles traveling the road
C = emission factor for 1980's vehicle fleet exhaust, brake wear and tire wear.

Parameter	**Value**	**Unit**	
k =	0.016	lb/VMT	AP 42, Table 13.2-1.1: default k value for PM_{10}
C =	0.00047	lb/VMT	AP 42, Table 13.2-1.2: default C value for PM_{10}
sL=	0.031	g/m^2	Default value from URBEMIS 9.2 for Kern County
W =	2.65	ton	Default value from URBEMIS 9.2 for Kern County
E =	4.1E-04	lb/VMT	Default value from URBEMIS 9.2 for Kern County
	0.19	g/VMT	Default value from URBEMIS 9.2 for Kern County

Summary of Truck Emissions - HECA

Emissions Summary

Hydrogen Energy International LLC
HECA Project

5/21/2009

EMFAC2007 Emission Factors (g/mi or g/idle-hour)

Pollutant	Coke and Coal Trucks (@ 10 mph)		Onsite Gasifier Solids Handling (@ 5 mph)	
	Running Emissions	Idling Emissions	Running Emissions	Idling Emissions
CO	8.289	47.47	12.05	47.47
NOx	16.59	115.98	23.645	115.98
SOx	0.03	0.062	0.04	0.062
PM10 *	1.09	1.115	1.47	1.115
PM2.5	0.794	1.026	1.142	1.026

** PM10 iincludes entrained road dust factor for paved roads obtained from AP-42 Ch. 13, using defaults from URBEMIS 9.2*

1-hr Emission Rates for AERMOD (g/s)

Pollutant	Coke and Coal Trucks (@ 10 mph)		Onsite Gasifier Solids Handling (@ 5 mph)	
	Running Emissions (0.84 mile route)	Idling Emissions (at each Idle Point)	Running Emissions (0.568 mile route)	Idling Emissions (at each Idle Point)
CO	0.040	0.028	0.004	0.002
NOx	0.080	0.068	0.007	0.005
SOx	1.4E-04	3.6E-05	1.2E-05	2.9E-06
PM10	0.005	0.001	0.000	5.2E-05
PM2.5	0.004	0.001	3.60E-04	4.8E-05

3-hr Emission Rates for AERMOD (g/s)

Pollutant	Coke and Coal Trucks (@ 10 mph)		Onsite Gasifier Solids Handling (@ 5 mph)	
	Running Emissions (0.84 mile route)	Idling Emissions (at each Idle Point)	Running Emissions (0.568 mile route)	Idling Emissions (at each Idle Point)
CO	0.040	0.028	0.004	0.003
NOx	0.080	0.068	0.009	0.006
SOx	1.4E-04	3.6E-05	1.4E-05	3.3E-06
PM10	0.005	0.001	0.001	6.0E-05
PM2.5	0.004	0.001	4.20E-04	5.5E-05

Summary of Truck Emissions - HECA

Emissions Summary

Hydrogen Energy International LLC
HECA Project

5/21/2009

8-hour Emission Rates for AERMOD (g/s)

Pollutant	Coke and Coal Trucks (@ 10 mph)		Onsite Gasifier Solids Handling (@ 5 mph)	
	Running Emissions (0.84 mile route)	Idling Emissions (at each Idle Point)	Running Emissions (0.568 mile route)	Idling Emissions (at each Idle Point)
CO	0.040	0.028	0.003	0.002
NOx	0.080	0.068	0.006	0.004
SOx	1.4E-04	3.6E-05	9.5E-06	2.3E-06
PM10	0.005	0.001	3.8E-04	4.2E-05
PM2.5	0.004	0.001	2.9E-04	3.9E-05

24-hour Emission Rates for AERMOD (g/s)

Pollutant	Coke and Coal Trucks (@ 10 mph)		Onsite Gasifier Solids Handling (@ 5 mph)	
	Running Emissions (0.84 mile route)	Idling Emissions (at each Idle Point)	Running Emissions (0.568 mile route)	Idling Emissions (at each Idle Point)
CO	0.017	0.012	0.003	0.002
NOx	0.033	0.028	0.006	0.004
SOx	6.0E-05	1.5E-05	9.1E-06	2.2E-06
PM10	0.002	2.7E-04	3.6E-04	4.0E-05
PM2.5	0.002	2.5E-04	2.8E-04	3.7E-05

Annual Emission Rates for AERMOD (g/s)

Pollutant	Coke and Coal Trucks (@ 10 mph)		Onsite Gasifier Solids Handling (@ 5 mph)	
	Running Emissions (0.84 mile route)	Idling Emissions (at each Idle Point)	Running Emissions (0.568 mile route)	Idling Emissions (at each Idle Point)
CO	0.009	0.006	0.001	0.000
NOx	0.018	0.015	0.001	0.001
SOx	3.3E-05	8.1E-06	1.9E-06	4.8E-07
PM10	0.001	1.5E-04	7.7E-05	8.5E-06
PM2.5	0.001	1.3E-04	6.0E-05	7.9E-06

Appendix D2

Best Available Control Technology (BACT) Section

APPENDIX D2

BEST AVAILABLE CONTROL TECHNOLOGY (BACT) SECTION

HECA POWER PROJECT
KERN COUNTY, CALIFORNIA

Prepared For:

San Joaquin Valley Air Pollution Control District
California Energy Commission
U.S. Environmental Protection Agency Region IX

Prepared on behalf of

Hydrogen Energy International LLC

May 2009

URS

Table of Contents

1.0 Applicable Regulations D2-1

2.0 BACT Review Process D2-2

3.0 Project Sources Subject to BACT Analysis D2-4

4.0 Consideration of Alternative Generating Technology D2-6

5.0 Other Permitted IGCC Projects D2-7

6.0 Source-Specific BACT Analysis D2-8
- 6.1 CTG/HRSG BACT Analysis D2-9
  - 6.1.1 Nitrogen Oxides BACT Analysis for the CTG/HRSG D2-9
  - 6.1.2 Carbon Monoxide BACT Analysis for the CTG/HRSG D2-15
  - 6.1.3 Particulate Matter Emissions BACT Analysis for the CTG/HRSG ... D2-18
  - 6.1.4 Sulfur Dioxide and Sulfuric Acid Mist BACT Analysis for the CTG/HRSG D2-20
  - 6.1.5 Volatile Organic Compounds BACT Analysis for the CTG/HRSG .. D2-24
- 6.2 Auxiliary CTG BACT Analysis D2-27
  - 6.2.1 Nitrogen Oxides BACT Analysis for the Auxiliary CTG D2-27
  - 6.2.2 Carbon Monoxide BACT Analysis for the Auxiliary CTG D2-27
  - 6.2.3 Particulate Emissions BACT Analysis for the Auxiliary CTG D2-27
  - 6.2.4 Sulfur Oxides BACT Analysis for the Auxiliary CTG D2-28
  - 6.2.5 Volatile Organic Compounds BACT Analysis for the Auxiliary CTG D2-28
- 6.3 Cooling Towers Particulate Emissions BACT Analysis D2-28
- 6.4 Auxiliary Boiler BACT Analysis D2-30
  - 6.4.1 Nitrogen Oxides BACT Analysis for the Auxiliary Boiler D2-31
  - 6.4.2 Carbon Monoxide BACT Analysis for the Auxiliary Boiler D2-32
  - 6.4.3 Particulate Emissions, Sulfur Oxides, Volatile Organic Compounds BACT Analysis for the Auxiliary Boiler D2-33
- 6.5 Diesel Engines BACT Analysis D2-33
  - 6.5.1 BACT Analysis for the Standby Diesel Generators D2-34
  - 6.5.2 BACT Analysis for the Firewater Pump Diesel Engine D2-35
- 6.6 Gasification Flare BACT Analysis D2-35
- 6.7 Sulfur Recovery System BACT Analysis D2-37
- 6.8 CO_2 Vent BACT Analysis D2-40
- 6.9 Gasifier Warming (Refractory Heaters) BACT Analysis D2-42
- 6.10 Feedstock Handling System BACT Analysis D2-42
  - 6.10.1 Particulate Matter BACT Analysis for the Feedstock-Handling System D2-43

7.0 Reference D2-43

List of Tables

Table 3-1 Proposed BACT for Project
Table 6-1 Permitted Criteria Pollutant BACT Limits for Combined Cycle-Combustion Turbine
Table 6-2 NOx BACT Emission Limit Comparison
Table 6-3 CO BACT Emission Limit Comparison
Table 6-4 PM BACT Emission Limit Comparison
Table 6-5 SO_2 BACT Emission Limit Comparison
Table 6-6 VOC BACT Emission Limit Comparison
Table 6-7 Gasification Flare Total Criteria Pollutant Emissions
Table 6-8 Sulfur Recovery System Emissions
Table 6-9 Gasifier Warming (Refractory Heater) Emissions

1.0 APPLICABLE REGULATIONS

Federal requirements pertaining to control of pollutants subject to PSD review (i.e., attainment pollutants) were promulgated by U.S. EPA in 40 Code of Federal Regulations (CFR) 42.21 (j). This regulation defines Best Available Control Technology (BACT) as emission limits "based on the maximum degree of reduction for each pollutant." BACT determinations are made on a case-by-case basis, taking into account energy, environmental, and economic impacts and other costs.

Federal requirements pertaining to control of non-attainment pollutants, or Lowest Achievable Emission Rate (LAER), were promulgated by USEPA under 40 CFR 51.165 (a). This regulation defines LAER as the emissions limit based on either (1) the most stringent emission rate contained in a State Implementation Plan (SIP), unless the [source] demonstrates the rate is not achievable; or (2) the most stringent emissions limitation that is achieved in practice. The federal LAER does not consider the cost impacts of control.

BACT must be applied to any new or modified source resulting in an emissions increase exceeding any San Joaquin Valley Air Pollution Control District (SJVAPCD) BACT threshold. SJVAPCD Rule 2201 requires HECA to apply BACT to any source that has an increase in emissions of oxides of nitrogen (NO_x), volatile organic compounds (VOC), sulfur dioxide (SO_2), carbon monoxide (CO), and particulate matter equal to or less than 10 microns in diameter (PM_{10}) (criteria pollutants) in excess of 2.0 pounds per highest day. BACT for the applicable pollutants was determined by reviewing the SJVAPCD BACT Guidelines Manual, the South Coast Air Quality Management District BACT Guidelines Manual, the most recent Compilation of California BACT Determinations, CAPCOA (2nd Ed., November 1993), and USEPA's BACT/LAER Clearinghouse.

BACT review is required for the proposed Project because the proposed Project will result in a significant net emissions increase for NO_x, CO, VOC, PM_{10}, and SO_2.

The basis for the emissions-related analyses is annual average operation at a design capacity of nominally 250 megawatts. The proposed Project as currently configured will involve the following major processes and emission units:

- One hydrogen-rich fuel and/or natural-gas–fired Combustion Turbine Generator (CTG) with Heat Recovery Steam Generator (HRSG) and one Steam Turbine-Generator (STG);
- One Natural-Gas – fired Simple-Cycle Auxiliary CTG
- One Multi-cell, Mechanical-draft Cooling Tower for the combined-cycle power block
- One Multi-cell, Mechanical-draft Cooling Tower for the Air Separation Unit
- One Multi-cell, Mechanical-draft Cooling Tower for the gasification block
- One Auxiliary Boiler
- Solid Feedstock Receiving and Handling System
- Gasification Block, including an Elevated Gasification Flare
- Three Natural-Gas – Fired Gasifier Warming (Refractory Heaters)

- Sulfur Recovery System (Tail Gas Thermal Oxidizer and two elevated flares with natural gas assist)
- Two Emergency, Diesel-Engine — Driven Generators
- One Diesel-Engine – Driven Fire – Water Pump
- One carbon dioxide (CO_2) vent stack

Section 2 of this ATC provides a complete description of the Project indicating the layout of the major plant components within the site, and general discussion of the project components.

2.0 BACT REVIEW PROCESS

BACT is defined in the PSD regulations as:

"... an emission limitation based on the maximum degree of reduction for each pollutant subject to regulation under the Act which would be emitted from any proposed major stationary source ... which [is determined to be achievable], on a case-by-case basis, taking into account energy, environmental, and economic impacts and other costs" [40 CFR 52.21(b)(12)]

In a December 1, 1987 memorandum from the USEPA Assistant Administrator for Air and Radiation, the agency provided guidance on the "top-down" methodology for determining BACT. The "top-down" process involves the identification of all applicable control technologies according to control effectiveness. Evaluation begins with the "top," or most stringent, control alternative. If the most stringent option is shown to be technically or economically infeasible, or if environmental impacts are severe enough to preclude its use, then it is eliminated from consideration, and the next most stringent control technology is similarly evaluated. This process continues until the BACT level under consideration cannot be eliminated by technical or economic considerations, energy impacts, or environmental impacts. The top control alternative that is not eliminated in this process becomes the proposed BACT basis.

This top-down BACT analysis process can be considered to contain five basic steps, described below (from the USEPA's Draft New Source Review Workshop Manual, 1990)[1]:

Step 1. Identify all available control technologies with practical potential for application to the specific emission unit for the regulated pollutant under evaluation;

Step 2. Eliminate all technically infeasible control technologies;

Step 3. Rank remaining control technologies by control effectiveness and tabulate a control hierarchy;

Step 4. Evaluate most effective controls and document results; and

Step 5. Select BACT, which will be the most effective practical option not rejected, based on economic, environmental, and/or energy impacts.

[1] "New Source Review Workshop Manual," DRAFT October 1990, USEPA Office of Air Quality Planning and Standards

Formal use of these steps is not always necessary. However, the USEPA has consistently interpreted the statutory and regulatory BACT definitions as containing two core requirements, which USEPA believes must be met by any BACT determination, irrespective of whether it is conducted in a "top-down" manner. First, the BACT analysis must include consideration of the most stringent available technologies, i.e., those that provide the "maximum degree of emissions reduction."

Second, any decision to require a lesser degree of emissions reduction must be justified by an objective analysis of "energy, environmental, and economic impacts" contained in the record of the permit decisions.

Additionally, the minimum control efficiency to be considered in a BACT analysis must result in an emission rate no less stringent than the applicable New Source Performance Standard (NSPS) emission rate, if any NSPS standard for that pollutant is applicable to the source.

This BACT analysis was conducted in a manner consistent with this stepwise approach. Control options for potential reductions in criteria pollution emissions were identified for each source. These options were identified by researching the USEPA database known as the RACT/BACT/LAER Clearinghouse (RBLC), drawing upon previous environmental permitting experience for similar units and surveying available literature. Available controls that are judged to be technically feasible are further evaluated based on an analysis of economic, environmental, and energy impacts.

Assessing the technical feasibility of emission control alternatives is discussed in USEPA's draft "New Source Review Workshop Manual." Using terminology from this manual, if a control technology has been "demonstrated" successfully for the type of emission unit under review, then it would normally be considered technically feasible. For an undemonstrated technology, "availability" and "applicability" determine technical feasibility. An available technology is one that is commercially available, meaning that it has advanced through the following steps:

- Concept stage;
- Research and patenting;
- Bench-scale or laboratory testing;
- Pilot-scale testing;
- Licensing and commercial demonstration; and
- Commercial sales.

Suitability for consideration as a BACT measure involves not only commercial availability (as evidenced by past or expected near-term deployment on the same or similar type of emission unit), but also involves consideration of the physical and chemical characteristics of the gas stream to be controlled. A control method applicable to one emission unit may not be applicable to a similar unit, depending on differences in the gas streams' physical and chemical characteristics.

For this BACT analysis, the available control options were identified by querying the USEPA RBLC and by consulting available literature on control options for integrated gasification combined cycle (IGCC). The analysis also involves review of currently permitted and operating IGCC facilities.

3.0 PROJECT SOURCES SUBJECT TO BACT ANALYSIS

HECA will consist of several facility blocks/systems representing sources of regulated air pollutants that are addressed in this BACT analysis. To evaluate possible emission control technologies, it is first important to understand the unique IGCC process and the supporting ancillary plant processes. The process descriptions for the various processes that make up HECA are included in Chapter 2 of this Application. The proposed BACT controls and associated emission rates for each emission unit are summarized in Table 3-1.

HECA includes one type of source unique to power generation facilities operating at this time – the CTG/HRSG equipped to combust syngas. It is important to emphasize that BACT for this source is based on the "best of class" in current diffusion combustor based syngas fired gas turbine technology. The emissions profile contained in this application for this source is as good as or better than other syngas IGCC permitted to date, as discussed later in this section. However, the IGCC BACT level emissions should not be compared to the natural gas combined cycle (NGCC) gas turbine technology using dry low NOx burner technology emission levels.

Table 3-1
Proposed BACT for Project

Pollutant	Technology	Emission Limit
CTG/HRSG Combustion Turbine (excluding Start up / Shutdown conditions).		
NO_x	Diluent Injection, Selective Catalytic Reduction	4 ppm NO_x @ 15 percent O_2 on hydrogen-rich fuel and natural gas fuel, 3-hour average
CO	Good Combustion Practice (GCP), CO Catalyst	3 ppm CO @ 15 percent O_2 on hydrogen-rich fuel, 5 ppm CO @ 15 percent O_2 on natural gas fuel
PM/PM_{10}	GCP, Gas Cleanup, Gaseous Fuels	24 lb/hr on hydrogen-rich fuel, 18 lb/hr on natural gas fuel
SO_2	Hydrogen-rich Gas cleanup, pipeline quality natural gas	≤ 5 ppmv in undiluted total sulfur (hydrogen-rich fuel) ≤ 0.75 grain / 100 SCF (12.65 ppm for natural gas)
VOC	CO Catalyst	1 ppm VOC @ 15 percent O_2 on hydrogen-rich fuel, 2 ppm VOC @ 15 percent O_2 on natural gas fuel
NH_3	Selective Catalytic Reduction	5 ppm NH_3 slip on hydrogen-rich fuel and natural gas fuel
Auxiliary CTG (excluding Start up / Shutdown conditions). Natural Gas fired. 103.3 MW		
NO_x	Selective Catalytic Reduction	2.5 ppm NO_x @ 15 percent O_2 on natural gas fuel, 3-hour average
CO	CO Catalyst	6.0 ppm CO @ 15 percent O_2
PM/PM_{10}	PUC regulated natural gas	6 lb/hr on natural gas fuel
SO_2		≤ 0.75 grain / 100 SCF (12.65 ppm for natural gas)
VOC	CO Catalyst	2 ppm VOC @ 15 percent O_2 on natural gas fuel

Table 3-1
Proposed BACT for Project (Continued)

Pollutant	Technology	Emission Limit
NH_3	Selective Catalytic Reduction	10 ppm NH_3 slip on natural gas fuel
Cooling Towers		
PM/PM_{10}	High Efficiency Drift Eliminators, Total Dissolved Solids (TDS) limit in circulating water, and Good Operating Practice	0.0005 percent drift as percent of the circulating water
Auxiliary Boiler, Natural Gas 142 MMBTU/hr		
NO_x	Low NO_x Combustor with FGR	9 ppm NO_x @ 3 percent O_2 on natural gas fuel
CO	GCP	50 ppmvd @ 3 percent O_2
PM/PM_{10}	GCP, PUC grade natural gas fuel	0.005 lb/MMBtu heat input
SO_2		≤ 0.75 grain / 100 SCF (12.65 ppm for natural gas)
VOC		0.004 lb/MMBtu heat input
Emergency Diesel Engines (2 Emergency Generators)		
NO_x	Combustion controls, restricted operating hours	0.5 g/brake horsepower (Bhp)/hr
CO		0.29 g/Bhp-hr
PM/PM_{10}	Combustion controls, Low Sulfur Diesel fuel, restricted operating hours	0.03 g/Bhp-hr
SO_2		N/A
VOC		0.11 g/bhp-hr
Emergency Diesel Engines (Fire Pump)		
NO_x	Combustion controls, restricted operating hours	1.5 g/bhp-hr
CO		2.60 g/bhp-hr
PM/PM_{10}	Combustion controls, Low Sulfur Diesel fuel, restricted operating hours	0.015 g/bhp-hr
SO_2		N/A
VOC		0.14 g/bhp-hr
Gasification Flare (an elevated flare)		
NO_x, CO, PM/PM_{10}, SO_2, VOC	GCP, gaseous fuel only, Gas cleanup/Limit on reduced sulfur in hydrogen-rich fuel	
Thermal Oxidizer (Sulfur Recovery System)		
NO_x	GCP	4.8 lb/hr 24-hour average
CO		4.0 lb/hr, 1-hour average
PM/PM_{10}		0.16 lb/hr 24-hour average
SO_2	GCP, Gas cleanup	2.02 lb/hr, 3-hour average
VOC	GCP	32.84 lb/hr, annual average

Table 3-1
Proposed BACT for Project (Continued)

Pollutant	Technology	Emission Limit
SRU Flare (an elevated flare with natural gas assist)		
NO_x	GCP	
CO		
PM/PM_{10}	GCP, gaseous fuel only	
SO_2	GCP, Caustic Scrubber	
VOC	GCP	
CO_2 Vent		
CO	Gas Cleanup	1000 ppmv
H_2S	Acid Gas Removal	10 ppmv
VOC	Gas Cleanup	40 ppmv
Gasifier Warming (refractory heater)		
NO_x	GCP	0.11 lb/MMBtu, higher heating value (HHV)
CO	GCP	0.09 lb/MMBtu, HHV
PM/PM_{10}	GCP, gaseous fuel only	0.008 lb/MMBtu, HHV
SO_2	GCP, PUC grade Natural gas	0.002 lb/MMBtu, HHV (12.65 ppm)
VOC	GCP	0.007 lb/MMBtu, HHV
Feedstock		
PM/PM_{10}	Dust Collector	0.005 grain/scf outlet dust loading

Source: HECA Project

Notes:
BACT = best available control technology
CO = carbon monoxide
CPUC = California Public Utility Commission
CTG = combustion turbine generator
FGR = flue gas recirculation
MMBTU = million British thermal units
NO_x = nitrogen dioxide
NH_3 = ammonia
O_2 = oxygen
PM/PM_{10} = particulate matter/particulate matter less than 10 microns
ppm = parts per million
ppmvd = parts per million volumetric dry
SCF = standard cubic feet
SO_2 = sulfur dioxide
VOC = volatile organic compound
HHV = higher heating value

4.0 CONSIDERATION OF ALTERNATIVE GENERATING TECHNOLOGY

This section addresses recent guidance relating to the need for consideration of alternative electrical generating technologies for the proposed project, as part of the BACT analysis. Compared to pulverized coalpc (PC)-fired boilers and circulating fluidized bed (CFB) boilers, the proposed IGCC process is the very lowest emitting solid fuel-based electricity generating technology available, and selection of a completely different solid fuel-based generating technology would not result in lower emissions. Later portions of this BACT analysis address

the specific controls that are proposed to minimize the emissions from the proposed IGCC process.

The first step in a BACT determination process is to identify all available control technologies that could potentially be used to minimize the emissions of the source and pollutant under evaluation. The most common control technologies considered in a BACT analysis are add-on control measures and inherent process characteristics that minimize generation of pollutants, in addition to process or work practice modifications to improve the emissions performance of a proposed project. These types of process modifications/measures, when applicable, are properly considered in a BACT analysis.

In contrast, consideration of alternatives that would involve completely "redefining the design" of the proposed process are not required to be considered (1990 Draft New Source Review Workshop Manual, Section IV.A.3). Alternative generating processes, such as natural-gas–fired combined-cycle plants, represent a completely different family of power generation plant designs from IGCC. Although there are certain types of components in common, such as cooling towers and steam-driven turbine generators, the technical basis for a gas-fired plant differs markedly from that of an IGCC facility.

Because CFB or PC boilers or a natural-gas–fired electrical generating plant would be a completely different processes, and represent "redefining the design" compared to IGCC, it is reasonable to conclude that the USEPA would not require that the BACT analysis for HECA compare these different technologies. This point was recently reinforced in a December 13, 2005 letter from Stephen Page, Director of the USEPA's OAQPS, to E3 Consulting, LLC regarding BACT requirements for proposed coal-fired power plant projects. In that letter, the USEPA clarified that a BACT analysis need not consider an alternative "which would wholly replace the proposed facility with a different type of facility."

The remainder of this BACT analysis describes the various emission control options for specific IGCC facility processes, and demonstrates that as proposed, HECA would achieve the lowest emissions rate technically and economically feasible for such a facility.

5.0 OTHER PERMITTED IGCC PROJECTS

For this BACT analysis, the available control options were identified by querying the RBLC database and by consulting available literature on control options for IGCC. Applications and/or permits from a number of other IGCC facilities that have completed the New Source Review process were also reviewed to provide additional reference material for this BACT analysis. A brief summary of the other recently permitted IGCC plants in the United States and their emissions limits is presented in this section.

Other recently permitted IGCC facilities that will be used as comparison reference for this BACT analysis are:

- Duke Energy, Edwardsport Generating Station
- ERORA Group, Taylorville Energy Center

- ERORA Group, Cash Creek Generating Station

The air permits, BACT analyses, and additional literature were reviewed for each of these recently permitted IGCC facilities. Each facility is discussed briefly below. The facilities that were subject to BACT determinations are listed as such.

Duke Energy, Edwardsport Generating Station: Duke Energy Indiana, owner of Edwardsport Generating Station, obtained approval, via Indiana Department of Environmental Management Significant Modification Title V Permit, to install an IGCC facility in Knox County, Indiana. The Title V Significant Modification Permit was issued in January 2008. The 630–megawatt (net) IGCC plant will replace four older, less efficient generating units capable of generating approximately 160 megawatts at the Edwardsport site. The Edwardsport Generating Station is expected to use coal as feedstock, and SCR as add-on control to minimize NO_x emissions from the plant.

ERORA Group - Taylorville Energy Center: The ERORA Group is developing the Taylorville Energy Center, a 630 megawatt (net) IGCC facility to be located in Christian County, southern Illinois. Taylorville Energy Center obtained a final Illinois Environmental Protection Agency air permit in June 2007. Taylorville Energy Center proposed to use GE Energy gasification technology and local coals (Illinois coal) as the feedstock. Taylorville Energy Center will use Selexol® AGR systems, as well as SCR. The Taylorville Energy Center site is in an ozone attainment area, so SCR is not required for BACT purposes. ERORA is using SCR to minimize NO_x emissions from the plant, but not as BACT. This will allow them to minimize the cost to acquire NO_x allowances from the market. ERORA notes that in order to increase the chance that the SCR system will work in this unproven application on coal-derived syngas, higher sulfur removal, by using Selexol® instead of MDEA, will be required.

ERORA Group – Cash Creek Generating Station: The ERORA Group is developing the Cash Creek Generation Station IGCC facility, to be located near Owensboro, Henderson County, Kentucky. Cash Creek Generation Station obtained a final Kentucky DAQ air permit in January 2008. The 630 megawatt IGCC proposes to use GE Energy gasification technology and local coals (Kentucky coal) as the feedstock. Cash Creek Generation Station will use Selexol® AGR systems, as well as SCR. Because the proposed facility site is in an ozone attainment area, SCR is not required for BACT purposes. ERORA is using SCR to minimize NO_x emissions from the plant, but not as BACT. This will allow them to minimize the cost to acquire NO_x allowances from the market. ERORA notes that in order to increase the chance that the SCR system will work in this unproven application on coal-derived syngas, higher sulfur removal, by using Selexol® instead of MDEA, will be required.

6.0 SOURCE-SPECIFIC BACT ANALYSIS

The following BACT analysis evaluates control technologies applicable to each of the criteria pollutants that would be emitted from the proposed Project to determine appropriate BACT emission limits. This BACT analysis is based on the current state of IGCC technology, energy and environmental factors, current expected economics, energy, and technical feasibility.

6.1 CTG/HRSG BACT Analysis

The following is the BACT analysis for the proposed combustion turbine. The proposed combustion turbine will be a GE 7FB model turbine with a nominal capacity of 232 megawatt. The GE 7FB is a new turbine model designed to optimally uses hydrogen-rich fuel and natural gas, and includes changes to the fuel system, combustion system, and hot gas path. The use of hydrogen-rich fuel requires the use of a diffusion-type combustor, because the high concentration of hydrogen precludes the use of dry low NO_x (DLN) combustor technology.

The air permits, BACT analyses, and additional literature for each of the recently permitted IGCC facilities discussed in the last section were reviewed. Table 6-1 summarizes the criteria pollutant emission levels permitted for the combustion turbine units at each facility.

6.1.1 Nitrogen Oxides BACT Analysis for the CTG/HRSG

The criteria pollutant NO_x is primarily formed in combustion processes via the reaction of elemental nitrogen and oxygen in the combustion air (thermal NO_x), and the oxidation of nitrogen contained in the fuel (fuel NO_x). The hydrogen-rich fuel produced in the proposed project contains negligible amounts of fuel-bound nitrogen; therefore, it is expected that essentially all NO_x emissions from the CTG/HRSG will originate as thermal NO_x.

The rate of formation of thermal NO_x in a combustion turbine is a function of residence time, oxygen radicals, and peak flame temperature. Front-end NO_x control techniques are aimed at controlling one or more of these variables during combustion. Examples include dry low-NO_x combustors, flue gas recirculation, and diluent injection (steam, water, or nitrogen). These technologies are considered to be commercially available pollution prevention techniques. It is necessary to recognize the fundamental differences between natural-gas-fired and hydrogen-rich fuel-fired combustion turbines in evaluating these techniques. Compared to natural gas and syngas, hydrogen-rich fuel has a much higher hydrogen content (natural gas is often over 90 percent methane), and a much lower heating value (about 250 Btu/scf for hydrogen-rich fuel vs. 1,000 Btu/scf for natural gas). HECA will be fired on hydrogen-rich fuel. The other power plants used for comparison in this Appendix are fired on syngas.

1. Identify Control Technologies

The following NO_x control technologies were evaluated for the proposed CTG/HRSG:

Combustion Process Controls

- Dry Low NO_x Burner
- Diluent Injection

Post-Combustion Controls

- $SCONO_x$ ™
- Selective Non-Catalytic Reduction (SNCR)
- Selective Catalytic Reduction (SCR)

Table 6-1
Permitted Criteria Pollutant BACT Limits for Combined-Cycle Combustion Turbine

Facility	HECA	Cash Creek Generation Station	Edwardsport Generating Station	Taylorville Energy Center
Location	Kern County, CA	Henderson County, KY	Knox County, IN	Christian County, IL
MW	250	630	630	630 (net)
Turbine	GE 7FB	GE 7FB	GE 7FB	GE 7FB
NO_x	4 ppmc on hydrogen-rich fuel (0.019 lb/MMBtu), 4.0 ppmc on Natural Gas (0.016 lb/MMBtu)	0.0331 lb/MMBtu (approx 5 ppmc) Syngas 0.0246 lb/MMBtu on Nat Gas	0.027 lb/MMBtu Syngas 0.018 lb/MMBtu on Nat Gas	0.034 lb/MMBtu (5.0 ppmc) Syngas 0.025 lb/MMBtu on Nat Gas
SO_2	≤ 5 ppmv in undiluted hydrogen-rich fuel ((0.003 lb/MMBtu) 0.75 grains/100 scf of total sulfur on Nat Gas (0.002 lb/MMBtu)	0.0158 lb/MMBtu (3.8 ppmc) Syngas 0.0006 lb/MMBtu on Nat Gas	0.0138 lb/MMBtu Syngas 0.0006 lb/MMBtu on Nat Gas	0.016 lb/MMBtu Syngas (10 ppm Sulfur in Syngas) 0.001 lb/MMBtu on Nat Gas.
CO	3 ppmc on Hydrogen-rich fuel (0.008 lb/MMBtu), 5 ppmc on Nat Gas (0.012 lb/MMBtu)	0.0485 lb/MMBtu Syngas 0.0449 lb/MMBtu on Nat Gas	0.0441 lb/MMBtu Syngas 0.0421 lb/MMBtu on Natural Gas	0.049 lb/MMBtu (25.0 ppmvd) Syngas 0.045 lb/MMBtu (25.0 ppmvd) on Nat Gas
PM_{10} (Scaled to HECA MW size)	24 lb/hr on hydrogen-rich fuel and 18 lb/hr on Nat Gas	47 lb/hr on syngas and 35 lb/hr on Nat Gas	39.1 lb/hr on syngas and 18.1 lb/hr on Nat Gas	48 lb/hr on syngas and 24 lb/hr on Nat Gas
VOC	1 ppmc on Hydrogen-rich fuel (0.0016 lb/MMBtu), 2 ppmc on Nat Gas (0.0028 lb/MMBtu)		0.0016 lb/MMBtu Syngas or on Nat Gas	

Notes:
Only HECA would use duct firing. All emissions specified for HECA apply to non–duct-firing and duct-firing operation.
HECA SO_2 on natural gas is worst case short-term average based on limit of 0.75 gr./100 scf.
Taylorville CO values inconsistent in ratio of lb/MMBtu per ppmc for NO_x. Scaling ratio from NO_x would result in CO value of 0.049 lb/MMBtu (11.8 ppmc.) on Hydrogen-rich fuel(lower CO ppmc would be more conservative).

CO = carbon monoxide
MMBtu = million British thermal units
MW = megawatt
NO_x = oxides of nitrogen
PM_{10} = particulate matter 10 microns or less in diameter
ppm = parts per million
ppmc = parts per million by volume, dry basis, corrected to 15 percent O2
SO_2 = sulfur dioxide
VOC = volatile organic compound

2. Evaluate Technical Feasibilities

- Dry Low-NO_x Combustor

  DLN combustor technology has been successfully demonstrated to reduce thermal NO_x formation from natural-gas combustion turbines. This is done by designing the combustors to control both the stoichiometry and temperature of combustion by tuning the fuel and air locally within each individual combustor's flame envelope. Combustor design includes features that regulate the aerodynamic distribution and mixing of the fuel and air. A lean, pre-mixed combustor design mixes the fuel and air prior to combustion. This results in a homogeneous air/fuel mixture, which minimizes localized fuel-rich pockets that produce elevated combustion temperatures and higher NO_x emissions. A lean fuel-to-air ratio approaching the lean flammability limit is maintained, and the excess air serves as a heat sink to lower the combustion temperature, which in turn lowers thermal NO_x formation. A pilot flame is used to maintain combustion stability in this fuel-lean environment.

  Hydrogen-rich fuel is different than syngas and has a similar heating value, but with much less CO and carbon dioxide. Hydrogen-rich fuel differs from natural gas in heating value, gas composition, and flammability characteristics. Available DLN combustor technologies are designed for natural gas (methane-based) fuels and will not operate on the syngas (hydrogen/CO-based) fuels used by an IGCC combustion turbine. DLN combustors are not technically feasible for this application due to the potential for explosion hazard in the combustion section due primarily to the high hydrogen content of the syngas. No manufacturer currently makes DLN combustors that can be used for a combustion turbine fueled by petroleum coke (petcoke) or coal-derived syngas. Research is ongoing to develop DLN for syngas-fueled combustion turbines; however, such combustors are not yet commercially available. Thus, DLN combustor is not a technically feasible control option for this unit.

- Diluent Injection

  Higher peak flame temperature during combustion may increase thermodynamic efficiency, but it also increases the formation of thermal NO_x. The injection of an inert diluent such as atomized water, steam, or nitrogen into the high-temperature region of a combustor flame serves to inhibit thermal NO_x formation by reducing the peak flame temperature.

  For the Project's CTG/HRSG, nitrogen is used as a diluent that reduces thermal NO_x produced when hydrogen-rich gas is combusted. Steam is used as a diluent when natural gas is combusted. This method effectively lowers the fuel heat content, and consequently, the combustion temperature, thereby reducing NO_x emissions.

  GE guarantees that diluent injection can achieve turbine exhaust emission levels of 15 ppmvd NO_x (at 15 percent oxygen) over a 3-hour average (excluding start up, shutdown, and upset periods) when firing 100 percent hydrogen-rich fuel. For natural-gas combustion and co-firing, GE guarantees emission levels of 25 ppmvd NO_x (at 15 percent oxygen) from the

turbine exhaust. The higher emission is caused by the difference in combustion characteristic of natural gas compared to the hydrogen-rich fuel.

A secondary benefit of diluent injection is that it will increase the mass flow of the exhaust. Therefore, the power output per unit of fuel input also increases.

Diluent injection represents an inherently lower-emitting process for IGCC units, and is a technically feasible control technology. Diluent injection (steam for natural gas and nitrogen for hydrogen-rich fuel) is proposed as the baseline case for the CGT/HRSG combustion turbine NO_x BACT analysis. This NO_x control technology and emission level have also been determined as BACT for all other recent IGCC permits, and has been demonstrated to achieve NO_x emission rates of 15 ppmvd (at 15 percent O_2) when firing 100 percent syngas fuel. This NO_x diluent injection control technology has been commercially demonstrated on syngas on the GE 7FA, but not on hydrogen-rich fuel on the GE 7FB.

- $SCONO_x$ ™

The $SCONO_x$ ™ system is an add-on control device that reduces emissions of multiple pollutants. $SCONO_x$™ uses a single catalyst for the reduction of CO, VOC, and NO_x, which are converted to CO_2, water (H_2O), and nitrogen (N_2).

All installations of the technology have been on small natural gas facilities, and have experienced performance issues. The fact that $SCONO_x$™ has not been applied to large-scale natural gas combustion turbines creates concerns regarding the timing, feasibility, and cost-effectiveness of necessary design improvements. $SCONO_x$™ has also not been applied to syngas (or hydrogen-rich fuel).

In evaluating technical feasibility for large IGCC projects, the additional concerns are:

– $SCONO_x$™ uses a series of dampers to re-route air streams to regenerate the catalyst. The proposed HECA project is significantly larger than the facilities where $SCONO_x$™ has been used. This would require a significant redesign of the damper system, which raises feasibility concerns regarding reliable mechanical operation of the larger and more numerous dampers that would be required for application to the HECA CTG/HRSG.

– $SCONO_x$™ would not be expected to achieve lower guaranteed NO_x levels than SCR, and, for reasons described above, it has even greater feasibility concerns with respect to application on IGCC turbines than those for SCR.

For the above reasons, $SCONO_x$™ is considered technically infeasible for this unit.

- Selective Non-Catalytic Reduction

Selective non-catalytic reduction is a post-combustion NO_x control technology in which a reagent (NH_3 or urea) is injected into the exhaust gases to react chemically with NO_x to form elemental nitrogen and water without the use of a catalyst. The success of this process in

reducing NO_x emissions is highly dependent on the ability to achieve uniform mixing of the reagent into the flue gas, which must occur within a narrow flue gas temperature zone (typically from 1,700 to 2,000 degrees Fahrenheit [°F]).

The consequences of operating outside the optimum temperature range are severe. Above the upper end of the temperature range, the reagent will be converted to NO_x. Below the lower end of the temperature range, the reagent will not react with the NO_x resulting in very high NH_3 slip concentrations (NH_3 discharge from the stack).

This technology is occasionally used in conventional fired heaters or boilers upstream of any HRSG or heat recovery unit. SNCR has never been applied in IGCC service, primarily because there are no flue gas locations within the combustion turbine or upstream of the HRSG with the optimal requisite temperature and residence time characteristics to facilitate the SNCR flue gas reactions. Therefore, SNCR is not technically feasible for this unit.

- Selective Catalytic Reduction

SCR is a technology that achieves post-combustion reduction of NO_x from flue gas within a catalytic reactor. The SCR process involves the injection of NH_3 into the exhaust gas stream upstream of a specialized catalyst module to promote the conversion of NO_x to molecular nitrogen. SCR is a common control technology for use on natural-gas–fired combustion turbines.

In the SCR process, NH_3, usually diluted with air or steam, is injected through a grid system into the exhaust gas upstream of the catalyst bed. On the catalyst surface, the NH_3 reacts with NO_x to form molecular nitrogen and water. The basic reactions are:

$$4NH_3 + 4NO + O_2 \rightarrow 4N_2 + 6H_2O$$

$$8NH_3 + 6NO_2 \rightarrow 7N_2 + 12H_2O$$

The Project selected SCR and diluent injection technology to control NO_x emissions from the CTG/HRSG unit. The SCR system reduces nitrogen oxide emissions from the HRSG stack gases by up to about 80 percent. Diluted 19 percent aqueous ammonia is injected into the stack gases upstream of a catalytic system that converts nitrogen oxide and ammonia to nitrogen and water.

It is anticipated that this combination of control processes will achieve a NO_x emission limit of 4 ppmvd at 15 percent oxygen, based on a 3-hour rolling average, when firing hydrogen-rich fuel, natural gas, or a combination of hydrogen-rich fuel and natural gas. This emission limitation represents a removal efficiency that is better than the approved emissions for recently permitted IGCC units. HRSG vendors confirm the feasibility of achieving the NO_x levels cited in this ATC.

3. Rank Control Technologies

Among the control technologies considered in the previous subsection, only one was determined to be both technically feasible and commercially demonstrated at a cost level acceptable as a BACT option. Specifically, the feasible option is diluent injection upstream of the combustion zone to achieve a controlled level of 15 ppmvd NO_x at 15 percent O_2 while firing hydrogen-rich fuel, and 25 ppmvd NO_x at 15 percent O_2 while firing natural gas or a combination of hydrogen-rich fuel and natural gas.

Although there is no commercial demonstration of SCR performance for an IGCC plant using coal or petcoke feedstock, SCR technology has been proposed as emission limits for recently permitted IGCC projects. HRSG vendors confirm that SCR catalyst will be able to achieve combined NO_x reduction down to 4 ppmvd at 15 percent oxygen, based on a 3-hour rolling average, on all firing scenarios.

4. Evaluate Control Options

The next step in a BACT analysis is to evaluate the feasible control technology. Based on the evaluation in the previous step, the only feasible technologies suitable for establishment of BACT limits are diluent injection and SCR. The principal environmental consideration with respect to implementation of SCR is that, while it will reduce NO_x emissions, it will add NH_3 emissions associated with use of NH_3 as the reagent chemical. A portion of the unreacted NH_3 passes through the catalyst and is emitted from the stack. This is called ammonia slip, and the magnitude of these emissions depends on the catalyst activity and the degree of NO_x control desired. For this project, the concentration of ammonia slip is limited to 5 ppmvd at 15 percent oxygen.

Table 6-2 shows the typical NO_x BACT determination (when firing hydrogen-rich fuel and natural gas, respectively) and control technology for other recently permitted IGCC projects, in comparison with HECA's proposed NO_x BACT for the CTG/HRSG.

As shown in Table 6-2, the BACT limitation for NO_x emissions from HECA CTG/HRSG is more stringent than the historic BACT determination for other recently permitted IGCC projects.

NSPS 40 CFR 60 Subpart Da is considered as the BACT "floor" for this source category. As shown above, the BACT emission limit proposed for HECA is significantly lower than the applicable NSPS Subpart Da limit of 0.5 lb/MMBTU heat input for gaseous fuel. The proposed NO_x reduction technology is also more stringent than the NSPS Subparts Da recommended minimum reduction efficiency of 25 percent.

5. Select Control Technology

The final step in the top-down BACT analysis process is to select BACT based on the results of the previous steps. As has been explained, for this application of hydrogen-rich fuel-fired combustion turbines within an IGCC facility, diluent injection in the combustion turbine and SCR installation as post-combustion NO_x control are the appropriate control techniques for

setting BACT-based emission limits. The BACT selection described above is strongly supported by recent precedents for similar IGCC projects.

The proposed BACT limits based on this technology are 4 ppmvd NO_x at 15 percent O_2 for hydrogen-rich–fuel firing, natural-gas firing, and co-firing.

Table 6-2
NO_x BACT Emission Limit Comparison

Facility	State	MW	Turbine	NO_x BACT Technology	Emission Limit on Hydrogen-Rich or Syngas Fuels		Emission Limit on Natural Gas	
					ppm	lb/MMBTU Hydrogen-Rich Fuel	ppm	lb/MMBTU NG
HECA	CA	250	GE Model Number 7FB.	SCR	4[a]	0.019	4[a]	0.016
Cash Creek Generation Station	KY	630	GE Model Number 7FB.	SCR	5[a]	0.0331		0.0246
Edwardsport Generating Station	IN	630	GE Model Number 7FB.	SCR operated in trial mode		0.027[b]		0.018[b]
Taylorville Energy Center	IL	630 (net)	GE Model Number 7FB.	SCR	5[a]	0.034		0.025

Notes:
[a] Parts per million by volume, dry basis, corrected to 15 percent O_2.
[b] Calculated from mass emissions rate of 57 lb/hr on hydrogen-rich fuel and 38 lb/hr on natural gas.
MMBtu = million British thermal units
MW = megawatt
ppm = parts per million
SCR = selective catalytic reduction

6.1.2 Carbon Monoxide BACT Analysis for the CTG/HRSG

CO is a product of incomplete combustion. Control of CO is typically accomplished by providing adequate fuel residence time and high temperature in the combustion zone to ensure complete combustion. However, these same control factors can increase NO_x emissions. Conversely, lower NO_x emission rates achieved through flame temperature control (by diluent injection) can increase CO emissions for natural gas and un-shifted syngas. Thus, a compromise must be established whereby the flame temperature reduction is set to achieve the lowest NO_x emission rate possible while keeping CO emissions to an acceptable level. However, CO emissions are inherently low for hydrogen-rich fuels that contain very little reduced carbon and are less affected by the conventional trade-off between CO and NO_x.

1. Identify Control Technologies

The following CO control technologies were evaluated for the proposed CTG/HRSG:

Combustion Process Controls

- Good Combustion Practices (GCPs)

Post-Combustion Controls

- $SCONO_x$™
- Oxidation Catalyst

2. Evaluate Technical Feasibilities

Good Combustion Practices

Good combustion practices include the use of operational and design elements that optimize the amount and distribution of excess air in the combustion zone to ensure optimum complete combustion. GE guarantees the turbine exhaust can achieve CO emission levels of 5 ppmvd CO when firing hydrogen-rich fuel, and 25 ppmvd CO when operating on natural gas.

This technology has been determined to be BACT for CO emissions in other operational or recently permitted IGCC projects.

- $SCONO_x$™

  The $SCONO_x$ system was evaluated in the NO_x BACT analysis, and determined to be not technically feasible for this unit.

- Oxidation Catalysts

  Catalytic oxidation is a post-combustion control technology that uses a catalyst to oxidize CO into CO_2. Because of the catalyst fouling concerns, the use of oxidation catalysts has been previously limited to processes combusting natural gas. Oxidation catalysts have never been applied to coal-based IGCC processes. Other operational or recently permitted IGCC projects determined GCPs as the only feasible BACT for CO emissions. The project anticipated CO conversions up to 90 percent are attainable across the CO catalyst. HECA proposed CO emission limits of 3.0 ppmvd at 15 percent O_2 while firing hydrogen-rich fuel, and 5.0 ppmvd CO at 15 percent O_2 while firing natural gas.

3. Rank Control Technologies

Oxidation catalyst is the only technically feasible CO control technology identified in addition to Good Combustion Practices.

4. Evaluate Control Options

GCP is considered the baseline and only feasible and commercially demonstrated CO control technology for IGCC combustion turbines. GCP has been selected as BACT for all other recent IGCC permits. Oxidation catalysts have not been applied to the other coal-based IGCC processes. In comparison to other operational or recently permitted IGCC projects, this emission limitation represents a removal efficiency that is lower than the emission achieved in practice at currently operating IGCC units, and the lowest proposed emission limits for proposed coal-fired units, including other proposed IGCC units.

Table 6-3 shows the typical CO BACT determination (when firing hydrogen-rich fuel and natural gas, respectively) and control technology for other recently permitted IGCC projects, in comparison with HECA's proposed CO BACT for the CTG/HRSG.

Table 6-3
CO BACT Emission Limit Comparison

Facility	State	MW	Turbine	CO BACT Technology	Emission Limit on Hydrogen-Rich Fuel		Emission Limit on Nat Gas	
					ppm	lb/MMBTU Hydrogen-Rich Fuel or Syngas Fuels	ppm	lb/MMBTU NG
HECA	CA	250	GE Model Number 7FB.	CO catalyst and GCP	3[a]	0.008	5[a]	0.012
Cash Creek Generation Station	KY	630	GE Model Number 7FB.	GCP		0.0485		0.0449
Edwardsport Generating Station	IN	630	GE Model Number 7FB.	GCP		0.0441b		0.0421b
Taylorville Energy Center	IL	630 (net)	GE Model Number 7FB.	GCP	25	0.049	25	0.045

Notes:
[a] Parts per million by volume, dry basis, corrected to 15 percent O_2.
[b] Calculated from mass emissions rate of 93 lb/hr on hydrogen-rich fuel and 88.7 lb/hr on natural gas.
MMBtu = million British thermal units
MW = megawatt
ppm = parts per million

As shown in Table 6-3, the BACT limitation for CO emissions from HECA CTG/HRSG is more stringent than the historic BACT determination for other recently permitted IGCC units. This emission limitation represents a removal efficiency that is better than the emission achieved in practice at currently operating IGCC units, and the lowest proposed emission limits compared to recently permitted IGCC units.

5. Select Control Technology

The final step in the top-down BACT analysis process is to select BACT based on the results of the previous steps. As explained, GCPs and oxidation catalyst are the appropriate control technique for setting BACT-based emission limits.

HECA proposed the CO BACT-based limit of 3.0 ppmvd at 15 percent O_2 while firing hydrogen-rich fuel, and 5.0 ppmvd CO at 15 percent O_2 while firing natural gas during non-startup operation, using GCPs and an oxidation catalyst.

6.1.3 Particulate Matter Emissions BACT Analysis for the CTG/HRSG

Particulate matter emissions from natural-gas — fired combustion sources consist of inert contaminants in natural gas, sulfates from fuel sulfur, ammonia compounds for the SCR reagent, dust drawn in from the ambient air that passes through the combustion turbine inlet air filters, and particles of carbon and hydrocarbons resulting from incomplete combustion. Low ash content and high combustion efficiency exhibit correspondingly low particulate matter emissions for other fuel such as hydrogen-rich fuel.

1. Identify Control Technologies

The following particulate matter control technologies were evaluated for the proposed CTG/HRSG:

Pre-Combustion Controls

- Gas Cleanup (for hydrogen-rich fuel)

Combustion Process Controls

- Good Combustion Practices

Post-Combustion Controls

- Baghouse
- Electrostatic Precipitation

2. Evaluate Technical Feasibilities

In a typical solid fuel combustion process, fuel particulate matter is removed by post-combustion processes such as fabric filters or electrostatic precipitators. However, in an IGCC plant, particulate matter could damage the turbine, so particulate matter is removed prior to combustion. Post-combustion controls, such as electrostatic precipitators (ESPs) or baghouses, have never been applied to commercial combustion turbines burning gaseous fuels. Therefore, the use of ESPs and baghouses is considered technically infeasible control technology.

In the absence of add-on controls, the most effective control method demonstrated for gas-fired combustion turbines is the use of low-ash fuel, such as natural gas or hydrogen-rich fuel and GCPs. Therefore, it is necessary to use pre-combustion controls such as particulate removal as an integral part of the gasification process, in addition to GCPs.

The use of clean hydrogen-rich fuel and good combustion control is proposed as BACT for PM/ PM_{10} control in the proposed HECA CTG/HRSG. These operational controls will limit filterable plus condensable PM/ PM_{10} emissions to 24 lb/hr when operating on hydrogen-rich fuel, and 18 lb/hr when operating on natural gas.

3. Rank Control Technologies

The use of clean fuels with low potential particulate emissions from optimum gas cleanup processes and GCPs were identified as the only technically feasible particulate emissions control technologies applicable to the proposed combustion turbines.

4. Evaluate Control Options

The USEPA has indicated that particulate matter control devices are not typically installed on combustion turbines and that the cost of installing a particulate matter control device is prohibitive. When the NSPS for Stationary Gas Turbines (40 CFR 60 Subpart GG) was promulgated in 1979, the USEPA acknowledged, "Particulate emissions from stationary gas turbines are minimal." Similarly, the recently revised Subpart GG NSPS (2004) did not impose a particulate emission standard. Therefore, performance standards for particulate matter control of stationary gas turbines have not been proposed or promulgated at a federal level.

Table 6-4 shows the typical PM BACT determination (when firing hydrogen-rich fuel and natural gas, respectively) and control technology for other recently permitted IGCC projects, in comparison with HECA's proposed PM BACT for the CTG/HRSG.

Based on the evaluation in the previous step, GCPs and optimum gas cleanup are considered as technically feasible PM/ PM_{10} control technologies that are suitable for establishment of BACT limits. As shown in Table 6-4, HECA emission limitation represents a removal efficiency that is cleaner in comparison to other operational or recently permitted IGCC units. Therefore, the BACT limitation for PM emissions from HECA CTG/HRSG is more stringent than the historic BACT determination for other recently permitted IGCC units.

NSPS 40 CFR 60 Subpart Da is considered as the BACT "floor" for this source category. The BACT emission limits proposed in Table 6-4 are equivalent to 0.011 lb/MMBTU on hydrogen-rich fuel, and 0.008 lb/MMBTU on natural gas. These emission limits are significantly lower than the applicable NSPS Subpart Da limit of 0.03 lb/MMBtu heat input derived from the combustion of solid, liquid, or gaseous fuel.

5. Select Control Technology

The final step in the top-down BACT analysis process is to select BACT based on the results of the previous steps. As explained, GCPs and optimum gas cleanup are the appropriate control technique for setting BACT-based emission limits. The use of optimum gas cleanup to produce clean fuels with low potential particulate emissions and GCPs were selected as LAER for particulate emissions from the proposed combustion turbines. The following emission limit resulting from the implementation of these technologies is proposed for each combustion turbine.

HECA proposed the PM BACT-based limit of 24 lb/hr while firing hydrogen-rich fuel, and 18 lb/hr while firing natural gas during non-startup operation, using GCPs and optimum gas cleanup.

Table 6-4
PM BACT Emission Limit Comparison

Facility	State	MW	Turbine	PM10 BACT Technology	Emission Limit on Hydrogen-Rich Fuel or Syngas Fuels	Emission Limit on Natural Gas
					lb/hr	lb/hr
HECA	CA	250	GE Model Number 7FB.	Gas Cleanup and GCP	24	18
Cash Creek Generation Station	KY	630	GE Model Number 7FB.	Gas Cleanup and GCP	47	35
Edwardsport Generating Station	IN	630	GE Model Number 7FB.	Gas Cleanup and GCP	39.1	18.1
Taylorville Energy Center	IL	630 (net)	GE Model Number 7FB.	Gas Cleanup and GCP	48	24

Notes:
MW = megawatt
PM_{10} = particulate matter 10 microns in diameter

6.1.4 Sulfur Dioxide and Sulfuric Acid Mist BACT Analysis for the CTG/HRSG

Sulfur dioxide emissions from any combustion process are largely defined by the sulfur content of the fuel being combusted and the rate of the fuel usage. The combustion of hydrogen-rich fuel in the combustion turbines creates primarily SO_2 and small amounts of sulfite (SO_3) by the oxidation of the fuel sulfur. The SO_3 can react with the moisture in the exhaust to form sulfuric acid mist, or H_2SO_4. Emissions of these sulfur species can be controlled, either by limiting the sulfur content of the fuel (pre-combustion control), or by scrubbing the SO_2 from the exhaust gas (post-combustion control).

1. Identify Control Technologies

The following sulfur dioxide and sulfuric acid mist control technologies were evaluated for the proposed CTG/HRSG when operating on hydrogen-rich fuel:

Pre-Combustion Controls

- Chemical Absorption Acid Gas Removal (AGR), e.g., methyldiethanol-amine (MDEA)
- Physical Absorption Acid Gas Removal, e.g., Selexol®, Rectisol

Post-Combustion Controls

- Flue Gas Desulfurization

The sulfurs dioxide BACT for the proposed CTG/HRSG when operating on natural gas is PUC-grade natural gas fuel with less than 0.75 grain/100 scf sulfur content.

2. Evaluate Technical Feasibilities

- Acid Gas Removal

  In the gasification process, sulfur in the petcoke or coal feedstock converts primarily to hydrogen sulfide (H_2S). Solvent-based acid gas cleanup is commonly used for "gas sweetening" processes in petroleum refinery fuel gas or tail gas treating units, where H_2S in the process gas is removed before use as a fuel. The removed H_2S is recovered either as elemental sulfur in a Sulfur Recovery Unit (e.g., using a Claus process).

  In a chemical absorption process, acid gases in the sour syngas are removed by chemical reactions with a solvent that is subsequently separated from the gas and regenerated. The chemical absorption occurs in amine-based systems that use solvents such as MDEA. Amine solvents chemically bond with the H_2S. The H_2S can be easily liberated with low-level heat in a stripper to regenerate the solvent. However, amine-based systems such as MDEA are not effective at removing COS and have not demonstrated the deep total sulfur removal levels required by the Project.

  Lower levels of sulfur removal are possible using physical absorption AGR systems. Physical absorption methods, including Selexol® and Rectisol, use solvents that dissolve acid gases under pressure. Selexol® or Rectisol are normally applied when low syngas sulfur levels are required for SCR. Solubility of an acid gas is proportional to its partial pressure and is independent of the concentrations of other dissolved gases in the solvent. Consequently, increased operating pressure in an absorption column facilitates separation and removal of an acid gas like H_2S. The dissolved acid gas can then be removed from the solvent, which is regenerated by depressurization in a stripper.

  To selectively remove H_2S and CO_2, two absorption and regeneration columns or two-stage process are required. In general, H_2S is selectively removed in the first column by a lean

solvent that has been deeply stripped with steam, while CO_2 is removed from the now H_2S-free gas in the second absorber. The second-stage solvent can be regenerated if very deep CO_2 removal is required. If only bulk CO_2 removal is required, then the flashed gas containing the bulk of the CO, can be vented, and the second regenerator duty can be substantially lowered or totally eliminated.

A detailed technology assessment was completed by the Applicant and discussed in Section 6, Alternatives.

- Flue Gas Desulfurization

  Flue gas desulfurization is a post-combustion SO_2 control technology that reacts an alkaline with SO_2 in the exhaust gas. Typical FGD processes operate by contacting the exhaust gas downstream of the combustion zone with an alkaline slurry or solution that absorbs and subsequently reacts with the acidic SO_2. FGD technologies may be wet, semi-dry, or dry, based on the state of the reagent as it is injected or pumped into the absorber vessel. Also, the reagent may be regenerable (where it is treated and reused) or non-regenerable (all waste streams are de-watered and either discarded or sold). Wet, calcium-based processes that use lime (CaO) or limestone ($CaCO_3$) as the alkaline reagent, are the most common FGD systems in PC unit applications. After the exhaust gas has been scrubbed, it is passed through a mist eliminator and exhausted to the atmosphere through a stack

  FGD systems are commonly employed in conventional PC plants, where the concentration of oxidized sulfur species in the exhaust is relatively high. If properly designed and operated, FGD technology can reliably achieve more than 95 percent sulfur removal. However, FGD cannot provide as high a level of control as the pre-combustion AGR systems. In addition, FGD has the environmental drawbacks of substantial water usage and the need to dispose of a solid byproduct (the scrubber sludge). The solid by-product requires the installation of a significant number of ancillary support systems to accommodate treatment, handling, and disposal. Given these disadvantages and the fact that FGD could not achieve the high removal efficiencies associated with AGR, even though FGD is not technically infeasible, it is not considered to be a reasonable technical option for IGCC. Therefore FGD will not be considered further in this BACT analysis

3. Rank Control Technologies

Both chemical and physical absorption methods for AGR are considered feasible for an IGCC, and can achieve control of the sulfur in syngas up to 99 percent or better. Both of these systems are further considered in the BACT analysis. A detailed technology assessment was completed by the Applicant and discussed in Section 6, Alternatives.

4. Evaluate Control Options

Physical absorption AGR systems (including Selexol® and Rectisol) are considered as feasible sulfur dioxide and sulfuric acid mist control technology for the proposed CTG/HRSG turbine. Selexol® has been selected as BACT for all other recent IGCC permits. Rectisol has not yet

been applied to other coal-based IGCC processes but has been widely used in gasification projects in the chemical industry where both deep sulfur removal and CO_2 removal are required. Both Rectisol and Selexol® are considered viable alternatives or MDEA. However, the Project selected Rectisol because there are more units operating at similar capacities and similar conditions to those required for the Project, making Rectisol the more proven alternative.

Table 6-5 shows the typical SO_2 BACT determination (when firing hydrogen-rich fuel and natural gas, respectively) and control technology for other recently permitted IGCC projects, in comparison with HECA's proposed SO_2 BACT for the CTG/HRSG.

Table 6-5
SO_2 BACT Emission Limit Comparison

Facility	State	MW	Turbine	SO_2 BACT Technology	Emission Limit on Hydrogen-Rich Fuel		Emission Limit on Nat Gas	
					ppm	lb/MMBTU Hydrogen-Rich Fuel or Syngas Fuels	ppm	lb/MMBTU NG
HECA	CA	250	GE Model Number 7FB.	AGR, Rectisol	≤ 5 ppm Sulfur in undiluted Hydrogen-rich fuel	0.003	0.75 grains/ 100 scf	0.002
Cash Creek Generation Station	KY	630	GE Model Number 7FB.	AGR, Selexol®	3.8a	0.0158		0.0006
Edwardsport Generating Station	IN	630	GE Model Number 7FB.	AGR, Selexol®		0.0138b		0.0006b
Taylorville Energy Center	IL	630 (net)	GE Model Number 7FB.	AGR, Selexol®	10 ppm Sulfur in Hydrogen-rich fuel	0.016		0.001

Notes:
[a] Parts per million by volume, dry basis, corrected to 15 percent O_2.
[b] Calculated from mass emissions rate of 2.9 lb/hr on hydrogen-rich fuel and 1.30 lb/hr on natural gas.
MMBtu = million British thermal units
MW = megawatt
ppm = parts per million

As shown in Table 6-5, the BACT limitation for SO_2 emissions from HECA CTG/HRSG when firing hydrogen-rich fuel is more stringent than the historic BACT determination for other recently permitted IGCC units. This emission limitation represents a removal efficiency that is better than the emission achieved in practice at currently operating IGCC units, and the lowest proposed emission limits compared to recently permitted IGCC units.

NSPS 40 CFR 60 Subpart Da is considered as the BACT "floor" for this source category. The proposed SO_2 emission limits are significantly lower than the applicable NSPS Subpart Da limit of 180 nanograms per joule (1.4 lb/MWh) or 95 percent reduction on a 30-day rolling average.

When firing natural gas, sulfur dioxide emission from CTG/HRSG is slightly higher than other recently permitted IGCC units. The sulfurs dioxide BACT for the proposed CTG/HRSG when operating on natural gas is PUC-grade natural gas fuel with less than 0.75 grain/100 scf sulfur content.

5. Select Control Technology

The final step in the top-down BACT analysis process is to select BACT based on the results of the previous steps. HECA selected Rectisol as syngas cleanup control technology to remove sulfur dioxide from the hydrogen-rich fuel stream entering the CTG/HRSG. The reduction efficiency of Rectisol is above the NSPS floor requirement, and the overall performance of this technology is more stringent than the historic BACT determination for other recently permitted IGCC units. The following emission limit resulting from the implementation of these technologies is proposed for each combustion turbine.

HECA proposed the PM BACT-based limit of ≤ 5 ppmv sulfur in undiluted H_2-rich syngas, and ≤0.75 grains/100 scf of natural gas sulfur content, using an AGR system (Rectisol) and PUC-grade natural gas.

6.1.5 Volatile Organic Compounds BACT Analysis for the CTG/HRSG

VOCs are a product of incomplete combustion of the organic components in the hydrogen-rich fuel. Hydrogen-rich fuel contains very low concentrations of VOC; therefore, emissions of VOC are inherently very low. Reduction of VOC emissions is accomplished by providing adequate fuel residence time and a high temperature in the combustion zone to ensure complete combustion. A survey of the RBLC database indicated that good combustion control and burning clean gas fuel are the VOC control technologies primarily determined to be BACT. The advantage of IGCC technology is the fact that the combustion turbine operates on hydrogen-rich fuel, which contains a very low organic content, and yields very low levels of uncombusted VOC emissions.

1. Identify Control Technologies

The following VOC control technologies were evaluated for the proposed CTG/HRSG:

Combustion Process Controls

- Good Combustion Practices

Post-Combustion Controls

- $SCONO_x$™
- Oxidation Catalyst

2. Evaluate Technical Feasibilities

- Good Combustion Practices

  GCPs include the use of operational and design elements that optimize the amount and distribution of excess air in the combustion zone to ensure optimum complete combustion.

  This technology has been determined to be BACT for VOC emissions in other operational or recently permitted IGCC projects.

- $SCONO_x$™

  The $SCONO_x$ system was evaluated in the NO_x BACT analysis, and determined to be not technically feasible for this unit.

- Oxidation Catalysts

  Catalytic oxidation is a post-combustion control technology that uses a catalyst to oxidize VOC. The catalyst beds that functions to reduce CO emissions can also be effective in reducing VOC emissions. Such systems typically achieve a maximum VOC removal efficiency of up to 50 percent, while providing control for CO.

  Because of the catalyst fouling concerns, the use of oxidation catalysts has been previously limited to processes combusting natural gas. Oxidation catalysts have never been applied to coal-based IGCC processes. Other operational or recently permitted IGCC projects determined GCPs as the only feasible BACT for CO emissions. GE guarantees the turbine exhaust can achieve VOC emission levels of 1.0 ppmvd VOC (at 15 percent oxygen) when firing hydrogen-rich fuel, and 2.0 ppmvd CO (at 15 percent oxygen) when operating on natural gas.

3. Rank Control Technologies

Oxidation catalyst is the only technically feasible VOC control technology identified in addition to GCPs.

4. Evaluate Control Options

GCPs is considered the baseline and only feasible and commercially demonstrated VOC control technology for IGCC combustion turbines. GCP has been selected as BACT for all other recent IGCC permits. Oxidation catalysts have never been applied to other coal-based IGCC processes. In comparison to other operational or recently permitted IGCC projects, this emission limitation represents a removal efficiency that is lower than the emission achieved in practice at currently operating IGCC units, and the lowest proposed emission limits for proposed coal-fired units, including other proposed IGCC units.

Table 6-6 shows the typical VOC BACT determination (when firing hydrogen-rich fuel and natural gas, respectively) and control technology for other recently permitted IGCC projects, in comparison with HECA's proposed VOC BACT for the CTG/HRSG.

As shown in Table 6-6, the BACT limitation for VOC emissions from HECA CTG/HRSG is comparable to the historic BACT determination for other recently permitted IGCC units. This emission limitation represents a removal efficiency that is as good as the emissions proposed in recently permitted IGCC units

5. Select Control Technology

The final step in the top-down BACT analysis process is to select BACT based on the results of the previous steps. As explained, GCPs and oxidation catalyst are the appropriate control technique for setting BACT-based emission limits.

HECA proposed the VOC BACT-based limit of 1.0 ppmvd at 15 percent O_2 while firing hydrogen-rich fuel, and 2.0 ppmvd VOC at 15 percent O_2 while firing natural gas during non-startup operation, using GCPs and oxidation catalyst.

Table 6-6
VOC BACT Emission Limit Comparison

Facility	State	MW	Turbine	VOC BACT Technology	Emission Limit on Hydrogen-Rich Fuel		Emission Limit on Nat Gas	
					ppm	lb/MMBTU Hydrogen-Rich Fuel or Syngas Fuels	ppm	lb/MMBTU NG
HECA	CA	250	GE Model Number 7FB.	CO catalyst and GCP	1[a]	0.0016	2[a]	0.0028
Cash Creek Generation Station	KY	630	GE Model Number 7FB.	GCP		N/A		N/A
Edwardsport Generating Station	IN	630	GE Model Number 7FB.	GCP		0.0016[b]		0.0016 [b]
Taylorville Energy Center	IL	630 (net)	GE Model Number 7FB.	GCP		N/A		N/A

Notes:
[a] Parts per million by volume, dry basis, corrected to 15 percent O_2.
[b] Calculated from mass emissions rate of 3.3 lb/hr on hydrogen-rich fuel and natural gas.
MMBtu = million British thermal units
MW = megawatt
ppm = parts per million
VOC = volatile organic compound

6.2 Auxiliary CTG BACT Analysis

The following is the BACT analysis for the proposed auxiliary combustion turbine (Aux CTG). The proposed Aux CTG is a 103 megawatt natural-gas – fired GE LMS100® in a simple-cycle configuration, equipped with water injection for nitrogen oxide control. Post-combustion emission controls will include SCR and CO catalyst systems natural gas.

HECA proposed to apply the SJVAPCD BACT Guidelines for Gas Turbine > = 50 MW, Uniform Load without Heat Recovery, as the BACT for the Aux CTG unit.

6.2.1 Nitrogen Oxides BACT Analysis for the Auxiliary CTG

The achieved-in-practice or contained in the SIP BACT guideline for NO_x is 5.0 ppmvd at 15 percent O_2, based on a 3-hour average with high-temperature SCR, or equal. The NO_x emission limitation of 2.5 ppmvd at 15 percent O_2, (3-hour average) is categorized as technically feasible control technology.

HECA proposed the application of water injection as combustion process control, and SCR as post-combustion control to reduce NO_x emission from the Auxiliary CTG down to 2.5 ppmvd at 15 percent O_2. As explained in the BACT analysis for the CTG/HRSG unit, water injection reduces the formation of thermal NO_x in the combustion chamber by reducing the peak flame temperature, while SCR promotes the conversion of NO_x to molecular nitrogen.

6.2.2 Carbon Monoxide BACT Analysis for the Auxiliary CTG

The achieved-in-practice or contained in the SIP BACT guideline for CO is 6.0 ppmvd at 15 percent O_2, based on a 3-hour average with oxidation catalyst, or equal, technology. HECA proposed the application of GCPs and CO catalyst as the control technology to reduce CO emission from the Auxiliary CTG down to 6.0 ppmvd at 15 percent O_2 as recommended in the BACT guideline.

6.2.3 Particulate Emissions BACT Analysis for the Auxiliary CTG

The achieved-in-practice or contained in the SIP BACT guideline for PM_{10} is Air inlet cooler/filter, lube oil vent coalescer (or equal), and either PUC-regulated natural gas, LPG, or non-PUC regulated gas with < 0.75 grains Sulfur/100 dscf.

HECA auxiliary CTG is equipped with the following accessories to provide safe and reliable operation: evaporative coolers, inlet air filters, metal acoustical enclosure, duplex shell; and tube lube oil coolers for the turbine and generator, compressor water wash system, fire detection and protection system, hydraulic starting system, and compressor variable-bleed valve vent. In addition, this unit exclusively combusts PUC-grade natural gas with < 0.75 grain/100 dscf sulfur content. Therefore, the unit meets the recommended BACT emission limitation.

In addition to the recommendation from the BACT guideline, HECA proposed a PM_{10} emission limit of 6 lbs/hour. This emission limit is proposed based on the lowest PM_{10} BACT determination for a similar source from recently permitted power plants in California[2].

6.2.4 Sulfur Oxides BACT Analysis for the Auxiliary CTG

The achieved-in-practice or contained in the SIP BACT guideline for sulfur oxides is PUC-regulated natural gas, LPG, or non-PUC regulated gas with < 0.75 grain S/100 dscf. As mentioned in the previous section, the auxiliary CTG is proposed to be exclusively fueled by PUC-regulated gas with < 0.75 grain S/100 dscf. Therefore, this unit meets the recommended BACT.

6.2.5 Volatile Organic Compounds BACT Analysis for the Auxiliary CTG

The achieved-in-practice or contained in the SIP BACT guideline for VOCs is 2.0 ppmvd at 15 percent O_2, based on a 3-hour average with oxidation catalyst, or equal, technology. HECA proposed the application of GCPs and CO catalyst as the control technology to reduce VOC and CO emission from the Auxiliary CTG down to 2.0 ppmvd at 15 percent O_2 as recommended in the BACT guideline.

6.3 Cooling Towers Particulate Emissions BACT Analysis

There will be three cooling towers proposed for the Project: two cooling towers (gasification cooling tower and the ASU cooling tower) are associated with the gasification process, and the third cooling tower (power block cooling tower) is used by the power block. Compared to similar-sized combined-cycle power plants, the power block cooling duty is somewhat greater due to the heat integration with gasification resulting in the generation of additional steam for power production in the steam turbine. Each tower has a separate cooling water basin, pumps, and piping system, and operates independently. The cooling water will circulate through a mechanical draft-cooling tower that uses electric motor-driven fans to move the air into contact with the flow of the cooling water. The heat removed in the condenser will be discharged to the atmosphere by heating the air, and through evaporation of some of the cooling water.

The power block cooling tower is designed for an approximate capacity of 175,000 gallons per minute (gpm) of water, with an hourly circulation rate of 88 million lb/hr. The ASU and gasification block cooling water systems are similar in design to the power block cooling design, but they have substantially lower duties. The ASU cooling tower circulation rate is approximately 40,000 gpm, and the gasification cooling tower circulation rate is about 42,000 gpm.

All cooling towers are supplied with high-efficiency drift eliminators designed to reduce the maximum drift;; that is, the fine mist of water droplets entrained in the warm air leaving the cooling tower, to less than 0.0005 percent of the circulating water flow. Circulating water could range in TDS depending on makeup-water quality and tower operation. Therefore, PM_{10} emissions would vary proportionately.

[2] Final Decision Panoche Energy Center (2007)

Wet (evaporative) cooling towers emit aqueous aerosol "drift" particles that evaporate to leave crystallized solid particles that are considered PM_{10} emissions. The proposed control technology for PM_{10} is high-efficiency drift eliminators to capture drift aerosols upstream of the release point to the atmosphere.

1. Identify Control Technologies

The following particulate matter control technologies were evaluated for the proposed cooling towers:

Potential Cooling Tower Control Technology

- Drift Elimination System with limited TDS level

2. Evaluate Technical Feasibilities

High-efficiency drift eliminators and limits on TDS concentrations in the circulating water are the techniques that set the basis for cooling tower BACT emission limits. The efficiency of drift eliminator designs is characterized by the percentage of the circulating water flow rate that is lost to drift. The drift eliminators to be used on the proposed cooling tower will be designed such that the drift rate is less than 0.0005 percent of the circulating water. Typical geometries for the drift eliminators include chevron-type.

There is no PM_{10} BACT guideline for mechanical draft cooling towers in the SJVAPCD. However, the use of high-efficiency drift-eliminating media to de-entrain aerosol droplets from the air flow exiting the wetted-media tower is a commercially proven technique to reduce PM_{10} emissions. Compared to "conventional" drift eliminators, advanced drift eliminators reduce the PM_{10} emission rate by more than 90 percent.

In addition to the use of high-efficiency drift eliminators, management of the tower water balance to control the concentration of dissolved solids in the cooling water can also reduce particulate emissions. Dissolved solids accumulate in the cooling water due to increasing concentrations of dissolved solids in the make-up water as the circulating water evaporates;; and secondarily, to the addition of anti-corrosion, anti-biocide additives.

3. Rank Control Technologies

A drift elimination system is the only technically feasible control technology identified for the proposed cooling towers, and historically has been selected as BACT for other projects.

4. Evaluate Control Options

The highest control efficiency to reduce the PM_{10} emission from the proposed cooling towers involves the instillation of drift eliminators and adoption of TDS limit for the circulating water. Development of increasingly effective de-entrainment structures has resulted in equipment vendors' claims that a cooling tower may be specified to achieve drift release no higher than

0.0005 percent of the circulating water rate for the HECA project. This level of reduction has been approved in other recently permitted IGCC projects.

5. Select Control Technology

The final step in the top-down BACT analysis process is to select BACT based on the results of the previous steps. As has been explained, drift elimination system is selected as BACT for the proposed cooling towers. The proposed cooling tower will be designed with a high-efficiency drift elimination system to minimize potential drift and particulate emissions, achieving a maximum drift of 0.0005 percent of the circulating water. This measure, along with a limit on the circulating water TDS, is considered to be the BACT option for particulate emissions from the cooling towers.

6.4 Auxiliary Boiler BACT Analysis

The auxiliary boiler will provide steam to facilitate CTG startup, and for other industrial purposes. The auxiliary boiler will be designed to burn pipeline-quality natural gas at the design maximum fuel flow rate of 142 MMBtu/hr (HHV). During normal operation, the auxiliary boiler may be kept in warm standby (steam sparged, no firing) or cold standby (no firing), and will not have emissions. The boiler will produce a maximum of about 100,000 pounds per hour of steam.

Pollutant emissions from natural gas boiler units include NO_x, PM_{10}, CO, SO_2, and VOCs. The auxiliary boiler emissions are based on 2,190 hours of operation per year. The applicant is proposing proper boiler design and operation, low-NO_x combustors with FGR, and use of natural gas to be the BACT for the auxiliary boiler. This emission limitation is proposed to meet the SJVAPCD BACT Guidelines for greater than 20.0 MMBtu/hr natural-gas–fired boiler (base-loaded or with small load swings).

1. Identify Control Technologies

The following criteria pollutant emissions control technologies were evaluated for the proposed auxiliary boilers:

Potential Auxiliary Boiler Control Technology

- Good Combustion Practices
- Low NO_x combustor
- CO Oxidation Catalysts
- Low NO_x combustor with Flue Gas Recirculation
- Selective Catalytic Reduction
- Selective Non-Catalytic Reduction

6.4.1 Nitrogen Oxides BACT Analysis for the Auxiliary Boiler

2. Evaluate Technical Feasibilities

- Low NO_x Combustors

  Low NO_x combustors reduce thermal NO_x formation by regulating the distribution and mixing of fuel and air to control the stoichiometry and temperature of combustion. Historically, low NO_x combustors have been selected as BACT for natural-gas–fired auxiliary boilers. Therefore, low-NO_x combustor technology is technically feasible for the proposed auxiliary boiler.

- Low NO_x Combustors with Flue Gas Recirculation

  FGR reduces boiler NO_x emissions by recirculating a portion of the flue gas into the main combustion chamber. The increase in gas flow within the combustion chamber reduces the peak combustion temperature and oxygen in the combustion air/flue gas mixture, thereby reducing the formation of thermal NO_x. The application of FGR is typically in combination with low-NO_x combustor technology and has been selected as BACT for some auxiliary boiler processes. Therefore, FGR is considered technically feasible for the proposed auxiliary boiler.

- Selective Catalytic Reduction

  SCR is a technology that achieves post-combustion reduction of NO_x from flue gas within a catalytic reactor. The SCR process involves the injection of NH_3 into the exhaust gas stream upstream of a specialized catalyst module to promote the conversion of NO_x to molecular nitrogen. SCR technology has been most commonly applied to pulverized-coal–generating units and to natural-gas–fired combustions turbines. However, no examples have been identified where an SCR has been applied to an auxiliary boiler. The auxiliary boiler will provide steam to facilitate CTG startup, and will be kept in warm standby (steam sparged, no firing) or cold standby during normal operation. This operation results in varying flue gas characteristics that may not be suitable for continuous SCR operation. Therefore, SCR is not technically feasible for the intended operation of the auxiliary boiler.

- Selective Non-Catalytic Reduction

  Selective non-catalytic reduction is a post-combustion NO_x control technology in which a reagent (NH_3 or urea) is injected into the exhaust gases to react chemically with NO_x to form elemental nitrogen and water without the use of a catalyst. The success of this process in reducing NO_x emissions is highly dependent on the ability to achieve uniform mixing of the reagent into the flue gas, which must occur within a narrow flue gas temperature zone (typically from 1,700°F to 2,000°F).

  The consequences of operating outside the optimum temperature range are severe. Above the upper end of the temperature range, the reagent will be converted to NO_x. Below the

lower end of the temperature range, the reagent will not react with the NO_x, resulting in very high NH_3 slip concentrations (NH_3 discharge from the stack).

SNCR has never been applied in an auxiliary boiler unit, primarily because there are no flue gas locations within the process with the optimal requisite temperature and residence time characteristics to facilitate the SNCR flue gas reactions. Therefore, SNCR is not technically feasible for this unit.

3. Rank Control Technologies

The use of low NO_x combustor and flue gas recirculation is the only technically feasible control option identified for reducing NO_x emissions. These control technologies are commonly used in combination and historically have been selected as BACT for other projects.

4. Select Control Technology

Low-NO_x combustor technology and flue gas recirculation have historically been selected as BACT for natural-gas–fired auxiliary boilers. These technologies are commonly used in combination to reduce NO_x emissions in other recently permitted IGCC projects.

The proposed auxiliary boiler will be designed with a Low NO_x combustor technology and flue gas recirculation, achieving a maximum NO_x emission concentration of 9 ppm NO_x at 3 percent O_2 on natural gas fuel.

6.4.2 Carbon Monoxide BACT Analysis for the Auxiliary Boiler

An inadequate degree of fuel mixing, lack of available oxygen, or low temperatures in the combustion zone are common causes of incomplete combustion that results in CO emissions. Fuel quality and good combustion practices can limit CO emissions. Good combustion practice has commonly been determined as BACT for natural-gas–fired auxiliary boilers. Post-combustion control technologies using catalytic reduction have also been employed in some processes to reduce CO and VOC emissions.

2. Evaluate Technical Feasibilities

Good Combustion Practices

GCPs include the use of operational and design elements that optimize the amount and distribution of excess air in the combustion zone to ensure complete combustion. Good combustion practice has historically been determined as BACT for CO and VOC emissions from auxiliary boilers, and is a technically feasible control strategy for the proposed auxiliary boiler.

Oxidation Catalyst

Catalytic oxidation is a post-combustion control technology that uses a catalyst to oxidize CO and VOC into CO_2 or H_2O. The technology has most commonly been applied to natural-gas–

fired combustion turbines. No examples were identified where oxidation catalyst technology has been applied to an auxiliary boiler. Because of the low potential CO and VOC emission without an oxidation catalyst and the limited use of the proposed auxiliary boiler, the use of catalytic oxidation technology is determined to be infeasible.

3. Rank Control Technologies

Good combustion practice is the only feasible control strategy identified, and has historically been selected as BACT for CO emissions from the auxiliary boiler.

4. Select Control Technology

The use of good combustion practices has been selected as BACT for potential CO emission from the proposed auxiliary boiler. Boiler vendor information indicates that a CO worst-case hourly emission for the proposed auxiliary boiler is 50 ppmvd at 3 percent O_2.

6.4.3 Particulate Emissions, Sulfur Oxides, Volatile Organic Compounds BACT Analysis for the Auxiliary Boiler

For these pollutants, the commercially available control measures that are identified in the most stringent BACT determinations are use of low-sulfur, PUC natural gas, and GCP. Based on SJVAPCD BACT Guidelines for > 20.0 MMBtu/hr Natural-Gas–Fired Boiler (base-loaded or with small load swings), add-on controls were not implemented to achieve BACT limits for these pollutants.

Boiler vendor information indicates that the worst-case hourly emissions for this unit with these technologies would be 0.005 lb SO_2/MMBtu;; 0.004 lb VOC /MMBtu; and 0.005 lb PM_{10}/MMBtu. These rates, or corresponding lb/hour emission rates, are proposed as BACT limits for the auxiliary boiler emission unit.

6.5 Diesel Engines BACT Analysis

The Project will include two 2,800 HP standby diesel generators and one 556 HP, standby firewater pump. HECA proposed to apply the SJVAPCD BACT Guidelines for Emergency Diesel I.C. Engine = or > 400 hp as the BACT for the standby diesel generator engines, and SJVAPCD BACT Guidelines for Emergency Diesel I.C. Engine Driving a Fire Pump as the BACT for the standby firewater pump engine. The BACT emission limits will be achieved by the following control effort.

- Low Sulfur Fuel Selection

  The diesel engines will exclusively combust ultra-low sulfur diesel fuel. SO_2 emissions were estimated using ultra-low sulfur diesel fuel containing 15 ppm sulfur.

- Clean Combustion Process Selection

The engines will meet USEPA Tier 4 emissions standards for 2011 model equipment.

Standby diesel generator engine: 0.3 g/bhp-hr NMHC; 0.5 g/bhp-hr NO_x; 2.6 g/bhp-hr CO; 0.07 g/bhp-hr PM

Standby firewater pump engine: 0.14 g/bhp-hr NMHC; 1.5 g/bhp-hr NO_x; 2.6 g/bhp-hr CO; 0.015 g/bhp-hr PM

- Restricted Operating Hours

  The standby diesel generators will operate less than 50 hours per year per engine for non-emergency purposes such as: routine testing, maintenance, and inspection purposes. The fire pump will operate than less than 50 hours per year per engine for non-emergency purposes.

6.5.1 BACT Analysis for the Standby Diesel Generators

The achieved-in-practice or contained in the SIP BACT guideline for NO_x is certified emissions of 6.9 g/bhp-hr or less. The proposed control of using engines that meet USEPA Tier 4 emissions standards for 2011 model equipment will meet this BACT limit with 0.5 g/bhp-hr NO_x. Although it is technically feasible to install add-on NO_x control, this option is cost prohibitive due to the emergency nature of the engine operations.

The achieved-in-practice or contained in the SIP BACT guideline for CO is 2.0 g/bhp-hr. The vendor emission factor for the diesel engines guaranteed 0.29 g/bhp-hr of CO emission. This emission limit is substantially below the required BACT limit. Although it is feasible to install a CO oxidation catalyst to further reduce CO emissions from the engines, the cost for oxidation catalyst for CO control will be prohibitive, given the low number of routine operating hours per year of the engines.

The achieved-in-practice or contained in the SIP BACT guideline for PM_{10} is 0.1 gram/bhp-hr (if TBACT is triggered) or 0.4 g/bhp-hr (if TBACT is not triggered). The proposed control of using engines that meet USEPA Tier 4 emissions standards for 2011 model equipment will meet this BACT limit with 0.07 g/bhp-hr PM.

The achieved-in-practice or contained in the SIP BACT guideline for sulfur oxides is low-sulfur diesel fuel (500 ppmw sulfur or less) or Very Low-Sulfur Diesel fuel (15 ppmw sulfur or less). The standby diesel generator engines will exclusively combust ultra-low sulfur diesel fuel. SO_2 emissions were estimated using ultra-low sulfur diesel fuel containing 15 ppm sulfur.

There is no numerical emission limit achieved in practice or contained in the SIP BACT guideline for VOC. The proposed control of using engines that meet USEPA Tier 4 emissions standards for 2011 model equipment proposed a BACT limit with 0.3 g/bhp-hr VOC for this unit.

6.5.2 BACT Analysis for the Firewater Pump Diesel Engine

The achieved-in-practice or contained in the SIP BACT guideline for NO_x is certified emissions of 6.9 g/bhp-hr or less. The proposed control of using engines that meet USEPA Tier 4 emissions standards for 2011 model equipment will meet this BACT limit with 1.5 g/bhp-hr NO_x. Although it is technically feasible to install add-on NO_x control, this option is cost prohibitive due to the emergency nature of the fire/water pump engine operations.

There is no numerical emission limit achieved in practice or contained in the SIP BACT guideline for CO. The proposed control of using engines that meet USEPA Tier 4 emissions standards for 2011 model equipment proposed a BACT limit with 2.6 g/bhp-hr CO for this unit. Although it is feasible to install CO oxidation catalyst to further reduce CO emissions from the engines, the cost for an oxidation catalyst for CO control will be prohibitive, given the low number of routine operating hours per year of the fire water pump.

The achieved-in-practice or contained in the SIP BACT guideline for PM_{10} is 0.1 grams/bhp-hr (if TBACT is triggered) or 0.4 grams/bhp-hr (if TBACT is not triggered). The proposed control of using engines that meet USEPA Tier 4 emissions standards for 2011 model equipment will meet this BACT limit with 0.015 g/bhp-hr PM.

The achieved-in-practice or contained in the SIP BACT guideline for sulfur oxides is low-sulfur diesel fuel (500 ppmw sulfur or less) or ultra-low sulfur diesel fuel (15 ppmw sulfur or less). The firewater-pump diesel engine will exclusively combust ultra-low sulfur diesel fuel. SO_2 emissions were estimated using ultra-low sulfur diesel fuel containing 15 ppm sulfur.

No numerical emission limit is achieved in practice or contained in the SIP BACT guideline for VOC. The proposed control of using engines that meet USEPA Tier 4 emissions standards for 2011 model equipment proposed a BACT limit with 0.14 g/bhp-hr VOC for this unit.

6.6 Gasification Flare BACT Analysis

The gasification block will be provided with a relief system and associated gasification flare to safely dispose of gasifier streams during startup, shutdown, and unplanned upsets or emergency events, syngas during AGR startup, hydrogen-rich gas during short-term emergency combustion turbine outages, or other various streams within the Project during other unplanned upsets or equipment failures. Note that sulfur compounds will be treated upstream of the gasification flare header by the Gasification Amine Absorber.

Two flare-control technologies were evaluated for the proposed facility: an elevated flare, and an enclosed ground flare. Elevated flare technology uses a stack to vent combustible process gases to a combustor located at the top, resulting in an open flame at the stack discharge. Elevated flares provide for greater dispersion of heat and combustion products than ground flares. Elevated flares are the most common technology used by refinery, steel, and chemical industries, and are used by operational and recently permitted IGCC projects.

Compared to an elevated flare, an enclosed ground flare offers reduced noise, reduced visual impact, potentially, and better CO destruction. However, an enclosed ground flare poses potentially decreased dispersion of combustion gases and increased reliability concerns and have never been installed on any IGCC plants and so are considered unproven technology in this application with an associated risk. Elevated flares are used extensively with IGCC applications and therefore, the gasification block will be designed with an elevated flare to safely dispose of gasifier startup gases, hydrogen-rich fuel during AGR startup, hydrogen-rich gas during short-term emergency combustion turbine outages, or other various streams within the Project during other unplanned upsets or equipment failures. The low-pressure sour syngas sent to the flare from the gasification and shift units during shutdown depressurizing operations is first scrubbed in the Gasification Amine Absorber to remove essentially all of the sulfur bearing compounds. Flaring of untreated syngas or other streams within the plant would only occur as an emergency safety measure during unplanned plant upsets or equipment failures.

The gasification flare will emit criteria pollutants that are products of combustion. However, the chemical compositions of the predominant gaseous fuels that would be flared, i.e., syngas and natural gas, result in very low emissions of PM_{10}, SO_2, and VOC. For the syngas case, there is very little unoxidized carbon in the fuel, which limits the formation of particulate matter during combustion even below the rate for natural gas. Formation of SO_2 is limited by the pre-treatment of the syngas flare stream, and the inherently low sulfur content of pipeline natural gas.

1. Identify Control Technologies

The following control technologies were evaluated for the proposed gasification flare:

- Clean pilot fuel (Natural gas) and Good Combustion Practices
- Low NO_x Combustor
- Add-On Controls

2. Evaluate Technical Feasibilities

- Clean pilot fuel (Natural Gas) and Good Combustion Practices

  A certain level of flame temperature control can be exercised for the gasification flare by implementing fuel/air ratio control. Flare BACT options that have been achieved in practice in California (e.g., CAPCOA BACT Clearinghouse) indicate a natural gas pilot and "proper burner management and monitoring" are used to control the emissions of CO, VOCs and NO_x.

- Low-NO_x Combustor

  Low-NO_x combustor and ultralow NO_x combustor technology alter air-to-fuel ratio in the combustion zone by staging the introduction of the air to promote a "lean-premixed" flame. This results in lower combustion temperatures and reduced NO_x formation. Such designs are not available for elevated flares, that do not have a confined combustion zone, which would

allow staged introduction of fuel and air streams. Therefore, this control technology is not feasible for the proposed gasification flare.

- Add-On Controls

  The gasification block flare is not a candidate for add-on abatement systems. It is generally recognized in the chemical process industries that adoption of add-on control can impede the ability of a flare to respond to unexpected upset conditions. Therefore, this control technology is not feasible for the proposed gasification flare.

For plant safety, the flare must provide a "fail-safe" that is available regardless of the functioning of pollution control devices.

3. Rank Control Technologies

The use of natural gas as pilot fuel and good combustion practices were identified as the only technically feasible criteria pollutant emissions control technologies applicable to the proposed gasification flare.

4. Evaluate Control Options

As determined in the last section, the use of natural gas as pilot fuel and good combustion practices are the only feasible control strategy identified. Based on review of SJVAPCD BACT guideline, there is no BACT determination source category for flare that supports the gasification process.

5. Select Control Technology

The final step in the top-down BACT analysis process is to select BACT based on the results of the previous steps. As has been explained, use of natural gas as pilot fuel and GCPs are selected as BACT for the proposed gasification flare. The measure, along with natural gas pilot and processes flare gas for non-emergency operation are considered to be the best available control option for criteria pollutant emissions from the gasification flare. The proposed control and criteria pollutant emissions for the gasification flare are summarized in Table 6-7.

6.7 Sulfur Recovery System BACT Analysis

The sulfur recovery system is designed to process acid gas streams from the AGR system and IGCC process into an elemental sulfur by-product. Sulfur is removed from the processing facility through a sulfur complex which consists of a Claus unit (thermal stage) plus catalytic converters otherwise known as the SRU, and a Tail Gas Treating Unit (TGTU). The SRU is a totally enclosed process with no discharges to the atmosphere. The tail gas from the SRU is composed mostly of carbon dioxide, water vapor, and sulfur vapor with trace amounts of H_2S and SO_2. The tail gas is routed to the TGTU where the majority of the sulfur is recovered. The overhead of the TGT Unit is combined with the much larger product CO_2 stream and exported offsite for oil reservoir injection.

Table 6-7
Gasification Flare Total Criteria Pollutant Emissions

Pollutant	Emissions			
	Pilot (ton/yr)	Start-Up/ Shut-Down (ton/yr)	Total (ton/qtr)	Total (ton/yr)
NO_x	0.26	4.04	1.08	4.3
CO	0.18	48.65	12.21	48.8
VOC	0.003	0.00	0.001	0.003
SO_2	0.004	0.00	0.001	0.004
$PM_{10} = PM_{2.5}$	0.01	0.00	0.002	0.01

Notes:
CO = carbon monoxide
NO_x = oxides of nitrogen
$PM_{10} = PM_{2.5}$ = particulate matter 10 microns in diameter or smaller and is assumed to equal $PM_{2.5}$ = particulate matter 10 microns in diameter
SO_2 = sulfur dioxide
VOC = volatile organic compound

The proposed sulfur process facility consists of 2 by 50 percent SRUs, and 1 by 100 percent TGTU. The SRU and TGTU give an overall sulfur recovery efficiency of 99.9 percent. Associated with the operation of the sulfur recovery system, HECA proposed the integral use of two elevated flares, a caustic scrubber, and a thermal oxidizer as control devices to provide for the safe and efficient destruction of combustible gas streams. These control devices are primarily used intermittently during short-term periods of startup, shutdown, and malfunction operations.

1. Identify Control Technologies

The following control technologies were evaluated for the proposed Sulfur Recovery System:

- Thermal Oxidizer
- Flare
- Caustic Scrubber

2. Evaluate Control Technologies

- Thermal Oxidizer

  In the thermal oxidizer, the TGTU tail gas and other oxidizing streams are subjected to a high temperature and a sufficient residence time to cause an essentially complete destruction of reduced sulfur compounds such as H_2S. The thermal oxidizer uses natural gas to reach the necessary operating temperature for optimal thermal destruction. The thermal oxidizer also controls emissions from various systems during normal operations, including the sulfur pit

vent. A continuous natural gas pilot will be in service on both controls. The flare and thermal oxidizer are the only control technologies identified that are capable of controlling the variable potential gas streams associated with the sulfur recovery process and the startup, shutdown, and malfunction of the integrated IGCC systems.

Good thermal oxidizer design includes optimization of parameters that maintain efficiency, such as temperature, residence time, and the mixing of gas streams in the combustion zone. The proposed thermal oxidizer will use natural gas for preheating and to facilitate the combustion of process gases in the thermal oxidizer. Implementation of these elements into the design and operation of the thermal oxidizer, in combination with the use of a natural-gas pilot flame, will support a thermal oxidizer control technology that minimizes incomplete combustion, which directly correlates to potential criteria pollutant emissions.

- Flare

Emissions from the IGCC gas cleanup process cannot be directed to certain control systems and/or the combustion turbines during startup and shutdown operations, or during operational malfunctions. Directly venting these emissions to the atmosphere could result in very high concentrations of SO_2, CO, VOCs, NO_x, and/or $H2_SO_4$ being released. In this case, two elevated flares are selected to accommodate the variability inherent in these operations: Sulfur Recovery Unit Flare, and Rectisol Flare.

An SRU Flare will be used to safely dispose of gas streams containing sulfur during startup and shutdown, and gas streams containing sulfur during unplanned upsets or emergency events. Acid gas derived from the AGR, gasification unit, and SWS overhead is normally routed to the SRU for recovery as elemental sulfur. During cold plant startup of the gasifiers, AGR, and Shift units, these acid-gas streams will be diverted to the SRU Flare Header for a short time. To reduce the emissions of sulfur compounds to the environment during SRU or TGTU shutdown, the acid gas is routed to the Emergency Caustic Scrubber, where the sulfur compounds are absorbed with caustic solution. After scrubbing, the gas is then routed to the elevated SRU Flare Stack.

Enclosed ground flares have the potential to minimize flame appearance and provide a setting for monitoring post-combustion gas streams. However, they have not been proven for the proposed facility because of reliability concerns.

Elevated flares are used extensively with IGCC applications and therefore, are considered proven technology. The gasification block will be designed with an elevated flare.

- Caustic Scrubber

During cold plant startup of the gasification block, acid-gas streams will be diverted to a caustic scrubber prior to being directed to the elevated flare for a short time. The caustic scrubber removes H_2S from the acid gas stream with an anticipated scrubbing efficiency of at least 99.6 percent sulfur removal.

3. Select Control Technology

The final step in the top-down BACT analysis process is to select BACT based on the results of the previous steps. As discussed, the use of flares, thermal oxidizer, and caustic scrubber are the proposed technologies designed to control criteria pollutant emissions from the sulfur recovery system, in addition to an efficient IGCC process design. These technologies complement one another, and may operate in combination with each other.

Including the proposed control system to provide for the safe and efficient destruction of combustible sulfur-rich acid-gas streams, the emissions from the sulfur recovery system are categorized into three emission sources of tail gas thermal oxidizer, SRU flare and Rectisol flare (elevated flares with natural gas assist). Each emission source has its own emission control measure to reduce its criteria pollutant emissions. The proposed control and criteria pollutant emissions for the sulfur recovery system are summarized in Table 6-8.

Table 6-8
Sulfur Recovery System Emissions

Pollutant	Thermal Oxidizer Emissions (lb/MMBtu, HHV)	SRU Flare Emissions				Rectisol Flare Emissions*		
		Pilot (ton/yr)	Start-Up/ Shut-Down (ton/yr)	Total (ton/qtr)	Total (ton/yr)	Pilot (ton/yr)	Total (ton/qtr)	Total (ton/yr)
NO_x	0.13	0.16	0.0130	0.04	0.2	0.16	0.04	0.2
CO	0.04	0.11	0.0086	0.03	0.1	0.11	0.03	0.1
VOC	0.0070	0.002	0.0001	0.000	0.002	0.002	0.000	0.002
SO_2	See Below	0.003	0.05	0.014	0.1	0.003	0.001	0.003
PM_{10} = $PM_{2.5}$	0.008	0.004	0.0003	0.001	0.004	0.004	0.001	0.004

Assume an allowance of 2 lb/hr SO_2 emission to account for sulfur in the various vent streams, plus fuel.

Notes:

CO = carbon monoxide
NO_x = oxides of nitrogen
PM_{10} = $PM_{2.5}$ = particulate matter 10 microns in diameter or smaller and is assumed to equal $PM_{2.5}$ = particulate matter 10 microns in diameter
SO_2 = sulfur dioxide
VOC = volatile organic compound
* = Rectisol Flare will be used exclusively for emergency events. During normal plant operation, Rectisol Flare will have a natural-gas–fired pilot light (there is no planned operation expected for this source).

6.8 CO_2 Vent BACT Analysis

The Project will produce electricity while substantially reducing greenhouse gas emissions by capturing CO_2. At least 90 percent of the carbon in the raw syngas will be captured in a high-purity carbon dioxide stream during steady-state operation, which will be compressed and

transported by pipeline off site for injection into deep underground oil reservoirs for enhanced oil recovery and sequestration.

A CO_2 vent stack will allow for infrequent venting of produced CO_2 from the AGR and TGTU when the CO_2 injection system is unavailable, unable to export, or other upset condition. The CO_2 vent will enable HECA to operate, rather than be disabled, by brief periods of gasifier shutdown and subsequent gasifier restart. The CO_2 vent exhaust stream will be nearly all CO_2, with small amounts of CO, VOC, and H_2S.

Due to the infrequent nature of the venting event, the option of using add-on control technology is cost prohibitive for this emission point. In order to reduce the impact of this infrequent venting event, good engineering practice stack height, limited venting duration, and vent gas concentration limits are selected as BACT for this source.

HECA proposed a maximum of 504 hours of venting duration for this unit. The pollutant concentrations in the vent gas are limited to 1,000 ppm for CO, 40 ppm for VOCs, and 10 ppm for H_2S to reduce the overall impact of the venting event.

Good Engineering Practice Stack Height

The USEPA provides specific guidance for determining the Good Engineering Practice (GEP) stack height and for determining whether building downwash will occur in the *Guidance for Determination of Good Engineering Practice Stack Height (Technical Support Document for the Stack Height Regulations*). GEP is defined as "the height necessary to ensure that emissions from the stack do not result in excessive concentrations of any air pollutant in the immediate vicinity of the source as a result of atmospheric downwash, eddies, and wakes that may be created by the source itself, nearby structures, or nearby terrain obstacles."

The GEP definition is based on the observed phenomenon of atmospheric flow in the immediate vicinity of a structure. It identifies the minimum stack height at which significant adverse aerodynamics (downwash) are avoided. The U.S. EPA GEP stack height regulations specify that the GEP stack height is calculated in the following manner:

$$H_{GEP} = H_B + 1.5L$$

where:

H_B = the height of adjacent or nearby structures;; and

L = the lesser dimension (height or projected width) of the adjacent or nearby structures.

The regulations also specify that the creditable stack height for modeling purposes is either the GEP stack height as calculated, or a de minimis height of 65 meters.

A 260-foot stack height was chosen to satisfy HEI's inherently safe design practices to minimize ground-level CO_2 concentrations in the event of a CO_2 vent under very low wind speeds.

6.9 Gasifier Warming (Refractory Heaters) BACT Analysis

HECA proposed to install three natural-gas–fired gasification refractory heaters, each rated at 18 MMBtu/hr. Each of the three gasification trains will have one natural-gas fired combustor used to warm the gasification refractory to facilitate startup. The heaters are restricted to operate for gasifier startup with maximum total gasifier warming duration of 1,800 hours per year during mature operations.

No examples were found regarding the application of LAER for the case-specific emissions associated with natural gas combustion. To control criteria pollutant emissions from the heaters' natural gas combustion, HECA selected GCPs, natural-gas fuel, and restricted operating hours as BACT for the heaters. The total of potential PM and VOC emissions from the gasifiers are negligible (less than 0.2 tons/year). Therefore, the use of natural gas was determined to be LAER for the heaters. Good combustion practices will optimize the performance of the combustor, thereby minimizing the emission of NO_x and CO. Because the heaters will only combust natural gas, the potential for SO_2, VOC, and PM emissions is minimized. The proposed BACT/LAER emission rates for each gasifier refractory heater are presented in Table 6-9.

Table 6-9
Gasifier Warming (Refractory Heater) Emissions

Pollutant	Emission Limit
NO_x	0.11 lb/MMBtu, HHV
CO	0.09 lb/MMBtu, HHV
PM/ PM_{10}	0.008 lb/MMBtu, HHV
SO_2	0.002 lb/MMBtu, HHV (12.65 ppm)
VOC	0.007 lb/MMBtu, HHV

Notes:
CO = carbon monoxide
NO_x = oxides of nitrogen
PM/ PM_{10} = particulate matter/ particulate matter 10 microns in diameter
SO_2 = sulfur dioxide
VOC = volatile organic compound

6.10 Feedstock Handling System BACT Analysis

Two major IGCC feedstock with particulate emission potential are petcoke and fluxant. Petcoke will be delivered to the plant via truck from refineries in the Los Angeles, Santa Maria, or Bakersfield areas, and/or other regional sources. Fluxant will be delivered to the Project Site via truck from regional sources. The transportation and preparation processes related to the feedstock have a potential to emit particulate matter to the atmosphere. The following is the BACT analysis for the proposed feedstock-handling system in HECA.

6.10.1 Particulate Matter BACT Analysis for the Feedstock-Handling System

Because the feedstock preparation processes will be within an enclosed conveyor system, a forced air dust collection system is the most appropriate and common control technology for particulate matter emission control from the emission points.

- Truck Unloading
- Petcoke/coal Silos (filling)
- Mass Flow Bins (in/out)
- Petcoke/coal Silos (loadout)
- Crusher Inlet/Outlet
- Fluxant Bins (filling)

HECA selected dust collection systems consisting of hoods and baghouses as BACT to control particulate emissions from the aforementioned emission points. HECA will have six bag houses, with the maximum dust collector PM emission rate based on expected supplier guarantee of 0.005 grain/scf outlet dust loading.

AA dust collection system using baghouses has been proposed as BACT in other operating and recently permitted IGCC projects. The proposed emission limitation represents a removal efficiency that is comparable with the emission achieved in practice at currently operating IGCC units, and the lowest recently permitted IGCC units.

7.0 REFERENCE

Korens, Nick, et al., 2002. "Process Screening Analysis of Alternative Gas Treating and Sulfur Removal for Gasification." U.S. Department of Energy. National Energy Technology Laboratory. December 2002. SFA Pacific, Inc. Mountain View, California. Available online at <http://www.netl.doe.gov/technologies/coalpower/gasification/pubs/pdf/SFA %20Pacific_Process%20Screening%20Analysis_Dec%202002.pdf>

IGCC Permits and Applications for Cash Creek Generating Station, Edwardsport Generating Station, and Taylorville Energy Center.

CEC, 2007. Final Decision Panoche Energy Center.

Appendix E
Public Health and Safety

Project Total **HAP Emissions Summary**

Hydrogen Energy International LLC *5/21/2009*
HECA Project

Compound	CAS #	Annual Rate (tons per year)
1,3-Butadiene	106-99-0	2.32E-04
Acetaldehyde	75-07-0	2.72E-01
Acrolein	107-02-8	7.36E-03
Ammonia*	7664-41-7	1.01E+02
Antimony	7440-36-0	1.11E-02
Arsenic	7440-38-2	2.44E-02
Barium	7440-39-3	5.67E-06
Benzene	71-43-2	4.01E-02
Beryllium	7440-41-7	2.64E-03
Cadmium	7440-43-9	9.75E-02
Carbon Disulfide	75-15-0	4.66E-01
Carbonyl Sulfide	463-58-1	7.10E+00
Chromium	7440-47-3	3.71E-04
Chromium, (hexavalent)	18540-29-9	1.55E-03
Chromium, Total	0-00-5	5.16E-03
Cobalt	7440-48-4	2.65E-03
Copper*	7440-50-8	2.39E-04
Cyanides	57-12-5	5.77E-02
Ethylbenzene	100-41-4	1.17E-01
Fluoride*		1.21E-03
Formaldehyde	50-00-0	9.30E-01
Hexane	110-54-3	8.45E-01
Hydrochloric Acid	7647-01-0	1.32E-01
Hydrogen Fluoride (hydrofluoric acid)	7664-39-3	5.06E-01
Hydrogen Sulfide	7783-06-4	1.30E+00
Lead	7439-92-1	5.70E-03
Manganese	7439-96-5	1.41E-02
Mercury	7439-97-6	1.22E-02
Methyl Bromide (Bromomethane)	74-83-9	4.83E-01
Methylene Chloride (Dichloromethane)	75-09-2	2.23E-02
Naphthalene	91-20-3	2.91E-02
n-Hexane	110-54-3	1.69E-03
Nickel	7440-02-0	4.50E-03
Phenol	108-95-2	3.73E-01
Propylene*	115-07-1	1.55E+00
Propylene Oxide	75-56-9	8.74E-02
Selenium	7782-49-2	5.73E-03
Sulfuric Acid and Sulfates*	7664-93-9	5.79E+00
Toluene	108-88-3	1.34E-01
Vanadium*	7440-62-2	6.09E-04
Xylenes	1330-20-7	4.94E-02
Zinc*	7440-66-6	1.76E-03
Diesel Particulate Matter*	DPM	8.94E-03
2-Methylnaphthalene	PAH	4.96E-06
3-Methylchloranthrene	PAH	3.72E-07
7,12-Dimethylbenz(a)anthracene	PAH	3.30E-06
Acenaphthene	PAH	3.72E-07
Acenaphthylene	PAH	3.72E-07
Anthracene	PAH	4.96E-07
Benz(a)anthracene	PAH	2.37E-05
Benzo(a)anthracene	PAH	4.14E-05
Benzo(a)pyrene	PAH	2.57E-05
Benzo(b)fluoranthene	PAH	2.10E-05
Benzo(g,h,i)perylene	PAH	2.48E-07
Benzo(k)fluoranthene	PAH	2.04E-05
Chrysene	PAH	4.64E-05
Dibenzo(a,h)anthracene	PAH	4.31E-05
Dichlorobenzene	PAH	1.55E-06
Ethane	PAH	3.99E-03
Fluoranthene	PAH	6.20E-07
Fluorene	PAH	5.78E-07
Indeno(1,2,3-cd)pyrene	PAH	4.32E-05
PAH (excluding Naphthalene)	PAH	1.75E-04
Phenanathrene	PAH	3.51E-06
Pyrene	PAH	1.03E-06
Total Combined HAPs and TACs		**121.80**
Total HAPs*		**13.15**

Notes:

* Denotes pollutants that are not listed as Federal HAPs. These pollutants are not included in the HAP total provided. As shown, combined annual HAP emissions are less than 25 tons per year. Additionally, individual HAP emissions are below 10 tons per year. As such, the source is not a major source of HAPs.

CTG/HRSG Stack - SynGas — HAP Emissions Summary

Hydrogen Energy International LLC — *5/21/2009*
HECA Project

Annual emissions based on 100 percent load at annual average temperature (65°F)

HRSG Heat Input (Yearly Average - 65°F) =	2,159.40	10^6 Btu/hr (higher heating value)
Duct Burner Heat Input (Yearly Average - 65°F) =	273.76	10^6 Btu/hr ((higher heating value)
Total HRSG Heat Input (Yearly Average - 65°F) =	2,433.16	10^6 Btu/hr ((higher heating value)

Hourly emissions based on 100 percent load at winter minimum temperature (20°F)

HRSG Heat Input (Winter Minimum - 20°F) =	2,175.92	10^6 Btu/hr ((higher heating value)
Duct Burner Heat Input (Winter Minimum - 20°F) =	273.76	10^6 Btu/hr ((higher heating value)
Total HRSG Heat Input (Winter Minimum - 20°F) =	2,449.68	10^6 Btu/hr ((higher heating value)
HRSG (Firing Syngas) Operating Hours =	8,322.0	hr/yr

Compound	CAS #	Emission Factor ($lb/10^{12}$ Btu coal)	Hourly (lb/hr)	Annual (lb/yr)
Acetaldehyde	75-07-0	1.8	4.41E-03	3.64E+01
Ammonia	7664-41-7		1.84E+01	1.53E+05
Antimony	7440-36-0	1.1	2.69E-03	2.23E+01
Arsenic	7440-38-2	2.4	5.88E-03	4.86E+01
Benz[a]anthracene	56-55-3	0.0023	5.63E-06	4.66E-02
Benzene	71-43-2	2.4	5.88E-03	4.86E+01
Beryllium	7440-41-7	0.26	6.37E-04	5.26E+00
Cadmium	7440-43-9	9.6	2.35E-02	1.94E+02
Carbon disulfide	75-15-0	46	1.13E-01	9.31E+02
Chromium (hexavalent)	18540-29-9	0.15	3.75E-04	3.10E+00
Chromium, total	0-00-5	0.51	1.25E-03	1.03E+01
Cobalt	7440-48-4	0.26	6.37E-04	5.26E+00
Cyanides	57-12-5	5.7	1.40E-02	1.15E+02
Formaldehyde	50-00-0	17	4.16E-02	3.44E+02
Hydrochloric acid	7647-01-0	13	3.18E-02	2.63E+02
Hydrogen fluoride (Hydrofluoric acid)	7664-39-3	50	1.22E-01	1.01E+03
Lead	7439-92-1	0.56	1.37E-03	1.13E+01
Manganese	7439-96-5	1.0	2.55E-03	2.11E+01
Mercury	7439-97-6	1.2	2.94E-03	2.43E+01
Methyl bromide (Bromomethane)	74-83-9	47.7	1.17E-01	9.66E+02
Methylene chloride (Dichloromethane)	75-09-2	2.2	5.39E-03	4.45E+01
Naphthalene	91-20-3	2.5	6.12E-03	5.06E+01
Nickel	7440-02-0	0.39	9.55E-04	7.90E+00
Phenol	108-95-2	36.8	9.01E-02	7.45E+02
Selenium	7782-49-2	0.56	1.37E-03	1.13E+01
Sulfuric acid and sulfates	7664-93-9	572	1.40E+00	1.16E+04
Toluene	108-88-3	0.033	8.08E-05	6.68E-01

Notes:

Under a mature operating scenario, the unit will primarily fire syngas.

1) HRSG (firing syngas) operating hours = 8,322 hour per year
2) Hourly emissions based on 100 percent load at winter minimum temperature (20°F)
3) Annual emissions based on 100 percent load at annual average temperature (65°F)
4) Emission rates are taken from Wabash River test data and the National Energy Technology Laboratory, U.S. Dept of Energy, Major Environmental Aspects of Gasification-based Power Generation Technologies, Final Report, December 2002.
5) Ammonia slip from the SCR (5 parts per million volume dry @ 15 percent O_2) - provided by Fluor - see Criteria Pollutant emission spreadsheet for details

Btu = British thermal units

Auxiliary CTG — HAP Emissions Summary

Hydrogen Energy International LLC — *5/21/2009*
HECA Project

Operating Parameters

Total CTG Heat Input (Yearly Average - 65°F) = 911 10^6 Btu/hr (higher heating value)
Auxiliary CTG Operating Hours = 4,110 hours per year

Compound	CAS #	Emission Factor (lb/10^6 Btu coal)	Hourly (lb/hr)	Annual (lb/yr)
1,3-Butadiene	106-99-0	1.24E-07	1.13E-04	4.64E-01
Acetaldehyde	75-07-0	1.34E-04	1.22E-01	5.02E+02
Acrolein	107-02-8	3.62E-06	3.30E-03	1.36E+01
Ammonia	7664-41-7		1.20E+01	4.95E+04
Benzene	71-43-2	3.26E-06	2.97E-03	1.22E+01
Ethylbenzene	100-41-4	1.75E-05	1.59E-02	6.55E+01
Formaldehyde	50-00-0	3.60E-04	3.28E-01	1.35E+03
Hexane	110-54-3	2.53E-04	2.30E-01	9.47E+02
Propylene	115-07-1	7.53E-04	6.86E-01	2.82E+03
Propylene Oxide	75-56-9	4.67E-05	4.25E-02	1.75E+02
Toluene	108-88-3	6.93E-05	6.31E-02	2.59E+02
Xylenes	1330-20-7	2.55E-05	2.32E-02	9.55E+01
Benzo(a)anthracene	PAH	2.21E-08	2.01E-05	8.27E-02
Benzo(a)pyrene	PAH	1.36E-08	1.24E-05	5.09E-02
Benzo(b)fluoranthene	PAH	1.10E-08	1.00E-05	4.12E-02
Benzo(k)fluoranthene	PAH	1.07E-08	9.75E-06	4.01E-02
Chrysene	PAH	2.46E-08	2.24E-05	9.21E-02
Dibenz(a,h)anthracene	PAH	2.29E-08	2.09E-05	8.57E-02
Indeno(1,2,3-cd)pyrene	PAH	2.29E-08	2.09E-05	8.57E-02
Naphthalene	PAH	1.62E-06	1.48E-03	6.06E+00

Notes:

1) Auxiliary CTG operating hours = 4,110 hours per year
2) Hourly and annual emissions based on 100 percent load at annual average temperature (65°F) with evaporative cooling. This scenario represents worst-case heat input for both averaging periods.
3) Emission factors obtained from the CATEF database for natural-gas–fired combustion turbines. Formaldehyde, Benzene, and Acrolein emission factors are from the Background document for AP-42, Section 3.1, Table 3.4-1.
4) Ammonia emission rate based on an exhaust ammonia limit of 10 parts per million by volume at 15 percent oxygen.

Cooling Towers — HAP Emissions Summary

Hydrogen Energy International LLC — *5/21/2009*
HECA Project

Cooling Tower Operating Parameters

	Power Block	Process Area	ASU
Cooling water (CW) circulation rate, gpm =	175,000	42,300	40,200
CW circulation rate (million lb/hr) =	88	21	20
CW dissolved solids (ppmw) =	9,000	9,000	9,000
Drift, fraction of circulating CW =	0.0005%	0.0005%	0.0005%

Note: Assumed 9,000 ppm TDS in circulating cooling water. Circulating water could range from 1,200 to 90,000 ppm TDS depending on makeup water quality and tower operation. PM_{10} emissions would vary proportionately.

Cooling Tower Operating Hours = 8,322.0 hours per year

Power Block

Compound	CAS #	Emission Factor (ppm)	Hourly (lb/hr)	Annual (lb/yr)
Arsenic	7440-38-2	0.026	1.13E-05	9.38E-02
Copper	7440-50-8	0.005	2.19E-06	1.82E-02
Fluoride		0.45	1.97E-04	1.64E+00
Manganese	7439-96-5	1.29	5.63E-04	4.68E+00
Selenium	7784-49-2	0.02	9.36E-06	7.79E-02
Zinc	7440-66-6	0.01	4.38E-06	3.64E-02

Notes:

1) Power block operating hours = 8,322 hours per year
2) Arsenic ppm value shown taken as average of analytical test results (Fruit Growers Laboratory)
3) Copper ppm value shown is one-half of stated detection limit
4) Fluoride ppm value shown taken as average of analytical test results (Fruit Growers Laboratory)
5) Manganese ppm value shown taken as average of analytical test results (Fruit Growers Laboratory)
5) Selenium ppm value shown taken as average of analytical test results (DWR)
7) Zinc ppm value shown is one-half of stated detection limit

Process Area

Compound	CAS #	Emission Factor (ppm)	Hourly (lb/hr)	Annual (lb/yr)
Arsenic	7440-38-2	0.026	2.72E-06	2.27E-02
Copper	7440-50-8	0.005	5.29E-07	4.40E-03
Fluoride		0.45	4.76E-05	3.96E-01
Manganese	7439-96-5	1.29	1.36E-04	1.13E+00
Selenium	7784-49-2	0.02	2.26E-06	1.88E-02
Zinc	7440-66-6	0.01	1.06E-06	8.80E-03

Notes:

1) Process area operating hours = 8,322 hours per year
2) Arsenic ppm value shown taken as average of analytical test results (Fruit Growers Laboratory)
3) Copper ppm value shown is one-half of stated detection limit
4) Fluoride ppm value shown taken as average of analytical test results (Fruit Growers Laboratory)
5) Manganese ppm value shown taken as average of analytical test results (Fruit Growers Laboratory)
5) Selenium ppm value shown taken as average of analytical test results (DWR)
7) Zinc ppm value shown is one-half of stated detection limit

ASU

Compound	CAS #	Emission Factor (ppm)	Hourly (lb/hr)	Annual (lb/yr)
Arsenic	7440-38-2	0.026	2.59E-06	2.15E-02
Copper	7440-50-8	0.005	5.03E-07	4.18E-03
Fluoride		0.45	4.52E-05	3.76E-01
Manganese	7439-96-5	1.29	1.29E-04	1.08E+00
Selenium	7784-49-2	0.02	2.15E-06	1.79E-02
Zinc	7440-66-6	0.01	1.01E-06	8.36E-03

Notes:

1) ASU operating hours = 8,322 hours per year
2) Arsenic ppm value shown taken as average of analytical test results (Fruit Growers Laboratory)
3) Copper ppm value shown is one-half of stated detection limit
4) Fluoride ppm value shown taken as average of analytical test results (Fruit Growers Laboratory)
5) Manganese ppm value shown taken as average of analytical test results (Fruit Growers Laboratory)
5) Selenium ppm value shown taken as average of analytical test results (DWR)
7) Zinc ppm value shown is one-half of stated detection limit

Gasifier Refractory Heaters — HAP Emissions Summary

Hydrogen Energy International LLC — *5/21/2009*
HECA Project

Operating Parameters

Gasifier Heat Input =	18	10^6 Btu/hr (HHV)
Reference HHV =	1,050	Btu/scf
=	0.017	10^6 scf/hr
Gasifier Heater Operating Hours =	1,800	hours per year

Please note that there are three gasifier heaters; however, the current assumption is that only one gasifier heater is expected to operate at any one time on an as-needed basis to pre-heat the gasifier.

Compound	CAS #	Emission Factor ($lb/10^6$ scf)	Hourly (lb/hr)	Annual (lb/yr)
Arsenic	7440-38-2	2.00E-04	3.43E-06	6.17E-03
Benzene	71-43-2	2.10E-03	3.60E-05	6.48E-02
Beryllium	7440-41-7	1.20E-05	2.06E-07	3.70E-04
Cadmium	7440-43-9	1.10E-03	1.89E-05	3.39E-02
Chromium	7440-47-3	1.40E-03	2.40E-05	4.32E-02
Cobalt	7440-48-4	8.40E-05	1.44E-06	2.59E-03
Copper	7440-50-8	8.50E-04	1.46E-05	2.62E-02
Formaldehyde	50-00-0	7.50E-02	1.29E-03	2.31E+00
Hexane	110-54-3	1.80E+00	3.09E-02	5.55E+01
Manganese	7439-96-5	3.80E-04	6.51E-06	1.17E-02
Mercury	7439-97-6	2.60E-04	4.46E-06	8.02E-03
Naphthalene	91-20-3	6.10E-04	1.05E-05	1.88E-02
Nickel	7440-02-0	2.10E-03	3.60E-05	6.48E-02
Selenium	7782-49-2	2.40E-05	4.11E-07	7.41E-04
Toluene	108-88-3	3.40E-03	5.83E-05	1.05E-01
Vanadium	7440-62-2	2.30E-03	3.94E-05	7.10E-02
Benzo(a)pyrene	PAH	1.20E-06	2.06E-08	3.70E-05
Benz(a)anthracene	PAH	1.80E-06	3.09E-08	5.55E-05
Benzo(b)fluoranthene	PAH	1.80E-06	3.09E-08	5.55E-05
Chrysene	PAH	1.80E-06	3.09E-08	5.55E-05
Dibenzo(a,h)anthracene	PAH	1.20E-06	2.06E-08	3.70E-05
Indeno(1,2,3-cd)pyrene	PAH	1.80E-06	3.09E-08	5.55E-05
2-Methylnaphthalene	PAH	2.40E-05	4.11E-07	7.41E-04
3-Methylchloranthrene	PAH	1.80E-06	3.09E-08	5.55E-05
7,12-Dimethylbenz(a)anthracene	PAH	1.60E-05	2.74E-07	4.94E-04
Acenaphthene	PAH	1.80E-06	3.09E-08	5.55E-05
Acenaphthylene	PAH	1.80E-06	3.09E-08	5.55E-05
Anthracene	PAH	2.40E-06	4.11E-08	7.41E-05
Benzo(g,h,i)perylene	PAH	1.20E-06	2.06E-08	3.70E-05
Benzo(k)fluoranthene	PAH	1.80E-06	3.09E-08	5.55E-05
Fluoranthene	PAH	3.00E-06	5.14E-08	9.26E-05
Fluorene	PAH	2.80E-06	4.80E-08	8.64E-05
Phenanathrene	PAH	1.70E-05	2.91E-07	5.25E-04
Pyrene	PAH	5.00E-06	8.57E-08	1.54E-04

Notes:

1) Gasifier operating hours = 1,800 hours per year
2) Emission factor source is USEPA AP-42 Section 1.4
3) Calculation assumes fuel heating value, British thermal units/standard cubic foot, higher heating value 1,050
4) Please note that there are three gasifier heaters; however, the current assumption is that only one gasifier heater is expected to operate at any one time.

Auxiliary Boiler — HAP Emissions Summary

Hydrogen Energy International LLC — *5/21/2009*
HECA Project

Operating Parameters

Auxiliary Boiler Heat Input =	142	10^6 Btu/hr (HHV)
=	1050	Btu/scf
=	0.135	10^6 scf/hr
Auxiliary Boiler Operating Hours =	2,190	hours per year

Compound	CAS #	Emission Factor (lb/10^6 scf)	Hourly (lb/hr)	Annual (lb/yr)
Arsenic	7440-38-2	2.00E-04	2.70E-05	5.92E-02
Benzene	71-43-2	2.10E-03	2.84E-04	6.22E-01
Beryllium	7440-41-7	1.20E-05	1.62E-06	3.55E-03
Cadmium	7440-43-9	1.10E-03	1.49E-04	3.26E-01
Chromium	7440-47-3	1.40E-03	1.89E-04	4.15E-01
Cobalt	7440-48-4	8.40E-05	1.14E-05	2.49E-02
Copper	7440-50-8	8.50E-04	1.15E-04	2.52E-01
Formaldehyde	50-00-0	7.50E-02	1.01E-02	2.22E+01
Hexane	110-54-3	1.80E+00	2.43E-01	5.33E+02
Manganese	7439-96-5	3.80E-04	5.14E-05	1.13E-01
Mercury	7439-97-6	2.60E-04	3.52E-05	7.70E-02
Naphthalene	91-20-3	6.10E-04	8.25E-05	1.81E-01
Nickel	7440-02-0	2.10E-03	2.84E-04	6.22E-01
Selenium	7782-49-2	2.40E-05	3.25E-06	7.11E-03
Toluene	108-88-3	3.40E-03	4.60E-04	1.01E+00
Vanadium	7440-62-2	2.30E-03	3.11E-04	6.81E-01
Benzo(a)pyrene	PAH	1.20E-06	1.62E-07	3.55E-04
Benz(a)anthracene	PAH	1.80E-06	2.43E-07	5.33E-04
Benzo(b)fluoranthene	PAH	1.80E-06	2.43E-07	5.33E-04
Chrysene	PAH	1.80E-06	2.43E-07	5.33E-04
Dibenzo(a,h)anthracene	PAH	1.20E-06	1.62E-07	3.55E-04
Indeno(1,2,3-cd)pyrene	PAH	1.80E-06	2.43E-07	5.33E-04
2-Methylnaphthalene	PAH	2.40E-05	3.25E-06	7.11E-03
3-Methylchloranthrene	PAH	1.80E-06	2.43E-07	5.33E-04
7,12-Dimethylbenz(a)anthracene	PAH	1.60E-05	2.16E-06	4.74E-03
Acenaphthene	PAH	1.80E-06	2.43E-07	5.33E-04
Acenaphthylene	PAH	1.80E-06	2.43E-07	5.33E-04
Anthracene	PAH	2.40E-06	3.25E-07	7.11E-04
Benzo(g,h,i)perylene	PAH	1.20E-06	1.62E-07	3.55E-04
Benzo(k)fluoranthene	PAH	1.80E-06	2.43E-07	5.33E-04
Fluoranthene	PAH	3.00E-06	4.06E-07	8.89E-04
Fluorene	PAH	2.80E-06	3.79E-07	8.29E-04
Phenanathrene	PAH	1.70E-05	2.30E-06	5.03E-03
Pyrene	PAH	5.00E-06	6.76E-07	1.48E-03

Notes:

1) Auxiliary boiler operating hours = 2,190 hours per year
2) Emission factor source is EPA AP-42 Section 1.4
3) Calculation assumes fuel heating value,British thermal units/standard cubic foot, higher heating value 1,050

Gasification Flare — HAP Emissions Summary

Hydrogen Energy International LLC — *5/21/2009*
HECA Project

Operating Parameters

Reference HHV = 1,050 btu/scf

Gasification Flare - Normal Operating Emissions From Pilot

Total Hours of Pilot Operation = 8,760 hr/yr
Ground Flare Pilot Fuel Use = 0.5 10^6 Btu/hr

Gasification Flare - Operating Emissions During Gasifier Startup and Shutdown

Total Flare SU/SD Operation = 115,500 10^6 Btu/yr
Wet Unshifted Gas-Firing Rate = 1,195 10^6 Btu/hr - conservatively assuming maximum possible rate
Dry Shifted Gas-Firing Rate = 1,020 10^6 Btu/hr - conservatively assuming maximum possible rate

Startup and shutdown flared gas scenario

Cold plant startup =	30,000	10^6 Btu/yr (1 event)	(assume 20 percent unshifted)
Plant shutdown =	500	10^6 Btu/yr (1 event)	(assume 100 percent unshifted)
Gasifier outages =	60,000	10^6 Btu/yr (24 events)	(assume 100 percent unshifted)
Gasifier hot restarts =	25,000	10^6 Btu/yr (12 events)	(assume 100 percent unshifted)
Total	115,500	10^6 Btu/yr	(approx 75 percent unshifted)

Compound	CAS #	Emission Factor ($lb/10^6$ scf)	Emission ($lb/10^6$ Btu)	Hourly (lb/hr)	Annual (lb/yr)
Acetaldehyde	75-07-0	0.043	4.10E-05	9.07E-02	4.91E+00
Acrolein	107-02-8	0.01	9.52E-06	2.11E-02	1.14E+00
Benzene	71-43-2	0.159	1.51E-04	3.35E-01	1.82E+01
Ethyl Benzene	100-41-4	1.444	1.38E-03	3.05E+00	1.65E+02
Formaldehyde	50-00-0	1.169	1.11E-03	2.47E+00	1.33E+02
Naphthalene	91-20-3	0.011	1.05E-05	2.32E-02	1.26E+00
n-Hexane	110-54-3	0.029	2.76E-05	6.12E-02	3.31E+00
PAH (excluding Naphthalene)	PAH	0.003	2.86E-06	6.33E-03	3.43E-01
Propylene	115-07-1	2.44	2.32E-03	5.15E+00	2.79E+02
Toluene	108-88-3	0.058	5.52E-05	1.22E-01	6.62E+00
Xylene(s)	1330-20-7	0.029	2.76E-05	6.12E-02	3.31E+00
Arsenic	7440-38-2	2.00E-04	1.90E-07	4.22E-04	2.28E-02
Beryllium	7440-41-7	1.20E-05	1.14E-08	2.53E-05	1.37E-03
Cadmium	7440-43-9	1.10E-03	1.05E-06	2.32E-03	1.26E-01
Chromium	7440-47-3	1.40E-03	1.33E-06	2.95E-03	1.60E-01
Cobalt	7440-48-4	8.40E-05	8.00E-08	1.77E-04	9.59E-03
Copper	7440-50-8	8.50E-04	8.10E-07	1.79E-03	9.70E-02
Lead	7439-92-1	5.00E-04	4.76E-07	1.05E-03	5.71E-02
Manganese	7439-96-5	3.80E-04	3.62E-07	8.02E-04	4.34E-02
Mercury	7439-97-6	2.60E-04	2.48E-07	5.49E-04	2.97E-02
Nickel	7440-02-0	2.10E-03	2.00E-06	4.43E-03	2.40E-01
Selenium	7782-49-2	2.40E-05	2.29E-08	5.06E-05	2.74E-03
Vanadium	7440-62-2	2.30E-03	2.19E-06	4.85E-03	2.63E-01
Zinc	7440-66-6	2.90E-02	2.76E-05	6.12E-02	3.31E+00

Notes:

1) Annual operation assumes total pilot operation of 8,760 hr/yr and 115,500 10^6 Btu/yr during gasifier startup and shutdown.
2) Emission factors based on AP-42 Chpt. 1.4 (for metals) and VCAPCD AB2588 (for non-metals).
3) Calculation assumes fuel heating value, Btu/scf, higher heating value 1,050

SRU Flare — HAP Emissions Summary

Hydrogen Energy International LLC — *5/21/2009*
HECA Project

Operating Parameters

Reference HHV = 1,050 btu/scf

SRU Flare - Normal Operating Emissions From Pilot

Total Hours of Pilot Operation = 8,760 hr/yr
Elevated Flare Pilot Fuel Use = 0.3 10^6 Btu/hr

SRU Flare - Operating Emissions During Gasifier Startup and Shutdown

Total Flare Operation During SU/SD = 6.0 hr/yr — assumes approximately 6 hours (2 events)
Natural Gas Heat Rate (assist gas) = 36.0 10^6 Btu/hr

Compound	CAS #	Emission Factor ($lb/10^6$ scf)	Emission Factor ($lb/10^6$ Btu)	Hourly (lb/hr)	Annual (lb/yr)
Acetaldehyde	75-07-0	0.043	4.10E-05	1.49E-03	1.16E-01
Acrolein	107-02-8	0.01	9.52E-06	3.46E-04	2.71E-02
Benzene	71-43-2	0.159	1.51E-04	5.50E-03	4.31E-01
Ethyl Benzene	100-41-4	1.444	1.38E-03	4.99E-02	3.91E+00
Formaldehyde	50-00-0	1.169	1.11E-03	4.04E-02	3.17E+00
Naphthalene	91-20-3	0.011	1.05E-05	3.80E-04	2.98E-02
n-Hexane	110-54-3	0.029	2.76E-05	1.00E-03	7.85E-02
PAH (excluding Naphthalene)	PAH	0.003	2.86E-06	1.04E-04	8.13E-03
Propylene	115-07-1	2.44	2.32E-03	8.44E-02	6.61E+00
Toluene	108-88-3	0.058	5.52E-05	2.01E-03	1.57E-01
Xylene(s)	1330-20-7	0.029	2.76E-05	1.00E-03	7.85E-02
Arsenic	7440-38-2	2.00E-04	1.90E-07	6.91E-06	5.42E-04
Beryllium	7440-41-7	1.20E-05	1.14E-08	4.15E-07	3.25E-05
Cadmium	7440-43-9	1.10E-03	1.05E-06	3.80E-05	2.98E-03
Chromium	7440-47-3	1.40E-03	1.33E-06	4.84E-05	3.79E-03
Cobalt	7440-48-4	8.40E-05	8.00E-08	2.90E-06	2.28E-04
Copper	7440-50-8	8.50E-04	8.10E-07	2.94E-05	2.30E-03
Lead	7439-92-1	5.00E-04	4.76E-07	1.73E-05	1.35E-03
Manganese	7439-96-5	3.80E-04	3.62E-07	1.31E-05	1.03E-03
Mercury	7439-97-6	2.60E-04	2.48E-07	8.99E-06	7.04E-04
Nickel	7440-02-0	2.10E-03	2.00E-06	7.26E-05	5.69E-03
Selenium	7782-49-2	2.40E-05	2.29E-08	8.30E-07	6.50E-05
Vanadium	7440-62-2	2.30E-03	2.19E-06	7.95E-05	6.23E-03
Zinc	7440-66-6	2.90E-02	2.76E-05	1.00E-03	7.85E-02

Notes:

1) Annual operation assumes total pilot operation of 8,760 hr/yr and 6 hr/yr during gasifier startup and shutdown with assist gas.
2) Emission factors based on AP-42 Chpt. 1.4 (for metals) and VCAPCD AB2588 (for non-metals).
3) Calculation assumes fuel heating value, Btu/scf, higher heating value 1,050

Hydrogen Energy International LLC *5/21/2009*
HECA Project

Operating Parameters - Normal Operating Emissions From Pilot

Rectisol Flare Pilot Firing Rate = 0.3 MMBtu/hr
Annual Operating Hours = 8,760 hr/yr

Compound	CAS Number	Emission Factor ($lb/10^6$ scf)	Emission Factor (lb/MMBtu)	Hourly (lb/hr)	Annual (lb/yr)
2-Methylnaphthalene	91576	2.40E-05	2.35E-08	7.06E-09	6.18E-05
3-Methylchloranthrene	56495	1.80E-06	1.76E-09	5.29E-10	4.64E-06
7,12-Dimethylbenz(a)anthracene	57976	1.60E-05	1.57E-08	4.71E-09	4.12E-05
Acenaphthene	83329	1.80E-06	1.76E-09	5.29E-10	4.64E-06
Acenaphthylene	208968	1.80E-06	1.76E-09	5.29E-10	4.64E-06
Anthracene	120127	2.40E-06	2.35E-09	7.06E-10	6.18E-06
Benz(a)anthracene	56553	1.80E-06	1.76E-09	5.29E-10	4.64E-06
Benzene	71432	2.10E-03	2.06E-06	6.18E-07	5.41E-03
Benzo(a)pyrene	50328	1.20E-06	1.18E-09	3.53E-10	3.09E-06
Benzo(b)fluoranthene	205992	1.80E-06	1.76E-09	5.29E-10	4.64E-06
Benzo(g,h,i)perylene	191242	1.20E-06	1.18E-09	3.53E-10	3.09E-06
Benzo(k)fluoranthene	205823	1.80E-06	1.76E-09	5.29E-10	4.64E-06
Butane	106978	2.10E+00	2.06E-03	6.18E-04	5.41E+00
Chrysene	218019	1.80E-06	1.76E-09	5.29E-10	4.64E-06
Dibenzo(a,h)anthracene	53703	1.20E-06	1.18E-09	3.53E-10	3.09E-06
Dichlorobenzene	25321226	1.20E-03	1.18E-06	3.53E-07	3.09E-03
Ethane	74840	3.10E+00	3.04E-03	9.12E-04	7.99E+00
Fluoranthene	206440	3.00E-06	2.94E-09	8.82E-10	7.73E-06
Fluorene	86737	2.80E-06	2.75E-09	8.24E-10	7.21E-06
Formaldehyde	50000	7.50E-02	7.35E-05	2.21E-05	1.93E-01
Hexane	110543	1.80E+00	1.76E-03	5.29E-04	4.64E+00
Indeno(1,2,3-cd)pyrene	193395	1.80E-06	1.76E-09	5.29E-10	4.64E-06
Naphthalene	91203	6.10E-04	5.98E-07	1.79E-07	1.57E-03
Pentane	109660	2.60E+00	2.55E-03	7.65E-04	6.70E+00
Phenanthrene	85018	1.70E-05	1.67E-08	5.00E-09	4.38E-05
Propane	74986	1.60E+00	1.57E-03	4.71E-04	4.12E+00
Pyrene	129000	5.00E-06	4.90E-09	1.47E-09	1.29E-05
Toluene	108883	3.40E-03	3.33E-06	1.00E-06	8.76E-03
Arsenic	7440382	2.00E-04	1.96E-07	5.88E-08	5.15E-04
Barium	7440393	4.40E-03	4.31E-06	1.29E-06	1.13E-02
Beryllium	7440417	1.20E-05	1.18E-08	3.53E-09	3.09E-05
Cadmium	7440439	1.10E-03	1.08E-06	3.24E-07	2.83E-03
Chromium	7440473	1.40E-03	1.37E-06	4.12E-07	3.61E-03
Cobalt	7440484	8.40E-05	8.24E-08	2.47E-08	2.16E-04
Copper	7440508	8.50E-04	8.33E-07	2.50E-07	2.19E-03
Manganese	7439965	3.80E-04	3.73E-07	1.12E-07	9.79E-04
Mercury	7439976	2.60E-04	2.55E-07	7.65E-08	6.70E-04
Molybdenum	7439987	1.10E-03	1.08E-06	3.24E-07	2.83E-03
Nickel	7440020	2.10E-03	2.06E-06	6.18E-07	5.41E-03
Selenium	7782492	2.40E-05	2.35E-08	7.06E-09	6.18E-05
Vanadium	7440622	2.30E-03	2.25E-06	6.76E-07	5.93E-03
Zinc	7440666	2.90E-02	2.84E-05	8.53E-06	7.47E-02

Notes:

1) Emission factors ($lb/10^6$ scf) are from AP-42, Chapter 1.4, Table 1.4-3. Factors in pounds per 10E-06 scf were converted to factors in lb/MMBtu by dividing by 1,020.

Tail Gas Thermal Oxidizer — HAP Emissions Summary

Hydrogen Energy International LLC — *5/21/2009*
HECA Project

Operating Parameters

Tail Gas Thermal Oxidizer Heat Input =	10	10^6 Btu/hr (HHV)
Reference HHV =	1,050	Btu/scf
=	0.010	10^6 scf/hr
Tail Gas Thermal Oxidizer Operating Hours =	8,760	hr/yr

Compound	CAS #	Emission Factor ($lb/10^6$ scf)	Hourly (lb/hr)	Annual (lb/yr)
Arsenic	7440-38-2	2.00E-04	1.90E-06	1.67E-02
Benzene	71-43-2	2.10E-03	2.00E-05	1.75E-01
Beryllium	7440-41-7	1.20E-05	1.14E-07	1.00E-03
Cadmium	7440-43-9	1.10E-03	1.05E-05	9.18E-02
Chromium	7440-47-3	1.40E-03	1.33E-05	1.17E-01
Cobalt	7440-48-4	8.40E-05	8.00E-07	7.01E-03
Copper	7440-50-8	8.50E-04	8.10E-06	7.09E-02
Formaldehyde	50-00-0	7.50E-02	7.14E-04	6.26E+00
Hexane	110-54-3	1.80E+00	1.71E-02	1.50E+02
Manganese	7439-96-5	3.80E-04	3.62E-06	3.17E-02
Mercury	7439-97-6	2.60E-04	2.48E-06	2.17E-02
Naphthalene	91-20-3	6.10E-04	5.81E-06	5.09E-02
Nickel	7440-02-0	2.10E-03	2.00E-05	1.75E-01
Selenium	7782-49-2	2.40E-05	2.29E-07	2.00E-03
Toluene	108-88-3	3.40E-03	3.24E-05	2.84E-01
Vanadium	7440-62-2	2.30E-03	2.19E-05	1.92E-01
Benzo(a)pyrene	PAH	1.20E-06	1.14E-08	1.00E-04
Benz(a)anthracene	PAH	1.80E-06	1.71E-08	1.50E-04
Benzo(b)fluoranthene	PAH	1.80E-06	1.71E-08	1.50E-04
Chrysene	PAH	1.80E-06	1.71E-08	1.50E-04
Dibenzo(a,h)anthracene	PAH	1.20E-06	1.14E-08	1.00E-04
Indeno(1,2,3-cd)pyrene	PAH	1.80E-06	1.71E-08	1.50E-04
2-Methylnaphthalene	PAH	2.40E-05	2.29E-07	2.00E-03
3-Methylchloranthrene	PAH	1.80E-06	1.71E-08	1.50E-04
7,12-Dimethylbenz(a)anthracene	PAH	1.60E-05	1.52E-07	1.33E-03
Acenaphthene	PAH	1.80E-06	1.71E-08	1.50E-04
Acenaphthylene	PAH	1.80E-06	1.71E-08	1.50E-04
Anthracene	PAH	2.40E-06	2.29E-08	2.00E-04
Benzo(g,h,i)perylene	PAH	1.20E-06	1.14E-08	1.00E-04
Benzo(k)fluoranthene	PAH	1.80E-06	1.71E-08	1.50E-04
Fluoranthene	PAH	3.00E-06	2.86E-08	2.50E-04
Fluorene	PAH	2.80E-06	2.67E-08	2.34E-04
Phenanathrene	PAH	1.70E-05	1.62E-07	1.42E-03
Pyrene	PAH	5.00E-06	4.76E-08	4.17E-04

Notes:

1) Tail gas thermal oxidizer operating hours = 8,760 (accounting for both process vent and SRU startup)
2) Emission factor source is USEPA AP-42 Section 1.4
3) Calculation assumes fuel heating value, Btu/scf, HHV 1,050

Intermittent CO_2 Vent — HAP Emissions Summary

Hydrogen Energy International LLC — *5/21/2009*
HECA Project

Operating Parameters

Total Days of Operation =	21	day/yr
Total Hours of Operation =	504	hr/yr
Total Flow =	656,000	lb/hr
Total Flow =	15,150	lbmol/hr
Molecular weight		
COS	60	lb/lbmol
H_2S	34	lb/lbmol

PLEASE NOTE THAT THIS EMISSIONS SOURCE WILL BE MODELED IN DEGADIS.

Compound	CAS #	Emission Factor (ppm)	Hourly (lb/hr)	Annual (lb/yr)
Carbonyl Sulfide	463-58-1	55	5.01E+01	2.52E+04
Hydrogen Sulfide	7783-06-4	10	5.15E+00	2.60E+03

Notes:

1) Emission rates based on plant design and 21 days per year full venting.

Emergency Diesel Generator — HAP Emissions Summary

Hydrogen Energy International LLC — *5/21/2009*
HECA Project

Operating Parameters

Emergency Generator Specification = 2,800 Bhp
Emergency Generator Operating Hours = 50 hr/yr

PLEASE NOTE THAT THERE ARE TWO GENERATORS; EMISSION SHOWN IS FOR INDIVIDUAL GENERATORS.

Compound	CAS #	Emission Factor (g/Bhp/hr)	Hourly (lb/hr)	Annual (lb/yr)
Diesel Particulate Matter	DPM	0.03	1.60E-01	8.02E+00

Note:

1) Emergency generator operating hours = 50 hours per year per generator
2) Emissions factor shown is site-specific diesel emission rate based on vendor data
3) Emission rate shown is for individual generator

Emergency Diesel Firewater Pump — HAP Emissions Summary

Hydrogen Energy International LLC — *5/21/2009*
HECA Project

Operating Parameters

Fire Water Pump Specification =	556	Bhp
Fire Water Pump Operating Hours =	100	hr/yr

Compound	CAS #	Emission Factor (g/Bhp/hr)	Hourly (lb/hr)	Annual (lb/yr)
Diesel Particulate Matter	DPM	0.015	1.84E-02	1.84E+00

Note:

1) Fire water pump operating hours = 100 hours per year
2) Emission factor shown is from Tier 4 requirements

Hydrogen Energy International LLC *5/21/2009*
HECA Project

Data Supplied By Client				
	Onsite Petcoke and Coal Trucks (@ 10 mph)		Onsite Gasifier Solids Handling (@ 5 mph)	
Parameter	Running Emissions	Idling Emissions	Running Emissions	Idling Emissions
Distance Traveled (mile)	0.9659		0.568	
Per Truck Idle Time (hour)		0.117		0.083
No. Volume Sources	85		84	
Maximum number of trucks or loads				
1-hour	18	18	2	2
Annual average	35,500	35500	2,900	2900
EMFAC2007 Emission Factors (g/mi or g/idle-hour)				
PM_{10}	0.08	0.122	0.09	0.122

PM10 Emission Rates

	Onsite Petcoke and Coal Trucks (@ 10 mph)		Onsite Gasifier Solids Handling (@ 5 mph)	
Emission Rates for HARP	Running Emissions (0.84 mile route)	Idling Emissions (at each Idle Point)	Running Emissions (0.568 mile route)	Idling Emissions (at each Idle
1-hr PM_{10} (pounds per hour)	3.1E-03	5.6E-04	2.3E-04	4.5E-05
Annual PM_{10} (pounds per year)	6.2E+00	1.1E+00	3.3E-01	6.5E-02

HARP Inputs - Annual and Hourly Emission Rates per Volume Source

	Onsite Petcoke and Coal Trucks (@ 10 mph)		Onsite Gasifier Solids Handling (@ 5 mph)	
	Running Emissions (0.84 mile route)	Idling Emissions (at each Idle Point)	Running Emissions (0.568 mile route)	Idling Emissions (at each Idle
Max PM_{10} pounds per year per volume source	3.7E-05	6.6E-06	2.7E-06	5.3E-07
PM_{10} pounds per year per volume source	7.3E-02	1.3E-02	3.9E-03	7.7E-04