URS

DOCKET	
08-AFC-6	
DATE	9/24/2009
RECD.	9/25/2009

September 24, 2009

Dockets Unit
California Energy Commission
1516 Ninth Street, MS 4
Sacramento, CA 95814

RE: Willow Pass Generating Station
Application for Certification 08-AFC-06

On behalf of Mirant Willow Pass, LLC, the applicant for the above-referenced Willow Pass Generating Station AFC, we are pleased to submit the enclosed document:

- Twelve print copies and one CD of the ***Transition Cluster Group 1 Phase I Interconnection Study Report***

Please include this document in the AFC record.

URS Corporation

Kathy Rushmore
Project Manager

Enclosures

CC: Felicia Miller

URS Corporation
221 Main Street, Suite 600
San Francisco, CA 94105
Tel: 415.896.5858
Fax: 415.882.9261
www.urscorp.com

September 24, 2009

Felicia Miller
California Energy Commission
Energy Facilities Siting Division
1516 Ninth Street, MS 15
Sacramento, CA 95814-5512

Re: **Willow Pass Generating Station (08-AFC-6)**
Transition Cluster Group 1 Phase I Interconnection Study Report

Dear Ms. Miller:

Please find enclosed the Transition Cluster Group 1 Phase I Interconnection Study Report (Phase I Report) prepared by California Independent System Operator (CAISO) and Pacific Gas and Electric Company (PG&E) for the Willow Pass Generating Station (WPGS).

Mirant Willow Pass, LLC (Mirant Willow Pass) is submitting the Phase I Report in response to requests from staff. It must be emphasized, however, that the Phase I Report reflects outdated assumptions and does not predict the impacts associated with the addition of the WPGS to the transmission system. The California Energy Commission (CEC) therefore should not rely on the results predicted in the Phase I Report for its analysis of the WPGS. These points are explained below.

Under the CAISO's reformed process, the CAISO is processing interconnection requests together in clusters or groups. The WPGS project is part of the Bay Area "Transition Cluster" (Group 1), which is comprised of twelve projects located in the Greater Bay Area. Some of these projects may not be in the CEC review process.

The Phase I Report reflects the results of a Phase I Interconnection Study that evaluated the addition of all Group 1 projects collectively ("Phase I Study"). The purpose of the Phase I Study was to evaluate transmission system impacts caused by the addition of all twelve Group 1 projects together, and to identify the network upgrades that would be required to accommodate the addition of all twelve Group 1 projects. The CAISO allocated a percentage of the costs associated with these network upgrades to each of the Group 1 projects.

The Phase I Study and the resulting Phase I Report do not accurately predict the potential impacts associated with the WPGS. Because the Phase I Study assumes that that all Group 1 projects will be added within the study time frame and evaluates their collective impact, it overstates potential impacts and predicts impacts that are speculative. Some Group 1 projects may not be constructed, while others may be delayed and therefore will drop out of Group 1 consideration. Others could undergo design changes that affect their potential transmission impacts, as has occurred with the Marsh Landing Generating

Station, which comprises two Group 1 projects. In short, there is likely to be a significant decrease in the total amount of Group 1 capacity. Some information regarding the scope of this decrease should be known later this year, after the due date for posting of required financial security with the CAISO as a condition of remaining under consideration in Group 1.

In addition, due to the new clustering study methodology, the Phase I Study is not representative of project-specific impacts and it does not accurately estimate project-specific impacts associated with the addition of the WPGS. Mirant Willow Pass has met with CAISO to discuss the limitations and concerns regarding this new process.

For these reasons, the Phase I Study and the Phase I Report should not be relied upon for the CEC's analysis in this proceeding. To evaluate project-specific impacts, Mirant Willow Pass submitted a System Impact Study on September 29, 2008 and an Updated System Impact Study on February 12, 2009. Mirant Willow Pass consulted with the CEC staff prior to conducting the study, and included specific projects in the analysis as directed by CEC staff. Over the course of almost one year since becoming Data Adequate, Mirant Willow Pass has also submitted several responses to CEC staff's questions regarding the project-specific impact study.

As indicated in the WPGS Updated System Impact Study, no reconductoring is required to address WPGS impacts. Because the Phase I Study does not provide project-specific information related to impacts and mitigation, the information that Mirant Willow Pass has provided to CEC staff should be used for CEC's evaluation of the project.

Mirant Willow Pass requests that the Updated System Impact Study submitted to the CEC in February 2009, and subsequent submittals, be used to evaluate WPGS project-specific transmission system impacts.

Sincerely,

Kathy Rushmore
URS Corporation
On behalf of
Mirant Willow Pass, LLC

Enclosure

- CAISO Transition Cluster Group 1 Phase I Interconnection Study Report – Willow Pass Generating Station Combined Cycle Units, July 28, 2009

Appendix I

Deliverability Study Results

Deliverability Study Results for Transition Cluster Projects in the Greater Bay Area

1. 2013 Summer Peak Conditions

Overloaded Facility	Worst Loading	Worst Contingency	Catg	Generators responsible
30575 WND MSTR 230.00 kV to 38610 DELTAPMP 230.00 kV CCT 1	148%	30569 KELSO 230.0 kV To: 30570 USWP-RLF 230.0 kV Ckt 1 30570 USWP-RLF 230.0 kV To: 30571 ALTALAND 230.0 kV Ckt 1 30570 USWP-RLF 230.0 kV To: 30625 TESLA D 230.0 kV Ckt 1	B	T320GT1,T275GT1,T257GT1,T322GT1,T222,T258CT1,T305GT1,T334CT1,T171WG1
30525 C.COSTA 230.00 kV to 30575 WND MSTR 230.00 kV CCT 1	146%	30569 KELSO 230.0 kV To: 30570 USWP-RLF 230.0 kV Ckt 1 30570 USWP-RLF 230.0 kV To: 30571 ALTALAND 230.0 kV Ckt 1 30570 USWP-RLF 230.0 kV To: 30625 TESLA D 230.0 kV Ckt 1	B	T322GT1,T320GT1,T305GT1,T258CT1,T257GT1,T222,T171WG1,T275GT1,T334CT1
30452 T275SWST 230.00 kV to 30460 VACA-DIX 230.00 kV CCT 2	115%	30452 T275SWST 230.0 kV To: 30460 VACA-DIX 230.0 kV Ckt 1	B	T275GT1,T258CT1,T222,T305GT1,T320GT1,T334CT1
30452 T275SWST 230.00 kV to 30460 VACA-DIX 230.00 kV CCT 1	115%	30452 T275SWST 230.0 kV To: 30460 VACA-DIX 230.0 kV Ckt 2	B	T275GT1,T258CT1,T222,T305GT1,T320GT1,T334CT1
30525 C.COSTA 230.00 kV to 30543 ROSSTAP1 230.00 kV CCT 1	102%	30525 C.COSTA 230.0 kV To: 30544 ROSSTAP2 230.0 kV Ckt 2 30544 ROSSTAP2 230.0 kV To: 30550 MORAGA 230.0 kV Ckt 2	B	T275GT1,T320GT1, T305GT1, T258CT1, T222, T334
30540 SOBRANTE 230.00 kV to 33010 SOBRANTE 115.00 kV CCT 2	104%	30540 SOBRANTE 230.00 kV to 33010 SOBRANTE 115.00 kV CCT 1	B	T257GT1,T322GT1
30540 SOBRANTE 230.00 kV to 33010 SOBRANTE 115.00 kV CCT 1	107%	30540 SOBRANTE 230.00 kV to 33010 SOBRANTE 115.00 kV CCT 2	B	T257GT1,T322GT1
30523 CC SUB 230.00 kV to 30525 C.COSTA 230.00 kV CCT 1	106%	30452 T275SWST 230.0 kV To: 30460 VACA-DIX 230.0 kV Ckt 1 30452 T275SWST 230.0 kV To: 30460 VACA-DIX 230.0 kV Ckt 2	C	T258CT1,T275GT1,T222
30570 USWP-RLF 230.00 kV to 30625 TESLA D 230.00 kV CCT 1	144%	30452 T275SWST 230.0 kV To: 30460 VACA-DIX 230.0 kV Ckt 1 30452 T275SWST 230.0 kV To: 30460 VACA-DIX 230.0 kV Ckt 2	C	T320GT1, T305GT1, T258CT1, T257GT1, T275GT1, T222, T322GT1, T334CT1
30569 KELSO 230.00 kV to 30570 USWP-RLF 230.00 kV CCT 1	139%	30452 T275SWST 230.0 kV To: 30460 VACA-DIX 230.0 kV Ckt 1 30452 T275SWST 230.0 kV To: 30460 VACA-DIX 230.0 kV Ckt 2	C	T334CT1, T322GT1, T320GT1, T305GT1, T258CT1 ,T275GT1,T257GT1,T222
30525 C.COSTA 230.00 kV to 30565 BRENTWOD 230.00 kV CCT 1	125%	30452 T275SWST 230.0 kV To: 30460 VACA-DIX 230.0 kV Ckt 1 30452 T275SWST 230.0 kV To: 30460 VACA-DIX 230.0 kV Ckt 2	C	T305GT1,T258CT1,T320GT1,T275GT1,T257GT1,T222,T322GT1,T334

30580 ALTM MDW 230.00 kV to 30625 TESLA D 230.00 kV CCT 1	135%	30452 T275SWST 230.0 kV To: 30460 VACA-DIX 230.0 kV Ckt 1 30452 T275SWST 230.0 kV To: 30460 VACA-DIX 230.0 kV Ckt 2	C	T305GT1,T258CT1,T320GT1,T275GT1,T257GT1,T171WG1,T322GT1,T222
30585 LS PSTAS 230.00 kV to 30630 NEWARK D 230.00 kV CCT 1	135%	30565 BRENTWOD 230.0 kV To: 30569 KELSO 230.0 kV Ckt 1 30525 C.COSTA 230.0 kV To: 30575 WND MSTR 230.0 kV Ckt 1 30575 WND MSTR 230.0 kV To: 38610 DELTAPMP 230.0 kV Ckt 1	C	T275GT1,T320GT1, T305GT1, T258CT1, T222
32990 MARTNZ D 115 33016 ALHAMTP2 115 1	108%	32765 ELCRTJ1 115.0 kV To: 33010 SOBRANTE 115.0 kV Ckt 1 32765 ELCRTJ1 115.0 kV To: 32766 EL CRRTO 115.0 kV Ckt 1 32766 EL CRRTO 115.0 kV To: 33010 SOBRANTE 115.0 kV Ckt 2	C	T322GT1
35107 DUMBARTN 115.00 kV to 35120 NEWARK D 115.00 kV CCT 1	138%	30700 SANMATEO 230.0 kV To: 30527 PITSBG E 230.0 kV Ckt 1 30560 E. SHORE 230.0 kV To: 30700 SANMATEO 230.0 kV Ckt 1	C	(RCECSTG1,ESEC),T322GT1,T257GT1
35105 EASTSHRE 115.00 kV to 35107 DUMBARTN 115.00 kV CCT 1	105%	30700 SANMATEO 230.0 kV To: 30527 PITSBG E 230.0 kV Ckt 1 30560 E. SHORE 230.0 kV To: 30700 SANMATEO 230.0 kV Ckt 1	C	T322GT1
30530 CAYETANO 230.00 kV to 30537 NDUBLIN 230.00 kV CCT 1	118%	30525 C.COSTA 230.0 kV To: 30565 BRENTWOD 230.0 kV Ckt 1 30525 C.COSTA 230.0 kV To: 30575 WND MSTR 230.0 kV Ckt 1 30575 WND MSTR 230.0 kV To: 38610 DELTAPMP 230.0 kV Ckt 1	C	T305GT1,T258CT1,T320GT1,T275GT1,T222,
30567 LONETREE 230.00 kV to 30590 USWP-JRW 230.00 kV CCT 1	119%	30525 C.COSTA 230.0 kV To: 30565 BRENTWOD 230.0 kV Ckt 1 30525 C.COSTA 230.0 kV To: 30575 WND MSTR 230.0 kV Ckt 1 30575 WND MSTR 230.0 kV To: 38610 DELTAPMP 230.0 kV Ckt 1	C	T222,T275GT1,T258CT1,T305GT1,T320GT1
30537 NDUBLIN 230.00 kV to 35224 VINEYD_D 230.00 kV CCT 1	113%	30525 C.COSTA 230.0 kV To: 30565 BRENTWOD 230.0 kV Ckt 1 30525 C.COSTA 230.0 kV To: 30575 WND MSTR 230.0 kV Ckt 1 30575 WND MSTR 230.0 kV To: 38610 DELTAPMP 230.0 kV Ckt 1	C	T305GT1,T258CT1,T320GT1,T275GT1,T222
30630 NEWARK D 230.00 kV to 35219 VINEYARD 230.00 kV CCT 1	108%	30525 C.COSTA 230.0 kV To: 30565 BRENTWOD 230.0 kV Ckt 1 30525 C.COSTA 230.0 kV To: 30575 WND MSTR 230.0 kV Ckt 1 30575 WND MSTR 230.0 kV To: 38610 DELTAPMP 230.0 kV Ckt 1	C	T305GT1,T258CT1,T320GT1,T275GT1,T222
30525 C.COSTA 230.00 kV to 30585 LS PSTAS 230.00 kV CCT 1	104%	30525 C.COSTA 230.0 kV To: 30565 BRENTWOD 230.0 kV Ckt 1 30525 C.COSTA 230.0 kV To: 30575 WND MSTR 230.0 kV Ckt 1 30575 WND MSTR 230.0 kV To: 38610 DELTAPMP 230.0 kV Ckt 1	C	T275GT1,T320GT1, T305GT1, T258CT1, T222
30530 CAYETANO 230.00 kV to 30590 USWP-JRW 230.00 kV CCT 1	120%	30452 T275SWST 230.0 kV To: 30460 VACA-DIX 230.0 kV Ckt 1 30452 T275SWST 230.0 kV To: 30460 VACA-DIX 230.0 kV Ckt 2	C	T222,T275GT1,T258CT1,T305GT1,T320GT1

30580 ALTM MDW 230.00 kV to 38610 DELTAPMP 230.00 kV CCT 1	125%	30452 T275SWST 230.0 kV To: 30460 VACA-DIX 230.0 kV Ckt 1 30452 T275SWST 230.0 kV To: 30460 VACA-DIX 230.0 kV Ckt 2	C	T305GT1,T258CT1,T320GT1,T275GT1,T257GT1,T171WG1,T322GT1,T222,T334
30550 MORAGA 230.00 kV to 30554 CASTROVL 230.00 kV CCT 1	104%	30525 C.COSTA 230.0 kV To: 30585 LS PSTAS 230.0 kV Ckt 1 30525 C.COSTA 230.0 kV To: 30567 LONETREE 230.0 kV Ckt 1	C	T275GT1,T320GT1, T305GT1, T258CT1, T222,T257GT1,T322GT1
30554 CASTROVL 230.00 kV to 30631 NEWARK E 230.00 kV CCT 1	104%	30525 C.COSTA 230.0 kV To: 30585 LS PSTAS 230.0 kV Ckt 1 30525 C.COSTA 230.0 kV To: 30567 LONETREE 230.0 kV Ckt 1	C	T275GT1,T320GT1, T305GT1, T258CT1, T222,T257GT1,T322GT1
33010 SOBRANTE 115.00 kV to 33020 MORAGA 115.00 kV CCT 1	116%	32740 HILLSIDE 115.0 kV To: 33006 GRIZLYJ1 115.0 kV Ckt 1 33006 GRIZLYJ1 115.0 kV To: 33010 SOBRANTE 115.0 kV Ckt 1 33006 GRIZLYJ1 115.0 kV To: 33012 EST PRTL 115.0 kV Ckt 1 32740 HILLSIDE 115.0 kV To: 32770 GRIZZLY2 115.0 kV Ckt 1 327	C	T257GT1,T322GT1
35612 TRIMBLE 115.00 Kv to 35616 SJ B E 115.00 Kv CCT 1	107%	35620 EL PATIO 115.0 kV To: 35621 IBM-HR J 115.0 kV Ckt 1 35621 IBM-HR J 115.0 kV To: 35642 MTCALF D 115.0 kV Ckt 1 35620 EL PATIO 115.0 kV To: 35651 BAILY J3 115.0 kV Ckt 2 35642 MTCALF D 115.0 kV To: 35651 BAILY J3 115.0 kV Ckt 2	C	T378ST1

2. 2013 Summer Off-Peak Conditions

Overloaded Facility	Worst Loading	Worst Contingency	Catg	Generators responsible
BDLSWSTA 230 - C.COSTA 230 CKT 1	114.3%	Birds Landing - Contra Costa Sub 230 kV Line and Gateway PP	B	T222, T171
BDLSWSTA 230 - CC SUB 230 CKT 1	111.5%	Birds Landing - Contra Costa 230 kV Line and Gateway PP	B	T222, T171
BDLSWSTA 230 - C.COSTA 230 CKT 1	109.6%	BUS FAULT 30523 "CC SUB" Contra Costa Sub 230 kV Bus Section 1 (Opens Contra Costa sub-Birds Landing 230 kV line and Contra Costa sub 230/115 kV txmr)	C	T222, T172
BDLSWSTA 230 - CC SUB 230 CKT 1	106.7%	BUS FAULT 30525 "C.COSTA" Contra Costa 230 kV Bus Section 2D (Opens Contra Costa-Birds Landing 230 kV line)	C	T222, T173

3. Sensitivity Analysis without the largest Network Upgrade

Upgrades	Group	Deliverable MW w/o the Highest Cost Component				
	Gen ID	Component	On Peak Deliverable MW and % of NQC		Mw curtailed	total MW
Reconductor WND MSTR - DELTAPMP 230 kV line with 1113 ACSS conductor	T171WG1	Reconductor WND MSTR - DELTAPMP 230 kV line with 1113 ACSS conductor	2567		1335	3901.6
	T222		66%			
	T257GT1					
	T258CT1					
	T275GT1					
	T305GT1					
	T320GT1					
	T322GT1					
	T334CT1					
Reconductor C.COSTA -WND MSTR 230 kV line with 1113 ACSS conductor	T171WG1	Reconductor C.COSTA - WND MSTR 230 kV line with 1113 ACSS conductor	2567		1335	3901.6
	T222		66%			
	T257GT1					
	T258CT1					
	T275GT1					
	T305GT1					
	T320GT1					
	T322GT1					
	T334CT1					
Reconductor T275SWST -VACA-DIX 230 kV line #1 with 2-795 ACSS conductor	T222	Reconductor T275SWST - VACA-DIX 230 kV line #1 with 2-795 ACSS conductor	1356		1105	2460.6
	T258CT1		55%			
	T275GT1					
	T305GT1					
	T320GT1					
	T334CT1					
Reconductor T275SWST -VACA-DIX 230 kV line #2 with 2-795 ACSS conductor	T222	Reconductor T275SWST - VACA-DIX 230 kV line #2 with 2-795 ACSS conductor	1356		1105	2460.6
	T258CT1		55%			
	T275GT1					
	T305GT1					
	T320GT1					
	T334CT1					

Loop C.COSTA -ROSSTAP1 230 kV line into CC Sub	T222	Loop C.COSTA - ROSSTAP1 230 kV line into CC Sub	2104		357	2460.6
	T258CT1		85%			
	T275GT1					
	T305GT1					
	T320GT1					
	T334CT1					
Add new 230/115 kV transformer #3 at Sobrante substation	T257GT1	Add new 230/115 kV transformer #3 at Sobrante substation	892		294	1186
	T322GT1		75%			
Reconductor USWP-RLF- TESLA D 230 kV line with 1113 ACSS conductor	T222	Reconductor USWP-RLF- TESLA D 230 kV line with 1113 ACSS conductor	2458		1189	3646.6
	T257GT1		67%			
	T258CT1					
	T275GT1					
	T305GT1					
	T320GT1					
	T322GT1					
	T334CT1					
Reconductor KELSO-USWP-RLF 230 kV line with 1113 ACSS conductor	T222	Reconductor KELSO-USWP-RLF 230 kV line with 1113 ACSS conductor	2628		1019	3646.6
	T257GT1		72%			
	T258CT1					
	T275GT1					
	T305GT1					
	T320GT1					
	T322GT1					
	T334CT1					
Reconductor C.COSTA-BRENTWOD 230 kV line with 954 ACSS conductor	T222	Reconductor C.COSTA-BRENTWOD 230 kV line with 954 ACSS conductor	2182		1271	3453
	T257GT1		63%			
	T258CT1					
	T275GT1					
	T305GT1					
	T320GT1					
	T322GT1					
Reconductor ALTM MDW-TESLA D 230 kV line with 1113 ACSS conductor	T171WG1	Reconductor ALTM MDW-TESLA D 230 kV line with 1113 ACSS conductor	2728		980	3708
	T222		74%			
	T257GT1					
	T258CT1					
	T275GT1					
	T305GT1					

	T320GT1					
	T322GT1					
Reconductor ALTM MDW-DELTAPMP 230 kV line with 1113 ACSS conductor	T171WG1	Reconductor ALTM MDW-DELTAPMP 230 kV line with 1113 ACSS conductor	2932		970	3901.6
	T222		75%			
	T257GT1					
	T258CT1					
	T275GT1					
	T305GT1					
	T320GT1					
	T322GT1					
	T334CT1					
Reconductor MORAGA-CASTROVL 230 kV line with 795 ACSS conductor	T222	Reconductor MORAGA-CASTROVL 230 kV line with 795 ACSS conductor	2940		513	3453
	T257GT1		85%			
	T258CT1					
	T275GT1					
	T305GT1					
	T320GT1					
	T322GT1					
Reconductor CASTROVL-NEWARK E 230 kV line with 795 ACSS conductor	T222	Reconductor CASTROVL-NEWARK E 230 kV line with 795 ACSS conductor	2940		513	3453
	T257GT1		85%			
	T258CT1					
	T275GT1					
	T305GT1					
	T320GT1					
	T322GT1					
Reconductor SOBRANTE-MORAGA 115 kV line with 2-477 ACSS conductor	T257GT1	Reconductor SOBRANTE-MORAGA 115 kV line with 2-477 ACSS conductor	840		346	1186
	T322GT1		71%			
Reconductor TRIMBLE-SJB E 115 kV line with 477 ACSS conductor or use SPS to drop generation	T378ST1	Reconductor TRIMBLE-SJB E 115 kV line with 477 ACSS conductor or use SPS to drop generation	17		106	123
			14%			
Construct two new switching stations in the North Dublin, Vineyard areas and loop several transmission lines as shown in the attached map in and	T222	North Dublin switching station	1467		800	2267
	T258CT1		65%			

out of these switching stations to relieve overloading of several transmission lines with limiting underground	T275GT1					
	T305GT1					
	T320GT1					

Appendix H

Short Circuit Calculation Results

Sys. Pro. Results

28-May-09

Proposed Project:
GIRP 2009

Short Circuit Currents on Selected Busses for the Proposed Project (AMPS)

			Case 1		Case 2		DEVIATION	
			GIPR gen *OFF*		GIPR gen *ON*		PERCENT INCREASE(+) OR DECREASE(-) (Columns 2 over Columns 1)	
	Bus Name	**kV**	**3LG (A)**	**1LG (A)**	**3LG (A)**	**1LG (A)**	**3LG %DIFF**	**1LG %DIFF**
44	BAIR	115.kV	21.5E+3	16.4E+3	21.7E+3	16.4E+3	0.9%	0.4%
59	BAYSHORE 1	115.kV	27.6E+3	29.1E+3	27.8E+3	29.2E+3	0.7%	0.5%
60	BAYSHORE 2	115.kV	27.2E+3	29.5E+3	27.4E+3	29.6E+3	0.7%	0.5%
69	BELLOTA	115.kV	19.2E+3	20.1E+3	19.2E+3	20.1E+3	0.2%	0.1%
70	BELLOTA	230.kV	28.9E+3	23.3E+3	29.1E+3	23.4E+3	0.8%	0.4%
77	Bethel STH	230.kV	14.7E+3	10.9E+3	17.4E+3	15.7E+3	18.2%	44.4%
87	BIRDSLANDING	230.kV	17.7E+3	19.7E+3	19.9E+3	21.7E+3	12.3%	10.4%
106	BRENTWOOD	230.kV	17.2E+3	13.1E+3	18.4E+3	13.7E+3	6.8%	4.5%
122	BULLARD EC	230.kV	23.4E+3	22.8E+3	26.0E+3	24.6E+3	11.3%	8.2%
123	BURLINGAME	115.kV	22.4E+3	19.4E+3	22.6E+3	19.5E+3	0.7%	0.4%
200	CLAREMONT K	115.kV	35.9E+3	29.6E+3	36.9E+3	30.0E+3	2.7%	1.5%
204	CLAYTON	115.kV	27.4E+3	20.4E+3	27.9E+3	20.6E+3	1.8%	0.9%
216	COCO SUB	230.kV	29.2E+3	26.9E+3	36.8E+3	36.4E+3	26.3%	35.4%
230	COOLEY LDG	60.kV	25.9E+3	25.0E+3	26.0E+3	25.1E+3	0.5%	0.3%
231	COOLEY LDG 1	115.kV	24.4E+3	21.4E+3	24.6E+3	21.5E+3	1.2%	0.7%
232	COOLEY LDG 2	115.kV	26.8E+3	24.0E+3	27.2E+3	24.2E+3	1.3%	0.8%
260	CPV VIII	230.kV	45.8E+3	48.1E+3	47.2E+3	49.3E+3	3.1%	2.5%
267	CUYAMA	70.kV	2.0E+3	2.0E+3	2.3E+3	2.6E+3	12.5%	29.9%
268	CVEC GEN	230.kV	14.0E+3	13.1E+3	15.1E+3	16.2E+3	8.0%	23.4%
284	DELTA PMPS	230.kV	26.5E+3	21.3E+3	27.4E+3	21.7E+3	3.3%	1.9%
287	DESERT TOPAZ	230.kV	14.0E+3	12.6E+3	15.2E+3	16.5E+3	8.5%	31.0%
333	EAGLE ROCK	115.kV	12.3E+3	11.0E+3	12.9E+3	11.5E+3	5.1%	4.4%
336	EAST NICLS	115.kV	9.9E+3	8.2E+3	10.9E+3	8.8E+3	10.2%	6.9%
337	EAST PORTAL	115.kV	30.0E+3	21.2E+3	30.7E+3	21.5E+3	2.5%	1.2%
339	EASTSHORE	115.kV	21.2E+3	23.6E+3	21.4E+3	23.8E+3	0.8%	0.6%
341	EDENVALE	115.kV	28.9E+3	18.7E+3	29.2E+3	18.8E+3	1.1%	0.4%
350	EL CERRITO G	115.kV	23.1E+3	16.5E+3	23.5E+3	16.6E+3	1.8%	0.9%
353	EL PATIO	115.kV	21.8E+3	16.9E+3	22.4E+3	17.2E+3	2.7%	1.5%
376	FIGRDN BK1	230.kV	18.9E+3	16.7E+3	20.7E+3	17.7E+3	9.4%	5.8%
377	FIGRDN BK2	230.kV	18.5E+3	16.3E+3	20.2E+3	17.3E+3	9.2%	5.7%
382	FMC	115.kV	24.2E+3	17.8E+3	25.2E+3	18.2E+3	4.1%	2.2%
392	FREMONT	115.kV	25.8E+3	18.6E+3	26.4E+3	18.8E+3	2.2%	1.1%
402	FULTON	60.kV	24.6E+3	28.5E+3	24.9E+3	28.7E+3	1.1%	1.0%
403	FULTON	115.kV	20.8E+3	22.9E+3	21.2E+3	23.3E+3	1.9%	1.6%
415	GATEWAY	230.kV	34.8E+3	34.1E+3	43.4E+3	43.8E+3	24.8%	28.3%
426	GOLD HILL	115.kV	19.0E+3	21.0E+3	19.2E+3	21.2E+3	1.2%	0.9%
489	HICKS	230.kV	18.6E+3	16.0E+3	18.8E+3	16.1E+3	1.1%	0.6%
491	HIGH WINDS	230.kV	17.3E+3	19.0E+3	19.4E+3	20.9E+3	12.1%	10.2%
513	HUNTERS PT 4	115.kV	27.7E+3	31.8E+3	27.9E+3	32.0E+3	0.7%	0.5%

520	IGNACIO BUS1	60.kV	19.6E+3	22.1E+3	20.0E+3	22.5E+3	2.3%	2.0%
521	IGNACIO BUS2	60.kV	19.6E+3	22.1E+3	20.0E+3	22.5E+3	2.3%	2.0%
534	JEFFERSON	60.kV	23.2E+3	23.5E+3	23.2E+3	23.5E+3	0.3%	0.2%
566	KIRKER	115.kV	29.5E+3	25.6E+3	30.1E+3	25.9E+3	2.0%	1.3%
575	LAKEVILLE	115.kV	23.1E+3	23.8E+3	23.9E+3	24.4E+3	3.4%	2.7%
576	LAKEVILLE	230.kV	21.0E+3	17.5E+3	22.5E+3	18.4E+3	6.9%	4.7%
579	LAMBIE	230.kV	18.1E+3	15.0E+3	21.4E+3	17.3E+3	18.0%	14.7%
582	LARKIN BUS D	115.kV	21.0E+3	19.5E+3	21.1E+3	19.6E+3	0.5%	0.3%
583	LARKIN BUS E	115.kV	25.6E+3	28.4E+3	25.8E+3	28.6E+3	0.6%	0.5%
618	LOCKF MAIN	60.kV	19.0E+3	20.2E+3	19.0E+3	20.2E+3	0.1%	0.1%
625	LONE TREE	230.kV	19.1E+3	14.7E+3	21.1E+3	15.9E+3	10.5%	7.9%
631	LOS ESTE CAP	115.kV	33.2E+3	33.9E+3	39.2E+3	42.7E+3	18.1%	26.0%
632	LOS ESTEROS	115.kV	37.7E+3	38.5E+3	45.7E+3	50.4E+3	21.1%	30.8%
633	LOS ESTEROS	230.kV	29.3E+3	25.4E+3	32.0E+3	28.6E+3	9.0%	12.8%
646	LTL NEWARK	230.kV	43.5E+3	39.6E+3	46.5E+3	41.7E+3	7.0%	5.3%
647	LUCERNE	115.kV	3.4E+3	3.0E+3	4.1E+3	3.4E+3	19.6%	15.4%
669	MARTIN	115.kV	32.3E+3	38.0E+3	32.6E+3	38.3E+3	0.9%	0.7%
743	MISSION	115.kV	26.6E+3	30.4E+3	26.8E+3	30.6E+3	0.7%	0.5%
751	MONTA VISTA	115.kV	32.6E+3	34.7E+3	33.0E+3	35.0E+3	1.1%	0.8%
752	MONTA VISTA	230.kV	24.3E+3	22.4E+3	24.6E+3	22.6E+3	1.5%	0.9%
753	MONTAGUE	115.kV	22.9E+3	18.8E+3	24.7E+3	19.9E+3	7.9%	5.7%
757	MORAGA B1	230.kV	27.6E+3	22.0E+3	29.3E+3	22.8E+3	6.2%	3.3%
758	MORAGA B2	230.kV	27.6E+3	22.0E+3	29.3E+3	22.7E+3	6.2%	3.3%
759	MORAGA BD1	115.kV	43.7E+3	42.0E+3	45.2E+3	43.0E+3	3.4%	2.2%
760	MORAGA BD2	115.kV	43.7E+3	42.0E+3	45.2E+3	43.0E+3	3.4%	2.2%
761	MORAGA BE1	115.kV	43.7E+3	42.0E+3	45.2E+3	42.9E+3	3.4%	2.2%
762	MORAGA BE2	115.kV	43.6E+3	42.0E+3	45.1E+3	42.9E+3	3.4%	2.2%
791	NEWARK D	115.kV	38.6E+3	40.4E+3	39.7E+3	41.3E+3	3.0%	2.3%
792	NEWARK D1	230.kV	44.8E+3	41.4E+3	48.0E+3	43.6E+3	7.0%	5.3%
793	NEWARK D2	230.kV	44.8E+3	41.4E+3	47.9E+3	43.5E+3	7.0%	5.3%
794	NEWARK E1	115.kV	55.5E+3	55.1E+3	58.3E+3	57.1E+3	5.0%	3.7%
795	NEWARK E1	230.kV	44.8E+3	41.4E+3	48.0E+3	43.6E+3	7.0%	5.3%
796	NEWARK E2	115.kV	55.5E+3	55.1E+3	58.2E+3	57.1E+3	5.0%	3.7%
797	NEWARK E2	230.kV	44.8E+3	41.4E+3	47.9E+3	43.6E+3	7.0%	5.3%
798	NEWARK F	115.kV	55.6E+3	55.1E+3	58.3E+3	57.2E+3	5.0%	3.7%
804	NORTECH	115.kV	30.8E+3	27.1E+3	34.5E+3	30.1E+3	11.9%	11.1%
812	OAKL C	115.kV	31.9E+3	33.6E+3	32.5E+3	34.1E+3	2.2%	1.5%
816	OAKL L BUS C	115.kV	31.9E+3	31.5E+3	32.6E+3	32.0E+3	2.2%	1.5%
817	OAKL L BUS D	115.kV	31.9E+3	31.5E+3	32.6E+3	32.0E+3	2.2%	1.5%
819	OAKLAND D	115.kV	33.8E+3	29.9E+3	34.6E+3	30.3E+3	2.5%	1.4%
820	OAKLAND X	115.kV	32.2E+3	28.5E+3	32.9E+3	28.9E+3	2.3%	1.3%
850	PALO ALTO SW	115.kV	24.7E+3	21.8E+3	25.0E+3	22.0E+3	1.2%	0.7%
860	PAT PASS EC	230.kV	000.0E+0	000.0E+0	21.6E+3	23.0E+3	N/A	N/A
863	PEABODY	230.kV	17.4E+3	12.8E+3	22.7E+3	16.6E+3	31.0%	30.0%
892	PITTSBURG D	115.kV	48.5E+3	55.7E+3	50.1E+3	57.5E+3	3.4%	3.2%
893	PITTSBURG D1	230.kV	51.3E+3	56.6E+3	58.1E+3	65.0E+3	13.4%	14.9%
894	PITTSBURG D2	230.kV	51.2E+3	56.5E+3	58.1E+3	64.9E+3	13.4%	15.0%
895	PITTSBURG E	115.kV	48.3E+3	55.4E+3	50.0E+3	57.2E+3	3.4%	3.2%
896	PITTSBURG E1	230.kV	51.3E+3	56.6E+3	58.1E+3	65.0E+3	13.4%	14.9%
897	PITTSBURG E2	230.kV	51.3E+3	56.5E+3	58.1E+3	64.9E+3	13.3%	14.9%
913	POTRERO	115.kV	28.7E+3	33.4E+3	28.9E+3	33.6E+3	0.7%	0.5%

914	POTRERO E	115.kV	24.0E+3	27.8E+3	24.1E+3	27.9E+3	0.6%	0.5%
926	PV-43 GEN	230.kV	54.5E+3	54.6E+3	57.0E+3	57.6E+3	4.6%	5.4%
934	RAVENSWOOD	115.kV	39.6E+3	39.7E+3	40.5E+3	40.3E+3	2.0%	1.4%
935	RAVENSWOOD	230.kV	31.1E+3	24.9E+3	32.1E+3	25.3E+3	3.2%	1.8%
959	RIO OSO	115.kV	18.9E+3	18.8E+3	24.7E+3	24.7E+3	30.5%	31.4%
965	RIVEROAKS	115.kV	23.7E+3	20.8E+3	26.6E+3	23.2E+3	11.9%	11.2%
972	ROSEDALE	115.kV	23.6E+3	20.3E+3	23.7E+3	20.3E+3	0.4%	0.2%
979	RUSSELL	230.kV	17.5E+3	19.3E+3	19.7E+3	21.2E+3	12.1%	10.1%
982	S JOSE A	115.kV	24.9E+3	21.5E+3	25.9E+3	22.1E+3	3.9%	2.5%
987	SALINAS BUS1	60.kV	18.3E+3	20.5E+3	18.3E+3	20.5E+3	0.0%	0.0%
988	SALINAS BUS2	60.kV	18.3E+3	20.5E+3	18.3E+3	20.5E+3	0.0%	0.0%
996	SAN JOSE B	115.kV	29.1E+3	26.6E+3	30.6E+3	27.5E+3	5.2%	3.5%
1001	SAN LS PMP	230.kV	23.5E+3	21.8E+3	23.9E+3	22.0E+3	1.5%	0.8%
1004	SAN MATEO	60.kV	26.0E+3	26.9E+3	26.2E+3	27.0E+3	0.4%	0.3%
1005	SAN MATEO	115.kV	41.4E+3	44.9E+3	42.0E+3	45.4E+3	1.5%	1.1%
1006	SAN MATEO	230.kV	27.2E+3	25.7E+3	27.8E+3	26.1E+3	2.2%	1.4%
1083	SHILOH II	230.kV	13.1E+3	13.0E+3	14.3E+3	13.9E+3	8.7%	6.4%
1097	SOBRANTE	115.kV	45.5E+3	44.2E+3	47.4E+3	45.6E+3	4.1%	3.1%
1098	SOBRANTE	230.kV	28.8E+3	22.8E+3	31.5E+3	24.2E+3	9.2%	6.2%
1111	STAGG	60.kV	24.0E+3	26.1E+3	24.0E+3	26.2E+3	0.2%	0.1%
1112	STAGG	230.kV	12.9E+3	11.5E+3	12.9E+3	11.5E+3	0.5%	0.2%
1133	STOREY 1	230.kV	12.6E+3	10.5E+3	13.3E+3	11.2E+3	5.5%	6.4%
1134	STOREY 2	230.kV	12.7E+3	11.1E+3	15.4E+3	13.6E+3	20.7%	22.4%
1137	SUBS DE #2	525.kV	12.0E+3	11.8E+3	13.1E+3	12.7E+3	9.9%	8.0%
1138	SUBS DE#1	525.kV	12.0E+3	11.8E+3	13.1E+3	12.7E+3	9.9%	8.0%
1170	TESLA	115.kV	28.5E+3	31.2E+3	28.8E+3	31.4E+3	0.7%	0.6%
1171	TESLA	525.kV	40.9E+3	36.1E+3	43.8E+3	38.5E+3	7.2%	6.6%
1173	TESLA BUS C	230.kV	51.6E+3	53.4E+3	53.6E+3	55.1E+3	3.8%	3.1%
1174	TESLA BUS D	230.kV	61.0E+3	60.9E+3	64.1E+3	63.3E+3	5.0%	4.0%
1175	TESLA BUS E	230.kV	53.9E+3	58.9E+3	55.1E+3	60.0E+3	2.1%	1.8%
1181	TESORO	230.kV	22.9E+3	17.8E+3	24.2E+3	18.3E+3	5.6%	3.2%
1191	THERMALITO	230.kV	18.8E+3	16.8E+3	19.1E+3	17.0E+3	2.0%	1.1%
1199	TRIMBLE	115.kV	30.0E+3	28.2E+3	32.7E+3	30.3E+3	9.1%	7.5%
1224	US WND RSL	230.kV	17.5E+3	19.3E+3	19.7E+3	21.2E+3	12.1%	10.1%
1228	VACA DIXON	60.kV	23.6E+3	27.4E+3	24.1E+3	28.0E+3	2.4%	2.2%
1229	VACA DIXON	115.kV	36.0E+3	39.5E+3	38.9E+3	42.7E+3	8.2%	8.0%
1230	VACA DIXON	230.kV	44.4E+3	42.6E+3	54.9E+3	52.5E+3	23.8%	23.0%
1231	VACA DIXON	525.kV	28.0E+3	20.6E+3	35.3E+3	24.5E+3	26.0%	18.9%
1257	WEBER B D	60.kV	26.2E+3	30.9E+3	26.2E+3	30.9E+3	0.1%	0.0%
1258	WEBER B E	60.kV	26.2E+3	30.9E+3	26.2E+3	30.9E+3	0.1%	0.0%
1271	WESTPARK	115.kV	20.9E+3	17.5E+3	21.0E+3	17.5E+3	0.3%	0.1%
1302	WOODLAND	115.kV	7.6E+3	6.9E+3	8.0E+3	7.1E+3	5.6%	3.4%
1311	YANCEY	70.kV	12.7E+3	10.0E+3	13.7E+3	11.0E+3	8.1%	10.0%

Substation Engineer's Evaluation of Overstressed Breakers

GIPR Cluster Study

The following is a tabulation of selected breakers that were checked to see if they would be overstressed or further overstressed to warrant replacement and if replacement should be paid for by this project. This table was prepared based on PG&E's latest DCM 073133 (Revision 3). Highest close-in fault currents before and after the project were provided by System Protection and were used in the calculations. Breaker interrupting capabilities were based on breaker information on Substation Asset Strategy's Website.

Station Name	Highest Close-in Faults Before Project	Highest Close-in Faults After Project	% Change due to Project	Breaker Number	Nominal Voltage (kV)	Interrupt Capacity (kVA)	Sym. Interrupt Rating (SIR) Amps	Percent Over-stress Before Project	Percent Over-stress After Project	Does Project pay for replacement?
El Cerrito G	21,971	22,368	1.81%	142	115	3500	17600	24.84%	27.09%	No. This breaker was overstressed by 25% before the project
Hillsdale Sub	11,370	11,383	0.11%	Fuse	60	1000	9600	18.44%	18.57%	No. Breaker was overstressed before the project. The added overstressed due to this project was under 5% and the resulting total overstress does not exceed 25%
Martinez E	18,659	18,844	0.99%	322	115	3500	17572	6.19%	7.24%	No. Breaker was overstressed before the project. The added overstressed due to this project was under 5% and the resulting total overstress does not exceed 25%
Oakland C	26,232	26,527	1.12%	172	115	5000	25102	4.50%	5.68%	No. Breaker was overstressed before the project. The added overstressed due to this project was under 5% and the resulting total overstress does not exceed 25%
Pittsburg PP	54,574	62,991	15.42%	492	230	20000	45900	18.90%	37.24%	Yes. This project added more than 5% overstress and the resultant overstress is greater than 25%
Pittsburg PP	46,674	55,133	18.12%	672	230	20000	45900	1.69%	20.12%	Yes. This project added more than 5% overstress to the breaker
Reedley	12,349	12,349	0.00%	22	70	1000	8367	47.59%	47.59%	No. This breaker was overstressed by more than 25% before the project
Reedley	11,705	11,701	-0.03%	32	70	1000	8367	39.89%	39.85%	No. This breaker was overstressed by more than 25% before the project
Reedley	12,112	12,111	-0.01%	72	70	1000	8367	44.76%	44.75%	No. This breaker was overstressed by more than 25% before the project

San Jose "B"	24,545	25,938	5.68%	132	115	5000	24000	2.27%	8.08%	Yes. This project added more than 5% overstress to the breaker
Sanger	25,090	25,405	1.26%	422	115	5000	25102	-0.05%	1.21%	Yes. Breaker was not overstressed before project but would be after the project
Table Mountain	28,382	28,680	1.05%	112	115	5000	25102	13.07%	14.25%	No. Breaker was overstressed before the project. The added overstressed due to this project was under 5% and the resulting total overstress does not exceed 25%
Tesla	39,294	40,645	3.44%	542	500		40000	-1.77%	1.61%	Yes. Breaker was not overstressed before project but would be after the project
Tesla	39,811	41,427	4.06%	612	500		40000	-0.47%	3.57%	Yes. Breaker was not overstressed before project but would be after the project
Tesla	39,294	40,645	3.44%	642	500		40000	-1.77%	1.61%	Yes. Breaker was not overstressed before project but would be after the project
Tesla	59,824	59,761	-0.11%	322	230		50000	19.65%	19.52%	No. Breaker was overstressed before the project. The overstress decreased as a result of this project and the resulting total overstress does not exceed 25%
Tesla	60,549	58,000	-4.21%	332	230		50000	21.10%	16.00%	No. Breaker was overstressed before the project. The overstress decreased as a result of this project and the resulting total overstress does not exceed 25%
Vaca Dixon	41,359	50,191	21.35%	442	230	16766	40000	3.40%	25.48%	Yes. This project added more than 5% overstress and the resultant overstress is greater than 25%
Vaca Dixon	41,569	50,341	21.10%	452	230	36200	36000	15.47%	39.84%	Yes. This project added more than 5% overstress and the resultant overstress is greater than 25%
Vaca Dixon	41,754	50,567	21.11%	462	230	16766	40000	4.38%	26.42%	Yes. This project added more than 5% overstress and the resultant overstress is greater than 25%
Vaca Dixon	43,161	52,155	20.84%	492	230		50000	-13.68%	4.31%	Yes. Breaker was not overstressed before project but would be after the project
COCO PP	41,076	57,879	40.91%	630	230000	20000	45900	-10.51%	26.10%	Yes. Breaker was not overstressed before project but would be after the project

COCO PP	40,790	57,375	40.66%	640	230000		40000	1.97%	43.44%	Yes. This project added more than 5% overstress to the breaker
COCO PP	40,948	58,371	42.55%	650	230000	20000	47715	-14.18%	22.33%	Yes. Breaker was not overstressed before project but would be after the project
COCO PP	39,954	57,225	43.23%	660	230000	20000	47715	-16.27%	19.93%	Yes. Breaker was not overstressed before project but would be after the project
COCO PP	42,198	59,697	41.47%	670	230000	20000	47715	-11.56%	25.11%	Yes. Breaker was not overstressed before project but would be after the project
COCO PP	42,201	59,699	41.46%	680	230000	20000	47715	-11.56%	25.12%	Yes. Breaker was not overstressed before project but would be after the project
COCO PP	43,926	61,669	40.39%	690	230000	20000	47715	-7.94%	29.24%	Yes. Breaker was not overstressed before project but would be after the project
Martinez	18,504	18,613	0.59%	322	115000	3500	17572	5.30%	5.92%	No. Breaker was overstressed before the project. The added overstressed due to this project was under 5% and the resulting total overstress does not exceed 25%
Pittsburg	52,499	59,490	13.32%	452	230000	30000	50204	4.57%	18.50%	Yes. This project added more than 5% overstress to the breaker
Pittsburg	55,397	62,404	12.65%	472	230000	20000	45900	20.69%	35.96%	Yes. This project added more than 5% overstress and the resultant overstress is greater than 25%
Pittsburg	47,411	53,329	12.48%	672	230000	20000	45900	3.29%	16.19%	Yes. This project added more than 5% overstress to the breaker

Short Circuit Currents (Amps)												
	Contra Costa PP 230 kV Bus		Pittsburg PP 230 kV Bus		San Jose 'B' 115 kV Bus		Tesla 230 kV Bus E		Tesla 500kV Bus		Vaca Dixon 230 kV Bus	
	3LG	1LG	3LG	1LG	3LG	1LG	3LG	1LG	3LG	1LG	3LG	1LG
GIPR Projects On	56700	61525	58644	62491	30085	27023	62796	68117	44445	39602	52021	50912
Group 1 Projects												
Q171 Project Off	56494	61441	58620	62472	30081	27021	62765	68078	44074	39278	51130	49478
Difference	**206**	84	24	19	4	2	31	39	**371**	**324**	**891**	**1434**
Q222 Project Off	56427	61305	58635	62484	30083	27022	62789	68112	44434	39594	51955	50871
Difference	**273**	220	9	7	2	1	7	5	11	8	66	41
Q257 Project Off	56640	61477	57996	61990	30080	27020	62776	68102	44412	39578	51809	50773
Difference	60	48	**648**	**501**	5	3	20	15	33	24	**212**	**139**
Q258 Project Off	53220	57714	58581	62443	30072	27016	62737	68071	44367	39552	51778	50758
Difference	**3480**	**3811**	63	48	13	7	59	46	78	50	**243**	**154**
Q269 Project Off	56649	61486	58613	62468	30065	27013	58708	61812	43163	37593	51974	50878
Difference	51	39	31	23	20	10	**4088**	**6305**	**1282**	**2009**	47	34
Q275 Project Off	55929	60913	58549	62418	30076	27006	62604	67962	43981	39196	45748	43987
Difference	**771**	**612**	95	73	9	17	**192**	**155**	**464**	**406**	**6273**	**6925**
Q305 Project Off	51333	54165	58551	62420	30065	27013	62711	68051	44338	39535	51765	50750
Difference	**5367**	**7360**	93	71	20	10	85	66	**107**	67	**256**	**162**
Q320 Project Off	52356	55322	58559	62434	30069	27015	62728	68065	44360	39549	51818	50738
Difference	**4344**	**6203**	85	57	16	8	68	52	85	53	**203**	**174**
Q322 Project Off	56614	61457	53101	55942	30067	27014	62750	68082	44385	39567	51972	50880
Difference	86	68	**5543**	**6549**	18	9	46	35	60	35	49	32
Q334 Project Off	56648	61484	58636	62484	30082	27022	62749	68074	44399	39566	52012	50906
Difference	52	41	8	7	3	1	47	43	46	36	9	6
Q378 Project Off	56664	61498	58607	62464	29637	26788	62744	68078	44396	39576	52010	50905
Difference	36	27	37	27	**448**	**235**	52	39	49	26	11	7
Q417 Project Off	56685	61515	58546	62402	30081	27021	62780	68102	44417	39577	52016	50908
Difference	15	10	98	89	4	2	16	15	28	25	5	4

Group 4 Projects												
Q259 Project Off	56697	61523	58640	62487	30083	27022	62709	68049	44415	39583	52009	50905
Difference	3	2	4	4	2	1	87	68	30	19	12	7
Q379 Project Off	56698	61522	58639	62488	30081	27021	62788	68089	44442	39596	52007	50908
Difference	2	3	5	3	4	2	8	28	3	6	14	4
Group 5 Project												
Q250 Project Off	56691	61517	58640	62487	30085	27022	62789	68112	44429	39588	51858	50798
Difference	9	8	4	4	0	1	7	5	16	14	**163**	**114**
Group 6 Project												
Q321 Project Off	56699	61524	58644	62490	30085	27023	62787	68111	44427	39590	51996	50904
Difference	1	1	0	1	0	0	9	6	18	12	25	8

Station	CB	kV	Cost Allocation													TOTAL COST
			Q171	Q222	Q257	Q258	Q269	Q275	Q305	Q320	Q322	Q334	Q378	Q417	Q250	
Contra Costa PP	630	230														
	640	230														
	650	230														
	660	230														
	670	230														
	680	230														
	690	230														
Total Overstressed	7															
Pittsburg PP	452	230														
	472	230														
	492	230														
	672	230														
Total Overstressed	4															
San Jose 'B'	132	115														
Total Overstressed	1															
Tesla	542	500														
	612	500														
	642	500														
Total Overstressed	3															
Tesla Bus		230														
Vaca Dixon	442	230														
	452	230														
	462	230														
	492	230														
Total Overstressed	4		$													
TOTAL			$													

Cost/230 KV Breaker	
Cost/500 KV Breaker	
Cost to rearrange 230 kV lines at Tesla	

Check	

Appendix G

Preliminary Protection Requirement

Preliminary Protection Requirements
Q322 Pittsburg Power Plant Combined Cycle Units Project

Assumptions:
GIPR Cluster study includes the following projects:

- Q258 Project
- Q320 Project
- Q322 Project
- Q378 Project
- Q417 Project General Information

Preliminary information & bus configurations based on document "Q322 Project General Information.doc"

Fault Duty Summary:
Please refer to attached document "GIPR Preliminary Fault Duties 4-28-2009.xls" for summary of "Before & After" fault duty comparison.

- "Before" fault duties are based on Pge09D.olr Aspen basecase file with the above five generation projects modeled in, but **offline**.
- "After" fault duties are based on Pge09D.olr Aspen basecase file with the above five generation projects modeled in, and **online**.
- Other "future" generation projects were not included.

Protection Requirements:

- PG&E Interconnection Handbook to be used as reference.
- Customer to provide one dedicated set of 3000/5MR C1200 CT's on the generator side of each of 230kV CB 472 & 482 to be connected to existing Pittsburg PP 230kV Bus 1D & 2D Differential protection scheme as appropriate.
- Customer to be responsible for providing and demonstrating adequate protection for their Generators, Generator step-up transformers, and all associated Circuit Breakers, with overlapping zones of protection.
- PG&E relay coordination review and relay setting changes may be required.

Appendix F

Dynamic Stability Plots

Q322 GIPR Phase 1 Interconnection System Impact Study

Selected PG&E Bus Voltage Plots Adjacent to Fault

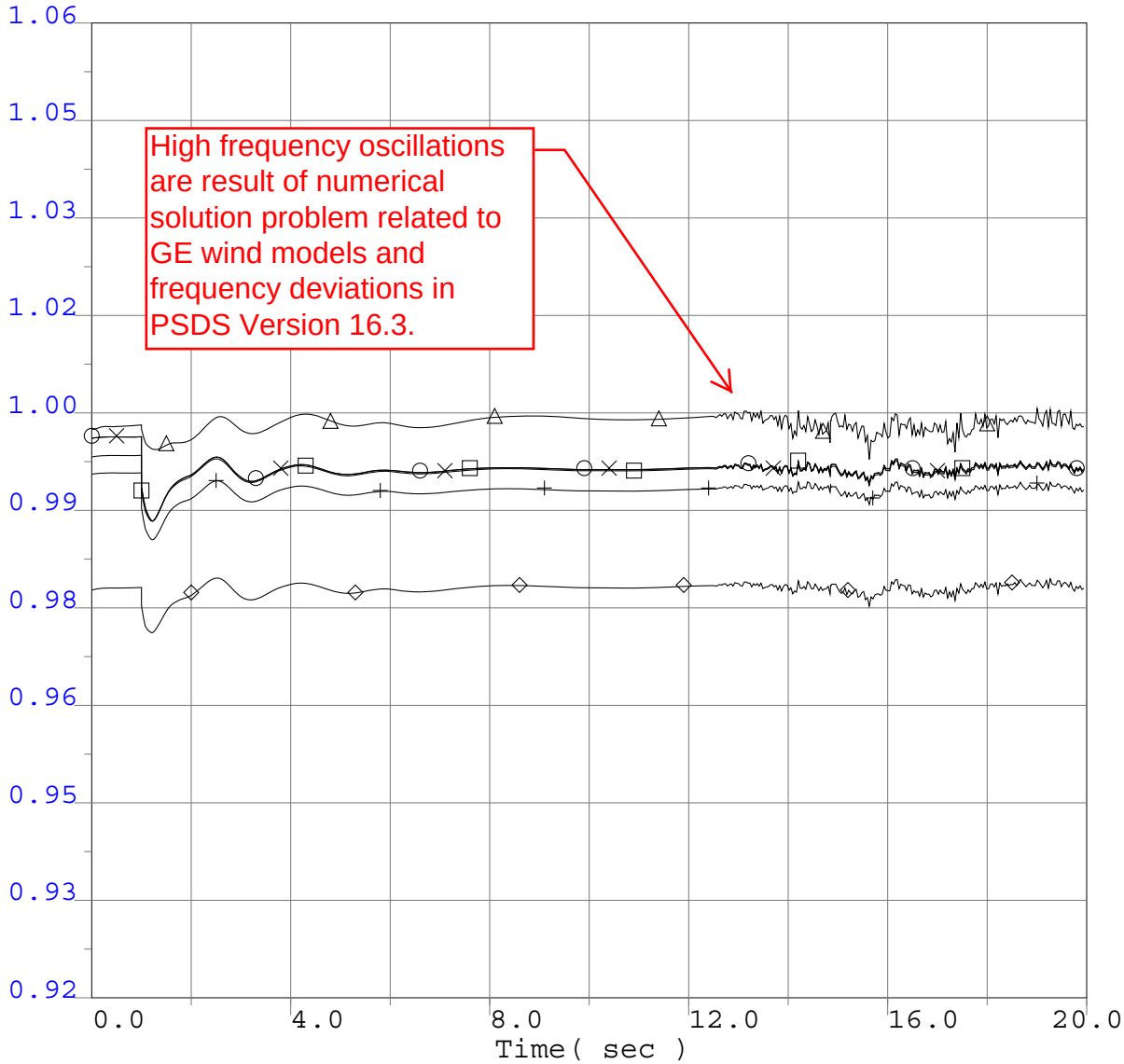

Q322 Project GIPR Phase 1 Interconnection System Impact Study
2013 Greater Bay Area Summer Peak Base Case
Q322 @626MW
Q322 Load Rejection
No Fault Load Rejection

Q322 GIPR Phase 1 Interconnection System Impact Study

Selected PG&E Bus Frequency Plots Adjacent to Fault

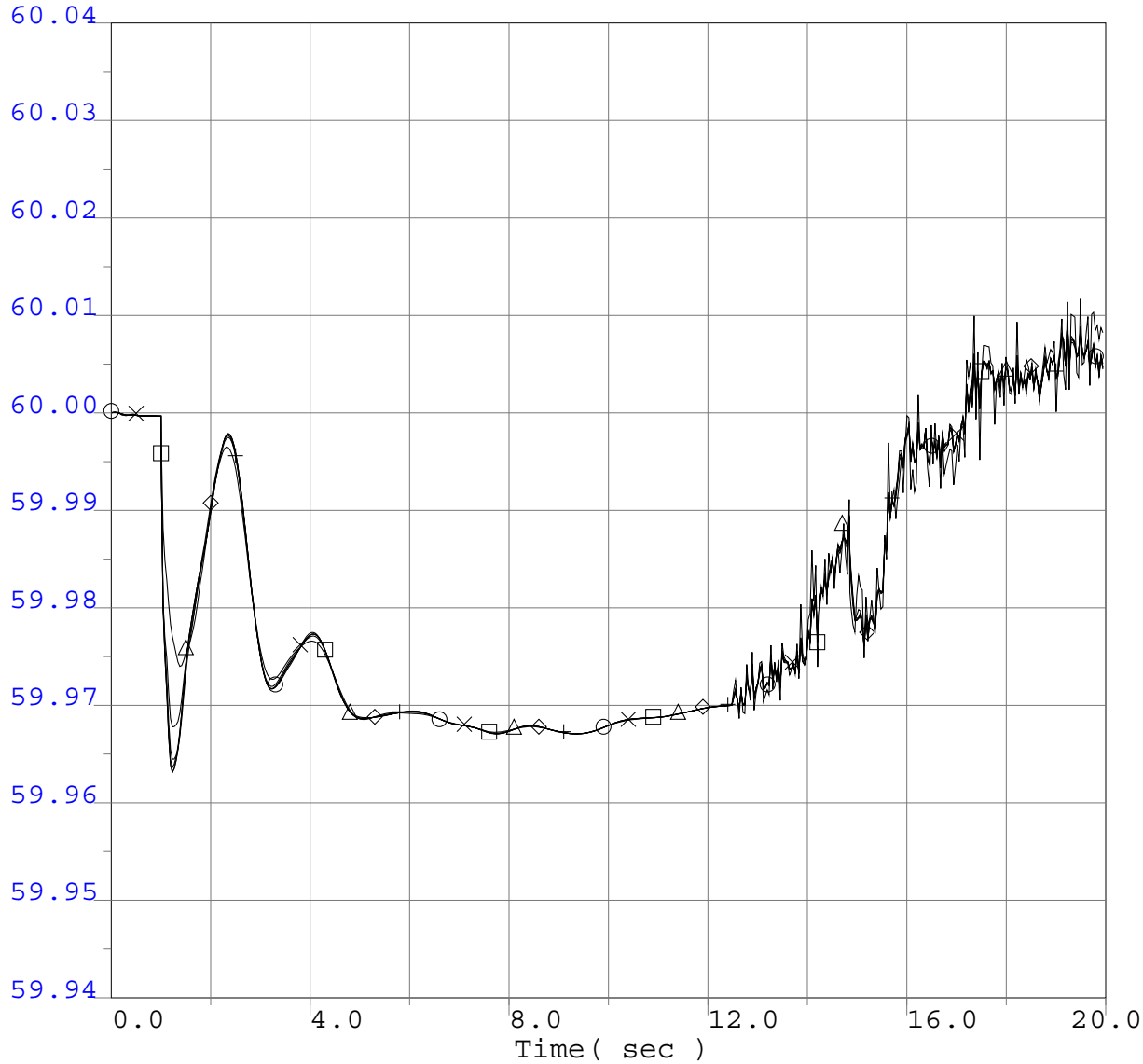

Q322 Project GIPR Phase 1 Interconnection System Impact Study
2013 Greater Bay Area Summer Peak Base Case
Q322 @626MW
Q322 Load Rejection
No Fault Load Rejection

Q322 GIPR Phase 1 Interconnection System Impact Study

Project Generator Terminal Voltages (P.U.)

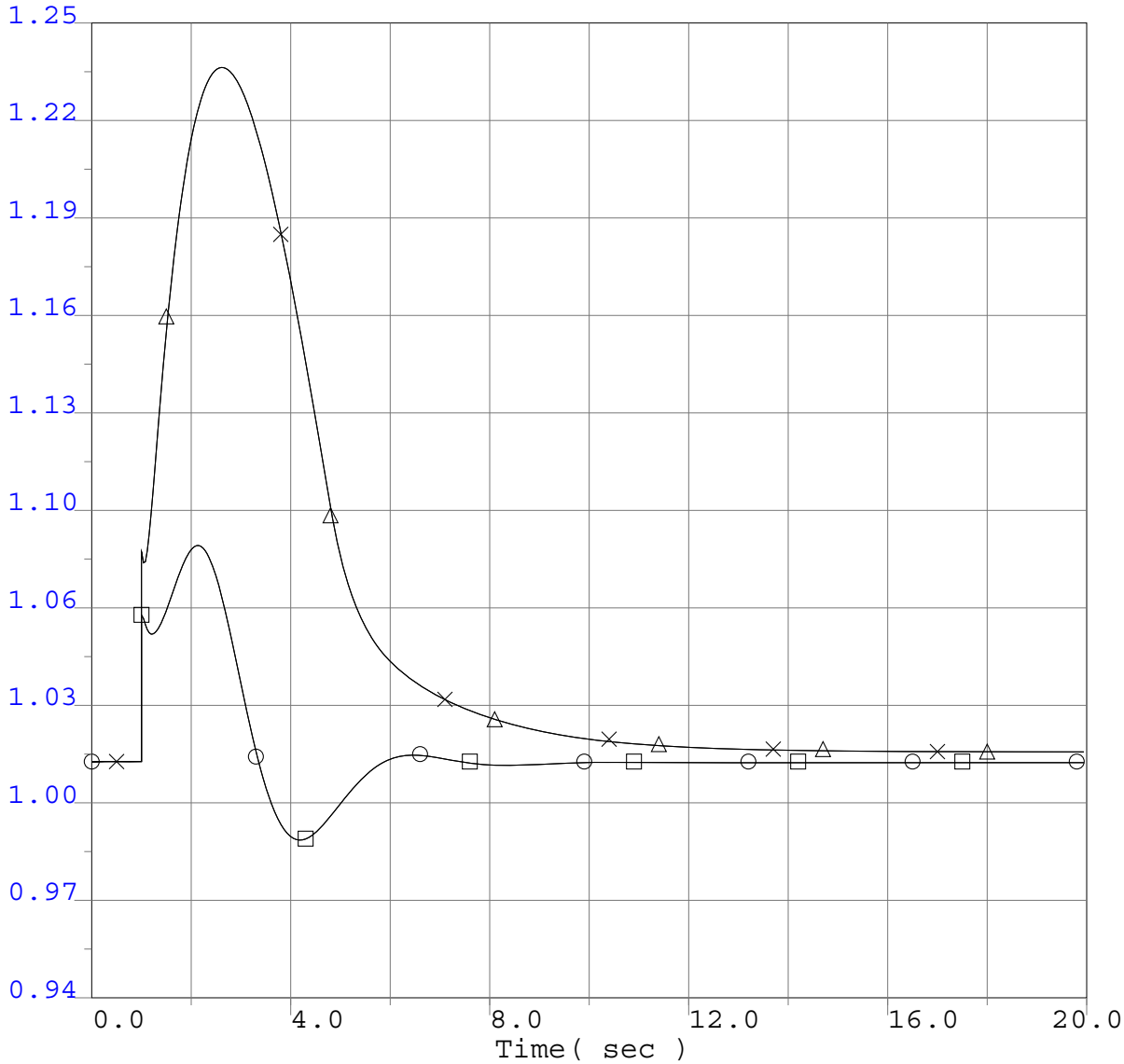

○	0.9400 vt	33191	T322GT1	16.5	0	0.0 "1"	1	1.2500
×	0.9400 vt	33192	T322ST1	13.8	0	0.0 "1"	1	1.2500
□	0.9400 vt	33193	T322GT2	16.5	0	0.0 "2"	1	1.2500
△	0.9400 vt	33194	T322ST2	13.8	0	0.0 "2"	1	1.2500

Q322 Project GIPR Phase 1 Interconnection System Impact Study
2013 Greater Bay Area Summer Peak Base Case
Q322 @626MW
Q322 Load Rejection
No Fault Load Rejection

Q322 GIPR Phase 1 Interconnection System Impact Study

Selected Generator Terminal Voltages (P.U.)

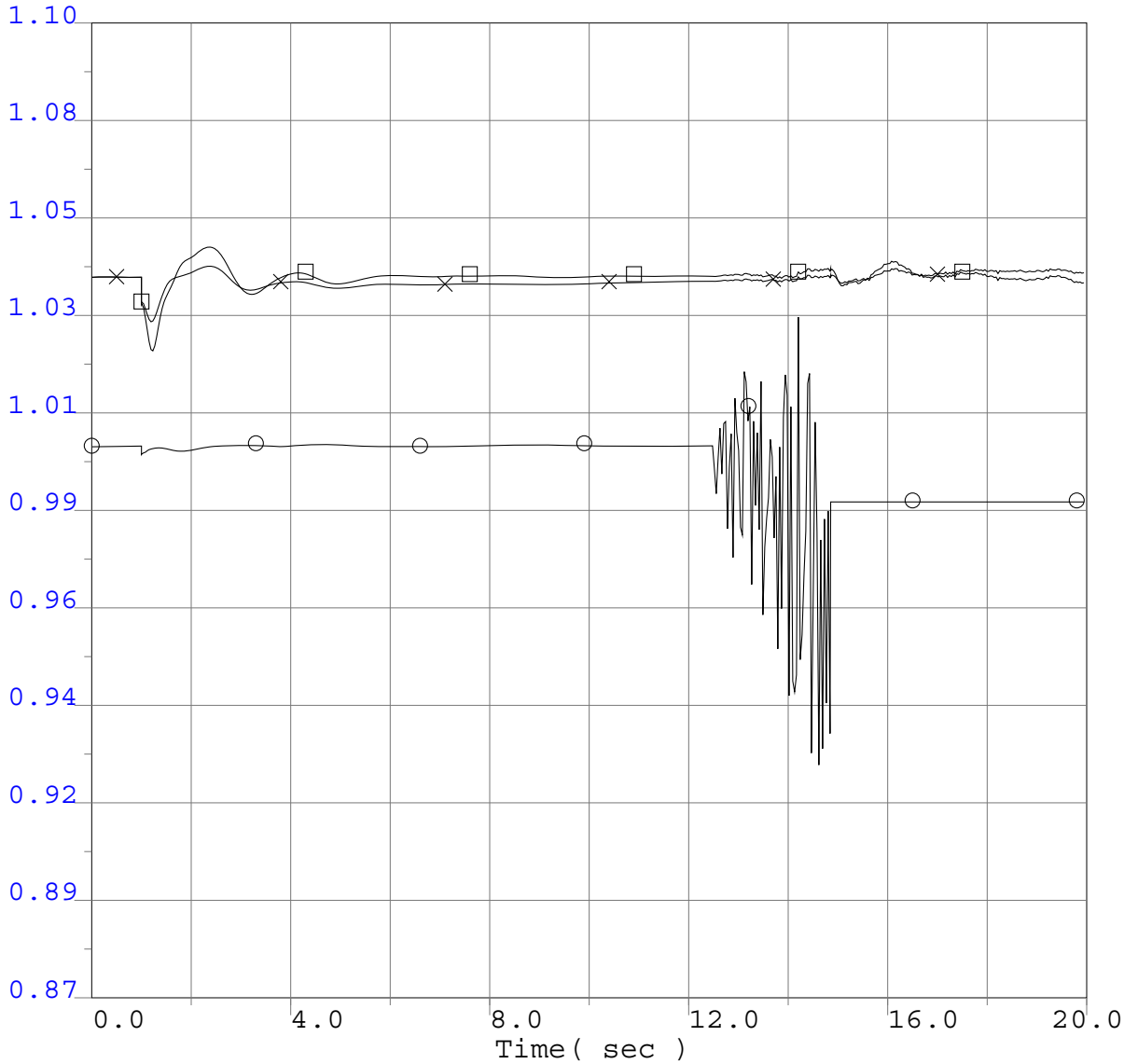

○	0.8700 vt	33195	T417	34.5	0	0.0	"1"	1	1.1000
⊗	0.8700 vt	33108	DEC CTG1	18.0	0	0.0	"1"	1	1.1000
□	0.8700 vt	33107	DEC STG1	24.0	0	0.0	"1"	1	1.1000

Q322 Project GIPR Phase 1 Interconnection System Impact Study
2013 Greater Bay Area Summer Peak Base Case
Q322 @626MW
Q322 Load Rejection
No Fault Load Rejection

Q322 GIPR Phase 1 Interconnection System Impact Study

Project Generator Speed (P.U.)

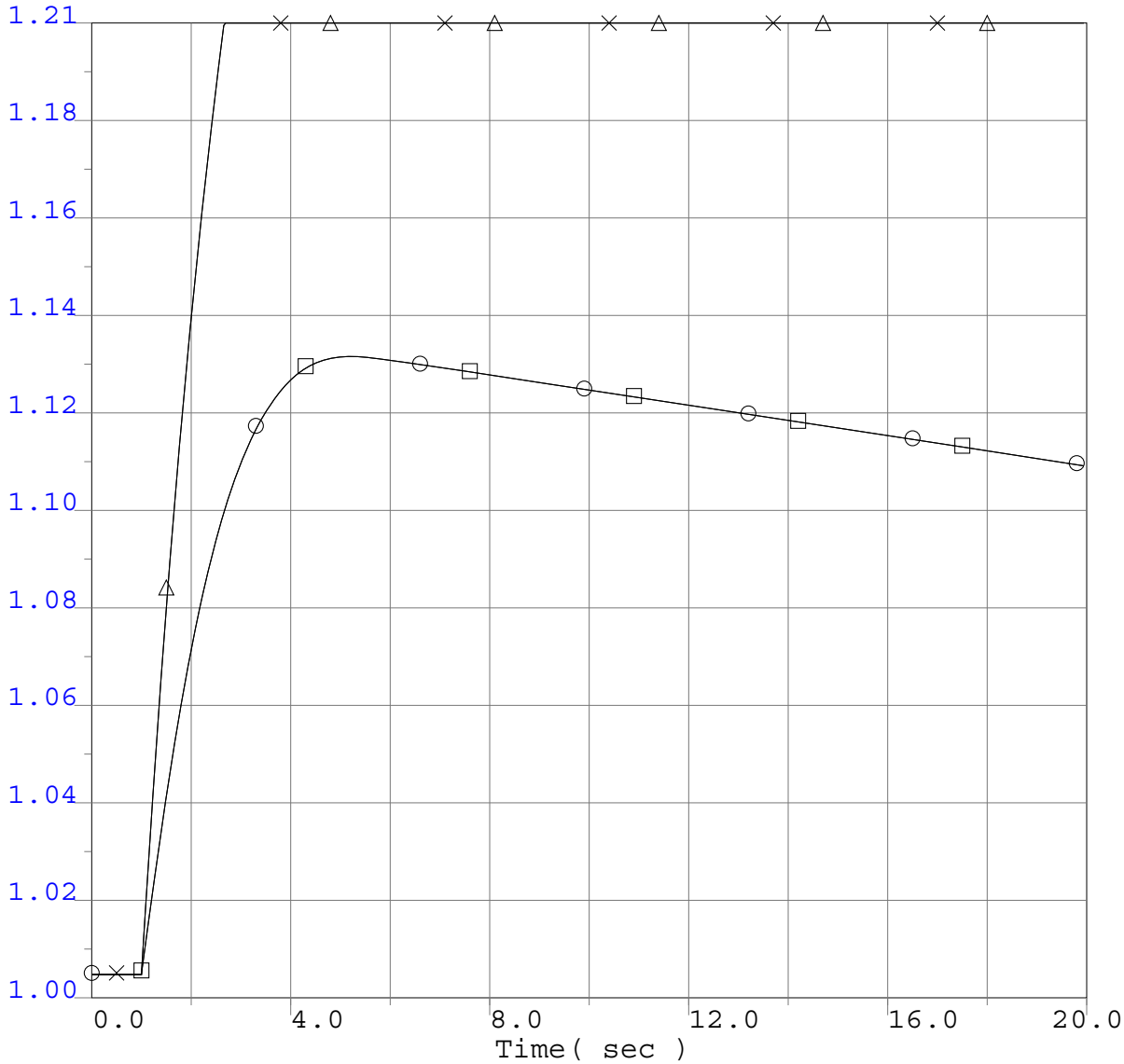

0.9950 spd	33191	T322GT1	16.5	0	0.0 "1"	1	1.2050
0.9950 spd	33192	T322ST1	13.8	0	0.0 "1"	1	1.2050
0.9950 spd	33193	T322GT2	16.5	0	0.0 "2"	1	1.2050
0.9950 spd	33194	T322ST2	13.8	0	0.0 "2"	1	1.2050

Q322 Project GIPR Phase 1 Interconnection System Impact Study
2013 Greater Bay Area Summer Peak Base Case
Q322 @626MW
Q322 Load Rejection
No Fault Load Rejection

Q322 GIPR Phase 1 Interconnection System Impact Study

Selected Generator Speed (P.U.)

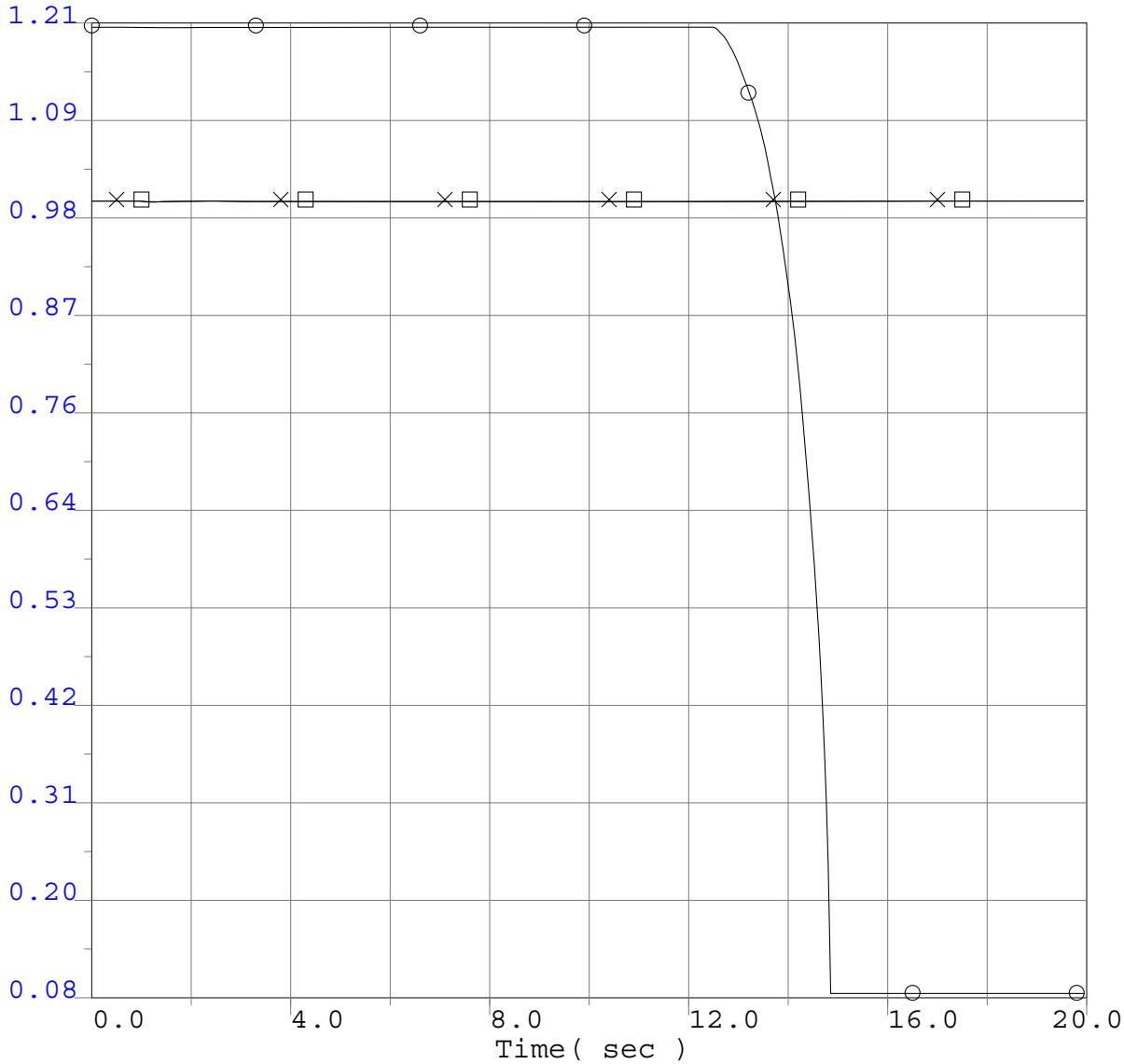

○	0.0829 spd	33195	T417	34.5	0	0.0 "1"	1	1.2050
⊗	0.0829 spd	33108	DEC CTG1	18.0	0	0.0 "1"	1	1.2050
□	0.0829 spd	33107	DEC STG1	24.0	0	0.0 "1"	1	1.2050

Q322 Project GIPR Phase 1 Interconnection System Impact Study
2013 Greater Bay Area Summer Peak Base Case
Q322 @626MW
Q322 Load Rejection
No Fault Load Rejection

Q322 GIPR Phase 1 Interconnection System Impact Study

Project Generator Terminal Power (MW)

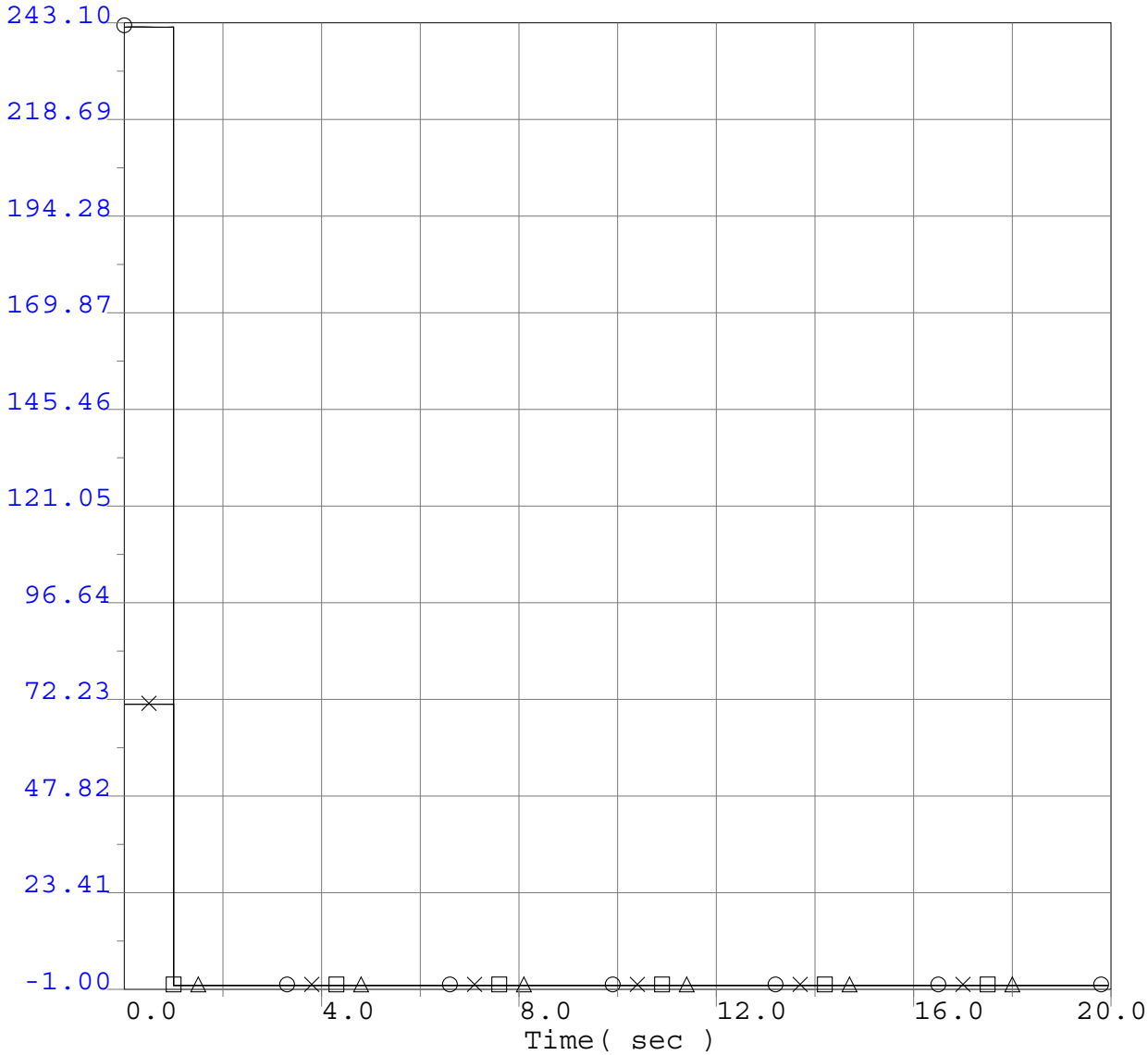

-1.0000 pg	33191	T322GT1	16.5	0	0.0 "1"	1	243.1000
-1.0000 pg	33192	T322ST1	13.8	0	0.0 "1"	1	243.1000
-1.0000 pg	33193	T322GT2	16.5	0	0.0 "2"	1	243.1000
-1.0000 pg	33194	T322ST2	13.8	0	0.0 "2"	1	243.1000

Q322 Project GIPR Phase 1 Interconnection System Impact Study
2013 Greater Bay Area Summer Peak Base Case
Q322 @626MW
Q322 Load Rejection
No Fault Load Rejection

Q322 GIPR Phase 1 Interconnection System Impact Study

Selected Generator Terminal Power (MW)

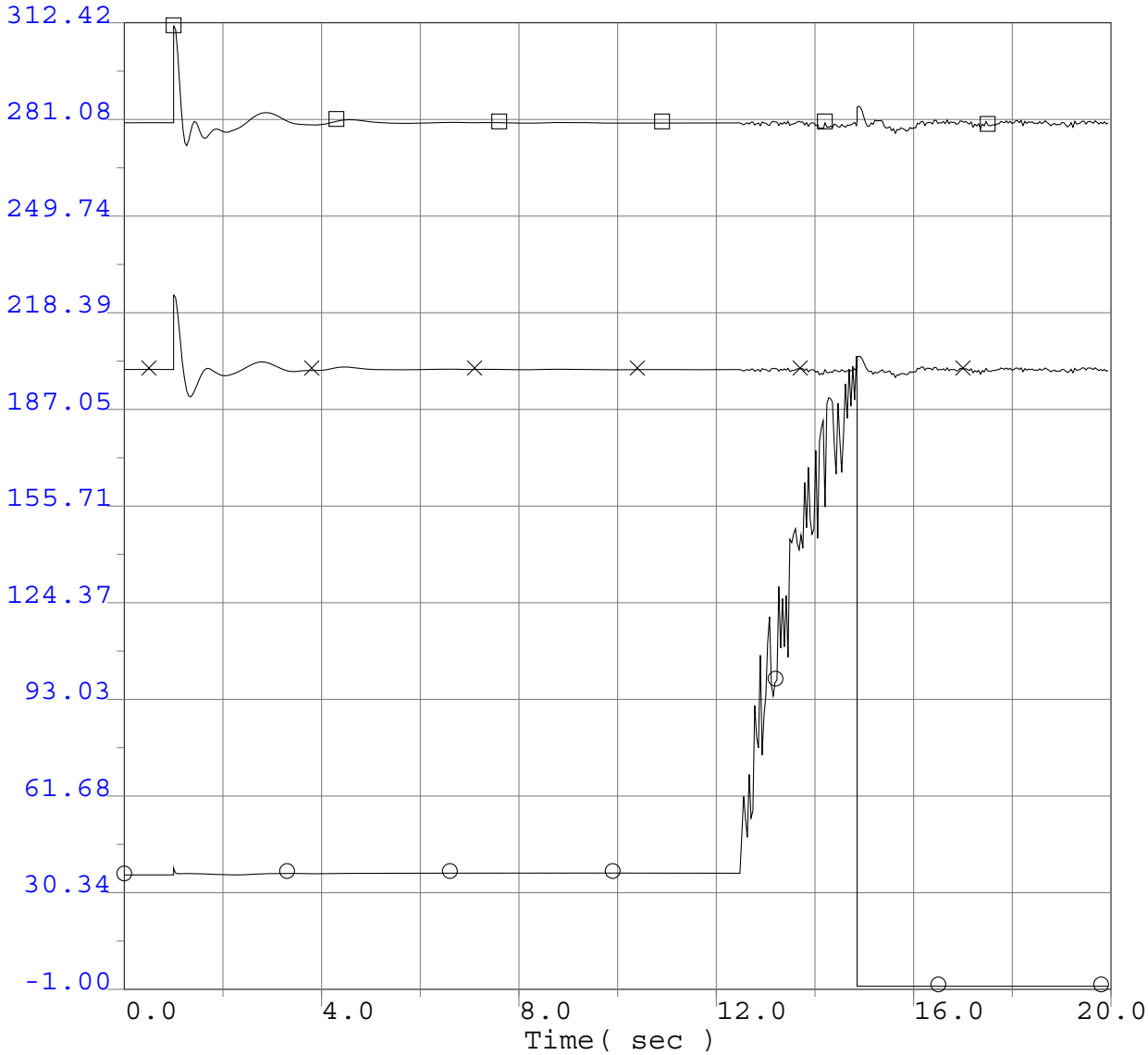

○	-1.0000 pg	33195	T417	34.5	0	0.0	"1"	1	312.4200
⊗	-1.0000 pg	33108	DEC CTG1	18.0	0	0.0	"1"	1	312.4200
□	-1.0000 pg	33107	DEC STG1	24.0	0	0.0	"1"	1	312.4200

Q322 Project GIPR Phase 1 Interconnection System Impact Study
2013 Greater Bay Area Summer Peak Base Case
Q322 @626MW
Q322 Load Rejection
No Fault Load Rejection

Q322 GIPR Phase 1 Interconnection System Impact Study

Project Generator Terminal Reactive Power (MVAr)

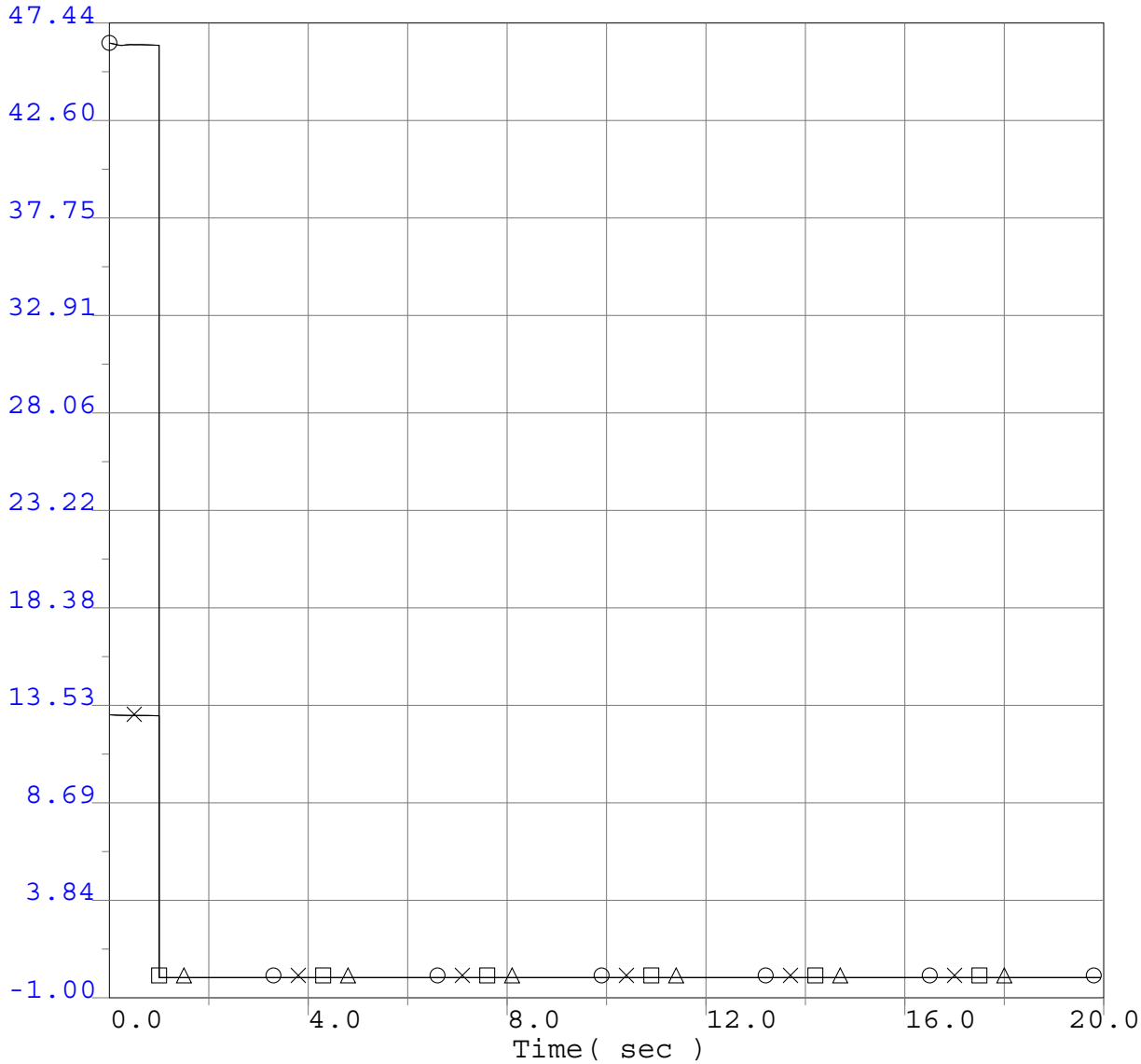

-1.0000	qg	33191	T322GT1	16.5	0	0.0	"1"	1	47.4400
-1.0000	qg	33192	T322ST1	13.8	0	0.0	"1"	1	47.4400
-1.0000	qg	33193	T322GT2	16.5	0	0.0	"2"	1	47.4400
-1.0000	qg	33194	T322ST2	13.8	0	0.0	"2"	1	47.4400

Q322 Project GIPR Phase 1 Interconnection System Impact Study
2013 Greater Bay Area Summer Peak Base Case
Q322 @626MW
Q322 Load Rejection
No Fault Load Rejection

Q322 GIPR Phase 1 Interconnection System Impact Study

Selected Generator Terminal Reactive Power (MVAr)

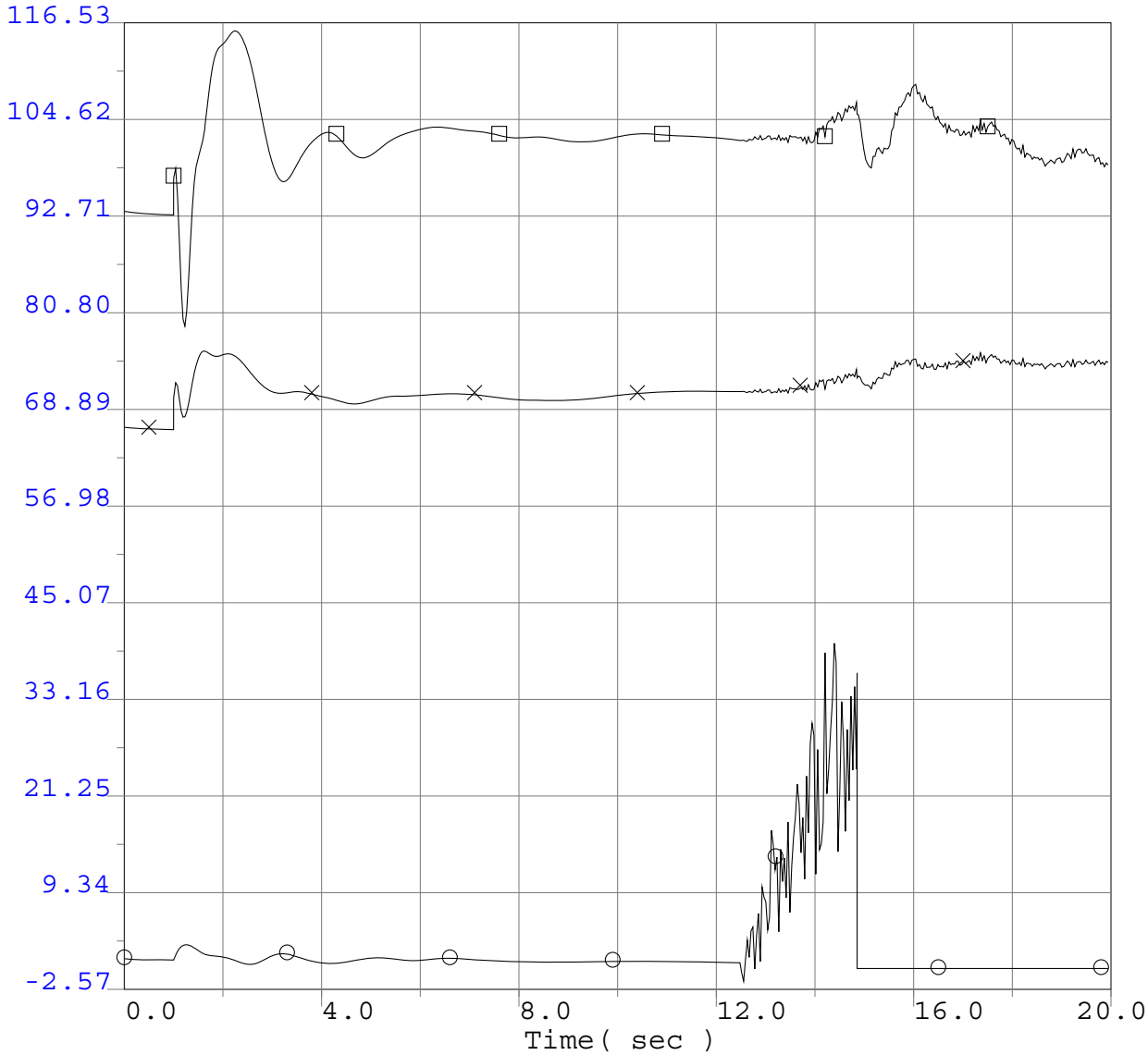

○	-2.5700 qg	33195	T417	34.5	0	0.0 "1"	1	116.5300
⊗	-2.5700 qg	33108	DEC CTG1	18.0	0	0.0 "1"	1	116.5300
□	-2.5700 qg	33107	DEC STG1	24.0	0	0.0 "1"	1	116.5300

Q322 Project GIPR Phase 1 Interconnection System Impact Study
2013 Greater Bay Area Summer Peak Base Case
Q322 @626MW
Q322 Load Rejection
No Fault Load Rejection

Q322 GIPR Phase 1 Interconnection System Impact Study

Selected WECC Bus Voltage Plots

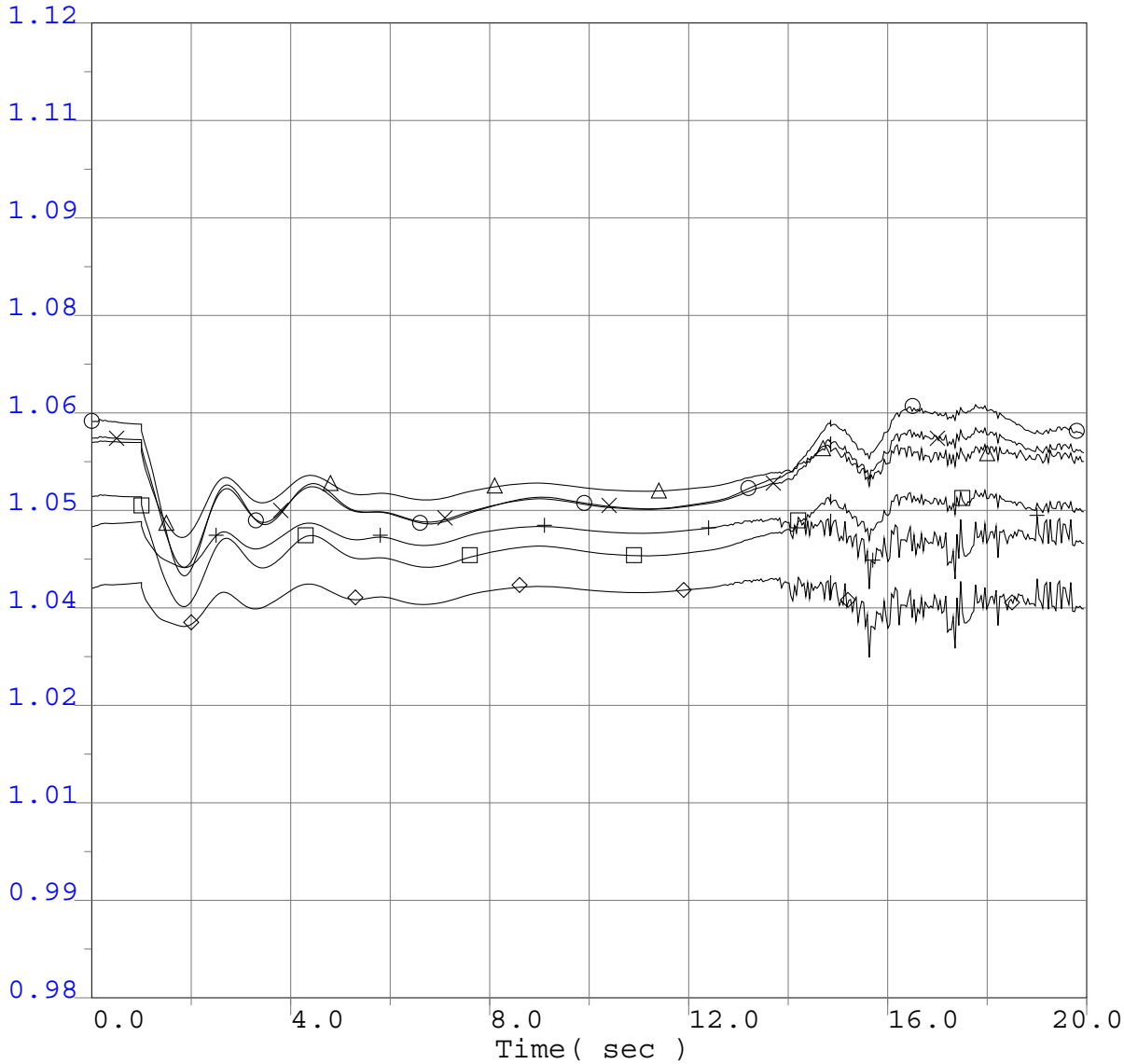

0.9800	vbus	40687	MALIN	500.0	0	0.0 "*"	1	1.1200
0.9800	vbus	30005	ROUND MT	500.0	0	0.0 "*"	1	1.1200
0.9800	vbus	30015	TABLE MT	500.0	0	0.0 "*"	1	1.1200
0.9800	vbus	30030	VACA-DIX	500.0	0	0.0 "*"	1	1.1200
0.9800	vbus	30040	TESLA	500.0	0	0.0 "*"	1	1.1200
0.9800	vbus	30035	TRACY	500.0	0	0.0 "*"	1	1.1200

Q322 Project GIPR Phase 1 Interconnection System Impact Study
2013 Greater Bay Area Summer Peak Base Case
Q322 @626MW
Q322 Load Rejection
No Fault Load Rejection

Q322 GIPR Phase 1 Interconnection System Impact Study

Selected WECC Bus Voltage Plots

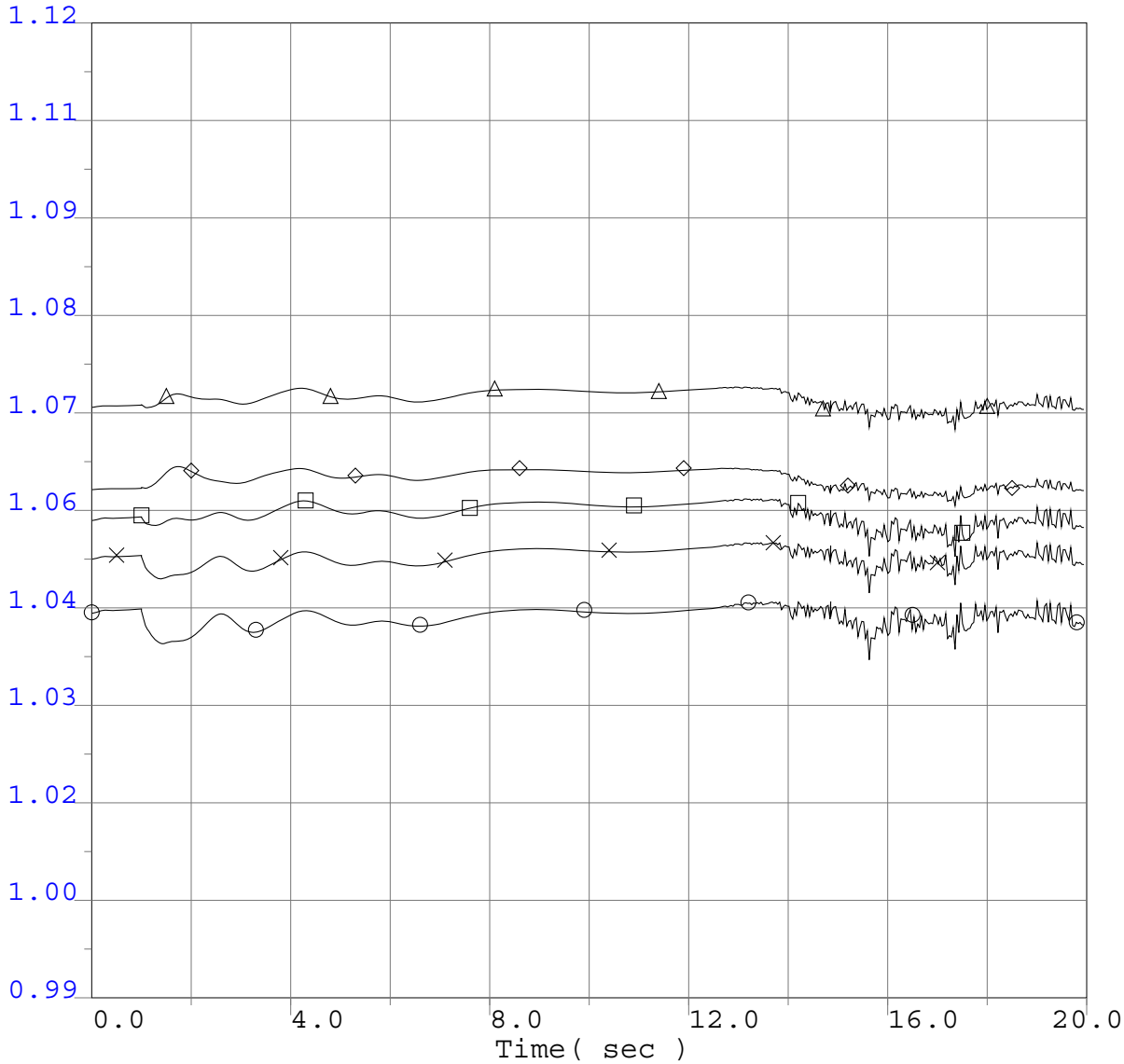

○	0.9900	vbus	30042	METCALF	500.0	0	0.0	"*"	1	1.1200
⊗	0.9900	vbus	30045	MOSSLAND	500.0	0	0.0	"*"	1	1.1200
□	0.9900	vbus	30050	LOSBANOS	500.0	0	0.0	"*"	1	1.1200
△	0.9900	vbus	30055	GATES	500.0	0	0.0	"*"	1	1.1200
◇	0.9900	vbus	30060	MIDWAY	500.0	0	0.0	"*"	1	1.1200

Q322 Project GIPR Phase 1 Interconnection System Impact Study
2013 Greater Bay Area Summer Peak Base Case
Q322 @626MW
Q322 Load Rejection
No Fault Load Rejection

Q322 GIPR Phase 1 Interconnection System Impact Study

Selected WECC Bus Voltage Plots

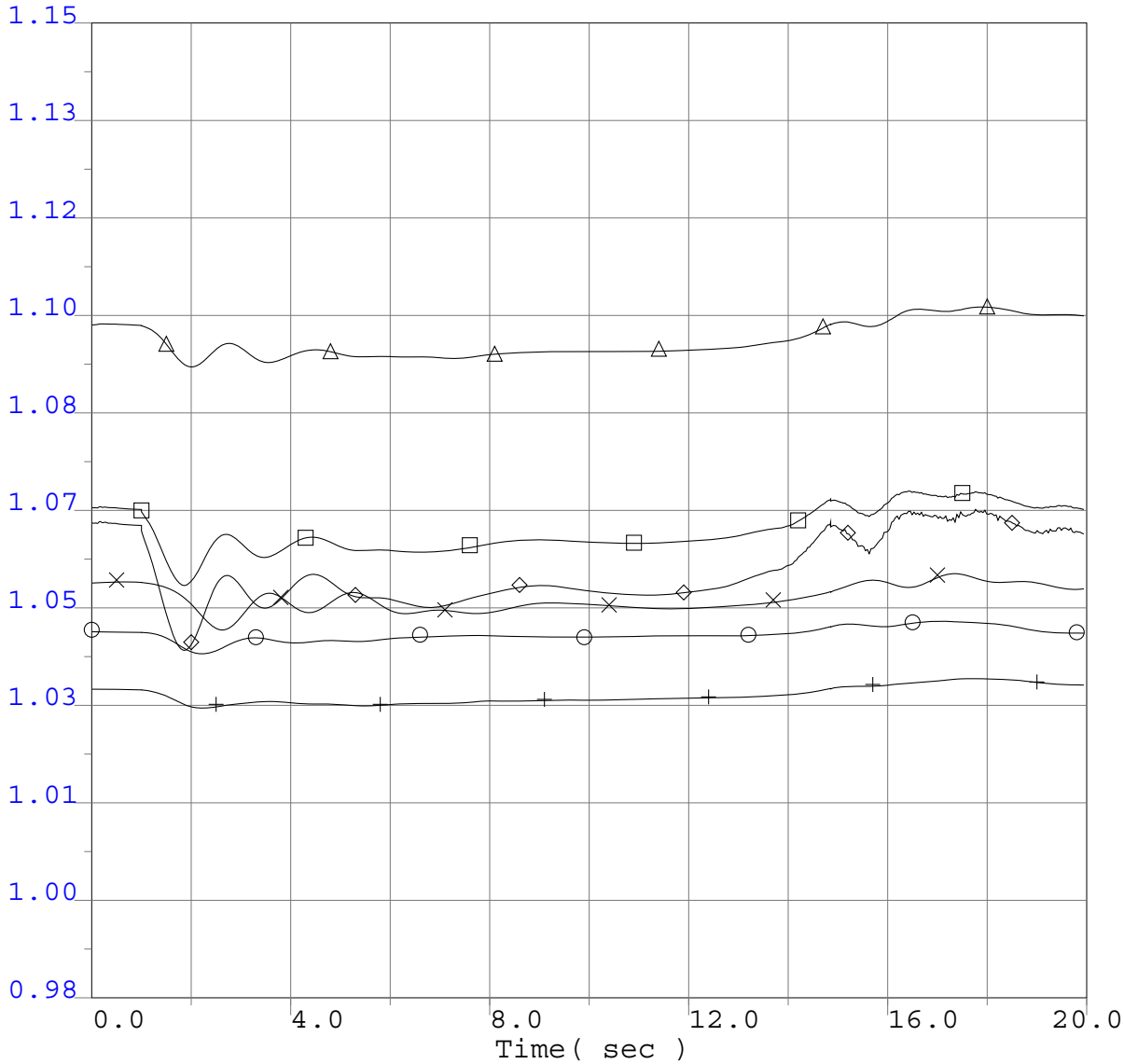

0.9800	vbus	14001	FOURCORN	500.0	0	0.0 "*"	1	1.1500
0.9800	vbus	50703	NIC500	500.0	0	0.0 "*"	1	1.1500
0.9800	vbus	60240	MIDPOINT	500.0	0	0.0 "*"	1	1.1500
0.9800	vbus	62012	TOWN2	500.0	0	0.0 "*"	1	1.1500
0.9800	vbus	40687	MALIN	500.0	0	0.0 "*"	1	1.1500
0.9800	vbus	66340	SIGURD	345.0	0	0.0 "*"	1	1.1500

Q322 Project GIPR Phase 1 Interconnection System Impact Study
2013 Greater Bay Area Summer Peak Base Case
Q322 @626MW
Q322 Load Rejection
No Fault Load Rejection

Q322 GIPR Phase 1 Interconnection System Impact Study

Selected WECC Bus Voltage Plots

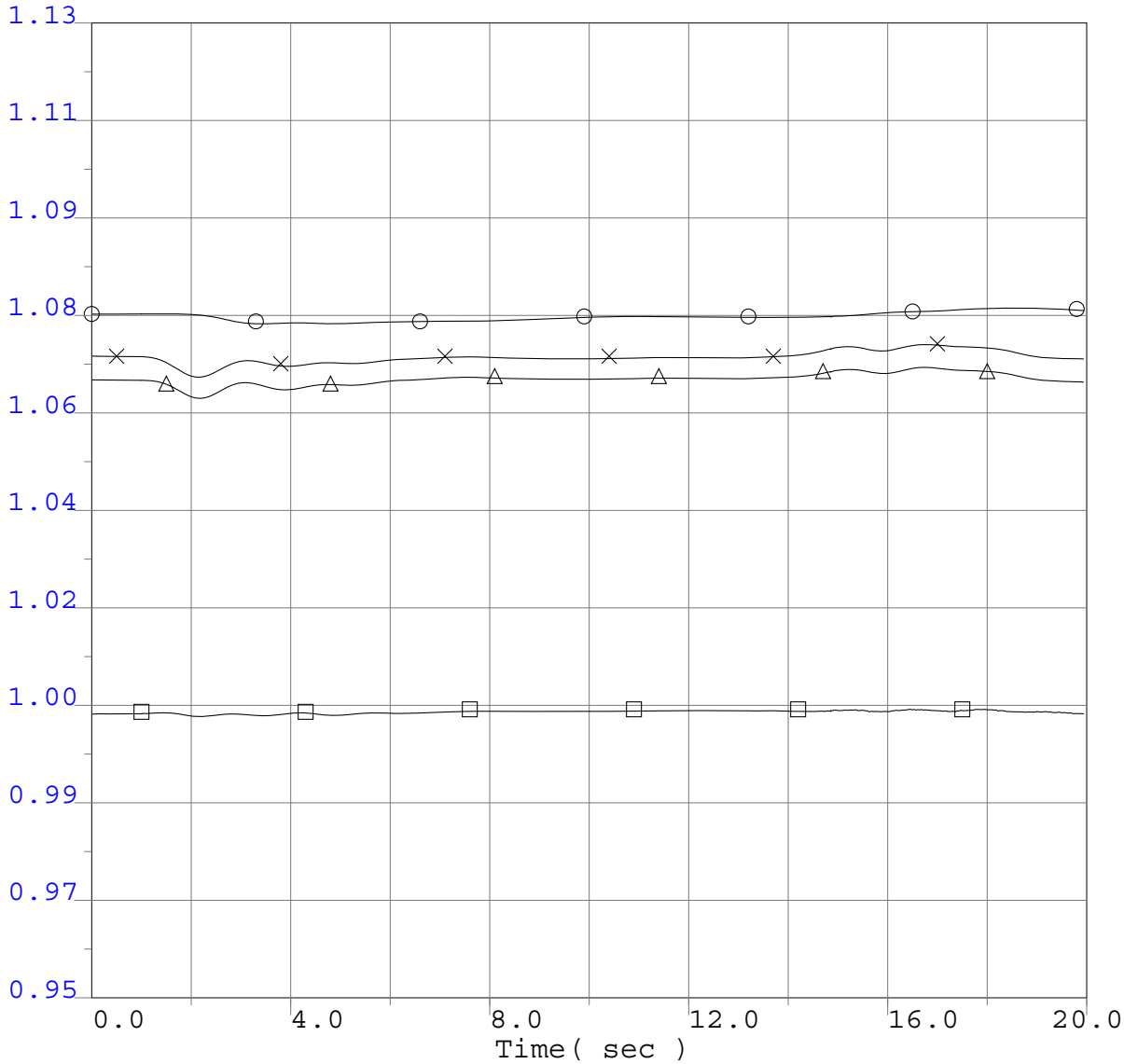

○	0.9500 vbul	54150	WILLESD9 240.0	0	0.0 "*"	1	1.1300
⊗	0.9500 vbus	14003	NAVAJO 500.0	0	0.0 "*"	1	1.1300
□	0.9500 vbus	24153	VESTAL 230.0	0	0.0 "*"	1	1.1300
△	0.9500 vbus	22360	IMPRLVLY 500.0	0	0.0 "*"	1	1.1300

Q322 Project GIPR Phase 1 Interconnection System Impact Study
2013 Greater Bay Area Summer Peak Base Case
Q322 @626MW
Q322 Load Rejection
No Fault Load Rejection

Q322 GIPR Phase 1 Interconnection System Impact Study

Selected WECC Bus Frequency Plots

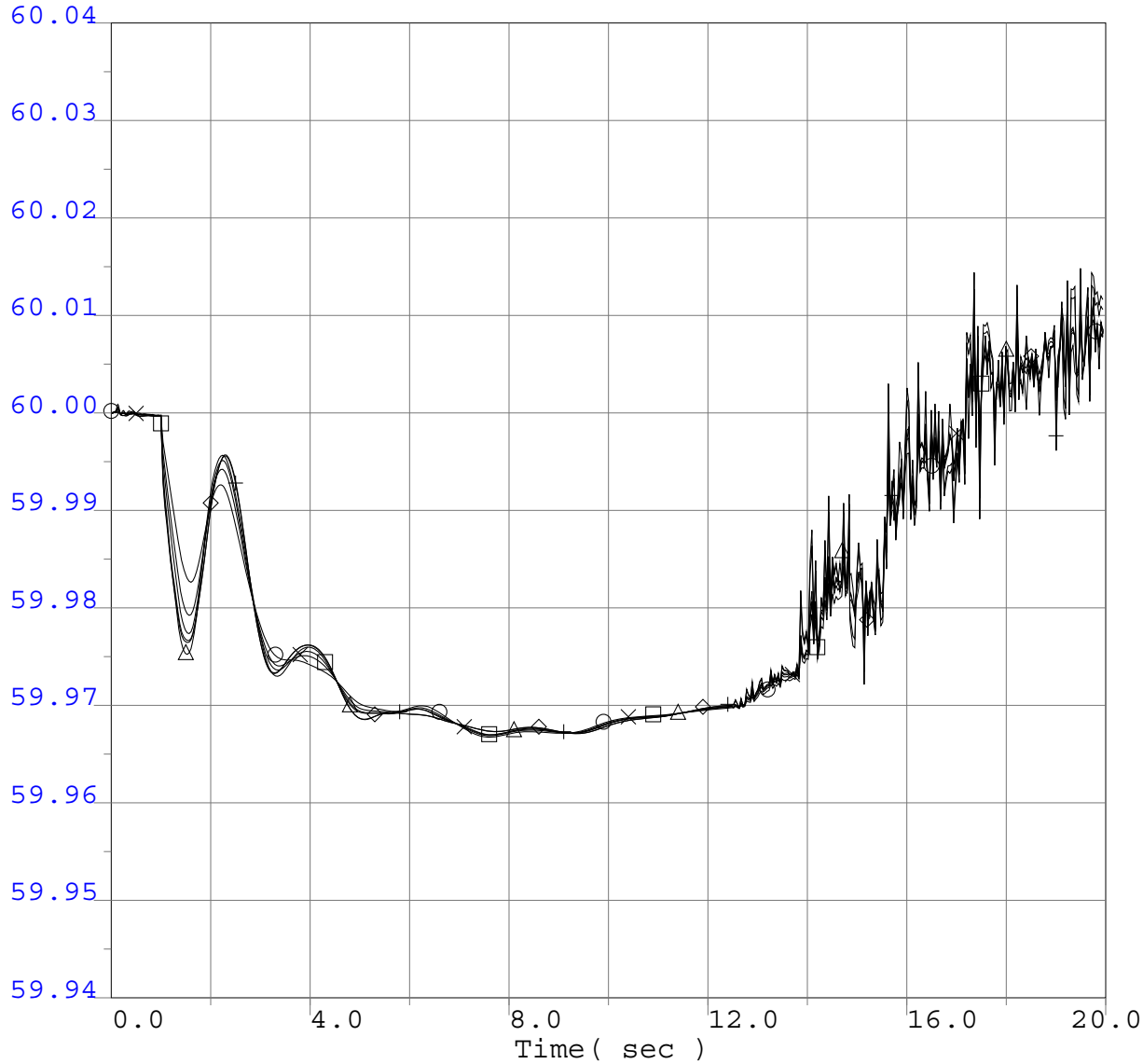

59.9400	fbus	40687	MALIN	500.0	0	0.0	"*"	1	60.0400
59.9400	fbus	30005	ROUND MT	500.0	0	0.0	"*"	1	60.0400
59.9400	fbus	30015	TABLE MT	500.0	0	0.0	"*"	1	60.0400
59.9400	fbus	30030	VACA-DIX	500.0	0	0.0	"*"	1	60.0400
59.9400	fbus	30040	TESLA	500.0	0	0.0	"*"	1	60.0400
59.9400	fbus	30035	TRACY	500.0	0	0.0	"*"	1	60.0400

Q322 Project GIPR Phase 1 Interconnection System Impact Study
2013 Greater Bay Area Summer Peak Base Case
Q322 @626MW
Q322 Load Rejection
No Fault Load Rejection

Q322 GIPR Phase 1 Interconnection System Impact Study

Selected WECC Bus Frequency Plots

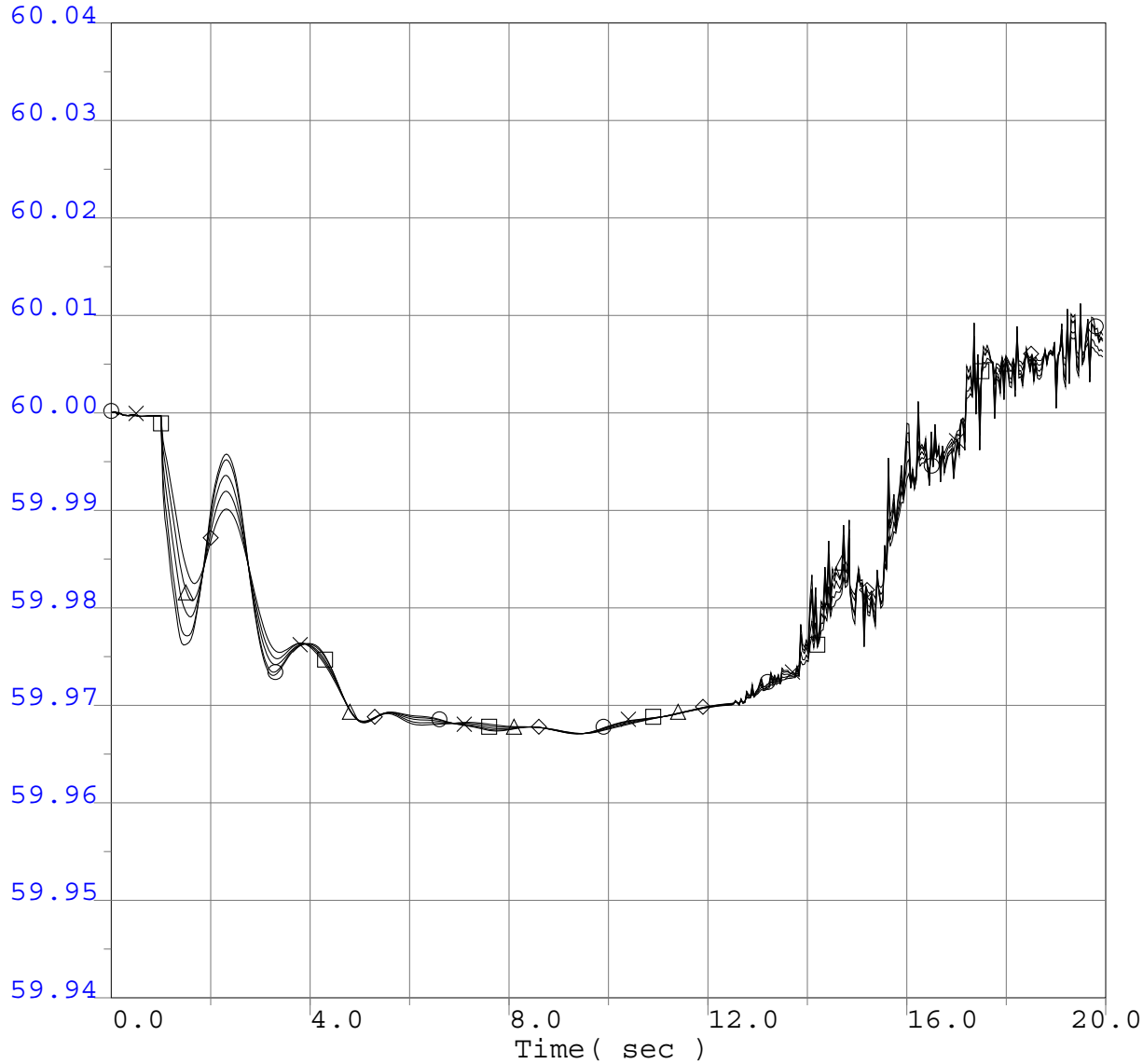

○	59.9400	fbus	30042	METCALF	500.0	0	0.0	"*"	1	60.0400
⊗	59.9400	fbus	30045	MOSSLAND	500.0	0	0.0	"*"	1	60.0400
□	59.9400	fbus	30050	LOSBANOS	500.0	0	0.0	"*"	1	60.0400
△	59.9400	fbus	30055	GATES	500.0	0	0.0	"*"	1	60.0400
◇	59.9400	fbus	30060	MIDWAY	500.0	0	0.0	"*"	1	60.0400

Q322 Project GIPR Phase 1 Interconnection System Impact Study
2013 Greater Bay Area Summer Peak Base Case
Q322 @626MW
Q322 Load Rejection
No Fault Load Rejection

Q322 GIPR Phase 1 Interconnection System Impact Study

Selected WECC Bus Frequency Plots

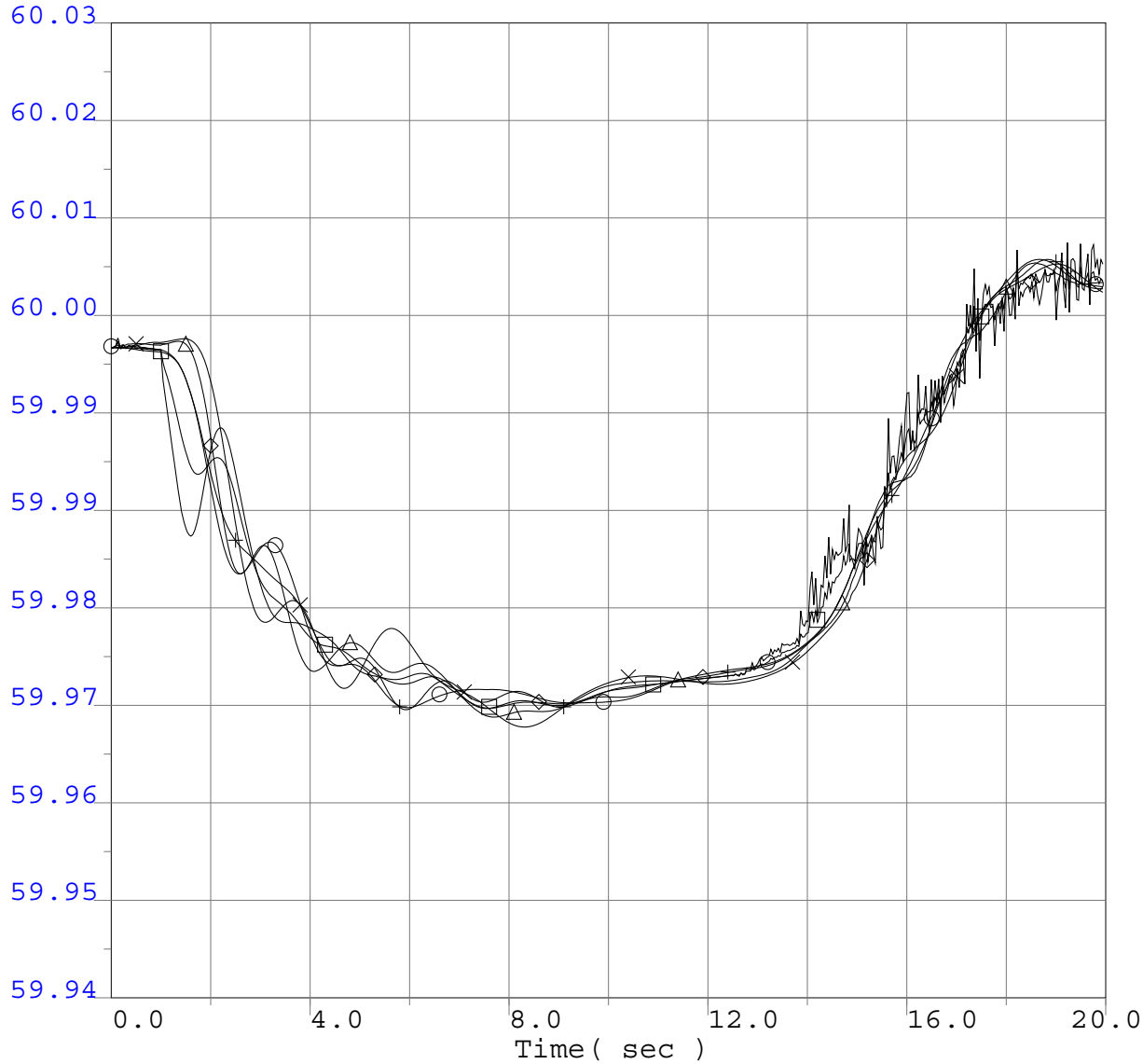

59.9400	fbus	14001	FOURCORN	500.0	0	0.0	"*"	1	60.0300
59.9400	fbus	50703	NIC500	500.0	0	0.0	"*"	1	60.0300
59.9400	fbus	60240	MIDPOINT	500.0	0	0.0	"*"	1	60.0300
59.9400	fbus	62012	TOWN2	500.0	0	0.0	"*"	1	60.0300
59.9400	fbus	40687	MALIN	500.0	0	0.0	"*"	1	60.0300
59.9400	fbus	66340	SIGURD	345.0	0	0.0	"*"	1	60.0300

Q322 Project GIPR Phase 1 Interconnection System Impact Study
2013 Greater Bay Area Summer Peak Base Case
Q322 @626MW
Q322 Load Rejection
No Fault Load Rejection

Q322 GIPR Phase 1 Interconnection System Impact Study

Selected WECC Bus Frequency Plots

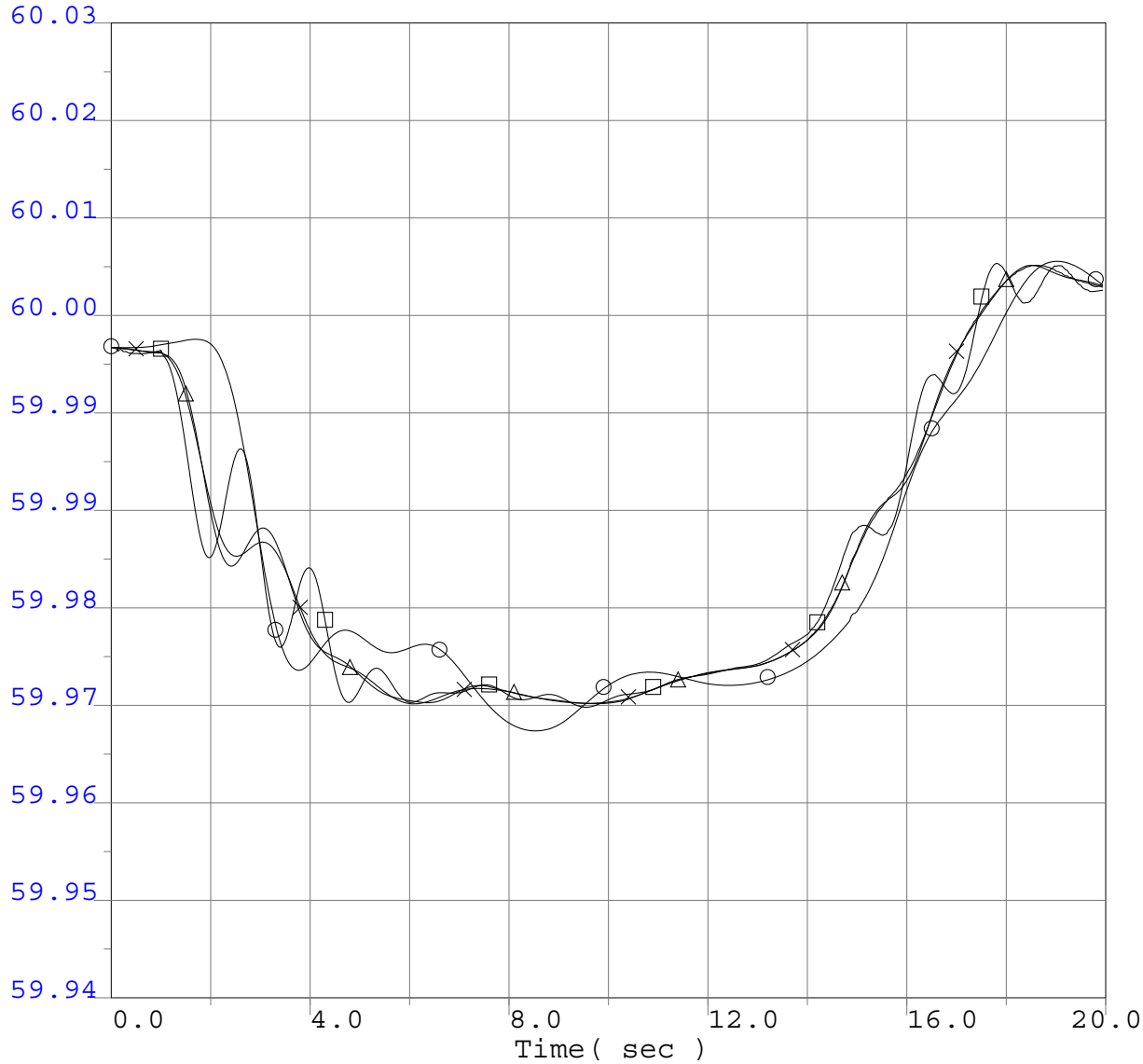

○	59.9400 fbul	54150	WILLESD9 240.0	0	0.0 "*"	1	60.0300
⊗	59.9400 fbus	14003	NAVAJO 500.0	0	0.0 "*"	1	60.0300
□	59.9400 fbus	24153	VESTAL 230.0	0	0.0 "*"	1	60.0300
△	59.9400 fbus	22360	IMPRLVLY 500.0	0	0.0 "*"	1	60.0300

Q322 Project GIPR Phase 1 Interconnection System Impact Study
2013 Greater Bay Area Summer Peak Base Case
Q322 @626MW
Q322 Load Rejection
No Fault Load Rejection

Q322 GIPR Phase 1 Interconnection System Impact Study

WECC Generator Rotor Angle

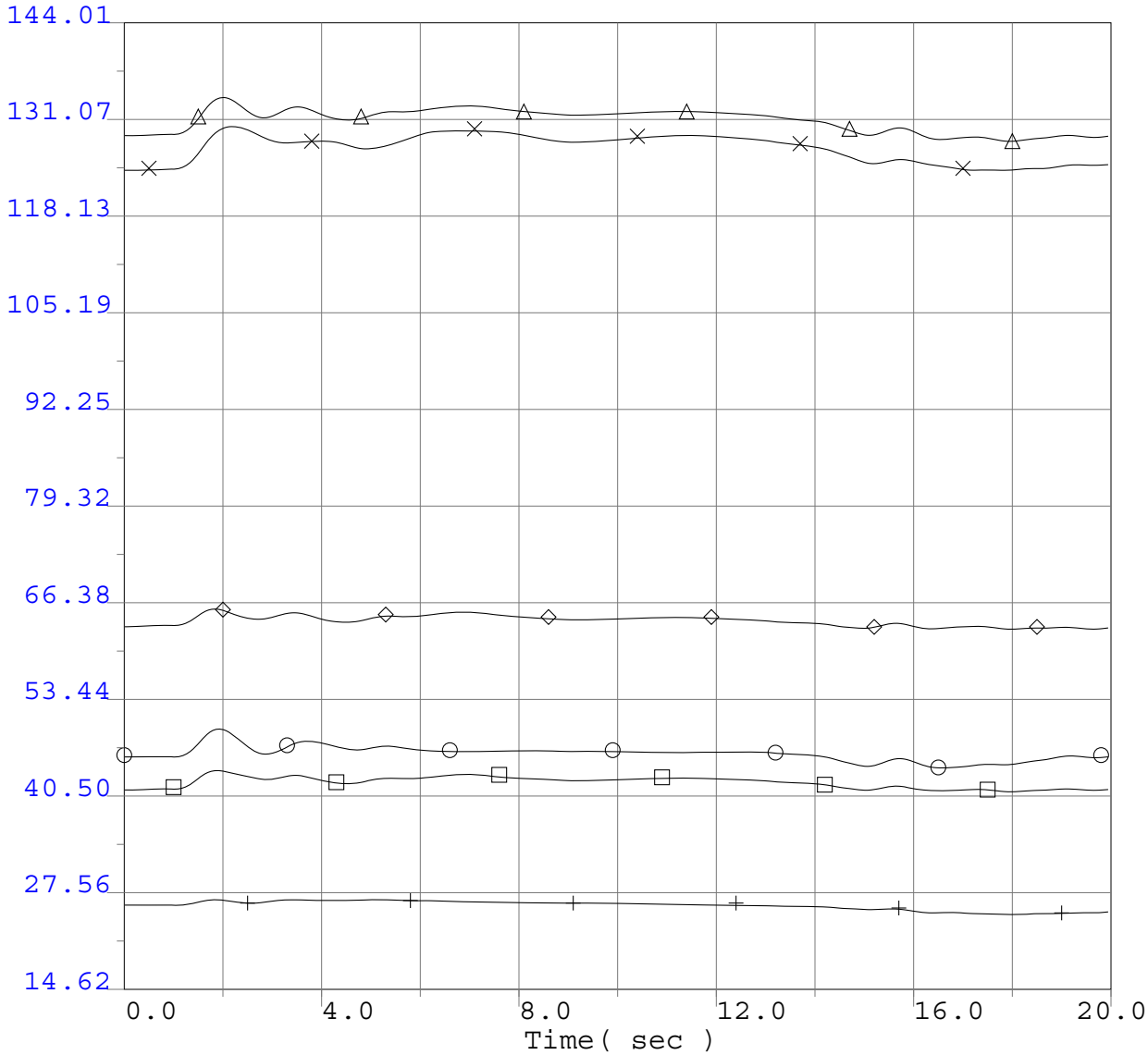

14.6200 ang	14914	FCNGN4CC	22.0	0	0.0 "H"	1	144.0100
14.6200 ang	50499	GMS G5	13.8	0	0.0 "1"	1	144.0100
14.6200 ang	60100	BRWNL 5	13.8	0	0.0 "1"	1	144.0100
14.6200 ang	62048	COLSTP 3	26.0	0	0.0 "1"	1	144.0100
14.6200 ang	44071	JDA 0102	13.8	0	0.0"01"	1	144.0100
14.6200 ang	36411	DIABLO 1	25.0	0	0.0 "1"	1	144.0100

Q322 Project GIPR Phase 1 Interconnection System Impact Study
2013 Greater Bay Area Summer Peak Base Case
Q322 @626MW
Q322 Load Rejection
No Fault Load Rejection

Q322 GIPR Phase 1 Interconnection System Impact Study

WECC Generator Rotor Angle

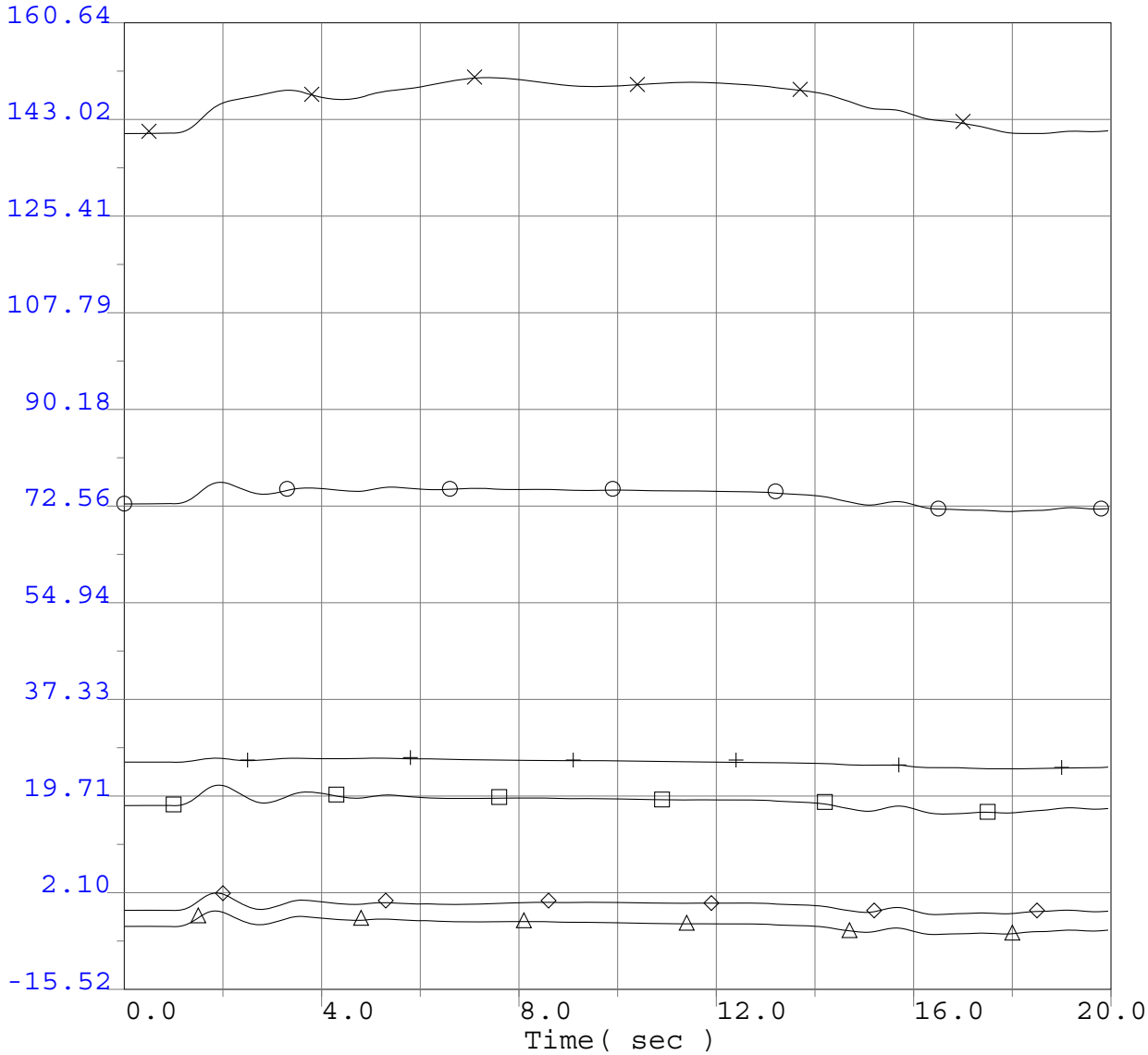

-15.5200 ang	65490	EHUNTR 1	24.0	0	0.0	"1"	1	160.6400
-15.5200 ang	54338	SUND#2GN	18.0	0	0.0	"2"	1	160.6400
-15.5200 ang	79151	GLENC3-4	13.8	0	0.0	"3"	1	160.6400
-15.5200 ang	24130	S.ONOFR3	22.0	0	0.0	"3"	1	160.6400
-15.5200 ang	22244	ENCINA 5	24.0	0	0.0	"1"	1	160.6400
-15.5200 ang	36411	DIABLO 1	25.0	0	0.0	"1"	1	160.6400

Q322 Project GIPR Phase 1 Interconnection System Impact Study
2013 Greater Bay Area Summer Peak Base Case
Q322 @626MW
Q322 Load Rejection
No Fault Load Rejection

Q322 GIPR Phase 1 Interconnection System Impact Study

Selected PG&E Transmission Line Flows (MW)

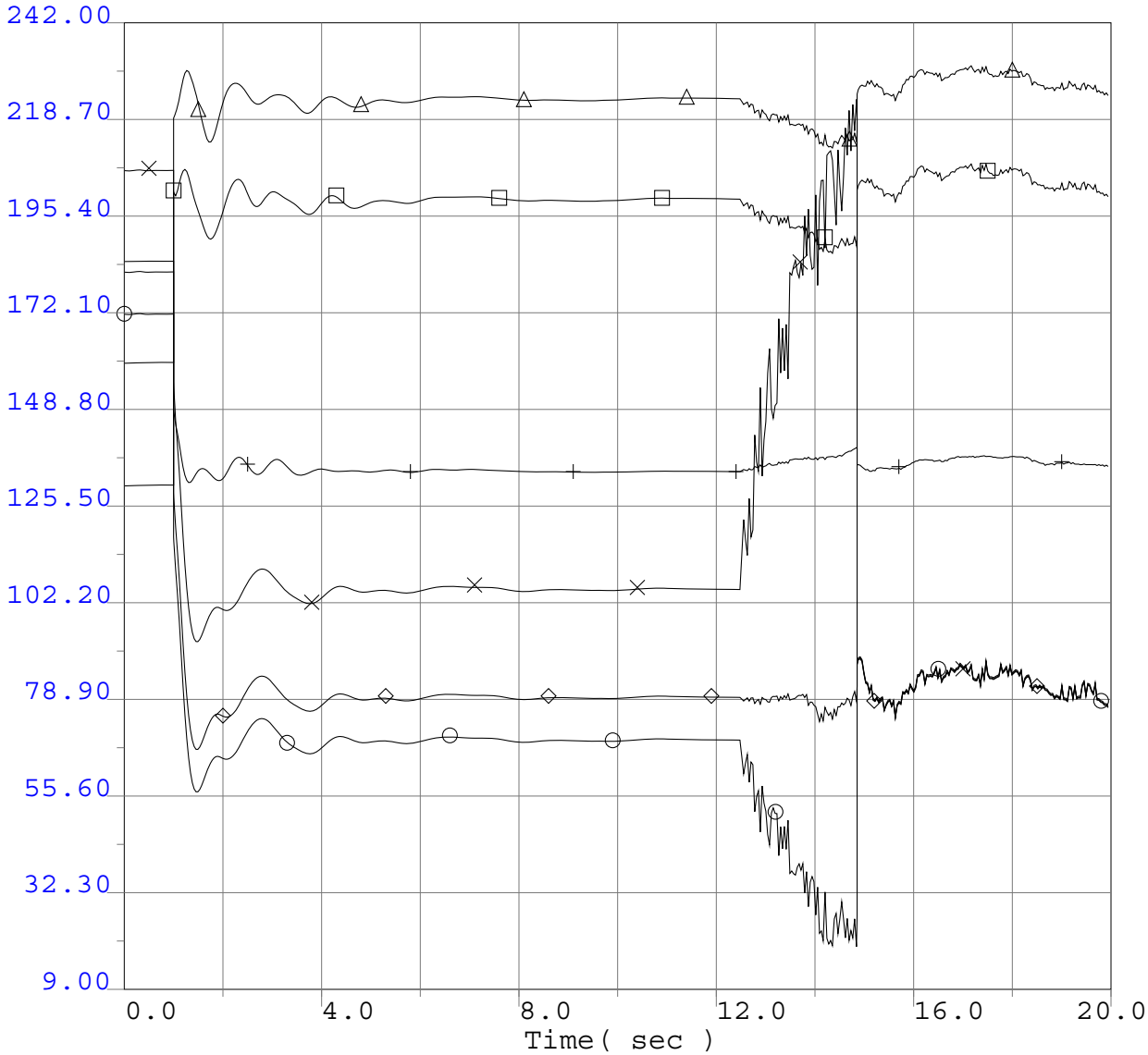

9.0000 pbr	30527	PITSBG E 230.0	30600	TRES VAQ 230.0	1	2	242.0000
9.0000 pbr	30600	TRES VAQ 230.0	30640	TESLA C 230.0	1	2	242.0000
9.0000 pbr	30535	TIDEWATR 230.0	30527	PITSBG E 230.0	1	1	242.0000
9.0000 pbr	30536	TESORO 230.0	30527	PITSBG E 230.0	1	1	242.0000
9.0000 pbr	30527	PITSBG E 230.0	30595	FLOWIND2 230.0	1	1	242.0000
9.0000 pbr	30527	PITSBG E 230.0	30560	E. SHORE 230.0	1	1	242.0000

Q322 Project GIPR Phase 1 Interconnection System Impact Study
2013 Greater Bay Area Summer Peak Base Case
Q322 @626MW
Q322 Load Rejection
No Fault Load Rejection

Q322 GIPR Phase 1 Interconnection System Impact Study

Selected PG&E Transmission Line Flows (MW)

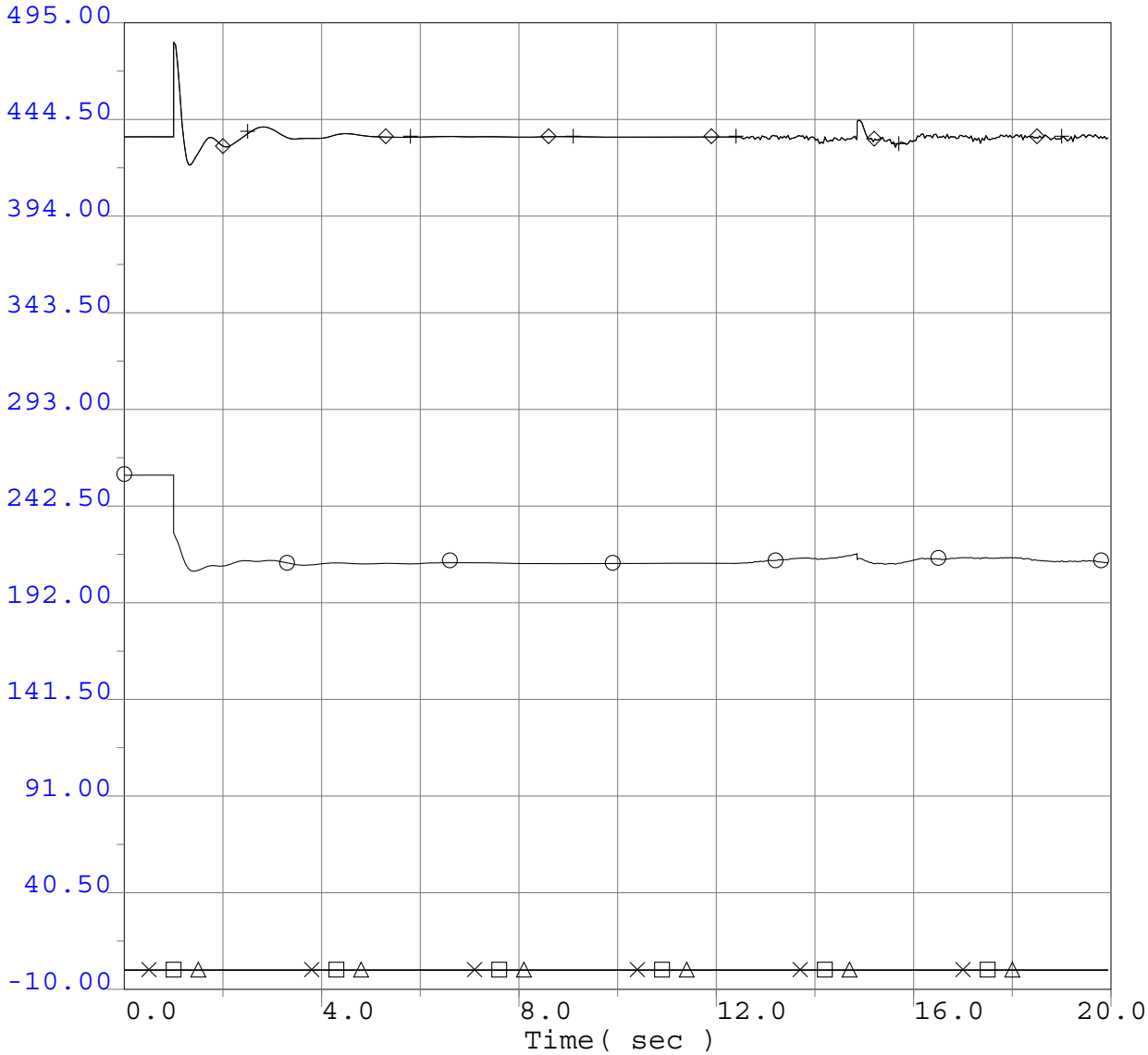

Q322 Project GIPR Phase 1 Interconnection System Impact Study
2013 Greater Bay Area Summer Peak Base Case
Q322 @626MW
Q322 Load Rejection
No Fault Load Rejection

Q322 GIPR Phase 1 Interconnection System Impact Study

Selected PG&E Transmission Line Flows (MW)

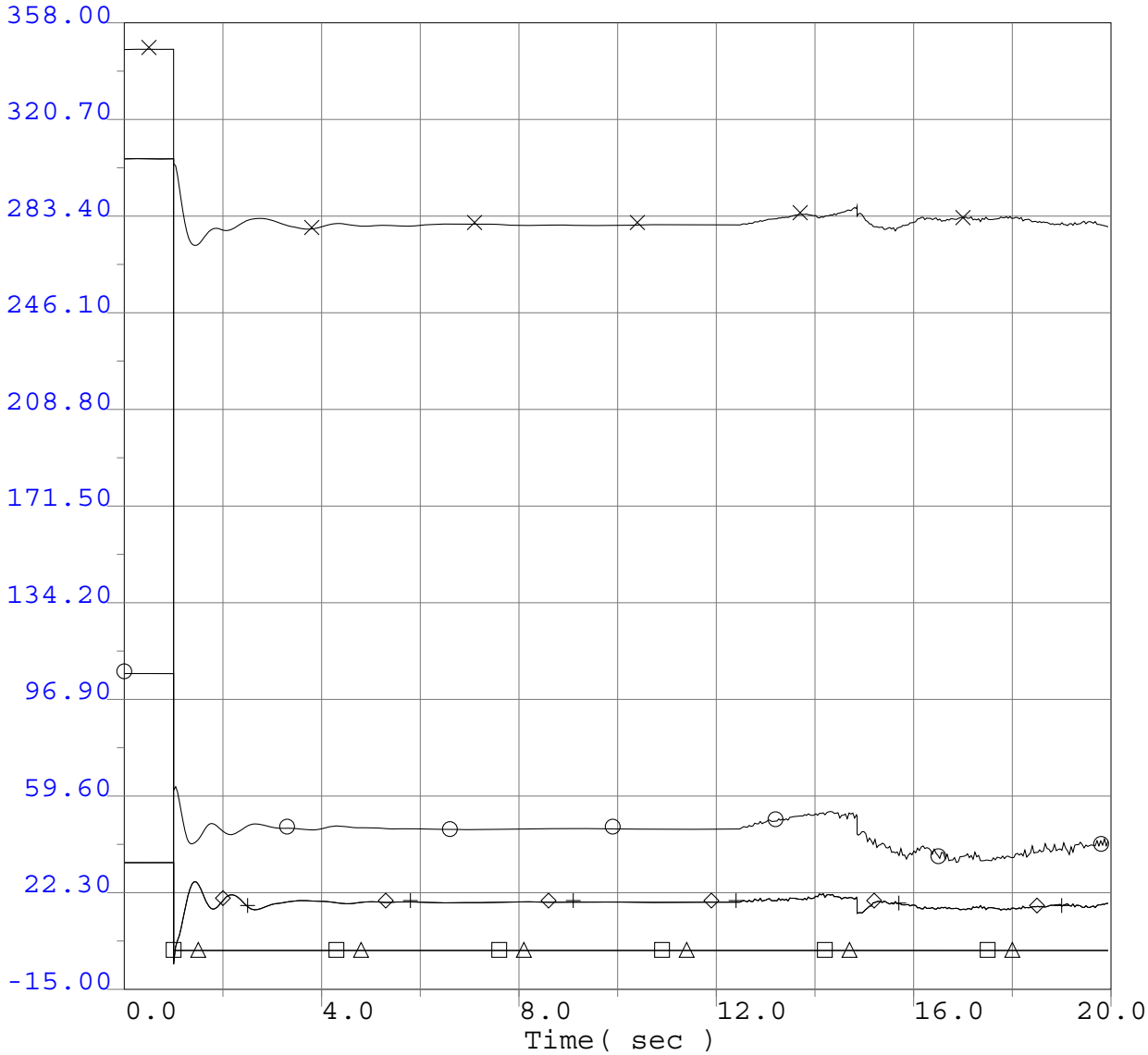

-15.0000 pbr	30526	PITSBG D 230.0	30555	SANRAMON 230.0	1	1	358.0000
-15.0000 pbr	30526	PITSBG D 230.0	30561	TASSAJAR 230.0	1	1	358.0000
-15.0000 pbr	30531	T322BUS1 230.0	30526	PITSBG D 230.0	1	1	358.0000
-15.0000 pbr	30532	T322BUS2 230.0	30526	PITSBG D 230.0	1	1	358.0000
-15.0000 pbr	30526	PITSBG D 230.0	32950	PITSBURG 115.0	1	12	358.0000
-15.0000 pbr	30526	PITSBG D 230.0	32950	PITSBURG 115.0	1	13	358.0000

Q322 Project GIPR Phase 1 Interconnection System Impact Study
2013 Greater Bay Area Summer Peak Base Case
Q322 @626MW
Q322 Load Rejection
No Fault Load Rejection

Q322 GIPR Phase 1 Interconnection System Impact Study

Selected PG&E Transmission Line Flows (MW)

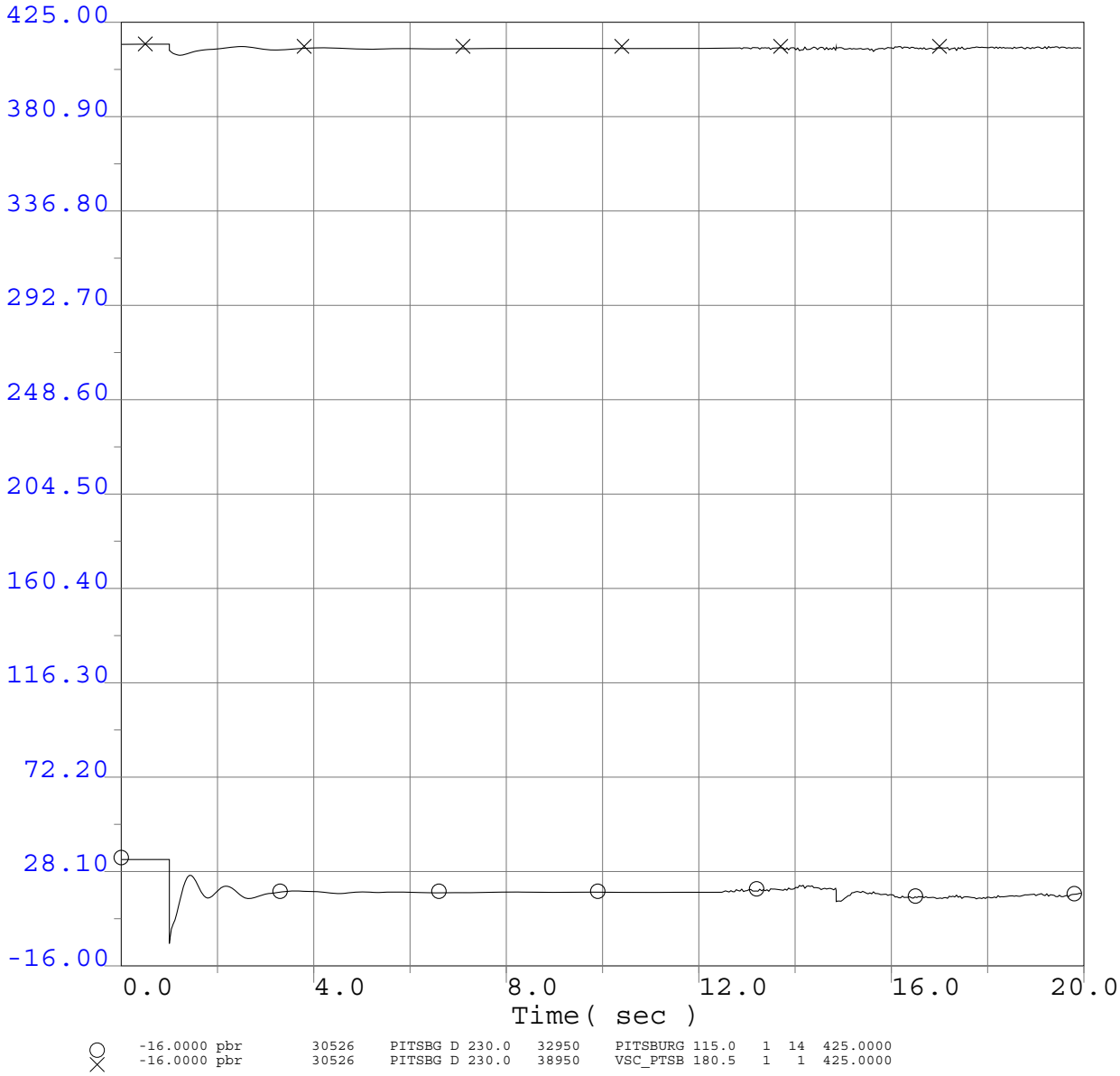

Q322 Project GIPR Phase 1 Interconnection System Impact Study
2013 Greater Bay Area Summer Peak Base Case
Q322 @626MW
Q322 Load Rejection
No Fault Load Rejection

Q322 GIPR Phase 1 Interconnection System Impact Study

Selected PG&E Bus Voltage Plots Adjacent to Fault

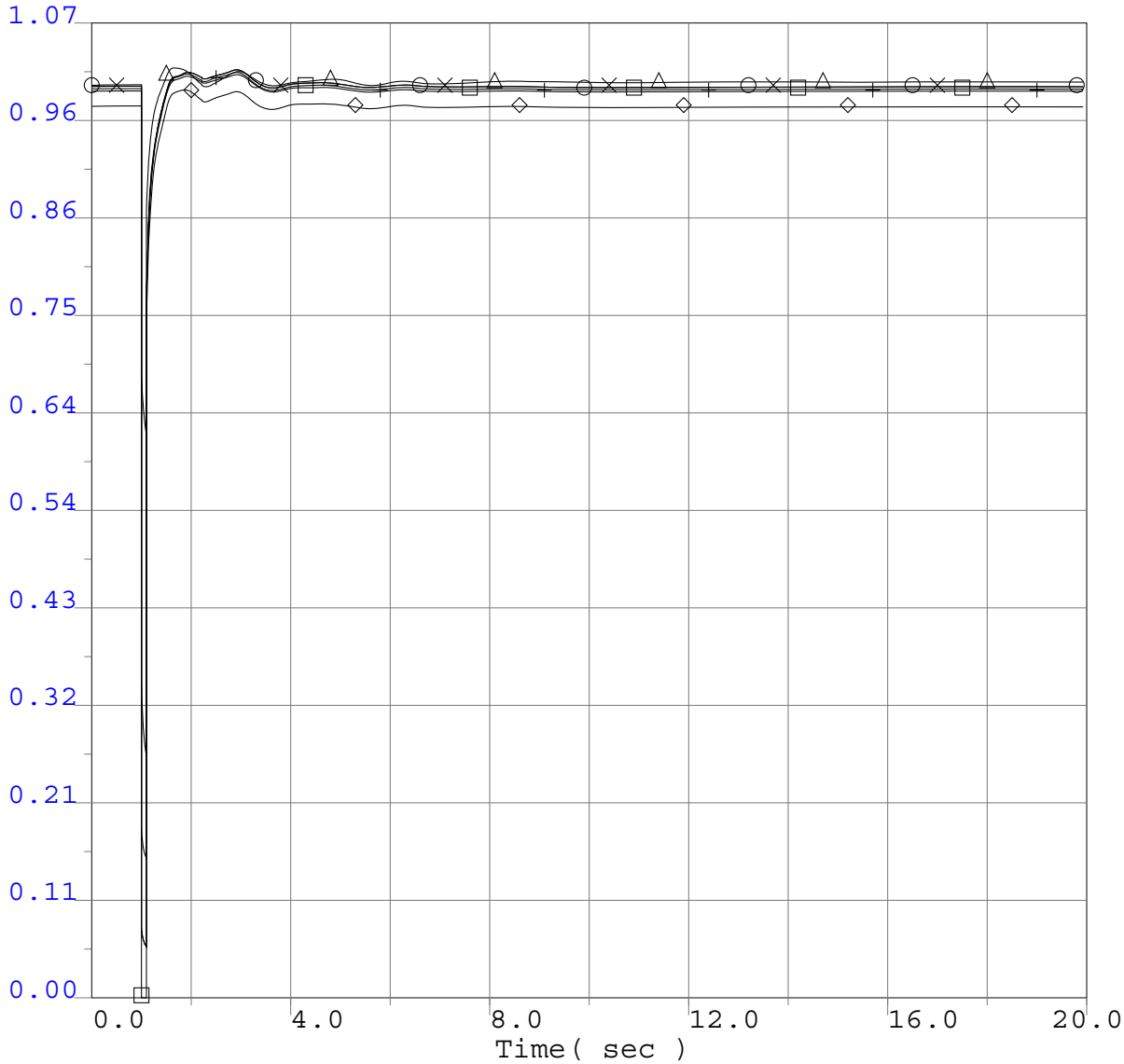

0.0000	vbus	30531	T322BUS1	230.0	0	0.0 "*"	1	1.0700
0.0000	vbus	30532	T322BUS2	230.0	0	0.0 "*"	1	1.0700
0.0000	vbus	30527	PITSBG E	230.0	0	0.0 "*"	1	1.0700
0.0000	vbus	30640	TESLA C	230.0	0	0.0 "*"	1	1.0700
0.0000	vbul	30561	TASSAJAR	230.0	0	0.0 "*"	1	1.0700
0.0000	vbul	30536	TESORO	230.0	0	0.0 "*"	1	1.0700

Q322 Project GIPR Phase 1 Interconnection System Impact Study
2013 Greater Bay Area Summer Peak Base Case
Q322 @626MW
Pittsburg PP-Tesla #2 230kV Line Outage
3 ph 6 cyc flt @ Pittsburg PP & clr Pittsburg PP-Tesla #2 230kV line

Q322 GIPR Phase 1 Interconnection System Impact Study

Selected PG&E Bus Frequency Plots Adjacent to Fault

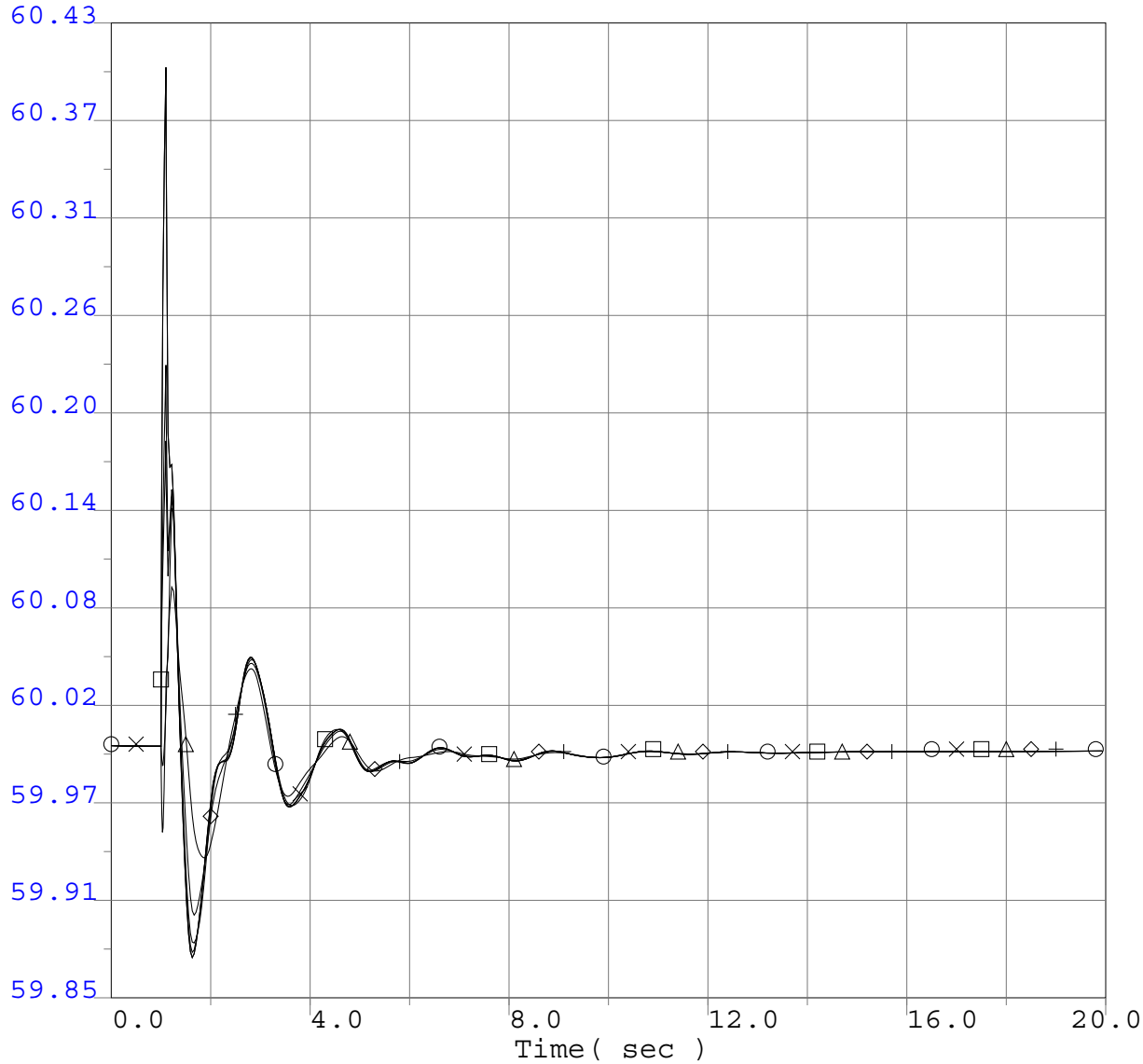

○	59.8500 fbus	30531	T322BUS1 230.0	0	0.0 "*"	1	60.4300
⊗	59.8500 fbus	30532	T322BUS2 230.0	0	0.0 "*"	1	60.4300
□	59.8500 fbus	30527	PITSBG E 230.0	0	0.0 "*"	1	60.4300
△	59.8500 fbus	30640	TESLA C 230.0	0	0.0 "*"	1	60.4300
◇	59.8500 fbul	30561	TASSAJAR 230.0	0	0.0 "*"	1	60.4300
+	59.8500 fbul	30536	TESORO 230.0	0	0.0 "*"	1	60.4300

Q322 Project GIPR Phase 1 Interconnection System Impact Study
2013 Greater Bay Area Summer Peak Base Case
Q322 @626MW
Pittsburg PP-Tesla #2 230kV Line Outage
3 ph 6 cyc flt @ Pittsburg PP & clr Pittsburg PP-Tesla #2 230kV line

Q322 GIPR Phase 1 Interconnection System Impact Study

Project Generator Terminal Voltages (P.U.)

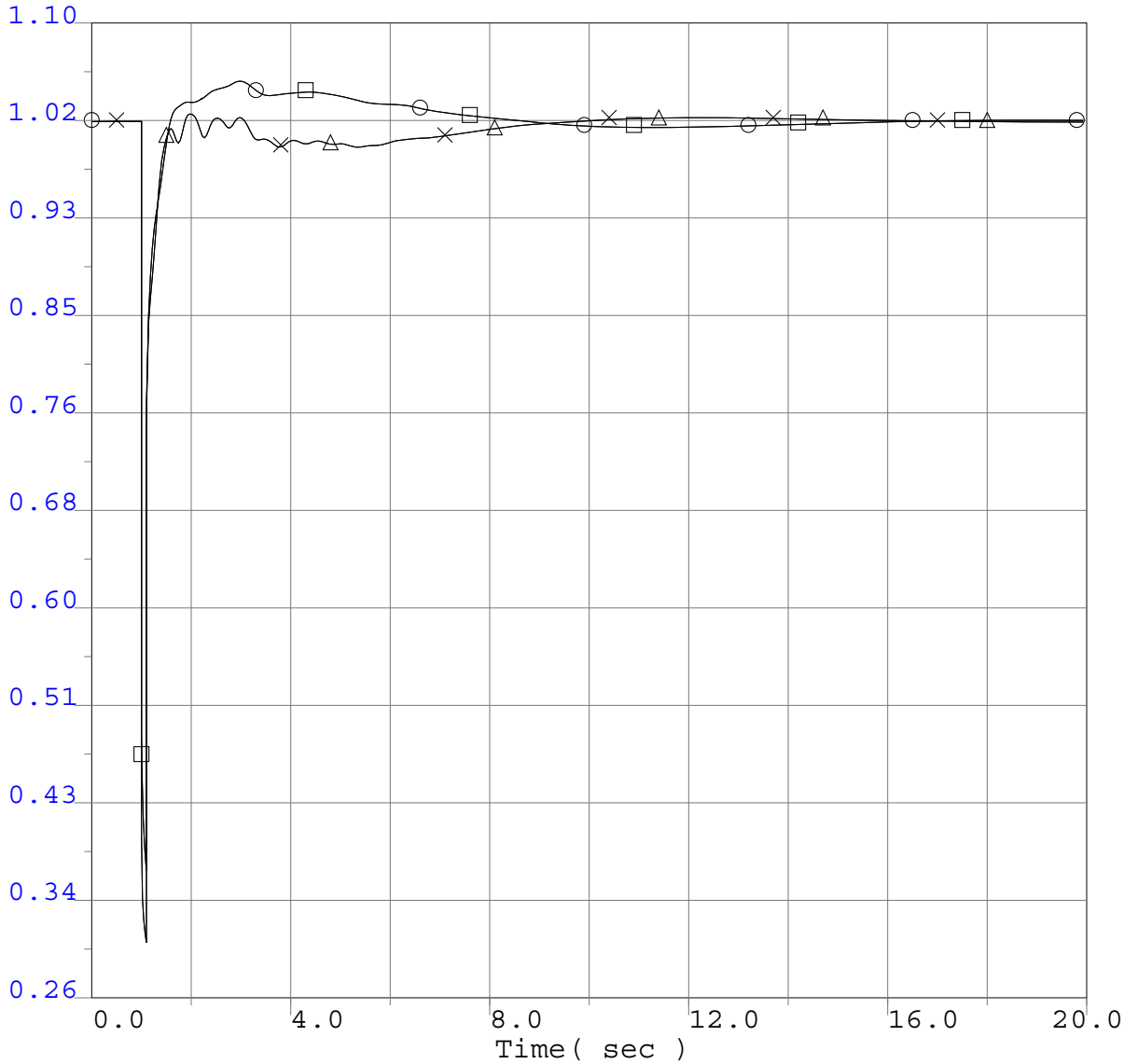

○	0.2600 vt	33191	T322GT1	16.5	0	0.0 "1"	1	1.1000
×	0.2600 vt	33192	T322ST1	13.8	0	0.0 "1"	1	1.1000
□	0.2600 vt	33193	T322GT2	16.5	0	0.0 "2"	1	1.1000
△	0.2600 vt	33194	T322ST2	13.8	0	0.0 "2"	1	1.1000

Q322 Project GIPR Phase 1 Interconnection System Impact Study
2013 Greater Bay Area Summer Peak Base Case
Q322 @626MW
Pittsburg PP-Tesla #2 230kV Line Outage
3 ph 6 cyc flt @ Pittsburg PP & clr Pittsburg PP-Tesla #2 230kV line

Q322 GIPR Phase 1 Interconnection System Impact Study

Selected Generator Terminal Voltages (P.U.)

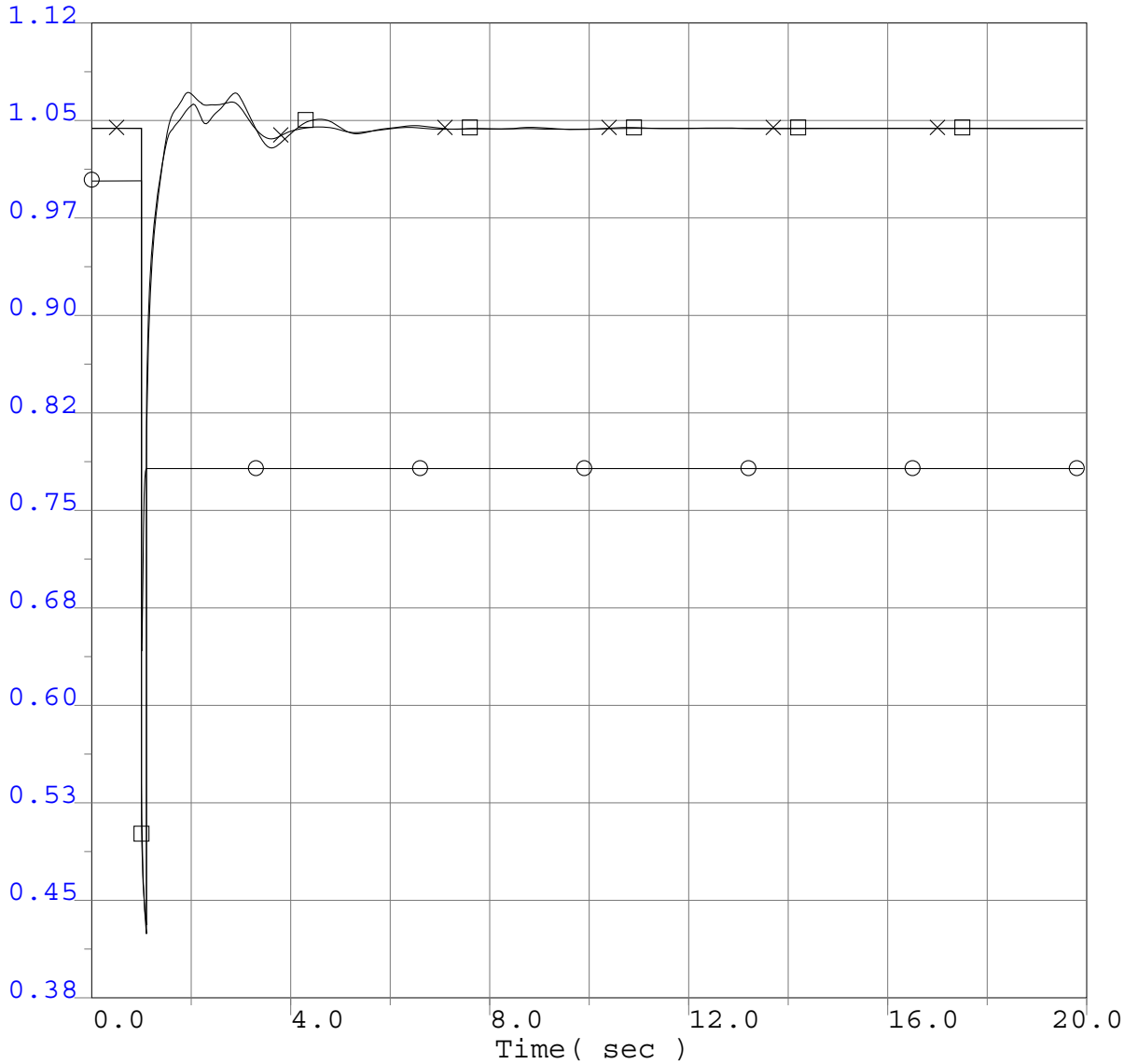

○	0.3800 vt	33195	T417	34.5	0	0.0 "1"	1	1.1200
⊗	0.3800 vt	33108	DEC CTG1	18.0	0	0.0 "1"	1	1.1200
□	0.3800 vt	33107	DEC STG1	24.0	0	0.0 "1"	1	1.1200

Q322 Project GIPR Phase 1 Interconnection System Impact Study
2013 Greater Bay Area Summer Peak Base Case
Q322 @626MW
Pittsburg PP-Tesla #2 230kV Line Outage
3 ph 6 cyc flt @ Pittsburg PP & clr Pittsburg PP-Tesla #2 230kV line

Q322 GIPR Phase 1 Interconnection System Impact Study

Project Generator Speed (P.U.)

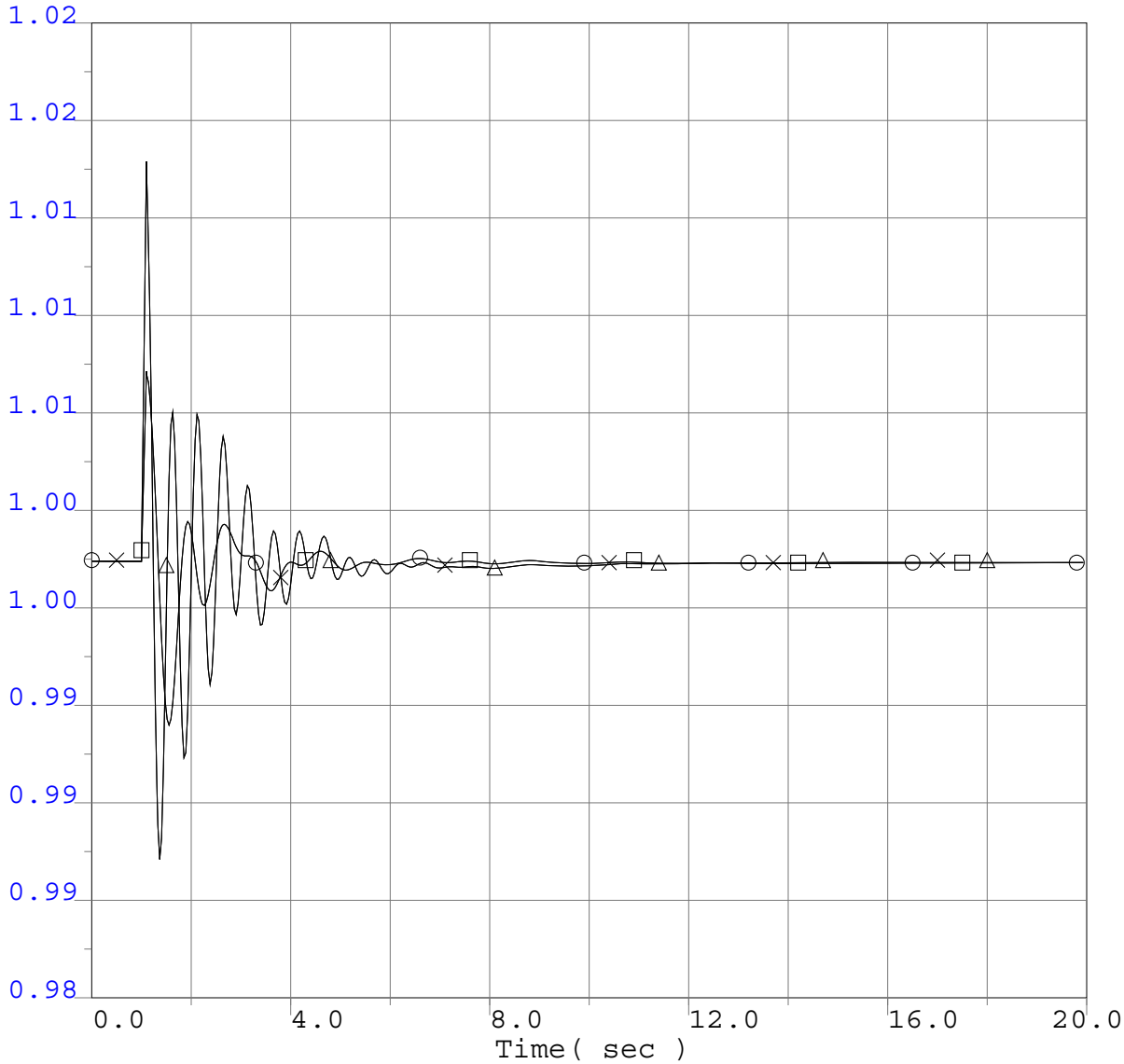

0.9841 spd	33191	T322GT1	16.5	0	0.0 "1"	1	1.0196
0.9841 spd	33192	T322ST1	13.8	0	0.0 "1"	1	1.0196
0.9841 spd	33193	T322GT2	16.5	0	0.0 "2"	1	1.0196
0.9841 spd	33194	T322ST2	13.8	0	0.0 "2"	1	1.0196

Q322 Project GIPR Phase 1 Interconnection System Impact Study
2013 Greater Bay Area Summer Peak Base Case
Q322 @626MW
Pittsburg PP-Tesla #2 230kV Line Outage
3 ph 6 cyc flt @ Pittsburg PP & clr Pittsburg PP-Tesla #2 230kV line

Q322 GIPR Phase 1 Interconnection System Impact Study

Selected Generator Speed (P.U.)

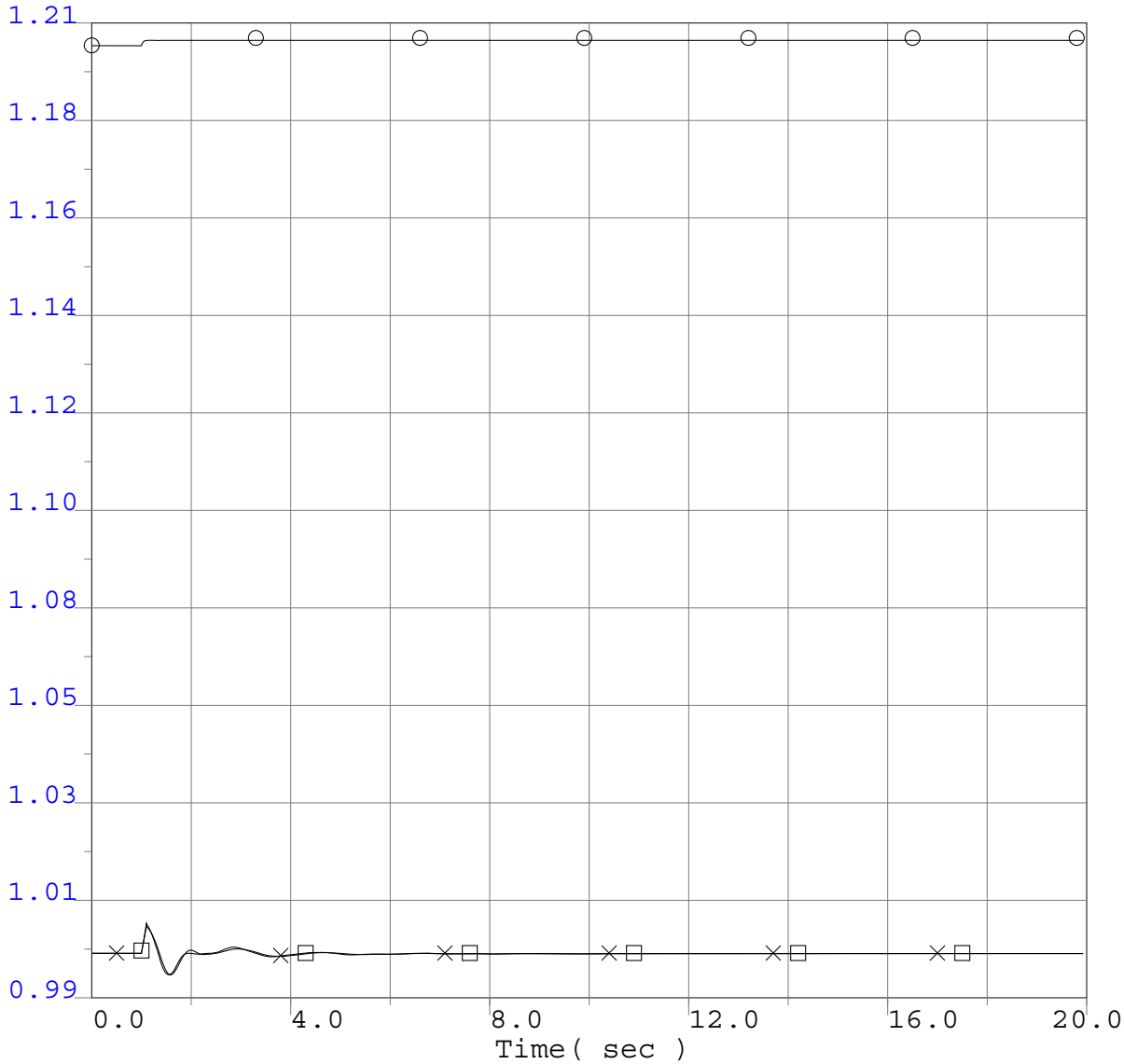

○	0.9902 spd	33195	T417	34.5	0	0.0 "1"	1	1.2050
⊗	0.9902 spd	33108	DEC CTG1	18.0	0	0.0 "1"	1	1.2050
□	0.9902 spd	33107	DEC STG1	24.0	0	0.0 "1"	1	1.2050

Q322 Project GIPR Phase 1 Interconnection System Impact Study
2013 Greater Bay Area Summer Peak Base Case
Q322 @626MW
Pittsburg PP-Tesla #2 230kV Line Outage
3 ph 6 cyc flt @ Pittsburg PP & clr Pittsburg PP-Tesla #2 230kV line

Q322 GIPR Phase 1 Interconnection System Impact Study

Project Generator Terminal Power (MW)

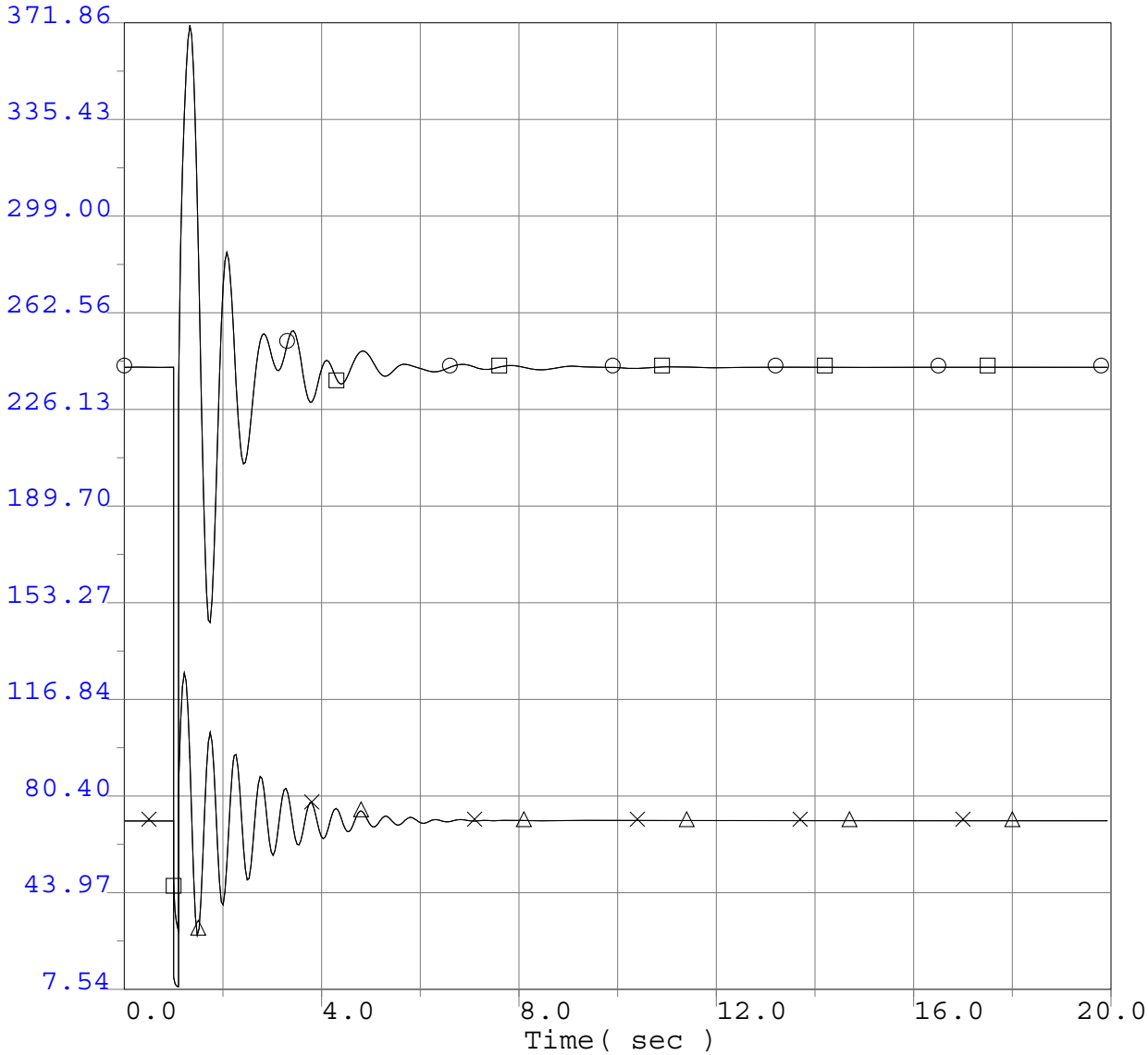

7.5400 pg	33191	T322GT1	16.5	0	0.0 "1"	1	371.8600
7.5400 pg	33192	T322ST1	13.8	0	0.0 "1"	1	371.8600
7.5400 pg	33193	T322GT2	16.5	0	0.0 "2"	1	371.8600
7.5400 pg	33194	T322ST2	13.8	0	0.0 "2"	1	371.8600

Q322 Project GIPR Phase 1 Interconnection System Impact Study
2013 Greater Bay Area Summer Peak Base Case
Q322 @626MW
Pittsburg PP-Tesla #2 230kV Line Outage
3 ph 6 cyc flt @ Pittsburg PP & clr Pittsburg PP-Tesla #2 230kV line

Q322 GIPR Phase 1 Interconnection System Impact Study

Selected Generator Terminal Power (MW)

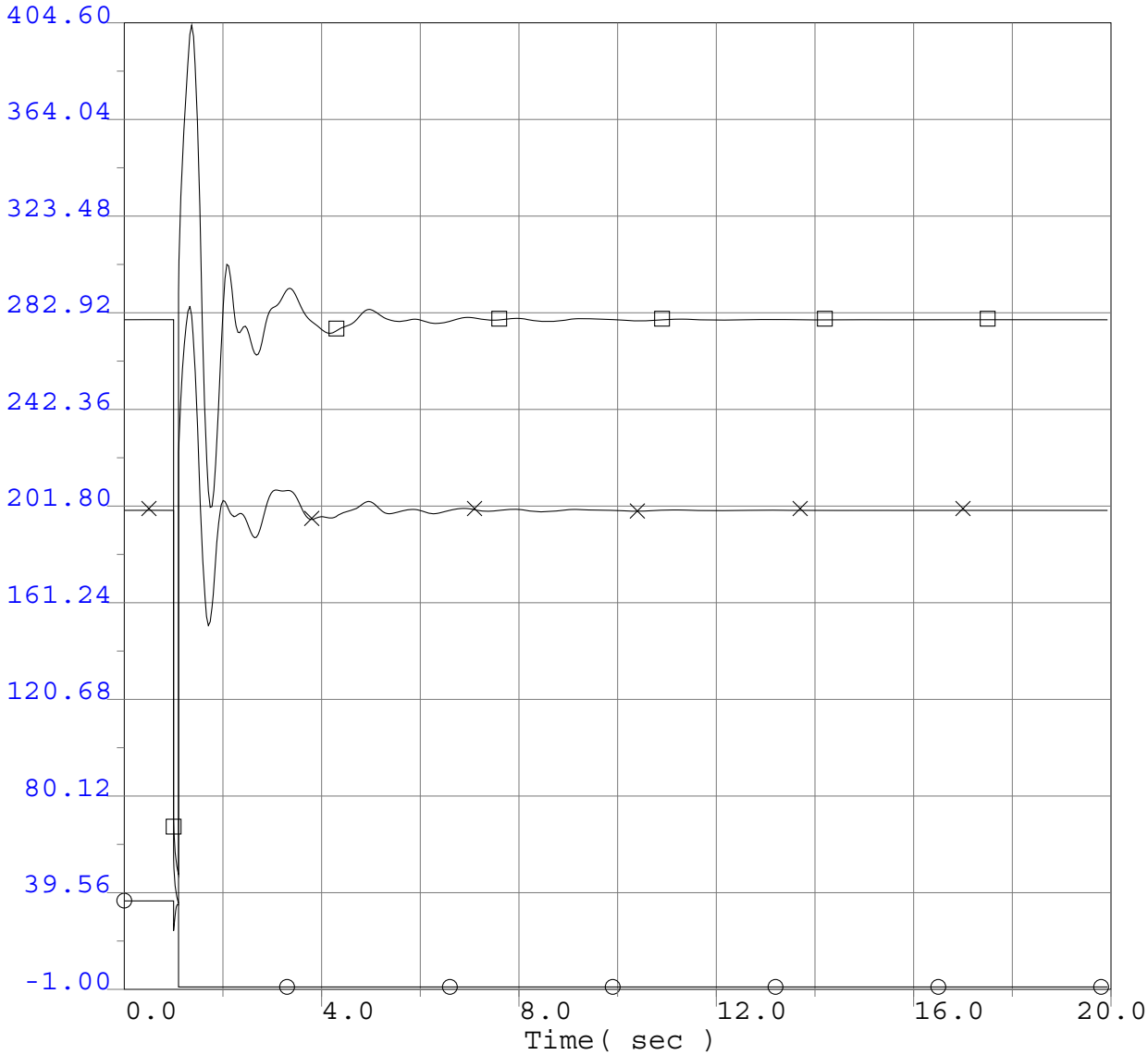

-1.0000 pg	33195		T417	34.5	0	0.0 "1"	1	404.6000
-1.0000 pg	33108	DEC	CTG1	18.0	0	0.0 "1"	1	404.6000
-1.0000 pg	33107	DEC	STG1	24.0	0	0.0 "1"	1	404.6000

Q322 Project GIPR Phase 1 Interconnection System Impact Study
2013 Greater Bay Area Summer Peak Base Case
Q322 @626MW
Pittsburg PP-Tesla #2 230kV Line Outage
3 ph 6 cyc flt @ Pittsburg PP & clr Pittsburg PP-Tesla #2 230kV line

Q322 GIPR Phase 1 Interconnection System Impact Study

Project Generator Terminal Reactive Power (MVAr)

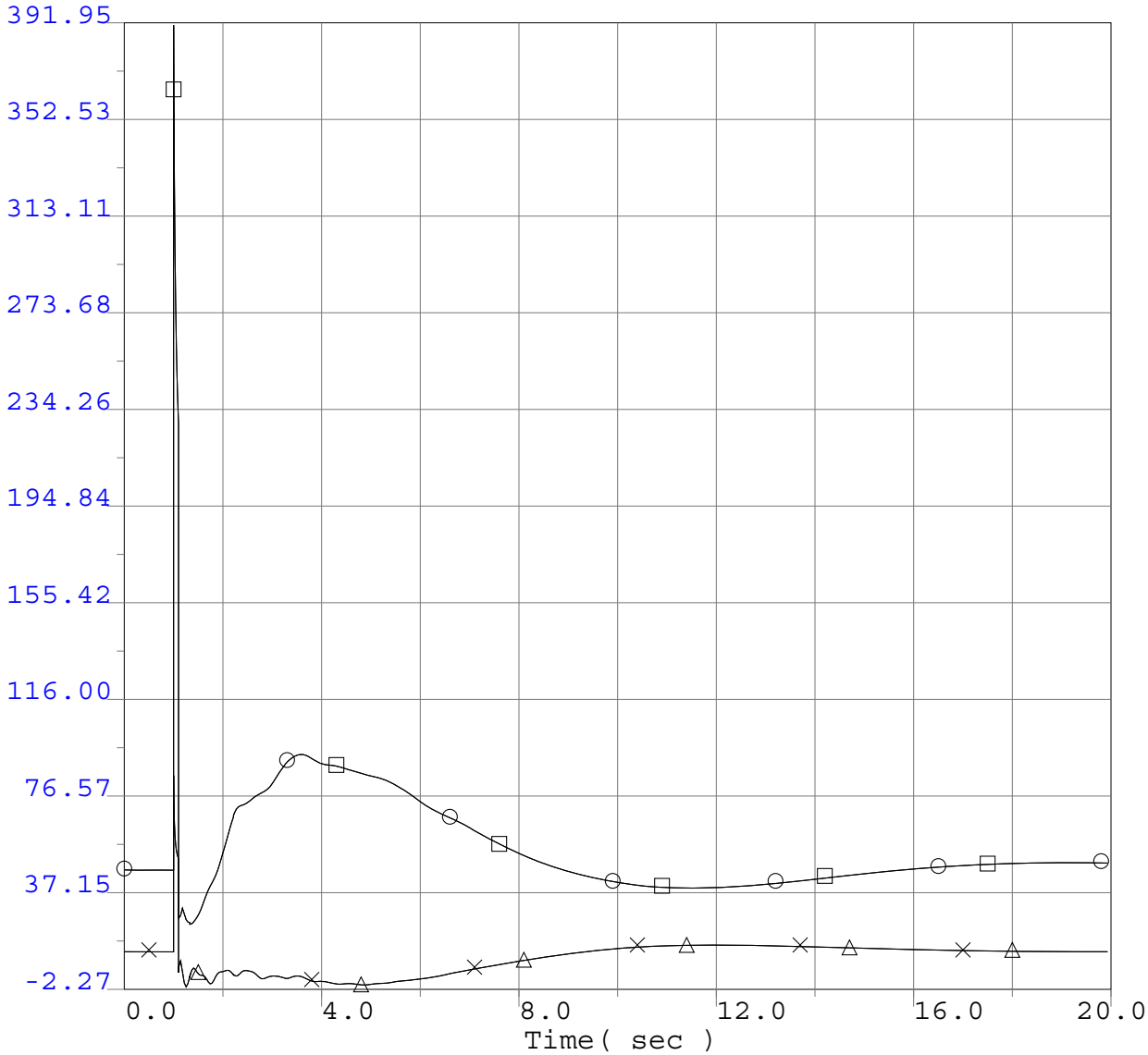

-2.2700	qg	33191	T322GT1	16.5	0	0.0 "1"	1	391.9500
-2.2700	qg	33192	T322ST1	13.8	0	0.0 "1"	1	391.9500
-2.2700	qg	33193	T322GT2	16.5	0	0.0 "2"	1	391.9500
-2.2700	qg	33194	T322ST2	13.8	0	0.0 "2"	1	391.9500

Q322 Project GIPR Phase 1 Interconnection System Impact Study
2013 Greater Bay Area Summer Peak Base Case
Q322 @626MW
Pittsburg PP-Tesla #2 230kV Line Outage
3 ph 6 cyc flt @ Pittsburg PP & clr Pittsburg PP-Tesla #2 230kV line

Q322 GIPR Phase 1 Interconnection System Impact Study

Selected Generator Terminal Reactive Power (MVAr)

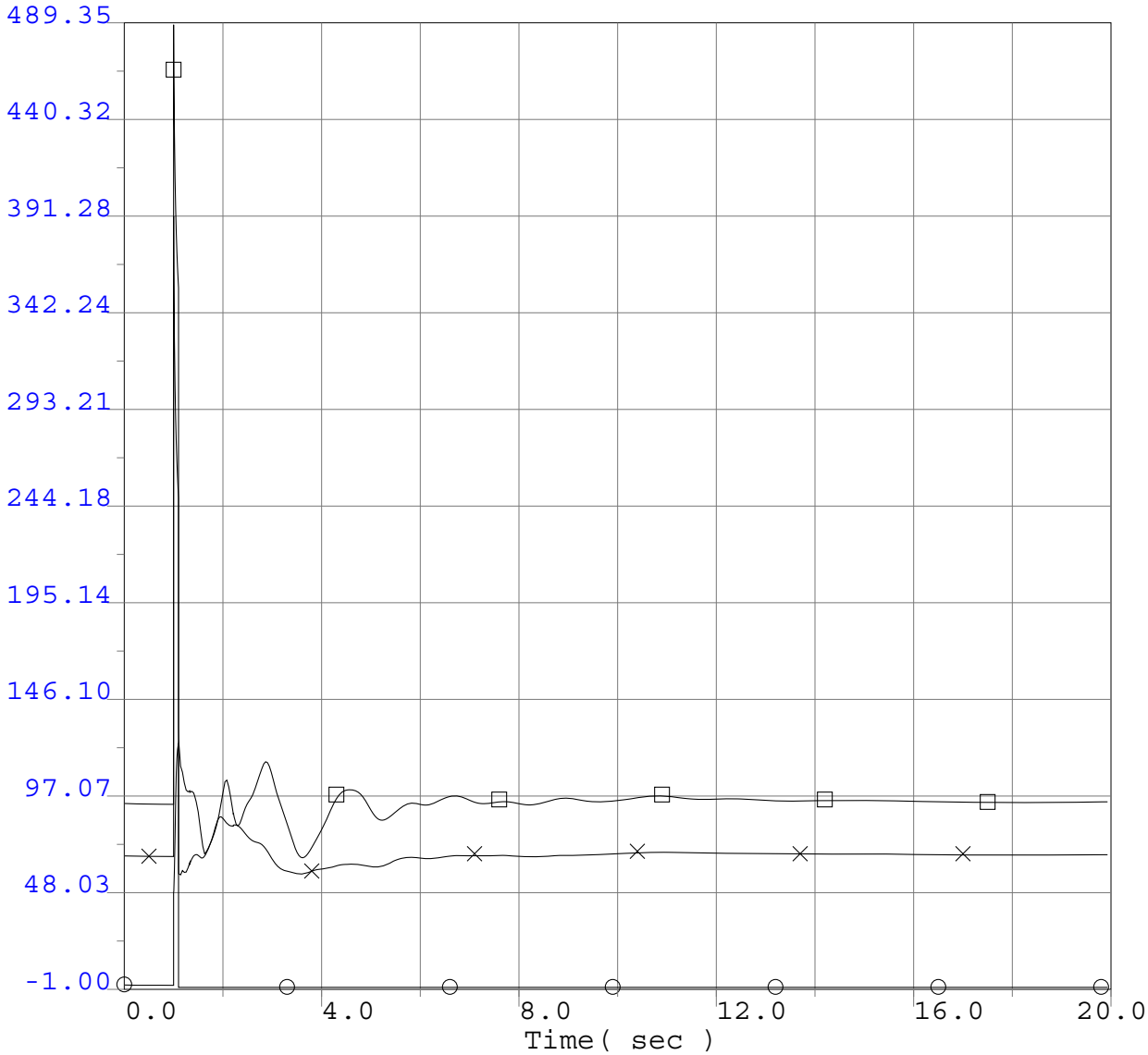

-1.0000 qg	33195		T417	34.5	0	0.0	"1"	1	489.3500
-1.0000 qg	33108	DEC	CTG1	18.0	0	0.0	"1"	1	489.3500
-1.0000 qg	33107	DEC	STG1	24.0	0	0.0	"1"	1	489.3500

Q322 Project GIPR Phase 1 Interconnection System Impact Study
2013 Greater Bay Area Summer Peak Base Case
Q322 @626MW
Pittsburg PP-Tesla #2 230kV Line Outage
3 ph 6 cyc flt @ Pittsburg PP & clr Pittsburg PP-Tesla #2 230kV line

Q322 GIPR Phase 1 Interconnection System Impact Study

Selected WECC Bus Voltage Plots

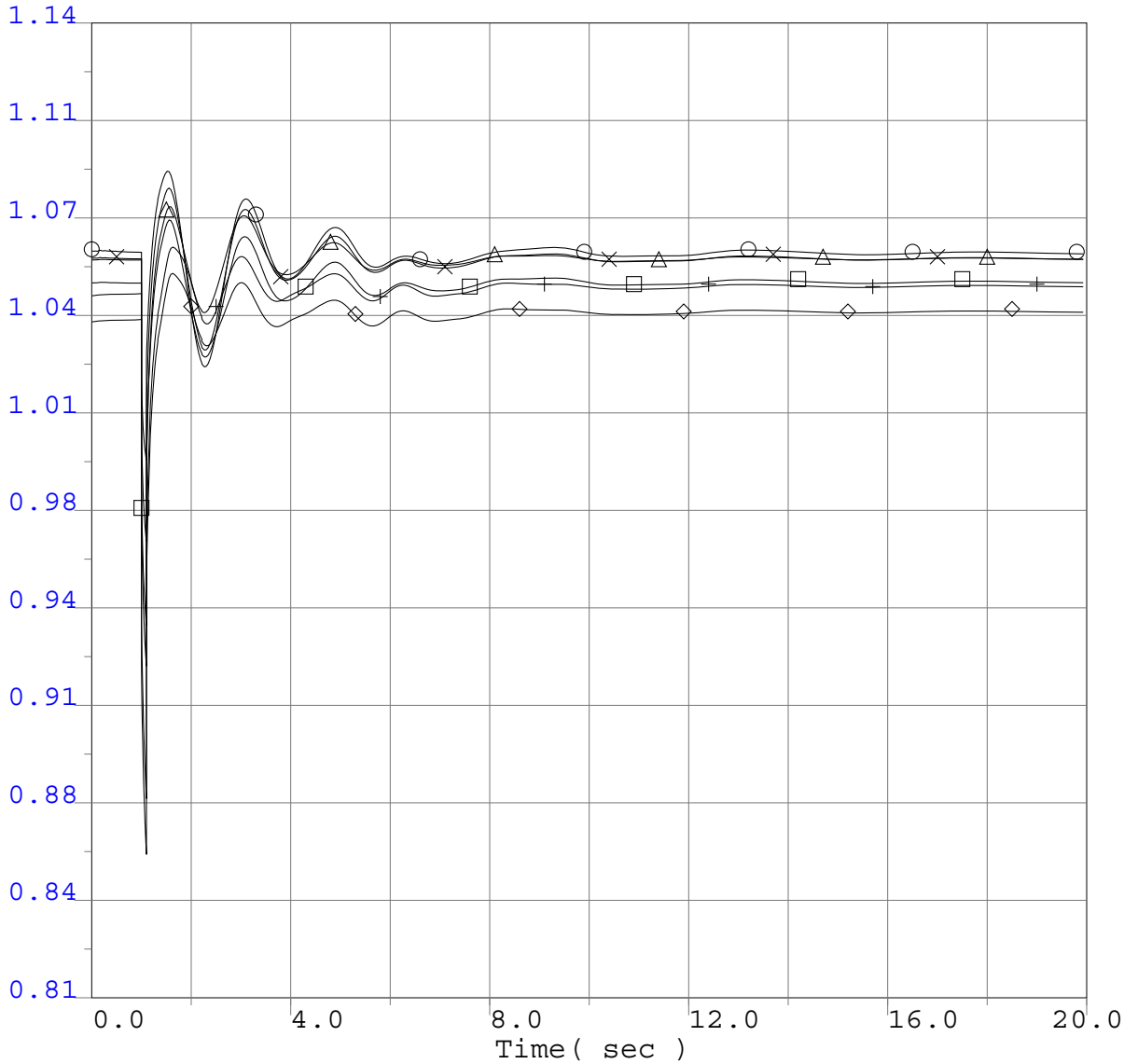

0.8100	vbus	40687	MALIN	500.0	0	0.0 "*"	1	1.1400
0.8100	vbus	30005	ROUND MT	500.0	0	0.0 "*"	1	1.1400
0.8100	vbus	30015	TABLE MT	500.0	0	0.0 "*"	1	1.1400
0.8100	vbus	30030	VACA-DIX	500.0	0	0.0 "*"	1	1.1400
0.8100	vbus	30040	TESLA	500.0	0	0.0 "*"	1	1.1400
0.8100	vbus	30035	TRACY	500.0	0	0.0 "*"	1	1.1400

Q322 Project GIPR Phase 1 Interconnection System Impact Study
2013 Greater Bay Area Summer Peak Base Case
Q322 @626MW
Pittsburg PP-Tesla #2 230kV Line Outage
3 ph 6 cyc flt @ Pittsburg PP & clr Pittsburg PP-Tesla #2 230kV line

Q322 GIPR Phase 1 Interconnection System Impact Study

Selected WECC Bus Voltage Plots

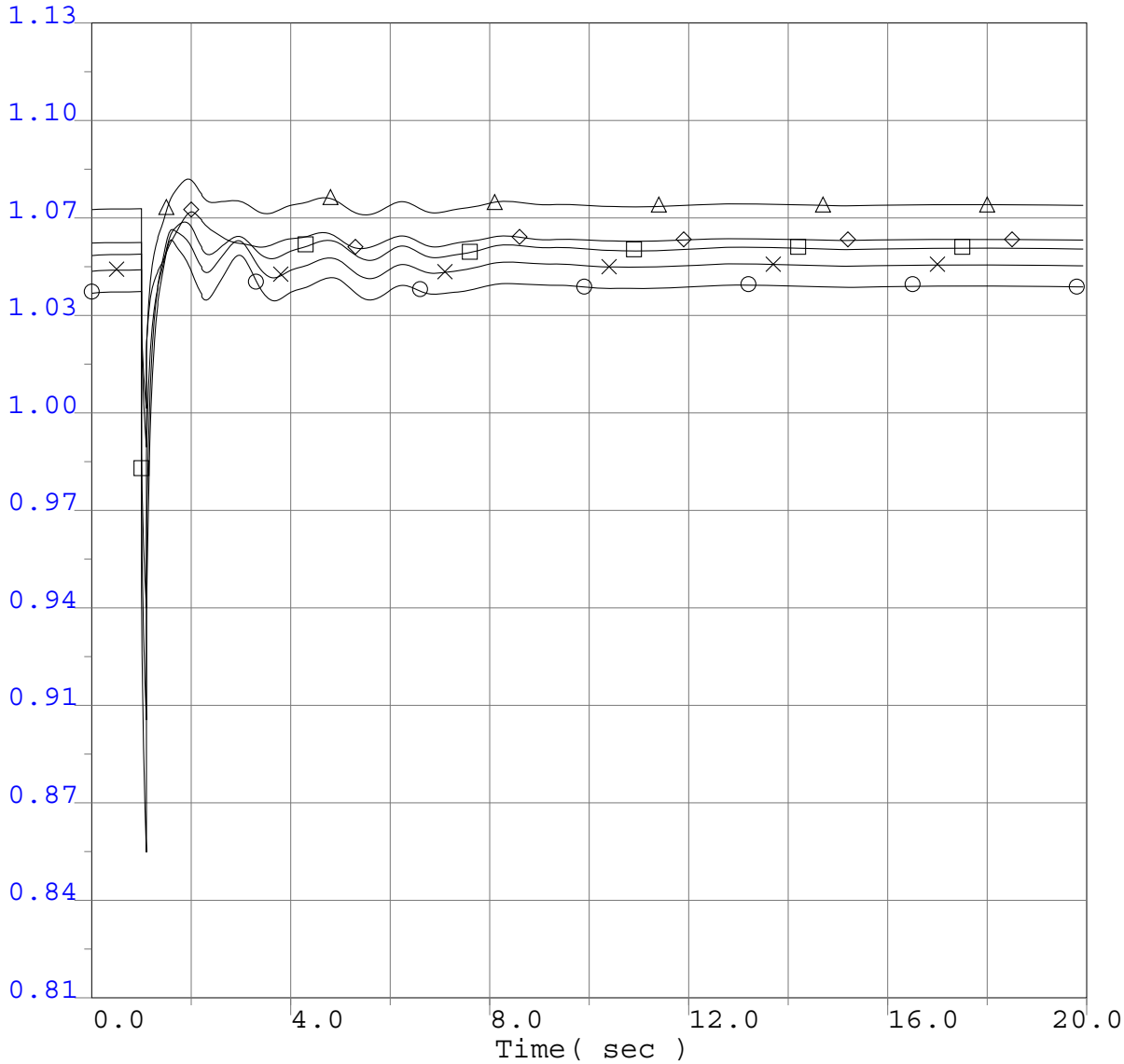

0.8100	vbus	30042	METCALF	500.0	0	0.0 "*"	1	1.1300
0.8100	vbus	30045	MOSSLAND	500.0	0	0.0 "*"	1	1.1300
0.8100	vbus	30050	LOSBANOS	500.0	0	0.0 "*"	1	1.1300
0.8100	vbus	30055	GATES	500.0	0	0.0 "*"	1	1.1300
0.8100	vbus	30060	MIDWAY	500.0	0	0.0 "*"	1	1.1300

Q322 Project GIPR Phase 1 Interconnection System Impact Study
2013 Greater Bay Area Summer Peak Base Case
Q322 @626MW
Pittsburg PP-Tesla #2 230kV Line Outage
3 ph 6 cyc flt @ Pittsburg PP & clr Pittsburg PP-Tesla #2 230kV line

Q322 GIPR Phase 1 Interconnection System Impact Study

Selected WECC Bus Voltage Plots

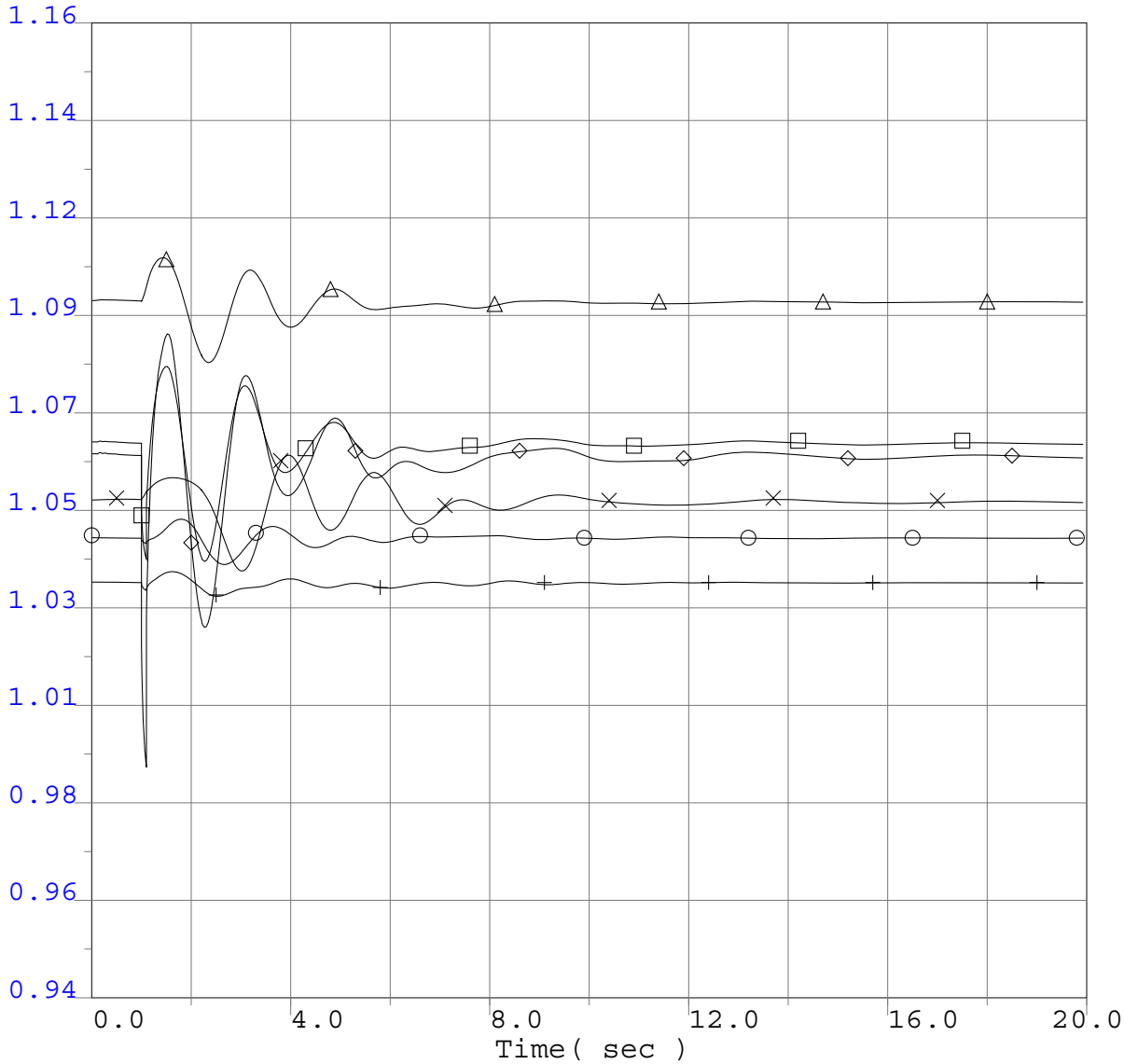

0.9400	vbus	14001	FOURCORN	500.0	0	0.0 "*"	1	1.1600
0.9400	vbus	50703	NIC500	500.0	0	0.0 "*"	1	1.1600
0.9400	vbus	60240	MIDPOINT	500.0	0	0.0 "*"	1	1.1600
0.9400	vbus	62012	TOWN2	500.0	0	0.0 "*"	1	1.1600
0.9400	vbus	40687	MALIN	500.0	0	0.0 "*"	1	1.1600
0.9400	vbus	66340	SIGURD	345.0	0	0.0 "*"	1	1.1600

Q322 Project GIPR Phase 1 Interconnection System Impact Study
2013 Greater Bay Area Summer Peak Base Case
Q322 @626MW
Pittsburg PP-Tesla #2 230kV Line Outage
3 ph 6 cyc flt @ Pittsburg PP & clr Pittsburg PP-Tesla #2 230kV line

Q322 GIPR Phase 1 Interconnection System Impact Study

Selected WECC Bus Voltage Plots

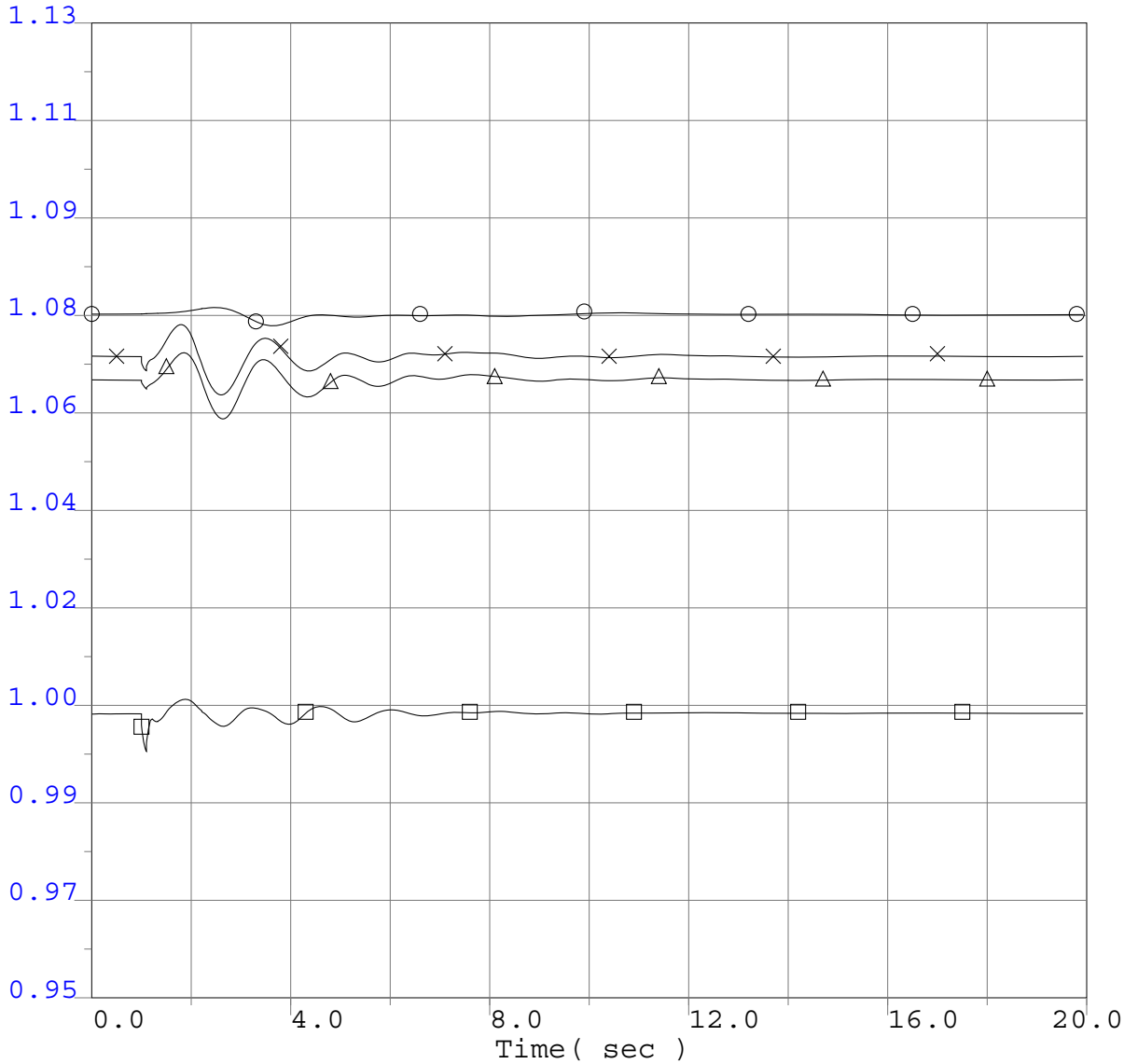

○	0.9500 vbul	54150	WILLESD9 240.0	0	0.0 "*"	1	1.1300
⊗	0.9500 vbus	14003	NAVAJO 500.0	0	0.0 "*"	1	1.1300
□	0.9500 vbus	24153	VESTAL 230.0	0	0.0 "*"	1	1.1300
△	0.9500 vbus	22360	IMPRLVLY 500.0	0	0.0 "*"	1	1.1300

Q322 Project GIPR Phase 1 Interconnection System Impact Study
2013 Greater Bay Area Summer Peak Base Case
Q322 @626MW
Pittsburg PP-Tesla #2 230kV Line Outage
3 ph 6 cyc flt @ Pittsburg PP & clr Pittsburg PP-Tesla #2 230kV line

Q322 GIPR Phase 1 Interconnection System Impact Study

Selected WECC Bus Frequency Plots

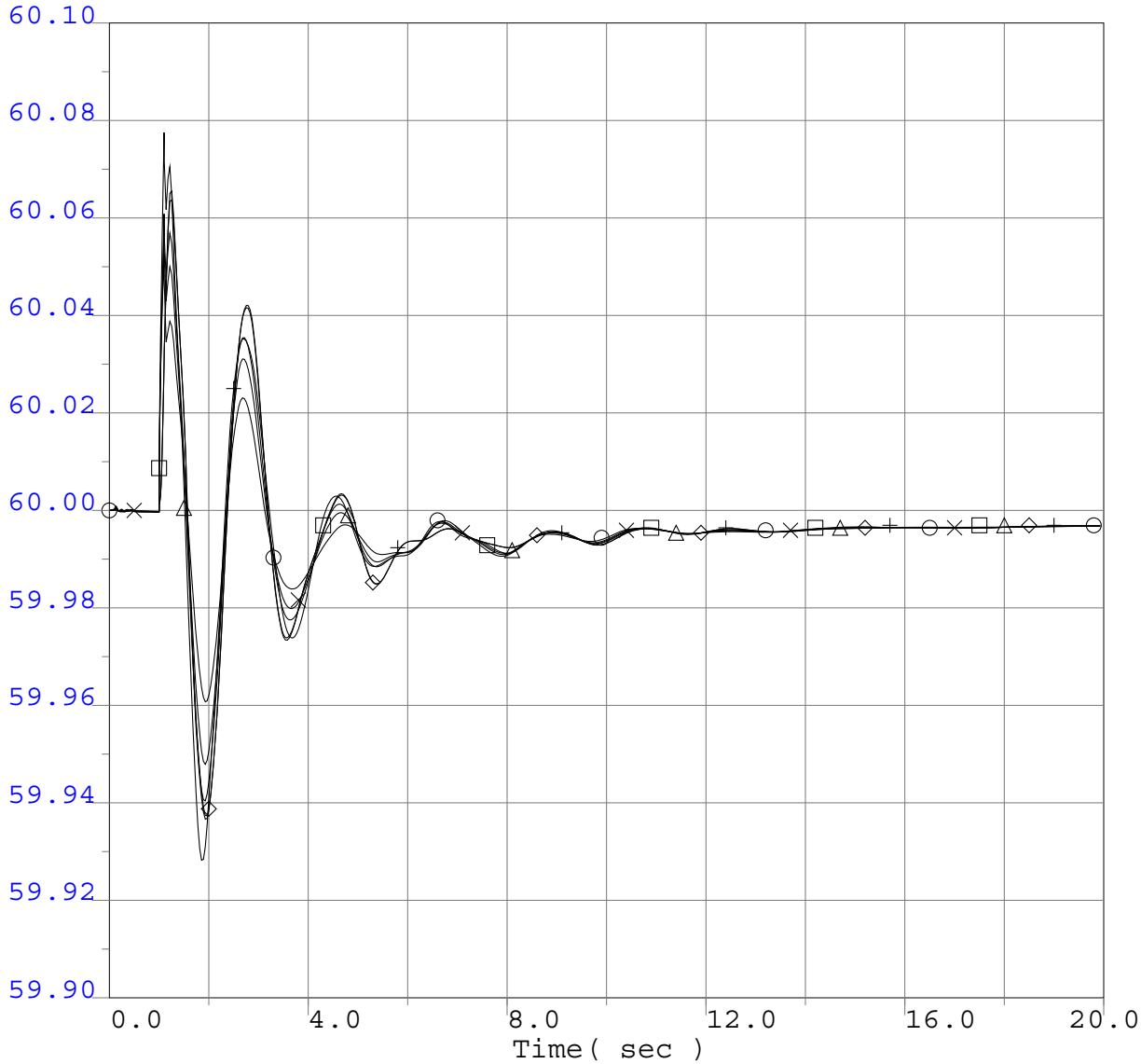

Q322 Project GIPR Phase 1 Interconnection System Impact Study
2013 Greater Bay Area Summer Peak Base Case
Q322 @626MW
Pittsburg PP-Tesla #2 230kV Line Outage
3 ph 6 cyc flt @ Pittsburg PP & clr Pittsburg PP-Tesla #2 230kV line

Q322 GIPR Phase 1 Interconnection System Impact Study

Selected WECC Bus Frequency Plots

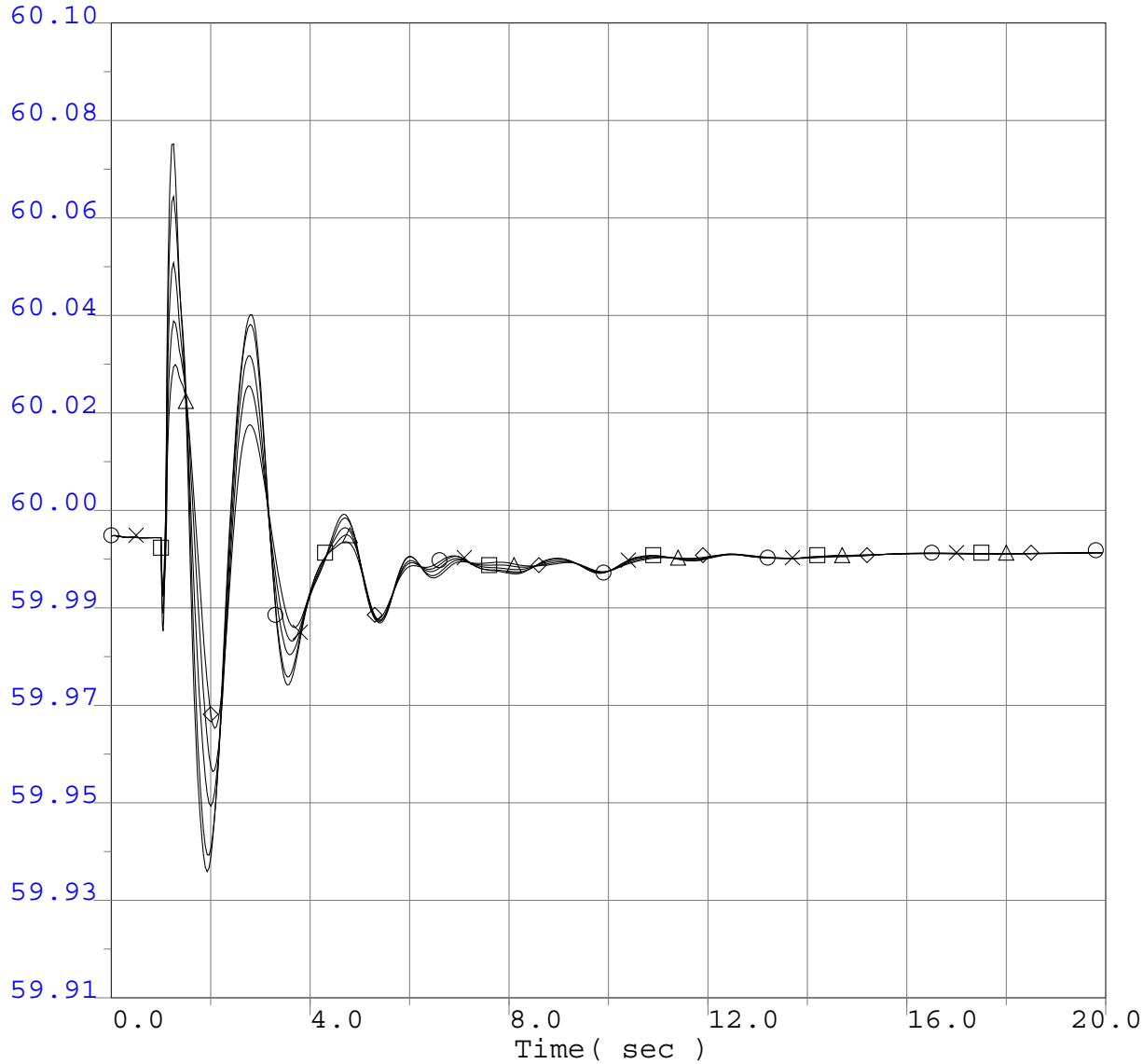

○	59.9100 fbus	30042	METCALF 500.0	0	0.0 "*"	1	60.1000
⊗	59.9100 fbus	30045	MOSSLAND 500.0	0	0.0 "*"	1	60.1000
□	59.9100 fbus	30050	LOSBANOS 500.0	0	0.0 "*"	1	60.1000
△	59.9100 fbus	30055	GATES 500.0	0	0.0 "*"	1	60.1000
◇	59.9100 fbus	30060	MIDWAY 500.0	0	0.0 "*"	1	60.1000

Q322 Project GIPR Phase 1 Interconnection System Impact Study
2013 Greater Bay Area Summer Peak Base Case
Q322 @626MW
Pittsburg PP-Tesla #2 230kV Line Outage
3 ph 6 cyc flt @ Pittsburg PP & clr Pittsburg PP-Tesla #2 230kV line

Q322 GIPR Phase 1 Interconnection System Impact Study

Selected WECC Bus Frequency Plots

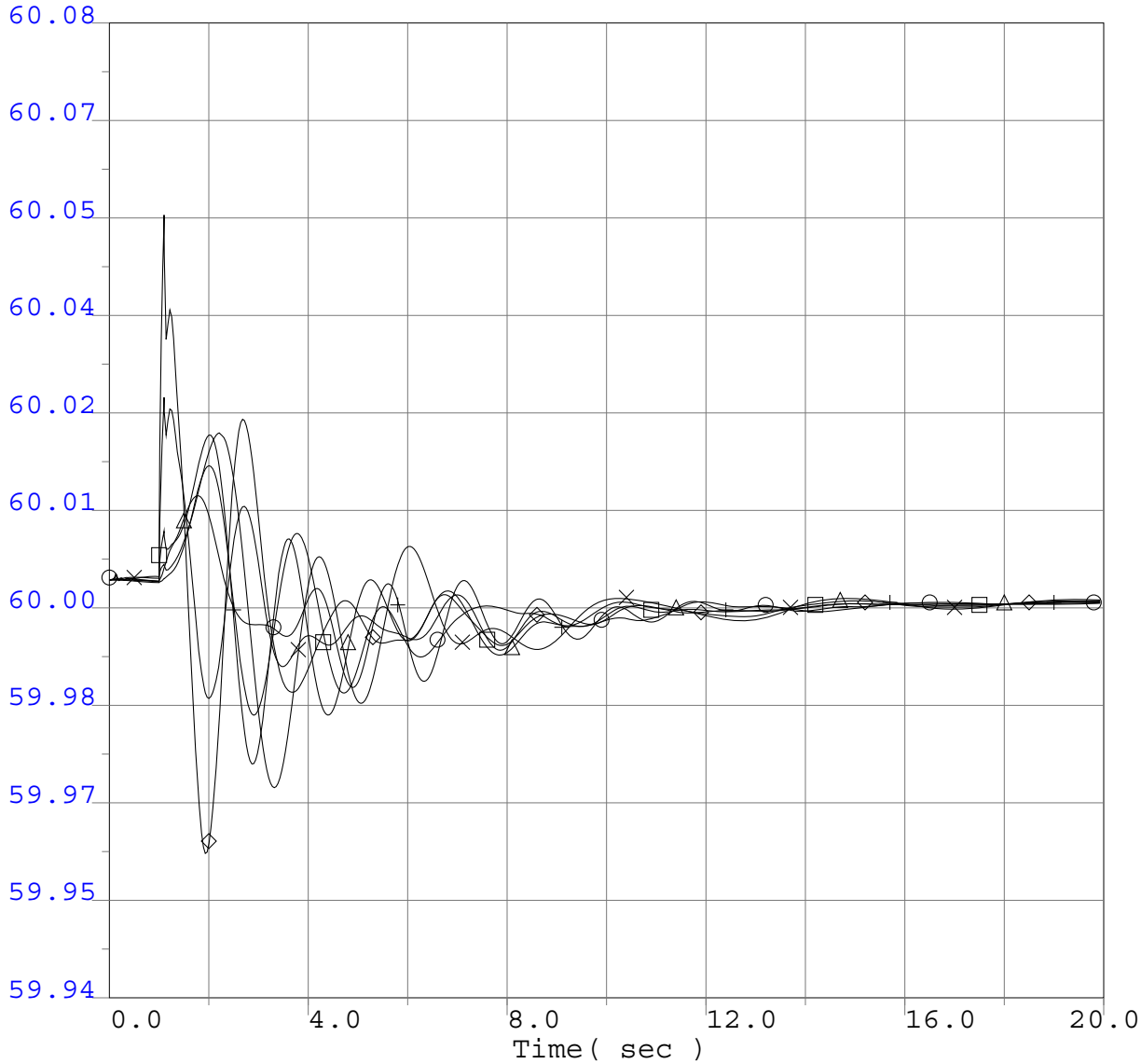

59.9400	fbus	14001	FOURCORN	500.0	0	0.0 "*"	1	60.0800
59.9400	fbus	50703	NIC500	500.0	0	0.0 "*"	1	60.0800
59.9400	fbus	60240	MIDPOINT	500.0	0	0.0 "*"	1	60.0800
59.9400	fbus	62012	TOWN2	500.0	0	0.0 "*"	1	60.0800
59.9400	fbus	40687	MALIN	500.0	0	0.0 "*"	1	60.0800
59.9400	fbus	66340	SIGURD	345.0	0	0.0 "*"	1	60.0800

Q322 Project GIPR Phase 1 Interconnection System Impact Study
2013 Greater Bay Area Summer Peak Base Case
Q322 @626MW
Pittsburg PP-Tesla #2 230kV Line Outage
3 ph 6 cyc flt @ Pittsburg PP & clr Pittsburg PP-Tesla #2 230kV line

Q322 GIPR Phase 1 Interconnection System Impact Study

Selected WECC Bus Frequency Plots

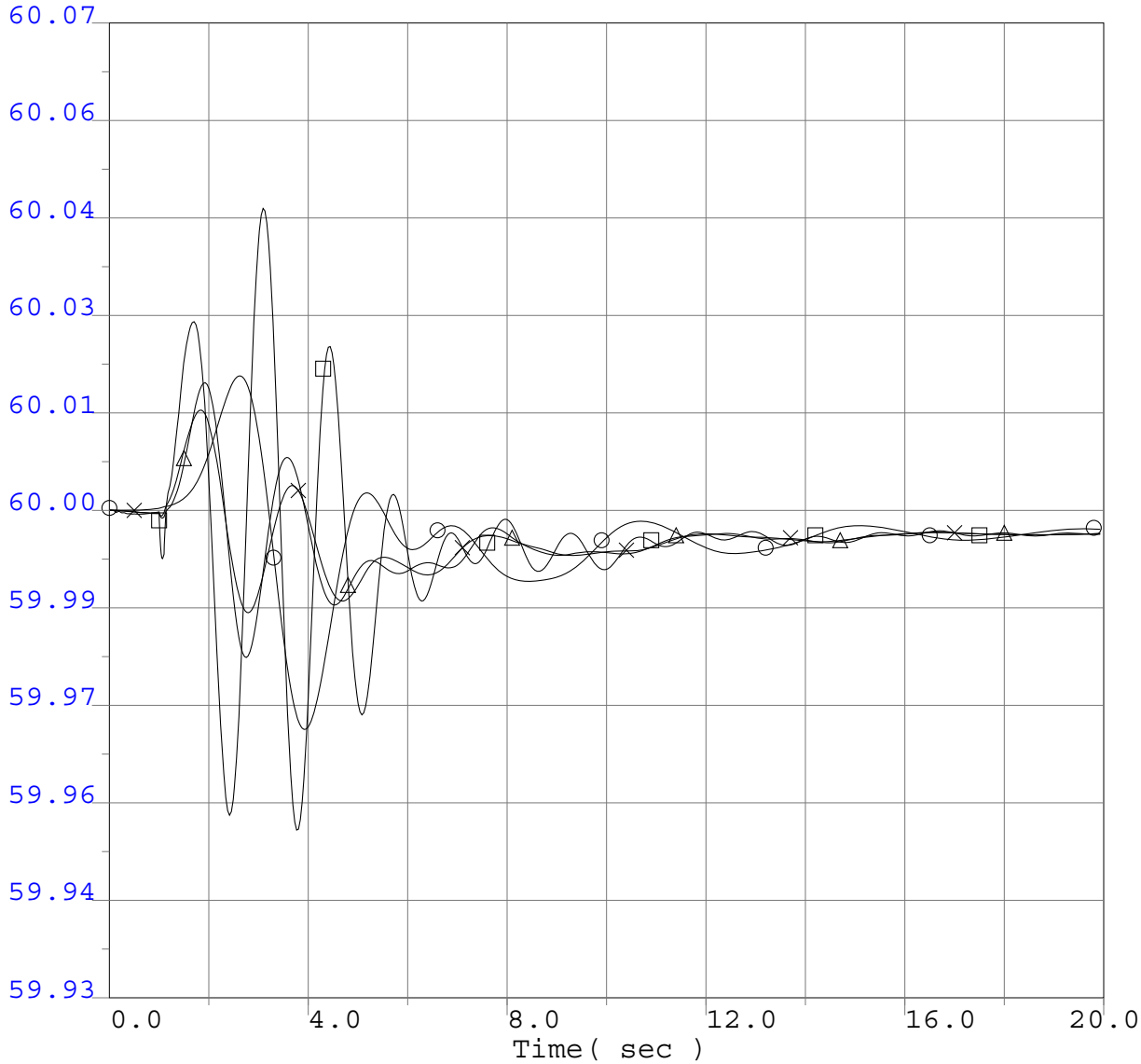

○	59.9300 fbul	54150	WILLESD9 240.0	0	0.0 "*"	1	60.0700
⊗	59.9300 fbus	14003	NAVAJO 500.0	0	0.0 "*"	1	60.0700
□	59.9300 fbus	24153	VESTAL 230.0	0	0.0 "*"	1	60.0700
△	59.9300 fbus	22360	IMPRLVLY 500.0	0	0.0 "*"	1	60.0700

Q322 Project GIPR Phase 1 Interconnection System Impact Study
2013 Greater Bay Area Summer Peak Base Case
Q322 @626MW
Pittsburg PP-Tesla #2 230kV Line Outage
3 ph 6 cyc flt @ Pittsburg PP & clr Pittsburg PP-Tesla #2 230kV line

Q322 GIPR Phase 1 Interconnection System Impact Study

WECC Generator Rotor Angle

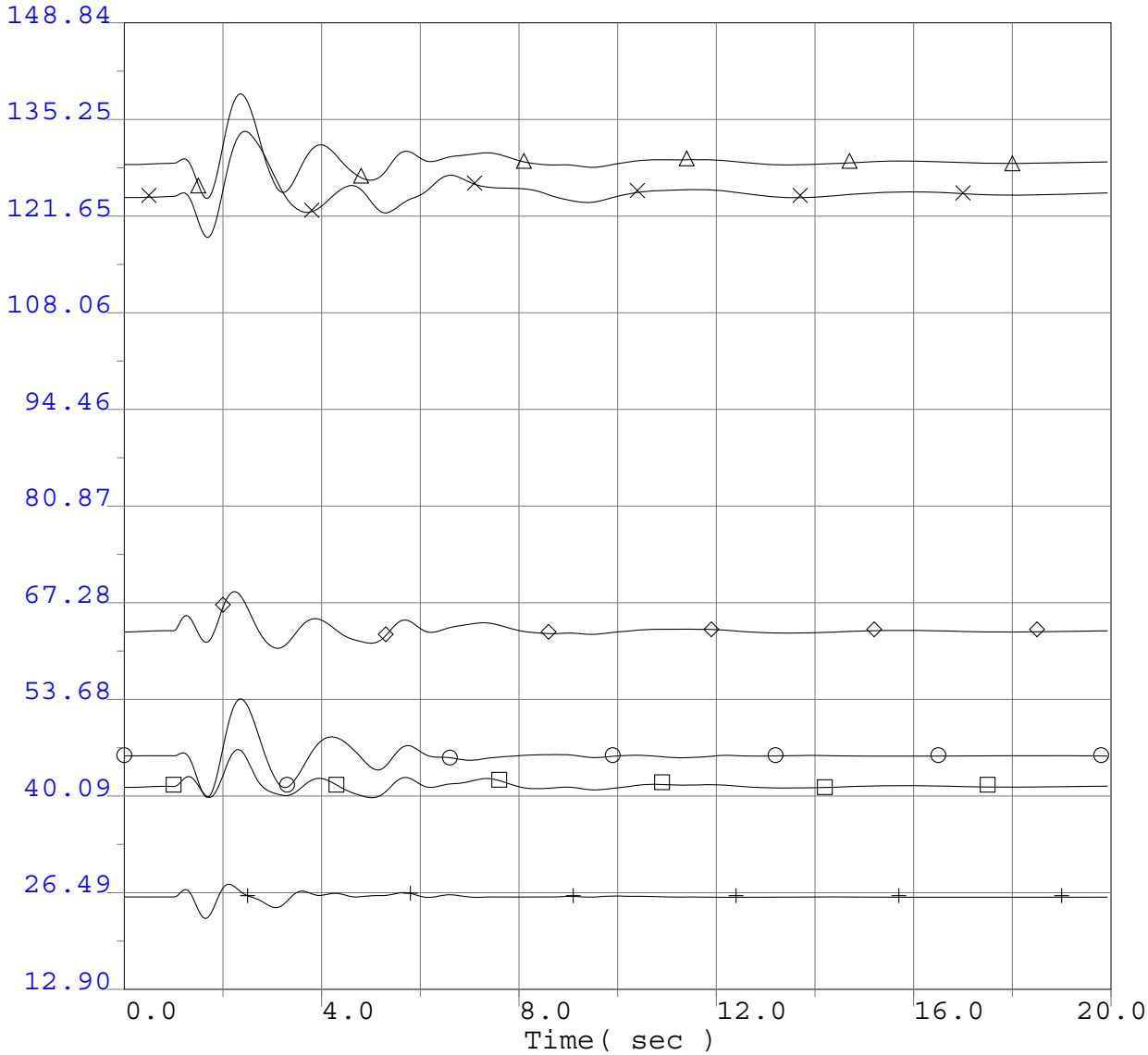

12.9000 ang	14914	FCNGN4CC	22.0	0	0.0 "H"	1	148.8400
12.9000 ang	50499	GMS G5	13.8	0	0.0 "1"	1	148.8400
12.9000 ang	60100	BRWNL 5	13.8	0	0.0 "1"	1	148.8400
12.9000 ang	62048	COLSTP 3	26.0	0	0.0 "1"	1	148.8400
12.9000 ang	44071	JDA 0102	13.8	0	0.0"01"	1	148.8400
12.9000 ang	36411	DIABLO 1	25.0	0	0.0 "1"	1	148.8400

Q322 Project GIPR Phase 1 Interconnection System Impact Study
2013 Greater Bay Area Summer Peak Base Case
Q322 @626MW
Pittsburg PP-Tesla #2 230kV Line Outage
3 ph 6 cyc flt @ Pittsburg PP & clr Pittsburg PP-Tesla #2 230kV line

Q322 GIPR Phase 1 Interconnection System Impact Study

WECC Generator Rotor Angle

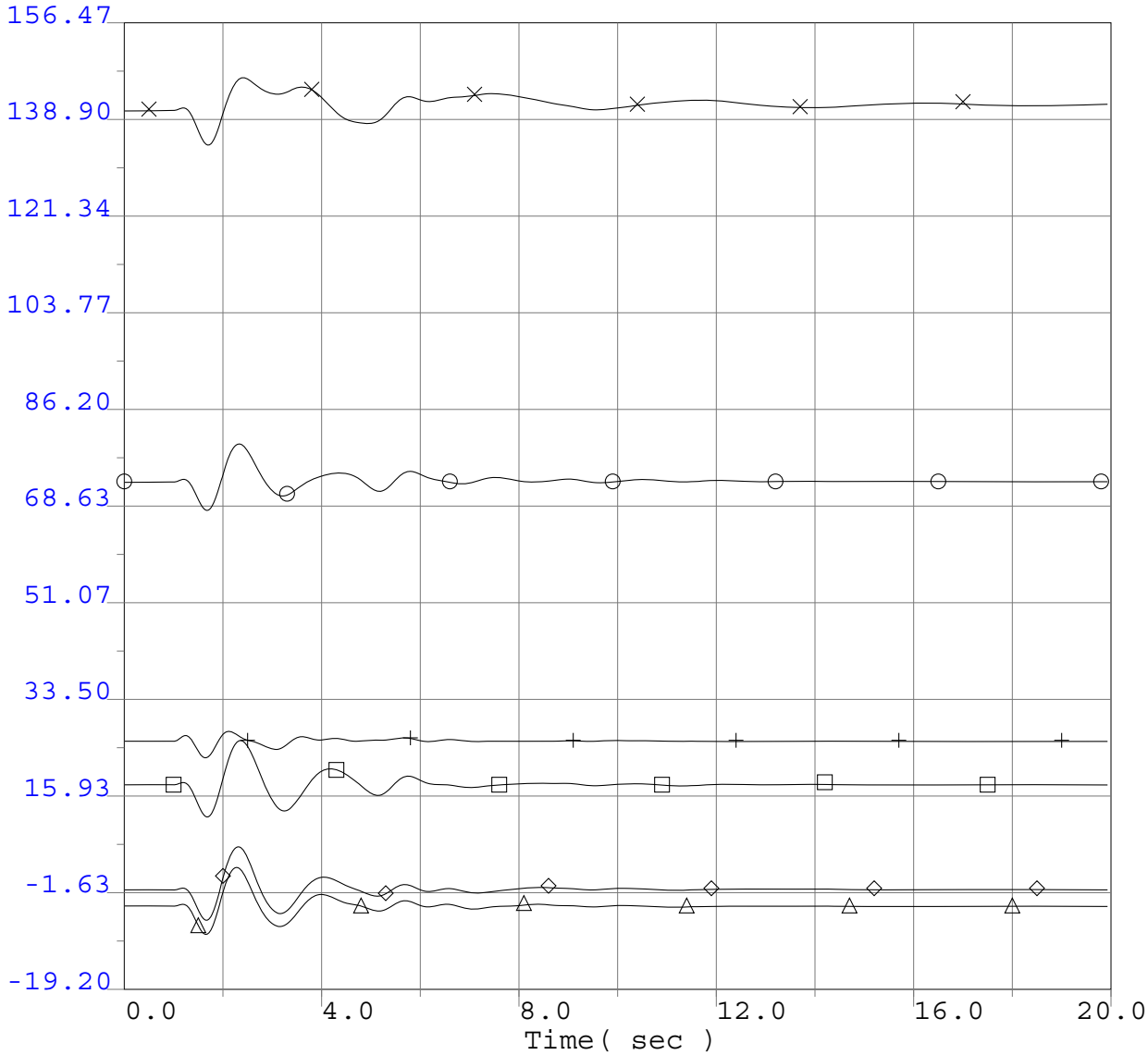

-19.2000 ang	65490	EHUNTR 1	24.0	0	0.0 "1"	1	156.4700
-19.2000 ang	54338	SUND#2GN	18.0	0	0.0 "2"	1	156.4700
-19.2000 ang	79151	GLENC3-4	13.8	0	0.0 "3"	1	156.4700
-19.2000 ang	24130	S.ONOFR3	22.0	0	0.0 "3"	1	156.4700
-19.2000 ang	22244	ENCINA 5	24.0	0	0.0 "1"	1	156.4700
-19.2000 ang	36411	DIABLO 1	25.0	0	0.0 "1"	1	156.4700

Q322 Project GIPR Phase 1 Interconnection System Impact Study
2013 Greater Bay Area Summer Peak Base Case
Q322 @626MW
Pittsburg PP-Tesla #2 230kV Line Outage
3 ph 6 cyc flt @ Pittsburg PP & clr Pittsburg PP-Tesla #2 230kV line

Q322 GIPR Phase 1 Interconnection System Impact Study

Selected PG&E Transmission Line Flows (MW)

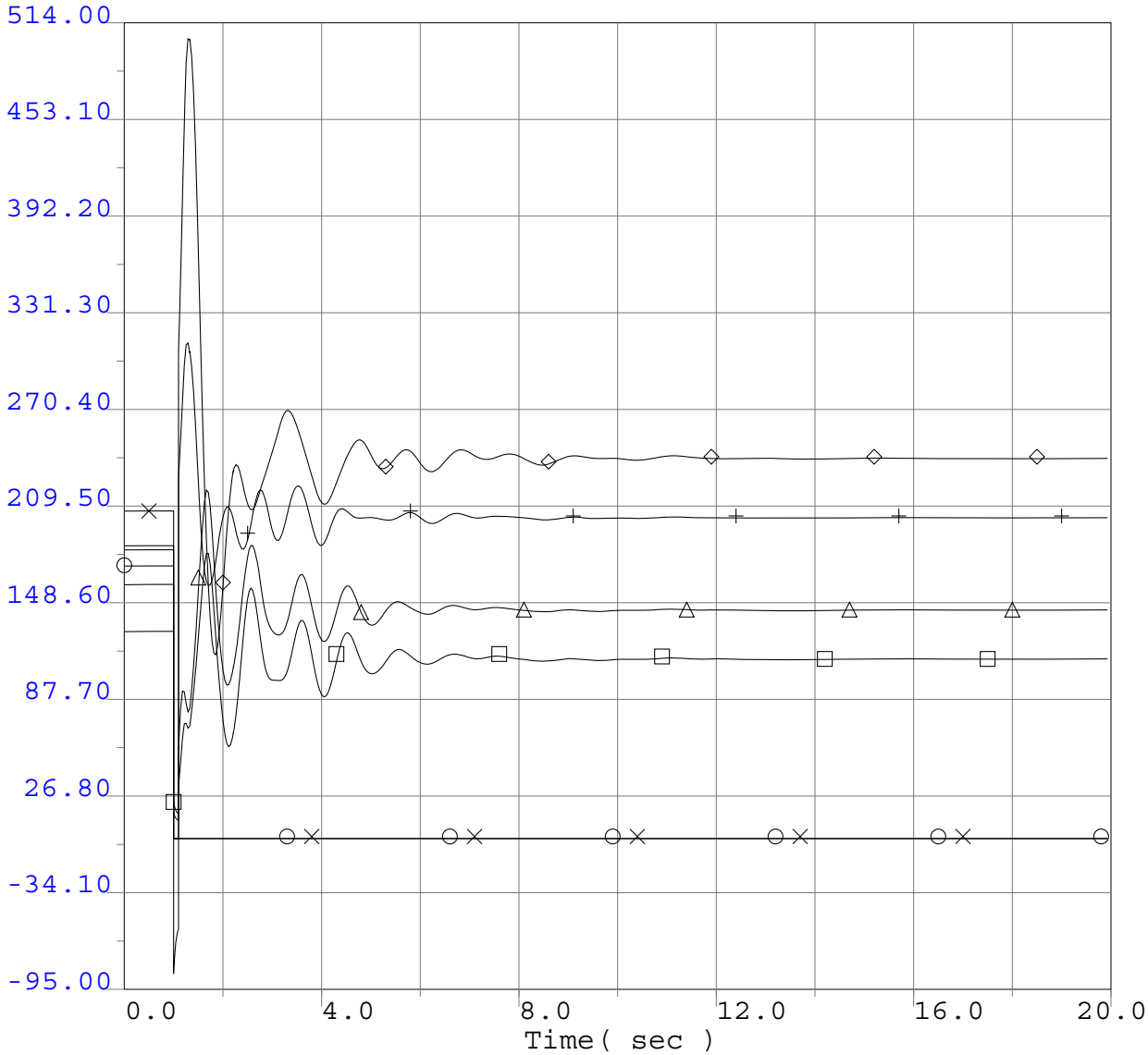

-95.0000 pbr	30527	PITSBG E 230.0	30600	TRES VAQ 230.0	1	2	514.0000
-95.0000 pbr	30600	TRES VAQ 230.0	30640	TESLA C 230.0	1	2	514.0000
-95.0000 pbr	30535	TIDEWATR 230.0	30527	PITSBG E 230.0	1	1	514.0000
-95.0000 pbr	30536	TESORO 230.0	30527	PITSBG E 230.0	1	1	514.0000
-95.0000 pbr	30527	PITSBG E 230.0	30595	FLOWIND2 230.0	1	1	514.0000
-95.0000 pbr	30527	PITSBG E 230.0	30560	E. SHORE 230.0	1	1	514.0000

Q322 Project GIPR Phase 1 Interconnection System Impact Study
2013 Greater Bay Area Summer Peak Base Case
Q322 @626MW
Pittsburg PP-Tesla #2 230kV Line Outage
3 ph 6 cyc flt @ Pittsburg PP & clr Pittsburg PP-Tesla #2 230kV line

Q322 GIPR Phase 1 Interconnection System Impact Study

Selected PG&E Transmission Line Flows (MW)

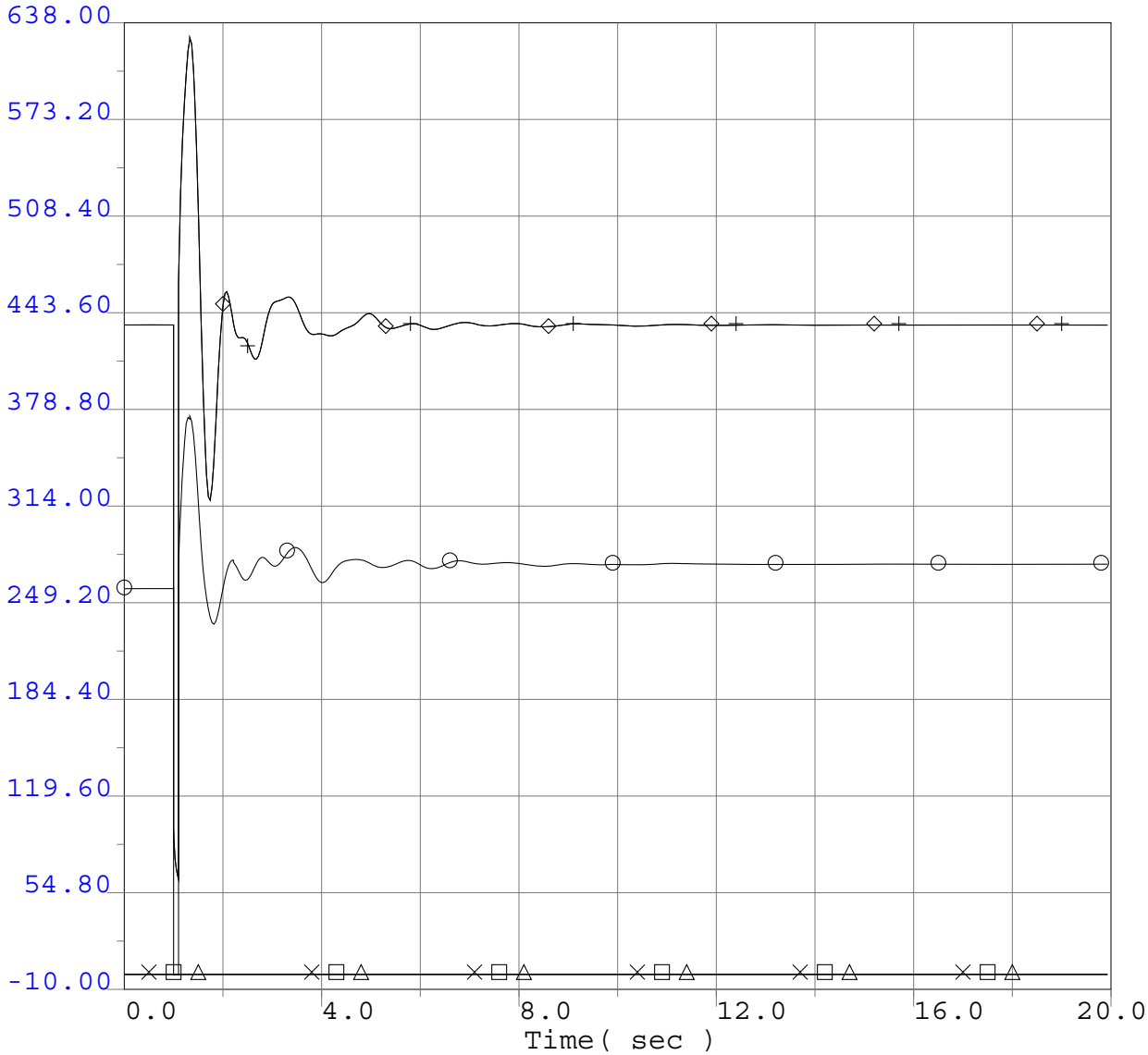

-10.0000 pbr	30527	PITSBG E 230.0	30700	SANMATEO 230.0	1	1	638.0000
-10.0000 pbr	30000	PTSB 7 20.0	30527	PITSBG E 230.0	1	1	638.0000
-10.0000 pbr	33105	PTSB 5 18.0	30527	PITSBG E 230.0	1	1	638.0000
-10.0000 pbr	33106	PTSB 6 18.0	30527	PITSBG E 230.0	1	1	638.0000
-10.0000 pbr	30528	DEC PTSG 230.0	30526	PITSBG D 230.0	1	1	638.0000
-10.0000 pbr	30528	DEC PTSG 230.0	30526	PITSBG D 230.0	1	2	638.0000

Q322 Project GIPR Phase 1 Interconnection System Impact Study
2013 Greater Bay Area Summer Peak Base Case
Q322 @626MW
Pittsburg PP-Tesla #2 230kV Line Outage
3 ph 6 cyc flt @ Pittsburg PP & clr Pittsburg PP-Tesla #2 230kV line

Q322 GIPR Phase 1 Interconnection System Impact Study

Selected PG&E Transmission Line Flows (MW)

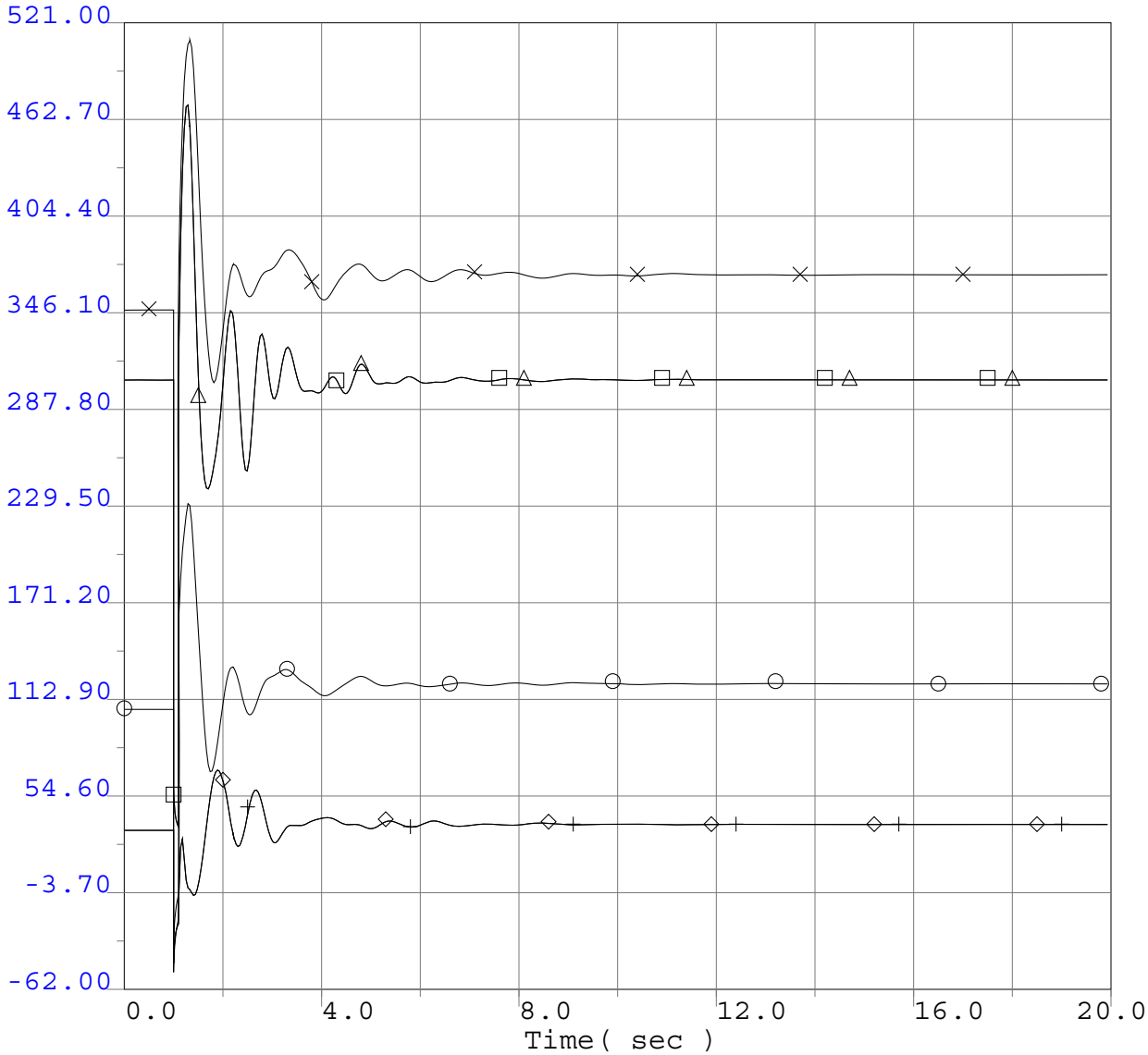

-62.0000 pbr	30526	PITSBG D 230.0	30555	SANRAMON 230.0	1	1	521.0000
-62.0000 pbr	30526	PITSBG D 230.0	30561	TASSAJAR 230.0	1	1	521.0000
-62.0000 pbr	30531	T322BUS1 230.0	30526	PITSBG D 230.0	1	1	521.0000
-62.0000 pbr	30532	T322BUS2 230.0	30526	PITSBG D 230.0	1	1	521.0000
-62.0000 pbr	30526	PITSBG D 230.0	32950	PITSBURG 115.0	1	12	521.0000
-62.0000 pbr	30526	PITSBG D 230.0	32950	PITSBURG 115.0	1	13	521.0000

Q322 Project GIPR Phase 1 Interconnection System Impact Study
2013 Greater Bay Area Summer Peak Base Case
Q322 @626MW
Pittsburg PP-Tesla #2 230kV Line Outage
3 ph 6 cyc flt @ Pittsburg PP & clr Pittsburg PP-Tesla #2 230kV line

Q322 GIPR Phase 1 Interconnection System Impact Study

Selected PG&E Transmission Line Flows (MW)

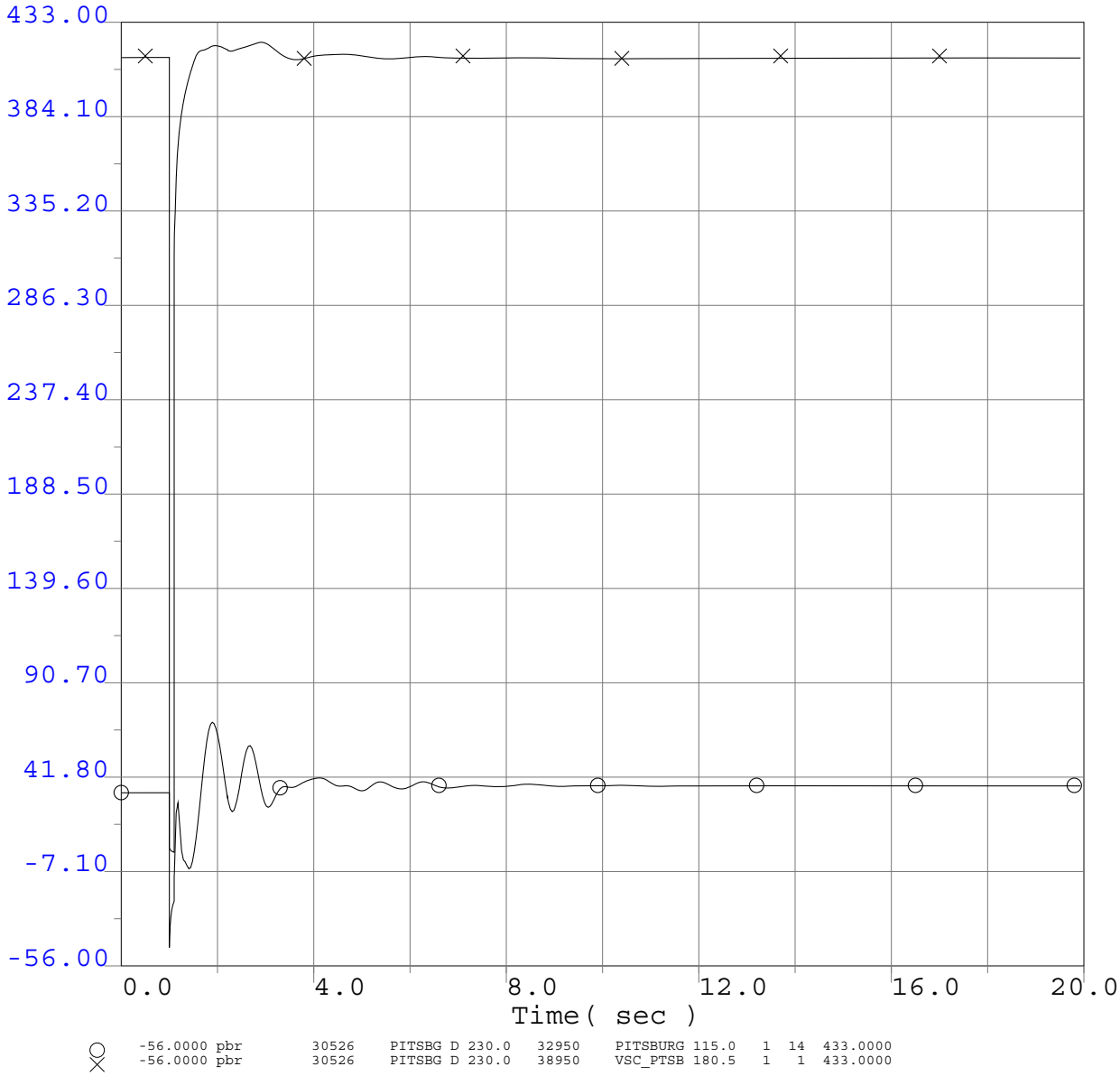

Q322 Project GIPR Phase 1 Interconnection System Impact Study
2013 Greater Bay Area Summer Peak Base Case
Q322 @626MW
Pittsburg PP-Tesla #2 230kV Line Outage
3 ph 6 cyc flt @ Pittsburg PP & clr Pittsburg PP-Tesla #2 230kV line

Q322 GIPR Phase 1 Interconnection System Impact Study

Selected PG&E Bus Voltage Plots Adjacent to Fault

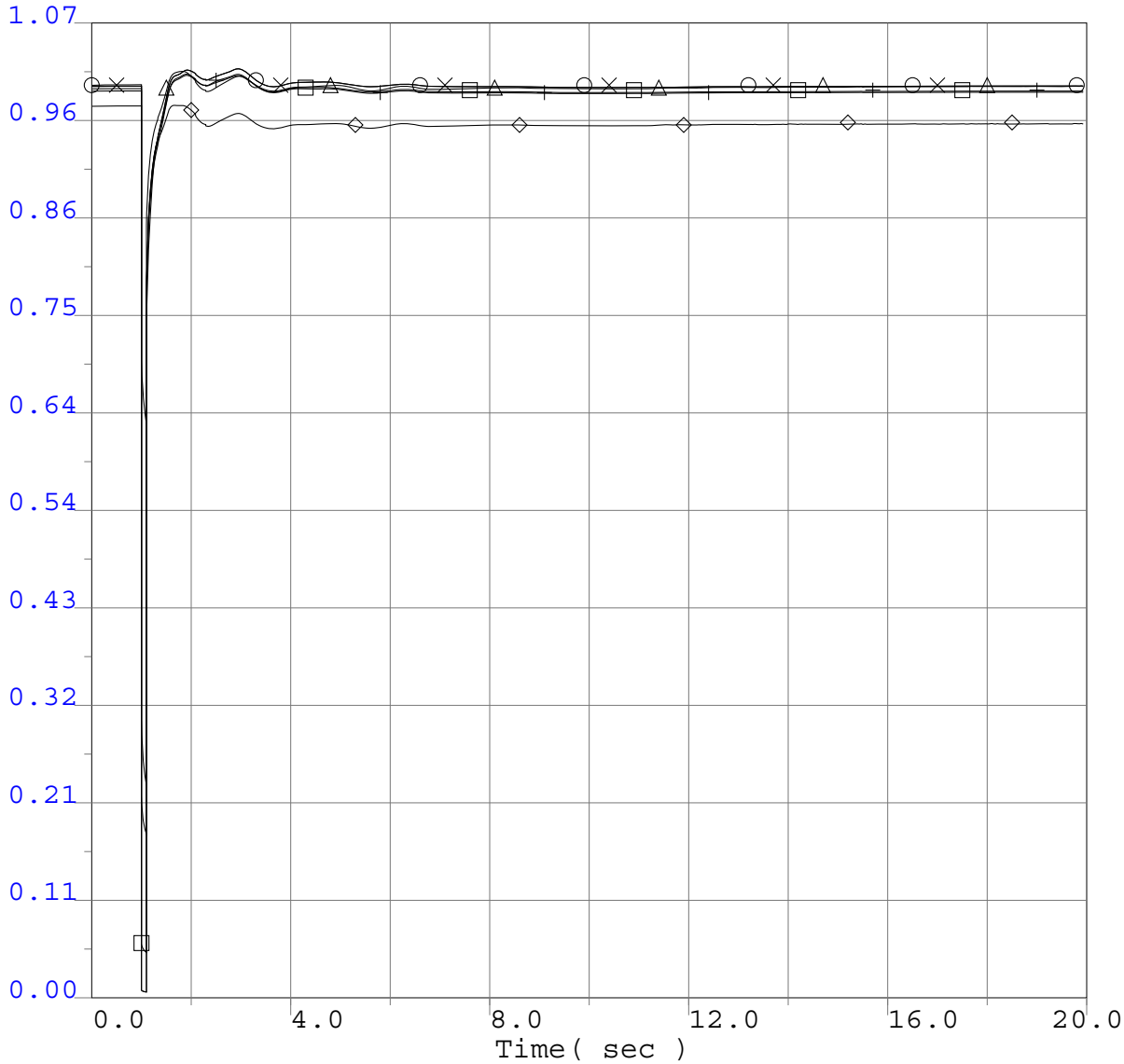

0.0000	vbus	30531	T322BUS1	230.0	0	0.0 "*"	1	1.0700
0.0000	vbus	30532	T322BUS2	230.0	0	0.0 "*"	1	1.0700
0.0000	vbus	30527	PITSBG E	230.0	0	0.0 "*"	1	1.0700
0.0000	vbus	30640	TESLA C	230.0	0	0.0 "*"	1	1.0700
0.0000	vbul	30561	TASSAJAR	230.0	0	0.0 "*"	1	1.0700
0.0000	vbul	30536	TESORO	230.0	0	0.0 "*"	1	1.0700

Q322 Project GIPR Phase 1 Interconnection System Impact Study
2013 Greater Bay Area Summer Peak Base Case
Q322 @626MW
Pittsburg 230kV Bus 1D
3 ph 6 cyc flt @ Pittsburg & clr Pittsburg 230kV Bus 1D

Q322 GIPR Phase 1 Interconnection System Impact Study

Selected PG&E Bus Frequency Plots Adjacent to Fault

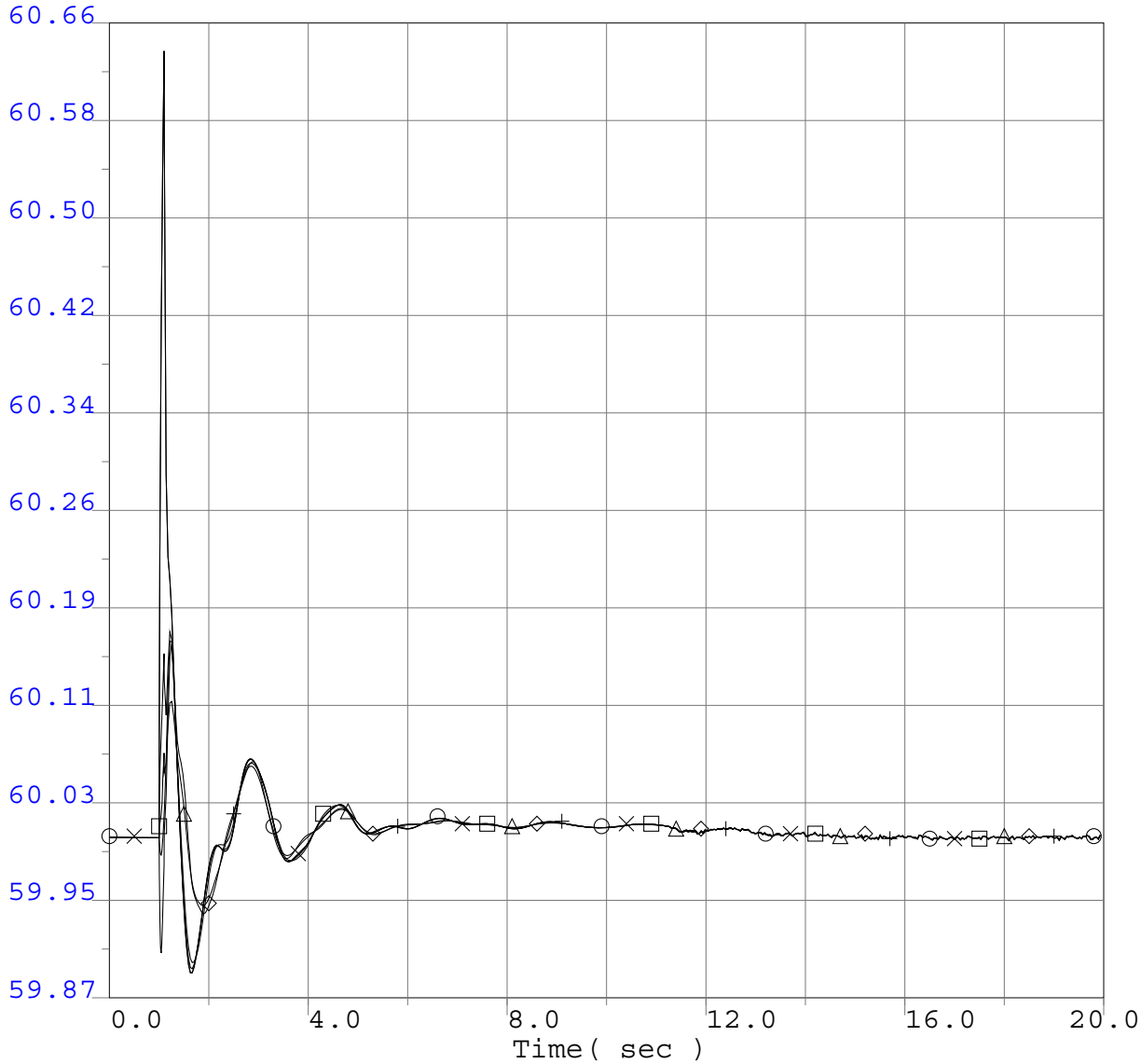

○	59.8700	fbus	30531	T322BUS1	230.0	0	0.0 "*"	1	60.6600
×	59.8700	fbus	30532	T322BUS2	230.0	0	0.0 "*"	1	60.6600
□	59.8700	fbus	30527	PITSBG E	230.0	0	0.0 "*"	1	60.6600
△	59.8700	fbus	30640	TESLA C	230.0	0	0.0 "*"	1	60.6600
◇	59.8700	fbul	30561	TASSAJAR	230.0	0	0.0 "*"	1	60.6600
+	59.8700	fbul	30536	TESORO	230.0	0	0.0 "*"	1	60.6600

Q322 Project GIPR Phase 1 Interconnection System Impact Study
2013 Greater Bay Area Summer Peak Base Case
Q322 @626MW
Pittsburg 230kV Bus 1D
3 ph 6 cyc flt @ Pittsburg & clr Pittsburg 230kV Bus 1D

Q322 GIPR Phase 1 Interconnection System Impact Study

Project Generator Terminal Voltages (P.U.)

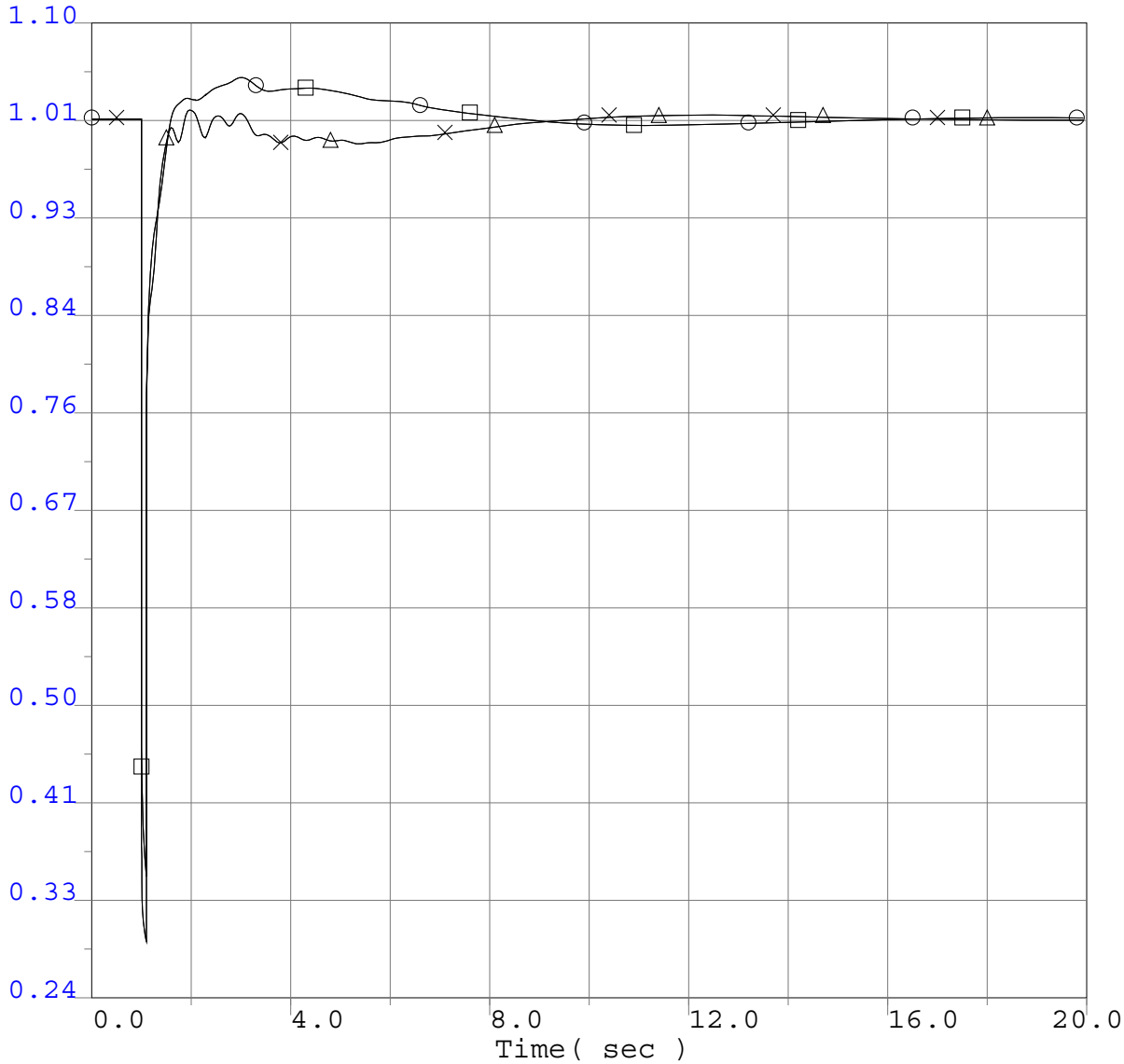

○	0.2400 vt	33191	T322GT1	16.5	0	0.0 "1"	1	1.1000
×	0.2400 vt	33192	T322ST1	13.8	0	0.0 "1"	1	1.1000
□	0.2400 vt	33193	T322GT2	16.5	0	0.0 "2"	1	1.1000
△	0.2400 vt	33194	T322ST2	13.8	0	0.0 "2"	1	1.1000

Q322 Project GIPR Phase 1 Interconnection System Impact Study
2013 Greater Bay Area Summer Peak Base Case
Q322 @626MW
Pittsburg 230kV Bus 1D
3 ph 6 cyc flt @ Pittsburg & clr Pittsburg 230kV Bus 1D

Q322 GIPR Phase 1 Interconnection System Impact Study

Selected Generator Terminal Voltages (P.U.)

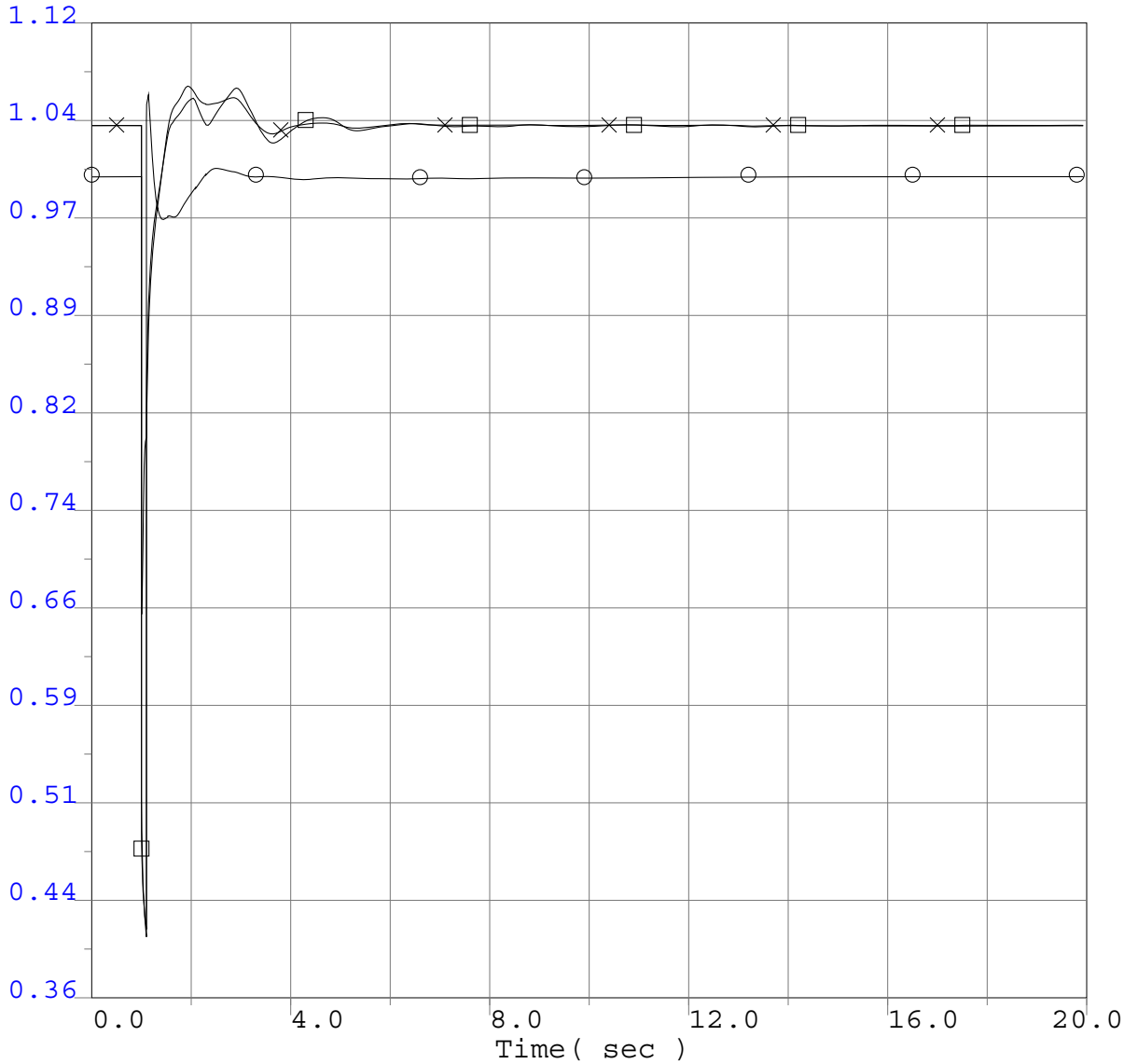

○	0.3600 vt	33195	T417	34.5	0	0.0 "1"	1	1.1200
×	0.3600 vt	33108	DEC CTG1	18.0	0	0.0 "1"	1	1.1200
□	0.3600 vt	33107	DEC STG1	24.0	0	0.0 "1"	1	1.1200

Q322 Project GIPR Phase 1 Interconnection System Impact Study
2013 Greater Bay Area Summer Peak Base Case
Q322 @626MW
Pittsburg 230kV Bus 1D
3 ph 6 cyc flt @ Pittsburg & clr Pittsburg 230kV Bus 1D

Q322 GIPR Phase 1 Interconnection System Impact Study

Project Generator Speed (P.U.)

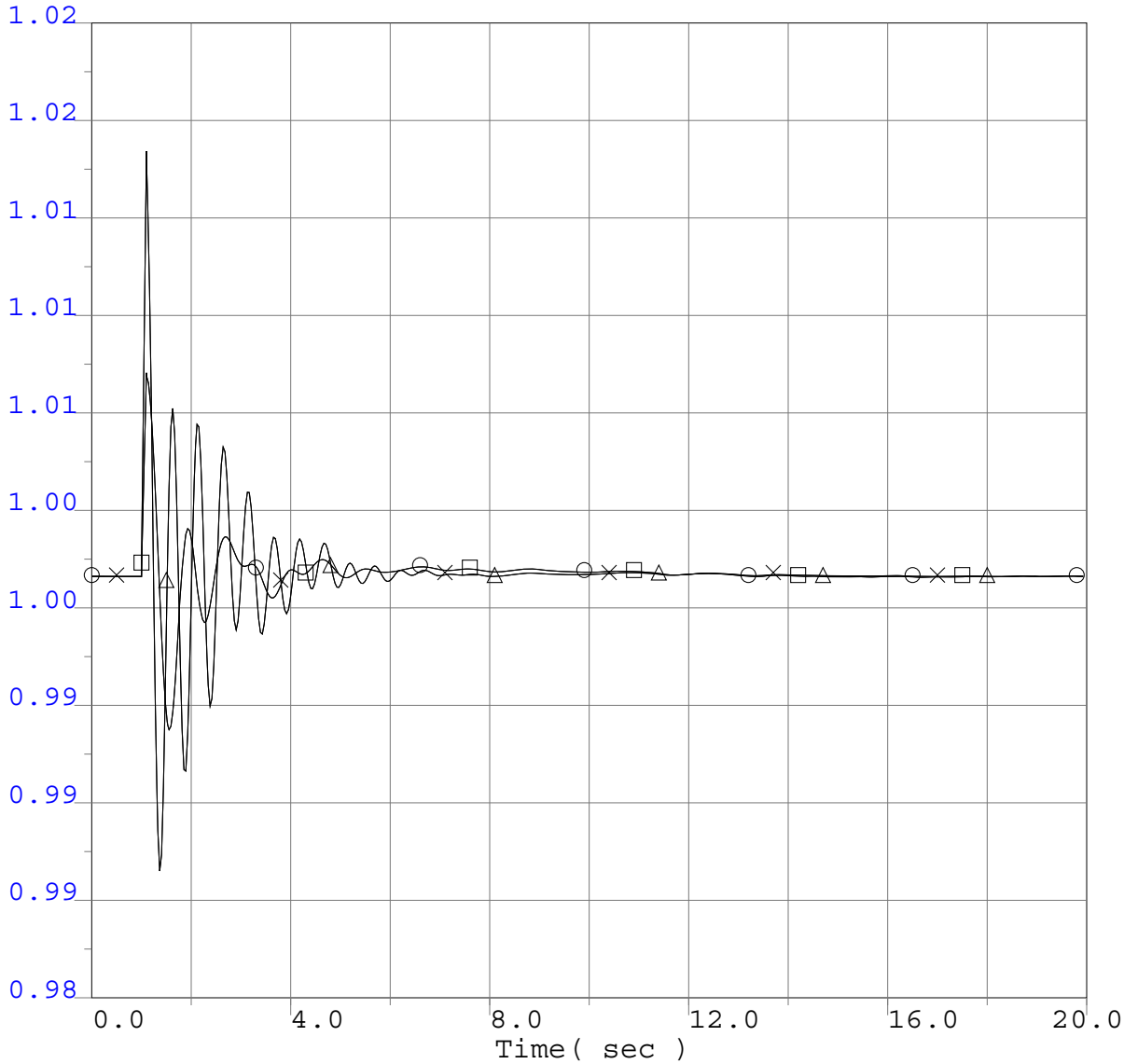

○	0.9834 spd	33191	T322GT1	16.5	0	0.0 "1"	1	1.0218
×	0.9834 spd	33192	T322ST1	13.8	0	0.0 "1"	1	1.0218
□	0.9834 spd	33193	T322GT2	16.5	0	0.0 "2"	1	1.0218
△	0.9834 spd	33194	T322ST2	13.8	0	0.0 "2"	1	1.0218

Q322 Project GIPR Phase 1 Interconnection System Impact Study
2013 Greater Bay Area Summer Peak Base Case
Q322 @626MW
Pittsburg 230kV Bus 1D
3 ph 6 cyc flt @ Pittsburg & clr Pittsburg 230kV Bus 1D

Q322 GIPR Phase 1 Interconnection System Impact Study

Selected Generator Speed (P.U.)

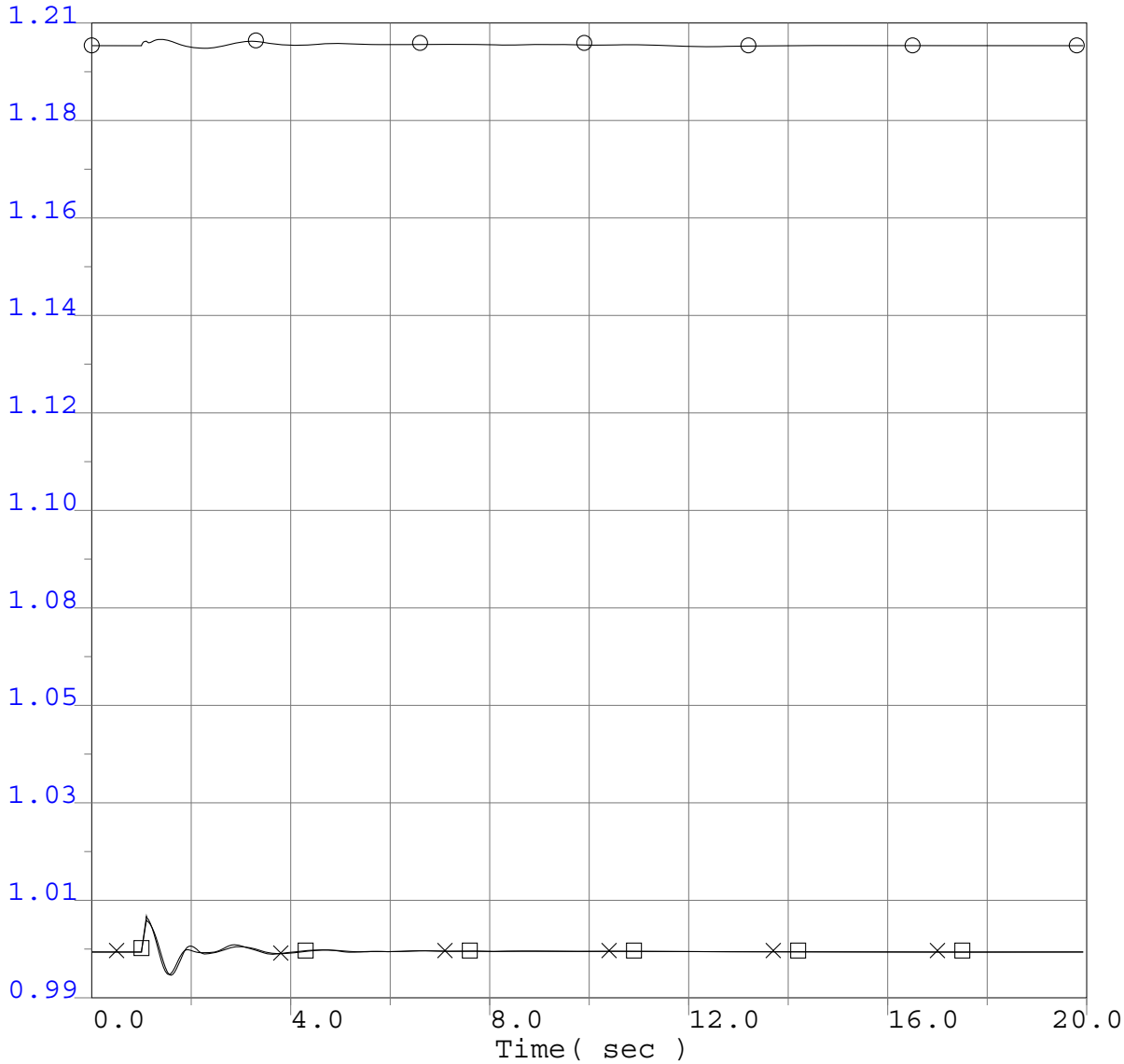

○	0.9899 spd	33195	T417	34.5	0	0.0 "1"	1	1.2050
⊗	0.9899 spd	33108	DEC CTG1	18.0	0	0.0 "1"	1	1.2050
□	0.9899 spd	33107	DEC STG1	24.0	0	0.0 "1"	1	1.2050

Q322 Project GIPR Phase 1 Interconnection System Impact Study
2013 Greater Bay Area Summer Peak Base Case
Q322 @626MW
Pittsburg 230kV Bus 1D
3 ph 6 cyc flt @ Pittsburg & clr Pittsburg 230kV Bus 1D

Q322 GIPR Phase 1 Interconnection System Impact Study

Project Generator Terminal Power (MW)

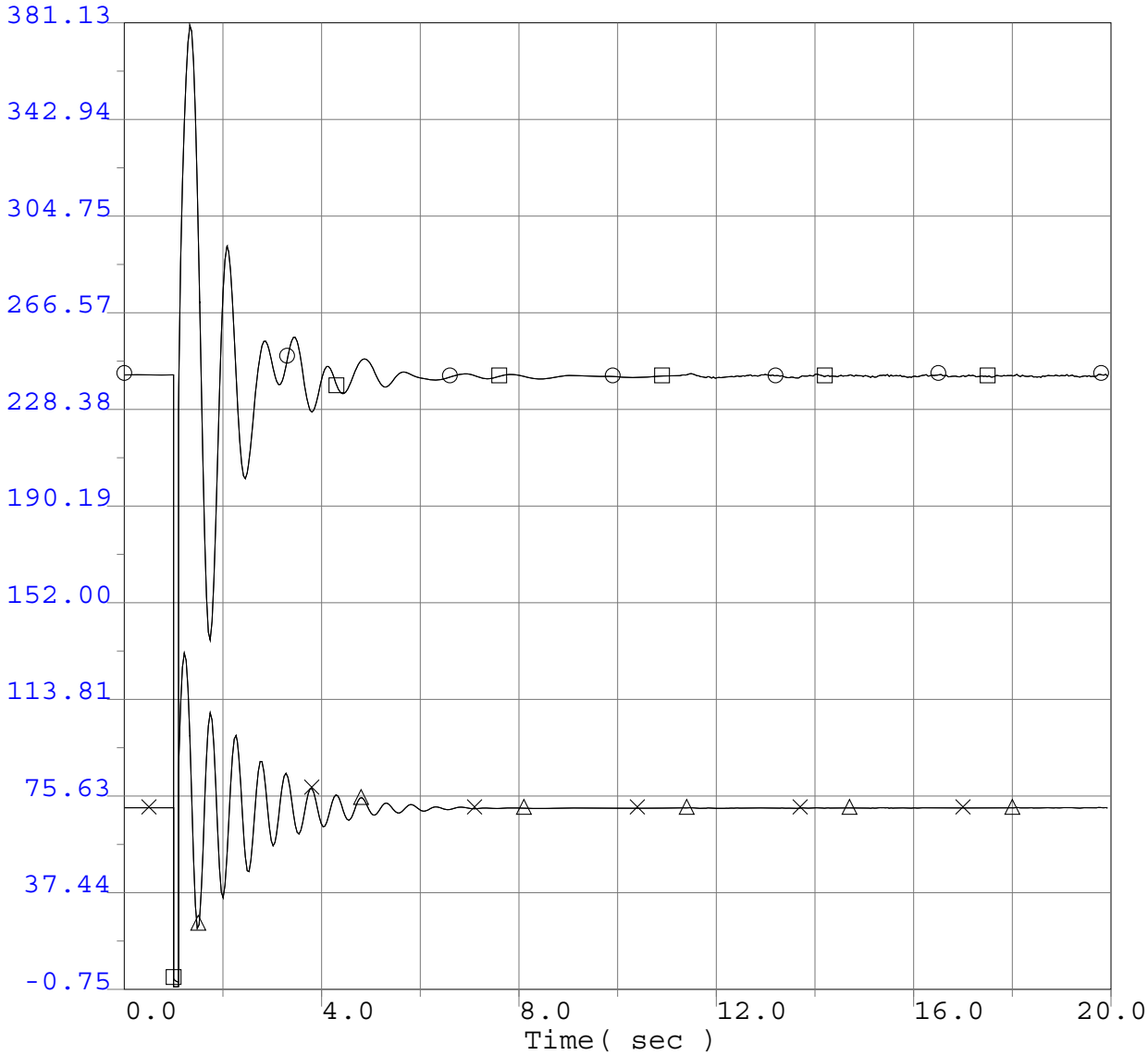

-0.7500 pg	33191	T322GT1	16.5	0	0.0 "1"	1	381.1300
-0.7500 pg	33192	T322ST1	13.8	0	0.0 "1"	1	381.1300
-0.7500 pg	33193	T322GT2	16.5	0	0.0 "2"	1	381.1300
-0.7500 pg	33194	T322ST2	13.8	0	0.0 "2"	1	381.1300

Q322 Project GIPR Phase 1 Interconnection System Impact Study
2013 Greater Bay Area Summer Peak Base Case
Q322 @626MW
Pittsburg 230kV Bus 1D
3 ph 6 cyc flt @ Pittsburg & clr Pittsburg 230kV Bus 1D

Q322 GIPR Phase 1 Interconnection System Impact Study

Selected Generator Terminal Power (MW)

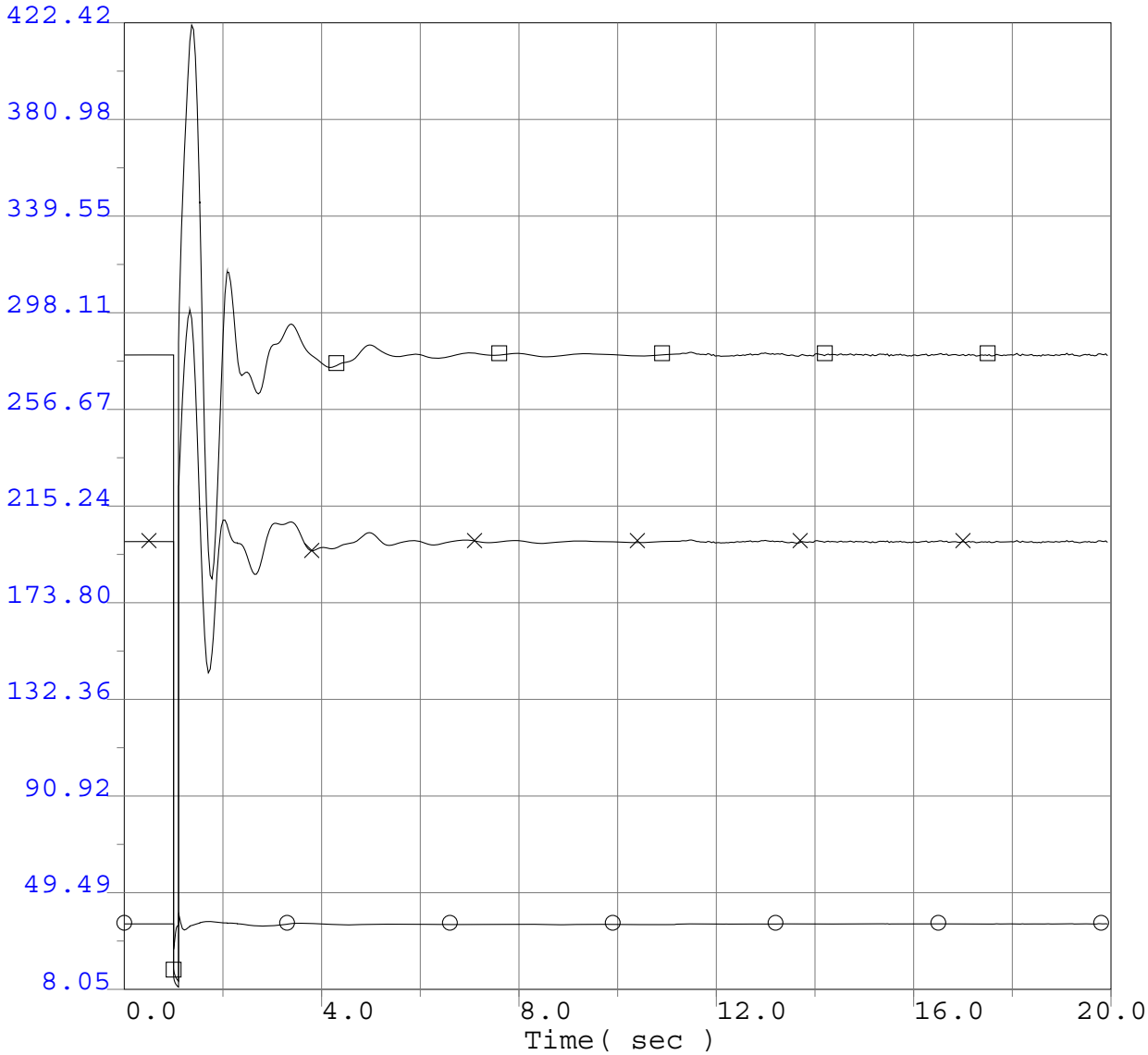

○	8.0500 pg	33195	T417	34.5	0	0.0 "1"	1	422.4200
⊗	8.0500 pg	33108	DEC CTG1	18.0	0	0.0 "1"	1	422.4200
□	8.0500 pg	33107	DEC STG1	24.0	0	0.0 "1"	1	422.4200

Q322 Project GIPR Phase 1 Interconnection System Impact Study
2013 Greater Bay Area Summer Peak Base Case
Q322 @626MW
Pittsburg 230kV Bus 1D
3 ph 6 cyc flt @ Pittsburg & clr Pittsburg 230kV Bus 1D

Q322 GIPR Phase 1 Interconnection System Impact Study

Project Generator Terminal Reactive Power (MVAr)

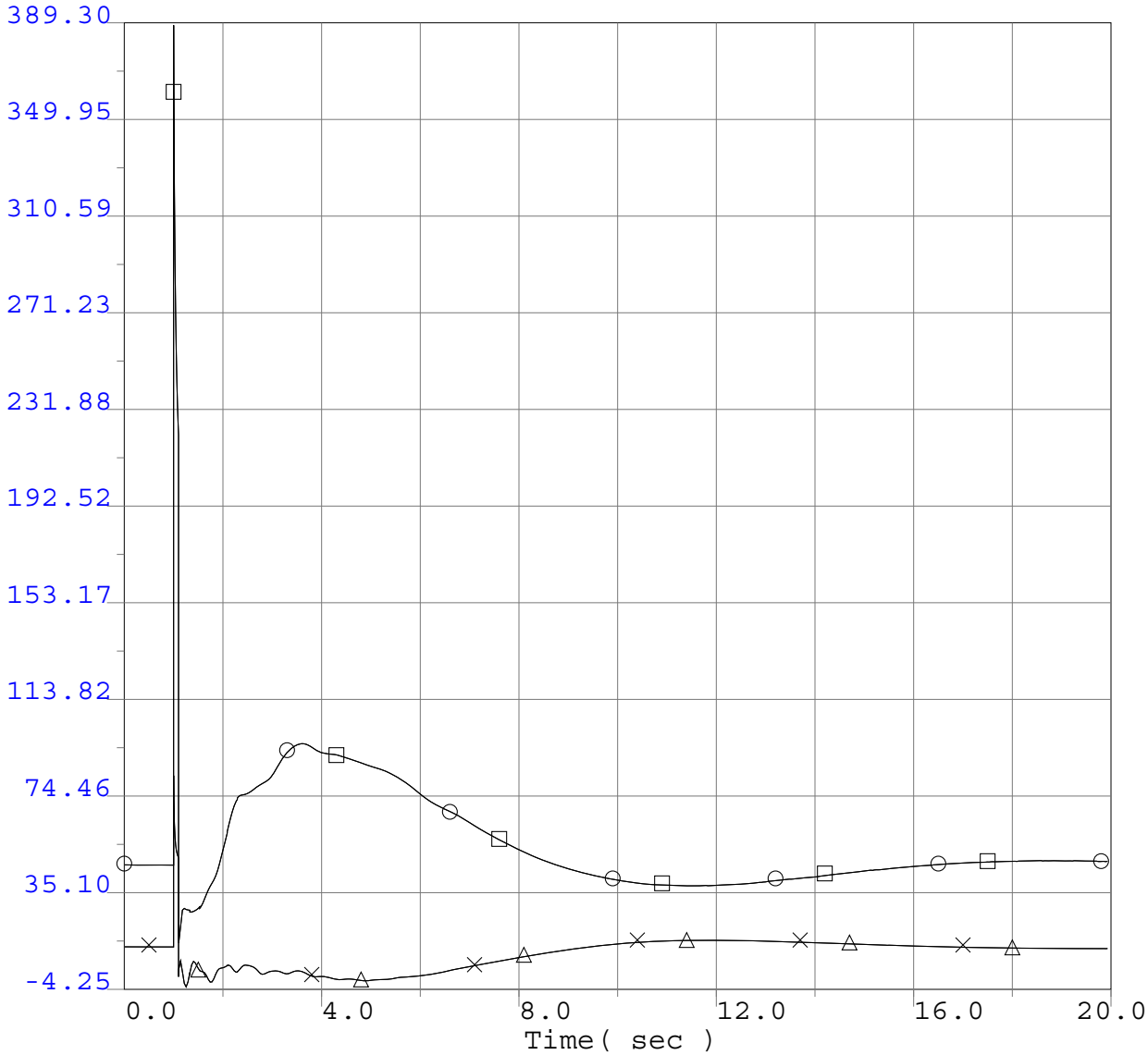

○	-4.2500	qg	33191	T322GT1	16.5	0	0.0	"1"	1 389.3000
×	-4.2500	qg	33192	T322ST1	13.8	0	0.0	"1"	1 389.3000
□	-4.2500	qg	33193	T322GT2	16.5	0	0.0	"2"	1 389.3000
△	-4.2500	qg	33194	T322ST2	13.8	0	0.0	"2"	1 389.3000

Q322 Project GIPR Phase 1 Interconnection System Impact Study
2013 Greater Bay Area Summer Peak Base Case
Q322 @626MW
Pittsburg 230kV Bus 1D
3 ph 6 cyc flt @ Pittsburg & clr Pittsburg 230kV Bus 1D

Q322 GIPR Phase 1 Interconnection System Impact Study

Selected Generator Terminal Reactive Power (MVAr)

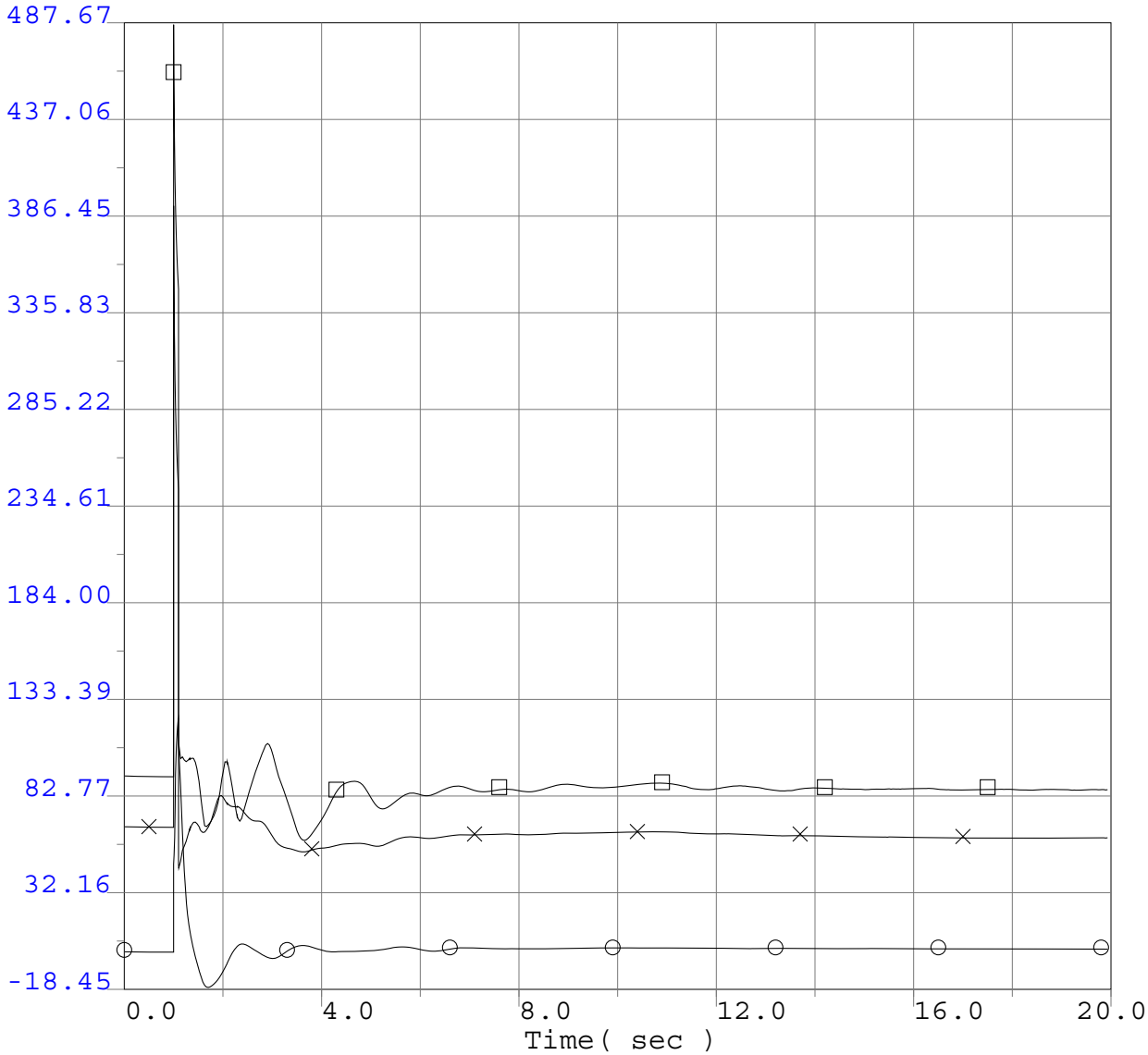

○	-18.4500 qg	33195	T417	34.5	0	0.0 "1"	1	487.6700
⊗	-18.4500 qg	33108	DEC CTG1	18.0	0	0.0 "1"	1	487.6700
□	-18.4500 qg	33107	DEC STG1	24.0	0	0.0 "1"	1	487.6700

Q322 Project GIPR Phase 1 Interconnection System Impact Study
2013 Greater Bay Area Summer Peak Base Case
Q322 @626MW
Pittsburg 230kV Bus 1D
3 ph 6 cyc flt @ Pittsburg & clr Pittsburg 230kV Bus 1D

Q322 GIPR Phase 1 Interconnection System Impact Study

Selected WECC Bus Voltage Plots

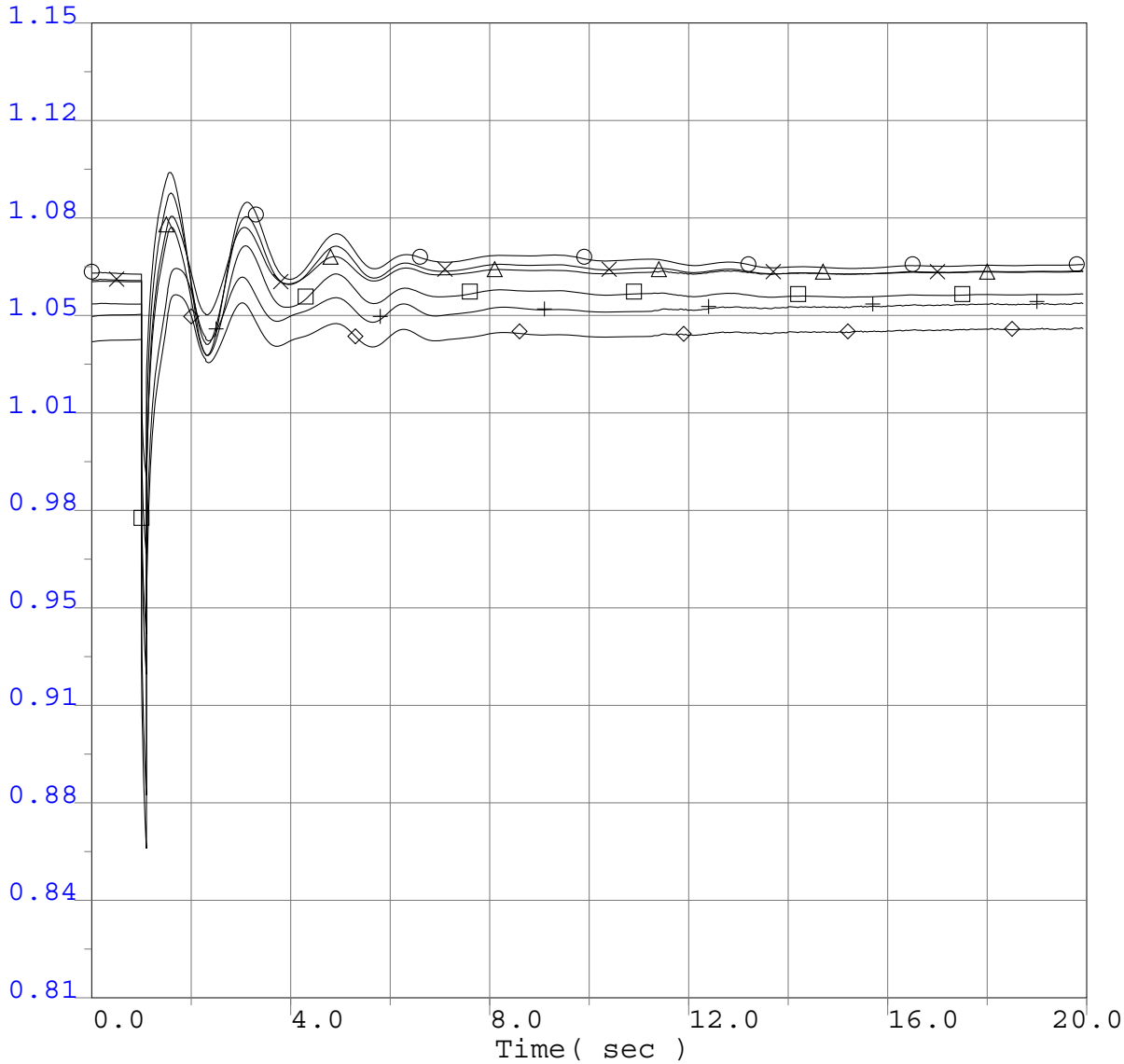

0.8100	vbus	40687	MALIN	500.0	0	0.0 "*"	1	1.1500
0.8100	vbus	30005	ROUND MT	500.0	0	0.0 "*"	1	1.1500
0.8100	vbus	30015	TABLE MT	500.0	0	0.0 "*"	1	1.1500
0.8100	vbus	30030	VACA-DIX	500.0	0	0.0 "*"	1	1.1500
0.8100	vbus	30040	TESLA	500.0	0	0.0 "*"	1	1.1500
0.8100	vbus	30035	TRACY	500.0	0	0.0 "*"	1	1.1500

Q322 Project GIPR Phase 1 Interconnection System Impact Study
2013 Greater Bay Area Summer Peak Base Case
Q322 @626MW
Pittsburg 230kV Bus 1D
3 ph 6 cyc flt @ Pittsburg & clr Pittsburg 230kV Bus 1D

Q322 GIPR Phase 1 Interconnection System Impact Study

Selected WECC Bus Voltage Plots

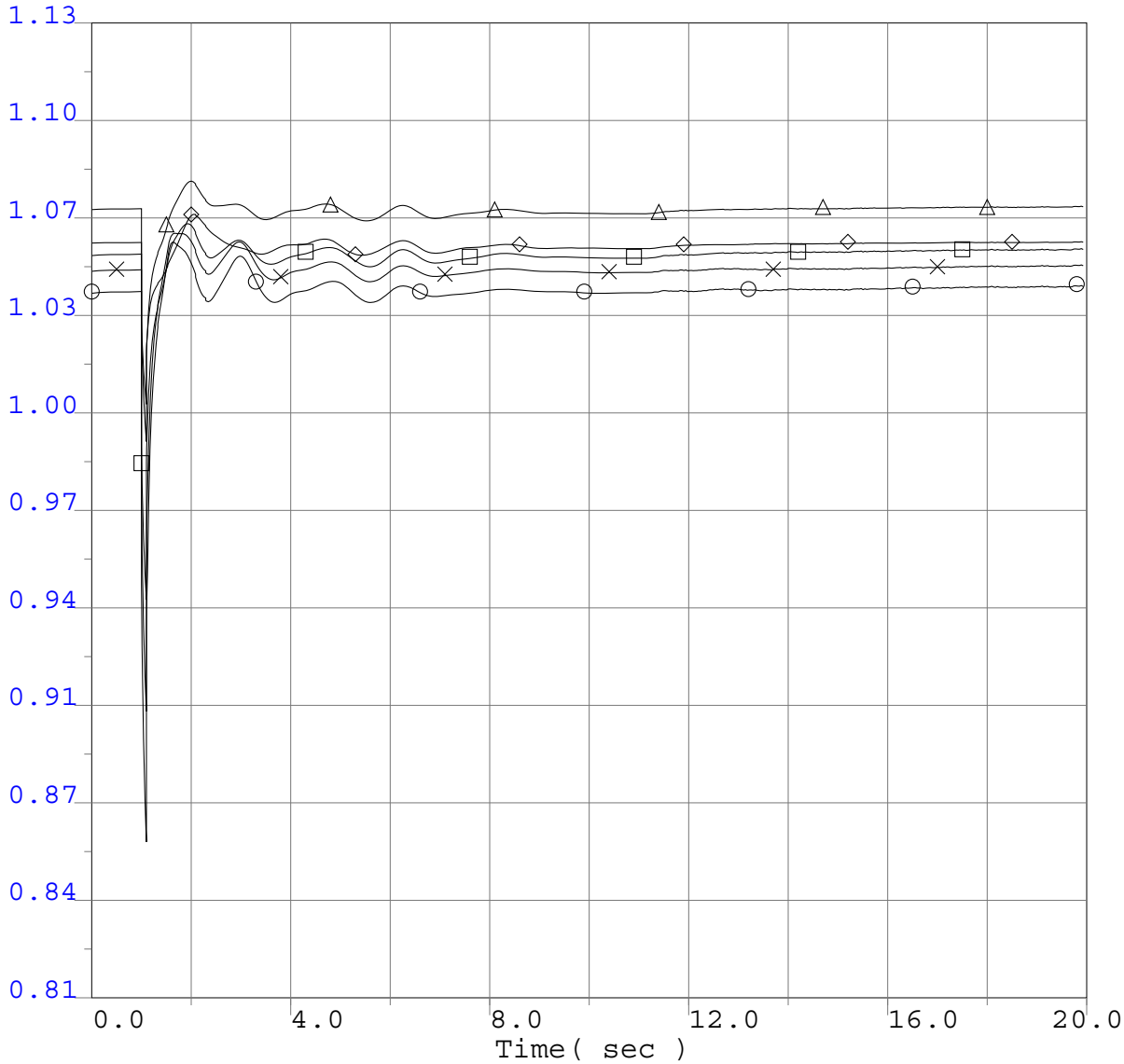

0.8100	vbus	30042	METCALF	500.0	0	0.0 "*"	1	1.1300
0.8100	vbus	30045	MOSSLAND	500.0	0	0.0 "*"	1	1.1300
0.8100	vbus	30050	LOSBANOS	500.0	0	0.0 "*"	1	1.1300
0.8100	vbus	30055	GATES	500.0	0	0.0 "*"	1	1.1300
0.8100	vbus	30060	MIDWAY	500.0	0	0.0 "*"	1	1.1300

Q322 Project GIPR Phase 1 Interconnection System Impact Study
2013 Greater Bay Area Summer Peak Base Case
Q322 @626MW
Pittsburg 230kV Bus 1D
3 ph 6 cyc flt @ Pittsburg & clr Pittsburg 230kV Bus 1D

Q322 GIPR Phase 1 Interconnection System Impact Study

Selected WECC Bus Voltage Plots

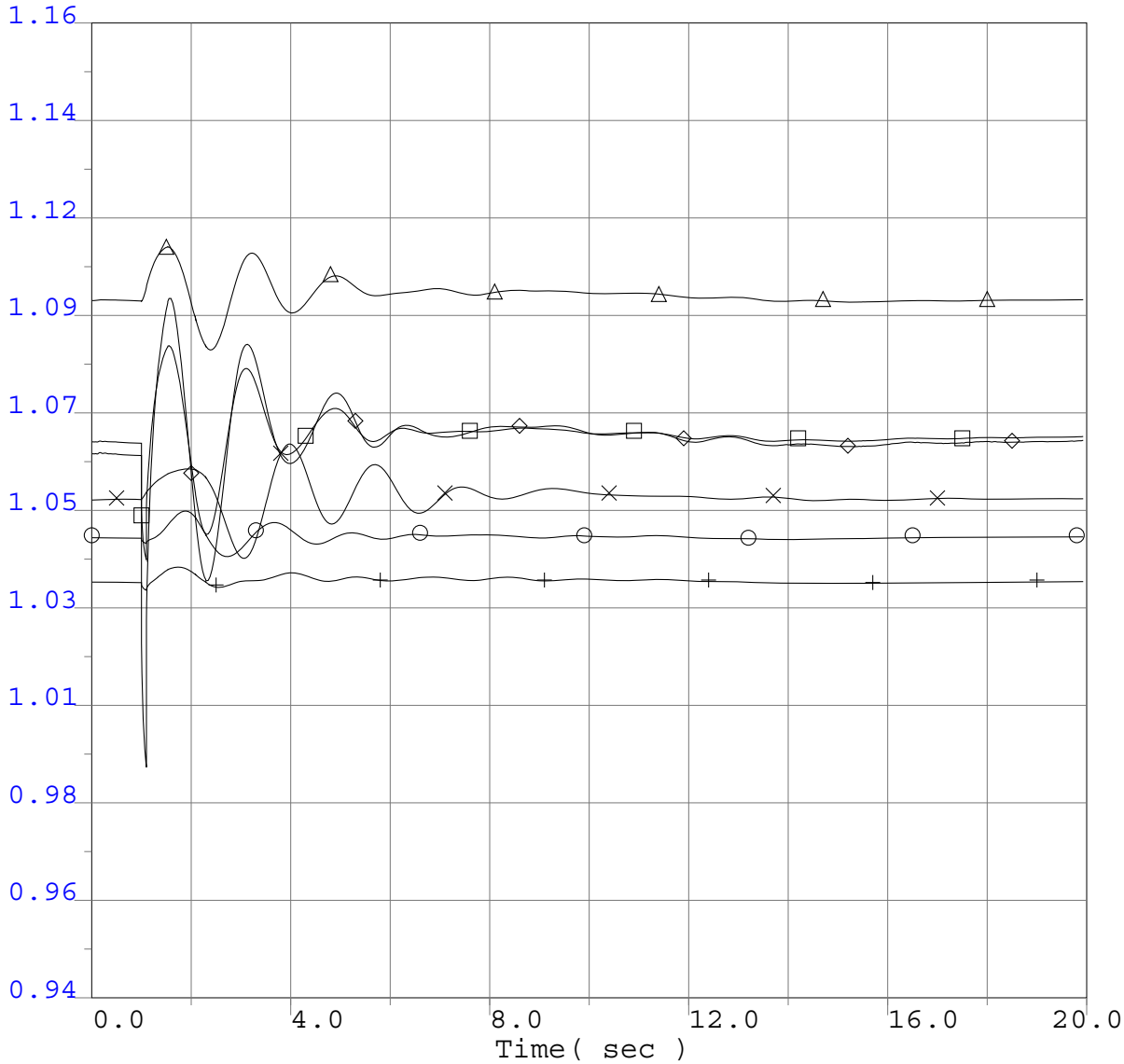

0.9400	vbus	14001	FOURCORN	500.0	0	0.0 "*"	1	1.1600
0.9400	vbus	50703	NIC500	500.0	0	0.0 "*"	1	1.1600
0.9400	vbus	60240	MIDPOINT	500.0	0	0.0 "*"	1	1.1600
0.9400	vbus	62012	TOWN2	500.0	0	0.0 "*"	1	1.1600
0.9400	vbus	40687	MALIN	500.0	0	0.0 "*"	1	1.1600
0.9400	vbus	66340	SIGURD	345.0	0	0.0 "*"	1	1.1600

Q322 Project GIPR Phase 1 Interconnection System Impact Study
2013 Greater Bay Area Summer Peak Base Case
Q322 @626MW
Pittsburg 230kV Bus 1D
3 ph 6 cyc flt @ Pittsburg & clr Pittsburg 230kV Bus 1D

Q322 GIPR Phase 1 Interconnection System Impact Study

Selected WECC Bus Voltage Plots

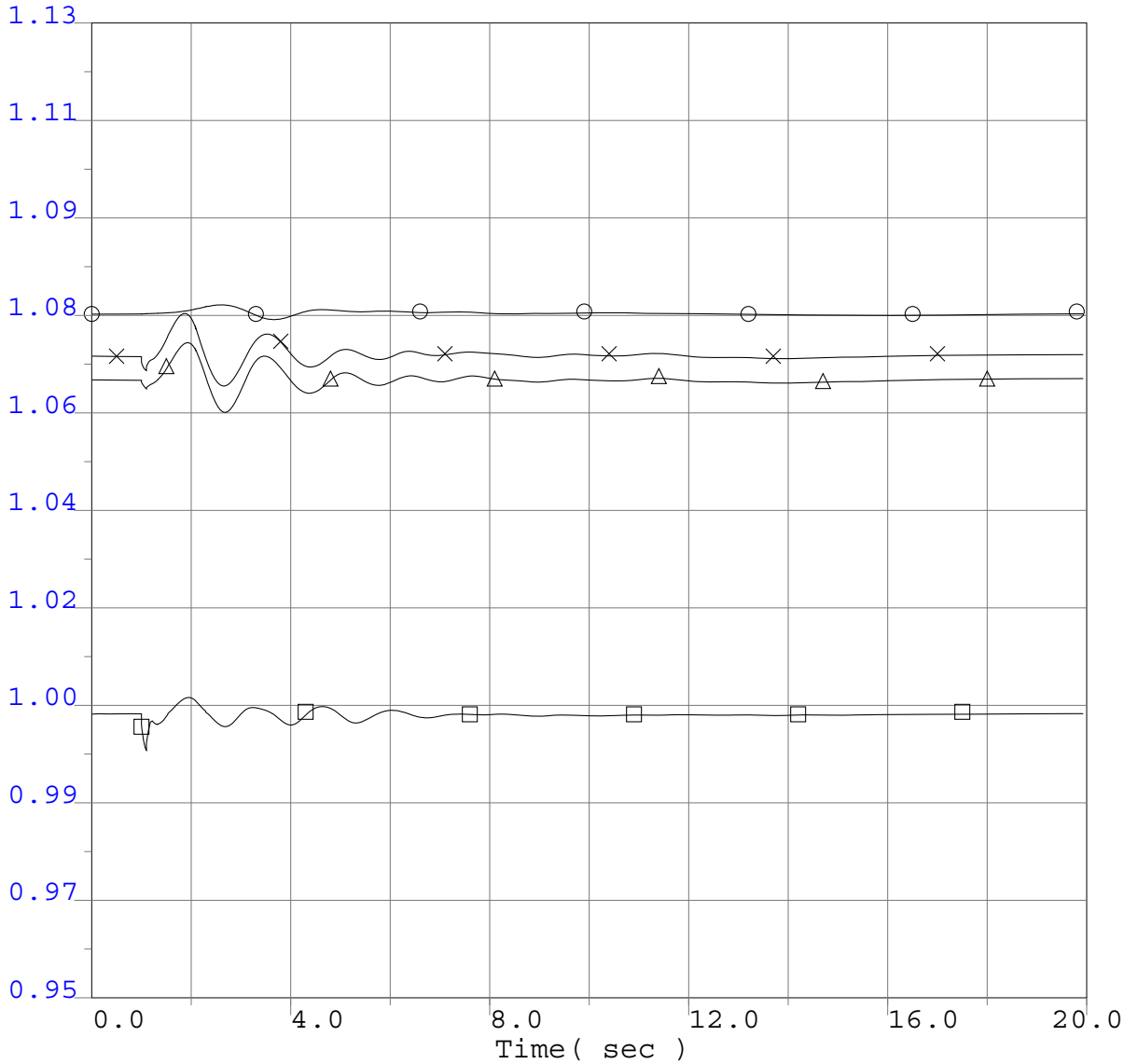

0.9500 vbul	54150	WILLESD9	240.0	0	0.0	"*"	1	1.1300
0.9500 vbus	14003	NAVAJO	500.0	0	0.0	"*"	1	1.1300
0.9500 vbus	24153	VESTAL	230.0	0	0.0	"*"	1	1.1300
0.9500 vbus	22360	IMPRLVLY	500.0	0	0.0	"*"	1	1.1300

Q322 Project GIPR Phase 1 Interconnection System Impact Study
2013 Greater Bay Area Summer Peak Base Case
Q322 @626MW
Pittsburg 230kV Bus 1D
3 ph 6 cyc flt @ Pittsburg & clr Pittsburg 230kV Bus 1D

Q322 GIPR Phase 1 Interconnection System Impact Study

Selected WECC Bus Frequency Plots

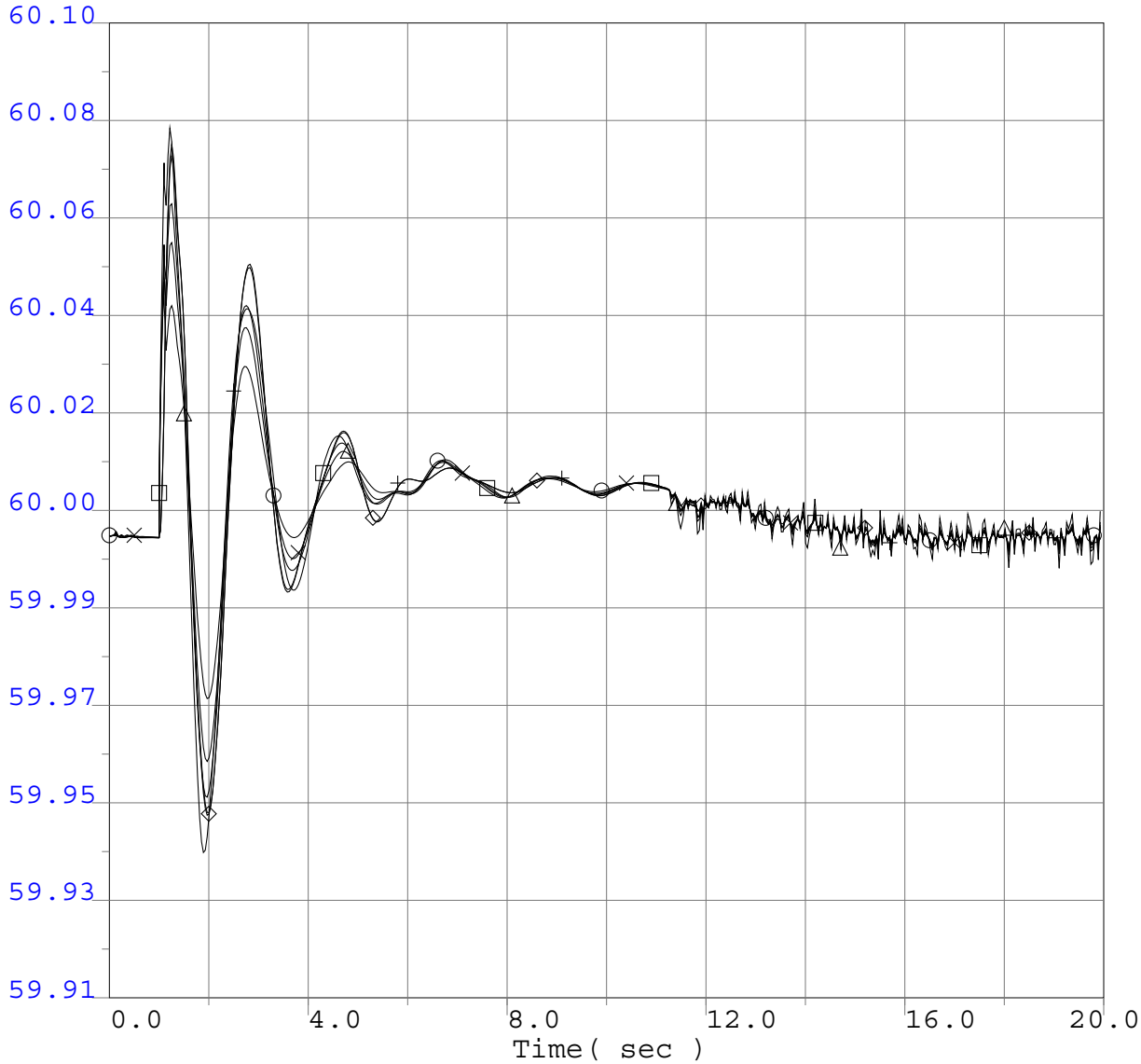

59.9100	fbus	40687	MALIN	500.0	0	0.0	"*"	1	60.1000
59.9100	fbus	30005	ROUND MT	500.0	0	0.0	"*"	1	60.1000
59.9100	fbus	30015	TABLE MT	500.0	0	0.0	"*"	1	60.1000
59.9100	fbus	30030	VACA-DIX	500.0	0	0.0	"*"	1	60.1000
59.9100	fbus	30040	TESLA	500.0	0	0.0	"*"	1	60.1000
59.9100	fbus	30035	TRACY	500.0	0	0.0	"*"	1	60.1000

Q322 Project GIPR Phase 1 Interconnection System Impact Study
2013 Greater Bay Area Summer Peak Base Case
Q322 @626MW
Pittsburg 230kV Bus 1D
3 ph 6 cyc flt @ Pittsburg & clr Pittsburg 230kV Bus 1D

Q322 GIPR Phase 1 Interconnection System Impact Study

Selected WECC Bus Frequency Plots

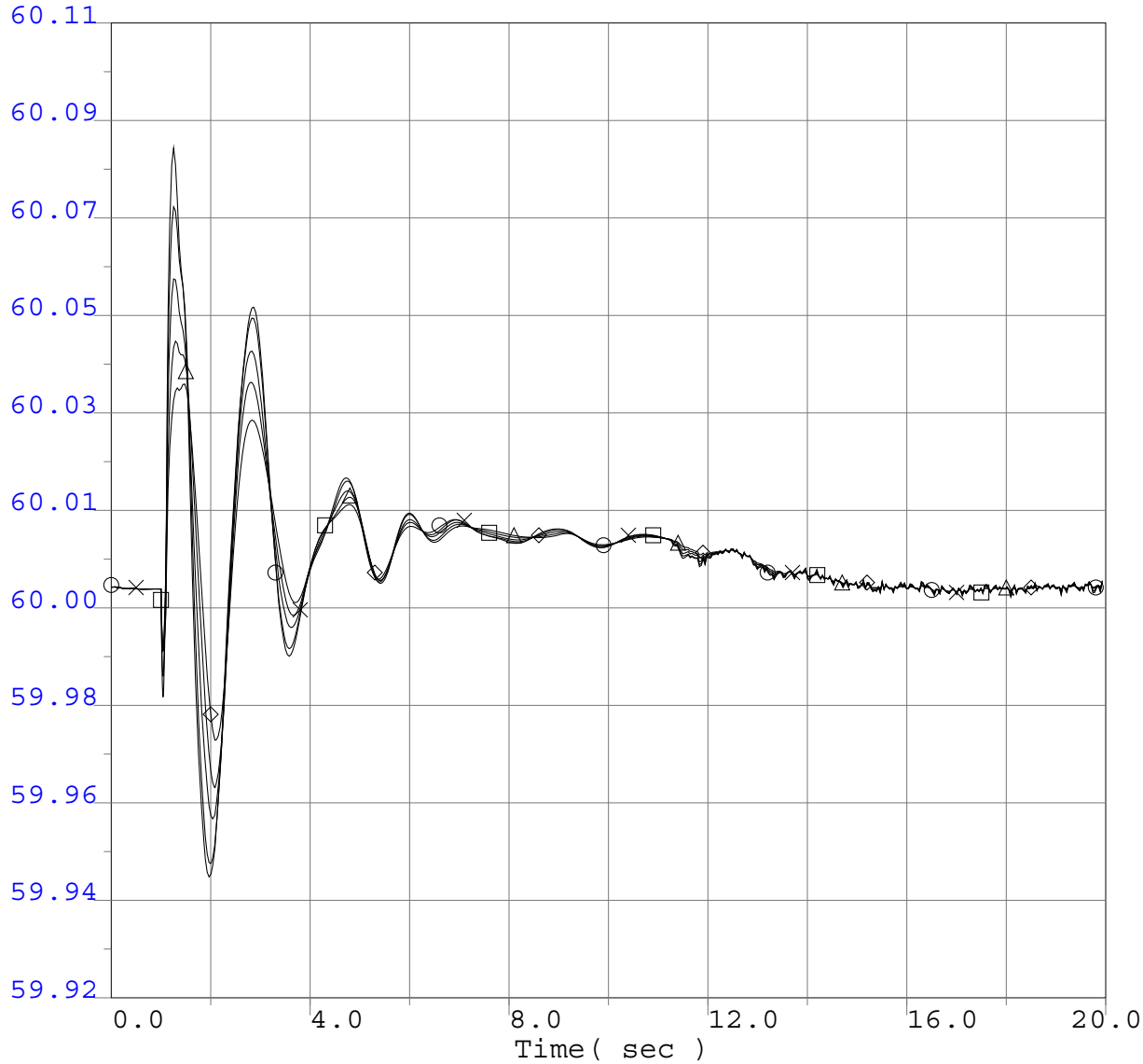

○	59.9200 fbus	30042	METCALF 500.0	0	0.0 "*"	1	60.1100
⊗	59.9200 fbus	30045	MOSSLAND 500.0	0	0.0 "*"	1	60.1100
□	59.9200 fbus	30050	LOSBANOS 500.0	0	0.0 "*"	1	60.1100
△	59.9200 fbus	30055	GATES 500.0	0	0.0 "*"	1	60.1100
◇	59.9200 fbus	30060	MIDWAY 500.0	0	0.0 "*"	1	60.1100

Q322 Project GIPR Phase 1 Interconnection System Impact Study
2013 Greater Bay Area Summer Peak Base Case
Q322 @626MW
Pittsburg 230kV Bus 1D
3 ph 6 cyc flt @ Pittsburg & clr Pittsburg 230kV Bus 1D

Q322 GIPR Phase 1 Interconnection System Impact Study

Selected WECC Bus Frequency Plots

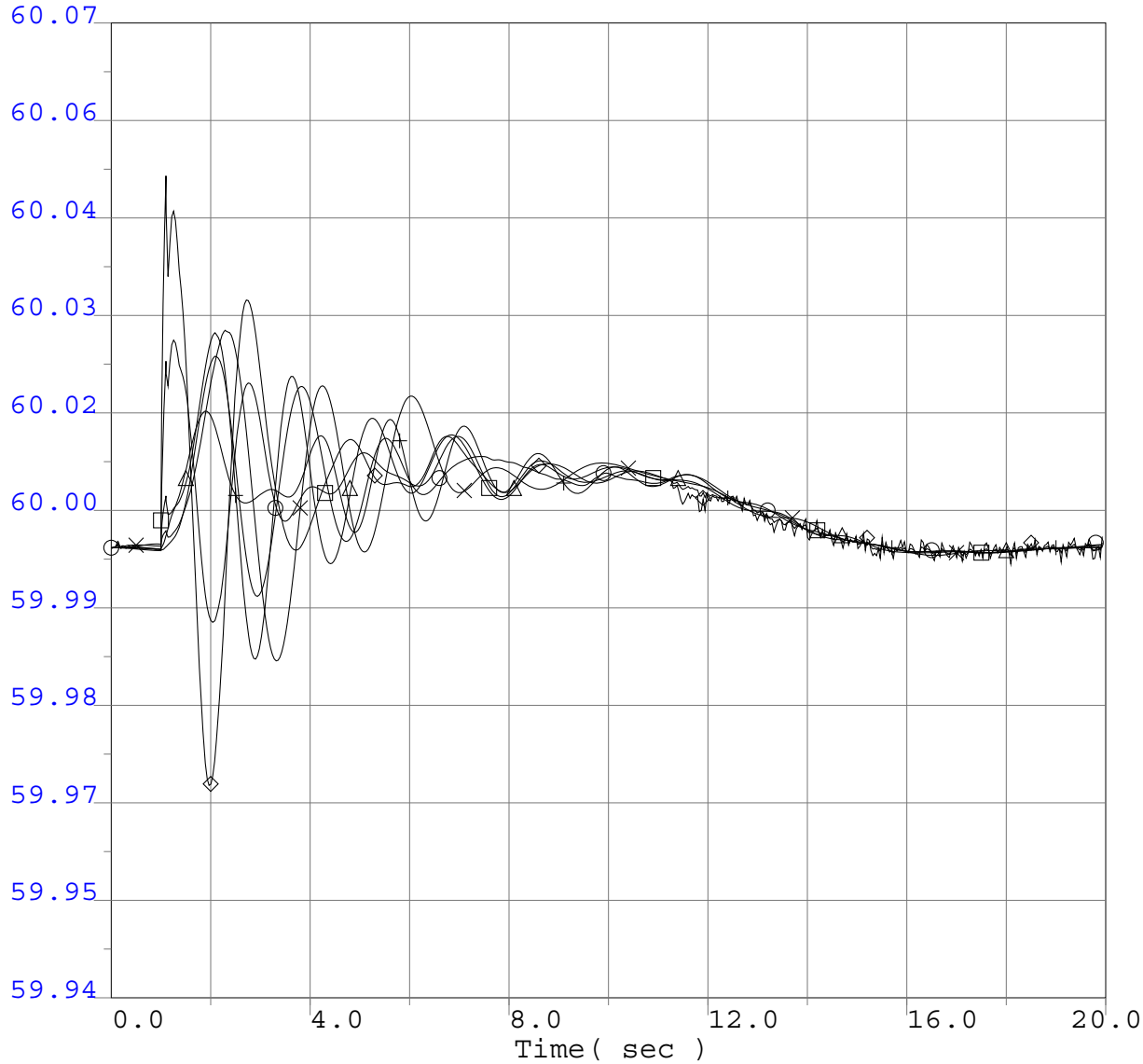

59.9400	fbus	14001	FOURCORN	500.0	0	0.0 "*"	1	60.0700
59.9400	fbus	50703	NIC500	500.0	0	0.0 "*"	1	60.0700
59.9400	fbus	60240	MIDPOINT	500.0	0	0.0 "*"	1	60.0700
59.9400	fbus	62012	TOWN2	500.0	0	0.0 "*"	1	60.0700
59.9400	fbus	40687	MALIN	500.0	0	0.0 "*"	1	60.0700
59.9400	fbus	66340	SIGURD	345.0	0	0.0 "*"	1	60.0700

Q322 Project GIPR Phase 1 Interconnection System Impact Study
2013 Greater Bay Area Summer Peak Base Case
Q322 @626MW
Pittsburg 230kV Bus 1D
3 ph 6 cyc flt @ Pittsburg & clr Pittsburg 230kV Bus 1D

Q322 GIPR Phase 1 Interconnection System Impact Study

Selected WECC Bus Frequency Plots

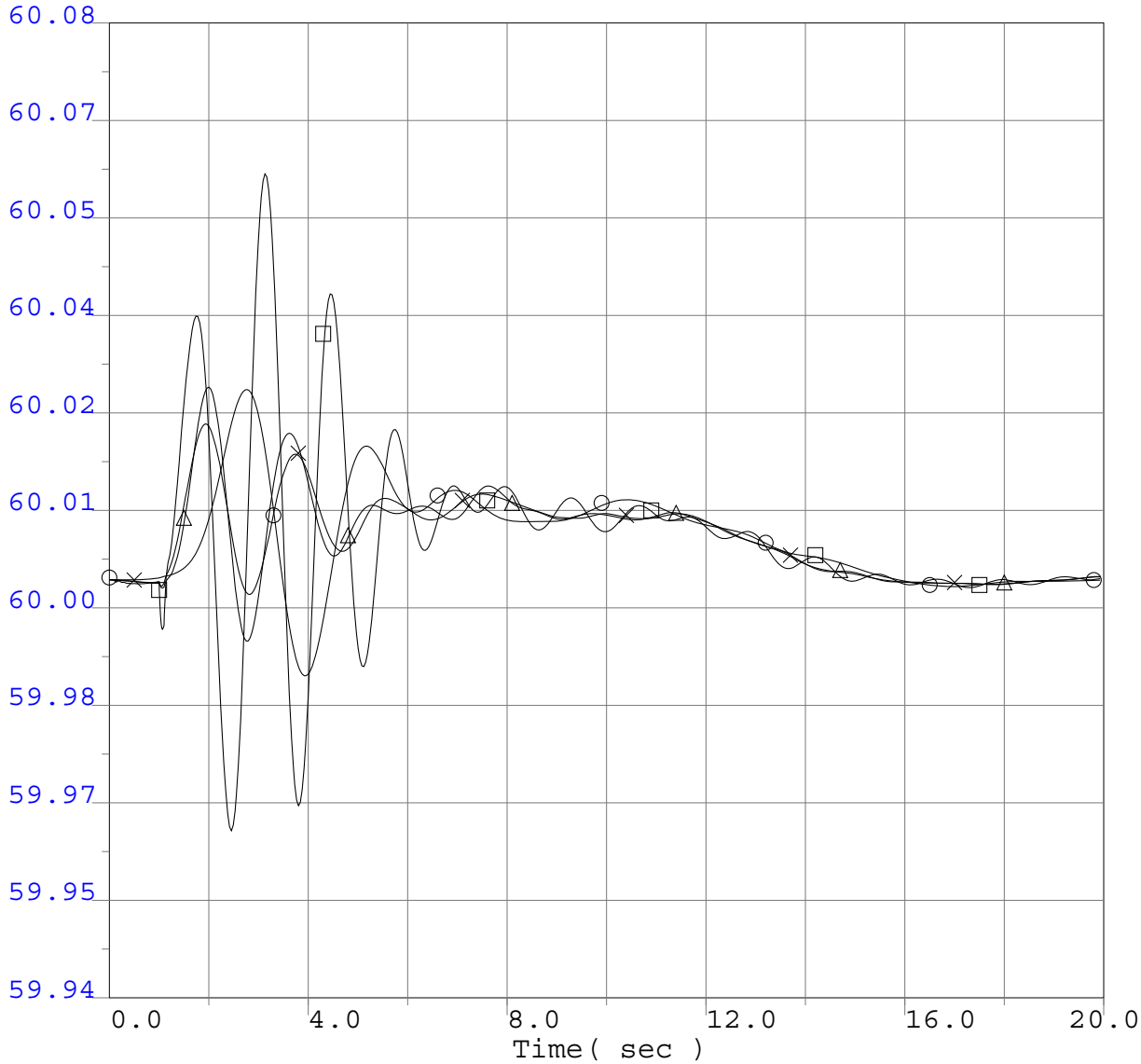

○	59.9400 fbul	54150	WILLESD9 240.0	0	0.0 "*"	1	60.0800
⊗	59.9400 fbus	14003	NAVAJO 500.0	0	0.0 "*"	1	60.0800
□	59.9400 fbus	24153	VESTAL 230.0	0	0.0 "*"	1	60.0800
△	59.9400 fbus	22360	IMPRLVLY 500.0	0	0.0 "*"	1	60.0800

Q322 Project GIPR Phase 1 Interconnection System Impact Study
2013 Greater Bay Area Summer Peak Base Case
Q322 @626MW
Pittsburg 230kV Bus 1D
3 ph 6 cyc flt @ Pittsburg & clr Pittsburg 230kV Bus 1D

Q322 GIPR Phase 1 Interconnection System Impact Study

WECC Generator Rotor Angle

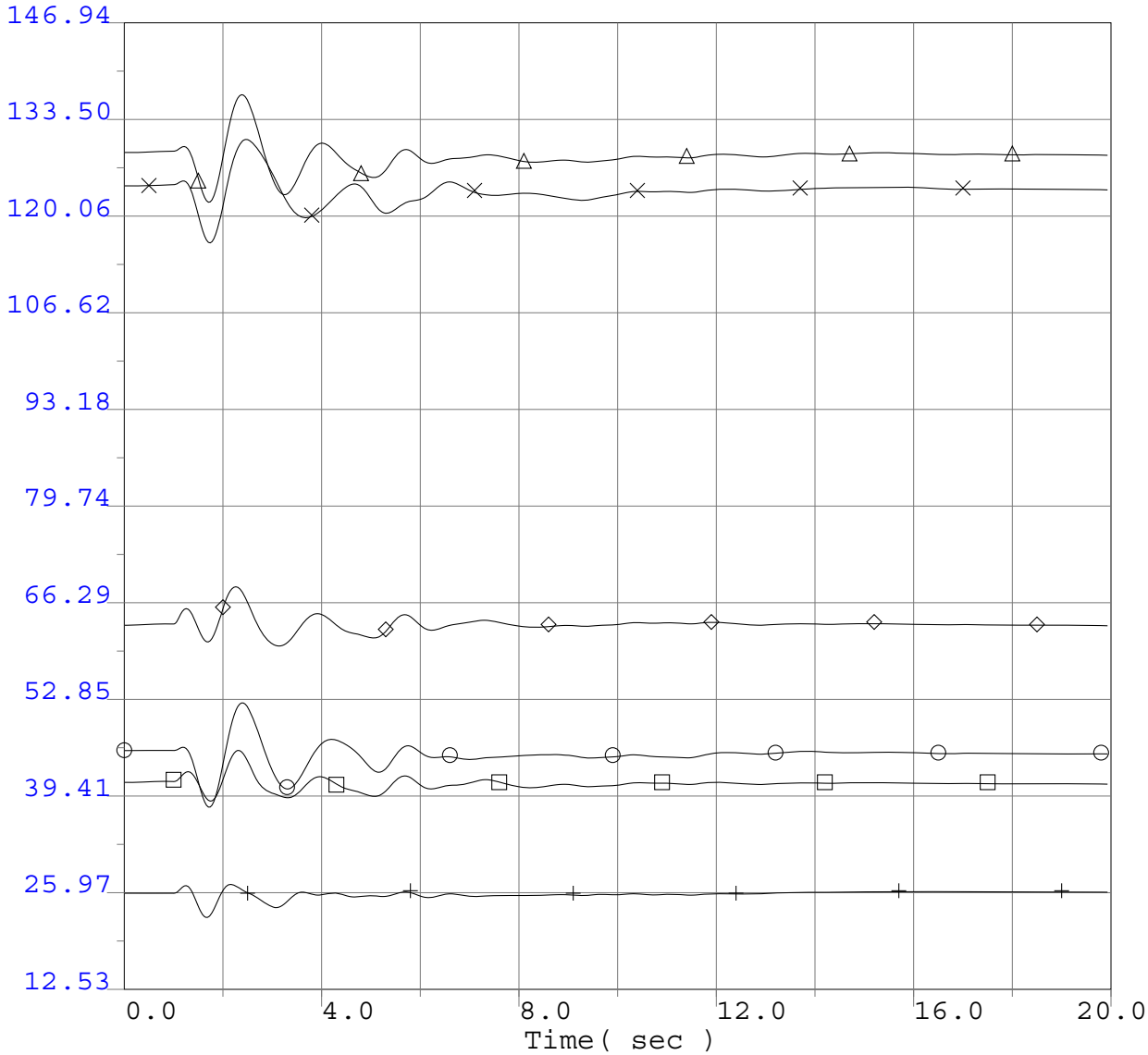

12.5300 ang	14914	FCNGN4CC	22.0	0	0.0 "H"	1	146.9400
12.5300 ang	50499	GMS G5	13.8	0	0.0 "1"	1	146.9400
12.5300 ang	60100	BRWNL 5	13.8	0	0.0 "1"	1	146.9400
12.5300 ang	62048	COLSTP 3	26.0	0	0.0 "1"	1	146.9400
12.5300 ang	44071	JDA 0102	13.8	0	0.0"01"	1	146.9400
12.5300 ang	36411	DIABLO 1	25.0	0	0.0 "1"	1	146.9400

Q322 Project GIPR Phase 1 Interconnection System Impact Study
2013 Greater Bay Area Summer Peak Base Case
Q322 @626MW
Pittsburg 230kV Bus 1D
3 ph 6 cyc flt @ Pittsburg & clr Pittsburg 230kV Bus 1D

Q322 GIPR Phase 1 Interconnection System Impact Study

WECC Generator Rotor Angle

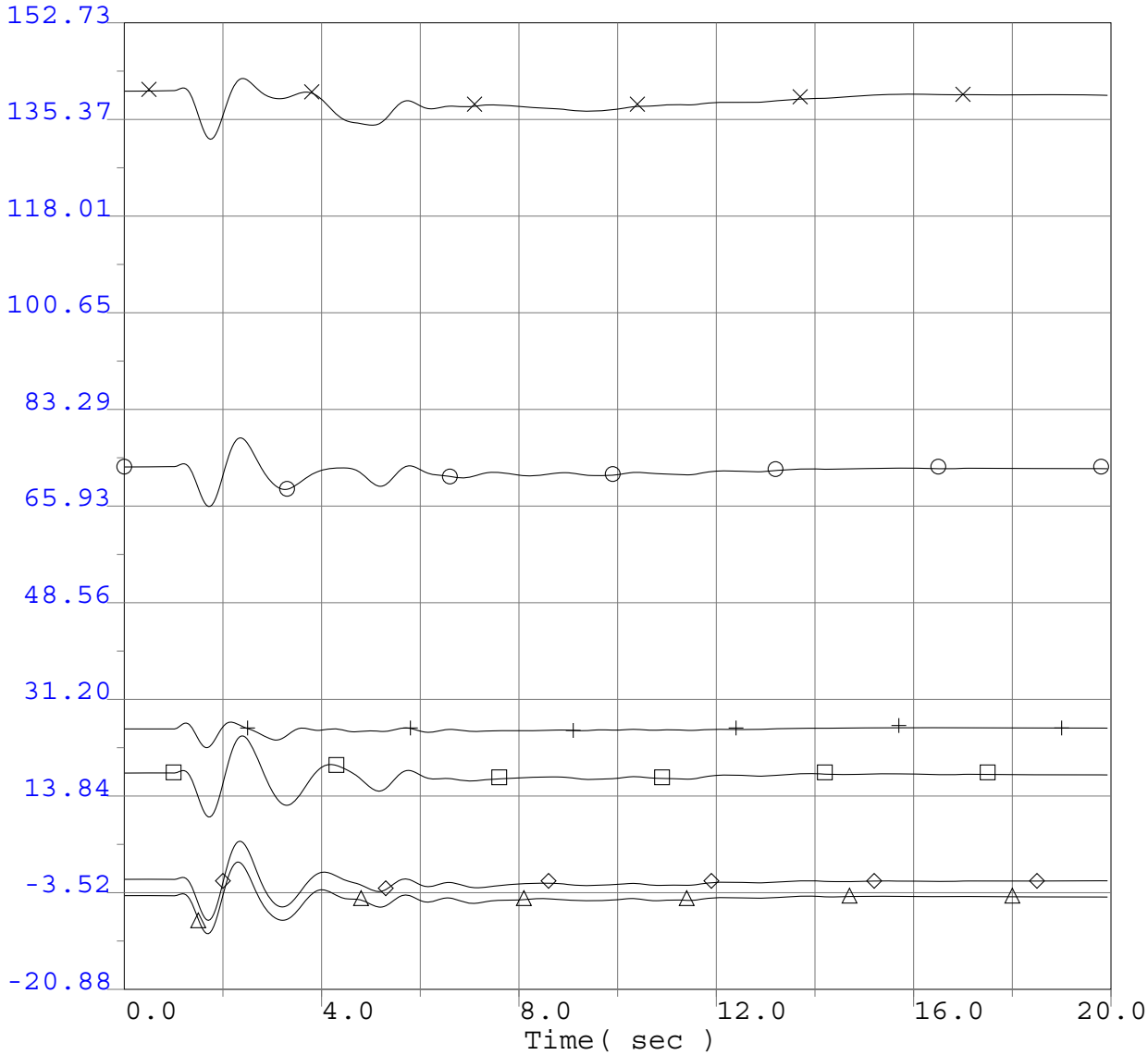

-20.8800 ang	65490	EHUNTR 1	24.0	0	0.0	"1"	1	152.7300
-20.8800 ang	54338	SUND#2GN	18.0	0	0.0	"2"	1	152.7300
-20.8800 ang	79151	GLENC3-4	13.8	0	0.0	"3"	1	152.7300
-20.8800 ang	24130	S.ONOFR3	22.0	0	0.0	"3"	1	152.7300
-20.8800 ang	22244	ENCINA 5	24.0	0	0.0	"1"	1	152.7300
-20.8800 ang	36411	DIABLO 1	25.0	0	0.0	"1"	1	152.7300

Q322 Project GIPR Phase 1 Interconnection System Impact Study
2013 Greater Bay Area Summer Peak Base Case
Q322 @626MW
Pittsburg 230kV Bus 1D
3 ph 6 cyc flt @ Pittsburg & clr Pittsburg 230kV Bus 1D

Q322 GIPR Phase 1 Interconnection System Impact Study

Selected PG&E Transmission Line Flows (MW)

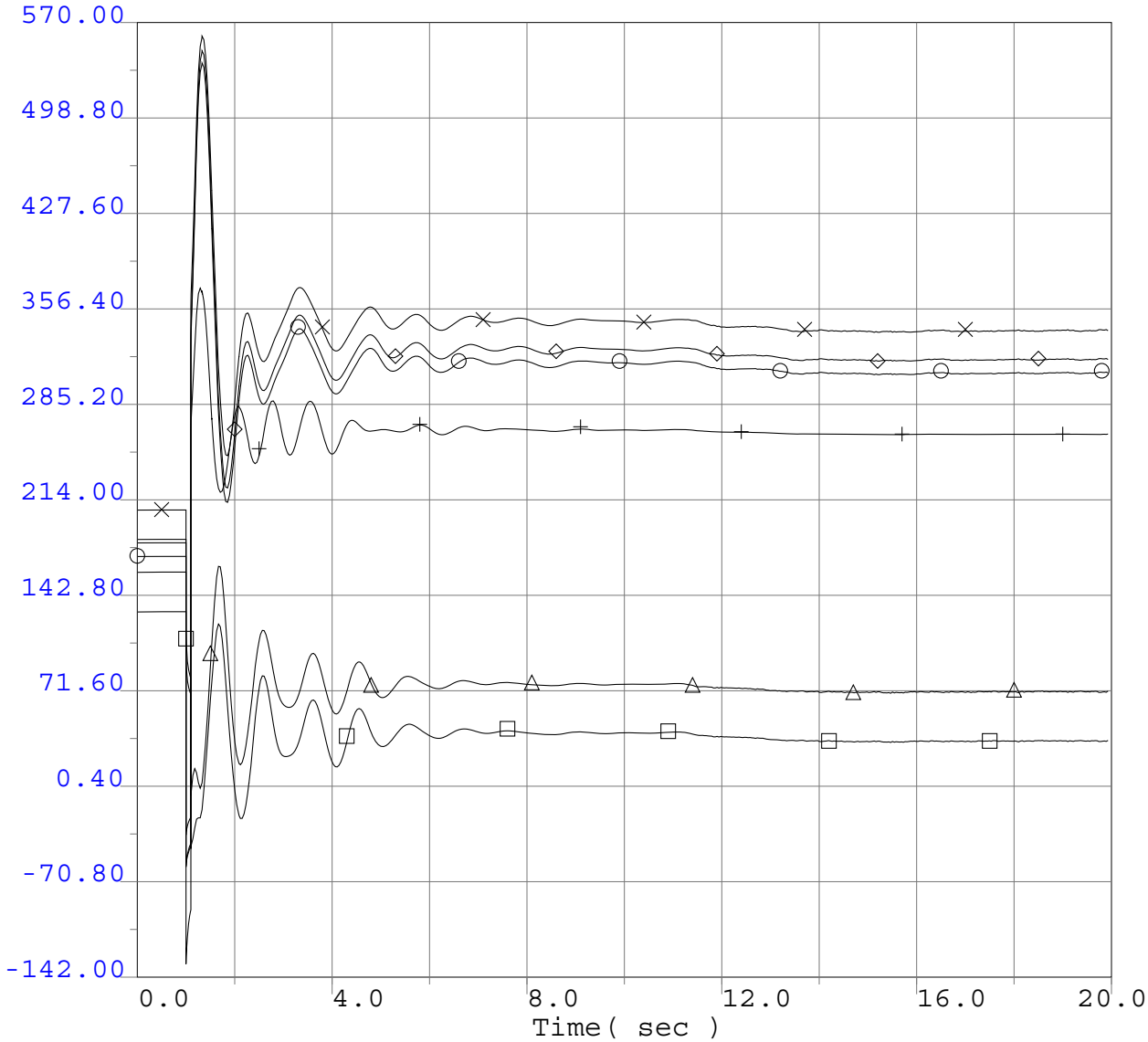

-142.0000 pbr	30527	PITSBG E 230.0	30600	TRES VAQ 230.0	1	2	570.0000
-142.0000 pbr	30600	TRES VAQ 230.0	30640	TESLA C 230.0	1	2	570.0000
-142.0000 pbr	30535	TIDEWATR 230.0	30527	PITSBG E 230.0	1	1	570.0000
-142.0000 pbr	30536	TESORO 230.0	30527	PITSBG E 230.0	1	1	570.0000
-142.0000 pbr	30527	PITSBG E 230.0	30595	FLOWIND2 230.0	1	1	570.0000
-142.0000 pbr	30527	PITSBG E 230.0	30560	E. SHORE 230.0	1	1	570.0000

Q322 Project GIPR Phase 1 Interconnection System Impact Study
2013 Greater Bay Area Summer Peak Base Case
Q322 @626MW
Pittsburg 230kV Bus 1D
3 ph 6 cyc flt @ Pittsburg & clr Pittsburg 230kV Bus 1D

Q322 GIPR Phase 1 Interconnection System Impact Study

Selected PG&E Transmission Line Flows (MW)

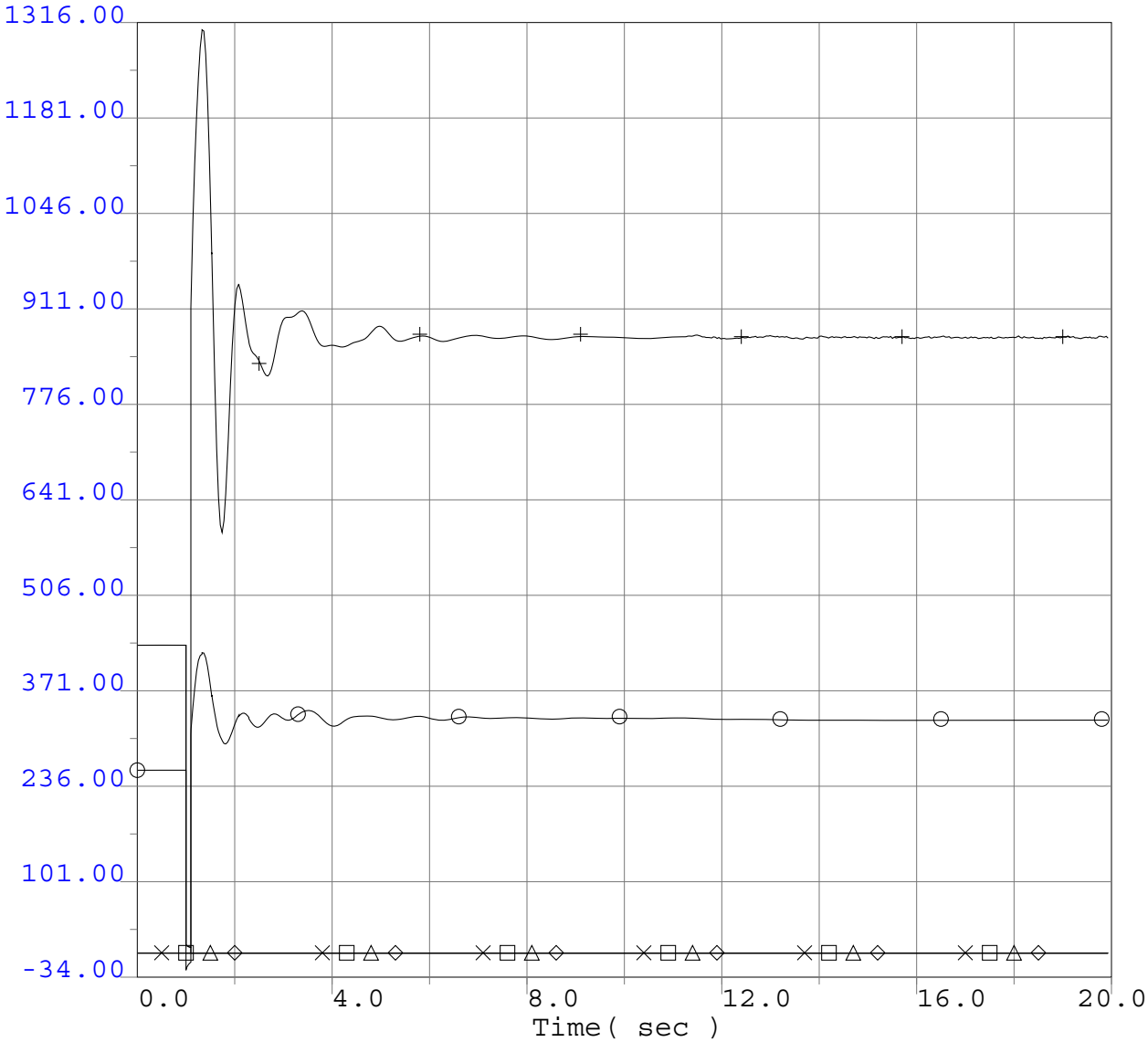

-34.0000 pbr	30527	PITSBG E 230.0	30700	SANMATEO 230.0	1	1	1316.0000
-34.0000 pbr	30000	PTSB 7 20.0	30527	PITSBG E 230.0	1	1	1316.0000
-34.0000 pbr	33105	PTSB 5 18.0	30527	PITSBG E 230.0	1	1	1316.0000
-34.0000 pbr	33106	PTSB 6 18.0	30527	PITSBG E 230.0	1	1	1316.0000
-34.0000 pbr	30528	DEC PTSG 230.0	30526	PITSBG D 230.0	1	1	1316.0000
-34.0000 pbr	30528	DEC PTSG 230.0	30526	PITSBG D 230.0	1	2	1316.0000

Q322 Project GIPR Phase 1 Interconnection System Impact Study
2013 Greater Bay Area Summer Peak Base Case
Q322 @626MW
Pittsburg 230kV Bus 1D
3 ph 6 cyc flt @ Pittsburg & clr Pittsburg 230kV Bus 1D

Q322 GIPR Phase 1 Interconnection System Impact Study

Selected PG&E Transmission Line Flows (MW)

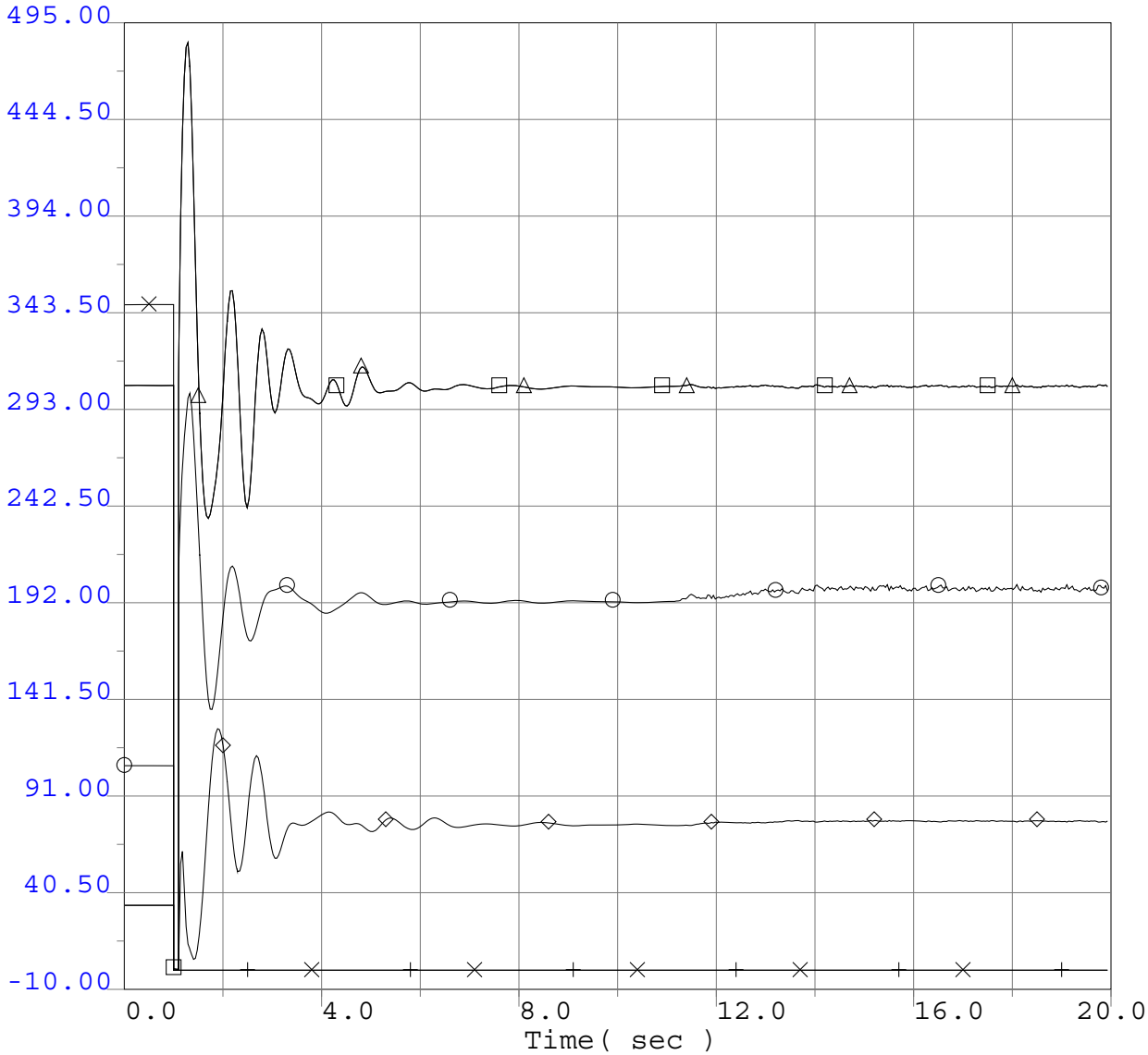

-10.0000 pbr	30526	PITSBG D 230.0	30555	SANRAMON 230.0	1	1	495.0000
-10.0000 pbr	30526	PITSBG D 230.0	30561	TASSAJAR 230.0	1	1	495.0000
-10.0000 pbr	30531	T322BUS1 230.0	30526	PITSBG D 230.0	1	1	495.0000
-10.0000 pbr	30532	T322BUS2 230.0	30526	PITSBG D 230.0	1	1	495.0000
-10.0000 pbr	30526	PITSBG D 230.0	32950	PITSBURG 115.0	1	12	495.0000
-10.0000 pbr	30526	PITSBG D 230.0	32950	PITSBURG 115.0	1	13	495.0000

Q322 Project GIPR Phase 1 Interconnection System Impact Study
2013 Greater Bay Area Summer Peak Base Case
Q322 @626MW
Pittsburg 230kV Bus 1D
3 ph 6 cyc flt @ Pittsburg & clr Pittsburg 230kV Bus 1D

Q322 GIPR Phase 1 Interconnection System Impact Study

Selected PG&E Transmission Line Flows (MW)

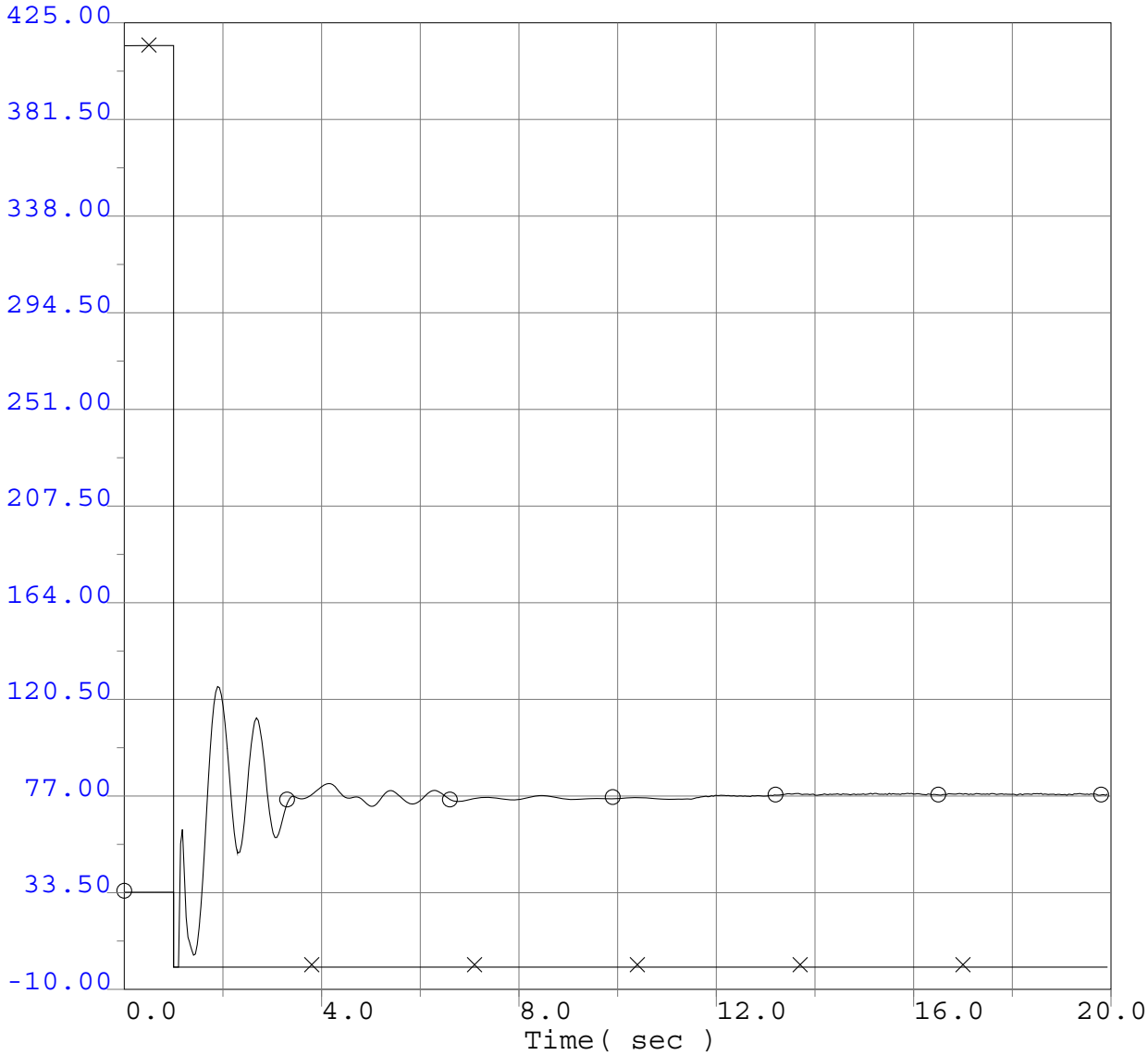

○	-10.0000 pbr	30526	PITSBG D 230.0	32950	PITSBURG 115.0	1	14	425.0000
×	-10.0000 pbr	30526	PITSBG D 230.0	38950	VSC_PTSB 180.5	1	1	425.0000

Q322 Project GIPR Phase 1 Interconnection System Impact Study
2013 Greater Bay Area Summer Peak Base Case
Q322 @626MW
Pittsburg 230kV Bus 1D
3 ph 6 cyc flt @ Pittsburg & clr Pittsburg 230kV Bus 1D

Q322 GIPR Phase 1 Interconnection System Impact Study

Selected PG&E Bus Voltage Plots Adjacent to Fault

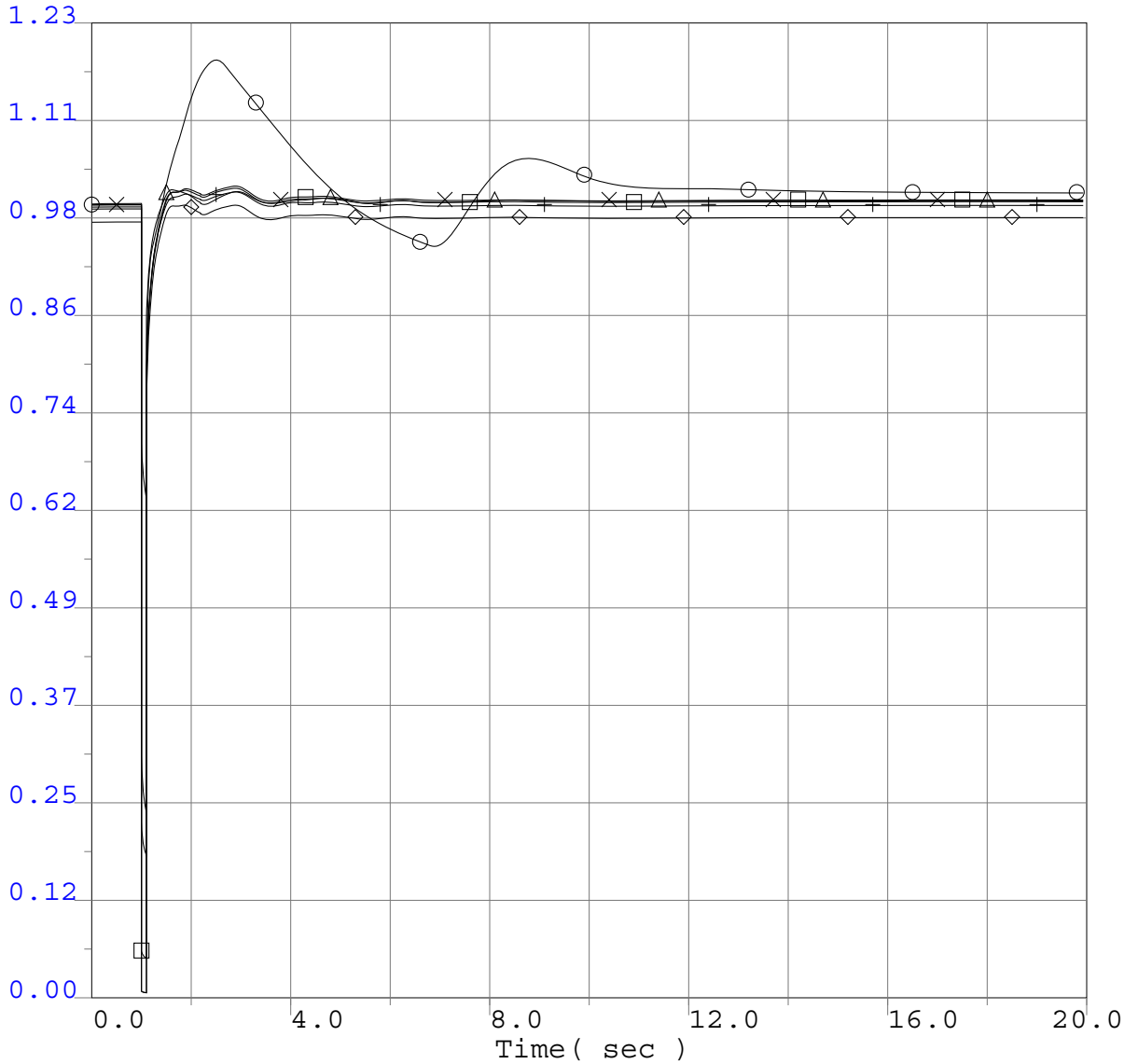

0.0000	vbus	30531	T322BUS1	230.0	0	0.0 "*"	1	1.2300
0.0000	vbus	30532	T322BUS2	230.0	0	0.0 "*"	1	1.2300
0.0000	vbus	30527	PITSBG E	230.0	0	0.0 "*"	1	1.2300
0.0000	vbus	30640	TESLA C	230.0	0	0.0 "*"	1	1.2300
0.0000	vbul	30561	TASSAJAR	230.0	0	0.0 "*"	1	1.2300
0.0000	vbul	30536	TESORO	230.0	0	0.0 "*"	1	1.2300

Q322 Project GIPR Phase 1 Interconnection System Impact Study
2013 Greater Bay Area Summer Peak Base Case
Q322 @626MW
Pittsburg 230kV Bus 2D
3 ph 6 cyc flt @ Pittsburg & clr Pittsburg 230kV Bus 2D

Q322 GIPR Phase 1 Interconnection System Impact Study

Selected PG&E Bus Frequency Plots Adjacent to Fault

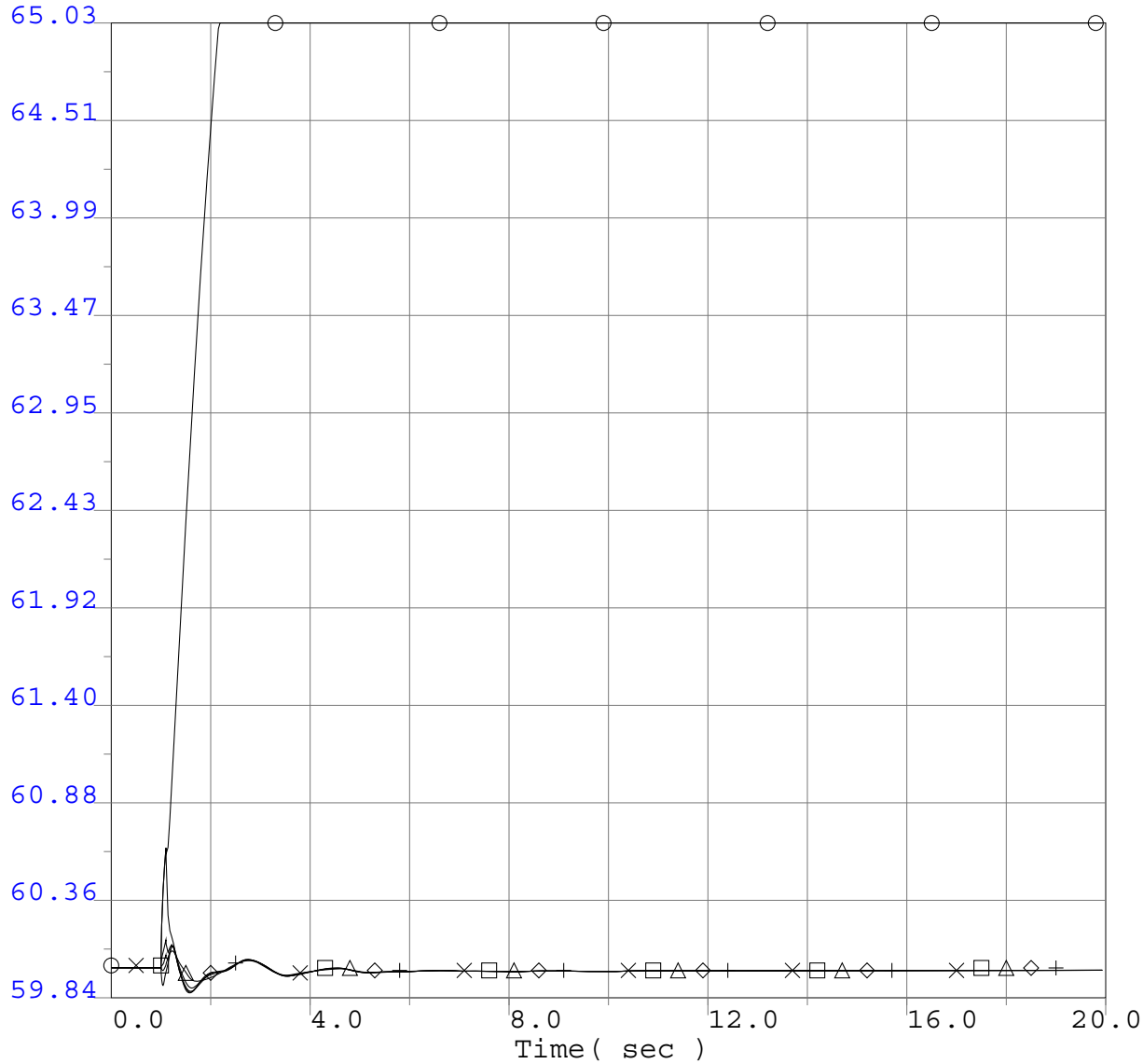

○	59.8400	fbus	30531	T322BUS1 230.0	0	0.0 "*"	1	65.0300
×	59.8400	fbus	30532	T322BUS2 230.0	0	0.0 "*"	1	65.0300
□	59.8400	fbus	30527	PITSBG E 230.0	0	0.0 "*"	1	65.0300
△	59.8400	fbus	30640	TESLA C 230.0	0	0.0 "*"	1	65.0300
◇	59.8400	fbul	30561	TASSAJAR 230.0	0	0.0 "*"	1	65.0300
+	59.8400	fbul	30536	TESORO 230.0	0	0.0 "*"	1	65.0300

Q322 Project GIPR Phase 1 Interconnection System Impact Study
2013 Greater Bay Area Summer Peak Base Case
Q322 @626MW
Pittsburg 230kV Bus 2D
3 ph 6 cyc flt @ Pittsburg & clr Pittsburg 230kV Bus 2D

Q322 GIPR Phase 1 Interconnection System Impact Study

Project Generator Terminal Voltages (P.U.)

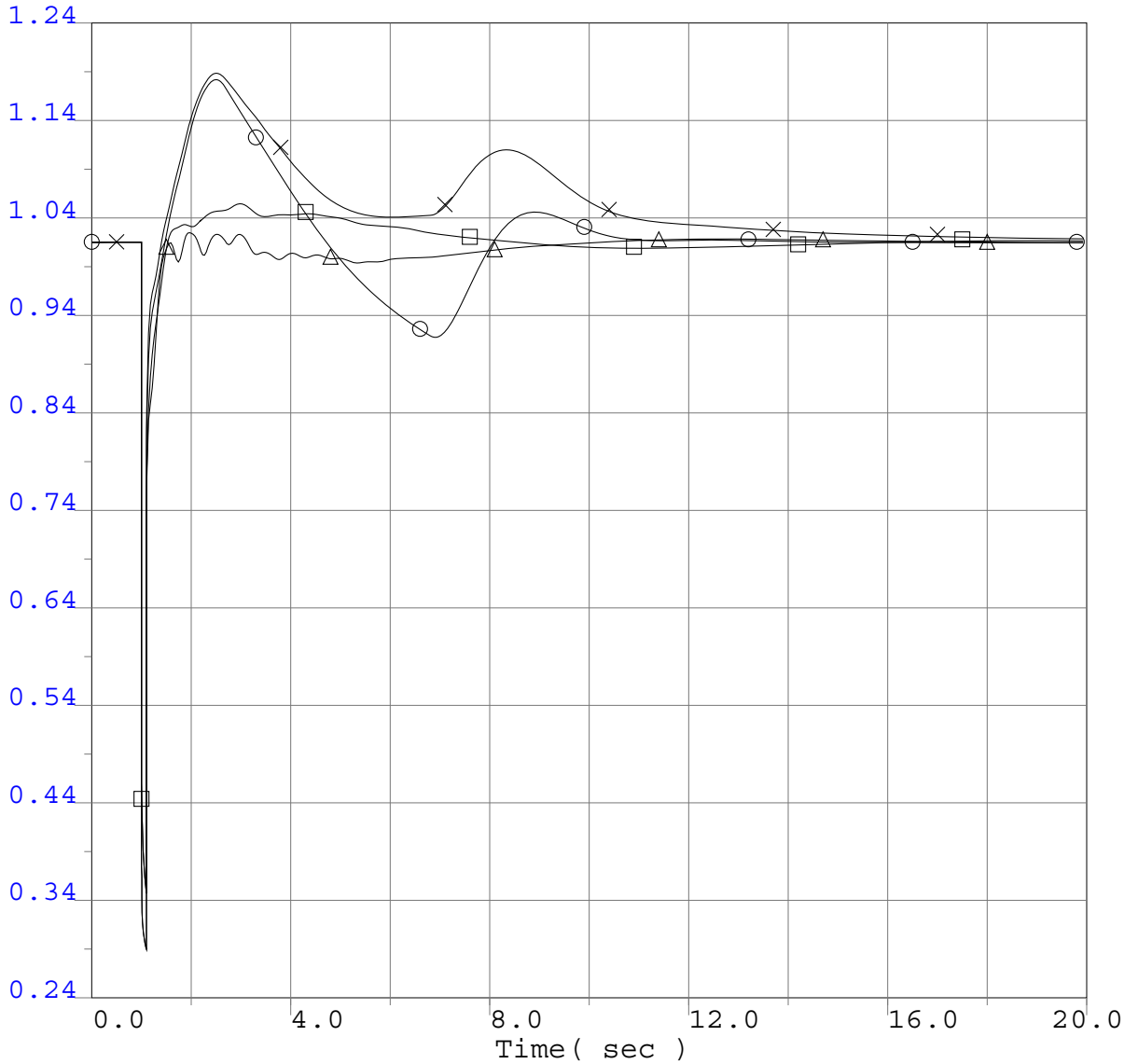

○	0.2400 vt	33191	T322GT1	16.5	0	0.0 "1"	1	1.2400
×	0.2400 vt	33192	T322ST1	13.8	0	0.0 "1"	1	1.2400
□	0.2400 vt	33193	T322GT2	16.5	0	0.0 "2"	1	1.2400
△	0.2400 vt	33194	T322ST2	13.8	0	0.0 "2"	1	1.2400

Q322 Project GIPR Phase 1 Interconnection System Impact Study
2013 Greater Bay Area Summer Peak Base Case
Q322 @626MW
Pittsburg 230kV Bus 2D
3 ph 6 cyc flt @ Pittsburg & clr Pittsburg 230kV Bus 2D

Q322 GIPR Phase 1 Interconnection System Impact Study

Selected Generator Terminal Voltages (P.U.)

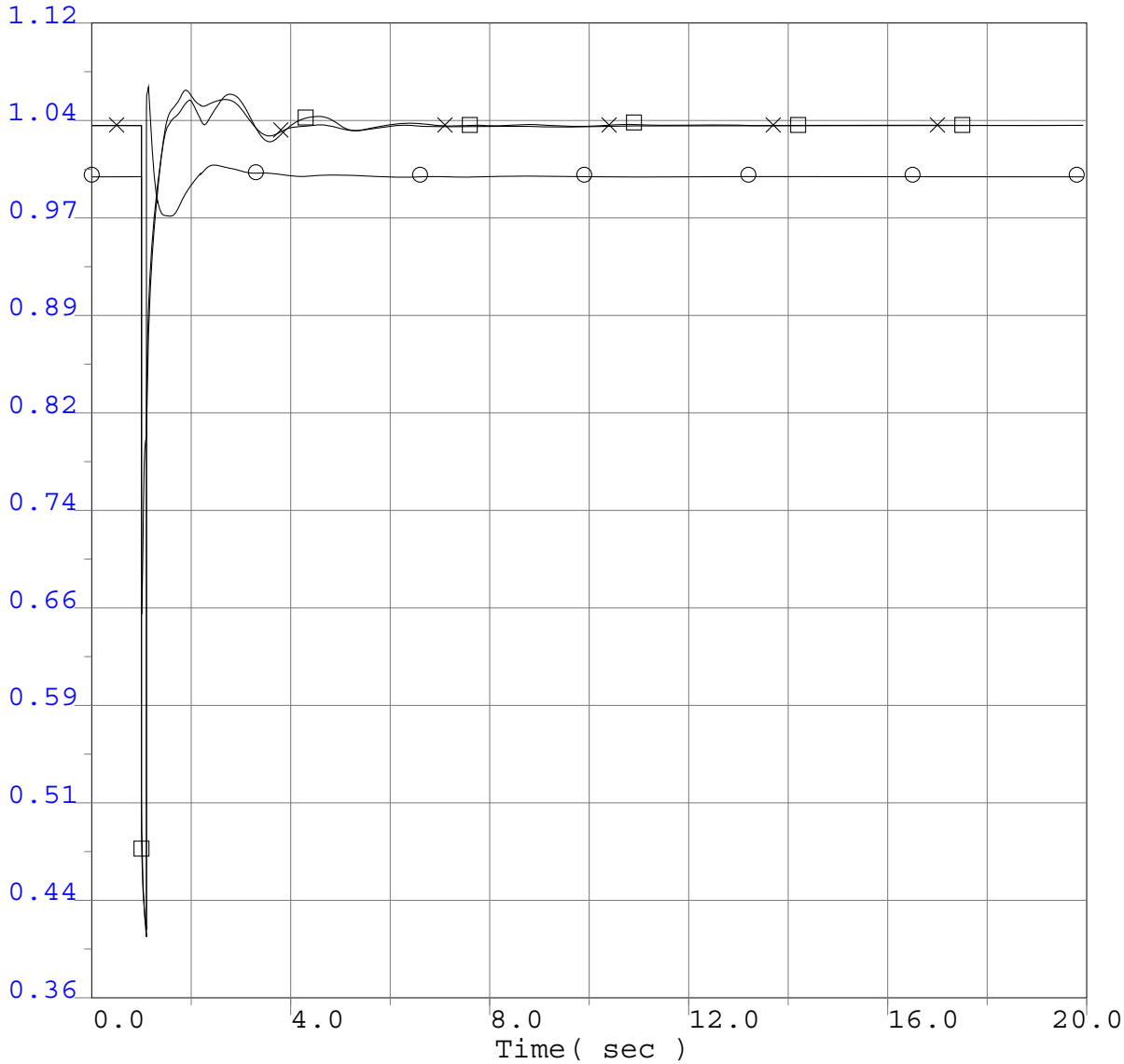

○	0.3600 vt	33195	T417	34.5	0	0.0 "1"	1	1.1200
×	0.3600 vt	33108	DEC CTG1	18.0	0	0.0 "1"	1	1.1200
□	0.3600 vt	33107	DEC STG1	24.0	0	0.0 "1"	1	1.1200

Q322 Project GIPR Phase 1 Interconnection System Impact Study
2013 Greater Bay Area Summer Peak Base Case
Q322 @626MW
Pittsburg 230kV Bus 2D
3 ph 6 cyc flt @ Pittsburg & clr Pittsburg 230kV Bus 2D

Q322 GIPR Phase 1 Interconnection System Impact Study

Project Generator Speed (P.U.)

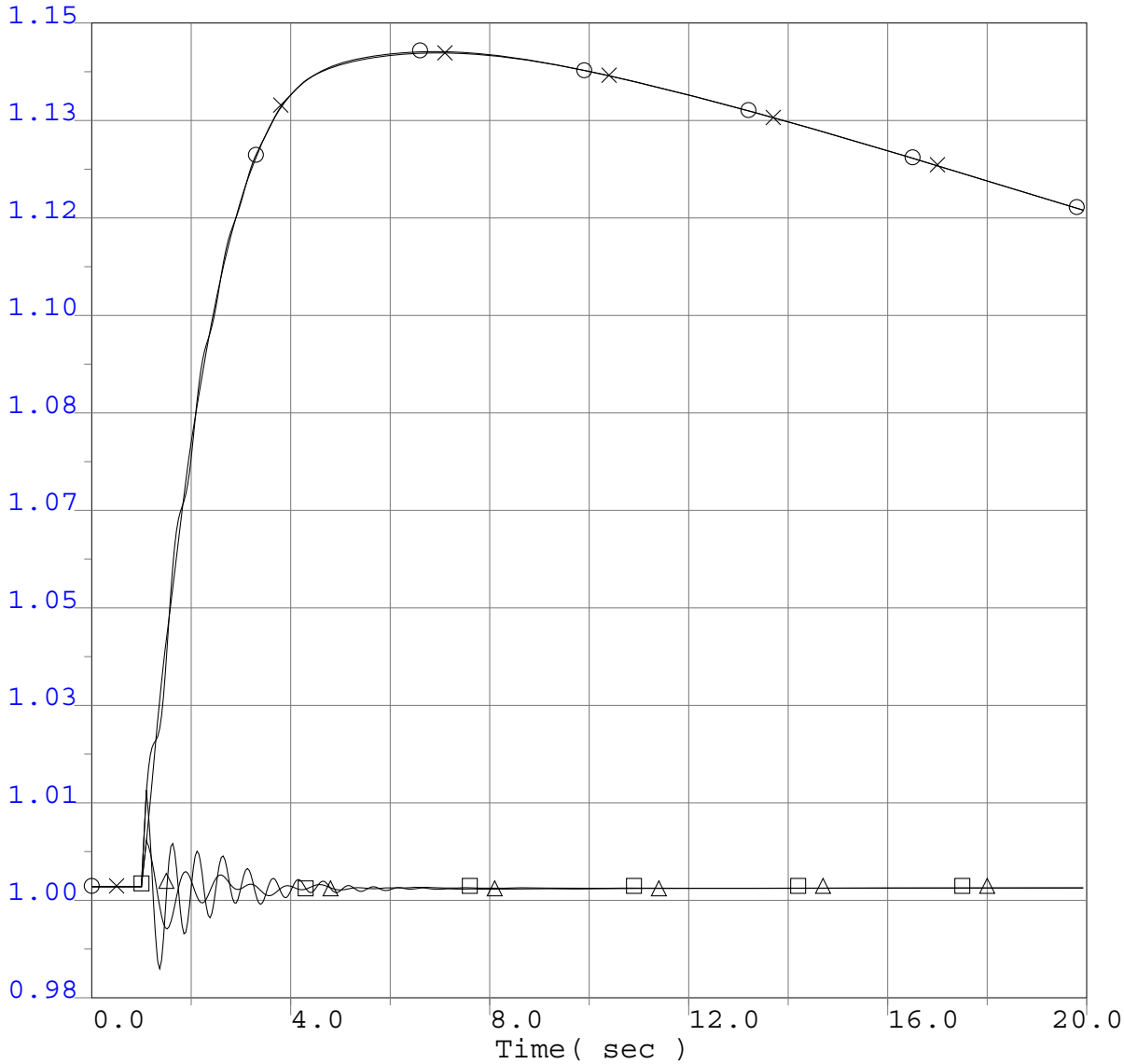

○	0.9807 spd	33191	T322GT1	16.5	0	0.0 "1"	1	1.1500
×	0.9807 spd	33192	T322ST1	13.8	0	0.0 "1"	1	1.1500
□	0.9807 spd	33193	T322GT2	16.5	0	0.0 "2"	1	1.1500
△	0.9807 spd	33194	T322ST2	13.8	0	0.0 "2"	1	1.1500

Q322 Project GIPR Phase 1 Interconnection System Impact Study
2013 Greater Bay Area Summer Peak Base Case
Q322 @626MW
Pittsburg 230kV Bus 2D
3 ph 6 cyc flt @ Pittsburg & clr Pittsburg 230kV Bus 2D

Q322 GIPR Phase 1 Interconnection System Impact Study

Selected Generator Speed (P.U.)

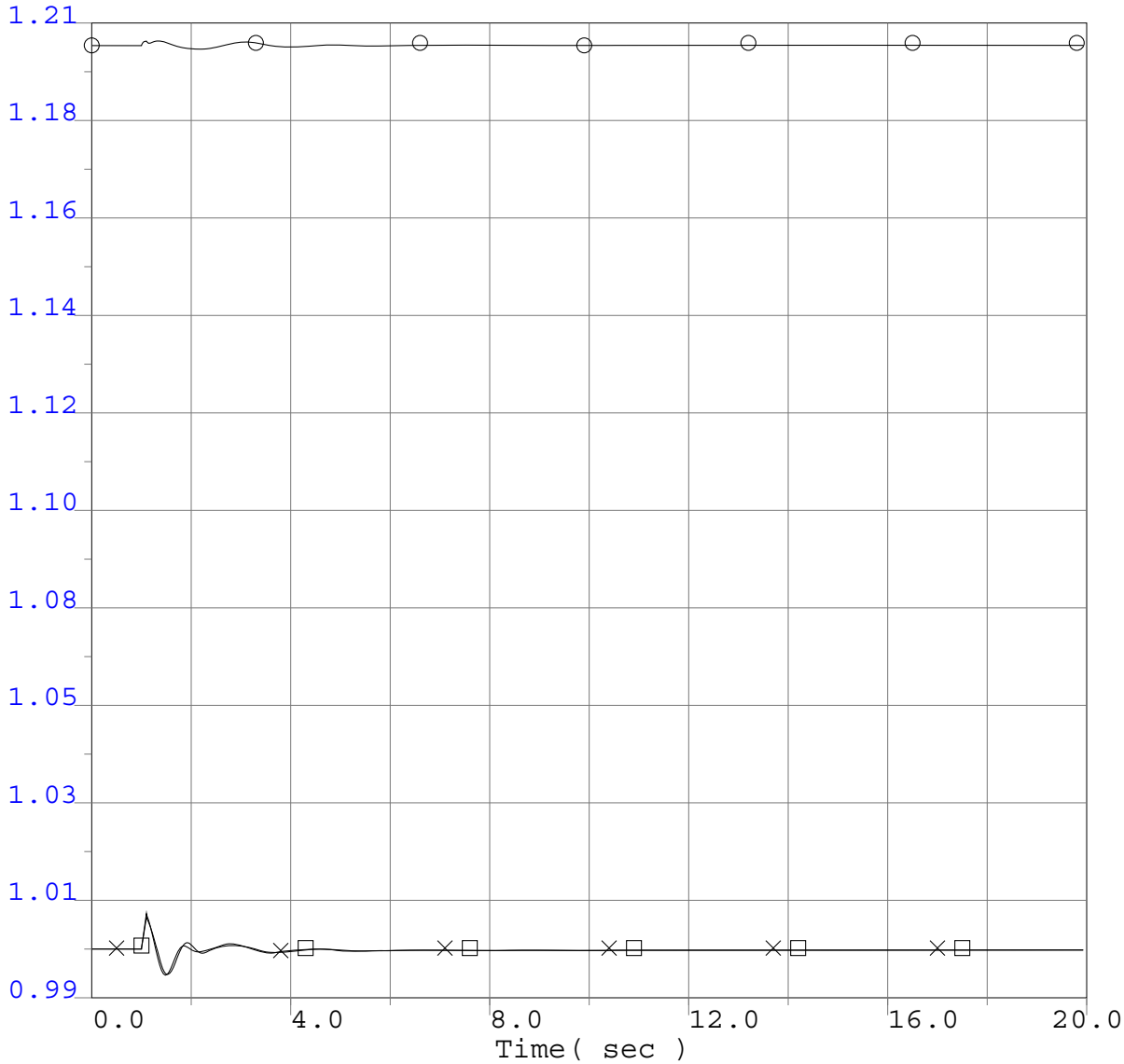

○	0.9892 spd	33195	T417	34.5	0	0.0 "1"	1	1.2050
⊗	0.9892 spd	33108	DEC CTG1	18.0	0	0.0 "1"	1	1.2050
□	0.9892 spd	33107	DEC STG1	24.0	0	0.0 "1"	1	1.2050

Q322 Project GIPR Phase 1 Interconnection System Impact Study
2013 Greater Bay Area Summer Peak Base Case
Q322 @626MW
Pittsburg 230kV Bus 2D
3 ph 6 cyc flt @ Pittsburg & clr Pittsburg 230kV Bus 2D

Q322 GIPR Phase 1 Interconnection System Impact Study

Project Generator Terminal Power (MW)

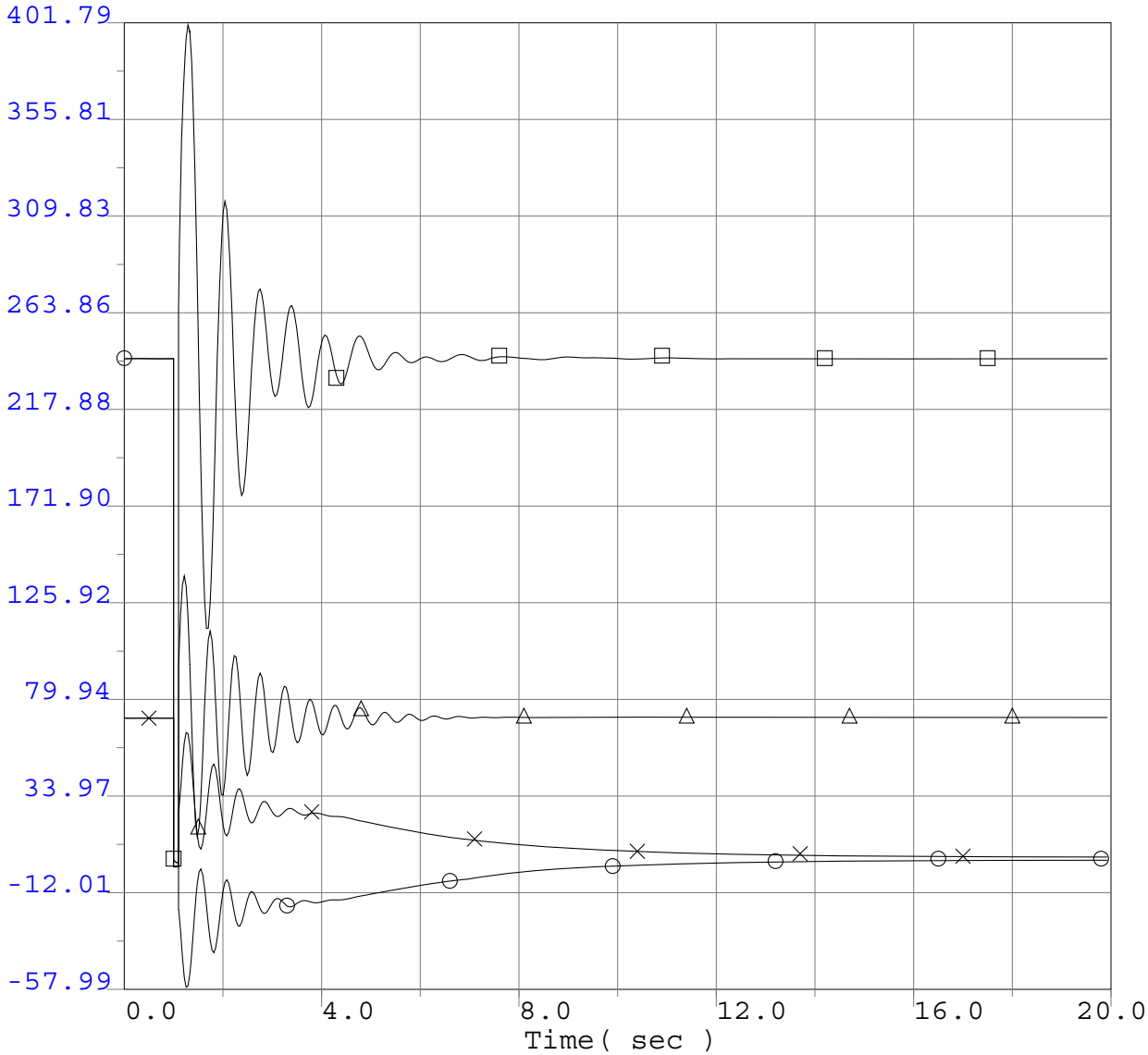

-57.9900 pg	33191	T322GT1	16.5	0	0.0 "1"	1	401.7900
-57.9900 pg	33192	T322ST1	13.8	0	0.0 "1"	1	401.7900
-57.9900 pg	33193	T322GT2	16.5	0	0.0 "2"	1	401.7900
-57.9900 pg	33194	T322ST2	13.8	0	0.0 "2"	1	401.7900

Q322 Project GIPR Phase 1 Interconnection System Impact Study
2013 Greater Bay Area Summer Peak Base Case
Q322 @626MW
Pittsburg 230kV Bus 2D
3 ph 6 cyc flt @ Pittsburg & clr Pittsburg 230kV Bus 2D

Q322 GIPR Phase 1 Interconnection System Impact Study

Selected Generator Terminal Power (MW)

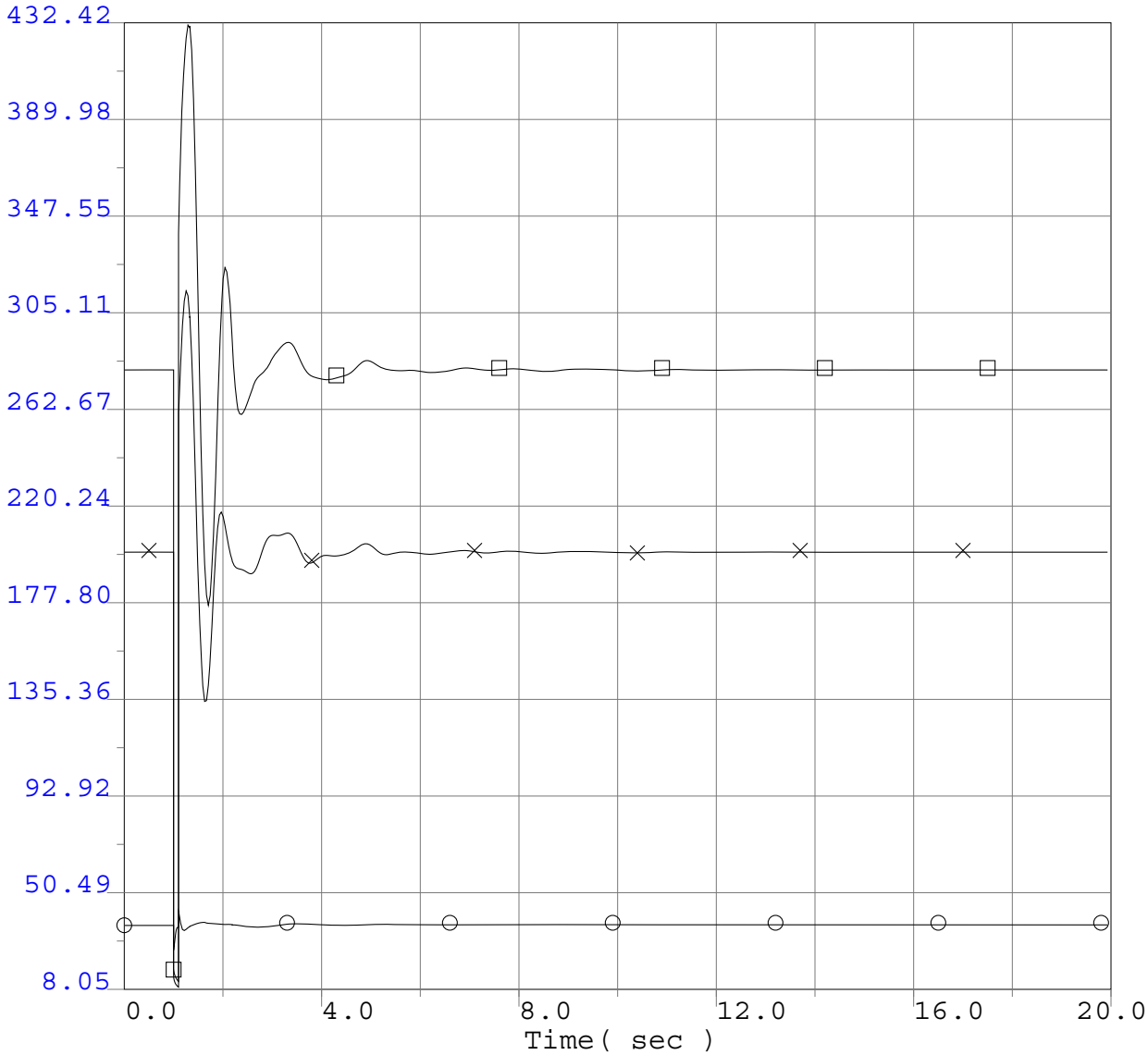

○	8.0500 pg	33195	T417	34.5	0	0.0 "1"	1	432.4200
⊗	8.0500 pg	33108	DEC CTG1	18.0	0	0.0 "1"	1	432.4200
□	8.0500 pg	33107	DEC STG1	24.0	0	0.0 "1"	1	432.4200

Q322 Project GIPR Phase 1 Interconnection System Impact Study
2013 Greater Bay Area Summer Peak Base Case
Q322 @626MW
Pittsburg 230kV Bus 2D
3 ph 6 cyc flt @ Pittsburg & clr Pittsburg 230kV Bus 2D

Q322 GIPR Phase 1 Interconnection System Impact Study

Project Generator Terminal Reactive Power (MVAr)

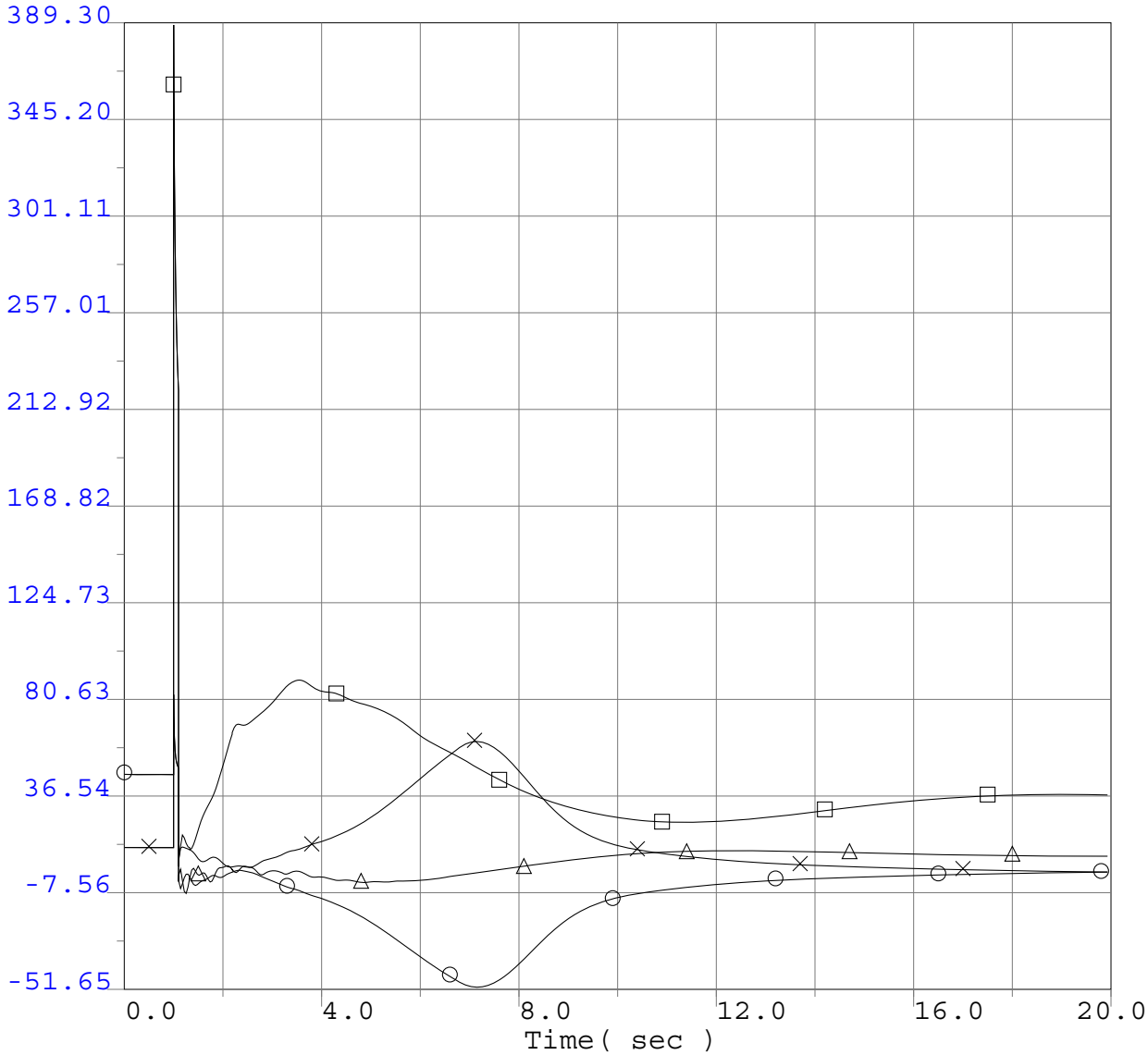

-51.6500 qg	33191	T322GT1	16.5	0	0.0 "1"	1	389.3000
-51.6500 qg	33192	T322ST1	13.8	0	0.0 "1"	1	389.3000
-51.6500 qg	33193	T322GT2	16.5	0	0.0 "2"	1	389.3000
-51.6500 qg	33194	T322ST2	13.8	0	0.0 "2"	1	389.3000

Q322 Project GIPR Phase 1 Interconnection System Impact Study
2013 Greater Bay Area Summer Peak Base Case
Q322 @626MW
Pittsburg 230kV Bus 2D
3 ph 6 cyc flt @ Pittsburg & clr Pittsburg 230kV Bus 2D

Q322 GIPR Phase 1 Interconnection System Impact Study

Selected Generator Terminal Reactive Power (MVAr)

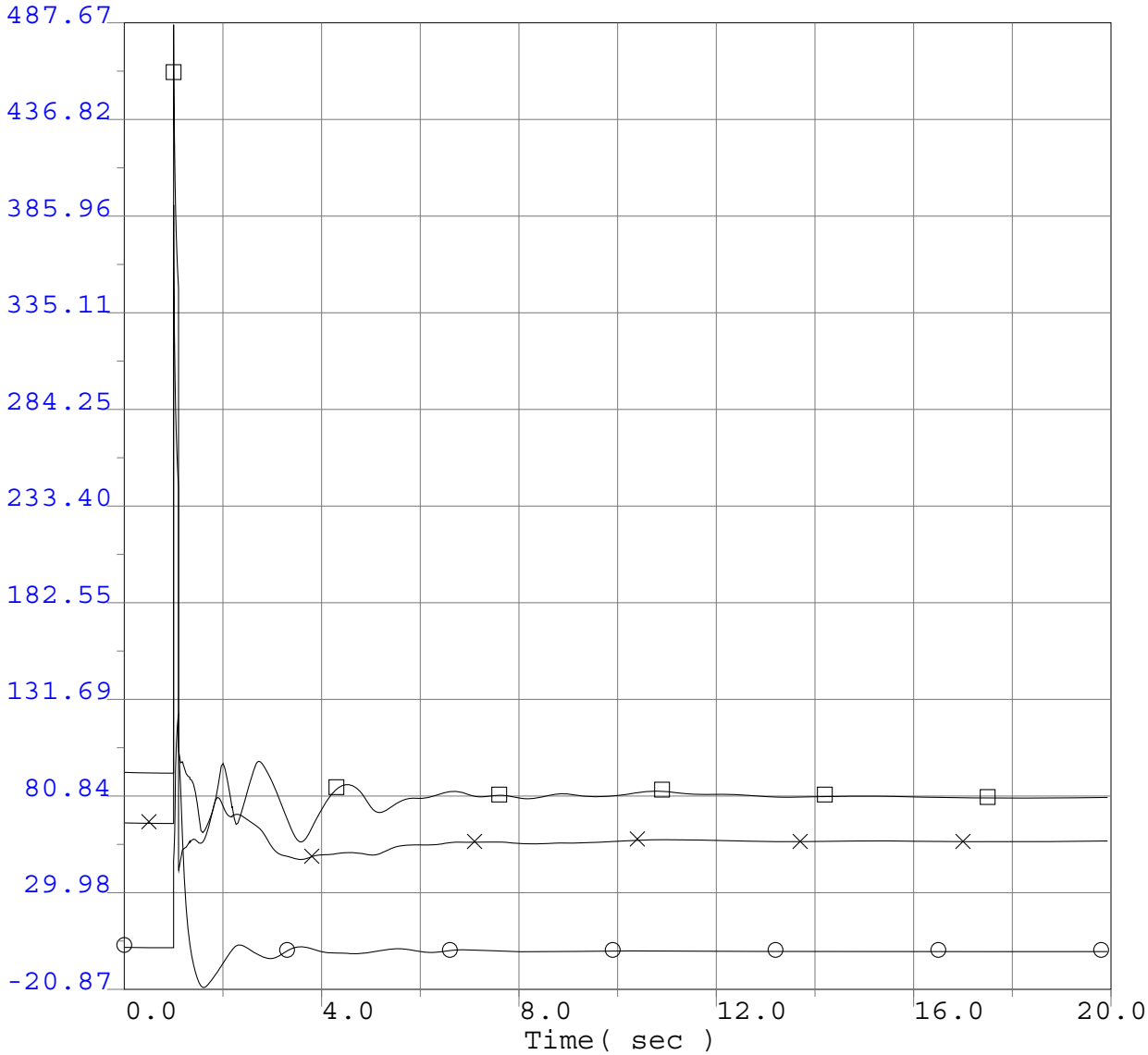

○	-20.8700 qg	33195	T417	34.5	0	0.0 "1"	1	487.6700
⊗	-20.8700 qg	33108	DEC CTG1	18.0	0	0.0 "1"	1	487.6700
□	-20.8700 qg	33107	DEC STG1	24.0	0	0.0 "1"	1	487.6700

Q322 Project GIPR Phase 1 Interconnection System Impact Study
2013 Greater Bay Area Summer Peak Base Case
Q322 @626MW
Pittsburg 230kV Bus 2D
3 ph 6 cyc flt @ Pittsburg & clr Pittsburg 230kV Bus 2D

Q322 GIPR Phase 1 Interconnection System Impact Study

Selected WECC Bus Voltage Plots

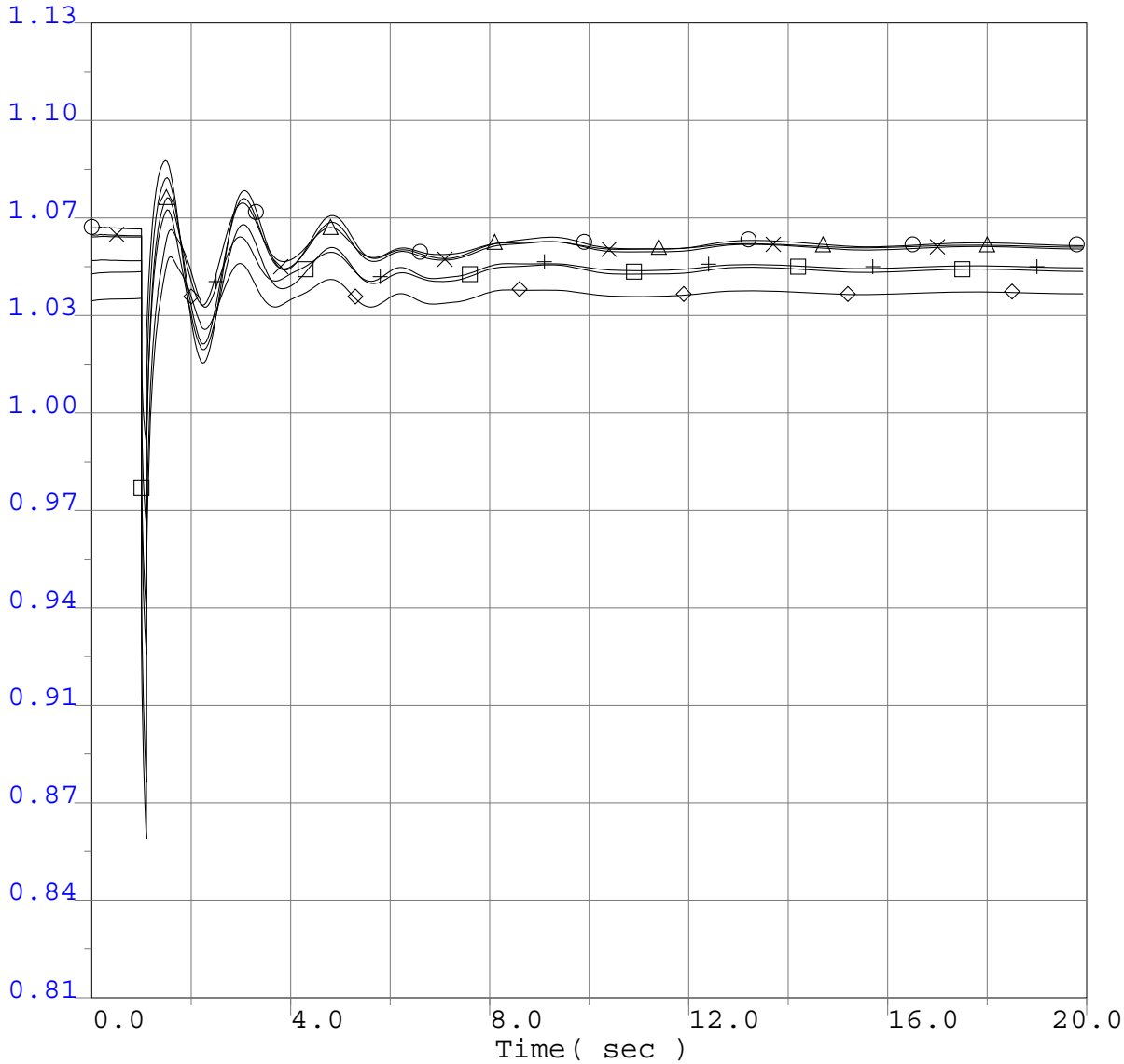

0.8100	vbus	40687	MALIN	500.0	0	0.0 "*"	1	1.1300
0.8100	vbus	30005	ROUND MT	500.0	0	0.0 "*"	1	1.1300
0.8100	vbus	30015	TABLE MT	500.0	0	0.0 "*"	1	1.1300
0.8100	vbus	30030	VACA-DIX	500.0	0	0.0 "*"	1	1.1300
0.8100	vbus	30040	TESLA	500.0	0	0.0 "*"	1	1.1300
0.8100	vbus	30035	TRACY	500.0	0	0.0 "*"	1	1.1300

Q322 Project GIPR Phase 1 Interconnection System Impact Study
2013 Greater Bay Area Summer Peak Base Case
Q322 @626MW
Pittsburg 230kV Bus 2D
3 ph 6 cyc flt @ Pittsburg & clr Pittsburg 230kV Bus 2D

Q322 GIPR Phase 1 Interconnection System Impact Study

Selected WECC Bus Voltage Plots

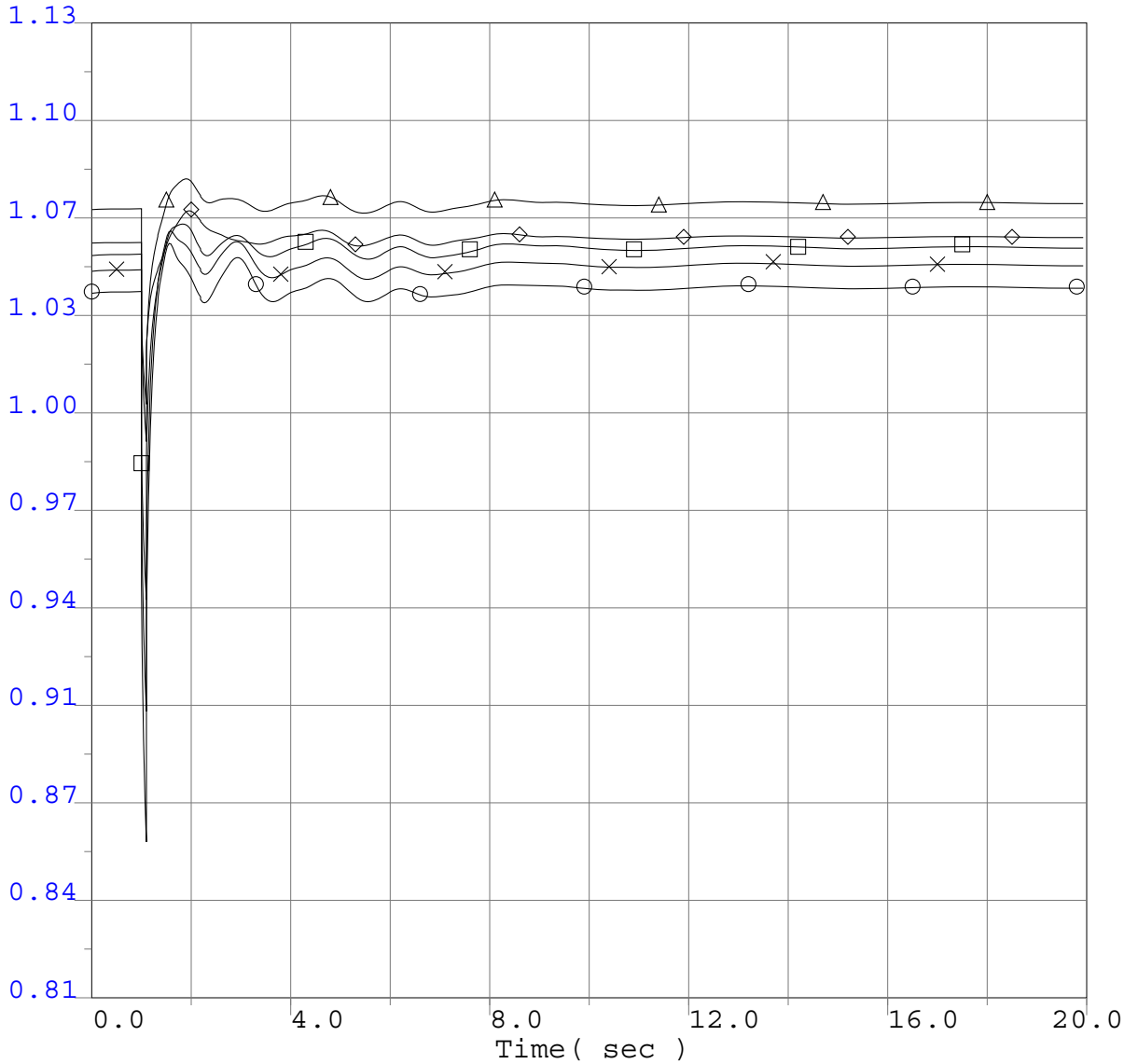

0.8100	vbus	30042	METCALF	500.0	0	0.0 "*"	1	1.1300
0.8100	vbus	30045	MOSSLAND	500.0	0	0.0 "*"	1	1.1300
0.8100	vbus	30050	LOSBANOS	500.0	0	0.0 "*"	1	1.1300
0.8100	vbus	30055	GATES	500.0	0	0.0 "*"	1	1.1300
0.8100	vbus	30060	MIDWAY	500.0	0	0.0 "*"	1	1.1300

Q322 Project GIPR Phase 1 Interconnection System Impact Study
2013 Greater Bay Area Summer Peak Base Case
Q322 @626MW
Pittsburg 230kV Bus 2D
3 ph 6 cyc flt @ Pittsburg & clr Pittsburg 230kV Bus 2D

Q322 GIPR Phase 1 Interconnection System Impact Study

Selected WECC Bus Voltage Plots

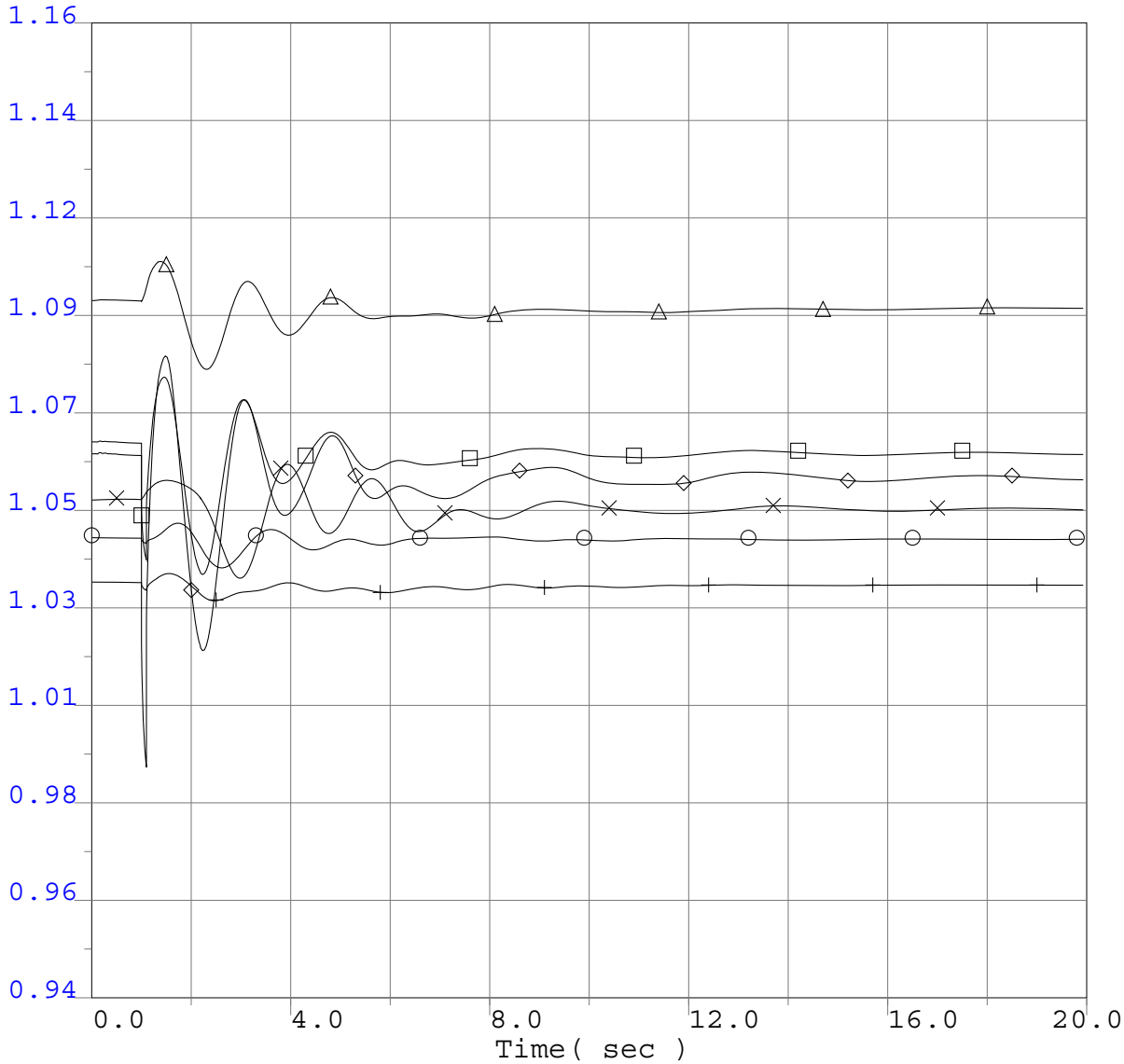

0.9400	vbus	14001	FOURCORN	500.0	0	0.0 "*"	1	1.1600
0.9400	vbus	50703	NIC500	500.0	0	0.0 "*"	1	1.1600
0.9400	vbus	60240	MIDPOINT	500.0	0	0.0 "*"	1	1.1600
0.9400	vbus	62012	TOWN2	500.0	0	0.0 "*"	1	1.1600
0.9400	vbus	40687	MALIN	500.0	0	0.0 "*"	1	1.1600
0.9400	vbus	66340	SIGURD	345.0	0	0.0 "*"	1	1.1600

Q322 Project GIPR Phase 1 Interconnection System Impact Study
2013 Greater Bay Area Summer Peak Base Case
Q322 @626MW
Pittsburg 230kV Bus 2D
3 ph 6 cyc flt @ Pittsburg & clr Pittsburg 230kV Bus 2D

Q322 GIPR Phase 1 Interconnection System Impact Study

Selected WECC Bus Voltage Plots

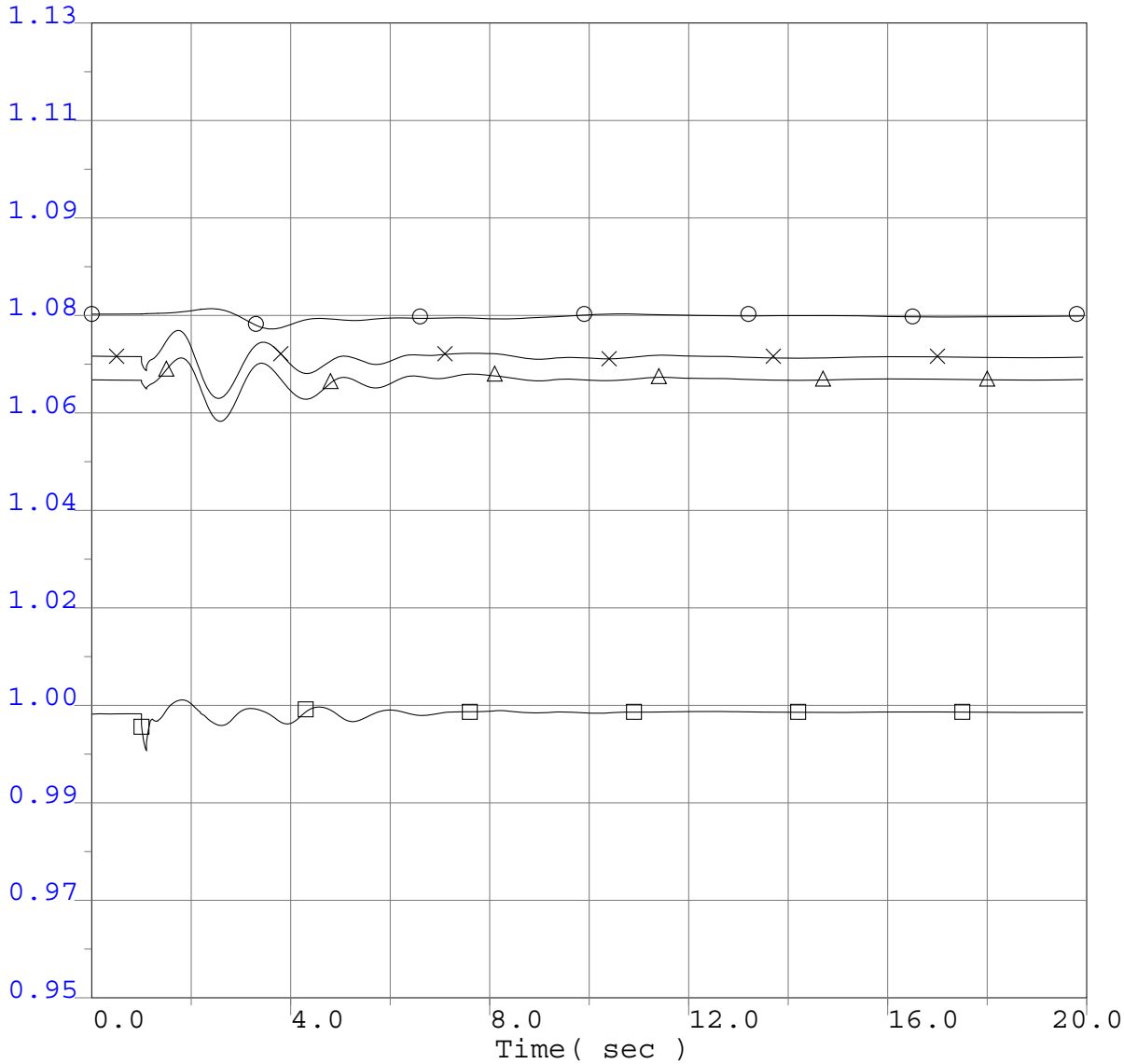

○	0.9500 vbul	54150	WILLESD9 240.0	0	0.0 "*"	1	1.1300
⊗	0.9500 vbus	14003	NAVAJO 500.0	0	0.0 "*"	1	1.1300
□	0.9500 vbus	24153	VESTAL 230.0	0	0.0 "*"	1	1.1300
△	0.9500 vbus	22360	IMPRLVLY 500.0	0	0.0 "*"	1	1.1300

Q322 Project GIPR Phase 1 Interconnection System Impact Study
2013 Greater Bay Area Summer Peak Base Case
Q322 @626MW
Pittsburg 230kV Bus 2D
3 ph 6 cyc flt @ Pittsburg & clr Pittsburg 230kV Bus 2D

Q322 GIPR Phase 1 Interconnection System Impact Study

Selected WECC Bus Frequency Plots

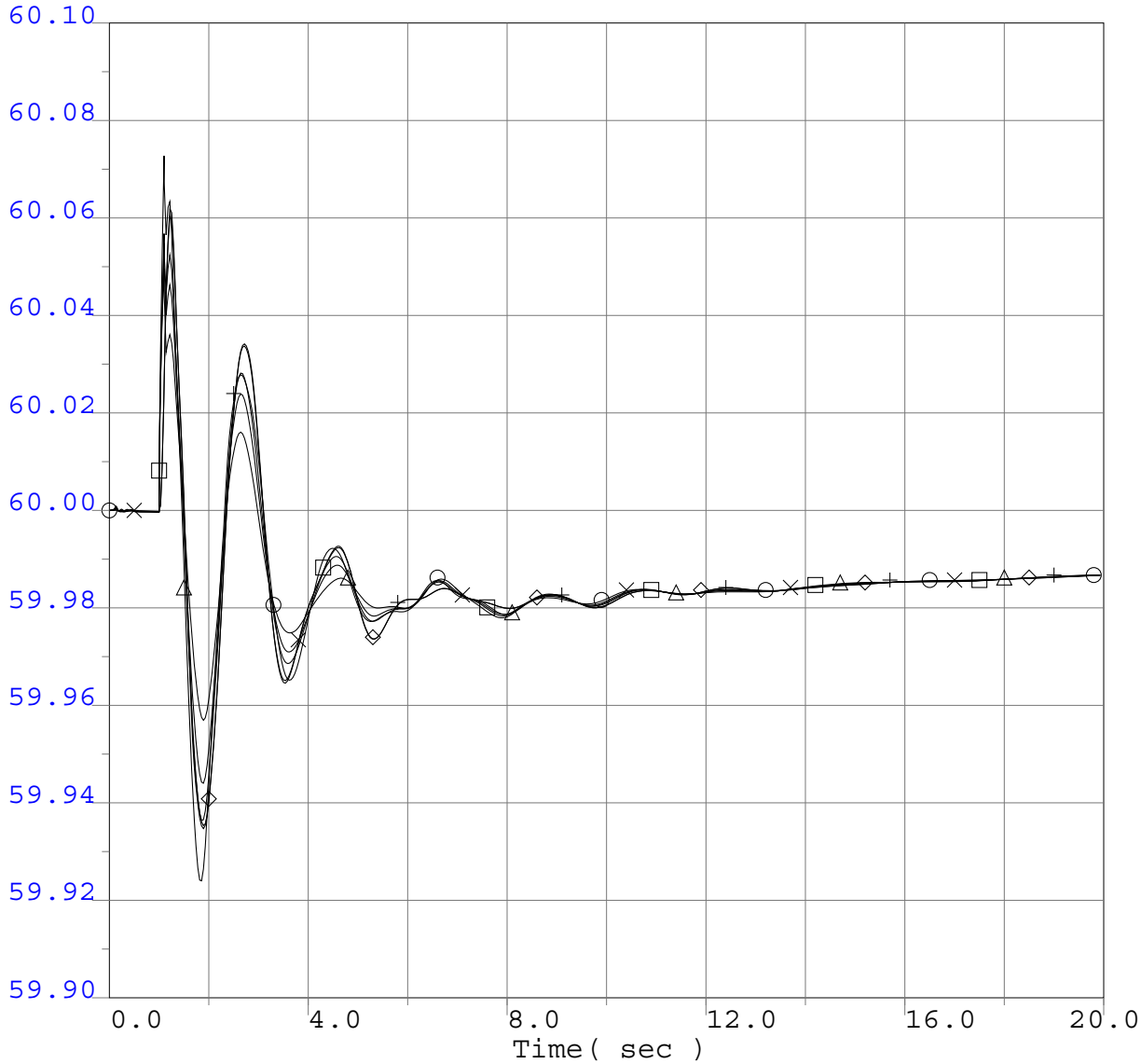

○	59.9000 fbus	40687	MALIN 500.0	0	0.0 "*"	1	60.1000
⊗	59.9000 fbus	30005	ROUND MT 500.0	0	0.0 "*"	1	60.1000
□	59.9000 fbus	30015	TABLE MT 500.0	0	0.0 "*"	1	60.1000
△	59.9000 fbus	30030	VACA-DIX 500.0	0	0.0 "*"	1	60.1000
◇	59.9000 fbus	30040	TESLA 500.0	0	0.0 "*"	1	60.1000
+	59.9000 fbus	30035	TRACY 500.0	0	0.0 "*"	1	60.1000

Q322 Project GIPR Phase 1 Interconnection System Impact Study
2013 Greater Bay Area Summer Peak Base Case
Q322 @626MW
Pittsburg 230kV Bus 2D
3 ph 6 cyc flt @ Pittsburg & clr Pittsburg 230kV Bus 2D

Q322 GIPR Phase 1 Interconnection System Impact Study

Selected WECC Bus Frequency Plots

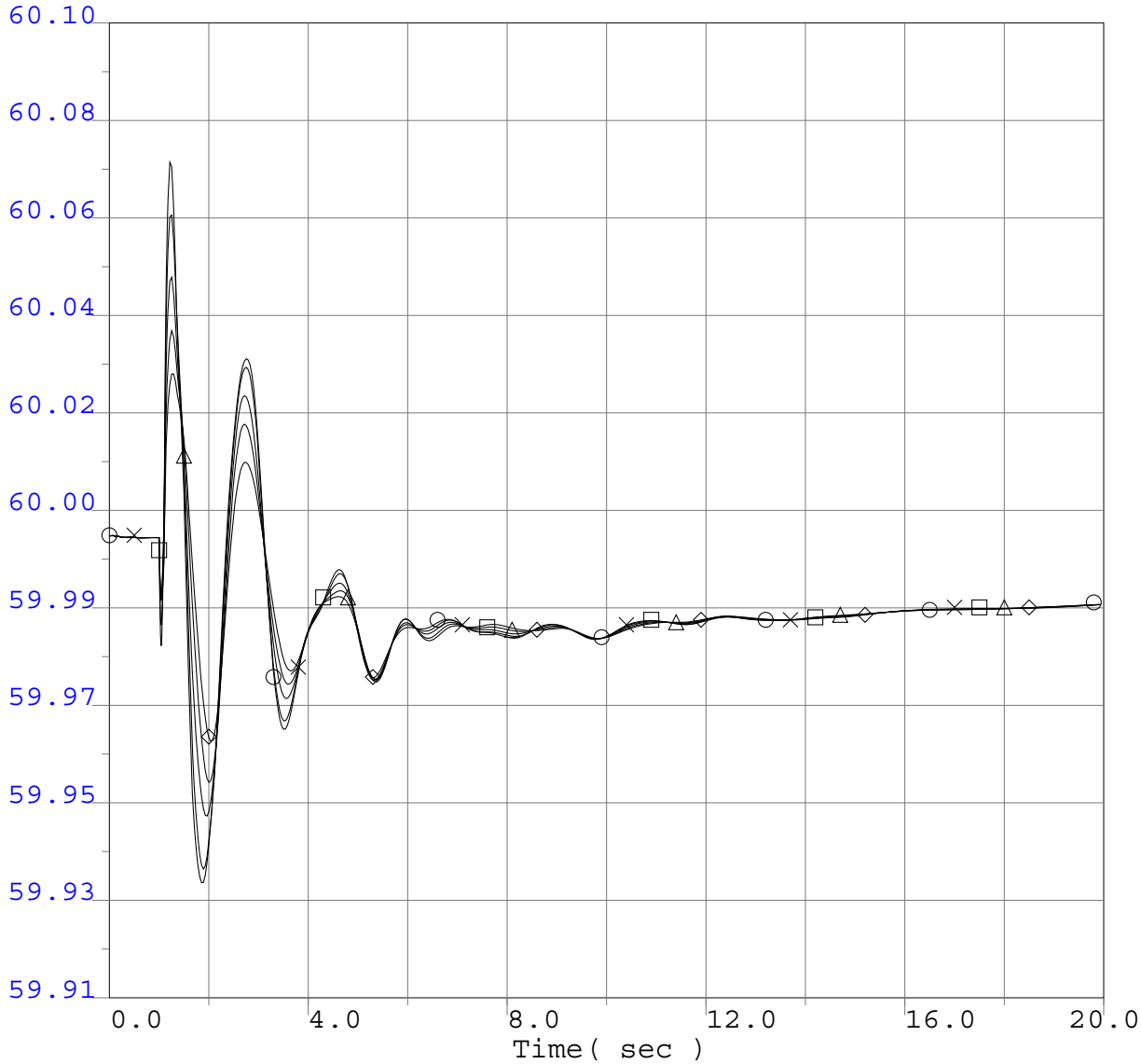

○	59.9100 fbus	30042	METCALF 500.0	0	0.0 "*"	1	60.1000
×	59.9100 fbus	30045	MOSSLAND 500.0	0	0.0 "*"	1	60.1000
□	59.9100 fbus	30050	LOSBANOS 500.0	0	0.0 "*"	1	60.1000
△	59.9100 fbus	30055	GATES 500.0	0	0.0 "*"	1	60.1000
◇	59.9100 fbus	30060	MIDWAY 500.0	0	0.0 "*"	1	60.1000

Q322 Project GIPR Phase 1 Interconnection System Impact Study
2013 Greater Bay Area Summer Peak Base Case
Q322 @626MW
Pittsburg 230kV Bus 2D
3 ph 6 cyc flt @ Pittsburg & clr Pittsburg 230kV Bus 2D

Q322 GIPR Phase 1 Interconnection System Impact Study

Selected WECC Bus Frequency Plots

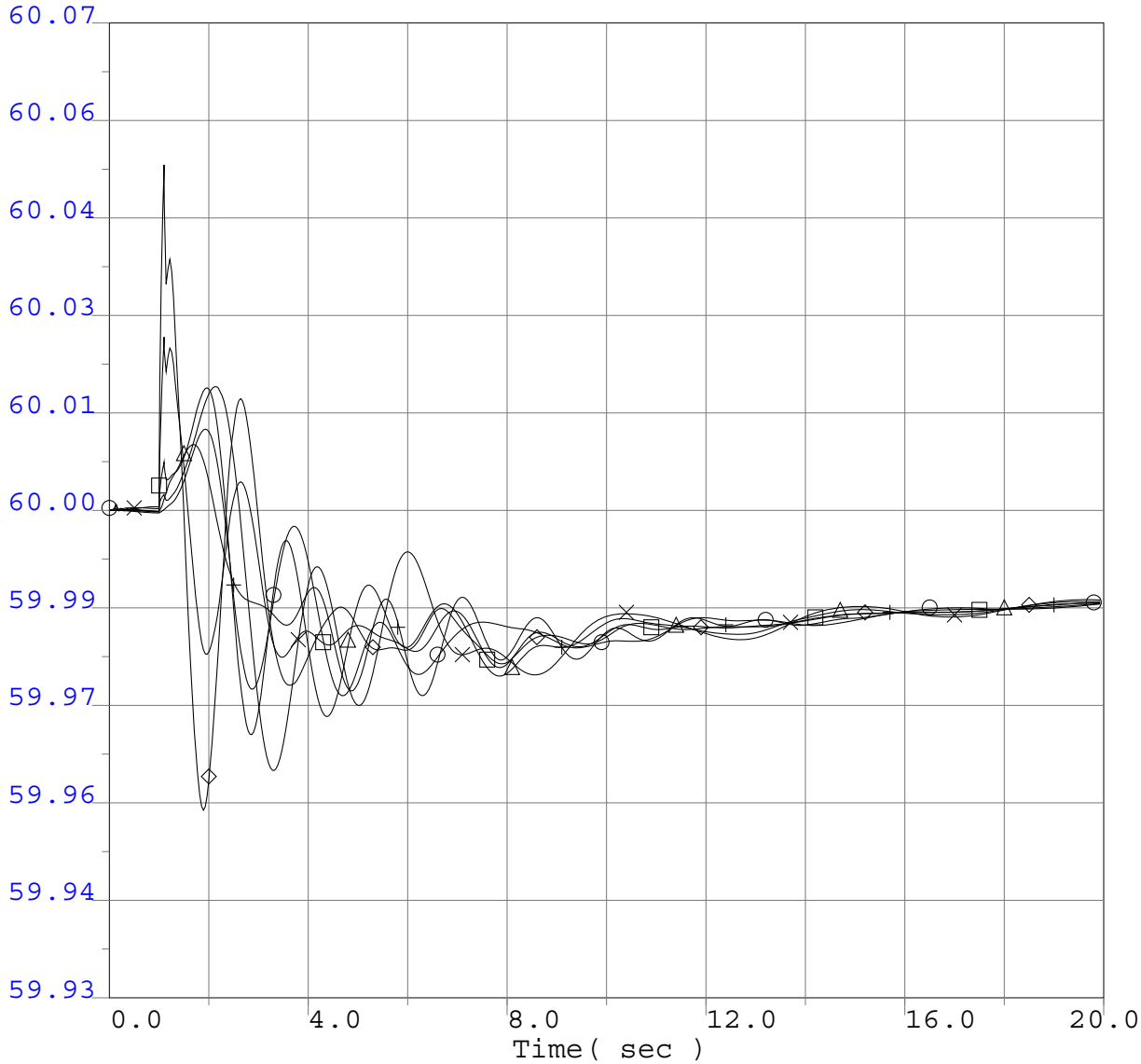

59.9300	fbus	14001	FOURCORN	500.0	0	0.0 "*"	1	60.0700
59.9300	fbus	50703	NIC500	500.0	0	0.0 "*"	1	60.0700
59.9300	fbus	60240	MIDPOINT	500.0	0	0.0 "*"	1	60.0700
59.9300	fbus	62012	TOWN2	500.0	0	0.0 "*"	1	60.0700
59.9300	fbus	40687	MALIN	500.0	0	0.0 "*"	1	60.0700
59.9300	fbus	66340	SIGURD	345.0	0	0.0 "*"	1	60.0700

Q322 Project GIPR Phase 1 Interconnection System Impact Study
2013 Greater Bay Area Summer Peak Base Case
Q322 @626MW
Pittsburg 230kV Bus 2D
3 ph 6 cyc flt @ Pittsburg & clr Pittsburg 230kV Bus 2D

Q322 GIPR Phase 1 Interconnection System Impact Study

Selected WECC Bus Frequency Plots

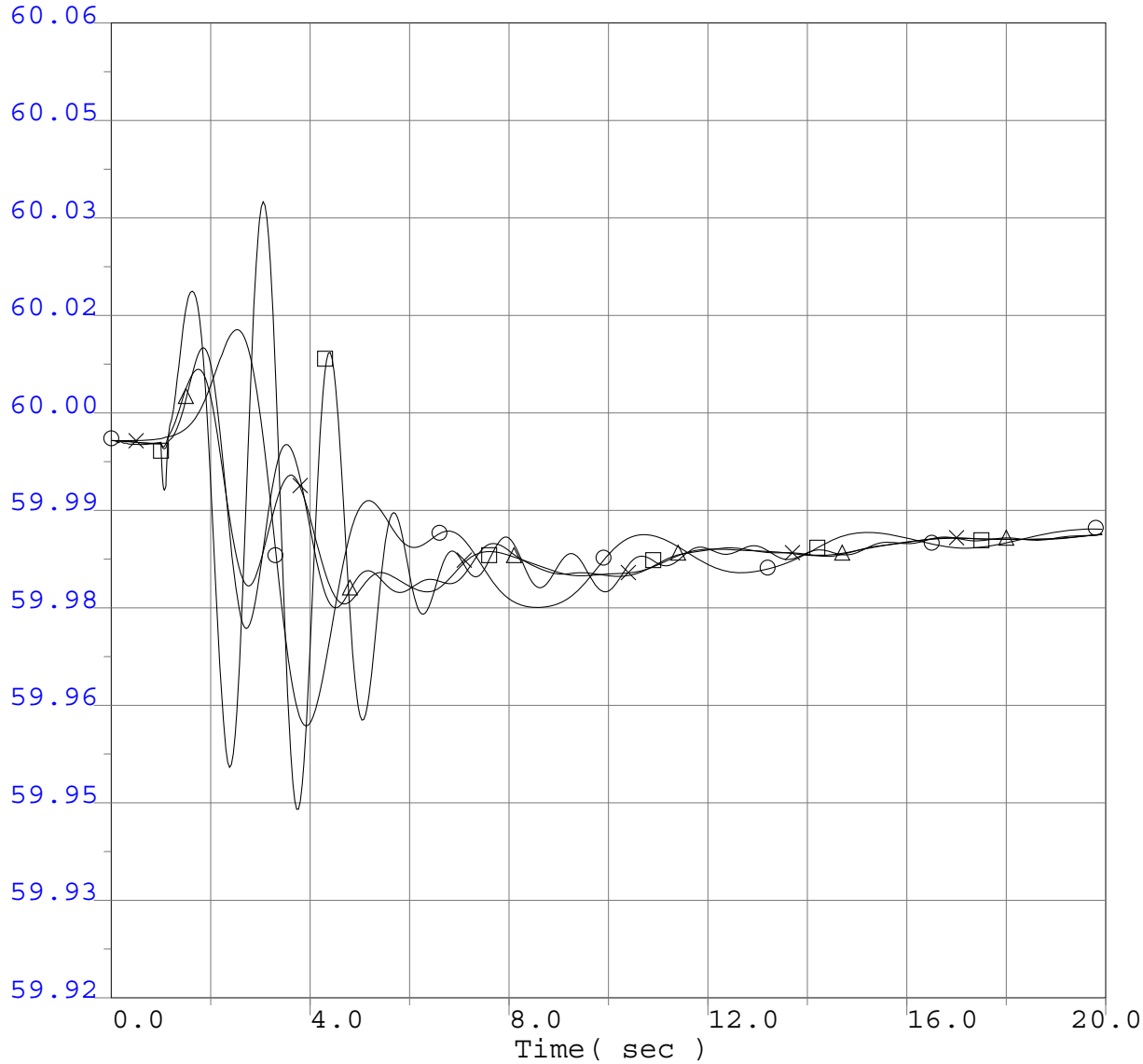

○	59.9200 fbul	54150	WILLESD9 240.0	0	0.0 "*"	1	60.0600
⊗	59.9200 fbus	14003	NAVAJO 500.0	0	0.0 "*"	1	60.0600
□	59.9200 fbus	24153	VESTAL 230.0	0	0.0 "*"	1	60.0600
△	59.9200 fbus	22360	IMPRLVLY 500.0	0	0.0 "*"	1	60.0600

Q322 Project GIPR Phase 1 Interconnection System Impact Study
2013 Greater Bay Area Summer Peak Base Case
Q322 @626MW
Pittsburg 230kV Bus 2D
3 ph 6 cyc flt @ Pittsburg & clr Pittsburg 230kV Bus 2D

Q322 GIPR Phase 1 Interconnection System Impact Study

WECC Generator Rotor Angle

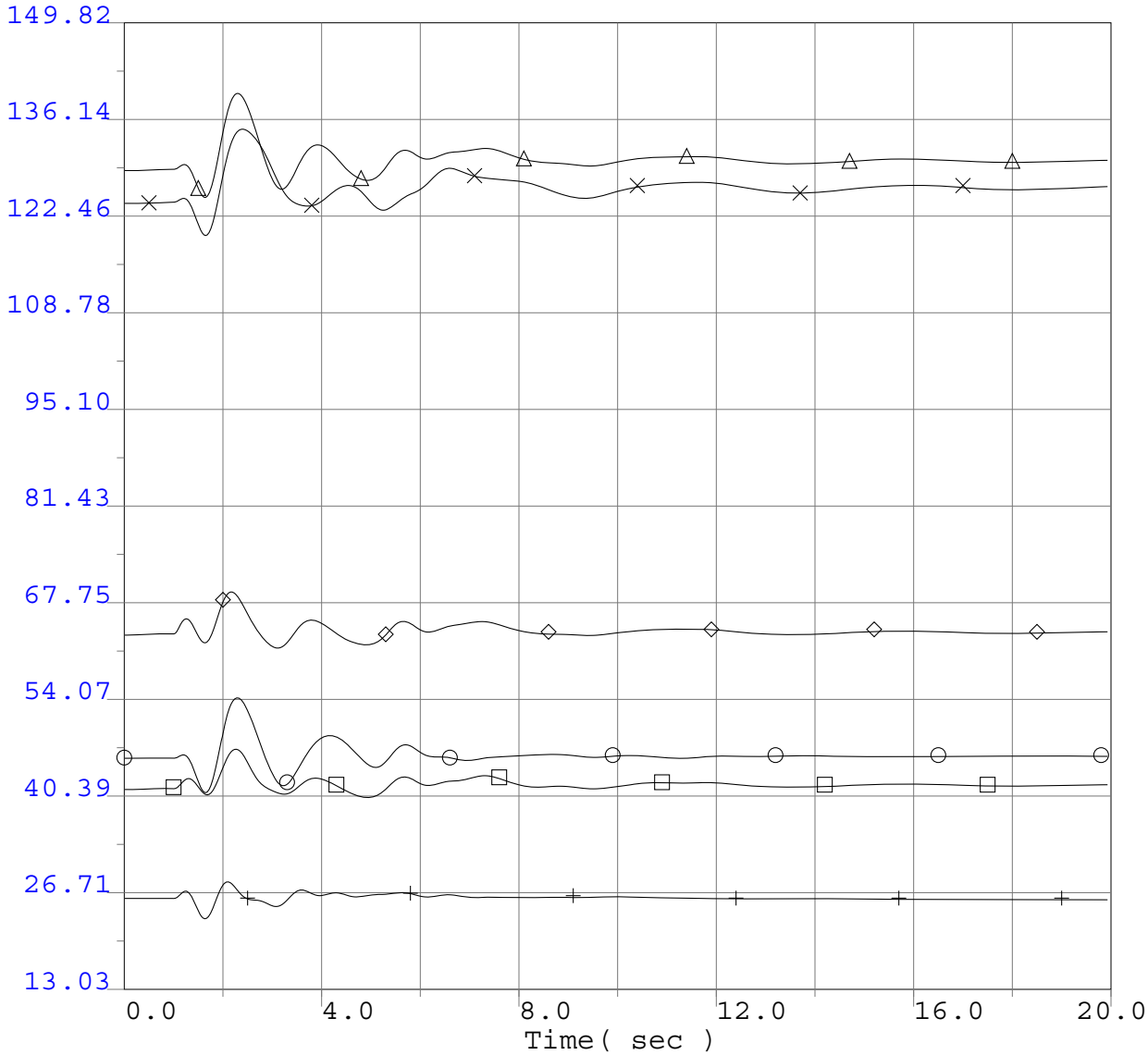

13.0300 ang	14914	FCNGN4CC	22.0	0	0.0 "H"	1	149.8200
13.0300 ang	50499	GMS G5	13.8	0	0.0 "1"	1	149.8200
13.0300 ang	60100	BRWNL 5	13.8	0	0.0 "1"	1	149.8200
13.0300 ang	62048	COLSTP 3	26.0	0	0.0 "1"	1	149.8200
13.0300 ang	44071	JDA 0102	13.8	0	0.0"01"	1	149.8200
13.0300 ang	36411	DIABLO 1	25.0	0	0.0 "1"	1	149.8200

Q322 Project GIPR Phase 1 Interconnection System Impact Study
2013 Greater Bay Area Summer Peak Base Case
Q322 @626MW
Pittsburg 230kV Bus 2D
3 ph 6 cyc flt @ Pittsburg & clr Pittsburg 230kV Bus 2D

Q322 GIPR Phase 1 Interconnection System Impact Study

WECC Generator Rotor Angle

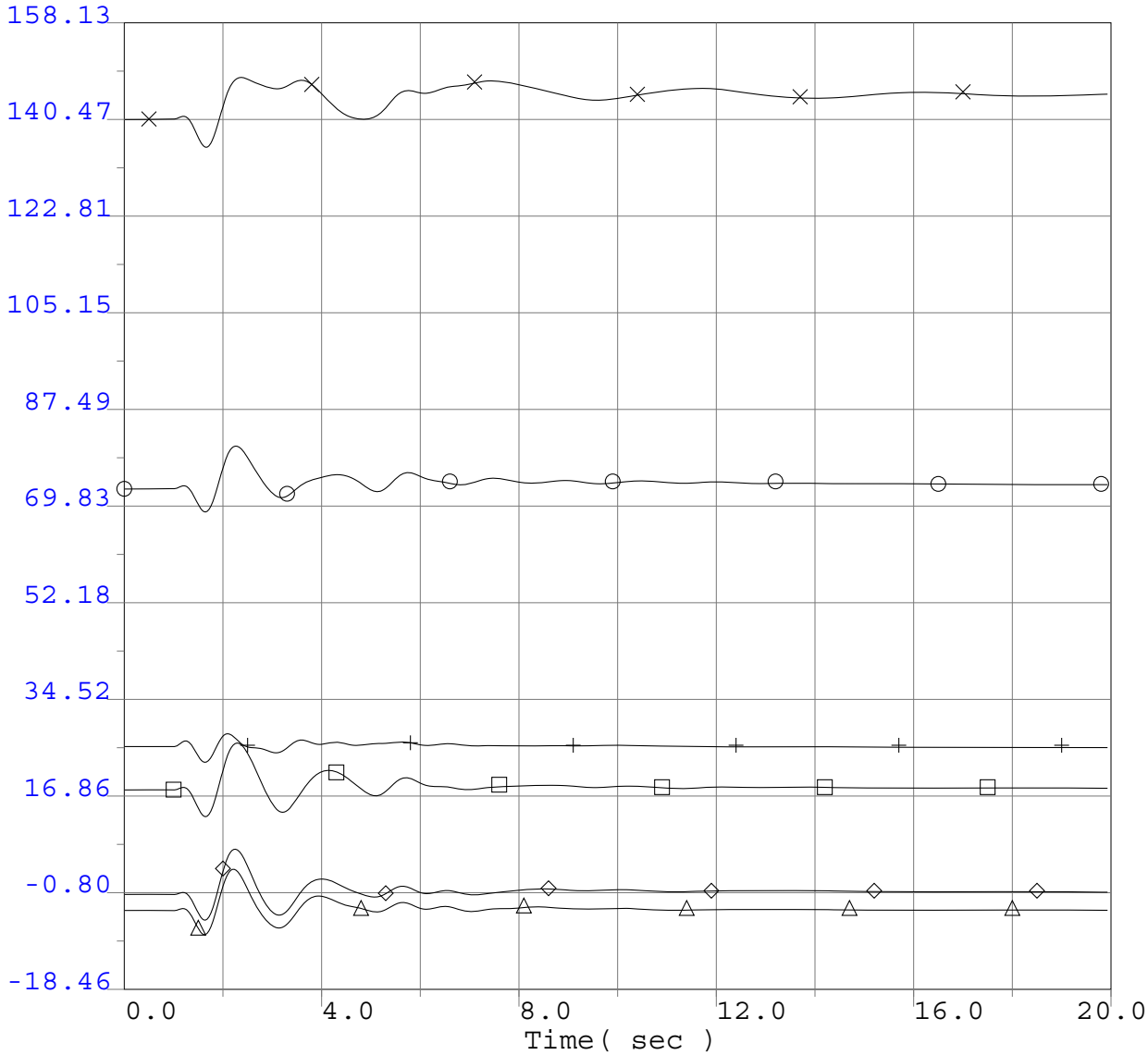

-18.4600 ang	65490	EHUNTR 1	24.0	0	0.0 "1"	1	158.1300
-18.4600 ang	54338	SUND#2GN	18.0	0	0.0 "2"	1	158.1300
-18.4600 ang	79151	GLENC3-4	13.8	0	0.0 "3"	1	158.1300
-18.4600 ang	24130	S.ONOFR3	22.0	0	0.0 "3"	1	158.1300
-18.4600 ang	22244	ENCINA 5	24.0	0	0.0 "1"	1	158.1300
-18.4600 ang	36411	DIABLO 1	25.0	0	0.0 "1"	1	158.1300

Q322 Project GIPR Phase 1 Interconnection System Impact Study
2013 Greater Bay Area Summer Peak Base Case
Q322 @626MW
Pittsburg 230kV Bus 2D
3 ph 6 cyc flt @ Pittsburg & clr Pittsburg 230kV Bus 2D

Q322 GIPR Phase 1 Interconnection System Impact Study

Selected PG&E Transmission Line Flows (MW)

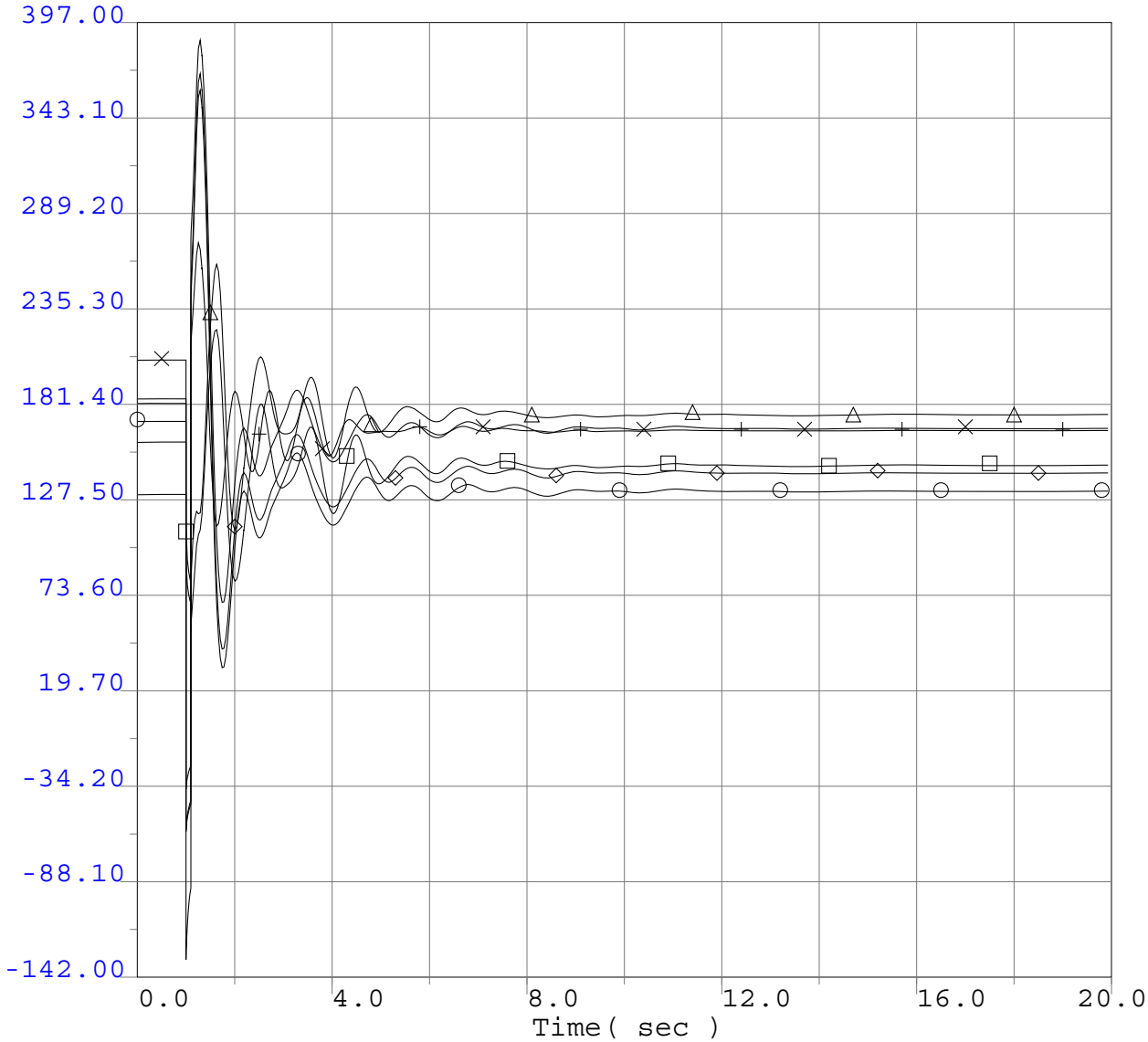

-142.0000 pbr	30527	PITSBG E 230.0	30600	TRES VAQ 230.0	1	2	397.0000
-142.0000 pbr	30600	TRES VAQ 230.0	30640	TESLA C 230.0	1	2	397.0000
-142.0000 pbr	30535	TIDEWATR 230.0	30527	PITSBG E 230.0	1	1	397.0000
-142.0000 pbr	30536	TESORO 230.0	30527	PITSBG E 230.0	1	1	397.0000
-142.0000 pbr	30527	PITSBG E 230.0	30595	FLOWIND2 230.0	1	1	397.0000
-142.0000 pbr	30527	PITSBG E 230.0	30560	E. SHORE 230.0	1	1	397.0000

Q322 Project GIPR Phase 1 Interconnection System Impact Study
2013 Greater Bay Area Summer Peak Base Case
Q322 @626MW
Pittsburg 230kV Bus 2D
3 ph 6 cyc flt @ Pittsburg & clr Pittsburg 230kV Bus 2D

Q322 GIPR Phase 1 Interconnection System Impact Study

Selected PG&E Transmission Line Flows (MW)

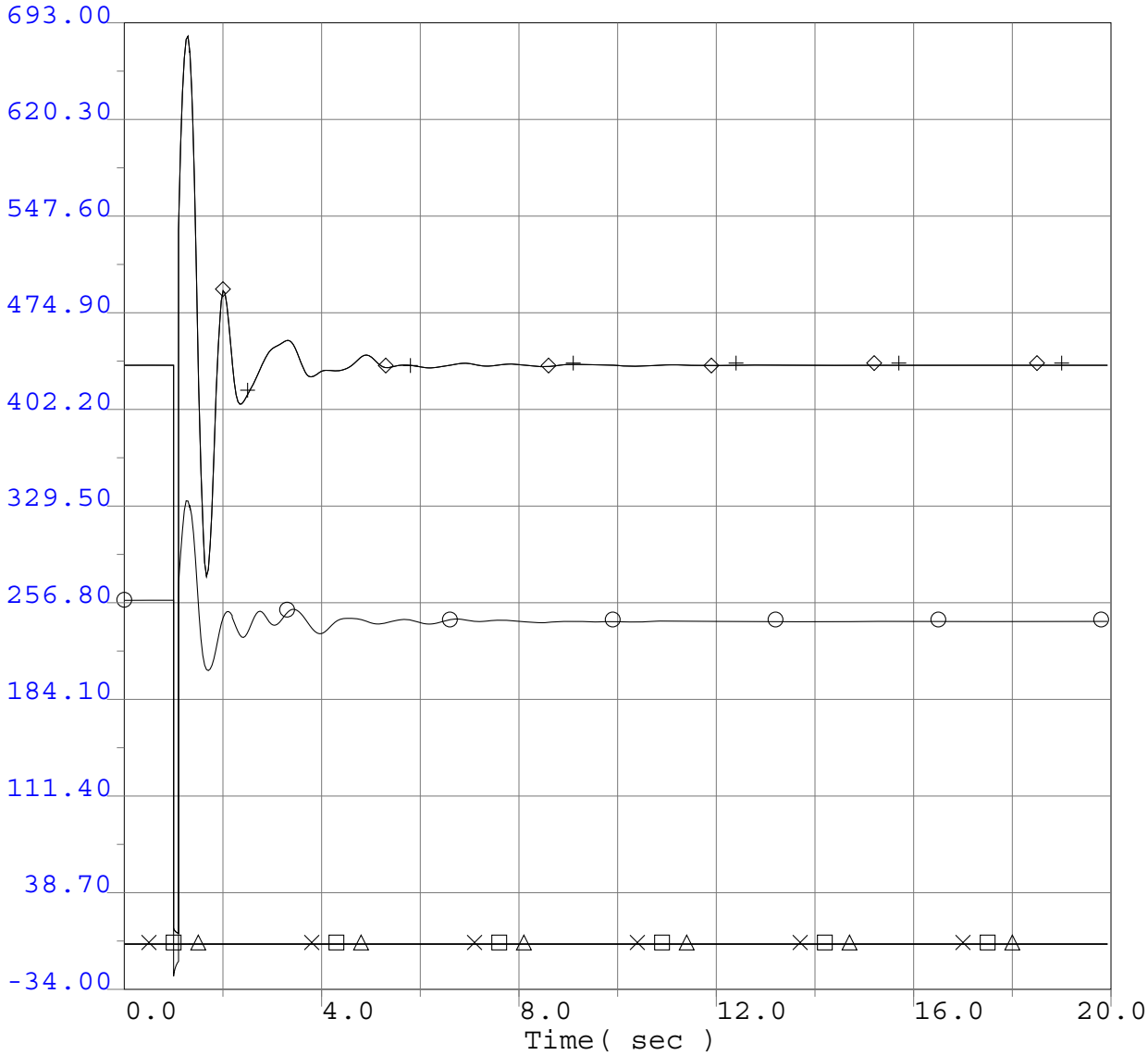

-34.0000 pbr	30527	PITSBG E 230.0	30700	SANMATEO 230.0	1	1	693.0000
-34.0000 pbr	30000	PTSB 7 20.0	30527	PITSBG E 230.0	1	1	693.0000
-34.0000 pbr	33105	PTSB 5 18.0	30527	PITSBG E 230.0	1	1	693.0000
-34.0000 pbr	33106	PTSB 6 18.0	30527	PITSBG E 230.0	1	1	693.0000
-34.0000 pbr	30528	DEC PTSG 230.0	30526	PITSBG D 230.0	1	1	693.0000
-34.0000 pbr	30528	DEC PTSG 230.0	30526	PITSBG D 230.0	1	2	693.0000

Q322 Project GIPR Phase 1 Interconnection System Impact Study
2013 Greater Bay Area Summer Peak Base Case
Q322 @626MW
Pittsburg 230kV Bus 2D
3 ph 6 cyc flt @ Pittsburg & clr Pittsburg 230kV Bus 2D

Q322 GIPR Phase 1 Interconnection System Impact Study

Selected PG&E Transmission Line Flows (MW)

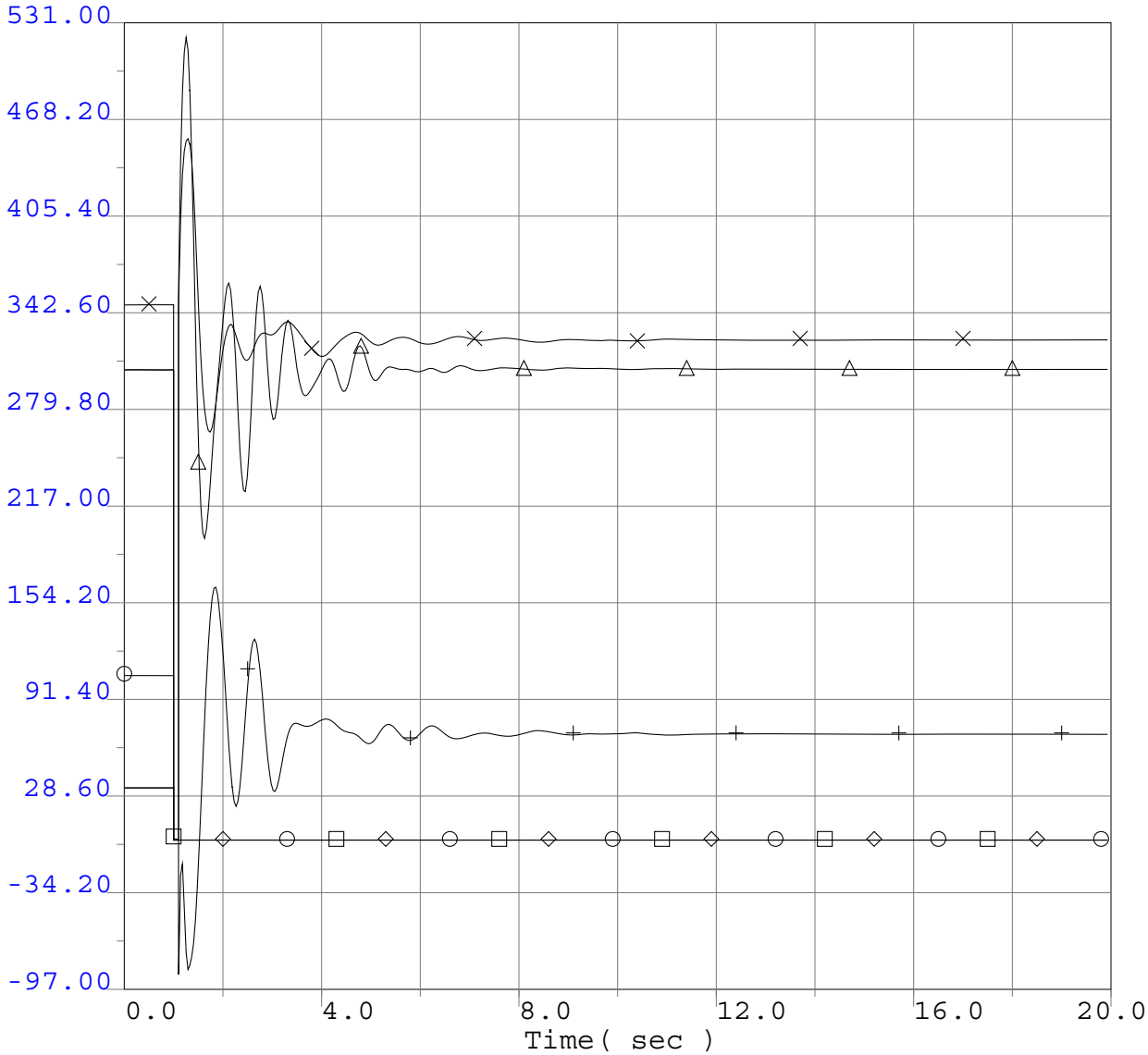

-97.0000 pbr	30526	PITSBG D 230.0	30555	SANRAMON 230.0	1	1	531.0000
-97.0000 pbr	30526	PITSBG D 230.0	30561	TASSAJAR 230.0	1	1	531.0000
-97.0000 pbr	30531	T322BUS1 230.0	30526	PITSBG D 230.0	1	1	531.0000
-97.0000 pbr	30532	T322BUS2 230.0	30526	PITSBG D 230.0	1	1	531.0000
-97.0000 pbr	30526	PITSBG D 230.0	32950	PITSBURG 115.0	1	12	531.0000
-97.0000 pbr	30526	PITSBG D 230.0	32950	PITSBURG 115.0	1	13	531.0000

Q322 Project GIPR Phase 1 Interconnection System Impact Study
2013 Greater Bay Area Summer Peak Base Case
Q322 @626MW
Pittsburg 230kV Bus 2D
3 ph 6 cyc flt @ Pittsburg & clr Pittsburg 230kV Bus 2D

Q322 GIPR Phase 1 Interconnection System Impact Study

Selected PG&E Transmission Line Flows (MW)

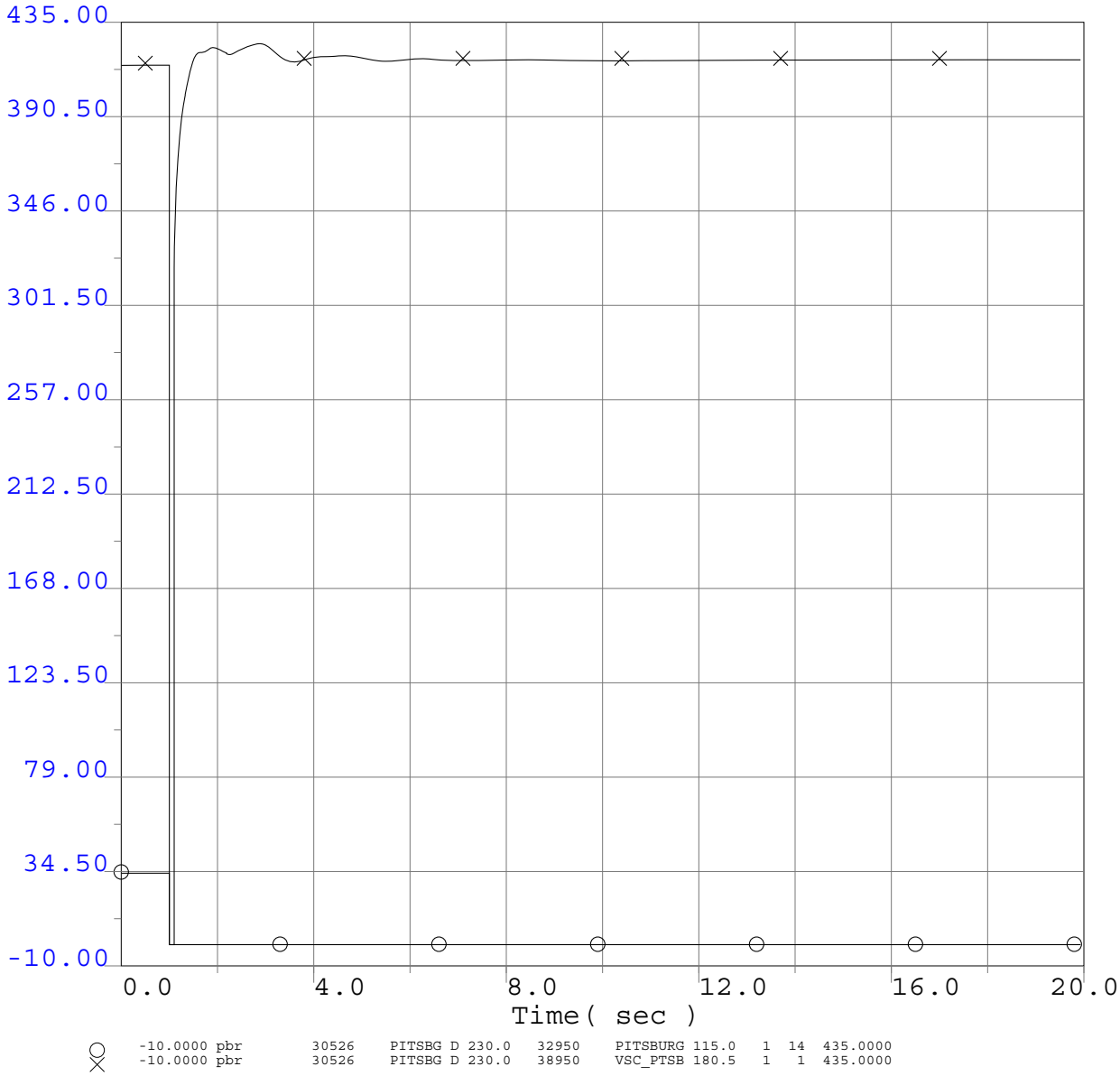

Q322 Project GIPR Phase 1 Interconnection System Impact Study
2013 Greater Bay Area Summer Peak Base Case
Q322 @626MW
Pittsburg 230kV Bus 2D
3 ph 6 cyc flt @ Pittsburg & clr Pittsburg 230kV Bus 2D

Q322 GIPR Phase 1 Interconnection System Impact Study

Selected PG&E Bus Voltage Plots Adjacent to Fault

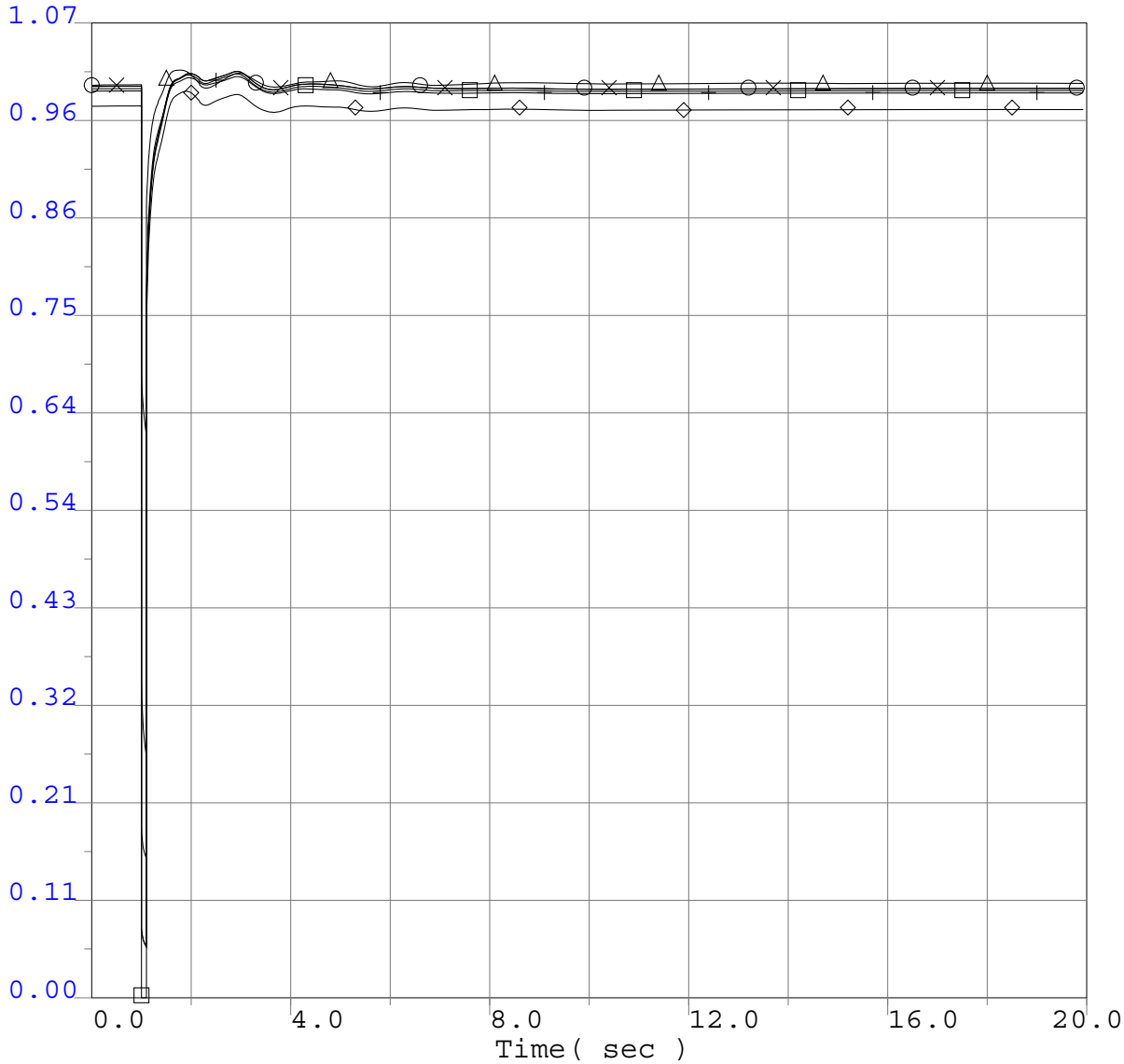

0.0000	vbus	30531	T322BUS1	230.0	0	0.0 "*"	1	1.0700
0.0000	vbus	30532	T322BUS2	230.0	0	0.0 "*"	1	1.0700
0.0000	vbus	30527	PITSBG E	230.0	0	0.0 "*"	1	1.0700
0.0000	vbus	30640	TESLA C	230.0	0	0.0 "*"	1	1.0700
0.0000	vbul	30561	TASSAJAR	230.0	0	0.0 "*"	1	1.0700
0.0000	vbul	30536	TESORO	230.0	0	0.0 "*"	1	1.0700

Q322 Project GIPR Phase 1 Interconnection System Impact Study
2013 Greater Bay Area Summer Peak Base Case
Q322 @626MW
Pittsburg 230kV Bus 1E
3 ph 6 cyc flt @ Pittsburg & clr Pittsburg 230kV Bus 1E

Q322 GIPR Phase 1 Interconnection System Impact Study

Selected PG&E Bus Frequency Plots Adjacent to Fault

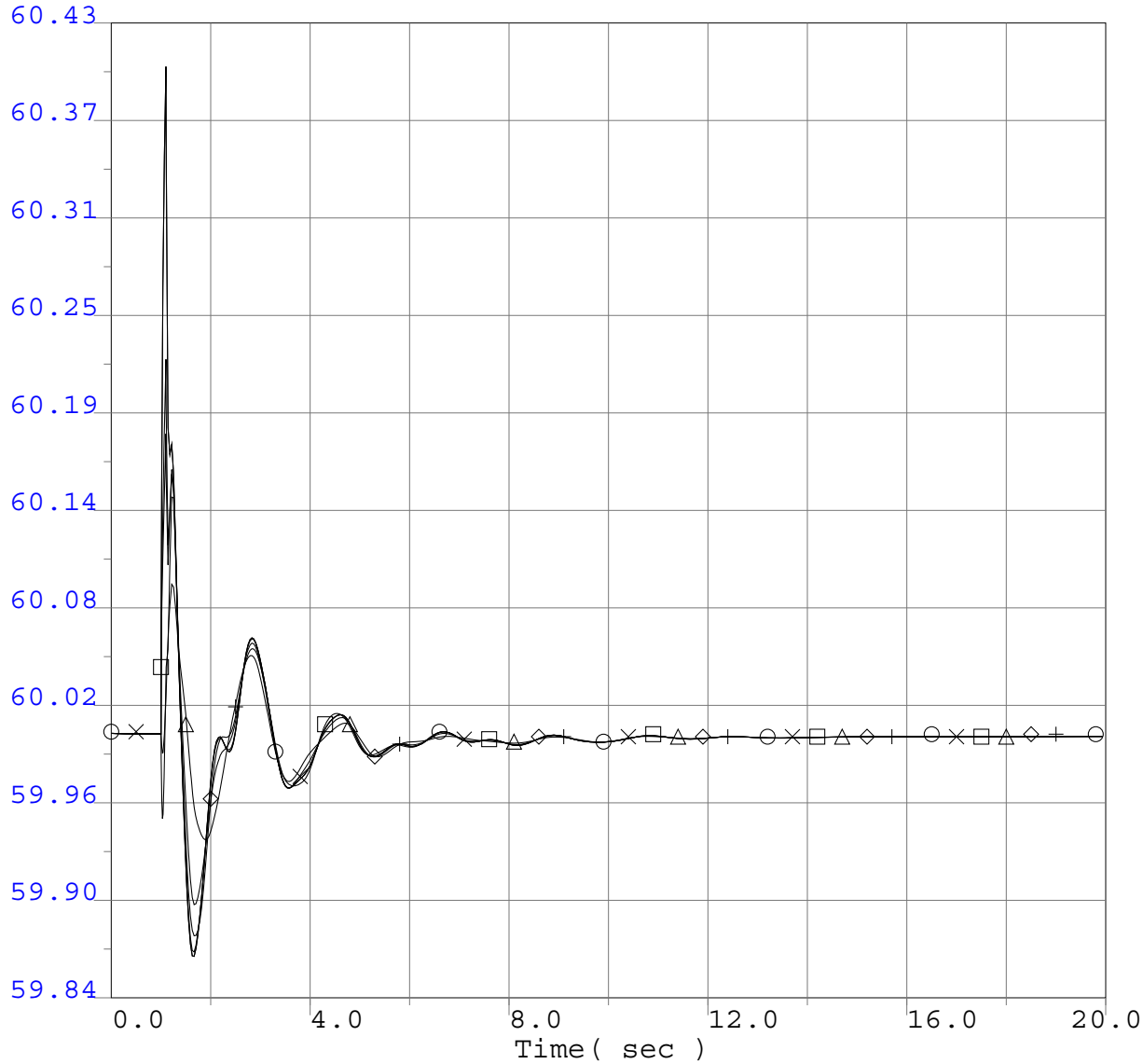

59.8400	fbus	30531	T322BUS1	230.0	0	0.0	"*"	1	60.4300
59.8400	fbus	30532	T322BUS2	230.0	0	0.0	"*"	1	60.4300
59.8400	fbus	30527	PITSBG E	230.0	0	0.0	"*"	1	60.4300
59.8400	fbus	30640	TESLA C	230.0	0	0.0	"*"	1	60.4300
59.8400	fbul	30561	TASSAJAR	230.0	0	0.0	"*"	1	60.4300
59.8400	fbul	30536	TESORO	230.0	0	0.0	"*"	1	60.4300

Q322 Project GIPR Phase 1 Interconnection System Impact Study
2013 Greater Bay Area Summer Peak Base Case
Q322 @626MW
Pittsburg 230kV Bus 1E
3 ph 6 cyc flt @ Pittsburg & clr Pittsburg 230kV Bus 1E

Q322 GIPR Phase 1 Interconnection System Impact Study

Project Generator Terminal Voltages (P.U.)

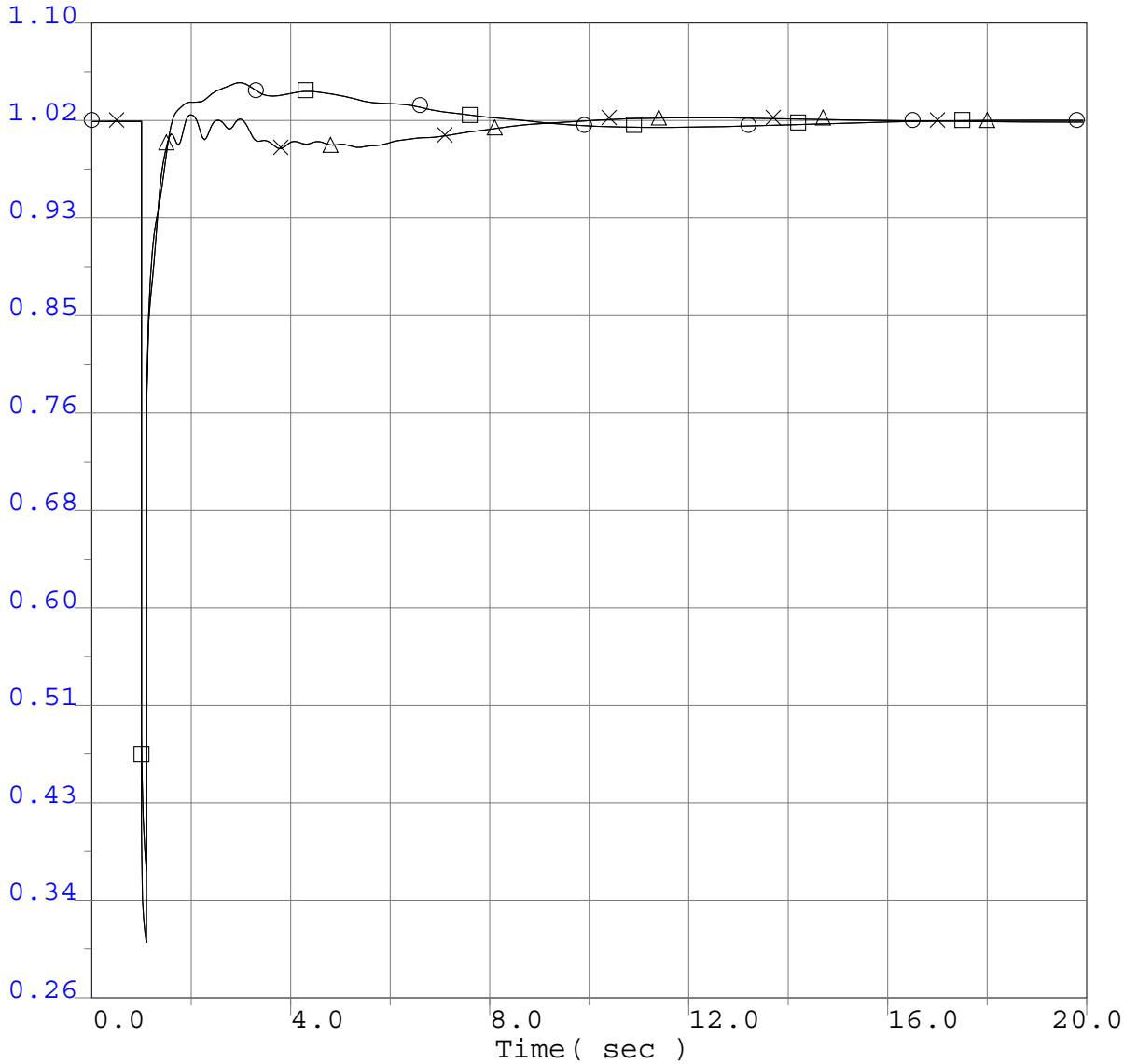

○	0.2600 vt	33191	T322GT1	16.5	0	0.0 "1"	1	1.1000
×	0.2600 vt	33192	T322ST1	13.8	0	0.0 "1"	1	1.1000
□	0.2600 vt	33193	T322GT2	16.5	0	0.0 "2"	1	1.1000
△	0.2600 vt	33194	T322ST2	13.8	0	0.0 "2"	1	1.1000

Q322 Project GIPR Phase 1 Interconnection System Impact Study
2013 Greater Bay Area Summer Peak Base Case
Q322 @626MW
Pittsburg 230kV Bus 1E
3 ph 6 cyc flt @ Pittsburg & clr Pittsburg 230kV Bus 1E

Q322 GIPR Phase 1 Interconnection System Impact Study

Selected Generator Terminal Voltages (P.U.)

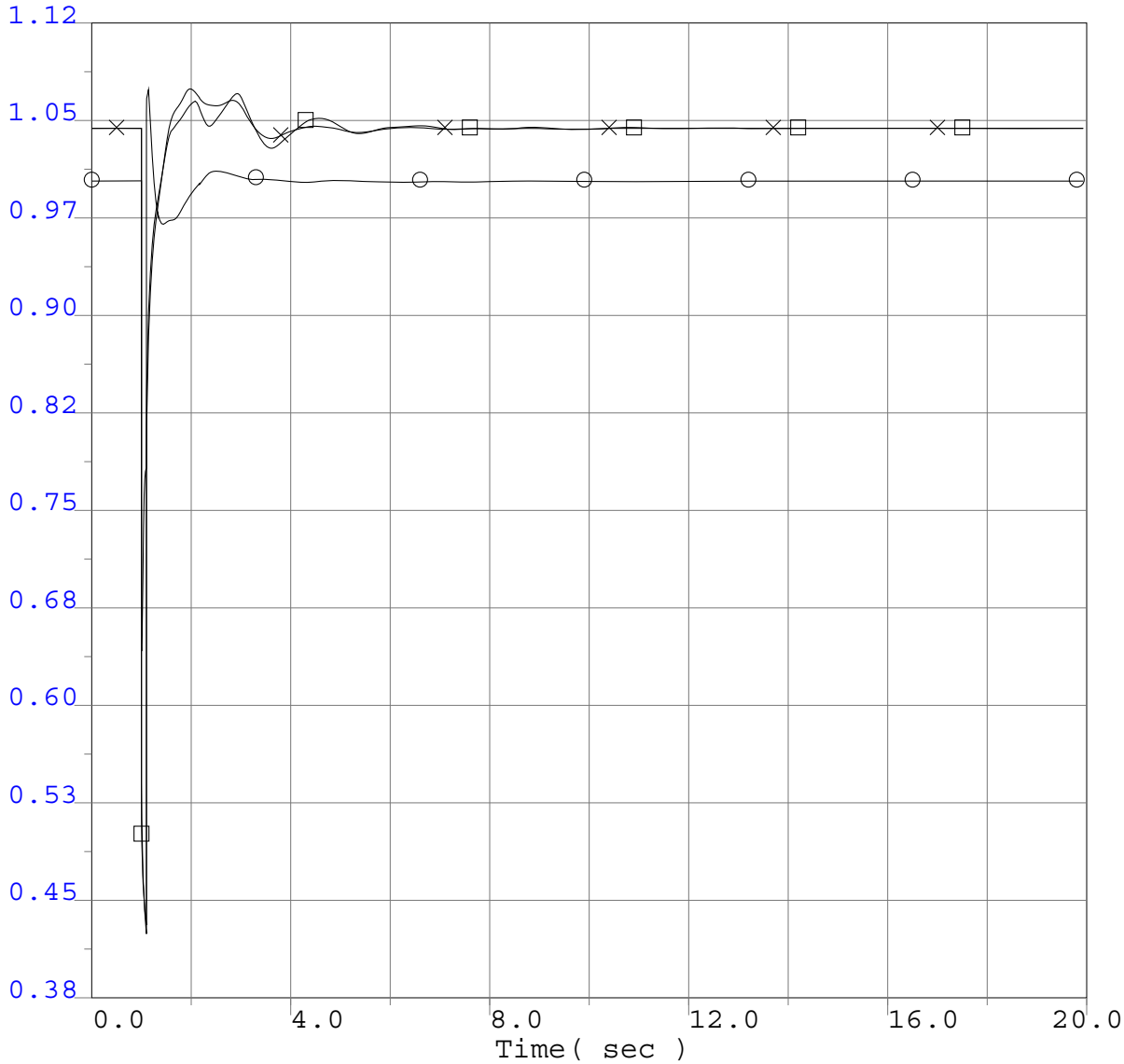

○	0.3800 vt	33195	T417	34.5	0	0.0 "1"	1	1.1200
×	0.3800 vt	33108	DEC CTG1	18.0	0	0.0 "1"	1	1.1200
□	0.3800 vt	33107	DEC STG1	24.0	0	0.0 "1"	1	1.1200

Q322 Project GIPR Phase 1 Interconnection System Impact Study
2013 Greater Bay Area Summer Peak Base Case
Q322 @626MW
Pittsburg 230kV Bus 1E
3 ph 6 cyc flt @ Pittsburg & clr Pittsburg 230kV Bus 1E

Q322 GIPR Phase 1 Interconnection System Impact Study

Project Generator Speed (P.U.)

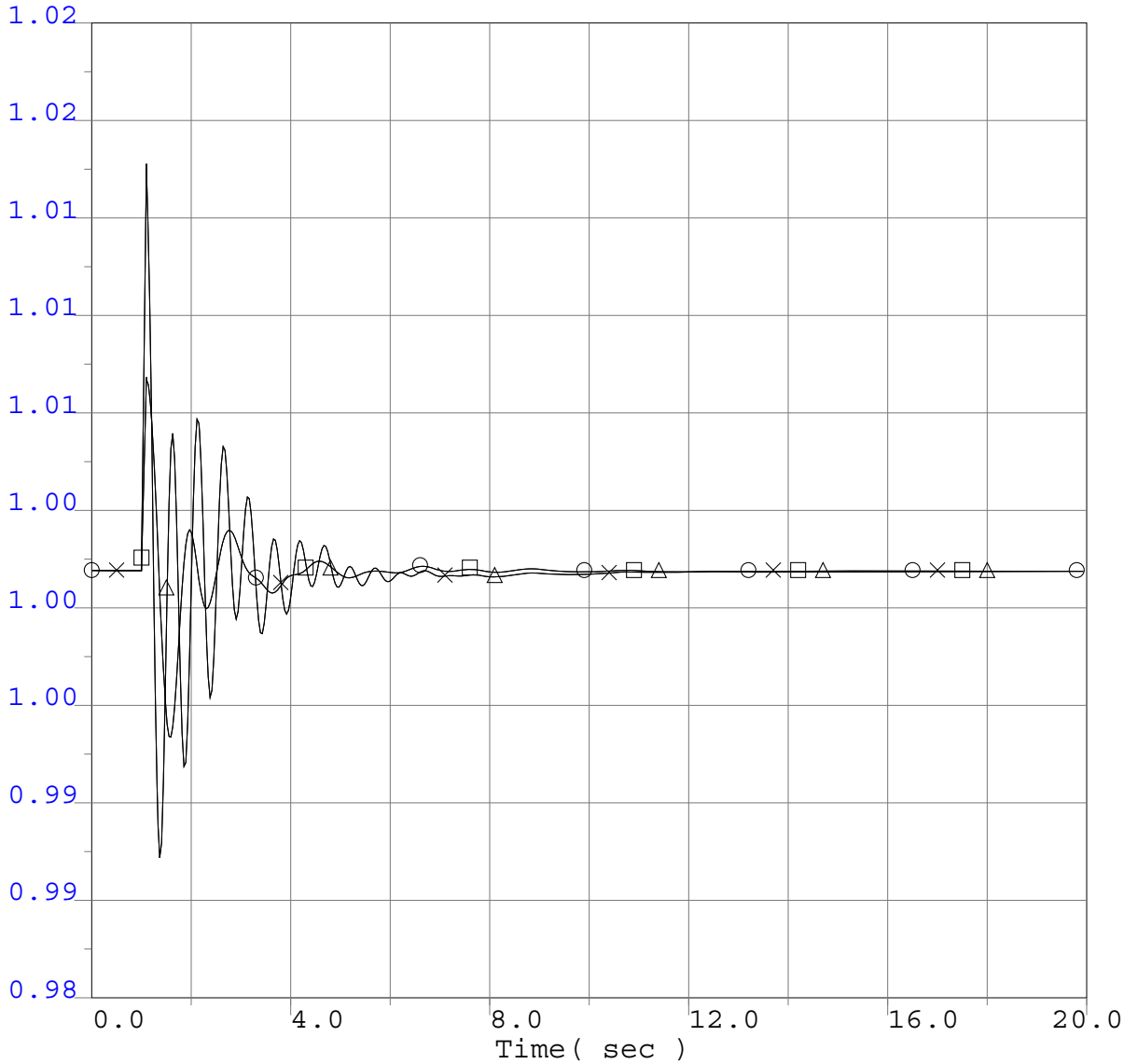

○	0.9847 spd	33191	T322GT1	16.5	0	0.0 "1"	1	1.0196
⊗	0.9847 spd	33192	T322ST1	13.8	0	0.0 "1"	1	1.0196
□	0.9847 spd	33193	T322GT2	16.5	0	0.0 "2"	1	1.0196
△	0.9847 spd	33194	T322ST2	13.8	0	0.0 "2"	1	1.0196

Q322 Project GIPR Phase 1 Interconnection System Impact Study
2013 Greater Bay Area Summer Peak Base Case
Q322 @626MW
Pittsburg 230kV Bus 1E
3 ph 6 cyc flt @ Pittsburg & clr Pittsburg 230kV Bus 1E

Q322 GIPR Phase 1 Interconnection System Impact Study

Selected Generator Speed (P.U.)

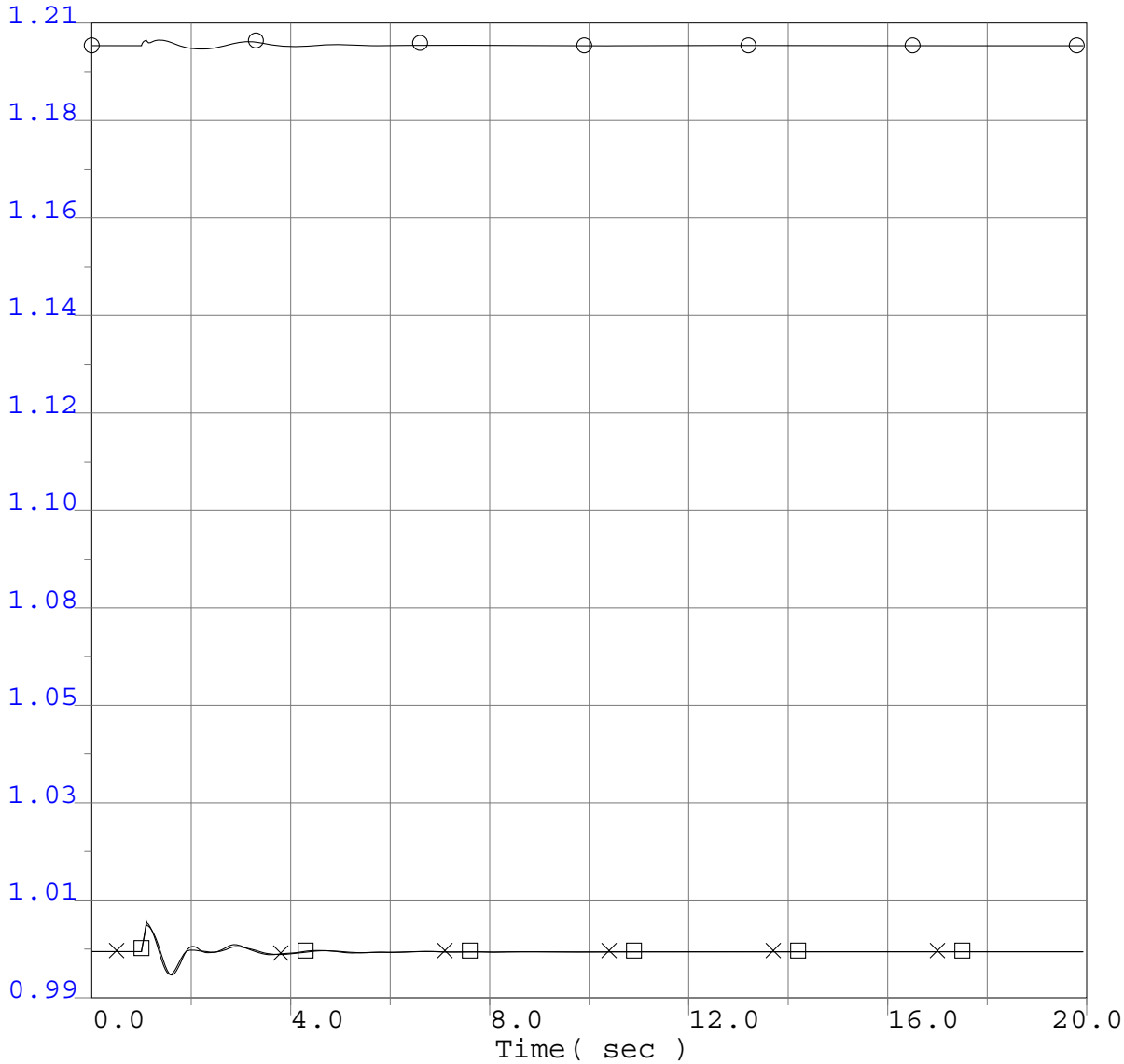

○	0.9898 spd	33195	T417	34.5	0	0.0 "1"	1	1.2050
⊗	0.9898 spd	33108	DEC CTG1	18.0	0	0.0 "1"	1	1.2050
□	0.9898 spd	33107	DEC STG1	24.0	0	0.0 "1"	1	1.2050

Q322 Project GIPR Phase 1 Interconnection System Impact Study
2013 Greater Bay Area Summer Peak Base Case
Q322 @626MW
Pittsburg 230kV Bus 1E
3 ph 6 cyc flt @ Pittsburg & clr Pittsburg 230kV Bus 1E

Q322 GIPR Phase 1 Interconnection System Impact Study

Project Generator Terminal Power (MW)

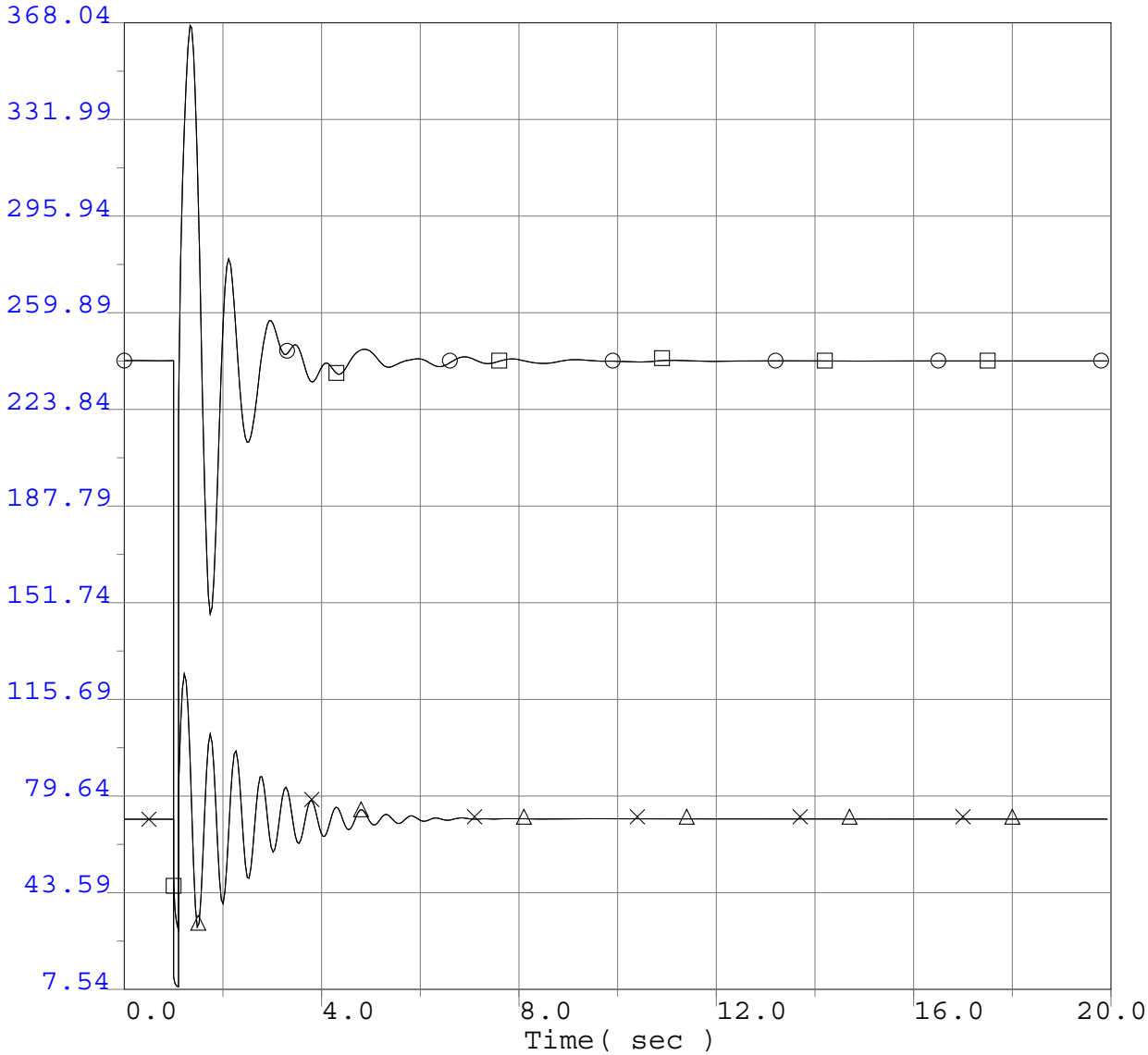

7.5400 pg	33191	T322GT1	16.5	0	0.0 "1"	1	368.0400
7.5400 pg	33192	T322ST1	13.8	0	0.0 "1"	1	368.0400
7.5400 pg	33193	T322GT2	16.5	0	0.0 "2"	1	368.0400
7.5400 pg	33194	T322ST2	13.8	0	0.0 "2"	1	368.0400

Q322 Project GIPR Phase 1 Interconnection System Impact Study
2013 Greater Bay Area Summer Peak Base Case
Q322 @626MW
Pittsburg 230kV Bus 1E
3 ph 6 cyc flt @ Pittsburg & clr Pittsburg 230kV Bus 1E

Q322 GIPR Phase 1 Interconnection System Impact Study

Selected Generator Terminal Power (MW)

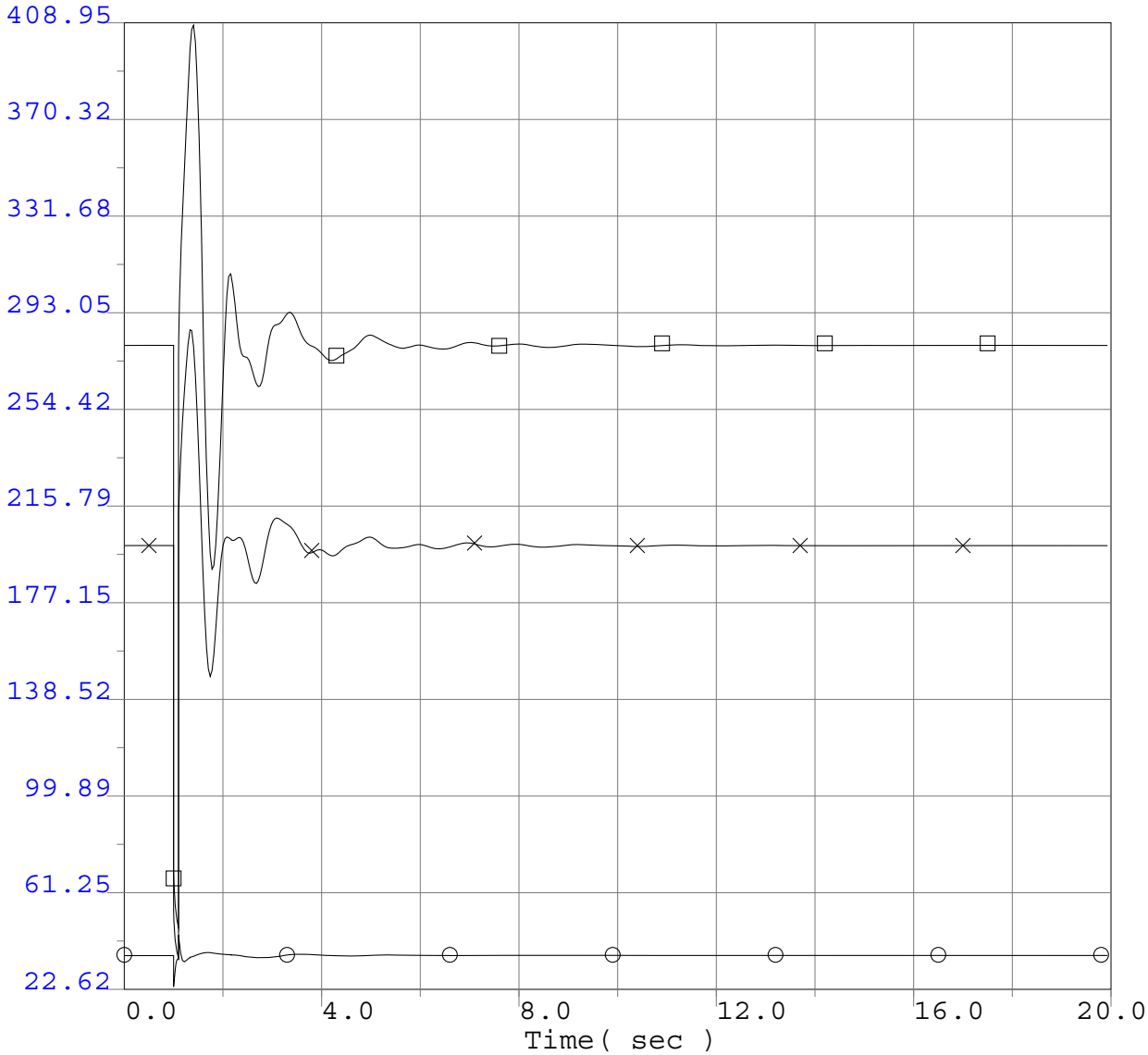

○	22.6200 pg	33195	T417	34.5	0	0.0 "1"	1	408.9500
⊗	22.6200 pg	33108	DEC CTG1	18.0	0	0.0 "1"	1	408.9500
□	22.6200 pg	33107	DEC STG1	24.0	0	0.0 "1"	1	408.9500

Q322 Project GIPR Phase 1 Interconnection System Impact Study
2013 Greater Bay Area Summer Peak Base Case
Q322 @626MW
Pittsburg 230kV Bus 1E
3 ph 6 cyc flt @ Pittsburg & clr Pittsburg 230kV Bus 1E

Q322 GIPR Phase 1 Interconnection System Impact Study

Project Generator Terminal Reactive Power (MVAr)

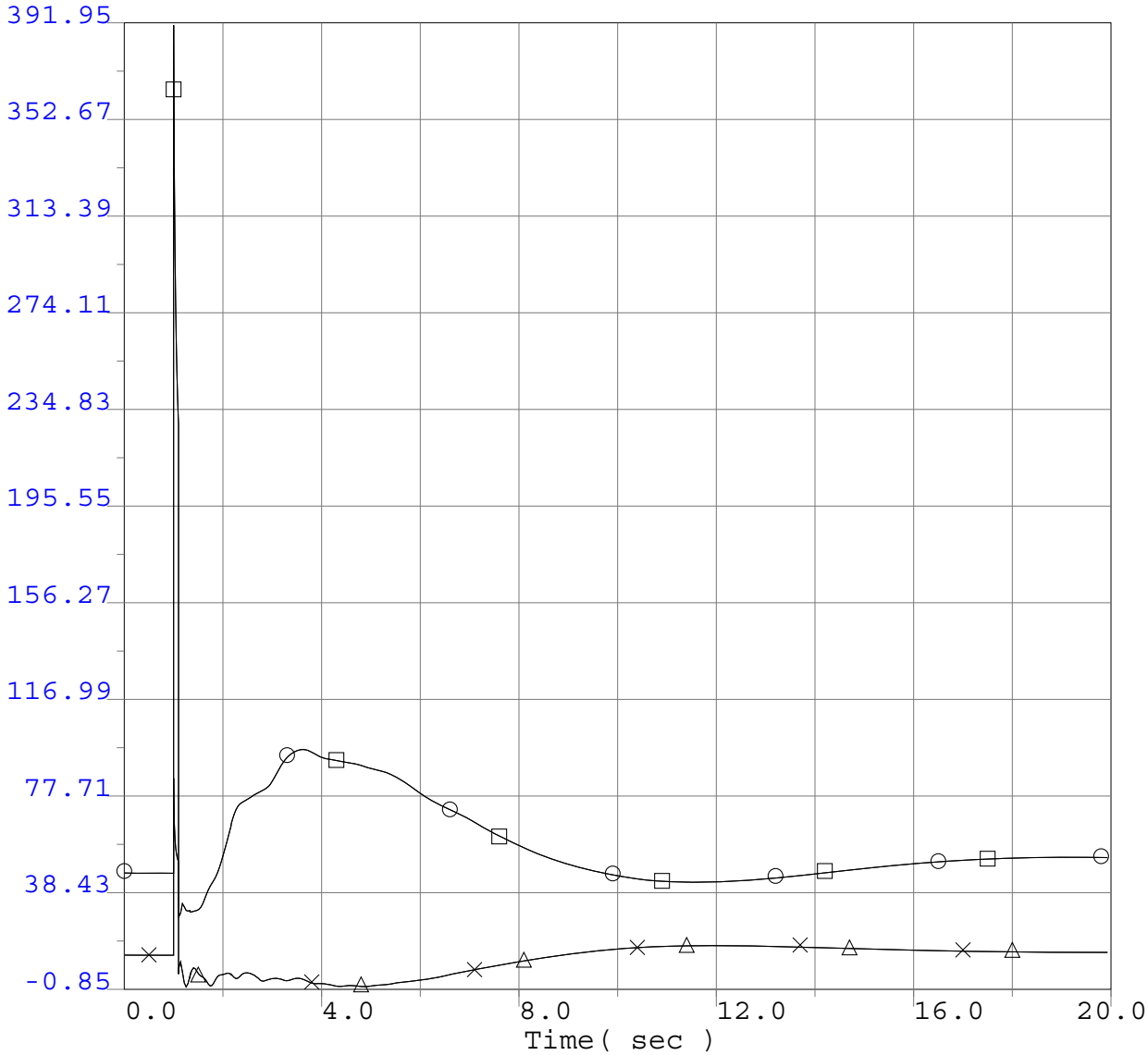

-0.8500 qg	33191	T322GT1	16.5	0	0.0 "1"	1	391.9500
-0.8500 qg	33192	T322ST1	13.8	0	0.0 "1"	1	391.9500
-0.8500 qg	33193	T322GT2	16.5	0	0.0 "2"	1	391.9500
-0.8500 qg	33194	T322ST2	13.8	0	0.0 "2"	1	391.9500

Q322 Project GIPR Phase 1 Interconnection System Impact Study
2013 Greater Bay Area Summer Peak Base Case
Q322 @626MW
Pittsburg 230kV Bus 1E
3 ph 6 cyc flt @ Pittsburg & clr Pittsburg 230kV Bus 1E

Q322 GIPR Phase 1 Interconnection System Impact Study

Selected Generator Terminal Reactive Power (MVAr)

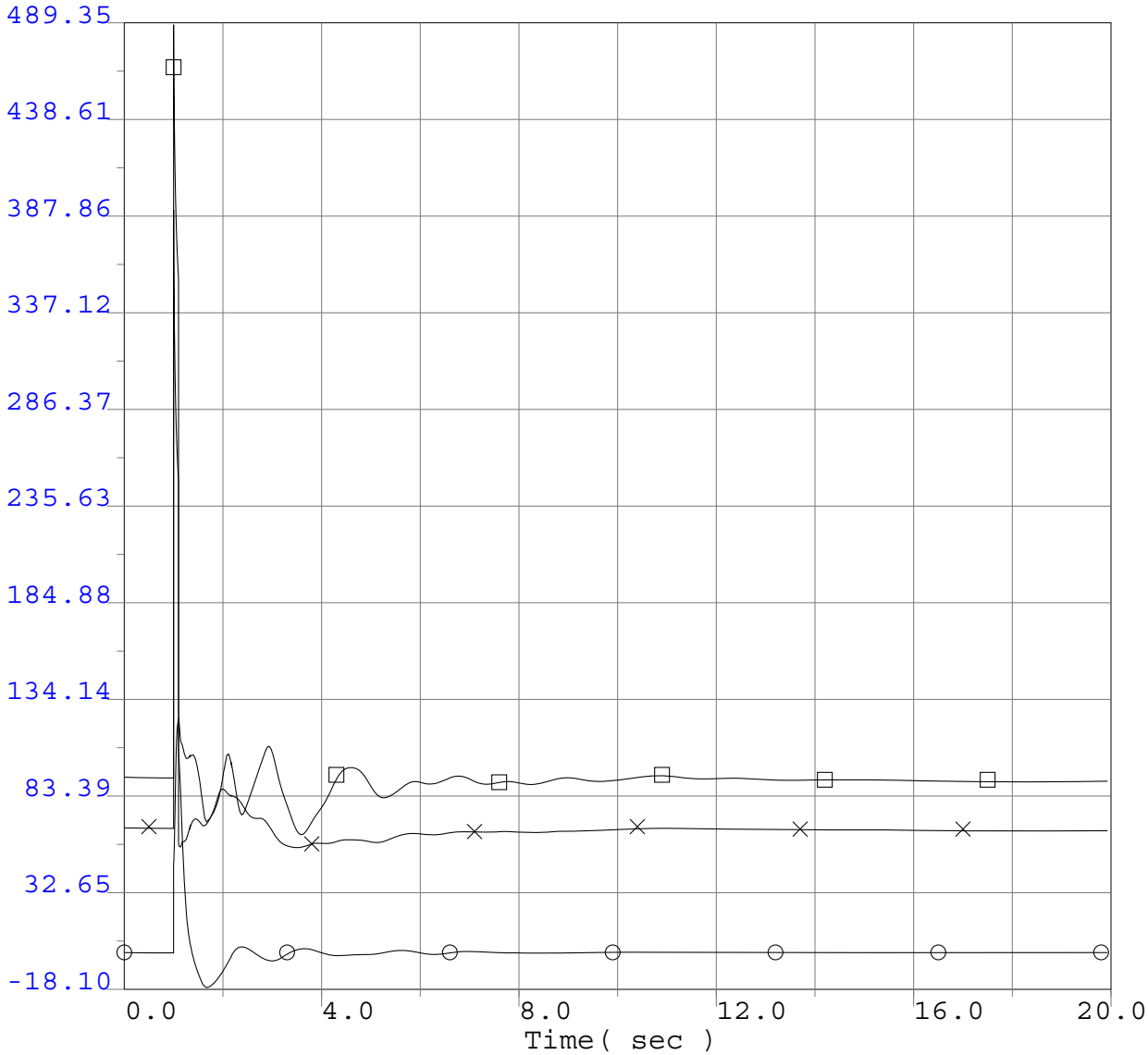

-18.1000 qg	33195	T417	34.5	0	0.0 "1"	1	489.3500
-18.1000 qg	33108	DEC CTG1	18.0	0	0.0 "1"	1	489.3500
-18.1000 qg	33107	DEC STG1	24.0	0	0.0 "1"	1	489.3500

Q322 Project GIPR Phase 1 Interconnection System Impact Study
2013 Greater Bay Area Summer Peak Base Case
Q322 @626MW
Pittsburg 230kV Bus 1E
3 ph 6 cyc flt @ Pittsburg & clr Pittsburg 230kV Bus 1E

Q322 GIPR Phase 1 Interconnection System Impact Study

Selected WECC Bus Voltage Plots

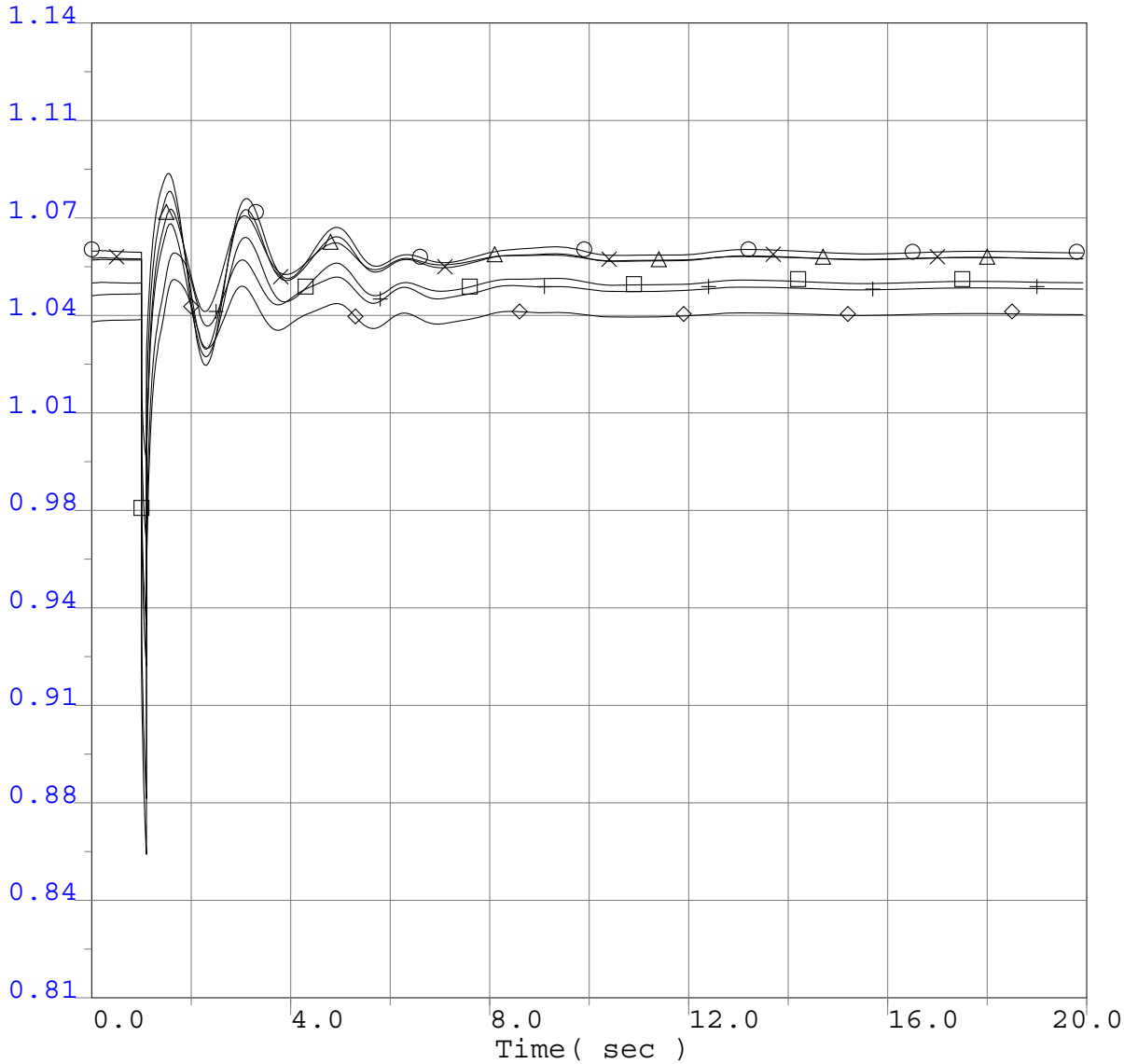

0.8100	vbus	40687	MALIN	500.0	0	0.0 "*"	1	1.1400
0.8100	vbus	30005	ROUND MT	500.0	0	0.0 "*"	1	1.1400
0.8100	vbus	30015	TABLE MT	500.0	0	0.0 "*"	1	1.1400
0.8100	vbus	30030	VACA-DIX	500.0	0	0.0 "*"	1	1.1400
0.8100	vbus	30040	TESLA	500.0	0	0.0 "*"	1	1.1400
0.8100	vbus	30035	TRACY	500.0	0	0.0 "*"	1	1.1400

Q322 Project GIPR Phase 1 Interconnection System Impact Study
2013 Greater Bay Area Summer Peak Base Case
Q322 @626MW
Pittsburg 230kV Bus 1E
3 ph 6 cyc flt @ Pittsburg & clr Pittsburg 230kV Bus 1E

Q322 GIPR Phase 1 Interconnection System Impact Study

Selected WECC Bus Voltage Plots

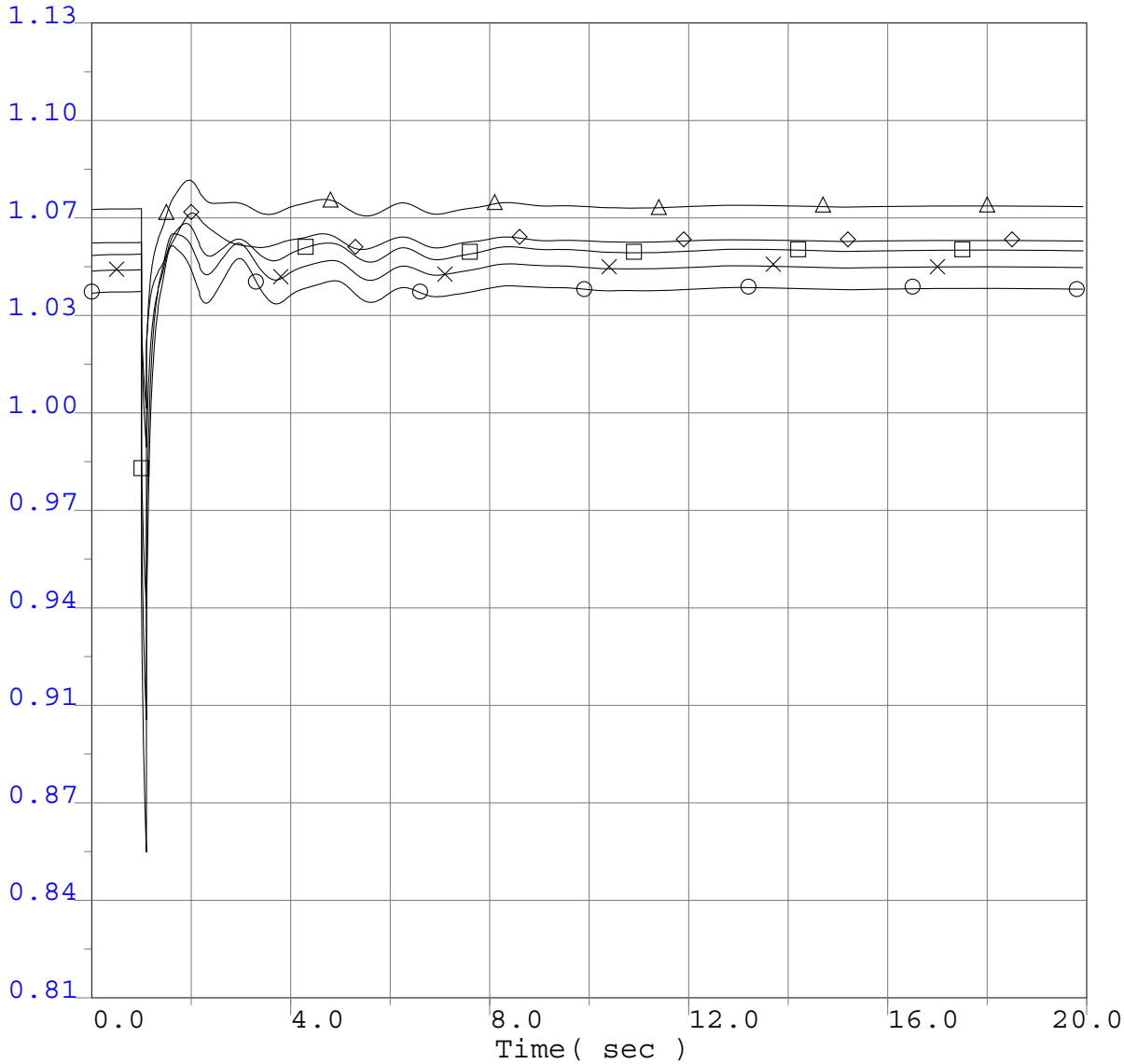

0.8100	vbus	30042	METCALF	500.0	0	0.0 "*"	1	1.1300
0.8100	vbus	30045	MOSSLAND	500.0	0	0.0 "*"	1	1.1300
0.8100	vbus	30050	LOSBANOS	500.0	0	0.0 "*"	1	1.1300
0.8100	vbus	30055	GATES	500.0	0	0.0 "*"	1	1.1300
0.8100	vbus	30060	MIDWAY	500.0	0	0.0 "*"	1	1.1300

Q322 Project GIPR Phase 1 Interconnection System Impact Study
2013 Greater Bay Area Summer Peak Base Case
Q322 @626MW
Pittsburg 230kV Bus 1E
3 ph 6 cyc flt @ Pittsburg & clr Pittsburg 230kV Bus 1E

Q322 GIPR Phase 1 Interconnection System Impact Study

Selected WECC Bus Voltage Plots

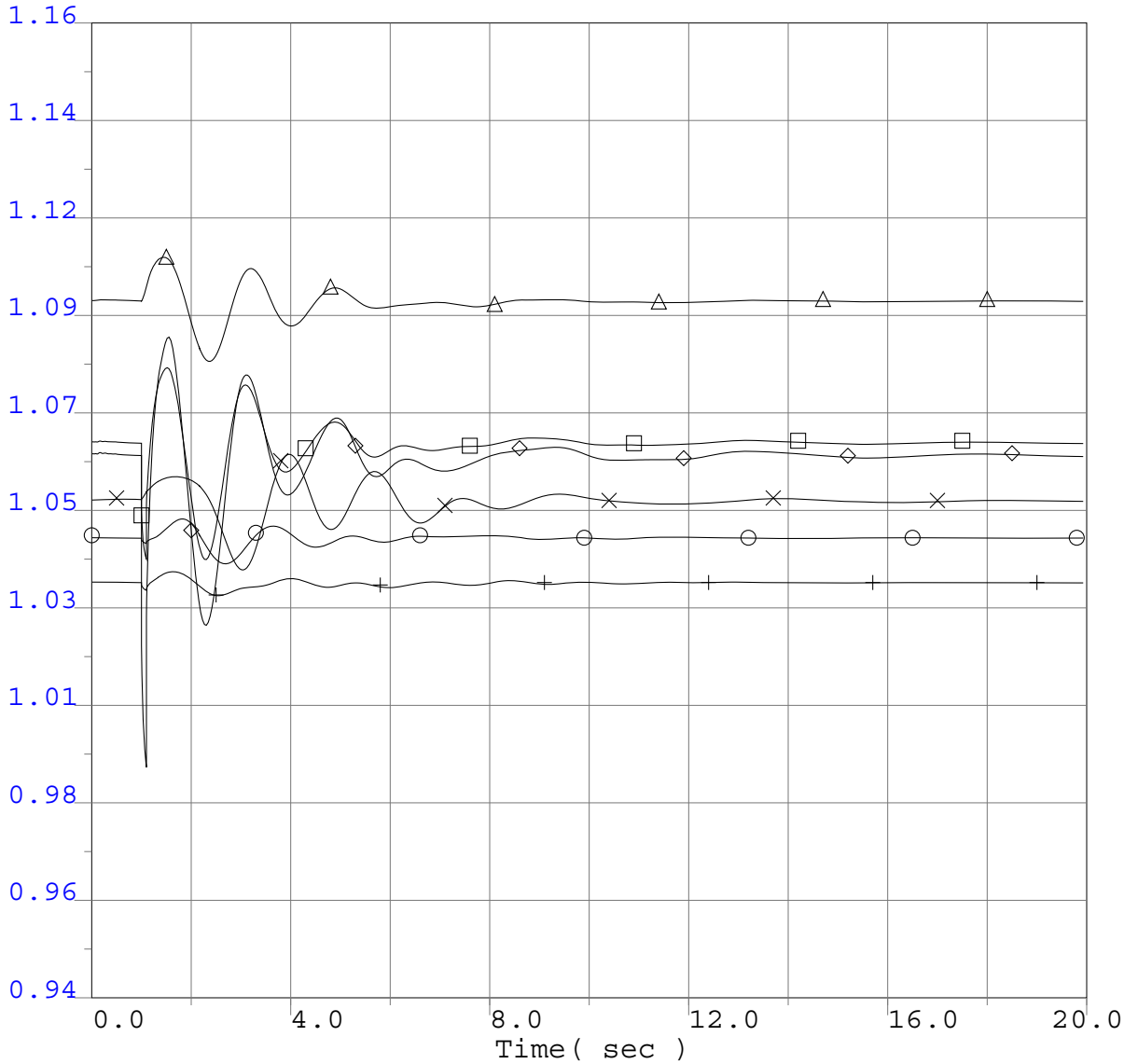

0.9400	vbus	14001	FOURCORN	500.0	0	0.0 "*"	1	1.1600
0.9400	vbus	50703	NIC500	500.0	0	0.0 "*"	1	1.1600
0.9400	vbus	60240	MIDPOINT	500.0	0	0.0 "*"	1	1.1600
0.9400	vbus	62012	TOWN2	500.0	0	0.0 "*"	1	1.1600
0.9400	vbus	40687	MALIN	500.0	0	0.0 "*"	1	1.1600
0.9400	vbus	66340	SIGURD	345.0	0	0.0 "*"	1	1.1600

Q322 Project GIPR Phase 1 Interconnection System Impact Study
2013 Greater Bay Area Summer Peak Base Case
Q322 @626MW
Pittsburg 230kV Bus 1E
3 ph 6 cyc flt @ Pittsburg & clr Pittsburg 230kV Bus 1E

Q322 GIPR Phase 1 Interconnection System Impact Study

Selected WECC Bus Voltage Plots

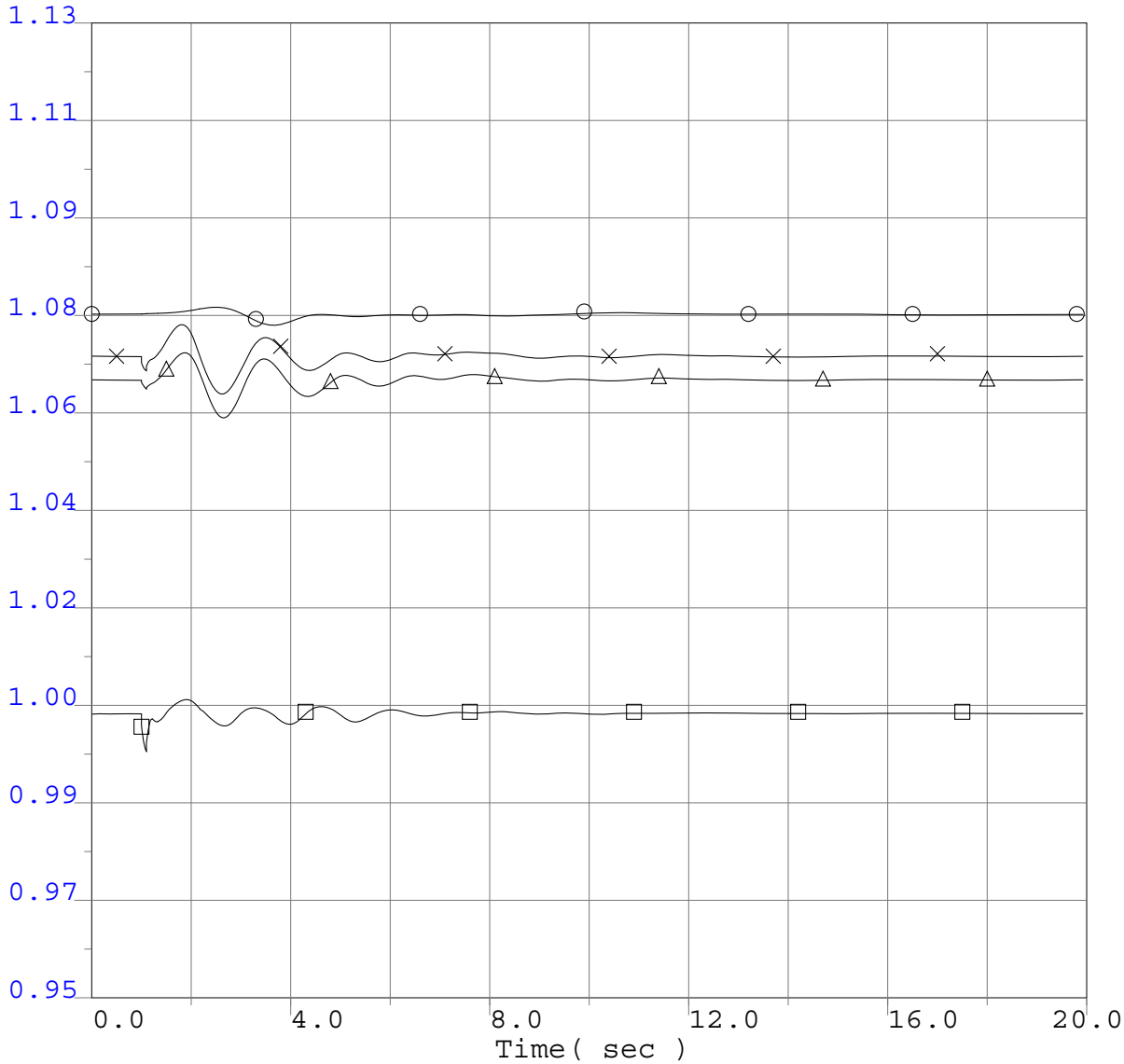

○	0.9500 vbul	54150	WILLESD9 240.0	0	0.0 "*"	1	1.1300
⊗	0.9500 vbus	14003	NAVAJO 500.0	0	0.0 "*"	1	1.1300
□	0.9500 vbus	24153	VESTAL 230.0	0	0.0 "*"	1	1.1300
△	0.9500 vbus	22360	IMPRLVLY 500.0	0	0.0 "*"	1	1.1300

Q322 Project GIPR Phase 1 Interconnection System Impact Study
2013 Greater Bay Area Summer Peak Base Case
Q322 @626MW
Pittsburg 230kV Bus 1E
3 ph 6 cyc flt @ Pittsburg & clr Pittsburg 230kV Bus 1E

Q322 GIPR Phase 1 Interconnection System Impact Study

Selected WECC Bus Frequency Plots

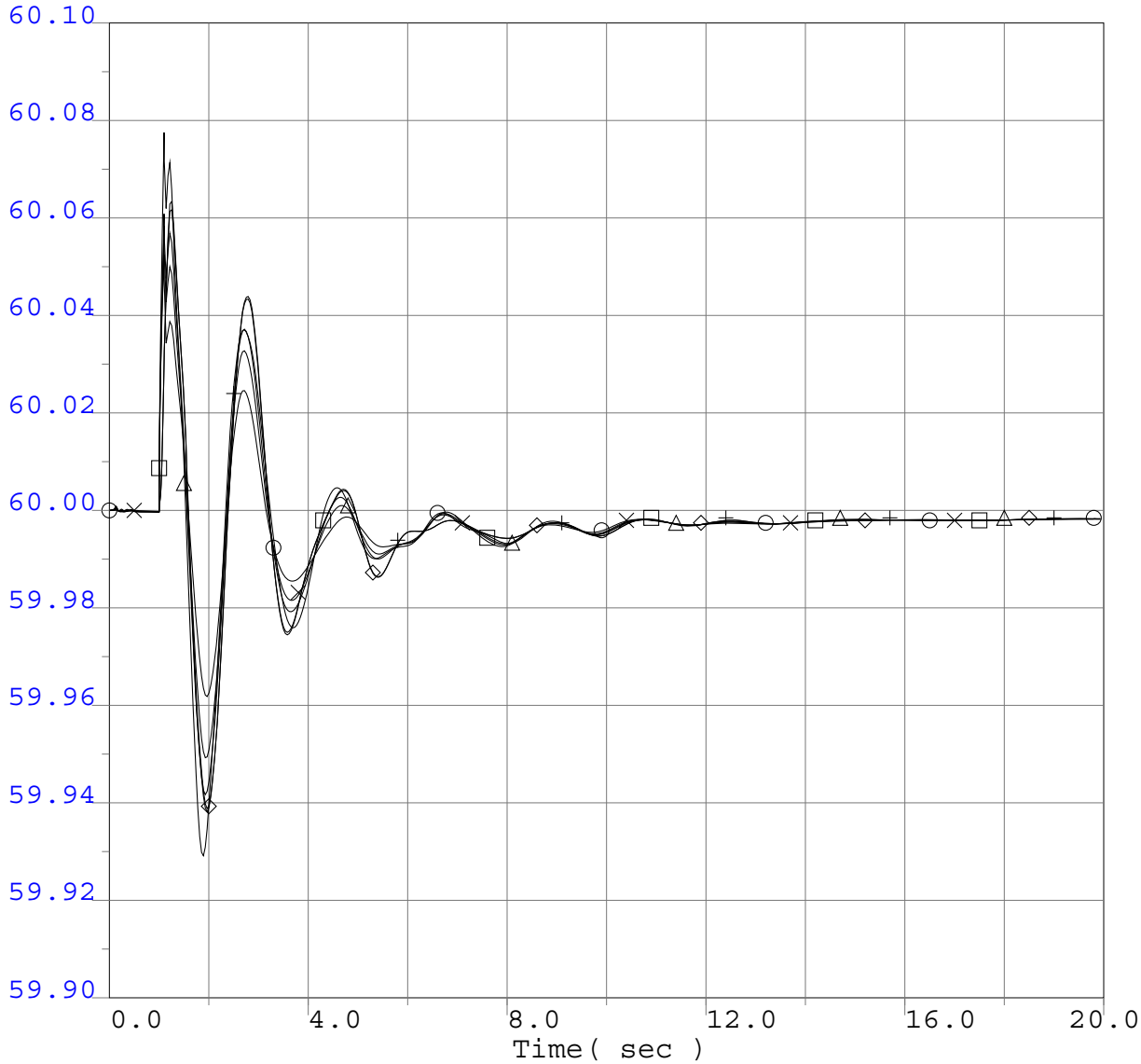

Q322 Project GIPR Phase 1 Interconnection System Impact Study
2013 Greater Bay Area Summer Peak Base Case
Q322 @626MW
Pittsburg 230kV Bus 1E
3 ph 6 cyc flt @ Pittsburg & clr Pittsburg 230kV Bus 1E

Q322 GIPR Phase 1 Interconnection System Impact Study

Selected WECC Bus Frequency Plots

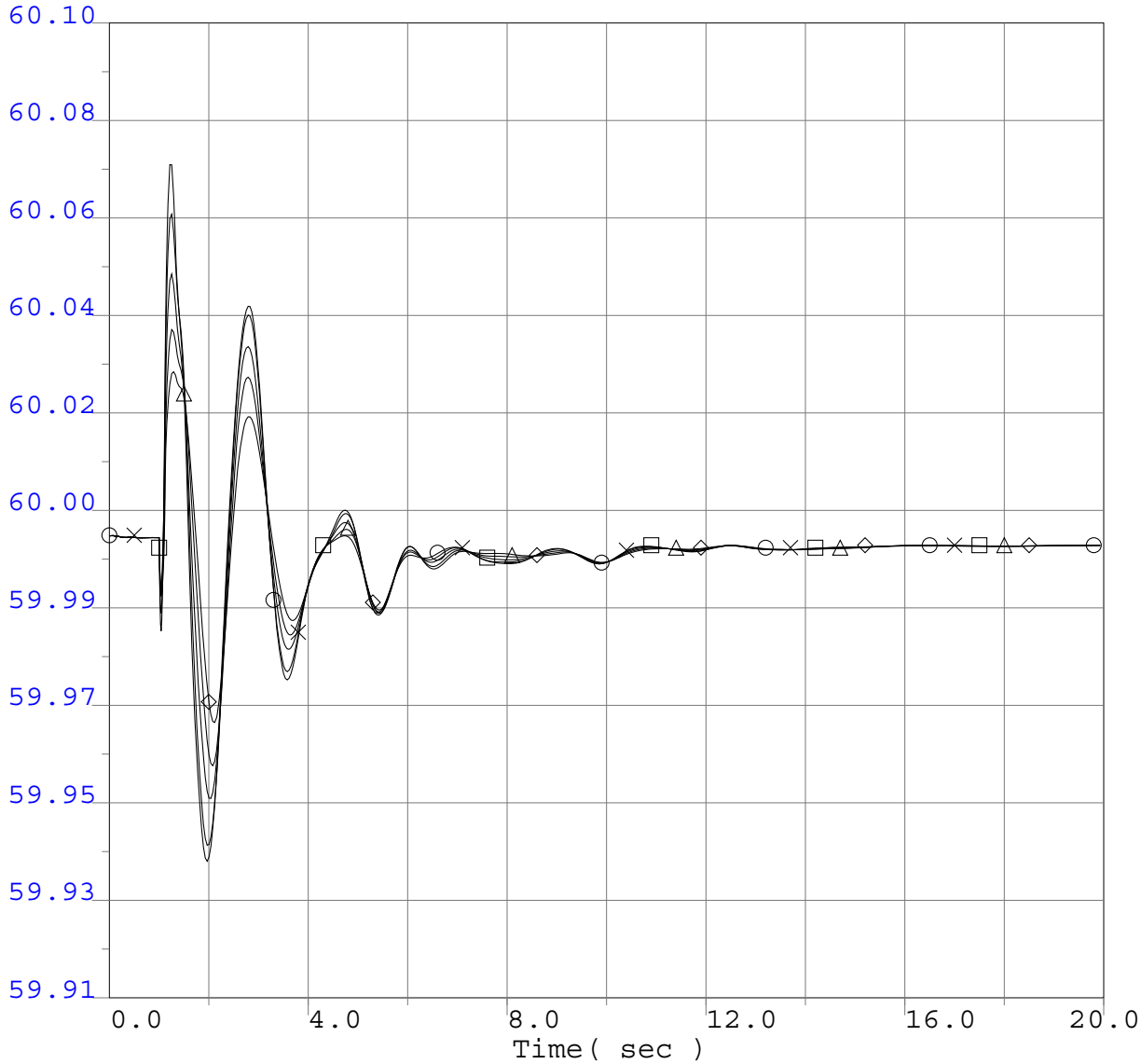

○	59.9100 fbus	30042	METCALF 500.0	0	0.0 "*"	1	60.1000
⊗	59.9100 fbus	30045	MOSSLAND 500.0	0	0.0 "*"	1	60.1000
□	59.9100 fbus	30050	LOSBANOS 500.0	0	0.0 "*"	1	60.1000
△	59.9100 fbus	30055	GATES 500.0	0	0.0 "*"	1	60.1000
◇	59.9100 fbus	30060	MIDWAY 500.0	0	0.0 "*"	1	60.1000

Q322 Project GIPR Phase 1 Interconnection System Impact Study
2013 Greater Bay Area Summer Peak Base Case
Q322 @626MW
Pittsburg 230kV Bus 1E
3 ph 6 cyc flt @ Pittsburg & clr Pittsburg 230kV Bus 1E

Q322 GIPR Phase 1 Interconnection System Impact Study

Selected WECC Bus Frequency Plots

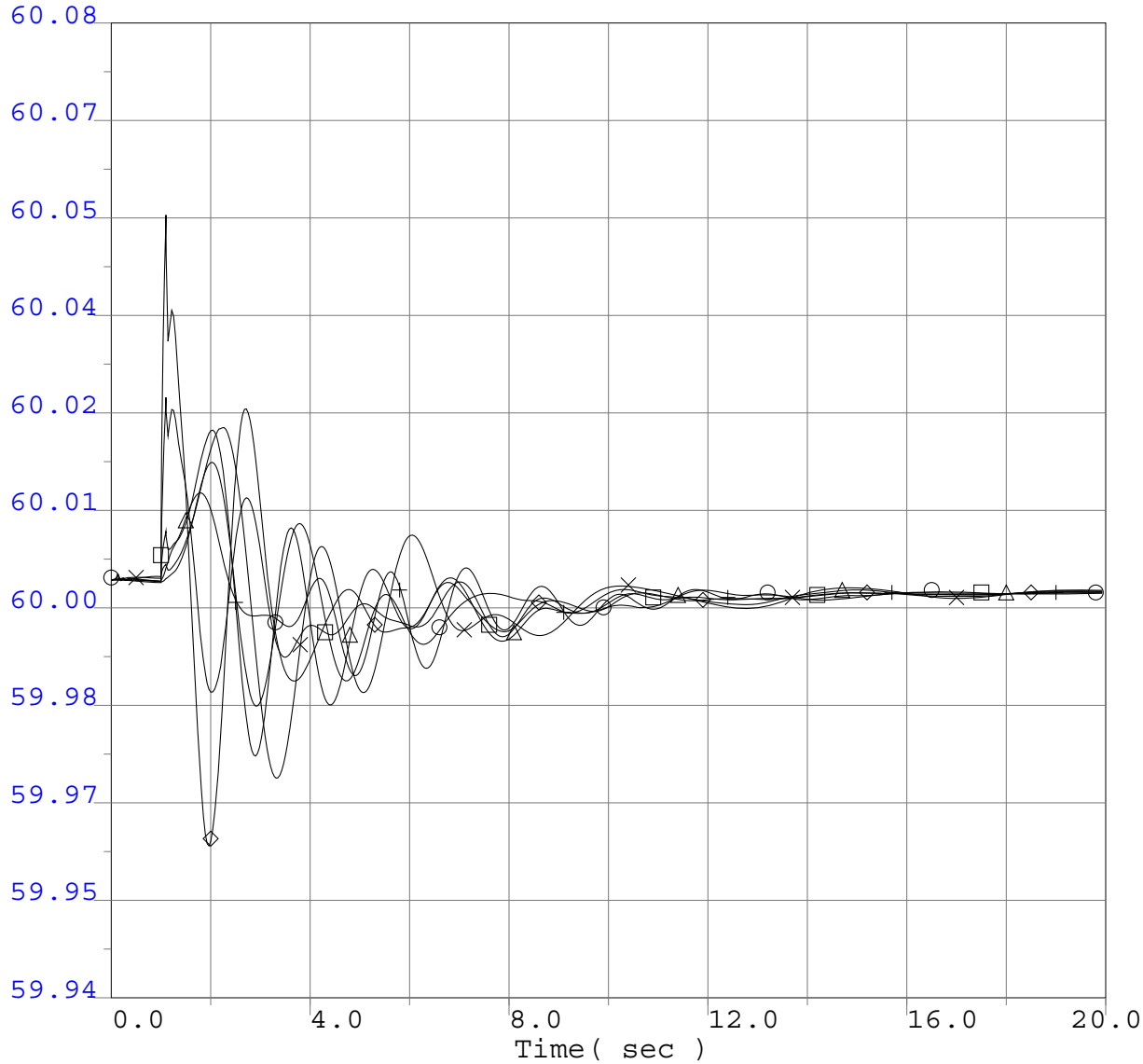

59.9400	fbus	14001	FOURCORN	500.0	0	0.0 "*"	1	60.0800
59.9400	fbus	50703	NIC500	500.0	0	0.0 "*"	1	60.0800
59.9400	fbus	60240	MIDPOINT	500.0	0	0.0 "*"	1	60.0800
59.9400	fbus	62012	TOWN2	500.0	0	0.0 "*"	1	60.0800
59.9400	fbus	40687	MALIN	500.0	0	0.0 "*"	1	60.0800
59.9400	fbus	66340	SIGURD	345.0	0	0.0 "*"	1	60.0800

Q322 Project GIPR Phase 1 Interconnection System Impact Study
2013 Greater Bay Area Summer Peak Base Case
Q322 @626MW
Pittsburg 230kV Bus 1E
3 ph 6 cyc flt @ Pittsburg & clr Pittsburg 230kV Bus 1E

Q322 GIPR Phase 1 Interconnection System Impact Study

Selected WECC Bus Frequency Plots

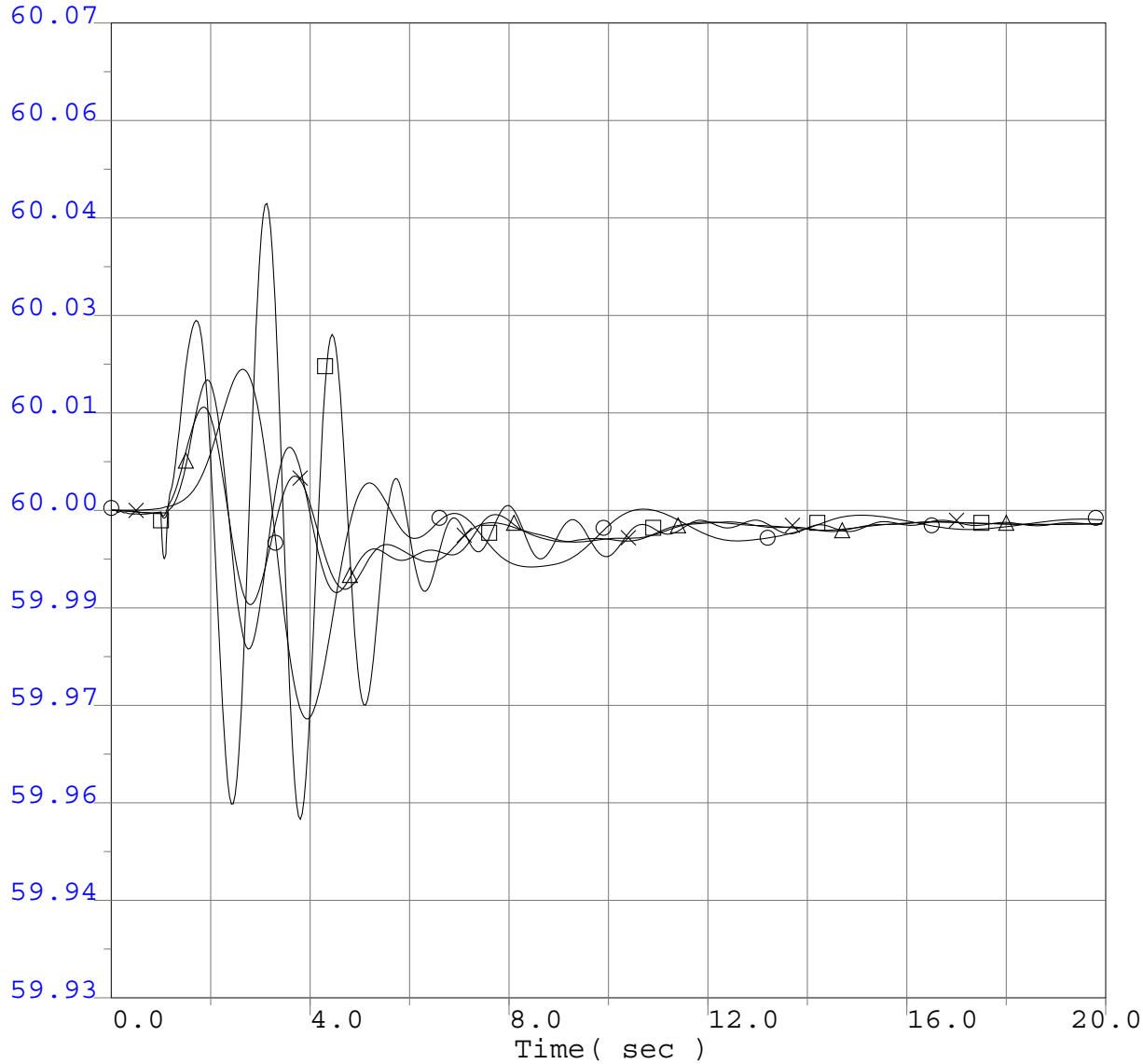

○	59.9300 fbul	54150	WILLESD9 240.0	0	0.0 "*"	1	60.0700
⊗	59.9300 fbus	14003	NAVAJO 500.0	0	0.0 "*"	1	60.0700
□	59.9300 fbus	24153	VESTAL 230.0	0	0.0 "*"	1	60.0700
△	59.9300 fbus	22360	IMPRLVLY 500.0	0	0.0 "*"	1	60.0700

Q322 Project GIPR Phase 1 Interconnection System Impact Study
2013 Greater Bay Area Summer Peak Base Case
Q322 @626MW
Pittsburg 230kV Bus 1E
3 ph 6 cyc flt @ Pittsburg & clr Pittsburg 230kV Bus 1E

Q322 GIPR Phase 1 Interconnection System Impact Study

WECC Generator Rotor Angle

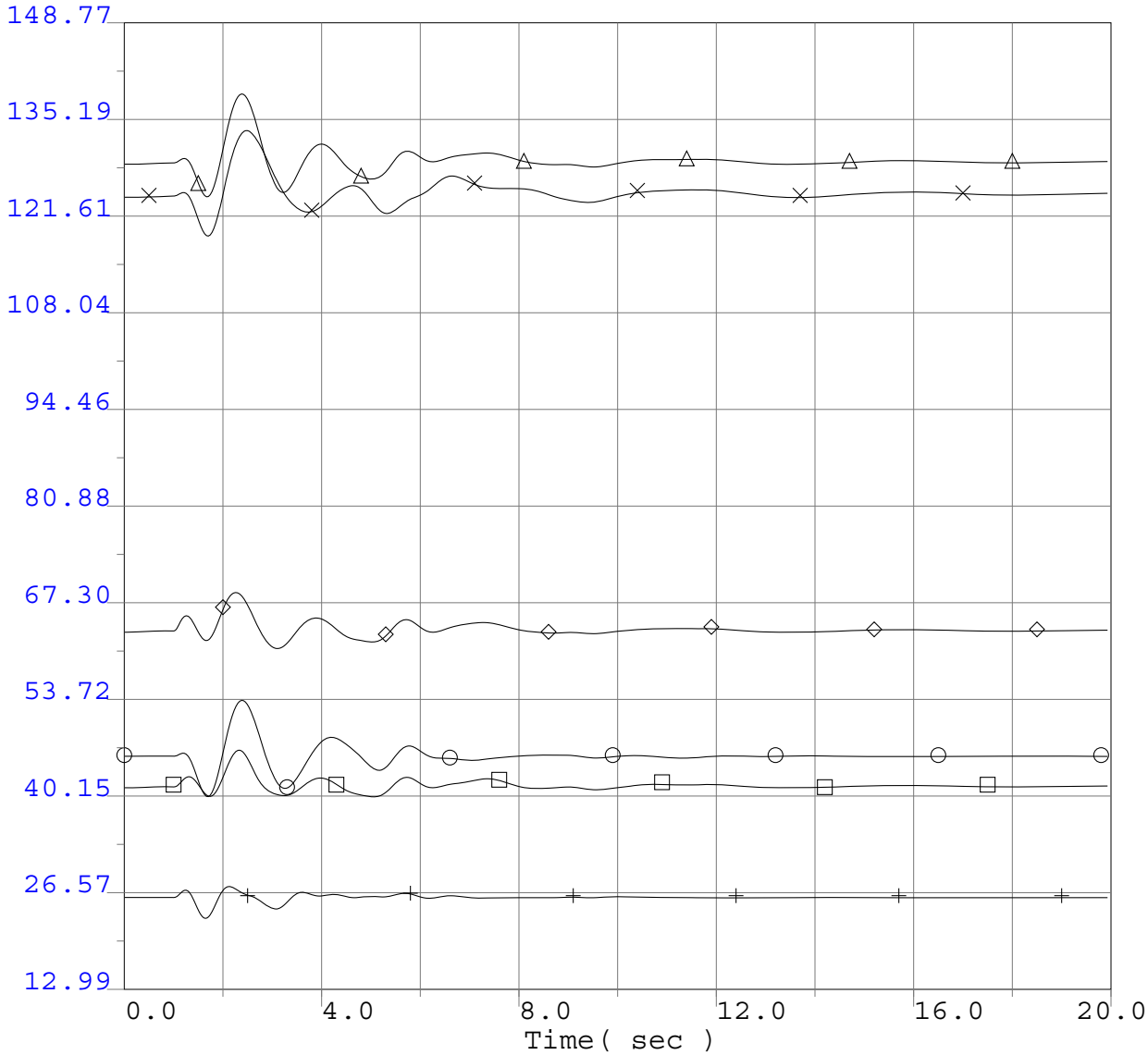

12.9900 ang	14914	FCNGN4CC	22.0	0	0.0 "H"	1	148.7700
12.9900 ang	50499	GMS G5	13.8	0	0.0 "1"	1	148.7700
12.9900 ang	60100	BRWNL 5	13.8	0	0.0 "1"	1	148.7700
12.9900 ang	62048	COLSTP 3	26.0	0	0.0 "1"	1	148.7700
12.9900 ang	44071	JDA 0102	13.8	0	0.0"01"	1	148.7700
12.9900 ang	36411	DIABLO 1	25.0	0	0.0 "1"	1	148.7700

Q322 Project GIPR Phase 1 Interconnection System Impact Study
2013 Greater Bay Area Summer Peak Base Case
Q322 @626MW
Pittsburg 230kV Bus 1E
3 ph 6 cyc flt @ Pittsburg & clr Pittsburg 230kV Bus 1E

Q322 GIPR Phase 1 Interconnection System Impact Study

WECC Generator Rotor Angle

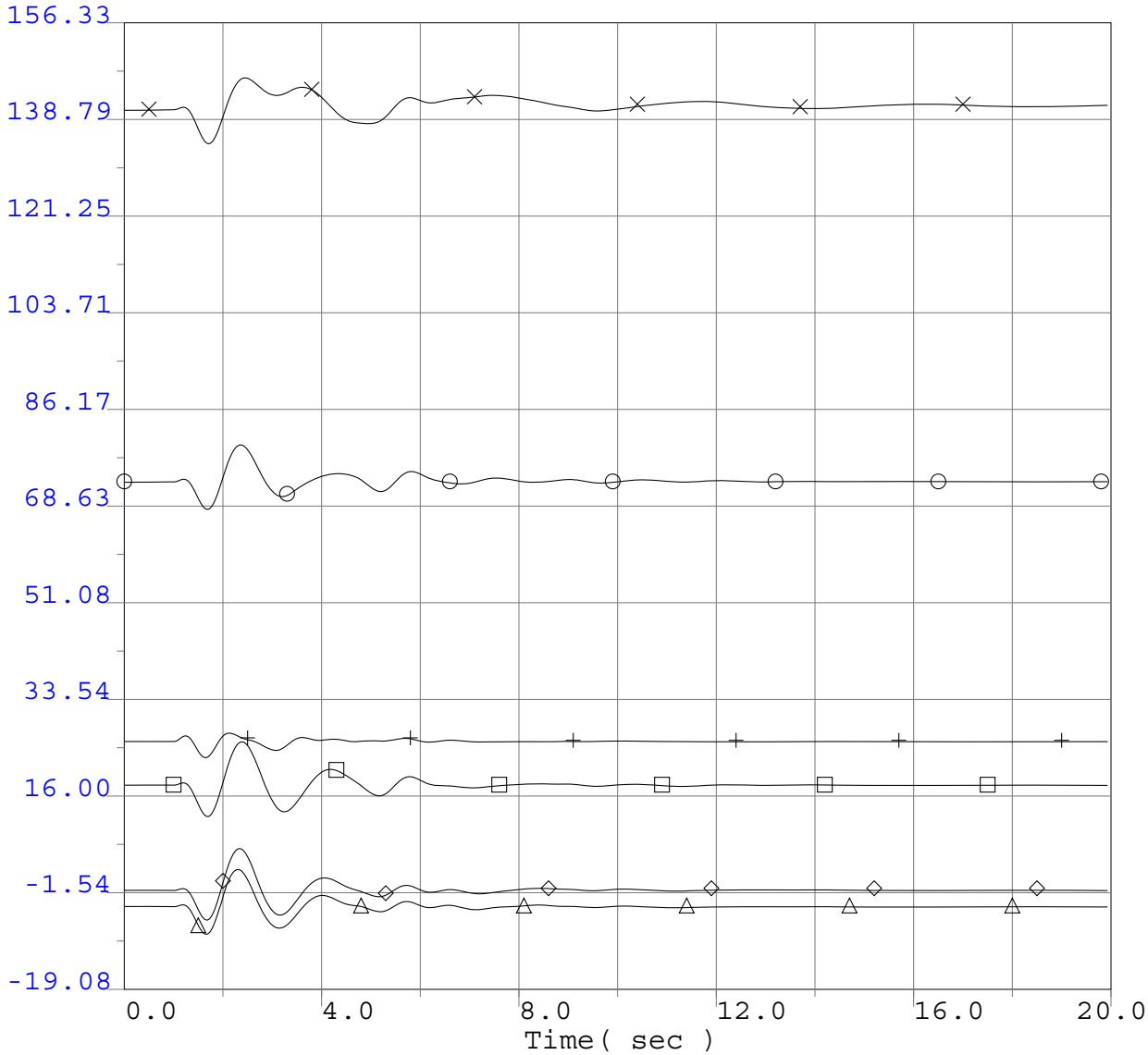

-19.0800 ang	65490	EHUNTR 1	24.0	0	0.0	"1"	1	156.3300
-19.0800 ang	54338	SUND#2GN	18.0	0	0.0	"2"	1	156.3300
-19.0800 ang	79151	GLENC3-4	13.8	0	0.0	"3"	1	156.3300
-19.0800 ang	24130	S.ONOFR3	22.0	0	0.0	"3"	1	156.3300
-19.0800 ang	22244	ENCINA 5	24.0	0	0.0	"1"	1	156.3300
-19.0800 ang	36411	DIABLO 1	25.0	0	0.0	"1"	1	156.3300

Q322 Project GIPR Phase 1 Interconnection System Impact Study
2013 Greater Bay Area Summer Peak Base Case
Q322 @626MW
Pittsburg 230kV Bus 1E
3 ph 6 cyc flt @ Pittsburg & clr Pittsburg 230kV Bus 1E

Q322 GIPR Phase 1 Interconnection System Impact Study

Selected PG&E Transmission Line Flows (MW)

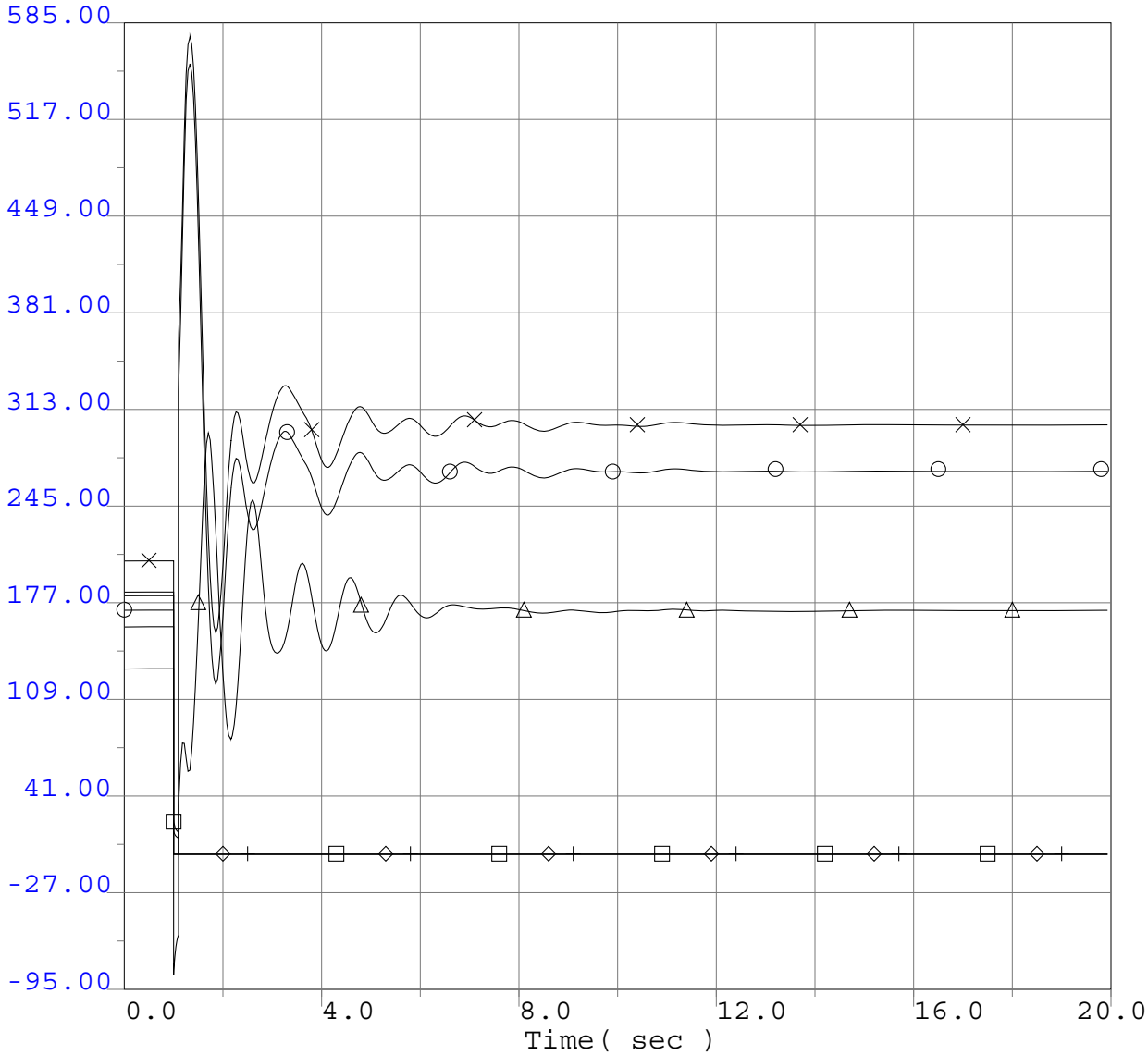

-95.0000 pbr	30527	PITSBG E 230.0	30600	TRES VAQ 230.0	1	2	585.0000
-95.0000 pbr	30600	TRES VAQ 230.0	30640	TESLA C 230.0	1	2	585.0000
-95.0000 pbr	30535	TIDEWATR 230.0	30527	PITSBG E 230.0	1	1	585.0000
-95.0000 pbr	30536	TESORO 230.0	30527	PITSBG E 230.0	1	1	585.0000
-95.0000 pbr	30527	PITSBG E 230.0	30595	FLOWIND2 230.0	1	1	585.0000
-95.0000 pbr	30527	PITSBG E 230.0	30560	E. SHORE 230.0	1	1	585.0000

Q322 Project GIPR Phase 1 Interconnection System Impact Study
2013 Greater Bay Area Summer Peak Base Case
Q322 @626MW
Pittsburg 230kV Bus 1E
3 ph 6 cyc flt @ Pittsburg & clr Pittsburg 230kV Bus 1E

Q322 GIPR Phase 1 Interconnection System Impact Study

Selected PG&E Transmission Line Flows (MW)

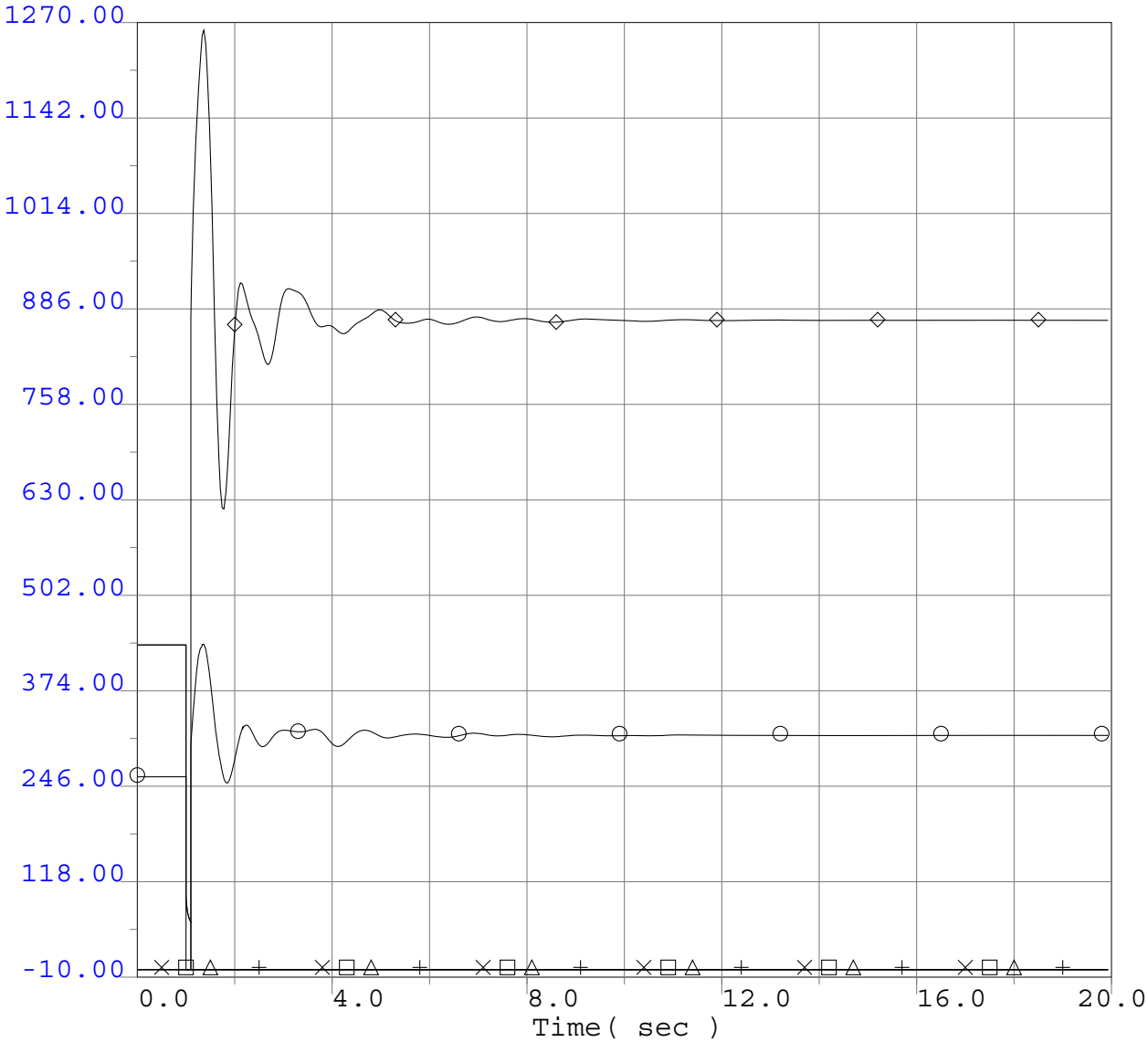

Q322 Project GIPR Phase 1 Interconnection System Impact Study
2013 Greater Bay Area Summer Peak Base Case
Q322 @626MW
Pittsburg 230kV Bus 1E
3 ph 6 cyc flt @ Pittsburg & clr Pittsburg 230kV Bus 1E

Q322 GIPR Phase 1 Interconnection System Impact Study

Selected PG&E Transmission Line Flows (MW)

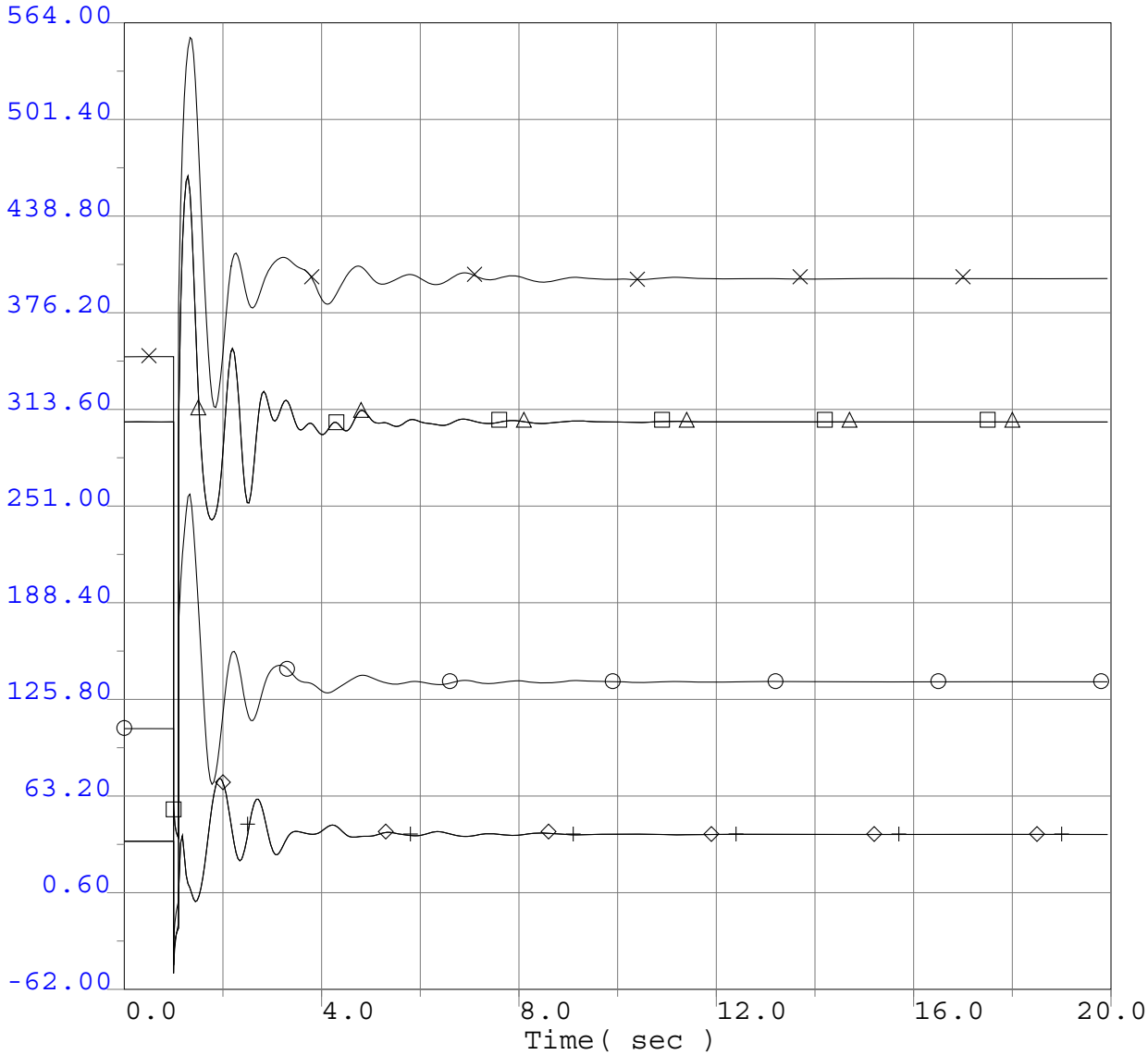

-62.0000 pbr	30526	PITSBG D 230.0	30555	SANRAMON 230.0	1	1	564.0000
-62.0000 pbr	30526	PITSBG D 230.0	30561	TASSAJAR 230.0	1	1	564.0000
-62.0000 pbr	30531	T322BUS1 230.0	30526	PITSBG D 230.0	1	1	564.0000
-62.0000 pbr	30532	T322BUS2 230.0	30526	PITSBG D 230.0	1	1	564.0000
-62.0000 pbr	30526	PITSBG D 230.0	32950	PITSBURG 115.0	1	12	564.0000
-62.0000 pbr	30526	PITSBG D 230.0	32950	PITSBURG 115.0	1	13	564.0000

Q322 Project GIPR Phase 1 Interconnection System Impact Study
2013 Greater Bay Area Summer Peak Base Case
Q322 @626MW
Pittsburg 230kV Bus 1E
3 ph 6 cyc flt @ Pittsburg & clr Pittsburg 230kV Bus 1E

Q322 GIPR Phase 1 Interconnection System Impact Study

Selected PG&E Transmission Line Flows (MW)

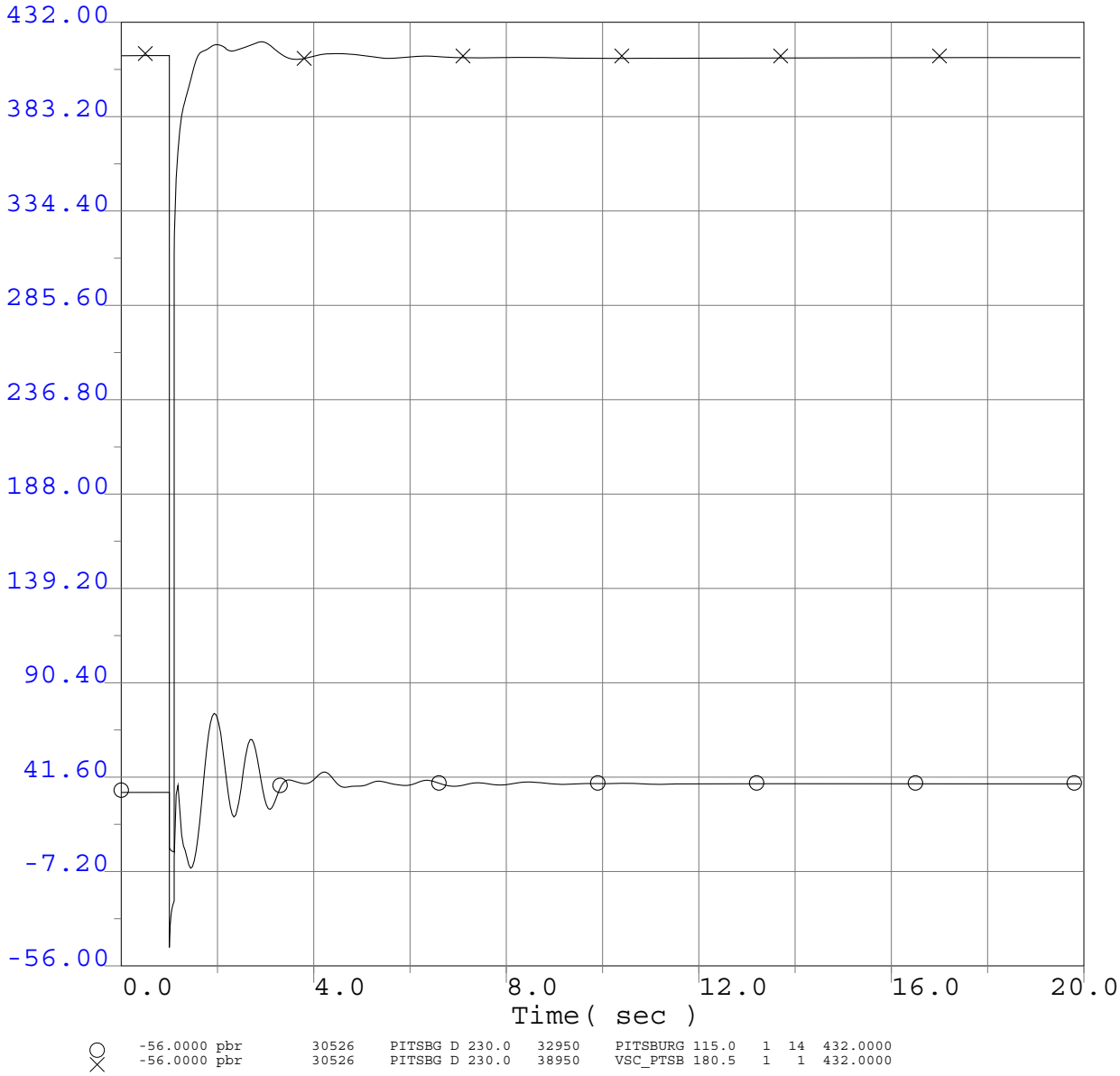

Q322 Project GIPR Phase 1 Interconnection System Impact Study
2013 Greater Bay Area Summer Peak Base Case
Q322 @626MW
Pittsburg 230kV Bus 1E
3 ph 6 cyc flt @ Pittsburg & clr Pittsburg 230kV Bus 1E

Q322 GIPR Phase 1 Interconnection System Impact Study

Selected PG&E Bus Voltage Plots Adjacent to Fault

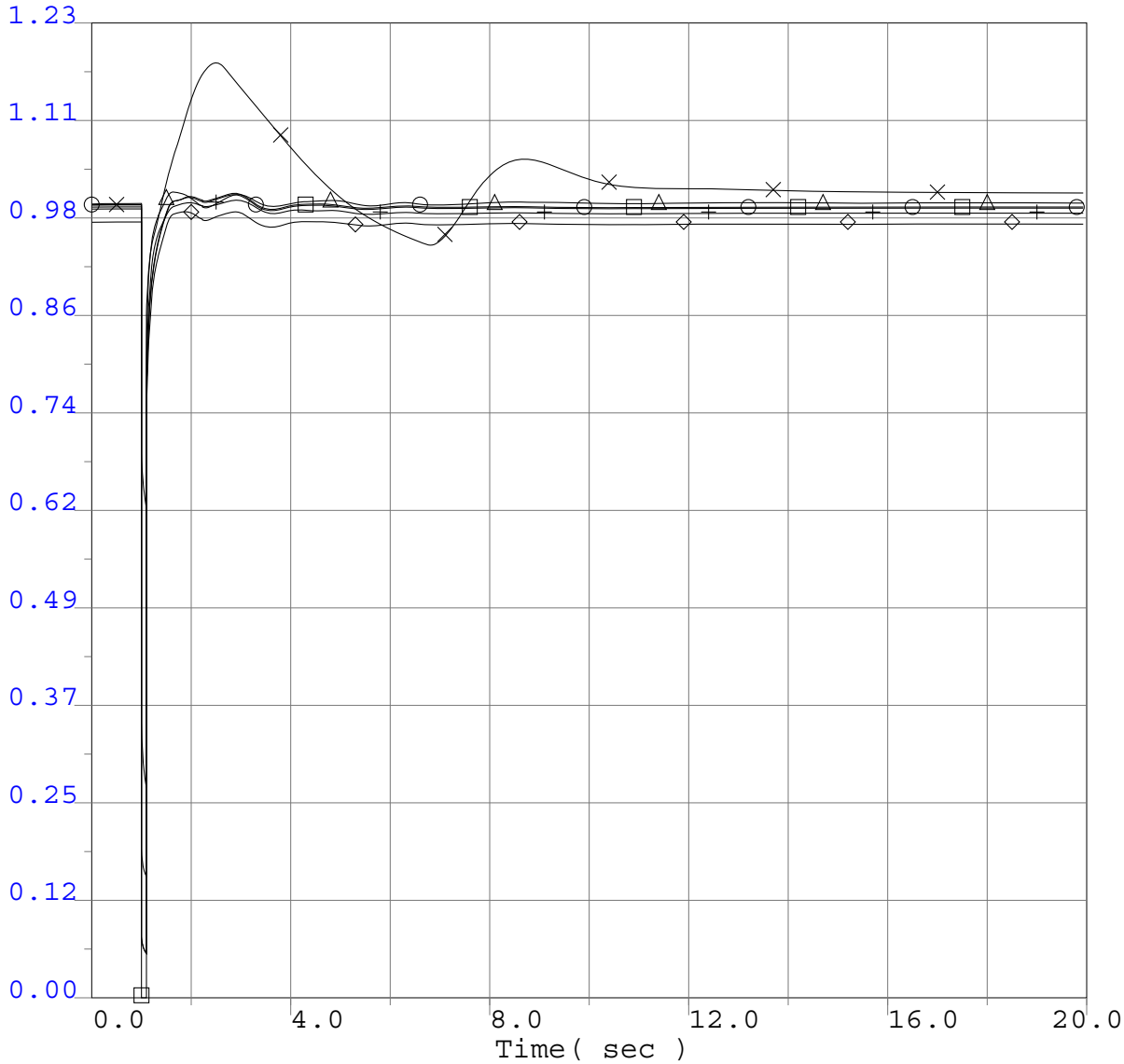

0.0000	vbus	30531	T322BUS1	230.0	0	0.0 "*"	1	1.2300
0.0000	vbus	30532	T322BUS2	230.0	0	0.0 "*"	1	1.2300
0.0000	vbus	30527	PITSBG E	230.0	0	0.0 "*"	1	1.2300
0.0000	vbus	30640	TESLA C	230.0	0	0.0 "*"	1	1.2300
0.0000	vbul	30561	TASSAJAR	230.0	0	0.0 "*"	1	1.2300
0.0000	vbul	30536	TESORO	230.0	0	0.0 "*"	1	1.2300

Q322 Project GIPR Phase 1 Interconnection System Impact Study
2013 Greater Bay Area Summer Peak Base Case
Q322 @626MW
Pittsburg 230kV Bus 2E
3 ph 6 cyc flt @ Pittsburg & clr Pittsburg 230kV Bus 2E

Q322 GIPR Phase 1 Interconnection System Impact Study

Selected PG&E Bus Frequency Plots Adjacent to Fault

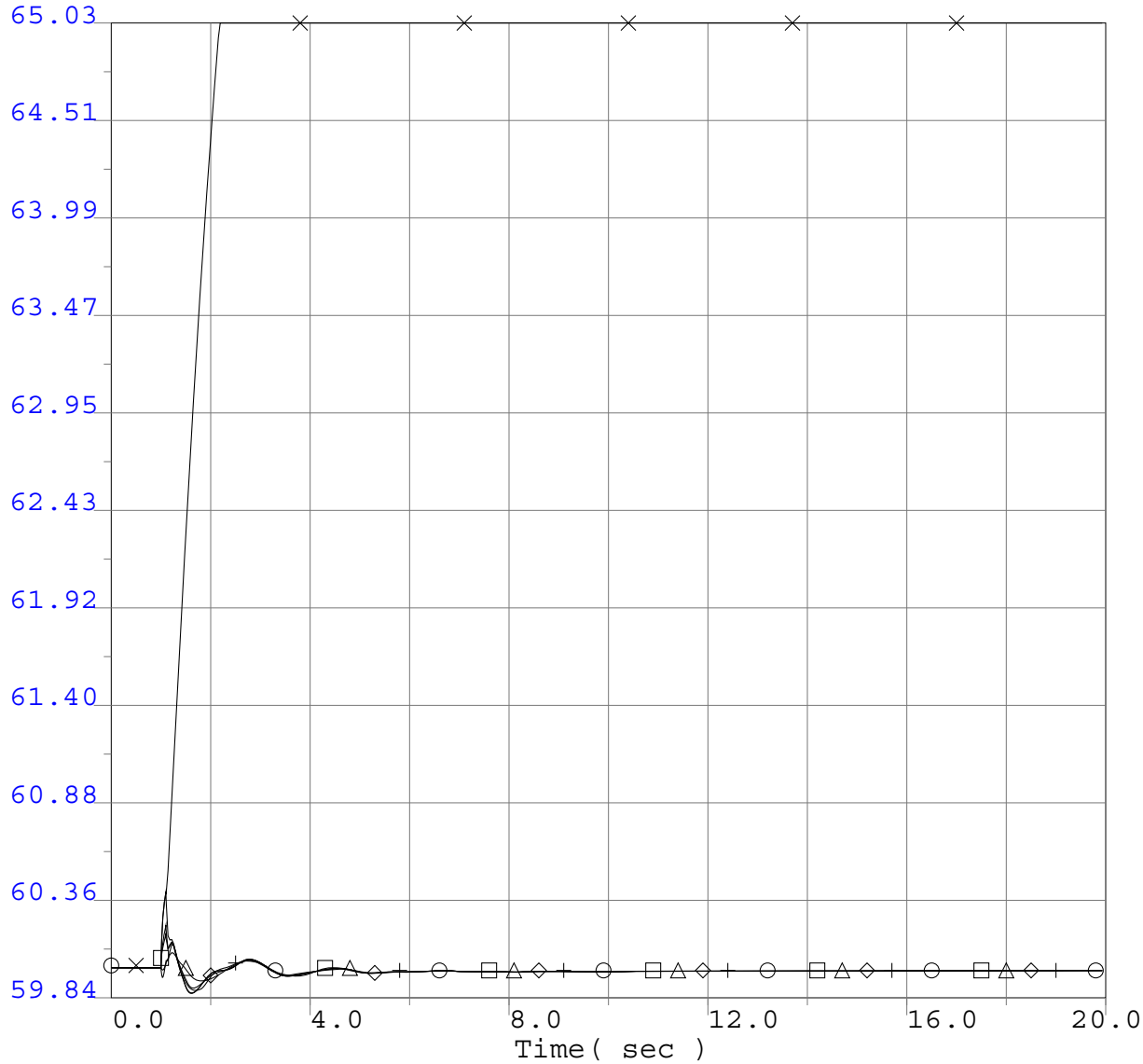

Q322 Project GIPR Phase 1 Interconnection System Impact Study
2013 Greater Bay Area Summer Peak Base Case
Q322 @626MW
Pittsburg 230kV Bus 2E
3 ph 6 cyc flt @ Pittsburg & clr Pittsburg 230kV Bus 2E

Q322 GIPR Phase 1 Interconnection System Impact Study

Project Generator Terminal Voltages (P.U.)

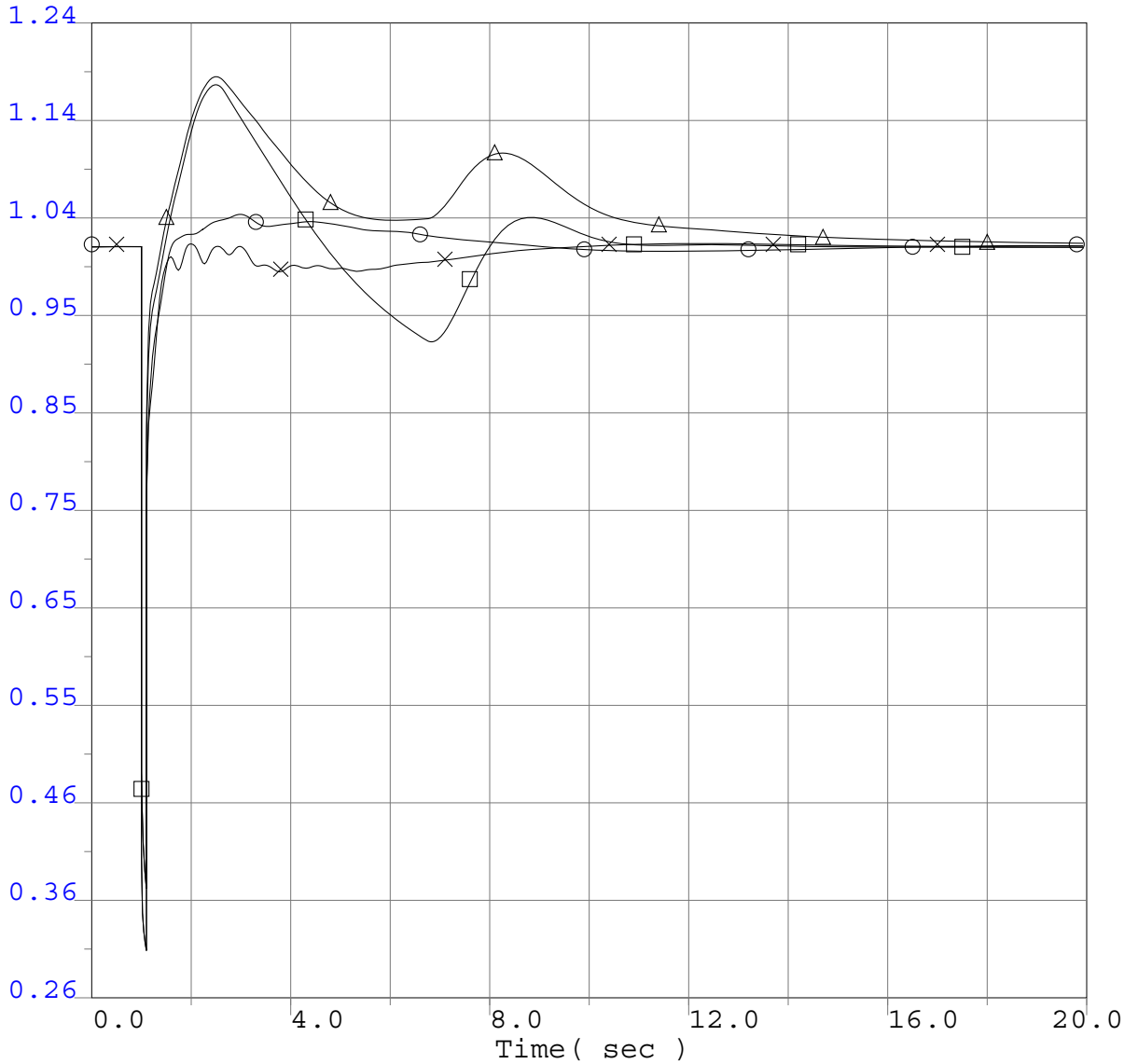

○	0.2600 vt	33191	T322GT1	16.5	0	0.0 "1"	1	1.2400
⊗	0.2600 vt	33192	T322ST1	13.8	0	0.0 "1"	1	1.2400
□	0.2600 vt	33193	T322GT2	16.5	0	0.0 "2"	1	1.2400
△	0.2600 vt	33194	T322ST2	13.8	0	0.0 "2"	1	1.2400

Q322 Project GIPR Phase 1 Interconnection System Impact Study
2013 Greater Bay Area Summer Peak Base Case
Q322 @626MW
Pittsburg 230kV Bus 2E
3 ph 6 cyc flt @ Pittsburg & clr Pittsburg 230kV Bus 2E

Q322 GIPR Phase 1 Interconnection System Impact Study

Selected Generator Terminal Voltages (P.U.)

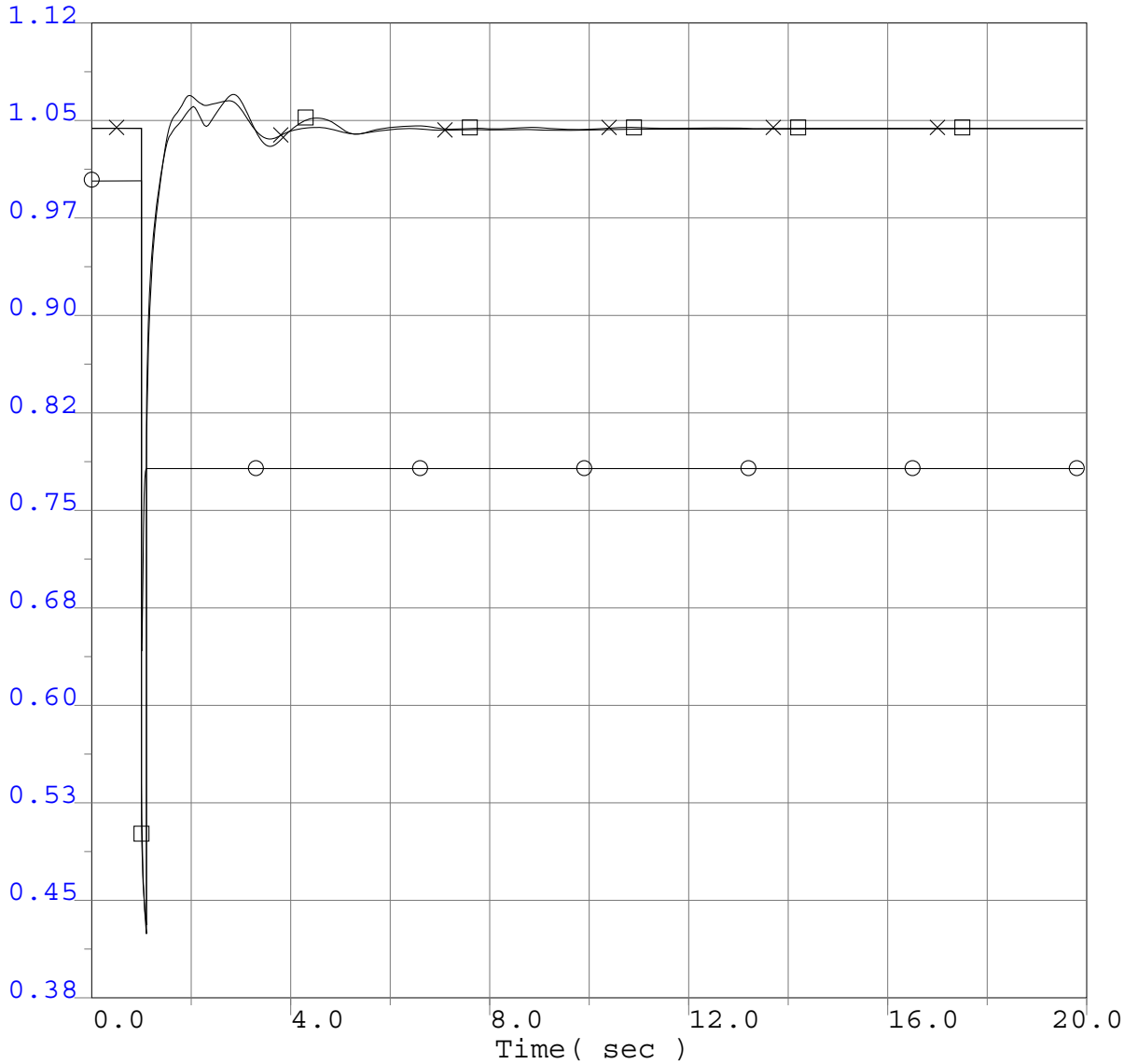

○	0.3800 vt	33195	T417	34.5	0	0.0 "1"	1	1.1200
⊗	0.3800 vt	33108	DEC CTG1	18.0	0	0.0 "1"	1	1.1200
□	0.3800 vt	33107	DEC STG1	24.0	0	0.0 "1"	1	1.1200

Q322 Project GIPR Phase 1 Interconnection System Impact Study
2013 Greater Bay Area Summer Peak Base Case
Q322 @626MW
Pittsburg 230kV Bus 2E
3 ph 6 cyc flt @ Pittsburg & clr Pittsburg 230kV Bus 2E

Q322 GIPR Phase 1 Interconnection System Impact Study

Project Generator Speed (P.U.)

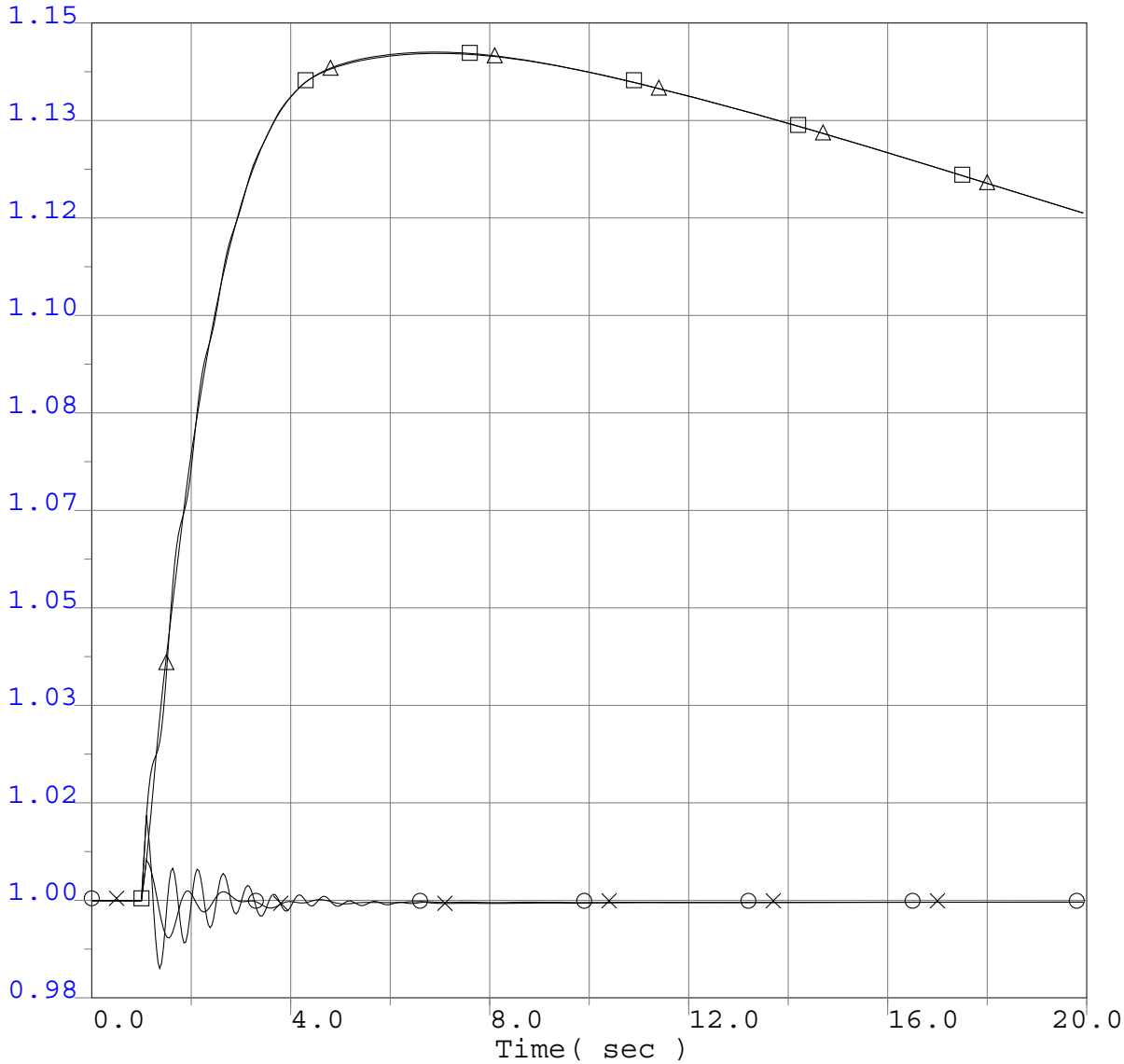

○	0.9834 spd	33191	T322GT1	16.5	0	0.0 "1"	1	1.1500
×	0.9834 spd	33192	T322ST1	13.8	0	0.0 "1"	1	1.1500
□	0.9834 spd	33193	T322GT2	16.5	0	0.0 "2"	1	1.1500
△	0.9834 spd	33194	T322ST2	13.8	0	0.0 "2"	1	1.1500

Q322 Project GIPR Phase 1 Interconnection System Impact Study
2013 Greater Bay Area Summer Peak Base Case
Q322 @626MW
Pittsburg 230kV Bus 2E
3 ph 6 cyc flt @ Pittsburg & clr Pittsburg 230kV Bus 2E

Q322 GIPR Phase 1 Interconnection System Impact Study

Selected Generator Speed (P.U.)

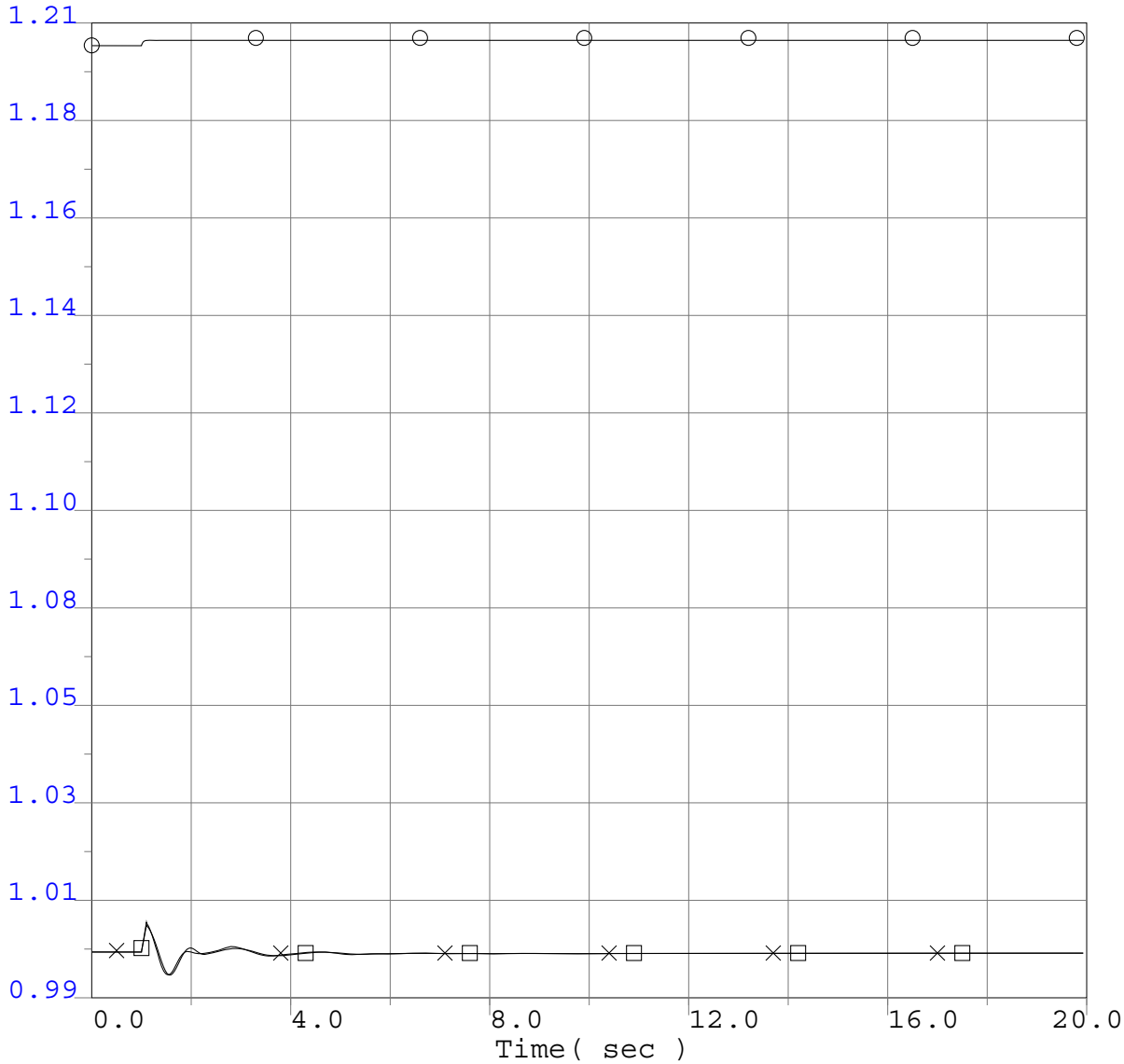

○	0.9899 spd	33195		T417	34.5	0	0.0 "1"	1	1.2050
⊗	0.9899 spd	33108	DEC	CTG1	18.0	0	0.0 "1"	1	1.2050
□	0.9899 spd	33107	DEC	STG1	24.0	0	0.0 "1"	1	1.2050

Q322 Project GIPR Phase 1 Interconnection System Impact Study
2013 Greater Bay Area Summer Peak Base Case
Q322 @626MW
Pittsburg 230kV Bus 2E
3 ph 6 cyc flt @ Pittsburg & clr Pittsburg 230kV Bus 2E

Q322 GIPR Phase 1 Interconnection System Impact Study

Project Generator Terminal Power (MW)

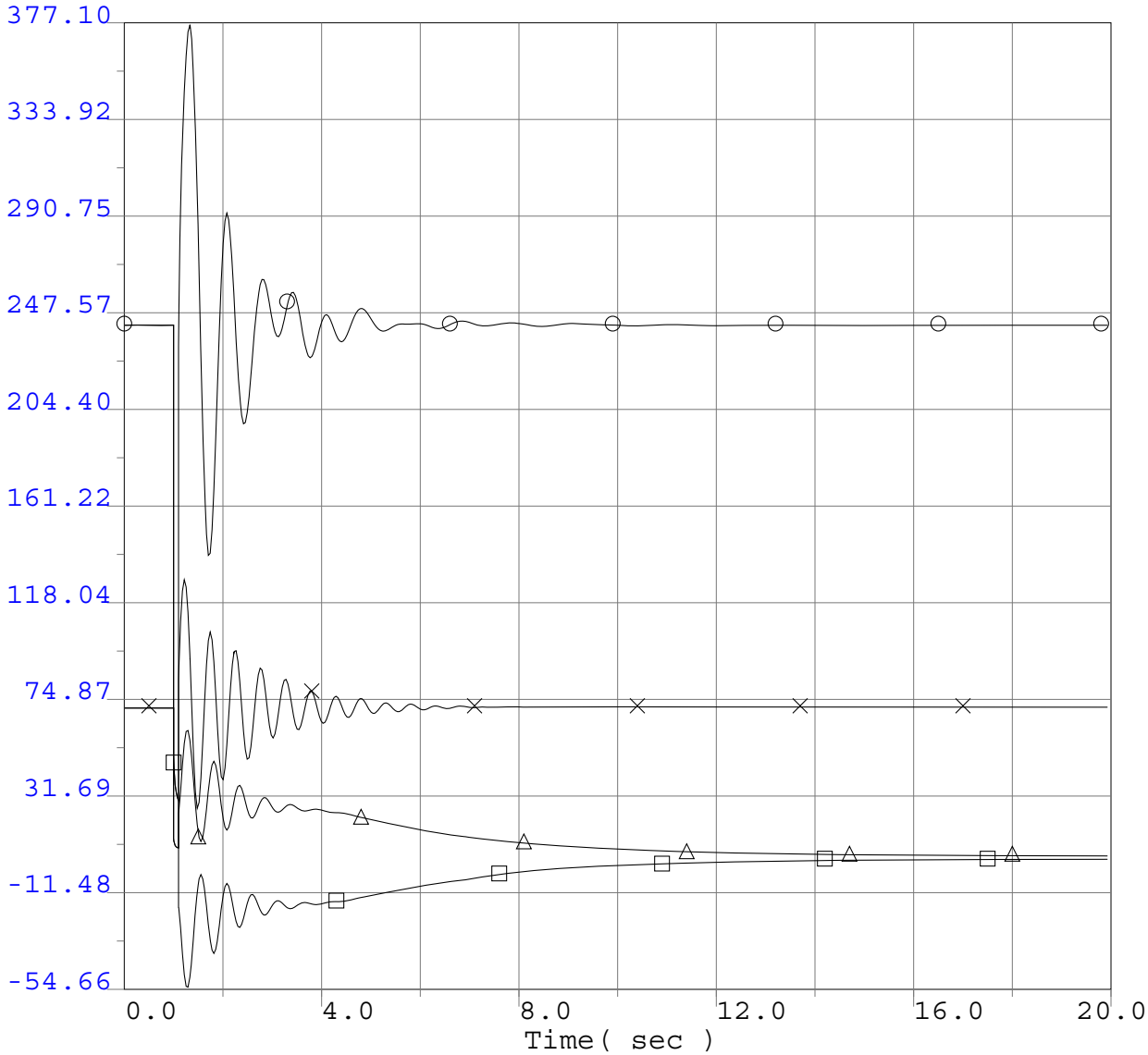

-54.6600 pg	33191	T322GT1	16.5	0	0.0 "1"	1	377.1000
-54.6600 pg	33192	T322ST1	13.8	0	0.0 "1"	1	377.1000
-54.6600 pg	33193	T322GT2	16.5	0	0.0 "2"	1	377.1000
-54.6600 pg	33194	T322ST2	13.8	0	0.0 "2"	1	377.1000

Q322 Project GIPR Phase 1 Interconnection System Impact Study
2013 Greater Bay Area Summer Peak Base Case
Q322 @626MW
Pittsburg 230kV Bus 2E
3 ph 6 cyc flt @ Pittsburg & clr Pittsburg 230kV Bus 2E

Q322 GIPR Phase 1 Interconnection System Impact Study

Selected Generator Terminal Power (MW)

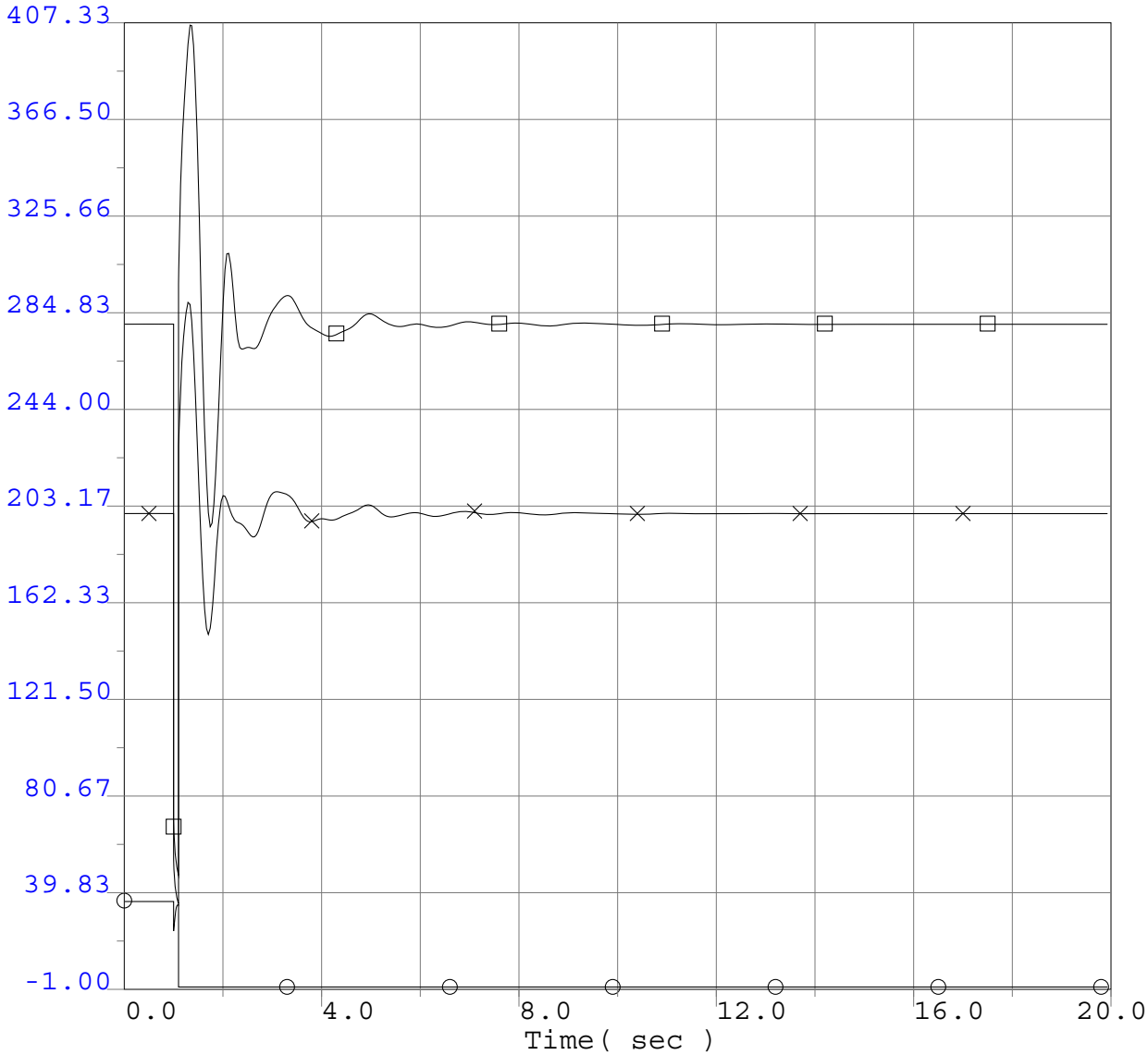

○	-1.0000 pg	33195	T417	34.5	0	0.0	"1"	1	407.3300
⊗	-1.0000 pg	33108	DEC CTG1	18.0	0	0.0	"1"	1	407.3300
□	-1.0000 pg	33107	DEC STG1	24.0	0	0.0	"1"	1	407.3300

Q322 Project GIPR Phase 1 Interconnection System Impact Study
2013 Greater Bay Area Summer Peak Base Case
Q322 @626MW
Pittsburg 230kV Bus 2E
3 ph 6 cyc flt @ Pittsburg & clr Pittsburg 230kV Bus 2E

Q322 GIPR Phase 1 Interconnection System Impact Study

Project Generator Terminal Reactive Power (MVAr)

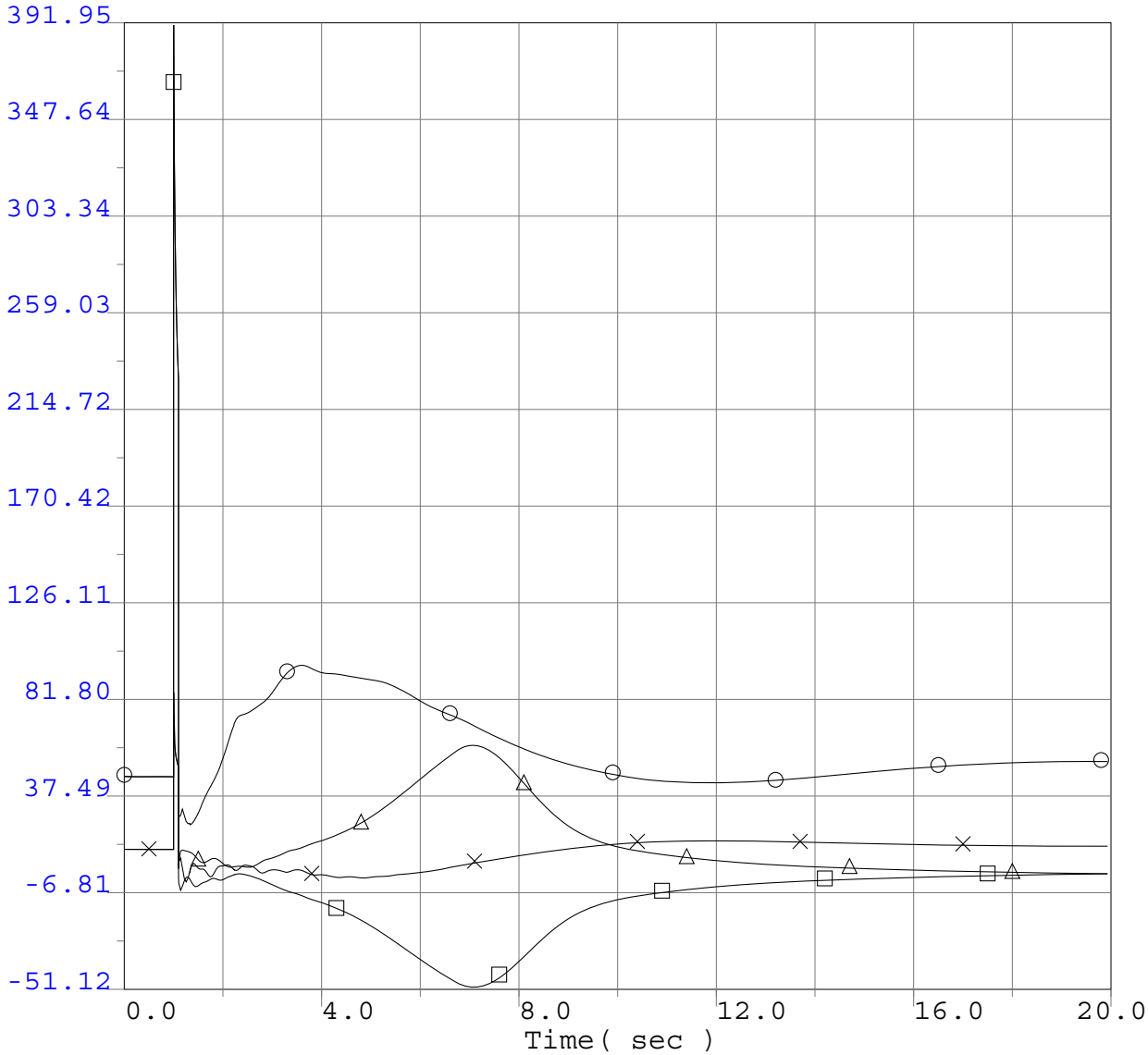

-51.1200 qg	33191	T322GT1	16.5	0	0.0 "1"	1	391.9500
-51.1200 qg	33192	T322ST1	13.8	0	0.0 "1"	1	391.9500
-51.1200 qg	33193	T322GT2	16.5	0	0.0 "2"	1	391.9500
-51.1200 qg	33194	T322ST2	13.8	0	0.0 "2"	1	391.9500

Q322 Project GIPR Phase 1 Interconnection System Impact Study
2013 Greater Bay Area Summer Peak Base Case
Q322 @626MW
Pittsburg 230kV Bus 2E
3 ph 6 cyc flt @ Pittsburg & clr Pittsburg 230kV Bus 2E

Q322 GIPR Phase 1 Interconnection System Impact Study

Selected Generator Terminal Reactive Power (MVAr)

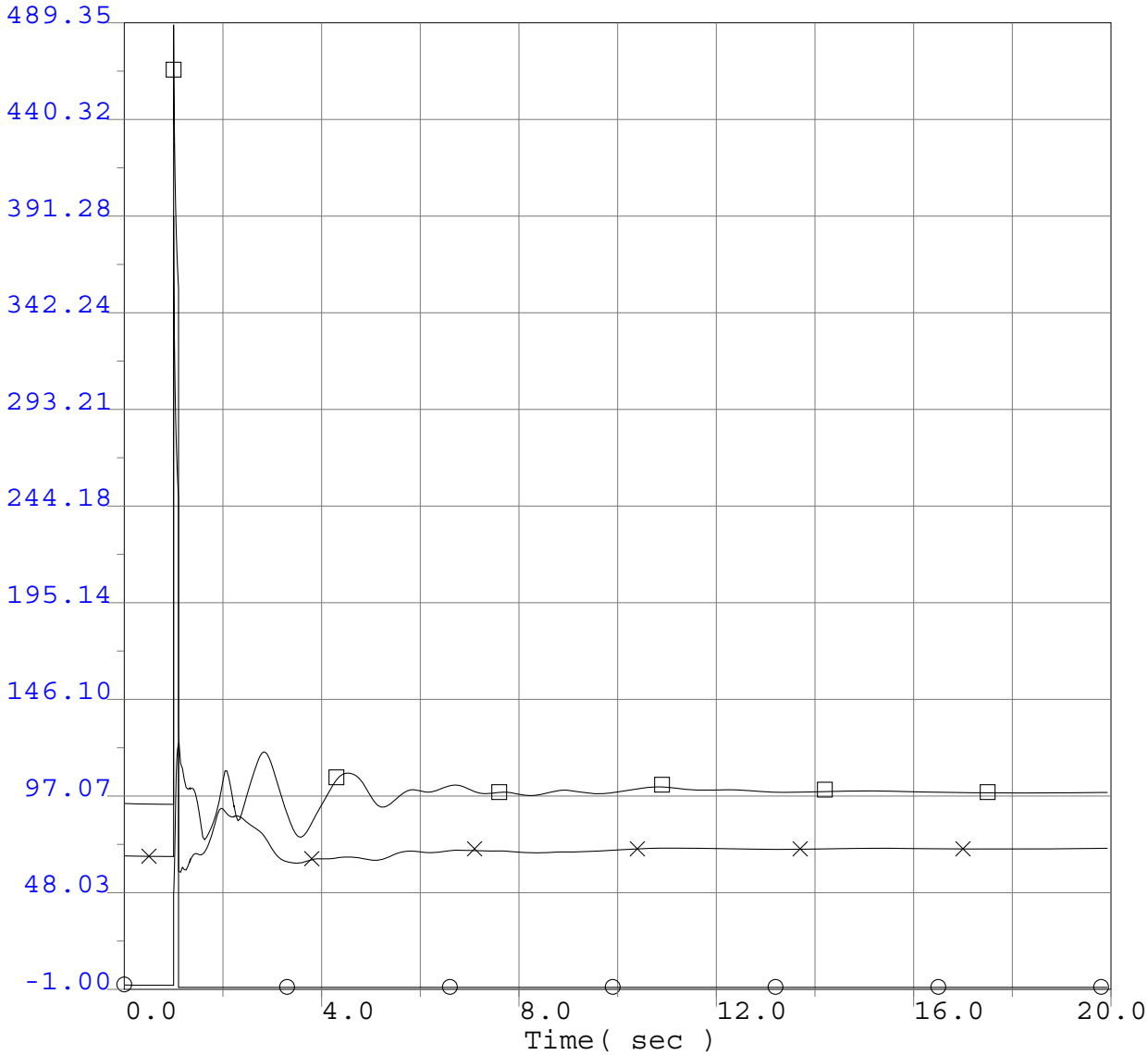

○	-1.0000 qg	33195	T417	34.5	0	0.0 "1"	1	489.3500
⊗	-1.0000 qg	33108	DEC CTG1	18.0	0	0.0 "1"	1	489.3500
□	-1.0000 qg	33107	DEC STG1	24.0	0	0.0 "1"	1	489.3500

Q322 Project GIPR Phase 1 Interconnection System Impact Study
2013 Greater Bay Area Summer Peak Base Case
Q322 @626MW
Pittsburg 230kV Bus 2E
3 ph 6 cyc flt @ Pittsburg & clr Pittsburg 230kV Bus 2E

Q322 GIPR Phase 1 Interconnection System Impact Study

Selected WECC Bus Voltage Plots

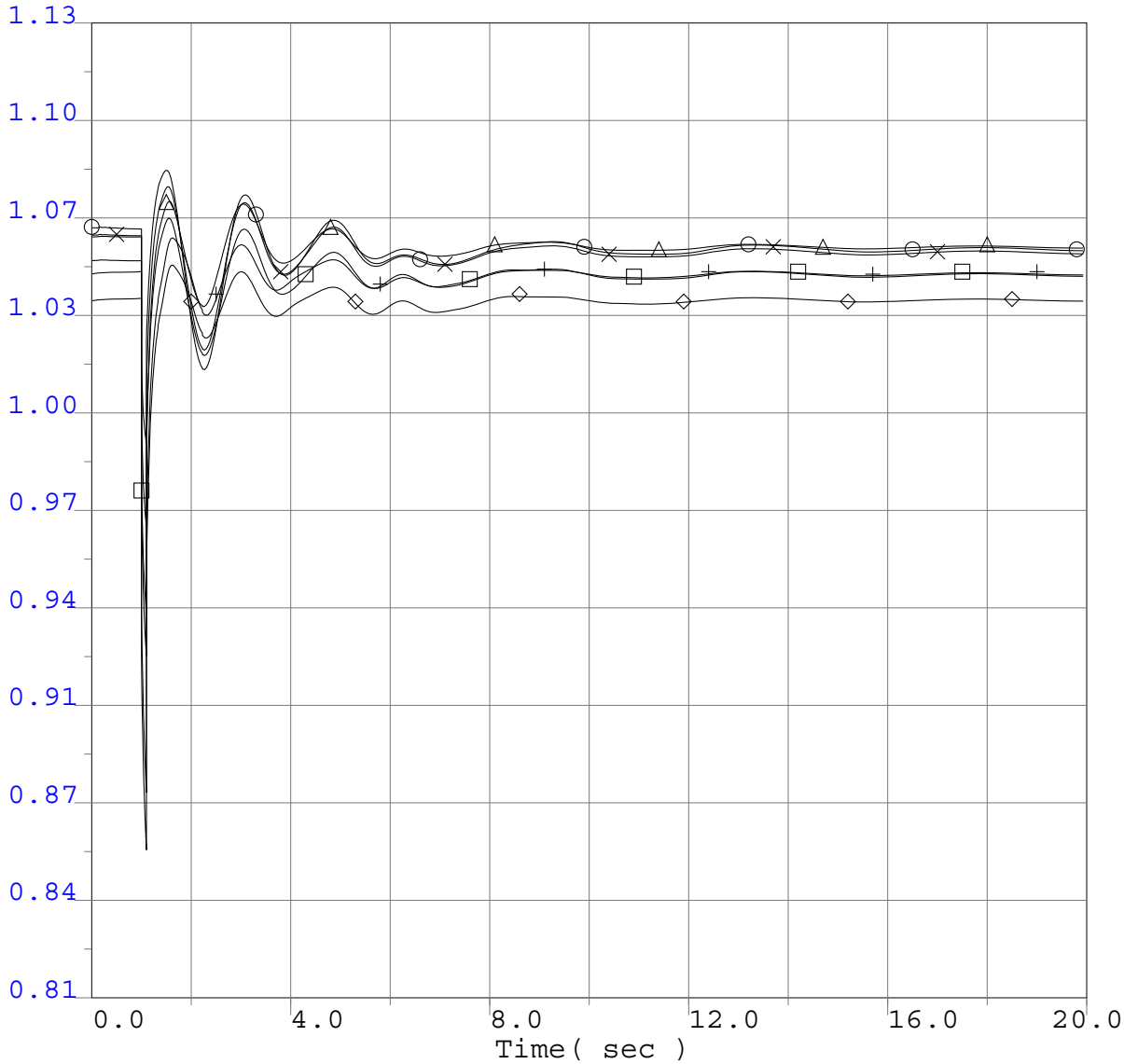

0.8100	vbus	40687	MALIN	500.0	0	0.0 "*"	1	1.1300
0.8100	vbus	30005	ROUND MT	500.0	0	0.0 "*"	1	1.1300
0.8100	vbus	30015	TABLE MT	500.0	0	0.0 "*"	1	1.1300
0.8100	vbus	30030	VACA-DIX	500.0	0	0.0 "*"	1	1.1300
0.8100	vbus	30040	TESLA	500.0	0	0.0 "*"	1	1.1300
0.8100	vbus	30035	TRACY	500.0	0	0.0 "*"	1	1.1300

Q322 Project GIPR Phase 1 Interconnection System Impact Study
2013 Greater Bay Area Summer Peak Base Case
Q322 @626MW
Pittsburg 230kV Bus 2E
3 ph 6 cyc flt @ Pittsburg & clr Pittsburg 230kV Bus 2E

Q322 GIPR Phase 1 Interconnection System Impact Study

Selected WECC Bus Voltage Plots

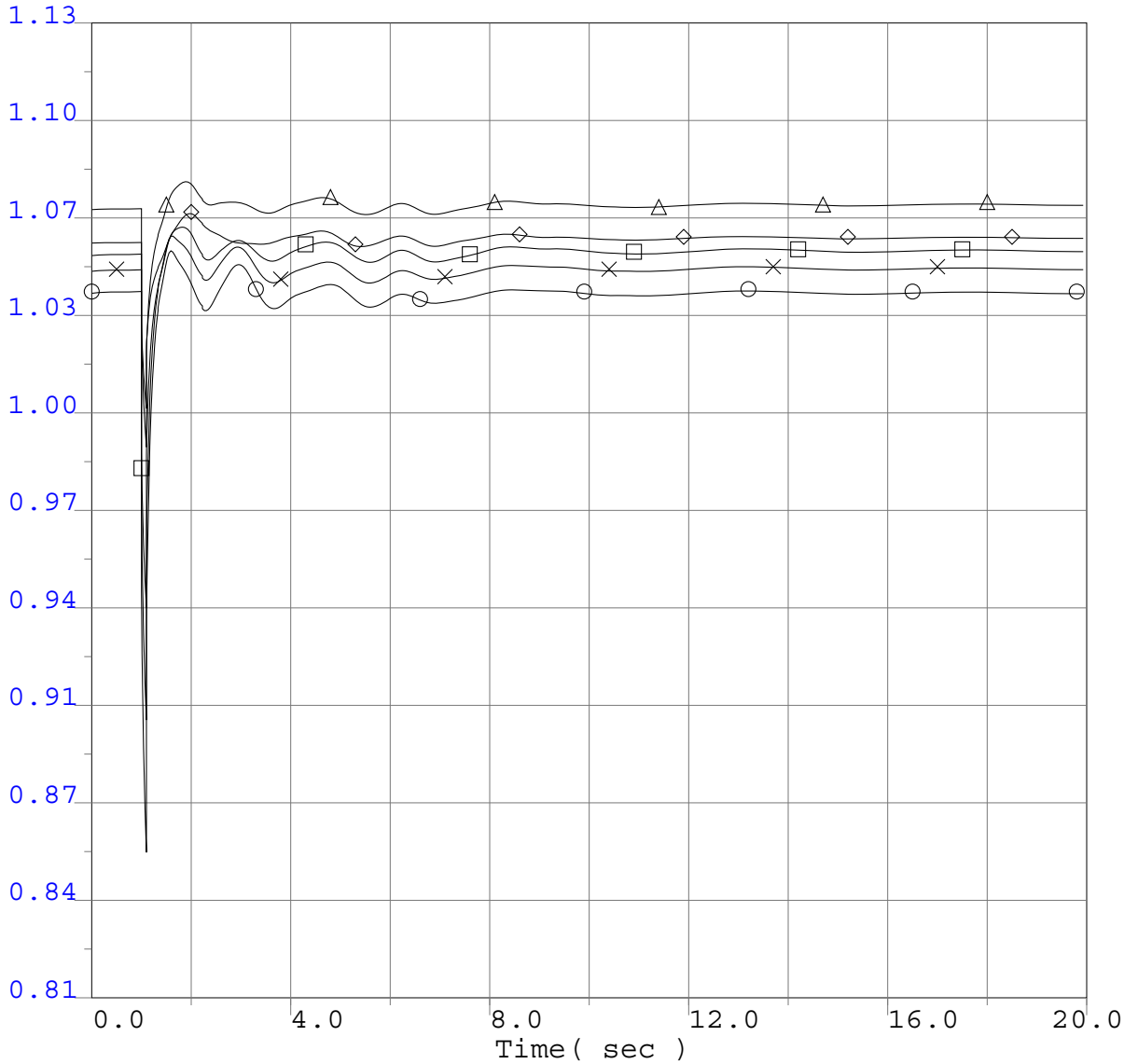

0.8100	vbus	30042	METCALF	500.0	0	0.0 "*"	1	1.1300
0.8100	vbus	30045	MOSSLAND	500.0	0	0.0 "*"	1	1.1300
0.8100	vbus	30050	LOSBANOS	500.0	0	0.0 "*"	1	1.1300
0.8100	vbus	30055	GATES	500.0	0	0.0 "*"	1	1.1300
0.8100	vbus	30060	MIDWAY	500.0	0	0.0 "*"	1	1.1300

Q322 Project GIPR Phase 1 Interconnection System Impact Study
2013 Greater Bay Area Summer Peak Base Case
Q322 @626MW
Pittsburg 230kV Bus 2E
3 ph 6 cyc flt @ Pittsburg & clr Pittsburg 230kV Bus 2E

Q322 GIPR Phase 1 Interconnection System Impact Study

Selected WECC Bus Voltage Plots

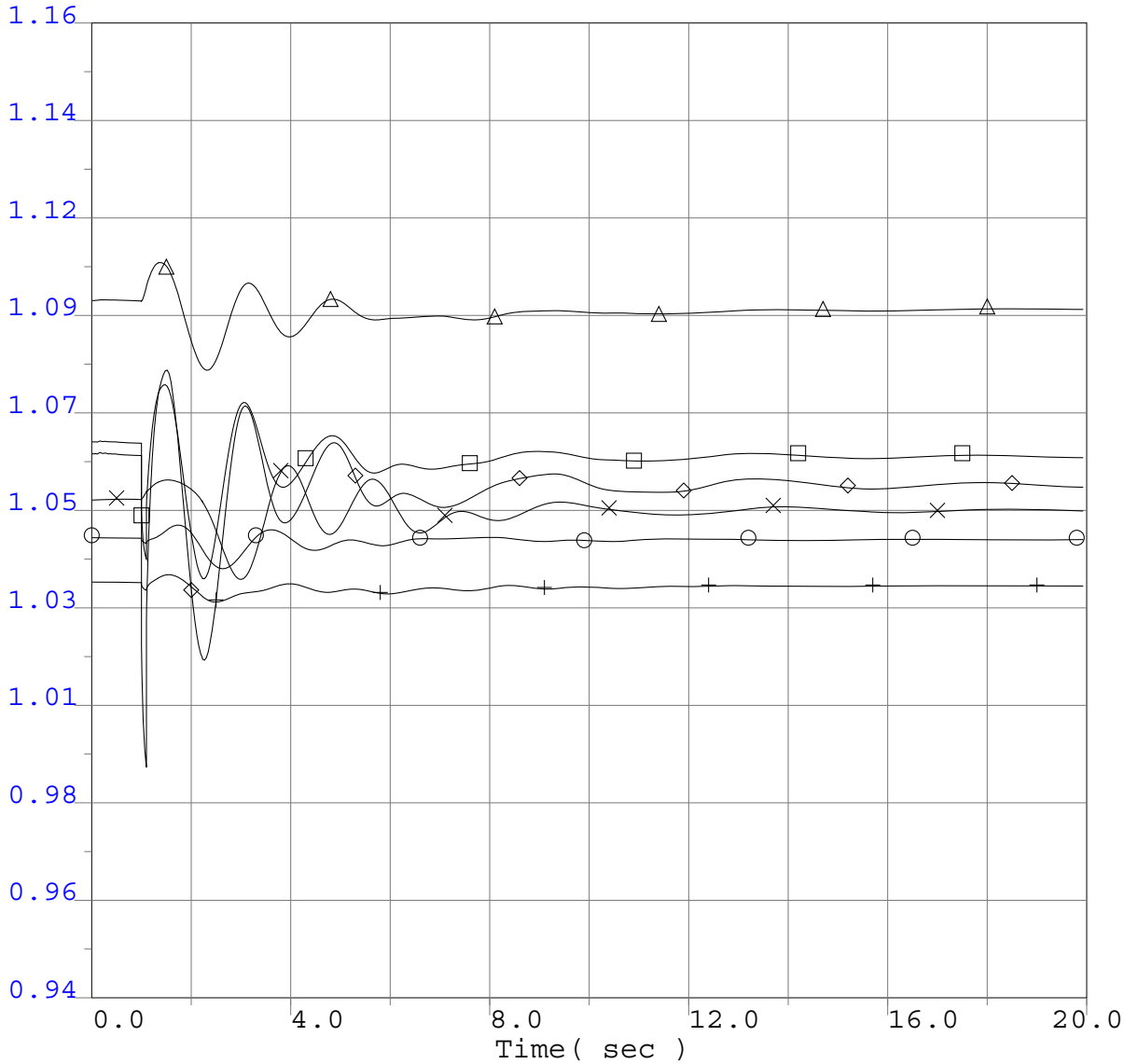

0.9400	vbus	14001	FOURCORN	500.0	0	0.0 "*"	1	1.1600
0.9400	vbus	50703	NIC500	500.0	0	0.0 "*"	1	1.1600
0.9400	vbus	60240	MIDPOINT	500.0	0	0.0 "*"	1	1.1600
0.9400	vbus	62012	TOWN2	500.0	0	0.0 "*"	1	1.1600
0.9400	vbus	40687	MALIN	500.0	0	0.0 "*"	1	1.1600
0.9400	vbus	66340	SIGURD	345.0	0	0.0 "*"	1	1.1600

Q322 Project GIPR Phase 1 Interconnection System Impact Study
2013 Greater Bay Area Summer Peak Base Case
Q322 @626MW
Pittsburg 230kV Bus 2E
3 ph 6 cyc flt @ Pittsburg & clr Pittsburg 230kV Bus 2E

Q322 GIPR Phase 1 Interconnection System Impact Study

Selected WECC Bus Voltage Plots

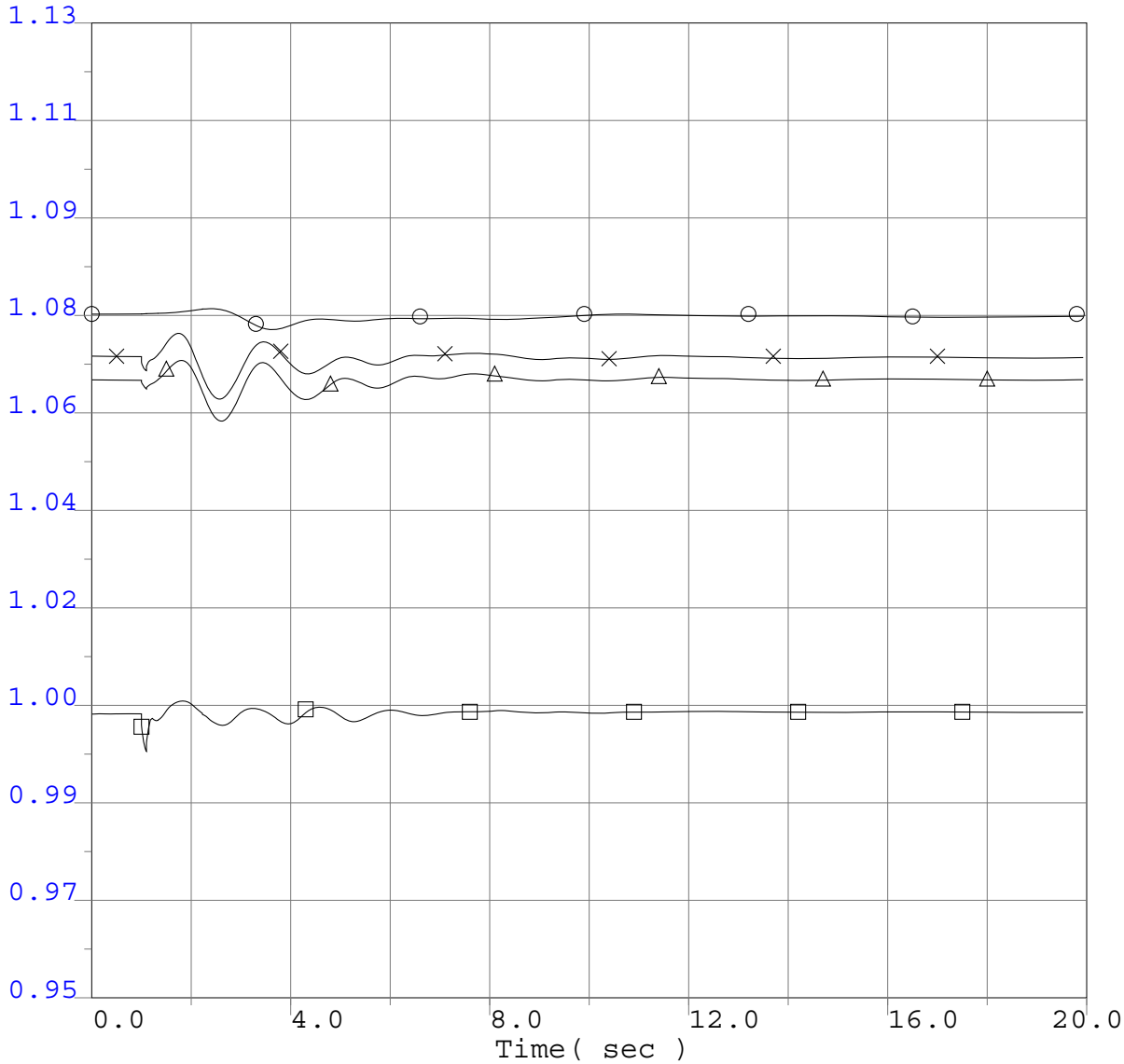

0.9500 vbul	54150	WILLESD9	240.0	0	0.0	"*"	1	1.1300
0.9500 vbus	14003	NAVAJO	500.0	0	0.0	"*"	1	1.1300
0.9500 vbus	24153	VESTAL	230.0	0	0.0	"*"	1	1.1300
0.9500 vbus	22360	IMPRLVLY	500.0	0	0.0	"*"	1	1.1300

Q322 Project GIPR Phase 1 Interconnection System Impact Study
2013 Greater Bay Area Summer Peak Base Case
Q322 @626MW
Pittsburg 230kV Bus 2E
3 ph 6 cyc flt @ Pittsburg & clr Pittsburg 230kV Bus 2E

Q322 GIPR Phase 1 Interconnection System Impact Study

Selected WECC Bus Frequency Plots

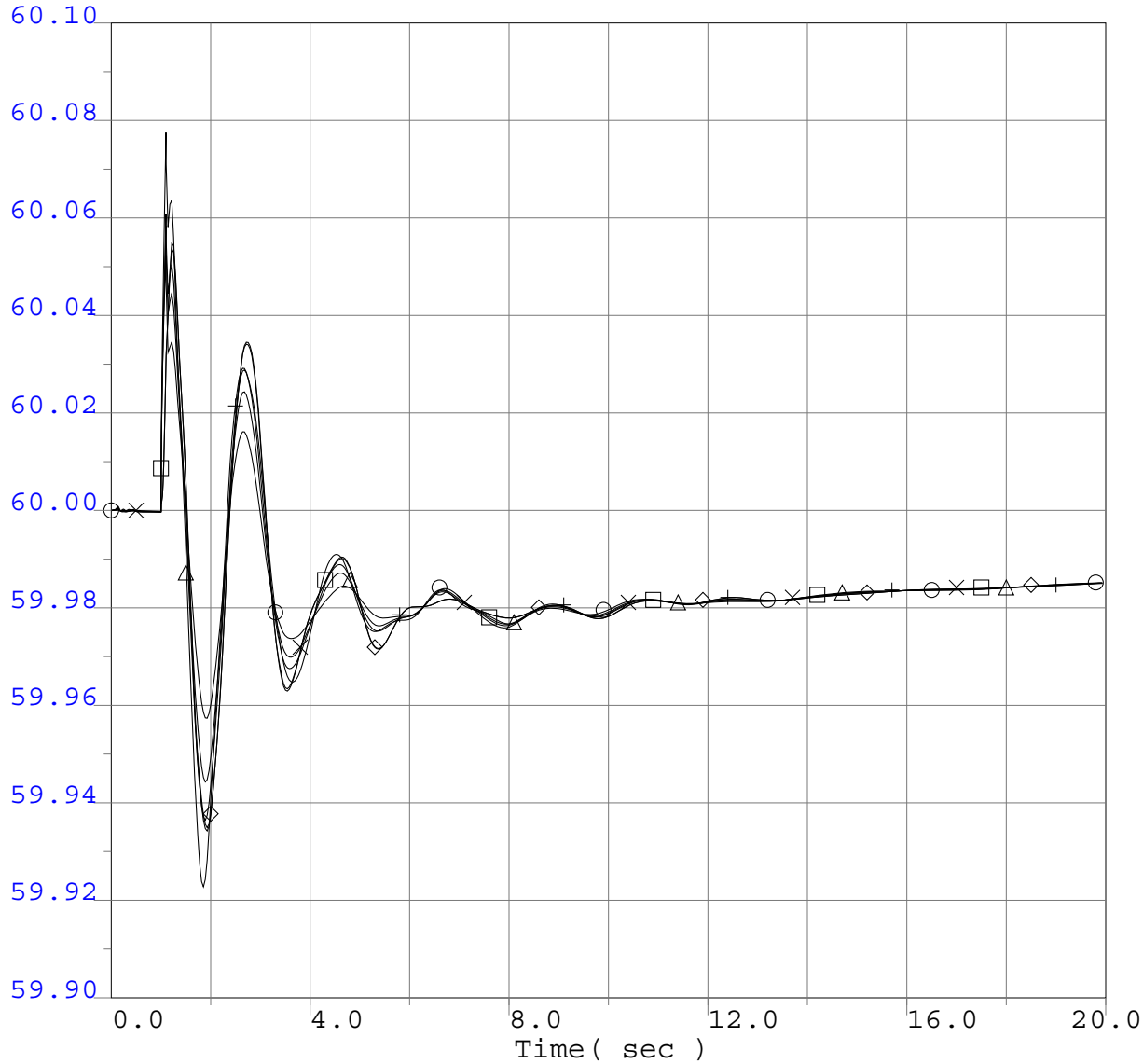

59.9000	fbus	40687	MALIN	500.0	0	0.0 "*"	1	60.1000
59.9000	fbus	30005	ROUND MT	500.0	0	0.0 "*"	1	60.1000
59.9000	fbus	30015	TABLE MT	500.0	0	0.0 "*"	1	60.1000
59.9000	fbus	30030	VACA-DIX	500.0	0	0.0 "*"	1	60.1000
59.9000	fbus	30040	TESLA	500.0	0	0.0 "*"	1	60.1000
59.9000	fbus	30035	TRACY	500.0	0	0.0 "*"	1	60.1000

Q322 Project GIPR Phase 1 Interconnection System Impact Study
2013 Greater Bay Area Summer Peak Base Case
Q322 @626MW
Pittsburg 230kV Bus 2E
3 ph 6 cyc flt @ Pittsburg & clr Pittsburg 230kV Bus 2E

Q322 GIPR Phase 1 Interconnection System Impact Study

Selected WECC Bus Frequency Plots

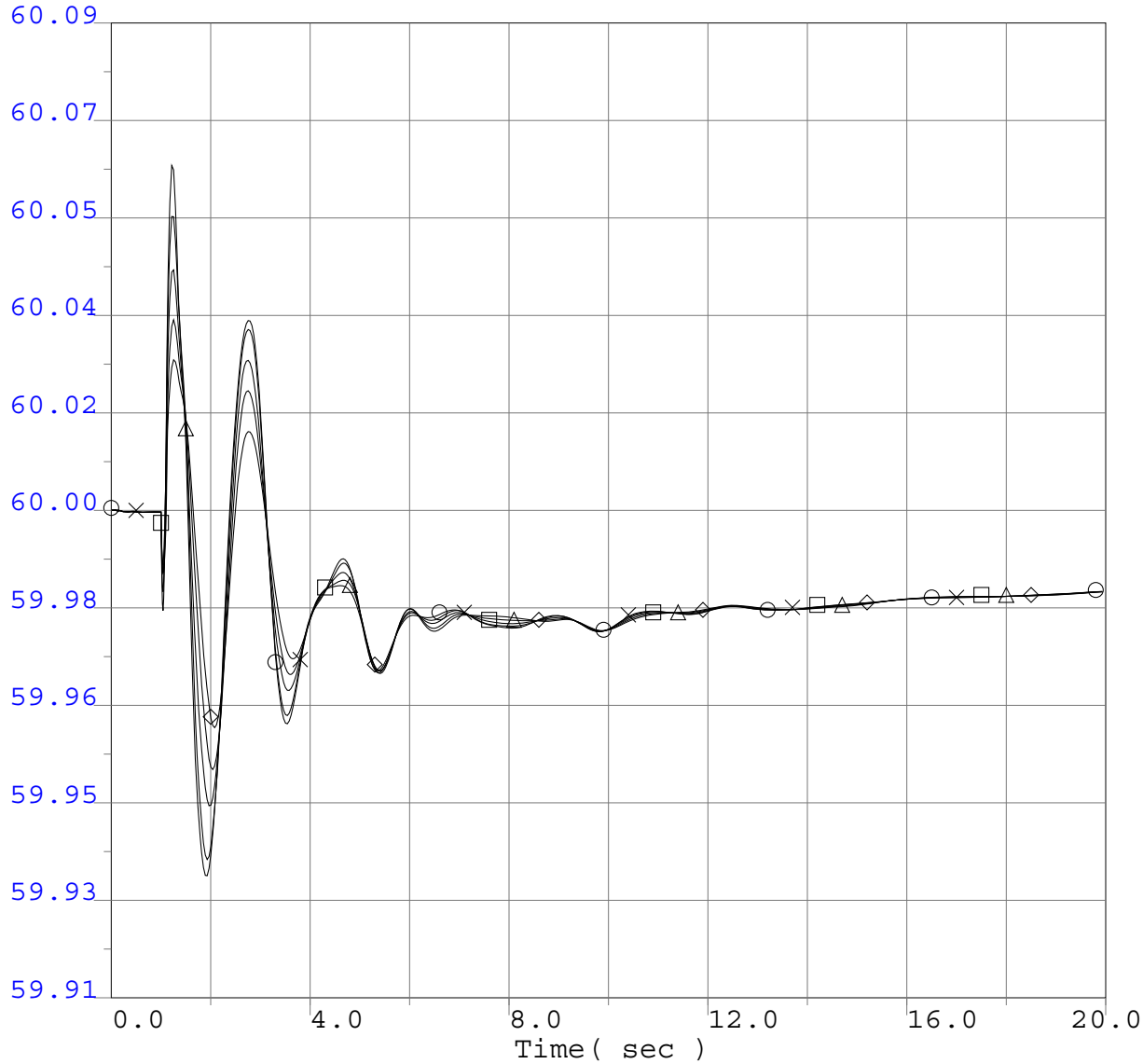

○	59.9100 fbus	30042	METCALF 500.0	0	0.0 "*"	1	60.0900
⊗	59.9100 fbus	30045	MOSSLAND 500.0	0	0.0 "*"	1	60.0900
□	59.9100 fbus	30050	LOSBANOS 500.0	0	0.0 "*"	1	60.0900
△	59.9100 fbus	30055	GATES 500.0	0	0.0 "*"	1	60.0900
◇	59.9100 fbus	30060	MIDWAY 500.0	0	0.0 "*"	1	60.0900

Q322 Project GIPR Phase 1 Interconnection System Impact Study
2013 Greater Bay Area Summer Peak Base Case
Q322 @626MW
Pittsburg 230kV Bus 2E
3 ph 6 cyc flt @ Pittsburg & clr Pittsburg 230kV Bus 2E

Q322 GIPR Phase 1 Interconnection System Impact Study

Selected WECC Bus Frequency Plots

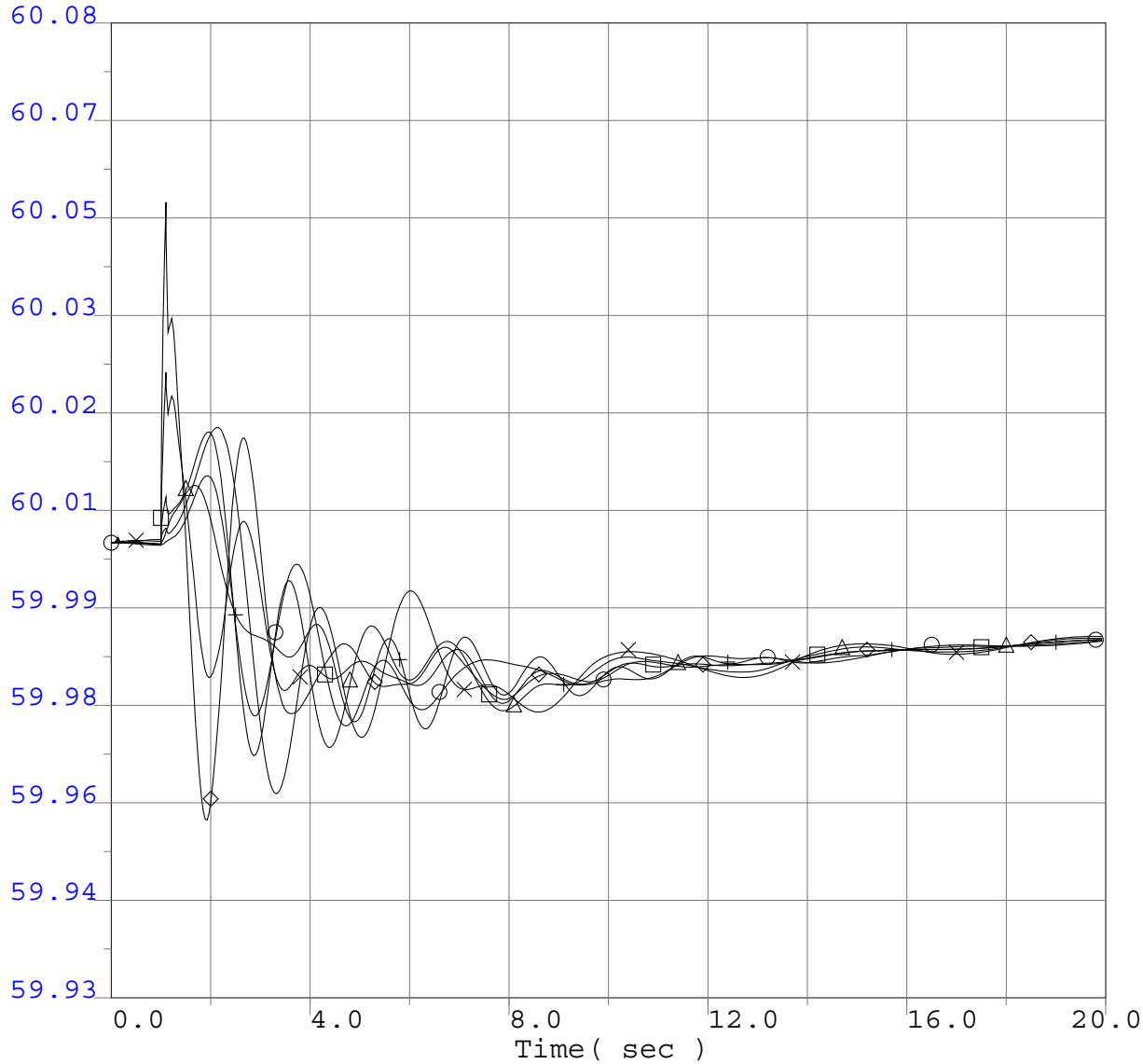

59.9300	fbus	14001	FOURCORN	500.0	0	0.0 "*"	1	60.0800
59.9300	fbus	50703	NIC500	500.0	0	0.0 "*"	1	60.0800
59.9300	fbus	60240	MIDPOINT	500.0	0	0.0 "*"	1	60.0800
59.9300	fbus	62012	TOWN2	500.0	0	0.0 "*"	1	60.0800
59.9300	fbus	40687	MALIN	500.0	0	0.0 "*"	1	60.0800
59.9300	fbus	66340	SIGURD	345.0	0	0.0 "*"	1	60.0800

Q322 Project GIPR Phase 1 Interconnection System Impact Study
2013 Greater Bay Area Summer Peak Base Case
Q322 @626MW
Pittsburg 230kV Bus 2E
3 ph 6 cyc flt @ Pittsburg & clr Pittsburg 230kV Bus 2E

Q322 GIPR Phase 1 Interconnection System Impact Study

Selected WECC Bus Frequency Plots

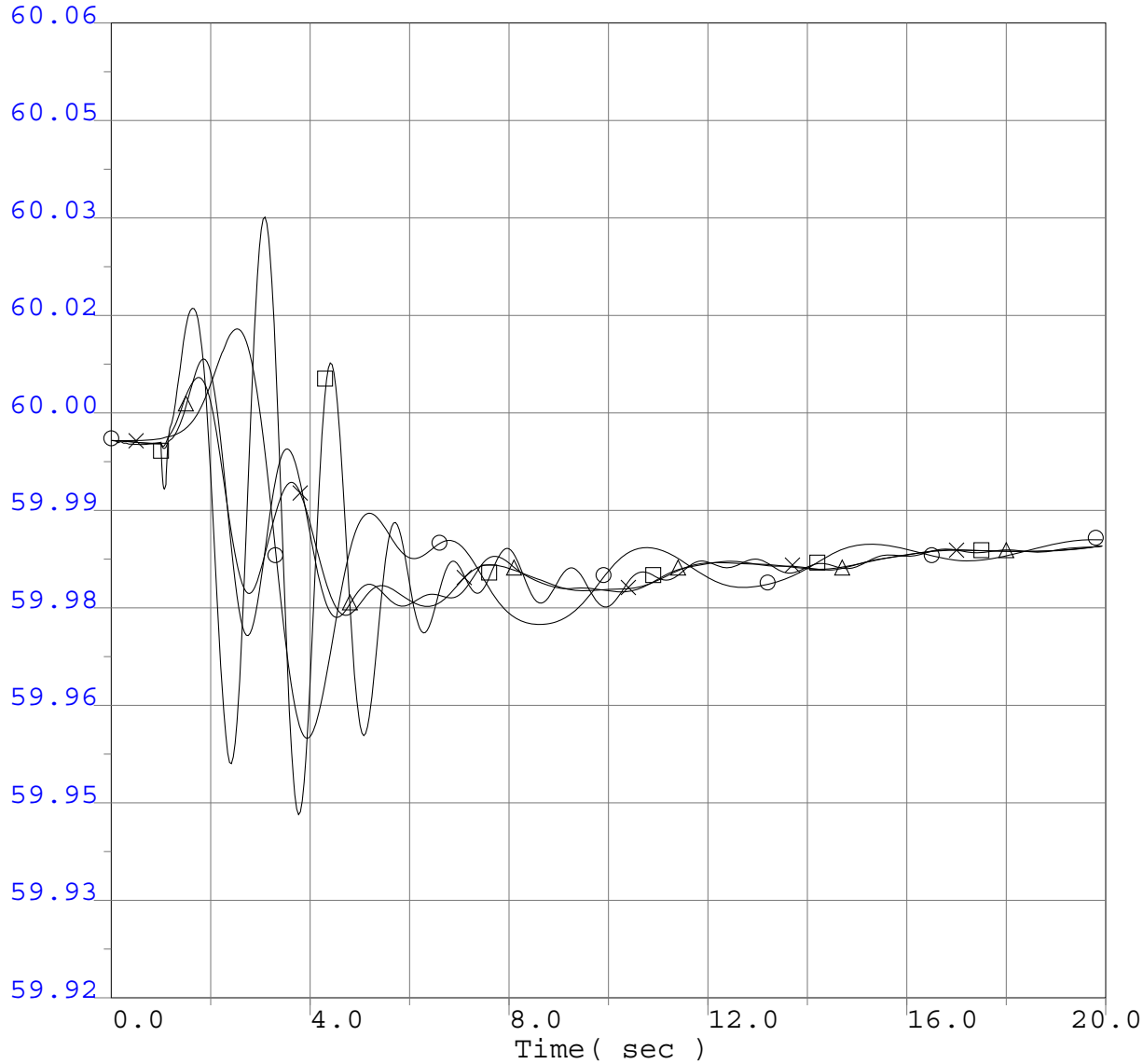

○	59.9200 fbul	54150	WILLESD9 240.0	0	0.0 "*"	1	60.0600
⊗	59.9200 fbus	14003	NAVAJO 500.0	0	0.0 "*"	1	60.0600
□	59.9200 fbus	24153	VESTAL 230.0	0	0.0 "*"	1	60.0600
△	59.9200 fbus	22360	IMPRLVLY 500.0	0	0.0 "*"	1	60.0600

Q322 Project GIPR Phase 1 Interconnection System Impact Study
2013 Greater Bay Area Summer Peak Base Case
Q322 @626MW
Pittsburg 230kV Bus 2E
3 ph 6 cyc flt @ Pittsburg & clr Pittsburg 230kV Bus 2E

Q322 GIPR Phase 1 Interconnection System Impact Study

WECC Generator Rotor Angle

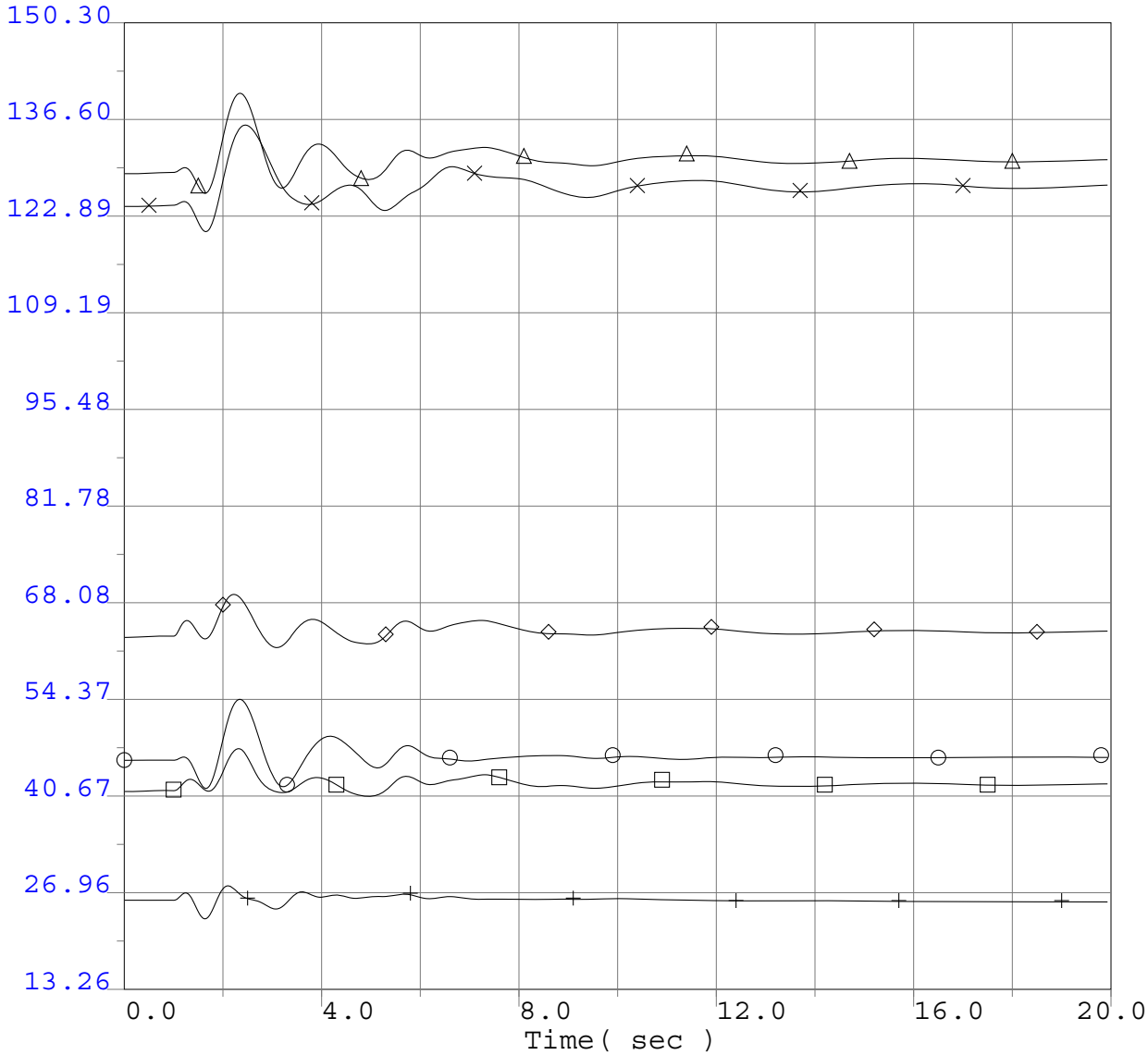

13.2600 ang	14914	FCNGN4CC	22.0	0	0.0 "H"	1	150.3000
13.2600 ang	50499	GMS G5	13.8	0	0.0 "1"	1	150.3000
13.2600 ang	60100	BRWNL 5	13.8	0	0.0 "1"	1	150.3000
13.2600 ang	62048	COLSTP 3	26.0	0	0.0 "1"	1	150.3000
13.2600 ang	44071	JDA 0102	13.8	0	0.0"01"	1	150.3000
13.2600 ang	36411	DIABLO 1	25.0	0	0.0 "1"	1	150.3000

Q322 Project GIPR Phase 1 Interconnection System Impact Study
2013 Greater Bay Area Summer Peak Base Case
Q322 @626MW
Pittsburg 230kV Bus 2E
3 ph 6 cyc flt @ Pittsburg & clr Pittsburg 230kV Bus 2E

Q322 GIPR Phase 1 Interconnection System Impact Study

WECC Generator Rotor Angle

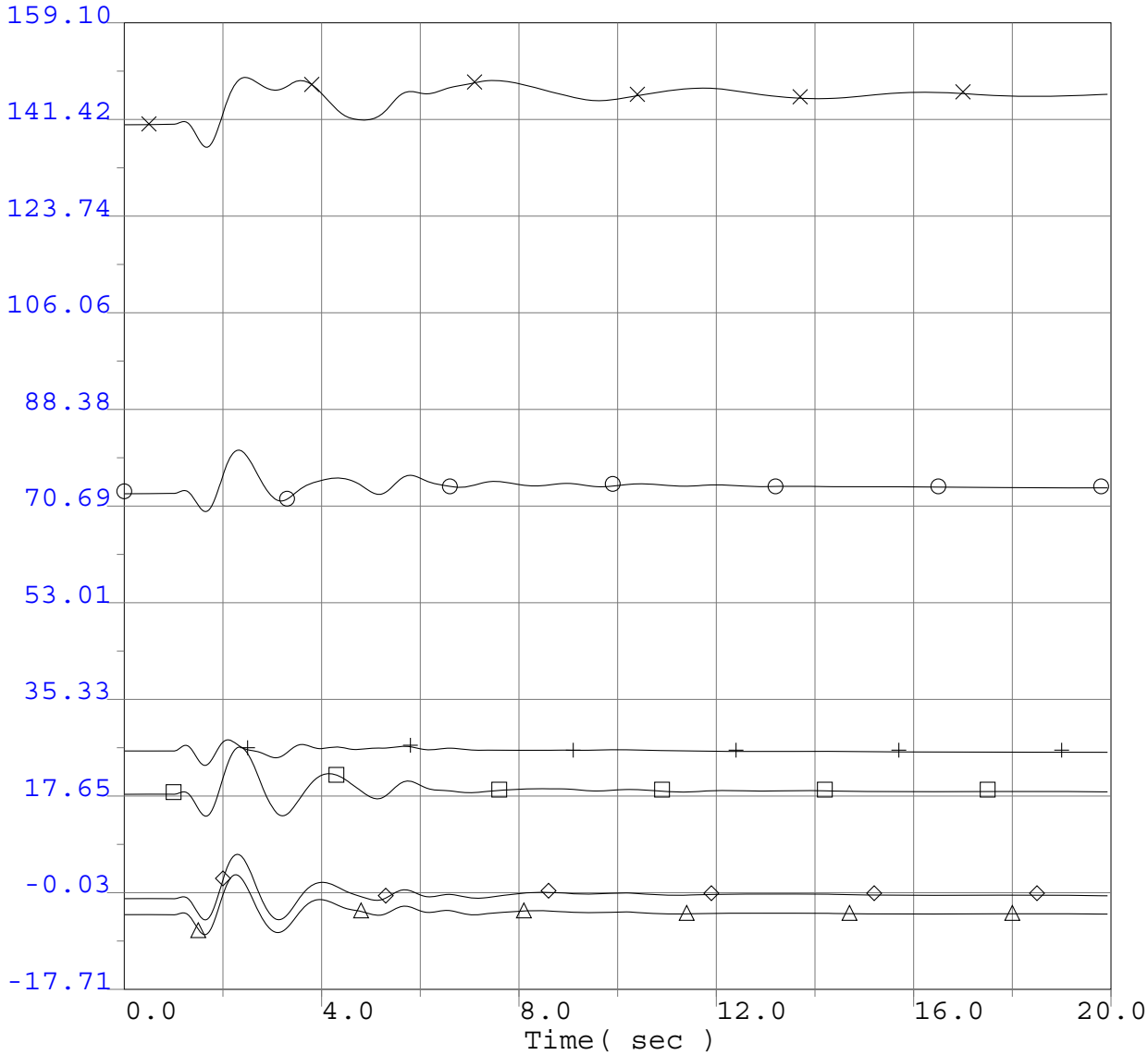

-17.7100 ang	65490	EHUNTR 1	24.0	0	0.0	"1"	1	159.1000
-17.7100 ang	54338	SUND#2GN	18.0	0	0.0	"2"	1	159.1000
-17.7100 ang	79151	GLENC3-4	13.8	0	0.0	"3"	1	159.1000
-17.7100 ang	24130	S.ONOFR3	22.0	0	0.0	"3"	1	159.1000
-17.7100 ang	22244	ENCINA 5	24.0	0	0.0	"1"	1	159.1000
-17.7100 ang	36411	DIABLO 1	25.0	0	0.0	"1"	1	159.1000

Q322 Project GIPR Phase 1 Interconnection System Impact Study
2013 Greater Bay Area Summer Peak Base Case
Q322 @626MW
Pittsburg 230kV Bus 2E
3 ph 6 cyc flt @ Pittsburg & clr Pittsburg 230kV Bus 2E

Q322 GIPR Phase 1 Interconnection System Impact Study

Selected PG&E Transmission Line Flows (MW)

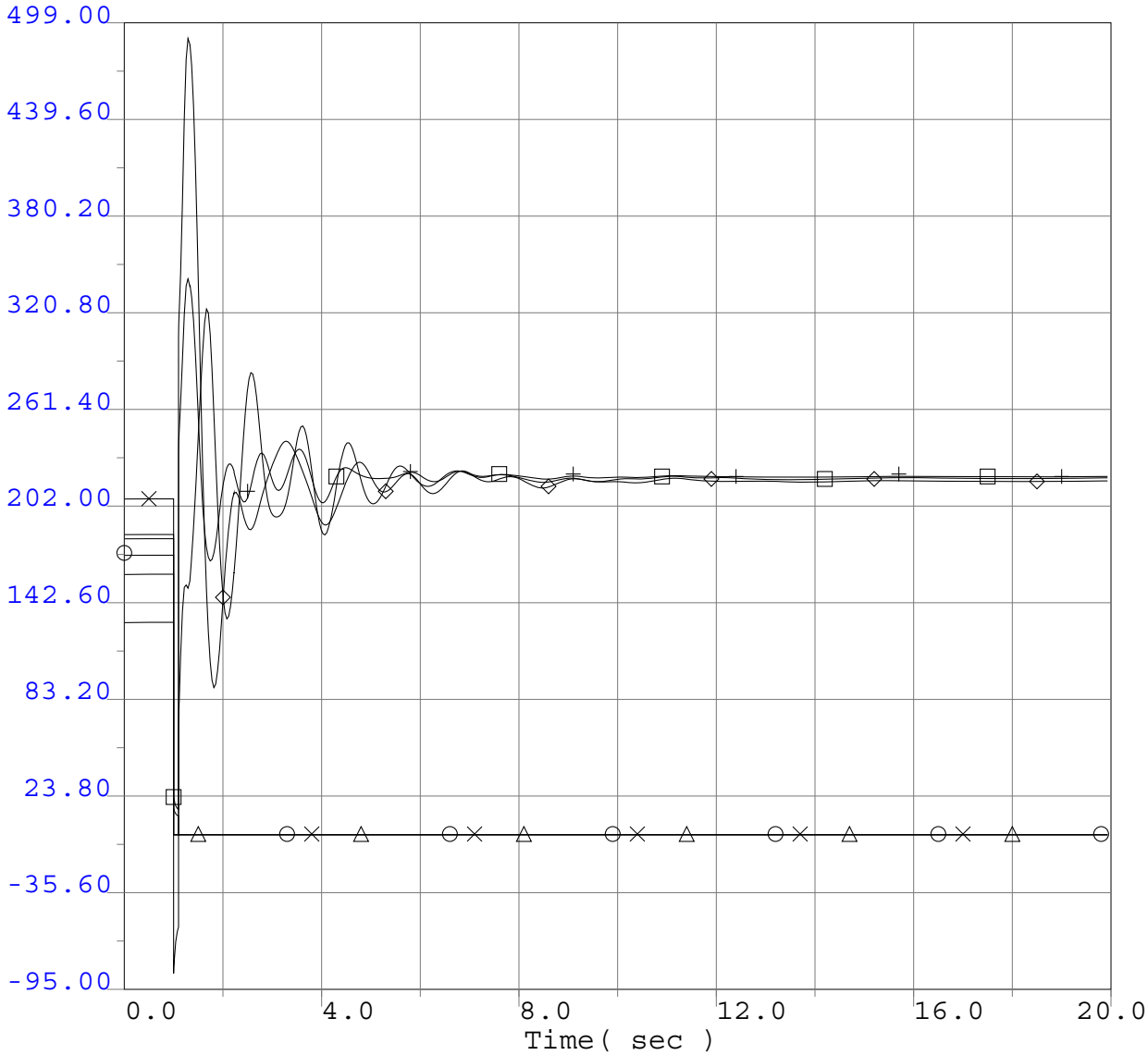

-95.0000 pbr	30527	PITSBG E 230.0	30600	TRES VAQ 230.0	1	2	499.0000
-95.0000 pbr	30600	TRES VAQ 230.0	30640	TESLA C 230.0	1	2	499.0000
-95.0000 pbr	30535	TIDEWATR 230.0	30527	PITSBG E 230.0	1	1	499.0000
-95.0000 pbr	30536	TESORO 230.0	30527	PITSBG E 230.0	1	1	499.0000
-95.0000 pbr	30527	PITSBG E 230.0	30595	FLOWIND2 230.0	1	1	499.0000
-95.0000 pbr	30527	PITSBG E 230.0	30560	E. SHORE 230.0	1	1	499.0000

Q322 Project GIPR Phase 1 Interconnection System Impact Study
2013 Greater Bay Area Summer Peak Base Case
Q322 @626MW
Pittsburg 230kV Bus 2E
3 ph 6 cyc flt @ Pittsburg & clr Pittsburg 230kV Bus 2E

Q322 GIPR Phase 1 Interconnection System Impact Study

Selected PG&E Transmission Line Flows (MW)

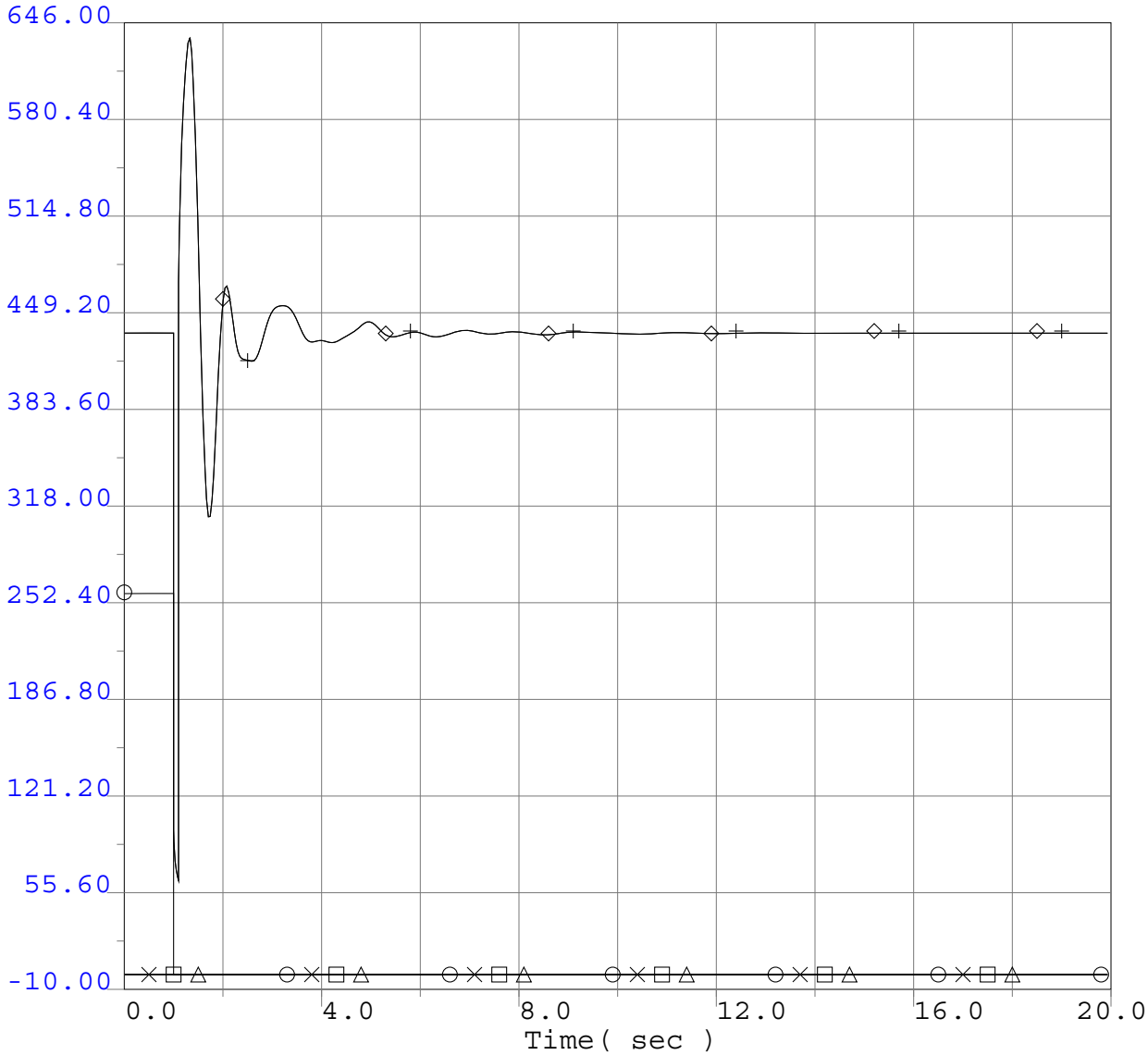

-10.0000 pbr	30527	PITSBG E 230.0	30700	SANMATEO 230.0	1	1	646.0000
-10.0000 pbr	30000	PTSB 7 20.0	30527	PITSBG E 230.0	1	1	646.0000
-10.0000 pbr	33105	PTSB 5 18.0	30527	PITSBG E 230.0	1	1	646.0000
-10.0000 pbr	33106	PTSB 6 18.0	30527	PITSBG E 230.0	1	1	646.0000
-10.0000 pbr	30528	DEC PTSG 230.0	30526	PITSBG D 230.0	1	1	646.0000
-10.0000 pbr	30528	DEC PTSG 230.0	30526	PITSBG D 230.0	1	2	646.0000

Q322 Project GIPR Phase 1 Interconnection System Impact Study
2013 Greater Bay Area Summer Peak Base Case
Q322 @626MW
Pittsburg 230kV Bus 2E
3 ph 6 cyc flt @ Pittsburg & clr Pittsburg 230kV Bus 2E

Q322 GIPR Phase 1 Interconnection System Impact Study

Selected PG&E Transmission Line Flows (MW)

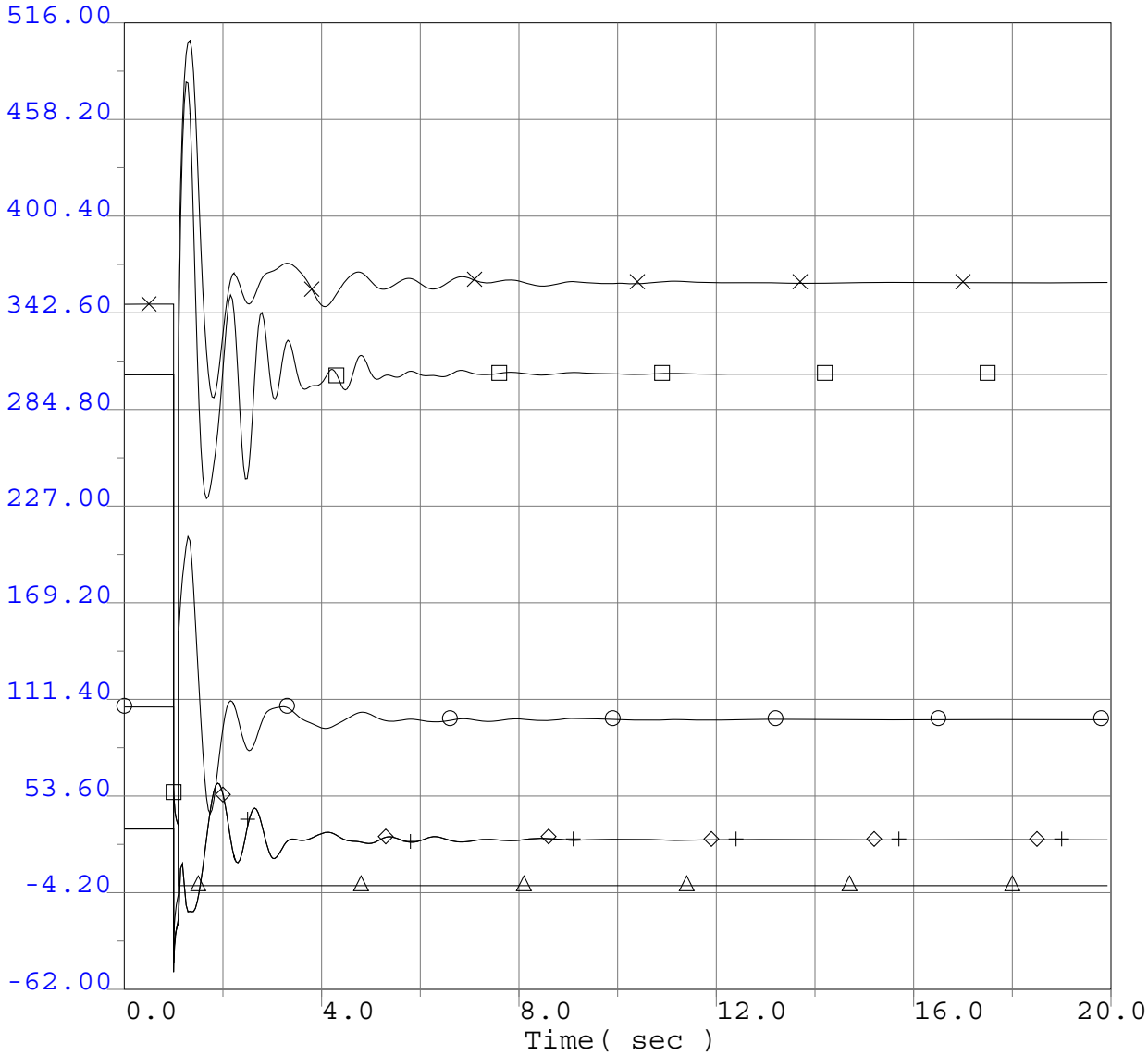

-62.0000 pbr	30526	PITSBG D 230.0	30555	SANRAMON 230.0	1	1	516.0000
-62.0000 pbr	30526	PITSBG D 230.0	30561	TASSAJAR 230.0	1	1	516.0000
-62.0000 pbr	30531	T322BUS1 230.0	30526	PITSBG D 230.0	1	1	516.0000
-62.0000 pbr	30532	T322BUS2 230.0	30526	PITSBG D 230.0	1	1	516.0000
-62.0000 pbr	30526	PITSBG D 230.0	32950	PITSBURG 115.0	1	12	516.0000
-62.0000 pbr	30526	PITSBG D 230.0	32950	PITSBURG 115.0	1	13	516.0000

Q322 Project GIPR Phase 1 Interconnection System Impact Study
2013 Greater Bay Area Summer Peak Base Case
Q322 @626MW
Pittsburg 230kV Bus 2E
3 ph 6 cyc flt @ Pittsburg & clr Pittsburg 230kV Bus 2E

Q322 GIPR Phase 1 Interconnection System Impact Study

Selected PG&E Transmission Line Flows (MW)

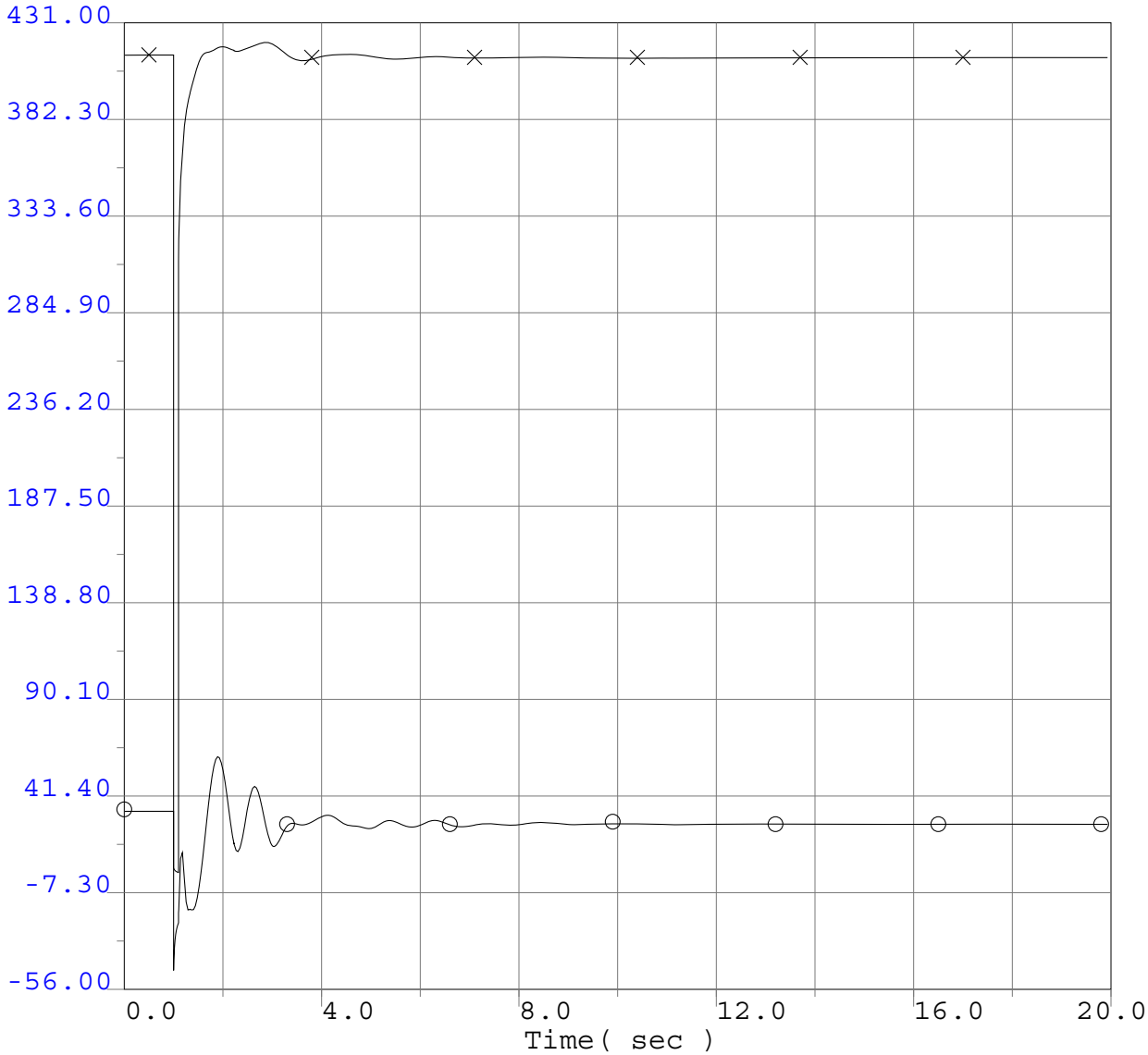

-56.0000 pbr	30526	PITSBG D 230.0	32950	PITSBURG 115.0	1	14	431.0000
-56.0000 pbr	30526	PITSBG D 230.0	38950	VSC_PTSB 180.5	1	1	431.0000

Q322 Project GIPR Phase 1 Interconnection System Impact Study
2013 Greater Bay Area Summer Peak Base Case
Q322 @626MW
Pittsburg 230kV Bus 2E
3 ph 6 cyc flt @ Pittsburg & clr Pittsburg 230kV Bus 2E

Appendix E

Generator Machine Dynamic Data

Machine Data for GT Units 1-2: Model: GENROU

Variable	Description	Value
Tdop	D-axis transient rotor time constant, set	10.119
Tppdo	D-axis sub-transient rotor time constant, sec	0.047
Tpqo	Q-axis transient rotor time constant, sec	1.124
Tppqo	Q-axis sub-transient rotor time constant, sec	0.081
H	Inertia constant, sec	5.32
D	Damping factor, pu	0.00
Ld	D-axis synchronous reactance, pu	2.078
Lq	Q-axis synchronous reactance, pu	2.024
Lpd	D-axis transient synchronous reactance, pu	0.269
Lpq	Q-axis transient synchronous reactance, pu	0.455
Lppd	D-axis subtransient synchronous reactance, pu	0.203
Ll	Stator leakage reactance, pu	0.173
s1	Saturation factor at 1 pu flux	0.067
s12	Saturation factor at 1.2 pu flux	0.206
Ra	Stator resistance, pu	0.002
Rcomp	Compounding resistance voltage control, pu	0.00
Xcomp	Compounding reactance voltage control, pu	0.00

Excitation Data for GT Units 1-2: Model: REXS

Variable	Description	Value
Tr	Voltage transducer time constant, sec	0.1
Kvp	Voltage regulator proportional gain	8.0
Kvi	Voltage regulator integral gain	13.
Vimax	Voltage regulator input limit, p.u.	999.
Ta	Voltage regulator time constant, sec	0.0
Tb1	Lag time constant, sec	0.0
Tc1	Lead time constant, sec	0.0
Tb2	Lag time constant, sec	0.0
Tc2	Lead time constant, sec	0.0
Vrmax	Maximum controller output, p.u.	15.4
Vrmin	Minimum controller output, p.u.	-12.3
Kf	Rate feedback gain	0.02
Tf	Rate feedback time constant, sec	0.70
Tf1	Feedback lead time constant, sec	0.0
Tf2	Feedback lag time constant, sec	0.0
Fbf	Rate feedback signal flag	1
Kip	Field current regulator proportional gain	20.0
Kii	Field current regulator integral gain	10.0
Tp	Field current bridge time constant, sec	0.02
Vfmax	Maximum exciter field current, p.u.	15.4
Vfmin	Minimum exciter field current, p.u.	-12.3
Kh	Field voltage controller feedback gain	1.0
Ke	Exciter field proportional constant	0.50
Te	Exciter field time constant, sec	0.70
Kc	Rectifier regulation factor, p.u.	0.10
Kd	Exciter regulation factor, p.u.	0.50
E1	Exciter flux at knee of curve, p.u.	2.525
Se1	Saturation factor at knee	0.10
E2	Maximum exciter, p.u.	3.367
Se2	Saturation factor at max flux	0.23
Rcomp	Not used	0
Xcomp	Not used	0
Nvphz	Pickup speed of v/Hz limiter, p.u	0
Kvphz	V/Hz limiter gain	0
Flimf	Limit type flag	1
Xc	Exciter compounding reactance, p.u.	0.0
Vcmax	Maximum compounding voltage, p.u.	0.0
Kefd	Field voltage feedback gain	0

Governor Data for GT Units 1-2: Model: GGOV1

Variable	Description	Value
R	Permanent droop, p.u.	0.04
rselect	Selection for feedback signal for droop	1
tpelec	Electrical power transducer time constant, sec	2.5
maxerr	Maximum value for speed error signal	0.004
minerr	Minimum value for speed error signal	-1.0
kpgov	Governor proportional gain	4.0
kigov	Governor integral gain	0.45
kdgov	Governor derivative gain	0.0
tdgov	Governor derivative controller time constant, sec	1.0
vmax	Maximum valve position limit	1.00
vmin	Minimum valve position limit	0.175
Tact	Actuator time constant, sec	0.40
Kturb	Turbine gain	1.9168
wfn1	No load fuel flow, p.u.	0.187
Tb	Turbine lag time constant, sec	0.1
Tc	Turbine lead time constant, sec	0.0
Flag	Switch for turbine output	0.0
Teng	Transport lag time constant for diesel engine	0
Tfload	Load limiter time constant, sec	3.0
kpload	Load limiter proportional gain for PI controller	1.00
kiload	Load limiter integral gain for PI controller	1.00
Ldref	Load limiter reference value, p.u.	1.00
Dm	Mechanical damping coefficient, p.u.	0.00
Ropen	Maximum valve opening rate, p.u./sec.	99.0
Rclose	Minimum valve opening rate, p.u./sec.	-99.0
Kimw	Power controller gain	0.0
Pmwset	Power controller setpoint, MW	15.52
Asset	Acceleration limiter setpoint, p.u./sec.	10.0
Ka	Acceleration limiter gain	10.0
Ta	Acceleration limiter time constant, sec.	1.0
Db	Speed governor dead band	0.0
Tsa	Temperature detection lead time constant, sec.	1.0
Tsb	Temperature detection lag time constant, sec.	1.0
Rup	Maximum rate of load limit increase	99.0
Rdown	Maximum rate of load limit decrease	-99.0
Tbd	Speed ratio valve and fuel supply lag time constant, sec.	0.0
Tcd	Speed ratio valve and fuel supply lead time constant, sec.	0.0

PSS Data for GT Units 1-2: Model: PSS2a

Variable	Description	Value
j1	Input signal #1 code	3
k1	Input signal #1 remote bus number	0
j2	Input signal #2 code	3
k2	Input signal #2 remote bus number	0
tw1	First washout on signal #1, sec	0.2
tw2	First washout on signal #1, sec	0
tw3	First washout on signal #2, sec	0.2
tw4	First washout on signal #2, sec	0
t6	Time constant on signal #1, sec	0.02
t7	Time constant on signal #2, sec	2.0
ks2	Gain signal #2	0
ks3	Gain signal #2	0
ks4	Gain signal #2	0
t8	Lead of ramp tracking filter	0
t9	Lag of ramp tracking filter	0.427
N	Order of ramp tracking filter	1
M	Order of ramp tracking filter	1
ks1	Stabilizer gain	-2.0
t1	Lead/lag time constants, sec	0.28
t2	Lead/lag time constants, sec	0.43
t3	Lead/lag time constants, sec	0.28
t4	Lead/lag time constants, sec	1.16
vstmax	Stabilizer output max limit, p.u.	0.10
vstmin	Stabilizer output min limit, p.u.	-0.10

Machine Data for ST Units 1-2: Model: GENROU

Variable	Description	Value
Tdop	D-axis transient rotor time constant, set	7.5
Tppdo	D-axis sub-transient rotor time constant, sec	0.025
Tpqo	Q-axis transient rotor time constant, sec	1.6
Tppqo	Q-axis sub-transient rotor time constant, sec	0.04
H	Inertia constant, sec	2.54
D	Damping factor, pu	0.00
Ld	D-axis synchronous reactance, pu	2.05
Lq	Q-axis synchronous reactance, pu	2.02
Lpd	D-axis transient synchronous reactance, pu	0.329
Lpq	Q-axis transient synchronous reactance, pu	0.532
Lppd	D-axis subtransient synchronous reactance, pu	0.266
Ll	Stator leakage reactance, pu	0.235
s1	Saturation factor at 1 pu flux	0.078
s12	Saturation factor at 1.2 pu flux	0.259
Ra	Stator resistance, pu	0.0027
Rcomp	Compounding resistance voltage control, pu	0.00
Xcomp	Compounding reactance voltage control, pu	0.00

Excitation Data for ST Units 1-2: Model: EXAC1

Variable	Description	Value
Tr	Voltage transducer time constant, sec	0
Tb	Lag time constant, sec	1
Tc	Lead time constant, sec	1
Ka	Voltage regulator gain	640
Ta	Voltage regulator time constant, sec	0.012
Vamax	Maximum control element, p.u.	3
Vamin	Minimum control element, p.u.	-3
Te	Exciter time constant, sec	0.95
Kf	Rate feedback gain	0.072
Tf	Rate feedback time constant, sec	1
Kc	Rectifier regulation factor, p.u.	0
Kd	Exciter internal reactance, p.u.	0
Ke	Exciter field resistance constant, p.u.	1.0
E1	Exciter flux at knee of curve, p.u.	3
Se1	Saturation factor at knee	0.03
E2	Maximum exciter, p.u.	4
Se2	Saturation factor at max flux	0.1
Vrmax	Maximum controller output, p.u.	4.1
Vrmin	Minimum controller output, p.u.	0

Governor Data for ST Units 1-2: Model: IEEEG1

Variable	Description	Value
K	Governor gain	20
T1	Governor lag time constant, sec.	0
T2	Governor lead time constant, sec.	0
T3	Valve positioner time constant, sec.	0.2
Uo	Maximum valve opening velocity, p.u./sec.	99
Uc	Maximum valve closing velocity, p.u./sec (< 0.)	-99
Pmax	Maximum valve opening, p.u. of mwcap.	1.1
Pmin	Minimum valve opening, p.u. of mwcap	0.05
T4	Inlet piping/steam bowl time constant, sec.	0.465
K1	Fraction of hp shaft power after first boiler pass	0.264
K2	Fraction of lp shaft power after first boiler pass	0.00
T5	Time constant of second boiler pass, sec	3.0
K3	Fraction of hp shaft power after second boiler pass	0.476
K4	Fraction of lp shaft power after second boiler pass	0
T6	Time constant of third boiler pass, sec.	0.389
K5	Fraction of hp shaft power after third boiler pass	0.26
K6	Fraction of lp shaft power after third boiler pass	0
T7	Time constant of fourth boiler pass, sec	0
K7	Fraction of hp shaft power after fourth boiler pass	0
K8	Fraction of lp shaft power after fourth boiler pass	0
Db1	Intentional deadband width, Hz.	0
Eps	Intentional db hysteresis, Hz.	0
Db2	Unintentional deadband, MW	0
Gv1	Nonlinear gain point 1, p.u. gv	0
Pgv1	Nonlinear gain point 1, p.u. power	0
Gv2	Nonlinear gain point 2, p.u. gv	0
Pgv	Nonlinear gain point 2, p.u. power	0
Gv3	Nonlinear gain point 3, p.u. gv	0
Pgv3	Nonlinear gain point 3, p.u. power	0
Gv4	Nonlinear gain point 4, p.u. gv	0
Pgv4	Nonlinear gain point 4, p.u. power	0
Gv5	Nonlinear gain point 5, p.u. gv	0
Pgv5	Nonlinear gain point 5, p.u. power	0
Gv6	Nonlinear gain point 6, p.u. gv	0
Pgv6	Nonlinear gain point 6, p.u. power	0

PSS Data for ST Units 1-2: Model: PSS2A

Variable	Description	Value
j1	Input signal #1 code	3
k1	Input signal #1 remote bus number	0
j2	Input signal #2 code	0
k2	Input signal #2 remote bus number	0
tw1	First washout on signal #1, sec	2
tw2	First washout on signal #1, sec	0
tw3	First washout on signal #2, sec	0
tw4	First washout on signal #2, sec	0
t6	Time constant on signal #1, sec	0.03
t7	Time constant on signal #2, sec	0
ks2	Gain signal #2	0
ks3	Gain signal #2	0
ks4	Gain signal #2	0
t8	Lead of ramp tracking filter	0
t9	Lag of ramp tracking filter	0
N	Order of ramp tracking filter	1
M	Order of ramp tracking filter	1
ks1	Stabilizer gain	-0.5
t1	Lead/lag time constants, sec	0.04
t2	Lead/lag time constants, sec	0.02
t3	Lead/lag time constants, sec	0.04
t4	Lead/lag time constants, sec	0.02
vstmax	Stabilizer output max limit, p.u.	0.10
vstmin	Stabilizer output min limit, p.u.	-0.10

Appendix D

Steady State Power Flow Plots

PG&E TCP1 Group 1 Greater Bay Area Power Flow Plots

Plot	Description
Plot #1	2013 Summer Peak Pre-Project: Normal Conditions (MW/MVAr)
Plot #2	2013 Summer Peak Pre-Project: Normal Conditions (Amps/% Rate)
Plot #3	2013 Summer Peak Post-Project: Normal Conditions (MW/MVAr)
Plot #4	2013 Summer Peak Post-Project: Normal Conditions (Amps/% Rate)
Plot #5	2013 Summer Off Peak Pre-Project: Normal Conditions (MW/MVAr)
Plot #6	2013 Summer Off Peak Pre-Project: Normal Conditions (Amps/% Rate)
Plot #7	2013 Summer Off Peak Post-Project: Normal Conditions (MW/MVAr)
Plot #8	2013 Summer Off Peak Post-Project: Normal Conditions (Amps/% Rate)
Plot #9	2013 Summer Peak Pre-Project : Contra Costa - Las Positas 230 kV Line and RCEC STG1 Outage (MW/MVAr)
Plot #10	2013 Summer Peak Pre-Project: Contra Costa - Las Positas 230 kV Line and RCEC STG1 Outage (Amps/% Rate)
Plot #11	2013 Summer Peak Post-Project : Contra Costa - Las Positas 230 kV Line and RCEC STG1 Outage (MW/MVAr)
Plot #12	2013 Summer Peak Post-Project: Contra Costa - Las Positas 230 kV Line and RCEC STG1 Outage (Amps/% Rate)
Plot #13	2013 Summer Peak Pre-Project : Contra Costa - Lonetree 230 kV Line Outage (MW/MVAr)
Plot #14	2013 Summer Peak Pre-Project: Contra Costa - Lonetree 230 kV Line Outage (Amps/% Rate)
Plot #15	2013 Summer Peak Post-Project : Contra Costa - Lonetree 230 kV Line Outage (MW/MVAr)
Plot #16	2013 Summer Peak Post-Project: Contra Costa - Lonetree 230 kV Line Outage (Amps/% Rate)
Plot #17	2013 Summer Peak Pre-Project : Birds Landing - Contra Costa 230 kV Line & Gateway PP Outage (MW/MVAr)
Plot #18	2013 Summer Peak Pre-Project: Birds Landing - Contra Costa 230 kV Line & Gateway PP Outage (Amps/% Rate)
Plot #19	2013 Summer Peak Post-Project : Birds Landing - Contra Costa 230 kV Line & Gateway PP Outage (MW/MVAr)
Plot #20	2013 Summer Peak Post-Project: Birds Landing - Contra Costa 230 kV Line & Gateway PP Outage (Amps/% Rate)
Plot #21	2013 Summer Peak Pre-Project : Kelso - Tesla 230 kV Line Outage (MW/MVAr)
Plot #22	2013 Summer Peak Pre-Project: Kelso - Tesla 230 kV Line Outage (Amps/% Rate)
Plot #23	2013 Summer Peak Post-Project : Kelso - Tesla 230 kV Line Outage (MW/MVAr)
Plot #24	2013 Summer Peak Post-Project: Kelso - Tesla 230 kV Line Outage (Amps/% Rate)
Plot #25	2013 Summer Off Peak Pre-Project : Kelso - Tesla 230 kV Line Outage (MW/MVAr)
Plot #26	2013 Summer Off Peak Pre-Project: Kelso - Tesla 230 kV Line Outage (Amps/% Rate)
Plot #27	2013 Summer Off Peak Post-Project : Kelso - Tesla 230 kV Line Outage (MW/MVAr)
Plot #28	2013 Summer Off Peak Post-Project: Kelso - Tesla 230 kV Line Outage (Amps/% Rate)
Plot #29	2013 Summer Peak Pre-Project : Contra Costa - Delta Pumps 230 kV Line Outage (MW/MVAr)
Plot #30	2013 Summer Peak Pre-Project: Contra Costa - Delta Pumps 230 kV Line Outage (Amps/% Rate)
Plot #31	2013 Summer Peak Post-Project : Contra Costa - Delta Pumps 230 kV Line Outage (MW/MVAr)

Plot	Description
Plot #32	2013 Summer Peak Post-Project: Contra Costa - Delta Pumps 230 kV Line Outage (Amps/% Rate)
Plot #33	2013 Summer Off Peak Pre-Project : Contra Costa - Delta Pumps 230 kV Line Outage (MW/MVAr)
Plot #34	2013 Summer Off Peak Pre-Project: Contra Costa - Delta Pumps 230 kV Line Outage (Amps/% Rate)
Plot #35	2013 Summer Off Peak Post-Project : Contra Costa - Delta Pumps 230 kV Line Outage (MW/MVAr)
Plot #36	2013 Summer Off Peak Post-Project: Contra Costa - Delta Pumps 230 kV Line Outage (Amps/% Rate)
Plot #37	2013 Summer Peak Pre-Project : Vaca-Dixon - T275 #1 230 kV Line Outage (MW/MVAr)
Plot #38	2013 Summer Peak Pre-Project: Vaca-Dixon - T275 #1 230 kV Line Outage (Amps/% Rate)
Plot #39	2013 Summer Peak Post-Project : Vaca-Dixon - T275 #1 230 kV Line Outage (MW/MVAr)
Plot #40	2013 Summer Peak Post-Project: Vaca-Dixon - T275 #1 230 kV Line Outage (Amps/% Rate)
Plot #41	2013 Summer Off Peak Pre-Project : Vaca-Dixon - T275 #1 230 kV Line Outage (MW/MVAr)
Plot #42	2013 Summer Off Peak Pre-Project: Vaca-Dixon - T275 #1 230 kV Line Outage (Amps/% Rate)
Plot #43	2013 Summer Off Peak Post-Project : Vaca-Dixon - T275 #1 230 kV Line Outage (MW/MVAr)
Plot #44	2013 Summer Off Peak Post-Project: Vaca-Dixon - T275 #1 230 kV Line Outage (Amps/% Rate)
Plot #45	2013 Summer Peak Pre-Project : Olinda - Tracy 500 kV Line Outage (MW/MVAr)
Plot #46	2013 Summer Peak Pre-Project: Olinda - Tracy 500 kV Line Outage (Amps/% Rate)
Plot #47	2013 Summer Peak Post-Project : Olinda - Tracy 500 kV Line Outage (MW/MVAr)
Plot #48	2013 Summer Peak Post-Project: Olinda - Tracy 500 kV Line Outage (Amps/% Rate)

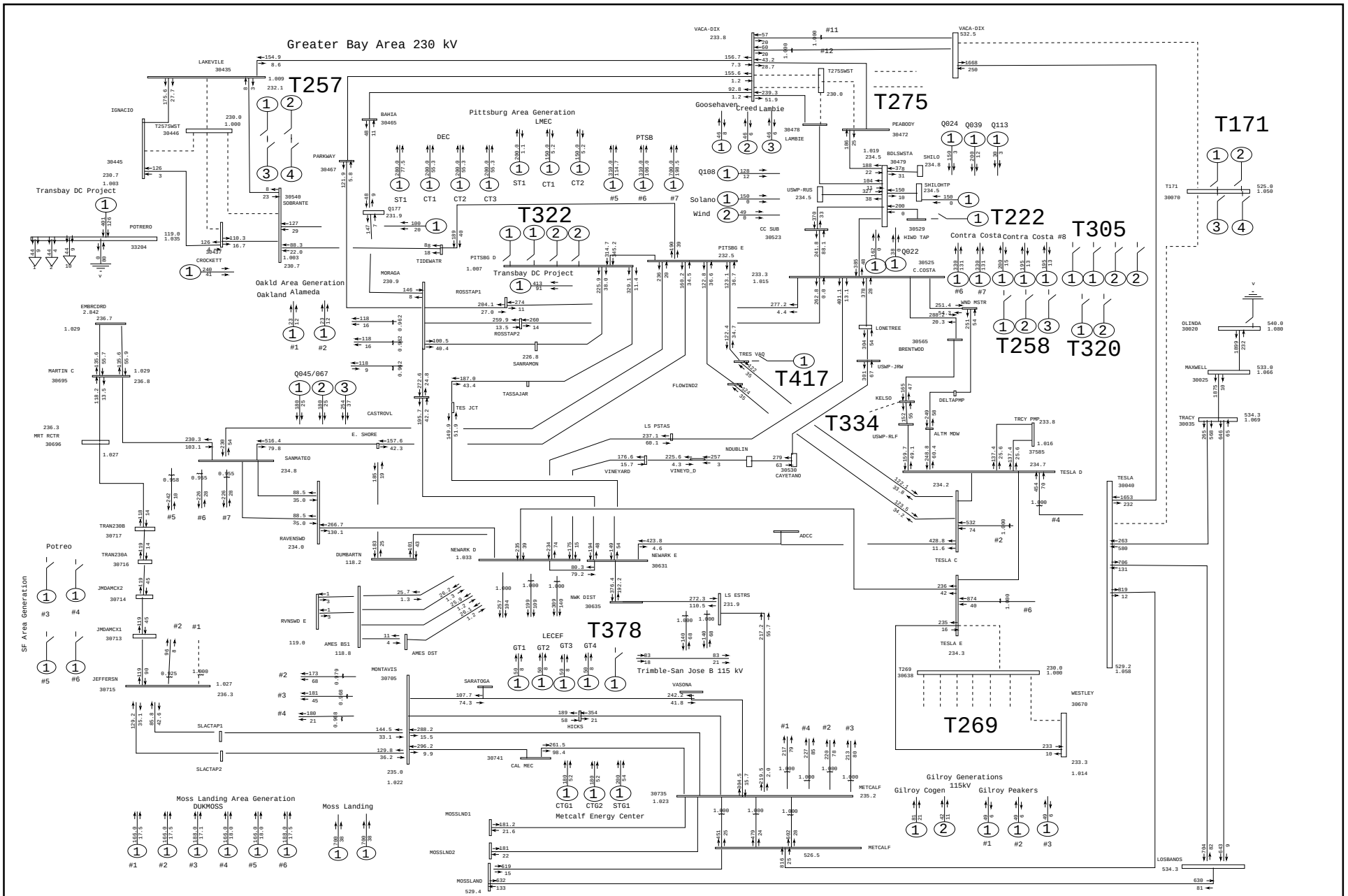

General Electric International, Inc. PSLF Program Mon Jul 13 11:54:05 2009 cases\sumpk\13sumpk-pge-tcp1-grba-pre.sav

Pacific Gas and Electric Company	PG&E 2008 CASE SERIES: 2013 Greater Bay Area Summer Peak Case (1-in-10 load) PATH15=-1215 MW(S-N) PATH26= 3906 MW(N-S) PDCI= 3096 MW(N-S) COI= 4710 MW(N-S) PG&E 2008 Group 1 Greater Bay Area Summer Peak Transition Pre-Cluster Case	Plot 001: Normal Conditions	MW/MVAR draw\grba\pge-tcp1-grba- Rating = 1

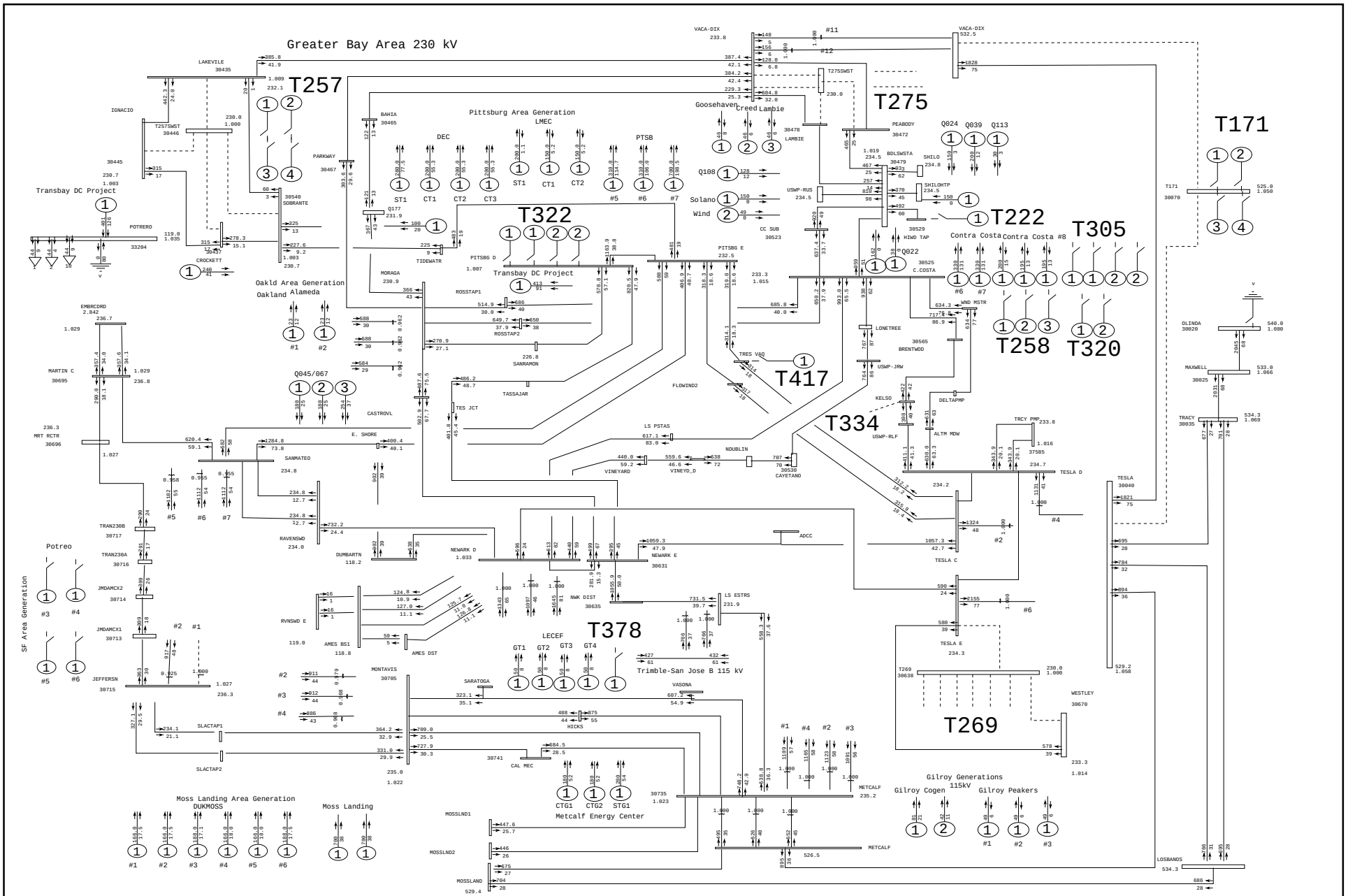

General Electric International, Inc. PSLF Program Mon Jul 13 11:54:06 2009 cases\sumpk\13sumpk-pge-tcp1-grba-pre.sav

Pacific Gas and Electric Company	PG&E 2008 CASE SERIES: 2013 Greater Bay Area Summer Peak Case (1-in-10 load) PATH15=-1215 MW(S-N) PATH26= 3906 MW(N-S) PDCI= 3096 MW(N-S) COI= 4710 MW(N-S) PG&E 2008 Group 1 Greater Bay Area Summer Peak Transition Pre-Cluster Case	Plot 002: Normal Conditions	amps/rate draw\grba\pge-tcp1-grba- Rating = 1

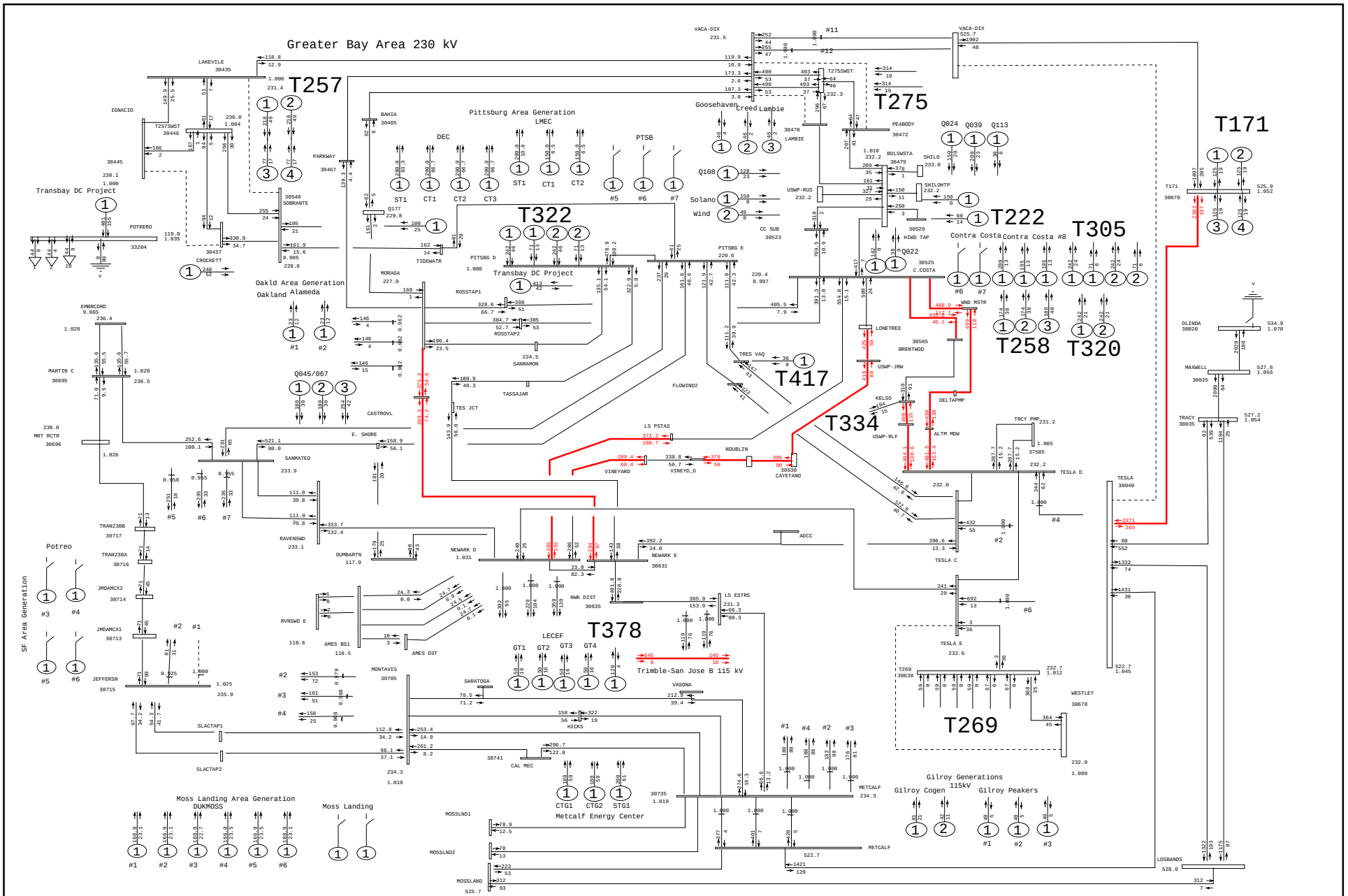

General Electric International, Inc. PSLF Program Mon Jul 13 11:54:08 2009 cases\sumpk\13sumpk-pge-tcp1-grba-pst.sav

Pacific Gas and Electric Company	PG&E 2008 CASE SERIES: 2013 Greater Bay Area Summer Peak Case (1-in-10 load) PATH15=-2341 MW(S-N) PATH26= 3975 MW(N-S) PDCI= 3087 MW(N-S) COI= 4585 MW(N-S) PG&E 2008 Group 1 Greater Bay Area Summer Peak Transition Post-Cluster Case	Plot 003: Normal Conditions	MW/MVAR draw\grba\pge-tcp1-grba- Rating = 1

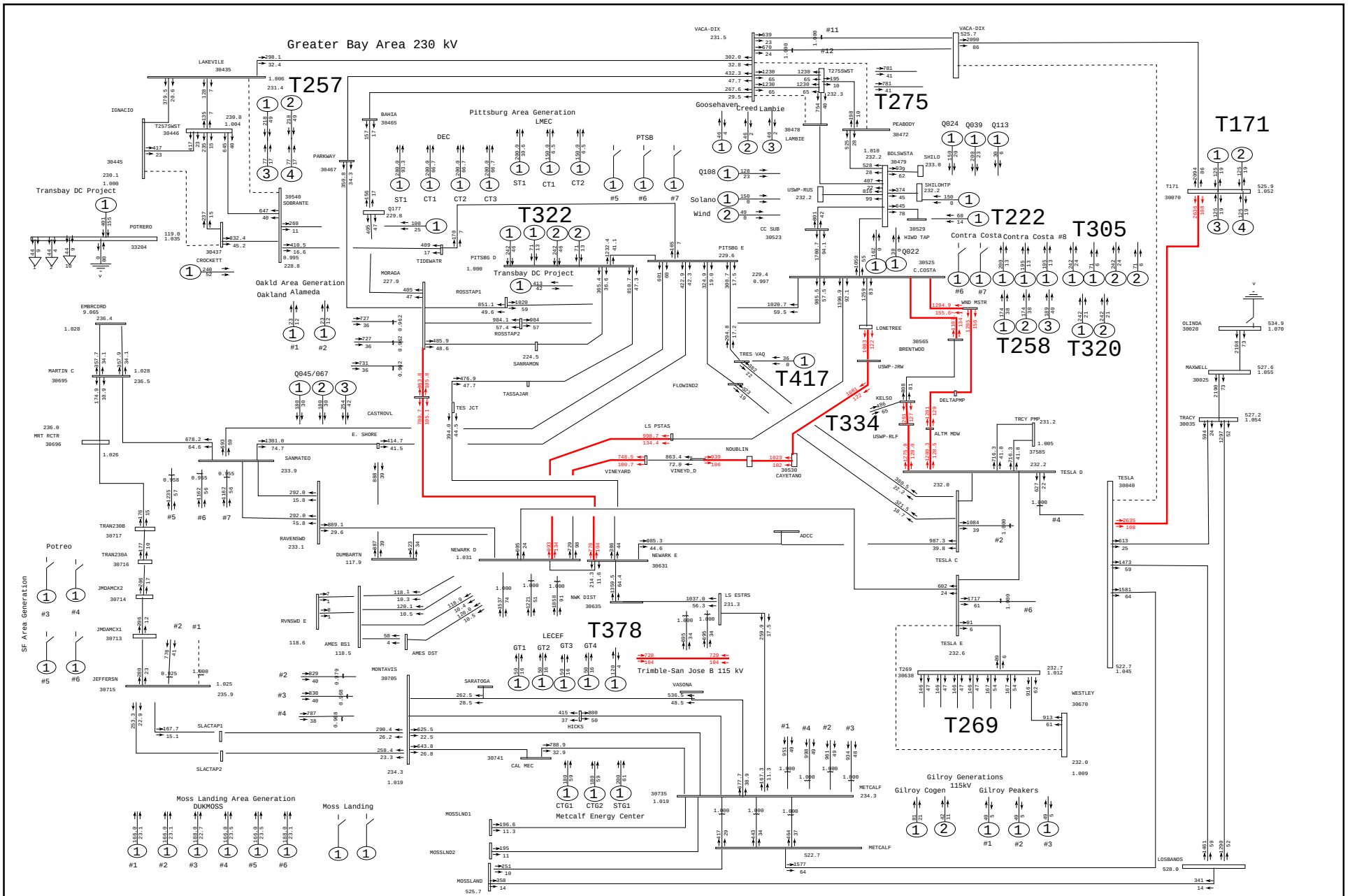
Greater Bay Area 230 kV
T257
T275
T171
T322
T222
T305
T258
T320
T417
T334
T378
T269
Pittsburg Area Generation
LMEC
Oakld Area Generation
Oakland
Alameda
Transbay DC Project
Moss Landing Area Generation
DUKMOSS
Moss Landing
Metcalf Energy Center
Gilroy Generations
115kV
Gilroy Cogen
Gilroy Peakers
Trimble-San Jose B 115 kV
SF Area Generation
Potreo
Transbay DC Project
LAKEVILE
IGNACIO
PARKWAY
SOBRANTE
POTRERO
CROCKETT
TIDEWATR
MORAGA
ROSSTAP1
ROSSTAP2
SANRAMON
TASSAJAR
TES JCT
CASTROVL
E. SHORE
SANMATEO
RAVENSWD
DUMBARTN
NEWARK D
NEWARK E
ADCC
NWK DIST
LS ESTRS
LECEF
AMES BS1
AMES DST
MONTAVIS
SARATOGA
VASONA
HICKS
CAL MEC
SLACTAP1
SLACTAP2
JEFFERSN
JMDAMCX1
JMDAMCX2
TRAN230A
TRAN230B
RVNSWD E
MARTIN C
EMBRCORD
MRT RCTR
MOSSLND1
MOSSLND2
MOSSLAND
METCALF
LOSBANOS
WESTLEY
TESLA C
TESLA D
TESLA E
TESLA
TRACY
MAXWELL
OLINDA
TRCY PMP
ALTM MDW
USWP-RLF
DELTAPMP
KELSO
USWP-JRW
LONETREE
BRENTWOOD
WND MSTR
HIWD TAP
C.COSTA
Contra Costa
Contra Costa #8
CC SUB
PITSBG D
PITSBG E
FLOWIND2
TRES VAQ
NDUBLIN
CAYETANO
VINEYARD
VINEYD_D
LS PSTAS
VACA-DIX
PEABODY
LAMBIE
Goosehaven
Creed
Lambie
BDLSWSTA
SHILO
SHILOHTP
USWP-RUS
Solano
Wind
DEC
PTSB
ST1
CT1
CT2
CT3
GT1
GT2
GT3
GT4
CTG1
CTG2
STG1
Q024
Q039
Q113
Q108
Q022
Q045/067
Q177
T275SWST
T257SWST
BAHIA
PARKWAY

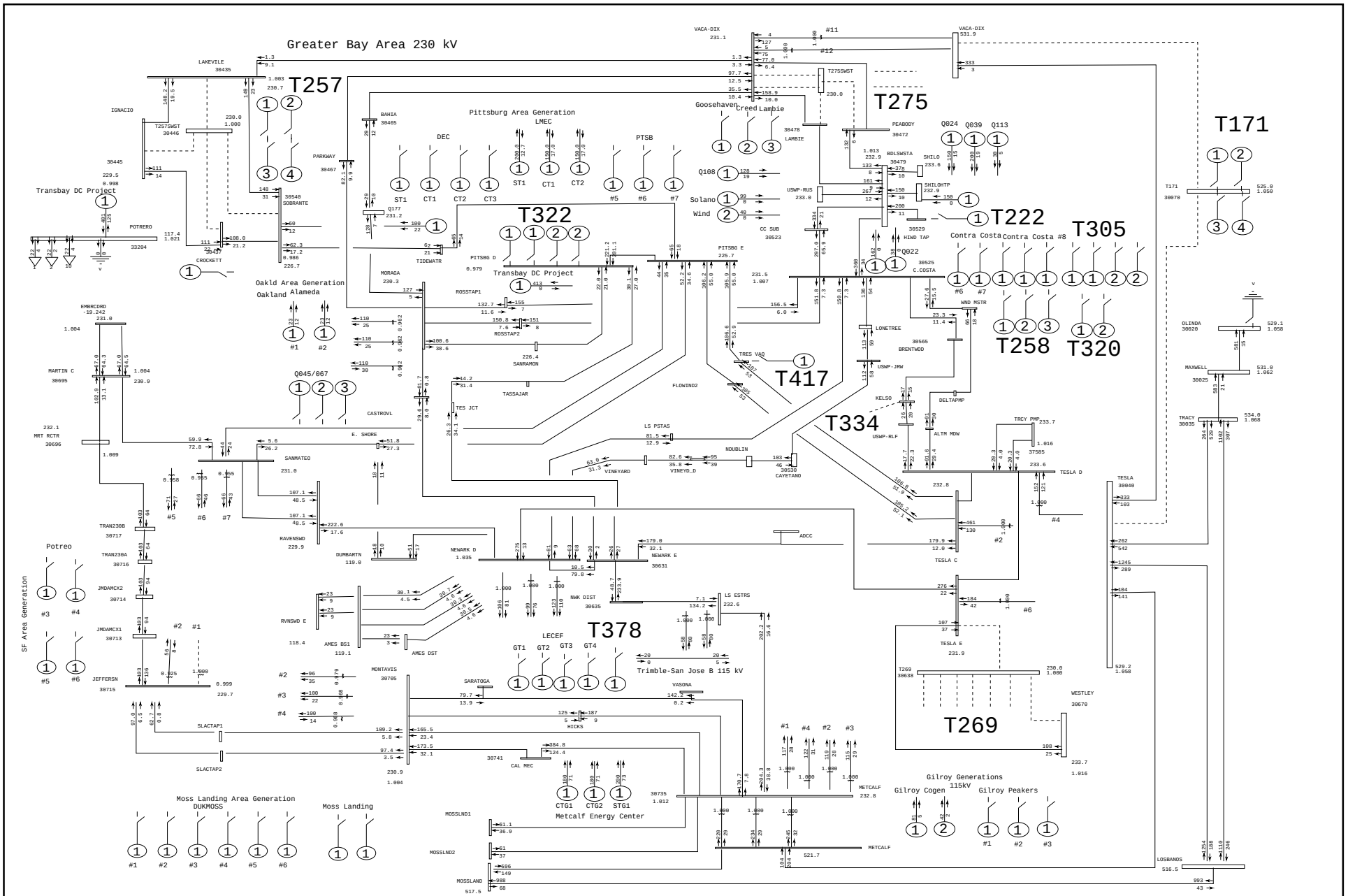

General Electric International, Inc. PSLF Program Mon Jul 13 11:54:12 2009 cases\sumop\13sumop-pge-tcp1-grba-pre.sav

Pacific Gas and Electric Company	PG&E 2008 CASE SERIES: 2013 Summer Off Peak Case PATH15= 5294 MW(S-N) PATH26=-1637 MW(N-S) PDCI=-1846 MW(N-S) COI=-3584 MW(N-S) PG&E 2008 Group 1 Greater Bay Area Summer Off Peak Transition Pre-Cluster Case	Plot 005: Normal Conditions	MW/MVAR draw\grba\pge-tcp1-grba- Rating = 1

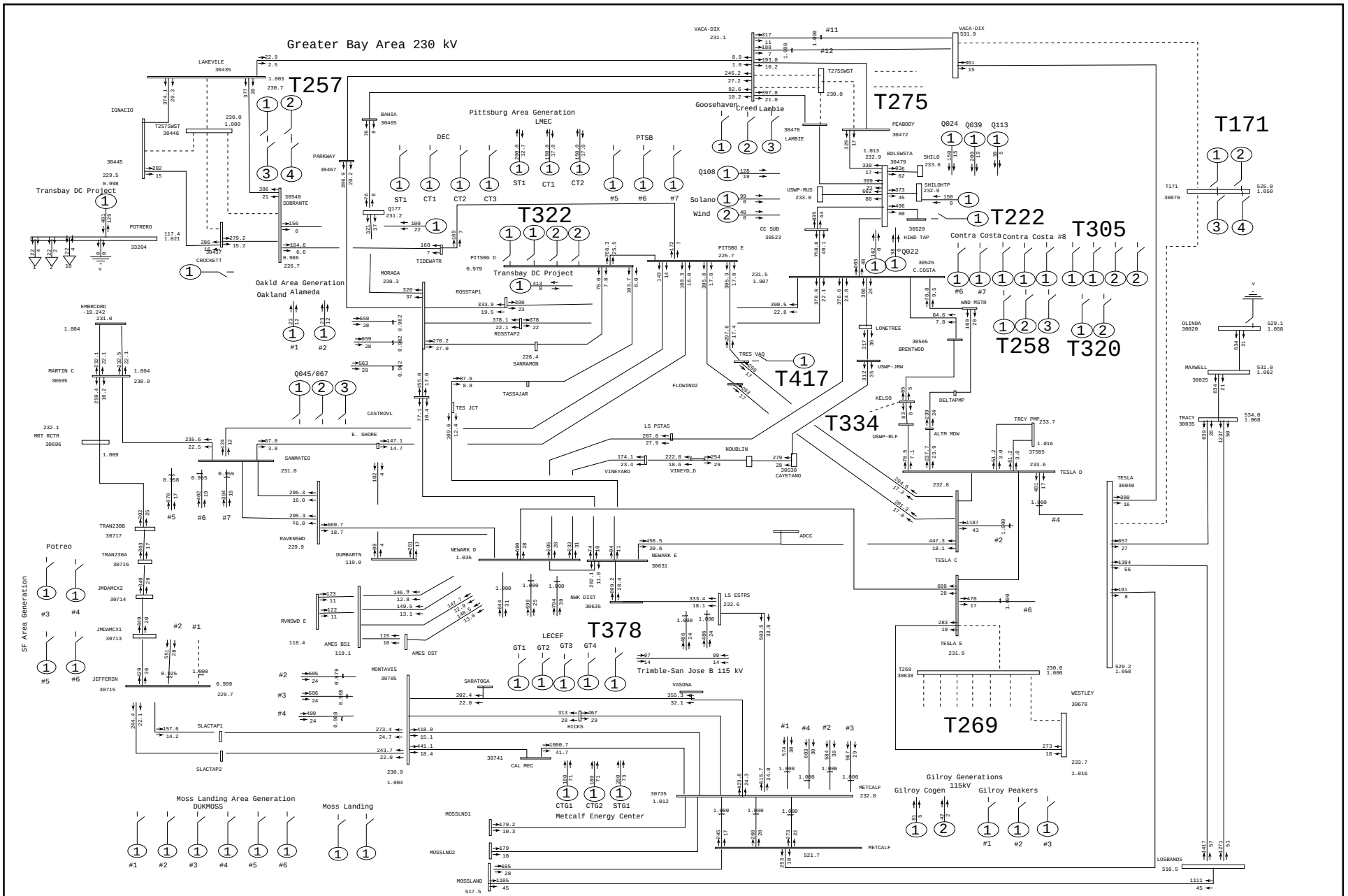

General Electric International, Inc. PSLF Program Mon Jul 13 11:54:13 2009 cases\sumop\13sumop-pge-tcp1-grba-pre.sav

Pacific Gas and Electric Company	PG&E 2008 CASE SERIES: 2013 Summer Off Peak Case PATH15= 5294 MW(S-N) PATH26=-1637 MW(N-S) PDCI=-1846 MW(N-S) COI=-3584 MW(N-S) PG&E 2008 Group 1 Greater Bay Area Summer Off Peak Transition Pre-Cluster Case	Plot 006: Normal Conditions	amps/rate draw\grba\pge-tcp1-grba- Rating = 1

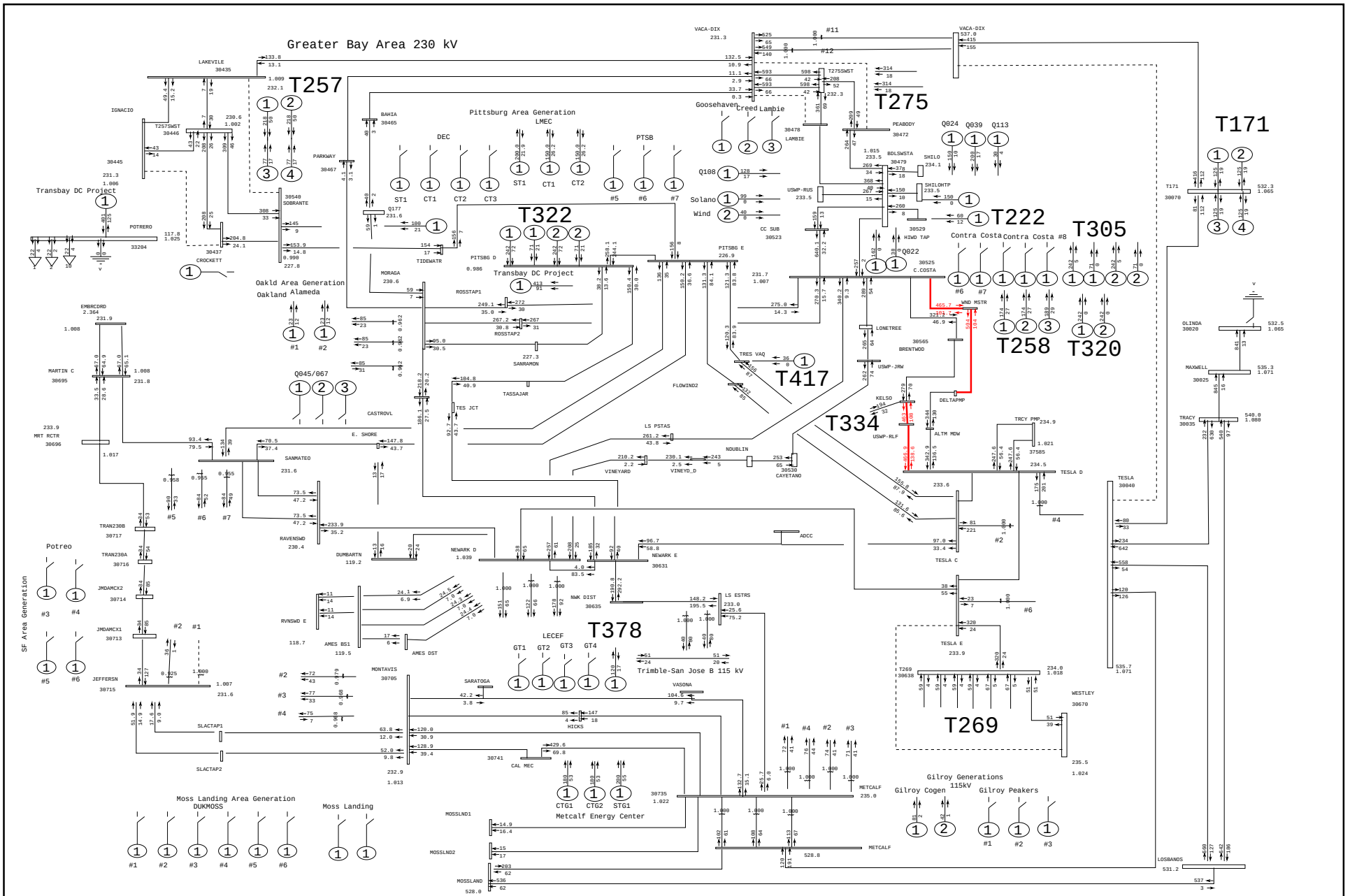

General Electric International, Inc. PSLF Program Mon Jul 13 11:54:15 2009 cases\sumop\13sumop-pge-tcp1-grba-pst.sav

Pacific Gas and Electric Company	PG&E 2008 CASE SERIES: 2013 Summer Off Peak Case PATH15= 3141 MW(S-N) PATH26= -212 MW(N-S) PDCI=-1846 MW(N-S) COI=-3658 MW(N-S) PG&E 2008 Group 1 Greater Bay Area Summer Off Peak Transition Post-Cluster Case	Plot 007: Normal Conditions	MW/MVAR draw\grba\pge-tcp1-grba- Rating = 1

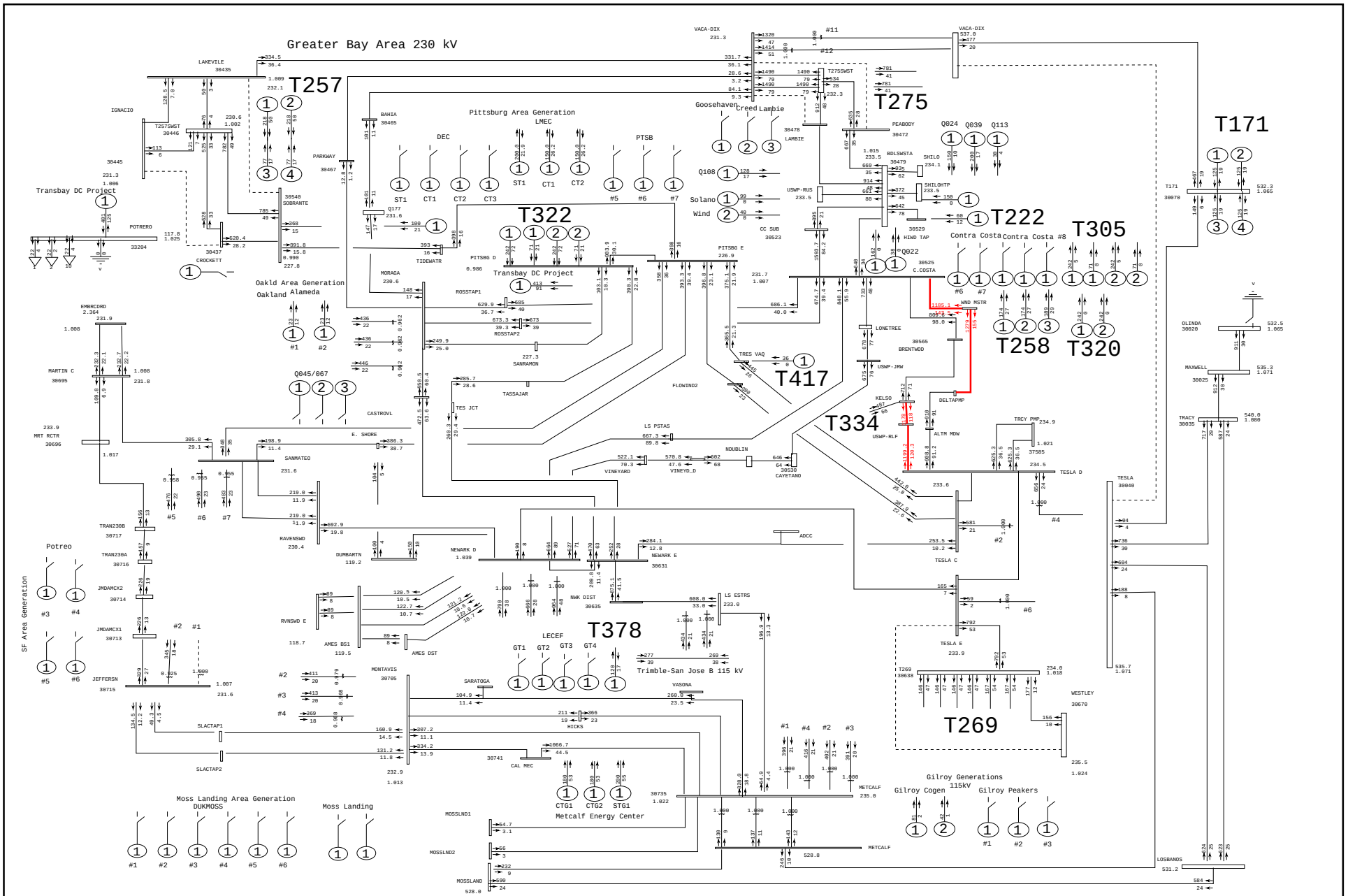

General Electric International, Inc. PSLF Program Mon Jul 13 11:54:16 2009 cases\sumop\13sumop-pge-tcp1-grba-pst.sav

Pacific Gas and Electric Company	PG&E 2008 CASE SERIES: 2013 Summer Off Peak Case PATH15= 3141 MW(S-N) PATH26= -212 MW(N-S) PDCI=-1846 MW(N-S) COI=-3658 MW(N-S) PG&E 2008 Group 1 Greater Bay Area Summer Off Peak Transition Post-Cluster Case	Plot 008: Normal Conditions	amps/rate draw\grba\pge-tcp1-grba- Rating = 1

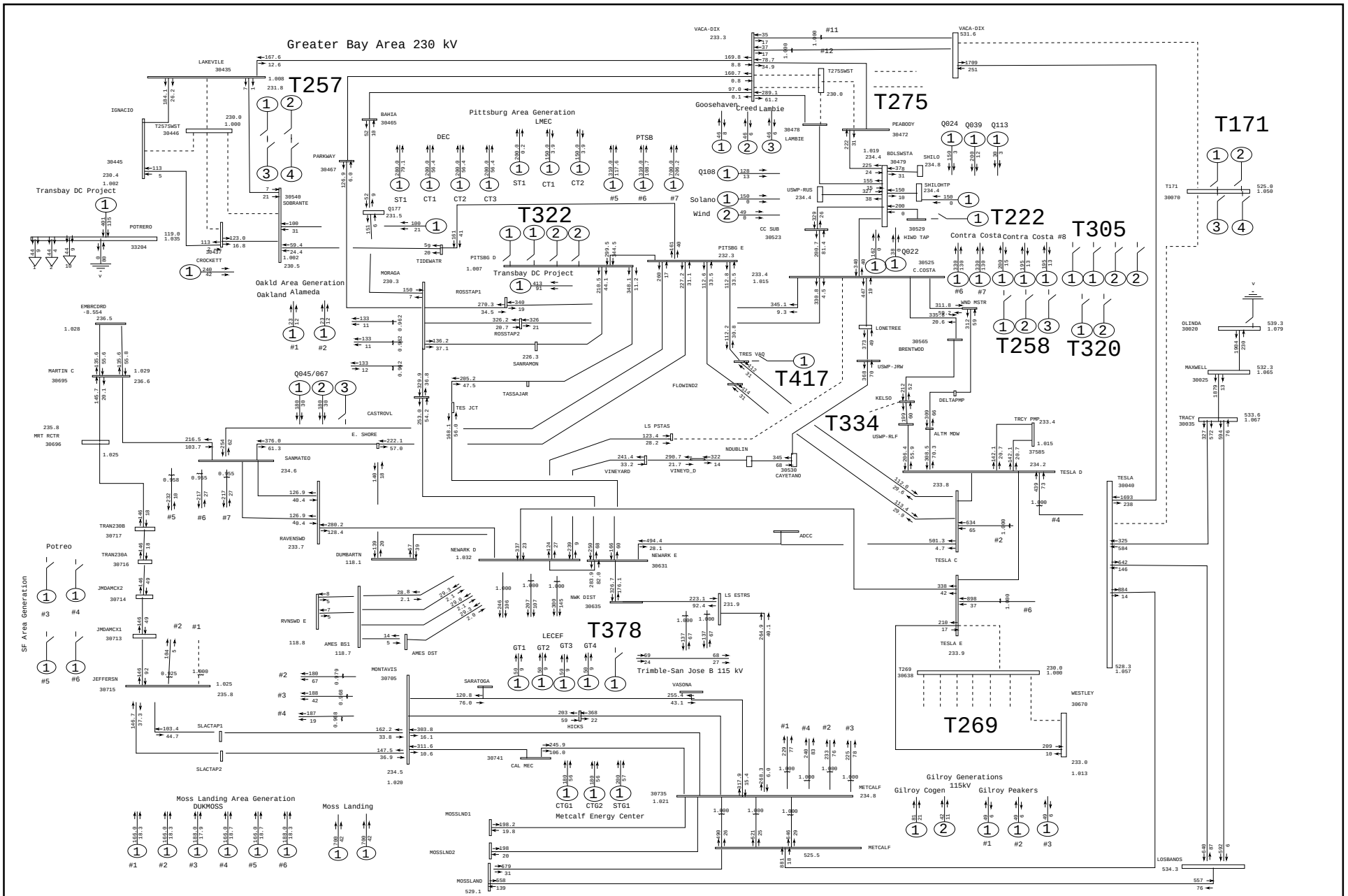

General Electric International, Inc. PSLF Program Mon Jul 13 11:54:19 2009 cases\sumpk\13sumpk-pge-tcp1-grba-pre.sav

Pacific Gas and Electric Company	PG&E 2008 CASE SERIES: 2013 Greater Bay Area Summer Peak Case (1-in-10 load) PATH15=-1215 MW(S-N) PATH26= 3906 MW(N-S) PDCI= 3096 MW(N-S) COI= 4710 MW(N-S) PG&E 2008 Group 1 Greater Bay Area Summer Peak Transition Pre-Cluster Case	Plot 009: Contra Costa - Las Positas 230 kV Line and RCEC STG1 Outage	MW/MVAR draw\grba\pge-tcp1-grba- Rating = 2

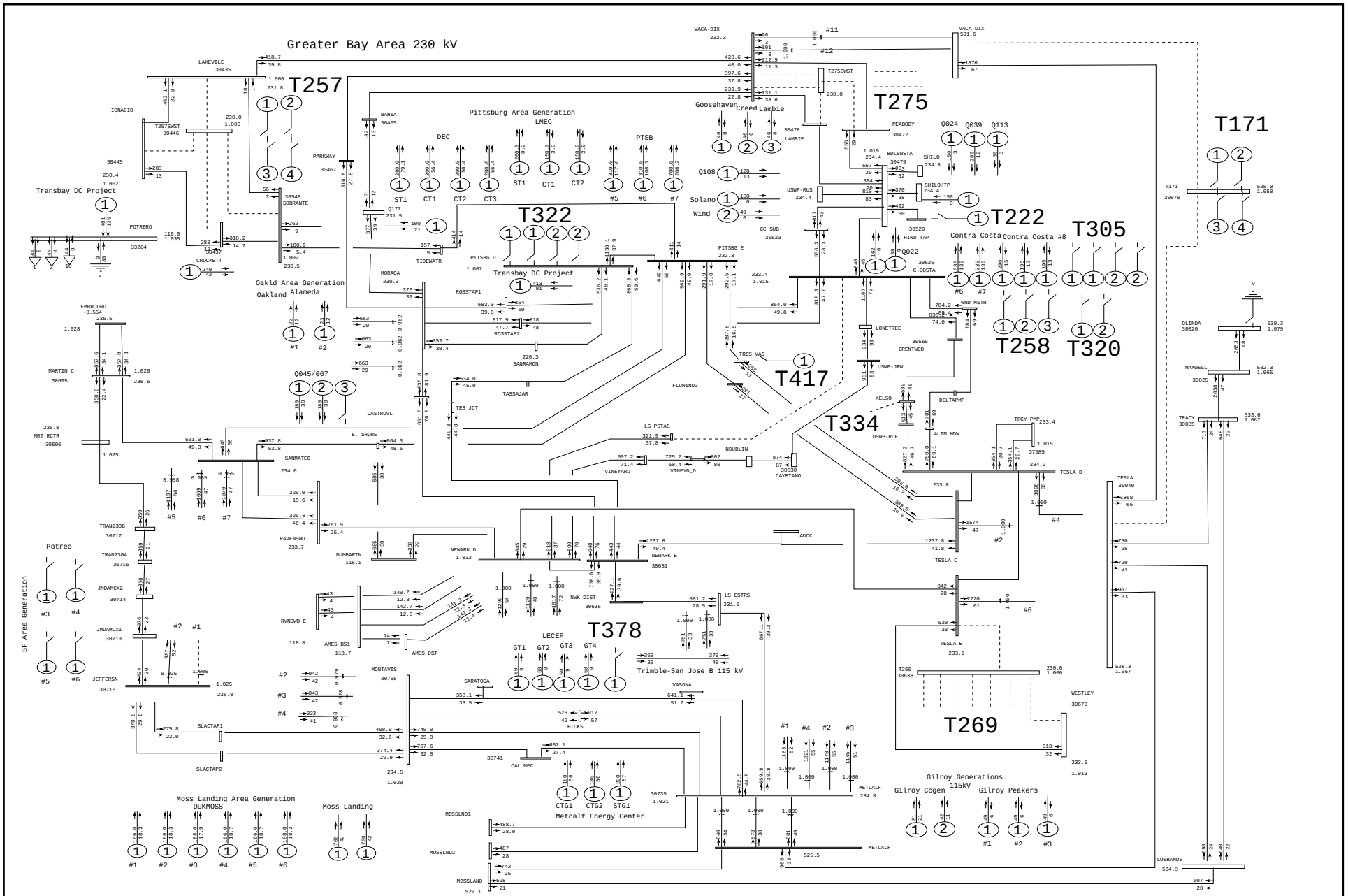

General Electric International, Inc. PSLF Program Mon Jul 13 11:54:21 2009 cases\sumpk\13sumpk-pge-tcp1-grba-pre.sav

Pacific Gas and Electric Company	PG&E 2008 CASE SERIES: 2013 Greater Bay Area Summer Peak Case (1-in-10 load) PATH15=-1215 MW(S-N) PATH26= 3906 MW(N-S) PDCI= 3096 MW(N-S) COI= 4710 MW(N-S) PG&E 2008 Group 1 Greater Bay Area Summer Peak Transition Pre-Cluster Case	Plot 010: Contra Costa - Las Positas 230 kV Line and RCEC STG1 Outage	amps/rate draw\grba\pge-tcp1-grba- Rating = 2

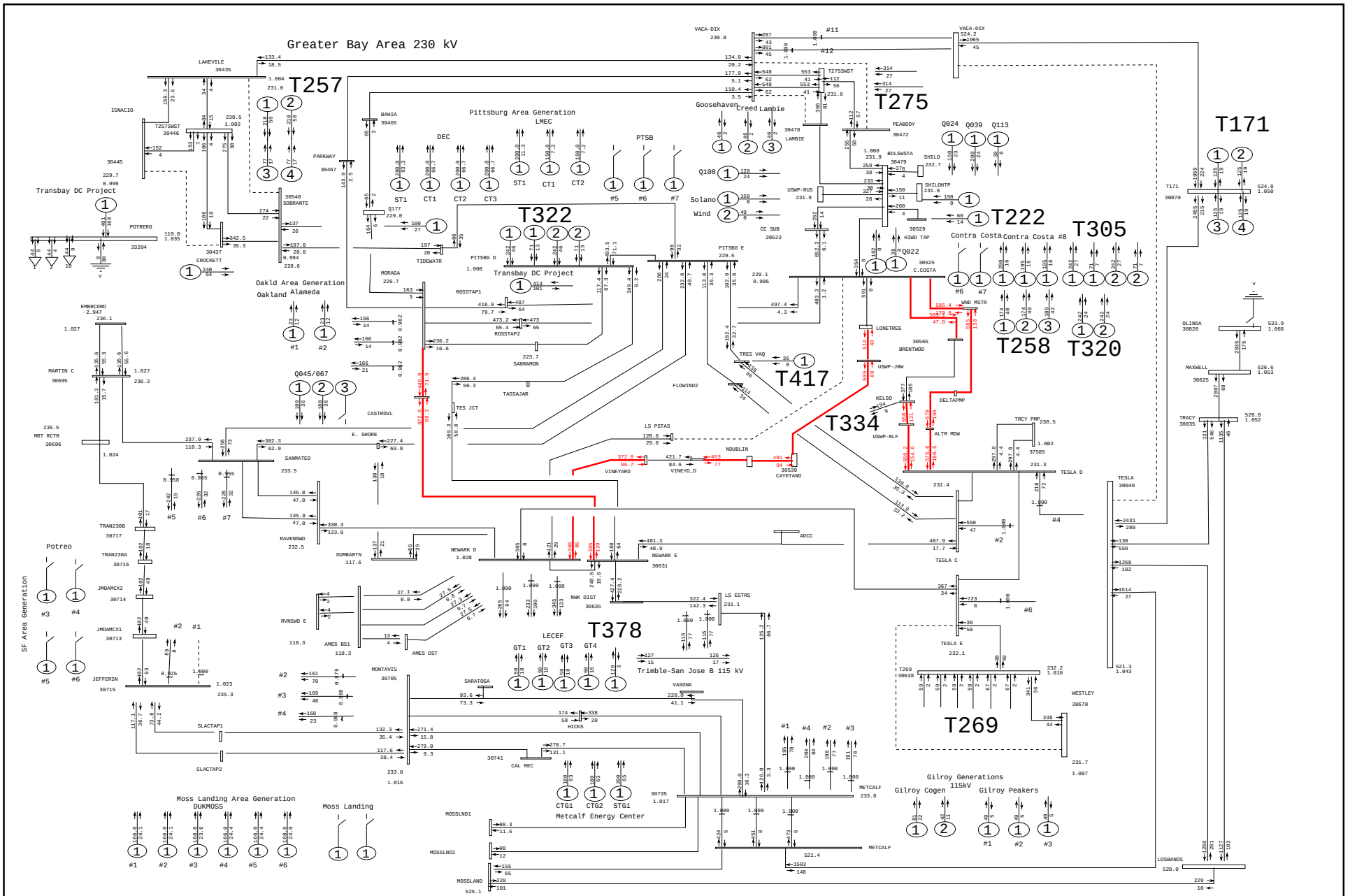

General Electric International, Inc. PSLF Program Mon Jul 13 11:54:25 2009 cases\sumpk\13sumpk-pge-tcp1-grba-pst.sav

Pacific Gas and Electric Company	PG&E 2008 CASE SERIES: 2013 Greater Bay Area Summer Peak Case (1-in-10 load) PATH15=-2341 MW(S-N) PATH26= 3975 MW(N-S) PDCI= 3087 MW(N-S) COI= 4585 MW(N-S) PG&E 2008 Group 1 Greater Bay Area Summer Peak Transition Post-Cluster Case	Plot 011: Contra Costa - Las Positas 230 kV Line and RCEC STG1 Outage	MW/MVAR draw\grba\pge-tcp1-grba- Rating = 2

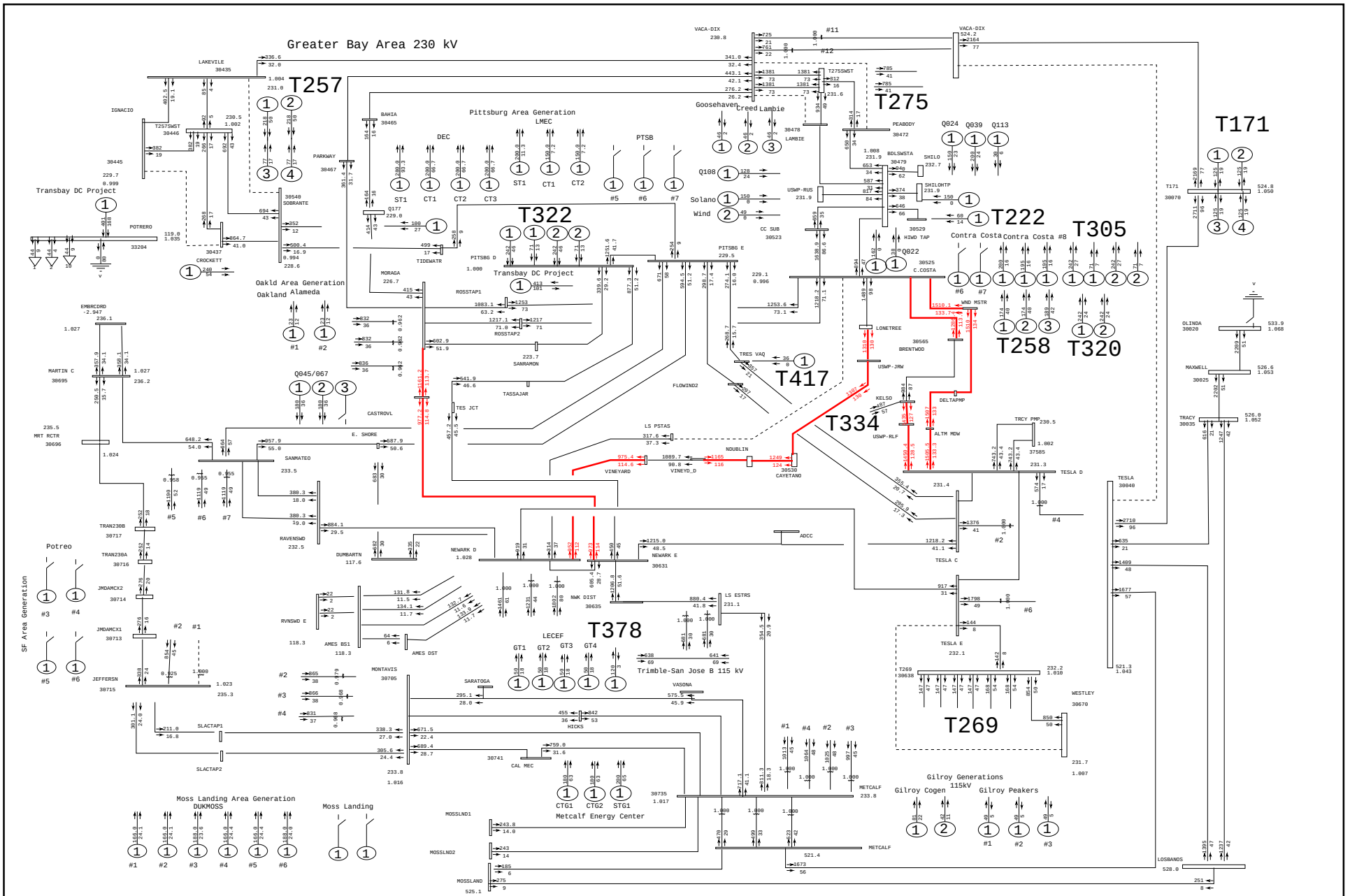

General Electric International, Inc. PSLF Program Mon Jul 13 11:54:27 2009 cases\sumpk\13sumpk-pge-tcp1-grba-pst.sav

Pacific Gas and Electric Company	PG&E 2008 CASE SERIES: 2013 Greater Bay Area Summer Peak Case (1-in-10 load) PATH15=-2341 MW(S-N) PATH26= 3975 MW(N-S) PDCI= 3087 MW(N-S) COI= 4585 MW(N-S) PG&E 2008 Group 1 Greater Bay Area Summer Peak Transition Post-Cluster Case	Plot 012: Contra Costa - Las Positas 230 kV Line and RCEC STG1 Outage	amps/rate draw\grba\pge-tcp1-grba- Rating = 2

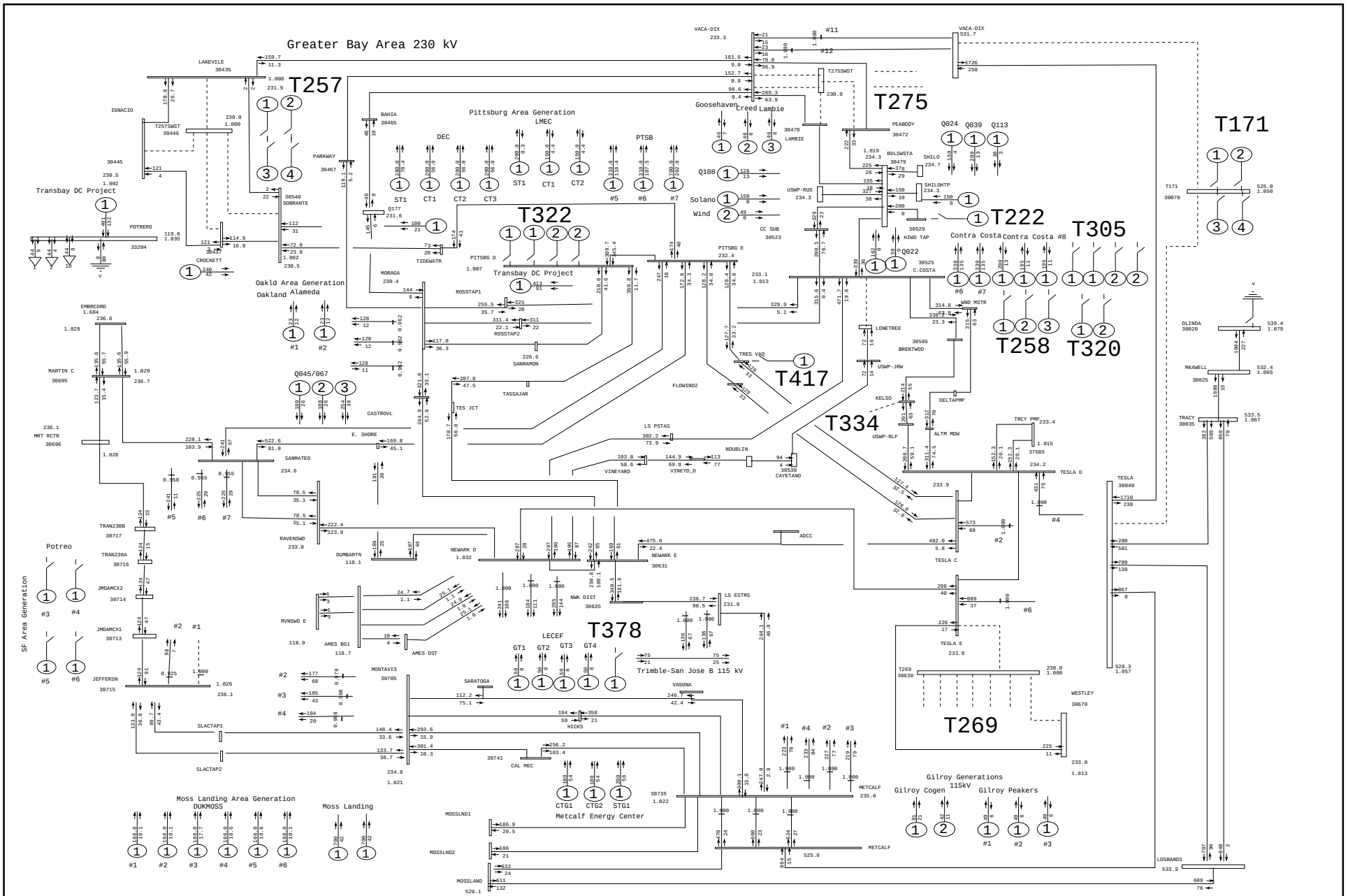

General Electric International, Inc. PSLF Program Mon Jul 13 11:54:30 2009 cases\sumpk\13sumpk-pge-tcp1-grba-pre.sav

Pacific Gas and Electric Company	PG&E 2008 CASE SERIES: 2013 Greater Bay Area Summer Peak Case (1-in-10 load) PATH15=-1215 MW(S-N) PATH26= 3906 MW(N-S) PDCI= 3096 MW(N-S) COI= 4710 MW(N-S) PG&E 2008 Group 1 Greater Bay Area Summer Peak Transition Pre-Cluster Case	Plot 013: Contra Costa - Lonetree 230 kV Line Outage	MW/MVAR draw\grba\pge-tcp1-grba- Rating = 2

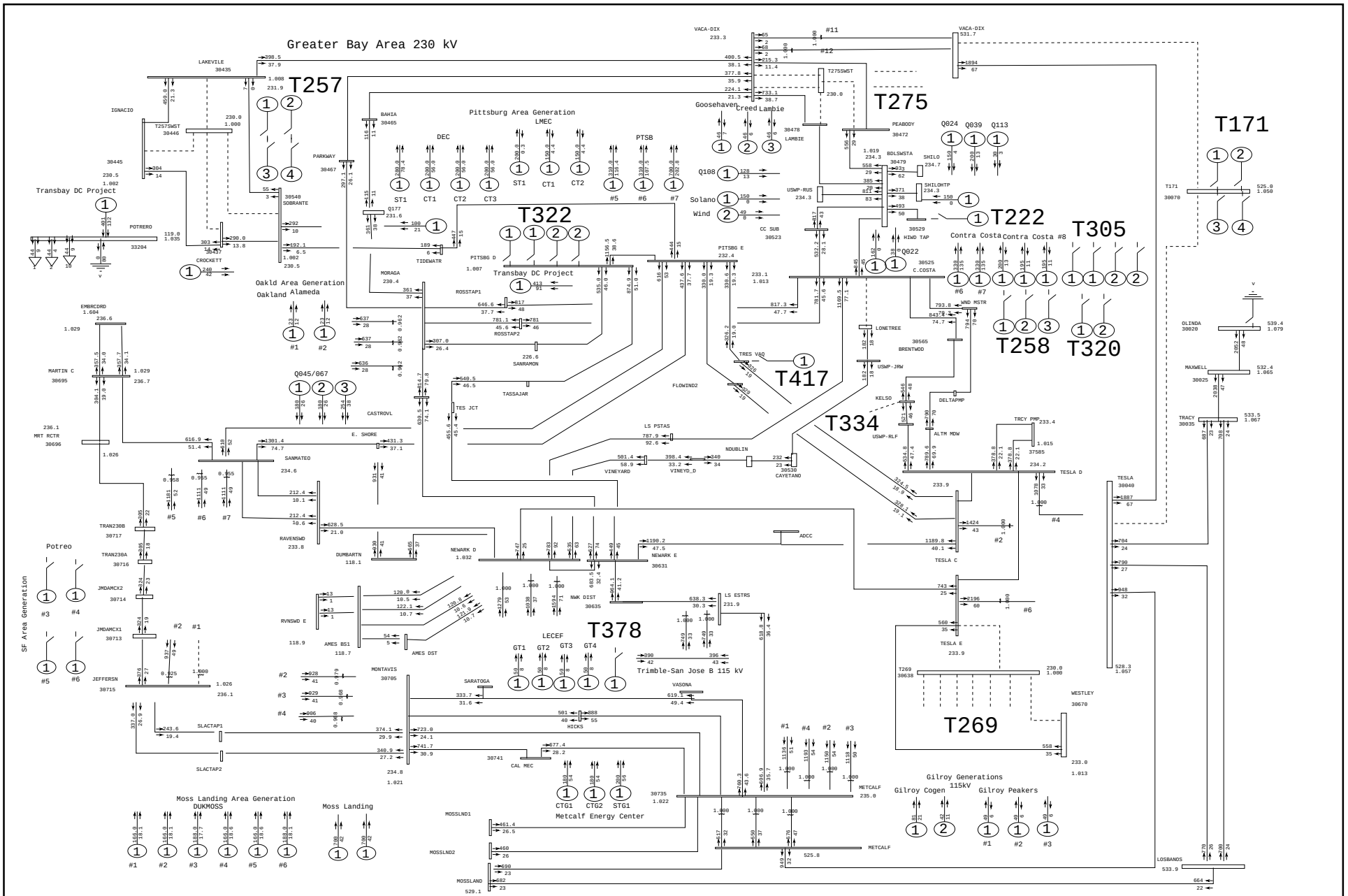

General Electric International, Inc. PSLF Program Mon Jul 13 11:54:32 2009 cases\sumpk\13sumpk-pge-tcp1-grba-pre.sav

Pacific Gas and Electric Company	PG&E 2008 CASE SERIES: 2013 Greater Bay Area Summer Peak Case (1-in-10 load) PATH15=-1215 MW(S-N) PATH26= 3906 MW(N-S) PDCI= 3096 MW(N-S) COI= 4710 MW(N-S) PG&E 2008 Group 1 Greater Bay Area Summer Peak Transition Pre-Cluster Case	Plot 014: Contra Costa - Lonetree 230 kV Line Outage	amps/rate draw\grba\pge-tcp1-grba- Rating = 2

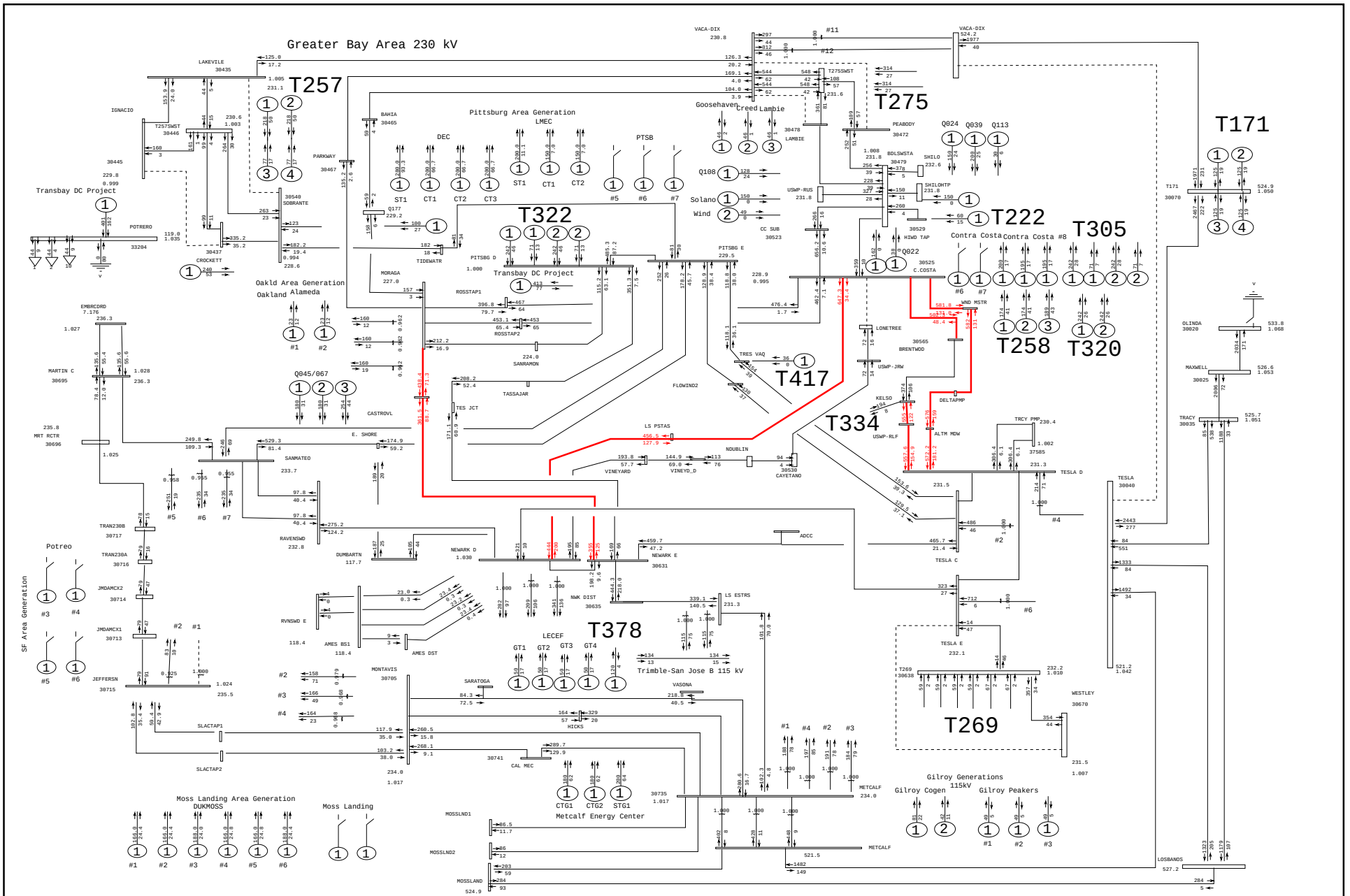

General Electric International, Inc. PSLF Program Mon Jul 13 11:54:36 2009 cases\sumpk\13sumpk-pge-tcp1-grba-pst.sav

Pacific Gas and Electric Company	PG&E 2008 CASE SERIES: 2013 Greater Bay Area Summer Peak Case (1-in-10 load) PATH15=-2341 MW(S-N) PATH26= 3975 MW(N-S) PDCI= 3087 MW(N-S) COI= 4585 MW(N-S) PG&E 2008 Group 1 Greater Bay Area Summer Peak Transition Post-Cluster Case	Plot 015: Contra Costa - Lonetree 230 kV Line Outage	MW/MVAR draw\grba\pge-tcp1-grba- Rating = 2

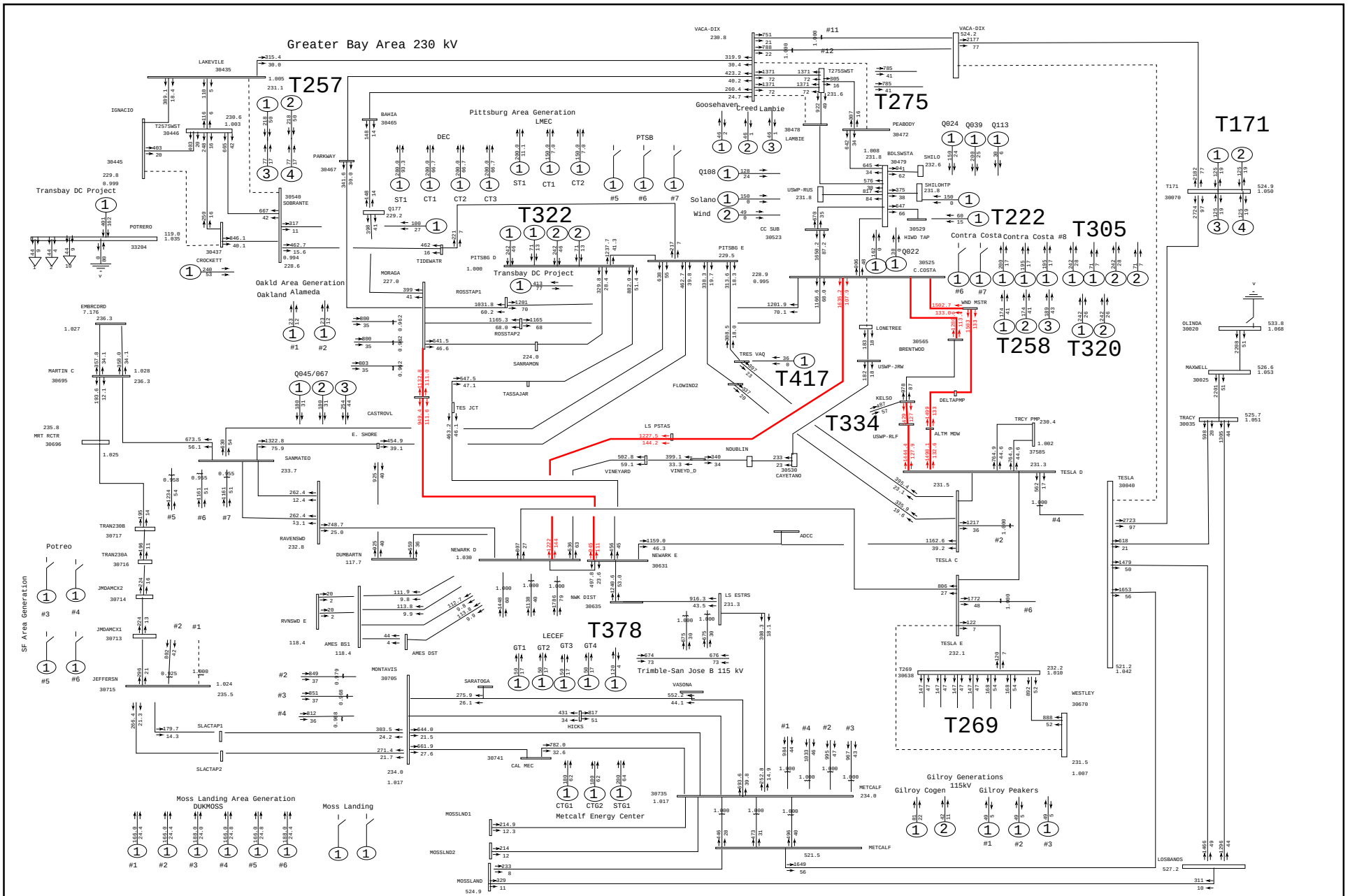

General Electric International, Inc. PSLF Program Mon Jul 13 11:54:37 2009 cases\sumpk\13sumpk-pge-tcp1-grba-pst.sav

Pacific Gas and Electric Company	PG&E 2008 CASE SERIES: 2013 Greater Bay Area Summer Peak Case (1-in-10 load) PATH15=-2341 MW(S-N) PATH26= 3975 MW(N-S) PDCI= 3087 MW(N-S) COI= 4585 MW(N-S) PG&E 2008 Group 1 Greater Bay Area Summer Peak Transition Post-Cluster Case	Plot 016 Contra Costa - Lonetree 230 kV Line Outage	amps/rate draw\grba\pge-tcp1-grba- Rating = 2

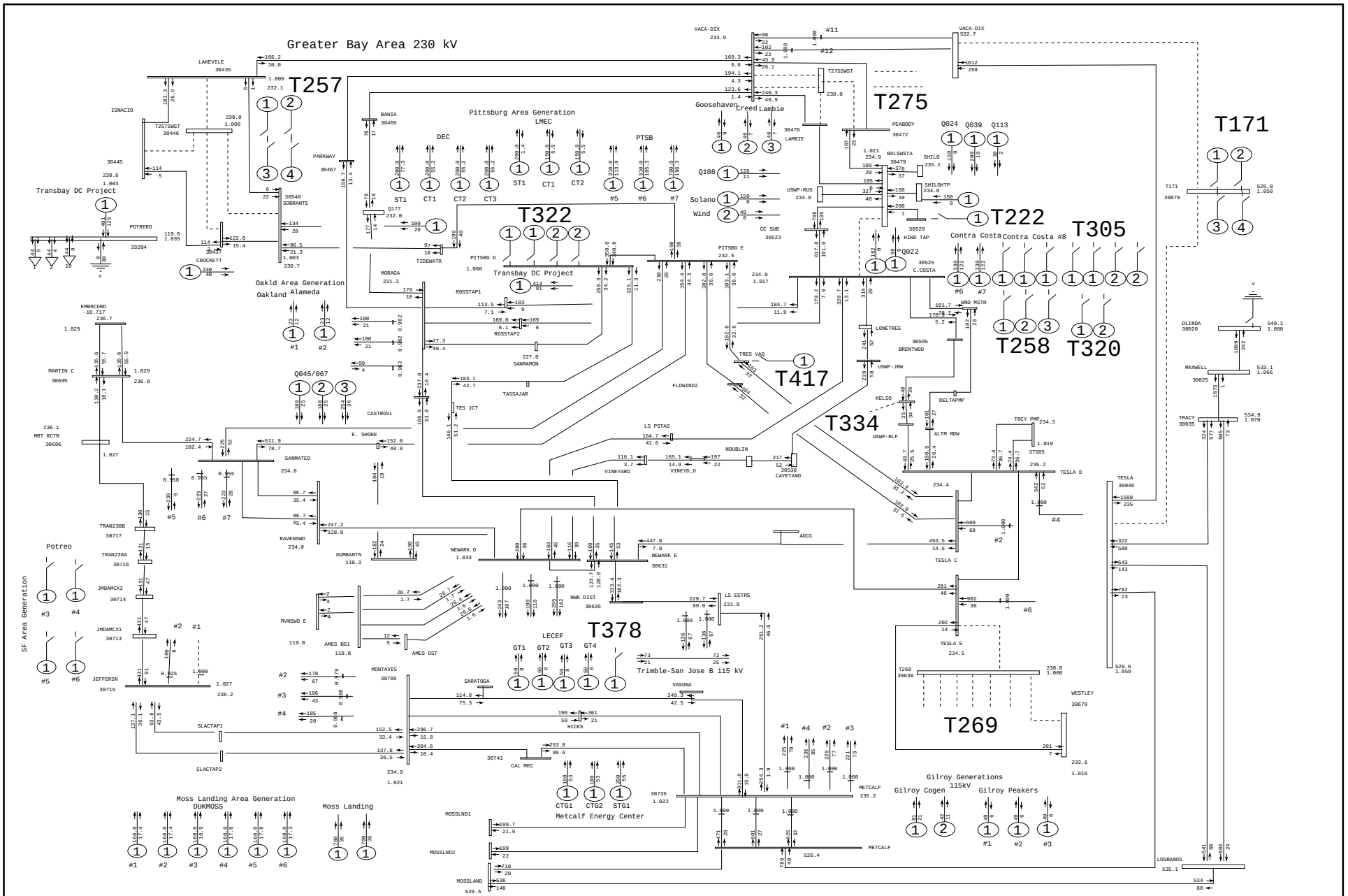
Greater Bay Area 230 kV
T257
T275
T171
T322
T222
T305
T258
T320
T417
T334
T378
T269
Pittsburg Area Generation
LMEC
Transbay DC Project
Oakld Area Generation
Oakland
Alameda
Moss Landing Area Generation
DUKMOSS
Moss Landing
Metcalf Energy Center
Gilroy Generations
115kV
Gilroy Cogen
Gilroy Peakers
Trimble-San Jose B 115 kV
SF Area Generation
Potreo
Contra Costa
Contra Costa #8
Goosehaven
Creed
Lambie
Solano
Wind
VACA-DIX
LAKEVILE
IGNACIO
PARKWAY
SOBRANTE
POTRERO
CROCKETT
TIDEWATR
MORAGA
ROSSTAP1
ROSSTAP2
SANRAMON
TASSAJAR
TES JCT
CASTROVL
E. SHORE
SANMATEO
RAVENSWD
DUMBARTN
NEWARK D
NEWARK E
ADCC
TESLA D
TESLA C
TESLA E
TESLA
WESTLEY
LOSBANOS
OLINDA
MAXWELL
TRACY
TRCY PMP
ALTM MDW
DELTAPMP
KELSO
USWP-JRW
USWP-RLF
LONETREE
BRENTWOOD
WND MSTR
HIWD TAP
C.COSTA
CC SUB
PEABODY
BDLSWSTA
SHILO
SHILOHTP
USWP-RUS
PITSBG D
PITSBG E
TRES VAQ
FLOWIND2
LS PSTAS
NDUBLIN
VINEYARD
VINEYD_D
CAYETANO
EMBRCORD
MARTIN C
MRT RCTR
TRAN230B
TRAN230A
JMDAMCX2
JMDAMCX1
JEFFERSN
RVNSWD E
AMES BS1
AMES DST
NWK DIST
LS ESTRS
LECEF
MONTAVIS
SARATOGA
HICKS
VASONA
SLACTAP1
SLACTAP2
CAL MEC
METCALF
MOSSLND1
MOSSLND2
MOSSLAND
Q045/067
Q177
Q108
Q022
Q024
Q039
Q113
T269
30638
230.0
1.000
T171
30070
525.0
1.050
540.1
1.080
533.1
1.066
534.9
1.070
529.6
1.059
535.1
233.6
1.016
30670
30035
30025
30020
30040
37585
235.2
234.4
234.5
30631
30635
30741
30735
1.022
526.4
529.5
30715
236.2
1.027
30714
30713
30716
30717
30696
30695
236.8
236.7
-18.717
1.029
30446
30437
30467
30465
30435
30445
30540
30478
30479
30472
30529
30525
30565
30530
30523
30465
232.1
232.0
232.5
231.3
234.8
234.0
1.017
1.008
1.035
1.003
119.0
118.3
118.8
119.0
234.9
1.021
231.9
229.7
99.0
234.9
1.021
33204
30716
30714
30713
30715
30717
30696
30695
30686
30705
30741
30735
30631
30635
30638
30670
30035
30025
30020
30040
37585
30530
30523
30525
30529
30479
30478
30472
30465
30467
30446
30437
30435
30445
30540
30717
30716
30714
30713
30715

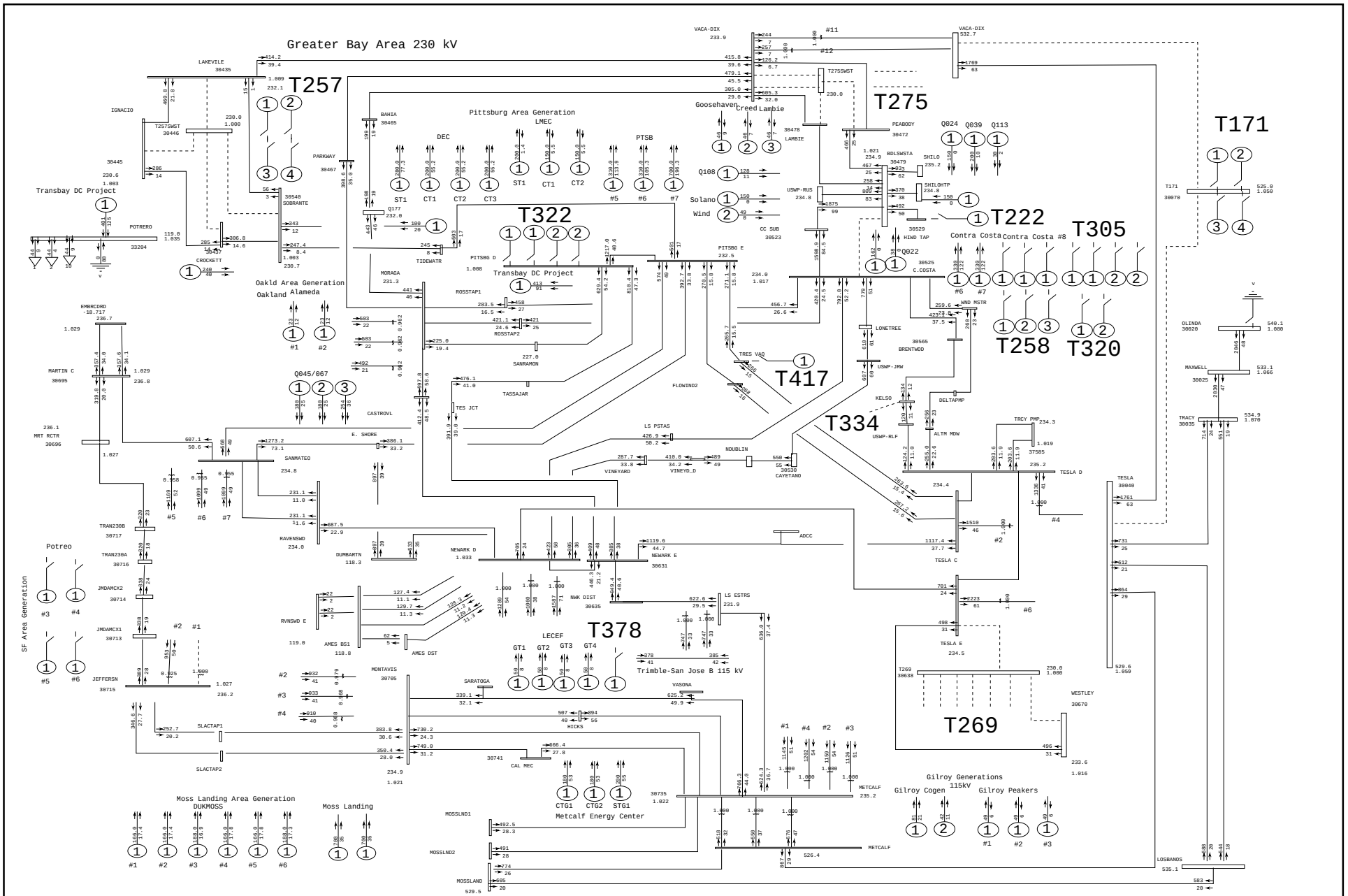

General Electric International, Inc. PSLF Program Mon Jul 13 11:54:42 2009 cases\sumpk\13sumpk-pge-tcp1-grba-pre.sav

Pacific Gas and Electric Company	PG&E 2008 CASE SERIES: 2013 Greater Bay Area Summer Peak Case (1-in-10 load) PATH15=-1215 MW(S-N) PATH26= 3906 MW(N-S) PDCI= 3096 MW(N-S) COI= 4710 MW(N-S) PG&E 2008 Group 1 Greater Bay Area Summer Peak Transition Pre-Cluster Case	Plot 018: Birds Landing - Contra Costa 230 kV Line & Gateway PP Outage	amps/rate draw\grba\pge-tcp1-grba- Rating = 2

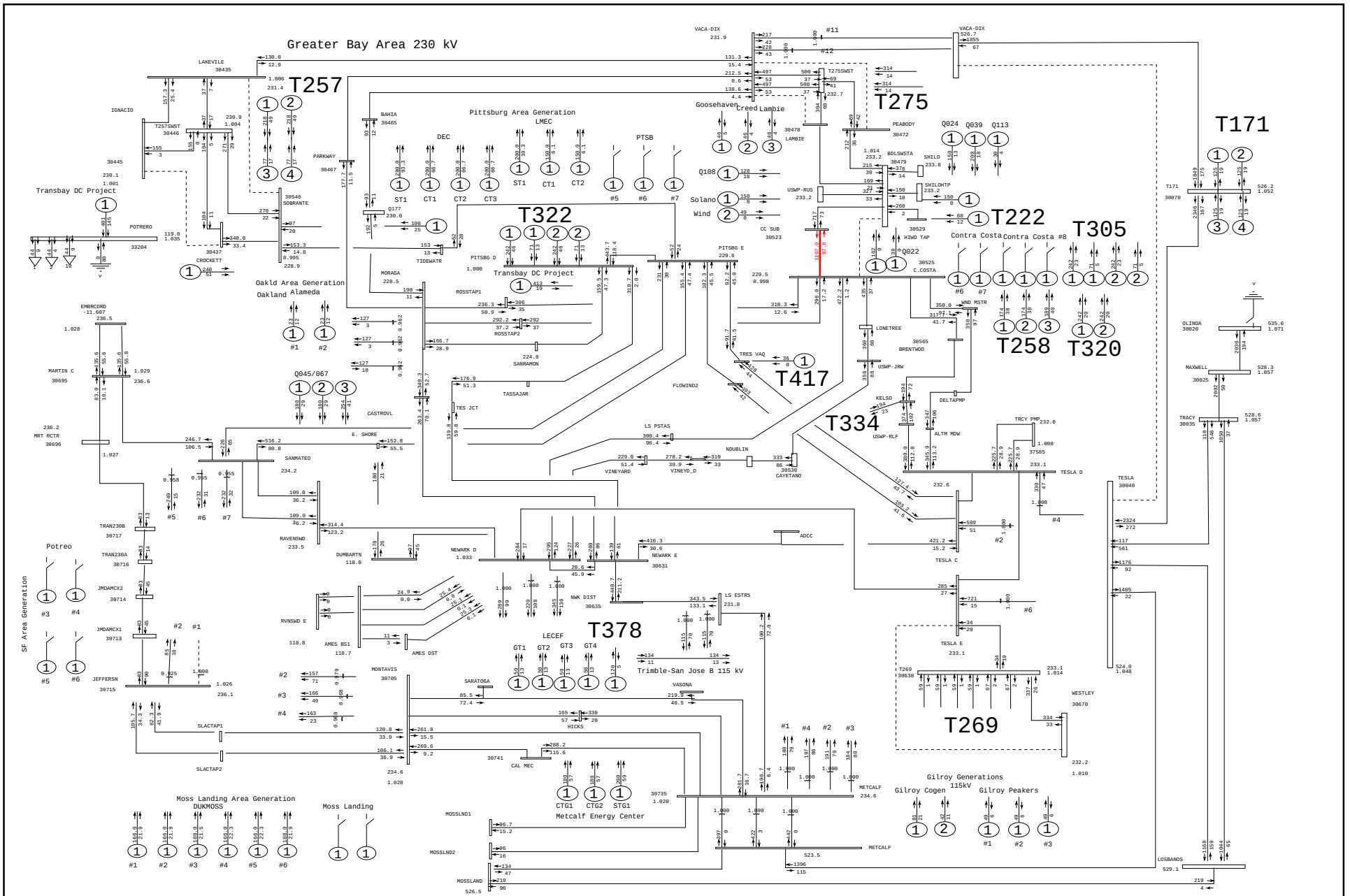

General Electric International, Inc. PSLF Program Mon Jul 13 11:54:45 2009 cases\sumpk\13sumpk-pge-tcp1-grba-pst.sav

Pacific Gas and Electric Company	PG&E 2008 CASE SERIES: 2013 Greater Bay Area Summer Peak Case (1-in-10 load) PATH15=-2341 MW(S-N) PATH26= 3975 MW(N-S) PDCI= 3087 MW(N-S) COI= 4585 MW(N-S) PG&E 2008 Group 1 Greater Bay Area Summer Peak Transition Post-Cluster Case	Plot 019: Birds Landing - Contra Costa 230 kV Line & Gateway PP Outage	MW/MVAR draw\grba\pge-tcp1-grba- Rating = 2

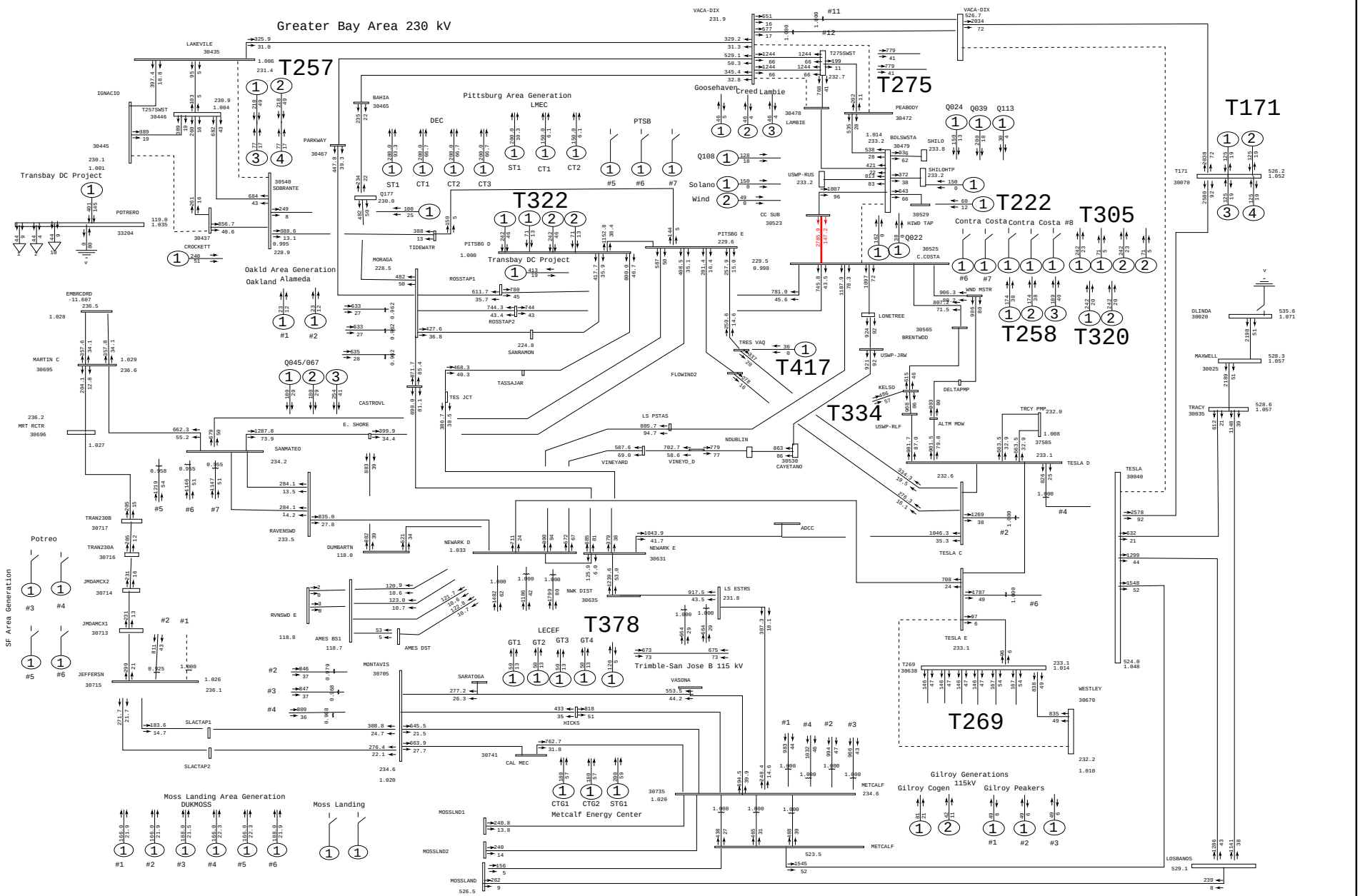

General Electric International, Inc. PSLF Program Mon Jul 13 11:54:47 2009 cases\sumpk\13sumpk-pge-tcp1-grba-pst.sav

Pacific Gas and Electric Company	PG&E 2008 CASE SERIES: 2013 Greater Bay Area Summer Peak Case (1-in-10 load) PATH15=-2341 MW(S-N) PATH26= 3975 MW(N-S) PDCI= 3087 MW(N-S) COI= 4585 MW(N-S) PG&E 2008 Group 1 Greater Bay Area Summer Peak Transition Post-Cluster Case	Plot 020: Birds Landing - Contra Costa 230 kV Line & Gateway PP Outage	amps/rate draw\grba\pge-tcp1-grba- Rating = 2

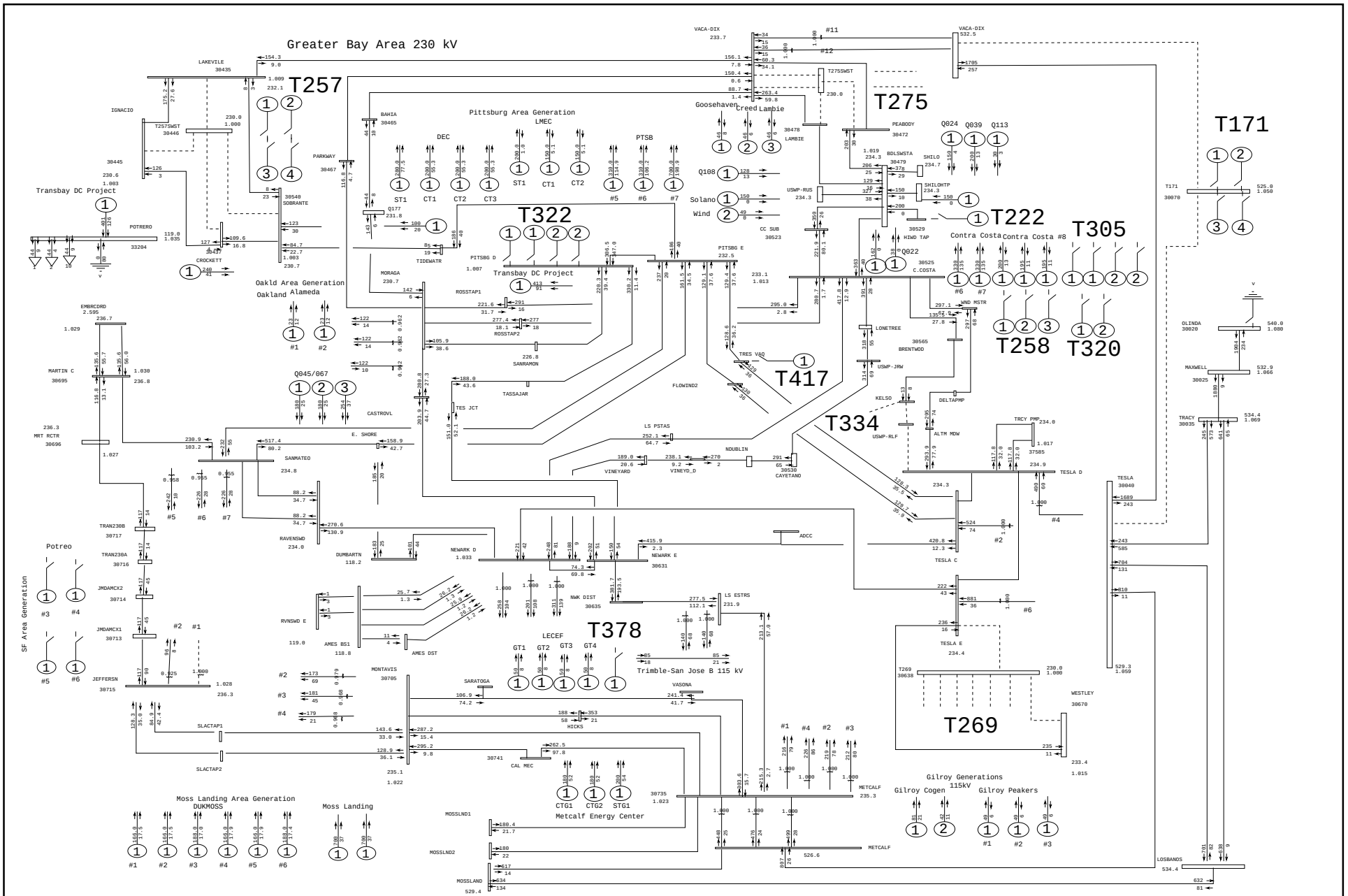

General Electric International, Inc. PSLF Program Mon Jul 13 11:54:53 2009 cases\sumpk\13sumpk-pge-tcp1-grba-pre.sav

Pacific Gas and Electric Company	PG&E 2008 CASE SERIES: 2013 Greater Bay Area Summer Peak Case (1-in-10 load) PATH15=-1215 MW(S-N) PATH26= 3906 MW(N-S) PDCI= 3096 MW(N-S) COI= 4710 MW(N-S) PG&E 2008 Group 1 Greater Bay Area Summer Peak Transition Pre-Cluster Case	Plot 021: Kelso - Tesla 230 kV Line Outage	MW/MVAR draw\grba\pge-tcp1-grba- Rating = 2

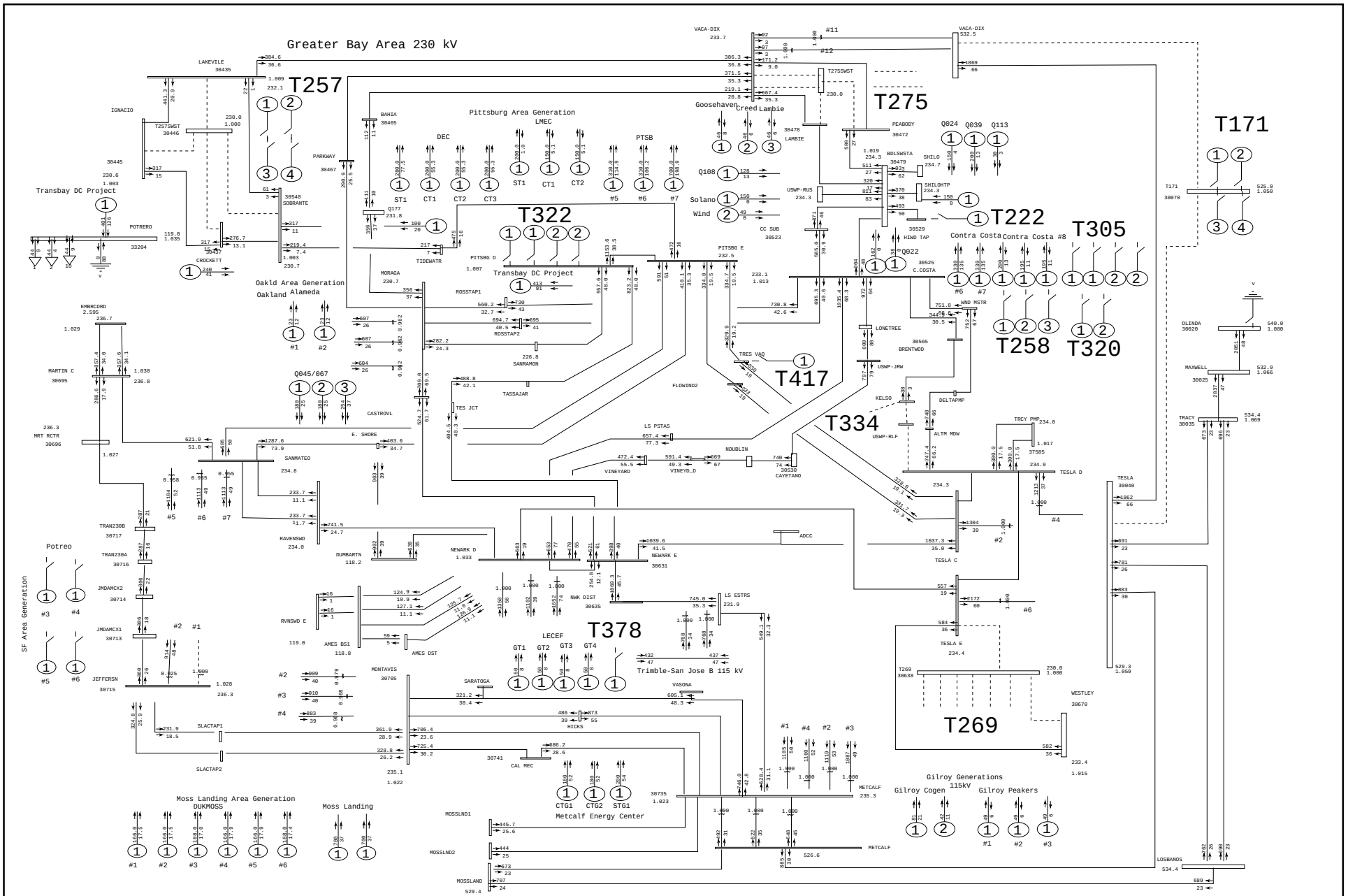

General Electric International, Inc. PSLF Program Mon Jul 13 11:54:55 2009 cases\sumpk\13sumpk-pge-tcp1-grba-pre.sav

Pacific Gas and Electric Company	PG&E 2008 CASE SERIES: 2013 Greater Bay Area Summer Peak Case (1-in-10 load) PATH15=-1215 MW(S-N) PATH26= 3906 MW(N-S) PDCI= 3096 MW(N-S) COI= 4710 MW(N-S) PG&E 2008 Group 1 Greater Bay Area Summer Peak Transition Pre-Cluster Case	Plot 022: Kelso - Tesla 230 kV Line Outage	amps/rate draw\grba\pge-tcp1-grba- Rating = 2

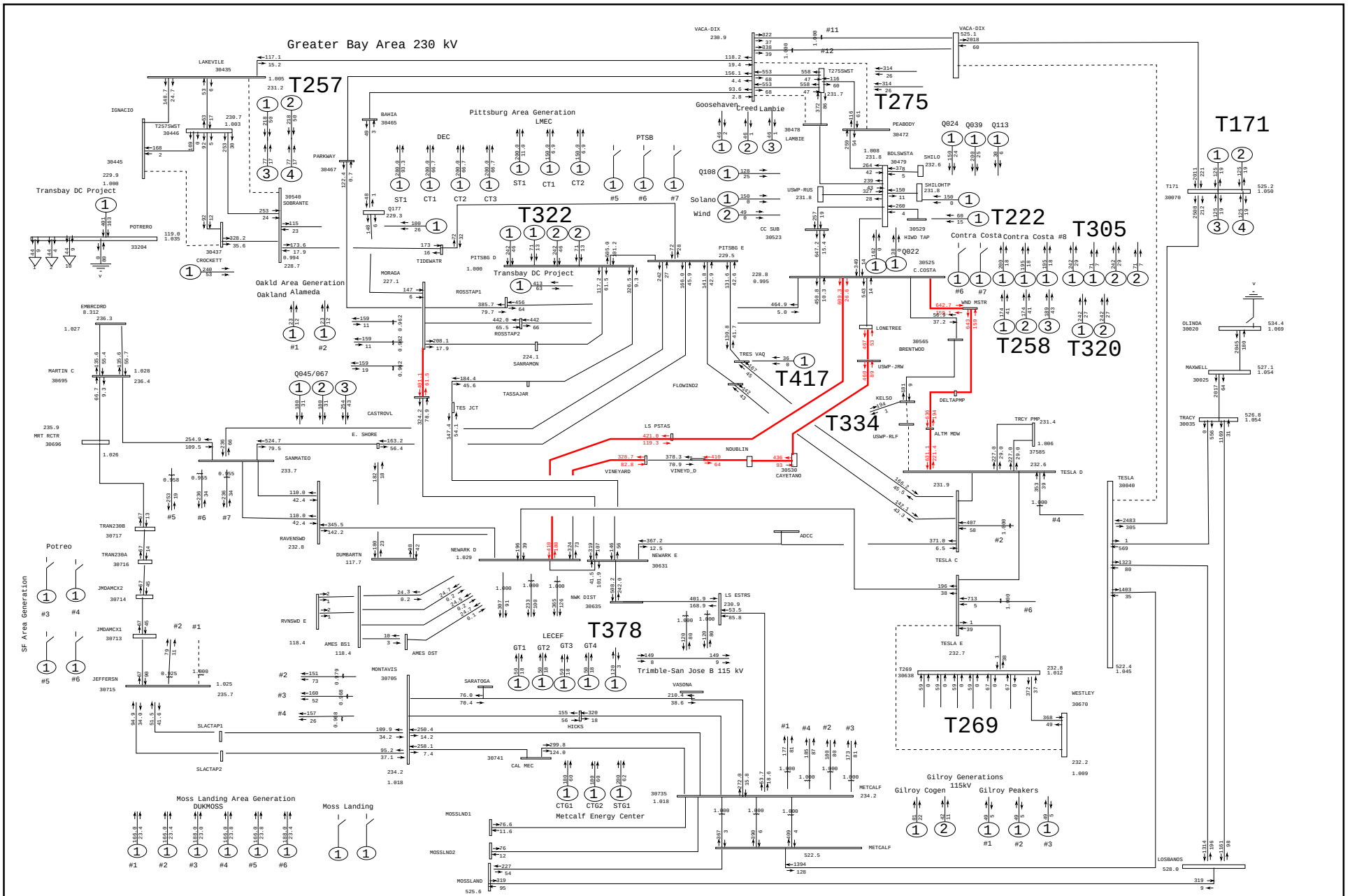

General Electric International, Inc. PSLF Program Mon Jul 13 11:55:01 2009 cases\sumpk\13sumpk-pge-tcp1-grba-pst.sav

Pacific Gas and Electric Company	PG&E 2008 CASE SERIES: 2013 Greater Bay Area Summer Peak Case (1-in-10 load) PATH15=-2341 MW(S-N) PATH26= 3975 MW(N-S) PDCI= 3087 MW(N-S) COI= 4585 MW(N-S) PG&E 2008 Group 1 Greater Bay Area Summer Peak Transition Post-Cluster Case	Plot 023: Kelso - Tesla 230 kV Line Outage	MW/MVAR draw\grba\pge-tcp1-grba- Rating = 2

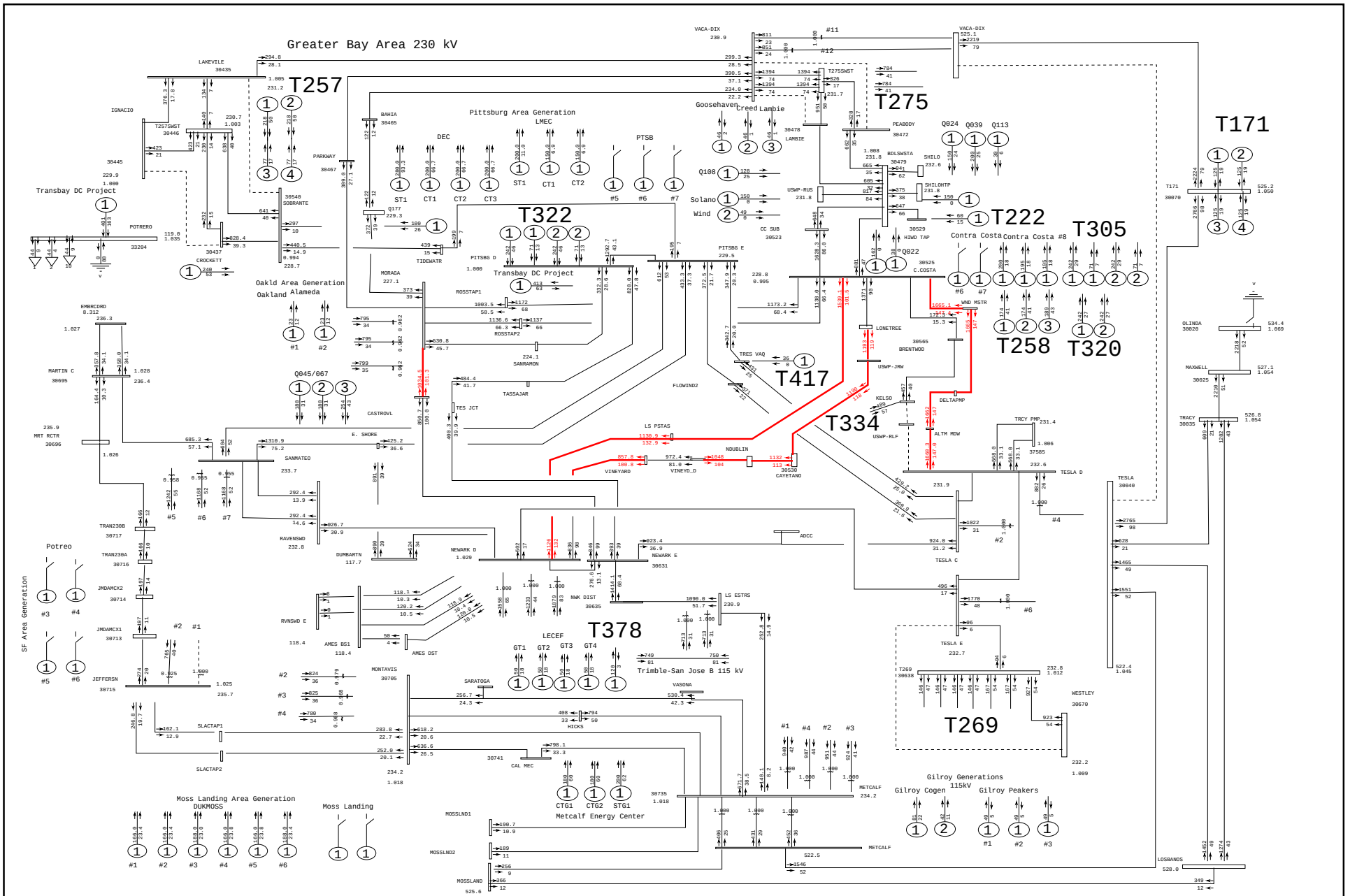

General Electric International, Inc. PSLF Program Mon Jul 13 11:55:02 2009 cases\sumpk\13sumpk-pge-tcp1-grba-pst.sav

Pacific Gas and Electric Company	PG&E 2008 CASE SERIES: 2013 Greater Bay Area Summer Peak Case (1-in-10 load) PATH15=-2341 MW(S-N) PATH26= 3975 MW(N-S) PDCI= 3087 MW(N-S) COI= 4585 MW(N-S) PG&E 2008 Group 1 Greater Bay Area Summer Peak Transition Post-Cluster Case	Plot 024: Kelso - Tesla 230 kV Line Outage	amps/rate draw\grba\pge-tcp1-grba- Rating = 2

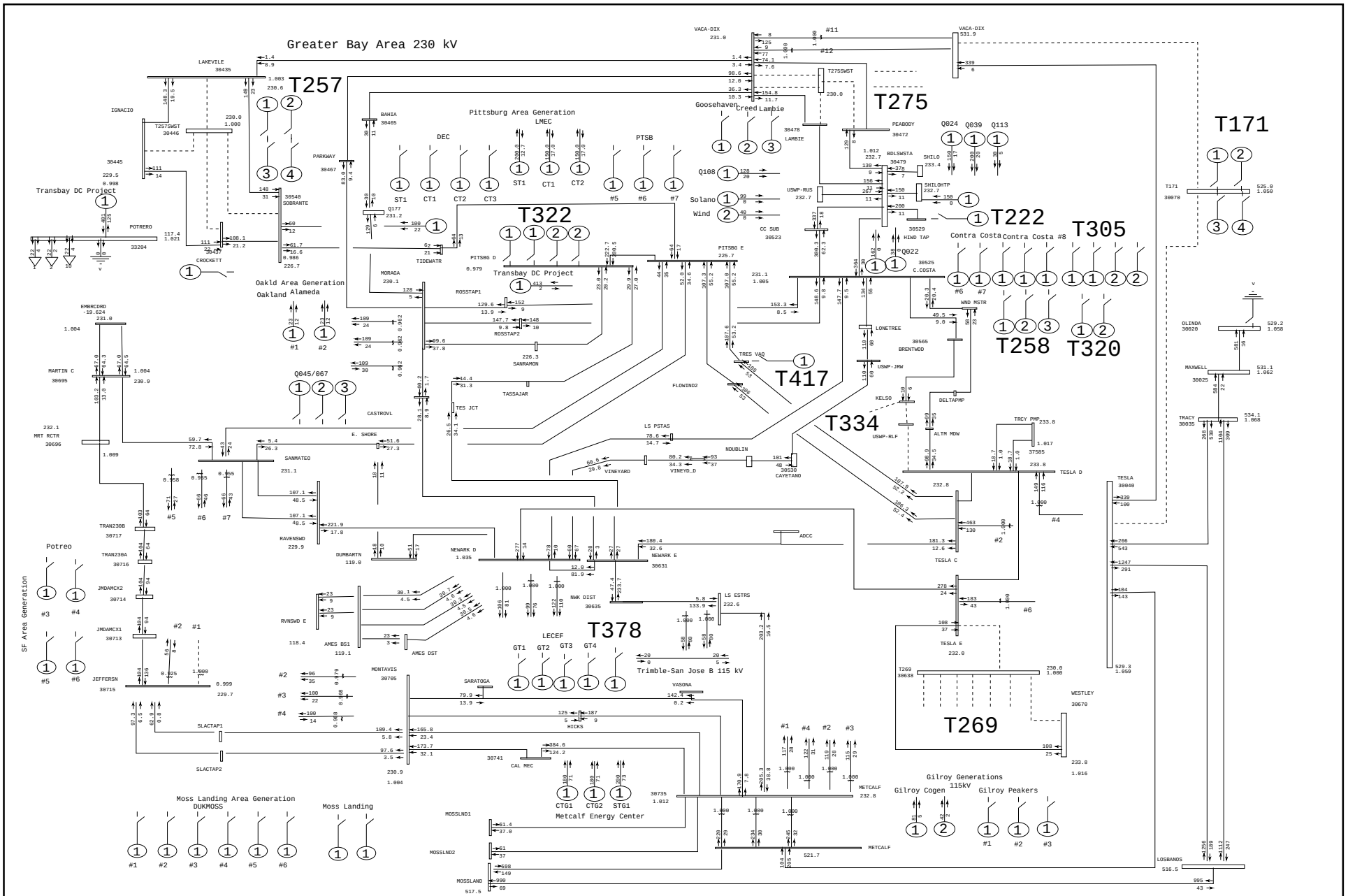

General Electric International, Inc. PSLF Program Mon Jul 13 11:55:08 2009 cases\sumop\13sumop-pge-tcp1-grba-pre.sav

Pacific Gas and Electric Company	PG&E 2008 CASE SERIES: 2013 Summer Off Peak Case PATH15= 5294 MW(S-N) PATH26=-1637 MW(N-S) PDCI=-1846 MW(N-S) COI=-3584 MW(N-S) PG&E 2008 Group 1 Greater Bay Area Summer Off Peak Transition Pre-Cluster Case	Plot 025: Kelso - Tesla 230 kV Line Outage	MW/MVAR draw\grba\pge-tcp1-grba- Rating = 2

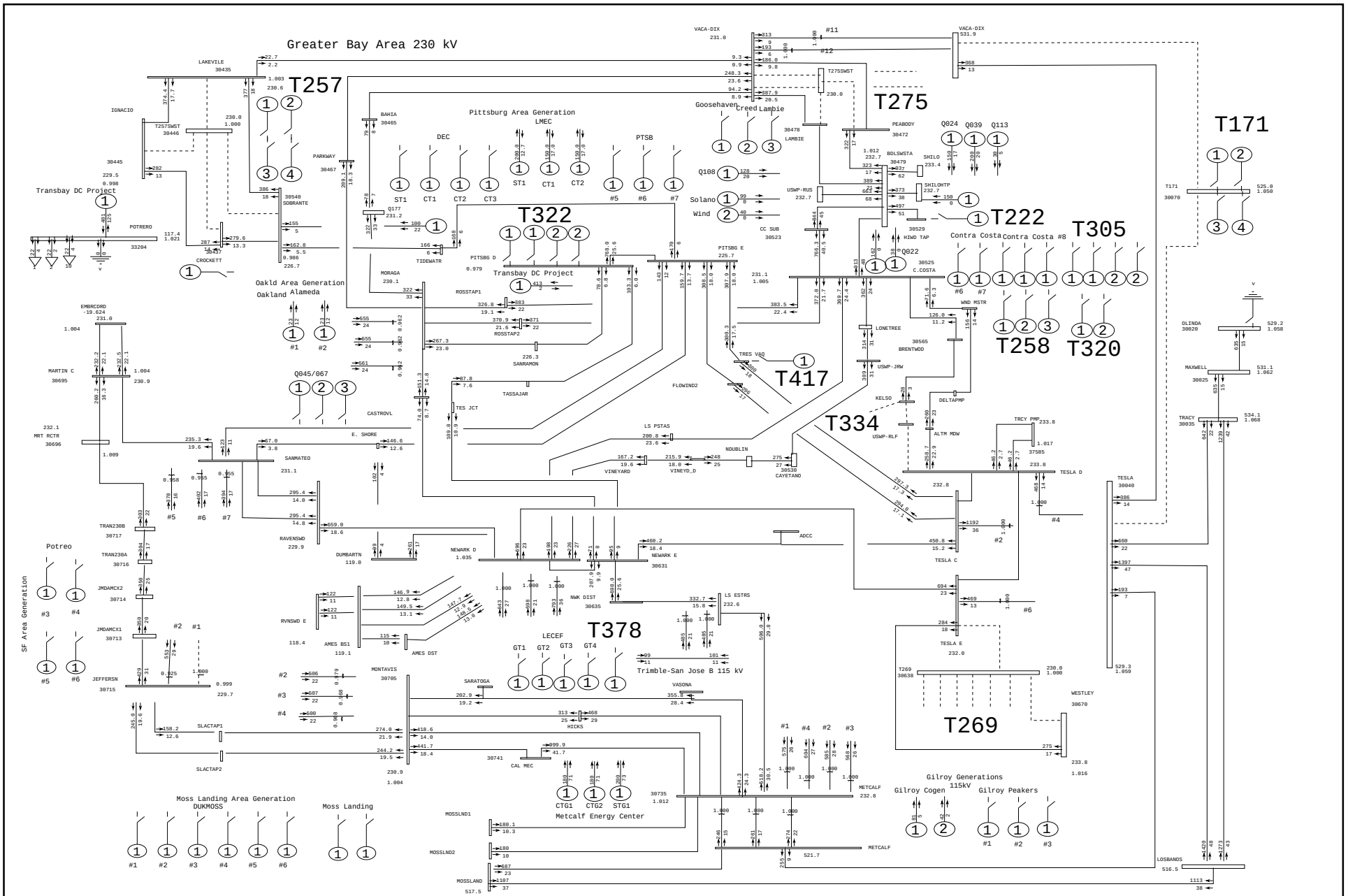

General Electric International, Inc. PSLF Program Mon Jul 13 11:55:10 2009 cases\sumop\13sumop-pge-tcp1-grba-pre.sav

Pacific Gas and Electric Company	PG&E 2008 CASE SERIES: 2013 Summer Off Peak Case PATH15= 5294 MW(S-N) PATH26=-1637 MW(N-S) PDCI=-1846 MW(N-S) COI=-3584 MW(N-S) PG&E 2008 Group 1 Greater Bay Area Summer Off Peak Transition Pre-Cluster Case	Plot 026: Kelso - Tesla 230 kV Line Outage	amps/rate draw\grba\pge-tcp1-grba- Rating = 2

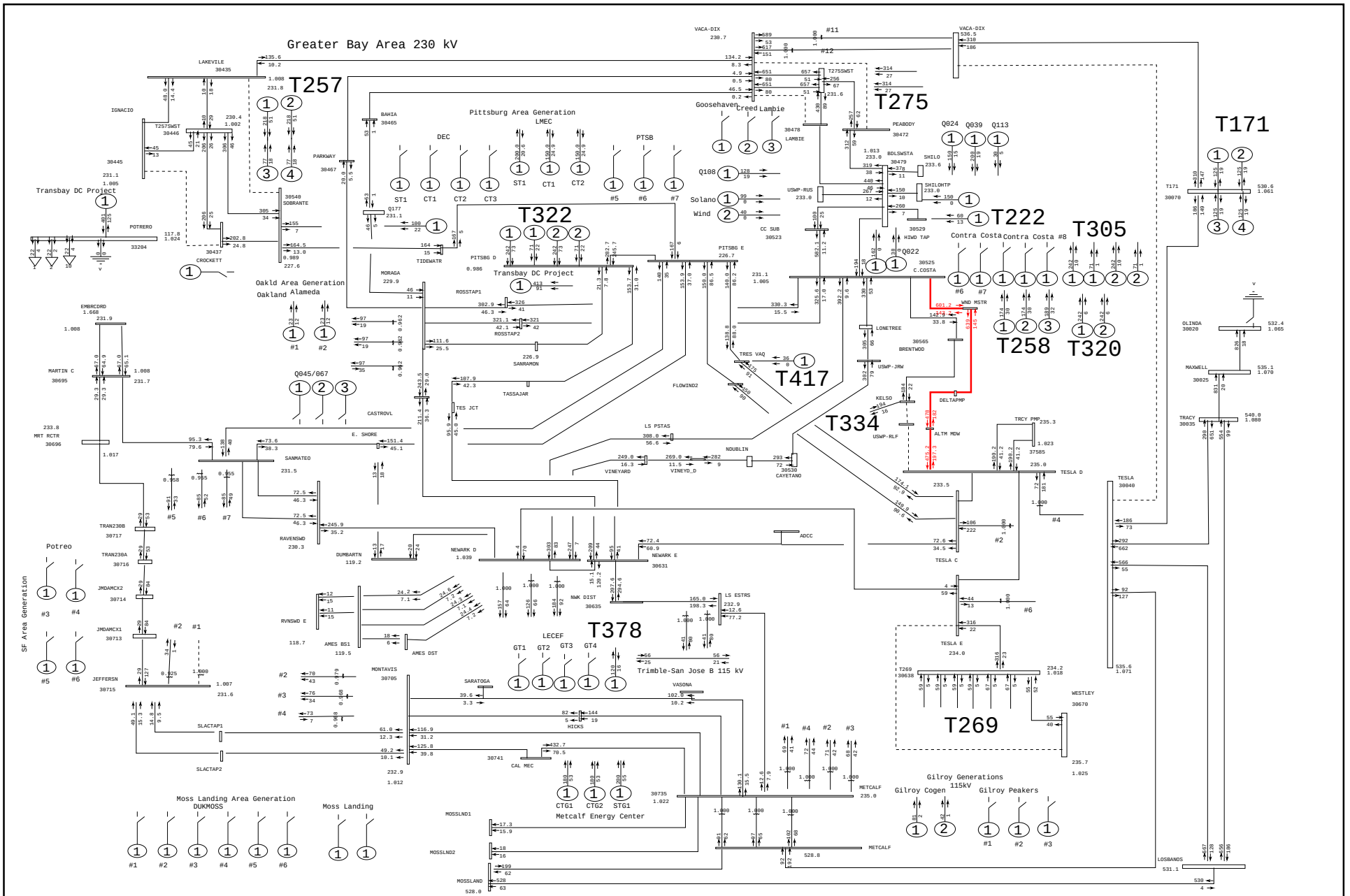

General Electric International, Inc. PSLF Program Mon Jul 13 11:55:16 2009 cases\sumop\13sumop-pge-tcp1-grba-pst.sav

Pacific Gas and Electric Company	PG&E 2008 CASE SERIES: 2013 Summer Off Peak Case PATH15= 3141 MW(S-N) PATH26= -212 MW(N-S) PDCI=-1846 MW(N-S) COI=-3658 MW(N-S) PG&E 2008 Group 1 Greater Bay Area Summer Off Peak Transition Post-Cluster Case	Plot 027: Kelso - Tesla 230 kV Line Outage	MW/MVAR draw\grba\pge-tcp1-grba- Rating = 2

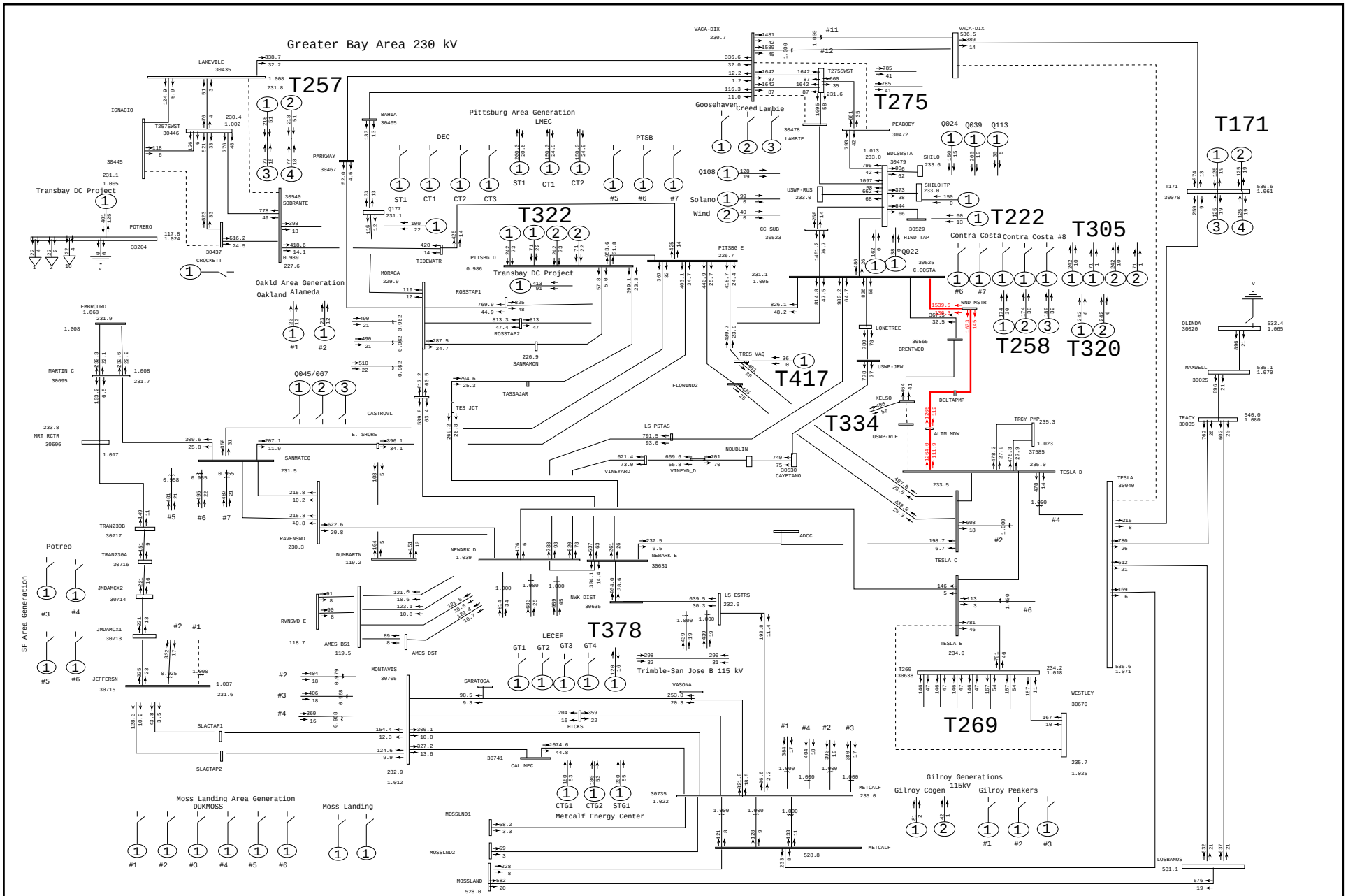

General Electric International, Inc. PSLF Program Mon Jul 13 11:55:17 2009 cases\sumop\13sumop-pge-tcp1-grba-pst.sav

Pacific Gas and Electric Company	PG&E 2008 CASE SERIES: 2013 Summer Off Peak Case PATH15= 3141 MW(S-N) PATH26= -212 MW(N-S) PDCI=-1846 MW(N-S) COI=-3658 MW(N-S) PG&E 2008 Group 1 Greater Bay Area Summer Off Peak Transition Post-Cluster Case	Plot 028: Kelso - Tesla 230 kV Line Outage	amps/rate draw\grba\pge-tcp1-grba- Rating = 2

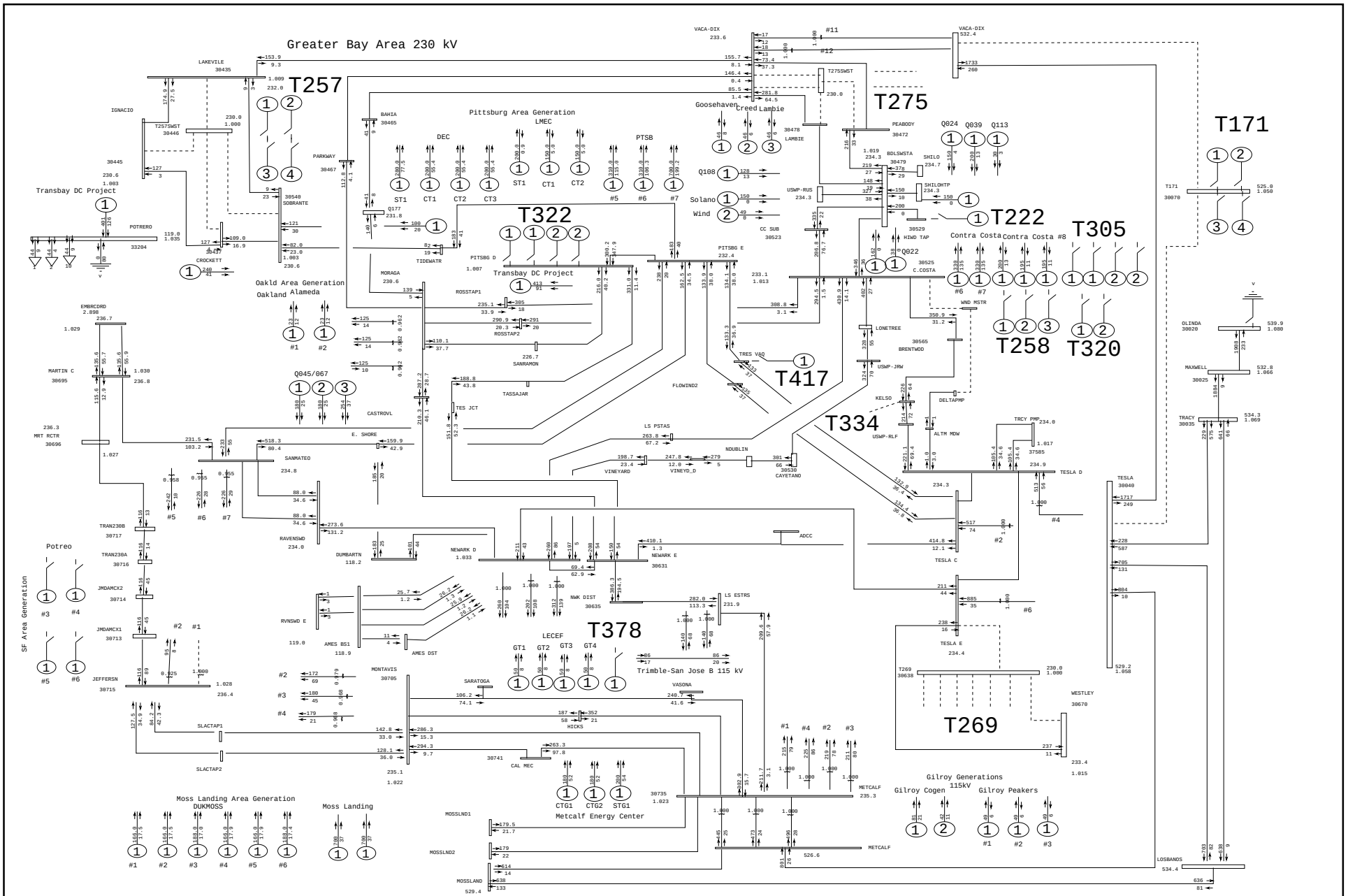

General Electric International, Inc. PSLF Program Mon Jul 13 11:55:20 2009 cases\sumpk\13sumpk-pge-tcp1-grba-pre.sav

Pacific Gas and Electric Company	PG&E 2008 CASE SERIES: 2013 Greater Bay Area Summer Peak Case (1-in-10 load) PATH15=-1215 MW(S-N) PATH26= 3906 MW(N-S) PDCI= 3096 MW(N-S) COI= 4710 MW(N-S) PG&E 2008 Group 1 Greater Bay Area Summer Peak Transition Pre-Cluster Case	Plot 029: Contra Costa - Delta Pumps 230 kV Line Outage	MW/MVAR draw\grba\pge-tcp1-grba- Rating = 2

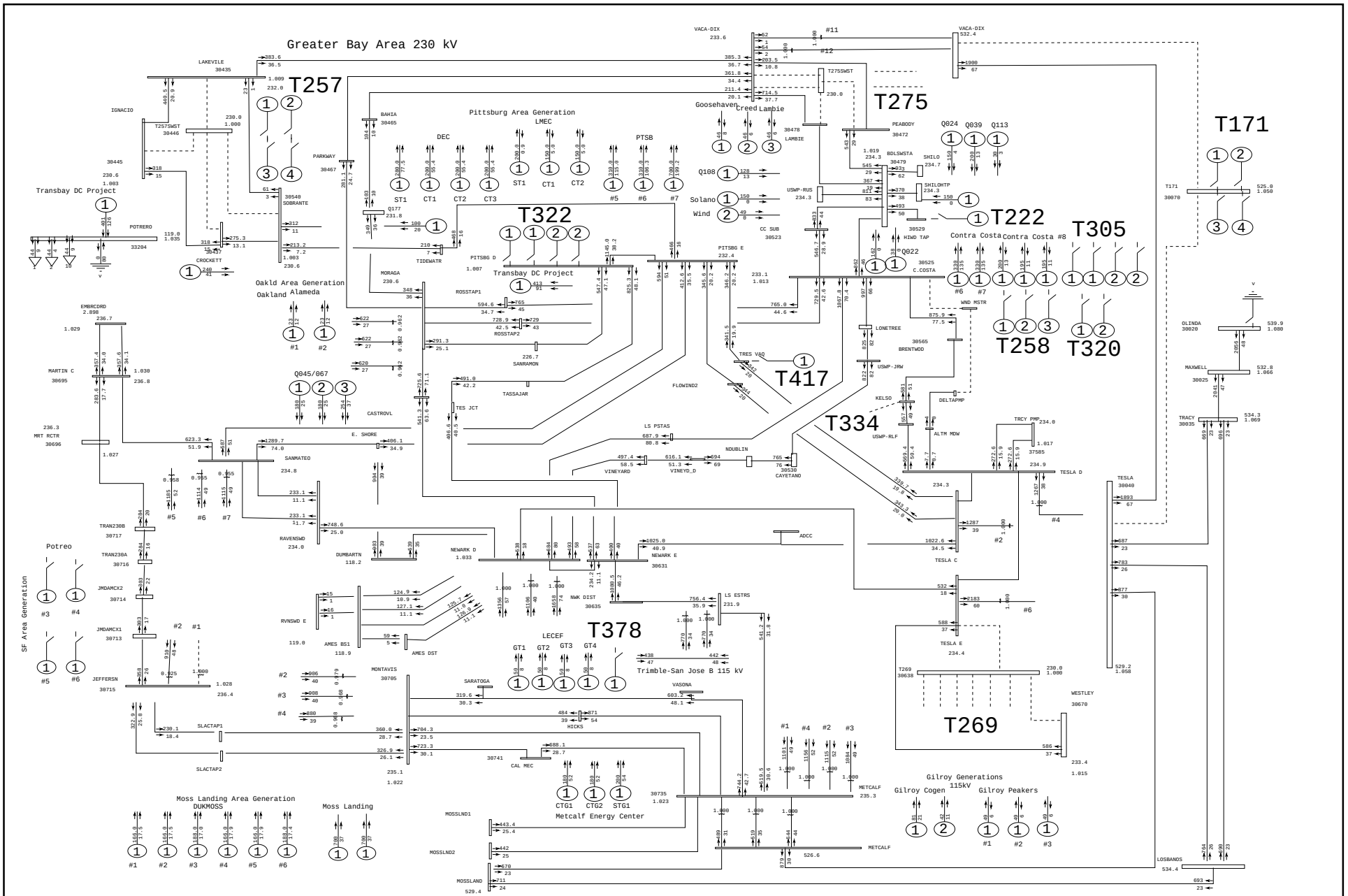

General Electric International, Inc. PSLF Program Mon Jul 13 11:55:21 2009 cases\sumpk\13sumpk-pge-tcp1-grba-pre.sav

Pacific Gas and Electric Company	PG&E 2008 CASE SERIES: 2013 Greater Bay Area Summer Peak Case (1-in-10 load) PATH15=-1215 MW(S-N) PATH26= 3906 MW(N-S) PDCI= 3096 MW(N-S) COI= 4710 MW(N-S) PG&E 2008 Group 1 Greater Bay Area Summer Peak Transition Pre-Cluster Case	Plot 030: Contra Costa - Delta Pumps 230 kV Line Outage	amps/rate draw\grba\pge-tcp1-grba- Rating = 2

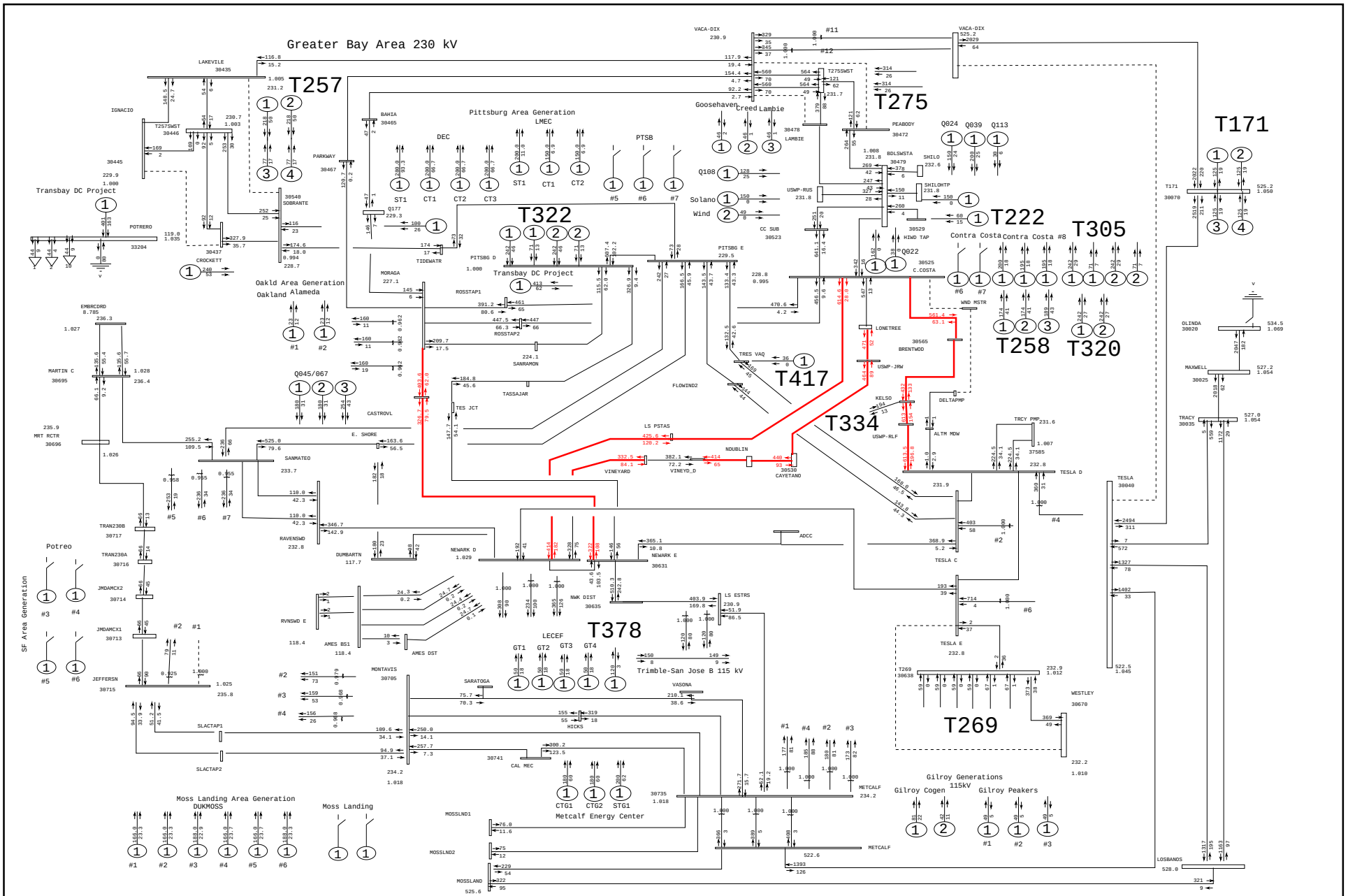

General Electric International, Inc. PSLF Program Mon Jul 13 11:55:24 2009 cases\sumpk\13sumpk-pge-tcp1-grba-pst.sav

Pacific Gas and Electric Company	PG&E 2008 CASE SERIES: 2013 Greater Bay Area Summer Peak Case (1-in-10 load) PATH15=-2341 MW(S-N) PATH26= 3975 MW(N-S) PDCI= 3087 MW(N-S) COI= 4585 MW(N-S) PG&E 2008 Group 1 Greater Bay Area Summer Peak Transition Post-Cluster Case	Plot 031: Contra Costa - Delta Pumps 230 kV Line Outage	MW/MVAR draw\grba\pge-tcp1-grba- Rating = 2

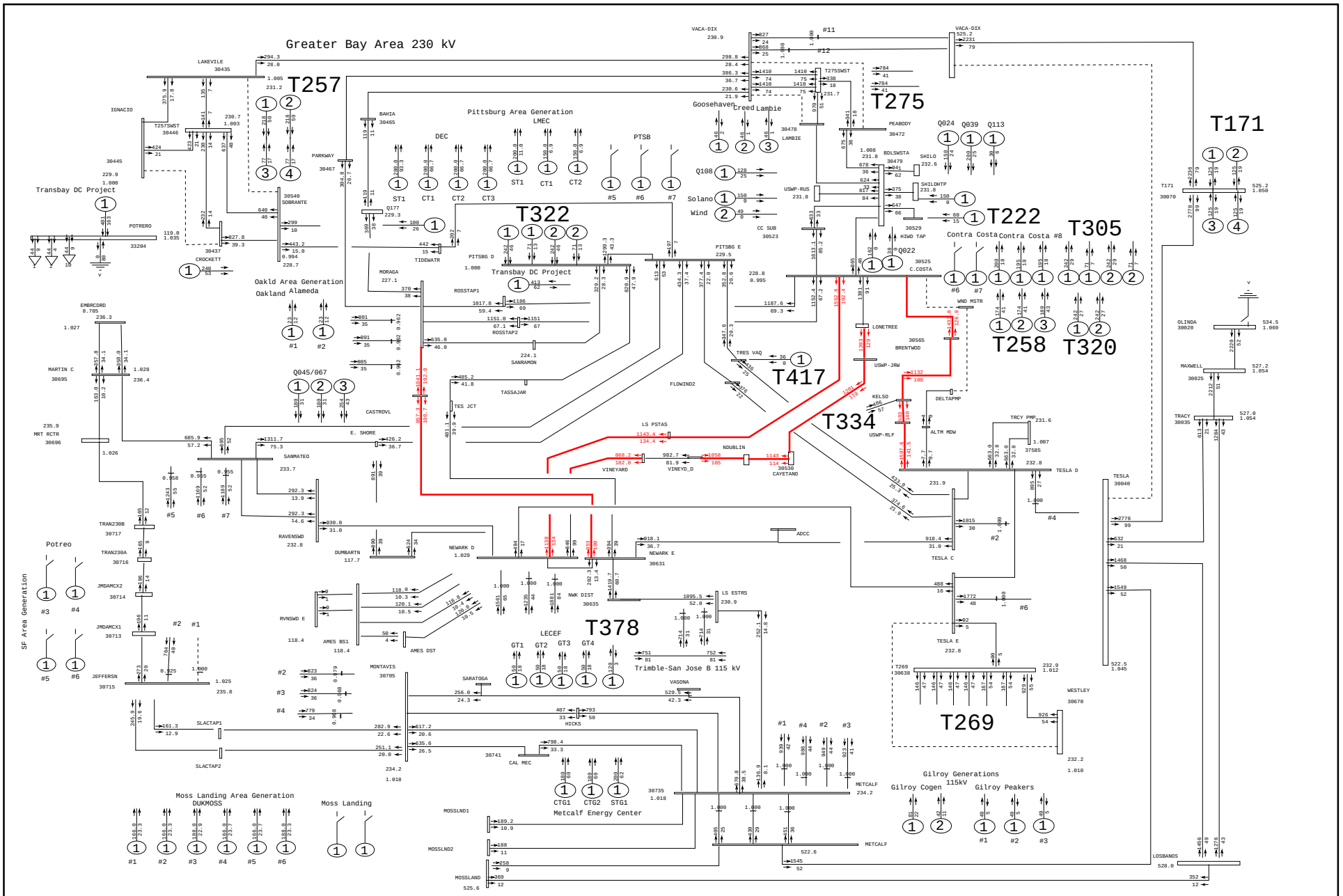

General Electric International, Inc. PSLF Program Mon Jul 13 11:55:25 2009 cases\sumpk\13sumpk-pge-tcp1-grba-pst.sav

Pacific Gas and Electric Company	PG&E 2008 CASE SERIES: 2013 Greater Bay Area Summer Peak Case (1-in-10 load) PATH15=-2341 MW(S-N) PATH26= 3975 MW(N-S) PDCI= 3087 MW(N-S) COI= 4585 MW(N-S) PG&E 2008 Group 1 Greater Bay Area Summer Peak Transition Post-Cluster Case	Plot 032: Contra Costa - Delta Pumps 230 kV Line Outage	amps/rate draw\grba\pge-tcp1-grba- Rating = 2

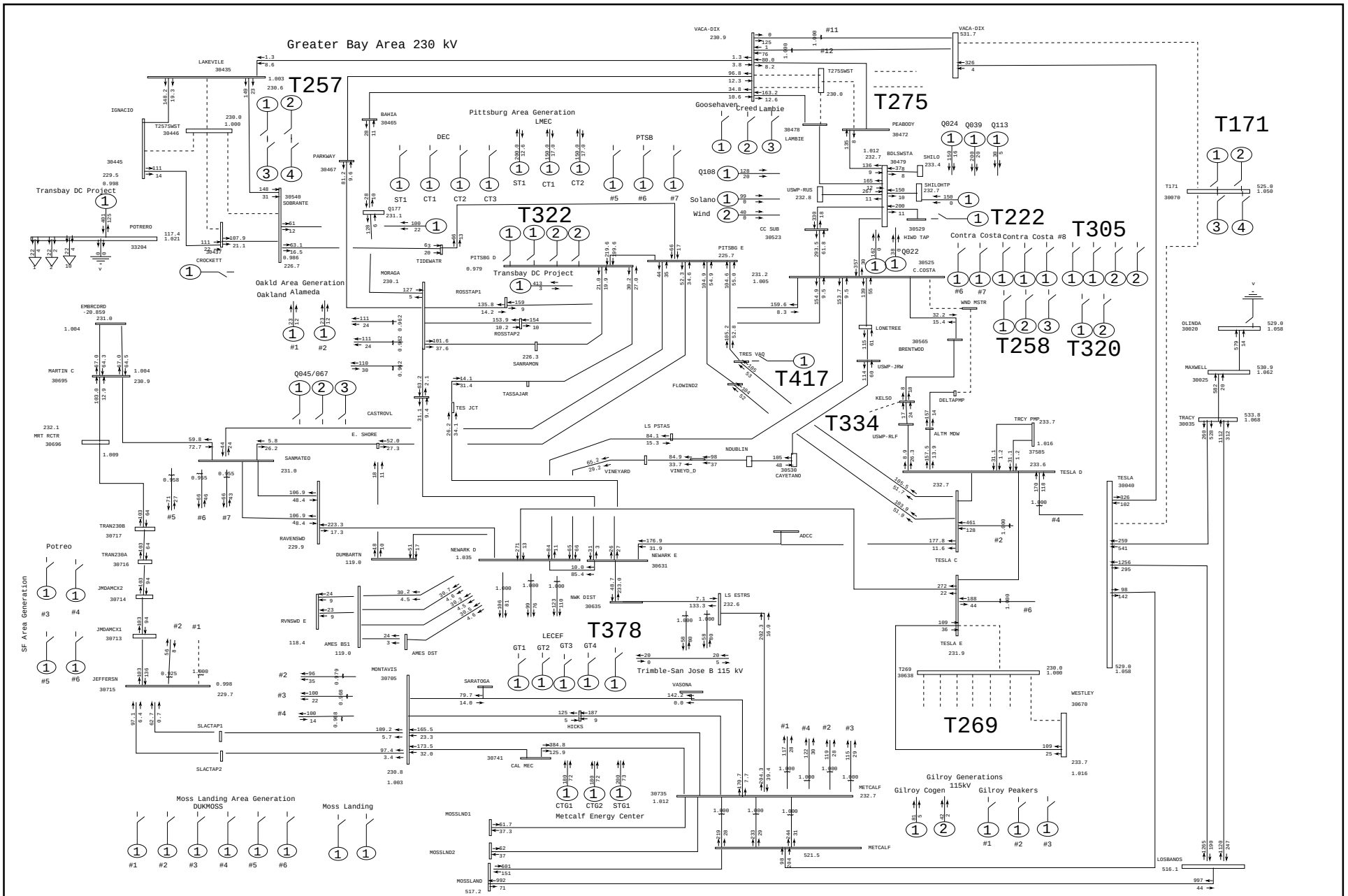

General Electric International, Inc. PSLF Program Mon Jul 13 11:55:31 2009 cases\sumop\13sumop-pge-tcp1-grba-pre.sav

Pacific Gas and Electric Company	PG&E 2008 CASE SERIES: 2013 Summer Off Peak Case PATH15= 5294 MW(S-N) PATH26=-1637 MW(N-S) PDCI=-1846 MW(N-S) COI=-3584 MW(N-S) PG&E 2008 Group 1 Greater Bay Area Summer Off Peak Transition Pre-Cluster Case	Plot 033: Contra Costa - Delta Pumps 230 kV Line Outage	MW/MVAR draw\grba\pge-tcp1-grba- Rating = 2

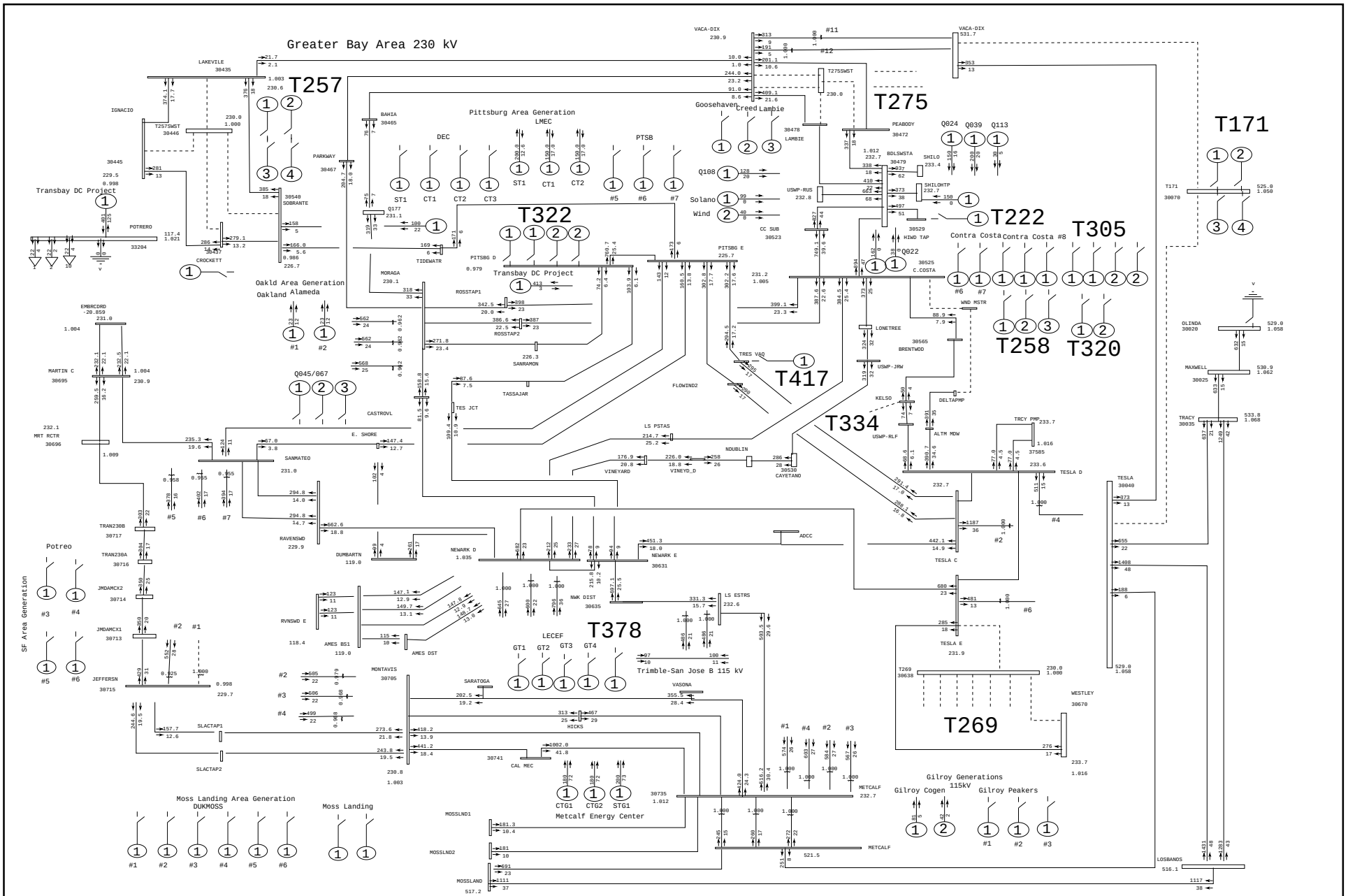

General Electric International, Inc. PSLF Program Mon Jul 13 11:55:33 2009 cases\sumop\13sumop-pge-tcp1-grba-pre.sav

Pacific Gas and Electric Company	PG&E 2008 CASE SERIES: 2013 Summer Off Peak Case PATH15= 5294 MW(S-N) PATH26=-1637 MW(N-S) PDCI=-1846 MW(N-S) COI=-3584 MW(N-S) PG&E 2008 Group 1 Greater Bay Area Summer Off Peak Transition Pre-Cluster Case	Plot 034: Contra Costa - Delta Pumps 230 kV Line Outage	amps/rate draw\grba\pge-tcp1-grba- Rating = 2

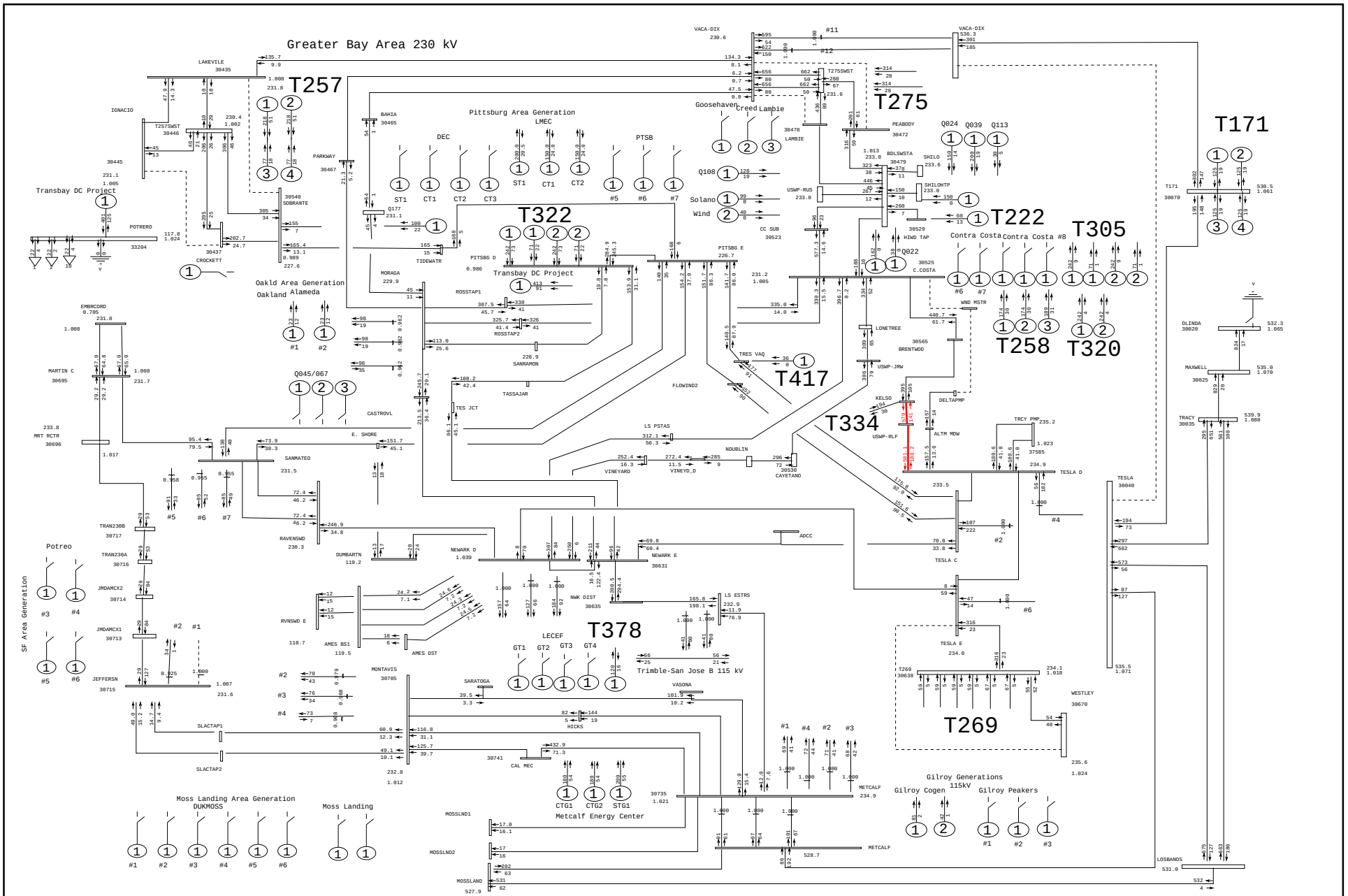

General Electric International, Inc. PSLF Program Mon Jul 13 11:55:39 2009 cases\sumop\13sumop-pge-tcp1-grba-pst.sav

Pacific Gas and Electric Company	PG&E 2008 CASE SERIES: 2013 Summer Off Peak Case PATH15= 3141 MW(S-N) PATH26= -212 MW(N-S) PDCI=-1846 MW(N-S) COI=-3658 MW(N-S) PG&E 2008 Group 1 Greater Bay Area Summer Off Peak Transition Post-Cluster Case	Plot 035: Contra Costa - Delta Pumps 230 kV Line Outage	MW/MVAR draw\grba\pge-tcp1-grba- Rating = 2

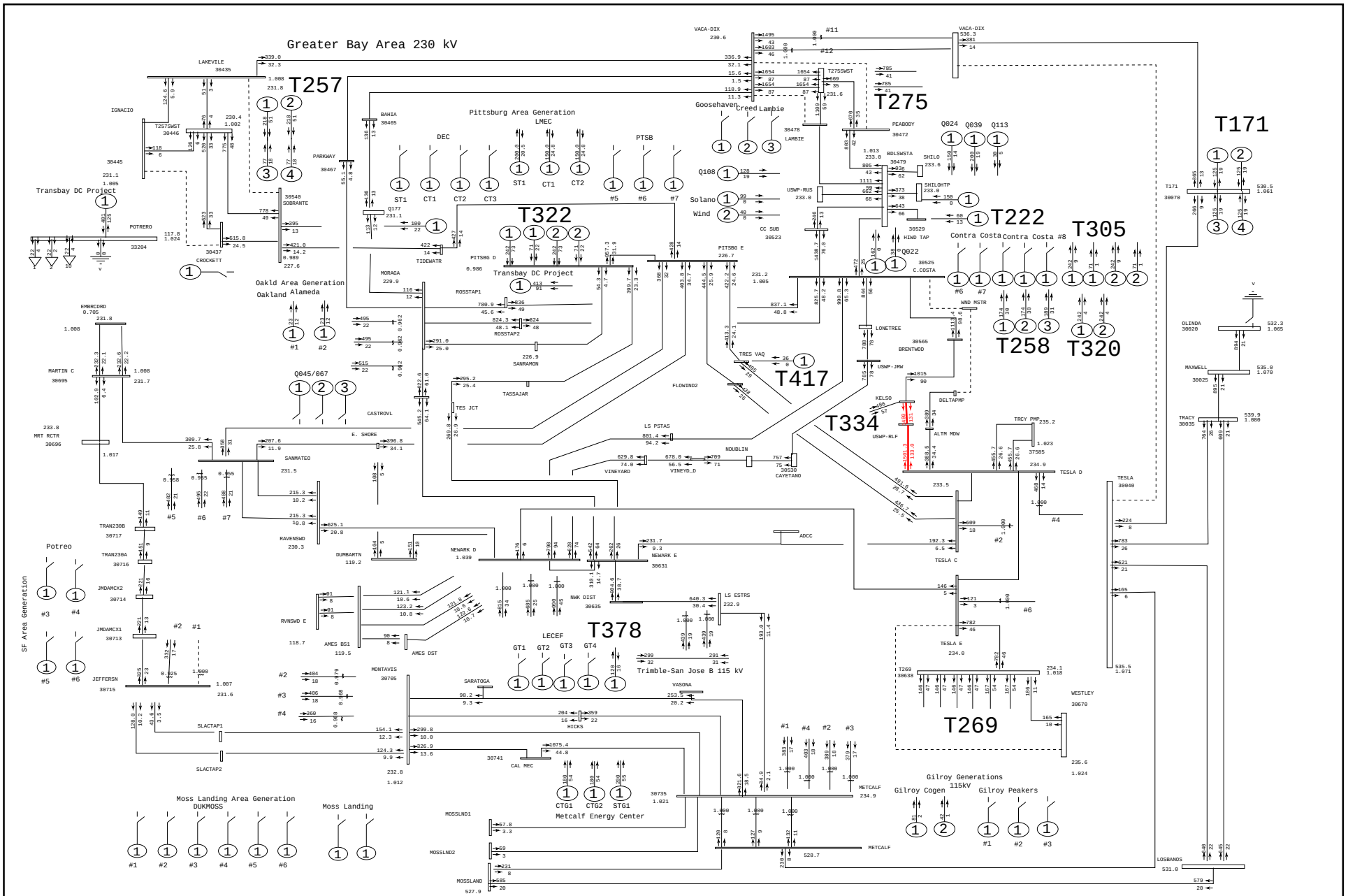

General Electric International, Inc. PSLF Program Mon Jul 13 11:55:40 2009 cases\sumop\13sumop-pge-tcp1-grba-pst.sav

Pacific Gas and Electric Company	PG&E 2008 CASE SERIES: 2013 Summer Off Peak Case PATH15= 3141 MW(S-N) PATH26= -212 MW(N-S) PDCI=-1846 MW(N-S) COI=-3658 MW(N-S) PG&E 2008 Group 1 Greater Bay Area Summer Off Peak Transition Post-Cluster Case	Plot 036: Contra Costa - Delta Pumps 230 kV Line Outage	amps/rate draw\grba\pge-tcp1-grba- Rating = 2

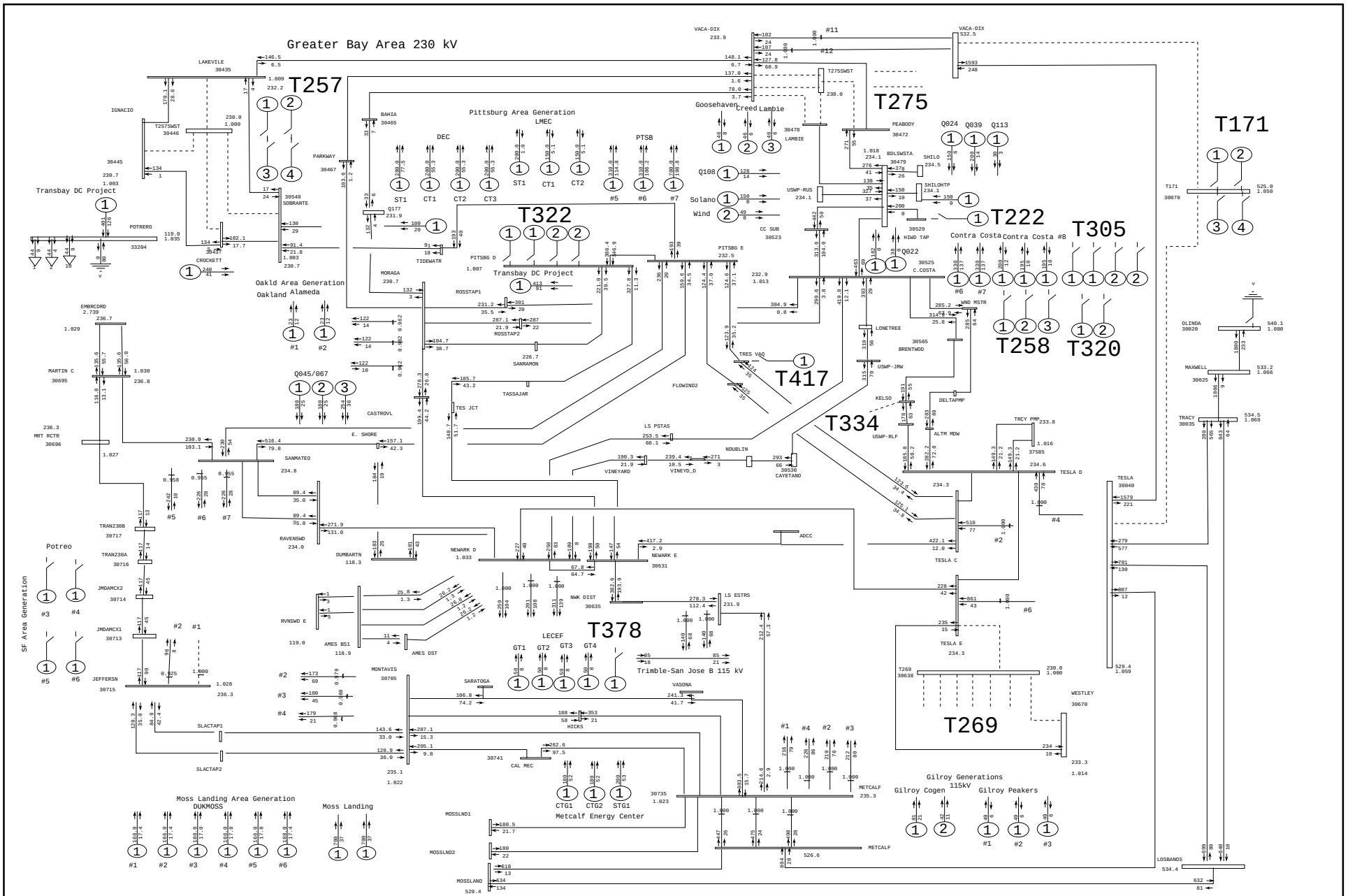

General Electric International, Inc. PSLF Program Mon Jul 13 11:55:43 2009 cases\sumpk\13sumpk-pge-tcp1-grba-pre.sav

Pacific Gas and Electric Company	PG&E 2008 CASE SERIES: 2013 Greater Bay Area Summer Peak Case (1-in-10 load) PATH15=-1215 MW(S-N) PATH26= 3906 MW(N-S) PDCI= 3096 MW(N-S) COI= 4710 MW(N-S) PG&E 2008 Group 1 Greater Bay Area Summer Peak Transition Pre-Cluster Case	Plot 037: Vaca-Dixon - T275 #1 230 kV Line Outage	MW/MVAR draw\grba\pge-tcp1-grba- Rating = 2

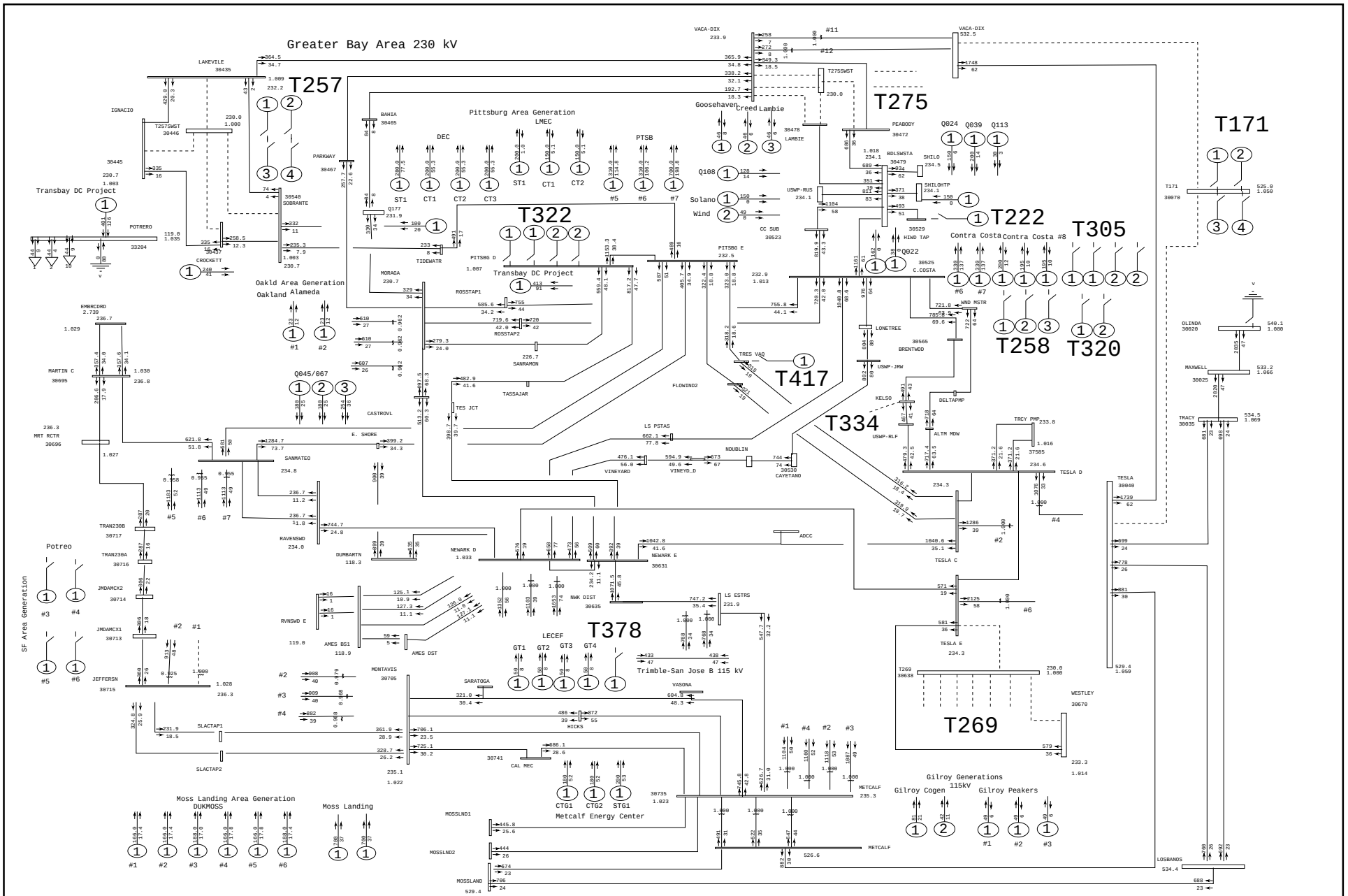

General Electric International, Inc. PSLF Program Mon Jul 13 11:55:45 2009 cases\sumpk\13sumpk-pge-tcp1-grba-pre.sav

Pacific Gas and Electric Company	PG&E 2008 CASE SERIES: 2013 Greater Bay Area Summer Peak Case (1-in-10 load) PATH15=-1215 MW(S-N) PATH26= 3906 MW(N-S) PDCI= 3096 MW(N-S) COI= 4710 MW(N-S) PG&E 2008 Group 1 Greater Bay Area Summer Peak Transition Pre-Cluster Case	Plot 038: Vaca-Dixon - T275 #1 230 kV Line Outage	amps/rate draw\grba\pge-tcp1-grba- Rating = 2

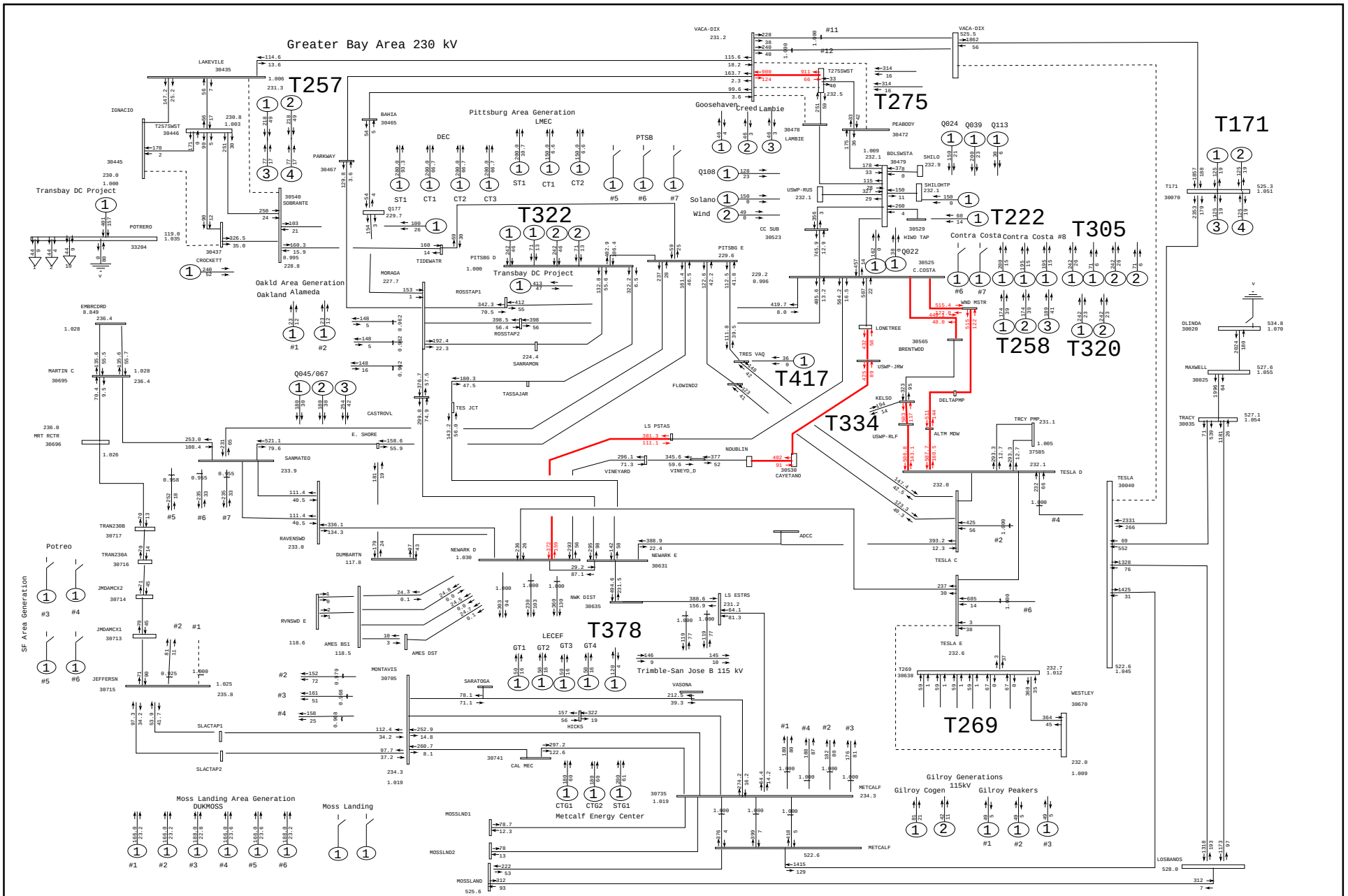

General Electric International, Inc. PSLF Program Mon Jul 13 11:55:48 2009 cases\sumpk\13sumpk-pge-tcp1-grba-pst.sav

Pacific Gas and Electric Company	PG&E 2008 CASE SERIES: 2013 Greater Bay Area Summer Peak Case (1-in-10 load) PATH15=-2341 MW(S-N) PATH26= 3975 MW(N-S) PDCI= 3087 MW(N-S) COI= 4585 MW(N-S) PG&E 2008 Group 1 Greater Bay Area Summer Peak Transition Post-Cluster Case	Plot 039: Vaca-Dixon - T275 #1 230 kV Line Outage	MW/MVAR draw\grba\pge-tcp1-grba- Rating = 2

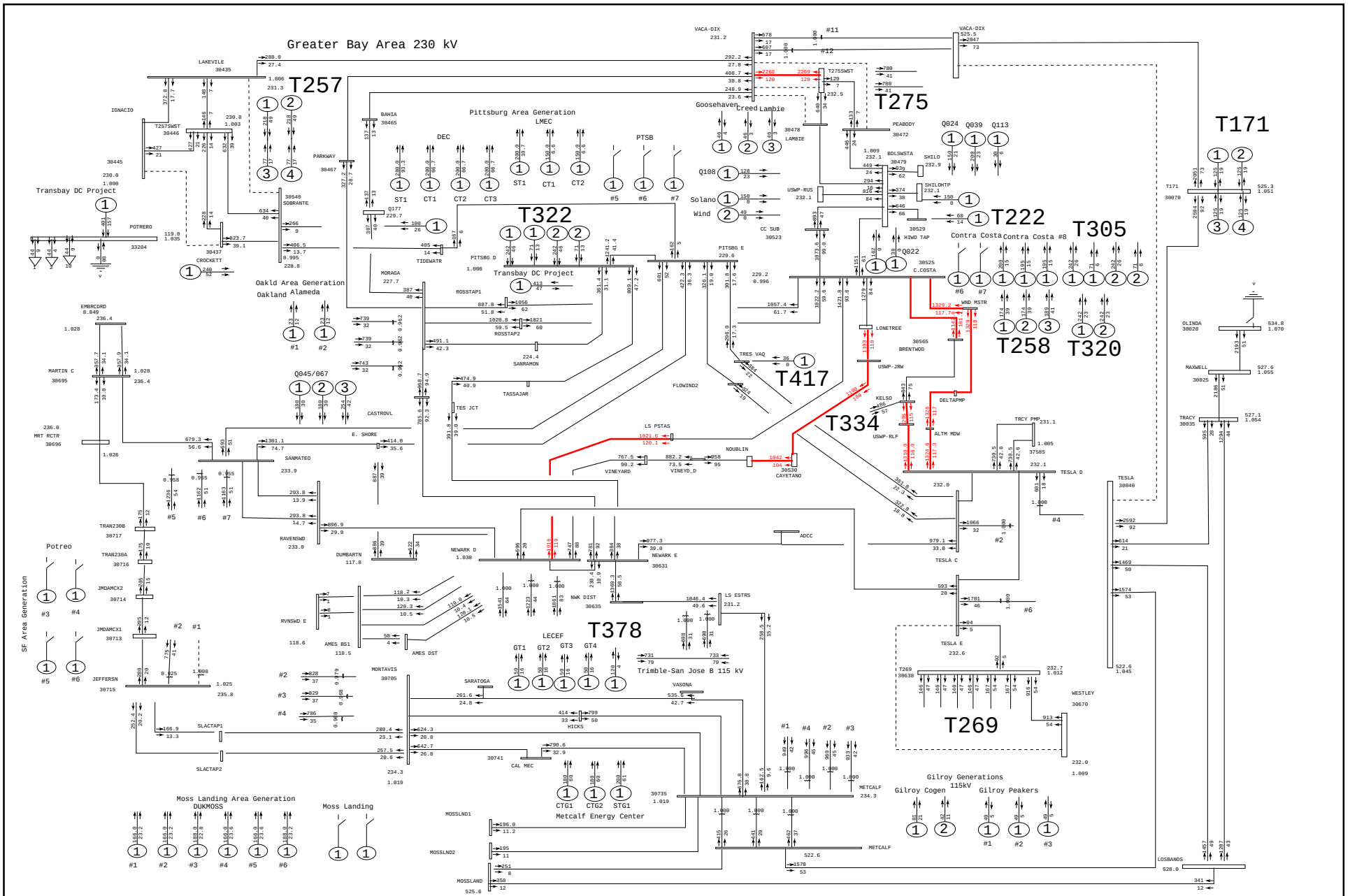

General Electric International, Inc. PSLF Program Mon Jul 13 11:55:49 2009 cases\sumpk\13sumpk-pge-tcp1-grba-pst.sav

Pacific Gas and Electric Company	PG&E 2008 CASE SERIES: 2013 Greater Bay Area Summer Peak Case (1-in-10 load) PATH15=-2341 MW(S-N) PATH26= 3975 MW(N-S) PDCI= 3087 MW(N-S) COI= 4585 MW(N-S) PG&E 2008 Group 1 Greater Bay Area Summer Peak Transition Post-Cluster Case	Plot 040: Vaca-Dixon - T275 #1 230 kV Line Outage	amps/rate draw\grba\pge-tcp1-grba- Rating = 2

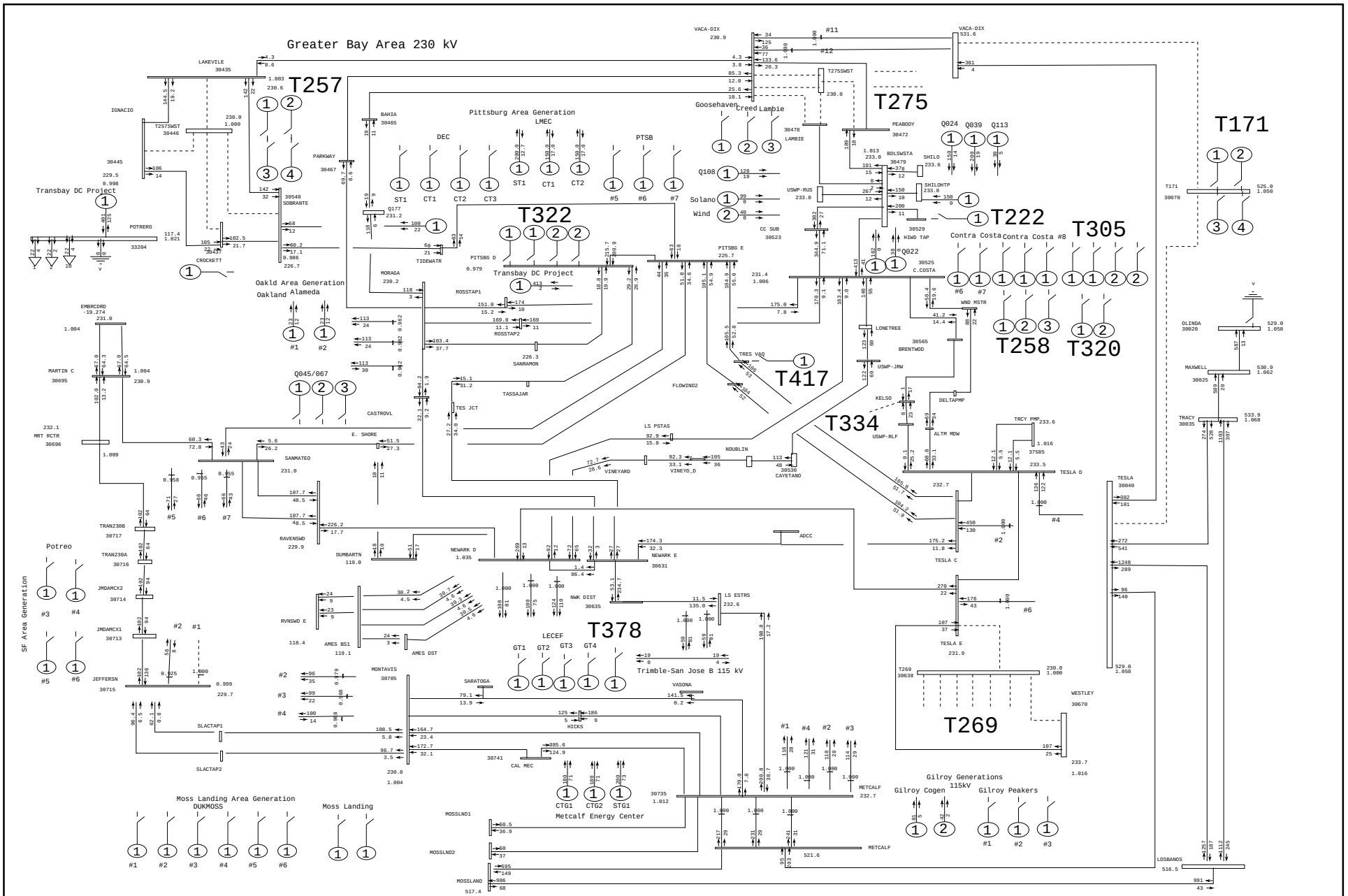

General Electric International, Inc. PSLF Program Mon Jul 13 11:55:51 2009 cases\sumop\13sumop-pge-tcp1-grba-pre.sav

Pacific Gas and Electric Company	PG&E 2008 CASE SERIES: 2013 Summer Off Peak Case PATH15= 5294 MW(S-N) PATH26=-1637 MW(N-S) PDCI=-1846 MW(N-S) COI=-3584 MW(N-S) PG&E 2008 Group 1 Greater Bay Area Summer Off Peak Transition Pre-Cluster Case	Plot 041: Vaca-Dixon - T275 #1 230 kV Line Outage	MW/MVAR draw\grba\pge-tcp1-grba- Rating = 2

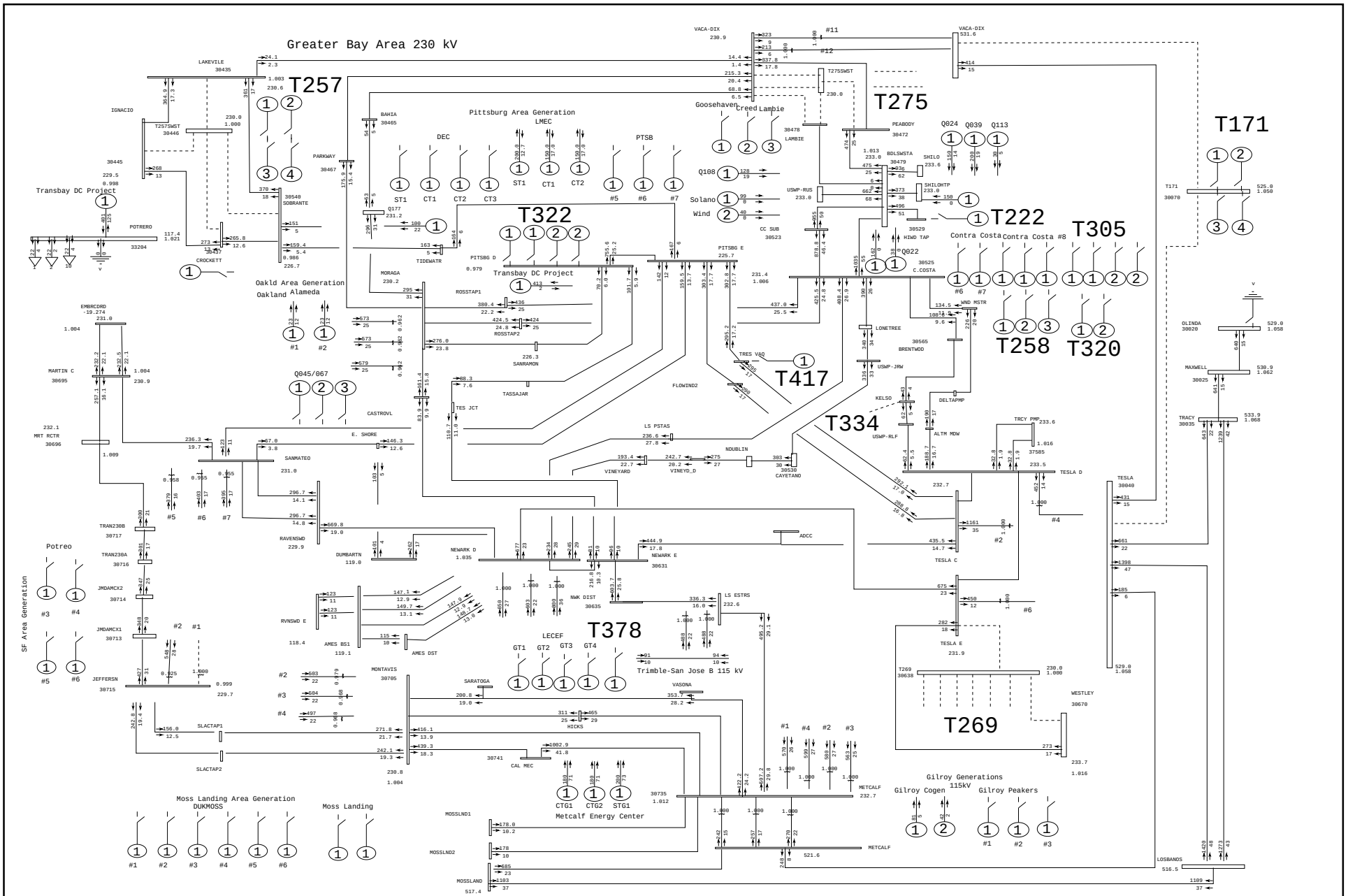

General Electric International, Inc. PSLF Program Mon Jul 13 11:55:53 2009 cases\sumop\13sumop-pge-tcp1-grba-pre.sav

Pacific Gas and Electric Company	PG&E 2008 CASE SERIES: 2013 Summer Off Peak Case PATH15= 5294 MW(S-N) PATH26=-1637 MW(N-S) PDCI=-1846 MW(N-S) COI=-3584 MW(N-S) PG&E 2008 Group 1 Greater Bay Area Summer Off Peak Transition Pre-Cluster Case	Plot 042: Vaca-Dixon - T275 #1 230 kV Line Outage	amps/rate draw\grba\pge-tcp1-grba- Rating = 2

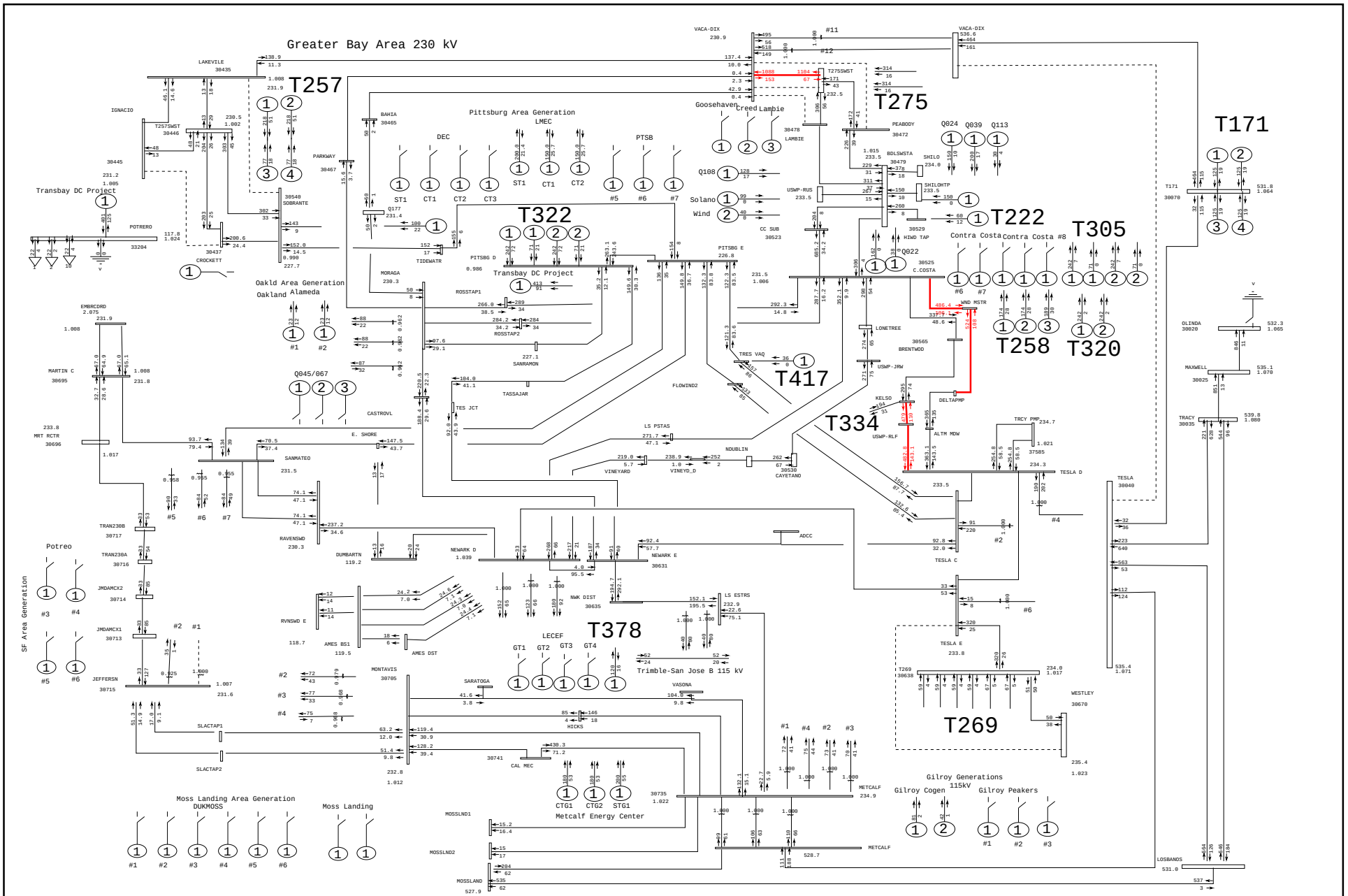

General Electric International, Inc. PSLF Program Mon Jul 13 11:55:56 2009 cases\sumop\13sumop-pge-tcp1-grba-pst.sav

Pacific Gas and Electric Company	PG&E 2008 CASE SERIES: 2013 Summer Off Peak Case PATH15= 3141 MW(S-N) PATH26= -212 MW(N-S) PDCI=-1846 MW(N-S) COI=-3658 MW(N-S) PG&E 2008 Group 1 Greater Bay Area Summer Off Peak Transition Post-Cluster Case	Plot 043: Vaca-Dixon - T275 #1 230 kV Line Outage	MW/MVAR draw\grba\pge-tcp1-grba- Rating = 2

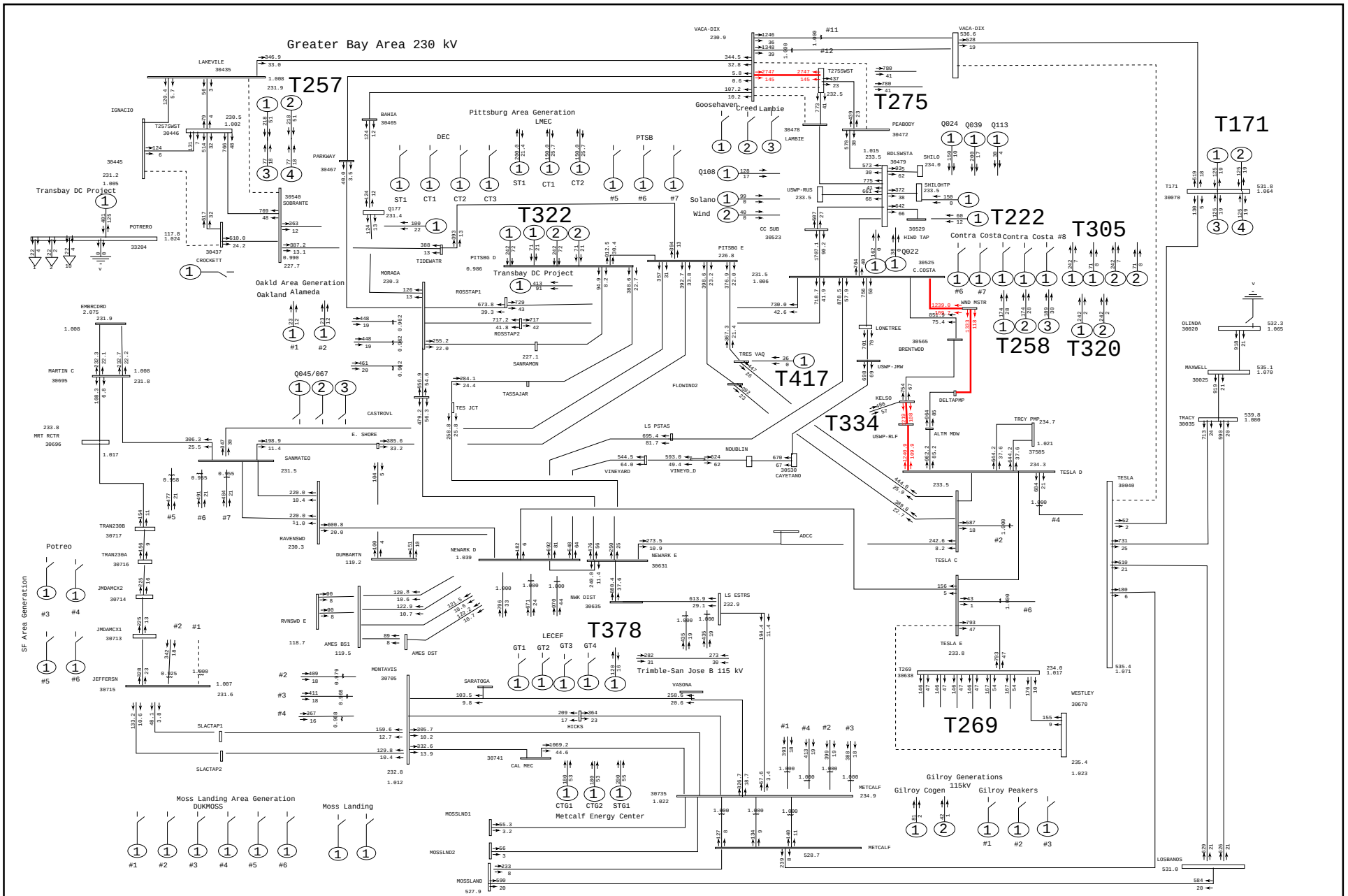

General Electric International, Inc. PSLF Program Mon Jul 13 11:55:57 2009 cases\sumop\13sumop-pge-tcp1-grba-pst.sav

Pacific Gas and Electric Company	PG&E 2008 CASE SERIES: 2013 Summer Off Peak Case PATH15= 3141 MW(S-N) PATH26= -212 MW(N-S) PDCI=-1846 MW(N-S) COI=-3658 MW(N-S) PG&E 2008 Group 1 Greater Bay Area Summer Off Peak Transition Post-Cluster Case	Plot 044: Vaca-Dixon - T275 #1 230 kV Line Outage	amps/rate draw\grba\pge-tcp1-grba- Rating = 2

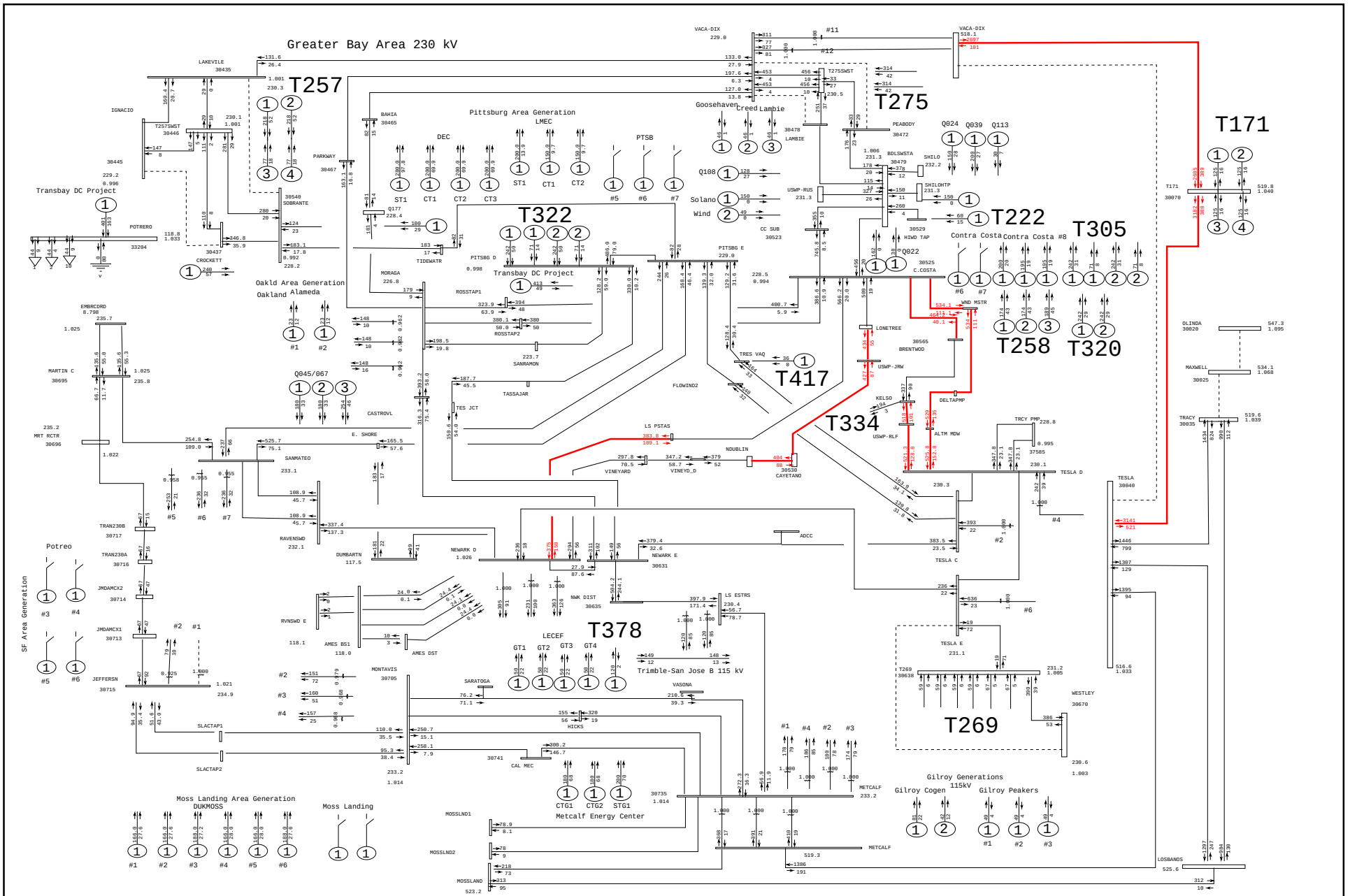

General Electric International, Inc. PSLF Program Mon Jul 13 11:56:00 2009 draw\grba\pt-13sumpk-grba-pst-dyn_swt06_b2_olda-trcy-500kV.sav

Pacific Gas and Electric Company	PG&E 2008 CASE SERIES: 2013 Greater Bay Area Summer Peak Case (1-in-10 load) PATH15=-2341 MW(S-N) PATH26= 3975 MW(N-S) PDCI= 3087 MW(N-S) COI= 4585 MW(N-S) PG&E 2008 Group 1 Greater Bay Area Summer Peak Transition Post-Cluster Case	Plot 045: Olinda - Tracy 500 kV Line Outage	MW/MVAR draw\grba\pge-tcp1-grba- Rating = 2

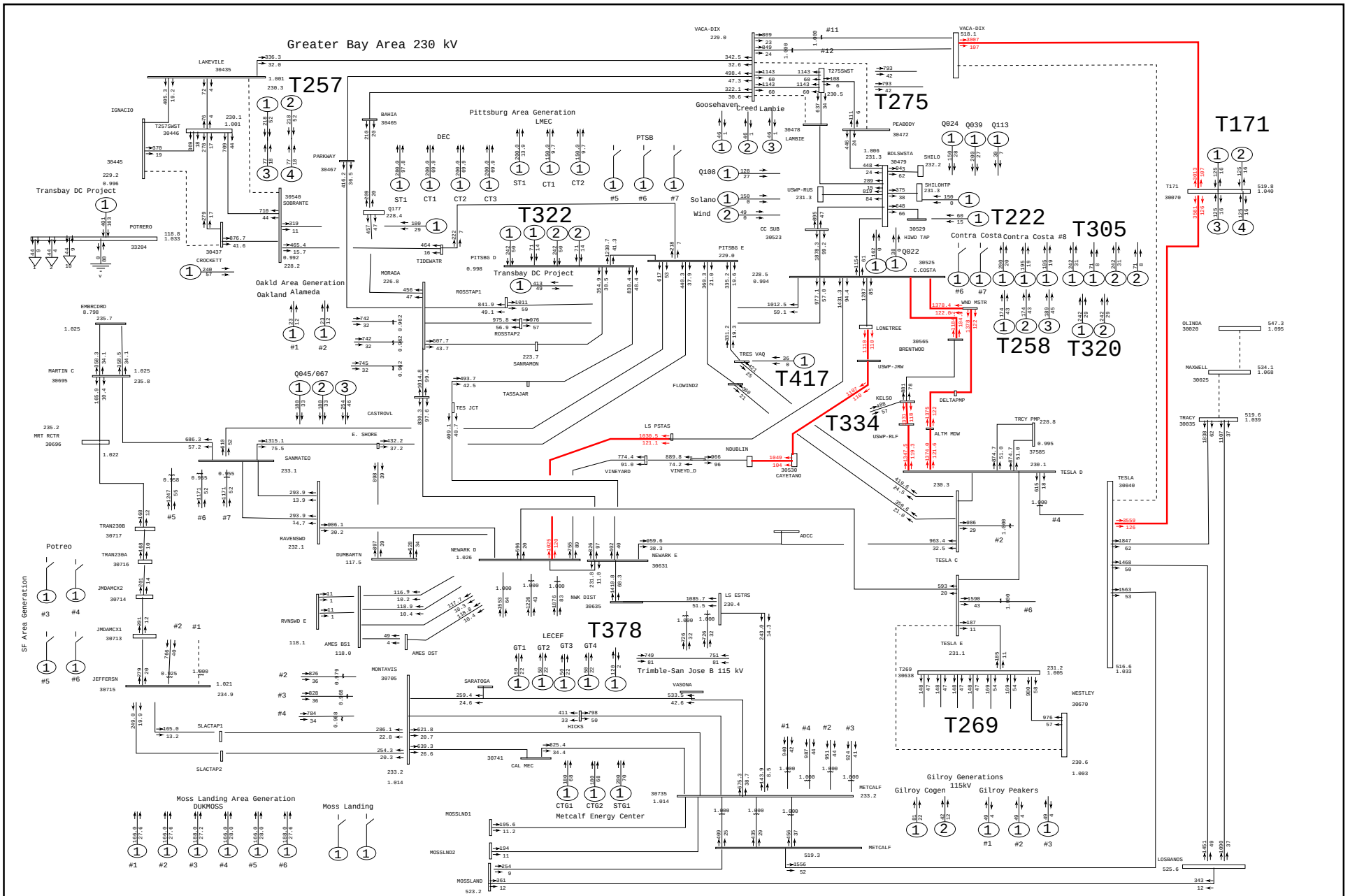

General Electric International, Inc. PSLF Program Mon Jul 13 11:56:02 2009 draw\grba\pt-13sumpk-grba-pst-dyn_swt06_b2_olda-trcy-500kV.sav

Pacific Gas and Electric Company	PG&E 2008 CASE SERIES: 2013 Greater Bay Area Summer Peak Case (1-in-10 load) PATH15=-2341 MW(S-N) PATH26= 3975 MW(N-S) PDCI= 3087 MW(N-S) COI= 4585 MW(N-S) PG&E 2008 Group 1 Greater Bay Area Summer Peak Transition Post-Cluster Case	Plot 046: Olinda - Tracy 500 kV Line Outage	amps/rate draw\grba\pge-tcp1-grba- Rating = 2

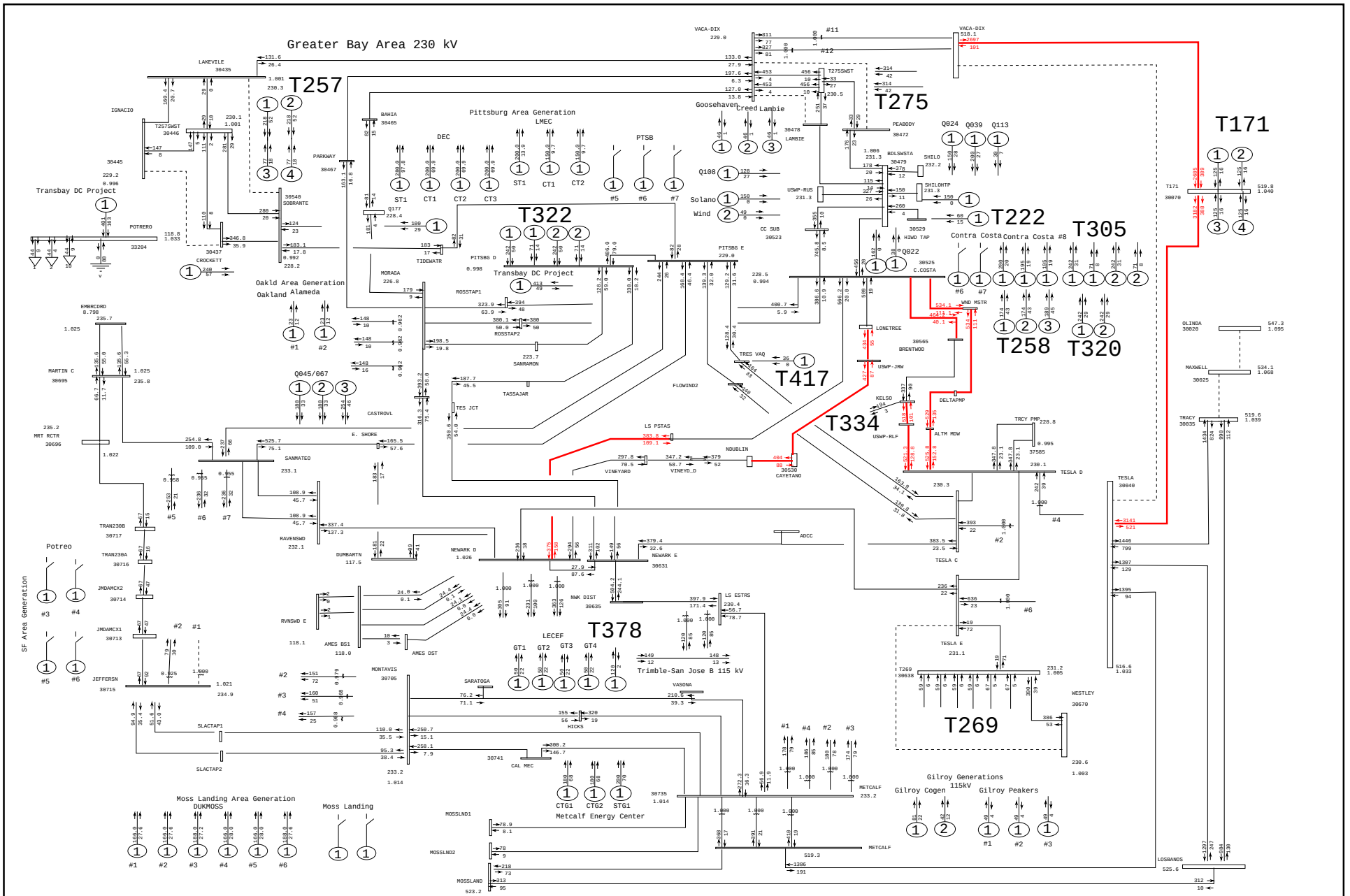

General Electric International, Inc. PSLF Program Mon Jul 13 11:56:05 2009 draw\grba\pt-13sumpk-grba-pst-dyn_swt06_b2_olda-trcy-500kV.sav

Pacific Gas and Electric Company	PG&E 2008 CASE SERIES: 2013 Greater Bay Area Summer Peak Case (1-in-10 load) PATH15=-2341 MW(S-N) PATH26= 3975 MW(N-S) PDCI= 3087 MW(N-S) COI= 4585 MW(N-S) PG&E 2008 Group 1 Greater Bay Area Summer Peak Transition Post-Cluster Case	Plot 047: Olinda - Tracy 500 kV Line Outage	MW/MVAR draw\grba\pge-tcp1-grba- Rating = 2

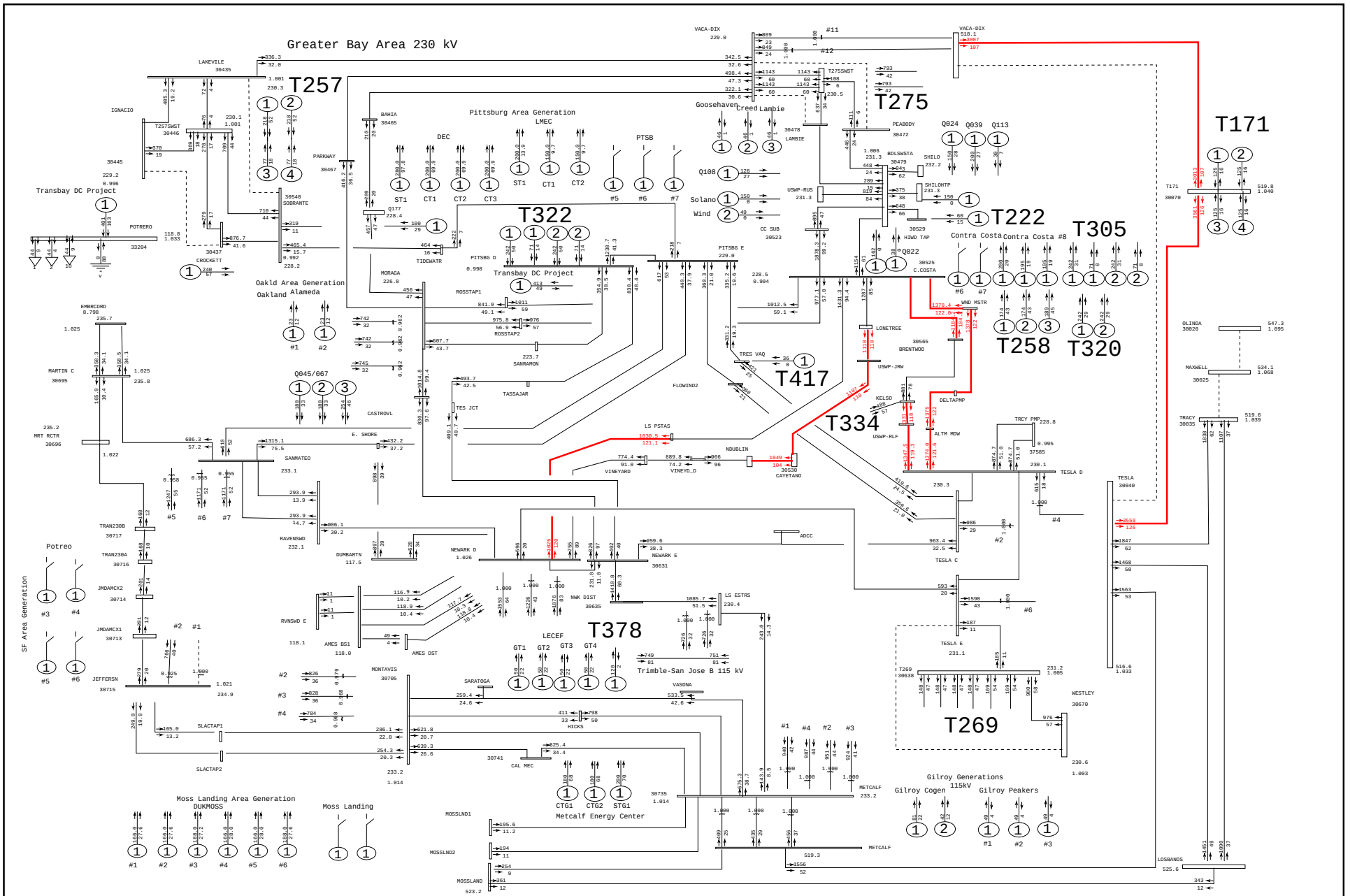

General Electric International, Inc. PSLF Program Mon Jul 13 11:56:06 2009 draw\grba\pt-13sumpk-grba-pst-dyn_swt06_b2_olda-trcy-500kV.sav

Pacific Gas and Electric Company	PG&E 2008 CASE SERIES: 2013 Greater Bay Area Summer Peak Case (1-in-10 load) PATH15=-2341 MW(S-N) PATH26= 3975 MW(N-S) PDCI= 3087 MW(N-S) COI= 4585 MW(N-S) PG&E 2008 Group 1 Greater Bay Area Summer Peak Transition Post-Cluster Case	Plot 048: Olinda - Tracy 500 kV Line Outage	amps/rate draw\grba\pge-tcp1-grba- Rating = 2

Appendix C

Contingency Lists for Outages

Autocon Input Files

Group 1 - Greater Bay Area

```
# PG&E TCP1 Group 5 Greater Bay Area 2013 category b contingency list
# North Bay, East Bay, Diablo, San Francisco, Peninsula, Mission, DeAnza and San Jose Divisions
# Zones 306, 307, 308, 309, 310, 316, 317, 318 and selected outages from Sacramento/Sierra 304/311
#
  # 2013 category b contingency list
  # selected Sacramento/Sierra outages
  #
  #
  # (1)  B2 LINE OUTAGE (BREAKER-TO-BREAKER)
  # pre-project outage
 1  30460 30472  "1 "    0     # line from  VACA-DIX 230.00  BRKR to BRKR  PEABODY  230.00
 0
  #
  #
  # (2)  B2 LINE OUTAGE (BREAKER-TO-BREAKER)
  # pre-project outage
 1  30460 30478  "1 "    0     # line from  VACA-DIX 230.00  BRKR to BRKR  LAMBIE   230.00
 0
  #
  #
  # (3)  B2 LINE OUTAGE (BREAKER-TO-BREAKER)
  # post-project outage
 1  30452 30472  "1 "    0     # line from  T275SWST 230.00  BRKR to BRKR  PEABODY  230.00
 0
  #
  #
  # (4)  B2 LINE OUTAGE (BREAKER-TO-BREAKER)
  # post-project outage
 1  30452 30478  "1 "    0     # line from  T275SWST 230.00  BRKR to BRKR  LAMBIE   230.00
 0
  #
  #
  # (5)  B2 LINE OUTAGE (BREAKER-TO-BREAKER)
  # post-project outage
 1  30460 30452  "1 "    0     # line from  VACA-DIX 230.00  BRKR to BRKR  T275SWST 230.00
 0
  #
  #
  # (6)  B2 LINE OUTAGE (BREAKER-TO-BREAKER)
  # post-project outage
 1  30460 30452  "2 "    0     # line from  VACA-DIX 230.00  BRKR to BRKR  T275SWST 230.00
 0
  #
  #
  # (7)  B2 LINE OUTAGE (BREAKER-TO-BREAKER)
  #
 1  30472 30479  "1 "    0     # line from  PEABODY  230.00  BRKR to BRKR  BDLSWSTA 230.00
 0
  #
  #
  # (8)  B2 LINE OUTAGE (BREAKER-TO-BREAKER)
  #
 1  30478 30479  "1 "    0     # line from  LAMBIE   230.00  BRKR to BRKR  BDLSWSTA 230.00
 0
  #
  #
  # (9)  B2 LINE OUTAGE (BREAKER-TO-BREAKER)
  #
 1  30330 30482  "1 "    0     # line from  RIO OSO  230.00  BRKR to BRKR  LOCKFORD 230.00
 0
  #
  #
  # (10)  B2 LINE OUTAGE (BREAKER-TO-BREAKER)
  #
 1  30337 30622  "1 "    0     # line from  GOLDHILL 230.00  BRKR to BRKR  EIGHT MI 230.00
 0
  #
  #
  # (11)  B2 LINE OUTAGE (BREAKER-TO-BREAKER)
  #
 1  30348 30500  "1 "    0     # line from  BRIGHTON 230.00  BRKR to BRKR  BELLOTA  230.00
 0
  #
  #
  # (12)  B2 LINE OUTAGE (BREAKER-TO-BREAKER)
  #
```

```
1  30482 30500  "1 "    0     # line from  LOCKFORD 230.00  BRKR to BRKR  BELLOTA  230.00
0
 #
 #
 # (13)  B2 LINE OUTAGE (BREAKER-TO-BREAKER)
 #
1  30485 30487  "1 "    0     # line from  TIGR CRK 230.00  BRKR to BRKR  ELECTRA  230.00
0
 #
 #
 # (14)  B2 LINE OUTAGE (BREAKER-TO-BREAKER)
 #
1  30485 30490  "1 "    0     # line from  TIGR CRK 230.00  BRKR to BRKR  VLLY SPS 230.00
0
 #
 #
 # (15)  B2 LINE OUTAGE (BREAKER-TO-BREAKER)
 #
1  30487 30500  "1 "    0     # line from  ELECTRA  230.00  BRKR to BRKR  BELLOTA  230.00
0
 #
 #
 # (16)  B2 LINE OUTAGE (BREAKER-TO-BREAKER)
 #
1  30489 30624  "1 "    0     # line from  STAGG-J2 230.00   (2) to BRKR  TESLA E  230.00
1  30489 30499  "1 "    0     # line from  STAGG-J2 230.00   (2) to BRKR  STAGG-E  230.00
0
 #
 #
 # (17)  B2 LINE OUTAGE (BREAKER-TO-BREAKER)
 #
1  30490 30500  "1 "    0     # line from  VLLY SPS 230.00  BRKR to BRKR  BELLOTA  230.00
0
 #
 #
 # (18)  B2 LINE OUTAGE (BREAKER-TO-BREAKER)
 #
1  30500 30503  "1 "    0     # line from  BELLOTA  230.00  BRKR to BRKR  COLLERVL 230.00
0
 #
 #
 # (19)  B2 LINE OUTAGE (BREAKER-TO-BREAKER)
 #
1  30500 30503  "2 "    0     # line from  BELLOTA  230.00  BRKR to BRKR  COLLERVL 230.00
0
 #
 #
 # (20)  B2 LINE OUTAGE (BREAKER-TO-BREAKER)
 #
1  30500 30505  "1 "    0     # line from  BELLOTA  230.00  BRKR to BRKR  WEBER    230.00
0
 #
 #
 # (21)  B2 LINE OUTAGE (BREAKER-TO-BREAKER)
 #
1  30500 30888  "1 "    0     # line from  BELLOTA  230.00  BRKR to BRKR  Q172     230.00
0
 #
 #
 # (22)  B2 LINE OUTAGE (BREAKER-TO-BREAKER)
 #
1  30500 38206  "1 "    0     # line from  BELLOTA  230.00  BRKR to (2)   COTTLE A 230.00
1  38206 37563  "1 "    0     # line from  COTTLE A 230.00   (2) to BRKR  MELONES  230.00
4  38206     0  "1 "    0     # LOAD-DROP    COTTLE A 230.00  LOAD==20.21(0.91)
0
 #
 #
 # (23)  B2 LINE OUTAGE (BREAKER-TO-BREAKER)
 #
1  30500 38208  "1 "    0     # line from  BELLOTA  230.00  BRKR to (2)   COTTLE B 230.00
1  38208 30515  "1 "    0     # line from  COTTLE B 230.00   (2) to BRKR  WARNERVL 230.00
4  38208     0  "2 "    0     # LOAD-DROP    COTTLE B 230.00  LOAD==23.24(1.04)
0
 #
 #
 # (24)  B2 LINE OUTAGE (BREAKER-TO-BREAKER)
 #
1  30505 30888  "1 "    0     # line from  WEBER    230.00  BRKR to BRKR  Q172     230.00
```

```
0
 #
 #
 # (25)  B2 LINE OUTAGE (BREAKER-TO-BREAKER)
 #
1  30527 30595  "1 "    0     # line from  PITSBG E 230.00  BRKR to (3)   FLOWIND2 230.00
1  30595 30640  "1 "    0     # line from  FLOWIND2 230.00   (3) to BRKR  TESLA C  230.00
2  30595 33840  "1 "    0     # TRAN from  FLOWIND2 230.00   (3) to (1)   FLOWD3-6   9.11
4  33840     0  "SG"    0     # LOAD-DROP    FLOWD3-6   9.11  LOAD==0.70(0.34)
3  33840     0  "1 "    0     # GEN-DROP    FLOWD3-6   9.11  GEN==1.30(0.00)
3  33840     0  "4 "    0     # GEN-DROP    FLOWD3-6   9.11  GEN==1.10(0.00)
0
 #
 #
 # (26)  B2 LINE OUTAGE (BREAKER-TO-BREAKER)
 #
1  30565 30569  "1 "    0     # line from  BRENTWOD 230.00  BRKR to BRKR  KELSO    230.00
0
 #
 #
 # (27)  B2 LINE OUTAGE (BREAKER-TO-BREAKER)
 #
1  30569 30570  "1 "    0     # line from  KELSO    230.00  BRKR to (4)   USWP-RLF 230.00
1  30570 30571  "1 "    0     # line from  USWP-RLF 230.00   (4) to (2)   ALTALAND 230.00
1  30570 30625  "1 "    0     # line from  USWP-RLF 230.00   (4) to BRKR  TESLA D  230.00
2  30570 33836  "1 "    0     # TRAN from  USWP-RLF 230.00   (4) to (1)   USWP_#4    9.11
2  30571 33832  "1 "    0     # TRAN from  ALTALAND 230.00   (2) to (1)   COG.CAPT   9.11
4  33836     0  "SG"    0     # LOAD-DROP    USWP_#4    9.11  LOAD==0.34(0.21)
3  33836     0  "3 "    0     # GEN-DROP    USWP_#4    9.11  GEN==4.50(0.00)
3  33832     0  "1 "    0     # GEN-DROP    COG.CAPT   9.11  GEN==4.30(6.60)
0
 #
 #
 # (28)  B2 LINE OUTAGE (BREAKER-TO-BREAKER)
 #
1  30580 30625  "1 "    0     # line from  ALTM MDW 230.00   (3) to BRKR  TESLA D  230.00
1  30580 38610  "1 "    0     # line from  ALTM MDW 230.00   (3) to BRKR  DELTAPMP 230.00
2  30580 33175  "1 "    0     # TRAN from  ALTM MDW 230.00   (3) to (1)   ALTAMONT   9.11
0
 #
 #
 # (29)  B2 LINE OUTAGE (BREAKER-TO-BREAKER)
 # pre and post-project outage
1  30527 30600  "2 "    0     # line from  PITSBG E 230.00  BRKR to (4)   TRES VAQ 230.00
1  30600 30640  "2 "    0     # line from  TRES VAQ 230.00   (4) to BRKR  TESLA C  230.00
2  30600 33171  "1 "    0     # TRAN from  TRES VAQ 230.00   (4) to (1)   TRSVQ+NW   9.11
2  30600 33195  "1 "    0     # TRAN from  TRES VAQ 230.00   (4) to (1)   T417      34.50
4  33195     0  "ss"    0     # LOAD-DROP    T417      34.50  LOAD==0.10(0.06)
3  33195     0  "1 "    0     # GEN-DROP    T417      34.50  GEN==36.10(0.00)
0
 #
 #
 # (30)  B2 LINE OUTAGE (BREAKER-TO-BREAKER)
 #
1  30622 30495  "1 "    0     # line from  EIGHT MI 230.00  BRKR to BRKR  STAGG    230.00
0
 #
 #
 # (31)  B2 LINE OUTAGE (BREAKER-TO-BREAKER)
 #
1  30622 30624  "1 "    0     # line from  EIGHT MI 230.00  BRKR to BRKR  TESLA E  230.00
0
 #
 #
 # (32)  B2 LINE OUTAGE (BREAKER-TO-BREAKER)
 #
1  30624 30630  "1 "    0     # line from  TESLA E  230.00  BRKR to BRKR  NEWARK D 230.00
0
 #
 #
 # (33)  B2 LINE OUTAGE (BREAKER-TO-BREAKER)
 # pre-project outage
1  30624 30670  "1 "    0     # line from  TESLA E  230.00  BRKR to BRKR  WESTLEY  230.00
0
 #
 #
 # (34)  B2 LINE OUTAGE (BREAKER-TO-BREAKER)
 # post-project outage
```

```
1  30624 30638  "1 "    0     # line from  TESLA E  230.00  BRKR to BRKR  T269     230.00
0
 #
 #
 # (35)  B2 LINE OUTAGE (BREAKER-TO-BREAKER)
 # post-project outage
1  30638 30670  "1 "    0     # line from  T269     230.00  BRKR to BRKR  WESTLEY  230.00
0
 #
 #
 # (36)  B2 LINE OUTAGE (BREAKER-TO-BREAKER)
 #
1  30624 30888  "1 "    0     # line from  TESLA E  230.00  BRKR to BRKR  Q172     230.00
0
 #
 #
 # (37)  B2 LINE OUTAGE (BREAKER-TO-BREAKER)
 #
1  30624 30888  "2 "    0     # line from  TESLA E  230.00  BRKR to BRKR  Q172     230.00
0
 #
 #
 # (38)  B2 LINE OUTAGE (BREAKER-TO-BREAKER)
 #
1  30632 30624  "1 "    0     # line from  TESL_GEN 230.00  BRKR to BRKR  TESLA E  230.00
0
 #
 #
 # (39)  B2 LINE OUTAGE (BREAKER-TO-BREAKER)
 #
1  30632 30624  "2 "    0     # line from  TESL_GEN 230.00  BRKR to BRKR  TESLA E  230.00
0
 #
 #
 # (40)  B2 LINE OUTAGE (BREAKER-TO-BREAKER)
 #
1  30640 30655  "2 "    0     # line from  TESLA C  230.00  BRKR to (3)   ADCC     230.00
1  30655 30631  "2 "    0     # line from  ADCC     230.00   (3) to BRKR  NEWARK E 230.00
2  30655 35310  "1 "    0     # TRAN from  ADCC     230.00   (3) to (1)   LFC FIN+   9.11
0
 #
 #
 # (41)  B2 LINE OUTAGE (BREAKER-TO-BREAKER)
 #
1  30640 30703  "1 "    0     # line from  TESLA C  230.00  BRKR to BRKR  RAVENSWD 230.00
0
 #
 #
 # (42)  B1 GENERATOR OUTAGE
 #
3  32191     0  "1"     0     # T275GT1   13.80       PGEN=109.00  QGEN=13.69
0
 #
 #
 # (43)  B1 GENERATOR OUTAGE
 #
3  33813     0  "1"     0     # T334CT1   13.80       PGEN=49.40  QGEN=4.90
0
 #
 #
 # (44)  B1 GENERATOR OUTAGE
 #
3  33879     0  "1"     0     # T269BS1   13.80       PGEN=8.43  QGEN=1.08
0
 #
 #
 # 2013 category b contingency list
 # North Bay Division Zone 306
 #
 #
 # (45)  B2 LINE OUTAGE (BREAKER-TO-BREAKER)
 #
1  30430 30445  "1 "    0     # line from  FULTON   230.00  BRKR to BRKR  IGNACIO  230.00
0
 #
 #
 # (46)  B2 LINE OUTAGE (BREAKER-TO-BREAKER)
 #
```

```
1  30433 30445  "2 "    0     # line from  T22_93B  230.00   (2) to BRKR  IGNACIO  230.00
1  30433 30435  "2 "    0     # line from  T22_93B  230.00   (2) to BRKR  LAKEVILE 230.00
0
 #
 #
 # (47)  B2 LINE OUTAGE (BREAKER-TO-BREAKER)
 #
1  30435 30445  "1 "    0     # line from  LAKEVILE 230.00  BRKR to BRKR  IGNACIO  230.00
0
 #
 #
 # (48)  B2 LINE OUTAGE (BREAKER-TO-BREAKER)
 # pre-project outage
1  30437 30445  "1 "    0     # line from  CROCKETT 230.00   (3) to BRKR  IGNACIO  230.00
1  30437 30438  "1 "    0     # line from  CROCKETT 230.00   (3) to (2)   C&H      230.00
1  30437 30540  "1 "    0     # line from  CROCKETT 230.00   (3) to BRKR  SOBRANTE 230.00
2  30438 32900  "1 "    0     # TRAN from  C&H      230.00  BRKR to (1)   CRCKTCOG  18.00
4  30438     0  "1 "    0     # LOAD-DROP    C&H      230.00  LOAD==3.32(0.76)
3  32900     0  "1 "    0     # GEN-DROP    CRCKTCOG  18.00  GEN==240.00(40.82)
0
 #
 #
 # (49)  B2 LINE OUTAGE (BREAKER-TO-BREAKER)
 # post-project outage
1  30435 30446  "1 "    0     # line from  LAKEVILE 230.00  BRKR to BRKR  T257SWST 230.00
0
 #
 #
 # (50)  B2 LINE OUTAGE (BREAKER-TO-BREAKER)
 # post-project outage
1  30445 30446  "1 "    0     # line from  IGNACIO  230.00  BRKR to BRKR  T257SWST 230.00
0
 #
 #
 # (51)  B2 LINE OUTAGE (BREAKER-TO-BREAKER)
 # post-project outage
1  30446 30437  "1 "    0     # line from  T257SWST 230.00  BRKR to (3)   CROCKETT 230.00
1  30437 30438  "1 "    0     # line from  CROCKETT 230.00   (3) to (2)   C&H      230.00
1  30437 30540  "1 "    0     # line from  CROCKETT 230.00   (3) to BRKR  SOBRANTE 230.00
2  30438 32900  "1 "    0     # TRAN from  C&H      230.00  BRKR to (1)   CRCKTCOG  18.00
4  30438     0  "1 "    0     # LOAD-DROP    C&H      230.00  LOAD==3.32(0.76)
3  32900     0  "1 "    0     # GEN-DROP    CRCKTCOG  18.00  GEN==240.00(54.42)
0
 #
 #
 # (52)  B2 LINE OUTAGE (BREAKER-TO-BREAKER)
 # post-project outage
1  30446 30447  "1 "    0     # line from  T257SWST 230.00  BRKR to (5)   T257     230.00
2  30447 32711  "1 "    0     # TRAN from  T257     230.00   (5) to (1)   T257GT1   16.50
2  30447 32712  "1 "    0     # TRAN from  T257     230.00   (5) to (1)   T257GT2   16.50
2  30447 32713  "1 "    0     # TRAN from  T257     230.00   (5) to (1)   T257ST1   13.80
2  30447 32714  "1 "    0     # TRAN from  T257     230.00   (5) to (1)   T257ST2   13.80
4  32711     0  "ss"    0     # LOAD-DROP    T257GT1   16.50  LOAD==3.75(2.07)
4  32712     0  "ss"    0     # LOAD-DROP    T257GT2   16.50  LOAD==3.75(2.07)
4  32713     0  "ss"    0     # LOAD-DROP    T257ST1   13.80  LOAD==3.75(2.07)
4  32714     0  "ss"    0     # LOAD-DROP    T257ST2   13.80  LOAD==3.75(2.07)
3  32711     0  "1 "    0     # GEN-DROP    T257GT1   16.50  GEN==218.00(50.25)
3  32712     0  "2 "    0     # GEN-DROP    T257GT2   16.50  GEN==218.00(50.25)
3  32713     0  "3 "    0     # GEN-DROP    T257ST1   13.80  GEN==77.00(17.46)
3  32714     0  "4 "    0     # GEN-DROP    T257ST2   13.80  GEN==77.00(17.46)
0
 #
 #
 # (53)  B2 LINE OUTAGE (BREAKER-TO-BREAKER)
 # post-project outage
1  30446 30540  "2 "    0     # line from  T257SWST 230.00  BRKR to BRKR  SOBRANTE 230.00
0
 #
 #
 # (54)  B2 LINE OUTAGE (BREAKER-TO-BREAKER)
 #
1  30460 30465  "1 "    0     # line from  VACA-DIX 230.00  BRKR to BRKR  BAHIA    230.00
0
 #
 #
 # (55)  B2 LINE OUTAGE (BREAKER-TO-BREAKER)
 #
1  30460 30467  "1 "    0     # line from  VACA-DIX 230.00  BRKR to BRKR  PARKWAY  230.00
```

```
0
 #
 #
 # (56)  B2 LINE OUTAGE (BREAKER-TO-BREAKER)
 #
1  30465 30466  "1 "    0     # line from  BAHIA    230.00  BRKR to BRKR  Q177     230.00
0
 #
 #
 # (57)  B2 LINE OUTAGE (BREAKER-TO-BREAKER)
 #
1  30466 30550  "1 "    0     # line from  Q177     230.00  BRKR to BRKR  MORAGA   230.00
0
 #
 #
 # (58)  B2 LINE OUTAGE (BREAKER-TO-BREAKER)
 #
1  30467 30550  "1 "    0     # line from  PARKWAY  230.00  BRKR to BRKR  MORAGA   230.00
0
 #
 #
 # (59)  B2 LINE OUTAGE (BREAKER-TO-BREAKER)
 #
1  31258 32564  "1 "    0     # line from  SONOMA   115.00  BRKR to BRKR  PUEBLO   115.00
0
 #
 #
 # (60)  B2 LINE OUTAGE (BREAKER-TO-BREAKER)
 #
1  31264 32553  "1 "    0     # line from  STHELNJ2 115.00   (2) to (3)   MNTCLOJ2 115.00
1  31264 32549  "1 "    0     # line from  STHELNJ2 115.00  BRKR to BRKR  SILVRDJ2 115.00
1  32553 32554  "1 "    0     # line from  MNTCLOJ2 115.00   (3) to (1)   MONTCLLO 115.00
1  32553 32559  "1 "    0     # line from  MNTCLOJ2 115.00   (3) to (2)   MTCLPHJ2 115.00
1  32559 32560  "1 "    0     # line from  MTCLPHJ2 115.00   (2) to (2)   MNTCLOPH 115.00
2  32560 32700  "1 "    0     # TRAN from  MNTCLOPH 115.00   (2) to (1)   MONTICLO   9.11
4  32554     0  "1 "    0     # LOAD-DROP    MONTCLLO 115.00  LOAD==6.93(0.99)
3  32700     0  "1 "    0     # GEN-DROP    MONTICLO   9.11  GEN==4.70(0.00)
3  32700     0  "2 "    0     # GEN-DROP    MONTICLO   9.11  GEN==4.70(0.00)
0
 #
 #
 # (61)  B2 LINE OUTAGE (BREAKER-TO-BREAKER)
 #
1  31265 32555  "1 "    0     # line from  STHELNJ1 115.00   (3) to (2)   MNTCLOJ1 115.00
1  31265 32562  "1 "    0     # line from  STHELNJ1 115.00   (3) to (2)   PUEBLOJT 115.00
1  31265 32551  "1 "    0     # line from  STHELNJ1 115.00   (3) to (2)   SILVRDJ1 115.00
1  32555 32561  "1 "    0     # line from  MNTCLOJ1 115.00   (2) to (1)   MTCLPHJ1 115.00
1  32562 32564  "1 "    0     # line from  PUEBLOJT 115.00   (2) to BRKR  PUEBLO   115.00
1  32551 31251  "1 "    0     # line from  SILVRDJ1 115.00   (2) to (2)   RINCONJ1 115.00
1  31251 31236  "1 "    0     # line from  RINCONJ1 115.00   (2) to BRKR  FULTON   115.00
0
 #
 #
 # (62)  B2 LINE OUTAGE (BREAKER-TO-BREAKER)
 #
1  32549 32550  "1 "    0     # line from  SILVRDJ2 115.00   (3) to (1)   SILVERDO 115.00
1  32549 31218  "1 "    0     # line from  SILVRDJ2 115.00   (3) to (3)   ER_FTNJT 115.00
1  32549 31264  "1 "    0     # line from  SILVRDJ2 115.00  BRKR to BRKR  STHELNJ2 115.00
1  31218 31219  "1 "    0     # line from  ER_FTNJT 115.00   (3) to (2)   ERFT5_25 115.00
1  31218 31249  "1 "    0     # line from  ER_FTNJT 115.00   (3) to (3)   RINCONJ2 115.00
1  31219 31220  "1 "    0     # line from  ERFT5_25 115.00   (2) to BRKR  EGLE RCK 115.00
1  31249 31236  "1 "    0     # line from  RINCONJ2 115.00   (3) to BRKR  FULTON   115.00
1  31249 31250  "1 "    0     # line from  RINCONJ2 115.00   (3) to (1)   RINCON   115.00
4  32550     0  "1 "    0     # LOAD-DROP    SILVERDO 115.00  LOAD==21.67(3.09)
4  32550     0  "2 "    0     # LOAD-DROP    SILVERDO 115.00  LOAD==27.99(3.99)
4  31250     0  "1 "    0     # LOAD-DROP    RINCON   115.00  LOAD==19.57(2.79)
4  31250     0  "2 "    0     # LOAD-DROP    RINCON   115.00  LOAD==17.92(2.55)
1 31251 31250 "1 " 1      # close Line from RINCONJ1 115.00 to RINCON  115.00
4 31250 0     "**" 1      # restore all loads to RINCON  115.00 (Eagle Rock-Fulton-Silverado 115 kV
1 32551 32550 "1 " 1      # close Line from SILVRDJ1 115.00 to SILVERDO 115.00
4 32550 0     "**" 1      # restore all loads to SILVERDO 115.00 (Eagle Rock-Fulton-Silverado 115 k
0
 #
 #
 # (63)  B2 LINE OUTAGE (BREAKER-TO-BREAKER)
 #
1  32568 32569  "1 "    0     # line from  IGNACIO  115.00  BRKR to (2)   HMLT_WET 115.00
1  32569 32578  "1 "    0     # line from  HMLT_WET 115.00   (2) to (2)   SKGGS J2 115.00
```

```
1  32578 32586  "1 "    0     # line from  SKGGS J2 115.00   (2) to (3)   HGHWY J2 115.00
1  32586 31956  "1 "    0     # line from  HGHWY J2 115.00   (3) to (2)   CORDELLT 115.00
1  32586 32590  "1 "    0     # line from  HGHWY J2 115.00   (3) to BRKR  HIGHWAY  115.00
1  31956 32598  "1 "    0     # line from  CORDELLT 115.00   (2) to (2)   NTWR ALT 115.00
1  32598 32608  "1 "    0     # line from  NTWR ALT 115.00   (2) to (2)   CRQNZTP2 115.00
1  32608 32616  "1 "    0     # line from  CRQNZTP2 115.00   (2) to (1)   MEYERTP2 115.00
4  32569     0  "1 "    0     # LOAD-DROP    HMLT_WET 115.00  LOAD==15.00(9.30)
4  32590     0  "1 "    0     # LOAD-DROP    HIGHWAY  115.00  LOAD==20.67(2.94)
4  32590     0  "2 "    0     # LOAD-DROP    HIGHWAY  115.00  LOAD==25.37(3.61)
1  32588 32590  "1 "    1     # LINE-TRANSFER HGHWY J2 115.00 to HGHWY J1 115.00
4  32590     0  "**"    1     # RESTORE HIGHWAY load
0
 #
 #
 # (64)  B2 LINE OUTAGE (BREAKER-TO-BREAKER)
 #
1  32568 32570  "3 "    0     # line from  IGNACIO  115.00  BRKR to BRKR  LS GLLNS 115.00
0
 #
 #
 # (65)  B2 LINE OUTAGE (BREAKER-TO-BREAKER)
 #
1  32568 32574  "1 "    0     # line from  IGNACIO  115.00  BRKR to BRKR  SAN RAFL 115.00
0
 #
 #
 # (66)  B2 LINE OUTAGE (BREAKER-TO-BREAKER)
 #
1  32568 32576  "1 "    0     # line from  IGNACIO  115.00  BRKR to (3)   SKGGS J1 115.00
1  32576 32580  "1 "    0     # line from  SKGGS J1 115.00   (3) to (1)   SKAGGS   115.00
1  32576 32588  "1 "    0     # line from  SKGGS J1 115.00   (3) to (2)   HGHWY J1 115.00
1  32588 32593  "1 "    0     # line from  HGHWY J1 115.00   (2) to (3)   JCPMPJCT 115.00
1  32593 32595  "1 "    0     # line from  JCPMPJCT 115.00   (3) to (1)   JMSCNPMP 115.00
1  32593 32604  "1 "    0     # line from  JCPMPJCT 115.00   (3) to (2)   MREIS JC 115.00
1  32604 32612  "1 "    0     # line from  MREIS JC 115.00   (2) to (3)   CRQNZTP1 115.00
1  32612 32610  "1 "    0     # line from  CRQNZTP1 115.00   (3) to BRKR  MRE IS-Q 115.00
1  32612 32614  "1 "    0     # line from  CRQNZTP1 115.00   (3) to (3)   MEYERTP1 115.00
1  32614 32600  "1 "    0     # line from  MEYERTP1 115.00   (3) to BRKR  MEYERS   115.00
1  32614 32606  "1 "    0     # line from  MEYERTP1 115.00   (3) to BRKR  CARQUINZ 115.00
4  32610     0  "1 "    0     # LOAD-DROP    MRE IS-Q 115.00  LOAD==4.25(0.86)
4  32600     0  "1 "    0     # LOAD-DROP    MEYERS   115.00  LOAD==0.24(0.05)
4  32606     0  "1 "    0     # LOAD-DROP    CARQUINZ 115.00  LOAD==13.23(1.89)
4  32606     0  "2 "    0     # LOAD-DROP    CARQUINZ 115.00  LOAD==11.26(1.60)
1  32616 32606  "1 "    1     # LINE-TRANSFER MEYERTP1 115.00 to MEYERTP2 115.00
4  32606     0  "**"    1     # RESTORE CARQUINEZ load
0
 #
 #
 # (67)  B2 LINE OUTAGE (BREAKER-TO-BREAKER)
 #
1  32570 32574  "3 "    0     # line from  LS GLLNS 115.00  BRKR to BRKR  SAN RAFL 115.00
0
 #
 #
 # (68)  B2 LINE OUTAGE (BREAKER-TO-BREAKER)
 #
1  32602 32620  "1 "    0     # line from  NRTH TWR 115.00  BRKR to (2)   NTWRJCT2 115.00
1  32620 32778  "1 "    0     # line from  NTWRJCT2 115.00   (2) to (3)   MRTNZJCT 115.00
1  32778 32754  "1 "    0     # line from  MRTNZJCT 115.00   (3) to BRKR  OLEUM    115.00
1  32778 32756  "1 "    0     # line from  MRTNZJCT 115.00   (3) to BRKR  CHRISTIE 115.00
4  32602     0  "1 "    0     # LOAD-DROP    NRTH TWR 115.00  LOAD==14.43(2.06)
4  32602     0  "2 "    0     # LOAD-DROP    NRTH TWR 115.00  LOAD==9.58(1.37)
4  32602     0  "3 "    0     # LOAD-DROP    NRTH TWR 115.00  LOAD==6.08(0.87)
4  32602     0  "4 "    0     # LOAD-DROP    NRTH TWR 115.00  LOAD==2.85(0.41)
1  32602 32618  "1 "    1     # LINE-TRANSFER NTWRJCT2 115.00 to NTWRJCT1 115.00
4  32602     0  "**"    1     # RESTORE NORTH TOWER load
0
 #
 #
 # (69)  B2 LINE OUTAGE (BREAKER-TO-BREAKER)
 #
1  32618 32020  "1 "    0     # line from  NTWRJCT1 115.00   (1) to (3)   JMSN JCT 115.00
1  32020 31996  "1 "    0     # line from  JMSN JCT 115.00   (3) to (3)   HALE J1  115.00
1  32020 32010  "1 "    0     # line from  JMSN JCT 115.00   (3) to BRKR  JAMESON  115.00
1  31996 31995  "1 "    0     # line from  HALE J1  115.00   (3) to (2)   HALE     115.00
1  31996 32006  "1 "    0     # line from  HALE J1  115.00   (3) to (3)   VCVLLE1J 115.00
1  31995 32013  "1 "    0     # line from  HALE     115.00   (2) to (1)   HALE2    115.00
1  32006 31998  "1 "    0     # line from  VCVLLE1J 115.00   (3) to BRKR  VACA-DIX 115.00
```

```
1  32006 32000  "1 "    0     # line from  VCVLLE1J 115.00   (3) to BRKR  VACAVLL1 115.00
4  32010     0  "1 "    0     # LOAD-DROP    JAMESON  115.00  LOAD==35.07(1.57)
4  31995     0  "1 "    0     # LOAD-DROP    HALE     115.00  LOAD==2.36(1.40)
4  32000     0  "1 "    0     # LOAD-DROP    VACAVLL1 115.00  LOAD==27.49(1.23)
1  32002 32000  "1"     1     #Line transfer VACAVLL1 115kV TO VACAVLL2 115kV
4  32000     0  "**"    1     #Restore VACAVLL1 load
1  32012 32013  "1"     1     #Transfer load to HALE alternate
4  31995     0  "**"    1     #Restore load at HALE
1  32010 32009  "1 "    1     # LINE-TRANSFER JMSN JCT 115.00 to JAMESN-A 115.00
4  32010     0  "**"    1     # RESTORE JAMESON load
0
 #
 #
 # (70)  B2 LINE OUTAGE (BREAKER-TO-BREAKER)
 #
1  32650 32652  "1 "    0     # line from  ST.HELNA  60.00   (2) to BRKR  CALISTGA  60.00
1  32650 31378  "1 "    0     # line from  ST.HELNA  60.00   (2) to BRKR  FULTON    60.00
4  32652     0  "1 "    0     # LOAD-DROP    CALISTGA  60.00  LOAD==18.46(2.63)
0
 #
 #
 # (71)  B2 LINE OUTAGE (BREAKER-TO-BREAKER)
 #
1  32654 32655  "1 "    0     # line from  TULUCAY   60.00  BRKR to (2)   TULCAY1   60.00
1  32655 32662  "1 "    0     # line from  TULCAY1   60.00   (2) to (4)   TULCY JT  60.00
1  32662 32077  "1 "    0     # line from  TULCY JT  60.00   (4) to (1)   CORD PMP  60.00
1  32662 32656  "1 "    0     # line from  TULCY JT  60.00   (4) to BRKR  NAPA      60.00
1  32662 32093  "1 "    0     # line from  TULCY JT  60.00   (4) to (3)   CRD-JCT   60.00
1  32093 32091  "1 "    0     # line from  CRD-JCT   60.00   (3) to (1)   CRD_INTR  60.00
1  32093 32074  "1 "    0     # line from  CRD-JCT   60.00   (3) to (1)   CORDELIA  60.00
4  32077     0  "1 "    0     # LOAD-DROP    CORD PMP  60.00  LOAD==4.74(1.56)
4  32091     0  "1 "    0     # LOAD-DROP    CRD_INTR  60.00  LOAD==2.80(0.90)
4  32074     0  "4 "    0     # LOAD-DROP    CORDELIA  60.00  LOAD==11.94(0.53)
1 32662 32656 "1 " 1      # close Line from TULCY JT 60.00 to NAPA 60.00
1 32662 32077 "1 " 1      # close Line from TULCY JT 60.00 to CORD PMP 60.00
1 32077 32074 "1 " 1      # close Line from CORD PMP 60.00 to CORDELIA 60.00
4 32077 0     "**" 1      # restore all loads to CORD PMP 60.00
4 32074 0     "**" 1      # restore all loads to CORDELIA 60.00 (Tulucay - Napa #1 60 kV)
0
 #
 #
 # (72)  B2 LINE OUTAGE (BREAKER-TO-BREAKER)
 #
1  32654 32660  "1 "    0     # line from  TULUCAY   60.00  BRKR to (3)   BSLT TAP  60.00
1  32660 32656  "1 "    0     # line from  BSLT TAP  60.00   (3) to BRKR  NAPA      60.00
1  32660 32658  "1 "    0     # line from  BSLT TAP  60.00   (3) to (1)   BASALT    60.00
4  32658     0  "1 "    0     # LOAD-DROP    BASALT    60.00  LOAD==3.68(0.53)
4  32658     0  "2 "    0     # LOAD-DROP    BASALT    60.00  LOAD==20.76(2.96)
1 32655 32658 "1 " 1      # close Line from TULUCAY   60.00 to BASALT 60.00
4 32658 0     "**" 1      # restore all loads to BASALT 60.00 (Tulucay - Napa #2 60 kV)
0
 #
 #
 # (73)  B2 LINE OUTAGE (BREAKER-TO-BREAKER)
 #
1  32664 32667  "1 "    0     # line from  IGNACO A  60.00  BRKR to (3)   IG JCT    60.00
1  32667 32678  "1 "    0     # line from  IG JCT    60.00   (3) to (2)   SAN RFLJ  60.00
1  32667 32668  "1 "    0     # line from  IG JCT    60.00   (3) to BRKR  NOVATO    60.00
1  32678 32680  "1 "    0     # line from  SAN RFLJ  60.00   (2) to BRKR  GREENBRE  60.00
0
 #
 #
 # (74)  B2 LINE OUTAGE (BREAKER-TO-BREAKER)
 #
1  32664 32676  "1 "    0     # line from  IGNACO A  60.00  BRKR to (2)   HMLTN FD  60.00
1  32676 32686  "1 "    0     # line from  HMLTN FD  60.00   (2) to (2)   ALTOJT2   60.00
1  32686 32682  "1 "    0     # line from  ALTOJT2   60.00   (2) to BRKR  ALTO      60.00
1  32676 32677  "1 "    1     # LINE-TRANSFER HMLTN FD 60.00 to HMLTNBFD 60.00
4  32676     0  "**"    1     # RESTORE HMLTN FD load
0
 #
 #
 # (75)  B2 LINE OUTAGE (BREAKER-TO-BREAKER)
 #
1  32664 32677  "1 "    0     # line from  IGNACO A  60.00  BRKR to (2)   HMLTNBFD  60.00
1  32677 32684  "1 "    0     # line from  HMLTNBFD  60.00   (2) to (3)   ALTOJT1   60.00
1  32684 32682  "1 "    0     # line from  ALTOJT1   60.00   (3) to BRKR  ALTO      60.00
1  32684 32688  "1 "    0     # line from  ALTOJT1   60.00   (3) to BRKR  SAUSALTO  60.00
```

```
4  32688     0  "2 "    0     # LOAD-DROP    SAUSALTO  60.00  LOAD==10.92(1.56)
1  32688 32686  "1 "    1     # LINE-TRANSFER SAUSALTO 60.00 to ALTOJT2 60.00
4  32688     0  "**"    1     # RESTORE SAUSALTO load
0
 #
 #
 # (76)  B2 LINE OUTAGE (BREAKER-TO-BREAKER)
 #
1  32666 32669  "1 "    0     # line from  IGNACO B  60.00  BRKR to (3)   STAF_JCT  60.00
1  32669 32673  "1 "    0     # line from  STAF_JCT  60.00   (3) to (3)   TOCA_JCT  60.00
1  32669 32670  "1 "    0     # line from  STAF_JCT  60.00   (3) to BRKR  STAFFORD  60.00
1  32673 32672  "1 "    0     # line from  TOCA_JCT  60.00   (3) to BRKR  OLEMA     60.00
1  32673 32675  "1 "    0     # line from  TOCA_JCT  60.00   (3) to (1)   TOCALOMA  60.00
4  32670     0  "1 "    0     # LOAD-DROP    STAFFORD  60.00  LOAD==10.16(1.45)
4  32670     0  "2 "    0     # LOAD-DROP    STAFFORD  60.00  LOAD==10.61(1.51)
1  32670 32665  "1 "    1     # LINE-TRANSFER STAF_JCT 60.00 to NVTO JCT 60.00
4  32670     0  "**"    1     # RESTORE STAFFORD load
0
 #
 #
 # (77)  B2 LINE OUTAGE (BREAKER-TO-BREAKER)
 #
1  32666 32674  "1 "    0     # line from  IGNACO B  60.00  BRKR to (2)   WOODACRE  60.00
1  32674 32671  "1 "    0     # line from  WOODACRE  60.00   (2) to BRKR  BOLINAS   60.00
4  32674     0  "1 "    0     # LOAD-DROP    WOODACRE  60.00  LOAD==7.94(1.13)
0
 #
 #
 # (78)  B2 LINE OUTAGE (BREAKER-TO-BREAKER)
 #
1  32672 32671  "1 "    0     # line from  OLEMA     60.00  BRKR to BRKR  BOLINAS   60.00
0
 #
 #
 # (79)  B2 LINE OUTAGE (BREAKER-TO-BREAKER)
 #
1  32680 32682  "1 "    0     # line from  GREENBRE  60.00  BRKR to BRKR  ALTO      60.00
0
 #
 #
 # (80)  B3 TRANSFORMER OUTAGE (BREAKER-TO-BREAKER)
 #
2  30464 30465  "1 "    0     # TRAN from  EXXON_BH  12.47   (3) to BRKR  BAHIA    230.00
2  30464 30465  "2 "    0     # TRAN from  EXXON_BH  12.47   (3) to BRKR  BAHIA    230.00
2  30464 30465  "3 "    0     # TRAN from  EXXON_BH  12.47   (3) to BRKR  BAHIA    230.00
4  30464     0  "SG"    0     # LOAD-DROP    EXXON_BH  12.47  LOAD==47.30(30.55)
3  30464     0  "1 "    0     # GEN-DROP    EXXON_BH  12.47  GEN==52.00(19.25)
0
 #
 #
 # (81)  B3 TRANSFORMER OUTAGE (BREAKER-TO-BREAKER)
 #
2  32568 30445  "4 "    0     # TRAN from  IGNACIO  115.00  BRKR to BRKR  IGNACIO  230.00
0
 #
 #
 # (82)  B3 TRANSFORMER OUTAGE (BREAKER-TO-BREAKER)
 #
2  32568 30445  "6 "    0     # TRAN from  IGNACIO  115.00  BRKR to BRKR  IGNACIO  230.00
0
 #
 #
 # (83)  B3 TRANSFORMER OUTAGE (BREAKER-TO-BREAKER)
 #
2  32654 30440  "1 "    0     # TRAN from  TULUCAY   60.00  BRKR to BRKR  TULUCAY  230.00
0
 #
 #
 # (84)  B3 TRANSFORMER OUTAGE (BREAKER-TO-BREAKER)
 #
2  32654 30440  "3 "    0     # TRAN from  TULUCAY   60.00  BRKR to BRKR  TULUCAY  230.00
0
 #
 #
 # (85)  B3 TRANSFORMER OUTAGE (BREAKER-TO-BREAKER)
 #
2  32666 32568  "1 "    0     # TRAN from  IGNACO B  60.00  BRKR to BRKR  IGNACIO  115.00
0
```

```
 #
 #
 # (86)  B3 TRANSFORMER OUTAGE (BREAKER-TO-BREAKER)
 #
2  32666 32568  "3 "    0     # TRAN from  IGNACO B  60.00  BRKR to BRKR  IGNACIO  115.00
0
 #
 #
 # (87)  B1 GENERATOR OUTAGE
 #
3  30464     0  "1 "    0     # EXXON_BH  12.47       PGEN=52.00   QGEN=19.25
0
 #
 #
 # (88)  B1 GENERATOR OUTAGE
 #
3  32900     0  "1 "    0     # CRCKTCOG  18.00       PGEN=240.00  QGEN=40.82
0
 #
 #
 # (89)  B1 GENERATOR OUTAGE
 #
3  32703     0  "1"     0     # Q177WG1    0.58       PGEN=100.00  QGEN=20.16
0
 #
 #
 # (90)  L-1/G-1 OVERLAPPING OUTAGE
 # Fulton - Ignacio 230 kV Line and Crockett Cogen
1  30430 30445  "1 "    0     # line from  FULTON   230.00  BRKR to BRKR  IGNACIO  230.00
 #
3  32900     0  "1 "    0     # CRCKTCOG  18.00       PGEN=240.00  QGEN=40.82
0
 #
 #
 # (91)  L-1/G-1 OVERLAPPING OUTAGE
 # Lakeville - Ignacio #2 230 kV Line and Crockett Cogen
1  30433 30445  "2 "    0     # line from  T22_93B  230.00   (2) to BRKR  IGNACIO  230.00
1  30433 30435  "2 "    0     # line from  T22_93B  230.00   (2) to BRKR  LAKEVILE 230.00
 #
3  32900     0  "1 "    0     # CRCKTCOG  18.00       PGEN=240.00  QGEN=40.82
0
 #
 #
 # (92)  L-1/G-1 OVERLAPPING OUTAGE
 # Lakeville - Ignacio #1 230 kV Line and Crockett Cogen
1  30435 30445  "1 "    0     # line from  LAKEVILE 230.00  BRKR to BRKR  IGNACIO  230.00
 #
3  32900     0  "1 "    0     # CRCKTCOG  18.00       PGEN=240.00  QGEN=40.82
0
 #
 #
 # (93)  L-1/G-1 OVERLAPPING OUTAGE
 # Lakeville - T257 230 kV Line and Crockett Cogen post-project outage
1  30435 30446  "1 "    0     # line from  LAKEVILE 230.00  BRKR to BRKR  T257SWST 230.00
 #
3  32900     0  "1 "    0     # CRCKTCOG  18.00       PGEN=240.00  QGEN=40.82
0
 #
 #
 # (94)  L-1/G-1 OVERLAPPING OUTAGE
 # Ignacio - T257 230 kV Line and Crockett Cogen post-project outage
1  30445 30446  "1 "    0     # line from  IGNACIO  230.00  BRKR to BRKR  T257SWST 230.00
 #
3  32900     0  "1 "    0     # CRCKTCOG  18.00       PGEN=240.00  QGEN=40.82
0
 #
 #
 # (95)  L-1/G-1 OVERLAPPING OUTAGE
 # T257 - Sobrante #2 230 kV Line and Crockett Cogen post-project outage
1  30446 30540  "2 "    0     # line from  T257SWST 230.00  BRKR to BRKR  SOBRANTE 230.00
 #
3  32900     0  "1 "    0     # CRCKTCOG  18.00       PGEN=240.00  QGEN=40.82
0
 #
 #
 # (96)  L-1/G-1 OVERLAPPING OUTAGE
 # Vaca-Dixon - Bahia 230 kV Line and Crockett Cogen
1  30460 30465  "1 "    0     # line from  VACA-DIX 230.00  BRKR to BRKR  BAHIA    230.00
```

```
 #
3  32900     0  "1 "    0     # CRCKTCOG  18.00       PGEN=240.00  QGEN=40.82
0
 #
 #
 # (97)  L-1/G-1 OVERLAPPING OUTAGE
 # Vaca-Dixon - Parkway 230 kV Line and Crockett Cogen
1  30460 30467  "1 "    0     # line from  VACA-DIX 230.00  BRKR to BRKR  PARKWAY  230.00
 #
3  32900     0  "1 "    0     # CRCKTCOG  18.00       PGEN=240.00  QGEN=40.82
0
 #
 #
 # (98)  L-1/G-1 OVERLAPPING OUTAGE
 # Bahia - Q177 230 kV Line and Crockett Cogen
1  30465 30466  "1 "    0     # line from  BAHIA    230.00  BRKR to BRKR  Q177     230.00
 #
3  32900     0  "1 "    0     # CRCKTCOG  18.00       PGEN=240.00  QGEN=40.82
0
 #
 #
 # (99)  L-1/G-1 OVERLAPPING OUTAGE
 # Q177 - Moraga 230 kV Line and Crockett Cogen
1  30466 30550  "1 "    0     # line from  Q177     230.00  BRKR to BRKR  MORAGA   230.00
 #
3  32900     0  "1 "    0     # CRCKTCOG  18.00       PGEN=240.00  QGEN=40.82
0
 #
 #
 # (100)  L-1/G-1 OVERLAPPING OUTAGE
 # Parkway - Moraga 230 kV Line and Crockett Cogen
1  30467 30550  "1 "    0     # line from  PARKWAY  230.00  BRKR to BRKR  MORAGA   230.00
 #
3  32900     0  "1 "    0     # CRCKTCOG  18.00       PGEN=240.00  QGEN=40.82
0
 #
 #
 # 2013 category b contingency list
 # East Bay Division Zone 307
 #
 #
 # (101)  B2 LINE OUTAGE (BREAKER-TO-BREAKER)
 #
1  32740 33006  "1 "    0     # line from  HILLSIDE 115.00  BRKR to (3)   GRIZLYJ1 115.00
1  33006 33010  "1 "    0     # line from  GRIZLYJ1 115.00   (3) to BRKR  SOBRANTE 115.00
1  33006 33012  "1 "    0     # line from  GRIZLYJ1 115.00   (3) to BRKR  EST PRTL 115.00
1  32770 32740  "1 "    0     # include GRIZZLY2 115.00  BRKR to HILLSIDE 115.00 ckt 1
0
 #
 #
 # (102)  B2 LINE OUTAGE (BREAKER-TO-BREAKER)
 #
1  32740 33008  "2 "    0     # line from  HILLSIDE 115.00  BRKR to (3)   GRIZLYJ2 115.00
1  33008 32780  "2 "    0     # line from  GRIZLYJ2 115.00   (3) to BRKR  CLARMNT  115.00
1  33008 33010  "2 "    0     # line from  GRIZLYJ2 115.00   (3) to BRKR  SOBRANTE 115.00
1  32770 32740  "2 "    0     # include GRIZZLY2 115.00  BRKR to HILLSIDE 115.00 ckt 2
0
 #
 #
 # (103)  B2 LINE OUTAGE (BREAKER-TO-BREAKER)
 #
1  32748 32750  "1 "    0     # line from  PP STEEL 115.00  BRKR to (3)   PPSTLTAP 115.00
1  32750 32774  "1 "    0     # line from  PPSTLTAP 115.00   (3) to (3)   PTPNLTAP 115.00
1  32750 32760  "1 "    0     # line from  PPSTLTAP 115.00   (3) to (1)   PT PINLE 115.00
1  32774 32762  "1 "    0     # line from  PTPNLTAP 115.00   (3) to BRKR  STD. OIL 115.00
1  32774 32808  "1 "    0     # line from  PTPNLTAP 115.00   (3) to (2)   SNPBLTP2 115.00
1  32808 33010  "1 "    0     # line from  SNPBLTP2 115.00   (2) to BRKR  SOBRANTE 115.00
4  32748     0  "1 "    0     # LOAD-DROP    PP STEEL 115.00  LOAD==0.19(0.25)
4  32760     0  "1 "    0     # LOAD-DROP    PT PINLE 115.00  LOAD==14.78(3.36)
0
 #
 #
 # (104)  B2 LINE OUTAGE (BREAKER-TO-BREAKER)
 #
1  32754 32802  "1 "    0     # line from  OLEUM    115.00  BRKR to (3)   VLYVWTP1 115.00
1  32802 32764  "1 "    0     # line from  VLYVWTP1 115.00   (3) to BRKR  VALLY VW 115.00
1  32802 32766  "1 "    0     # line from  VLYVWTP1 115.00   (3) to BRKR  EL CRRTO 115.00
4  32764     0  "1 "    0     # LOAD-DROP    VALLY VW 115.00  LOAD==7.65(1.74)
```

```
4  32764     0  "2 "    0     # LOAD-DROP    VALLY VW 115.00  LOAD==15.69(3.58)
1  32764 32804  "2 "    1     # LINE-TRANSFER VLYVWTP1 to VLYVWTP2
4  32764     0  "**"    1     # RESTORE VALLEY VIEW load
0
 #
 #
 # (105)  B2 LINE OUTAGE (BREAKER-TO-BREAKER)
 #
1  32754 32804  "2 "    0     # line from  OLEUM    115.00  BRKR to (2)   VLYVWTP2 115.00
1  32804 32766  "2 "    0     # line from  VLYVWTP2 115.00   (2) to BRKR  EL CRRTO 115.00
0
 #
 #
 # (106)  B2 LINE OUTAGE (BREAKER-TO-BREAKER)
 #
1  32754 32849  "1 "    0     # line from  OLEUM    115.00  BRKR to (2)   CON25    115.00
1  32849 32754  "2 "    0     # line from  CON25    115.00   (2) to BRKR  OLEUM    115.00
4  32849     0  "1 "    0     # LOAD-DROP    CON25    115.00  LOAD==25.00(15.56)
0
 #
 #
 # (107)  B2 LINE OUTAGE (BREAKER-TO-BREAKER)
 #
1  32756 33010  "1 "    0     # line from  CHRISTIE 115.00  BRKR to BRKR  SOBRANTE 115.00
0
 #
 #
 # (108)  B2 LINE OUTAGE (BREAKER-TO-BREAKER)
 #
1  32765 33010  "1 "    0     # line from  ELCRTJ1  115.00   (2) to BRKR  SOBRANTE 115.00
1  32765 32766  "1 "    0     # line from  ELCRTJ1  115.00   (2) to BRKR  EL CRRTO 115.00
0
 #
 #
 # (109)  B2 LINE OUTAGE (BREAKER-TO-BREAKER)
 #
1  32766 33010  "2 "    0     # line from  EL CRRTO 115.00  BRKR to BRKR  SOBRANTE 115.00
0
 #
 #
 # (110)  B2 LINE OUTAGE (BREAKER-TO-BREAKER)
 #
1  32767 33010  "1 "    0     # line from  ELCRTJ2  115.00   (2) to BRKR  SOBRANTE 115.00
1  32767 32768  "1 "    0     # line from  ELCRTJ2  115.00   (2) to BRKR  RICHMOND 115.00
0
 #
 #
 # (111)  B2 LINE OUTAGE (BREAKER-TO-BREAKER)
 #
1  32768 33010  "2 "    0     # line from  RICHMOND 115.00  BRKR to BRKR  SOBRANTE 115.00
0
 #
 #
 # (112)  B2 LINE OUTAGE (BREAKER-TO-BREAKER)
 #
1  32770 32740  "1 "    0     # line from  GRIZZLY2 115.00  BRKR to BRKR  HILLSIDE 115.00
0
 #
 #
 # (113)  B2 LINE OUTAGE (BREAKER-TO-BREAKER)
 #
1  32770 32740  "2 "    0     # line from  GRIZZLY2 115.00  BRKR to BRKR  HILLSIDE 115.00
0
 #
 #
 # (114)  B2 LINE OUTAGE (BREAKER-TO-BREAKER)
 #
1  32780 32782  "1 "    0     # line from  CLARMNT  115.00  BRKR to BRKR  STATIN D 115.00
0
 #
 #
 # (115)  B2 LINE OUTAGE (BREAKER-TO-BREAKER)
 #
1  32780 32782  "2 "    0     # line from  CLARMNT  115.00  BRKR to BRKR  STATIN D 115.00
0
 #
 #
 # (116)  B2 LINE OUTAGE (BREAKER-TO-BREAKER)
```

```
 #
1  32782 32788  "1 "    0     # line from  STATIN D 115.00  BRKR to BRKR  STATIN L 115.00
0
 #
 #
 # (117)  B2 LINE OUTAGE (BREAKER-TO-BREAKER)
 #
1  32786 32788  "1 "    0     # line from  OAK C115 115.00  BRKR to BRKR  STATIN L 115.00
0
 #
 #
 # (118)  B2 LINE OUTAGE (BREAKER-TO-BREAKER)
 #
1  32786 32790  "2 "    0     # line from  OAK C115 115.00  BRKR to BRKR  STATIN X 115.00
0
 #
 #
 # (119)  B2 LINE OUTAGE (BREAKER-TO-BREAKER)
 #
1  32786 32790  "3 "    0     # line from  OAK C115 115.00  BRKR to BRKR  STATIN X 115.00
0
 #
 #
 # (120)  B2 LINE OUTAGE (BREAKER-TO-BREAKER)
 #
1  32786 32793  "1 "    0     # line from  OAK C115 115.00  BRKR to (2)   SCHNITZ  115.00
1  32793 32794  "1 "    0     # line from  SCHNITZ  115.00   (2) to BRKR  MARITIME 115.00
4  32793     0  "1 "    0     # LOAD-DROP    SCHNITZ  115.00  LOAD==9.29(4.50)
4  32794     0  "1 "    0     # LOAD-DROP    MARITIME 115.00  LOAD==0.95(1.11)
0
 #
 #
 # (121)  B2 LINE OUTAGE (BREAKER-TO-BREAKER)
 #
1  32786 38026  "1 "    0     # line from  OAK C115 115.00  BRKR to (4)   ALAMEDCT 115.00
1  38026 38022  "1 "    0     # line from  ALAMEDCT 115.00   (4) to BRKR  CARTWRT  115.00
2  38026 38118  "1 "    0     # TRAN from  ALAMEDCT 115.00   (4) to (1)   ALMDACT1  13.80
2  38026 38119  "1 "    0     # TRAN from  ALAMEDCT 115.00   (4) to (1)   ALMDACT2  13.80
4  38022     0  "1 "    0     # LOAD-DROP    CARTWRT  115.00  LOAD==23.04(4.31)
4  38022     0  "2 "    0     # LOAD-DROP    CARTWRT  115.00  LOAD==23.04(4.31)
3  38118     0  "1 "    0     # GEN-DROP    ALMDACT1  13.80  GEN==22.60(12.40)
3  38119     0  "1 "    0     # GEN-DROP    ALMDACT2  13.80  GEN==22.60(12.40)
0
 #
 #
 # (122)  B2 LINE OUTAGE (BREAKER-TO-BREAKER)
 #
1  32787 32786  "1 "    0     # line from  Q155     115.00   (4) to BRKR  OAK C115 115.00
2  32787 32905  "1 "    0     # TRAN from  Q155     115.00   (4) to (1)   Q155BUS1  13.80
2  32787 32906  "2 "    0     # TRAN from  Q155     115.00   (4) to (1)   Q155BUS2  13.80
2  32787 32907  "3 "    0     # TRAN from  Q155     115.00   (4) to (1)   Q155BUS3  13.80
4  32905     0  "ss"    0     # LOAD-DROP    Q155BUS1  13.80  LOAD==1.20(0.66)
4  32906     0  "ss"    0     # LOAD-DROP    Q155BUS2  13.80  LOAD==1.20(0.66)
4  32907     0  "ss"    0     # LOAD-DROP    Q155BUS3  13.80  LOAD==0.60(0.33)
3  32905     0  "1 "    0     # GEN-DROP    Q155BUS1  13.80  GEN==60.60(15.56)
3  32905     0  "2 "    0     # GEN-DROP    Q155BUS1  13.80  GEN==60.60(15.56)
3  32906     0  "3 "    0     # GEN-DROP    Q155BUS2  13.80  GEN==60.60(15.56)
3  32906     0  "4 "    0     # GEN-DROP    Q155BUS2  13.80  GEN==60.60(15.56)
3  32907     0  "5 "    0     # GEN-DROP    Q155BUS3  13.80  GEN==60.60(24.01)
0
 #
 #
 # (123)  B2 LINE OUTAGE (BREAKER-TO-BREAKER)
 #
1  32792 32798  "1 "    0     # line from  STATIN J 115.00  BRKR to (2)   OWENSTAP 115.00
1  32798 32800  "1 "    0     # line from  OWENSTAP 115.00   (2) to BRKR  OWNBRKWY 115.00
4  32800     0  "1 "    0     # LOAD-DROP    OWNBRKWY 115.00  LOAD==9.29(5.51)
0
 #
 #
 # (124)  B2 LINE OUTAGE (BREAKER-TO-BREAKER)
 #
1  32792 32814  "1 "    0     # line from  STATIN J 115.00  BRKR to (3)   EDESTAP1 115.00
1  32814 32810  "1 "    0     # line from  EDESTAP1 115.00   (3) to BRKR  EDES     115.00
1  32814 35113  "1 "    0     # line from  EDESTAP1 115.00   (3) to (2)   DMTAR_SL 115.00
1  35113 35101  "1 "    0     # line from  DMTAR_SL 115.00   (2) to BRKR  SN LNDRO 115.00
4  32810     0  "2 "    0     # LOAD-DROP    EDES     115.00  LOAD==18.85(4.29)
4  32810     0  "3 "    0     # LOAD-DROP    EDES     115.00  LOAD==29.45(6.71)
```

```
4  35113     0  "1 "    0     # LOAD-DROP    DMTAR_SL 115.00  LOAD==3.61(2.24)
1  32810 32812  "1 "    1     # LINE-TRANSFER EDESTAP1 to EDS GRNT
4  32810     0  "**"    1     # RESTORE EDES load
0
 #
 #
 # (125)  B2 LINE OUTAGE (BREAKER-TO-BREAKER)
 #
1  32792 38024  "1 "    0     # line from  STATIN J 115.00  BRKR to BRKR  JENNY    115.00
4  38024     0  "1 "    0     # LOAD-DROP    JENNY    115.00  LOAD==33.37(6.27)
1  38024 38022  "1 "    1     # LINE-TRANSFER ALAMDA J to ALAMDA C
4  38024     0  "**"    1     # RESTORE ALAMDA J load
0
 #
 #
 # (126)  B2 LINE OUTAGE (BREAKER-TO-BREAKER)
 #
1  32806 32758  "1 "    0     # line from  SNPBLTP1 115.00   (3) to BRKR  SAN PBLO 115.00
1  32806 32762  "2 "    0     # line from  SNPBLTP1 115.00   (3) to BRKR  STD. OIL 115.00
1  32806 33010  "2 "    0     # line from  SNPBLTP1 115.00   (3) to BRKR  SOBRANTE 115.00
4  32758     0  "1 "    0     # LOAD-DROP    SAN PBLO 115.00  LOAD==19.98(4.55)
1  32758 32808  "2 "    1     # LINE-TRANSFER SNPBLTP1 to SNPBLTP2
4  32758     0  "**"    1     # RESTORE SAN PABLO load
0
 #
 #
 # (127)  B2 LINE OUTAGE (BREAKER-TO-BREAKER)
 #
1  32812 35104  "1 "    0     # line from  EDS GRNT 115.00   (1) to BRKR  GRANT    115.00
0
 #
 #
 # (128)  B2 LINE OUTAGE (BREAKER-TO-BREAKER)
 #
1  32850 32852  "1 "    0     # line from  UNIN CHM  60.00   (3) to BRKR  CHRISTIE  60.00
1  32850 32860  "1 "    0     # line from  UNIN CHM  60.00   (3) to BRKR  FRKLNALT  60.00
2  32850 32920  "1 "    0     # TRAN from  UNIN CHM  60.00   (3) to (1)   UNION CH   9.11
4  32920     0  "SG"    0     # LOAD-DROP    UNION CH   9.11  LOAD==2.35(0.54)
3  32920     0  "1 "    0     # GEN-DROP    UNION CH   9.11  GEN==20.40(-9.00)
0
 #
 #
 # (129)  B2 LINE OUTAGE (BREAKER-TO-BREAKER)
 #
1  32852 32856  "2 "    0     # line from  CHRISTIE  60.00  BRKR to (2)   FRANKLIN  60.00
1  32856 32858  "1 "    0     # line from  FRANKLIN  60.00   (2) to (1)   SEQUOIA   60.00
4  32856     0  "1 "    0     # LOAD-DROP    FRANKLIN  60.00  LOAD==16.51(3.76)
4  32856     0  "2 "    0     # LOAD-DROP    FRANKLIN  60.00  LOAD==16.30(3.72)
1  32856 32860  "1 "    1     # LINE-TRANSFER FRANKLIN to FRKLNALT
4  32856     0  "**"    1     # RESTORE FRANKLIN load
0
 #
 #
 # (130)  B2 LINE OUTAGE (BREAKER-TO-BREAKER)
 #
1  32852 33067  "1 "    0     # line from  CHRISTIE  60.00  BRKR to (3)   PCBRICK   60.00
1  33067 32854  "1 "    0     # line from  PCBRICK   60.00   (3) to (1)   PRT CSTA  60.00
1  33067 33066  "1 "    0     # line from  PCBRICK   60.00   (3) to (3)   STAUFFER  60.00
1  33066 33065  "1 "    0     # line from  STAUFFER  60.00   (3) to (2)   URICH     60.00
2  33066 33139  "1 "    0     # TRAN from  STAUFFER  60.00   (3) to (1)   STAUFER    9.11
1  33065 33064  "1 "    0     # line from  URICH     60.00   (2) to (2)   SFPP CNC  60.00
1  33064 33091  "1 "    0     # line from  SFPP CNC  60.00   (2) to (2)   TAP GWF5  60.00
2  33091 33135  "1 "    0     # TRAN from  TAP GWF5  60.00   (2) to (1)   GWF #5    13.80
4  32854     0  "1 "    0     # LOAD-DROP    PRT CSTA  60.00  LOAD==0.28(0.25)
4  33065     0  "1 "    0     # LOAD-DROP    URICH     60.00  LOAD==1.99(1.23)
4  33139     0  "SG"    0     # LOAD-DROP    STAUFER    9.11  LOAD==2.23(0.32)
4  33064     0  "1 "    0     # LOAD-DROP    SFPP CNC  60.00  LOAD==8.05(4.78)
4  33135     0  "SG"    0     # LOAD-DROP    GWF #5    13.80  LOAD==2.77(0.63)
3  33139     0  "1 "    0     # GEN-DROP    STAUFER    9.11  GEN==2.00(-1.00)
3  33135     0  "1 "    0     # GEN-DROP    GWF #5    13.80  GEN==18.90(3.52)
0
 #
 #
 # (131)  B2 LINE OUTAGE (BREAKER-TO-BREAKER)
 #
1  32911 32754  "1 "    0     # line from  UNOCAL2  115.00   (3) to BRKR  OLEUM    115.00
1  32911 32754  "2 "    0     # line from  UNOCAL2  115.00   (3) to BRKR  OLEUM    115.00
2  32911 32910  "1 "    0     # TRAN from  UNOCAL2  115.00   (3) to BRKR  UNOCAL    12.00
```

```
4  32910     0  "SG"    0     # LOAD-DROP    UNOCAL    12.00  LOAD==20.81(12.90)
3  32910     0  "1 "    0     # GEN-DROP    UNOCAL    12.00  GEN==15.70(6.59)
3  32910     0  "2 "    0     # GEN-DROP    UNOCAL    12.00  GEN==15.70(6.59)
3  32910     0  "3 "    0     # GEN-DROP    UNOCAL    12.00  GEN==15.70(6.59)
0
 #
 #
 # (132)  B2 LINE OUTAGE (BREAKER-TO-BREAKER)
 #
1  33012 32780  "1 "    0     # line from  EST PRTL 115.00  BRKR to BRKR  CLARMNT  115.00
0
 #
 #
 # (133)  B2 LINE OUTAGE (BREAKER-TO-BREAKER)
 #
1  33016 32754  "1 "    0     # line from  ALHAMTP2 115.00   (2) to BRKR  OLEUM    115.00
1  33016 32990  "1 "    0     # line from  ALHAMTP2 115.00   (2) to BRKR  MARTNZ D 115.00
0
 #
 #
 # (134)  B2 LINE OUTAGE (BREAKER-TO-BREAKER)
 #
1  33020 32780  "1 "    0     # line from  MORAGA   115.00  BRKR to BRKR  CLARMNT  115.00
0
 #
 #
 # (135)  B2 LINE OUTAGE (BREAKER-TO-BREAKER)
 #
1  33020 32780  "2 "    0     # line from  MORAGA   115.00  BRKR to BRKR  CLARMNT  115.00
0
 #
 #
 # (136)  B2 LINE OUTAGE (BREAKER-TO-BREAKER)
 #
1  33020 32790  "1 "    0     # line from  MORAGA   115.00  BRKR to BRKR  STATIN X 115.00
0
 #
 #
 # (137)  B2 LINE OUTAGE (BREAKER-TO-BREAKER)
 #
1  33020 32790  "2 "    0     # line from  MORAGA   115.00  BRKR to BRKR  STATIN X 115.00
0
 #
 #
 # (138)  B2 LINE OUTAGE (BREAKER-TO-BREAKER)
 #
1  33020 32790  "3 "    0     # line from  MORAGA   115.00  BRKR to BRKR  STATIN X 115.00
0
 #
 #
 # (139)  B2 LINE OUTAGE (BREAKER-TO-BREAKER)
 #
1  33020 32790  "4 "    0     # line from  MORAGA   115.00  BRKR to BRKR  STATIN X 115.00
0
 #
 #
 # (140)  B2 LINE OUTAGE (BREAKER-TO-BREAKER)
 #
1  33020 32792  "1 "    0     # line from  MORAGA   115.00  BRKR to BRKR  STATIN J 115.00
0
 #
 #
 # (141)  B3 TRANSFORMER OUTAGE (BREAKER-TO-BREAKER)
 #
2  32786 32908  "1 "    0     # TRAN from  OAK C115 115.00  BRKR to BRKR  OAK C12   12.00
0
 #
 #
 # (142)  B3 TRANSFORMER OUTAGE (BREAKER-TO-BREAKER)
 #
2  32786 32908  "2 "    0     # TRAN from  OAK C115 115.00  BRKR to BRKR  OAK C12   12.00
0
 #
 #
 # (143)  B3 TRANSFORMER OUTAGE (BREAKER-TO-BREAKER)
 #
2  32786 32908  "3 "    0     # TRAN from  OAK C115 115.00  BRKR to BRKR  OAK C12   12.00
0
```

```
 #
 #
 # (144)  B3 TRANSFORMER OUTAGE (BREAKER-TO-BREAKER)
 #
2  32852 32756  "1 "    0     # TRAN from  CHRISTIE  60.00  BRKR to BRKR  CHRISTIE 115.00
0
 #
 #
 # (145)  B1 GENERATOR OUTAGE
 #
3  32740     0  "1"     0     # HILLSIDE 115.00       PGEN=26.00  QGEN=-8.70
0
 #
 #
 # (146)  B1 GENERATOR OUTAGE
 #
3  32905     0  "1"     0     # Q155BUS1  13.80       PGEN=60.60  QGEN=15.56
0
 #
 #
 # (147)  B1 GENERATOR OUTAGE
 #
3  32910     0  "1"     0     # UNOCAL    12.00       PGEN=15.70  QGEN=8.37
0
 #
 #
 # (148)  B1 GENERATOR OUTAGE
 #
3  32920     0  "1"     0     # UNION CH   9.11       PGEN=20.40  QGEN=-9.00
0
 #
 #
 # (149)  B1 GENERATOR OUTAGE
 #
3  32921     0  "1"     0     # ChevGen1  13.80       PGEN=54.00  QGEN=34.20
0
 #
 #
 # (150)  L-1/G-1 OVERLAPPING OUTAGE
 # Ignacio - Sobrante 230 kV Line and Q155 Unit 1 pre-project outage
1  30437 30445  "1 "    0     # line from  CROCKETT 230.00   (3) to BRKR  IGNACIO  230.00
1  30437 30438  "1 "    0     # line from  CROCKETT 230.00   (3) to (2)   C&H      230.00
1  30437 30540  "1 "    0     # line from  CROCKETT 230.00   (3) to BRKR  SOBRANTE 230.00
2  30438 32900  "1 "    0     # TRAN from  C&H      230.00  BRKR to (1)   CRCKTCOG  18.00
4  30438     0  "1 "    0     # LOAD-DROP    C&H      230.00  LOAD==3.32(0.76)
3  32900     0  "1 "    0     # GEN-DROP    CRCKTCOG  18.00  GEN==240.00(40.82)
 #
3  32905     0  "1"     0     # Q155BUS1  13.80       PGEN=60.60  QGEN=15.56
0
 #
 #
 # (151)  L-1/G-1 OVERLAPPING OUTAGE
 # Ignacio - T257 230 kV Line and Q155 Unit 1 post-project outage
1  30445 30446  "1 "    0     # line from  IGNACIO  230.00  BRKR to BRKR  T257SWST 230.00
 #
3  32905     0  "1"     0     # Q155BUS1  13.80       PGEN=60.60  QGEN=15.56
0
 #
 #
 # (152)  L-1/G-1 OVERLAPPING OUTAGE
 # T257 - Sobrante #1 230 kV Line and Q155 Unit 1 post-project outage
1  30446 30437  "1 "    0     # line from  T257SWST 230.00  BRKR to (3)   CROCKETT 230.00
1  30437 30438  "1 "    0     # line from  CROCKETT 230.00   (3) to (2)   C&H      230.00
1  30437 30540  "1 "    0     # line from  CROCKETT 230.00   (3) to BRKR  SOBRANTE 230.00
2  30438 32900  "1 "    0     # TRAN from  C&H      230.00  BRKR to (1)   CRCKTCOG  18.00
4  30438     0  "1 "    0     # LOAD-DROP    C&H      230.00  LOAD==3.32(0.76)
3  32900     0  "1 "    0     # GEN-DROP    CRCKTCOG  18.00  GEN==240.00(54.42)
 #
3  32905     0  "1"     0     # Q155BUS1  13.80       PGEN=60.60  QGEN=15.56
0
 #
 #
 # (153)  L-1/G-1 OVERLAPPING OUTAGE
 # Sobrante - Grizzly - East Portal #1 115 kV Line and Q155 Unit 1
1  32740 33006  "1 "    0     # line from  HILLSIDE 115.00  BRKR to (3)   GRIZLYJ1 115.00
1  33006 33010  "1 "    0     # line from  GRIZLYJ1 115.00   (3) to BRKR  SOBRANTE 115.00
1  33006 33012  "1 "    0     # line from  GRIZLYJ1 115.00   (3) to BRKR  EST PRTL 115.00
1  32770 32740  "1 "    0     # include GRIZZLY2 115.00  BRKR to HILLSIDE 115.00 ckt 1
```

```
 #
3  32905     0  "1"     0     # Q155BUS1  13.80       PGEN=60.60  QGEN=15.56
0
 #
 #
 # (154)  L-1/G-1 OVERLAPPING OUTAGE
 # Sobrante - Grizzly - Claremont #2 115 kV Line and Q155 Unit 1
1  32740 33008  "2 "    0     # line from  HILLSIDE 115.00  BRKR to (3)   GRIZLYJ2 115.00
1  33008 32780  "2 "    0     # line from  GRIZLYJ2 115.00   (3) to BRKR  CLARMNT  115.00
1  33008 33010  "2 "    0     # line from  GRIZLYJ2 115.00   (3) to BRKR  SOBRANTE 115.00
1  32770 32740  "2 "    0     # include GRIZZLY2 115.00  BRKR to HILLSIDE 115.00 ckt 2
 #
3  32905     0  "1"     0     # Q155BUS1  13.80       PGEN=60.60  QGEN=15.56
0
 #
 #
 # (155)  L-1/G-1 OVERLAPPING OUTAGE
 # Claremont - Oakland D #1 115 kV Line and Q155 Unit 1
1  32780 32782  "1 "    0     # line from  CLARMNT  115.00  BRKR to BRKR  STATIN D 115.00
 #
3  32905     0  "1"     0     # Q155BUS1  13.80       PGEN=60.60  QGEN=15.56
0
 #
 #
 # (156)  L-1/G-1 OVERLAPPING OUTAGE
 # Claremont - Oakland D #2 115 kV Line and Q155 Unit 1
1  32780 32782  "2 "    0     # line from  CLARMNT  115.00  BRKR to BRKR  STATIN D 115.00
 #
3  32905     0  "1"     0     # Q155BUS1  13.80       PGEN=60.60  QGEN=15.56
0
 #
 #
 # (157)  L-1/G-1 OVERLAPPING OUTAGE
 # Oakland D - Oakland L 115 kV Line and Q155 Unit 1
1  32782 32788  "1 "    0     # line from  STATIN D 115.00  BRKR to BRKR  STATIN L 115.00
 #
3  32905     0  "1"     0     # Q155BUS1  13.80       PGEN=60.60  QGEN=15.56
0
 #
 #
 # (158)  L-1/G-1 OVERLAPPING OUTAGE
 # Oakland C - Oakland L 115 kV Line and Q155 Unit 1
1  32786 32788  "1 "    0     # line from  OAK C115 115.00  BRKR to BRKR  STATIN L 115.00
 #
3  32905     0  "1"     0     # Q155BUS1  13.80       PGEN=60.60  QGEN=15.56
0
 #
 #
 # (159)  L-1/G-1 OVERLAPPING OUTAGE
 # Oakland C - Oakland X #2 115 kV Line and Q155 Unit 1
1  32786 32790  "2 "    0     # line from  OAK C115 115.00  BRKR to BRKR  STATIN X 115.00
 #
3  32905     0  "1"     0     # Q155BUS1  13.80       PGEN=60.60  QGEN=15.56
0
 #
 #
 # (160)  L-1/G-1 OVERLAPPING OUTAGE
 # Oakland C - Oakland X #3 115 kV Line and Q155 Unit 1
1  32786 32790  "3 "    0     # line from  OAK C115 115.00  BRKR to BRKR  STATIN X 115.00
 #
3  32905     0  "1"     0     # Q155BUS1  13.80       PGEN=60.60  QGEN=15.56
0
 #
 #
 # (161)  L-1/G-1 OVERLAPPING OUTAGE
 # Oakland C - Maritime 115 kV Line and Q155 Unit 1
1  32786 32793  "1 "    0     # line from  OAK C115 115.00  BRKR to (2)   SCHNITZ  115.00
1  32793 32794  "1 "    0     # line from  SCHNITZ  115.00   (2) to BRKR  MARITIME 115.00
4  32793     0  "1 "    0     # LOAD-DROP    SCHNITZ  115.00  LOAD==9.29(4.50)
4  32794     0  "1 "    0     # LOAD-DROP    MARITIME 115.00  LOAD==0.95(1.11)
 #
3  32905     0  "1"     0     # Q155BUS1  13.80       PGEN=60.60  QGEN=15.56
0
 #
 #
 # (162)  L-1/G-1 OVERLAPPING OUTAGE
 # Oakland C - Alameda 115 kV Line and Q155 Unit 1
1  32786 38026  "1 "    0     # line from  OAK C115 115.00  BRKR to (4)   ALAMEDCT 115.00
```

```
1  38026 38022  "1 "    0     # line from  ALAMEDCT 115.00   (4) to BRKR  CARTWRT  115.00
2  38026 38118  "1 "    0     # TRAN from  ALAMEDCT 115.00   (4) to (1)   ALMDACT1  13.80
2  38026 38119  "1 "    0     # TRAN from  ALAMEDCT 115.00   (4) to (1)   ALMDACT2  13.80
4  38022     0  "1 "    0     # LOAD-DROP    CARTWRT  115.00  LOAD==23.04(4.31)
4  38022     0  "2 "    0     # LOAD-DROP    CARTWRT  115.00  LOAD==23.04(4.31)
3  38118     0  "1 "    0     # GEN-DROP    ALMDACT1  13.80  GEN==22.60(12.40)
3  38119     0  "1 "    0     # GEN-DROP    ALMDACT2  13.80  GEN==22.60(12.40)
 #
3  32905     0  "1"     0     # Q155BUS1  13.80       PGEN=60.60  QGEN=15.56
0
 #
 #
 # (163)  L-1/G-1 OVERLAPPING OUTAGE
 # Oakland J - Owens Brockway 115 kV Line and Q155 Unit 1
1  32792 32798  "1 "    0     # line from  STATIN J 115.00  BRKR to (2)   OWENSTAP 115.00
1  32798 32800  "1 "    0     # line from  OWENSTAP 115.00   (2) to BRKR  OWNBRKWY 115.00
4  32800     0  "1 "    0     # LOAD-DROP    OWNBRKWY 115.00  LOAD==9.29(5.51)
 #
3  32905     0  "1"     0     # Q155BUS1  13.80       PGEN=60.60  QGEN=15.56
0
 #
 #
 # (164)  L-1/G-1 OVERLAPPING OUTAGE
 # San Leandro - Oakland J 115 kV Line and Q155 Unit 1
1  32792 32814  "1 "    0     # line from  STATIN J 115.00  BRKR to (3)   EDESTAP1 115.00
1  32814 32810  "1 "    0     # line from  EDESTAP1 115.00   (3) to BRKR  EDES     115.00
1  32814 35113  "1 "    0     # line from  EDESTAP1 115.00   (3) to (2)   DMTAR_SL 115.00
1  35113 35101  "1 "    0     # line from  DMTAR_SL 115.00   (2) to BRKR  SN LNDRO 115.00
4  32810     0  "2 "    0     # LOAD-DROP    EDES     115.00  LOAD==18.85(4.29)
4  32810     0  "3 "    0     # LOAD-DROP    EDES     115.00  LOAD==29.45(6.71)
4  35113     0  "1 "    0     # LOAD-DROP    DMTAR_SL 115.00  LOAD==3.61(2.24)
1  32810 32812  "1 "    1     # LINE-TRANSFER EDESTAP1 to EDS GRNT
4  32810     0  "**"    1     # RESTORE EDES load
 #
3  32905     0  "1"     0     # Q155BUS1  13.80       PGEN=60.60  QGEN=15.56
0
 #
 #
 # (165)  L-1/G-1 OVERLAPPING OUTAGE
 # Oakland J - Alameda 115 kV Line and Q155 Unit 1
1  32792 38024  "1 "    0     # line from  STATIN J 115.00  BRKR to BRKR  JENNY    115.00
4  38024     0  "1 "    0     # LOAD-DROP    JENNY    115.00  LOAD==33.37(6.27)
1  38024 38022  "1 "    1     # LINE-TRANSFER ALAMDA J to ALAMDA C
4  38024     0  "**"    1     # RESTORE ALAMDA J load
 #
3  32905     0  "1"     0     # Q155BUS1  13.80       PGEN=60.60  QGEN=15.56
0
 #
 #
 # (166)  L-1/G-1 OVERLAPPING OUTAGE
 # Sobrante - Standard Oil #1 115 kV Line and Standard Oil Unit 1
1  32748 32750  "1 "    0     # line from  PP STEEL 115.00  BRKR to (3)   PPSTLTAP 115.00
1  32750 32774  "1 "    0     # line from  PPSTLTAP 115.00   (3) to (3)   PTPNLTAP 115.00
1  32750 32760  "1 "    0     # line from  PPSTLTAP 115.00   (3) to (1)   PT PINLE 115.00
1  32774 32762  "1 "    0     # line from  PTPNLTAP 115.00   (3) to BRKR  STD. OIL 115.00
1  32774 32808  "1 "    0     # line from  PTPNLTAP 115.00   (3) to (2)   SNPBLTP2 115.00
1  32808 33010  "1 "    0     # line from  SNPBLTP2 115.00   (2) to BRKR  SOBRANTE 115.00
4  32748     0  "1 "    0     # LOAD-DROP    PP STEEL 115.00  LOAD==0.19(0.25)
4  32760     0  "1 "    0     # LOAD-DROP    PT PINLE 115.00  LOAD==14.78(3.36)
 #
3  32921     0  "1"     0     # ChevGen1  13.80       PGEN=54.00  QGEN=34.20
0
 #
 #
 # (167)  L-1/G-1 OVERLAPPING OUTAGE
 # Sobrante - Standard Oil #2 115 kV Line and Standard Oil Unit 1
1  32806 32758  "1 "    0     # line from  SNPBLTP1 115.00   (3) to BRKR  SAN PBLO 115.00
1  32806 32762  "2 "    0     # line from  SNPBLTP1 115.00   (3) to BRKR  STD. OIL 115.00
1  32806 33010  "2 "    0     # line from  SNPBLTP1 115.00   (3) to BRKR  SOBRANTE 115.00
4  32758     0  "1 "    0     # LOAD-DROP    SAN PBLO 115.00  LOAD==19.98(4.55)
1  32758 32808  "2 "    1     # LINE-TRANSFER SNPBLTP1 to SNPBLTP2
4  32758     0  "**"    1     # RESTORE SAN PABLO load
 #
3  32921     0  "1"     0     # ChevGen1  13.80       PGEN=54.00  QGEN=34.20
0
 #
 #
 # (168)  L-1/G-1 OVERLAPPING OUTAGE
```

```
 # Oleum - El Cerrito #1 115 kV Line and Oleum Unit 1
1  32754 32802  "1 "    0     # line from  OLEUM    115.00  BRKR to (3)   VLYVWTP1 115.00
1  32802 32764  "1 "    0     # line from  VLYVWTP1 115.00   (3) to BRKR  VALLY VW 115.00
1  32802 32766  "1 "    0     # line from  VLYVWTP1 115.00   (3) to BRKR  EL CRRTO 115.00
4  32764     0  "1 "    0     # LOAD-DROP    VALLY VW 115.00  LOAD==7.65(1.74)
4  32764     0  "2 "    0     # LOAD-DROP    VALLY VW 115.00  LOAD==15.69(3.58)
1  32764 32804  "2 "    1     # LINE-TRANSFER VLYVWTP1 to VLYVWTP2
4  32764     0  "**"    1     # RESTORE VALLEY VIEW load
 #
3  32910     0  "1"     0     # UNOCAL    12.00       PGEN=15.70  QGEN=8.37
0
 #
 #
 # (169)  L-1/G-1 OVERLAPPING OUTAGE
 # Oleum - El Cerrito #2 115 kV Line and Oleum Unit 1
1  32754 32804  "2 "    0     # line from  OLEUM    115.00  BRKR to (2)   VLYVWTP2 115.00
1  32804 32766  "2 "    0     # line from  VLYVWTP2 115.00   (2) to BRKR  EL CRRTO 115.00
 #
3  32910     0  "1"     0     # UNOCAL    12.00       PGEN=15.70  QGEN=8.37
0
 #
 #
 # (170)  L-1/G-1 OVERLAPPING OUTAGE
 # Oleum - Martinez 115 kV Line and Oleum Unit 1
1  33016 32754  "1 "    0     # line from  ALHAMTP2 115.00   (2) to BRKR  OLEUM    115.00
1  33016 32990  "1 "    0     # line from  ALHAMTP2 115.00   (2) to BRKR  MARTNZ D 115.00
 #
3  32910     0  "1"     0     # UNOCAL    12.00       PGEN=15.70  QGEN=8.37
0
 #
 #
 # (171)  L-1/G-1 OVERLAPPING OUTAGE
 # Oleum - North Tower - Christie 115 kV Line and Oleum Unit 1
1  32620 32778  "1 "    0     # line from  NTWRJCT2 115.00   (2) to (3)   MRTNZJCT 115.00
1  32620 32602  "1 "    0     # line from  NTWRJCT2 115.00   (2) to BRKR  NRTH TWR 115.00
1  32778 32754  "1 "    0     # line from  MRTNZJCT 115.00   (3) to BRKR  OLEUM    115.00
1  32778 32756  "1 "    0     # line from  MRTNZJCT 115.00   (3) to BRKR  CHRISTIE 115.00
4  32602     0  "1 "    0     # LOAD-DROP    NRTH TWR 115.00  LOAD==14.43(2.06)
4  32602     0  "2 "    0     # LOAD-DROP    NRTH TWR 115.00  LOAD==9.58(1.37)
4  32602     0  "3 "    0     # LOAD-DROP    NRTH TWR 115.00  LOAD==6.08(0.87)
4  32602     0  "4 "    0     # LOAD-DROP    NRTH TWR 115.00  LOAD==2.85(0.41)
1  32602 32618  "1 "    1     # LINE-TRANSFER NTWRJCT2 115.00 to NTWRJCT1 115.00
4  32602     0  "**"    1     # RESTORE NORTH TOWER load
 #
3  32910     0  "1"     0     # UNOCAL    12.00       PGEN=15.70  QGEN=8.37
0
 #
 #
 # 2013 category b contingency list
 # Diablo Division Zone 308
 #
 #
 # (172)  B2 LINE OUTAGE (BREAKER-TO-BREAKER)
 #
1  30479 30523  "1 "    0     # line from  BDLSWSTA 230.00  BRKR to BRKR  CC SUB   230.00
0
 #
 #
 # (173)  B2 LINE OUTAGE (BREAKER-TO-BREAKER)
 #
1  30520 30525  "1 "    0     # line from  GATEWAY  230.00  BRKR to BRKR  C.COSTA  230.00
0
 #
 #
 # (174)  B2 LINE OUTAGE (BREAKER-TO-BREAKER)
 #
1  30523 30525  "1 "    0     # line from  CC SUB   230.00  BRKR to BRKR  C.COSTA  230.00
0
 #
 #
 # (175)  B2 LINE OUTAGE (BREAKER-TO-BREAKER)
 #
1  30525 30479  "1 "    0     # line from  C.COSTA  230.00  BRKR to BRKR  BDLSWSTA 230.00
0
 #
 #
 # (176)  B2 LINE OUTAGE (BREAKER-TO-BREAKER)
 #
```

```
1  30525 30543  "1 "    0     # line from  C.COSTA  230.00  BRKR to (3)   ROSSTAP1 230.00
1  30543 30545  "1 "    0     # line from  ROSSTAP1 230.00   (3) to BRKR  ROSSMOOR 230.00
1  30543 30550  "1 "    0     # line from  ROSSTAP1 230.00   (3) to BRKR  MORAGA   230.00
4  30545     0  "1 "    0     # LOAD-DROP    ROSSMOOR 230.00  LOAD==36.95(8.42)
4  30545     0  "2 "    0     # LOAD-DROP    ROSSMOOR 230.00  LOAD==32.85(7.49)
1  30544 30545  "2 "    1     # LINE-TRANSFER  ROSSTAP1  230.00  TO  ROSSTAP2  230.00
4  30545     0  "**"    1     # RESTORE ROSSMOOR load
0
 #
 #
 # (177)  B2 LINE OUTAGE (BREAKER-TO-BREAKER)
 #
1  30525 30544  "2 "    0     # line from  C.COSTA  230.00  BRKR to (2)   ROSSTAP2 230.00
1  30544 30550  "2 "    0     # line from  ROSSTAP2 230.00   (2) to BRKR  MORAGA   230.00
0
 #
 #
 # (178)  B2 LINE OUTAGE (BREAKER-TO-BREAKER)
 #
1  30525 30565  "1 "    0     # line from  C.COSTA  230.00  BRKR to BRKR  BRENTWOD 230.00
0
 #
 #
 # (179)  B2 LINE OUTAGE (BREAKER-TO-BREAKER)
 #
1  30525 30567  "1 "    0     # line from  C.COSTA  230.00  BRKR to BRKR  LONETREE 230.00
0
 #
 #
 # (180)  B2 LINE OUTAGE (BREAKER-TO-BREAKER)
 #
1  30525 30575  "1 "    0     # line from  C.COSTA  230.00  BRKR to (3)   WND MSTR 230.00
1  30575 38610  "1 "    0     # line from  WND MSTR 230.00   (3) to BRKR  DELTAPMP 230.00
2  30575 33170  "1 "    0     # TRAN from  WND MSTR 230.00   (3) to (1)   WINDMSTR   9.11
0
 #
 #
 # (181)  B2 LINE OUTAGE (BREAKER-TO-BREAKER)
 #
1  30525 30585  "1 "    0     # line from  C.COSTA  230.00  BRKR to BRKR  LS PSTAS 230.00
0
 #
 #
 # (182)  B2 LINE OUTAGE (BREAKER-TO-BREAKER)
 #
1  30526 30555  "1 "    0     # line from  PITSBG D 230.00  BRKR to BRKR  SANRAMON 230.00
0
 #
 #
 # (183)  B2 LINE OUTAGE (BREAKER-TO-BREAKER)
 #
1  30526 30561  "1 "    0     # line from  PITSBG D 230.00  BRKR to BRKR  TASSAJAR 230.00
0
 #
 #
 # (184)  B2 LINE OUTAGE (BREAKER-TO-BREAKER)
 #
1  30527 30535  "1 "    0     # line from  PITSBG E 230.00  BRKR to BRKR  TIDEWATR 230.00
0
 #
 #
 # (185)  B2 LINE OUTAGE (BREAKER-TO-BREAKER)
 #
1  30527 30536  "1 "    0     # line from  PITSBG E 230.00  BRKR to BRKR  TESORO   230.00
0
 #
 #
 # (186)  B2 LINE OUTAGE (BREAKER-TO-BREAKER)
 #
1  30535 30540  "1 "    0     # line from  TIDEWATR 230.00  BRKR to BRKR  SOBRANTE 230.00
0
 #
 #
 # (187)  B2 LINE OUTAGE (BREAKER-TO-BREAKER)
 #
1  30536 30540  "1 "    0     # line from  TESORO   230.00  BRKR to BRKR  SOBRANTE 230.00
0
 #
```

```
 #
 # (188)  B2 LINE OUTAGE (BREAKER-TO-BREAKER)
 #
1  30550 30554  "1 "    0     # line from  MORAGA   230.00  BRKR to BRKR  CASTROVL 230.00
0
 #
 #
 # (189)  B2 LINE OUTAGE (BREAKER-TO-BREAKER)
 #
1  30550 30555  "1 "    0     # line from  MORAGA   230.00  BRKR to BRKR  SANRAMON 230.00
0
 #
 #
 # (190)  B2 LINE OUTAGE (BREAKER-TO-BREAKER)
 #
1  30560 30527  "1 "    0     # line from  E. SHORE 230.00  BRKR to BRKR  PITSBG E 230.00
0
 #
 #
 # (191)  B2 LINE OUTAGE (BREAKER-TO-BREAKER)
 #
1  30561 30562  "1 "    0     # line from  TASSAJAR 230.00  BRKR to (3)   TES JCT  230.00
1  30562 30563  "1 "    0     # line from  TES JCT  230.00   (3) to BRKR  RESEARCH 230.00
1  30562 30631  "1 "    0     # line from  TES JCT  230.00   (3) to BRKR  NEWARK E 230.00
4  30563     0  "1 "    0     # LOAD-DROP    RESEARCH 230.00  LOAD==37.05(8.44)
0
 #
 #
 # (192)  B2 LINE OUTAGE (BREAKER-TO-BREAKER)
 #
1  30567 30590  "1 "    0     # line from  LONETREE 230.00  BRKR to (3)   USWP-JRW 230.00
1  30590 30530  "1 "    0     # line from  USWP-JRW 230.00   (3) to BRKR  CAYETANO 230.00
2  30590 33838  "1 "    0     # TRAN from  USWP-JRW 230.00   (3) to (1)   USWP_#3    9.11
4  33838     0  "SG"    0     # LOAD-DROP    USWP_#3    9.11  LOAD==0.50(0.20)
0
 #
 #
 # (193)  B2 LINE OUTAGE (BREAKER-TO-BREAKER)
 #
1  30700 30527  "1 "    0     # line from  SANMATEO 230.00  BRKR to BRKR  PITSBG E 230.00
0
 #
 #
 # (194)  B2 LINE OUTAGE (BREAKER-TO-BREAKER)
 #
1  30526 30528  "1 "    0     # line from  PITSBG D 230.00  BRKR to BRKR  DEC PTSG 230.00
3  33108     0  "**"    0     # GEN-DROP    DEC CTG1 18.00
0
 #
 #
 # (195)  B2 LINE OUTAGE (BREAKER-TO-BREAKER)
 #
1  30526 30528  "2 "    0     # line from  PITSBG D 230.00  BRKR to BRKR  DEC PTSG 230.00
3  33108     0  "**"    0     # GEN-DROP    DEC CTG1 18.00
0
 #
 #
 # (196)  B2 LINE OUTAGE (BREAKER-TO-BREAKER)
 #
1  30521 30523  "1 "    0     # line from  T258     230.00   (4) to BRKR  CC SUB   230.00
2  30521 33181  "1 "    0     # TRAN from  T258     230.00   (4) to (1)   T258CT1   18.00
2  30521 33182  "1 "    0     # TRAN from  T258     230.00   (4) to (1)   T258CT2   18.00
2  30521 33183  "1 "    0     # TRAN from  T258     230.00   (4) to (1)   T258ST1   18.00
4  33181     0  "ss"    0     # LOAD-DROP    T258CT1   18.00  LOAD==5.67(3.14)
4  33182     0  "ss"    0     # LOAD-DROP    T258CT2   18.00  LOAD==5.67(3.14)
4  33183     0  "ss"    0     # LOAD-DROP    T258ST1   18.00  LOAD==5.67(3.14)
3  33181     0  "1 "    0     # GEN-DROP    T258CT1   18.00  GEN==174.00(43.00)
3  33182     0  "2 "    0     # GEN-DROP    T258CT2   18.00  GEN==174.00(43.00)
3  33183     0  "3 "    0     # GEN-DROP    T258ST1   18.00  GEN==189.00(44.92)
0
 #
 #
 # (197)  B2 LINE OUTAGE (BREAKER-TO-BREAKER)
 #
1  30522 30525  "1 "    0     # line from  T305BUS1 230.00   (3) to BRKR  C.COSTA  230.00
2  30522 33184  "1 "    0     # TRAN from  T305BUS1 230.00   (3) to (1)   T305GT1   16.50
2  30522 33185  "1 "    0     # TRAN from  T305BUS1 230.00   (3) to (1)   T305ST1   13.80
4  33184     0  "ss"    0     # LOAD-DROP    T305GT1   16.50  LOAD==7.50(4.15)
```

```
3  33184     0  "1 "    0     # GEN-DROP    T305GT1   16.50  GEN==242.00(32.00)
3  33185     0  "1 "    0     # GEN-DROP    T305ST1   13.80  GEN==71.00(8.41)
0
 #
 #
 # (198)  B2 LINE OUTAGE (BREAKER-TO-BREAKER)
 #
1  30524 30525  "1 "    0     # line from  T305BUS2 230.00   (3) to BRKR  C.COSTA  230.00
2  30524 33186  "1 "    0     # TRAN from  T305BUS2 230.00   (3) to (1)   T305GT2   16.50
2  30524 33187  "1 "    0     # TRAN from  T305BUS2 230.00   (3) to (1)   T305ST2   13.80
4  33186     0  "ss"    0     # LOAD-DROP    T305GT2   16.50  LOAD==7.50(4.15)
3  33186     0  "2 "    0     # GEN-DROP    T305GT2   16.50  GEN==242.00(32.00)
3  33187     0  "2 "    0     # GEN-DROP    T305ST2   13.80  GEN==71.00(8.41)
0
 #
 #
 # (199)  B2 LINE OUTAGE (BREAKER-TO-BREAKER)
 #
1  30531 30526  "1 "    0     # line from  T322BUS1 230.00   (3) to BRKR  PITSBG D 230.00
2  30531 33191  "1 "    0     # TRAN from  T322BUS1 230.00   (3) to (1)   T322GT1   16.50
2  30531 33192  "1 "    0     # TRAN from  T322BUS1 230.00   (3) to (1)   T322ST1   13.80
4  33191     0  "ss"    0     # LOAD-DROP    T322GT1   16.50  LOAD==7.50(4.15)
3  33191     0  "1 "    0     # GEN-DROP    T322GT1   16.50  GEN==242.00(46.44)
3  33192     0  "1 "    0     # GEN-DROP    T322ST1   13.80  GEN==71.00(13.06)
0
 #
 #
 # (200)  B2 LINE OUTAGE (BREAKER-TO-BREAKER)
 #
1  30532 30526  "1 "    0     # line from  T322BUS2 230.00   (3) to BRKR  PITSBG D 230.00
2  30532 33193  "1 "    0     # TRAN from  T322BUS2 230.00   (3) to (1)   T322GT2   16.50
2  30532 33194  "1 "    0     # TRAN from  T322BUS2 230.00   (3) to (1)   T322ST2   13.80
4  33193     0  "ss"    0     # LOAD-DROP    T322GT2   16.50  LOAD==7.50(4.15)
3  33193     0  "2 "    0     # GEN-DROP    T322GT2   16.50  GEN==242.00(46.44)
3  33194     0  "2 "    0     # GEN-DROP    T322ST2   13.80  GEN==71.00(13.06)
0
 #
 #
 # (201)  B2 LINE OUTAGE (BREAKER-TO-BREAKER)
 #
1  32950 32970  "1 "    0     # line from  PITSBURG 115.00  BRKR to BRKR  CLAYTN   115.00
0
 #
 #
 # (202)  B2 LINE OUTAGE (BREAKER-TO-BREAKER)
 #
1  32950 32970  "4 "    0     # line from  PITSBURG 115.00  BRKR to BRKR  CLAYTN   115.00
0
 #
 #
 # (203)  B2 LINE OUTAGE (BREAKER-TO-BREAKER)
 #
1  32950 32978  "1 "    0     # line from  PITSBURG 115.00  BRKR to BRKR  LMEC     115.00
0
 #
 #
 # (204)  B2 LINE OUTAGE (BREAKER-TO-BREAKER)
 #
1  32950 32978  "2 "    0     # line from  PITSBURG 115.00  BRKR to BRKR  LMEC     115.00
0
 #
 #
 # (205)  B2 LINE OUTAGE (BREAKER-TO-BREAKER)
 #
1  32950 32992  "2 "    0     # line from  PITSBURG 115.00  BRKR to (2)   BOLLMAN2 115.00
1  32992 33043  "2 "    0     # line from  BOLLMAN2 115.00   (2) to (3)   IMHOFF_2 115.00
1  33043 32991  "2 "    0     # line from  IMHOFF_2 115.00   (3) to BRKR  MARTNZ E 115.00
1  33043 33041  "2 "    0     # line from  IMHOFF_2 115.00   (3) to (2)   IMHOFF   115.00
2  33041 33136  "1 "    0     # TRAN from  IMHOFF   115.00   (2) to (1)   CCCSD     12.47
4  33136     0  "SG"    0     # LOAD-DROP    CCCSD     12.47  LOAD==3.37(0.77)
3  33136     0  "1 "    0     # GEN-DROP    CCCSD     12.47  GEN==4.40(0.53)
0
 #
 #
 # (206)  B2 LINE OUTAGE (BREAKER-TO-BREAKER)
 #
1  32950 32993  "1 "    0     # line from  PITSBURG 115.00  BRKR to (2)   W.P.BART 115.00
1  32993 33040  "1 "    0     # line from  W.P.BART 115.00   (2) to (3)   BOLLMAN1 115.00
```

```
1  33040 32994  "1 "    0     # line from  BOLLMAN1 115.00   (3) to (1)   BOLLMAN  115.00
1  33040 33042  "1 "    0     # line from  BOLLMAN1 115.00   (3) to (2)   IMHOFF_1 115.00
1  33042 32991  "1 "    0     # line from  IMHOFF_1 115.00   (2) to BRKR  MARTNZ E 115.00
4  32993     0  "1 "    0     # LOAD-DROP    W.P.BART 115.00  LOAD==7.29(1.48)
4  32993     0  "3 "    0     # LOAD-DROP    W.P.BART 115.00  LOAD==13.49(3.07)
4  32994     0  "1 "    0     # LOAD-DROP    BOLLMAN  115.00  LOAD==2.59(1.36)
4  32994     0  "2 "    0     # LOAD-DROP    BOLLMAN  115.00  LOAD==2.59(1.36)
0
 #
 #
 # (207)  B2 LINE OUTAGE (BREAKER-TO-BREAKER)
 #
1  32950 33030  "1 "    0     # line from  PITSBURG 115.00  BRKR to (2)   COLSTJT1 115.00
1  33030 33036  "1 "    0     # line from  COLSTJT1 115.00   (2) to (3)   LINDETP1 115.00
1  33036 32954  "1 "    0     # line from  LINDETP1 115.00   (3) to (2)   DOW TAP1 115.00
1  33036 32961  "1 "    0     # line from  LINDETP1 115.00   (3) to (3)   GWF2 TAP 115.00
1  32954 32956  "1 "    0     # line from  DOW TAP1 115.00   (2) to (2)   DOW MTR  115.00
2  32956 33160  "1 "    0     # TRAN from  DOW MTR  115.00   (2) to (4)   DOW CHEM  13.80
1  33160 33161  "1 "    0     # line from  DOW CHEM  13.80   (4) to (1)   DOWCHEM1  13.80
1  33160 33162  "1 "    0     # line from  DOW CHEM  13.80   (4) to (1)   DOWCHEM2  13.80
1  33160 33163  "1 "    0     # line from  DOW CHEM  13.80   (4) to (1)   DOWCHEM3  13.80
1  32961 32960  "1 "    0     # line from  GWF2 TAP 115.00   (3) to (2)   GWF#2 HS 115.00
1  32961 33038  "1 "    0     # line from  GWF2 TAP 115.00   (3) to (2)   LINDEJCT 115.00
2  32960 33132  "1 "    0     # TRAN from  GWF#2 HS 115.00   (2) to (1)   GWF #2    13.80
1  33038 32957  "1 "    0     # line from  LINDEJCT 115.00   (2) to BRKR  PRAXAIR  115.00
4  33160     0  "SG"    0     # LOAD-DROP    DOW CHEM  13.80  LOAD==15.00(9.30)
4  33132     0  "SG"    0     # LOAD-DROP    GWF #2    13.80  LOAD==2.81(0.64)
4  32957     0  "1 "    0     # LOAD-DROP    PRAXAIR  115.00  LOAD==20.67(4.61)
3  33161     0  "1 "    0     # GEN-DROP    DOWCHEM1  13.80  GEN==15.30(6.00)
3  33162     0  "1 "    0     # GEN-DROP    DOWCHEM2  13.80  GEN==22.00(5.29)
3  33163     0  "1 "    0     # GEN-DROP    DOWCHEM3  13.80  GEN==22.00(5.29)
3  33132     0  "1 "    0     # GEN-DROP    GWF #2    13.80  GEN==12.30(3.13)
0
 #
 #
 # (208)  B2 LINE OUTAGE (BREAKER-TO-BREAKER)
 #
1  32950 33032  "3 "    0     # line from  PITSBURG 115.00  BRKR to (2)   KIRKTAP1 115.00
1  33032 32970  "3 "    0     # line from  KIRKTAP1 115.00   (2) to BRKR  CLAYTN   115.00
0
 #
 #
 # (209)  B2 LINE OUTAGE (BREAKER-TO-BREAKER)
 #
1  32950 33033  "1 "    0     # line from  PITSBURG 115.00  BRKR to (3)   KIRKTAP2 115.00
1  33033 32951  "1 "    0     # line from  KIRKTAP2 115.00   (3) to BRKR  KIRKER   115.00
1  33033 33031  "1 "    0     # line from  KIRKTAP2 115.00   (3) to (2)   COLSTJT2 115.00
1  33031 33037  "1 "    0     # line from  COLSTJT2 115.00   (2) to (2)   LINDETP2 115.00
1  33037 32955  "1 "    0     # line from  LINDETP2 115.00   (2) to (1)   DOW TAP2 115.00
4  32951     0  "1 "    0     # LOAD-DROP    KIRKER   115.00  LOAD==38.02(7.72)
4  32951     0  "2 "    0     # LOAD-DROP    KIRKER   115.00  LOAD==44.19(8.97)
4  32951     0  "3 "    0     # LOAD-DROP    KIRKER   115.00  LOAD==53.77(10.92)
1  33032 32951  "1 "    1     # LINE-TRANSFER  KIRKTAP2  115.00  TO KIRKTAP1
4  32951 0      "**"    1     # RESTORE KIRKER load
0
 #
 #
 # (210)  B2 LINE OUTAGE (BREAKER-TO-BREAKER)
 #
1  32970 32971  "1 "    0     # line from  CLAYTN   115.00  BRKR to BRKR  MEDW LNE 115.00
0
 #
 #
 # (211)  B2 LINE OUTAGE (BREAKER-TO-BREAKER)
 #
1  32970 32974  "2 "    0     # line from  CLAYTN   115.00  BRKR to BRKR  LAKEWD-M 115.00
0
 #
 #
 # (212)  B2 LINE OUTAGE (BREAKER-TO-BREAKER)
 #
1  32970 33035  "1 "    0     # line from  CLAYTN   115.00  BRKR to (3)   LKWD_JCT 115.00
1  33035 32972  "1 "    0     # line from  LKWD_JCT 115.00   (3) to (2)   EBMUDGRY 115.00
1  33035 32973  "1 "    0     # line from  LKWD_JCT 115.00   (3) to BRKR  LAKEWD-C 115.00
1  32972 32971  "1 "    0     # line from  EBMUDGRY 115.00   (2) to BRKR  MEDW LNE 115.00
4  32972     0  "1 "    0     # LOAD-DROP    EBMUDGRY 115.00  LOAD==5.67(1.86)
0
 #
```

```
 #
 # (213)  B2 LINE OUTAGE (BREAKER-TO-BREAKER)
 #
1  32974 32976  "9 "    0     # line from  LAKEWD-M 115.00  BRKR to (2)   LK_REACT 115.00
1  32976 33020  "1 "    0     # line from  LK_REACT 115.00   (2) to BRKR  MORAGA   115.00
0
 #
 #
 # (214)  B2 LINE OUTAGE (BREAKER-TO-BREAKER)
 #
1  32990 33014  "1 "    0     # line from  MARTNZ D 115.00  BRKR to (3)   ALHAMTP1 115.00
1  33014 33010  "1 "    0     # line from  ALHAMTP1 115.00   (3) to BRKR  SOBRANTE 115.00
1  33014 33011  "1 "    0     # line from  ALHAMTP1 115.00   (3) to BRKR  ALHAMBRA 115.00
4  33011     0  "1 "    0     # LOAD-DROP    ALHAMBRA 115.00  LOAD==10.29(2.34)
4  33011     0  "2 "    0     # LOAD-DROP    ALHAMBRA 115.00  LOAD==9.17(2.09)
1  33016 33011  "1 "    1     # LINE-TRANSFER  ALHAMTP1  115.00  TO  ALHAMTP2  115.00
4  33011     0  "**"    1     # RESTORE ALHAMBRA load
0
 #
 #
 # (215)  B2 LINE OUTAGE (BREAKER-TO-BREAKER)
 #
1  32996 32990  "1 "    0     # line from  SHELLJ1  115.00   (3) to BRKR  MARTNZ D 115.00
2  32996 33141  "7 "    0     # TRAN from  SHELLJ1  115.00   (3) to BRKR  SHELL 1   12.47
2  32996 33143  "6 "    0     # TRAN from  SHELLJ1  115.00   (3) to BRKR  SHELL 3   12.47
0
 #
 #
 # (216)  B2 LINE OUTAGE (BREAKER-TO-BREAKER)
 #
1  32997 32991  "2 "    0     # line from  SHELLJ2  115.00   (3) to BRKR  MARTNZ E 115.00
2  32997 33141  "6 "    0     # TRAN from  SHELLJ2  115.00   (3) to BRKR  SHELL 1   12.47
2  32997 33143  "7 "    0     # TRAN from  SHELLJ2  115.00   (3) to BRKR  SHELL 3   12.47
0
 #
 #
 # (217)  B2 LINE OUTAGE (BREAKER-TO-BREAKER)
 #
1  33000 33046  "1 "    0     # line from  CC SUB   115.00  BRKR to (3)   FIBRJCT2 115.00
1  33046 33001  "1 "    0     # line from  FIBRJCT2 115.00   (3) to BRKR  DOMTAR   115.00
1  33046 33044  "1 "    0     # line from  FIBRJCT2 115.00   (3) to (2)   FIBRBJCT 115.00
1  33044 33002  "1 "    0     # line from  FIBRBJCT 115.00   (2) to (2)   CROWN Z  115.00
2  33002 33133  "1 "    0     # TRAN from  CROWN Z  115.00   (2) to (1)   GWF #3    13.80
4  33001     0  "1 "    0     # LOAD-DROP    DOMTAR   115.00  LOAD==2.40(2.12)
4  33133     0  "SG"    0     # LOAD-DROP    GWF #3    13.80  LOAD==2.84(0.65)
3  33133     0  "1 "    0     # GEN-DROP    GWF #3    13.80  GEN==19.00(4.33)
0
 #
 #
 # (218)  B2 LINE OUTAGE (BREAKER-TO-BREAKER)
 #
1  33000 33047  "1 "    0     # line from  CC SUB   115.00  BRKR to (2)   CC JCT   115.00
1  33047 33045  "1 "    0     # line from  CC JCT   115.00   (2) to (2)   FIBRJCT1 115.00
1  33045 33048  "1 "    0     # line from  FIBRJCT1 115.00   (2) to (2)   RVECTP   115.00
1  33048 33049  "1 "    0     # line from  RVECTP   115.00   (2) to BRKR  RVEC     115.00
0
 #
 #
 # (219)  B2 LINE OUTAGE (BREAKER-TO-BREAKER)
 #
1  33020 33010  "1 "    0     # line from  MORAGA   115.00  BRKR to BRKR  SOBRANTE 115.00
0
 #
 #
 # (220)  B2 LINE OUTAGE (BREAKER-TO-BREAKER)
 #
1  33020 35101  "1 "    0     # line from  MORAGA   115.00  BRKR to BRKR  SN LNDRO 115.00
0
 #
 #
 # (221)  B2 LINE OUTAGE (BREAKER-TO-BREAKER)
 #
1  33020 35101  "2 "    0     # line from  MORAGA   115.00  BRKR to BRKR  SN LNDRO 115.00
0
 #
 #
 # (222)  B2 LINE OUTAGE (BREAKER-TO-BREAKER)
 #
```

```
1  33020 35101  "3 "    0     # line from  MORAGA   115.00  BRKR to BRKR  SN LNDRO 115.00
0
 #
 #
 # (223)  B2 LINE OUTAGE (BREAKER-TO-BREAKER)
 #
1  33050 33080  "1 "    0     # line from  CC SUB    60.00  BRKR to (3)   WILBRTAP  60.00
1  33080 33051  "1 "    0     # line from  WILBRTAP  60.00   (3) to BRKR  DU PONT   60.00
2  33080 33134  "1 "    0     # TRAN from  WILBRTAP  60.00   (3) to (1)   GWF #4    13.80
4  33051     0  "1 "    0     # LOAD-DROP    DU PONT   60.00  LOAD==2.00(2.16)
4  33134     0  "SG"    0     # LOAD-DROP    GWF #4    13.80  LOAD==2.88(0.66)
3  33134     0  "1 "    0     # GEN-DROP    GWF #4    13.80  GEN==18.60(3.34)
1  33051 33081  "1 "    1     # LINE-TRANSFER  WILBRTAP  60.00  TO  DUPNTJCT  60.00
4  33051     0  "**"    1     # RESTORE DU PONT load
0
 #
 #
 # (224)  B2 LINE OUTAGE (BREAKER-TO-BREAKER)
 #
1  33050 33081  "1 "    0     # line from  CC SUB    60.00  BRKR to (2)   DUPNTJCT  60.00
1  33081 33082  "1 "    0     # line from  DUPNTJCT  60.00   (2) to (3)   BALFRJCT  60.00
1  33082 33052  "1 "    0     # line from  BALFRJCT  60.00   (3) to (2)   MARSH     60.00
1  33082 33054  "1 "    0     # line from  BALFRJCT  60.00   (3) to BRKR  BALFOUR   60.00
1  33052 33053  "1 "    0     # line from  MARSH     60.00   (2) to (1)   BRIONES   60.00
4  33054     0  "1 "    0     # LOAD-DROP    BALFOUR   60.00  LOAD==4.00(0.81)
4  33053     0  "1 "    0     # LOAD-DROP    BRIONES   60.00  LOAD==3.90(1.84)
1  33083 33054  "1 "    1     # LINE-TRANSFER  BALFRJCT  60.00  TO  MDLRVRJT  60.00
4  33054     0  "**"    1     # RESTORE BALFOUR load
0
 #
 #
 # (225)  B2 LINE OUTAGE (BREAKER-TO-BREAKER)
 #
1  33055 33084  "1 "    0     # line from  BIXLER    60.00   (1) to (3)   BXLR_TAP  60.00
1  33084 33083  "1 "    0     # line from  BXLR_TAP  60.00   (3) to (2)   MDLRVRJT  60.00
1  33084 33778  "1 "    0     # line from  BXLR_TAP  60.00   (3) to (2)   MDL_RIVR  60.00
1  33083 33774  "1 "    0     # line from  MDLRVRJT  60.00   (2) to (3)   HRDLNJCT  60.00
1  33774 33770  "1 "    0     # line from  HRDLNJCT  60.00   (3) to BRKR  HERDLYN   60.00
1  33774 33782  "1 "    0     # line from  HRDLNJCT  60.00   (3) to (1)   WEST SDE  60.00
1  33778 33780  "1 "    0     # line from  MDL_RIVR  60.00   (2) to (1)   MCD_ISLE  60.00
4  33055     0  "1 "    0     # LOAD-DROP    BIXLER    60.00  LOAD==2.00(0.97)
4  33778     0  "1 "    0     # LOAD-DROP    MDL_RIVR  60.00  LOAD==4.84(0.22)
4  33782     0  "1 "    0     # LOAD-DROP    WEST SDE  60.00  LOAD==1.90(0.40)
4  33780     0  "1 "    0     # LOAD-DROP    MCD_ISLE  60.00  LOAD==5.76(0.82)
0
 #
 #
 # (226)  B2 LINE OUTAGE (BREAKER-TO-BREAKER)
 #
1  33060 33050  "1 "    0     # line from  ANTIOCH   60.00   (1) to BRKR  CC SUB    60.00
4  33060     0  "1 "    0     # LOAD-DROP    ANTIOCH   60.00  LOAD==1.93(0.39)
0
 #
 #
 # (227)  B2 LINE OUTAGE (BREAKER-TO-BREAKER)
 #
1  33062 33090  "1 "    0     # line from  SHLL CHM  60.00   (2) to (3)   SHLLCHMT  60.00
1  33062 33063  "1 "    0     # line from  SHLL CHM  60.00   (2) to BRKR  WLLW PSS  60.00
1  33090 33050  "1 "    0     # line from  SHLLCHMT  60.00   (3) to BRKR  CC SUB    60.00
1  33090 33061  "1 "    0     # line from  SHLLCHMT  60.00   (3) to (2)   PITTSBRG  60.00
2  33061 33131  "1 "    0     # TRAN from  PITTSBRG  60.00   (2) to (1)   GWF #1     9.11
4  33062     0  "1 "    0     # LOAD-DROP    SHLL CHM  60.00  LOAD==2.27(1.41)
4  33063     0  "1 "    0     # LOAD-DROP    WLLW PSS  60.00  LOAD==9.78(2.23)
4  33061     0  "1 "    0     # LOAD-DROP    PITTSBRG  60.00  LOAD==0.64(0.13)
4  33131     0  "SG"    0     # LOAD-DROP    GWF #1     9.11  LOAD==2.56(0.58)
3  33131     0  "1 "    0     # GEN-DROP    GWF #1     9.11  GEN==12.70(-2.78)
1  33091 33063  "1 "    1     # LINE-TRANSFER  SHLL CHM  60.00  TO  TAP GWF5  60.00
4  33063     0  "**"    1     # RESTORE WILLOW PASS load
0
 #
 #
 # (228)  B3 TRANSFORMER OUTAGE (BREAKER-TO-BREAKER)
 #
2  32950 30526  "12"    0     # TRAN from  PITSBURG 115.00  BRKR to BRKR  PITSBG D 230.00
0
 #
 #
 # (229)  B3 TRANSFORMER OUTAGE (BREAKER-TO-BREAKER)
```

```
 #
2  32950 30526  "13"    0     # TRAN from  PITSBURG 115.00  BRKR to BRKR  PITSBG D 230.00
0
 #
 #
 # (230)  B3 TRANSFORMER OUTAGE (BREAKER-TO-BREAKER)
 #
2  32950 30526  "14"    0     # TRAN from  PITSBURG 115.00  BRKR to BRKR  PITSBG D 230.00
0
 #
 #
 # (231)  B3 TRANSFORMER OUTAGE (BREAKER-TO-BREAKER)
 #
2  32990 33142  "2 "    0     # TRAN from  MARTNZ D 115.00  BRKR to BRKR  SHELL 2   12.47
0
 #
 #
 # (232)  B3 TRANSFORMER OUTAGE (BREAKER-TO-BREAKER)
 #
2  32991 33142  "1 "    0     # TRAN from  MARTNZ E 115.00  BRKR to BRKR  SHELL 2   12.47
0
 #
 #
 # (233)  B3 TRANSFORMER OUTAGE (BREAKER-TO-BREAKER)
 #
2  33000 30523  "3 "    0     # TRAN from  CC SUB   115.00  BRKR to BRKR  CC SUB   230.00
0
 #
 #
 # (234)  B3 TRANSFORMER OUTAGE (BREAKER-TO-BREAKER)
 #
2  33010 30540  "1 "    0     # TRAN from  SOBRANTE 115.00  BRKR to BRKR  SOBRANTE 230.00
0
 #
 #
 # (235)  B3 TRANSFORMER OUTAGE (BREAKER-TO-BREAKER)
 #
2  33010 30540  "2 "    0     # TRAN from  SOBRANTE 115.00  BRKR to BRKR  SOBRANTE 230.00
0
 #
 #
 # (236)  B3 TRANSFORMER OUTAGE (BREAKER-TO-BREAKER)
 #
#      **** 3-WINDING TRANSFORMER  33020  (30551)  30550  33121 :
2  33020 30550  "1 "    0     # TRAN from  MORAGA   115.00  BRKR to (1)   MORAGA   230.00
0
 #
 #
 # (237)  B3 TRANSFORMER OUTAGE (BREAKER-TO-BREAKER)
 #
#      **** 3-WINDING TRANSFORMER  33020  (30552)  30550  33122 :
2  33020 30550  "2 "    0     # TRAN from  MORAGA   115.00  BRKR to (1)   MORAGA   230.00
0
 #
 #
 # (238)  B3 TRANSFORMER OUTAGE (BREAKER-TO-BREAKER)
 #
#      **** 3-WINDING TRANSFORMER  33020  (30553)  30550  33123 :
2  33020 30550  "3 "    0     # TRAN from  MORAGA   115.00  BRKR to (1)   MORAGA   230.00
0
 #
 #
 # (239)  B3 TRANSFORMER OUTAGE (BREAKER-TO-BREAKER)
 #
2  33050 33000  "1 "    0     # TRAN from  CC SUB    60.00  BRKR to BRKR  CC SUB   115.00
0
 #
 #
 # (240)  B3 TRANSFORMER OUTAGE (BREAKER-TO-BREAKER)
 #
2  33151 30535  "1 "    0     # TRAN from  FOSTER W  12.47  BRKR to BRKR  TIDEWATR 230.00
0
 #
 #
 # (241)  B3 TRANSFORMER OUTAGE (BREAKER-TO-BREAKER)
 #
2  33151 30535  "2 "    0     # TRAN from  FOSTER W  12.47  BRKR to BRKR  TIDEWATR 230.00
0
```

```
 #
 #
 # (242)  B3 TRANSFORMER OUTAGE (BREAKER-TO-BREAKER)
 #
2  38950 30526  "1 "    0     # TRAN from  VSC_PTSB 180.50   (1) to BRKR  PITSBG D 230.00
3  38950     0  "1 "    0     # GEN-DROP    VSC_PTSB 180.50  GEN==-413.00(-91.10)
3  38951     0  "1 "    0     # GEN-DROP    VSC_POTR 180.50  GEN==401.40(155.40)
0
 #
 #
 # (243)  B1 GENERATOR OUTAGE
 #
3  33118     0  "1"     0     # GATEWAY1  18.00       PGEN=200.00  QGEN=-7.87
0
 #
 #
 # (244)  B1 GENERATOR OUTAGE
 #
3  33118     0  "1"     0     # GATEWAY1  18.00       PGEN=200.00  QGEN=-7.87
3  33119     0  "1"     0     # GATEWAY2  18.00       PGEN=195.00  QGEN=-6.21
3  33120     0  "1"     0     # GATEWAY3  18.00       PGEN=195.00  QGEN=-6.21
0
 #
 #
 # (245)  B1 GENERATOR OUTAGE
 #
3  33178     0  "1"     0     # RVEC_GEN  13.80       PGEN=50.00  QGEN=4.37
0
 #
 #
 # (246)  B1 GENERATOR OUTAGE
 #
3  33107     0  "1"     0     # DEC STG1  24.00       PGEN=280.00  QGEN=81.62
3  33108     0  "1"     0     # DEC CTG1  18.00       PGEN=200.00  QGEN=58.29
3  33109     0  "1"     0     # DEC CTG2  18.00       PGEN=200.00  QGEN=58.29
3  33110     0  "1"     0     # DEC CTG3  18.00       PGEN=200.00  QGEN=58.29
0
 #
 #
 # (247)  B1 GENERATOR OUTAGE
 #
3  33111     0  "1"     0     # LMECCT2   18.00       PGEN=150.00  QGEN=6.48
3  33112     0  "1"     0     # LMECCT1   18.00       PGEN=150.00  QGEN=6.48
3  33113     0  "1"     0     # LMECST1   18.00       PGEN=200.00  QGEN=10.61
0
 #
 #
 # (248)  B1 GENERATOR OUTAGE
 #
3  33134     0  "1"     0     # GWF #4    13.80       PGEN=18.60  QGEN=3.72
0
 #
 #
 # (249)  B1 GENERATOR OUTAGE
 #
3  33141     0  "1"     0     # SHELL 1   12.47       PGEN=20.00  QGEN=2.12
0
 #
 #
 # (250)  B1 GENERATOR OUTAGE
 #
3  33122     0  "1"     0     # MRAGA 2T  13.20       PGEN=0.00  QGEN=48.00
0
 #
 #
 # (251)  B1 GENERATOR OUTAGE
 #
3  33123     0  "1"     0     # MRAGA 3T  13.20       PGEN=0.00  QGEN=41.53
0
 #
 #
 # (252)  B1 GENERATOR OUTAGE
 #
3  33143     0  "1"     0     # SHELL 3   12.47       PGEN=40.00  QGEN=2.19
0
 #
 #
 # (253)  B1 GENERATOR OUTAGE
```

```
 #
3  33121     0  "1"     0     # MRAGA 1T  13.20       PGEN=0.00  QGEN=48.00
0
 #
 #
 # (254)  B1 GENERATOR OUTAGE
 #
3  33142     0  "1"     0     # SHELL 2   12.47       PGEN=40.00  QGEN=2.20
0
 #
 #
 # (255)  B1 GENERATOR OUTAGE
 #
3  33132     0  "1"     0     # GWF #2    13.80       PGEN=12.30  QGEN=5.65
0
 #
 #
 # (256)  B1 GENERATOR OUTAGE
 #
3  33116     0  "1"     0     # C.COS 6   18.00       PGEN=330.00  QGEN=145.77
0
 #
 #
 # (257)  B1 GENERATOR OUTAGE
 #
3  33117     0  "1"     0     # C.COS 7   18.00       PGEN=330.00  QGEN=145.77
0
 #
 #
 # (258)  B1 GENERATOR OUTAGE
 #
3  33105     0  "1"     0     # PTSB  5   18.00       PGEN=310.00  QGEN=122.68
0
 #
 #
 # (259)  B1 GENERATOR OUTAGE
 #
3  33106     0  "1"     0     # PTSB  6   18.00       PGEN=310.00  QGEN=113.24
0
 #
 #
 # (260)  B1 GENERATOR OUTAGE
 #
3  30000     0  "1"     0     # PTSB  7   20.00       PGEN=700.00  QGEN=219.50
0
 #
 #
 # (261)  B1 GENERATOR OUTAGE
 #
3  33151     0  "1"     0     # FOSTER W  12.47       PGEN=45.40  QGEN=24.97
0
 #
 #
 # (262)  B1 GENERATOR OUTAGE
 #
3  33151     0  "2"     0     # FOSTER W  12.47       PGEN=45.40  QGEN=24.97
0
 #
 #
 # (263)  B1 GENERATOR OUTAGE
 #
3  33151     0  "3"     0     # FOSTER W  12.47       PGEN=35.00  QGEN=21.00
0
 #
 #
 # (264)  B1 GENERATOR OUTAGE
 #
3  33161     0  "1"     0     # DOWCHEM1  13.80       PGEN=15.30  QGEN=3.06
0
 #
 #
 # (265)  B1 GENERATOR OUTAGE
 #
3  33133     0  "1"     0     # GWF #3    13.80       PGEN=19.00  QGEN=4.93
0
 #
 #
 # (266)  B1 GENERATOR OUTAGE
```

```
 #
3  33139     0  "1"     0     # STAUFER    9.11       PGEN=2.00  QGEN=-1.00
0
 #
 #
 # (267)  B1 GENERATOR OUTAGE
 #
3  33131     0  "1"     0     # GWF #1     9.11       PGEN=12.70  QGEN=-2.20
0
 #
 #
 # (268)  B1 GENERATOR OUTAGE
 #
3  33135     0  "1"     0     # GWF #5    13.80       PGEN=18.90  QGEN=4.22
0
 #
 #
 # (269)  B1 GENERATOR OUTAGE
 #
3  33162     0  "1"     0     # DOWCHEM2  13.80       PGEN=22.00  QGEN=8.00
0
 #
 #
 # (270)  B1 GENERATOR OUTAGE
 #
3  33163     0  "1"     0     # DOWCHEM3  13.80       PGEN=22.00  QGEN=8.00
0
 #
 #
 # (271)  B1 GENERATOR OUTAGE
 #
3  33136     0  "1"     0     # CCCSD     12.47       PGEN=4.40  QGEN=0.94
0
 #
 #
 # (272)  B1 GENERATOR OUTAGE
 #
3  33181     0  "1"     0     # T258CT1   18.00       PGEN=174.00  QGEN=43.00
0
 #
 #
 # (273)  B1 GENERATOR OUTAGE
 #
3  33182     0  "2"     0     # T258CT2   18.00       PGEN=174.00  QGEN=43.00
0
 #
 #
 # (274)  B1 GENERATOR OUTAGE
 #
3  33183     0  "3"     0     # T258ST1   18.00       PGEN=189.00  QGEN=44.92
0
 #
 #
 # (275)  B1 GENERATOR OUTAGE
 #
3  33184     0  "1"     0     # T305GT1   16.50       PGEN=242.00  QGEN=32.00
0
 #
 #
 # (276)  B1 GENERATOR OUTAGE
 #
3  33185     0  "1"     0     # T305ST1   13.80       PGEN=71.00  QGEN=8.41
0
 #
 #
 # (277)  B1 GENERATOR OUTAGE
 #
3  33186     0  "2"     0     # T305GT2   16.50       PGEN=242.00  QGEN=32.00
0
 #
 #
 # (278)  B1 GENERATOR OUTAGE
 #
3  33187     0  "2"     0     # T305ST2   13.80       PGEN=71.00  QGEN=8.41
0
 #
 #
 # (279)  B1 GENERATOR OUTAGE
```

```
 #
3  33188     0  "1"     0     # T320GT1   16.50       PGEN=242.00  QGEN=30.38
0
 #
 #
 # (280)  B1 GENERATOR OUTAGE
 #
3  33189     0  "2"     0     # T320GT2   16.50       PGEN=242.00  QGEN=30.38
0
 #
 #
 # (281)  B1 GENERATOR OUTAGE
 #
3  33191     0  "1"     0     # T322GT1   16.50       PGEN=242.00  QGEN=46.44
0
 #
 #
 # (282)  B1 GENERATOR OUTAGE
 #
3  33192     0  "1"     0     # T322ST1   13.80       PGEN=71.00  QGEN=13.06
0
 #
 #
 # (283)  B1 GENERATOR OUTAGE
 #
3  33193     0  "2"     0     # T322GT2   16.50       PGEN=242.00  QGEN=46.44
0
 #
 #
 # (284)  B1 GENERATOR OUTAGE
 #
3  33194     0  "2"     0     # T322ST2   13.80       PGEN=71.00  QGEN=13.06
0
 #
 #
 # (285)  B1 GENERATOR OUTAGE
 #
3  33195     0  "1"     0     # T417      34.50       PGEN=36.10  QGEN=0.00
0
 #
 #
 # (286)  L-1/G-1 OVERLAPPING OUTAGE
 # Lakeville - Sobrante #2 230 kV Line and DEC pre-project outage
1  30435 30540  "2 "    0     # line from  LAKEVILE 230.00  BRKR to BRKR  SOBRANTE 230.00
 #
3  33107     0  "1"     0     # DEC STG1  24.00       PGEN=280.00  QGEN=81.62
3  33108     0  "1"     0     # DEC CTG1  18.00       PGEN=200.00  QGEN=58.29
3  33109     0  "1"     0     # DEC CTG2  18.00       PGEN=200.00  QGEN=58.29
3  33110     0  "1"     0     # DEC CTG3  18.00       PGEN=200.00  QGEN=58.29
0
 #
 #
 # (287)  L-1/G-1 OVERLAPPING OUTAGE
 # Ignacio - Sobrante 230 kV Line and DEC pre-project outage
1  30437 30445  "1 "    0     # line from  CROCKETT 230.00   (3) to BRKR  IGNACIO  230.00
1  30437 30438  "1 "    0     # line from  CROCKETT 230.00   (3) to (2)   C&H      230.00
1  30437 30540  "1 "    0     # line from  CROCKETT 230.00   (3) to BRKR  SOBRANTE 230.00
2  30438 32900  "1 "    0     # TRAN from  C&H      230.00  BRKR to (1)   CRCKTCOG  18.00
4  30438     0  "1 "    0     # LOAD-DROP    C&H      230.00  LOAD==3.32(0.76)
3  32900     0  "1 "    0     # GEN-DROP    CRCKTCOG  18.00  GEN==240.00(40.82)
 #
3  33107     0  "1"     0     # DEC STG1  24.00       PGEN=280.00  QGEN=81.62
3  33108     0  "1"     0     # DEC CTG1  18.00       PGEN=200.00  QGEN=58.29
3  33109     0  "1"     0     # DEC CTG2  18.00       PGEN=200.00  QGEN=58.29
3  33110     0  "1"     0     # DEC CTG3  18.00       PGEN=200.00  QGEN=58.29
0
 #
 #
 # (288)  L-1/G-1 OVERLAPPING OUTAGE
 # Lakeville - T257 230 kV Line and DEC post-project outage
1  30435 30446  "1 "    0     # line from  LAKEVILE 230.00  BRKR to BRKR  T257SWST 230.00
 #
3  33107     0  "1"     0     # DEC STG1  24.00       PGEN=280.00  QGEN=81.62
3  33108     0  "1"     0     # DEC CTG1  18.00       PGEN=200.00  QGEN=58.29
3  33109     0  "1"     0     # DEC CTG2  18.00       PGEN=200.00  QGEN=58.29
3  33110     0  "1"     0     # DEC CTG3  18.00       PGEN=200.00  QGEN=58.29
0
 #
```

```
 #
 # (289)  L-1/G-1 OVERLAPPING OUTAGE
 # Ignacio - T257 230 kV Line and DEC post-project outage
1  30445 30446  "1 "    0     # line from  IGNACIO  230.00  BRKR to BRKR  T257SWST 230.00
 #
3  33107     0  "1"     0     # DEC STG1  24.00       PGEN=280.00  QGEN=81.62
3  33108     0  "1"     0     # DEC CTG1  18.00       PGEN=200.00  QGEN=58.29
3  33109     0  "1"     0     # DEC CTG2  18.00       PGEN=200.00  QGEN=58.29
3  33110     0  "1"     0     # DEC CTG3  18.00       PGEN=200.00  QGEN=58.29
0
 #
 #
 # (290)  L-1/G-1 OVERLAPPING OUTAGE
 # T257 - Sobrante #1 230 kV Line and DEC post-project outage
1  30446 30437  "1 "    0     # line from  T257SWST 230.00  BRKR to (3)   CROCKETT 230.00
1  30437 30438  "1 "    0     # line from  CROCKETT 230.00   (3) to (2)   C&H      230.00
1  30437 30540  "1 "    0     # line from  CROCKETT 230.00   (3) to BRKR  SOBRANTE 230.00
2  30438 32900  "1 "    0     # TRAN from  C&H      230.00  BRKR to (1)   CRCKTCOG  18.00
4  30438     0  "1 "    0     # LOAD-DROP    C&H      230.00  LOAD==3.32(0.76)
3  32900     0  "1 "    0     # GEN-DROP    CRCKTCOG  18.00  GEN==240.00(54.42)
 #
3  33107     0  "1"     0     # DEC STG1  24.00       PGEN=280.00  QGEN=81.62
3  33108     0  "1"     0     # DEC CTG1  18.00       PGEN=200.00  QGEN=58.29
3  33109     0  "1"     0     # DEC CTG2  18.00       PGEN=200.00  QGEN=58.29
3  33110     0  "1"     0     # DEC CTG3  18.00       PGEN=200.00  QGEN=58.29
0
 #
 #
 # (291)  L-1/G-1 OVERLAPPING OUTAGE
 # T257 - Sobrante #2 230 kV Line and DEC post-project outage
1  30446 30540  "2 "    0     # line from  T257SWST 230.00  BRKR to BRKR  SOBRANTE 230.00
 #
3  33107     0  "1"     0     # DEC STG1  24.00       PGEN=280.00  QGEN=81.62
3  33108     0  "1"     0     # DEC CTG1  18.00       PGEN=200.00  QGEN=58.29
3  33109     0  "1"     0     # DEC CTG2  18.00       PGEN=200.00  QGEN=58.29
3  33110     0  "1"     0     # DEC CTG3  18.00       PGEN=200.00  QGEN=58.29
0
 #
 #
 # (292)  L-1/G-1 OVERLAPPING OUTAGE
 # Q177 - Moraga 230 kV Line and DEC
1  30466 30550  "1 "    0     # line from  Q177     230.00  BRKR to BRKR  MORAGA   230.00
 #
3  33107     0  "1"     0     # DEC STG1  24.00       PGEN=280.00  QGEN=81.62
3  33108     0  "1"     0     # DEC CTG1  18.00       PGEN=200.00  QGEN=58.29
3  33109     0  "1"     0     # DEC CTG2  18.00       PGEN=200.00  QGEN=58.29
3  33110     0  "1"     0     # DEC CTG3  18.00       PGEN=200.00  QGEN=58.29
0
 #
 #
 # (293)  L-1/G-1 OVERLAPPING OUTAGE
 # Parkway - Moraga 230 kV Line and DEC
1  30467 30550  "1 "    0     # line from  PARKWAY  230.00  BRKR to BRKR  MORAGA   230.00
 #
3  33107     0  "1"     0     # DEC STG1  24.00       PGEN=280.00  QGEN=81.62
3  33108     0  "1"     0     # DEC CTG1  18.00       PGEN=200.00  QGEN=58.29
3  33109     0  "1"     0     # DEC CTG2  18.00       PGEN=200.00  QGEN=58.29
3  33110     0  "1"     0     # DEC CTG3  18.00       PGEN=200.00  QGEN=58.29
0
 #
 #
 # (294)  L-1/G-1 OVERLAPPING OUTAGE
 # Birds Landing - Contra Costa Sub 230 kV Line and DEC
1  30479 30523  "1 "    0     # line from  BDLSWSTA 230.00  BRKR to BRKR  CC SUB   230.00
 #
3  33107     0  "1"     0     # DEC STG1  24.00       PGEN=280.00  QGEN=81.62
3  33108     0  "1"     0     # DEC CTG1  18.00       PGEN=200.00  QGEN=58.29
3  33109     0  "1"     0     # DEC CTG2  18.00       PGEN=200.00  QGEN=58.29
3  33110     0  "1"     0     # DEC CTG3  18.00       PGEN=200.00  QGEN=58.29
0
 #
 #
 # (295)  L-1/G-1 OVERLAPPING OUTAGE
 # Contra Costa - Contra Costa Sub 230 kV Line and DEC
1  30523 30525  "1 "    0     # line from  CC SUB   230.00  BRKR to BRKR  C.COSTA  230.00
 #
3  33107     0  "1"     0     # DEC STG1  24.00       PGEN=280.00  QGEN=81.62
3  33108     0  "1"     0     # DEC CTG1  18.00       PGEN=200.00  QGEN=58.29
```

```
3  33109     0  "1"     0     # DEC CTG2  18.00       PGEN=200.00  QGEN=58.29
3  33110     0  "1"     0     # DEC CTG3  18.00       PGEN=200.00  QGEN=58.29
0
 #
 #
 # (296)  L-1/G-1 OVERLAPPING OUTAGE
 # Birds Landing - Contra Costa 230 kV Line and DEC
1  30525 30479  "1 "    0     # line from  C.COSTA  230.00  BRKR to BRKR  BDLSWSTA 230.00
 #
3  33107     0  "1"     0     # DEC STG1  24.00       PGEN=280.00  QGEN=81.62
3  33108     0  "1"     0     # DEC CTG1  18.00       PGEN=200.00  QGEN=58.29
3  33109     0  "1"     0     # DEC CTG2  18.00       PGEN=200.00  QGEN=58.29
3  33110     0  "1"     0     # DEC CTG3  18.00       PGEN=200.00  QGEN=58.29
0
 #
 #
 # (297)  L-1/G-1 OVERLAPPING OUTAGE
 # Contra Costa - Moraga #1 230 kV Line and DEC
1  30525 30543  "1 "    0     # line from  C.COSTA  230.00  BRKR to (3)   ROSSTAP1 230.00
1  30543 30545  "1 "    0     # line from  ROSSTAP1 230.00   (3) to BRKR  ROSSMOOR 230.00
1  30543 30550  "1 "    0     # line from  ROSSTAP1 230.00   (3) to BRKR  MORAGA   230.00
4  30545     0  "1 "    0     # LOAD-DROP    ROSSMOOR 230.00  LOAD==36.95(8.42)
4  30545     0  "2 "    0     # LOAD-DROP    ROSSMOOR 230.00  LOAD==32.85(7.49)
1  30544 30545  "2 "    1     # LINE-TRANSFER  ROSSTAP1  230.00  TO  ROSSTAP2  230.00
4  30545     0  "**"    1     # RESTORE ROSSMOOR load
 #
3  33107     0  "1"     0     # DEC STG1  24.00       PGEN=280.00  QGEN=81.62
3  33108     0  "1"     0     # DEC CTG1  18.00       PGEN=200.00  QGEN=58.29
3  33109     0  "1"     0     # DEC CTG2  18.00       PGEN=200.00  QGEN=58.29
3  33110     0  "1"     0     # DEC CTG3  18.00       PGEN=200.00  QGEN=58.29
0
 #
 #
 # (298)  L-1/G-1 OVERLAPPING OUTAGE
 # Contra Costa - Moraga #2 230 kV Line and DEC
1  30525 30544  "2 "    0     # line from  C.COSTA  230.00  BRKR to (2)   ROSSTAP2 230.00
1  30544 30550  "2 "    0     # line from  ROSSTAP2 230.00   (2) to BRKR  MORAGA   230.00
 #
3  33107     0  "1"     0     # DEC STG1  24.00       PGEN=280.00  QGEN=81.62
3  33108     0  "1"     0     # DEC CTG1  18.00       PGEN=200.00  QGEN=58.29
3  33109     0  "1"     0     # DEC CTG2  18.00       PGEN=200.00  QGEN=58.29
3  33110     0  "1"     0     # DEC CTG3  18.00       PGEN=200.00  QGEN=58.29
0
 #
 #
 # (299)  L-1/G-1 OVERLAPPING OUTAGE
 # Contra Costa - Brentwood 230 kV Line and DEC
1  30525 30565  "1 "    0     # line from  C.COSTA  230.00  BRKR to BRKR  BRENTWOD 230.00
 #
3  33107     0  "1"     0     # DEC STG1  24.00       PGEN=280.00  QGEN=81.62
3  33108     0  "1"     0     # DEC CTG1  18.00       PGEN=200.00  QGEN=58.29
3  33109     0  "1"     0     # DEC CTG2  18.00       PGEN=200.00  QGEN=58.29
3  33110     0  "1"     0     # DEC CTG3  18.00       PGEN=200.00  QGEN=58.29
0
 #
 #
 # (300)  L-1/G-1 OVERLAPPING OUTAGE
 # Contra Costa - Lonetree 230 kV Line and DEC
1  30525 30567  "1 "    0     # line from  C.COSTA  230.00  BRKR to BRKR  LONETREE 230.00
 #
3  33107     0  "1"     0     # DEC STG1  24.00       PGEN=280.00  QGEN=81.62
3  33108     0  "1"     0     # DEC CTG1  18.00       PGEN=200.00  QGEN=58.29
3  33109     0  "1"     0     # DEC CTG2  18.00       PGEN=200.00  QGEN=58.29
3  33110     0  "1"     0     # DEC CTG3  18.00       PGEN=200.00  QGEN=58.29
0
 #
 #
 # (301)  L-1/G-1 OVERLAPPING OUTAGE
 # Contra Costa - Delta Pumps 230 kV Line and DEC
1  30525 30575  "1 "    0     # line from  C.COSTA  230.00  BRKR to (3)   WND MSTR 230.00
1  30575 38610  "1 "    0     # line from  WND MSTR 230.00   (3) to BRKR  DELTAPMP 230.00
2  30575 33170  "1 "    0     # TRAN from  WND MSTR 230.00   (3) to (1)   WINDMSTR   9.11
 #
3  33107     0  "1"     0     # DEC STG1  24.00       PGEN=280.00  QGEN=81.62
3  33108     0  "1"     0     # DEC CTG1  18.00       PGEN=200.00  QGEN=58.29
3  33109     0  "1"     0     # DEC CTG2  18.00       PGEN=200.00  QGEN=58.29
3  33110     0  "1"     0     # DEC CTG3  18.00       PGEN=200.00  QGEN=58.29
0
```

```
 #
 #
 # (302)  L-1/G-1 OVERLAPPING OUTAGE
 # Contra Costa - Las Positas 230 kV Line and DEC
1  30525 30585  "1 "    0     # line from  C.COSTA  230.00  BRKR to BRKR  LS PSTAS 230.00
 #
3  33107     0  "1"     0     # DEC STG1  24.00       PGEN=280.00  QGEN=81.62
3  33108     0  "1"     0     # DEC CTG1  18.00       PGEN=200.00  QGEN=58.29
3  33109     0  "1"     0     # DEC CTG2  18.00       PGEN=200.00  QGEN=58.29
3  33110     0  "1"     0     # DEC CTG3  18.00       PGEN=200.00  QGEN=58.29
0
 #
 #
 # (303)  L-1/G-1 OVERLAPPING OUTAGE
 # Pittsburg - San Ramon 230 kV Line and DEC
1  30526 30555  "1 "    0     # line from  PITSBG D 230.00  BRKR to BRKR  SANRAMON 230.00
 #
3  33107     0  "1"     0     # DEC STG1  24.00       PGEN=280.00  QGEN=81.62
3  33108     0  "1"     0     # DEC CTG1  18.00       PGEN=200.00  QGEN=58.29
3  33109     0  "1"     0     # DEC CTG2  18.00       PGEN=200.00  QGEN=58.29
3  33110     0  "1"     0     # DEC CTG3  18.00       PGEN=200.00  QGEN=58.29
0
 #
 #
 # (304)  L-1/G-1 OVERLAPPING OUTAGE
 # Pittsburg - Tassajara 230 kV Line and DEC
1  30526 30561  "1 "    0     # line from  PITSBG D 230.00  BRKR to BRKR  TASSAJAR 230.00
 #
3  33107     0  "1"     0     # DEC STG1  24.00       PGEN=280.00  QGEN=81.62
3  33108     0  "1"     0     # DEC CTG1  18.00       PGEN=200.00  QGEN=58.29
3  33109     0  "1"     0     # DEC CTG2  18.00       PGEN=200.00  QGEN=58.29
3  33110     0  "1"     0     # DEC CTG3  18.00       PGEN=200.00  QGEN=58.29
0
 #
 #
 # (305)  L-1/G-1 OVERLAPPING OUTAGE
 # Pittsburg - Tidewater 230 kV Line and DEC
1  30527 30535  "1 "    0     # line from  PITSBG E 230.00  BRKR to BRKR  TIDEWATR 230.00
 #
3  33107     0  "1"     0     # DEC STG1  24.00       PGEN=280.00  QGEN=81.62
3  33108     0  "1"     0     # DEC CTG1  18.00       PGEN=200.00  QGEN=58.29
3  33109     0  "1"     0     # DEC CTG2  18.00       PGEN=200.00  QGEN=58.29
3  33110     0  "1"     0     # DEC CTG3  18.00       PGEN=200.00  QGEN=58.29
0
 #
 #
 # (306)  L-1/G-1 OVERLAPPING OUTAGE
 # Pittsburg - Tesoro 230 kV Line and DEC
1  30527 30536  "1 "    0     # line from  PITSBG E 230.00  BRKR to BRKR  TESORO   230.00
 #
3  33107     0  "1"     0     # DEC STG1  24.00       PGEN=280.00  QGEN=81.62
3  33108     0  "1"     0     # DEC CTG1  18.00       PGEN=200.00  QGEN=58.29
3  33109     0  "1"     0     # DEC CTG2  18.00       PGEN=200.00  QGEN=58.29
3  33110     0  "1"     0     # DEC CTG3  18.00       PGEN=200.00  QGEN=58.29
0
 #
 #
 # (307)  L-1/G-1 OVERLAPPING OUTAGE
 # Pittsburg - Tesla #1 230 kV Line and DEC
1  30527 30595  "1 "    0     # line from  PITSBG E 230.00  BRKR to (3)   FLOWIND2 230.00
1  30595 30640  "1 "    0     # line from  FLOWIND2 230.00   (3) to BRKR  TESLA C  230.00
2  30595 33840  "1 "    0     # TRAN from  FLOWIND2 230.00   (3) to (1)   FLOWD3-6   9.11
4  33840     0  "SG"    0     # LOAD-DROP    FLOWD3-6   9.11  LOAD==0.70(0.34)
3  33840     0  "1 "    0     # GEN-DROP    FLOWD3-6   9.11  GEN==1.30(0.00)
3  33840     0  "4 "    0     # GEN-DROP    FLOWD3-6   9.11  GEN==1.10(0.00)
 #
3  33107     0  "1"     0     # DEC STG1  24.00       PGEN=280.00  QGEN=81.62
3  33108     0  "1"     0     # DEC CTG1  18.00       PGEN=200.00  QGEN=58.29
3  33109     0  "1"     0     # DEC CTG2  18.00       PGEN=200.00  QGEN=58.29
3  33110     0  "1"     0     # DEC CTG3  18.00       PGEN=200.00  QGEN=58.29
0
 #
 #
 # (308)  L-1/G-1 OVERLAPPING OUTAGE
 # Pittsburg - Tesla #2 230 kV Line and DEC pre and post-project outage
1  30527 30600  "2 "    0     # line from  PITSBG E 230.00  BRKR to (4)   TRES VAQ 230.00
1  30600 30640  "2 "    0     # line from  TRES VAQ 230.00   (4) to BRKR  TESLA C  230.00
2  30600 33171  "1 "    0     # TRAN from  TRES VAQ 230.00   (4) to (1)   TRSVQ+NW   9.11
```

```
2  30600 33195  "1 "    0     # TRAN from  TRES VAQ 230.00   (4) to (1)   T417      34.50
4  33195     0  "ss"    0     # LOAD-DROP    T417      34.50  LOAD==0.10(0.06)
3  33195     0  "1 "    0     # GEN-DROP    T417      34.50  GEN==36.10(0.00)
 #
3  33107     0  "1"     0     # DEC STG1  24.00       PGEN=280.00  QGEN=81.62
3  33108     0  "1"     0     # DEC CTG1  18.00       PGEN=200.00  QGEN=58.29
3  33109     0  "1"     0     # DEC CTG2  18.00       PGEN=200.00  QGEN=58.29
3  33110     0  "1"     0     # DEC CTG3  18.00       PGEN=200.00  QGEN=58.29
0
 #
 #
 # (309)  L-1/G-1 OVERLAPPING OUTAGE
 # Tidewater - Sobrante 230 kV Line and DEC
1  30535 30540  "1 "    0     # line from  TIDEWATR 230.00  BRKR to BRKR  SOBRANTE 230.00
 #
3  33107     0  "1"     0     # DEC STG1  24.00       PGEN=280.00  QGEN=81.62
3  33108     0  "1"     0     # DEC CTG1  18.00       PGEN=200.00  QGEN=58.29
3  33109     0  "1"     0     # DEC CTG2  18.00       PGEN=200.00  QGEN=58.29
3  33110     0  "1"     0     # DEC CTG3  18.00       PGEN=200.00  QGEN=58.29
0
 #
 #
 # (310)  L-1/G-1 OVERLAPPING OUTAGE
 # Tesoro - Sobrante 230 kV Line and DEC
1  30536 30540  "1 "    0     # line from  TESORO   230.00  BRKR to BRKR  SOBRANTE 230.00
 #
3  33107     0  "1"     0     # DEC STG1  24.00       PGEN=280.00  QGEN=81.62
3  33108     0  "1"     0     # DEC CTG1  18.00       PGEN=200.00  QGEN=58.29
3  33109     0  "1"     0     # DEC CTG2  18.00       PGEN=200.00  QGEN=58.29
3  33110     0  "1"     0     # DEC CTG3  18.00       PGEN=200.00  QGEN=58.29
0
 #
 #
 # (311)  L-1/G-1 OVERLAPPING OUTAGE
 # Moraga - Castro Valley 230 kV Line and DEC
1  30550 30554  "1 "    0     # line from  MORAGA   230.00  BRKR to BRKR  CASTROVL 230.00
 #
3  33107     0  "1"     0     # DEC STG1  24.00       PGEN=280.00  QGEN=81.62
3  33108     0  "1"     0     # DEC CTG1  18.00       PGEN=200.00  QGEN=58.29
3  33109     0  "1"     0     # DEC CTG2  18.00       PGEN=200.00  QGEN=58.29
3  33110     0  "1"     0     # DEC CTG3  18.00       PGEN=200.00  QGEN=58.29
0
 #
 #
 # (312)  L-1/G-1 OVERLAPPING OUTAGE
 # Moraga - San Ramon 230 kV Line and DEC
1  30550 30555  "1 "    0     # line from  MORAGA   230.00  BRKR to BRKR  SANRAMON 230.00
 #
3  33107     0  "1"     0     # DEC STG1  24.00       PGEN=280.00  QGEN=81.62
3  33108     0  "1"     0     # DEC CTG1  18.00       PGEN=200.00  QGEN=58.29
3  33109     0  "1"     0     # DEC CTG2  18.00       PGEN=200.00  QGEN=58.29
3  33110     0  "1"     0     # DEC CTG3  18.00       PGEN=200.00  QGEN=58.29
0
 #
 #
 # (313)  L-1/G-1 OVERLAPPING OUTAGE
 # Pittsburg - East Shore 230 kV Line and DEC
1  30560 30527  "1 "    0     # line from  E. SHORE 230.00  BRKR to BRKR  PITSBG E 230.00
 #
3  33107     0  "1"     0     # DEC STG1  24.00       PGEN=280.00  QGEN=81.62
3  33108     0  "1"     0     # DEC CTG1  18.00       PGEN=200.00  QGEN=58.29
3  33109     0  "1"     0     # DEC CTG2  18.00       PGEN=200.00  QGEN=58.29
3  33110     0  "1"     0     # DEC CTG3  18.00       PGEN=200.00  QGEN=58.29
0
 #
 #
 # (314)  L-1/G-1 OVERLAPPING OUTAGE
 # Tassajara - Newark 230 kV Line and DEC
1  30561 30562  "1 "    0     # line from  TASSAJAR 230.00  BRKR to (3)   TES JCT  230.00
1  30562 30563  "1 "    0     # line from  TES JCT  230.00   (3) to BRKR  RESEARCH 230.00
1  30562 30631  "1 "    0     # line from  TES JCT  230.00   (3) to BRKR  NEWARK E 230.00
4  30563     0  "1 "    0     # LOAD-DROP    RESEARCH 230.00  LOAD==37.05(8.44)
 #
3  33107     0  "1"     0     # DEC STG1  24.00       PGEN=280.00  QGEN=81.62
3  33108     0  "1"     0     # DEC CTG1  18.00       PGEN=200.00  QGEN=58.29
3  33109     0  "1"     0     # DEC CTG2  18.00       PGEN=200.00  QGEN=58.29
3  33110     0  "1"     0     # DEC CTG3  18.00       PGEN=200.00  QGEN=58.29
0
```

```
 #
 #
 # (315)  L-1/G-1 OVERLAPPING OUTAGE
 # Brentwood - Kelso 230 kV Line and DEC
1  30565 30569  "1 "    0     # line from  BRENTWOD 230.00  BRKR to BRKR  KELSO    230.00
 #
3  33107     0  "1"     0     # DEC STG1  24.00       PGEN=280.00  QGEN=81.62
3  33108     0  "1"     0     # DEC CTG1  18.00       PGEN=200.00  QGEN=58.29
3  33109     0  "1"     0     # DEC CTG2  18.00       PGEN=200.00  QGEN=58.29
3  33110     0  "1"     0     # DEC CTG3  18.00       PGEN=200.00  QGEN=58.29
0
 #
 #
 # (316)  L-1/G-1 OVERLAPPING OUTAGE
 # Lonetree - Cayetano 230 kV Line and DEC
1  30567 30590  "1 "    0     # line from  LONETREE 230.00  BRKR to (3)   USWP-JRW 230.00
1  30590 30530  "1 "    0     # line from  USWP-JRW 230.00   (3) to BRKR  CAYETANO 230.00
2  30590 33838  "1 "    0     # TRAN from  USWP-JRW 230.00   (3) to (1)   USWP_#3    9.11
4  33838     0  "SG"    0     # LOAD-DROP    USWP_#3    9.11  LOAD==0.50(0.20)
 #
3  33107     0  "1"     0     # DEC STG1  24.00       PGEN=280.00  QGEN=81.62
3  33108     0  "1"     0     # DEC CTG1  18.00       PGEN=200.00  QGEN=58.29
3  33109     0  "1"     0     # DEC CTG2  18.00       PGEN=200.00  QGEN=58.29
3  33110     0  "1"     0     # DEC CTG3  18.00       PGEN=200.00  QGEN=58.29
0
 #
 #
 # (317)  L-1/G-1 OVERLAPPING OUTAGE
 # Pittsburg - San Mateo 230 kV Line and DEC
1  30700 30527  "1 "    0     # line from  SANMATEO 230.00  BRKR to BRKR  PITSBG E 230.00
 #
3  33107     0  "1"     0     # DEC STG1  24.00       PGEN=280.00  QGEN=81.62
3  33108     0  "1"     0     # DEC CTG1  18.00       PGEN=200.00  QGEN=58.29
3  33109     0  "1"     0     # DEC CTG2  18.00       PGEN=200.00  QGEN=58.29
3  33110     0  "1"     0     # DEC CTG3  18.00       PGEN=200.00  QGEN=58.29
0
 #
 #
 # (318)  L-1/G-1 OVERLAPPING OUTAGE
 # Lakeville - Sobrante #2 230 kV Line and Gateway PP pre-project outage
1  30435 30540  "2 "    0     # line from  LAKEVILE 230.00  BRKR to BRKR  SOBRANTE 230.00
 #
3  33118     0  "1"     0     # GATEWAY1  18.00       PGEN=200.00  QGEN=-7.87
3  33119     0  "1"     0     # GATEWAY2  18.00       PGEN=195.00  QGEN=-6.21
3  33120     0  "1"     0     # GATEWAY3  18.00       PGEN=195.00  QGEN=-6.21
0
 #
 #
 # (319)  L-1/G-1 OVERLAPPING OUTAGE
 # Ignacio - Sobrante 230 kV Line and Gateway PP pre-project outage
1  30437 30445  "1 "    0     # line from  CROCKETT 230.00   (3) to BRKR  IGNACIO  230.00
1  30437 30438  "1 "    0     # line from  CROCKETT 230.00   (3) to (2)   C&H      230.00
1  30437 30540  "1 "    0     # line from  CROCKETT 230.00   (3) to BRKR  SOBRANTE 230.00
2  30438 32900  "1 "    0     # TRAN from  C&H      230.00  BRKR to (1)   CRCKTCOG  18.00
4  30438     0  "1 "    0     # LOAD-DROP    C&H      230.00  LOAD==3.32(0.76)
3  32900     0  "1 "    0     # GEN-DROP    CRCKTCOG  18.00  GEN==240.00(40.82)
 #
3  33118     0  "1"     0     # GATEWAY1  18.00       PGEN=200.00  QGEN=-7.87
3  33119     0  "1"     0     # GATEWAY2  18.00       PGEN=195.00  QGEN=-6.21
3  33120     0  "1"     0     # GATEWAY3  18.00       PGEN=195.00  QGEN=-6.21
0
 #
 #
 # (320)  L-1/G-1 OVERLAPPING OUTAGE
 # Lakeville - T257 230 kV Line and Gateway PP post-project outage
1  30435 30446  "1 "    0     # line from  LAKEVILE 230.00  BRKR to BRKR  T257SWST 230.00
 #
3  33118     0  "1"     0     # GATEWAY1  18.00       PGEN=200.00  QGEN=-7.87
3  33119     0  "1"     0     # GATEWAY2  18.00       PGEN=195.00  QGEN=-6.21
3  33120     0  "1"     0     # GATEWAY3  18.00       PGEN=195.00  QGEN=-6.21
0
 #
 #
 # (321)  L-1/G-1 OVERLAPPING OUTAGE
 # Ignacio - T257 230 kV Line and Gateway PP post-project outage
1  30445 30446  "1 "    0     # line from  IGNACIO  230.00  BRKR to BRKR  T257SWST 230.00
 #
3  33118     0  "1"     0     # GATEWAY1  18.00       PGEN=200.00  QGEN=-7.87
```

```
3  33119     0  "1"     0     # GATEWAY2  18.00       PGEN=195.00  QGEN=-6.21
3  33120     0  "1"     0     # GATEWAY3  18.00       PGEN=195.00  QGEN=-6.21
0
 #
 #
 # (322)  L-1/G-1 OVERLAPPING OUTAGE
 # T257 - Sobrante #1 230 kV Line and Gateway PP post-project outage
1  30446 30437  "1 "    0     # line from  T257SWST 230.00  BRKR to (3)   CROCKETT 230.00
1  30437 30438  "1 "    0     # line from  CROCKETT 230.00   (3) to (2)   C&H      230.00
1  30437 30540  "1 "    0     # line from  CROCKETT 230.00   (3) to BRKR  SOBRANTE 230.00
2  30438 32900  "1 "    0     # TRAN from  C&H      230.00  BRKR to (1)   CRCKTCOG  18.00
4  30438     0  "1 "    0     # LOAD-DROP    C&H      230.00  LOAD==3.32(0.76)
3  32900     0  "1 "    0     # GEN-DROP    CRCKTCOG  18.00  GEN==240.00(54.42)
 #
3  33118     0  "1"     0     # GATEWAY1  18.00       PGEN=200.00  QGEN=-7.87
3  33119     0  "1"     0     # GATEWAY2  18.00       PGEN=195.00  QGEN=-6.21
3  33120     0  "1"     0     # GATEWAY3  18.00       PGEN=195.00  QGEN=-6.21
0
 #
 #
 # (323)  L-1/G-1 OVERLAPPING OUTAGE
 # T257 - Sobrante #2 230 kV Line and Gateway PP post-project outage
1  30446 30540  "2 "    0     # line from  T257SWST 230.00  BRKR to BRKR  SOBRANTE 230.00
 #
3  33118     0  "1"     0     # GATEWAY1  18.00       PGEN=200.00  QGEN=-7.87
3  33119     0  "1"     0     # GATEWAY2  18.00       PGEN=195.00  QGEN=-6.21
3  33120     0  "1"     0     # GATEWAY3  18.00       PGEN=195.00  QGEN=-6.21
0
 #
 #
 # (324)  L-1/G-1 OVERLAPPING OUTAGE
 # Q177 - Moraga 230 kV Line and Gateway PP
1  30466 30550  "1 "    0     # line from  Q177     230.00  BRKR to BRKR  MORAGA   230.00
 #
3  33118     0  "1"     0     # GATEWAY1  18.00       PGEN=200.00  QGEN=-7.87
3  33119     0  "1"     0     # GATEWAY2  18.00       PGEN=195.00  QGEN=-6.21
3  33120     0  "1"     0     # GATEWAY3  18.00       PGEN=195.00  QGEN=-6.21
0
 #
 #
 # (325)  L-1/G-1 OVERLAPPING OUTAGE
 # Parkway - Moraga 230 kV Line and Gateway PP
1  30467 30550  "1 "    0     # line from  PARKWAY  230.00  BRKR to BRKR  MORAGA   230.00
 #
3  33118     0  "1"     0     # GATEWAY1  18.00       PGEN=200.00  QGEN=-7.87
3  33119     0  "1"     0     # GATEWAY2  18.00       PGEN=195.00  QGEN=-6.21
3  33120     0  "1"     0     # GATEWAY3  18.00       PGEN=195.00  QGEN=-6.21
0
 #
 #
 # (326)  L-1/G-1 OVERLAPPING OUTAGE
 # Birds Landing - Contra Costa Sub 230 kV Line and Gateway PP
1  30479 30523  "1 "    0     # line from  BDLSWSTA 230.00  BRKR to BRKR  CC SUB   230.00
 #
3  33118     0  "1"     0     # GATEWAY1  18.00       PGEN=200.00  QGEN=-7.87
3  33119     0  "1"     0     # GATEWAY2  18.00       PGEN=195.00  QGEN=-6.21
3  33120     0  "1"     0     # GATEWAY3  18.00       PGEN=195.00  QGEN=-6.21
0
 #
 #
 # (327)  L-1/G-1 OVERLAPPING OUTAGE
 # Contra Costa - Contra Costa Sub 230 kV Line and Gateway PP
1  30523 30525  "1 "    0     # line from  CC SUB   230.00  BRKR to BRKR  C.COSTA  230.00
 #
3  33118     0  "1"     0     # GATEWAY1  18.00       PGEN=200.00  QGEN=-7.87
3  33119     0  "1"     0     # GATEWAY2  18.00       PGEN=195.00  QGEN=-6.21
3  33120     0  "1"     0     # GATEWAY3  18.00       PGEN=195.00  QGEN=-6.21
0
 #
 #
 # (328)  L-1/G-1 OVERLAPPING OUTAGE
 # Birds Landing - Contra Costa 230 kV Line and Gateway PP
1  30525 30479  "1 "    0     # line from  C.COSTA  230.00  BRKR to BRKR  BDLSWSTA 230.00
 #
3  33118     0  "1"     0     # GATEWAY1  18.00       PGEN=200.00  QGEN=-7.87
3  33119     0  "1"     0     # GATEWAY2  18.00       PGEN=195.00  QGEN=-6.21
3  33120     0  "1"     0     # GATEWAY3  18.00       PGEN=195.00  QGEN=-6.21
0
```

```
 #
 #
 # (329)  L-1/G-1 OVERLAPPING OUTAGE
 # Contra Costa - Moraga #1 230 kV Line and Gateway PP
1  30525 30543  "1 "    0     # line from  C.COSTA  230.00  BRKR to (3)   ROSSTAP1 230.00
1  30543 30545  "1 "    0     # line from  ROSSTAP1 230.00   (3) to BRKR  ROSSMOOR 230.00
1  30543 30550  "1 "    0     # line from  ROSSTAP1 230.00   (3) to BRKR  MORAGA   230.00
4  30545     0  "1 "    0     # LOAD-DROP    ROSSMOOR 230.00  LOAD==36.95(8.42)
4  30545     0  "2 "    0     # LOAD-DROP    ROSSMOOR 230.00  LOAD==32.85(7.49)
1  30544 30545  "2 "    1     # LINE-TRANSFER  ROSSTAP1  230.00  TO  ROSSTAP2  230.00
4  30545     0  "**"    1     # RESTORE ROSSMOOR load
 #
3  33118     0  "1"     0     # GATEWAY1  18.00       PGEN=200.00  QGEN=-7.87
3  33119     0  "1"     0     # GATEWAY2  18.00       PGEN=195.00  QGEN=-6.21
3  33120     0  "1"     0     # GATEWAY3  18.00       PGEN=195.00  QGEN=-6.21
0
 #
 #
 # (330)  L-1/G-1 OVERLAPPING OUTAGE
 # Contra Costa - Moraga #2 230 kV Line and Gateway PP
1  30525 30544  "2 "    0     # line from  C.COSTA  230.00  BRKR to (2)   ROSSTAP2 230.00
1  30544 30550  "2 "    0     # line from  ROSSTAP2 230.00   (2) to BRKR  MORAGA   230.00
 #
3  33118     0  "1"     0     # GATEWAY1  18.00       PGEN=200.00  QGEN=-7.87
3  33119     0  "1"     0     # GATEWAY2  18.00       PGEN=195.00  QGEN=-6.21
3  33120     0  "1"     0     # GATEWAY3  18.00       PGEN=195.00  QGEN=-6.21
0
 #
 #
 # (331)  L-1/G-1 OVERLAPPING OUTAGE
 # Contra Costa - Brentwood 230 kV Line and Gateway PP
1  30525 30565  "1 "    0     # line from  C.COSTA  230.00  BRKR to BRKR  BRENTWOD 230.00
 #
3  33118     0  "1"     0     # GATEWAY1  18.00       PGEN=200.00  QGEN=-7.87
3  33119     0  "1"     0     # GATEWAY2  18.00       PGEN=195.00  QGEN=-6.21
3  33120     0  "1"     0     # GATEWAY3  18.00       PGEN=195.00  QGEN=-6.21
0
 #
 #
 # (332)  L-1/G-1 OVERLAPPING OUTAGE
 # Contra Costa - Lonetree 230 kV Line and Gateway PP
1  30525 30567  "1 "    0     # line from  C.COSTA  230.00  BRKR to BRKR  LONETREE 230.00
 #
3  33118     0  "1"     0     # GATEWAY1  18.00       PGEN=200.00  QGEN=-7.87
3  33119     0  "1"     0     # GATEWAY2  18.00       PGEN=195.00  QGEN=-6.21
3  33120     0  "1"     0     # GATEWAY3  18.00       PGEN=195.00  QGEN=-6.21
0
 #
 #
 # (333)  L-1/G-1 OVERLAPPING OUTAGE
 # Contra Costa - Delta Pumps 230 kV Line and Gateway PP
1  30525 30575  "1 "    0     # line from  C.COSTA  230.00  BRKR to (3)   WND MSTR 230.00
1  30575 38610  "1 "    0     # line from  WND MSTR 230.00   (3) to BRKR  DELTAPMP 230.00
2  30575 33170  "1 "    0     # TRAN from  WND MSTR 230.00   (3) to (1)   WINDMSTR   9.11
 #
3  33118     0  "1"     0     # GATEWAY1  18.00       PGEN=200.00  QGEN=-7.87
3  33119     0  "1"     0     # GATEWAY2  18.00       PGEN=195.00  QGEN=-6.21
3  33120     0  "1"     0     # GATEWAY3  18.00       PGEN=195.00  QGEN=-6.21
0
 #
 #
 # (334)  L-1/G-1 OVERLAPPING OUTAGE
 # Contra Costa - Las Positas 230 kV Line and Gateway PP
1  30525 30585  "1 "    0     # line from  C.COSTA  230.00  BRKR to BRKR  LS PSTAS 230.00
 #
3  33118     0  "1"     0     # GATEWAY1  18.00       PGEN=200.00  QGEN=-7.87
3  33119     0  "1"     0     # GATEWAY2  18.00       PGEN=195.00  QGEN=-6.21
3  33120     0  "1"     0     # GATEWAY3  18.00       PGEN=195.00  QGEN=-6.21
0
 #
 #
 # (335)  L-1/G-1 OVERLAPPING OUTAGE
 # Pittsburg - San Ramon 230 kV Line and Gateway PP
1  30526 30555  "1 "    0     # line from  PITSBG D 230.00  BRKR to BRKR  SANRAMON 230.00
 #
3  33118     0  "1"     0     # GATEWAY1  18.00       PGEN=200.00  QGEN=-7.87
3  33119     0  "1"     0     # GATEWAY2  18.00       PGEN=195.00  QGEN=-6.21
3  33120     0  "1"     0     # GATEWAY3  18.00       PGEN=195.00  QGEN=-6.21
```

```
0
 #
 #
 # (336)  L-1/G-1 OVERLAPPING OUTAGE
 # Pittsburg - Tassajara 230 kV Line and Gateway PP
1  30526 30561  "1 "    0     # line from  PITSBG D 230.00  BRKR to BRKR  TASSAJAR 230.00
 #
3  33118     0  "1"     0     # GATEWAY1  18.00       PGEN=200.00  QGEN=-7.87
3  33119     0  "1"     0     # GATEWAY2  18.00       PGEN=195.00  QGEN=-6.21
3  33120     0  "1"     0     # GATEWAY3  18.00       PGEN=195.00  QGEN=-6.21
0
 #
 #
 # (337)  L-1/G-1 OVERLAPPING OUTAGE
 # Pittsburg - Tidewater 230 kV Line and Gateway PP
1  30527 30535  "1 "    0     # line from  PITSBG E 230.00  BRKR to BRKR  TIDEWATR 230.00
 #
3  33118     0  "1"     0     # GATEWAY1  18.00       PGEN=200.00  QGEN=-7.87
3  33119     0  "1"     0     # GATEWAY2  18.00       PGEN=195.00  QGEN=-6.21
3  33120     0  "1"     0     # GATEWAY3  18.00       PGEN=195.00  QGEN=-6.21
0
 #
 #
 # (338)  L-1/G-1 OVERLAPPING OUTAGE
 # Pittsburg - Tesoro 230 kV Line and Gateway PP
1  30527 30536  "1 "    0     # line from  PITSBG E 230.00  BRKR to BRKR  TESORO   230.00
 #
3  33118     0  "1"     0     # GATEWAY1  18.00       PGEN=200.00  QGEN=-7.87
3  33119     0  "1"     0     # GATEWAY2  18.00       PGEN=195.00  QGEN=-6.21
3  33120     0  "1"     0     # GATEWAY3  18.00       PGEN=195.00  QGEN=-6.21
0
 #
 #
 # (339)  L-1/G-1 OVERLAPPING OUTAGE
 # Pittsburg - Tesla #1 230 kV Line and Gateway PP
1  30527 30595  "1 "    0     # line from  PITSBG E 230.00  BRKR to (3)   FLOWIND2 230.00
1  30595 30640  "1 "    0     # line from  FLOWIND2 230.00   (3) to BRKR  TESLA C  230.00
2  30595 33840  "1 "    0     # TRAN from  FLOWIND2 230.00   (3) to (1)   FLOWD3-6   9.11
4  33840     0  "SG"    0     # LOAD-DROP    FLOWD3-6   9.11  LOAD==0.70(0.34)
3  33840     0  "1 "    0     # GEN-DROP    FLOWD3-6   9.11  GEN==1.30(0.00)
3  33840     0  "4 "    0     # GEN-DROP    FLOWD3-6   9.11  GEN==1.10(0.00)
 #
3  33118     0  "1"     0     # GATEWAY1  18.00       PGEN=200.00  QGEN=-7.87
3  33119     0  "1"     0     # GATEWAY2  18.00       PGEN=195.00  QGEN=-6.21
3  33120     0  "1"     0     # GATEWAY3  18.00       PGEN=195.00  QGEN=-6.21
0
 #
 #
 # (340)  L-1/G-1 OVERLAPPING OUTAGE
 # Pittsburg - Tesla #2 230 kV Line and Gateway PP pre and post-project outage
1  30527 30600  "2 "    0     # line from  PITSBG E 230.00  BRKR to (4)   TRES VAQ 230.00
1  30600 30640  "2 "    0     # line from  TRES VAQ 230.00   (4) to BRKR  TESLA C  230.00
2  30600 33171  "1 "    0     # TRAN from  TRES VAQ 230.00   (4) to (1)   TRSVQ+NW   9.11
2  30600 33195  "1 "    0     # TRAN from  TRES VAQ 230.00   (4) to (1)   T417      34.50
4  33195     0  "ss"    0     # LOAD-DROP    T417      34.50  LOAD==0.10(0.06)
3  33195     0  "1 "    0     # GEN-DROP    T417      34.50  GEN==36.10(0.00)
 #
3  33118     0  "1"     0     # GATEWAY1  18.00       PGEN=200.00  QGEN=-7.87
3  33119     0  "1"     0     # GATEWAY2  18.00       PGEN=195.00  QGEN=-6.21
3  33120     0  "1"     0     # GATEWAY3  18.00       PGEN=195.00  QGEN=-6.21
0
 #
 #
 # (341)  L-1/G-1 OVERLAPPING OUTAGE
 # Tidewater - Sobrante 230 kV Line and Gateway PP
1  30535 30540  "1 "    0     # line from  TIDEWATR 230.00  BRKR to BRKR  SOBRANTE 230.00
 #
3  33118     0  "1"     0     # GATEWAY1  18.00       PGEN=200.00  QGEN=-7.87
3  33119     0  "1"     0     # GATEWAY2  18.00       PGEN=195.00  QGEN=-6.21
3  33120     0  "1"     0     # GATEWAY3  18.00       PGEN=195.00  QGEN=-6.21
0
 #
 #
 # (342)  L-1/G-1 OVERLAPPING OUTAGE
 # Tesoro - Sobrante 230 kV Line and Gateway PP
1  30536 30540  "1 "    0     # line from  TESORO   230.00  BRKR to BRKR  SOBRANTE 230.00
 #
3  33118     0  "1"     0     # GATEWAY1  18.00       PGEN=200.00  QGEN=-7.87
```

```
3  33119     0  "1"     0     # GATEWAY2  18.00       PGEN=195.00  QGEN=-6.21
3  33120     0  "1"     0     # GATEWAY3  18.00       PGEN=195.00  QGEN=-6.21
0
 #
 #
 # (343)  L-1/G-1 OVERLAPPING OUTAGE
 # Moraga - Castro Valley 230 kV Line and Gateway PP
1  30550 30554  "1 "    0     # line from  MORAGA   230.00  BRKR to BRKR  CASTROVL 230.00
 #
3  33118     0  "1"     0     # GATEWAY1  18.00       PGEN=200.00  QGEN=-7.87
3  33119     0  "1"     0     # GATEWAY2  18.00       PGEN=195.00  QGEN=-6.21
3  33120     0  "1"     0     # GATEWAY3  18.00       PGEN=195.00  QGEN=-6.21
0
 #
 #
 # (344)  L-1/G-1 OVERLAPPING OUTAGE
 # Moraga - San Ramon 230 kV Line and Gateway PP
1  30550 30555  "1 "    0     # line from  MORAGA   230.00  BRKR to BRKR  SANRAMON 230.00
 #
3  33118     0  "1"     0     # GATEWAY1  18.00       PGEN=200.00  QGEN=-7.87
3  33119     0  "1"     0     # GATEWAY2  18.00       PGEN=195.00  QGEN=-6.21
3  33120     0  "1"     0     # GATEWAY3  18.00       PGEN=195.00  QGEN=-6.21
0
 #
 #
 # (345)  L-1/G-1 OVERLAPPING OUTAGE
 # Pittsburg - East Shore 230 kV Line and Gateway PP
1  30560 30527  "1 "    0     # line from  E. SHORE 230.00  BRKR to BRKR  PITSBG E 230.00
 #
3  33118     0  "1"     0     # GATEWAY1  18.00       PGEN=200.00  QGEN=-7.87
3  33119     0  "1"     0     # GATEWAY2  18.00       PGEN=195.00  QGEN=-6.21
3  33120     0  "1"     0     # GATEWAY3  18.00       PGEN=195.00  QGEN=-6.21
0
 #
 #
 # (346)  L-1/G-1 OVERLAPPING OUTAGE
 # Tassajara - Newark 230 kV Line and Gateway PP
1  30561 30562  "1 "    0     # line from  TASSAJAR 230.00  BRKR to (3)   TES JCT  230.00
1  30562 30563  "1 "    0     # line from  TES JCT  230.00   (3) to BRKR  RESEARCH 230.00
1  30562 30631  "1 "    0     # line from  TES JCT  230.00   (3) to BRKR  NEWARK E 230.00
4  30563     0  "1 "    0     # LOAD-DROP    RESEARCH 230.00  LOAD==37.05(8.44)
 #
3  33118     0  "1"     0     # GATEWAY1  18.00       PGEN=200.00  QGEN=-7.87
3  33119     0  "1"     0     # GATEWAY2  18.00       PGEN=195.00  QGEN=-6.21
3  33120     0  "1"     0     # GATEWAY3  18.00       PGEN=195.00  QGEN=-6.21
0
 #
 #
 # (347)  L-1/G-1 OVERLAPPING OUTAGE
 # Brentwood - Kelso 230 kV Line and Gateway PP
1  30565 30569  "1 "    0     # line from  BRENTWOD 230.00  BRKR to BRKR  KELSO    230.00
 #
3  33118     0  "1"     0     # GATEWAY1  18.00       PGEN=200.00  QGEN=-7.87
3  33119     0  "1"     0     # GATEWAY2  18.00       PGEN=195.00  QGEN=-6.21
3  33120     0  "1"     0     # GATEWAY3  18.00       PGEN=195.00  QGEN=-6.21
0
 #
 #
 # (348)  L-1/G-1 OVERLAPPING OUTAGE
 # Lonetree - Cayetano 230 kV Line and Gateway PP
1  30567 30590  "1 "    0     # line from  LONETREE 230.00  BRKR to (3)   USWP-JRW 230.00
1  30590 30530  "1 "    0     # line from  USWP-JRW 230.00   (3) to BRKR  CAYETANO 230.00
2  30590 33838  "1 "    0     # TRAN from  USWP-JRW 230.00   (3) to (1)   USWP_#3    9.11
4  33838     0  "SG"    0     # LOAD-DROP    USWP_#3    9.11  LOAD==0.50(0.20)
 #
3  33118     0  "1"     0     # GATEWAY1  18.00       PGEN=200.00  QGEN=-7.87
3  33119     0  "1"     0     # GATEWAY2  18.00       PGEN=195.00  QGEN=-6.21
3  33120     0  "1"     0     # GATEWAY3  18.00       PGEN=195.00  QGEN=-6.21
0
 #
 #
 # (349)  L-1/G-1 OVERLAPPING OUTAGE
 # Pittsburg - San Mateo 230 kV Line and Gateway PP
1  30700 30527  "1 "    0     # line from  SANMATEO 230.00  BRKR to BRKR  PITSBG E 230.00
 #
3  33118     0  "1"     0     # GATEWAY1  18.00       PGEN=200.00  QGEN=-7.87
3  33119     0  "1"     0     # GATEWAY2  18.00       PGEN=195.00  QGEN=-6.21
3  33120     0  "1"     0     # GATEWAY3  18.00       PGEN=195.00  QGEN=-6.21
```

```
0
 #
 #
 # 2013 category b contingency list
 # San Francisco Division Zone 309
 #
 #
 # (350)  L-1/G-1 OVERLAPPING OUTAGE
 #
1  30695 30685  "2 "    0     # line from  MARTIN C 230.00  BRKR to BRKR  EMBRCDRD 230.00
4  30685     0  "1 "    0     # LOAD-DROP    EMBRCDRD 230.00  LOAD==64.01(11.21)
4  30685     0  "2 "    0     # LOAD-DROP    EMBRCDRD 230.00  LOAD==71.45(12.52)
1  30685 30690  "1 "    1     # LINE-TRANSFER MARTIN C to EMBRCDRE
4  30685     0  "**"    1     # RESTORE EMBRCDRD load
0
 #
 #
 # (351)  L-1/G-1 OVERLAPPING OUTAGE
 #
1  30695 30690  "1 "    0     # line from  MARTIN C 230.00  BRKR to BRKR  EMBRCDRE 230.00
4  30690     0  "3 "    0     # LOAD-DROP    EMBRCDRE 230.00  LOAD==71.45(12.52)
4  30690     0  "5 "    0     # LOAD-DROP    EMBRCDRE 230.00  LOAD==64.01(11.21)
1  30690 30685  "1 "    1     # LINE-TRANSFER MARTIN C to EMBRCDRD
4  30690     0  "**"    1     # RESTORE EMBRCDRE load
0
 #
 #
 # (352)  L-1/G-1 OVERLAPPING OUTAGE
 #
1  30696 30695  "1 "    0     # line from  MRT RCTR 230.00   (2) to BRKR  MARTIN C 230.00
1  30696 30717  "1 "    0     # line from  MRT RCTR 230.00   (2) to (2)   TRAN230B 230.00
1  30717 30716  "1 "    0     # line from  TRAN230B 230.00   (2) to (2)   TRAN230A 230.00
1  30716 30714  "1 "    0     # line from  TRAN230A 230.00   (2) to (2)   JMDAMCX2 230.00
1  30714 30713  "1 "    0     # line from  JMDAMCX2 230.00   (2) to (2)   JMDAMCX1 230.00
1  30713 30715  "1 "    0     # line from  JMDAMCX1 230.00   (2) to BRKR  JEFFERSN 230.00
0
 #
 #
 # (353)  L-1/G-1 OVERLAPPING OUTAGE
 #
1  30700 30695  "1 "    0     # line from  SANMATEO 230.00  BRKR to BRKR  MARTIN C 230.00
0
 #
 #
 # (354)  L-1/G-1 OVERLAPPING OUTAGE
 #
1  33200 33204  "1 "    0     # line from  LARKIN D 115.00   (3) to BRKR  POTRERO  115.00
2  33200 33218  "1 "    0     # TRAN from  LARKIN D 115.00   (3) to BRKR  LARKIN 1  12.00
2  33200 33219  "2 "    0     # TRAN from  LARKIN D 115.00   (3) to BRKR  LARKIN 2  12.00
0
 #
 #
 # (355)  L-1/G-1 OVERLAPPING OUTAGE
 #
1  33201 33203  "1 "    0     # line from  LARKIN E 115.00   (4) to BRKR  MISSON   115.00
0
 #
 #
 # (356)  L-1/G-1 OVERLAPPING OUTAGE
 #
1  33201 33204  "2 "    0     # line from  LARKIN E 115.00  BRKR to BRKR  POTRERO  115.00
0
 #
 #
 # (357)  L-1/G-1 OVERLAPPING OUTAGE
 #
1  33203 33204  "1 "    0     # line from  MISSON   115.00  BRKR to BRKR  POTRERO  115.00
0
 #
 #
 # (358)  L-1/G-1 OVERLAPPING OUTAGE
 #
1  33203 33205  "1 "    0     # line from  MISSON   115.00  BRKR to BRKR  HNTRS PT 115.00
0
 #
 #
 # (359)  L-1/G-1 OVERLAPPING OUTAGE
 #
```

```
1  33203 33205  "2 "    0     # line from  MISSON   115.00  BRKR to BRKR  HNTRS PT 115.00
0
 #
 #
 # (360)  L-1/G-1 OVERLAPPING OUTAGE
 #
1  33204 33205  "1 "    0     # line from  POTRERO  115.00  BRKR to BRKR  HNTRS PT 115.00
0
 #
 #
 # (361)  L-1/G-1 OVERLAPPING OUTAGE
 #
1  33204 33213  "1 "    0     # line from  POTRERO  115.00  BRKR to BRKR  CCSF1    115.00
0
 #
 #
 # (362)  L-1/G-1 OVERLAPPING OUTAGE
 #
1  33204 33213  "2 "    0     # line from  POTRERO  115.00  BRKR to BRKR  CCSF1    115.00
0
 #
 #
 # (363)  L-1/G-1 OVERLAPPING OUTAGE
 #
1  33206 33204  "1 "    0     # line from  BAYSHOR1 115.00   (2) to BRKR  POTRERO  115.00
1  33206 33208  "1 "    0     # line from  BAYSHOR1 115.00   (2) to BRKR  MARTIN C 115.00
4  33206     0  "1 "    0     # LOAD-DROP    BAYSHOR1 115.00  LOAD==4.75(0.68)
0
 #
 #
 # (364)  L-1/G-1 OVERLAPPING OUTAGE
 #
1  33207 33204  "2 "    0     # line from  BAYSHOR2 115.00   (2) to BRKR  POTRERO  115.00
1  33207 33208  "2 "    0     # line from  BAYSHOR2 115.00   (2) to BRKR  MARTIN C 115.00
4  33207     0  "2 "    0     # LOAD-DROP    BAYSHOR2 115.00  LOAD==6.65(0.95)
0
 #
 #
 # (365)  L-1/G-1 OVERLAPPING OUTAGE
 #
1  33208 33202  "1 "    0     # line from  MARTIN C 115.00  BRKR to (3)   LARKIN F 115.00
2  33202 33218  "5 "    0     # TRAN from  LARKIN F 115.00   (3) to BRKR  LARKIN 1  12.00
2  33202 33219  "6 "    0     # TRAN from  LARKIN F 115.00   (3) to BRKR  LARKIN 2  12.00
0
 #
 #
 # (366)  L-1/G-1 OVERLAPPING OUTAGE
 #
1  33208 33205  "1 "    0     # line from  MARTIN C 115.00  BRKR to BRKR  HNTRS PT 115.00
0
 #
 #
 # (367)  L-1/G-1 OVERLAPPING OUTAGE
 #
1  33208 33205  "3 "    0     # line from  MARTIN C 115.00  BRKR to BRKR  HNTRS PT 115.00
0
 #
 #
 # (368)  L-1/G-1 OVERLAPPING OUTAGE
 #
1  33208 33205  "4 "    0     # line from  MARTIN C 115.00  BRKR to BRKR  HNTRS PT 115.00
0
 #
 #
 # (369)  L-1/G-1 OVERLAPPING OUTAGE
 #
1  33208 33300  "1 "    0     # line from  MARTIN C 115.00  BRKR to BRKR  DALY CTY 115.00
0
 #
 #
 # (370)  L-1/G-1 OVERLAPPING OUTAGE
 #
1  33208 33301  "2 "    0     # line from  MARTIN C 115.00  BRKR to (3)   DLY CTYP 115.00
1  33301 33300  "2 "    0     # line from  DLY CTYP 115.00   (3) to BRKR  DALY CTY 115.00
1  33301 33302  "1 "    0     # line from  DLY CTYP 115.00   (3) to BRKR  SERRMNTE 115.00
4  33302     0  "1 "    0     # LOAD-DROP    SERRMNTE 115.00  LOAD==11.42(2.60)
0
 #
```

```
 #
 # (371)  L-1/G-1 OVERLAPPING OUTAGE
 #
1  33208 33303  "2 "    0     # line from  MARTIN C 115.00  BRKR to BRKR  EST GRND 115.00
0
 #
 #
 # (372)  L-1/G-1 OVERLAPPING OUTAGE
 #
1  33208 33307  "1 "    0     # line from  MARTIN C 115.00  BRKR to BRKR  MILLBRAE 115.00
0
 #
 #
 # (373)  L-1/G-1 OVERLAPPING OUTAGE
 #
1  33208 33310  "3 "    0     # line from  MARTIN C 115.00  BRKR to BRKR  SANMATEO 115.00
0
 #
 #
 # (374)  L-1/G-1 OVERLAPPING OUTAGE
 #
1  33208 33322  "5 "    0     # line from  MARTIN C 115.00  BRKR to (3)   UAL TAP  115.00
1  33322 33306  "5 "    0     # line from  UAL TAP  115.00   (3) to BRKR  SFIA     115.00
1  33322 33323  "1 "    0     # line from  UAL TAP  115.00   (3) to (3)   SFASWSTA 115.00
1  33323 33304  "1 "    0     # line from  SFASWSTA 115.00   (3) to (2)   UAL COGN 115.00
1  33323 33324  "1 "    0     # line from  SFASWSTA 115.00   (3) to (2)   SFAERP11 115.00
2  33304 33466  "1 "    0     # TRAN from  UAL COGN 115.00  BRKR to (1)   UNTED CO   9.11
2  33324 33467  "1 "    0     # TRAN from  SFAERP11 115.00   (2) to (1)   SFAERP    13.80
4  33467     0  "ss"    0     # LOAD-DROP    SFAERP    13.80  LOAD==1.80(1.12)
3  33466     0  "1 "    0     # GEN-DROP    UNTED CO   9.11  GEN==28.20(11.16)
3  33467     0  "1 "    0     # GEN-DROP    SFAERP    13.80  GEN==48.00(10.34)
0
 #
 #
 # (375)  L-1/G-1 OVERLAPPING OUTAGE
 #
1  33209 33347  "1 "    0     # line from  MARTIN    60.00  BRKR to (2)   SNTH JCT  60.00
1  33347 33346  "1 "    0     # line from  SNTH JCT  60.00   (2) to (3)   SNTH TP2  60.00
1  33346 33389  "1 "    0     # line from  SNTH TP2  60.00   (3) to (1)   PACIFJCT  60.00
1  33346 33350  "1 "    0     # line from  SNTH TP2  60.00   (3) to BRKR  SNTH LNE  60.00
4  33350     0  "1 "    0     # LOAD-DROP    SNTH LNE  60.00  LOAD==7.61(1.73)
4  33350     0  "2 "    0     # LOAD-DROP    SNTH LNE  60.00  LOAD==9.62(2.19)
1  33350 33345  "1 "    1     # LINE-TRANSFER  SNTH LNE  60.00  TO  SNTH TP  60.00
4  33350     0  "**"    1     # RESTORE SNEATH LANE LOAD
0
 #
 #
 # (376)  L-1/G-1 OVERLAPPING OUTAGE
 #
1  33210 33204  "1 "    0     # line from  POT_SVC  115.00   (1) to BRKR  POTRERO  115.00
0
 #
 #
 # (377)  L-1/G-1 OVERLAPPING OUTAGE
 #
1  33305 33208  "6 "    0     # line from  SHAWROAD 115.00   (2) to BRKR  MARTIN C 115.00
1  33305 33310  "6 "    0     # line from  SHAWROAD 115.00   (2) to BRKR  SANMATEO 115.00
4  33305 33309  "1 "    1     # LOAD-TRANSFER  SHAWROAD 115.00  TO  SANPAULA 115.00    LOAD==9.00(1.83)
0
 #
 #
 # (378)  L-1/G-1 OVERLAPPING OUTAGE
 #
1  33356 33208  "4 "    0     # line from  BURLNGME 115.00  BRKR to BRKR  MARTIN C 115.00
0
 #
 #
 # (379)  B3 TRANSFORMER OUTAGE (BREAKER-TO-BREAKER)
 #
2  33208 30695  "7 "    0     # TRAN from  MARTIN C 115.00  BRKR to BRKR  MARTIN C 230.00
0
 #
 #
 # (380)  B3 TRANSFORMER OUTAGE (BREAKER-TO-BREAKER)
 #
2  33208 30695  "8 "    0     # TRAN from  MARTIN C 115.00  BRKR to BRKR  MARTIN C 230.00
0
 #
```

```
 #
 # (381)  B3 TRANSFORMER OUTAGE (BREAKER-TO-BREAKER)
 #
2  33209 33208  "6 "    0     # TRAN from  MARTIN    60.00  BRKR to BRKR  MARTIN C 115.00
0
 #
 #
 # (382)  B1 GENERATOR OUTAGE
 #
3  33281     0  "1"     0     # CCSFCT1   13.80       PGEN=48.00  QGEN=8.46
0
 #
 #
 # (383)  B1 GENERATOR OUTAGE
 #
3  33282     0  "1"     0     # CCSFCT2   13.80       PGEN=48.00  QGEN=8.46
0
 #
 #
 # (384)  B1 GENERATOR OUTAGE
 #
3  33283     0  "1"     0     # CCSFCT3   13.80       PGEN=48.00  QGEN=8.46
0
 #
 #
 # (385)  L-1/G-1 OVERLAPPING OUTAGE
 # Jefferson - Martin 230 kV Line and CCSF CT1
1  30696 30695  "1 "    0     # line from  MRT RCTR 230.00   (2) to BRKR  MARTIN C 230.00
1  30696 30717  "1 "    0     # line from  MRT RCTR 230.00   (2) to (2)   TRAN230B 230.00
1  30717 30716  "1 "    0     # line from  TRAN230B 230.00   (2) to (2)   TRAN230A 230.00
1  30716 30714  "1 "    0     # line from  TRAN230A 230.00   (2) to (2)   JMDAMCX2 230.00
1  30714 30713  "1 "    0     # line from  JMDAMCX2 230.00   (2) to (2)   JMDAMCX1 230.00
1  30713 30715  "1 "    0     # line from  JMDAMCX1 230.00   (2) to BRKR  JEFFERSN 230.00
 #
3  33281     0  "1"     0     # CCSFCT1   13.80       PGEN=48.00  QGEN=8.46
0
 #
 #
 # (386)  L-1/G-1 OVERLAPPING OUTAGE
 # San Mateo - Martin 230 kV Line and CCSF CT1
1  30700 30695  "1 "    0     # line from  SANMATEO 230.00  BRKR to BRKR  MARTIN C 230.00
 #
3  33281     0  "1"     0     # CCSFCT1   13.80       PGEN=48.00  QGEN=8.46
0
 #
 #
 # (387)  L-1/G-1 OVERLAPPING OUTAGE
 # Larkin - Potrero #1 115 kV Line and CCSF CT1
1  33200 33204  "1 "    0     # line from  LARKIN D 115.00   (3) to BRKR  POTRERO  115.00
2  33200 33218  "1 "    0     # TRAN from  LARKIN D 115.00   (3) to BRKR  LARKIN 1  12.00
2  33200 33219  "2 "    0     # TRAN from  LARKIN D 115.00   (3) to BRKR  LARKIN 2  12.00
 #
3  33281     0  "1"     0     # CCSFCT1   13.80       PGEN=48.00  QGEN=8.46
0
 #
 #
 # (388)  L-1/G-1 OVERLAPPING OUTAGE
 # Larkin - Mission 115 kV Line and CCSF CT1
1  33201 33203  "1 "    0     # line from  LARKIN E 115.00   (4) to BRKR  MISSON   115.00
 #
3  33281     0  "1"     0     # CCSFCT1   13.80       PGEN=48.00  QGEN=8.46
0
 #
 #
 # (389)  L-1/G-1 OVERLAPPING OUTAGE
 # Larkin - Potrero #2 115 kV Line and CCSF CT1
1  33201 33204  "2 "    0     # line from  LARKIN E 115.00  BRKR to BRKR  POTRERO  115.00
 #
3  33281     0  "1"     0     # CCSFCT1   13.80       PGEN=48.00  QGEN=8.46
0
 #
 #
 # (390)  L-1/G-1 OVERLAPPING OUTAGE
 # Mission - Potrero 115 kV Line and CCSF CT1
1  33203 33204  "1 "    0     # line from  MISSON   115.00  BRKR to BRKR  POTRERO  115.00
 #
3  33281     0  "1"     0     # CCSFCT1   13.80       PGEN=48.00  QGEN=8.46
0
```

```
 #
 #
 # (391)  L-1/G-1 OVERLAPPING OUTAGE
 # Mission - Hunters Point #1 115 kV Line and CCSF CT1
1  33203 33205  "1 "    0     # line from  MISSON   115.00  BRKR to BRKR  HNTRS PT 115.00
 #
3  33281     0  "1"     0     # CCSFCT1   13.80       PGEN=48.00  QGEN=8.46
0
 #
 #
 # (392)  L-1/G-1 OVERLAPPING OUTAGE
 # Mission - Hunters Point #2 115 kV Line and CCSF CT1
1  33203 33205  "2 "    0     # line from  MISSON   115.00  BRKR to BRKR  HNTRS PT 115.00
 #
3  33281     0  "1"     0     # CCSFCT1   13.80       PGEN=48.00  QGEN=8.46
0
 #
 #
 # (393)  L-1/G-1 OVERLAPPING OUTAGE
 # Potrero - Hunters Point #1 115 kV Line and CCSF CT1
1  33204 33205  "1 "    0     # line from  POTRERO  115.00  BRKR to BRKR  HNTRS PT 115.00
 #
3  33281     0  "1"     0     # CCSFCT1   13.80       PGEN=48.00  QGEN=8.46
0
 #
 #
 # (394)  L-1/G-1 OVERLAPPING OUTAGE
 # Potrero - Martin #1 115 kV Line and CCSF CT1
1  33206 33204  "1 "    0     # line from  BAYSHOR1 115.00   (2) to BRKR  POTRERO  115.00
1  33206 33208  "1 "    0     # line from  BAYSHOR1 115.00   (2) to BRKR  MARTIN C 115.00
4  33206     0  "1 "    0     # LOAD-DROP    BAYSHOR1 115.00  LOAD==4.75(0.68)
 #
3  33281     0  "1"     0     # CCSFCT1   13.80       PGEN=48.00  QGEN=8.46
0
 #
 #
 # (395)  L-1/G-1 OVERLAPPING OUTAGE
 # Potrero - Martin #2 115 kV Line and CCSF CT1
1  33207 33204  "2 "    0     # line from  BAYSHOR2 115.00   (2) to BRKR  POTRERO  115.00
1  33207 33208  "2 "    0     # line from  BAYSHOR2 115.00   (2) to BRKR  MARTIN C 115.00
4  33207     0  "2 "    0     # LOAD-DROP    BAYSHOR2 115.00  LOAD==6.65(0.95)
 #
3  33281     0  "1"     0     # CCSFCT1   13.80       PGEN=48.00  QGEN=8.46
0
 #
 #
 # (396)  L-1/G-1 OVERLAPPING OUTAGE
 # Larkin - Martin 115 kV Line and CCSF CT1
1  33208 33202  "1 "    0     # line from  MARTIN C 115.00  BRKR to (3)   LARKIN F 115.00
2  33202 33218  "5 "    0     # TRAN from  LARKIN F 115.00   (3) to BRKR  LARKIN 1  12.00
2  33202 33219  "6 "    0     # TRAN from  LARKIN F 115.00   (3) to BRKR  LARKIN 2  12.00
 #
3  33281     0  "1"     0     # CCSFCT1   13.80       PGEN=48.00  QGEN=8.46
0
 #
 #
 # (397)  L-1/G-1 OVERLAPPING OUTAGE
 # Hunters Point - Martin #1 115 kV Line and CCSF CT1
1  33208 33205  "1 "    0     # line from  MARTIN C 115.00  BRKR to BRKR  HNTRS PT 115.00
 #
3  33281     0  "1"     0     # CCSFCT1   13.80       PGEN=48.00  QGEN=8.46
0
 #
 #
 # (398)  L-1/G-1 OVERLAPPING OUTAGE
 # Hunters Point - Martin #3 115 kV Line and CCSF CT1
1  33208 33205  "3 "    0     # line from  MARTIN C 115.00  BRKR to BRKR  HNTRS PT 115.00
 #
3  33281     0  "1"     0     # CCSFCT1   13.80       PGEN=48.00  QGEN=8.46
0
 #
 #
 # (399)  L-1/G-1 OVERLAPPING OUTAGE
 # Hunters Point - Martin #4 115 kV Line and CCSF CT1
1  33208 33205  "4 "    0     # line from  MARTIN C 115.00  BRKR to BRKR  HNTRS PT 115.00
 #
3  33281     0  "1"     0     # CCSFCT1   13.80       PGEN=48.00  QGEN=8.46
0
```

```
 #
 #
 # (400)  L-1/G-1 OVERLAPPING OUTAGE
 # Martin - East Grand 115 kV Line and CCSF CT1
1  33208 33303  "2 "    0     # line from  MARTIN C 115.00  BRKR to BRKR  EST GRND 115.00
 #
3  33281     0  "1"     0     # CCSFCT1   13.80       PGEN=48.00  QGEN=8.46
0
 #
 #
 # (401)  L-1/G-1 OVERLAPPING OUTAGE
 # Martin - Millbrae 115 kV Line and CCSF CT1
1  33208 33307  "1 "    0     # line from  MARTIN C 115.00  BRKR to BRKR  MILLBRAE 115.00
 #
3  33281     0  "1"     0     # CCSFCT1   13.80       PGEN=48.00  QGEN=8.46
0
 #
 #
 # (402)  L-1/G-1 OVERLAPPING OUTAGE
 # Martin - San Mateo #3 115 kV Line and CCSF CT1
1  33208 33310  "3 "    0     # line from  MARTIN C 115.00  BRKR to BRKR  SANMATEO 115.00
 #
3  33281     0  "1"     0     # CCSFCT1   13.80       PGEN=48.00  QGEN=8.46
0
 #
 #
 # (403)  L-1/G-1 OVERLAPPING OUTAGE
 # Martin - SF Airport 115 kV Line and CCSF CT1
1  33208 33322  "5 "    0     # line from  MARTIN C 115.00  BRKR to (3)   UAL TAP  115.00
1  33322 33306  "5 "    0     # line from  UAL TAP  115.00   (3) to BRKR  SFIA     115.00
1  33322 33323  "1 "    0     # line from  UAL TAP  115.00   (3) to (3)   SFASWSTA 115.00
1  33323 33304  "1 "    0     # line from  SFASWSTA 115.00   (3) to (2)   UAL COGN 115.00
1  33323 33324  "1 "    0     # line from  SFASWSTA 115.00   (3) to (2)   SFAERP11 115.00
2  33304 33466  "1 "    0     # TRAN from  UAL COGN 115.00  BRKR to (1)   UNTED CO   9.11
2  33324 33467  "1 "    0     # TRAN from  SFAERP11 115.00   (2) to (1)   SFAERP    13.80
4  33467     0  "ss"    0     # LOAD-DROP    SFAERP    13.80  LOAD==1.80(1.12)
3  33466     0  "1 "    0     # GEN-DROP    UNTED CO   9.11  GEN==28.20(11.16)
3  33467     0  "1 "    0     # GEN-DROP    SFAERP    13.80  GEN==48.00(10.34)
 #
3  33281     0  "1"     0     # CCSFCT1   13.80       PGEN=48.00  QGEN=8.46
0
 #
 #
 # (404)  L-1/G-1 OVERLAPPING OUTAGE
 # Martin - San Mateo #6 115 kV Line and CCSF CT1
1  33305 33208  "6 "    0     # line from  SHAWROAD 115.00   (2) to BRKR  MARTIN C 115.00
1  33305 33310  "6 "    0     # line from  SHAWROAD 115.00   (2) to BRKR  SANMATEO 115.00
4  33305 33309  "1 "    1     # LOAD-TRANSFER  SHAWROAD 115.00  TO  SANPAULA 115.00    LOAD==9.00(1.83)
 #
3  33281     0  "1"     0     # CCSFCT1   13.80       PGEN=48.00  QGEN=8.46
0
 #
 #
 # (405)  L-1/G-1 OVERLAPPING OUTAGE
 # Martin - Burlingame 115 kV Line and CCSF CT1
1  33356 33208  "4 "    0     # line from  BURLNGME 115.00  BRKR to BRKR  MARTIN C 115.00
 #
3  33281     0  "1"     0     # CCSFCT1   13.80       PGEN=48.00  QGEN=8.46
0
 #
 #
 # (406)  L-1/G-1 OVERLAPPING OUTAGE
 # Trans Bay HVDC Cable and CCSF CT1
2  38950 30526  "1 "    0     # TRAN from  VSC_PTSB 180.50   (1) to BRKR  PITSBG D 230.00
3  38950     0  "1 "    0     # GEN-DROP    VSC_PTSB 180.50  GEN==-413.00(-91.10)
3  38951     0  "1 "    0     # GEN-DROP    VSC_POTR 180.50  GEN==401.40(155.40)
 #
3  33281     0  "1"     0     # CCSFCT1   13.80       PGEN=48.00  QGEN=8.46
0
 #
 #
 # 2013 category b contingency list
 # Peninsula Division Zone 310
 #
 #
 # (407)  B2 LINE OUTAGE (BREAKER-TO-BREAKER)
 #
1  30560 30700  "1 "    0     # line from  E. SHORE 230.00  BRKR to BRKR  SANMATEO 230.00
```

```
0
 #
 #
 # (408)  B2 LINE OUTAGE (BREAKER-TO-BREAKER)
 #
1  30630 30703  "1 "    0     # line from  NEWARK D 230.00  BRKR to BRKR  RAVENSWD 230.00
0
 #
 #
 # (409)  B2 LINE OUTAGE (BREAKER-TO-BREAKER)
 #
1  30703 30700  "1 "    0     # line from  RAVENSWD 230.00  BRKR to BRKR  SANMATEO 230.00
0
 #
 #
 # (410)  B2 LINE OUTAGE (BREAKER-TO-BREAKER)
 #
1  30703 30700  "2 "    0     # line from  RAVENSWD 230.00  BRKR to BRKR  SANMATEO 230.00
0
 #
 #
 # (411)  B2 LINE OUTAGE (BREAKER-TO-BREAKER)
 #
1  30705 30710  "1 "    0     # line from  MONTAVIS 230.00  BRKR to (3)   SLACTAP1 230.00
1  30710 30711  "1 "    0     # line from  SLACTAP1 230.00   (3) to BRKR  S.L.A.C. 230.00
1  30710 30715  "1 "    0     # line from  SLACTAP1 230.00   (3) to BRKR  JEFFERSN 230.00
4  30711     0  "1 "    0     # LOAD-DROP    S.L.A.C. 230.00  LOAD==58.00(11.78)
1  30711 30712  "1 "    1     # LINE-TRANSFER SLACTAP1 to SLACTAP2
4  30711     0  "**"    1     # RESTORE S.L.A.C. load
0
 #
 #
 # (412)  B2 LINE OUTAGE (BREAKER-TO-BREAKER)
 #
1  30705 30712  "2 "    0     # line from  MONTAVIS 230.00  BRKR to (2)   SLACTAP2 230.00
1  30712 30715  "2 "    0     # line from  SLACTAP2 230.00   (2) to BRKR  JEFFERSN 230.00
0
 #
 #
 # (413)  B2 LINE OUTAGE (BREAKER-TO-BREAKER)
 #
1  33306 33310  "5 "    0     # line from  SFIA     115.00  BRKR to BRKR  SANMATEO 115.00
0
 #
 #
 # (414)  B2 LINE OUTAGE (BREAKER-TO-BREAKER)
 #
1  33307 33310  "1 "    0     # line from  MILLBRAE 115.00  BRKR to BRKR  SANMATEO 115.00
0
 #
 #
 # (415)  B2 LINE OUTAGE (BREAKER-TO-BREAKER)
 #
1  33308 33303  "2 "    0     # line from  SFIA-MA  115.00   (2) to BRKR  EST GRND 115.00
1  33308 33310  "2 "    0     # line from  SFIA-MA  115.00   (2) to BRKR  SANMATEO 115.00
4  33308 33306  "1 "    1     # LOAD-TRANSFER  SFIA-MA  115.00  TO  SFIA     115.00    LOAD==20.20(4.10)
0
 #
 #
 # (416)  B2 LINE OUTAGE (BREAKER-TO-BREAKER)
 #
1  33309 33307  "1 "    0     # line from  SANPAULA 115.00   (1) to BRKR  MILLBRAE 115.00
4  33309 33305  "1 "    1     # LOAD-TRANSFER  SANPAULA 115.00  TO  SHAWROAD 115.00    LOAD==8.00(1.62)
0
 #
 #
 # (417)  B2 LINE OUTAGE (BREAKER-TO-BREAKER)
 #
1  33310 33311  "1 "    0     # line from  SANMATEO 115.00  BRKR to BRKR  BAY MDWS 115.00
0
 #
 #
 # (418)  B2 LINE OUTAGE (BREAKER-TO-BREAKER)
 #
1  33310 33311  "2 "    0     # line from  SANMATEO 115.00  BRKR to BRKR  BAY MDWS 115.00
0
 #
 #
```

```
 # (419)  B2 LINE OUTAGE (BREAKER-TO-BREAKER)
 #
1  33310 33312  "1 "    0     # line from  SANMATEO 115.00  BRKR to BRKR  BELMONT  115.00
0
 #
 #
 # (420)  B2 LINE OUTAGE (BREAKER-TO-BREAKER)
 #
1  33310 33321  "1 "    0     # line from  SANMATEO 115.00  BRKR to BRKR  RVNSWD D 115.00
0
 #
 #
 # (421)  B2 LINE OUTAGE (BREAKER-TO-BREAKER)
 #
1  33310 33356  "4 "    0     # line from  SANMATEO 115.00  BRKR to BRKR  BURLNGME 115.00
0
 #
 #
 # (422)  B2 LINE OUTAGE (BREAKER-TO-BREAKER)
 #
1  33312 33313  "1 "    0     # line from  BELMONT  115.00  BRKR to BRKR  BAIR     115.00
0
 #
 #
 # (423)  B2 LINE OUTAGE (BREAKER-TO-BREAKER)
 #
1  33313 33319  "2 "    0     # line from  BAIR     115.00  BRKR to (3)   SHREDJCT 115.00
1  33319 33314  "1 "    0     # line from  SHREDJCT 115.00   (3) to (2)   SHREDDER 115.00
1  33319 33321  "2 "    0     # line from  SHREDJCT 115.00   (3) to BRKR  RVNSWD D 115.00
1  33314 33320  "1 "    0     # line from  SHREDDER 115.00   (2) to (1)   LONESTAR 115.00
4  33314     0  "1 "    0     # LOAD-DROP    SHREDDER 115.00  LOAD==4.77(5.43)
4  33320     0  "1 "    0     # LOAD-DROP    LONESTAR 115.00  LOAD==2.57(3.43)
0
 #
 #
 # (424)  B2 LINE OUTAGE (BREAKER-TO-BREAKER)
 #
1  33315 33316  "2 "    0     # line from  RVNSWD E 115.00  BRKR to BRKR  CLY LND2 115.00
0
 #
 #
 # (425)  B2 LINE OUTAGE (BREAKER-TO-BREAKER)
 #
1  33315 35350  "1 "    0     # line from  RVNSWD E 115.00  BRKR to BRKR  AMES BS1 115.00
0
 #
 #
 # (426)  B2 LINE OUTAGE (BREAKER-TO-BREAKER)
 #
1  33315 35351  "2 "    0     # line from  RVNSWD E 115.00  BRKR to BRKR  AMES BS2 115.00
0
 #
 #
 # (427)  B2 LINE OUTAGE (BREAKER-TO-BREAKER)
 #
1  33315 38028  "1 "    0     # line from  RVNSWD E 115.00  BRKR to BRKR  PLO ALTO 115.00
0
 #
 #
 # (428)  B2 LINE OUTAGE (BREAKER-TO-BREAKER)
 #
1  33315 38028  "2 "    0     # line from  RVNSWD E 115.00  BRKR to BRKR  PLO ALTO 115.00
0
 #
 #
 # (429)  B2 LINE OUTAGE (BREAKER-TO-BREAKER)
 #
1  33316 38028  "1 "    0     # line from  CLY LND2 115.00  BRKR to BRKR  PLO ALTO 115.00
0
 #
 #
 # (430)  B2 LINE OUTAGE (BREAKER-TO-BREAKER)
 #
1  33321 33313  "1 "    0     # line from  RVNSWD D 115.00  BRKR to BRKR  BAIR     115.00
0
 #
 #
 # (431)  B2 LINE OUTAGE (BREAKER-TO-BREAKER)
```

```
 #
1  33321 33317  "1 "    0     # line from  RVNSWD D 115.00  BRKR to BRKR  CLY LND  115.00
0
 #
 #
 # (432)  B2 LINE OUTAGE (BREAKER-TO-BREAKER)
 #
1  33348 33359  "1 "    0     # line from  CAROLD1   60.00   (3) to BRKR  CAROLNDS  60.00
1  33348 33391  "1 "    0     # line from  CAROLD1   60.00   (3) to (2)   TRAN-60   60.00
1  33348 33396  "1 "    0     # line from  CAROLD1   60.00   (3) to (3)   HILDAL49  60.00
1  33391 33392  "1 "    0     # line from  TRAN-60   60.00   (2) to (1)   MLLBTP97  60.00
1  33396 33361  "1 "    0     # line from  HILDAL49  60.00   (3) to (3)   HLLSDLJT  60.00
1  33396 33397  "1 "    0     # line from  HILDAL49  60.00   (3) to (2)   RLSTN35   60.00
1  33361 33360  "1 "    0     # line from  HLLSDLJT  60.00  BRKR to BRKR  HILLSDLE  60.00
1  33361 33394  "1 "    0     # line from  HLLSDLJT  60.00   (3) to BRKR  OXMTN_TP  60.00
1  33397 33378  "1 "    0     # line from  RLSTN35   60.00   (2) to (3)   WTRSHDTP  60.00
1  33378 33379  "1 "    0     # line from  WTRSHDTP  60.00   (3) to (1)   WATRSHED  60.00
1  33378 33400  "1 "    0     # line from  WTRSHDTP  60.00   (3) to BRKR  JEFRSN_E  60.00
4  33359     0  "1 "    0     # LOAD-DROP    CAROLNDS  60.00  LOAD==2.65(0.60)
4  33359     0  "2 "    0     # LOAD-DROP    CAROLNDS  60.00  LOAD==4.88(1.11)
4  33379 33363  "1 "    1     # LOAD-TRANSFER  WATRSHED  60.00  TO  RALSTON   60.00    LOAD==0.70(0.32)
1  33349 33359  "1 "    1     # LINE-TRANSFER  CAROLNDS  60.00  TO  CAROLD2  60.00
4  33359     0  "**"    1     # RESTORE CAROLANDS load
0
 #
 #
 # (433)  B2 LINE OUTAGE (BREAKER-TO-BREAKER)
 #
1  33349 33362  "1 "    0     # line from  CAROLD2   60.00   (1) to (2)   CRYSTLSG  60.00
1  33362 33399  "1 "    0     # line from  CRYSTLSG  60.00   (2) to (2)   HILDAL47  60.00
1  33399 33398  "1 "    0     # line from  HILDAL47  60.00   (2) to (3)   RLSTN45   60.00
1  33398 33363  "1 "    0     # line from  RLSTN45   60.00   (3) to BRKR  RALSTON   60.00
1  33398 33400  "1 "    0     # line from  RLSTN45   60.00   (3) to BRKR  JEFRSN_E  60.00
4  33362     0  "1 "    0     # LOAD-DROP    CRYSTLSG  60.00  LOAD==3.00(0.61)
1  33397 33363  "1 "    1     # LINE-TRANSFER  RLSTN35  60.00  TO  RALSTON  60.00
4  33363     0  "**"    1     # RESTORE RALSTON LOAD
0
 #
 #
 # (434)  B2 LINE OUTAGE (BREAKER-TO-BREAKER)
 #
1  33351 33345  "1 "    0     # line from  SN BRNOT  60.00   (2) to (2)   SNTH TP1  60.00
1  33351 33352  "1 "    0     # line from  SN BRNOT  60.00   (2) to (2)   SNANDRES  60.00
1  33345 33355  "1 "    0     # line from  SNTH TP1  60.00   (2) to BRKR  PACIFICA  60.00
1  33352 33354  "1 "    0     # line from  SNANDRES  60.00   (2) to (2)   MLLBRETP  60.00
1  33354 33353  "1 "    0     # line from  MLLBRETP  60.00   (2) to BRKR  MILLBRAE  60.00
4  33351     0  "1 "    0     # LOAD-DROP    SN BRNOT  60.00  LOAD==3.36(0.77)
4  33352     0  "1 "    0     # LOAD-DROP    SNANDRES  60.00  LOAD==1.80(0.37)
4  33355     0  "1 "    0     # LOAD-DROP    PACIFICA  60.00  LOAD==9.92(2.26)
4  33355     0  "2 "    0     # LOAD-DROP    PACIFICA  60.00  LOAD==5.61(1.28)
1  33355 33389  "1 "    1     # LINE-TRANSFER  PACIFICA  60.00  TO  PACIFJCT  60.00
4  33355     0  "**"    1     # RESTORE PACIFICA LOAD
0
 #
 #
 # (435)  B2 LINE OUTAGE (BREAKER-TO-BREAKER)
 #
1  33357 33358  "1 "    0     # line from  SAN MATO  60.00  BRKR to BRKR  BERESFRD  60.00
0
 #
 #
 # (436)  B2 LINE OUTAGE (BREAKER-TO-BREAKER)
 #
1  33357 33364  "1 "    0     # line from  SAN MATO  60.00  BRKR to (2)   ORACLE60  60.00
1  33364 33365  "1 "    0     # line from  ORACLE60  60.00   (2) to BRKR  SAN CRLS  60.00
4  33364     0  "1 "    0     # LOAD-DROP    ORACLE60  60.00  LOAD==11.86(5.40)
0
 #
 #
 # (437)  B2 LINE OUTAGE (BREAKER-TO-BREAKER)
 #
1  33358 33360  "1 "    0     # line from  BERESFRD  60.00  BRKR to BRKR  HILLSDLE  60.00
0
 #
 #
 # (438)  B2 LINE OUTAGE (BREAKER-TO-BREAKER)
 #
1  33360 33361  "1 "    0     # line from  HILLSDLE  60.00  BRKR to BRKR  HLLSDLJT  60.00
```

```
0
 #
 #
 # (439)  B2 LINE OUTAGE (BREAKER-TO-BREAKER)
 #
1  33365 33367  "1 "    0     # line from  SAN CRLS  60.00  BRKR to BRKR  BAIR      60.00
0
 #
 #
 # (440)  B2 LINE OUTAGE (BREAKER-TO-BREAKER)
 #
1  33367 33368  "1 "    0     # line from  BAIR      60.00  BRKR to (2)   REDWDTP1  60.00
1  33368 33373  "1 "    0     # line from  REDWDTP1  60.00   (2) to (3)   BLHVNTP1  60.00
1  33373 33372  "1 "    0     # line from  BLHVNTP1  60.00   (3) to (1)   BLLE HVN  60.00
1  33373 33375  "1 "    0     # line from  BLHVNTP1  60.00   (3) to BRKR  CLY LNDG  60.00
4  33372     0  "1 "    0     # LOAD-DROP    BLLE HVN  60.00  LOAD==7.52(1.71)
4  33372     0  "2 "    0     # LOAD-DROP    BLLE HVN  60.00  LOAD==8.46(1.93)
4  33372     0  "3 "    0     # LOAD-DROP    BLLE HVN  60.00  LOAD==15.39(3.51)
4  33372     0  "4 "    0     # LOAD-DROP    BLLE HVN  60.00  LOAD==14.12(3.21)
4  33372     0  "5 "    0     # LOAD-DROP    BLLE HVN  60.00  LOAD==29.05(6.62)
1  33372 33374  "2 "    1     # LINE-TRANSFER  BLHVNTP1  60.00  TO  BLHVNTP2  60.00
4  33372     0  "**"    1     # RESTORE BELLE HAVEN load
0
 #
 #
 # (441)  B2 LINE OUTAGE (BREAKER-TO-BREAKER)
 #
1  33367 33369  "2 "    0     # line from  BAIR      60.00  BRKR to (3)   REDWDTP2  60.00
1  33369 33370  "2 "    0     # line from  REDWDTP2  60.00   (3) to BRKR  REDWOOD   60.00
1  33369 33374  "2 "    0     # line from  REDWDTP2  60.00   (3) to (2)   BLHVNTP2  60.00
1  33374 33371  "2 "    0     # line from  BLHVNTP2  60.00   (2) to (2)   RAYCHEM   60.00
1  33371 33375  "2 "    0     # line from  RAYCHEM   60.00   (2) to BRKR  CLY LNDG  60.00
4  33370     0  "1 "    0     # LOAD-DROP    REDWOOD   60.00  LOAD==11.80(2.69)
4  33370     0  "2 "    0     # LOAD-DROP    REDWOOD   60.00  LOAD==5.12(1.17)
4  33370     0  "3 "    0     # LOAD-DROP    REDWOOD   60.00  LOAD==8.98(2.05)
4  33370     0  "4 "    0     # LOAD-DROP    REDWOOD   60.00  LOAD==8.44(1.93)
4  33370     0  "5 "    0     # LOAD-DROP    REDWOOD   60.00  LOAD==30.43(6.94)
4  33371     0  "1 "    0     # LOAD-DROP    RAYCHEM   60.00  LOAD==7.48(5.22)
1  33368 33370  "1 "    1     # LINE-TRANSFER  REDWDTP2  60.00  TO  REDWDTP1  60.00
4  33370     0  "**"    1     # RESTORE REDWOOD CITY load
0
 #
 #
 # (442)  B2 LINE OUTAGE (BREAKER-TO-BREAKER)
 #
1  33375 33382  "1 "    0     # line from  CLY LNDG  60.00  BRKR to (3)   S.R.I.    60.00
1  33382 33381  "1 "    0     # line from  S.R.I.    60.00   (3) to BRKR  GLENWOOD  60.00
2  33382 33468  "1 "    0     # TRAN from  S.R.I.    60.00   (3) to (1)   SRI INTL   9.11
4  33468     0  "1 "    0     # LOAD-DROP    SRI INTL   9.11  LOAD==4.12(0.84)
3  33468     0  "1 "    0     # GEN-DROP    SRI INTL   9.11  GEN==4.30(3.00)
3  33463     0  "1"     0     # GEN-DROP    CARDINAL  12.97
3  33463     0  "2"     0     # GEN-DROP    CARDINAL  12.97
4  33386     0  "**"    0     # LOAD-DROP   STANFORD  60.00
0
 #
 #
 # (443)  B2 LINE OUTAGE (BREAKER-TO-BREAKER)
 #
1  33375 35454  "1 "    0     # line from  CLY LNDG  60.00  BRKR to (3)   WSTNG JT  60.00
1  35454 35451  "1 "    0     # line from  WSTNG JT  60.00   (3) to (1)   L.ALTS J  60.00
1  35454 35453  "1 "    0     # line from  WSTNG JT  60.00   (3) to (1)   NRTHGRUM  60.00
4  35453     0  "1 "    0     # LOAD-DROP    NRTHGRUM  60.00  LOAD==5.99(4.18)
0
 #
 #
 # (444)  B2 LINE OUTAGE (BREAKER-TO-BREAKER)
 #
1  33376 33387  "1 "    0     # line from  LAS PLGS  60.00  BRKR to BRKR  WOODSIDE  60.00
4  33376     0  "1 "    0     # LOAD-DROP    LAS PLGS  60.00  LOAD==3.30(0.75)
4  33376     0  "2 "    0     # LOAD-DROP    LAS PLGS  60.00  LOAD==3.30(0.75)
1  33376 33393  "1 "    1     # LOAD-TRANSFER  LAS PLGS  60.00  TO  LSPLGSJT  60.00
4  33376     0  "**"    1     # RESTORE LAS PULGAS load
0
 #
 #
 # (445)  B2 LINE OUTAGE (BREAKER-TO-BREAKER)
 #
1  33377 33380  "1 "    0     # line from  EMRLD LE  60.00   (2) to BRKR  JEFRSN_D  60.00
```

```
 1  33377 33393  "1 "    0     # line from  EMRLD LE  60.00   (2) to (2)   LSPLGSJT  60.00
 1  33393 33385  "1 "    0     # line from  LSPLGSJT  60.00   (2) to (3)   MNLOJCT2  60.00
 1  33385 33383  "1 "    0     # line from  MNLOJCT2  60.00   (3) to BRKR  MENLO     60.00
 1  33385 33388  "1 "    0     # line from  MNLOJCT2  60.00   (3) to (1)   S.L.A.C.  60.00
 4  33377     0  "1 "    0     # LOAD-DROP    EMRLD LE  60.00  LOAD==5.54(1.26)
 0
  #
  #
  # (446)  B2 LINE OUTAGE (BREAKER-TO-BREAKER)
  #
 1  33380 33387  "1 "    0     # line from  JEFRSN_D  60.00  BRKR to BRKR  WOODSIDE  60.00
 1  33376 33393  "1 "    1     # LINE-TRANSFER  LAS PLGS  60.00  TO  LSPLGSJT  60.00
 1  33376 33387  "1 "    1     # LINE-TRANSFER  LAS PLGS  60.00  TO  WOODSIDE  60.00
 4  33387     0  "**"    1     # RESTORE WOODSIDE load
 4  33376     0  "**"    1     # RESTORE LAS PLGS load
 0
  #
  #
  # (447)  B2 LINE OUTAGE (BREAKER-TO-BREAKER)
  #
 1  33380 33400  "1 "    0     # line from  JEFRSN_D  60.00  BRKR to BRKR  JEFRSN_E  60.00
 0
  #
  #
  # (448)  B2 LINE OUTAGE (BREAKER-TO-BREAKER)
  #
 1  33381 33384  "1 "    0     # line from  GLENWOOD  60.00  BRKR to (3)   MNLO JCT  60.00
 1  33384 33386  "1 "    0     # line from  MNLO JCT  60.00   (3) to BRKR  STANFORD  60.00
 1  33384 33390  "1 "    0     # line from  MNLO JCT  60.00   (3) to BRKR  MENLO G   60.00
 3  33463     0  "**"    0     # GEN-DROP    CARDINAL  12.97
 1  33388 33386  "1 "    1     # LINE-TRANSFER  MNLO JCT  60.00  TO  S.L.A.C.  60.00
 4  33386     0  "**"    1     # RESTORE STANFORD load
 0
  #
  #
  # (449)  B2 LINE OUTAGE (BREAKER-TO-BREAKER)
  #
 1  33394 33366  "1 "    0     # line from  OXMTN_TP  60.00  BRKR to BRKR  HLF MNBY  60.00
 4  33366     0  "1 "    0     # LOAD-DROP    HLF MNBY  60.00  LOAD==8.02(1.82)
 4  33366     0  "2 "    0     # LOAD-DROP    HLF MNBY  60.00  LOAD==8.73(1.99)
 4  33366     0  "3 "    0     # LOAD-DROP    HLF MNBY  60.00  LOAD==9.64(2.19)
 1  33366 33389  "1 "    1     # LINE-TRANSFER  HLLSDLJT  60.00  TO  PACIFJCT  60.00
 4  33366     0  "**"    1     # RESTORE HALF MOON BAY load
 0
  #
  #
  # (450)  B2 LINE OUTAGE (BREAKER-TO-BREAKER)
  #
 1  33394 33395  "1 "    0     # line from  OXMTN_TP  60.00  BRKR to (2)   OX_MTN60  60.00
 2  33395 33469  "1 "    0     # TRAN from  OX_MTN60  60.00   (2) to (1)   OX_MTN     4.16
 3  33469     0  "1 "    0     # GEN-DROP    OX_MTN     4.16  GEN==1.90(0.85)
 3  33469     0  "2 "    0     # GEN-DROP    OX_MTN     4.16  GEN==1.90(0.85)
 3  33469     0  "3 "    0     # GEN-DROP    OX_MTN     4.16  GEN==1.90(0.85)
 3  33469     0  "4 "    0     # GEN-DROP    OX_MTN     4.16  GEN==1.90(0.85)
 3  33469     0  "5 "    0     # GEN-DROP    OX_MTN     4.16  GEN==1.90(0.85)
 3  33469     0  "6 "    0     # GEN-DROP    OX_MTN     4.16  GEN==1.90(0.85)
 3  33469     0  "7 "    0     # GEN-DROP    OX_MTN     4.16  GEN==1.90(0.85)
 0
  #
  #
  # (451)  B3 TRANSFORMER OUTAGE (BREAKER-TO-BREAKER)
  #
 2  33307 33353  "5 "    0     # TRAN from  MILLBRAE 115.00  BRKR to BRKR  MILLBRAE  60.00
 0
  #
  #
  # (452)  B3 TRANSFORMER OUTAGE (BREAKER-TO-BREAKER)
  #
#      **** 3-WINDING TRANSFORMER  33310  (30701)  30700  33460 :
 2  33310 30700  "5 "    0     # TRAN from  SANMATEO 115.00  BRKR to (1)   SANMATEO 230.00
 0
  #
  #
  # (453)  B3 TRANSFORMER OUTAGE (BREAKER-TO-BREAKER)
  #
#      **** 3-WINDING TRANSFORMER  33310  (30702)  30700  33461 :
 2  33310 30700  "6 "    0     # TRAN from  SANMATEO 115.00  BRKR to (1)   SANMATEO 230.00
 0
```

```
 #
 #
 # (454)  B3 TRANSFORMER OUTAGE (BREAKER-TO-BREAKER)
 #
#      **** 3-WINDING TRANSFORMER  33310  (30704)  30700  33462 :
2  33310 30700  "7 "    0     # TRAN from  SANMATEO 115.00  BRKR to (1)   SANMATEO 230.00
0
 #
 #
 # (455)  B3 TRANSFORMER OUTAGE (BREAKER-TO-BREAKER)
 #
2  33310 33318  "3 "    0     # TRAN from  SANMATEO 115.00  BRKR to (2)   SMATEO3M 115.00
2  33318 33357  "3 "    0     # TRAN from  SMATEO3M 115.00   (2) to BRKR  SAN MATO  60.00
0
 #
 #
 # (456)  B3 TRANSFORMER OUTAGE (BREAKER-TO-BREAKER)
 #
2  33315 30703  "1 "    0     # TRAN from  RVNSWD E 115.00  BRKR to BRKR  RAVENSWD 230.00
0
 #
 #
 # (457)  B3 TRANSFORMER OUTAGE (BREAKER-TO-BREAKER)
 #
2  33321 30703  "2 "    0     # TRAN from  RVNSWD D 115.00  BRKR to BRKR  RAVENSWD 230.00
0
 #
 #
 # (458)  B3 TRANSFORMER OUTAGE (BREAKER-TO-BREAKER)
 #
2  33357 33310  "8 "    0     # TRAN from  SAN MATO  60.00  BRKR to BRKR  SANMATEO 115.00
0
 #
 #
 # (459)  B3 TRANSFORMER OUTAGE (BREAKER-TO-BREAKER)
 #
2  33367 33313  "1 "    0     # TRAN from  BAIR      60.00  BRKR to BRKR  BAIR     115.00
0
 #
 #
 # (460)  B3 TRANSFORMER OUTAGE (BREAKER-TO-BREAKER)
 #
2  33375 33316  "2 "    0     # TRAN from  CLY LNDG  60.00  BRKR to BRKR  CLY LND2 115.00
0
 #
 #
 # (461)  B3 TRANSFORMER OUTAGE (BREAKER-TO-BREAKER)
 #
2  33375 33317  "1 "    0     # TRAN from  CLY LNDG  60.00  BRKR to BRKR  CLY LND  115.00
0
 #
 #
 # (462)  B3 TRANSFORMER OUTAGE (BREAKER-TO-BREAKER)
 #
2  33400 30715  "2 "    0     # TRAN from  JEFRSN_E  60.00  BRKR to BRKR  JEFFERSN 230.00
0
 #
 #
 # (463)  B3 TRANSFORMER OUTAGE (BREAKER-TO-BREAKER)
 #
2  33463 33386  "1 "    0     # TRAN from  CARDINAL  12.47   (1) to BRKR  STANFORD  60.00
3  33463     0  "1 "    0     # GEN-DROP    CARDINAL  12.47  GEN==31.00(12.13)
3  33463     0  "2 "    0     # GEN-DROP    CARDINAL  12.47  GEN==10.00(3.91)
0
 #
 #
 # (464)  B1 GENERATOR OUTAGE
 #
3  33467     0  "1"     0     # SFAERP    13.80       PGEN=48.00  QGEN=10.35
0
 #
 #
 # (465)  B1 GENERATOR OUTAGE
 #
3  33469     0  "1"     0     # OX_MTN     4.16       PGEN=1.90  QGEN=0.85
0
 #
 #
```

```
 # (466)  B1 GENERATOR OUTAGE
 #
3  33460     0  "1"     0     # SMATO2SC  13.20       PGEN=0.00  QGEN=22.88
0
 #
 #
 # (467)  B1 GENERATOR OUTAGE
 #
3  33461     0  "1"     0     # SMATO3SC  13.20       PGEN=0.00  QGEN=23.33
0
 #
 #
 # (468)  B1 GENERATOR OUTAGE
 #
3  33462     0  "1"     0     # SMATO1SC  13.20       PGEN=0.00  QGEN=25.00
0
 #
 #
 # (469)  B1 GENERATOR OUTAGE
 #
3  33466     0  "1"     0     # UNTED CO   9.11       PGEN=28.20  QGEN=11.18
0
 #
 #
 # (470)  B1 GENERATOR OUTAGE
 #
3  33468     0  "1"     0     # SRI INTL   9.11       PGEN=4.30  QGEN=3.00
0
 #
 #
 # (471)  B1 GENERATOR OUTAGE
 #
3  33463     0  "1"     0     # CARDINAL  12.47       PGEN=31.00  QGEN=12.01
0
 #
 #
 # (472)  B1 GENERATOR OUTAGE
 #
3  33463     0  "2"     0     # CARDINAL  12.47       PGEN=10.00  QGEN=3.43
0
 #
 #
 # (473)  L-1/G-1 OVERLAPPING OUTAGE
 # East Shore - San Mateo 230 kV Line and SFAERP
1  30560 30700  "1 "    0     # line from  E. SHORE 230.00  BRKR to BRKR  SANMATEO 230.00
 #
3  33467     0  "1"     0     # SFAERP    13.80       PGEN=48.00  QGEN=10.35
0
 #
 #
 # (474)  L-1/G-1 OVERLAPPING OUTAGE
 # Newark - Ravenswood 230 kV Line and SFAERP
1  30630 30703  "1 "    0     # line from  NEWARK D 230.00  BRKR to BRKR  RAVENSWD 230.00
 #
3  33467     0  "1"     0     # SFAERP    13.80       PGEN=48.00  QGEN=10.35
0
 #
 #
 # (475)  L-1/G-1 OVERLAPPING OUTAGE
 # Tesla - Ravenswood 230 kV Line and SFAERP
1  30640 30703  "1 "    0     # line from  TESLA C  230.00  BRKR to BRKR  RAVENSWD 230.00
 #
3  33467     0  "1"     0     # SFAERP    13.80       PGEN=48.00  QGEN=10.35
0
 #
 #
 # (476)  L-1/G-1 OVERLAPPING OUTAGE
 # Pittsburg - San Mateo 230 kV Line and SFAERP
1  30700 30527  "1 "    0     # line from  SANMATEO 230.00  BRKR to BRKR  PITSBG E 230.00
 #
3  33467     0  "1"     0     # SFAERP    13.80       PGEN=48.00  QGEN=10.35
0
 #
 #
 # (477)  L-1/G-1 OVERLAPPING OUTAGE
 # Martin - San Mateo 230 kV Line and SFAERP
1  30700 30695  "1 "    0     # line from  SANMATEO 230.00  BRKR to BRKR  MARTIN C 230.00
 #
```

```
3  33467     0  "1"     0     # SFAERP    13.80       PGEN=48.00  QGEN=10.35
0
 #
 #
 # (478)  L-1/G-1 OVERLAPPING OUTAGE
 # San Mateo - Ravenswood #1 230 kV Line and SFAERP
1  30703 30700  "1 "    0     # line from  RAVENSWD 230.00  BRKR to BRKR  SANMATEO 230.00
 #
3  33467     0  "1"     0     # SFAERP    13.80       PGEN=48.00  QGEN=10.35
0
 #
 #
 # (479)  L-1/G-1 OVERLAPPING OUTAGE
 # San Mateo - Ravenswood #2 230 kV Line and SFAERP
1  30703 30700  "2 "    0     # line from  RAVENSWD 230.00  BRKR to BRKR  SANMATEO 230.00
 #
3  33467     0  "1"     0     # SFAERP    13.80       PGEN=48.00  QGEN=10.35
0
 #
 #
 # (480)  L-1/G-1 OVERLAPPING OUTAGE
 # Monta Vista - Jefferson #1 230 kV Line and SFAERP
1  30705 30710  "1 "    0     # line from  MONTAVIS 230.00  BRKR to (3)   SLACTAP1 230.00
1  30710 30711  "1 "    0     # line from  SLACTAP1 230.00   (3) to BRKR  S.L.A.C. 230.00
1  30710 30715  "1 "    0     # line from  SLACTAP1 230.00   (3) to BRKR  JEFFERSN 230.00
4  30711     0  "1 "    0     # LOAD-DROP    S.L.A.C. 230.00  LOAD==58.00(11.78)
1  30711 30712  "1 "    1     # LINE-TRANSFER SLACTAP1 to SLACTAP2
4  30711     0  "**"    1     # RESTORE S.L.A.C. load
 #
3  33467     0  "1"     0     # SFAERP    13.80       PGEN=48.00  QGEN=10.35
0
 #
 #
 # (481)  L-1/G-1 OVERLAPPING OUTAGE
 # Monta Vista - Jefferson #2 230 kV Line and SFAERP
1  30705 30712  "2 "    0     # line from  MONTAVIS 230.00  BRKR to (2)   SLACTAP2 230.00
1  30712 30715  "2 "    0     # line from  SLACTAP2 230.00   (2) to BRKR  JEFFERSN 230.00
 #
3  33467     0  "1"     0     # SFAERP    13.80       PGEN=48.00  QGEN=10.35
0
 #
 #
 # (482)  L-1/G-1 OVERLAPPING OUTAGE
 # Martin - Jefferson 230 kV Line and SFAERP
1  30713 30714  "1 "    0     # line from  JMDAMCX1 230.00   (2) to (2)   JMDAMCX2 230.00
1  30713 30715  "1 "    0     # line from  JMDAMCX1 230.00   (2) to BRKR  JEFFERSN 230.00
1  30714 30716  "1 "    0     # line from  JMDAMCX2 230.00   (2) to (2)   TRAN230A 230.00
1  30716 30717  "1 "    0     # line from  TRAN230A 230.00   (2) to (2)   TRAN230B 230.00
1  30717 30696  "1 "    0     # line from  TRAN230B 230.00   (2) to (2)   MRT RCTR 230.00
1  30696 30695  "1 "    0     # line from  MRT RCTR 230.00   (2) to BRKR  MARTIN C 230.00
 #
3  33467     0  "1"     0     # SFAERP    13.80       PGEN=48.00  QGEN=10.35
0
 #
 #
 # (483)  L-1/G-1 OVERLAPPING OUTAGE
 # Martin - East Grand 115 kV Line and SFAERP
1  33208 33303  "2 "    0     # line from  MARTIN C 115.00  BRKR to BRKR  EST GRND 115.00
 #
3  33467     0  "1"     0     # SFAERP    13.80       PGEN=48.00  QGEN=10.35
0
 #
 #
 # (484)  L-1/G-1 OVERLAPPING OUTAGE
 # Martin - Millbrae 115 kV Line and SFAERP
1  33208 33307  "1 "    0     # line from  MARTIN C 115.00  BRKR to BRKR  MILLBRAE 115.00
 #
3  33467     0  "1"     0     # SFAERP    13.80       PGEN=48.00  QGEN=10.35
0
 #
 #
 # (485)  L-1/G-1 OVERLAPPING OUTAGE
 # Martin - San Mateo #3 115 kV Line and SFAERP
1  33208 33310  "3 "    0     # line from  MARTIN C 115.00  BRKR to BRKR  SANMATEO 115.00
 #
3  33467     0  "1"     0     # SFAERP    13.80       PGEN=48.00  QGEN=10.35
0
 #
```

```
 #
 # (486)  L-1/G-1 OVERLAPPING OUTAGE
 # Martin - San Mateo #6 115 kV Line and SFAERP
1  33305 33208  "6 "    0     # line from  SHAWROAD 115.00   (2) to BRKR  MARTIN C 115.00
1  33305 33310  "6 "    0     # line from  SHAWROAD 115.00   (2) to BRKR  SANMATEO 115.00
4  33305 33309  "1 "    1     # LOAD-TRANSFER  SHAWROAD 115.00  TO  SANPAULA 115.00    LOAD==9.00(1.83)
 #
3  33467     0  "1"     0     # SFAERP    13.80       PGEN=48.00  QGEN=10.35
0
 #
 #
 # (487)  L-1/G-1 OVERLAPPING OUTAGE
 # SF Airport - San Mateo 115 kV Line and SFAERP
1  33306 33310  "5 "    0     # line from  SFIA     115.00  BRKR to BRKR  SANMATEO 115.00
 #
3  33467     0  "1"     0     # SFAERP    13.80       PGEN=48.00  QGEN=10.35
0
 #
 #
 # (488)  L-1/G-1 OVERLAPPING OUTAGE
 # Millbrae - San Mateo 115 kV Line and SFAERP
1  33307 33310  "1 "    0     # line from  MILLBRAE 115.00  BRKR to BRKR  SANMATEO 115.00
 #
3  33467     0  "1"     0     # SFAERP    13.80       PGEN=48.00  QGEN=10.35
0
 #
 #
 # (489)  L-1/G-1 OVERLAPPING OUTAGE
 # East Grand - San Mateo 115 kV Line and SFAERP
1  33308 33303  "2 "    0     # line from  SFIA-MA  115.00   (2) to BRKR  EST GRND 115.00
1  33308 33310  "2 "    0     # line from  SFIA-MA  115.00   (2) to BRKR  SANMATEO 115.00
4  33308 33306  "1 "    1     # LOAD-TRANSFER  SFIA-MA  115.00  TO  SFIA     115.00    LOAD==20.20(4.10)
 #
3  33467     0  "1"     0     # SFAERP    13.80       PGEN=48.00  QGEN=10.35
0
 #
 #
 # (490)  L-1/G-1 OVERLAPPING OUTAGE
 # Millbrae - Santa Paula 115 kV Line and SFAERP
1  33309 33307  "1 "    0     # line from  SANPAULA 115.00   (1) to BRKR  MILLBRAE 115.00
4  33309 33305  "1 "    1     # LOAD-TRANSFER  SANPAULA 115.00  TO  SHAWROAD 115.00    LOAD==8.00(1.62)
 #
3  33467     0  "1"     0     # SFAERP    13.80       PGEN=48.00  QGEN=10.35
0
 #
 #
 # (491)  L-1/G-1 OVERLAPPING OUTAGE
 # Belmont - San Mateo 115 kV Line and SFAERP
1  33310 33312  "1 "    0     # line from  SANMATEO 115.00  BRKR to BRKR  BELMONT  115.00
 #
3  33467     0  "1"     0     # SFAERP    13.80       PGEN=48.00  QGEN=10.35
0
 #
 #
 # (492)  L-1/G-1 OVERLAPPING OUTAGE
 # Ravenswood - San Mateo 115 kV Line and SFAERP
1  33310 33321  "1 "    0     # line from  SANMATEO 115.00  BRKR to BRKR  RVNSWD D 115.00
 #
3  33467     0  "1"     0     # SFAERP    13.80       PGEN=48.00  QGEN=10.35
0
 #
 #
 # (493)  L-1/G-1 OVERLAPPING OUTAGE
 # Burlingame - San Mateo 115 kV Line and SFAERP
1  33310 33356  "4 "    0     # line from  SANMATEO 115.00  BRKR to BRKR  BURLNGME 115.00
 #
3  33467     0  "1"     0     # SFAERP    13.80       PGEN=48.00  QGEN=10.35
0
 #
 #
 # (494)  L-1/G-1 OVERLAPPING OUTAGE
 # Belmont - Bair 115 kV Line and SFAERP
1  33312 33313  "1 "    0     # line from  BELMONT  115.00  BRKR to BRKR  BAIR     115.00
 #
3  33467     0  "1"     0     # SFAERP    13.80       PGEN=48.00  QGEN=10.35
0
 #
 #
```

```
 # (495)  L-1/G-1 OVERLAPPING OUTAGE
 # Ravenswood - Bair 115 kV Line and SFAERP
1  33313 33319  "2 "    0     # line from  BAIR     115.00  BRKR to (3)   SHREDJCT 115.00
1  33319 33314  "1 "    0     # line from  SHREDJCT 115.00   (3) to (2)   SHREDDER 115.00
1  33319 33321  "2 "    0     # line from  SHREDJCT 115.00   (3) to BRKR  RVNSWD D 115.00
1  33314 33320  "1 "    0     # line from  SHREDDER 115.00   (2) to (1)   LONESTAR 115.00
4  33314     0  "1 "    0     # LOAD-DROP    SHREDDER 115.00  LOAD==4.77(5.43)
4  33320     0  "1 "    0     # LOAD-DROP    LONESTAR 115.00  LOAD==2.57(3.43)
 #
3  33467     0  "1"     0     # SFAERP    13.80       PGEN=48.00  QGEN=10.35
0
 #
 #
 # (496)  L-1/G-1 OVERLAPPING OUTAGE
 # Ravenswood - Cooley Landing #2 115 kV Line and SFAERP
1  33315 33316  "2 "    0     # line from  RVNSWD E 115.00  BRKR to BRKR  CLY LND2 115.00
 #
3  33467     0  "1"     0     # SFAERP    13.80       PGEN=48.00  QGEN=10.35
0
 #
 #
 # (497)  L-1/G-1 OVERLAPPING OUTAGE
 # Ravenswood - Ames #1 115 kV Line and SFAERP
1  33315 35350  "1 "    0     # line from  RVNSWD E 115.00  BRKR to BRKR  AMES BS1 115.00
 #
3  33467     0  "1"     0     # SFAERP    13.80       PGEN=48.00  QGEN=10.35
0
 #
 #
 # (498)  L-1/G-1 OVERLAPPING OUTAGE
 # Ravenswood - Ames #2 115 kV Line and SFAERP
1  33315 35351  "2 "    0     # line from  RVNSWD E 115.00  BRKR to BRKR  AMES BS2 115.00
 #
3  33467     0  "1"     0     # SFAERP    13.80       PGEN=48.00  QGEN=10.35
0
 #
 #
 # (499)  L-1/G-1 OVERLAPPING OUTAGE
 # Ravenswood - Palo Alto #1 115 kV Line and SFAERP
1  33315 38028  "1 "    0     # line from  RVNSWD E 115.00  BRKR to BRKR  PLO ALTO 115.00
 #
3  33467     0  "1"     0     # SFAERP    13.80       PGEN=48.00  QGEN=10.35
0
 #
 #
 # (500)  L-1/G-1 OVERLAPPING OUTAGE
 # Ravenswood - Palo Alto #2 115 kV Line and SFAERP
1  33315 38028  "2 "    0     # line from  RVNSWD E 115.00  BRKR to BRKR  PLO ALTO 115.00
 #
3  33467     0  "1"     0     # SFAERP    13.80       PGEN=48.00  QGEN=10.35
0
 #
 #
 # (501)  L-1/G-1 OVERLAPPING OUTAGE
 # Cooley Landing - Palo Alto 115 kV Line and SFAERP
1  33316 38028  "1 "    0     # line from  CLY LND2 115.00  BRKR to BRKR  PLO ALTO 115.00
 #
3  33467     0  "1"     0     # SFAERP    13.80       PGEN=48.00  QGEN=10.35
0
 #
 #
 # (502)  L-1/G-1 OVERLAPPING OUTAGE
 # Ravenswood - Bair 115 kV Line and SFAERP
1  33321 33313  "1 "    0     # line from  RVNSWD D 115.00  BRKR to BRKR  BAIR     115.00
 #
3  33467     0  "1"     0     # SFAERP    13.80       PGEN=48.00  QGEN=10.35
0
 #
 #
 # (503)  L-1/G-1 OVERLAPPING OUTAGE
 # Ravenswood - Cooley Landing #1 115 kV Line and SFAERP
1  33321 33317  "1 "    0     # line from  RVNSWD D 115.00  BRKR to BRKR  CLY LND  115.00
 #
3  33467     0  "1"     0     # SFAERP    13.80       PGEN=48.00  QGEN=10.35
0
 #
 #
 # 2013 category b contingency list
```

```
 # Mission Division Zone 316
 #
 #
 # (504)  B2 LINE OUTAGE (BREAKER-TO-BREAKER)
 #
1  30530 30537  "1 "    0     # line from  CAYETANO 230.00  BRKR to BRKR  NDUBLIN  230.00
0
 #
 #
 # (505)  B2 LINE OUTAGE (BREAKER-TO-BREAKER)
 #
1  30537 35224  "1 "    0     # line from  NDUBLIN  230.00  BRKR to BRKR  VINEYD_D 230.00
0
 #
 #
 # (506)  B2 LINE OUTAGE (BREAKER-TO-BREAKER)
 #
1  30554 30631  "1 "    0     # line from  CASTROVL 230.00  BRKR to BRKR  NEWARK E 230.00
0
 #
 #
 # (507)  B2 LINE OUTAGE (BREAKER-TO-BREAKER)
 #
1  30560 30559  "1 "    0     # line from  E. SHORE 230.00  BRKR to BRKR  RCEC     230.00
0
 #
 #
 # (508)  B2 LINE OUTAGE (BREAKER-TO-BREAKER)
 #
1  30560 30559  "2 "    0     # line from  E. SHORE 230.00  BRKR to BRKR  RCEC     230.00
0
 #
 #
 # (509)  B2 LINE OUTAGE (BREAKER-TO-BREAKER)
 #
1  30585 30630  "1 "    0     # line from  LS PSTAS 230.00  BRKR to BRKR  NEWARK D 230.00
0
 #
 #
 # (510)  B2 LINE OUTAGE (BREAKER-TO-BREAKER)
 #
1  30631 30635  "1 "    0     # line from  NEWARK E 230.00  BRKR to BRKR  NWK DIST 230.00
0
 #
 #
 # (511)  B2 LINE OUTAGE (BREAKER-TO-BREAKER)
 #
1  30635 30731  "1 "    0     # line from  NWK DIST 230.00  BRKR to BRKR  LS ESTRS 230.00
0
 #
 #
 # (512)  B2 LINE OUTAGE (BREAKER-TO-BREAKER)
 #
1  35104 35105  "1 "    0     # line from  GRANT    115.00  BRKR to BRKR  EASTSHRE 115.00
0
 #
 #
 # (513)  B2 LINE OUTAGE (BREAKER-TO-BREAKER)
 #
1  35104 35105  "2 "    0     # line from  GRANT    115.00  BRKR to BRKR  EASTSHRE 115.00
0
 #
 #
 # (514)  B2 LINE OUTAGE (BREAKER-TO-BREAKER)
 #
1  35105 35106  "1 "    0     # line from  EASTSHRE 115.00  BRKR to BRKR  MT EDEN  115.00
0
 #
 #
 # (515)  B2 LINE OUTAGE (BREAKER-TO-BREAKER)
 #
1  35105 35106  "2 "    0     # line from  EASTSHRE 115.00  BRKR to BRKR  MT EDEN  115.00
0
 #
 #
 # (516)  B2 LINE OUTAGE (BREAKER-TO-BREAKER)
 #
1  35105 35107  "1 "    0     # line from  EASTSHRE 115.00  BRKR to BRKR  DUMBARTN 115.00
```

```
0
 #
 #
 # (517)  B2 LINE OUTAGE (BREAKER-TO-BREAKER)
 #
1  35105 35108  "1 "    0     # line from  EASTSHRE 115.00  BRKR to (2)   ESEC115  115.00
2  35108 35302  "1 "    0     # TRAN from  ESEC115  115.00   (2) to (1)   ESEC      13.80
4  35302     0  "SG"    0     # LOAD-DROP    ESEC      13.80  LOAD==3.00(1.66)
3  35302     0  "1 "    0     # GEN-DROP    ESEC      13.80  GEN==8.43(3.60)
3  35302     0  "10"    0     # GEN-DROP    ESEC      13.80  GEN==8.43(3.60)
3  35302     0  "11"    0     # GEN-DROP    ESEC      13.80  GEN==8.43(3.60)
3  35302     0  "12"    0     # GEN-DROP    ESEC      13.80  GEN==8.43(3.60)
3  35302     0  "13"    0     # GEN-DROP    ESEC      13.80  GEN==8.43(3.60)
3  35302     0  "14"    0     # GEN-DROP    ESEC      13.80  GEN==8.43(3.60)
3  35302     0  "2 "    0     # GEN-DROP    ESEC      13.80  GEN==8.43(3.60)
3  35302     0  "3 "    0     # GEN-DROP    ESEC      13.80  GEN==8.43(3.60)
3  35302     0  "4 "    0     # GEN-DROP    ESEC      13.80  GEN==8.43(3.60)
3  35302     0  "5 "    0     # GEN-DROP    ESEC      13.80  GEN==8.43(3.60)
3  35302     0  "6 "    0     # GEN-DROP    ESEC      13.80  GEN==8.43(3.60)
3  35302     0  "7 "    0     # GEN-DROP    ESEC      13.80  GEN==8.43(3.60)
3  35302     0  "8 "    0     # GEN-DROP    ESEC      13.80  GEN==8.43(3.60)
3  35302     0  "9 "    0     # GEN-DROP    ESEC      13.80  GEN==8.43(3.60)
0
 #
 #
 # (518)  B2 LINE OUTAGE (BREAKER-TO-BREAKER)
 #
1  35107 35120  "1 "    0     # line from  DUMBARTN 115.00  BRKR to BRKR  NEWARK D 115.00
0
 #
 #
 # (519)  B2 LINE OUTAGE (BREAKER-TO-BREAKER)
 #
1  35120 35111  "1 "    0     # line from  NEWARK D 115.00  BRKR to BRKR  JARVIS   115.00
0
 #
 #
 # (520)  B2 LINE OUTAGE (BREAKER-TO-BREAKER)
 #
1  35120 35124  "2 "    0     # line from  NEWARK D 115.00  BRKR to (2)   NUMI JCT 115.00
1  35124 35111  "2 "    0     # line from  NUMI JCT 115.00   (2) to BRKR  JARVIS   115.00
0
 #
 #
 # (521)  B2 LINE OUTAGE (BREAKER-TO-BREAKER)
 #
1  35120 36851  "1 "    0     # line from  NEWARK D 115.00  BRKR to BRKR  NRS 400  115.00
0
 #
 #
 # (522)  B2 LINE OUTAGE (BREAKER-TO-BREAKER)
 #
1  35120 38446  "3 "    0     # line from  NEWARK D 115.00  BRKR to (3)   OAK-TAP1 115.00
1  38446 38432  "1 "    0     # line from  OAK-TAP1 115.00   (3) to (4)   OAKDLTID 115.00
1  38446 36962  "3 "    0     # line from  OAK-TAP1 115.00   (3) to BRKR  MOCCASIN 115.00
1  38432 38420  "1 "    0     # line from  OAKDLTID 115.00   (4) to BRKR  TUOLUMN  115.00
1  38432 38420  "2 "    0     # line from  OAKDLTID 115.00   (4) to BRKR  TUOLUMN  115.00
1  38432 38448  "2 "    0     # line from  OAKDLTID 115.00   (4) to (3)   OAK-TAP2 115.00
1  38448 35120  "4 "    0     # line from  OAK-TAP2 115.00   (3) to BRKR  NEWARK D 115.00
1  38448 36962  "4 "    0     # line from  OAK-TAP2 115.00   (3) to BRKR  MOCCASIN 115.00
0
 #
 #
 # (523)  B2 LINE OUTAGE (BREAKER-TO-BREAKER)
 #
1  35121 35110  "1 "    0     # line from  NEWARK E 115.00  BRKR to BRKR  FREMNT   115.00
0
 #
 #
 # (524)  B2 LINE OUTAGE (BREAKER-TO-BREAKER)
 #
1  35121 35110  "2 "    0     # line from  NEWARK E 115.00  BRKR to BRKR  FREMNT   115.00
0
 #
 #
 # (525)  B2 LINE OUTAGE (BREAKER-TO-BREAKER)
 #
1  35121 35350  "1 "    0     # line from  NEWARK E 115.00  BRKR to BRKR  AMES BS1 115.00
```

```
0
 #
 #
 # (526)  B2 LINE OUTAGE (BREAKER-TO-BREAKER)
 #
1  35121 35350  "3 "    0     # line from  NEWARK E 115.00  BRKR to BRKR  AMES BS1 115.00
0
 #
 #
 # (527)  B2 LINE OUTAGE (BREAKER-TO-BREAKER)
 #
1  35121 35351  "2 "    0     # line from  NEWARK E 115.00  BRKR to BRKR  AMES BS2 115.00
0
 #
 #
 # (528)  B2 LINE OUTAGE (BREAKER-TO-BREAKER)
 #
1  35122 35126  "1 "    0     # line from  NEWARK F 115.00  BRKR to (2)   NUMI TAP 115.00
1  35126 35127  "1 "    0     # line from  NUMI TAP 115.00   (2) to (2)   WESTRN_D 115.00
1  35127 35112  "1 "    0     # line from  WESTRN_D 115.00   (2) to BRKR  NUMMI    115.00
4  35127     0  "1 "    0     # LOAD-DROP    WESTRN_D 115.00  LOAD==6.80(4.25)
4  35112     0  "1 "    0     # LOAD-DROP    NUMMI    115.00  LOAD==30.88(8.14)
0
 #
 #
 # (529)  B2 LINE OUTAGE (BREAKER-TO-BREAKER)
 #
1  35122 35357  "1 "    0     # line from  NEWARK F 115.00  BRKR to (3)   LCKHD J1 115.00
1  35357 35358  "1 "    0     # line from  LCKHD J1 115.00   (3) to (3)   MFT.FD J 115.00
1  35357 35363  "1 "    0     # line from  LCKHD J1 115.00   (3) to BRKR  LAWRENCE 115.00
1  35358 35359  "1 "    0     # line from  MFT.FD J 115.00   (3) to (1)   MOFT.FLD 115.00
1  35358 35361  "1 "    0     # line from  MFT.FD J 115.00   (3) to BRKR  LOCKHD 1 115.00
4  35359     0  "1 "    0     # LOAD-DROP    MOFT.FLD 115.00  LOAD==4.46(1.12)
4  35361     0  "3 "    0     # LOAD-DROP    LOCKHD 1 115.00  LOAD==17.45(14.46)
1  35361 35362  "1 "    1     # close LOCKHD 1 115.00  LOCKHD 2  115.00
4  35361 0      "**"    1     # restore all loads to LOCKHD 1
0
 #
 #
 # (530)  B2 LINE OUTAGE (BREAKER-TO-BREAKER)
 #
1  35122 35360  "1 "    0     # line from  NEWARK F 115.00  BRKR to (3)   LCKHD J2 115.00
1  35360 35362  "1 "    0     # line from  LCKHD J2 115.00   (3) to BRKR  LOCKHD 2 115.00
1  35360 35365  "1 "    0     # line from  LCKHD J2 115.00   (3) to (3)   AMD JCT  115.00
1  35365 35364  "1 "    0     # line from  AMD JCT  115.00   (3) to BRKR  A.M.D    115.00
1  35365 35369  "1 "    0     # line from  AMD JCT  115.00   (3) to BRKR  APP MAT  115.00
4  35362     0  "1 "    0     # LOAD-DROP    LOCKHD 2 115.00  LOAD==7.56(1.72)
4  35362     0  "2 "    0     # LOAD-DROP    LOCKHD 2 115.00  LOAD==3.42(0.78)
4  35362     0  "4 "    0     # LOAD-DROP    LOCKHD 2 115.00  LOAD==16.21(12.58)
4  35364     0  "1 "    0     # LOAD-DROP    A.M.D    115.00  LOAD==1.67(1.17)
1  35361 35362  "1 "    1     # close LOCKHD 1 115.00  LOCKHD 2  115.00
4  35362 0      "**"    1     # restore all loads to LOCKHD 2
0
 #
 #
 # (531)  B2 LINE OUTAGE (BREAKER-TO-BREAKER)
 #
1  35122 35600  "1 "    0     # line from  NEWARK F 115.00  BRKR to BRKR  DIXON LD 115.00
0
 #
 #
 # (532)  B2 LINE OUTAGE (BREAKER-TO-BREAKER)
 #
1  35122 35602  "1 "    0     # line from  NEWARK F 115.00  BRKR to (3)   ZNKER J2 115.00
1  35602 35604  "1 "    0     # line from  ZNKER J2 115.00   (3) to (3)   ZANKER   115.00
1  35602 36850  "1 "    0     # line from  ZNKER J2 115.00   (3) to BRKR  KRS      115.00
2  35604 35861  "1 "    0     # TRAN from  ZANKER   115.00   (3) to (2)   SJ-SCL W   9.11
2  35604 35861  "2 "    0     # TRAN from  ZANKER   115.00   (3) to (2)   SJ-SCL W   9.11
4  35861     0  "SG"    0     # LOAD-DROP    SJ-SCL W   9.11  LOAD==6.17(2.09)
3  35861     0  "1 "    0     # GEN-DROP    SJ-SCL W   9.11  GEN==5.00(0.00)
0
 #
 #
 # (533)  B2 LINE OUTAGE (BREAKER-TO-BREAKER)
 #
1  35122 35603  "1 "    0     # line from  NEWARK F 115.00  BRKR to (3)   ZNKER J1 115.00
1  35603 35605  "1 "    0     # line from  ZNKER J1 115.00   (3) to (1)   AGNEW J  115.00
1  35603 35612  "1 "    0     # line from  ZNKER J1 115.00   (3) to BRKR  TRIMBLE  115.00
```

```
0
 #
 #
 # (534)  B2 LINE OUTAGE (BREAKER-TO-BREAKER)
 #
1  35122 35624  "1 "    0     # line from  NEWARK F 115.00  BRKR to BRKR  MILPITAS 115.00
0
 #
 #
 # (535)  B2 LINE OUTAGE (BREAKER-TO-BREAKER)
 #
1  35122 35624  "2 "    0     # line from  NEWARK F 115.00  BRKR to BRKR  MILPITAS 115.00
0
 #
 #
 # (536)  B2 LINE OUTAGE (BREAKER-TO-BREAKER)
 #
1  35122 36853  "2 "    0     # line from  NEWARK F 115.00  BRKR to BRKR  NRS 300  115.00
0
 #
 #
 # (537)  B2 LINE OUTAGE (BREAKER-TO-BREAKER)
 #
1  35200 35204  "1 "    0     # line from  SEAWEST   60.00   (3) to (3)   ZONDWD    60.00
1  35200 35218  "1 "    0     # line from  SEAWEST   60.00   (3) to (2)   FLOWIND1  60.00
2  35200 35312  "1 "    0     # TRAN from  SEAWEST   60.00   (3) to (1)   SEAWESTF   9.11
1  35204 35208  "1 "    0     # line from  ZONDWD    60.00   (3) to (3)   USWP-FRK  60.00
2  35204 35316  "1 "    0     # TRAN from  ZONDWD    60.00   (3) to (1)   ZOND SYS   9.11
2  35218 35318  "1 "    0     # TRAN from  FLOWIND1  60.00   (2) to (1)   FLOWDPTR   9.11
1  35208 35210  "1 "    0     # line from  USWP-FRK  60.00   (3) to (3)   VASCJCT.  60.00
2  35208 35320  "1 "    0     # TRAN from  USWP-FRK  60.00   (3) to (1)   USW FRIC  12.00
1  35210 35201  "1 "    0     # line from  VASCJCT.  60.00   (3) to BRKR  VASCO     60.00
1  35210 35220  "1 "    0     # line from  VASCJCT.  60.00   (3) to BRKR  LPOSTAS   60.00
4  35201     0  "1 "    0     # LOAD-DROP    VASCO     60.00  LOAD==6.00(1.37)
4  35201     0  "2 "    0     # LOAD-DROP    VASCO     60.00  LOAD==8.78(2.00)
3  35312     0  "1 "    0     # GEN-DROP    SEAWESTF   9.11  GEN==0.10(0.00)
3  35320     0  "1 "    0     # GEN-DROP    USW FRIC  12.00  GEN==2.60(0.00)
1  35211 35201  "1 "    1     # LINE-TRANSFER  VASCJCT.  60.00  TO  ALTAMONT  60.00
4  35201     0  "**"    1     # RESTORE VASCO load
0
 #
 #
 # (538)  B2 LINE OUTAGE (BREAKER-TO-BREAKER)
 #
1  35202 33776  "1 "    0     # line from  USWP-WKR  60.00   (3) to (2)   SOUTH BY  60.00
1  35202 35211  "1 "    0     # line from  USWP-WKR  60.00   (3) to (1)   ALTAMONT  60.00
2  35202 35314  "1 "    0     # TRAN from  USWP-WKR  60.00   (3) to (1)   WALKER+    9.11
1  33776 33775  "1 "    0     # line from  SOUTH BY  60.00   (2) to (2)   TOSCO-PP  60.00
1  33775 33773  "1 "    0     # line from  TOSCO-PP  60.00   (2) to (2)   ALTA-CGE  60.00
1  33773 33772  "1 "    0     # line from  ALTA-CGE  60.00   (2) to (2)   B.BTHNY-  60.00
1  33772 33770  "1 "    0     # line from  B.BTHNY-  60.00   (2) to BRKR  HERDLYN   60.00
4  33776     0  "1 "    0     # LOAD-DROP    SOUTH BY  60.00  LOAD==23.00(0.00)
4  33775     0  "1 "    0     # LOAD-DROP    TOSCO-PP  60.00  LOAD==0.98(0.89)
4  33772     0  "1 "    0     # LOAD-DROP    B.BTHNY-  60.00  LOAD==1.94(0.44)
3  33773     0  "1 "    0     # GEN-DROP    ALTA-CGE  60.00  GEN==4.00(-1.00)
0
 #
 #
 # (539)  B2 LINE OUTAGE (BREAKER-TO-BREAKER)
 #
1  35203 35220  "1 "    0     # line from  LIVERMRE  60.00  BRKR to BRKR  LPOSTAS   60.00
0
 #
 #
 # (540)  B2 LINE OUTAGE (BREAKER-TO-BREAKER)
 #
1  35203 35222  "1 "    0     # line from  LIVERMRE  60.00  BRKR to (2)   CALMAT60  60.00
1  35222 35206  "1 "    0     # line from  CALMAT60  60.00   (2) to (2)   KAISER    60.00
1  35206 35205  "1 "    0     # line from  KAISER    60.00   (2) to BRKR  RADUM     60.00
4  35222     0  "1 "    0     # LOAD-DROP    CALMAT60  60.00  LOAD==6.62(4.10)
4  35206     0  "1 "    0     # LOAD-DROP    KAISER    60.00  LOAD==1.09(2.16)
0
 #
 #
 # (541)  B2 LINE OUTAGE (BREAKER-TO-BREAKER)
 #
1  35205 35227  "1 "    0     # line from  RADUM     60.00  BRKR to (2)   VINEYARD  60.00
1  35227 35212  "1 "    0     # line from  VINEYARD  60.00   (2) to (2)   IUKA      60.00
```

```
 1  35212 35213  "1 "    0     # line from  IUKA      60.00   (2) to BRKR  VALLECTS  60.00
 4  35212     0  "1 "    0     # LOAD-DROP    IUKA      60.00  LOAD==3.34(2.95)
 0
  #
  #
  # (542)  B2 LINE OUTAGE (BREAKER-TO-BREAKER)
  #
 1  35209 35221  "1 "    0     # line from  SAN RAMN  60.00  BRKR to (2)   E DUBLIN  60.00
 1  35221 35223  "1 "    0     # line from  E DUBLIN  60.00   (2) to (3)   PARKS TP  60.00
 1  35223 35205  "1 "    0     # line from  PARKS TP  60.00   (3) to BRKR  RADUM     60.00
 1  35223 35207  "1 "    0     # line from  PARKS TP  60.00   (3) to (1)   PARKS     60.00
 4  35221     0  "1 "    0     # LOAD-DROP    E DUBLIN  60.00  LOAD==2.20(0.45)
 0
  #
  #
  # (543)  B2 LINE OUTAGE (BREAKER-TO-BREAKER)
  #
 1  35213 35214  "1 "    0     # line from  VALLECTS  60.00  BRKR to (2)   SUNOL     60.00
 1  35214 35216  "1 "    0     # line from  SUNOL     60.00   (2) to (2)   DCTO JCT  60.00
 1  35216 35217  "1 "    0     # line from  DCTO JCT  60.00   (2) to BRKR  NEWARK    60.00
 4  35214     0  "1 "    0     # LOAD-DROP    SUNOL     60.00  LOAD==6.87(1.57)
 0
  #
  #
  # (544)  B2 LINE OUTAGE (BREAKER-TO-BREAKER)
  #
 1  35219 30630  "1 "    0     # line from  VINEYARD 230.00  BRKR to BRKR  NEWARK D 230.00
 0
  #
  #
  # (545)  B2 LINE OUTAGE (BREAKER-TO-BREAKER)
  #
 1  35225 35217  "1 "    0     # line from  LIVRMR_2  60.00  BRKR to BRKR  NEWARK    60.00
 0
  #
  #
  # (546)  B2 LINE OUTAGE (BREAKER-TO-BREAKER)
  #
 1  35349 35121  "1 "    0     # line from  AMES DST 115.00  BRKR to BRKR  NEWARK E 115.00
 0
  #
  #
  # (547)  B3 TRANSFORMER OUTAGE (BREAKER-TO-BREAKER)
  #
 2  35105 30560  "1 "    0     # TRAN from  EASTSHRE 115.00  BRKR to BRKR  E. SHORE 230.00
 0
  #
  #
  # (548)  B3 TRANSFORMER OUTAGE (BREAKER-TO-BREAKER)
  #
 2  35105 30560  "2 "    0     # TRAN from  EASTSHRE 115.00  BRKR to BRKR  E. SHORE 230.00
 0
  #
  #
  # (549)  B3 TRANSFORMER OUTAGE (BREAKER-TO-BREAKER)
  #
#      **** 3-WINDING TRANSFORMER  35120  (30627)  30630  35301 :
 2  35120 30630  "9 "    0     # TRAN from  NEWARK D 115.00  BRKR to (1)   NEWARK D 230.00
 0
  #
  #
  # (550)  B3 TRANSFORMER OUTAGE (BREAKER-TO-BREAKER)
  #
 2  35120 35109  "1 "    0     # TRAN from  NEWARK D 115.00  BRKR to (2)   NWRK 2 M 115.00
 2  35109 35217  "1 "    0     # TRAN from  NWRK 2 M 115.00   (2) to BRKR  NEWARK    60.00
 0
  #
  #
  # (551)  B3 TRANSFORMER OUTAGE (BREAKER-TO-BREAKER)
  #
#      **** 3-WINDING TRANSFORMER  35121  (30626)  30630  35303 :
 2  35121 30630  "7 "    0     # TRAN from  NEWARK E 115.00  BRKR to (1)   NEWARK D 230.00
 0
  #
  #
  # (552)  B3 TRANSFORMER OUTAGE (BREAKER-TO-BREAKER)
  #
#      **** 3-WINDING TRANSFORMER  35122  (30628)  30631  35300 :
```

```
2  35122 30631  "11"    0     # TRAN from  NEWARK F 115.00  BRKR to (1)   NEWARK E 230.00
0
 #
 #
 # (553)  B3 TRANSFORMER OUTAGE (BREAKER-TO-BREAKER)
 #
2  35209 30555  "1 "    0     # TRAN from  SAN RAMN  60.00  BRKR to BRKR  SANRAMON 230.00
0
 #
 #
 # (554)  B3 TRANSFORMER OUTAGE (BREAKER-TO-BREAKER)
 #
2  35220 30585  "4 "    0     # TRAN from  LPOSTAS   60.00  BRKR to BRKR  LS PSTAS 230.00
0
 #
 #
 # (555)  B1 GENERATOR OUTAGE
 #
3  35312     0  "1"     0     # SEAWESTF   9.11       PGEN=0.10  QGEN=0.00
0
 #
 #
 # (556)  B1 GENERATOR OUTAGE
 #
3  35320     0  "1"     0     # USW FRIC  12.00       PGEN=2.60  QGEN=0.00
0
 #
 #
 # (557)  B1 GENERATOR OUTAGE
 #
3  35302     0  "1"     0     # ESEC      13.80       PGEN=8.43  QGEN=3.60
0
 #
 #
 # (558)  B1 GENERATOR OUTAGE
 #
3  35304     0  "1"     0     # RCECCTG1  15.00       PGEN=180.00  QGEN=24.99
0
 #
 #
 # (559)  B1 GENERATOR OUTAGE
 #
3  35305     0  "2"     0     # RCECCTG2  15.00       PGEN=180.00  QGEN=24.99
0
 #
 #
 # (560)  B1 GENERATOR OUTAGE
 #
3  35306     0  "3"     0     # RCECSTG1  18.00       PGEN=254.00  QGEN=36.45
0
 #
 #
 # (561)  L-1/G-1 OVERLAPPING OUTAGE
 # Contra Costa - Las Positas 230 kV Line and RCEC STG1
1  30525 30585  "1 "    0     # line from  C.COSTA  230.00  BRKR to BRKR  LS PSTAS 230.00
 #
3  35306     0  "3"     0     # RCECSTG1  18.00       PGEN=254.00  QGEN=36.45
0
 #
 #
 # (562)  L-1/G-1 OVERLAPPING OUTAGE
 # Pittsburg - San Ramon 230 kV Line and RCEC STG1
1  30526 30555  "1 "    0     # line from  PITSBG D 230.00  BRKR to BRKR  SANRAMON 230.00
 #
3  35306     0  "3"     0     # RCECSTG1  18.00       PGEN=254.00  QGEN=36.45
0
 #
 #
 # (563)  L-1/G-1 OVERLAPPING OUTAGE
 # Cayetano - North Dublin 230 kV Line and RCEC STG1
1  30530 30537  "1 "    0     # line from  CAYETANO 230.00  BRKR to BRKR  NDUBLIN  230.00
 #
3  35306     0  "3"     0     # RCECSTG1  18.00       PGEN=254.00  QGEN=36.45
0
 #
 #
 # (564)  L-1/G-1 OVERLAPPING OUTAGE
 # North Dublin - Vineyard 230 kV Line and RCEC STG1
```

```
1  30537 35224  "1 "    0     # line from  NDUBLIN  230.00  BRKR to BRKR  VINEYD_D 230.00
 #
3  35306     0  "3"     0     # RCECSTG1  18.00       PGEN=254.00  QGEN=36.45
0
 #
 #
 # (565)  L-1/G-1 OVERLAPPING OUTAGE
 # Moraga - Castro Valley 230 kV Line and RCEC STG1
1  30550 30554  "1 "    0     # line from  MORAGA   230.00  BRKR to BRKR  CASTROVL 230.00
 #
3  35306     0  "3"     0     # RCECSTG1  18.00       PGEN=254.00  QGEN=36.45
0
 #
 #
 # (566)  L-1/G-1 OVERLAPPING OUTAGE
 # Moraga - San Ramon 230 kV Line and RCEC STG1
1  30550 30555  "1 "    0     # line from  MORAGA   230.00  BRKR to BRKR  SANRAMON 230.00
 #
3  35306     0  "3"     0     # RCECSTG1  18.00       PGEN=254.00  QGEN=36.45
0
 #
 #
 # (567)  L-1/G-1 OVERLAPPING OUTAGE
 # Castro Valley - Newark 230 kV Line and RCEC STG1
1  30554 30631  "1 "    0     # line from  CASTROVL 230.00  BRKR to BRKR  NEWARK E 230.00
 #
3  35306     0  "3"     0     # RCECSTG1  18.00       PGEN=254.00  QGEN=36.45
0
 #
 #
 # (568)  L-1/G-1 OVERLAPPING OUTAGE
 # Pittsburg - East Shore 230 kV Line and RCEC STG1
1  30560 30527  "1 "    0     # line from  E. SHORE 230.00  BRKR to BRKR  PITSBG E 230.00
 #
3  35306     0  "3"     0     # RCECSTG1  18.00       PGEN=254.00  QGEN=36.45
0
 #
 #
 # (569)  L-1/G-1 OVERLAPPING OUTAGE
 # East Shore - San Mateo 230 kV Line and RCEC STG1
1  30560 30700  "1 "    0     # line from  E. SHORE 230.00  BRKR to BRKR  SANMATEO 230.00
 #
3  35306     0  "3"     0     # RCECSTG1  18.00       PGEN=254.00  QGEN=36.45
0
 #
 #
 # (570)  L-1/G-1 OVERLAPPING OUTAGE
 # Tassajara - Newark 230 kV Line and RCEC STG1
1  30562 30631  "1 "    0     # line from  TES JCT  230.00   (3) to BRKR  NEWARK E 230.00
1  30562 30561  "1 "    0     # line from  TES JCT  230.00   (3) to BRKR  TASSAJAR 230.00
1  30562 30563  "1 "    0     # line from  TES JCT  230.00   (3) to BRKR  RESEARCH 230.00
4  30563     0  "1 "    0     # LOAD-DROP    RESEARCH 230.00  LOAD==37.05(8.44)
 #
3  35306     0  "3"     0     # RCECSTG1  18.00       PGEN=254.00  QGEN=36.45
0
 #
 #
 # (571)  L-1/G-1 OVERLAPPING OUTAGE
 # Lonetree - Cayetano 230 kV Line and RCEC STG1
1  30567 30590  "1 "    0     # line from  LONETREE 230.00  BRKR to (3)   USWP-JRW 230.00
1  30590 30530  "1 "    0     # line from  USWP-JRW 230.00   (3) to BRKR  CAYETANO 230.00
2  30590 33838  "1 "    0     # TRAN from  USWP-JRW 230.00   (3) to (1)   USWP_#3    9.11
4  33838     0  "SG"    0     # LOAD-DROP    USWP_#3    9.11  LOAD==0.50(0.20)
 #
3  35306     0  "3"     0     # RCECSTG1  18.00       PGEN=254.00  QGEN=36.45
0
 #
 #
 # (572)  L-1/G-1 OVERLAPPING OUTAGE
 # Las Positas - Newark 230 kV Line and RCEC STG1
1  30585 30630  "1 "    0     # line from  LS PSTAS 230.00  BRKR to BRKR  NEWARK D 230.00
 #
3  35306     0  "3"     0     # RCECSTG1  18.00       PGEN=254.00  QGEN=36.45
0
 #
 #
 # (573)  L-1/G-1 OVERLAPPING OUTAGE
 # Tesla - Newark #1 230 kV Line and RCEC STG1
```

```
1  30624 30630  "1 "    0     # line from  TESLA E  230.00  BRKR to BRKR  NEWARK D 230.00
 #
3  35306     0  "3"     0     # RCECSTG1  18.00       PGEN=254.00  QGEN=36.45
0
 #
 #
 # (574)  L-1/G-1 OVERLAPPING OUTAGE
 # Newark - Ravenswood 230 kV Line and RCEC STG1
1  30630 30703  "1 "    0     # line from  NEWARK D 230.00  BRKR to BRKR  RAVENSWD 230.00
 #
3  35306     0  "3"     0     # RCECSTG1  18.00       PGEN=254.00  QGEN=36.45
0
 #
 #
 # (575)  L-1/G-1 OVERLAPPING OUTAGE
 # Newark - Newark Distribution 230 kV Line and RCEC STG1
1  30631 30635  "1 "    0     # line from  NEWARK E 230.00  BRKR to BRKR  NWK DIST 230.00
 #
3  35306     0  "3"     0     # RCECSTG1  18.00       PGEN=254.00  QGEN=36.45
0
 #
 #
 # (576)  L-1/G-1 OVERLAPPING OUTAGE
 # Newark Distribution - Los Esteros 230 kV Line and RCEC STG1
1  30635 30731  "1 "    0     # line from  NWK DIST 230.00  BRKR to BRKR  LS ESTRS 230.00
 #
3  35306     0  "3"     0     # RCECSTG1  18.00       PGEN=254.00  QGEN=36.45
0
 #
 #
 # (577)  L-1/G-1 OVERLAPPING OUTAGE
 # Tesla - Newark #2 230 kV Line and RCEC STG1
1  30655 30631  "2 "    0     # line from  ADCC     230.00   (3) to BRKR  NEWARK E 230.00
1  30655 30640  "2 "    0     # line from  ADCC     230.00   (3) to BRKR  TESLA C  230.00
2  30655 35310  "1 "    0     # TRAN from  ADCC     230.00   (3) to (1)   LFC FIN+   9.11
 #
3  35306     0  "3"     0     # RCECSTG1  18.00       PGEN=254.00  QGEN=36.45
0
 #
 #
 # (578)  L-1/G-1 OVERLAPPING OUTAGE
 # Vineyard - Newark 230 kV Line and RCEC STG1
1  35219 30630  "1 "    0     # line from  VINEYARD 230.00  BRKR to BRKR  NEWARK D 230.00
 #
3  35306     0  "3"     0     # RCECSTG1  18.00       PGEN=254.00  QGEN=36.45
0
 #
 #
 # 2013 category b contingency list
 # DeAnza Division Zone 317
 #
 #
 # (579)  B2 LINE OUTAGE (BREAKER-TO-BREAKER)
 #
1  30705 30720  "1 "    0     # line from  MONTAVIS 230.00  BRKR to BRKR  SARATOGA 230.00
0
 #
 #
 # (580)  B2 LINE OUTAGE (BREAKER-TO-BREAKER)
 #
1  30705 30730  "1 "    0     # line from  MONTAVIS 230.00  BRKR to BRKR  HICKS    230.00
0
 #
 #
 # (581)  B2 LINE OUTAGE (BREAKER-TO-BREAKER)
 #
1  30720 30733  "1 "    0     # line from  SARATOGA 230.00  BRKR to BRKR  VASONA   230.00
0
 #
 #
 # (582)  B2 LINE OUTAGE (BREAKER-TO-BREAKER)
 #
1  30733 30735  "1 "    0     # line from  VASONA   230.00  BRKR to BRKR  METCALF  230.00
0
 #
 #
 # (583)  B2 LINE OUTAGE (BREAKER-TO-BREAKER)
 #
```

```
1  30735 30705  "3 "    0     # line from  METCALF  230.00  BRKR to BRKR  MONTAVIS 230.00
0
 #
 #
 # (584)  B2 LINE OUTAGE (BREAKER-TO-BREAKER)
 #
1  30741 30705  "4 "    0     # line from  CAL MEC  230.00  BRKR to BRKR  MONTAVIS 230.00
0
 #
 #
 # (585)  B2 LINE OUTAGE (BREAKER-TO-BREAKER)
 #
1  35351 35349  "1 "    0     # line from  AMES BS2 115.00  BRKR to BRKR  AMES DST 115.00
0
 #
 #
 # (586)  B2 LINE OUTAGE (BREAKER-TO-BREAKER)
 #
1  35352 35356  "1 "    0     # line from  WHISMAN  115.00  BRKR to BRKR  MNTA VSA 115.00
0
 #
 #
 # (587)  B2 LINE OUTAGE (BREAKER-TO-BREAKER)
 #
1  35353 35356  "1 "    0     # line from  MT VIEW  115.00  BRKR to BRKR  MNTA VSA 115.00
0
 #
 #
 # (588)  B2 LINE OUTAGE (BREAKER-TO-BREAKER)
 #
1  35354 35355  "1 "    0     # line from  STELLING 115.00  BRKR to BRKR  WOLFE    115.00
0
 #
 #
 # (589)  B2 LINE OUTAGE (BREAKER-TO-BREAKER)
 #
1  35354 35356  "1 "    0     # line from  STELLING 115.00  BRKR to BRKR  MNTA VSA 115.00
0
 #
 #
 # (590)  B2 LINE OUTAGE (BREAKER-TO-BREAKER)
 #
1  35355 35356  "1 "    0     # line from  WOLFE    115.00  BRKR to BRKR  MNTA VSA 115.00
0
 #
 #
 # (591)  B2 LINE OUTAGE (BREAKER-TO-BREAKER)
 #
1  35356 35367  "1 "    0     # line from  MNTA VSA 115.00  BRKR to (3)   PHLPS_JT 115.00
1  35367 35363  "1 "    0     # line from  PHLPS_JT 115.00   (3) to BRKR  LAWRENCE 115.00
1  35367 35366  "1 "    0     # line from  PHLPS_JT 115.00   (3) to BRKR  PHILLIPS 115.00
4  35366     0  "1 "    0     # LOAD-DROP    PHILLIPS 115.00  LOAD==1.25(0.00)
0
 #
 #
 # (592)  B2 LINE OUTAGE (BREAKER-TO-BREAKER)
 #
1  35356 35368  "1 "    0     # line from  MNTA VSA 115.00  BRKR to BRKR  BRITTN   115.00
0
 #
 #
 # (593)  B2 LINE OUTAGE (BREAKER-TO-BREAKER)
 #
1  35368 35369  "1 "    0     # line from  BRITTN   115.00  BRKR to BRKR  APP MAT  115.00
0
 #
 #
 # (594)  B2 LINE OUTAGE (BREAKER-TO-BREAKER)
 #
1  35370 35353  "1 "    0     # line from  AMES J1A 115.00   (2) to BRKR  MT VIEW  115.00
1  35370 35371  "1 "    0     # line from  AMES J1A 115.00   (2) to (2)   AMES J1B 115.00
1  35371 35352  "1 "    0     # line from  AMES J1B 115.00   (2) to BRKR  WHISMAN  115.00
0
 #
 #
 # (595)  B2 LINE OUTAGE (BREAKER-TO-BREAKER)
 #
1  35450 35452  "1 "    0     # line from  LOS ALTS  60.00   (1) to BRKR  LOYOLA    60.00
```

```
4  35450     0  "1 "    0     # LOAD-DROP    LOS ALTS  60.00  LOAD==1.89(0.43)
4  35450     0  "2 "    0     # LOAD-DROP    LOS ALTS  60.00  LOAD==9.73(2.22)
4  35450     0  "3 "    0     # LOAD-DROP    LOS ALTS  60.00  LOAD==11.00(2.51)
1  35450 35451  "1 "    1     # close Line from LOS ALTS 60.00 to L.ALTS J (Los Altos - Loyola)
4  35450 0      "**"    1     # restore all loads to LOS ALTS 60.00 (Monta Vista - Loyola)
0
 #
 #
 # (596)  B2 LINE OUTAGE (BREAKER-TO-BREAKER)
 #
1  35452 35455  "1 "    0     # line from  LOYOLA    60.00  BRKR to BRKR  MNTA VSA  60.00
1  35450 35451  "1 "    1     # close Line from LOS ALTS to L.ALTS J (Monta Vista - Loyola)
0
 #
 #
 # (597)  B2 LINE OUTAGE (BREAKER-TO-BREAKER)
 #
1  35455 35456  "1 "    0     # line from  MNTA VSA  60.00  BRKR to (2)   PRMNT J3  60.00
1  35456 36000  "1 "    0     # line from  PRMNT J3  60.00   (2) to (2)   BIG BASN  60.00
1  36000 36001  "1 "    0     # line from  BIG BASN  60.00   (2) to (3)   BURNS J1  60.00
1  36001 36002  "1 "    0     # line from  BURNS J1  60.00   (3) to BRKR  BURNS     60.00
1  36001 36003  "1 "    0     # line from  BURNS J1  60.00   (3) to BRKR  BURNS J2  60.00
4  36000     0  "1 "    0     # LOAD-DROP    BIG BASN  60.00  LOAD==6.71(0.96)
0
 #
 #
 # (598)  B2 LINE OUTAGE (BREAKER-TO-BREAKER)
 #
1  35455 35458  "1 "    0     # line from  MNTA VSA  60.00  BRKR to (2)   PRMNT J1  60.00
1  35458 35459  "1 "    0     # line from  PRMNT J1  60.00   (2) to (2)   PRMNT J2  60.00
1  35459 35457  "1 "    0     # line from  PRMNT J2  60.00   (2) to BRKR  PERMNNTE  60.00
4  35457     0  "1 "    0     # LOAD-DROP    PERMNNTE  60.00  LOAD==29.94(20.90)
0
 #
 #
 # (599)  B2 LINE OUTAGE (BREAKER-TO-BREAKER)
 #
1  35455 35460  "1 "    0     # line from  MNTA VSA  60.00  BRKR to (2)   LOS GATS  60.00
1  35460 35757  "1 "    0     # line from  LOS GATS  60.00   (2) to BRKR  ALMADEN   60.00
4  35460     0  "1 "    0     # LOAD-DROP    LOS GATS  60.00  LOAD==20.79(4.74)
4  35460     0  "2 "    0     # LOAD-DROP    LOS GATS  60.00  LOAD==17.01(3.88)
1  35757 35460  "1 "    1     # close Los Gatos to Almaden (Monta Vista - Los Gatos 60 kV)
4  35460 0      "**"    1     # restore all loads to LOS GATS (Monta Vista - Los Gatos 60 kV)
0
 #
 #
 # (600)  B3 TRANSFORMER OUTAGE (BREAKER-TO-BREAKER)
 #
2  35356 30705  "2 "    0     # TRAN from  MNTA VSA 115.00  BRKR to BRKR  MONTAVIS 230.00
0
 #
 #
 # (601)  B3 TRANSFORMER OUTAGE (BREAKER-TO-BREAKER)
 #
2  35356 30705  "3 "    0     # TRAN from  MNTA VSA 115.00  BRKR to BRKR  MONTAVIS 230.00
0
 #
 #
 # (602)  B3 TRANSFORMER OUTAGE (BREAKER-TO-BREAKER)
 #
2  35356 30705  "4 "    0     # TRAN from  MNTA VSA 115.00  BRKR to BRKR  MONTAVIS 230.00
0
 #
 #
 # (603)  B3 TRANSFORMER OUTAGE (BREAKER-TO-BREAKER)
 #
2  35455 30705  "5 "    0     # TRAN from  MNTA VSA  60.00  BRKR to BRKR  MONTAVIS 230.00
0
 #
 #
 # (604)  B3 TRANSFORMER OUTAGE (BREAKER-TO-BREAKER)
 #
2  35455 35356  "6 "    0     # TRAN from  MNTA VSA  60.00  BRKR to BRKR  MNTA VSA 115.00
0
 #
 #
 # (605)  L-1/G-1 OVERLAPPING OUTAGE
 # Monta Vista - Jefferson #1 230 kV Line and MEC
```

```
1  30705 30710  "1 "    0     # line from  MONTAVIS 230.00  BRKR to (3)   SLACTAP1 230.00
1  30710 30711  "1 "    0     # line from  SLACTAP1 230.00   (3) to BRKR  S.L.A.C. 230.00
1  30710 30715  "1 "    0     # line from  SLACTAP1 230.00   (3) to BRKR  JEFFERSN 230.00
4  30711     0  "1 "    0     # LOAD-DROP    S.L.A.C. 230.00  LOAD==58.00(11.78)
1  30711 30712  "1 "    1     # LINE-TRANSFER SLACTAP1 to SLACTAP2
4  30711     0  "**"    1     # RESTORE S.L.A.C. load
 #
3  35881     0  "1"     0     # MEC CTG1  18.00       PGEN=180.00  QGEN=61.41
3  35882     0  "1"     0     # MEC CTG2  18.00       PGEN=180.00  QGEN=61.41
3  35883     0  "1"     0     # MEC STG1  18.00       PGEN=200.00  QGEN=62.96
0
 #
 #
 # (606)  L-1/G-1 OVERLAPPING OUTAGE
 # Monta Vista - Jefferson #2 230 kV Line and MEC
1  30705 30712  "2 "    0     # line from  MONTAVIS 230.00  BRKR to (2)   SLACTAP2 230.00
1  30712 30715  "2 "    0     # line from  SLACTAP2 230.00   (2) to BRKR  JEFFERSN 230.00
 #
3  35881     0  "1"     0     # MEC CTG1  18.00       PGEN=180.00  QGEN=61.41
3  35882     0  "1"     0     # MEC CTG2  18.00       PGEN=180.00  QGEN=61.41
3  35883     0  "1"     0     # MEC STG1  18.00       PGEN=200.00  QGEN=62.96
0
 #
 #
 # (607)  L-1/G-1 OVERLAPPING OUTAGE
 # Monta Vista - Jefferson #2 230 kV Line and MEC
1  30705 30720  "1 "    0     # line from  MONTAVIS 230.00  BRKR to BRKR  SARATOGA 230.00
 #
3  35881     0  "1"     0     # MEC CTG1  18.00       PGEN=180.00  QGEN=61.41
3  35882     0  "1"     0     # MEC CTG2  18.00       PGEN=180.00  QGEN=61.41
3  35883     0  "1"     0     # MEC STG1  18.00       PGEN=200.00  QGEN=62.96
0
 #
 #
 # (608)  L-1/G-1 OVERLAPPING OUTAGE
 # Monta Vista - Hicks 230 kV Line and MEC
1  30705 30730  "1 "    0     # line from  MONTAVIS 230.00  BRKR to BRKR  HICKS    230.00
 #
3  35881     0  "1"     0     # MEC CTG1  18.00       PGEN=180.00  QGEN=61.41
3  35882     0  "1"     0     # MEC CTG2  18.00       PGEN=180.00  QGEN=61.41
3  35883     0  "1"     0     # MEC STG1  18.00       PGEN=200.00  QGEN=62.96
0
 #
 #
 # (609)  L-1/G-1 OVERLAPPING OUTAGE
 # Saratoga - Vasona 230 kV Line and MEC
1  30720 30733  "1 "    0     # line from  SARATOGA 230.00  BRKR to BRKR  VASONA   230.00
 #
3  35881     0  "1"     0     # MEC CTG1  18.00       PGEN=180.00  QGEN=61.41
3  35882     0  "1"     0     # MEC CTG2  18.00       PGEN=180.00  QGEN=61.41
3  35883     0  "1"     0     # MEC STG1  18.00       PGEN=200.00  QGEN=62.96
0
 #
 #
 # (610)  L-1/G-1 OVERLAPPING OUTAGE
 # Vasona - Metcalf 230 kV Line and MEC
1  30733 30735  "1 "    0     # line from  VASONA   230.00  BRKR to BRKR  METCALF  230.00
 #
3  35881     0  "1"     0     # MEC CTG1  18.00       PGEN=180.00  QGEN=61.41
3  35882     0  "1"     0     # MEC CTG2  18.00       PGEN=180.00  QGEN=61.41
3  35883     0  "1"     0     # MEC STG1  18.00       PGEN=200.00  QGEN=62.96
0
 #
 #
 # (611)  L-1/G-1 OVERLAPPING OUTAGE
 # Monta Vista - Metcalf #3 230 kV Line and MEC
1  30735 30705  "3 "    0     # line from  METCALF  230.00  BRKR to BRKR  MONTAVIS 230.00
 #
3  35881     0  "1"     0     # MEC CTG1  18.00       PGEN=180.00  QGEN=61.41
3  35882     0  "1"     0     # MEC CTG2  18.00       PGEN=180.00  QGEN=61.41
3  35883     0  "1"     0     # MEC STG1  18.00       PGEN=200.00  QGEN=62.96
0
 #
 #
 # (612)  L-1/G-1 OVERLAPPING OUTAGE
 # Monta Vista - Coyote Sw Sta 230 kV Line and MEC
1  30741 30705  "4 "    0     # line from  CAL MEC  230.00  BRKR to BRKR  MONTAVIS 230.00
 #
```

```
3  35881     0  "1"     0     # MEC CTG1  18.00       PGEN=180.00  QGEN=61.41
3  35882     0  "1"     0     # MEC CTG2  18.00       PGEN=180.00  QGEN=61.41
3  35883     0  "1"     0     # MEC STG1  18.00       PGEN=200.00  QGEN=62.96
0
 #
 #
 # 2013 category b contingency list
 # San Jose Division Zone 318
 #
 #
 # (613)  B2 LINE OUTAGE (BREAKER-TO-BREAKER)
 #
1  30731 38901  "1 "    0     # line from  LS ESTRS 230.00  BRKR to (2)   SSS      230.00
1  38901 36893  "1 "    0     # line from  SSS      230.00   (2) to (3)   NRSriser 230.00
1  36893 38900  "1 "    0     # line from  NRSriser 230.00   (3) to (3)   NRS      230.00
1  36893 38900  "2 "    0     # line from  NRSriser 230.00   (3) to (3)   NRS      230.00
2  38900 36851  "1 "    0     # TRAN from  NRS      230.00   (3) to BRKR  NRS 400  115.00
0
 #
 #
 # (614)  B2 LINE OUTAGE (BREAKER-TO-BREAKER)
 #
1  30735 30730  "1 "    0     # line from  METCALF  230.00  BRKR to BRKR  HICKS    230.00
0
 #
 #
 # (615)  B2 LINE OUTAGE (BREAKER-TO-BREAKER)
 #
1  30735 30731  "1 "    0     # line from  METCALF  230.00  BRKR to BRKR  LS ESTRS 230.00
0
 #
 #
 # (616)  B2 LINE OUTAGE (BREAKER-TO-BREAKER)
 #
1  30735 30741  "4 "    0     # line from  METCALF  230.00  BRKR to BRKR  CAL MEC  230.00
0
 #
 #
 # (617)  B2 LINE OUTAGE (BREAKER-TO-BREAKER)
 #
1  30735 30750  "1 "    0     # line from  METCALF  230.00  BRKR to BRKR  MOSSLND2 230.00
0
 #
 #
 # (618)  B2 LINE OUTAGE (BREAKER-TO-BREAKER)
 #
1  30735 30755  "1 "    0     # line from  METCALF  230.00  BRKR to BRKR  MOSSLND1 230.00
0
 #
 #
 # (619)  B2 LINE OUTAGE (BREAKER-TO-BREAKER)
 #
1  35600 35629  "1 "    0     # line from  DIXON LD 115.00  BRKR to (3)   MABURY J 115.00
1  35629 35626  "1 "    0     # line from  MABURY J 115.00   (3) to BRKR  MCKEE    115.00
1  35629 35630  "1 "    0     # line from  MABURY J 115.00   (3) to BRKR  MABURY   115.00
4  35630     0  "2 "    0     # LOAD-DROP    MABURY   115.00  LOAD==19.00(4.33)
0
 #
 #
 # (620)  B2 LINE OUTAGE (BREAKER-TO-BREAKER)
 #
1  35612 35610  "1 "    0     # line from  TRIMBLE  115.00  BRKR to BRKR  MONTAGUE 115.00
0
 #
 #
 # (621)  B2 LINE OUTAGE (BREAKER-TO-BREAKER)
 #
1  35612 35616  "1 "    0     # line from  TRIMBLE  115.00  BRKR to BRKR  SJ B   E 115.00
0
 #
 #
 # (622)  B2 LINE OUTAGE (BREAKER-TO-BREAKER)
 #
1  35613 35614  "1 "    0     # line from  ELPT_SJ1 115.00   (3) to (3)   ELPT_SJ2 115.00
1  35613 35614  "2 "    0     # line from  ELPT_SJ1 115.00   (3) to (3)   ELPT_SJ2 115.00
1  35613 35618  "1 "    0     # line from  ELPT_SJ1 115.00   (3) to BRKR  SN JSE A 115.00
1  35614 35620  "1 "    0     # line from  ELPT_SJ2 115.00   (3) to BRKR  EL PATIO 115.00
0
```

```
 #
 #
 # (623)  B2 LINE OUTAGE (BREAKER-TO-BREAKER)
 #
1  35615 35616  "1 "    0     # line from  FMC      115.00  BRKR to BRKR  SJ B   E 115.00
0
 #
 #
 # (624)  B2 LINE OUTAGE (BREAKER-TO-BREAKER)
 #
1  35615 35617  "1 "    0     # line from  FMC      115.00  BRKR to (2)   FMC JCT  115.00
1  35617 36850  "1 "    0     # line from  FMC JCT  115.00   (2) to BRKR  KRS      115.00
0
 #
 #
 # (625)  B2 LINE OUTAGE (BREAKER-TO-BREAKER)
 #
1  35618 35619  "1 "    0     # line from  SN JSE A 115.00  BRKR to BRKR  SJ B   F 115.00
0
 #
 #
 # (626)  B2 LINE OUTAGE (BREAKER-TO-BREAKER)
 #
1  35619 35631  "1 "    0     # line from  SJ B   F 115.00  BRKR to (3)   MARKHM J 115.00
1  35631 35632  "1 "    0     # line from  MARKHM J 115.00   (3) to (2)   MARKHAM  115.00
1  35631 35636  "1 "    0     # line from  MARKHM J 115.00   (3) to BRKR  EVRGRN 1 115.00
2  35632 35863  "1 "    0     # TRAN from  MARKHAM  115.00  BRKR to (1)   CATALYST   9.11
4  35863     0  "1 "    0     # LOAD-DROP    CATALYST   9.11  LOAD==9.12(3.09)
3  35863     0  "1 "    0     # GEN-DROP    CATALYST   9.11  GEN==2.30(0.00)
 1  35632 36420  "1 "    1     # close Markham to Stone
 2  35632 35863  "1 "    1     # restore TRAN from  MARKHAM 115.00 to CATALYST 9.11
 4  35863 0      "**"    1     # restore all loads to CATALYST
0
 #
 #
 # (627)  B2 LINE OUTAGE (BREAKER-TO-BREAKER)
 #
1  35620 35621  "1 "    0     # line from  EL PATIO 115.00  BRKR to (2)   IBM-HR J 115.00
1  35621 35642  "1 "    0     # line from  IBM-HR J 115.00   (2) to BRKR  MTCALF D 115.00
0
 #
 #
 # (628)  B2 LINE OUTAGE (BREAKER-TO-BREAKER)
 #
1  35620 35651  "2 "    0     # line from  EL PATIO 115.00  BRKR to (2)   BAILY J3 115.00
1  35651 35642  "2 "    0     # line from  BAILY J3 115.00   (2) to BRKR  MTCALF D 115.00
0
 #
 #
 # (629)  B2 LINE OUTAGE (BREAKER-TO-BREAKER)
 #
1  35622 35624  "1 "    0     # line from  SWIFT    115.00  BRKR to BRKR  MILPITAS 115.00
0
 #
 #
 # (630)  B2 LINE OUTAGE (BREAKER-TO-BREAKER)
 #
1  35622 35643  "1 "    0     # line from  SWIFT    115.00  BRKR to BRKR  MTCALF E 115.00
0
 #
 #
 # (631)  B2 LINE OUTAGE (BREAKER-TO-BREAKER)
 #
1  35625 35645  "1 "    0     # line from  MARKHMJ2 115.00   (2) to (3)   EVRGRN J 115.00
1  35625 35634  "1 "    0     # line from  MARKHMJ2 115.00   (2) to (2)   STONE J  115.00
1  35645 35633  "2 "    0     # line from  EVRGRN J 115.00   (3) to BRKR  EVRGRN 2 115.00
1  35645 35643  "2 "    0     # line from  EVRGRN J 115.00   (3) to BRKR  MTCALF E 115.00
1  35634 36420  "1 "    0     # line from  STONE J  115.00   (2) to BRKR  STONE    115.00
4  36420     0  "1 "    0     # LOAD-DROP    STONE    115.00  LOAD==35.69(8.13)
4  36420     0  "2 "    0     # LOAD-DROP    STONE    115.00  LOAD==14.87(3.39)
0
 #
 #
 # (632)  B2 LINE OUTAGE (BREAKER-TO-BREAKER)
 #
1  35626 35656  "1 "    0     # line from  MCKEE    115.00  BRKR to BRKR  PIERCY   115.00
0
 #
```

```
 #
 # (633)  B2 LINE OUTAGE (BREAKER-TO-BREAKER)
 #
1  35636 35643  "1 "    0     # line from  EVRGRN 1 115.00  BRKR to BRKR  MTCALF E 115.00
0
 #
 #
 # (634)  B2 LINE OUTAGE (BREAKER-TO-BREAKER)
 #
1  35637 35649  "1 "    0     # line from  IBM-CTLE 115.00   (1) to (3)   EDNVL J3 115.00
1  35649 35638  "1 "    0     # line from  EDNVL J3 115.00   (3) to BRKR  EDENVALE 115.00
1  35649 35641  "1 "    0     # line from  EDNVL J3 115.00  BRKR to (1)   EDNVL J1 115.00
4  35637     0  "1 "    0     # LOAD-DROP    IBM-CTLE 115.00  LOAD==28.58(22.18)
0
 #
 #
 # (635)  B2 LINE OUTAGE (BREAKER-TO-BREAKER)
 #
1  35638 35653  "1 "    0     # line from  EDENVALE 115.00  BRKR to (3)   BAILY J2 115.00
1  35653 35642  "1 "    0     # line from  BAILY J2 115.00   (3) to BRKR  MTCALF D 115.00
1  35653 35652  "1 "    0     # line from  BAILY J2 115.00   (3) to (2)   BAILY J1 115.00
1  35652 35640  "1 "    0     # line from  BAILY J1 115.00   (2) to BRKR  IBM-BALY 115.00
4  35640     0  "1 "    0     # LOAD-DROP    IBM-BALY 115.00  LOAD==5.63(3.04)
0
 #
 #
 # (636)  B2 LINE OUTAGE (BREAKER-TO-BREAKER)
 #
1  35639 35641  "1 "    0     # line from  IBM-HRRS 115.00  BRKR to (3)   EDNVL J1 115.00
1  35641 35642  "1 "    0     # line from  EDNVL J1 115.00   (3) to BRKR  MTCALF D 115.00
1  35641 35649  "1 "    0     # line from  EDNVL J1 115.00   (3) to BRKR  EDNVL J3 115.00
4  35639     0  "1 "    0     # LOAD-DROP    IBM-HRRS 115.00  LOAD==2.43(1.63)
4  35639     0  "2 "    0     # LOAD-DROP    IBM-HRRS 115.00  LOAD==2.43(1.63)
 1  35621 35639  "1 "    1     # close IBM Harry to Metcalf-El Patio
 4  35639 0      "**"    1     # restore all loads to IBM HRRS
0
 #
 #
 # (637)  B2 LINE OUTAGE (BREAKER-TO-BREAKER)
 #
1  35642 35646  "1 "    0     # line from  MTCALF D 115.00  BRKR to BRKR  MRGN HIL 115.00
0
 #
 #
 # (638)  B2 LINE OUTAGE (BREAKER-TO-BREAKER)
 #
1  35642 35654  "1 "    0     # line from  MTCALF D 115.00  BRKR to (2)   MORGN J1 115.00
1  35654 35655  "1 "    0     # line from  MORGN J1 115.00   (2) to (2)   MORGN J2 115.00
1  35655 35648  "1 "    0     # line from  MORGN J2 115.00   (2) to BRKR  LLAGAS   115.00
0
 #
 #
 # (639)  B2 LINE OUTAGE (BREAKER-TO-BREAKER)
 #
1  35643 35644  "1 "    0     # line from  MTCALF E 115.00  BRKR to BRKR  CYTE PMP 115.00
4  35644     0  "1 "    0     # LOAD-DROP    CYTE PMP 115.00  LOAD==4.90(1.12)
0
 #
 #
 # (640)  B2 LINE OUTAGE (BREAKER-TO-BREAKER)
 #
1  35646 35648  "1 "    0     # line from  MRGN HIL 115.00  BRKR to BRKR  LLAGAS   115.00
0
 #
 #
 # (641)  B2 LINE OUTAGE (BREAKER-TO-BREAKER)
 #
1  35648 35660  "1 "    0     # line from  LLAGAS   115.00  BRKR to (4)   GILROYTP 115.00
1  35660 35647  "1 "    0     # line from  GILROYTP 115.00   (4) to BRKR  GILROY   115.00
1  35660 35650  "1 "    0     # line from  GILROYTP 115.00   (4) to (1)   GILROY F 115.00
1  35660 35661  "1 "    0     # line from  GILROYTP 115.00   (4) to (4)   GILROYPK 115.00
2  35661 35851  "1 "    0     # TRAN from  GILROYPK 115.00   (4) to (1)   GROYPKR1  13.80
2  35661 35852  "1 "    0     # TRAN from  GILROYPK 115.00   (4) to (1)   GROYPKR2  13.80
2  35661 35853  "1 "    0     # TRAN from  GILROYPK 115.00   (4) to (1)   GROYPKR3  13.80
4  35650     0  "1 "    0     # LOAD-DROP    GILROY F 115.00  LOAD==8.88(7.83)
3  35851     0  "1 "    0     # GEN-DROP    GROYPKR1  13.80  GEN==48.70(-6.28)
3  35852     0  "1 "    0     # GEN-DROP    GROYPKR2  13.80  GEN==48.70(-6.28)
3  35853     0  "1 "    0     # GEN-DROP    GROYPKR3  13.80  GEN==48.70(-6.28)
```

```
0
 #
 #
 # (642)  B2 LINE OUTAGE (BREAKER-TO-BREAKER)
 #
1  35656 35643  "1 "    0     # line from  PIERCY   115.00  BRKR to BRKR  MTCALF E 115.00
0
 #
 #
 # (643)  B2 LINE OUTAGE (BREAKER-TO-BREAKER)
 # post-project outage
1  35657 35658  "1 "    0     # line from  CP LECEF 115.00  BRKR to BRKR  LS ESTRS 115.00
0
 #
 #
 # (644)  B2 LINE OUTAGE (BREAKER-TO-BREAKER)
 # post-project outage
1  35657 35658  "2 "    0     # line from  CP LECEF 115.00  BRKR to BRKR  LS ESTRS 115.00
0
 #
 #
 # (645)  B2 LINE OUTAGE (BREAKER-TO-BREAKER)
 #
1  35658 35606  "1 "    0     # line from  LS ESTRS 115.00  BRKR to BRKR  AGNEW    115.00
0
 #
 #
 # (646)  B2 LINE OUTAGE (BREAKER-TO-BREAKER)
 #
1  35658 35610  "1 "    0     # line from  LS ESTRS 115.00  BRKR to BRKR  MONTAGUE 115.00
0
 #
 #
 # (647)  B2 LINE OUTAGE (BREAKER-TO-BREAKER)
 #
1  35658 35612  "1 "    0     # line from  LS ESTRS 115.00  BRKR to BRKR  TRIMBLE  115.00
0
 #
 #
 # (648)  B2 LINE OUTAGE (BREAKER-TO-BREAKER)
 # pre-project outage
1  35659 35666  "1 "    0     # line from  NORTECH  115.00  BRKR to (3)   LECEFTAP 115.00
1  35666 35657  "1 "    0     # line from  LECEFTAP 115.00   (3) to BRKR  CP LECEF 115.00
1  35666 35658  "1 "    0     # line from  LECEFTAP 115.00   (3) to BRKR  LS ESTRS 115.00
0
 #
 #
 # (649)  B2 LINE OUTAGE (BREAKER-TO-BREAKER)
 # post-project outage
1  35658 35659  "1 "    0     # line from  LS ESTRS 115.00  BRKR to BRKR  NORTECH  115.00
0
 #
 #
 # (650)  B2 LINE OUTAGE (BREAKER-TO-BREAKER)
 #
1  35659 36853  "1 "    0     # line from  NORTECH  115.00  BRKR to BRKR  NRS 300  115.00
0
 #
 #
 # (651)  B2 LINE OUTAGE (BREAKER-TO-BREAKER)
 #
1  35750 35752  "1 "    0     # line from  MABURY    60.00  BRKR to (3)   JENING J  60.00
1  35752 35751  "1 "    0     # line from  JENING J  60.00   (3) to BRKR  JENNINGS  60.00
1  35752 35754  "1 "    0     # line from  JENING J  60.00   (3) to (3)   EVRGRN J  60.00
1  35754 35753  "1 "    0     # line from  EVRGRN J  60.00   (3) to BRKR  EVERGREN  60.00
1  35754 35755  "1 "    0     # line from  EVRGRN J  60.00   (3) to BRKR  SENTER    60.00
4  35750     0  "1 "    0     # LOAD-DROP    MABURY    60.00  LOAD==17.10(3.90)
4  35751     0  "1 "    0     # LOAD-DROP    JENNINGS  60.00  LOAD==0.71(0.77)
 1  35755 35756  "1 "    1     # close Senter to Almaden (Evergreen - Mabury 60 kV)
 4  35755 0      "**"    1     # restore all loads to SENTER (Evergreen - Mabury 60 kV)
0
 #
 #
 # (652)  B2 LINE OUTAGE (BREAKER-TO-BREAKER)
 #
1  35753 35756  "1 "    0     # line from  EVERGREN  60.00  BRKR to (2)   SENTER J  60.00
1  35756 35757  "1 "    0     # line from  SENTER J  60.00   (2) to BRKR  ALMADEN   60.00
 1  35757 35460  "1 "    1     # close Almaden to Los Gatos (Evergreen - Los Gatos 60 kV)
```

```
 4  35757 0      "**"    1     # restore all loads to ALMADEN (Evergreen - Los Gatos 60 kV)
0
 #
 #
 # (653)  B3 TRANSFORMER OUTAGE (BREAKER-TO-BREAKER)
 #
2  30735 30042  "11"    0     # TRAN from  METCALF  230.00  BRKR to BRKR  METCALF  500.00
0
 #
 #
 # (654)  B3 TRANSFORMER OUTAGE (BREAKER-TO-BREAKER)
 #
2  30735 30042  "12"    0     # TRAN from  METCALF  230.00  BRKR to BRKR  METCALF  500.00
0
 #
 #
 # (655)  B3 TRANSFORMER OUTAGE (BREAKER-TO-BREAKER)
 #
2  30735 30042  "13"    0     # TRAN from  METCALF  230.00  BRKR to BRKR  METCALF  500.00
0
 #
 #
 # (656)  B3 TRANSFORMER OUTAGE (BREAKER-TO-BREAKER)
 #
2  35642 30735  "1 "    0     # TRAN from  MTCALF D 115.00  BRKR to BRKR  METCALF  230.00
0
 #
 #
 # (657)  B3 TRANSFORMER OUTAGE (BREAKER-TO-BREAKER)
 #
2  35642 30735  "4 "    0     # TRAN from  MTCALF D 115.00  BRKR to BRKR  METCALF  230.00
0
 #
 #
 # (658)  B3 TRANSFORMER OUTAGE (BREAKER-TO-BREAKER)
 #
2  35643 30735  "2 "    0     # TRAN from  MTCALF E 115.00  BRKR to BRKR  METCALF  230.00
0
 #
 #
 # (659)  B3 TRANSFORMER OUTAGE (BREAKER-TO-BREAKER)
 #
2  35643 30735  "3 "    0     # TRAN from  MTCALF E 115.00  BRKR to BRKR  METCALF  230.00
0
 #
 #
 # (660)  B3 TRANSFORMER OUTAGE (BREAKER-TO-BREAKER)
 #
2  35658 30731  "3 "    0     # TRAN from  LS ESTRS 115.00  BRKR to BRKR  LS ESTRS 230.00
0
 #
 #
 # (661)  B3 TRANSFORMER OUTAGE (BREAKER-TO-BREAKER)
 #
2  35658 30731  "4 "    0     # TRAN from  LS ESTRS 115.00  BRKR to BRKR  LS ESTRS 230.00
0
 #
 #
 # (662)  B3 TRANSFORMER OUTAGE (BREAKER-TO-BREAKER)
 #
2  35753 35633  "1 "    0     # TRAN from  EVERGREN  60.00  BRKR to BRKR  EVRGRN 2 115.00
 1  35756 35757  "1 "    0     # open ALMADEN to SENTER J (Evergreen 115/60 kV Bank)
 1  35757 35460  "1 "    1     # close Almaden to Los Gatos (Evergreen 115/60 kV Bank)
0
 #
 #
 # (663)  B3 TRANSFORMER OUTAGE (BREAKER-TO-BREAKER)
 #
2  35850 35647  "1 "    0     # TRAN from  GLRY COG  13.80   (1) to BRKR  GILROY   115.00
4  35850     0  "SG"    0     # LOAD-DROP    GLRY COG  13.80  LOAD==1.73(1.43)
3  35850     0  "1 "    0     # GEN-DROP    GLRY COG  13.80  GEN==80.50(20.69)
3  35850     0  "2 "    0     # GEN-DROP    GLRY COG  13.80  GEN==41.50(10.67)
0
 #
 #
 # (664)  B1 GENERATOR OUTAGE
 #
3  35850     0  "1"     0     # GLRY COG  13.80       PGEN=80.50  QGEN=15.86
```

```
0
 #
 #
 # (665)  B1 GENERATOR OUTAGE
 #
3  35850     0  "2"     0     # GLRY COG  13.80       PGEN=41.50  QGEN=15.86
0
 #
 #
 # (666)  B1 GENERATOR OUTAGE
 #
3  35851     0  "1"     0     # GROYPKR1  13.80       PGEN=48.70  QGEN=-6.01
0
 #
 #
 # (667)  B1 GENERATOR OUTAGE
 #
3  35852     0  "1"     0     # GROYPKR2  13.80       PGEN=48.70  QGEN=-6.01
0
 #
 #
 # (668)  B1 GENERATOR OUTAGE
 #
3  35853     0  "1"     0     # GROYPKR3  13.80       PGEN=48.70  QGEN=-6.01
0
 #
 #
 # (669)  B1 GENERATOR OUTAGE
 #
3  35854     0  "1"     0     # LECEFGT1  13.80       PGEN=50.00  QGEN=29.91
0
 #
 #
 # (670)  B1 GENERATOR OUTAGE
 #
3  35855     0  "1"     0     # LECEFGT2  13.80       PGEN=50.00  QGEN=29.91
0
 #
 #
 # (671)  B1 GENERATOR OUTAGE
 #
3  35856     0  "1"     0     # LECEFGT3  13.80       PGEN=50.00  QGEN=29.91
0
 #
 #
 # (672)  B1 GENERATOR OUTAGE
 #
3  35857     0  "1"     0     # LECEFGT4  13.80       PGEN=50.00  QGEN=29.91
0
 #
 #
 # (673)  B1 GENERATOR OUTAGE
 #
3  35860     0  "1"     0     # OLS-AGNE   9.11       PGEN=29.60  QGEN=6.64
0
 #
 #
 # (674)  B1 GENERATOR OUTAGE
 #
3  35861     0  "1"     0     # SJ-SCL W   9.11       PGEN=5.00  QGEN=0.00
0
 #
 #
 # (675)  B1 GENERATOR OUTAGE
 #
3  35863     0  "1"     0     # CATALYST   9.11       PGEN=2.30  QGEN=0.00
0
 #
 #
 # (676)  B1 GENERATOR OUTAGE
 #
3  35881     0  "1"     0     # MEC CTG1  18.00       PGEN=180.00  QGEN=61.41
3  35882     0  "1"     0     # MEC CTG2  18.00       PGEN=180.00  QGEN=61.41
3  35883     0  "1"     0     # MEC STG1  18.00       PGEN=200.00  QGEN=62.96
0
 #
 #
 # (677)  B1 GENERATOR OUTAGE
```

```
 #
3  35858     0  "1"     0     # T378ST1   13.80       PGEN=120.00  QGEN=-2.05
0
 #
 #
 # (678)  L-1/G-1 OVERLAPPING OUTAGE
 # Newark Distribution - Los Esteros 230 kV Line and MEC
1  30635 30731  "1 "    0     # line from  NWK DIST 230.00  BRKR to BRKR  LS ESTRS 230.00
 #
3  35881     0  "1"     0     # MEC CTG1  18.00       PGEN=180.00  QGEN=61.41
3  35882     0  "1"     0     # MEC CTG2  18.00       PGEN=180.00  QGEN=61.41
3  35883     0  "1"     0     # MEC STG1  18.00       PGEN=200.00  QGEN=62.96
0
 #
 #
 # (679)  L-1/G-1 OVERLAPPING OUTAGE
 # Los Esteros - NRS 230 kV Line and MEC
1  30731 38901  "1 "    0     # line from  LS ESTRS 230.00  BRKR to (2)   SSS      230.00
1  38901 36893  "1 "    0     # line from  SSS      230.00   (2) to (3)   NRSriser 230.00
1  36893 38900  "1 "    0     # line from  NRSriser 230.00   (3) to (3)   NRS      230.00
1  36893 38900  "2 "    0     # line from  NRSriser 230.00   (3) to (3)   NRS      230.00
2  38900 36851  "1 "    0     # TRAN from  NRS      230.00   (3) to BRKR  NRS 400  115.00
 #
3  35881     0  "1"     0     # MEC CTG1  18.00       PGEN=180.00  QGEN=61.41
3  35882     0  "1"     0     # MEC CTG2  18.00       PGEN=180.00  QGEN=61.41
3  35883     0  "1"     0     # MEC STG1  18.00       PGEN=200.00  QGEN=62.96
0
 #
 #
 # (680)  L-1/G-1 OVERLAPPING OUTAGE
 # Los Esteros - Metcalf 230 kV Line and MEC
1  30735 30731  "1 "    0     # line from  METCALF  230.00  BRKR to BRKR  LS ESTRS 230.00
 #
3  35881     0  "1"     0     # MEC CTG1  18.00       PGEN=180.00  QGEN=61.41
3  35882     0  "1"     0     # MEC CTG2  18.00       PGEN=180.00  QGEN=61.41
3  35883     0  "1"     0     # MEC STG1  18.00       PGEN=200.00  QGEN=62.96
0
 #
 #
 # (681)  L-1/G-1 OVERLAPPING OUTAGE
 # Coyote Sw Sta - Metcalf 230 kV Line and MEC
1  30735 30741  "4 "    0     # line from  METCALF  230.00  BRKR to BRKR  CAL MEC  230.00
 #
3  35881     0  "1"     0     # MEC CTG1  18.00       PGEN=180.00  QGEN=61.41
3  35882     0  "1"     0     # MEC CTG2  18.00       PGEN=180.00  QGEN=61.41
3  35883     0  "1"     0     # MEC STG1  18.00       PGEN=200.00  QGEN=62.96
0
 #
 #
 # (682)  L-1/G-1 OVERLAPPING OUTAGE
 # Metcalf - Moss Landing #2 230 kV Line and MEC
1  30735 30750  "1 "    0     # line from  METCALF  230.00  BRKR to BRKR  MOSSLND2 230.00
 #
3  35881     0  "1"     0     # MEC CTG1  18.00       PGEN=180.00  QGEN=61.41
3  35882     0  "1"     0     # MEC CTG2  18.00       PGEN=180.00  QGEN=61.41
3  35883     0  "1"     0     # MEC STG1  18.00       PGEN=200.00  QGEN=62.96
0
 #
 #
 # (683)  L-1/G-1 OVERLAPPING OUTAGE
 # Metcalf - Moss Landing #1 230 kV Line and MEC
1  30735 30755  "1 "    0     # line from  METCALF  230.00  BRKR to BRKR  MOSSLND1 230.00
 #
3  35881     0  "1"     0     # MEC CTG1  18.00       PGEN=180.00  QGEN=61.41
3  35882     0  "1"     0     # MEC CTG2  18.00       PGEN=180.00  QGEN=61.41
3  35883     0  "1"     0     # MEC STG1  18.00       PGEN=200.00  QGEN=62.96
0
 #
 #
 # (684)  L-1/G-1 OVERLAPPING OUTAGE
 # Newark Distribution - Los Esteros 230 kV Line and LECEF GT1
1  30635 30731  "1 "    0     # line from  NWK DIST 230.00  BRKR to BRKR  LS ESTRS 230.00
 #
3  35854     0  "1"     0     # LECEFGT1  13.80       PGEN=50.00  QGEN=29.91
0
 #
 #
 # (685)  L-1/G-1 OVERLAPPING OUTAGE
```

```
 # Los Esteros - NRS 230 kV Line and LECEF GT1
1  30731 38901  "1 "    0     # line from  LS ESTRS 230.00  BRKR to (2)   SSS      230.00
1  38901 36893  "1 "    0     # line from  SSS      230.00   (2) to (3)   NRSriser 230.00
1  36893 38900  "1 "    0     # line from  NRSriser 230.00   (3) to (3)   NRS      230.00
1  36893 38900  "2 "    0     # line from  NRSriser 230.00   (3) to (3)   NRS      230.00
2  38900 36851  "1 "    0     # TRAN from  NRS      230.00   (3) to BRKR  NRS 400  115.00
 #
3  35854     0  "1"     0     # LECEFGT1  13.80       PGEN=50.00  QGEN=29.91
0
 #
 #
 # (686)  L-1/G-1 OVERLAPPING OUTAGE
 # Los Esteros - Metcalf 230 kV Line and LECEF GT1
1  30735 30731  "1 "    0     # line from  METCALF  230.00  BRKR to BRKR  LS ESTRS 230.00
 #
3  35854     0  "1"     0     # LECEFGT1  13.80       PGEN=50.00  QGEN=29.91
0
 #
 #
 # (687)  L-1/G-1 OVERLAPPING OUTAGE
 # Newark - Dixon Landing 115 kV Line and LECEF GT1
1  35122 35600  "1 "    0     # line from  NEWARK F 115.00  BRKR to BRKR  DIXON LD 115.00
 #
3  35854     0  "1"     0     # LECEFGT1  13.80       PGEN=50.00  QGEN=29.91
0
 #
 #
 # (688)  L-1/G-1 OVERLAPPING OUTAGE
 # Newark - Kifer 115 kV Line and LECEF GT1
1  35122 35602  "1 "    0     # line from  NEWARK F 115.00  BRKR to (3)   ZNKER J2 115.00
1  35602 35604  "1 "    0     # line from  ZNKER J2 115.00   (3) to (3)   ZANKER   115.00
1  35602 36850  "1 "    0     # line from  ZNKER J2 115.00   (3) to BRKR  KRS      115.00
2  35604 35861  "1 "    0     # TRAN from  ZANKER   115.00   (3) to (2)   SJ-SCL W   9.11
2  35604 35861  "2 "    0     # TRAN from  ZANKER   115.00   (3) to (2)   SJ-SCL W   9.11
4  35861     0  "SG"    0     # LOAD-DROP    SJ-SCL W   9.11  LOAD==6.17(2.09)
3  35861     0  "1 "    0     # GEN-DROP    SJ-SCL W   9.11  GEN==5.00(0.00)
 #
3  35854     0  "1"     0     # LECEFGT1  13.80       PGEN=50.00  QGEN=29.91
0
 #
 #
 # (689)  L-1/G-1 OVERLAPPING OUTAGE
 # Newark - Trimble 115 kV Line and LECEF GT1
1  35122 35603  "1 "    0     # line from  NEWARK F 115.00  BRKR to (3)   ZNKER J1 115.00
1  35603 35605  "1 "    0     # line from  ZNKER J1 115.00   (3) to (1)   AGNEW J  115.00
1  35603 35612  "1 "    0     # line from  ZNKER J1 115.00   (3) to BRKR  TRIMBLE  115.00
 #
3  35854     0  "1"     0     # LECEFGT1  13.80       PGEN=50.00  QGEN=29.91
0
 #
 #
 # (690)  L-1/G-1 OVERLAPPING OUTAGE
 # Newark - Milpitas #1 115 kV Line and LECEF GT1
1  35122 35624  "1 "    0     # line from  NEWARK F 115.00  BRKR to BRKR  MILPITAS 115.00
 #
3  35854     0  "1"     0     # LECEFGT1  13.80       PGEN=50.00  QGEN=29.91
0
 #
 #
 # (691)  L-1/G-1 OVERLAPPING OUTAGE
 # Newark - Milpitas #2 115 kV Line and LECEF GT1
1  35122 35624  "2 "    0     # line from  NEWARK F 115.00  BRKR to BRKR  MILPITAS 115.00
 #
3  35854     0  "1"     0     # LECEFGT1  13.80       PGEN=50.00  QGEN=29.91
0
 #
 #
 # (692)  L-1/G-1 OVERLAPPING OUTAGE
 # Dixon Landing - McKee 115 kV Line and LECEF GT1
1  35600 35629  "1 "    0     # line from  DIXON LD 115.00  BRKR to (3)   MABURY J 115.00
1  35629 35626  "1 "    0     # line from  MABURY J 115.00   (3) to BRKR  MCKEE    115.00
1  35629 35630  "1 "    0     # line from  MABURY J 115.00   (3) to BRKR  MABURY   115.00
4  35630     0  "2 "    0     # LOAD-DROP    MABURY   115.00  LOAD==19.00(4.33)
 #
3  35854     0  "1"     0     # LECEFGT1  13.80       PGEN=50.00  QGEN=29.91
0
 #
 #
```

```
 # (693)  L-1/G-1 OVERLAPPING OUTAGE
 # Montague - Trimble 115 kV Line and LECEF GT1
1  35612 35610  "1 "    0     # line from  TRIMBLE  115.00  BRKR to BRKR  MONTAGUE 115.00
 #
3  35854     0  "1"     0     # LECEFGT1  13.80       PGEN=50.00  QGEN=29.91
0
 #
 #
 # (694)  L-1/G-1 OVERLAPPING OUTAGE
 # Trimble - San Jose B 115 kV Line and LECEF GT1
1  35612 35616  "1 "    0     # line from  TRIMBLE  115.00  BRKR to BRKR  SJ B   E 115.00
 #
3  35854     0  "1"     0     # LECEFGT1  13.80       PGEN=50.00  QGEN=29.91
0
 #
 #
 # (695)  L-1/G-1 OVERLAPPING OUTAGE
 # El Patio - San Jose A 115 kV Line and LECEF GT1
1  35613 35614  "1 "    0     # line from  ELPT_SJ1 115.00   (3) to (3)   ELPT_SJ2 115.00
1  35613 35614  "2 "    0     # line from  ELPT_SJ1 115.00   (3) to (3)   ELPT_SJ2 115.00
1  35613 35618  "1 "    0     # line from  ELPT_SJ1 115.00   (3) to BRKR  SN JSE A 115.00
1  35614 35620  "1 "    0     # line from  ELPT_SJ2 115.00   (3) to BRKR  EL PATIO 115.00
 #
3  35854     0  "1"     0     # LECEFGT1  13.80       PGEN=50.00  QGEN=29.91
0
 #
 #
 # (696)  L-1/G-1 OVERLAPPING OUTAGE
 # FMC - San Jose B 115 kV Line and LECEF GT1
1  35615 35616  "1 "    0     # line from  FMC      115.00  BRKR to BRKR  SJ B   E 115.00
 #
3  35854     0  "1"     0     # LECEFGT1  13.80       PGEN=50.00  QGEN=29.91
0
 #
 #
 # (697)  L-1/G-1 OVERLAPPING OUTAGE
 # Kifer - FMC 115 kV Line and LECEF GT1
1  35615 35617  "1 "    0     # line from  FMC      115.00  BRKR to (2)   FMC JCT  115.00
1  35617 36850  "1 "    0     # line from  FMC JCT  115.00   (2) to BRKR  KRS      115.00
 #
3  35854     0  "1"     0     # LECEFGT1  13.80       PGEN=50.00  QGEN=29.91
0
 #
 #
 # (698)  L-1/G-1 OVERLAPPING OUTAGE
 # San Jose B - San Jose A 115 kV Line and LECEF GT1
1  35618 35619  "1 "    0     # line from  SN JSE A 115.00  BRKR to BRKR  SJ B   F 115.00
 #
3  35854     0  "1"     0     # LECEFGT1  13.80       PGEN=50.00  QGEN=29.91
0
 #
 #
 # (699)  L-1/G-1 OVERLAPPING OUTAGE
 # Evergreen - San Jose A 115 kV Line and LECEF GT1
1  35619 35631  "1 "    0     # line from  SJ B   F 115.00  BRKR to (3)   MARKHM J 115.00
1  35631 35632  "1 "    0     # line from  MARKHM J 115.00   (3) to (2)   MARKHAM  115.00
1  35631 35636  "1 "    0     # line from  MARKHM J 115.00   (3) to BRKR  EVRGRN 1 115.00
2  35632 35863  "1 "    0     # TRAN from  MARKHAM  115.00  BRKR to (1)   CATALYST   9.11
4  35863     0  "1 "    0     # LOAD-DROP    CATALYST   9.11  LOAD==9.12(3.09)
3  35863     0  "1 "    0     # GEN-DROP    CATALYST   9.11  GEN==2.30(0.00)
 1  35632 36420  "1 "    1     # close Markham to Stone
 2  35632 35863  "1 "    1     # restore TRAN from  MARKHAM 115.00 to CATALYST 9.11
 4  35863 0      "**"    1     # restore all loads to CATALYST
 #
3  35854     0  "1"     0     # LECEFGT1  13.80       PGEN=50.00  QGEN=29.91
0
 #
 #
 # (700)  L-1/G-1 OVERLAPPING OUTAGE
 # Metcalf - El Patio #1 115 kV Line and LECEF GT1
1  35620 35621  "1 "    0     # line from  EL PATIO 115.00  BRKR to (2)   IBM-HR J 115.00
1  35621 35642  "1 "    0     # line from  IBM-HR J 115.00   (2) to BRKR  MTCALF D 115.00
 #
3  35854     0  "1"     0     # LECEFGT1  13.80       PGEN=50.00  QGEN=29.91
0
 #
 #
 # (701)  L-1/G-1 OVERLAPPING OUTAGE
```

```
 # Metcalf - El Patio #2 115 kV Line and LECEF GT1
1  35620 35651  "2 "    0     # line from  EL PATIO 115.00  BRKR to (2)   BAILY J3 115.00
1  35651 35642  "2 "    0     # line from  BAILY J3 115.00   (2) to BRKR  MTCALF D 115.00
 #
3  35854     0  "1"     0     # LECEFGT1  13.80       PGEN=50.00  QGEN=29.91
0
 #
 #
 # (702)  L-1/G-1 OVERLAPPING OUTAGE
 # Milpitas - Swift 115 kV Line and LECEF GT1
1  35622 35624  "1 "    0     # line from  SWIFT    115.00  BRKR to BRKR  MILPITAS 115.00
 #
3  35854     0  "1"     0     # LECEFGT1  13.80       PGEN=50.00  QGEN=29.91
0
 #
 #
 # (703)  L-1/G-1 OVERLAPPING OUTAGE
 # Swift - Metcalf 115 kV Line and LECEF GT1
1  35622 35643  "1 "    0     # line from  SWIFT    115.00  BRKR to BRKR  MTCALF E 115.00
 #
3  35854     0  "1"     0     # LECEFGT1  13.80       PGEN=50.00  QGEN=29.91
0
 #
 #
 # (704)  L-1/G-1 OVERLAPPING OUTAGE
 # Metcalf - Evergreen #2 115 kV Line and LECEF GT1
1  35625 35645  "1 "    0     # line from  MARKHMJ2 115.00   (2) to (3)   EVRGRN J 115.00
1  35625 35634  "1 "    0     # line from  MARKHMJ2 115.00   (2) to (2)   STONE J  115.00
1  35645 35633  "2 "    0     # line from  EVRGRN J 115.00   (3) to BRKR  EVRGRN 2 115.00
1  35645 35643  "2 "    0     # line from  EVRGRN J 115.00   (3) to BRKR  MTCALF E 115.00
1  35634 36420  "1 "    0     # line from  STONE J  115.00   (2) to BRKR  STONE    115.00
4  36420     0  "1 "    0     # LOAD-DROP    STONE    115.00  LOAD==35.69(8.13)
4  36420     0  "2 "    0     # LOAD-DROP    STONE    115.00  LOAD==14.87(3.39)
 #
3  35854     0  "1"     0     # LECEFGT1  13.80       PGEN=50.00  QGEN=29.91
0
 #
 #
 # (705)  L-1/G-1 OVERLAPPING OUTAGE
 # Mc Kee - Piercy 115 kV Line and LECEF GT1
1  35626 35656  "1 "    0     # line from  MCKEE    115.00  BRKR to BRKR  PIERCY   115.00
 #
3  35854     0  "1"     0     # LECEFGT1  13.80       PGEN=50.00  QGEN=29.91
0
 #
 #
 # (706)  L-1/G-1 OVERLAPPING OUTAGE
 # Metcalf - Evergreen #1 115 kV Line and LECEF GT1
1  35636 35643  "1 "    0     # line from  EVRGRN 1 115.00  BRKR to BRKR  MTCALF E 115.00
 #
3  35854     0  "1"     0     # LECEFGT1  13.80       PGEN=50.00  QGEN=29.91
0
 #
 #
 # (707)  L-1/G-1 OVERLAPPING OUTAGE
 # Piercy - Metcalf 115 kV Line and LECEF GT1
1  35656 35643  "1 "    0     # line from  PIERCY   115.00  BRKR to BRKR  MTCALF E 115.00
 #
3  35854     0  "1"     0     # LECEFGT1  13.80       PGEN=50.00  QGEN=29.91
0
 #
 #
 # (708)  L-1/G-1 OVERLAPPING OUTAGE
 # Los Esteros - Agnew 115 kV Line and LECEF GT1
1  35658 35606  "1 "    0     # line from  LS ESTRS 115.00  BRKR to BRKR  AGNEW    115.00
 #
3  35854     0  "1"     0     # LECEFGT1  13.80       PGEN=50.00  QGEN=29.91
0
 #
 #
 # (709)  L-1/G-1 OVERLAPPING OUTAGE
 # Los Esteros - Montague 115 kV Line and LECEF GT1
1  35658 35610  "1 "    0     # line from  LS ESTRS 115.00  BRKR to BRKR  MONTAGUE 115.00
 #
3  35854     0  "1"     0     # LECEFGT1  13.80       PGEN=50.00  QGEN=29.91
0
 #
 #
```

```
 # (710)  L-1/G-1 OVERLAPPING OUTAGE
 # Los Esteros - Trimble 115 kV Line and LECEF GT1
1  35658 35612  "1 "    0     # line from  LS ESTRS 115.00  BRKR to BRKR  TRIMBLE  115.00
 #
3  35854     0  "1"     0     # LECEFGT1  13.80       PGEN=50.00  QGEN=29.91
0
 #
 #
 # (711)  L-1/G-1 OVERLAPPING OUTAGE
 # Los Esteros - Nortech 115 kV Line and LECEF GT1 post-project outage
1  35658 35659  "1 "    0     # line from  LS ESTRS 115.00  BRKR to BRKR  NORTECH  115.00
 #
3  35854     0  "1"     0     # LECEFGT1  13.80       PGEN=50.00  QGEN=29.91
0
 #
 #
 # (712)  L-1/G-1 OVERLAPPING OUTAGE
 # Nortech - NRS 115 kV Line and LECEF GT1
1  35659 36853  "1 "    0     # line from  NORTECH  115.00  BRKR to BRKR  NRS 300  115.00
 #
3  35854     0  "1"     0     # LECEFGT1  13.80       PGEN=50.00  QGEN=29.91
0
 #
 #
 # (713)  L-1/G-1 OVERLAPPING OUTAGE
 # Metcalf - Morgan Hill 115 kV Line and Gilroy Energy 1
1  35642 35646  "1 "    0     # line from  MTCALF D 115.00  BRKR to BRKR  MRGN HIL 115.00
 #
3  35850     0  "1"     0     # GLRY COG  13.80       PGEN=80.50  QGEN=15.86
0
 #
 #
 # (714)  L-1/G-1 OVERLAPPING OUTAGE
 # Metcalf - Llagas 115 kV Line and Gilroy Energy 1
1  35642 35654  "1 "    0     # line from  MTCALF D 115.00  BRKR to (2)   MORGN J1 115.00
1  35654 35655  "1 "    0     # line from  MORGN J1 115.00   (2) to (2)   MORGN J2 115.00
1  35655 35648  "1 "    0     # line from  MORGN J2 115.00   (2) to BRKR  LLAGAS   115.00
 #
3  35850     0  "1"     0     # GLRY COG  13.80       PGEN=80.50  QGEN=15.86
0
 #
 #
 # (715)  L-1/G-1 OVERLAPPING OUTAGE
 # Morgan Hill - Llagas 115 kV Line and Gilroy Energy 1
1  35646 35648  "1 "    0     # line from  MRGN HIL 115.00  BRKR to BRKR  LLAGAS   115.00
 #
3  35850     0  "1"     0     # GLRY COG  13.80       PGEN=80.50  QGEN=15.86
0
 #
 #
-1
 # EOF
```

```
# PG&E TCP1 Group 5 Greater Bay Area 2013 category c contingency list (dctl and bus outages)
# North Bay, East Bay, Diablo, San Francisco, Peninsula, Mission, DeAnza and San Jose Divisions
# Zones 306, 307, 308, 309, 310, 316, 317, 318 and selected outages from Sacramento/Sierra 304/311
#
  # 2013 category c contingency list (dctl and bus outages)
  # selected Sacramento/Sierra outages
  #
  #
  # (1)   C5 DCTL OUTAGE
  # Vaca-Dixon - Lambie and Vaca-Dixon - Peabody 230 kV Lines pre-project outage
 1  30460 30472  "1 "    0     # line from  VACA-DIX 230.00  BRKR to BRKR  PEABODY  230.00
  #
 1  30460 30478  "1 "    0     # line from  VACA-DIX 230.00  BRKR to BRKR  LAMBIE   230.00
 0
  #
  #
  # (2)   C5 DCTL OUTAGE
  # Lambie - Birds Landing and Peabody - Birds Landing 230 kV Lines pre-project outage
 1  30478 30479  "1 "    0     # line from  LAMBIE   230.00  BRKR to BRKR  BDLSWSTA 230.00
  #
 1  30472 30479  "1 "    0     # line from  PEABODY  230.00  BRKR to BRKR  BDLSWSTA 230.00
 0
  #
  #
  # (3)   C5 DCTL OUTAGE
  # Vaca-Dixon - T257 #1 and #2 230 kV Lines post-project outage
 1  30460 30452  "1 "    0     # line from  VACA-DIX 230.00  BRKR to BRKR  T275SWST 230.00
  #
 1  30460 30452  "2 "    0     # line from  VACA-DIX 230.00  BRKR to BRKR  T275SWST 230.00
 0
  #
  #
  # (4)   C5 DCTL OUTAGE
  # T257 - Lambie and T257 - Peabody 230 kV Lines pre-project outage
 1  30452 30478  "1 "    0     # line from  T275SWST 230.00  BRKR to BRKR  LAMBIE   230.00
  #
 1  30452 30472  "1 "    0     # line from  T275SWST 230.00  BRKR to BRKR  PEABODY  230.00
 0
  #
  #
  # (5)   C5 DCTL OUTAGE
  # Vaca-Dixon - Tesla 500 kV and Peabody - Birds Landing 230 kV Lines pre-project outage
 1  30030 30040  "1 "    0     # line from  VACA-DIX 500.00  BRKR to BRKR  TESLA    500.00
  #
 1  30472 30479  "1 "    0     # line from  PEABODY  230.00  BRKR to BRKR  BDLSWSTA 230.00
 0
  #
  #
  # (6)   C5 DCTL OUTAGE
  # Vaca-Dixon - T171 500 kV and Peabody - Birds Landing 230 kV Lines post-project outage
 1  30030 30070  "1 "    0     # line from  VACA-DIX 500.00  BRKR to BRKR  T171     500.00
  #
 1  30472 30479  "1 "    0     # line from  PEABODY  230.00  BRKR to BRKR  BDLSWSTA 230.00
 0
  #
  #
  # (7)   C5 DCTL OUTAGE
  # T171 - Tesla 500 kV and Peabody - Birds Landing 230 kV Lines post-project outage
 1  30070 30040  "1 "    0     # line from  T171     500.00  BRKR to BRKR  TESLA    500.00
  #
 1  30472 30479  "1 "    0     # line from  PEABODY  230.00  BRKR to BRKR  BDLSWSTA 230.00
 0
  #
  #
  # 2013 category c contingency list (dctl and bus outages)
  # North Bay Division Zone 306
  #
  #
  # (8)   C5 DCTL OUTAGE
  # Lakeville - Ignacio #1 and Lakeville - Sobrante #2 230 kV Lines pre-project outage
 1  30435 30445  "1 "    0     # line from  LAKEVILE 230.00  BRKR to BRKR  IGNACIO  230.00
  #
 1  30435 30540  "2 "    0     # line from  LAKEVILE 230.00  BRKR to BRKR  SOBRANTE 230.00
 0
  #
  #
```

```
 # (9)   C5 DCTL OUTAGE
 # Lakeville - Ignacio #1 and Lakeville - T257 230 kV Lines post-project outage
1  30435 30445  "1 "    0     # line from  LAKEVILE 230.00  BRKR to BRKR  IGNACIO  230.00
 #
1  30435 30446  "1 "    0     # line from  LAKEVILE 230.00  BRKR to BRKR  T257SWST 230.00
0
 #
 #
 # (10)   C5 DCTL OUTAGE
 # Lakeville - Ignacio #1 and T257 - Sobrante #2 230 kV Lines post-project outage
1  30435 30445  "1 "    0     # line from  LAKEVILE 230.00  BRKR to BRKR  IGNACIO  230.00
 #
1  30446 30540  "2 "    0     # line from  T257SWST 230.00  BRKR to BRKR  SOBRANTE 230.00
0
 #
 #
 # (11)   C5 DCTL OUTAGE
 # Lakeville - Ignacio #1 and Ignacio - Sobrante 230 kV Lines pre-project outage
1  30435 30445  "1 "    0     # line from  LAKEVILE 230.00  BRKR to BRKR  IGNACIO  230.00
 #
1  30437 30445  "1 "    0     # line from  CROCKETT 230.00   (3) to BRKR  IGNACIO  230.00
1  30437 30438  "1 "    0     # line from  CROCKETT 230.00   (3) to (2)   C&H      230.00
1  30437 30540  "1 "    0     # line from  CROCKETT 230.00   (3) to BRKR  SOBRANTE 230.00
2  30438 32900  "1 "    0     # TRAN from  C&H      230.00  BRKR to (1)   CRCKTCOG  18.00
4  30438     0  "1 "    0     # LOAD-DROP    C&H      230.00  LOAD==3.32(0.76)
3  32900     0  "1 "    0     # GEN-DROP    CRCKTCOG  18.00  GEN==240.00(40.82)
0
 #
 #
 # (12)   C5 DCTL OUTAGE
 # Lakeville - Ignacio #1 and Ignacio - T257 230 kV Lines post-project outage
1  30435 30445  "1 "    0     # line from  LAKEVILE 230.00  BRKR to BRKR  IGNACIO  230.00
 #
1  30445 30446  "1 "    0     # line from  IGNACIO  230.00  BRKR to BRKR  T257SWST 230.00
0
 #
 #
 # (13)   C5 DCTL OUTAGE
 # Lakeville - Ignacio #1 and T257 - Sobrante #1 230 kV Lines post-project outage
1  30435 30445  "1 "    0     # line from  LAKEVILE 230.00  BRKR to BRKR  IGNACIO  230.00
 #
1  30446 30437  "1 "    0     # line from  T257SWST 230.00  BRKR to (3)   CROCKETT 230.00
1  30437 30438  "1 "    0     # line from  CROCKETT 230.00   (3) to (2)   C&H      230.00
1  30437 30540  "1 "    0     # line from  CROCKETT 230.00   (3) to BRKR  SOBRANTE 230.00
2  30438 32900  "1 "    0     # TRAN from  C&H      230.00  BRKR to (1)   CRCKTCOG  18.00
4  30438     0  "1 "    0     # LOAD-DROP    C&H      230.00  LOAD==3.32(0.76)
3  32900     0  "1 "    0     # GEN-DROP    CRCKTCOG  18.00  GEN==240.00(54.42)
0
 #
 #
 # (14)   C5 DCTL OUTAGE
 # Lakeville - Ignacio #2 and Ignacio - Sobrante 230 kV Lines pre-project outage
1  30433 30445  "2 "    0     # line from  T22_93B  230.00   (2) to BRKR  IGNACIO  230.00
1  30433 30435  "2 "    0     # line from  T22_93B  230.00   (2) to BRKR  LAKEVILE 230.00
 #
1  30437 30445  "1 "    0     # line from  CROCKETT 230.00   (3) to BRKR  IGNACIO  230.00
1  30437 30438  "1 "    0     # line from  CROCKETT 230.00   (3) to (2)   C&H      230.00
1  30437 30540  "1 "    0     # line from  CROCKETT 230.00   (3) to BRKR  SOBRANTE 230.00
2  30438 32900  "1 "    0     # TRAN from  C&H      230.00  BRKR to (1)   CRCKTCOG  18.00
4  30438     0  "1 "    0     # LOAD-DROP    C&H      230.00  LOAD==3.32(0.76)
3  32900     0  "1 "    0     # GEN-DROP    CRCKTCOG  18.00  GEN==240.00(40.82)
0
 #
 #
 # (15)   C5 DCTL OUTAGE
 # Lakeville - Ignacio #2 and Ignacio - T257 230 kV Lines post-project outage
1  30433 30445  "2 "    0     # line from  T22_93B  230.00   (2) to BRKR  IGNACIO  230.00
1  30433 30435  "2 "    0     # line from  T22_93B  230.00   (2) to BRKR  LAKEVILE 230.00
 #
1  30445 30446  "1 "    0     # line from  IGNACIO  230.00  BRKR to BRKR  T257SWST 230.00
0
 #
 #
 # (16)   C5 DCTL OUTAGE
 # Lakeville - Ignacio #2 and T257 - Sobrante #1 230 kV Lines post-project outage
1  30433 30445  "2 "    0     # line from  T22_93B  230.00   (2) to BRKR  IGNACIO  230.00
1  30433 30435  "2 "    0     # line from  T22_93B  230.00   (2) to BRKR  LAKEVILE 230.00
 #
```

```
1  30446 30437  "1 "    0     # line from  T257SWST 230.00  BRKR to (3)   CROCKETT 230.00
1  30437 30438  "1 "    0     # line from  CROCKETT 230.00   (3) to (2)   C&H      230.00
1  30437 30540  "1 "    0     # line from  CROCKETT 230.00   (3) to BRKR  SOBRANTE 230.00
2  30438 32900  "1 "    0     # TRAN from  C&H      230.00  BRKR to (1)   CRCKTCOG  18.00
4  30438     0  "1 "    0     # LOAD-DROP    C&H      230.00  LOAD==3.32(0.76)
3  32900     0  "1 "    0     # GEN-DROP    CRCKTCOG  18.00  GEN==240.00(54.42)
0
 #
 #
 # (17)   C5 DCTL OUTAGE
 # Lakeville - Ignacio #2 and Fulton - Ignacio 230 kV Lines
1  30433 30445  "2 "    0     # line from  T22_93B  230.00   (2) to BRKR  IGNACIO  230.00
1  30433 30435  "2 "    0     # line from  T22_93B  230.00   (2) to BRKR  LAKEVILE 230.00
 #
1  30430 30445  "1 "    0     # line from  FULTON   230.00  BRKR to BRKR  IGNACIO  230.00
0
 #
 #
 # (18)   C5 DCTL OUTAGE
 # Vaca-Dixon - Bahia and Vaca-Dixon - Parkway 230 kV Lines
1  30460 30465  "1 "    0     # line from  VACA-DIX 230.00  BRKR to BRKR  BAHIA    230.00
 #
1  30460 30467  "1 "    0     # line from  VACA-DIX 230.00  BRKR to BRKR  PARKWAY  230.00
0
 #
 #
 # (19)   C5 DCTL OUTAGE
 # Vaca-Dixon - Bahia and Parkway - Moraga 230 kV Lines
1  30460 30465  "1 "    0     # line from  VACA-DIX 230.00  BRKR to BRKR  BAHIA    230.00
 #
1  30467 30550  "1 "    0     # line from  PARKWAY  230.00  BRKR to BRKR  MORAGA   230.00
0
 #
 #
 # (20)   C5 DCTL OUTAGE
 # Bahia - Q177 and Parkway - Moraga 230 kV Lines
1  30465 30466  "1 "    0     # line from  BAHIA    230.00  BRKR to BRKR  Q177     230.00
 #
1  30467 30550  "1 "    0     # line from  PARKWAY  230.00  BRKR to BRKR  MORAGA   230.00
0
 #
 #
 # (21)   C5 DCTL OUTAGE
 # Q177 - Moraga and Parkway - Moraga 230 kV Lines
1  30466 30550  "1 "    0     # line from  Q177     230.00  BRKR to BRKR  MORAGA   230.00
 #
1  30467 30550  "1 "    0     # line from  PARKWAY  230.00  BRKR to BRKR  MORAGA   230.00
0
 #
 #
 # (22)   C5 DCTL OUTAGE
 # Ignacio - San Rafael #1 and Ignacio - Las Gallinas #3 115 kV Lines
1  32568 32574  "1 "    0     # line from  IGNACIO  115.00  BRKR to BRKR  SAN RAFL 115.00
 #
1  32568 32570  "3 "    0     # line from  IGNACIO  115.00  BRKR to BRKR  LS GLLNS 115.00
0
 #
 #
 # (23)   C5 DCTL OUTAGE
 # Ignacio - San Rafael #1 and Las Gallinas - San Rafael #3 115 kV Lines
1  32568 32574  "1 "    0     # line from  IGNACIO  115.00  BRKR to BRKR  SAN RAFL 115.00
 #
1  32570 32574  "3 "    0     # line from  LS GLLNS 115.00  BRKR to BRKR  SAN RAFL 115.00
0
 #
 #
 # (24)   C5 DCTL OUTAGE
 # Ignacio - Mare Island #1 and #2 115 kV Lines
1  32568 32576  "1 "    0     # line from  IGNACIO  115.00  BRKR to (3)   SKGGS J1 115.00
1  32576 32580  "1 "    0     # line from  SKGGS J1 115.00   (3) to (1)   SKAGGS   115.00
1  32576 32588  "1 "    0     # line from  SKGGS J1 115.00   (3) to (2)   HGHWY J1 115.00
1  32588 32593  "1 "    0     # line from  HGHWY J1 115.00   (2) to (3)   JCPMPJCT 115.00
1  32593 32595  "1 "    0     # line from  JCPMPJCT 115.00   (3) to (1)   JMSCNPMP 115.00
1  32593 32604  "1 "    0     # line from  JCPMPJCT 115.00   (3) to (2)   MREIS JC 115.00
1  32604 32612  "1 "    0     # line from  MREIS JC 115.00   (2) to (3)   CRQNZTP1 115.00
1  32612 32610  "1 "    0     # line from  CRQNZTP1 115.00   (3) to BRKR  MRE IS-Q 115.00
1  32612 32614  "1 "    0     # line from  CRQNZTP1 115.00   (3) to (3)   MEYERTP1 115.00
1  32614 32600  "1 "    0     # line from  MEYERTP1 115.00   (3) to BRKR  MEYERS   115.00
```

```
1  32614 32606  "1 "    0     # line from  MEYERTP1 115.00   (3) to BRKR  CARQUINZ 115.00
4  32610     0  "1 "    0     # LOAD-DROP    MRE IS-Q 115.00  LOAD==4.25(0.86)
4  32600     0  "1 "    0     # LOAD-DROP    MEYERS   115.00  LOAD==0.24(0.05)
4  32606     0  "1 "    0     # LOAD-DROP    CARQUINZ 115.00  LOAD==13.23(1.89)
4  32606     0  "2 "    0     # LOAD-DROP    CARQUINZ 115.00  LOAD==11.26(1.60)
1  32616 32606  "1 "    1     # LINE-TRANSFER MEYERTP1 115.00 to MEYERTP2 115.00
4  32606     0  "**"    1     # RESTORE CARQUINEZ load
 #
1  32568 32569  "1 "    0     # line from  IGNACIO  115.00  BRKR to (2)   HMLT_WET 115.00
1  32569 32578  "1 "    0     # line from  HMLT_WET 115.00   (2) to (2)   SKGGS J2 115.00
1  32578 32586  "1 "    0     # line from  SKGGS J2 115.00   (2) to (3)   HGHWY J2 115.00
1  32586 31956  "1 "    0     # line from  HGHWY J2 115.00   (3) to (2)   CORDELLT 115.00
1  32586 32590  "1 "    0     # line from  HGHWY J2 115.00   (3) to BRKR  HIGHWAY  115.00
1  31956 32598  "1 "    0     # line from  CORDELLT 115.00   (2) to (2)   NTWR ALT 115.00
1  32598 32608  "1 "    0     # line from  NTWR ALT 115.00   (2) to (2)   CRQNZTP2 115.00
1  32608 32616  "1 "    0     # line from  CRQNZTP2 115.00   (2) to (1)   MEYERTP2 115.00
4  32569     0  "1 "    0     # LOAD-DROP    HMLT_WET 115.00  LOAD==15.00(9.30)
4  32590     0  "1 "    0     # LOAD-DROP    HIGHWAY  115.00  LOAD==20.67(2.94)
4  32590     0  "2 "    0     # LOAD-DROP    HIGHWAY  115.00  LOAD==25.37(3.61)
1  32588 32590  "1 "    1     # LINE-TRANSFER HGHWY J2 115.00 to HGHWY J1 115.00
4  32590     0  "**"    1     # RESTORE HIGHWAY load
0
 #
 #
 # (25)   C5 DCTL OUTAGE
 # Vaca-Vacaville-Jameson-North Tower and Ignacio - Mare Island #2 115 kV Lines
1  32618 32020  "1 "    0     # line from  NTWRJCT1 115.00   (1) to (3)   JMSN JCT 115.00
1  32020 31996  "1 "    0     # line from  JMSN JCT 115.00   (3) to (3)   HALE J1  115.00
1  32020 32010  "1 "    0     # line from  JMSN JCT 115.00   (3) to BRKR  JAMESON  115.00
1  31996 31995  "1 "    0     # line from  HALE J1  115.00   (3) to (2)   HALE     115.00
1  31996 32006  "1 "    0     # line from  HALE J1  115.00   (3) to (3)   VCVLLE1J 115.00
1  31995 32013  "1 "    0     # line from  HALE     115.00   (2) to (1)   HALE2    115.00
1  32006 31998  "1 "    0     # line from  VCVLLE1J 115.00   (3) to BRKR  VACA-DIX 115.00
1  32006 32000  "1 "    0     # line from  VCVLLE1J 115.00   (3) to BRKR  VACAVLL1 115.00
4  32010     0  "1 "    0     # LOAD-DROP    JAMESON  115.00  LOAD==35.07(1.57)
4  31995     0  "1 "    0     # LOAD-DROP    HALE     115.00  LOAD==2.36(1.40)
4  32000     0  "1 "    0     # LOAD-DROP    VACAVLL1 115.00  LOAD==27.49(1.23)
1  32002 32000  "1"     1     #Line transfer VACAVLL1 115kV TO VACAVLL2 115kV
4  32000     0  "**"    1     #Restore VACAVLL1 load
1  32012 32013  "1"     1     #Transfer load to HALE alternate
4  31995     0  "**"    1     #Restore load at HALE
1  32010 32009  "1 "    1     # LINE-TRANSFER JMSN JCT 115.00 to JAMESN-A 115.00
4  32010     0  "**"    1     # RESTORE JAMESON load
 #
1  32568 32569  "1 "    0     # line from  IGNACIO  115.00  BRKR to (2)   HMLT_WET 115.00
1  32569 32578  "1 "    0     # line from  HMLT_WET 115.00   (2) to (2)   SKGGS J2 115.00
1  32578 32586  "1 "    0     # line from  SKGGS J2 115.00   (2) to (3)   HGHWY J2 115.00
1  32586 31956  "1 "    0     # line from  HGHWY J2 115.00   (3) to (2)   CORDELLT 115.00
1  32586 32590  "1 "    0     # line from  HGHWY J2 115.00   (3) to BRKR  HIGHWAY  115.00
1  31956 32598  "1 "    0     # line from  CORDELLT 115.00   (2) to (2)   NTWR ALT 115.00
1  32598 32608  "1 "    0     # line from  NTWR ALT 115.00   (2) to (2)   CRQNZTP2 115.00
1  32608 32616  "1 "    0     # line from  CRQNZTP2 115.00   (2) to (1)   MEYERTP2 115.00
4  32569     0  "1 "    0     # LOAD-DROP    HMLT_WET 115.00  LOAD==15.00(9.30)
4  32590     0  "1 "    0     # LOAD-DROP    HIGHWAY  115.00  LOAD==20.67(2.94)
4  32590     0  "2 "    0     # LOAD-DROP    HIGHWAY  115.00  LOAD==25.37(3.61)
1  32588 32590  "1 "    1     # LINE-TRANSFER HGHWY J2 115.00 to HGHWY J1 115.00
4  32590     0  "**"    1     # RESTORE HIGHWAY load
0
 #
 #
 # (26)   C5 DCTL OUTAGE
 # Ignacio - San Rafael #1 115 kV and Ignacio - Alto 60 kV Lines
1  32568 32574  "1 "    0     # line from  IGNACIO  115.00  BRKR to BRKR  SAN RAFL 115.00
 #
1  32664 32667  "1 "    0     # line from  IGNACO A  60.00  BRKR to (3)   IG JCT    60.00
1  32667 32678  "1 "    0     # line from  IG JCT    60.00   (3) to (2)   SAN RFLJ  60.00
1  32667 32668  "1 "    0     # line from  IG JCT    60.00   (3) to BRKR  NOVATO    60.00
1  32678 32680  "1 "    0     # line from  SAN RFLJ  60.00   (2) to BRKR  GREENBRE  60.00
0
 #
 #
 # (27)   C5 DCTL OUTAGE
 # Ignacio - Alto - Sausalito #1 and #2 60 kV Lines
1  32664 32676  "1 "    0     # line from  IGNACO A  60.00  BRKR to (2)   HMLTN FD  60.00
1  32676 32686  "1 "    0     # line from  HMLTN FD  60.00   (2) to (2)   ALTOJT2   60.00
1  32686 32682  "1 "    0     # line from  ALTOJT2   60.00   (2) to BRKR  ALTO      60.00
1  32676 32677  "1 "    1     # LINE-TRANSFER HMLTN FD 60.00 to HMLTNBFD 60.00
4  32676     0  "**"    1     # RESTORE HMLTN FD load
```

```
 #
1  32664 32677  "1 "    0     # line from  IGNACO A  60.00  BRKR to (2)   HMLTNBFD  60.00
1  32677 32684  "1 "    0     # line from  HMLTNBFD  60.00   (2) to (3)   ALTOJT1   60.00
1  32684 32682  "1 "    0     # line from  ALTOJT1   60.00   (3) to BRKR  ALTO      60.00
1  32684 32688  "1 "    0     # line from  ALTOJT1   60.00   (3) to BRKR  SAUSALTO  60.00
4  32688     0  "2 "    0     # LOAD-DROP    SAUSALTO  60.00  LOAD==10.92(1.56)
1  32688 32686  "1 "    1     # LINE-TRANSFER SAUSALTO 60.00 to ALTOJT2 60.00
4  32688     0  "**"    1     # RESTORE SAUSALTO load
0
 #
 #
 # (28) BUS FAULT  30445  "IGNACIO" Ignacio 230 kV Bus Section 1
 #
1  30445  30430  "1"    0     # LINE from  IGNACIO  230.00  to  FULTON   230.00
2  30445  32568  "6"    0     # TRAN from  IGNACIO  230.00  to  IGNACIO  115.00
0
 #
 #
 # (29) BUS FAULT  30445  "IGNACIO" Ignacio 230 kV Bus Section 2
 # pre and post-project outage
1  30445  30433  "2"    0     # LINE from  IGNACIO  230.00  to  T22_93B  230.00
1  30445  30435  "1"    0     # LINE from  IGNACIO  230.00  to  LAKEVILE 230.00
1  30445  30437  "1"    0     # LINE from  IGNACIO  230.00  to  CROCKETT 230.00 pre-project
1  30445  30446  "1"    0     # LINE from  IGNACIO  230.00  to  T257SWST 230.00 post-project
2  30445  32568  "4"    0     # TRAN from  IGNACIO  230.00  to  IGNACIO  115.00
0
 #
 #
 # (30) BUS FAULT  30465  "BAHIA"
 #
1  30465  30460  "1"    0     # LINE from  BAHIA    230.00  to  VACA-DIX 230.00
1  30465  30466  "1"    0     # LINE from  BAHIA    230.00  to  Q177     230.00
2  30465  30464  "1"    0     # TRAN from  BAHIA    230.00  to  EXXON_BH  12.47
2  30465  30464  "2"    0     # TRAN from  BAHIA    230.00  to  EXXON_BH  12.47
2  30465  30464  "3"    0     # TRAN from  BAHIA    230.00  to  EXXON_BH  12.47
4  30465     0  "1 "    0     # LOAD-DROP    BAHIA    230.00  LOAD==30.11(4.29)
4  30465     0  "2 "    0     # LOAD-DROP    BAHIA    230.00  LOAD==19.06(2.72)
0
 #
 #
 # (31) BUS FAULT  30466  "Q177"
 #
1  30466  30465  "1"    0     # LINE from  Q177     230.00  to  BAHIA    230.00
1  30466  30550  "1"    0     # LINE from  Q177     230.00  to  MORAGA   230.00
2  30466  32701  "1"    0     # TRAN from  Q177     230.00  to  Q177CL1   34.50
0
 #
 #
 # (32) BUS FAULT  30467  "PARKWAY"
 #
1  30467  30460  "1"    0     # LINE from  PARKWAY  230.00  to  VACA-DIX 230.00
1  30467  30550  "1"    0     # LINE from  PARKWAY  230.00  to  MORAGA   230.00
4  30467     0  "1 "    0     # LOAD-DROP    PARKWAY  230.00  LOAD==32.48(4.63)
0
 #
 #
 # (33) BUS FAULT  32564  "PUEBLO"
 #
1  32564  31258  "1"    0     # LINE from  PUEBLO   115.00  to  SONOMA   115.00
1  32564  32562  "1"    0     # LINE from  PUEBLO   115.00  to  PUEBLOJT 115.00
4  32564     0  "1 "    0     # LOAD-DROP    PUEBLO   115.00  LOAD==48.17(6.86)
4  32564     0  "2 "    0     # LOAD-DROP    PUEBLO   115.00  LOAD==38.82(5.53)
0
 #
 #
 # (34) BUS FAULT  32568  "IGNACIO" Ignacio 115 kV Bus Section D
 #
1  32568  32574  "1"    0     # LINE from  IGNACIO  115.00  to  SAN RAFL 115.00
1  32568  32576  "1"    0     # LINE from  IGNACIO  115.00  to  SKGGS J1 115.00
2  32568  30445  "4"    0     # TRAN from  IGNACIO  115.00  to  IGNACIO  230.00
2  32568  32666  "3"    0     # TRAN from  IGNACIO  115.00  to  IGNACO B  60.00
0
 #
 #
 # (35) BUS FAULT  32568  "IGNACIO" Ignacio 115 kV Bus Section E
 #
1  32568  32569  "1"    0     # LINE from  IGNACIO  115.00  to  HMLT_WET 115.00
1  32568  32570  "3"    0     # LINE from  IGNACIO  115.00  to  LS GLLNS 115.00
```

```
2  32568  30445  "6"    0     # TRAN from  IGNACIO  115.00  to  IGNACIO  230.00
2  32568  32666  "1"    0     # TRAN from  IGNACIO  115.00  to  IGNACO B  60.00
4  32568     0  "2 "    0     # LOAD-DROP    IGNACIO  115.00  LOAD==15.92(2.27)
4  32568     0  "5 "    0     # LOAD-DROP    IGNACIO  115.00  LOAD==16.10(2.29)
0
 #
 #
 # (36) BUS FAULT  32570  "LS GLLNS"
 #
1  32570  32568  "3"    0     # LINE from  LS GLLNS 115.00  to  IGNACIO  115.00
1  32570  32574  "3"    0     # LINE from  LS GLLNS 115.00  to  SAN RAFL 115.00
4  32570     0  "1 "    0     # LOAD-DROP    LS GLLNS 115.00  LOAD==14.53(2.07)
4  32570     0  "2 "    0     # LOAD-DROP    LS GLLNS 115.00  LOAD==9.81(1.40)
4  32570     0  "3 "    0     # LOAD-DROP    LS GLLNS 115.00  LOAD==10.97(1.56)
0
 #
 #
 # (37) BUS FAULT  32574  "SAN RAFL"
 #
1  32574  32568  "1"    0     # LINE from  SAN RAFL 115.00  to  IGNACIO  115.00
1  32574  32570  "3"    0     # LINE from  SAN RAFL 115.00  to  LS GLLNS 115.00
4  32574     0  "1 "    0     # LOAD-DROP    SAN RAFL 115.00  LOAD==26.66(3.80)
4  32574     0  "2 "    0     # LOAD-DROP    SAN RAFL 115.00  LOAD==25.42(3.62)
4  32574     0  "3 "    0     # LOAD-DROP    SAN RAFL 115.00  LOAD==17.66(2.52)
0
 #
 #
 # (38) BUS FAULT  32590  "HIGHWAY"
 #
1  32590  32586  "1"    0     # LINE from  HIGHWAY  115.00  to  HGHWY J2 115.00
1  32590  32588  "1"    0     # LINE from  HIGHWAY  115.00  to  HGHWY J1 115.00
4  32590     0  "1 "    0     # LOAD-DROP    HIGHWAY  115.00  LOAD==20.67(2.94)
4  32590     0  "2 "    0     # LOAD-DROP    HIGHWAY  115.00  LOAD==25.37(3.61)
0
 #
 #
 # (39) BUS FAULT  32600  "MEYERS"
 #
1  32600  32614  "1"    0     # LINE from  MEYERS   115.00  to  MEYERTP1 115.00
1  32600  32616  "1"    0     # LINE from  MEYERS   115.00  to  MEYERTP2 115.00
4  32600     0  "1 "    0     # LOAD-DROP    MEYERS   115.00  LOAD==0.24(0.05)
0
 #
 #
 # (40) BUS FAULT  32602  "NRTH TWR"
 #
1  32602  32618  "1"    0     # LINE from  NRTH TWR 115.00  to  NTWRJCT1 115.00
1  32602  32620  "1"    0     # LINE from  NRTH TWR 115.00  to  NTWRJCT2 115.00
4  32602     0  "1 "    0     # LOAD-DROP    NRTH TWR 115.00  LOAD==14.43(2.06)
4  32602     0  "2 "    0     # LOAD-DROP    NRTH TWR 115.00  LOAD==9.58(1.37)
4  32602     0  "3 "    0     # LOAD-DROP    NRTH TWR 115.00  LOAD==6.08(0.87)
4  32602     0  "4 "    0     # LOAD-DROP    NRTH TWR 115.00  LOAD==2.85(0.41)
0
 #
 #
 # (41) BUS FAULT  32606  "CARQUINZ"
 #
1  32606  32614  "1"    0     # LINE from  CARQUINZ 115.00  to  MEYERTP1 115.00
1  32606  32616  "1"    0     # LINE from  CARQUINZ 115.00  to  MEYERTP2 115.00
4  32606     0  "1 "    0     # LOAD-DROP    CARQUINZ 115.00  LOAD==13.23(1.89)
4  32606     0  "2 "    0     # LOAD-DROP    CARQUINZ 115.00  LOAD==11.26(1.60)
0
 #
 #
 # (42) BUS FAULT  32652  "CALISTGA"
 #
1  32652  31342  "1"    0     # LINE from  CALISTGA  60.00  to  MIDDLTWN  60.00
1  32652  32650  "1"    0     # LINE from  CALISTGA  60.00  to  ST.HELNA  60.00
4  32652     0  "1 "    0     # LOAD-DROP    CALISTGA  60.00  LOAD==18.46(2.63)
0
 #
 #
 # (43) BUS FAULT  32654  "TULUCAY"
 #
1  32654  32655  "1"    0     # LINE from  TULUCAY   60.00  to  TULCAY1   60.00
1  32654  32660  "1"    0     # LINE from  TULUCAY   60.00  to  BSLT TAP  60.00
2  32654  30440  "1"    0     # TRAN from  TULUCAY   60.00  to  TULUCAY  230.00
2  32654  30440  "3"    0     # TRAN from  TULUCAY   60.00  to  TULUCAY  230.00
```

```
4  32654     0  "2 "    0     # LOAD-DROP    TULUCAY   60.00  LOAD==11.77(1.68)
0
 #
 #
 # (44) BUS FAULT  32656  "NAPA"
 #
1  32656  32660  "1"    0     # LINE from  NAPA      60.00  to  BSLT TAP  60.00
1  32656  32662  "1"    0     # LINE from  NAPA      60.00  to  TULCY JT  60.00
4  32656     0  "1 "    0     # LOAD-DROP    NAPA      60.00  LOAD==19.68(2.80)
4  32656     0  "2 "    0     # LOAD-DROP    NAPA      60.00  LOAD==16.99(2.42)
0
 #
 #
 # (45) BUS FAULT  32664  "IGNACO A"
 #
1  32664  32666  "1"    0     # LINE from  IGNACO A  60.00  to  IGNACO B  60.00
1  32664  32667  "1"    0     # LINE from  IGNACO A  60.00  to  IG JCT    60.00
1  32664  32676  "1"    0     # LINE from  IGNACO A  60.00  to  HMLTN FD  60.00
1  32664  32677  "1"    0     # LINE from  IGNACO A  60.00  to  HMLTNBFD  60.00
0
 #
 #
 # (46) BUS FAULT  32666  "IGNACO B"
 #
1  32666  32664  "1"    0     # LINE from  IGNACO B  60.00  to  IGNACO A  60.00
1  32666  32669  "1"    0     # LINE from  IGNACO B  60.00  to  STAF_JCT  60.00
1  32666  32674  "1"    0     # LINE from  IGNACO B  60.00  to  WOODACRE  60.00
2  32666  32568  "1"    0     # TRAN from  IGNACO B  60.00  to  IGNACIO  115.00
2  32666  32568  "3"    0     # TRAN from  IGNACO B  60.00  to  IGNACIO  115.00
0
 #
 #
 # (47) BUS FAULT  32668  "NOVATO"
 #
1  32668  32665  "1"    0     # LINE from  NOVATO    60.00  to  NVTO JCT  60.00
1  32668  32667  "1"    0     # LINE from  NOVATO    60.00  to  IG JCT    60.00
4  32668     0  "1 "    0     # LOAD-DROP    NOVATO    60.00  LOAD==5.04(0.72)
4  32668     0  "2 "    0     # LOAD-DROP    NOVATO    60.00  LOAD==15.47(2.20)
0
 #
 #
 # (48) BUS FAULT  32670  "STAFFORD"
 #
1  32670  32665  "1"    0     # LINE from  STAFFORD  60.00  to  NVTO JCT  60.00
1  32670  32669  "1"    0     # LINE from  STAFFORD  60.00  to  STAF_JCT  60.00
4  32670     0  "1 "    0     # LOAD-DROP    STAFFORD  60.00  LOAD==10.16(1.45)
4  32670     0  "2 "    0     # LOAD-DROP    STAFFORD  60.00  LOAD==10.61(1.51)
0
 #
 #
 # (49) BUS FAULT  32671  "BOLINAS"
 #
1  32671  32674  "1"    0     # LINE from  BOLINAS   60.00  to  WOODACRE  60.00
1  32671  32672  "1"    0     # LINE from  BOLINAS   60.00  to  OLEMA     60.00
4  32671     0  "1 "    0     # LOAD-DROP    BOLINAS   60.00  LOAD==1.48(0.21)
0
 #
 #
 # (50) BUS FAULT  32672  "OLEMA"
 #
1  32672  32671  "1"    0     # LINE from  OLEMA     60.00  to  BOLINAS   60.00
1  32672  32673  "1"    0     # LINE from  OLEMA     60.00  to  TOCA_JCT  60.00
4  32672     0  "1 "    0     # LOAD-DROP    OLEMA     60.00  LOAD==3.24(0.46)
0
 #
 #
 # (51) BUS FAULT  32680  "GREENBRE"
 #
1  32680  32678  "1"    0     # LINE from  GREENBRE  60.00  to  SAN RFLJ  60.00
1  32680  32682  "1"    0     # LINE from  GREENBRE  60.00  to  ALTO      60.00
4  32680     0  "1 "    0     # LOAD-DROP    GREENBRE  60.00  LOAD==10.09(1.44)
4  32680     0  "2 "    0     # LOAD-DROP    GREENBRE  60.00  LOAD==13.05(1.86)
0
 #
 #
 # (52) BUS FAULT  32682  "ALTO"
 #
1  32682  32680  "1"    0     # LINE from  ALTO      60.00  to  GREENBRE  60.00
```

```
1  32682  32684  "1"    0     # LINE from  ALTO      60.00  to  ALTOJT1   60.00
1  32682  32686  "1"    0     # LINE from  ALTO      60.00  to  ALTOJT2   60.00
4  32682     0  "1 "    0     # LOAD-DROP    ALTO      60.00  LOAD==17.21(2.45)
4  32682     0  "3 "    0     # LOAD-DROP    ALTO      60.00  LOAD==18.42(2.62)
0
 #
 #
 # (53) BUS FAULT  32688  "SAUSALTO"
 #
1  32688  32684  "1"    0     # LINE from  SAUSALTO  60.00  to  ALTOJT1   60.00
1  32688  32686  "1"    0     # LINE from  SAUSALTO  60.00  to  ALTOJT2   60.00
4  32688     0  "2 "    0     # LOAD-DROP    SAUSALTO  60.00  LOAD==10.92(1.56)
0
 #
 #
 # 2013 category c contingency list (dctl and bus outages)
 # East Bay Division Zone 307
 #
 #
 # (54)   C5 DCTL OUTAGE
 # Ignacio - Sobrante and Lakeville - Sobrante 230 kV Lines pre-project outage
1  30437 30445  "1 "    0     # line from  CROCKETT 230.00   (3) to BRKR  IGNACIO  230.00
1  30437 30438  "1 "    0     # line from  CROCKETT 230.00   (3) to (2)   C&H      230.00
1  30437 30540  "1 "    0     # line from  CROCKETT 230.00   (3) to BRKR  SOBRANTE 230.00
2  30438 32900  "1 "    0     # TRAN from  C&H      230.00  BRKR to (1)   CRCKTCOG  18.00
4  30438     0  "1 "    0     # LOAD-DROP    C&H      230.00  LOAD==3.32(0.76)
3  32900     0  "1 "    0     # GEN-DROP    CRCKTCOG  18.00  GEN==240.00(40.82)
 #
1  30435 30540  "2 "    0     # line from  LAKEVILE 230.00  BRKR to BRKR  SOBRANTE 230.00
0
 #
 #
 # (55)   C5 DCTL OUTAGE
 # T257 - Sobrante #1 and #2 230 kV Lines post-project outage
1  30446 30437  "1 "    0     # line from  T257SWST 230.00  BRKR to (3)   CROCKETT 230.00
1  30437 30438  "1 "    0     # line from  CROCKETT 230.00   (3) to (2)   C&H      230.00
1  30437 30540  "1 "    0     # line from  CROCKETT 230.00   (3) to BRKR  SOBRANTE 230.00
2  30438 32900  "1 "    0     # TRAN from  C&H      230.00  BRKR to (1)   CRCKTCOG  18.00
4  30438     0  "1 "    0     # LOAD-DROP    C&H      230.00  LOAD==3.32(0.76)
3  32900     0  "1 "    0     # GEN-DROP    CRCKTCOG  18.00  GEN==240.00(54.42)
 #
1  30446 30540  "2 "    0     # line from  T257SWST 230.00  BRKR to BRKR  SOBRANTE 230.00
0
 #
 #
 # (56)   C5 DCTL OUTAGE
 # Christie - Sobrante and Martinez - Sobrante 115 kV Lines
1  32756 33010  "1 "    0     # line from  CHRISTIE 115.00  BRKR to BRKR  SOBRANTE 115.00
 #
1  32990 33014  "1 "    0     # line from  MARTNZ D 115.00  BRKR to (3)   ALHAMTP1 115.00
1  33014 33010  "1 "    0     # line from  ALHAMTP1 115.00   (3) to BRKR  SOBRANTE 115.00
1  33014 33011  "1 "    0     # line from  ALHAMTP1 115.00   (3) to BRKR  ALHAMBRA 115.00
4  33011     0  "1 "    0     # LOAD-DROP    ALHAMBRA 115.00  LOAD==10.29(2.34)
4  33011     0  "2 "    0     # LOAD-DROP    ALHAMBRA 115.00  LOAD==9.17(2.09)
1  33016 33011  "1 "    1     # LINE-TRANSFER  ALHAMTP1  115.00  TO  ALHAMTP2  115.00
4  33011     0  "**"    1     # RESTORE ALHAMBRA load
0
 #
 #
 # (57)   C5 DCTL OUTAGE
 # Sobrante - El Cerrito #1 and #2 115 kV Lines
1  32765 33010  "1 "    0     # line from  ELCRTJ1  115.00   (2) to BRKR  SOBRANTE 115.00
1  32765 32766  "1 "    0     # line from  ELCRTJ1  115.00   (2) to BRKR  EL CRRTO 115.00
 #
1  32766 33010  "2 "    0     # line from  EL CRRTO 115.00  BRKR to BRKR  SOBRANTE 115.00
0
 #
 #
 # (58)   C5 DCTL OUTAGE
 # Sobrante - Richmond #1 and #2 115 kV Lines
1  32767 33010  "1 "    0     # line from  ELCRTJ2  115.00   (2) to BRKR  SOBRANTE 115.00
1  32767 32768  "1 "    0     # line from  ELCRTJ2  115.00   (2) to BRKR  RICHMOND 115.00
 #
1  32768 33010  "2 "    0     # line from  RICHMOND 115.00  BRKR to BRKR  SOBRANTE 115.00
0
 #
 #
 # (59)   C5 DCTL OUTAGE
```

```
 # Sobrante - Standard Oil #1 and #2 115 kV Lines
1  32748 32750  "1 "    0     # line from  PP STEEL 115.00  BRKR to (3)   PPSTLTAP 115.00
1  32750 32774  "1 "    0     # line from  PPSTLTAP 115.00   (3) to (3)   PTPNLTAP 115.00
1  32750 32760  "1 "    0     # line from  PPSTLTAP 115.00   (3) to (1)   PT PINLE 115.00
1  32774 32762  "1 "    0     # line from  PTPNLTAP 115.00   (3) to BRKR  STD. OIL 115.00
1  32774 32808  "1 "    0     # line from  PTPNLTAP 115.00   (3) to (2)   SNPBLTP2 115.00
1  32808 33010  "1 "    0     # line from  SNPBLTP2 115.00   (2) to BRKR  SOBRANTE 115.00
4  32748     0  "1 "    0     # LOAD-DROP    PP STEEL 115.00  LOAD==0.19(0.25)
4  32760     0  "1 "    0     # LOAD-DROP    PT PINLE 115.00  LOAD==14.78(3.36)
 #
1  32806 32758  "1 "    0     # line from  SNPBLTP1 115.00   (3) to BRKR  SAN PBLO 115.00
1  32806 32762  "2 "    0     # line from  SNPBLTP1 115.00   (3) to BRKR  STD. OIL 115.00
1  32806 33010  "2 "    0     # line from  SNPBLTP1 115.00   (3) to BRKR  SOBRANTE 115.00
4  32758     0  "1 "    0     # LOAD-DROP    SAN PBLO 115.00  LOAD==19.98(4.55)
1  32758 32808  "2 "    1     # LINE-TRANSFER SNPBLTP1 to SNPBLTP2
4  32758     0  "**"    1     # RESTORE SAN PABLO load
0
 #
 #
 # (60)   C5 DCTL OUTAGE
 # Oleum - North Tower - Christie and Martinez - Sobrante 115 kV Lines
1  32620 32778  "1 "    0     # line from  NTWRJCT2 115.00   (2) to (3)   MRTNZJCT 115.00
1  32620 32602  "1 "    0     # line from  NTWRJCT2 115.00   (2) to BRKR  NRTH TWR 115.00
1  32778 32754  "1 "    0     # line from  MRTNZJCT 115.00   (3) to BRKR  OLEUM    115.00
1  32778 32756  "1 "    0     # line from  MRTNZJCT 115.00   (3) to BRKR  CHRISTIE 115.00
4  32602     0  "1 "    0     # LOAD-DROP    NRTH TWR 115.00  LOAD==14.43(2.06)
4  32602     0  "2 "    0     # LOAD-DROP    NRTH TWR 115.00  LOAD==9.58(1.37)
4  32602     0  "3 "    0     # LOAD-DROP    NRTH TWR 115.00  LOAD==6.08(0.87)
4  32602     0  "4 "    0     # LOAD-DROP    NRTH TWR 115.00  LOAD==2.85(0.41)
1  32602 32618  "1 "    1     # LINE-TRANSFER NTWRJCT2 115.00 to NTWRJCT1 115.00
4  32602     0  "**"    1     # RESTORE NORTH TOWER load
 #
1  32990 33014  "1 "    0     # line from  MARTNZ D 115.00  BRKR to (3)   ALHAMTP1 115.00
1  33014 33010  "1 "    0     # line from  ALHAMTP1 115.00   (3) to BRKR  SOBRANTE 115.00
1  33014 33011  "1 "    0     # line from  ALHAMTP1 115.00   (3) to BRKR  ALHAMBRA 115.00
4  33011     0  "1 "    0     # LOAD-DROP    ALHAMBRA 115.00  LOAD==10.29(2.34)
4  33011     0  "2 "    0     # LOAD-DROP    ALHAMBRA 115.00  LOAD==9.17(2.09)
1  33016 33011  "1 "    1     # LINE-TRANSFER  ALHAMTP1  115.00  TO  ALHAMTP2  115.00
4  33011     0  "**"    1     # RESTORE ALHAMBRA load
0
 #
 #
 # (61)   C5 DCTL OUTAGE
 # Oleum - Martinez and Martinez - Sobrante 115 kV Lines
1  33016 32754  "1 "    0     # line from  ALHAMTP2 115.00   (2) to BRKR  OLEUM    115.00
1  33016 32990  "1 "    0     # line from  ALHAMTP2 115.00   (2) to BRKR  MARTNZ D 115.00
 #
1  32990 33014  "1 "    0     # line from  MARTNZ D 115.00  BRKR to (3)   ALHAMTP1 115.00
1  33014 33010  "1 "    0     # line from  ALHAMTP1 115.00   (3) to BRKR  SOBRANTE 115.00
1  33014 33011  "1 "    0     # line from  ALHAMTP1 115.00   (3) to BRKR  ALHAMBRA 115.00
4  33011     0  "1 "    0     # LOAD-DROP    ALHAMBRA 115.00  LOAD==10.29(2.34)
4  33011     0  "2 "    0     # LOAD-DROP    ALHAMBRA 115.00  LOAD==9.17(2.09)
1  33016 33011  "1 "    1     # LINE-TRANSFER  ALHAMTP1  115.00  TO  ALHAMTP2  115.00
4  33011     0  "**"    1     # RESTORE ALHAMBRA load
0
 #
 #
 # (62)   C5 DCTL OUTAGE
 # Oleum - North Tower - Christie and Oleum - Martinez 115 kV Lines
1  32620 32778  "1 "    0     # line from  NTWRJCT2 115.00   (2) to (3)   MRTNZJCT 115.00
1  32620 32602  "1 "    0     # line from  NTWRJCT2 115.00   (2) to BRKR  NRTH TWR 115.00
1  32778 32754  "1 "    0     # line from  MRTNZJCT 115.00   (3) to BRKR  OLEUM    115.00
1  32778 32756  "1 "    0     # line from  MRTNZJCT 115.00   (3) to BRKR  CHRISTIE 115.00
4  32602     0  "1 "    0     # LOAD-DROP    NRTH TWR 115.00  LOAD==14.43(2.06)
4  32602     0  "2 "    0     # LOAD-DROP    NRTH TWR 115.00  LOAD==9.58(1.37)
4  32602     0  "3 "    0     # LOAD-DROP    NRTH TWR 115.00  LOAD==6.08(0.87)
4  32602     0  "4 "    0     # LOAD-DROP    NRTH TWR 115.00  LOAD==2.85(0.41)
1  32602 32618  "1 "    1     # LINE-TRANSFER NTWRJCT2 115.00 to NTWRJCT1 115.00
4  32602     0  "**"    1     # RESTORE NORTH TOWER load
 #
1  33016 32754  "1 "    0     # line from  ALHAMTP2 115.00   (2) to BRKR  OLEUM    115.00
1  33016 32990  "1 "    0     # line from  ALHAMTP2 115.00   (2) to BRKR  MARTNZ D 115.00
0
 #
 #
 # (63)   C5 DCTL OUTAGE
 # Oleum - El Cerrito #1 and #2 115 kV Lines
1  32754 32802  "1 "    0     # line from  OLEUM    115.00  BRKR to (3)   VLYVWTP1 115.00
```

```
1  32802 32764  "1 "    0     # line from  VLYVWTP1 115.00   (3) to BRKR  VALLY VW 115.00
1  32802 32766  "1 "    0     # line from  VLYVWTP1 115.00   (3) to BRKR  EL CRRTO 115.00
4  32764     0  "1 "    0     # LOAD-DROP    VALLY VW 115.00  LOAD==7.65(1.74)
4  32764     0  "2 "    0     # LOAD-DROP    VALLY VW 115.00  LOAD==15.69(3.58)
1  32764 32804  "2 "    1     # LINE-TRANSFER VLYVWTP1 to VLYVWTP2
4  32764     0  "**"    1     # RESTORE VALLEY VIEW load
 #
1  32754 32804  "2 "    0     # line from  OLEUM    115.00  BRKR to (2)   VLYVWTP2 115.00
1  32804 32766  "2 "    0     # line from  VLYVWTP2 115.00   (2) to BRKR  EL CRRTO 115.00
0
 #
 #
 # (64)   C5 DCTL OUTAGE
 # Moraga - Claremont #1 and #2 115 kV Lines
1  33020 32780  "1 "    0     # line from  MORAGA   115.00  BRKR to BRKR  CLARMNT  115.00
 #
1  33020 32780  "2 "    0     # line from  MORAGA   115.00  BRKR to BRKR  CLARMNT  115.00
0
 #
 #
 # (65)   C5 DCTL OUTAGE
 # Moraga - Oakland X #1 and #2 115 kV Lines
1  33020 32790  "1 "    0     # line from  MORAGA   115.00  BRKR to BRKR  STATIN X 115.00
 #
1  33020 32790  "2 "    0     # line from  MORAGA   115.00  BRKR to BRKR  STATIN X 115.00
0
 #
 #
 # (66)   C5 DCTL OUTAGE
 # Moraga - Oakland X #3 and #4 115 kV Lines
1  33020 32790  "3 "    0     # line from  MORAGA   115.00  BRKR to BRKR  STATIN X 115.00
 #
1  33020 32790  "4 "    0     # line from  MORAGA   115.00  BRKR to BRKR  STATIN X 115.00
0
 #
 #
 # (67)   C5 DCTL OUTAGE
 # Moraga - Oakland J and Moraga - San Leandro #3 115 kV Lines
1  33020 32792  "1 "    0     # line from  MORAGA   115.00  BRKR to BRKR  STATIN J 115.00
 #
1  33020 35101  "3 "    0     # line from  MORAGA   115.00  BRKR to BRKR  SN LNDRO 115.00
0
 #
 #
 # (68)   C5 DCTL OUTAGE
 # Moraga - Oakland J and San Leandro - Oakland J 115 kV Lines
1  33020 32792  "1 "    0     # line from  MORAGA   115.00  BRKR to BRKR  STATIN J 115.00
 #
1  32792 32814  "1 "    0     # line from  STATIN J 115.00  BRKR to (3)   EDESTAP1 115.00
1  32814 32810  "1 "    0     # line from  EDESTAP1 115.00   (3) to BRKR  EDES     115.00
1  32814 35113  "1 "    0     # line from  EDESTAP1 115.00   (3) to (2)   DMTAR_SL 115.00
1  35113 35101  "1 "    0     # line from  DMTAR_SL 115.00   (2) to BRKR  SN LNDRO 115.00
4  32810     0  "2 "    0     # LOAD-DROP    EDES     115.00  LOAD==18.85(4.29)
4  32810     0  "3 "    0     # LOAD-DROP    EDES     115.00  LOAD==29.45(6.71)
4  35113     0  "1 "    0     # LOAD-DROP    DMTAR_SL 115.00  LOAD==3.61(2.24)
1  32810 32812  "1 "    1     # LINE-TRANSFER EDESTAP1 to EDS GRNT
4  32810     0  "**"    1     # RESTORE EDES load
0
 #
 #
 # (69) BUS FAULT  32740  "HILLSIDE"
 #
1  32740  33006  "1"    0     # LINE from  HILLSIDE 115.00  to  GRIZLYJ1 115.00
1  32740  33008  "2"    0     # LINE from  HILLSIDE 115.00  to  GRIZLYJ2 115.00
1  32740  32770  "1"    0     # LINE from  HILLSIDE 115.00  to  GRIZZLY2 115.00
1  32740  32770  "2"    0     # LINE from  HILLSIDE 115.00  to  GRIZZLY2 115.00
4  32740     0  "SG"    0     # LOAD-DROP    HILLSIDE 115.00  LOAD==30.51(18.91)
3  32740     0  "1 "    0     # GEN-DROP    HILLSIDE 115.00  GEN==26.00(-8.70)
0
 #
 #
 # (70) BUS FAULT  32748  "PP STEEL"
 #
1  32748  32750  "1"    0     # LINE from  PP STEEL 115.00  to  PPSTLTAP 115.00
4  32748     0  "1 "    0     # LOAD-DROP    PP STEEL 115.00  LOAD==0.19(0.25)
0
 #
 #
```

```
 # (71) BUS FAULT  32754  "OLEUM" Oleum 115 kV Bus Section E
 #
1  32754  32778  "1"    0     # LINE from  OLEUM    115.00  to  MRTNZJCT 115.00
1  32754  32849  "2"    0     # LINE from  OLEUM    115.00  to  CON25    115.00
1  32754  32911  "2"    0     # LINE from  OLEUM    115.00  to  UNOCAL2  115.00
1  32754  33016  "1"    0     # LINE from  OLEUM    115.00  to  ALHAMTP2 115.00
0
 #
 #
 # (72) BUS FAULT  32754  "OLEUM" Oleum 115 kV Bus Section F
 #
1  32754  32802  "1"    0     # LINE from  OLEUM    115.00  to  VLYVWTP1 115.00
1  32754  32804  "2"    0     # LINE from  OLEUM    115.00  to  VLYVWTP2 115.00
1  32754  32849  "1"    0     # LINE from  OLEUM    115.00  to  CON25    115.00
1  32754  32911  "1"    0     # LINE from  OLEUM    115.00  to  UNOCAL2  115.00
0
 #
 #
 # (73) BUS FAULT  32756  "CHRISTIE"
 #
1  32756  32778  "1"    0     # LINE from  CHRISTIE 115.00  to  MRTNZJCT 115.00
1  32756  33010  "1"    0     # LINE from  CHRISTIE 115.00  to  SOBRANTE 115.00
2  32756  32852  "1"    0     # TRAN from  CHRISTIE 115.00  to  CHRISTIE  60.00
0
 #
 #
 # (74) BUS FAULT  32758  "SAN PBLO"
 #
1  32758  32806  "1"    0     # LINE from  SAN PBLO 115.00  to  SNPBLTP1 115.00
1  32758  32808  "2"    0     # LINE from  SAN PBLO 115.00  to  SNPBLTP2 115.00
4  32758     0  "1 "    0     # LOAD-DROP    SAN PBLO 115.00  LOAD==19.98(4.55)
0
 #
 #
 # (75) BUS FAULT  32764  "VALLY VW"
 #
1  32764  32802  "1"    0     # LINE from  VALLY VW 115.00  to  VLYVWTP1 115.00
1  32764  32804  "2"    0     # LINE from  VALLY VW 115.00  to  VLYVWTP2 115.00
4  32764     0  "1 "    0     # LOAD-DROP    VALLY VW 115.00  LOAD==7.65(1.74)
4  32764     0  "2 "    0     # LOAD-DROP    VALLY VW 115.00  LOAD==15.69(3.58)
0
 #
 #
 # (76) BUS FAULT  32766  "EL CRRTO" El Cerrito 115 kV Bus Section D
 #
1  32766  32765  "1"    0     # LINE from  EL CRRTO 115.00  to  ELCRTJ1  115.00
1  32766  32802  "1"    0     # LINE from  EL CRRTO 115.00  to  VLYVWTP1 115.00
4  32766     0  "5 "    0     # LOAD-DROP    EL CRRTO 115.00  LOAD==7.10(1.44)
0
 #
 #
 # (77) BUS FAULT  32766  "EL CRRTO" El Cerrito 115 kV Bus Section E
 #
1  32766  33010  "2"    0     # LINE from  EL CRRTO 115.00  to  SOBRANTE 115.00
1  32766  32804  "2"    0     # LINE from  EL CRRTO 115.00  to  VLYVWTP2 115.00
4  32766     0  "6 "    0     # LOAD-DROP    EL CRRTO 115.00  LOAD==6.90(1.40)
0
 #
 #
 # (78) BUS FAULT  32766  "EL CRRTO" El Cerrito 115 kV Bus Section Loads 1 & 2
 #
4  32766     0  "1 "    0     # LOAD-DROP    EL CRRTO 115.00  LOAD==25.48(5.81)
4  32766     0  "2 "    0     # LOAD-DROP    EL CRRTO 115.00  LOAD==31.69(7.22)
0
 #
 #
 # (79) BUS FAULT  32766  "EL CRRTO" El Cerrito 115 kV Bus Section Load 4
 #
4  32766     0  "4 "    0     # LOAD-DROP    EL CRRTO 115.00  LOAD==55.53(12.65)
0
 #
 #
 # (80) BUS FAULT  32768  "RICHMOND" Richmond 115 kV Bus Section 1
 #
1  32768  32767  "1"    0     # LINE from  RICHMOND 115.00  to  ELCRTJ2  115.00
4  32768     0  "2 "    0     # LOAD-DROP    RICHMOND 115.00  LOAD==18.34(4.18)
0
 #
```

```
 #
 # (81) BUS FAULT  32768  "RICHMOND" Richmond 115 kV Bus Section 2
 #
1  32768  33010  "2"    0     # LINE from  RICHMOND 115.00  to  SOBRANTE 115.00
4  32768     0  "1 "    0     # LOAD-DROP    RICHMOND 115.00  LOAD==37.70(8.59)
0
 #
 #
 # (82) BUS FAULT  32770  "GRIZZLY2"
 #
1  32770  32740  "1"    0     # LINE from  GRIZZLY2 115.00  to  HILLSIDE 115.00
1  32770  32740  "2"    0     # LINE from  GRIZZLY2 115.00  to  HILLSIDE 115.00
4  32770     0  "1 "    0     # LOAD-DROP    GRIZZLY2 115.00  LOAD==4.37(0.77)
0
 #
 #
 # (83) BUS FAULT  32780  "CLARMNT" Claremont 115 kV Bus Section 1
 #
1  32780  32782  "1"    0     # LINE from  CLARMNT  115.00  to  STATIN D 115.00
1  32780  33012  "1"    0     # LINE from  CLARMNT  115.00  to  EST PRTL 115.00
1  32780  33020  "1"    0     # LINE from  CLARMNT  115.00  to  MORAGA   115.00
0
 #
 #
 # (84) BUS FAULT  32780  "CLARMNT" Claremont 115 kV Bus Section 2
 #
1  32780  32782  "2"    0     # LINE from  CLARMNT  115.00  to  STATIN D 115.00
1  32780  33008  "2"    0     # LINE from  CLARMNT  115.00  to  GRIZLYJ2 115.00
1  32780  33020  "2"    0     # LINE from  CLARMNT  115.00  to  MORAGA   115.00
4  32780     0  "2 "    0     # LOAD-DROP    CLARMNT  115.00  LOAD==19.48(4.44)
0
 #
 #
 # (85) BUS FAULT  32782  "STATIN D"
 #
1  32782  32780  "1"    0     # LINE from  STATIN D 115.00  to  CLARMNT  115.00
1  32782  32780  "2"    0     # LINE from  STATIN D 115.00  to  CLARMNT  115.00
1  32782  32788  "1"    0     # LINE from  STATIN D 115.00  to  STATIN L 115.00
4  32782     0  "3 "    0     # LOAD-DROP    STATIN D 115.00  LOAD==26.13(5.95)
4  32782     0  "4 "    0     # LOAD-DROP    STATIN D 115.00  LOAD==39.73(9.05)
4  32782     0  "5 "    0     # LOAD-DROP    STATIN D 115.00  LOAD==43.68(9.96)
0
 #
 #
 # (86) BUS FAULT  32786  "OAK C115" Oakland C 115 kV Bus Section D
 #
1  32786  32788  "1"    0     # LINE from  OAK C115 115.00  to  STATIN L 115.00
2  32786  32908  "3"    0     # TRAN from  OAK C115 115.00  to  OAK C12   12.00
4  32786     0  "5 "    0     # LOAD-DROP    OAK C115 115.00  LOAD==10.40(2.11)
0
 #
 #
 # (87) BUS FAULT  32786  "OAK C115" Oakland C 115 kV Bus Section E
 #
1  32786  32787  "1"    0     # LINE from  OAK C115 115.00  to  Q155     115.00
1  32786  32790  "2"    0     # LINE from  OAK C115 115.00  to  STATIN X 115.00
1  32786  32790  "3"    0     # LINE from  OAK C115 115.00  to  STATIN X 115.00
1  32786  32793  "1"    0     # LINE from  OAK C115 115.00  to  SCHNITZ  115.00
1  32786  38026  "1"    0     # LINE from  OAK C115 115.00  to  ALAMEDCT 115.00
2  32786  32908  "1"    0     # TRAN from  OAK C115 115.00  to  OAK C12   12.00
2  32786  32908  "2"    0     # TRAN from  OAK C115 115.00  to  OAK C12   12.00
4  32786     0  "6 "    0     # LOAD-DROP    OAK C115 115.00  LOAD==4.23(0.86)
0
 #
 #
 # (88) BUS FAULT  32788  "STATIN L"
 #
1  32788  32782  "1"    0     # LINE from  STATIN L 115.00  to  STATIN D 115.00
1  32788  32786  "1"    0     # LINE from  STATIN L 115.00  to  OAK C115 115.00
4  32788     0  "1 "    0     # LOAD-DROP    STATIN L 115.00  LOAD==18.05(4.11)
4  32788     0  "3 "    0     # LOAD-DROP    STATIN L 115.00  LOAD==18.05(4.11)
4  32788     0  "5 "    0     # LOAD-DROP    STATIN L 115.00  LOAD==18.05(4.11)
0
 #
 #
 # (89) BUS FAULT  32790  "STATIN X" Oakland X 115 kV Bus Section 1
 #
1  32790  32786  "3"    0     # LINE from  STATIN X 115.00  to  OAK C115 115.00
```

```
1  32790  33020  "2"    0     # LINE from  STATIN X 115.00  to  MORAGA   115.00
1  32790  33020  "3"    0     # LINE from  STATIN X 115.00  to  MORAGA   115.00
4  32790     0  "2 "    0     # LOAD-DROP    STATIN X 115.00  LOAD==21.01(4.79)
0
 #
 #
 # (90) BUS FAULT  32790  "STATIN X" Oakland X 115 kV Bus Section 1
 #
1  32790  32786  "2"    0     # LINE from  STATIN X 115.00  to  OAK C115 115.00
1  32790  33020  "1"    0     # LINE from  STATIN X 115.00  to  MORAGA   115.00
1  32790  33020  "4"    0     # LINE from  STATIN X 115.00  to  MORAGA   115.00
4  32790     0  "3 "    0     # LOAD-DROP    STATIN X 115.00  LOAD==17.34(3.95)
4  32790     0  "4 "    0     # LOAD-DROP    STATIN X 115.00  LOAD==16.12(3.67)
0
 #
 #
 # (91) BUS FAULT  32792  "STATIN J" Oakland J 115 kV Bus Section D
 #
1  32792  32798  "1"    0     # LINE from  STATIN J 115.00  to  OWENSTAP 115.00
1  32792  38024  "1"    0     # LINE from  STATIN J 115.00  to  JENNY    115.00
4  32792     0  "1 "    0     # LOAD-DROP    STATIN J 115.00  LOAD==38.21(8.71)
0
 #
 #
 # (92) BUS FAULT  32792  "STATIN J" Oakland J 115 kV Bus Section E
 #
1  32792  32814  "1"    0     # LINE from  STATIN J 115.00  to  EDESTAP1 115.00
1  32792  33020  "1"    0     # LINE from  STATIN J 115.00  to  MORAGA   115.00
4  32792     0  "2 "    0     # LOAD-DROP    STATIN J 115.00  LOAD==17.16(3.91)
4  32792     0  "5 "    0     # LOAD-DROP    STATIN J 115.00  LOAD==28.89(6.58)
0
 #
 #
 # (93) BUS FAULT  32794  "MARITIME"
 #
1  32794  32793  "1"    0     # LINE from  MARITIME 115.00  to  SCHNITZ  115.00
4  32794     0  "1 "    0     # LOAD-DROP    MARITIME 115.00  LOAD==0.95(1.11)
0
 #
 #
 # (94) BUS FAULT  32800  "OWNBRKWY"
 #
1  32800  32798  "1"    0     # LINE from  OWNBRKWY 115.00  to  OWENSTAP 115.00
4  32800     0  "1 "    0     # LOAD-DROP    OWNBRKWY 115.00  LOAD==9.29(5.51)
0
 #
 #
 # (95) BUS FAULT  32810  "EDES" Edes 115 kV Bus Section E
 #
1  32810  32812  "1"    0     # LINE from  EDES     115.00  to  EDS GRNT 115.00
4  32810     0  "2 "    0     # LOAD-DROP    EDES     115.00  LOAD==18.85(4.29)
0
 #
 #
 # (96) BUS FAULT  32810  "EDES" Edes 115 kV Bus Section H
 #
1  32810  32814  "1"    0     # LINE from  EDES     115.00  to  EDESTAP1 115.00
4  32810     0  "3 "    0     # LOAD-DROP    EDES     115.00  LOAD==29.45(6.71)
0
 #
 #
 # (97) BUS FAULT  32852  "CHRISTIE"
 #
1  32852  32850  "1"    0     # LINE from  CHRISTIE  60.00  to  UNIN CHM  60.00
1  32852  32856  "2"    0     # LINE from  CHRISTIE  60.00  to  FRANKLIN  60.00
1  32852  33067  "1"    0     # LINE from  CHRISTIE  60.00  to  PCBRICK   60.00
2  32852  32756  "1"    0     # TRAN from  CHRISTIE  60.00  to  CHRISTIE 115.00
0
 #
 #
 # (98) BUS FAULT  32860  "FRKLNALT"
 #
1  32860  32850  "1"    0     # LINE from  FRKLNALT  60.00  to  UNIN CHM  60.00
1  32860  32856  "1"    0     # LINE from  FRKLNALT  60.00  to  FRANKLIN  60.00
0
 #
 #
 # 2013 category c contingency list (dctl and bus outages)
```

```
 # Diablo Division Zone 308
 #
 #
 # (99)   C5 DCTL OUTAGE
 # Contra Costa #1 and #2 115 kV Lines
1  33000 33047  "1 "    0     # line from  CC SUB   115.00  BRKR to (2)   CC JCT   115.00
1  33047 33045  "1 "    0     # line from  CC JCT   115.00   (2) to (2)   FIBRJCT1 115.00
1  33045 33048  "1 "    0     # line from  FIBRJCT1 115.00   (2) to (2)   RVECTP   115.00
1  33048 33049  "1 "    0     # line from  RVECTP   115.00   (2) to BRKR  RVEC     115.00
 #
1  33000 33046  "1 "    0     # line from  CC SUB   115.00  BRKR to (3)   FIBRJCT2 115.00
1  33046 33001  "1 "    0     # line from  FIBRJCT2 115.00   (3) to BRKR  DOMTAR   115.00
1  33046 33044  "1 "    0     # line from  FIBRJCT2 115.00   (3) to (2)   FIBRBJCT 115.00
1  33044 33002  "1 "    0     # line from  FIBRBJCT 115.00   (2) to (2)   CROWN Z  115.00
2  33002 33133  "1 "    0     # TRAN from  CROWN Z  115.00   (2) to (1)   GWF #3    13.80
4  33001     0  "1 "    0     # LOAD-DROP    DOMTAR   115.00  LOAD==2.40(2.12)
4  33133     0  "SG"    0     # LOAD-DROP    GWF #3    13.80  LOAD==2.84(0.65)
3  33133     0  "1 "    0     # GEN-DROP    GWF #3    13.80  GEN==19.00(4.33)
0
 #
 #
 # (100)   C5 DCTL OUTAGE
 # Contra Costa - DuPont and Contra Costa - Balfour 60 kV Lines
1  33050 33080  "1 "    0     # line from  CC SUB    60.00  BRKR to (3)   WILBRTAP  60.00
1  33080 33051  "1 "    0     # line from  WILBRTAP  60.00   (3) to BRKR  DU PONT   60.00
2  33080 33134  "1 "    0     # TRAN from  WILBRTAP  60.00   (3) to (1)   GWF #4    13.80
4  33051     0  "1 "    0     # LOAD-DROP    DU PONT   60.00  LOAD==2.00(2.16)
4  33134     0  "SG"    0     # LOAD-DROP    GWF #4    13.80  LOAD==2.88(0.66)
3  33134     0  "1 "    0     # GEN-DROP    GWF #4    13.80  GEN==18.60(3.34)
1  33051 33081  "1 "    1     # LINE-TRANSFER  WILBRTAP  60.00  TO  DUPNTJCT  60.00
4  33051     0  "**"    1     # RESTORE DU PONT load
 #
1  33050 33081  "1 "    0     # line from  CC SUB    60.00  BRKR to (2)   DUPNTJCT  60.00
1  33081 33082  "1 "    0     # line from  DUPNTJCT  60.00   (2) to (3)   BALFRJCT  60.00
1  33082 33052  "1 "    0     # line from  BALFRJCT  60.00   (3) to (2)   MARSH     60.00
1  33082 33054  "1 "    0     # line from  BALFRJCT  60.00   (3) to BRKR  BALFOUR   60.00
1  33052 33053  "1 "    0     # line from  MARSH     60.00   (2) to (1)   BRIONES   60.00
4  33054     0  "1 "    0     # LOAD-DROP    BALFOUR   60.00  LOAD==4.00(0.81)
4  33053     0  "1 "    0     # LOAD-DROP    BRIONES   60.00  LOAD==3.90(1.84)
1  33083 33054  "1 "    1     # LINE-TRANSFER  BALFRJCT  60.00  TO  MDLRVRJT  60.00
4  33054     0  "**"    1     # RESTORE BALFOUR load
0
 #
 #
 # (101)   C5 DCTL OUTAGE
 # Pittsburg - Martinez #1 and #2 115 kV Lines
1  32950 32993  "1 "    0     # line from  PITSBURG 115.00  BRKR to (2)   W.P.BART 115.00
1  32993 33040  "1 "    0     # line from  W.P.BART 115.00   (2) to (3)   BOLLMAN1 115.00
1  33040 32994  "1 "    0     # line from  BOLLMAN1 115.00   (3) to (1)   BOLLMAN  115.00
1  33040 33042  "1 "    0     # line from  BOLLMAN1 115.00   (3) to (2)   IMHOFF_1 115.00
1  33042 32991  "1 "    0     # line from  IMHOFF_1 115.00   (2) to BRKR  MARTNZ E 115.00
4  32993     0  "1 "    0     # LOAD-DROP    W.P.BART 115.00  LOAD==7.29(1.48)
4  32993     0  "3 "    0     # LOAD-DROP    W.P.BART 115.00  LOAD==13.49(3.07)
4  32994     0  "1 "    0     # LOAD-DROP    BOLLMAN  115.00  LOAD==2.59(1.36)
4  32994     0  "2 "    0     # LOAD-DROP    BOLLMAN  115.00  LOAD==2.59(1.36)
 #
1  32950 32992  "2 "    0     # line from  PITSBURG 115.00  BRKR to (2)   BOLLMAN2 115.00
1  32992 33043  "2 "    0     # line from  BOLLMAN2 115.00   (2) to (3)   IMHOFF_2 115.00
1  33043 32991  "2 "    0     # line from  IMHOFF_2 115.00   (3) to BRKR  MARTNZ E 115.00
1  33043 33041  "2 "    0     # line from  IMHOFF_2 115.00   (3) to (2)   IMHOFF   115.00
2  33041 33136  "1 "    0     # TRAN from  IMHOFF   115.00   (2) to (1)   CCCSD     12.47
4  33136     0  "SG"    0     # LOAD-DROP    CCCSD     12.47  LOAD==3.37(0.77)
3  33136     0  "1 "    0     # GEN-DROP    CCCSD     12.47  GEN==4.40(0.53)
0
 #
 #
 # (102)   C5 DCTL OUTAGE
 # Pittsburg - Clayton #3 and #4 115 kV Lines
1  32950 33032  "3 "    0     # line from  PITSBURG 115.00  BRKR to (2)   KIRKTAP1 115.00
1  33032 32970  "3 "    0     # line from  KIRKTAP1 115.00   (2) to BRKR  CLAYTN   115.00
 #
1  32950 32970  "4 "    0     # line from  PITSBURG 115.00  BRKR to BRKR  CLAYTN   115.00
0
 #
 #
 # (103)   C5 DCTL OUTAGE
 # Pittsburg - Columbia Steel and Pittsburg - Kirker - Columbia Steel 115 kV Lines
1  32950 33030  "1 "    0     # line from  PITSBURG 115.00  BRKR to (2)   COLSTJT1 115.00
```

```
1  33030 33036  "1 "    0     # line from  COLSTJT1 115.00   (2) to (3)   LINDETP1 115.00
1  33036 32954  "1 "    0     # line from  LINDETP1 115.00   (3) to (2)   DOW TAP1 115.00
1  33036 32961  "1 "    0     # line from  LINDETP1 115.00   (3) to (3)   GWF2 TAP 115.00
1  32954 32956  "1 "    0     # line from  DOW TAP1 115.00   (2) to (2)   DOW MTR  115.00
2  32956 33160  "1 "    0     # TRAN from  DOW MTR  115.00   (2) to (4)   DOW CHEM  13.80
1  33160 33161  "1 "    0     # line from  DOW CHEM  13.80   (4) to (1)   DOWCHEM1  13.80
1  33160 33162  "1 "    0     # line from  DOW CHEM  13.80   (4) to (1)   DOWCHEM2  13.80
1  33160 33163  "1 "    0     # line from  DOW CHEM  13.80   (4) to (1)   DOWCHEM3  13.80
1  32961 32960  "1 "    0     # line from  GWF2 TAP 115.00   (3) to (2)   GWF#2 HS 115.00
1  32961 33038  "1 "    0     # line from  GWF2 TAP 115.00   (3) to (2)   LINDEJCT 115.00
2  32960 33132  "1 "    0     # TRAN from  GWF#2 HS 115.00   (2) to (1)   GWF #2    13.80
1  33038 32957  "1 "    0     # line from  LINDEJCT 115.00   (2) to BRKR  PRAXAIR  115.00
4  33160     0  "SG"    0     # LOAD-DROP    DOW CHEM  13.80  LOAD==15.00(9.30)
4  33132     0  "SG"    0     # LOAD-DROP    GWF #2    13.80  LOAD==2.81(0.64)
4  32957     0  "1 "    0     # LOAD-DROP    PRAXAIR  115.00  LOAD==20.67(4.61)
3  33161     0  "1 "    0     # GEN-DROP    DOWCHEM1  13.80  GEN==15.30(6.00)
3  33162     0  "1 "    0     # GEN-DROP    DOWCHEM2  13.80  GEN==22.00(5.29)
3  33163     0  "1 "    0     # GEN-DROP    DOWCHEM3  13.80  GEN==22.00(5.29)
3  33132     0  "1 "    0     # GEN-DROP    GWF #2    13.80  GEN==12.30(3.13)
 #
1  32950 33033  "1 "    0     # line from  PITSBURG 115.00  BRKR to (3)   KIRKTAP2 115.00
1  33033 32951  "1 "    0     # line from  KIRKTAP2 115.00   (3) to BRKR  KIRKER   115.00
1  33033 33031  "1 "    0     # line from  KIRKTAP2 115.00   (3) to (2)   COLSTJT2 115.00
1  33031 33037  "1 "    0     # line from  COLSTJT2 115.00   (2) to (2)   LINDETP2 115.00
1  33037 32955  "1 "    0     # line from  LINDETP2 115.00   (2) to (1)   DOW TAP2 115.00
4  32951     0  "1 "    0     # LOAD-DROP    KIRKER   115.00  LOAD==38.02(7.72)
4  32951     0  "2 "    0     # LOAD-DROP    KIRKER   115.00  LOAD==44.19(8.97)
4  32951     0  "3 "    0     # LOAD-DROP    KIRKER   115.00  LOAD==53.77(10.92)
1  33032 32951  "1 "    1     # LINE-TRANSFER  KIRKTAP2  115.00  TO KIRKTAP1
4  32951 0      "**"    1     # RESTORE KIRKER load
0
 #
 #
 # (104)   C5 DCTL OUTAGE
 # Sobrante - Grizzly - East Portal and Sobrante - Grizzly - Claremont #2 115 kV Lines
1  32740 33006  "1 "    0     # line from  HILLSIDE 115.00  BRKR to (3)   GRIZLYJ1 115.00
1  33006 33010  "1 "    0     # line from  GRIZLYJ1 115.00   (3) to BRKR  SOBRANTE 115.00
1  33006 33012  "1 "    0     # line from  GRIZLYJ1 115.00   (3) to BRKR  EST PRTL 115.00
1  32770 32740  "1 "    0     # include GRIZZLY2 115.00  BRKR to HILLSIDE 115.00 ckt 1
 #
1  32740 33008  "2 "    0     # line from  HILLSIDE 115.00  BRKR to (3)   GRIZLYJ2 115.00
1  33008 32780  "2 "    0     # line from  GRIZLYJ2 115.00   (3) to BRKR  CLARMNT  115.00
1  33008 33010  "2 "    0     # line from  GRIZLYJ2 115.00   (3) to BRKR  SOBRANTE 115.00
1  32770 32740  "2 "    0     # include GRIZZLY2 115.00  BRKR to HILLSIDE 115.00 ckt 2
0
 #
 #
 # (105)   C5 DCTL OUTAGE
 # East Portal - Claremont and Sobrante - Grizzly - Claremont #2 115 kV Lines
1  33012 32780  "1 "    0     # line from  EST PRTL 115.00  BRKR to BRKR  CLARMNT  115.00
 #
1  32740 33008  "2 "    0     # line from  HILLSIDE 115.00  BRKR to (3)   GRIZLYJ2 115.00
1  33008 32780  "2 "    0     # line from  GRIZLYJ2 115.00   (3) to BRKR  CLARMNT  115.00
1  33008 33010  "2 "    0     # line from  GRIZLYJ2 115.00   (3) to BRKR  SOBRANTE 115.00
1  32770 32740  "2 "    0     # include GRIZZLY2 115.00  BRKR to HILLSIDE 115.00 ckt 2
0
 #
 #
 # (106)   C5 DCTL OUTAGE
 # Lakewood - Clayton #2 and Lakewood - Meadow Lane - Clayton 115 kV Lines
1  32970 32974  "2 "    0     # line from  CLAYTN   115.00  BRKR to BRKR  LAKEWD-M 115.00
 #
1  32970 33035  "1 "    0     # line from  CLAYTN   115.00  BRKR to (3)   LKWD_JCT 115.00
1  33035 32972  "1 "    0     # line from  LKWD_JCT 115.00   (3) to (2)   EBMUDGRY 115.00
1  33035 32973  "1 "    0     # line from  LKWD_JCT 115.00   (3) to BRKR  LAKEWD-C 115.00
1  32972 32971  "1 "    0     # line from  EBMUDGRY 115.00   (2) to BRKR  MEDW LNE 115.00
4  32972     0  "1 "    0     # LOAD-DROP    EBMUDGRY 115.00  LOAD==5.67(1.86)
0
 #
 #
 # (107)   C5 DCTL OUTAGE
 # Birds Landing - Contra Costa Sub and Birds Landing - Contra Costa 230 kV Lines
1  30479 30523  "1 "    0     # line from  BDLSWSTA 230.00  BRKR to BRKR  CC SUB   230.00
 #
1  30525 30479  "1 "    0     # line from  C.COSTA  230.00  BRKR to BRKR  BDLSWSTA 230.00
0
 #
 #
```

```
 # (108)   C5 DCTL OUTAGE
 # Contra Costa Sub - Contra Costa and Birds Landing - Contra Costa 230 kV Lines
1  30523 30525  "1 "    0     # line from  CC SUB   230.00  BRKR to BRKR  C.COSTA  230.00
 #
1  30525 30479  "1 "    0     # line from  C.COSTA  230.00  BRKR to BRKR  BDLSWSTA 230.00
0
 #
 #
 # (109)   C5 DCTL OUTAGE
 # Contra Costa - Moraga #1 and #2 230 kV Lines
1  30525 30543  "1 "    0     # line from  C.COSTA  230.00  BRKR to (3)   ROSSTAP1 230.00
1  30543 30545  "1 "    0     # line from  ROSSTAP1 230.00   (3) to BRKR  ROSSMOOR 230.00
1  30543 30550  "1 "    0     # line from  ROSSTAP1 230.00   (3) to BRKR  MORAGA   230.00
4  30545     0  "1 "    0     # LOAD-DROP    ROSSMOOR 230.00  LOAD==36.95(8.42)
4  30545     0  "2 "    0     # LOAD-DROP    ROSSMOOR 230.00  LOAD==32.85(7.49)
1  30544 30545  "2 "    1     # LINE-TRANSFER  ROSSTAP1  230.00  TO  ROSSTAP2  230.00
4  30545     0  "**"    1     # RESTORE ROSSMOOR load
 #
1  30525 30544  "2 "    0     # line from  C.COSTA  230.00  BRKR to (2)   ROSSTAP2 230.00
1  30544 30550  "2 "    0     # line from  ROSSTAP2 230.00   (2) to BRKR  MORAGA   230.00
0
 #
 #
 # (110)   C5 DCTL OUTAGE
 # Contra Costa - Brentwood and Contra Costa - Delta Pumps 230 kV Lines
1  30525 30565  "1 "    0     # line from  C.COSTA  230.00  BRKR to BRKR  BRENTWOD 230.00
 #
1  30525 30575  "1 "    0     # line from  C.COSTA  230.00  BRKR to (3)   WND MSTR 230.00
1  30575 38610  "1 "    0     # line from  WND MSTR 230.00   (3) to BRKR  DELTAPMP 230.00
2  30575 33170  "1 "    0     # TRAN from  WND MSTR 230.00   (3) to (1)   WINDMSTR   9.11
0
 #
 #
 # (111)   C5 DCTL OUTAGE
 # Brentwood - Kelso and Contra Costa - Delta Pumps 230 kV Lines
1  30565 30569  "1 "    0     # line from  BRENTWOD 230.00  BRKR to BRKR  KELSO    230.00
 #
1  30525 30575  "1 "    0     # line from  C.COSTA  230.00  BRKR to (3)   WND MSTR 230.00
1  30575 38610  "1 "    0     # line from  WND MSTR 230.00   (3) to BRKR  DELTAPMP 230.00
2  30575 33170  "1 "    0     # TRAN from  WND MSTR 230.00   (3) to (1)   WINDMSTR   9.11
0
 #
 #
 # (112)   C5 DCTL OUTAGE
 # Contra Costa - Las Positas and Contra Costa - Lonetree 230 kV Lines
1  30525 30585  "1 "    0     # line from  C.COSTA  230.00  BRKR to BRKR  LS PSTAS 230.00
 #
1  30525 30567  "1 "    0     # line from  C.COSTA  230.00  BRKR to BRKR  LONETREE 230.00
0
 #
 #
 # (113)   C5 DCTL OUTAGE
 # Contra Costa - Las Positas and Lonetree - Cayetano 230 kV Lines
1  30525 30585  "1 "    0     # line from  C.COSTA  230.00  BRKR to BRKR  LS PSTAS 230.00
 #
1  30567 30590  "1 "    0     # line from  LONETREE 230.00  BRKR to (3)   USWP-JRW 230.00
1  30590 30530  "1 "    0     # line from  USWP-JRW 230.00   (3) to BRKR  CAYETANO 230.00
2  30590 33838  "1 "    0     # TRAN from  USWP-JRW 230.00   (3) to (1)   USWP_#3    9.11
4  33838     0  "SG"    0     # LOAD-DROP    USWP_#3    9.11  LOAD==0.50(0.20)
0
 #
 #
 # (114)   C5 DCTL OUTAGE
 # Contra Costa - Las Positas and North Dublin - Vineyard 230 kV Lines
1  30525 30585  "1 "    0     # line from  C.COSTA  230.00  BRKR to BRKR  LS PSTAS 230.00
 #
1  30537 35224  "1 "    0     # line from  NDUBLIN  230.00  BRKR to BRKR  VINEYD_D 230.00
0
 #
 #
 # (115)   C5 DCTL OUTAGE
 # Cayetano - North Dublin and Lonetree - Cayetano 230 kV Lines
1  30530 30537  "1 "    0     # line from  CAYETANO 230.00  BRKR to BRKR  NDUBLIN  230.00
 #
1  30567 30590  "1 "    0     # line from  LONETREE 230.00  BRKR to (3)   USWP-JRW 230.00
1  30590 30530  "1 "    0     # line from  USWP-JRW 230.00   (3) to BRKR  CAYETANO 230.00
2  30590 33838  "1 "    0     # TRAN from  USWP-JRW 230.00   (3) to (1)   USWP_#3    9.11
4  33838     0  "SG"    0     # LOAD-DROP    USWP_#3    9.11  LOAD==0.50(0.20)
```

```
0
 #
 #
 # (116)   C5 DCTL OUTAGE
 # Pittsburg - Tidewater and Pittsburg - Tesoro 230 kV Lines
1  30527 30535  "1 "    0     # line from  PITSBG E 230.00  BRKR to BRKR  TIDEWATR 230.00
 #
1  30527 30536  "1 "    0     # line from  PITSBG E 230.00  BRKR to BRKR  TESORO   230.00
0
 #
 #
 # (117)   C5 DCTL OUTAGE
 # Tidewater - Sobrante and Tesoro - Sobrante 230 kV Lines
1  30535 30540  "1 "    0     # line from  TIDEWATR 230.00  BRKR to BRKR  SOBRANTE 230.00
 #
1  30536 30540  "1 "    0     # line from  TESORO   230.00  BRKR to BRKR  SOBRANTE 230.00
0
 #
 #
 # (118)   C5 DCTL OUTAGE
 # Pittsburg - San Mateo and Pittsburg - East Shore 230 kV Lines
1  30700 30527  "1 "    0     # line from  SANMATEO 230.00  BRKR to BRKR  PITSBG E 230.00
 #
1  30560 30527  "1 "    0     # line from  E. SHORE 230.00  BRKR to BRKR  PITSBG E 230.00
0
 #
 #
 # (119)   C5 DCTL OUTAGE
 # Pittsburg - Tesla #1 and #2 230 kV Lines pre and post-project outage
1  30527 30595  "1 "    0     # line from  PITSBG E 230.00  BRKR to (3)   FLOWIND2 230.00
1  30595 30640  "1 "    0     # line from  FLOWIND2 230.00   (3) to BRKR  TESLA C  230.00
2  30595 33840  "1 "    0     # TRAN from  FLOWIND2 230.00   (3) to (1)   FLOWD3-6   9.11
4  33840     0  "SG"    0     # LOAD-DROP    FLOWD3-6   9.11  LOAD==0.70(0.34)
3  33840     0  "1 "    0     # GEN-DROP    FLOWD3-6   9.11  GEN==1.30(0.00)
3  33840     0  "4 "    0     # GEN-DROP    FLOWD3-6   9.11  GEN==1.10(0.00)
 #
1  30527 30600  "2 "    0     # line from  PITSBG E 230.00  BRKR to (4)   TRES VAQ 230.00
1  30600 30640  "2 "    0     # line from  TRES VAQ 230.00   (4) to BRKR  TESLA C  230.00
2  30600 33171  "1 "    0     # TRAN from  TRES VAQ 230.00   (4) to (1)   TRSVQ+NW   9.11
2  30600 33195  "1 "    0     # TRAN from  TRES VAQ 230.00   (4) to (1)   T417      34.50
4  33195     0  "ss"    0     # LOAD-DROP    T417      34.50  LOAD==0.10(0.06)
3  33195     0  "1 "    0     # GEN-DROP    T417      34.50  GEN==36.10(0.00)
0
 #
 #
 # (120)   C5 DCTL OUTAGE
 # Pittsburg - San Ramon and Pittsburg - Tassajara 230 kV Lines
1  30526 30555  "1 "    0     # line from  PITSBG D 230.00  BRKR to BRKR  SANRAMON 230.00
 #
1  30526 30561  "1 "    0     # line from  PITSBG D 230.00  BRKR to BRKR  TASSAJAR 230.00
0
 #
 #
 # (121)   C5 DCTL OUTAGE
 # Moraga - Castro Valley and San Ramon - Moraga 230 kV Lines
1  30550 30554  "1 "    0     # line from  MORAGA   230.00  BRKR to BRKR  CASTROVL 230.00
 #
1  30550 30555  "1 "    0     # line from  MORAGA   230.00  BRKR to BRKR  SANRAMON 230.00
0
 #
 #
 # (122)   C5 DCTL OUTAGE
 # Castro Valley - Newark and San Ramon - Moraga 230 kV Lines
1  30554 30631  "1 "    0     # line from  CASTROVL 230.00  BRKR to BRKR  NEWARK E 230.00
 #
1  30550 30555  "1 "    0     # line from  MORAGA   230.00  BRKR to BRKR  SANRAMON 230.00
0
 #
 #
 # (123)   C5 DCTL OUTAGE
 # Ignacio - T257 and Lakeville - T257 230 kV Lines post-project outage
1  30445 30446  "1 "    0     # line from  IGNACIO  230.00  BRKR to BRKR  T257SWST 230.00
 #
1  30435 30446  "1 "    0     # line from  LAKEVILE 230.00  BRKR to BRKR  T257SWST 230.00
0
 #
 #
 # (124)   C5 DCTL OUTAGE
```

```
 # T257 - Sobrante #1 and #2 230 kV Lines post-project outage
1  30446 30437  "1 "    0     # line from  T257SWST 230.00  BRKR to (3)   CROCKETT 230.00
1  30437 30438  "1 "    0     # line from  CROCKETT 230.00   (3) to (2)   C&H      230.00
1  30437 30540  "1 "    0     # line from  CROCKETT 230.00   (3) to BRKR  SOBRANTE 230.00
2  30438 32900  "1 "    0     # TRAN from  C&H      230.00  BRKR to (1)   CRCKTCOG  18.00
4  30438     0  "1 "    0     # LOAD-DROP    C&H      230.00  LOAD==3.32(0.76)
3  32900     0  "1 "    0     # GEN-DROP    CRCKTCOG  18.00  GEN==240.00(54.42)
 #
1  30435 30446  "1 "    0     # line from  LAKEVILE 230.00  BRKR to BRKR  T257SWST 230.00
0
 #
 #
 # (125) BUS FAULT  30523  "CC SUB" Contra Costa Sub 230 kV Bus Section 1
 #
1  30523  30479  "1"    0     # LINE from  CC SUB   230.00  to  BDLSWSTA 230.00
2  30523  33000  "3"    0     # TRAN from  CC SUB   230.00  to  CC SUB   115.00
4  30523     0  "9 "    0     # LOAD-DROP    CC SUB   230.00  LOAD==77.62(15.76)
0
 #
 #
 # (126) BUS FAULT  30523  "CC SUB" Contra Costa Sub 230 kV Bus Section 2
 #
1  30523  30525  "1"    0     # LINE from  CC SUB   230.00  to  C.COSTA  230.00
4  30523     0  "8 "    0     # LOAD-DROP    CC SUB   230.00  LOAD==71.78(14.58)
0
 #
 #
 # (127) BUS FAULT  30525  "C.COSTA" Contra Costa 230 kV Bus Section 1D
 #
1  30525  30523  "1"    0     # LINE from  C.COSTA  230.00  to  CC SUB   230.00
0
 #
 #
 # (128) BUS FAULT  30525  "C.COSTA" Contra Costa 230 kV Bus Section 2D
 #
1  30525  30479  "1"    0     # LINE from  C.COSTA  230.00  to  BDLSWSTA 230.00
0
 #
 #
 # (129) BUS FAULT  30525  "C.COSTA" Contra Costa 230 kV Bus Section 1E
 #
1  30525  30585  "1"    0     # LINE from  C.COSTA  230.00  to  LS PSTAS 230.00
0
 #
 #
 # (130) BUS FAULT  30525  "C.COSTA" Contra Costa 230 kV Bus Section 2E
 #
1  30525  30567  "1"    0     # LINE from  C.COSTA  230.00  to  LONETREE 230.00
0
 #
 #
 # (131) BUS FAULT  30525  "C.COSTA" Contra Costa 230 kV Bus Section 1F
 #
1  30525  30543  "1"    0     # LINE from  C.COSTA  230.00  to  ROSSTAP1 230.00
1  30525  30565  "1"    0     # LINE from  C.COSTA  230.00  to  BRENTWOD 230.00
2  30525  33116  "1"    0     # TRAN from  C.COSTA  230.00  to  C.COS 6   18.00
0
 #
 #
 # (132) BUS FAULT  30525  "C.COSTA" Contra Costa 230 kV Bus Section 2F
 #
1  30525  30544  "2"    0     # LINE from  C.COSTA  230.00  to  ROSSTAP2 230.00
1  30525  30575  "1"    0     # LINE from  C.COSTA  230.00  to  WND MSTR 230.00
2  30525  33117  "1"    0     # TRAN from  C.COSTA  230.00  to  C.COS 7   18.00
0
 #
 #
 # (133) BUS FAULT  30526  "PITSBG D" Pittsburg 230 kV Bus Section 1D
 #
1  30526  30561  "1"    0     # LINE from  PITSBG D 230.00  to  TASSAJAR 230.00
1  30526  30528  "1"    0     # LINE from  PITSBG D 230.00  to  DEC PTSG 230.00
1  30526  30531  "1"    0     # LINE from  PITSBG D 230.00  to  T322BUS1 230.00
2  30526  32950  "13"    0     # TRAN from  PITSBG D 230.00  to  PITSBURG 115.00
0
 #
 #
 # (134) BUS FAULT  30526  "PITSBG D" Pittsburg 230 kV Bus Section 2D
 #
```

```
1  30526  30555  "1"    0     # LINE from  PITSBG D 230.00  to  SANRAMON 230.00
1  30526  30528  "2"    0     # LINE from  PITSBG D 230.00  to  DEC PTSG 230.00
1  30526  30532  "1"    0     # LINE from  PITSBG D 230.00  to  T322BUS2 230.00
2  30526  32950  "12"    0     # TRAN from  PITSBG D 230.00  to  PITSBURG 115.00
0
 #
 #
 # (135) BUS FAULT  30527  "PITSBG E" Pittsburg 230 kV Bus Section 1E
 #
1  30527  30535  "1"    0     # LINE from  PITSBG E 230.00  to  TIDEWATR 230.00
1  30527  30560  "1"    0     # LINE from  PITSBG E 230.00  to  E. SHORE 230.00
1  30527  30595  "1"    0     # LINE from  PITSBG E 230.00  to  FLOWIND2 230.00
2  30527  33105  "1"    0     # TRAN from  PITSBG E 230.00  to  PTSB  5   18.00
2  30527  33105  "2"    0     # TRAN from  PITSBG E 230.00  to  PTSB  5   18.00
0
 #
 #
 # (136) BUS FAULT  30527  "PITSBG E" Pittsburg 230 kV Bus Section 2E
 #
1  30527  30536  "1"    0     # LINE from  PITSBG E 230.00  to  TESORO   230.00
1  30527  30600  "2"    0     # LINE from  PITSBG E 230.00  to  TRES VAQ 230.00
1  30527  30700  "1"    0     # LINE from  PITSBG E 230.00  to  SANMATEO 230.00
0
 #
 #
 # (137) BUS FAULT  30535  "TIDEWATR"
 #
1  30535  30527  "1"    0     # LINE from  TIDEWATR 230.00  to  PITSBG E 230.00
1  30535  30540  "1"    0     # LINE from  TIDEWATR 230.00  to  SOBRANTE 230.00
2  30535  33151  "1"    0     # TRAN from  TIDEWATR 230.00  to  FOSTER W  12.47
2  30535  33151  "2"    0     # TRAN from  TIDEWATR 230.00  to  FOSTER W  12.47
4  30535     0  "1 "    0     # LOAD-DROP    TIDEWATR 230.00  LOAD==72.24(16.46)
4  30535     0  "2 "    0     # LOAD-DROP    TIDEWATR 230.00  LOAD==59.79(13.63)
0
 #
 #
 # (138) BUS FAULT  30536  "TESORO"
 #
1  30536  30527  "1"    0     # LINE from  TESORO   230.00  to  PITSBG E 230.00
1  30536  30540  "1"    0     # LINE from  TESORO   230.00  to  SOBRANTE 230.00
4  30536     0  "1 "    0     # LOAD-DROP    TESORO   230.00  LOAD==9.01(5.35)
0
 #
 #
 # (139) BUS FAULT  30540  "SOBRANTE" Sobrante 230 kV Bus Section 1
 #
1  30540  30437  "1"    0     # LINE from  SOBRANTE 230.00  to  CROCKETT 230.00
1  30540  30535  "1"    0     # LINE from  SOBRANTE 230.00  to  TIDEWATR 230.00
2  30540  33010  "1"    0     # TRAN from  SOBRANTE 230.00  to  SOBRANTE 115.00
0
 #
 #
 # (140) BUS FAULT  30540  "SOBRANTE" Sobrante 230 kV Bus Section 2
 # pre and post-project outage
1  30540  30435  "2"    0     # LINE from  SOBRANTE 230.00  to  LAKEVILE 230.00
1  30540  30446  "2"    0     # LINE from  SOBRANTE 230.00  to  T257SWST 230.00
1  30540  30536  "1"    0     # LINE from  SOBRANTE 230.00  to  TESORO   230.00
2  30540  33010  "2"    0     # TRAN from  SOBRANTE 230.00  to  SOBRANTE 115.00
0
 #
 #
 # (141) BUS FAULT  30545  "ROSSMOOR"
 #
1  30545  30543  "1"    0     # LINE from  ROSSMOOR 230.00  to  ROSSTAP1 230.00
1  30545  30544  "2"    0     # LINE from  ROSSMOOR 230.00  to  ROSSTAP2 230.00
4  30545     0  "1 "    0     # LOAD-DROP    ROSSMOOR 230.00  LOAD==36.95(8.42)
4  30545     0  "2 "    0     # LOAD-DROP    ROSSMOOR 230.00  LOAD==32.85(7.49)
0
 #
 #
 # (142) BUS FAULT  30550  "MORAGA" Moraga 230 kV Bus Section 1
 #
1  30550  30467  "1"    0     # LINE from  MORAGA   230.00  to  PARKWAY  230.00
1  30550  30543  "1"    0     # LINE from  MORAGA   230.00  to  ROSSTAP1 230.00
1  30550  30555  "1"    0     # LINE from  MORAGA   230.00  to  SANRAMON 230.00
2  30550  30553  "3"    0     # TRAN from  MORAGA   230.00  to  MRAGA_3M  13.20
0
 #
```

```
 #
 # (143) BUS FAULT  30550  "MORAGA" Moraga 230 kV Bus Section 2
 #
1  30550  30466  "1"    0     # LINE from  MORAGA   230.00  to  Q177     230.00
1  30550  30544  "2"    0     # LINE from  MORAGA   230.00  to  ROSSTAP2 230.00
1  30550  30554  "1"    0     # LINE from  MORAGA   230.00  to  CASTROVL 230.00
2  30550  30551  "1"    0     # TRAN from  MORAGA   230.00  to  MRAGA_1M  13.20
2  30550  30552  "2"    0     # TRAN from  MORAGA   230.00  to  MRAGA_2M  13.20
0
 #
 #
 # (144) BUS FAULT  30561  "TASSAJAR"
 #
1  30561  30526  "1"    0     # LINE from  TASSAJAR 230.00  to  PITSBG D 230.00
1  30561  30562  "1"    0     # LINE from  TASSAJAR 230.00  to  TES JCT  230.00
4  30561     0  "1 "    0     # LOAD-DROP    TASSAJAR 230.00  LOAD==53.13(12.11)
4  30561     0  "2 "    0     # LOAD-DROP    TASSAJAR 230.00  LOAD==82.91(18.90)
0
 #
 #
 # (145) BUS FAULT  30563  "RESEARCH"
 #
1  30563  30562  "1"    0     # LINE from  RESEARCH 230.00  to  TES JCT  230.00
4  30563     0  "1 "    0     # LOAD-DROP    RESEARCH 230.00  LOAD==37.05(8.44)
0
 #
 #
 # (146) BUS FAULT  30565  "BRENTWOD"
 #
1  30565  30525  "1"    0     # LINE from  BRENTWOD 230.00  to  C.COSTA  230.00
1  30565  30569  "1"    0     # LINE from  BRENTWOD 230.00  to  KELSO    230.00
4  30565     0  "1 "    0     # LOAD-DROP    BRENTWOD 230.00  LOAD==41.07(8.34)
4  30565     0  "2 "    0     # LOAD-DROP    BRENTWOD 230.00  LOAD==38.95(7.91)
4  30565     0  "3 "    0     # LOAD-DROP    BRENTWOD 230.00  LOAD==42.75(8.68)
0
 #
 #
 # (147) BUS FAULT  30567  "LONETREE"
 #
1  30567  30525  "1"    0     # LINE from  LONETREE 230.00  to  C.COSTA  230.00
1  30567  30590  "1"    0     # LINE from  LONETREE 230.00  to  USWP-JRW 230.00
4  30567     0  "1 "    0     # LOAD-DROP    LONETREE 230.00  LOAD==23.91(5.44)
4  30567     0  "2 "    0     # LOAD-DROP    LONETREE 230.00  LOAD==23.91(5.44)
4  30567     0  "3 "    0     # LOAD-DROP    LONETREE 230.00  LOAD==23.91(5.44)
0
 #
 #
 # (148) BUS FAULT  32950  "PITSBURG" Pittsburg 115 kV Bus Section 1D
 #
1  32950  33032  "3"    0     # LINE from  PITSBURG 115.00  to  KIRKTAP1 115.00
1  32950  32970  "4"    0     # LINE from  PITSBURG 115.00  to  CLAYTN   115.00
1  32950  33030  "1"    0     # LINE from  PITSBURG 115.00  to  COLSTJT1 115.00
0
 #
 #
 # (149) BUS FAULT  32950  "PITSBURG" Pittsburg 115 kV Bus Section 2D
 #
1  32950  33033  "1"    0     # LINE from  PITSBURG 115.00  to  KIRKTAP2 115.00
0
 #
 #
 # (150) BUS FAULT  32950  "PITSBURG" Pittsburg 115 kV Bus Section 1E
 #
1  32950  32993  "1"    0     # LINE from  PITSBURG 115.00  to  W.P.BART 115.00
0
 #
 #
 # (151) BUS FAULT  32950  "PITSBURG" Pittsburg 115 kV Bus Section 2E
 #
1  32950  32970  "1"    0     # LINE from  PITSBURG 115.00  to  CLAYTN   115.00
1  32950  32992  "2"    0     # LINE from  PITSBURG 115.00  to  BOLLMAN2 115.00
2  32950  30526  "12"    0     # TRAN from  PITSBURG 115.00  to  PITSBG D 230.00
0
 #
 #
 # (152) BUS FAULT  32951  "KIRKER"
 #
1  32951  33032  "1"    0     # LINE from  KIRKER   115.00  to  KIRKTAP1 115.00
```

```
1  32951  33033  "1"    0     # LINE from  KIRKER   115.00  to  KIRKTAP2 115.00
4  32951     0  "1 "    0     # LOAD-DROP    KIRKER   115.00  LOAD==38.02(7.72)
4  32951     0  "2 "    0     # LOAD-DROP    KIRKER   115.00  LOAD==44.19(8.97)
4  32951     0  "3 "    0     # LOAD-DROP    KIRKER   115.00  LOAD==53.77(10.92)
0
 #
 #
 # (153) BUS FAULT  32953  "CLMBA_ST"
 #
1  32953  32954  "1"    0     # LINE from  CLMBA_ST 115.00  to  DOW TAP1 115.00
1  32953  32955  "1"    0     # LINE from  CLMBA_ST 115.00  to  DOW TAP2 115.00
0
 #
 #
 # (154) BUS FAULT  32957  "PRAXAIR"
 #
1  32957  33038  "1"    0     # LINE from  PRAXAIR  115.00  to  LINDEJCT 115.00
4  32957     0  "1 "    0     # LOAD-DROP    PRAXAIR  115.00  LOAD==20.67(4.61)
0
 #
 #
 # (155) BUS FAULT  32970  "CLAYTN" Clayton 115 kV Bus Section 1
 #
1  32970  32971  "1"    0     # LINE from  CLAYTN   115.00  to  MEDW LNE 115.00
1  32970  32974  "2"    0     # LINE from  CLAYTN   115.00  to  LAKEWD-M 115.00
1  32970  33032  "3"    0     # LINE from  CLAYTN   115.00  to  KIRKTAP1 115.00
0
 #
 #
 # (156) BUS FAULT  32970  "CLAYTN" Clayton 115 kV Bus Section 2
 #
1  32970  32950  "1"    0     # LINE from  CLAYTN   115.00  to  PITSBURG 115.00
1  32970  32950  "4"    0     # LINE from  CLAYTN   115.00  to  PITSBURG 115.00
1  32970  33035  "1"    0     # LINE from  CLAYTN   115.00  to  LKWD_JCT 115.00
0
 #
 #
 # (157) BUS FAULT  32971  "MEDW LNE"
 #
1  32971  32970  "1"    0     # LINE from  MEDW LNE 115.00  to  CLAYTN   115.00
1  32971  32972  "1"    0     # LINE from  MEDW LNE 115.00  to  EBMUDGRY 115.00
4  32971     0  "1 "    0     # LOAD-DROP    MEDW LNE 115.00  LOAD==39.33(8.97)
4  32971     0  "2 "    0     # LOAD-DROP    MEDW LNE 115.00  LOAD==46.84(10.68)
4  32971     0  "3 "    0     # LOAD-DROP    MEDW LNE 115.00  LOAD==43.88(10.00)
0
 #
 #
 # (158) BUS FAULT  32973  "LAKEWD-C"
 #
1  32973  33035  "1"    0     # LINE from  LAKEWD-C 115.00  to  LKWD_JCT 115.00
1  32973  32974  "1"    0     # LINE from  LAKEWD-C 115.00  to  LAKEWD-M 115.00
4  32973     0  "5 "    0     # LOAD-DROP    LAKEWD-C 115.00  LOAD==19.48(4.44)
4  32973     0  "6 "    0     # LOAD-DROP    LAKEWD-C 115.00  LOAD==44.20(10.08)
0
 #
 #
 # (159) BUS FAULT  32974  "LAKEWD-M"
 #
1  32974  32970  "2"    0     # LINE from  LAKEWD-M 115.00  to  CLAYTN   115.00
1  32974  32973  "1"    0     # LINE from  LAKEWD-M 115.00  to  LAKEWD-C 115.00
1  32974  32976  "0"    0     # LINE from  LAKEWD-M 115.00  to  LK_REACT 115.00
1  32974  32976  "2"    0     # LINE from  LAKEWD-M 115.00  to  LK_REACT 115.00
1  32974  32976  "4"    0     # LINE from  LAKEWD-M 115.00  to  LK_REACT 115.00
1  32974  32976  "7"    0     # LINE from  LAKEWD-M 115.00  to  LK_REACT 115.00
1  32974  32976  "9"    0     # LINE from  LAKEWD-M 115.00  to  LK_REACT 115.00
4  32974     0  "1 "    0     # LOAD-DROP    LAKEWD-M 115.00  LOAD==38.07(8.68)
4  32974     0  "2 "    0     # LOAD-DROP    LAKEWD-M 115.00  LOAD==25.72(5.86)
4  32974     0  "4 "    0     # LOAD-DROP    LAKEWD-M 115.00  LOAD==48.09(10.96)
4  32974     0  "LW"    0     # LOAD-DROP    LAKEWD-M 115.00  LOAD==5.66(1.15)
0
 #
 #
 # (160) BUS FAULT  32990  "MARTNZ D"
 #
1  32990  33014  "1"    0     # LINE from  MARTNZ D 115.00  to  ALHAMTP1 115.00
1  32990  33016  "1"    0     # LINE from  MARTNZ D 115.00  to  ALHAMTP2 115.00
1  32990  32991  "1"    0     # LINE from  MARTNZ D 115.00  to  MARTNZ E 115.00
1  32990  32996  "1"    0     # LINE from  MARTNZ D 115.00  to  SHELLJ1  115.00
```

```
2  32990  33142  "2"    0     # TRAN from  MARTNZ D 115.00  to  SHELL 2   12.47
4  32990     0  "5 "    0     # LOAD-DROP    MARTNZ D 115.00  LOAD==45.86(10.45)
0
 #
 #
 # (161) BUS FAULT  32991  "MARTNZ E"
 #
1  32991  32990  "1"    0     # LINE from  MARTNZ E 115.00  to  MARTNZ D 115.00
1  32991  33042  "1"    0     # LINE from  MARTNZ E 115.00  to  IMHOFF_1 115.00
1  32991  33043  "2"    0     # LINE from  MARTNZ E 115.00  to  IMHOFF_2 115.00
1  32991  32997  "2"    0     # LINE from  MARTNZ E 115.00  to  SHELLJ2  115.00
2  32991  33142  "1"    0     # TRAN from  MARTNZ E 115.00  to  SHELL 2   12.47
0
 #
 #
 # (162) BUS FAULT  33000  "CC SUB" Contra Costa Sub 115 kV Bus Section 1
 #
1  33000  33047  "1"    0     # LINE from  CC SUB   115.00  to  CC JCT   115.00
2  33000  30523  "3"    0     # TRAN from  CC SUB   115.00  to  CC SUB   230.00
2  33000  33050  "1"    0     # TRAN from  CC SUB   115.00  to  CC SUB    60.00
4  33000     0  "4 "    0     # LOAD-DROP    CC SUB   115.00  LOAD==42.14(8.55)
0
 #
 #
 # (163) BUS FAULT  33000  "CC SUB" Contra Costa Sub 115 kV Bus Section 2
 #
1  33000  33046  "1"    0     # LINE from  CC SUB   115.00  to  FIBRJCT2 115.00
2  33000  33050  "2"    0     # TRAN from  CC SUB   115.00  to  CC SUB    60.00
0
 #
 #
 # (164) BUS FAULT  33001  "DOMTAR"
 #
1  33001  33046  "1"    0     # LINE from  DOMTAR   115.00  to  FIBRJCT2 115.00
4  33001     0  "1 "    0     # LOAD-DROP    DOMTAR   115.00  LOAD==2.40(2.12)
0
 #
 #
 # (165) BUS FAULT  33010  "SOBRANTE" Sobrante 115 kV Bus Section 1
 #
1  33010  32756  "1"    0     # LINE from  SOBRANTE 115.00  to  CHRISTIE 115.00
1  33010  32765  "1"    0     # LINE from  SOBRANTE 115.00  to  ELCRTJ1  115.00
1  33010  32767  "1"    0     # LINE from  SOBRANTE 115.00  to  ELCRTJ2  115.00
1  33010  32808  "1"    0     # LINE from  SOBRANTE 115.00  to  SNPBLTP2 115.00
1  33010  33006  "1"    0     # LINE from  SOBRANTE 115.00  to  GRIZLYJ1 115.00
1  33010  33014  "1"    0     # LINE from  SOBRANTE 115.00  to  ALHAMTP1 115.00
1  33010  33020  "1"    0     # LINE from  SOBRANTE 115.00  to  MORAGA   115.00
0
 #
 #
 # (166) BUS FAULT  33010  "SOBRANTE" Sobrante 115 kV Bus Section 2
 #
1  33010  32766  "2"    0     # LINE from  SOBRANTE 115.00  to  EL CRRTO 115.00
1  33010  32768  "2"    0     # LINE from  SOBRANTE 115.00  to  RICHMOND 115.00
1  33010  32806  "2"    0     # LINE from  SOBRANTE 115.00  to  SNPBLTP1 115.00
1  33010  33008  "2"    0     # LINE from  SOBRANTE 115.00  to  GRIZLYJ2 115.00
2  33010  30540  "1"    0     # TRAN from  SOBRANTE 115.00  to  SOBRANTE 230.00
2  33010  30540  "2"    0     # TRAN from  SOBRANTE 115.00  to  SOBRANTE 230.00
0
 #
 #
 # (167) BUS FAULT  33011  "ALHAMBRA"
 #
1  33011  33014  "1"    0     # LINE from  ALHAMBRA 115.00  to  ALHAMTP1 115.00
1  33011  33016  "1"    0     # LINE from  ALHAMBRA 115.00  to  ALHAMTP2 115.00
4  33011     0  "1 "    0     # LOAD-DROP    ALHAMBRA 115.00  LOAD==10.29(2.34)
4  33011     0  "2 "    0     # LOAD-DROP    ALHAMBRA 115.00  LOAD==9.17(2.09)
0
 #
 #
 # (168) BUS FAULT  33012  "EST PRTL"
 #
1  33012  33006  "1"    0     # LINE from  EST PRTL 115.00  to  GRIZLYJ1 115.00
1  33012  32780  "1"    0     # LINE from  EST PRTL 115.00  to  CLARMNT  115.00
4  33012     0  "1 "    0     # LOAD-DROP    EST PRTL 115.00  LOAD==7.66(1.55)
0
 #
 #
```

```
 # (169) BUS FAULT  33020  "MORAGA" Moraga 115 kV Bus Section 1D
 #
1  33020  32780  "1"    0     # LINE from  MORAGA   115.00  to  CLARMNT  115.00
1  33020  32790  "1"    0     # LINE from  MORAGA   115.00  to  STATIN X 115.00
1  33020  33010  "1"    0     # LINE from  MORAGA   115.00  to  SOBRANTE 115.00
2  33020  30551  "1"    0     # TRAN from  MORAGA   115.00  to  MRAGA_1M  13.20
0
 #
 #
 # (170) BUS FAULT  33020  "MORAGA" Moraga 115 kV Bus Section 2D
 #
1  33020  32780  "2"    0     # LINE from  MORAGA   115.00  to  CLARMNT  115.00
1  33020  32790  "2"    0     # LINE from  MORAGA   115.00  to  STATIN X 115.00
1  33020  32976  "1"    0     # LINE from  MORAGA   115.00  to  LK_REACT 115.00
2  33020  30552  "2"    0     # TRAN from  MORAGA   115.00  to  MRAGA_2M  13.20
0
 #
 #
 # (171) BUS FAULT  33020  "MORAGA" Moraga 115 kV Bus Section 1E
 #
1  33020  32790  "3"    0     # LINE from  MORAGA   115.00  to  STATIN X 115.00
1  33020  35101  "1"    0     # LINE from  MORAGA   115.00  to  SN LNDRO 115.00
1  33020  35101  "3"    0     # LINE from  MORAGA   115.00  to  SN LNDRO 115.00
0
 #
 #
 # (172) BUS FAULT  33020  "MORAGA" Moraga 115 kV Bus Section 2E
 #
1  33020  32790  "4"    0     # LINE from  MORAGA   115.00  to  STATIN X 115.00
1  33020  32792  "1"    0     # LINE from  MORAGA   115.00  to  STATIN J 115.00
1  33020  35101  "2"    0     # LINE from  MORAGA   115.00  to  SN LNDRO 115.00
0
 #
 #
 # (173) BUS FAULT  33049  "RVEC"
 #
1  33049  33048  "1"    0     # LINE from  RVEC     115.00  to  RVECTP   115.00
2  33049  33178  "1"    0     # TRAN from  RVEC     115.00  to  RVEC_GEN  13.80
0
 #
 #
 # (174) BUS FAULT  33050  "CC SUB" Contra Costa Sub 60 kV Bus Section 1
 #
1  33050  33081  "1"    0     # LINE from  CC SUB    60.00  to  DUPNTJCT  60.00
1  33050  33060  "1"    0     # LINE from  CC SUB    60.00  to  ANTIOCH   60.00
2  33050  33000  "1"    0     # TRAN from  CC SUB    60.00  to  CC SUB   115.00
0
 #
 #
 # (175) BUS FAULT  33050  "CC SUB" Contra Costa Sub 60 kV Bus Section 2
 #
1  33050  33080  "1"    0     # LINE from  CC SUB    60.00  to  WILBRTAP  60.00
1  33050  33090  "1"    0     # LINE from  CC SUB    60.00  to  SHLLCHMT  60.00
2  33050  33000  "2"    0     # TRAN from  CC SUB    60.00  to  CC SUB   115.00
0
 #
 #
 # (176) BUS FAULT  33051  "DU PONT"
 #
1  33051  33080  "1"    0     # LINE from  DU PONT   60.00  to  WILBRTAP  60.00
1  33051  33081  "1"    0     # LINE from  DU PONT   60.00  to  DUPNTJCT  60.00
4  33051     0  "1 "    0     # LOAD-DROP    DU PONT   60.00  LOAD==2.00(2.16)
0
 #
 #
 # (177) BUS FAULT  33054  "BALFOUR"
 #
1  33054  33082  "1"    0     # LINE from  BALFOUR   60.00  to  BALFRJCT  60.00
1  33054  33083  "1"    0     # LINE from  BALFOUR   60.00  to  MDLRVRJT  60.00
4  33054     0  "1 "    0     # LOAD-DROP    BALFOUR   60.00  LOAD==4.00(0.81)
0
 #
 #
 # (178) BUS FAULT  33063  "WLLW PSS"
 #
1  33063  33062  "1"    0     # LINE from  WLLW PSS  60.00  to  SHLL CHM  60.00
1  33063  33091  "1"    0     # LINE from  WLLW PSS  60.00  to  TAP GWF5  60.00
4  33063     0  "1 "    0     # LOAD-DROP    WLLW PSS  60.00  LOAD==9.78(2.23)
```

```
0
 #
 #
 # 2013 category c contingency list (dctl and bus outages)
 # San Francisco Division Zone 309
 #
 #
 # (179)   C5 DCTL OUTAGE
 # Martin - Daly City #1 and #2 115 kV Lines
1  33208 33300  "1 "    0     # line from  MARTIN C 115.00  BRKR to BRKR  DALY CTY 115.00
 #
1  33208 33301  "2 "    0     # line from  MARTIN C 115.00  BRKR to (3)   DLY CTYP 115.00
1  33301 33300  "2 "    0     # line from  DLY CTYP 115.00   (3) to BRKR  DALY CTY 115.00
1  33301 33302  "1 "    0     # line from  DLY CTYP 115.00   (3) to BRKR  SERRMNTE 115.00
4  33302     0  "1 "    0     # LOAD-DROP    SERRMNTE 115.00  LOAD==11.42(2.60)
0
 #
 #
 # (180)   C5 DCTL OUTAGE
 # Martin - East Grand and Martin - San Mateo #3 115 kV Lines
1  33208 33303  "2 "    0     # line from  MARTIN C 115.00  BRKR to BRKR  EST GRND 115.00
 #
1  33208 33310  "3 "    0     # line from  MARTIN C 115.00  BRKR to BRKR  SANMATEO 115.00
0
 #
 #
 # (181)   C5 DCTL OUTAGE
 # Martin - Millbrae and Martin - San Mateo #6 115 kV Lines
1  33208 33307  "1 "    0     # line from  MARTIN C 115.00  BRKR to BRKR  MILLBRAE 115.00
 #
1  33305 33208  "6 "    0     # line from  SHAWROAD 115.00   (2) to BRKR  MARTIN C 115.00
1  33305 33310  "6 "    0     # line from  SHAWROAD 115.00   (2) to BRKR  SANMATEO 115.00
4  33305 33309  "1 "    1     # LOAD-TRANSFER  SHAWROAD 115.00  TO  SANPAULA 115.00    LOAD==9.00(1.83)
0
 #
 #
 # (182)   C5 DCTL OUTAGE
 # Burlingame - San Mateo and Martin - San Mateo #3 115 kV Lines
1  33310 33356  "4 "    0     # line from  SANMATEO 115.00  BRKR to BRKR  BURLNGME 115.00
 #
1  33208 33310  "3 "    0     # line from  MARTIN C 115.00  BRKR to BRKR  SANMATEO 115.00
0
 #
 #
 # (183)   C5 DCTL OUTAGE
 # Martin - Burlingame and Martin - San Mateo #3 115 kV Lines
1  33356 33208  "4 "    0     # line from  BURLNGME 115.00  BRKR to BRKR  MARTIN C 115.00
 #
1  33208 33310  "3 "    0     # line from  MARTIN C 115.00  BRKR to BRKR  SANMATEO 115.00
0
 #
 #
 # (184)   C5 DCTL OUTAGE
 # SF Airport - San Mateo and Martin - San Mateo #3 115 kV Lines
1  33306 33310  "5 "    0     # line from  SFIA     115.00  BRKR to BRKR  SANMATEO 115.00
 #
1  33208 33310  "3 "    0     # line from  MARTIN C 115.00  BRKR to BRKR  SANMATEO 115.00
0
 #
 #
 # (185)   C5 DCTL OUTAGE
 # Martin - SF Airport and Martin - San Mateo #6 115 kV Lines
1  33208 33322  "5 "    0     # line from  MARTIN C 115.00  BRKR to (3)   UAL TAP  115.00
1  33322 33306  "5 "    0     # line from  UAL TAP  115.00   (3) to BRKR  SFIA     115.00
1  33322 33323  "1 "    0     # line from  UAL TAP  115.00   (3) to (3)   SFASWSTA 115.00
1  33323 33304  "1 "    0     # line from  SFASWSTA 115.00   (3) to (2)   UAL COGN 115.00
1  33323 33324  "1 "    0     # line from  SFASWSTA 115.00   (3) to (2)   SFAERP11 115.00
2  33304 33466  "1 "    0     # TRAN from  UAL COGN 115.00  BRKR to (1)   UNTED CO   9.11
2  33324 33467  "1 "    0     # TRAN from  SFAERP11 115.00   (2) to (1)   SFAERP    13.80
4  33467     0  "ss"    0     # LOAD-DROP    SFAERP    13.80  LOAD==1.80(1.12)
3  33466     0  "1 "    0     # GEN-DROP    UNTED CO   9.11  GEN==28.20(11.16)
3  33467     0  "1 "    0     # GEN-DROP    SFAERP    13.80  GEN==48.00(10.34)
 #
1  33305 33208  "6 "    0     # line from  SHAWROAD 115.00   (2) to BRKR  MARTIN C 115.00
1  33305 33310  "6 "    0     # line from  SHAWROAD 115.00   (2) to BRKR  SANMATEO 115.00
4  33305 33309  "1 "    1     # LOAD-TRANSFER  SHAWROAD 115.00  TO  SANPAULA 115.00    LOAD==9.00(1.83)
0
 #
```

```
 #
 # (186) BUS FAULT  33204  "POTRERO" Potrero 115 kV Bus Section 1D
 #
1  33204  33200  "1"    0     # LINE from  POTRERO  115.00  to  LARKIN D 115.00
1  33204  33203  "1"    0     # LINE from  POTRERO  115.00  to  MISSON   115.00
1  33204  33206  "1"    0     # LINE from  POTRERO  115.00  to  BAYSHOR1 115.00
2  33204  33252  "1"    0     # TRAN from  POTRERO  115.00  to  POTRERO3  20.00
2  33204  33252  "2"    0     # TRAN from  POTRERO  115.00  to  POTRERO3  20.00
4  33204     0  "1 "    0     # LOAD-DROP    POTRERO  115.00  LOAD==43.69(8.87)
4  33204     0  "2 "    0     # LOAD-DROP    POTRERO  115.00  LOAD==43.69(3.92)
0
 #
 #
 # (187) BUS FAULT  33204  "POTRERO" Potrero 115 kV Bus Section 2D
 #
1  33204  33207  "2"    0     # LINE from  POTRERO  115.00  to  BAYSHOR2 115.00
2  33204  33253  "1"    0     # TRAN from  POTRERO  115.00  to  POTRERO4  13.80
2  33204  33254  "1"    0     # TRAN from  POTRERO  115.00  to  POTRERO5  13.80
2  33204  33255  "1"    0     # TRAN from  POTRERO  115.00  to  POTRERO6  13.80
4  33204     0  "10"    0     # LOAD-DROP    POTRERO  115.00  LOAD==43.69(8.87)
0
 #
 #
 # (188) BUS FAULT  33204  "POTRERO" Potrero 115 kV Bus Section 1E
 #
1  33204  33205  "1"    0     # LINE from  POTRERO  115.00  to  HNTRS PT 115.00
1  33204  33210  "1"    0     # LINE from  POTRERO  115.00  to  POT_SVC  115.00
0
 #
 #
 # (189) BUS FAULT  33204  "POTRERO" Potrero 115 kV Bus Section 2E
 #
1  33204  33201  "2"    0     # LINE from  POTRERO  115.00  to  LARKIN E 115.00
6  33204     0   "v "   0     # SVD-DROP   POTRERO  115.00
0
 #
 #
 # (190) BUS FAULT  33208  "MARTIN C" Martin 115 kV Bus Section 1E
 #
1  33208  33205  "1"    0     # LINE from  MARTIN C 115.00  to  HNTRS PT 115.00
1  33208  33300  "1"    0     # LINE from  MARTIN C 115.00  to  DALY CTY 115.00
1  33208  33303  "2"    0     # LINE from  MARTIN C 115.00  to  EST GRND 115.00
4  33208     0  "4 "    0     # LOAD-DROP    MARTIN C 115.00  LOAD==32.54(2.06)
6  33208     0  "v "    0     # SVD-DROP   MARTIN C 115.00
0
 #
 #
 # (191) BUS FAULT  33208  "MARTIN C" Martin 115 kV Bus Section 2E
 #
1  33208  33207  "2"    0     # LINE from  MARTIN C 115.00  to  BAYSHOR2 115.00
1  33208  33301  "2"    0     # LINE from  MARTIN C 115.00  to  DLY CTYP 115.00
1  33208  33310  "3"    0     # LINE from  MARTIN C 115.00  to  SANMATEO 115.00
0
 #
 #
 # (192) BUS FAULT  33208  "MARTIN C" Martin 115 kV Bus Section 1D
 #
1  33208  33206  "1"    0     # LINE from  MARTIN C 115.00  to  BAYSHOR1 115.00
1  33208  33305  "6"    0     # LINE from  MARTIN C 115.00  to  SHAWROAD 115.00
1  33208  33322  "5"    0     # LINE from  MARTIN C 115.00  to  UAL TAP  115.00
1  33208  33356  "4"    0     # LINE from  MARTIN C 115.00  to  BURLNGME 115.00
0
 #
 #
 # (193) BUS FAULT  33208  "MARTIN C" Martin 115 kV Bus Section 2D
 #
1  33208  33202  "1"    0     # LINE from  MARTIN C 115.00  to  LARKIN F 115.00
1  33208  33307  "1"    0     # LINE from  MARTIN C 115.00  to  MILLBRAE 115.00
1  33208  33205  "3"    0     # LINE from  MARTIN C 115.00  to  HNTRS PT 115.00
2  33208  33209  "6"    0     # TRAN from  MARTIN C 115.00  to  MARTIN    60.00
4  33208     0  "1B"    0     # LOAD-DROP    MARTIN C 115.00  LOAD==32.54(2.06)
0
 #
 #
 # (194) BUS FAULT  33209  "MARTIN"
 #
1  33209  33347  "1"    0     # LINE from  MARTIN    60.00  to  SNTH JCT  60.00
2  33209  33208  "6"    0     # TRAN from  MARTIN    60.00  to  MARTIN C 115.00
```

```
0
 #
 #
 # 2013 category c contingency list (dctl and bus outages)
 # Peninsula Division Zone 310
 #
 #
 # (195)   C5 DCTL OUTAGE
 # Pittsburg - San Mateo and East Shore - San Mateo 230 kV Lines
1  30700 30527  "1 "    0     # line from  SANMATEO 230.00  BRKR to BRKR  PITSBG E 230.00
 #
1  30560 30700  "1 "    0     # line from  E. SHORE 230.00  BRKR to BRKR  SANMATEO 230.00
0
 #
 #
 # (196)   C5 DCTL OUTAGE
 # Newark - Ravenswood and Tesla - Ravenswood 230 kV Lines
1  30630 30703  "1 "    0     # line from  NEWARK D 230.00  BRKR to BRKR  RAVENSWD 230.00
 #
1  30640 30703  "1 "    0     # line from  TESLA C  230.00  BRKR to BRKR  RAVENSWD 230.00
0
 #
 #
 # (197)   C5 DCTL OUTAGE
 # Ravenswood - San Mateo #1 and #2 230 kV Lines
1  30703 30700  "1 "    0     # line from  RAVENSWD 230.00  BRKR to BRKR  SANMATEO 230.00
 #
1  30703 30700  "2 "    0     # line from  RAVENSWD 230.00  BRKR to BRKR  SANMATEO 230.00
0
 #
 #
 # (198)   C5 DCTL OUTAGE
 # Monta Vista - Jefferson #1 and #2 230 kV Lines
1  30705 30710  "1 "    0     # line from  MONTAVIS 230.00  BRKR to (3)   SLACTAP1 230.00
1  30710 30711  "1 "    0     # line from  SLACTAP1 230.00   (3) to BRKR  S.L.A.C. 230.00
1  30710 30715  "1 "    0     # line from  SLACTAP1 230.00   (3) to BRKR  JEFFERSN 230.00
4  30711     0  "1 "    0     # LOAD-DROP    S.L.A.C. 230.00  LOAD==58.00(11.78)
1  30711 30712  "1 "    1     # LINE-TRANSFER SLACTAP1 to SLACTAP2
4  30711     0  "**"    1     # RESTORE S.L.A.C. load
 #
1  30705 30712  "2 "    0     # line from  MONTAVIS 230.00  BRKR to (2)   SLACTAP2 230.00
1  30712 30715  "2 "    0     # line from  SLACTAP2 230.00   (2) to BRKR  JEFFERSN 230.00
0
 #
 #
 # (199)   C5 DCTL OUTAGE
 # Jefferson - Ralston and Millbrae - Pacifica 115 kV Lines
1  33349 33362  "1 "    0     # line from  CAROLD2   60.00   (1) to (2)   CRYSTLSG  60.00
1  33362 33399  "1 "    0     # line from  CRYSTLSG  60.00   (2) to (2)   HILDAL47  60.00
1  33399 33398  "1 "    0     # line from  HILDAL47  60.00   (2) to (3)   RLSTN45   60.00
1  33398 33363  "1 "    0     # line from  RLSTN45   60.00   (3) to BRKR  RALSTON   60.00
1  33398 33400  "1 "    0     # line from  RLSTN45   60.00   (3) to BRKR  JEFRSN_E  60.00
4  33362     0  "1 "    0     # LOAD-DROP    CRYSTLSG  60.00  LOAD==3.00(0.61)
1  33397 33363  "1 "    1     # LINE-TRANSFER  RLSTN35  60.00  TO  RALSTON  60.00
4  33363     0  "**"    1     # RESTORE RALSTON LOAD
 #
1  33351 33345  "1 "    0     # line from  SN BRNOT  60.00   (2) to (2)   SNTH TP1  60.00
1  33351 33352  "1 "    0     # line from  SN BRNOT  60.00   (2) to (2)   SNANDRES  60.00
1  33345 33355  "1 "    0     # line from  SNTH TP1  60.00   (2) to BRKR  PACIFICA  60.00
1  33352 33354  "1 "    0     # line from  SNANDRES  60.00   (2) to (2)   MLLBRETP  60.00
1  33354 33353  "1 "    0     # line from  MLLBRETP  60.00   (2) to BRKR  MILLBRAE  60.00
4  33351     0  "1 "    0     # LOAD-DROP    SN BRNOT  60.00  LOAD==3.36(0.77)
4  33352     0  "1 "    0     # LOAD-DROP    SNANDRES  60.00  LOAD==1.80(0.37)
4  33355     0  "1 "    0     # LOAD-DROP    PACIFICA  60.00  LOAD==9.92(2.26)
4  33355     0  "2 "    0     # LOAD-DROP    PACIFICA  60.00  LOAD==5.61(1.28)
1  33355 33389  "1 "    1     # LINE-TRANSFER  PACIFICA  60.00  TO  PACIFJCT  60.00
4  33355     0  "**"    1     # RESTORE PACIFICA LOAD
0
 #
 #
 # (200)   C5 DCTL OUTAGE
 # Jefferson - Ralston and Jefferson - Hillsdale Jct 115 kV Lines
1  33349 33362  "1 "    0     # line from  CAROLD2   60.00   (1) to (2)   CRYSTLSG  60.00
1  33362 33399  "1 "    0     # line from  CRYSTLSG  60.00   (2) to (2)   HILDAL47  60.00
1  33399 33398  "1 "    0     # line from  HILDAL47  60.00   (2) to (3)   RLSTN45   60.00
1  33398 33363  "1 "    0     # line from  RLSTN45   60.00   (3) to BRKR  RALSTON   60.00
1  33398 33400  "1 "    0     # line from  RLSTN45   60.00   (3) to BRKR  JEFRSN_E  60.00
4  33362     0  "1 "    0     # LOAD-DROP    CRYSTLSG  60.00  LOAD==3.00(0.61)
```

```
1  33397 33363  "1 "    1     # LINE-TRANSFER  RLSTN35  60.00  TO  RALSTON  60.00
4  33363     0  "**"    1     # RESTORE RALSTON LOAD
 #
1  33348 33359  "1 "    0     # line from  CAROLD1   60.00   (3) to BRKR  CAROLNDS  60.00
1  33348 33391  "1 "    0     # line from  CAROLD1   60.00   (3) to (2)   TRAN-60   60.00
1  33348 33396  "1 "    0     # line from  CAROLD1   60.00   (3) to (3)   HILDAL49  60.00
1  33391 33392  "1 "    0     # line from  TRAN-60   60.00   (2) to (1)   MLLBTP97  60.00
1  33396 33361  "1 "    0     # line from  HILDAL49  60.00   (3) to (3)   HLLSDLJT  60.00
1  33396 33397  "1 "    0     # line from  HILDAL49  60.00   (3) to (2)   RLSTN35   60.00
1  33361 33360  "1 "    0     # line from  HLLSDLJT  60.00  BRKR to BRKR  HILLSDLE  60.00
1  33361 33394  "1 "    0     # line from  HLLSDLJT  60.00   (3) to BRKR  OXMTN_TP  60.00
1  33397 33378  "1 "    0     # line from  RLSTN35   60.00   (2) to (3)   WTRSHDTP  60.00
1  33378 33379  "1 "    0     # line from  WTRSHDTP  60.00   (3) to (1)   WATRSHED  60.00
1  33378 33400  "1 "    0     # line from  WTRSHDTP  60.00   (3) to BRKR  JEFRSN_E  60.00
4  33359     0  "1 "    0     # LOAD-DROP    CAROLNDS  60.00  LOAD==2.65(0.60)
4  33359     0  "2 "    0     # LOAD-DROP    CAROLNDS  60.00  LOAD==4.88(1.11)
4  33379 33363  "1 "    1     # LOAD-TRANSFER  WATRSHED  60.00  TO  RALSTON   60.00    LOAD==0.70(0.32)
1  33349 33359  "1 "    1     # LINE-TRANSFER  CAROLNDS  60.00  TO  CAROLD2  60.00
4  33359     0  "**"    1     # RESTORE CAROLANDS load
0
 #
 #
 # (201)   C5 DCTL OUTAGE
 # Millbrae - San Mateo and East Grand - San Mateo 115 kV Lines
1  33307 33310  "1 "    0     # line from  MILLBRAE 115.00  BRKR to BRKR  SANMATEO 115.00
 #
1  33308 33303  "2 "    0     # line from  SFIA-MA  115.00   (2) to BRKR  EST GRND 115.00
1  33308 33310  "2 "    0     # line from  SFIA-MA  115.00   (2) to BRKR  SANMATEO 115.00
4  33308 33306  "1 "    1     # LOAD-TRANSFER  SFIA-MA  115.00  TO  SFIA     115.00    LOAD==20.20(4.10)
0
 #
 #
 # (202)   C5 DCTL OUTAGE
 # San Mateo - Bay Meadows #1 and #2 115 kV Lines
1  33310 33311  "1 "    0     # line from  SANMATEO 115.00  BRKR to BRKR  BAY MDWS 115.00
 #
1  33310 33311  "2 "    0     # line from  SANMATEO 115.00  BRKR to BRKR  BAY MDWS 115.00
0
 #
 #
 # (203)   C5 DCTL OUTAGE
 # San Mateo - Belmont and Ravenswood - San Mateo 115 kV Lines
1  33310 33312  "1 "    0     # line from  SANMATEO 115.00  BRKR to BRKR  BELMONT  115.00
 #
1  33310 33321  "1 "    0     # line from  SANMATEO 115.00  BRKR to BRKR  RVNSWD D 115.00
0
 #
 #
 # (204)   C5 DCTL OUTAGE
 # San Mateo - Belmont 115 kV and San Mateo - San Carlos 60 kV Lines
1  33310 33312  "1 "    0     # line from  SANMATEO 115.00  BRKR to BRKR  BELMONT  115.00
 #
1  33357 33364  "1 "    0     # line from  SAN MATO  60.00  BRKR to (2)   ORACLE60  60.00
1  33364 33365  "1 "    0     # line from  ORACLE60  60.00   (2) to BRKR  SAN CRLS  60.00
4  33364     0  "1 "    0     # LOAD-DROP    ORACLE60  60.00  LOAD==11.86(5.40)
0
 #
 #
 # (205)   C5 DCTL OUTAGE
 # Ravenswood - Bair #2 and Ravenswood - San Mateo 115 kV Lines
1  33313 33319  "2 "    0     # line from  BAIR     115.00  BRKR to (3)   SHREDJCT 115.00
1  33319 33314  "1 "    0     # line from  SHREDJCT 115.00   (3) to (2)   SHREDDER 115.00
1  33319 33321  "2 "    0     # line from  SHREDJCT 115.00   (3) to BRKR  RVNSWD D 115.00
1  33314 33320  "1 "    0     # line from  SHREDDER 115.00   (2) to (1)   LONESTAR 115.00
4  33314     0  "1 "    0     # LOAD-DROP    SHREDDER 115.00  LOAD==4.77(5.43)
4  33320     0  "1 "    0     # LOAD-DROP    LONESTAR 115.00  LOAD==2.57(3.43)
 #
1  33310 33321  "1 "    0     # line from  SANMATEO 115.00  BRKR to BRKR  RVNSWD D 115.00
0
 #
 #
 # (206)   C5 DCTL OUTAGE
 # Belmont - Bair 115 kV and San Carlos - Bair 60 kV Lines
1  33312 33313  "1 "    0     # line from  BELMONT  115.00  BRKR to BRKR  BAIR     115.00
 #
1  33365 33367  "1 "    0     # line from  SAN CRLS  60.00  BRKR to BRKR  BAIR      60.00
0
 #
```

```
 #
 # (207)   C5 DCTL OUTAGE
 # Ravenswood - Bair #1 and #2 115 kV Lines
1  33321 33313  "1 "    0     # line from  RVNSWD D 115.00  BRKR to BRKR  BAIR     115.00
 #
1  33313 33319  "2 "    0     # line from  BAIR     115.00  BRKR to (3)   SHREDJCT 115.00
1  33319 33314  "1 "    0     # line from  SHREDJCT 115.00   (3) to (2)   SHREDDER 115.00
1  33319 33321  "2 "    0     # line from  SHREDJCT 115.00   (3) to BRKR  RVNSWD D 115.00
1  33314 33320  "1 "    0     # line from  SHREDDER 115.00   (2) to (1)   LONESTAR 115.00
4  33314     0  "1 "    0     # LOAD-DROP    SHREDDER 115.00  LOAD==4.77(5.43)
4  33320     0  "1 "    0     # LOAD-DROP    LONESTAR 115.00  LOAD==2.57(3.43)
0
 #
 #
 # (208)   C5 DCTL OUTAGE
 # Ravenswood - Cooley Landing #1 and #2 115 kV Lines
1  33321 33317  "1 "    0     # line from  RVNSWD D 115.00  BRKR to BRKR  CLY LND  115.00
 #
1  33315 33316  "2 "    0     # line from  RVNSWD E 115.00  BRKR to BRKR  CLY LND2 115.00
0
 #
 #
 # (209)   C5 DCTL OUTAGE
 # Ravenswood - Ames #1 and #2 115 kV Lines
1  33315 35350  "1 "    0     # line from  RVNSWD E 115.00  BRKR to BRKR  AMES BS1 115.00
 #
1  33315 35351  "2 "    0     # line from  RVNSWD E 115.00  BRKR to BRKR  AMES BS2 115.00
0
 #
 #
 # (210)   C5 DCTL OUTAGE
 # Ravenswood - Palo Alto #1 and #2 115 kV Lines
1  33315 38028  "1 "    0     # line from  RVNSWD E 115.00  BRKR to BRKR  PLO ALTO 115.00
 #
1  33315 38028  "2 "    0     # line from  RVNSWD E 115.00  BRKR to BRKR  PLO ALTO 115.00
0
 #
 #
 # (211)   C5 DCTL OUTAGE
 # Ravenswood - Palo Alto #1 and Cooley Landing - Palo Alto 115 kV Lines
1  33315 38028  "1 "    0     # line from  RVNSWD E 115.00  BRKR to BRKR  PLO ALTO 115.00
 #
1  33316 38028  "1 "    0     # line from  CLY LND2 115.00  BRKR to BRKR  PLO ALTO 115.00
0
 #
 #
 # (212)   C5 DCTL OUTAGE
 # Bair - Cooley Landing #1 and #2 60 kV Lines
1  33367 33368  "1 "    0     # line from  BAIR      60.00  BRKR to (2)   REDWDTP1  60.00
1  33368 33373  "1 "    0     # line from  REDWDTP1  60.00   (2) to (3)   BLHVNTP1  60.00
1  33373 33372  "1 "    0     # line from  BLHVNTP1  60.00   (3) to (1)   BLLE HVN  60.00
1  33373 33375  "1 "    0     # line from  BLHVNTP1  60.00   (3) to BRKR  CLY LNDG  60.00
4  33372     0  "1 "    0     # LOAD-DROP    BLLE HVN  60.00  LOAD==7.52(1.71)
4  33372     0  "2 "    0     # LOAD-DROP    BLLE HVN  60.00  LOAD==8.46(1.93)
4  33372     0  "3 "    0     # LOAD-DROP    BLLE HVN  60.00  LOAD==15.39(3.51)
4  33372     0  "4 "    0     # LOAD-DROP    BLLE HVN  60.00  LOAD==14.12(3.21)
4  33372     0  "5 "    0     # LOAD-DROP    BLLE HVN  60.00  LOAD==29.05(6.62)
1  33372 33374  "2 "    1     # LINE-TRANSFER  BLHVNTP1  60.00  TO  BLHVNTP2  60.00
4  33372     0  "**"    1     # RESTORE BELLE HAVEN load
 #
1  33367 33369  "2 "    0     # line from  BAIR      60.00  BRKR to (3)   REDWDTP2  60.00
1  33369 33370  "2 "    0     # line from  REDWDTP2  60.00   (3) to BRKR  REDWOOD   60.00
1  33369 33374  "2 "    0     # line from  REDWDTP2  60.00   (3) to (2)   BLHVNTP2  60.00
1  33374 33371  "2 "    0     # line from  BLHVNTP2  60.00   (2) to (2)   RAYCHEM   60.00
1  33371 33375  "2 "    0     # line from  RAYCHEM   60.00   (2) to BRKR  CLY LNDG  60.00
4  33370     0  "1 "    0     # LOAD-DROP    REDWOOD   60.00  LOAD==11.80(2.69)
4  33370     0  "2 "    0     # LOAD-DROP    REDWOOD   60.00  LOAD==5.12(1.17)
4  33370     0  "3 "    0     # LOAD-DROP    REDWOOD   60.00  LOAD==8.98(2.05)
4  33370     0  "4 "    0     # LOAD-DROP    REDWOOD   60.00  LOAD==8.44(1.93)
4  33370     0  "5 "    0     # LOAD-DROP    REDWOOD   60.00  LOAD==30.43(6.94)
4  33371     0  "1 "    0     # LOAD-DROP    RAYCHEM   60.00  LOAD==7.48(5.22)
1  33368 33370  "1 "    1     # LINE-TRANSFER  REDWDTP2  60.00  TO  REDWDTP1  60.00
4  33370     0  "**"    1     # RESTORE REDWOOD CITY load
0
 #
 #
 # (213)   C5 DCTL OUTAGE
 # Martin - Sneath Lane and Millbrae - Pacifica 60 kV Lines
```

```
1  33209 33347  "1 "    0     # line from  MARTIN    60.00  BRKR to (2)   SNTH JCT  60.00
1  33347 33346  "1 "    0     # line from  SNTH JCT  60.00   (2) to (3)   SNTH TP2  60.00
1  33346 33389  "1 "    0     # line from  SNTH TP2  60.00   (3) to (1)   PACIFJCT  60.00
1  33346 33350  "1 "    0     # line from  SNTH TP2  60.00   (3) to BRKR  SNTH LNE  60.00
4  33350     0  "1 "    0     # LOAD-DROP    SNTH LNE  60.00  LOAD==7.61(1.73)
4  33350     0  "2 "    0     # LOAD-DROP    SNTH LNE  60.00  LOAD==9.62(2.19)
1  33350 33345  "1 "    1     # LINE-TRANSFER  SNTH LNE  60.00  TO  SNTH TP  60.00
4  33350     0  "**"    1     # RESTORE SNEATH LANE LOAD
 #
1  33351 33345  "1 "    0     # line from  SN BRNOT  60.00   (2) to (2)   SNTH TP1  60.00
1  33351 33352  "1 "    0     # line from  SN BRNOT  60.00   (2) to (2)   SNANDRES  60.00
1  33345 33355  "1 "    0     # line from  SNTH TP1  60.00   (2) to BRKR  PACIFICA  60.00
1  33352 33354  "1 "    0     # line from  SNANDRES  60.00   (2) to (2)   MLLBRETP  60.00
1  33354 33353  "1 "    0     # line from  MLLBRETP  60.00   (2) to BRKR  MILLBRAE  60.00
4  33351     0  "1 "    0     # LOAD-DROP    SN BRNOT  60.00  LOAD==3.36(0.77)
4  33352     0  "1 "    0     # LOAD-DROP    SNANDRES  60.00  LOAD==1.80(0.37)
4  33355     0  "1 "    0     # LOAD-DROP    PACIFICA  60.00  LOAD==9.92(2.26)
4  33355     0  "2 "    0     # LOAD-DROP    PACIFICA  60.00  LOAD==5.61(1.28)
1  33355 33389  "1 "    1     # LINE-TRANSFER  PACIFICA  60.00  TO  PACIFJCT  60.00
4  33355     0  "**"    1     # RESTORE PACIFICA LOAD
0
 #
 #
 # (214)   C5 DCTL OUTAGE
 # Martin - Sneath Lane and Jefferson - Hillsdale Jct 60 kV Lines
1  33209 33347  "1 "    0     # line from  MARTIN    60.00  BRKR to (2)   SNTH JCT  60.00
1  33347 33346  "1 "    0     # line from  SNTH JCT  60.00   (2) to (3)   SNTH TP2  60.00
1  33346 33389  "1 "    0     # line from  SNTH TP2  60.00   (3) to (1)   PACIFJCT  60.00
1  33346 33350  "1 "    0     # line from  SNTH TP2  60.00   (3) to BRKR  SNTH LNE  60.00
4  33350     0  "1 "    0     # LOAD-DROP    SNTH LNE  60.00  LOAD==7.61(1.73)
4  33350     0  "2 "    0     # LOAD-DROP    SNTH LNE  60.00  LOAD==9.62(2.19)
1  33350 33345  "1 "    1     # LINE-TRANSFER  SNTH LNE  60.00  TO  SNTH TP  60.00
4  33350     0  "**"    1     # RESTORE SNEATH LANE LOAD
 #
1  33348 33359  "1 "    0     # line from  CAROLD1   60.00   (3) to BRKR  CAROLNDS  60.00
1  33348 33391  "1 "    0     # line from  CAROLD1   60.00   (3) to (2)   TRAN-60   60.00
1  33348 33396  "1 "    0     # line from  CAROLD1   60.00   (3) to (3)   HILDAL49  60.00
1  33391 33392  "1 "    0     # line from  TRAN-60   60.00   (2) to (1)   MLLBTP97  60.00
1  33396 33361  "1 "    0     # line from  HILDAL49  60.00   (3) to (3)   HLLSDLJT  60.00
1  33396 33397  "1 "    0     # line from  HILDAL49  60.00   (3) to (2)   RLSTN35   60.00
1  33361 33360  "1 "    0     # line from  HLLSDLJT  60.00  BRKR to BRKR  HILLSDLE  60.00
1  33361 33394  "1 "    0     # line from  HLLSDLJT  60.00   (3) to BRKR  OXMTN_TP  60.00
1  33397 33378  "1 "    0     # line from  RLSTN35   60.00   (2) to (3)   WTRSHDTP  60.00
1  33378 33379  "1 "    0     # line from  WTRSHDTP  60.00   (3) to (1)   WATRSHED  60.00
1  33378 33400  "1 "    0     # line from  WTRSHDTP  60.00   (3) to BRKR  JEFRSN_E  60.00
4  33359     0  "1 "    0     # LOAD-DROP    CAROLNDS  60.00  LOAD==2.65(0.60)
4  33359     0  "2 "    0     # LOAD-DROP    CAROLNDS  60.00  LOAD==4.88(1.11)
4  33379 33363  "1 "    1     # LOAD-TRANSFER  WATRSHED  60.00  TO  RALSTON   60.00    LOAD==0.70(0.32)
1  33349 33359  "1 "    1     # LINE-TRANSFER  CAROLNDS  60.00  TO  CAROLD2  60.00
4  33359     0  "**"    1     # RESTORE CAROLANDS load
0
 #
 #
 # (215) BUS FAULT  30700  "SANMATEO" San Mateo 230 kV Bus Section 1E
 #
1  30700  30703  "2"    0     # LINE from  SANMATEO 230.00  to  RAVENSWD 230.00
4  30700     0   "v "   0     # SVD-DROP   SANMATEO 230.00
0
 #
 #
 # (216) BUS FAULT  30700  "SANMATEO" San Mateo 230 kV Bus Section 2E
 #
1  30700  30703  "1"    0     # LINE from  SANMATEO 230.00  to  RAVENSWD 230.00
0
 #
 #
 # (217) BUS FAULT  30700  "SANMATEO" San Mateo 230 kV Bus Section 1D
 #
1  30700  30527  "1"    0     # LINE from  SANMATEO 230.00  to  PITSBG E 230.00
2  30700  30701  "5"    0     # TRAN from  SANMATEO 230.00  to  SMATEO5M  13.20
0
 #
 #
 # (218) BUS FAULT  30700  "SANMATEO" San Mateo 230 kV Bus Section 2D
 #
1  30700  30560  "1"    0     # LINE from  SANMATEO 230.00  to  E. SHORE 230.00
2  30700  30702  "6"    0     # TRAN from  SANMATEO 230.00  to  SMATEO6M  13.20
0
```

```
 #
 #
 # (219) BUS FAULT  30711  "S.L.A.C."
 #
1  30711  30710  "1"    0     # LINE from  S.L.A.C. 230.00  to  SLACTAP1 230.00
1  30711  30712  "1"    0     # LINE from  S.L.A.C. 230.00  to  SLACTAP2 230.00
4  30711     0  "1 "    0     # LOAD-DROP    S.L.A.C. 230.00  LOAD==58.00(11.78)
0
 #
 #
 # (220) BUS FAULT  30715  "JEFFERSN"
 #
1  30715  30710  "1"    0     # LINE from  JEFFERSN 230.00  to  SLACTAP1 230.00
1  30715  30712  "2"    0     # LINE from  JEFFERSN 230.00  to  SLACTAP2 230.00
1  30715  30713  "1"    0     # LINE from  JEFFERSN 230.00  to  JMDAMCX1 230.00
2  30715  33380  "1"    0     # TRAN from  JEFFERSN 230.00  to  JEFRSN_D  60.00
2  30715  33400  "2"    0     # TRAN from  JEFFERSN 230.00  to  JEFRSN_E  60.00
0
 #
 #
 # (221) BUS FAULT  33300  "DALY CTY"
 #
1  33300  33208  "1"    0     # LINE from  DALY CTY 115.00  to  MARTIN C 115.00
1  33300  33301  "2"    0     # LINE from  DALY CTY 115.00  to  DLY CTYP 115.00
4  33300     0  "1 "    0     # LOAD-DROP    DALY CTY 115.00  LOAD==50.29(11.46)
4  33300     0  "2 "    0     # LOAD-DROP    DALY CTY 115.00  LOAD==30.35(6.92)
0
 #
 #
 # (222) BUS FAULT  33302  "SERRMNTE"
 #
1  33302  33301  "1"    0     # LINE from  SERRMNTE 115.00  to  DLY CTYP 115.00
4  33302     0  "1 "    0     # LOAD-DROP    SERRMNTE 115.00  LOAD==11.42(2.60)
0
 #
 #
 # (223) BUS FAULT  33303  "EST GRND"
 #
1  33303  33208  "2"    0     # LINE from  EST GRND 115.00  to  MARTIN C 115.00
1  33303  33308  "2"    0     # LINE from  EST GRND 115.00  to  SFIA-MA  115.00
4  33303     0  "1 "    0     # LOAD-DROP    EST GRND 115.00  LOAD==58.02(13.22)
4  33303     0  "4 "    0     # LOAD-DROP    EST GRND 115.00  LOAD==38.34(8.74)
4  33303     0  "5 "    0     # LOAD-DROP    EST GRND 115.00  LOAD==35.32(8.05)
0
 #
 #
 # (224) BUS FAULT  33306  "SFIA"
 #
1  33306  33310  "5"    0     # LINE from  SFIA     115.00  to  SANMATEO 115.00
1  33306  33322  "5"    0     # LINE from  SFIA     115.00  to  UAL TAP  115.00
4  33306 33308  "1 "    1     # LOAD-TRANSFER  SFIA     115.00  TO  SFIA-MA  115.00    LOAD==18.70(3.80)
4  33306 33308  "2 "    1     # LOAD-TRANSFER  SFIA     115.00  TO  SFIA-MA  115.00    LOAD==18.70(3.80)
0
 #
 #
 # (225) BUS FAULT  33307  "MILLBRAE" Millbrae 115 kV Bus Section 1
 #
1  33307  33208  "1"    0     # LINE from  MILLBRAE 115.00  to  MARTIN C 115.00
1  33307  33309  "1"    0     # LINE from  MILLBRAE 115.00  to  SANPAULA 115.00
4  33307     0  "4 "    0     # LOAD-DROP    MILLBRAE 115.00  LOAD==22.69(5.18)
0
 #
 #
 # (226) BUS FAULT  33307  "MILLBRAE" Millbrae 115 kV Bus Section 2
 #
1  33307  33310  "1"    0     # LINE from  MILLBRAE 115.00  to  SANMATEO 115.00
2  33307  33353  "5"    0     # TRAN from  MILLBRAE 115.00  to  MILLBRAE  60.00
4  33307     0  "3 "    0     # LOAD-DROP    MILLBRAE 115.00  LOAD==23.03(5.25)
0
 #
 #
 # (227) BUS FAULT  33310  "SANMATEO" San Mateo 115 kV Bus Section 1E
 #
1  33310  33208  "3"    0     # LINE from  SANMATEO 115.00  to  MARTIN C 115.00
1  33310  33306  "5"    0     # LINE from  SANMATEO 115.00  to  SFIA     115.00
2  33310  30702  "6"    0     # TRAN from  SANMATEO 115.00  to  SMATEO6M  13.20
2  33310  33357  "8"    0     # TRAN from  SANMATEO 115.00  to  SAN MATO  60.00
4  33310     0  "9 "    0     # LOAD-DROP    SANMATEO 115.00  LOAD==18.54(4.22)
```

```
0
 #
 #
 # (228) BUS FAULT  33310  "SANMATEO" San Mateo 115 kV Bus Section 2E
 #
1  33310  33305  "6"    0     # LINE from  SANMATEO 115.00  to  SHAWROAD 115.00
1  33310  33356  "4"    0     # LINE from  SANMATEO 115.00  to  BURLNGME 115.00
1  33310  33321  "1"    0     # LINE from  SANMATEO 115.00  to  RVNSWD D 115.00
1  33310  33311  "2"    0     # LINE from  SANMATEO 115.00  to  BAY MDWS 115.00
1  33310  33312  "1"    0     # LINE from  SANMATEO 115.00  to  BELMONT  115.00
0
 #
 #
 # (229) BUS FAULT  33310  "SANMATEO" San Mateo 115 kV Bus Section 1D
 #
1  33310  33307  "1"    0     # LINE from  SANMATEO 115.00  to  MILLBRAE 115.00
1  33310  33311  "1"    0     # LINE from  SANMATEO 115.00  to  BAY MDWS 115.00
0
 #
 #
 # (230) BUS FAULT  33310  "SANMATEO" San Mateo 115 kV Bus Section 2D
 #
1  33310  33308  "2"    0     # LINE from  SANMATEO 115.00  to  SFIA-MA  115.00
2  33310  30701  "5"    0     # TRAN from  SANMATEO 115.00  to  SMATEO5M  13.20
0
 #
 #
 # (231) BUS FAULT  33311  "BAY MDWS"
 #
1  33311  33310  "1"    0     # LINE from  BAY MDWS 115.00  to  SANMATEO 115.00
1  33311  33310  "2"    0     # LINE from  BAY MDWS 115.00  to  SANMATEO 115.00
4  33311     0  "1 "    0     # LOAD-DROP    BAY MDWS 115.00  LOAD==43.91(10.01)
4  33311     0  "2 "    0     # LOAD-DROP    BAY MDWS 115.00  LOAD==34.54(7.87)
4  33311     0  "3 "    0     # LOAD-DROP    BAY MDWS 115.00  LOAD==20.42(4.66)
4  33311     0  "5 "    0     # LOAD-DROP    BAY MDWS 115.00  LOAD==19.08(4.35)
0
 #
 #
 # (232) BUS FAULT  33312  "BELMONT"
 #
1  33312  33310  "1"    0     # LINE from  BELMONT  115.00  to  SANMATEO 115.00
1  33312  33313  "1"    0     # LINE from  BELMONT  115.00  to  BAIR     115.00
4  33312     0  "1 "    0     # LOAD-DROP    BELMONT  115.00  LOAD==37.28(8.49)
4  33312     0  "2 "    0     # LOAD-DROP    BELMONT  115.00  LOAD==9.80(2.23)
4  33312     0  "3 "    0     # LOAD-DROP    BELMONT  115.00  LOAD==31.91(7.27)
0
 #
 #
 # (233) BUS FAULT  33313  "BAIR"
 #
1  33313  33312  "1"    0     # LINE from  BAIR     115.00  to  BELMONT  115.00
1  33313  33319  "2"    0     # LINE from  BAIR     115.00  to  SHREDJCT 115.00
1  33313  33321  "1"    0     # LINE from  BAIR     115.00  to  RVNSWD D 115.00
2  33313  33367  "1"    0     # TRAN from  BAIR     115.00  to  BAIR      60.00
4  33313     0  "2 "    0     # LOAD-DROP    BAIR     115.00  LOAD==16.67(3.80)
0
 #
 #
 # (234) BUS FAULT  33315  "RVNSWD E" Ravenswood 115 kV Bus Section 1E
 #
1  33315  35350  "1"    0     # LINE from  RVNSWD E 115.00  to  AMES BS1 115.00
1  33315  38028  "1"    0     # LINE from  RVNSWD E 115.00  to  PLO ALTO 115.00
0
 #
 #
 # (235) BUS FAULT  33315  "RVNSWD E" Ravenswood 115 kV Bus Section 2E
 #
1  33315  33316  "2"    0     # LINE from  RVNSWD E 115.00  to  CLY LND2 115.00
1  33315  35351  "2"    0     # LINE from  RVNSWD E 115.00  to  AMES BS2 115.00
1  33315  38028  "2"    0     # LINE from  RVNSWD E 115.00  to  PLO ALTO 115.00
0
 #
 #
 # (236) BUS FAULT  33316  "CLY LND2"
 #
1  33316  33315  "2"    0     # LINE from  CLY LND2 115.00  to  RVNSWD E 115.00
1  33316  38028  "1"    0     # LINE from  CLY LND2 115.00  to  PLO ALTO 115.00
1  33316  33317  "1"    0     # LINE from  CLY LND2 115.00  to  CLY LND  115.00
```

```
2  33316  33375  "2"    0     # TRAN from  CLY LND2 115.00  to  CLY LNDG  60.00
0
 #
 #
 # (237) BUS FAULT  33317  "CLY LND"
 #
1  33317  33316  "1"    0     # LINE from  CLY LND  115.00  to  CLY LND2 115.00
1  33317  33321  "1"    0     # LINE from  CLY LND  115.00  to  RVNSWD D 115.00
2  33317  33375  "1"    0     # TRAN from  CLY LND  115.00  to  CLY LNDG  60.00
0
 #
 #
 # (238) BUS FAULT  33321  "RVNSWD D" Ravenswood 115 kV Bus Section 1D
 #
1  33321  33313  "1"    0     # LINE from  RVNSWD D 115.00  to  BAIR     115.00
1  33321  33317  "1"    0     # LINE from  RVNSWD D 115.00  to  CLY LND  115.00
0
 #
 #
 # (239) BUS FAULT  33321  "RVNSWD D" Ravenswood 115 kV Bus Section 1D
 #
1  33321  33310  "1"    0     # LINE from  RVNSWD D 115.00  to  SANMATEO 115.00
1  33321  33319  "2"    0     # LINE from  RVNSWD D 115.00  to  SHREDJCT 115.00
0
 #
 #
 # (240) BUS FAULT  33350  "SNTH LNE"
 #
1  33350  33345  "1"    0     # LINE from  SNTH LNE  60.00  to  SNTH TP1  60.00
1  33350  33346  "1"    0     # LINE from  SNTH LNE  60.00  to  SNTH TP2  60.00
4  33350     0  "1 "    0     # LOAD-DROP    SNTH LNE  60.00  LOAD==7.61(1.73)
4  33350     0  "2 "    0     # LOAD-DROP    SNTH LNE  60.00  LOAD==9.62(2.19)
0
 #
 #
 # (241) BUS FAULT  33353  "MILLBRAE"
 #
1  33353  33354  "1"    0     # LINE from  MILLBRAE  60.00  to  MLLBRETP  60.00
2  33353  33307  "5"    0     # TRAN from  MILLBRAE  60.00  to  MILLBRAE 115.00
4  33353     0  "1 "    0     # LOAD-DROP    MILLBRAE  60.00  LOAD==5.16(1.18)
0
 #
 #
 # (242) BUS FAULT  33355  "PACIFICA"
 #
1  33355  33345  "1"    0     # LINE from  PACIFICA  60.00  to  SNTH TP1  60.00
1  33355  33389  "1"    0     # LINE from  PACIFICA  60.00  to  PACIFJCT  60.00
4  33355     0  "1 "    0     # LOAD-DROP    PACIFICA  60.00  LOAD==9.92(2.26)
4  33355     0  "2 "    0     # LOAD-DROP    PACIFICA  60.00  LOAD==5.61(1.28)
0
 #
 #
 # (243) BUS FAULT  33356  "BURLNGME"
 #
1  33356  33310  "4"    0     # LINE from  BURLNGME 115.00  to  SANMATEO 115.00
1  33356  33208  "4"    0     # LINE from  BURLNGME 115.00  to  MARTIN C 115.00
4  33356     0  "1 "    0     # LOAD-DROP    BURLNGME 115.00  LOAD==10.08(2.30)
0
 #
 #
 # (244) BUS FAULT  33357  "SAN MATO" San Mateo 60 kV Bus Section 1
 #
1  33357  33358  "1"    0     # LINE from  SAN MATO  60.00  to  BERESFRD  60.00
2  33357  33318  "3"    0     # TRAN from  SAN MATO  60.00  to  SMATEO3M 115.00
0
 #
 #
 # (245) BUS FAULT  33357  "SAN MATO" San Mateo 60 kV Bus Section 2
 #
1  33357  33364  "1"    0     # LINE from  SAN MATO  60.00  to  ORACLE60  60.00
2  33357  33310  "8"    0     # TRAN from  SAN MATO  60.00  to  SANMATEO 115.00
4  33357     0  "4 "    0     # LOAD-DROP    SAN MATO  60.00  LOAD==8.55(1.94)
0
 #
 #
 # (246) BUS FAULT  33358  "BERESFRD"
 #
1  33358  33357  "1"    0     # LINE from  BERESFRD  60.00  to  SAN MATO  60.00
```

```
1  33358  33360  "1"    0     # LINE from  BERESFRD  60.00  to  HILLSDLE  60.00
4  33358     0  "1 "    0     # LOAD-DROP    BERESFRD  60.00  LOAD==5.80(1.32)
4  33358     0  "2 "    0     # LOAD-DROP    BERESFRD  60.00  LOAD==4.07(0.93)
0
 #
 #
 # (247) BUS FAULT  33359  "CAROLNDS"
 #
1  33359  33348  "1"    0     # LINE from  CAROLNDS  60.00  to  CAROLD1   60.00
1  33359  33349  "1"    0     # LINE from  CAROLNDS  60.00  to  CAROLD2   60.00
4  33359     0  "1 "    0     # LOAD-DROP    CAROLNDS  60.00  LOAD==2.65(0.60)
4  33359     0  "2 "    0     # LOAD-DROP    CAROLNDS  60.00  LOAD==4.88(1.11)
0
 #
 #
 # (248) BUS FAULT  33360  "HILLSDLE"
 #
1  33360  33358  "1"    0     # LINE from  HILLSDLE  60.00  to  BERESFRD  60.00
1  33360  33361  "1"    0     # LINE from  HILLSDLE  60.00  to  HLLSDLJT  60.00
4  33360     0  "1 "    0     # LOAD-DROP    HILLSDLE  60.00  LOAD==7.32(1.67)
0
 #
 #
 # (249) BUS FAULT  33363  "RALSTON"
 #
1  33363  33397  "1"    0     # LINE from  RALSTON   60.00  to  RLSTN35   60.00
1  33363  33398  "1"    0     # LINE from  RALSTON   60.00  to  RLSTN45   60.00
4  33363 33379  "1 "    1     # LOAD-TRANSFER  RALSTON   60.00  TO  WATRSHED  60.00    LOAD==6.53(1.49)
4  33363 33379  "2 "    1     # LOAD-TRANSFER  RALSTON   60.00  TO  WATRSHED  60.00    LOAD==3.37(0.77)
0
 #
 #
 # (250) BUS FAULT  33365  "SAN CRLS"
 #
1  33365  33364  "1"    0     # LINE from  SAN CRLS  60.00  to  ORACLE60  60.00
1  33365  33367  "1"    0     # LINE from  SAN CRLS  60.00  to  BAIR      60.00
4  33365     0  "1 "    0     # LOAD-DROP    SAN CRLS  60.00  LOAD==12.95(2.95)
4  33365     0  "2 "    0     # LOAD-DROP    SAN CRLS  60.00  LOAD==19.09(4.35)
4  33365     0  "3 "    0     # LOAD-DROP    SAN CRLS  60.00  LOAD==9.80(2.23)
0
 #
 #
 # (251) BUS FAULT  33366  "HLF MNBY"
 #
1  33366  33389  "1"    0     # LINE from  HLF MNBY  60.00  to  PACIFJCT  60.00
1  33366  33394  "1"    0     # LINE from  HLF MNBY  60.00  to  OXMTN_TP  60.00
4  33366     0  "1 "    0     # LOAD-DROP    HLF MNBY  60.00  LOAD==8.02(1.82)
4  33366     0  "2 "    0     # LOAD-DROP    HLF MNBY  60.00  LOAD==8.73(1.99)
4  33366     0  "3 "    0     # LOAD-DROP    HLF MNBY  60.00  LOAD==9.64(2.19)
0
 #
 #
 # (252) BUS FAULT  33367  "BAIR"
 #
1  33367  33365  "1"    0     # LINE from  BAIR      60.00  to  SAN CRLS  60.00
1  33367  33368  "1"    0     # LINE from  BAIR      60.00  to  REDWDTP1  60.00
1  33367  33369  "2"    0     # LINE from  BAIR      60.00  to  REDWDTP2  60.00
2  33367  33313  "1"    0     # TRAN from  BAIR      60.00  to  BAIR     115.00
0
 #
 #
 # (253) BUS FAULT  33370  "REDWOOD"
 #
1  33370  33368  "1"    0     # LINE from  REDWOOD   60.00  to  REDWDTP1  60.00
1  33370  33369  "2"    0     # LINE from  REDWOOD   60.00  to  REDWDTP2  60.00
4  33370     0  "1 "    0     # LOAD-DROP    REDWOOD   60.00  LOAD==11.80(2.69)
4  33370     0  "2 "    0     # LOAD-DROP    REDWOOD   60.00  LOAD==5.12(1.17)
4  33370     0  "3 "    0     # LOAD-DROP    REDWOOD   60.00  LOAD==8.98(2.05)
4  33370     0  "4 "    0     # LOAD-DROP    REDWOOD   60.00  LOAD==8.44(1.93)
4  33370     0  "5 "    0     # LOAD-DROP    REDWOOD   60.00  LOAD==30.43(6.94)
0
 #
 #
 # (254) BUS FAULT  33375  "CLY LNDG" Cooley Landing 60 kV Bus Section 1
 #
1  33375  33373  "1"    0     # LINE from  CLY LNDG  60.00  to  BLHVNTP1  60.00
1  33375  33382  "1"    0     # LINE from  CLY LNDG  60.00  to  S.R.I.    60.00
2  33375  33317  "1"    0     # TRAN from  CLY LNDG  60.00  to  CLY LND  115.00
```

```
0
 #
 #
 # (255) BUS FAULT  33375  "CLY LNDG" Cooley Landing 60 kV Bus Section 1
 #
1  33375  33371  "2"    0     # LINE from  CLY LNDG  60.00  to  RAYCHEM   60.00
1  33375  35454  "1"    0     # LINE from  CLY LNDG  60.00  to  WSTNG JT  60.00
2  33375  33316  "2"    0     # TRAN from  CLY LNDG  60.00  to  CLY LND2 115.00
0
 #
 #
 # (256) BUS FAULT  33376  "LAS PLGS"
 #
1  33376  33387  "1"    0     # LINE from  LAS PLGS  60.00  to  WOODSIDE  60.00
1  33376  33393  "1"    0     # LINE from  LAS PLGS  60.00  to  LSPLGSJT  60.00
4  33376     0  "1 "    0     # LOAD-DROP    LAS PLGS  60.00  LOAD==3.30(0.75)
4  33376     0  "2 "    0     # LOAD-DROP    LAS PLGS  60.00  LOAD==3.30(0.75)
0
 #
 #
 # (257) BUS FAULT  33380  "JEFRSN_D" Jefferson 60 kV Bus Section 1D
 #
1  33380  33377  "1"    0     # LINE from  JEFRSN_D  60.00  to  EMRLD LE  60.00
1  33380  33400  "1"    0     # LINE from  JEFRSN_D  60.00  to  JEFRSN_E  60.00
0
 #
 #
 # (258) BUS FAULT  33380  "JEFRSN_D" Jefferson 60 kV Bus Section 2D and 2E
 #
1  33380  33387  "1"    0     # LINE from  JEFRSN_D  60.00  to  WOODSIDE  60.00
2  33380  30715  "1"    0     # TRAN from  JEFRSN_D  60.00  to  JEFFERSN 230.00
1  33400  33378  "1"    0     # LINE from  JEFRSN_E  60.00  to  WTRSHDTP  60.00
0
 #
 #
 # (259) BUS FAULT  33381  "GLENWOOD"
 #
1  33381  33382  "1"    0     # LINE from  GLENWOOD  60.00  to  S.R.I.    60.00
1  33381  33384  "1"    0     # LINE from  GLENWOOD  60.00  to  MNLO JCT  60.00
4  33381     0  "1 "    0     # LOAD-DROP    GLENWOOD  60.00  LOAD==10.42(2.37)
4  33381     0  "2 "    0     # LOAD-DROP    GLENWOOD  60.00  LOAD==7.20(1.64)
4  33381     0  "3 "    0     # LOAD-DROP    GLENWOOD  60.00  LOAD==9.03(2.06)
0
 #
 #
 # (260) BUS FAULT  33383  "MENLO"
 #
1  33383  33385  "1"    0     # LINE from  MENLO     60.00  to  MNLOJCT2  60.00
1  33383  33390  "1"    0     # LINE from  MENLO     60.00  to  MENLO G   60.00
4  33383     0  "1 "    0     # LOAD-DROP    MENLO     60.00  LOAD==4.91(1.12)
4  33383     0  "3 "    0     # LOAD-DROP    MENLO     60.00  LOAD==14.12(3.21)
0
 #
 #
 # (261) BUS FAULT  33386  "STANFORD"
 #
1  33386  33384  "1"    0     # LINE from  STANFORD  60.00  to  MNLO JCT  60.00
1  33386  33388  "1"    0     # LINE from  STANFORD  60.00  to  S.L.A.C.  60.00
2  33386  33463  "1"    0     # TRAN from  STANFORD  60.00  to  CARDINAL  12.47
4  33386     0  "SG"    0     # LOAD-DROP    STANFORD  60.00  LOAD==30.83(6.26)
0
 #
 #
 # (262) BUS FAULT  33387  "WOODSIDE"
 #
1  33387  33376  "1"    0     # LINE from  WOODSIDE  60.00  to  LAS PLGS  60.00
1  33387  33380  "1"    0     # LINE from  WOODSIDE  60.00  to  JEFRSN_D  60.00
4  33387     0  "1 "    0     # LOAD-DROP    WOODSIDE  60.00  LOAD==12.61(2.87)
4  33387     0  "2 "    0     # LOAD-DROP    WOODSIDE  60.00  LOAD==10.53(2.40)
4  33387     0  "3 "    0     # LOAD-DROP    WOODSIDE  60.00  LOAD==10.53(2.40)
0
 #
 #
 # (263) BUS FAULT  33390  "MENLO G"
 #
1  33390  33383  "1"    0     # LINE from  MENLO G   60.00  to  MENLO     60.00
1  33390  33384  "1"    0     # LINE from  MENLO G   60.00  to  MNLO JCT  60.00
4  33390     0  "2 "    0     # LOAD-DROP    MENLO G   60.00  LOAD==5.32(1.21)
```

```
4  33390     0  "4 "    0     # LOAD-DROP    MENLO G   60.00  LOAD==14.35(3.27)
0
 #
 #
 # (264) BUS FAULT  33394  "OXMTN_TP"
 #
1  33394  33361  "1"    0     # LINE from  OXMTN_TP  60.00  to  HLLSDLJT  60.00
1  33394  33366  "1"    0     # LINE from  OXMTN_TP  60.00  to  HLF MNBY  60.00
1  33394  33395  "1"    0     # LINE from  OXMTN_TP  60.00  to  OX_MTN60  60.00
0
 #
 #
 # (265) BUS FAULT  33400  "JEFRSN_E" Jefferson 60 kV Bus Section 1E
 #
1  33400  33380  "1"    0     # LINE from  JEFRSN_E  60.00  to  JEFRSN_D  60.00
1  33400  33398  "1"    0     # LINE from  JEFRSN_E  60.00  to  RLSTN45   60.00
2  33400  30715  "2"    0     # TRAN from  JEFRSN_E  60.00  to  JEFFERSN 230.00
0
 #
 #
 # 2013 category c contingency list (dctl and bus outages)
 # Mission Division Zone 316
 #
 #
 # (266)   C5 DCTL OUTAGE
 # Tassajara - Newark and San Ramon - Moraga 230 kV Lines
1  30562 30631  "1 "    0     # line from  TES JCT  230.00   (3) to BRKR  NEWARK E 230.00
1  30562 30561  "1 "    0     # line from  TES JCT  230.00   (3) to BRKR  TASSAJAR 230.00
1  30562 30563  "1 "    0     # line from  TES JCT  230.00   (3) to BRKR  RESEARCH 230.00
4  30563     0  "1 "    0     # LOAD-DROP    RESEARCH 230.00  LOAD==37.05(8.44)
 #
1  30550 30555  "1 "    0     # line from  MORAGA   230.00  BRKR to BRKR  SANRAMON 230.00
0
 #
 #
 # (267)   C5 DCTL OUTAGE
 # Tassajara - Newark and Castro Valley - Newark 230 kV Lines
1  30562 30631  "1 "    0     # line from  TES JCT  230.00   (3) to BRKR  NEWARK E 230.00
1  30562 30561  "1 "    0     # line from  TES JCT  230.00   (3) to BRKR  TASSAJAR 230.00
1  30562 30563  "1 "    0     # line from  TES JCT  230.00   (3) to BRKR  RESEARCH 230.00
4  30563     0  "1 "    0     # LOAD-DROP    RESEARCH 230.00  LOAD==37.05(8.44)
 #
1  30554 30631  "1 "    0     # line from  CASTROVL 230.00  BRKR to BRKR  NEWARK E 230.00
0
 #
 #
 # (268)   C5 DCTL OUTAGE
 # Moraga - San Leandro #1 and #2 115 kV Lines
1  33020 35101  "1 "    0     # line from  MORAGA   115.00  BRKR to BRKR  SN LNDRO 115.00
 #
1  33020 35101  "2 "    0     # line from  MORAGA   115.00  BRKR to BRKR  SN LNDRO 115.00
0
 #
 #
 # (269)   C5 DCTL OUTAGE
 # Grant - East Shore #1 and #2 115 kV Lines
1  35104 35105  "1 "    0     # line from  GRANT    115.00  BRKR to BRKR  EASTSHRE 115.00
 #
1  35104 35105  "2 "    0     # line from  GRANT    115.00  BRKR to BRKR  EASTSHRE 115.00
0
 #
 #
 # (270)   C5 DCTL OUTAGE
 # East Shore - Mt Eden #1 and #2 115 kV Lines
1  35105 35106  "1 "    0     # line from  EASTSHRE 115.00  BRKR to BRKR  MT EDEN  115.00
 #
1  35105 35106  "2 "    0     # line from  EASTSHRE 115.00  BRKR to BRKR  MT EDEN  115.00
0
 #
 #
 # (271)   C5 DCTL OUTAGE
 # Newark - Jarvis #1 and #2 115 kV Lines
1  35120 35111  "1 "    0     # line from  NEWARK D 115.00  BRKR to BRKR  JARVIS   115.00
 #
1  35120 35124  "2 "    0     # line from  NEWARK D 115.00  BRKR to (2)   NUMI JCT 115.00
1  35124 35111  "2 "    0     # line from  NUMI JCT 115.00   (2) to BRKR  JARVIS   115.00
0
 #
```

```
 #
 # (272)   C5 DCTL OUTAGE
 # Newark - Northern #1 and #2 115 kV Lines
1  35120 36851  "1 "    0     # line from  NEWARK D 115.00  BRKR to BRKR  NRS 400  115.00
 #
1  35122 36853  "2 "    0     # line from  NEWARK F 115.00  BRKR to BRKR  NRS 300  115.00
0
 #
 #
 # (273)   C5 DCTL OUTAGE
 # Newark - Fremont #1 and #2 115 kV Lines
1  35121 35110  "1 "    0     # line from  NEWARK E 115.00  BRKR to BRKR  FREMNT   115.00
 #
1  35121 35110  "2 "    0     # line from  NEWARK E 115.00  BRKR to BRKR  FREMNT   115.00
0
 #
 #
 # (274)   C5 DCTL OUTAGE
 # Newark - Ames #1 and #2 115 kV Lines
1  35121 35350  "1 "    0     # line from  NEWARK E 115.00  BRKR to BRKR  AMES BS1 115.00
 #
1  35121 35351  "2 "    0     # line from  NEWARK E 115.00  BRKR to BRKR  AMES BS2 115.00
0
 #
 #
 # (275)   C5 DCTL OUTAGE
 # Newark - Ames #3 and Newark - Ames Distribution 115 kV Lines
1  35121 35350  "3 "    0     # line from  NEWARK E 115.00  BRKR to BRKR  AMES BS1 115.00
 #
1  35349 35121  "1 "    0     # line from  AMES DST 115.00  BRKR to BRKR  NEWARK E 115.00
0
 #
 #
 # (276)   C5 DCTL OUTAGE
 # Newark - Nummi 115 kV and Newark - Livermore 60 kV Lines
1  35122 35126  "1 "    0     # line from  NEWARK F 115.00  BRKR to (2)   NUMI TAP 115.00
1  35126 35127  "1 "    0     # line from  NUMI TAP 115.00   (2) to (2)   WESTRN_D 115.00
1  35127 35112  "1 "    0     # line from  WESTRN_D 115.00   (2) to BRKR  NUMMI    115.00
4  35127     0  "1 "    0     # LOAD-DROP    WESTRN_D 115.00  LOAD==6.80(4.25)
4  35112     0  "1 "    0     # LOAD-DROP    NUMMI    115.00  LOAD==30.88(8.14)
 #
1  35225 35217  "1 "    0     # line from  LIVRMR_2  60.00  BRKR to BRKR  NEWARK    60.00
0
 #
 #
 # (277)   C5 DCTL OUTAGE
 # Newark - Lawrence and Newark - Applied Materials 115 kV Lines
1  35122 35357  "1 "    0     # line from  NEWARK F 115.00  BRKR to (3)   LCKHD J1 115.00
1  35357 35358  "1 "    0     # line from  LCKHD J1 115.00   (3) to (3)   MFT.FD J 115.00
1  35357 35363  "1 "    0     # line from  LCKHD J1 115.00   (3) to BRKR  LAWRENCE 115.00
1  35358 35359  "1 "    0     # line from  MFT.FD J 115.00   (3) to (1)   MOFT.FLD 115.00
1  35358 35361  "1 "    0     # line from  MFT.FD J 115.00   (3) to BRKR  LOCKHD 1 115.00
4  35359     0  "1 "    0     # LOAD-DROP    MOFT.FLD 115.00  LOAD==4.46(1.12)
4  35361     0  "3 "    0     # LOAD-DROP    LOCKHD 1 115.00  LOAD==17.45(14.46)
1  35361 35362  "1 "    1     # close LOCKHD 1 115.00  LOCKHD 2  115.00
4  35361 0      "**"    1     # restore all loads to LOCKHD 1
 #
1  35122 35360  "1 "    0     # line from  NEWARK F 115.00  BRKR to (3)   LCKHD J2 115.00
1  35360 35362  "1 "    0     # line from  LCKHD J2 115.00   (3) to BRKR  LOCKHD 2 115.00
1  35360 35365  "1 "    0     # line from  LCKHD J2 115.00   (3) to (3)   AMD JCT  115.00
1  35365 35364  "1 "    0     # line from  AMD JCT  115.00   (3) to BRKR  A.M.D    115.00
1  35365 35369  "1 "    0     # line from  AMD JCT  115.00   (3) to BRKR  APP MAT  115.00
4  35362     0  "1 "    0     # LOAD-DROP    LOCKHD 2 115.00  LOAD==7.56(1.72)
4  35362     0  "2 "    0     # LOAD-DROP    LOCKHD 2 115.00  LOAD==3.42(0.78)
4  35362     0  "4 "    0     # LOAD-DROP    LOCKHD 2 115.00  LOAD==16.21(12.58)
4  35364     0  "1 "    0     # LOAD-DROP    A.M.D    115.00  LOAD==1.67(1.17)
1  35361 35362  "1 "    1     # close LOCKHD 1 115.00  LOCKHD 2  115.00
4  35362 0      "**"    1     # restore all loads to LOCKHD 2
0
 #
 #
 # (278)   C5 DCTL OUTAGE
 # Newark - Dixon Landing and Newark - Milpitas #1 115 kV Lines
1  35122 35600  "1 "    0     # line from  NEWARK F 115.00  BRKR to BRKR  DIXON LD 115.00
 #
1  35122 35624  "1 "    0     # line from  NEWARK F 115.00  BRKR to BRKR  MILPITAS 115.00
0
 #
```

```
 #
 # (279)   C5 DCTL OUTAGE
 # Newark - Kifer and Newark - Trimble 115 kV Lines
1  35122 35602  "1 "    0     # line from  NEWARK F 115.00  BRKR to (3)   ZNKER J2 115.00
1  35602 35604  "1 "    0     # line from  ZNKER J2 115.00   (3) to (3)   ZANKER   115.00
1  35602 36850  "1 "    0     # line from  ZNKER J2 115.00   (3) to BRKR  KRS      115.00
2  35604 35861  "1 "    0     # TRAN from  ZANKER   115.00   (3) to (2)   SJ-SCL W   9.11
2  35604 35861  "2 "    0     # TRAN from  ZANKER   115.00   (3) to (2)   SJ-SCL W   9.11
4  35861     0  "SG"    0     # LOAD-DROP    SJ-SCL W   9.11  LOAD==6.17(2.09)
3  35861     0  "1 "    0     # GEN-DROP    SJ-SCL W   9.11  GEN==5.00(0.00)
 #
1  35122 35603  "1 "    0     # line from  NEWARK F 115.00  BRKR to (3)   ZNKER J1 115.00
1  35603 35605  "1 "    0     # line from  ZNKER J1 115.00   (3) to (1)   AGNEW J  115.00
1  35603 35612  "1 "    0     # line from  ZNKER J1 115.00   (3) to BRKR  TRIMBLE  115.00
0
 #
 #
 # (280) BUS FAULT  30537  "NDUBLIN"
 #
 #
1  30537  30530  "1"    0     # LINE from  NDUBLIN  230.00  to  CAYETANO 230.00
1  30537  35224  "1"    0     # LINE from  NDUBLIN  230.00  to  VINEYD_D 230.00
4  30537     0  "1 "    0     # LOAD-DROP    NDUBLIN  230.00  LOAD==18.81(4.29)
0
 #
 #
 # (281) BUS FAULT  30554  "CASTROVL"
 #
1  30554  30550  "1"    0     # LINE from  CASTROVL 230.00  to  MORAGA   230.00
1  30554  30556  "1"    0     # LINE from  CASTROVL 230.00  to  CV BART  230.00
1  30554  30631  "1"    0     # LINE from  CASTROVL 230.00  to  NEWARK E 230.00
4  30554     0  "1 "    0     # LOAD-DROP    CASTROVL 230.00  LOAD==38.34(8.74)
4  30554     0  "2 "    0     # LOAD-DROP    CASTROVL 230.00  LOAD==34.68(7.90)
0
 #
 #
 # (282) BUS FAULT  30555  "SANRAMON" San Ramon 230 kV Bus Section 1
 #
1  30555  30526  "1"    0     # LINE from  SANRAMON 230.00  to  PITSBG D 230.00
2  30555  35209  "1"    0     # TRAN from  SANRAMON 230.00  to  SAN RAMN  60.00
0
 #
 #
 # (283) BUS FAULT  30555  "SANRAMON" San Ramon 230 kV Bus Section 2
 #
1  30555  30550  "1"    0     # LINE from  SANRAMON 230.00  to  MORAGA   230.00
0
 #
 #
 # (284) BUS FAULT  30585  "LS PSTAS"
 #
1  30585  30525  "1"    0     # LINE from  LS PSTAS 230.00  to  C.COSTA  230.00
1  30585  30630  "1"    0     # LINE from  LS PSTAS 230.00  to  NEWARK D 230.00
2  30585  35220  "4"    0     # TRAN from  LS PSTAS 230.00  to  LPOSTAS   60.00
4  30585     0  "1 "    0     # LOAD-DROP    LS PSTAS 230.00  LOAD==22.20(5.06)
4  30585     0  "2 "    0     # LOAD-DROP    LS PSTAS 230.00  LOAD==51.40(11.71)
4  30585     0  "3 "    0     # LOAD-DROP    LS PSTAS 230.00  LOAD==33.99(7.75)
0
 #
 #
 # (285) BUS FAULT  30630  "NEWARK D" Newark 230 kV Bus Section 1D
 #
1  30630  30585  "1"    0     # LINE from  NEWARK D 230.00  to  LS PSTAS 230.00
1  30630  30624  "1"    0     # LINE from  NEWARK D 230.00  to  TESLA E  230.00
1  30630  30703  "1"    0     # LINE from  NEWARK D 230.00  to  RAVENSWD 230.00
2  30630  30626  "7"    0     # TRAN from  NEWARK D 230.00  to  NWRK_7M   13.20
0
 #
 #
 # (286) BUS FAULT  30630  "NEWARK D" Newark 230 kV Bus Section 2D
 #
1  30630  30631  "1"    0     # LINE from  NEWARK D 230.00  to  NEWARK E 230.00
1  30630  35219  "1"    0     # LINE from  NEWARK D 230.00  to  VINEYARD 230.00
6  30630     0   "v "   0     # SVD-DROP   NEWARK D 230.00
0
 #
 #
 # (287) BUS FAULT  30631  "NEWARK E" Newark 230 kV Bus Section 1E
```

```
 #
1  30631  30554  "1"    0     # LINE from  NEWARK E 230.00  to  CASTROVL 230.00
1  30631  30635  "1"    0     # LINE from  NEWARK E 230.00  to  NWK DIST 230.00
0
 #
 #
 # (288) BUS FAULT  30631  "NEWARK E" Newark 230 kV Bus Section 2E
 #
1  30631  30562  "1"    0     # LINE from  NEWARK E 230.00  to  TES JCT  230.00
1  30631  30655  "2"    0     # LINE from  NEWARK E 230.00  to  ADCC     230.00
2  30631  30628  "11"    0     # TRAN from  NEWARK E 230.00  to  NWRK_11M  13.20
6  30631     0   "v "   0     # SVD-DROP   NEWARK E 230.00
0
 #
 #
 # (289) BUS FAULT  35101  "SN LNDRO" San Leandro 115 kV Bus Section D
 #
1  35101  33020  "2"    0     # LINE from  SN LNDRO 115.00  to  MORAGA   115.00
1  35101  33020  "3"    0     # LINE from  SN LNDRO 115.00  to  MORAGA   115.00
4  35101     0  "3 "    0     # LOAD-DROP    SN LNDRO 115.00  LOAD==26.45(6.03)
4  35101     0  "SL"    0     # LOAD-DROP    SN LNDRO 115.00  LOAD==7.80(1.58)
0
 #
 #
 # (290) BUS FAULT  35101  "SN LNDRO" San Leandro 115 kV Bus Section E
 #
1  35101  33020  "1"    0     # LINE from  SN LNDRO 115.00  to  MORAGA   115.00
1  35101  35113  "1"    0     # LINE from  SN LNDRO 115.00  to  DMTAR_SL 115.00
4  35101     0  "1 "    0     # LOAD-DROP    SN LNDRO 115.00  LOAD==26.90(6.13)
4  35101     0  "2 "    0     # LOAD-DROP    SN LNDRO 115.00  LOAD==37.54(8.55)
0
 #
 #
 # (291) BUS FAULT  35104  "GRANT"
 #
1  35104  32812  "1"    0     # LINE from  GRANT    115.00  to  EDS GRNT 115.00
1  35104  35105  "1"    0     # LINE from  GRANT    115.00  to  EASTSHRE 115.00
1  35104  35105  "2"    0     # LINE from  GRANT    115.00  to  EASTSHRE 115.00
4  35104     0  "1 "    0     # LOAD-DROP    GRANT    115.00  LOAD==23.95(5.46)
4  35104     0  "2 "    0     # LOAD-DROP    GRANT    115.00  LOAD==26.01(5.93)
0
 #
 #
 # (292) BUS FAULT  35105  "EASTSHRE" East Shore 115 kV Bus Section D
 #
1  35105  35104  "2"    0     # LINE from  EASTSHRE 115.00  to  GRANT    115.00
1  35105  35106  "1"    0     # LINE from  EASTSHRE 115.00  to  MT EDEN  115.00
2  35105  30560  "1"    0     # TRAN from  EASTSHRE 115.00  to  E. SHORE 230.00
0
 #
 #
 # (293) BUS FAULT  35105  "EASTSHRE" East Shore 115 kV Bus Section E
 #
1  35105  35104  "1"    0     # LINE from  EASTSHRE 115.00  to  GRANT    115.00
1  35105  35106  "2"    0     # LINE from  EASTSHRE 115.00  to  MT EDEN  115.00
1  35105  35107  "1"    0     # LINE from  EASTSHRE 115.00  to  DUMBARTN 115.00
2  35105  30560  "2"    0     # TRAN from  EASTSHRE 115.00  to  E. SHORE 230.00
0
 #
 #
 # (294) BUS FAULT  35106  "MT EDEN"
 #
1  35106  35105  "1"    0     # LINE from  MT EDEN  115.00  to  EASTSHRE 115.00
1  35106  35105  "2"    0     # LINE from  MT EDEN  115.00  to  EASTSHRE 115.00
4  35106     0  "1 "    0     # LOAD-DROP    MT EDEN  115.00  LOAD==38.61(8.80)
4  35106     0  "2 "    0     # LOAD-DROP    MT EDEN  115.00  LOAD==36.10(8.23)
4  35106     0  "3 "    0     # LOAD-DROP    MT EDEN  115.00  LOAD==34.77(7.93)
0
 #
 #
 # (295) BUS FAULT  35107  "DUMBARTN"
 #
1  35107  35105  "1"    0     # LINE from  DUMBARTN 115.00  to  EASTSHRE 115.00
1  35107  35120  "1"    0     # LINE from  DUMBARTN 115.00  to  NEWARK D 115.00
4  35107     0  "1 "    0     # LOAD-DROP    DUMBARTN 115.00  LOAD==24.42(5.57)
4  35107     0  "2 "    0     # LOAD-DROP    DUMBARTN 115.00  LOAD==25.84(5.89)
4  35107     0  "3 "    0     # LOAD-DROP    DUMBARTN 115.00  LOAD==31.54(7.19)
0
```

```
 #
 #
 # (296) BUS FAULT  35110  "FREMNT"
 #
1  35110  35121  "1"    0     # LINE from  FREMNT   115.00  to  NEWARK E 115.00
1  35110  35121  "2"    0     # LINE from  FREMNT   115.00  to  NEWARK E 115.00
4  35110     0  "1 "    0     # LOAD-DROP    FREMNT   115.00  LOAD==31.72(7.23)
4  35110     0  "2 "    0     # LOAD-DROP    FREMNT   115.00  LOAD==19.38(4.41)
4  35110     0  "3 "    0     # LOAD-DROP    FREMNT   115.00  LOAD==27.52(6.27)
0
 #
 #
 # (297) BUS FAULT  35111  "JARVIS"
 #
1  35111  35115  "1"    0     # LINE from  JARVIS   115.00  to  JV BART  115.00
1  35111  35116  "1"    0     # LINE from  JARVIS   115.00  to  CRYOGEN  115.00
1  35111  35120  "1"    0     # LINE from  JARVIS   115.00  to  NEWARK D 115.00
1  35111  35124  "2"    0     # LINE from  JARVIS   115.00  to  NUMI JCT 115.00
4  35111     0  "1 "    0     # LOAD-DROP    JARVIS   115.00  LOAD==17.70(4.03)
4  35111     0  "2 "    0     # LOAD-DROP    JARVIS   115.00  LOAD==26.59(6.06)
4  35111     0  "3 "    0     # LOAD-DROP    JARVIS   115.00  LOAD==34.15(7.78)
0
 #
 #
 # (298) BUS FAULT  35112  "NUMMI"
 #
1  35112  35127  "1"    0     # LINE from  NUMMI    115.00  to  WESTRN_D 115.00
4  35112     0  "1 "    0     # LOAD-DROP    NUMMI    115.00  LOAD==30.88(8.14)
0
 #
 #
 # (299) BUS FAULT  35120  "NEWARK D" Newark 115 kV Bus Section 1D
 #
1  35120  35111  "1"    0     # LINE from  NEWARK D 115.00  to  JARVIS   115.00
1  35120  36851  "1"    0     # LINE from  NEWARK D 115.00  to  NRS 400  115.00
1  35120  38446  "3"    0     # LINE from  NEWARK D 115.00  to  OAK-TAP1 115.00
4  35120     0  "3 "    0     # LOAD-DROP    NEWARK D 115.00  LOAD==25.84(5.89)
0
 #
 #
 # (300) BUS FAULT  35120  "NEWARK D" Newark 115 kV Bus Section 2D
 #

1  35120  35107  "1"    0     # LINE from  NEWARK D 115.00  to  DUMBARTN 115.00
1  35120  35124  "2"    0     # LINE from  NEWARK D 115.00  to  NUMI JCT 115.00
1  35120  38448  "4"    0     # LINE from  NEWARK D 115.00  to  OAK-TAP2 115.00
2  35120  35109  "1"    0     # TRAN from  NEWARK D 115.00  to  NWRK 2 M 115.00
4  35120     0  "4 "    0     # LOAD-DROP    NEWARK D 115.00  LOAD==24.33(5.54)
6  35120     0   "v "   0     # SVD-DROP   NEWARK D 115.00
0
 #
 #
 # (301) BUS FAULT  35121  "NEWARK E" Newark 115 kV Bus Section 1E
 #
1  35121  35110  "1"    0     # LINE from  NEWARK E 115.00  to  FREMNT   115.00
1  35121  35350  "1"    0     # LINE from  NEWARK E 115.00  to  AMES BS1 115.00
1  35121  35350  "3"    0     # LINE from  NEWARK E 115.00  to  AMES BS1 115.00
0
 #
 #
 # (302) BUS FAULT  35121  "NEWARK E" Newark 115 kV Bus Section 2E
 #
1  35121  35110  "2"    0     # LINE from  NEWARK E 115.00  to  FREMNT   115.00
1  35121  35351  "2"    0     # LINE from  NEWARK E 115.00  to  AMES BS2 115.00
1  35121  35349  "1"    0     # LINE from  NEWARK E 115.00  to  AMES DST 115.00
2  35121  30626  "7"    0     # TRAN from  NEWARK E 115.00  to  NWRK_7M   13.20
0
 #
 #
 # (303) BUS FAULT  35122  "NEWARK F" Newark 115 kV Bus Section 1F
 #
1  35122  35357  "1"    0     # LINE from  NEWARK F 115.00  to  LCKHD J1 115.00
1  35122  35603  "1"    0     # LINE from  NEWARK F 115.00  to  ZNKER J1 115.00
1  35122  35624  "1"    0     # LINE from  NEWARK F 115.00  to  MILPITAS 115.00
1  35122  35624  "2"    0     # LINE from  NEWARK F 115.00  to  MILPITAS 115.00
0
 #
 #
```

```
 # (304) BUS FAULT  35122  "NEWARK F" Newark 115 kV Bus Section 1F
 #
1  35122  35126  "1"    0     # LINE from  NEWARK F 115.00  to  NUMI TAP 115.00
1  35122  35360  "1"    0     # LINE from  NEWARK F 115.00  to  LCKHD J2 115.00
1  35122  35600  "1"    0     # LINE from  NEWARK F 115.00  to  DIXON LD 115.00
1  35122  35602  "1"    0     # LINE from  NEWARK F 115.00  to  ZNKER J2 115.00
1  35122  36853  "2"    0     # LINE from  NEWARK F 115.00  to  NRS 300  115.00
0
 #
 #
 # (305) BUS FAULT  35201  "VASCO"
 #
1  35201  35210  "1"    0     # LINE from  VASCO     60.00  to  VASCJCT.  60.00
1  35201  35211  "1"    0     # LINE from  VASCO     60.00  to  ALTAMONT  60.00
4  35201     0  "1 "    0     # LOAD-DROP    VASCO     60.00  LOAD==6.00(1.37)
4  35201     0  "2 "    0     # LOAD-DROP    VASCO     60.00  LOAD==8.78(2.00)
0
 #
 #
 # (306) BUS FAULT  35203  "LIVERMRE"
 #
1  35203  35220  "1"    0     # LINE from  LIVERMRE  60.00  to  LPOSTAS   60.00
1  35203  35222  "1"    0     # LINE from  LIVERMRE  60.00  to  CALMAT60  60.00
1  35203  35225  "1"    0     # LINE from  LIVERMRE  60.00  to  LIVRMR_2  60.00
4  35203     0  "1 "    0     # LOAD-DROP    LIVERMRE  60.00  LOAD==10.62(2.42)
0
 #
 #
 # (307) BUS FAULT  35205  "RADUM"
 #
1  35205  35206  "1"    0     # LINE from  RADUM     60.00  to  KAISER    60.00
1  35205  35227  "1"    0     # LINE from  RADUM     60.00  to  VINEYARD  60.00
1  35205  35223  "1"    0     # LINE from  RADUM     60.00  to  PARKS TP  60.00
4  35205     0  "1 "    0     # LOAD-DROP    RADUM     60.00  LOAD==9.13(2.08)
4  35205     0  "2 "    0     # LOAD-DROP    RADUM     60.00  LOAD==10.18(2.32)
0
 #
 #
 # (308) BUS FAULT  35209  "SAN RAMN"
 #
1  35209  35221  "1"    0     # LINE from  SAN RAMN  60.00  to  E DUBLIN  60.00
2  35209  30555  "1"    0     # TRAN from  SAN RAMN  60.00  to  SANRAMON 230.00
0
 #
 #
 # (309) BUS FAULT  35213  "VALLECTS"
 #
1  35213  35212  "1"    0     # LINE from  VALLECTS  60.00  to  IUKA      60.00
1  35213  35214  "1"    0     # LINE from  VALLECTS  60.00  to  SUNOL     60.00
4  35213     0  "1 "    0     # LOAD-DROP    VALLECTS  60.00  LOAD==1.16(0.20)
0
 #
 #
 # (310) BUS FAULT  35217  "NEWARK"
 #
1  35217  35216  "1"    0     # LINE from  NEWARK    60.00  to  DCTO JCT  60.00
1  35217  35225  "1"    0     # LINE from  NEWARK    60.00  to  LIVRMR_2  60.00
2  35217  35109  "1"    0     # TRAN from  NEWARK    60.00  to  NWRK 2 M 115.00
0
 #
 #
 # (311) BUS FAULT  35220  "LPOSTAS"
 #
1  35220  35203  "1"    0     # LINE from  LPOSTAS   60.00  to  LIVERMRE  60.00
1  35220  35210  "1"    0     # LINE from  LPOSTAS   60.00  to  VASCJCT.  60.00
2  35220  30585  "4"    0     # TRAN from  LPOSTAS   60.00  to  LS PSTAS 230.00
0
 #
 #
 # (312) BUS FAULT  35224  "VINEYD_D"
 #
1  35224  30537  "1"    0     # LINE from  VINEYD_D 230.00  to  NDUBLIN  230.00
1  35224  35219  "1"    0     # LINE from  VINEYD_D 230.00  to  VINEYARD 230.00
4  35224     0  "1 "    0     # LOAD-DROP    VINEYD_D 230.00  LOAD==31.52(7.18)
0
 #
 #
 # (313) BUS FAULT  35225  "LIVRMR_2"
```

```
 #
1  35225  35203  "1"    0     # LINE from  LIVRMR_2  60.00  to  LIVERMRE  60.00
1  35225  35217  "1"    0     # LINE from  LIVRMR_2  60.00  to  NEWARK    60.00
4  35225     0  "2 "    0     # LOAD-DROP    LIVRMR_2  60.00  LOAD==13.57(3.09)
0
 #
 #
 # 2013 category c contingency list (dctl and bus outages)
 # DeAnza Division Zone 317
 #
 #
 # (314)   C5 DCTL OUTAGE
 # Monta Vista - Saratoga and Monta Vista - Hicks 230 kV Lines
1  30705 30720  "1 "    0     # line from  MONTAVIS 230.00  BRKR to BRKR  SARATOGA 230.00
 #
1  30705 30730  "1 "    0     # line from  MONTAVIS 230.00  BRKR to BRKR  HICKS    230.00
0
 #
 #
 # (315)   C5 DCTL OUTAGE
 # Saratoga - Vasona and Monta Vista - Hicks 230 kV Lines
1  30720 30733  "1 "    0     # line from  SARATOGA 230.00  BRKR to BRKR  VASONA   230.00
 #
1  30705 30730  "1 "    0     # line from  MONTAVIS 230.00  BRKR to BRKR  HICKS    230.00
0
 #
 #
 # (316)   C5 DCTL OUTAGE
 # Monta Vista - Metcalf and Monta Vista - Coyote Sw Sta 230 kV Lines
1  30735 30705  "3 "    0     # line from  METCALF  230.00  BRKR to BRKR  MONTAVIS 230.00
 #
1  30741 30705  "4 "    0     # line from  CAL MEC  230.00  BRKR to BRKR  MONTAVIS 230.00
0
 #
 #
 # (317)   C5 DCTL OUTAGE
 # Newark - Ames #3 and Ames - Ames Distribution 115 kV Lines
1  35121 35350  "3 "    0     # line from  NEWARK E 115.00  BRKR to BRKR  AMES BS1 115.00
 #
1  35351 35349  "1 "    0     # line from  AMES BS2 115.00  BRKR to BRKR  AMES DST 115.00
0
 #
 #
 # (318)   C5 DCTL OUTAGE
 # Whisman - Monta Vista and Moutain View - Monta Vista 115 kV Lines
1  35352 35356  "1 "    0     # line from  WHISMAN  115.00  BRKR to BRKR  MNTA VSA 115.00
 #
1  35353 35356  "1 "    0     # line from  MT VIEW  115.00  BRKR to BRKR  MNTA VSA 115.00
0
 #
 #
 # (319)   C5 DCTL OUTAGE
 # Whisman - Monta Vista and Moutain View - Whisman 115 kV Lines
1  35352 35356  "1 "    0     # line from  WHISMAN  115.00  BRKR to BRKR  MNTA VSA 115.00
 #
1  35370 35353  "1 "    0     # line from  AMES J1A 115.00   (2) to BRKR  MT VIEW  115.00
1  35370 35371  "1 "    0     # line from  AMES J1A 115.00   (2) to (2)   AMES J1B 115.00
1  35371 35352  "1 "    0     # line from  AMES J1B 115.00   (2) to BRKR  WHISMAN  115.00
0
 #
 #
 # (320)   C5 DCTL OUTAGE
 # Stelling - Monta Vista and Monta Vista - Wolfe 115 kV Lines
1  35354 35356  "1 "    0     # line from  STELLING 115.00  BRKR to BRKR  MNTA VSA 115.00
 #
1  35355 35356  "1 "    0     # line from  WOLFE    115.00  BRKR to BRKR  MNTA VSA 115.00
0
 #
 #
 # (321)   C5 DCTL OUTAGE
 # Stelling - Wolfe and Monta Vista - Wolfe 115 kV Lines
1  35354 35355  "1 "    0     # line from  STELLING 115.00  BRKR to BRKR  WOLFE    115.00
 #
1  35355 35356  "1 "    0     # line from  WOLFE    115.00  BRKR to BRKR  MNTA VSA 115.00
0
 #
 #
 # (322)   C5 DCTL OUTAGE
```

```
 # Lawrence - Monta Vista and Britton - Monta Vista 115 kV Lines
1  35356 35367  "1 "    0     # line from  MNTA VSA 115.00  BRKR to (3)   PHLPS_JT 115.00
1  35367 35363  "1 "    0     # line from  PHLPS_JT 115.00   (3) to BRKR  LAWRENCE 115.00
1  35367 35366  "1 "    0     # line from  PHLPS_JT 115.00   (3) to BRKR  PHILLIPS 115.00
4  35366     0  "1 "    0     # LOAD-DROP    PHILLIPS 115.00  LOAD==1.25(0.00)
 #
1  35356 35368  "1 "    0     # line from  MNTA VSA 115.00  BRKR to BRKR  BRITTN   115.00
0
 #
 #
 # (323)   C5 DCTL OUTAGE
 # Lawrence - Monta Vista and Britton - Applied Materials 115 kV Lines
1  35356 35367  "1 "    0     # line from  MNTA VSA 115.00  BRKR to (3)   PHLPS_JT 115.00
1  35367 35363  "1 "    0     # line from  PHLPS_JT 115.00   (3) to BRKR  LAWRENCE 115.00
1  35367 35366  "1 "    0     # line from  PHLPS_JT 115.00   (3) to BRKR  PHILLIPS 115.00
4  35366     0  "1 "    0     # LOAD-DROP    PHILLIPS 115.00  LOAD==1.25(0.00)
 #
1  35368 35369  "1 "    0     # line from  BRITTN   115.00  BRKR to BRKR  APP MAT  115.00
0
 #
 #
 # (324)   C5 DCTL OUTAGE
 # Lawrence - Monta Vista and Newark - Applied Materials 115 kV Lines
1  35356 35367  "1 "    0     # line from  MNTA VSA 115.00  BRKR to (3)   PHLPS_JT 115.00
1  35367 35363  "1 "    0     # line from  PHLPS_JT 115.00   (3) to BRKR  LAWRENCE 115.00
1  35367 35366  "1 "    0     # line from  PHLPS_JT 115.00   (3) to BRKR  PHILLIPS 115.00
4  35366     0  "1 "    0     # LOAD-DROP    PHILLIPS 115.00  LOAD==1.25(0.00)
 #
1  35122 35360  "1 "    0     # line from  NEWARK F 115.00  BRKR to (3)   LCKHD J2 115.00
1  35360 35362  "1 "    0     # line from  LCKHD J2 115.00   (3) to BRKR  LOCKHD 2 115.00
1  35360 35365  "1 "    0     # line from  LCKHD J2 115.00   (3) to (3)   AMD JCT  115.00
1  35365 35364  "1 "    0     # line from  AMD JCT  115.00   (3) to BRKR  A.M.D    115.00
1  35365 35369  "1 "    0     # line from  AMD JCT  115.00   (3) to BRKR  APP MAT  115.00
4  35362     0  "1 "    0     # LOAD-DROP    LOCKHD 2 115.00  LOAD==7.56(1.72)
4  35362     0  "2 "    0     # LOAD-DROP    LOCKHD 2 115.00  LOAD==3.42(0.78)
4  35362     0  "4 "    0     # LOAD-DROP    LOCKHD 2 115.00  LOAD==16.21(12.58)
4  35364     0  "1 "    0     # LOAD-DROP    A.M.D    115.00  LOAD==1.67(1.17)
1  35361 35362  "1 "    1     # close LOCKHD 1 115.00  LOCKHD 2  115.00
4  35362 0      "**"    1     # restore all loads to LOCKHD 2
0
 #
 #
 # (325)   C5 DCTL OUTAGE
 # Monta Vista - Burns and Monta Vista - Permanente 60 kV Lines
1  35455 35456  "1 "    0     # line from  MNTA VSA  60.00  BRKR to (2)   PRMNT J3  60.00
1  35456 36000  "1 "    0     # line from  PRMNT J3  60.00   (2) to (2)   BIG BASN  60.00
1  36000 36001  "1 "    0     # line from  BIG BASN  60.00   (2) to (3)   BURNS J1  60.00
1  36001 36002  "1 "    0     # line from  BURNS J1  60.00   (3) to BRKR  BURNS     60.00
1  36001 36003  "1 "    0     # line from  BURNS J1  60.00   (3) to BRKR  BURNS J2  60.00
4  36000     0  "1 "    0     # LOAD-DROP    BIG BASN  60.00  LOAD==6.71(0.96)
 #
1  35455 35458  "1 "    0     # line from  MNTA VSA  60.00  BRKR to (2)   PRMNT J1  60.00
1  35458 35459  "1 "    0     # line from  PRMNT J1  60.00   (2) to (2)   PRMNT J2  60.00
1  35459 35457  "1 "    0     # line from  PRMNT J2  60.00   (2) to BRKR  PERMNNTE  60.00
4  35457     0  "1 "    0     # LOAD-DROP    PERMNNTE  60.00  LOAD==29.94(20.90)
0
 #
 #
 # (326) BUS FAULT  30705  "MONTAVIS" Monta Vista 230 kV Bus Section 1
 #
1  30705  30710  "1"    0     # LINE from  MONTAVIS 230.00  to  SLACTAP1 230.00
1  30705  30720  "1"    0     # LINE from  MONTAVIS 230.00  to  SARATOGA 230.00
1  30705  30735  "3"    0     # LINE from  MONTAVIS 230.00  to  METCALF  230.00
2  30705  35356  "2"    0     # TRAN from  MONTAVIS 230.00  to  MNTA VSA 115.00
6  30705     0   "v "   0     # SVD-DROP   MONTAVIS 230.00
0
 #
 #
 # (327) BUS FAULT  30705  "MONTAVIS" Monta Vista 230 kV Bus Section 2
 #
1  30705  30712  "2"    0     # LINE from  MONTAVIS 230.00  to  SLACTAP2 230.00
1  30705  30730  "1"    0     # LINE from  MONTAVIS 230.00  to  HICKS    230.00
1  30705  30741  "4"    0     # LINE from  MONTAVIS 230.00  to  CAL MEC  230.00
2  30705  35356  "3"    0     # TRAN from  MONTAVIS 230.00  to  MNTA VSA 115.00
2  30705  35356  "4"    0     # TRAN from  MONTAVIS 230.00  to  MNTA VSA 115.00
2  30705  35455  "5"    0     # TRAN from  MONTAVIS 230.00  to  MNTA VSA  60.00
0
 #
```

```
 #
 # (328) BUS FAULT  30720  "SARATOGA"
 #
1  30720  30705  "1"    0     # LINE from  SARATOGA 230.00  to  MONTAVIS 230.00
1  30720  30733  "1"    0     # LINE from  SARATOGA 230.00  to  VASONA   230.00
4  30720     0  "1 "    0     # LOAD-DROP    SARATOGA 230.00  LOAD==43.58(9.93)
4  30720     0  "2 "    0     # LOAD-DROP    SARATOGA 230.00  LOAD==50.15(11.43)
4  30720     0  "3 "    0     # LOAD-DROP    SARATOGA 230.00  LOAD==40.33(9.19)
0
 #
 #
 # (329) BUS FAULT  30733  "VASONA"
 #
1  30733  30720  "1"    0     # LINE from  VASONA   230.00  to  SARATOGA 230.00
1  30733  30735  "1"    0     # LINE from  VASONA   230.00  to  METCALF  230.00
4  30733     0  "1 "    0     # LOAD-DROP    VASONA   230.00  LOAD==39.49(9.00)
4  30733     0  "2 "    0     # LOAD-DROP    VASONA   230.00  LOAD==19.54(4.45)
0
 #
 #
 # (330) BUS FAULT  35349  "AMES DST"
 #
1  35349  35121  "1"    0     # LINE from  AMES DST 115.00  to  NEWARK E 115.00
1  35349  35351  "1"    0     # LINE from  AMES DST 115.00  to  AMES BS2 115.00
4  35349     0  "1 "    0     # LOAD-DROP    AMES DST 115.00  LOAD==14.75(3.36)
0
 #
 #
 # (331) BUS FAULT  35350  "AMES BS1"
 #
1  35350  33315  "1"    0     # LINE from  AMES BS1 115.00  to  RVNSWD E 115.00
1  35350  35121  "1"    0     # LINE from  AMES BS1 115.00  to  NEWARK E 115.00
1  35350  35121  "3"    0     # LINE from  AMES BS1 115.00  to  NEWARK E 115.00
1  35350  35351  "1"    0     # LINE from  AMES BS1 115.00  to  AMES BS2 115.00
1  35350  35370  "1"    0     # LINE from  AMES BS1 115.00  to  AMES J1A 115.00
1  35350  35371  "1"    0     # LINE from  AMES BS1 115.00  to  AMES J1B 115.00
4  35350     0  "1 "    0     # LOAD-DROP    AMES BS1 115.00  LOAD==43.14(0.00)
0
 #
 #
 # (332) BUS FAULT  35351  "AMES BS2"
 #
1  35351  33315  "2"    0     # LINE from  AMES BS2 115.00  to  RVNSWD E 115.00
1  35351  35121  "2"    0     # LINE from  AMES BS2 115.00  to  NEWARK E 115.00
1  35351  35350  "1"    0     # LINE from  AMES BS2 115.00  to  AMES BS1 115.00
1  35351  35349  "1"    0     # LINE from  AMES BS2 115.00  to  AMES DST 115.00
4  35351     0  "2 "    0     # LOAD-DROP    AMES BS2 115.00  LOAD==43.14(0.00)
0
 #
 #
 # (333) BUS FAULT  35352  "WHISMAN"
 #
1  35352  35356  "1"    0     # LINE from  WHISMAN  115.00  to  MNTA VSA 115.00
1  35352  35371  "1"    0     # LINE from  WHISMAN  115.00  to  AMES J1B 115.00
4  35352     0  "1 "    0     # LOAD-DROP    WHISMAN  115.00  LOAD==22.33(5.09)
4  35352     0  "2 "    0     # LOAD-DROP    WHISMAN  115.00  LOAD==24.02(5.47)
4  35352     0  "3 "    0     # LOAD-DROP    WHISMAN  115.00  LOAD==20.34(4.63)
0
 #
 #
 # (334) BUS FAULT  35353  "MT VIEW"
 #
1  35353  35356  "1"    0     # LINE from  MT VIEW  115.00  to  MNTA VSA 115.00
1  35353  35370  "1"    0     # LINE from  MT VIEW  115.00  to  AMES J1A 115.00
4  35353     0  "1 "    0     # LOAD-DROP    MT VIEW  115.00  LOAD==30.30(6.90)
4  35353     0  "2 "    0     # LOAD-DROP    MT VIEW  115.00  LOAD==32.19(7.34)
4  35353     0  "3 "    0     # LOAD-DROP    MT VIEW  115.00  LOAD==29.11(6.63)
0
 #
 #
 # (335) BUS FAULT  35354  "STELLING"
 #
1  35354  35355  "1"    0     # LINE from  STELLING 115.00  to  WOLFE    115.00
1  35354  35356  "1"    0     # LINE from  STELLING 115.00  to  MNTA VSA 115.00
4  35354     0  "1 "    0     # LOAD-DROP    STELLING 115.00  LOAD==31.51(7.18)
4  35354     0  "2 "    0     # LOAD-DROP    STELLING 115.00  LOAD==32.14(7.32)
4  35354     0  "3 "    0     # LOAD-DROP    STELLING 115.00  LOAD==32.89(7.50)
0
```

```
 #
 #
 # (336) BUS FAULT  35355  "WOLFE"
 #
1  35355  35354  "1"    0     # LINE from  WOLFE    115.00  to  STELLING 115.00
1  35355  35356  "1"    0     # LINE from  WOLFE    115.00  to  MNTA VSA 115.00
4  35355     0  "1 "    0     # LOAD-DROP    WOLFE    115.00  LOAD==25.27(5.76)
4  35355     0  "2 "    0     # LOAD-DROP    WOLFE    115.00  LOAD==31.85(7.26)
4  35355     0  "3 "    0     # LOAD-DROP    WOLFE    115.00  LOAD==16.40(3.74)
0
 #
 #
 # (337) BUS FAULT  35356  "MNTA VSA" Monta Vista 115 kV Bus Section 1
 #
1  35356  35352  "1"    0     # LINE from  MNTA VSA 115.00  to  WHISMAN  115.00
1  35356  35354  "1"    0     # LINE from  MNTA VSA 115.00  to  STELLING 115.00
1  35356  35367  "1"    0     # LINE from  MNTA VSA 115.00  to  PHLPS_JT 115.00
2  35356  30705  "2"    0     # TRAN from  MNTA VSA 115.00  to  MONTAVIS 230.00
2  35356  30705  "3"    0     # TRAN from  MNTA VSA 115.00  to  MONTAVIS 230.00
0
 #
 #
 # (338) BUS FAULT  35356  "MNTA VSA" Monta Vista 115 kV Bus Section 2
 #
1  35356  35353  "1"    0     # LINE from  MNTA VSA 115.00  to  MT VIEW  115.00
1  35356  35355  "1"    0     # LINE from  MNTA VSA 115.00  to  WOLFE    115.00
1  35356  35368  "1"    0     # LINE from  MNTA VSA 115.00  to  BRITTN   115.00
2  35356  30705  "4"    0     # TRAN from  MNTA VSA 115.00  to  MONTAVIS 230.00
2  35356  35455  "6"    0     # TRAN from  MNTA VSA 115.00  to  MNTA VSA  60.00
0
 #
 #
 # (339) BUS FAULT  35361  "LOCKHD 1"
 #
1  35361  35358  "1"    0     # LINE from  LOCKHD 1 115.00  to  MFT.FD J 115.00
1  35361  35362  "1"    0     # LINE from  LOCKHD 1 115.00  to  LOCKHD 2 115.00
4  35361     0  "3 "    0     # LOAD-DROP    LOCKHD 1 115.00  LOAD==17.45(14.46)
0
 #
 #
 # (340) BUS FAULT  35362  "LOCKHD 2"
 #
1  35362  35360  "1"    0     # LINE from  LOCKHD 2 115.00  to  LCKHD J2 115.00
1  35362  35361  "1"    0     # LINE from  LOCKHD 2 115.00  to  LOCKHD 1 115.00
4  35362     0  "1 "    0     # LOAD-DROP    LOCKHD 2 115.00  LOAD==7.56(1.72)
4  35362     0  "2 "    0     # LOAD-DROP    LOCKHD 2 115.00  LOAD==3.42(0.78)
4  35362     0  "4 "    0     # LOAD-DROP    LOCKHD 2 115.00  LOAD==16.21(12.58)
0
 #
 #
 # (341) BUS FAULT  35363  "LAWRENCE"
 #
1  35363  35357  "1"    0     # LINE from  LAWRENCE 115.00  to  LCKHD J1 115.00
1  35363  35367  "1"    0     # LINE from  LAWRENCE 115.00  to  PHLPS_JT 115.00
4  35363     0  "1 "    0     # LOAD-DROP    LAWRENCE 115.00  LOAD==50.73(11.56)
4  35363     0  "2 "    0     # LOAD-DROP    LAWRENCE 115.00  LOAD==20.08(4.58)
4  35363     0  "3 "    0     # LOAD-DROP    LAWRENCE 115.00  LOAD==35.41(8.07)
0
 #
 #
 # (342) BUS FAULT  35364  "A.M.D"
 #
1  35364  35365  "1"    0     # LINE from  A.M.D    115.00  to  AMD JCT  115.00
4  35364     0  "1 "    0     # LOAD-DROP    A.M.D    115.00  LOAD==1.67(1.17)
0
 #
 #
 # (343) BUS FAULT  35366  "PHILLIPS"
 #
1  35366  35367  "1"    0     # LINE from  PHILLIPS 115.00  to  PHLPS_JT 115.00
4  35366     0  "1 "    0     # LOAD-DROP    PHILLIPS 115.00  LOAD==1.25(0.00)
0
 #
 #
 # (344) BUS FAULT  35368  "BRITTN"
 #
1  35368  35356  "1"    0     # LINE from  BRITTN   115.00  to  MNTA VSA 115.00
1  35368  35369  "1"    0     # LINE from  BRITTN   115.00  to  APP MAT  115.00
```

```
4  35368     0  "1 "    0     # LOAD-DROP    BRITTN   115.00  LOAD==27.96(6.37)
4  35368     0  "2 "    0     # LOAD-DROP    BRITTN   115.00  LOAD==47.94(10.93)
4  35368     0  "3 "    0     # LOAD-DROP    BRITTN   115.00  LOAD==23.61(5.38)
0
 #
 #
 # (345) BUS FAULT  35369  "APP MAT"
 #
1  35369  35368  "1"    0     # LINE from  APP MAT  115.00  to  BRITTN   115.00
1  35369  35365  "1"    0     # LINE from  APP MAT  115.00  to  AMD JCT  115.00
4  35369     0  "1 "    0     # LOAD-DROP    APP MAT  115.00  LOAD==10.11(2.53)
0
 #
 #
 # (346) BUS FAULT  35452  "LOYOLA"
 #
1  35452  35450  "1"    0     # LINE from  LOYOLA    60.00  to  LOS ALTS  60.00
1  35452  35455  "1"    0     # LINE from  LOYOLA    60.00  to  MNTA VSA  60.00
4  35452     0  "1 "    0     # LOAD-DROP    LOYOLA    60.00  LOAD==4.43(1.01)
4  35452     0  "2 "    0     # LOAD-DROP    LOYOLA    60.00  LOAD==21.57(4.92)
0
 #
 #
 # (347) BUS FAULT  35455  "MNTA VSA" Monta Vista 60 kV Bus Section 1
 #
1  35455  35452  "1"    0     # LINE from  MNTA VSA  60.00  to  LOYOLA    60.00
1  35455  35458  "1"    0     # LINE from  MNTA VSA  60.00  to  PRMNT J1  60.00
2  35455  30705  "5"    0     # TRAN from  MNTA VSA  60.00  to  MONTAVIS 230.00
0
 #
 #
 # (348) BUS FAULT  35455  "MNTA VSA" Monta Vista 60 kV Bus Section 2
 #
1  35455  35456  "1"    0     # LINE from  MNTA VSA  60.00  to  PRMNT J3  60.00
1  35455  35460  "1"    0     # LINE from  MNTA VSA  60.00  to  LOS GATS  60.00
2  35455  35356  "6"    0     # TRAN from  MNTA VSA  60.00  to  MNTA VSA 115.00
0
 #
 #
 # (349) BUS FAULT  35457  "PERMNNTE"
 #
1  35457  35458  "1"    0     # LINE from  PERMNNTE  60.00  to  PRMNT J1  60.00
1  35457  35459  "1"    0     # LINE from  PERMNNTE  60.00  to  PRMNT J2  60.00
4  35457     0  "1 "    0     # LOAD-DROP    PERMNNTE  60.00  LOAD==29.94(20.90)
0
 #
 #
 # 2013 category c contingency list (dctl and bus outages)
 # San Jose Division Zone 318
 #
 #
 # (350)   C5 DCTL OUTAGE
 # Saratoga - Metcalf and Hicks - Metcalf 230 kV Lines
1  30733 30735  "1 "    0     # line from  VASONA   230.00  BRKR to BRKR  METCALF  230.00
 #
1  30735 30730  "1 "    0     # line from  METCALF  230.00  BRKR to BRKR  HICKS    230.00
0
 #
 #
 # (351)   C5 DCTL OUTAGE
 # Newark Distribution - Los Esteros and Los Esteros - Metcalf 230 kV Lines
1  30635 30731  "1 "    0     # line from  NWK DIST 230.00  BRKR to BRKR  LS ESTRS 230.00
 #
1  30735 30731  "1 "    0     # line from  METCALF  230.00  BRKR to BRKR  LS ESTRS 230.00
0
 #
 #
 # (352)   C5 DCTL OUTAGE
 # Metcalf - Moss Landing #1 and #2 230 kV Lines
1  30735 30755  "1 "    0     # line from  METCALF  230.00  BRKR to BRKR  MOSSLND1 230.00
 #
1  30735 30750  "1 "    0     # line from  METCALF  230.00  BRKR to BRKR  MOSSLND2 230.00
0
 #
 #
 # (353)   C5 DCTL OUTAGE
 # Dixon Landing - McKee and Newark - Milpitas #1 115 kV Lines
1  35600 35629  "1 "    0     # line from  DIXON LD 115.00  BRKR to (3)   MABURY J 115.00
```

```
1  35629 35626  "1 "    0     # line from  MABURY J 115.00   (3) to BRKR  MCKEE    115.00
1  35629 35630  "1 "    0     # line from  MABURY J 115.00   (3) to BRKR  MABURY   115.00
4  35630     0  "2 "    0     # LOAD-DROP    MABURY   115.00  LOAD==19.00(4.33)
 #
1  35122 35624  "1 "    0     # line from  NEWARK F 115.00  BRKR to BRKR  MILPITAS 115.00
0
 #
 #
 # (354)   C5 DCTL OUTAGE
 # Dixon Landing - McKee and Milpitas - Swift 115 kV Lines
1  35600 35629  "1 "    0     # line from  DIXON LD 115.00  BRKR to (3)   MABURY J 115.00
1  35629 35626  "1 "    0     # line from  MABURY J 115.00   (3) to BRKR  MCKEE    115.00
1  35629 35630  "1 "    0     # line from  MABURY J 115.00   (3) to BRKR  MABURY   115.00
4  35630     0  "2 "    0     # LOAD-DROP    MABURY   115.00  LOAD==19.00(4.33)
 #
1  35622 35624  "1 "    0     # line from  SWIFT    115.00  BRKR to BRKR  MILPITAS 115.00
0
 #
 #
 # (355)   C5 DCTL OUTAGE
 # McKee - Piercy and Milpitas - Swift 115 kV Lines
1  35626 35656  "1 "    0     # line from  MCKEE    115.00  BRKR to BRKR  PIERCY   115.00
 #
1  35622 35624  "1 "    0     # line from  SWIFT    115.00  BRKR to BRKR  MILPITAS 115.00
0
 #
 #
 # (356)   C5 DCTL OUTAGE
 # Swift - Metcalf and Piercy - Metcalf 115 kV Lines
1  35622 35643  "1 "    0     # line from  SWIFT    115.00  BRKR to BRKR  MTCALF E 115.00
 #
1  35656 35643  "1 "    0     # line from  PIERCY   115.00  BRKR to BRKR  MTCALF E 115.00
0
 #
 #
 # (357)   C5 DCTL OUTAGE
 # Los Esteros - Trimble and Los Esteros - Montague 115 kV Lines
1  35658 35612  "1 "    0     # line from  LS ESTRS 115.00  BRKR to BRKR  TRIMBLE  115.00
 #
1  35658 35610  "1 "    0     # line from  LS ESTRS 115.00  BRKR to BRKR  MONTAGUE 115.00
0
 #
 #
 # (358)   C5 DCTL OUTAGE
 # Los Esteros - Trimble and Montague - Trimble 115 kV Lines
1  35658 35612  "1 "    0     # line from  LS ESTRS 115.00  BRKR to BRKR  TRIMBLE  115.00
 #
1  35612 35610  "1 "    0     # line from  TRIMBLE  115.00  BRKR to BRKR  MONTAGUE 115.00
0
 #
 #
 # (359)   C5 DCTL OUTAGE
 # Los Esteros - Montague and Montague - Trimble 115 kV Lines
1  35658 35610  "1 "    0     # line from  LS ESTRS 115.00  BRKR to BRKR  MONTAGUE 115.00
 #
1  35612 35610  "1 "    0     # line from  TRIMBLE  115.00  BRKR to BRKR  MONTAGUE 115.00
0
 #
 #
 # (360)   C5 DCTL OUTAGE
 # Trimble - San Jose B and FMC - San Jose B 115 kV Lines
1  35612 35616  "1 "    0     # line from  TRIMBLE  115.00  BRKR to BRKR  SJ B   E 115.00
 #
1  35615 35616  "1 "    0     # line from  FMC      115.00  BRKR to BRKR  SJ B   E 115.00
0
 #
 #
 # (361)   C5 DCTL OUTAGE
 # Trimble - San Jose B and Kifer - FMC 115 kV Lines
1  35612 35616  "1 "    0     # line from  TRIMBLE  115.00  BRKR to BRKR  SJ B   E 115.00
 #
1  35615 35617  "1 "    0     # line from  FMC      115.00  BRKR to (2)   FMC JCT  115.00
1  35617 36850  "1 "    0     # line from  FMC JCT  115.00   (2) to BRKR  KRS      115.00
0
 #
 #
 # (362)   C5 DCTL OUTAGE
 # Newark - Kifer and Kifer - FMC 115 kV Lines
```

```
1  35122 35602  "1 "    0     # line from  NEWARK F 115.00  BRKR to (3)   ZNKER J2 115.00
1  35602 35604  "1 "    0     # line from  ZNKER J2 115.00   (3) to (3)   ZANKER   115.00
1  35602 36850  "1 "    0     # line from  ZNKER J2 115.00   (3) to BRKR  KRS      115.00
2  35604 35861  "1 "    0     # TRAN from  ZANKER   115.00   (3) to (2)   SJ-SCL W   9.11
2  35604 35861  "2 "    0     # TRAN from  ZANKER   115.00   (3) to (2)   SJ-SCL W   9.11
4  35861     0  "SG"    0     # LOAD-DROP    SJ-SCL W   9.11  LOAD==6.17(2.09)
3  35861     0  "1 "    0     # GEN-DROP    SJ-SCL W   9.11  GEN==5.00(0.00)
 #
1  35615 35617  "1 "    0     # line from  FMC      115.00  BRKR to (2)   FMC JCT  115.00
1  35617 36850  "1 "    0     # line from  FMC JCT  115.00   (2) to BRKR  KRS      115.00
0
 #
 #
 # (363)   C5 DCTL OUTAGE
 # Newark - Trimle and Kifer - FMC 115 kV Lines
1  35122 35603  "1 "    0     # line from  NEWARK F 115.00  BRKR to (3)   ZNKER J1 115.00
1  35603 35605  "1 "    0     # line from  ZNKER J1 115.00   (3) to (1)   AGNEW J  115.00
1  35603 35612  "1 "    0     # line from  ZNKER J1 115.00   (3) to BRKR  TRIMBLE  115.00
 #
1  35615 35617  "1 "    0     # line from  FMC      115.00  BRKR to (2)   FMC JCT  115.00
1  35617 36850  "1 "    0     # line from  FMC JCT  115.00   (2) to BRKR  KRS      115.00
0
 #
 #
 # (364)   C5 DCTL OUTAGE
 # Metcalf - El Patio #1 and #2 115 kV Lines
1  35620 35621  "1 "    0     # line from  EL PATIO 115.00  BRKR to (2)   IBM-HR J 115.00
1  35621 35642  "1 "    0     # line from  IBM-HR J 115.00   (2) to BRKR  MTCALF D 115.00
 #
1  35620 35651  "2 "    0     # line from  EL PATIO 115.00  BRKR to (2)   BAILY J3 115.00
1  35651 35642  "2 "    0     # line from  BAILY J3 115.00   (2) to BRKR  MTCALF D 115.00
0
 #
 #
 # (365)   C5 DCTL OUTAGE
 # Metcalf - El Patio #1 and #2 115 kV Lines
1  35636 35643  "1 "    0     # line from  EVRGRN 1 115.00  BRKR to BRKR  MTCALF E 115.00
 #
1  35625 35645  "1 "    0     # line from  MARKHMJ2 115.00   (2) to (3)   EVRGRN J 115.00
1  35625 35634  "1 "    0     # line from  MARKHMJ2 115.00   (2) to (2)   STONE J  115.00
1  35645 35633  "2 "    0     # line from  EVRGRN J 115.00   (3) to BRKR  EVRGRN 2 115.00
1  35645 35643  "2 "    0     # line from  EVRGRN J 115.00   (3) to BRKR  MTCALF E 115.00
1  35634 36420  "1 "    0     # line from  STONE J  115.00   (2) to BRKR  STONE    115.00
4  36420     0  "1 "    0     # LOAD-DROP    STONE    115.00  LOAD==35.69(8.13)
4  36420     0  "2 "    0     # LOAD-DROP    STONE    115.00  LOAD==14.87(3.39)
0
 #
 #
 # (366)   C5 DCTL OUTAGE
 # Metcalf - Morgan Hill and Metcalf - Llagas 115 kV Lines
1  35642 35646  "1 "    0     # line from  MTCALF D 115.00  BRKR to BRKR  MRGN HIL 115.00
 #
1  35642 35654  "1 "    0     # line from  MTCALF D 115.00  BRKR to (2)   MORGN J1 115.00
1  35654 35655  "1 "    0     # line from  MORGN J1 115.00   (2) to (2)   MORGN J2 115.00
1  35655 35648  "1 "    0     # line from  MORGN J2 115.00   (2) to BRKR  LLAGAS   115.00
0
 #
 #
 # (367)   C5 DCTL OUTAGE
 # Morgan Hill - Llagas and Metcalf - Llagas 115 kV Lines
1  35646 35648  "1 "    0     # line from  MRGN HIL 115.00  BRKR to BRKR  LLAGAS   115.00
 #
1  35642 35654  "1 "    0     # line from  MTCALF D 115.00  BRKR to (2)   MORGN J1 115.00
1  35654 35655  "1 "    0     # line from  MORGN J1 115.00   (2) to (2)   MORGN J2 115.00
1  35655 35648  "1 "    0     # line from  MORGN J2 115.00   (2) to BRKR  LLAGAS   115.00
0
 #
 #
 # (368) BUS FAULT  30730  "HICKS"
 #
1  30730  30705  "1"    0     # LINE from  HICKS    230.00  to  MONTAVIS 230.00
1  30730  30735  "1"    0     # LINE from  HICKS    230.00  to  METCALF  230.00
4  30730     0  "1 "    0     # LOAD-DROP    HICKS    230.00  LOAD==36.06(8.22)
4  30730     0  "2 "    0     # LOAD-DROP    HICKS    230.00  LOAD==41.64(9.49)
4  30730     0  "3 "    0     # LOAD-DROP    HICKS    230.00  LOAD==50.98(11.62)
4  30730     0  "4 "    0     # LOAD-DROP    HICKS    230.00  LOAD==36.06(8.22)
0
 #
```

```
 #
 # (369) BUS FAULT  30735  "METCALF" Metcalf 230 kV Bus Section 1D
 #
1  30735  30733  "1"    0     # LINE from  METCALF  230.00  to  VASONA   230.00
2  30735  35642  "1"    0     # TRAN from  METCALF  230.00  to  MTCALF D 115.00
6  30735     0   "v "   0     # SVD-DROP   METCALF  230.00
0
 #
 #
 # (370) BUS FAULT  30735  "METCALF" Metcalf 230 kV Bus Section 2D
 #
1  30735  30730  "1"    0     # LINE from  METCALF  230.00  to  HICKS    230.00
1  30735  30731  "1"    0     # LINE from  METCALF  230.00  to  LS ESTRS 230.00
2  30735  35642  "4"    0     # TRAN from  METCALF  230.00  to  MTCALF D 115.00
0
 #
 #
 # (371) BUS FAULT  30735  "METCALF" Metcalf 230 kV Bus Section 1E
 #
1  30735  30705  "3"    0     # LINE from  METCALF  230.00  to  MONTAVIS 230.00
1  30735  30755  "1"    0     # LINE from  METCALF  230.00  to  MOSSLND1 230.00
2  30735  35643  "3"    0     # TRAN from  METCALF  230.00  to  MTCALF E 115.00
0
 #
 #
 # (372) BUS FAULT  30735  "METCALF" Metcalf 230 kV Bus Section 2E
 #
1  30735  30741  "4"    0     # LINE from  METCALF  230.00  to  CAL MEC  230.00
1  30735  30750  "1"    0     # LINE from  METCALF  230.00  to  MOSSLND2 230.00
2  30735  35643  "2"    0     # TRAN from  METCALF  230.00  to  MTCALF E 115.00
0
 #
 #
 # (373) BUS FAULT  35600  "DIXON LD"
 #
1  35600  35122  "1"    0     # LINE from  DIXON LD 115.00  to  NEWARK F 115.00
1  35600  35629  "1"    0     # LINE from  DIXON LD 115.00  to  MABURY J 115.00
4  35600     0  "1 "    0     # LOAD-DROP    DIXON LD 115.00  LOAD==28.68(6.54)
4  35600     0  "2 "    0     # LOAD-DROP    DIXON LD 115.00  LOAD==19.33(4.40)
4  35600     0  "3 "    0     # LOAD-DROP    DIXON LD 115.00  LOAD==15.35(3.50)
0
 #
 #
 # (374) BUS FAULT  35606  "AGNEW"
 #
1  35606  35605  "1"    0     # LINE from  AGNEW    115.00  to  AGNEW J  115.00
1  35606  35658  "1"    0     # LINE from  AGNEW    115.00  to  LS ESTRS 115.00
2  35606  35860  "1"    0     # TRAN from  AGNEW    115.00  to  OLS-AGNE   9.11
4  35606     0  "1 "    0     # LOAD-DROP    AGNEW    115.00  LOAD==31.91(7.27)
4  35606     0  "2 "    0     # LOAD-DROP    AGNEW    115.00  LOAD==42.41(9.66)
0
 #
 #
 # (375) BUS FAULT  35610  "MONTAGUE"
 #
1  35610  35612  "1"    0     # LINE from  MONTAGUE 115.00  to  TRIMBLE  115.00
1  35610  35658  "1"    0     # LINE from  MONTAGUE 115.00  to  LS ESTRS 115.00
4  35610     0  "1 "    0     # LOAD-DROP    MONTAGUE 115.00  LOAD==37.77(8.61)
4  35610     0  "2 "    0     # LOAD-DROP    MONTAGUE 115.00  LOAD==42.11(9.60)
4  35610     0  "3 "    0     # LOAD-DROP    MONTAGUE 115.00  LOAD==34.14(7.78)
0
 #
 #
 # (376) BUS FAULT  35612  "TRIMBLE" Trimble 115 kV Bus Section D
 #
1  35612  35610  "1"    0     # LINE from  TRIMBLE  115.00  to  MONTAGUE 115.00
1  35612  35658  "1"    0     # LINE from  TRIMBLE  115.00  to  LS ESTRS 115.00
4  35612     0  "1 "    0     # LOAD-DROP    TRIMBLE  115.00  LOAD==29.68(6.77)
0
 #
 #
 # (377) BUS FAULT  35612  "TRIMBLE" Trimble 115 kV Bus Section E
 #
1  35612  35616  "1"    0     # LINE from  TRIMBLE  115.00  to  SJ B   E 115.00
4  35612     0  "2 "    0     # LOAD-DROP    TRIMBLE  115.00  LOAD==33.72(7.68)
0
 #
 #
```

```
 # (378) BUS FAULT  35612  "TRIMBLE" Trimble 115 kV Bus Section F
 #
1  35612  35603  "1"    0     # LINE from  TRIMBLE  115.00  to  ZNKER J1 115.00
4  35612     0  "3 "    0     # LOAD-DROP    TRIMBLE  115.00  LOAD==43.92(10.01)
4  35612     0  "5 "    0     # LOAD-DROP    TRIMBLE  115.00  LOAD==35.64(8.12)
0
 #
 #
 # (379) BUS FAULT  35615  "FMC"
 #
1  35615  35616  "1"    0     # LINE from  FMC      115.00  to  SJ B   E 115.00
1  35615  35617  "1"    0     # LINE from  FMC      115.00  to  FMC JCT  115.00
4  35615     0  "1 "    0     # LOAD-DROP    FMC      115.00  LOAD==21.65(4.93)
4  35615     0  "3 "    0     # LOAD-DROP    FMC      115.00  LOAD==28.54(6.51)
0
 #
 #
 # (380) BUS FAULT  35616  "SJ B   E" San Jose B 115 kV Bus Section E
 #
1  35616  35612  "1"    0     # LINE from  SJ B   E 115.00  to  TRIMBLE  115.00
1  35616  35615  "1"    0     # LINE from  SJ B   E 115.00  to  FMC      115.00
1  35616  35619  "1"    0     # LINE from  SJ B   E 115.00  to  SJ B   F 115.00
4  35616     0  "1 "    0     # LOAD-DROP    SJ B   E 115.00  LOAD==45.43(10.35)
4  35616     0  "4 "    0     # LOAD-DROP    SJ B   E 115.00  LOAD==40.44(9.21)
0
 #
 #
 # (381) BUS FAULT  35618  "SN JSE A"
 #
1  35618  35613  "1"    0     # LINE from  SN JSE A 115.00  to  ELPT_SJ1 115.00
1  35618  35619  "1"    0     # LINE from  SN JSE A 115.00  to  SJ B   F 115.00
4  35618     0  "1 "    0     # LOAD-DROP    SN JSE A 115.00  LOAD==8.60(1.96)
4  35618     0  "2 "    0     # LOAD-DROP    SN JSE A 115.00  LOAD==9.00(2.05)
4  35618     0  "3 "    0     # LOAD-DROP    SN JSE A 115.00  LOAD==39.97(9.10)
0
 #
 #
 # (382) BUS FAULT  35619  "SJ B   F" San Jose B 115 kV Bus Section F
 #
1  35619  35616  "1"    0     # LINE from  SJ B   F 115.00  to  SJ B   E 115.00
1  35619  35618  "1"    0     # LINE from  SJ B   F 115.00  to  SN JSE A 115.00
1  35619  35631  "1"    0     # LINE from  SJ B   F 115.00  to  MARKHM J 115.00
4  35619     0  "2 "    0     # LOAD-DROP    SJ B   F 115.00  LOAD==43.89(10.00)
4  35619     0  "3 "    0     # LOAD-DROP    SJ B   F 115.00  LOAD==45.67(10.41)
0
 #
 #
 # (383) BUS FAULT  35620  "EL PATIO"
 #
1  35620  35614  "1"    0     # LINE from  EL PATIO 115.00  to  ELPT_SJ2 115.00
1  35620  35621  "1"    0     # LINE from  EL PATIO 115.00  to  IBM-HR J 115.00
1  35620  35651  "2"    0     # LINE from  EL PATIO 115.00  to  BAILY J3 115.00
4  35620     0  "1 "    0     # LOAD-DROP    EL PATIO 115.00  LOAD==45.08(10.28)
4  35620     0  "2 "    0     # LOAD-DROP    EL PATIO 115.00  LOAD==41.19(9.39)
4  35620     0  "3 "    0     # LOAD-DROP    EL PATIO 115.00  LOAD==41.00(9.34)
0
 #
 #
 # (384) BUS FAULT  35622  "SWIFT"
 #
1  35622  35624  "1"    0     # LINE from  SWIFT    115.00  to  MILPITAS 115.00
1  35622  35643  "1"    0     # LINE from  SWIFT    115.00  to  MTCALF E 115.00
4  35622     0  "1 "    0     # LOAD-DROP    SWIFT    115.00  LOAD==32.49(7.41)
4  35622     0  "2 "    0     # LOAD-DROP    SWIFT    115.00  LOAD==32.21(7.34)
4  35622     0  "3 "    0     # LOAD-DROP    SWIFT    115.00  LOAD==43.51(9.91)
0
 #
 #
 # (385) BUS FAULT  35624  "MILPITAS" Milpitas 115 kV Bus Section E
 #
1  35624  35122  "1"    0     # LINE from  MILPITAS 115.00  to  NEWARK F 115.00
4  35624     0  "3 "    0     # LOAD-DROP    MILPITAS 115.00  LOAD==19.80(4.51)
4  35624     0  "6 "    0     # LOAD-DROP    MILPITAS 115.00  LOAD==38.57(8.79)
0
 #
 #
 # (386) BUS FAULT  35624  "MILPITAS" Milpitas 115 kV Bus Section F
 #
```

```
1  35624  35122  "2"    0     # LINE from  MILPITAS 115.00  to  NEWARK F 115.00
1  35624  35622  "1"    0     # LINE from  MILPITAS 115.00  to  SWIFT    115.00
4  35624     0  "1 "    0     # LOAD-DROP    MILPITAS 115.00  LOAD==42.72(9.74)
4  35624     0  "2 "    0     # LOAD-DROP    MILPITAS 115.00  LOAD==35.14(8.01)
0
 #
 #
 # (387) BUS FAULT  35626  "MCKEE"
 #
1  35626  35629  "1"    0     # LINE from  MCKEE    115.00  to  MABURY J 115.00
1  35626  35656  "1"    0     # LINE from  MCKEE    115.00  to  PIERCY   115.00
4  35626     0  "1 "    0     # LOAD-DROP    MCKEE    115.00  LOAD==39.23(8.94)
4  35626     0  "2 "    0     # LOAD-DROP    MCKEE    115.00  LOAD==24.48(5.57)
4  35626     0  "3 "    0     # LOAD-DROP    MCKEE    115.00  LOAD==35.43(8.08)
0
 #
 #
 # (388) BUS FAULT  35630  "MABURY"
 #
1  35630  35629  "1"    0     # LINE from  MABURY   115.00  to  MABURY J 115.00
4  35630     0  "2 "    0     # LOAD-DROP    MABURY   115.00  LOAD==19.00(4.33)
0
 #
 #
 # (389) BUS FAULT  35633  "EVRGRN 2"
 #
1  35633  35636  "1"    0     # LINE from  EVRGRN 2 115.00  to  EVRGRN 1 115.00
1  35633  35645  "2"    0     # LINE from  EVRGRN 2 115.00  to  EVRGRN J 115.00
2  35633  35753  "1"    0     # TRAN from  EVRGRN 2 115.00  to  EVERGREN  60.00
0
 #
 #
 # (390) BUS FAULT  35636  "EVRGRN 1"
 #
1  35636  35631  "1"    0     # LINE from  EVRGRN 1 115.00  to  MARKHM J 115.00
1  35636  35633  "1"    0     # LINE from  EVRGRN 1 115.00  to  EVRGRN 2 115.00
1  35636  35643  "1"    0     # LINE from  EVRGRN 1 115.00  to  MTCALF E 115.00
4  35636     0  "2 "    0     # LOAD-DROP    EVRGRN 1 115.00  LOAD==48.55(11.07)
4  35636     0  "3 "    0     # LOAD-DROP    EVRGRN 1 115.00  LOAD==16.81(3.83)
0
 #
 #
 # (391) BUS FAULT  35639  "IBM-HRRS"
 #
1  35639  35621  "1"    0     # LINE from  IBM-HRRS 115.00  to  IBM-HR J 115.00
1  35639  35641  "1"    0     # LINE from  IBM-HRRS 115.00  to  EDNVL J1 115.00
4  35639     0  "1 "    0     # LOAD-DROP    IBM-HRRS 115.00  LOAD==2.43(1.63)
4  35639     0  "2 "    0     # LOAD-DROP    IBM-HRRS 115.00  LOAD==2.43(1.63)
0
 #
 #
 # (392) BUS FAULT  35640  "IBM-BALY"
 #
1  35640  35652  "1"    0     # LINE from  IBM-BALY 115.00  to  BAILY J1 115.00
4  35640     0  "1 "    0     # LOAD-DROP    IBM-BALY 115.00  LOAD==5.63(3.04)
0
 #
 #
 # (393) BUS FAULT  35642  "MTCALF D" Metcalf 115 kV Bus Section 1D
 #
1  35642  35641  "1"    0     # LINE from  MTCALF D 115.00  to  EDNVL J1 115.00
1  35642  35621  "1"    0     # LINE from  MTCALF D 115.00  to  IBM-HR J 115.00
1  35642  35654  "1"    0     # LINE from  MTCALF D 115.00  to  MORGN J1 115.00
0
 #
 #
 # (394) BUS FAULT  35642  "MTCALF D" Metcalf 115 kV Bus Section 2D
 #
1  35642  35651  "2"    0     # LINE from  MTCALF D 115.00  to  BAILY J3 115.00
1  35642  35653  "1"    0     # LINE from  MTCALF D 115.00  to  BAILY J2 115.00
1  35642  35646  "1"    0     # LINE from  MTCALF D 115.00  to  MRGN HIL 115.00
0
 #
 #
 # (395) BUS FAULT  35643  "MTCALF E" Metcalf 115 kV Bus Section 1E
 #
1  35643  35645  "2"    0     # LINE from  MTCALF E 115.00  to  EVRGRN J 115.00
1  35643  35656  "1"    0     # LINE from  MTCALF E 115.00  to  PIERCY   115.00
```

```
0
 #
 #
 # (396) BUS FAULT  35643  "MTCALF E" Metcalf 115 kV Bus Section 2E
 #
1  35643  35622  "1"    0     # LINE from  MTCALF E 115.00  to  SWIFT    115.00
1  35643  35636  "1"    0     # LINE from  MTCALF E 115.00  to  EVRGRN 1 115.00
1  35643  35644  "1"    0     # LINE from  MTCALF E 115.00  to  CYTE PMP 115.00
0
 #
 #
 # (397) BUS FAULT  35644  "CYTE PMP"
 #
1  35644  35643  "1"    0     # LINE from  CYTE PMP 115.00  to  MTCALF E 115.00
4  35644     0  "1 "    0     # LOAD-DROP    CYTE PMP 115.00  LOAD==4.90(1.12)
0
 #
 #
 # (398) BUS FAULT  35646  "MRGN HIL"
 #
1  35646  35642  "1"    0     # LINE from  MRGN HIL 115.00  to  MTCALF D 115.00
1  35646  35648  "1"    0     # LINE from  MRGN HIL 115.00  to  LLAGAS   115.00
4  35646     0  "1 "    0     # LOAD-DROP    MRGN HIL 115.00  LOAD==26.52(6.04)
4  35646     0  "2 "    0     # LOAD-DROP    MRGN HIL 115.00  LOAD==22.86(5.21)
4  35646     0  "3 "    0     # LOAD-DROP    MRGN HIL 115.00  LOAD==44.34(10.10)
0
 #
 #
 # (399) BUS FAULT  35647  "GILROY"
 #
1  35647  35660  "1"    0     # LINE from  GILROY   115.00  to  GILROYTP 115.00
2  35647  35850  "1"    0     # TRAN from  GILROY   115.00  to  GLRY COG  13.80
0
 #
 #
 # (400) BUS FAULT  35648  "LLAGAS"
 #
1  35648  35646  "1"    0     # LINE from  LLAGAS   115.00  to  MRGN HIL 115.00
1  35648  35655  "1"    0     # LINE from  LLAGAS   115.00  to  MORGN J2 115.00
1  35648  35660  "1"    0     # LINE from  LLAGAS   115.00  to  GILROYTP 115.00
4  35648     0  "1 "    0     # LOAD-DROP    LLAGAS   115.00  LOAD==30.40(6.92)
4  35648     0  "2 "    0     # LOAD-DROP    LLAGAS   115.00  LOAD==24.51(5.58)
4  35648     0  "3 "    0     # LOAD-DROP    LLAGAS   115.00  LOAD==31.19(7.11)
0
 #
 #
 # (401) BUS FAULT  35656  "PIERCY"
 #
1  35656  35626  "1"    0     # LINE from  PIERCY   115.00  to  MCKEE    115.00
1  35656  35643  "1"    0     # LINE from  PIERCY   115.00  to  MTCALF E 115.00
4  35656     0  "3 "    0     # LOAD-DROP    PIERCY   115.00  LOAD==35.37(8.06)
0
 #
 #
 # (402) BUS FAULT  35659  "NORTECH"
 #
1  35659  35658  "1"    0     # LINE from  NORTECH  115.00  to  LS ESTRS 115.00
1  35659  35666  "1"    0     # LINE from  NORTECH  115.00  to  LECEFTAP 115.00
1  35659  36853  "1"    0     # LINE from  NORTECH  115.00  to  NRS 300  115.00
4  35659     0  "3 "    0     # LOAD-DROP    NORTECH  115.00  LOAD==15.25(3.48)
0
 #
 #
 # (403) BUS FAULT  35750  "MABURY"
 #
1  35750  35752  "1"    0     # LINE from  MABURY    60.00  to  JENING J  60.00
4  35750     0  "1 "    0     # LOAD-DROP    MABURY    60.00  LOAD==17.10(3.90)
0
 #
 #
 # (404) BUS FAULT  35751  "JENNINGS"
 #
1  35751  35752  "1"    0     # LINE from  JENNINGS  60.00  to  JENING J  60.00
4  35751     0  "1 "    0     # LOAD-DROP    JENNINGS  60.00  LOAD==0.71(0.77)
0
 #
 #
 # (405) BUS FAULT  35753  "EVERGREN"
```

```
 #
1  35753  35754  "1"    0     # LINE from  EVERGREN  60.00  to  EVRGRN J  60.00
1  35753  35756  "1"    0     # LINE from  EVERGREN  60.00  to  SENTER J  60.00
2  35753  35633  "1"    0     # TRAN from  EVERGREN  60.00  to  EVRGRN 2 115.00
0
 #
 #
 # (406) BUS FAULT  35755  "SENTER"
 #
1  35755  35754  "1"    0     # LINE from  SENTER    60.00  to  EVRGRN J  60.00
1  35755  35756  "1"    0     # LINE from  SENTER    60.00  to  SENTER J  60.00
0
 #
 #
 # (407) BUS FAULT  35757  "ALMADEN"
 #
1  35757  35756  "1"    0     # LINE from  ALMADEN   60.00  to  SENTER J  60.00
1  35757  35460  "1"    0     # LINE from  ALMADEN   60.00  to  LOS GATS  60.00
4  35757     0  "1 "    0     # LOAD-DROP    ALMADEN   60.00  LOAD==18.96(4.32)
0
 #
 #
 # (408) BUS FAULT  36420  "STONE"
 #
1  36420  35632  "1"    0     # LINE from  STONE    115.00  to  MARKHAM  115.00
1  36420  35634  "1"    0     # LINE from  STONE    115.00  to  STONE J  115.00
4  36420     0  "1 "    0     # LOAD-DROP    STONE    115.00  LOAD==35.69(8.13)
4  36420     0  "2 "    0     # LOAD-DROP    STONE    115.00  LOAD==14.87(3.39)
0
 #
 #
-1
 # EOF
```

Appendix B

Base Case Assumptions

Table B-1: Generation Projects Modeled in the Phase I Study Base Cases

Queue Position	Output Capacity (MW)	Interconnection Point	Current On-line Date (as last notified to CAISO by IR)
2	590	Contra Costa Power Plant 230 kV bus	2/1/2009
6	1156	Tesla Substation 230 kV Bus E	11/30/2011
16	120	Cabrillo	10/1/2008
22	38	New Birds Landing Sw Sta near Contra Costa PP Sub	12/31/2009
24	150	High Winds/Contra Costa PP	11/28/2008
28	145.	Potrero 115 kV Sub	6/1/2008
30	48.7	SF Airport Substation	6/1/2008
37	74.9	Tesla Substation	1/1/2010
38	146.	Humboldt Power Plant Substation	6/30/2009
39	200	New Birds Landing Sw Sta near Contra Costa PP Sub	12/22/2009
40	118	Eastshore Substation	10/1/2009
42	300	McCall Substation	3/31/2013
45	361	Eastshore substation	6/1/2010
52	401	Panoche Sub Station	8/1/2009
54	119.	Panoche Substation	1/1/2009
57	715	Between Cottonwood and Vaca-Dixon	5/1/2010
60	94	Kern Oil Substation 115 kV	3/31/2013
67	245	Eastshore Substation	7/31/2008
70	10.7	Hillsdale Junction-Half Moon Bay 60 kV line	9/4/2008
74	102	230kV line btn Pit#3 & Round Mtn	9/30/2009
76	10.5	PG&E Merced #1 70 kV circuit	2/29/2008
108	128	Lambie-Contra Costa 230 kV	3/1/2011
111	20	Tap of Chevron 70kv tran line	4/30/2011
113	30	Birds Landing	4/1/2009
128	565	McCall Substation	12/1/2010
155	300	Oakland C 115kV substation	5/31/2012
166	210	Midway-Morrow Bay 230kV line	12/31/2010
172	508	Tesla-Bellota 230kV lines	5/15/2011
177	100	Bahia – Moraga 230 kV Line	12/31/2011
184	35	Geysers #3 – Cloverdale 115 kV Line	1/1/2010
194	190	230kV lines near Carrizo Plain Substation	12/31/2011
212	50	Bridgeville Substation	10/30/2010
248	67	Tesla-Bellota 230kV line	5/15/2011
261A	5	Mendota-San Joaquin-Helm 70kV line	4/15/2009
267	280	Gold Hill-Eight Mile 230kV lines	4/16/2012
268	145	Tesla-Manteca 115kV line via Schulte Switchyard	4/1/2013

Table B-2: Network Upgrades Modeled in the Phase I Study Base Cases

OVERLOAD FACILITY	MITIGATION METHOD	NEW SIZE	LENGTH
Borden-Gregg 230 kV Line	Re-conductor	795 ACSS	6 miles
McCall-Sanger #3 115 kV Line	Re-conductor	477 ACSS	6.5 miles
Oro Loma-Canal 70 kV Line (Oro Loma-Dos Palos)	Re-conductor	397.5 al	2.5 miles
Barton-Sanger 115 kV Line (Airway J2-Sanger)	Re-conductor	795 ACSS	6 miles
Manchester-Sanger 115 kV Line (Sanger-Airway J1-Las Palmas)	Re-conductor	795 ACSS	6 miles
Warnerville - Wilson 230 kV Line	Re-conductor	954 ACSR	38 miles
Weber – Bellota 230 kV Line	Replace switch	1800 amp or more	
Humboldt Bay-Rio Dell Jct 60 kV Line (Newburg-Rio Dell Jct)	Re-conductor	954 al	4.75 miles
Rio Dell 60 kV Tap Line	Re-conductor	715 al	5.4 miles
Humboldt Bay-Eureka 60 kV Line	Re-conductor	715 al	2 miles
Bridgeville-Cottonwood 115 kV Line	Re-conductor	954 ACSR	87 miles
Humboldt Bay-Rio Dell Jct 60 kV Line (Humboldt-Eel River-Newburg)	Re-conductor	954 al	13 miles
Humboldt-Humboldt Bay #1 60 kV Line (Humboldt Jct-Humboldt Bay)	Re-conductor	715 al	4.1 miles
Humboldt-Eureka 60 kV Line	Re-conductor	715 al	3.6 miles
Humboldt-Humboldt Bay #2 60 kV Line	Re-conductor	954 al	6.5 miles
Humboldt-Maple Creek 60 kV Line	Re-conductor	715 al	14.3 miles
Trinity-Cottonwood 115 kV Line (Trinity-Jessup Tap)	Re-conductor	795 ACSR	35 miles
Humboldt 115/60 kV Bank 1 & 2	Replace	60 MVA	
Vierra-Tracy-Kasson 115 kV Line (Cross Road-Kasson Jct 2)	Re-conductor	477 ACSS	2.5 miles
Schulte-Manteca 115 kV Line (Kasson Jct 1-Schulte)	Re-conductor	795 ACSS	8.9 miles
Eight Mile Road – Tesla 230 kV Line	Re-conductor	795 ACSS	27 miles
Stagg – Tesla 23 kV Line	Re-conductor	795 ACSS	23 miles
Drum – Higgins 115 kV Line	SPS	N/A	N/A
Atascadero – Templeton 70 kV Line	SPS	N/A	N/A
Morro Bay – Templeton 230 kV Line	SPS	N/A	N/A
Birds Landing – Contra Costa PP 230 kV Line	Re-conductor	1113 ACSS	10 miles
Birds Landing – Contra Costa Sub 230 kV Line	Re-conductor	1113 ACSS	9.5 miles
Contra Costa Sub – Contra Costa PP 230 kV Line	Re-conductor	954 ACSR	2 miles
Simpson Paper – Ripon Tap 115 kV Line	Re-conductor	954 AAC	12 miles
Eastshore – San Mateo 230 kV Line	Re-conductor	954 ACSS	12.5 miles
Eastshore – Dumbarton 115 kV Line	Re-conductor	Parallel 477 ACSS	7 miles
Storey – Greg 230 kV Line	Re-conductor	795 ACSR	1 mile
Calpeak Panoche Peaker 115 kV Gen-Tie Line	Re-conductor	477 ACSS	0.5 miles

Table B-3: PG&E Transmission Projects Modeled in the Phase I Study Base Cases

T#	Project Name	Project Scope	EDRO
T571	Lakeville 230/60 kV Transformer Capacity Increase	Install Second 230/60 kVTransformer	Dec-08
T980	Martin 115/60 kV Transformer Replacement	TransformerReplacement	Dec-08
T867	Metcalf-Moss Landing 230 kV Reconductoring	Reconductor 230 kV Lines	Dec-08
T1018	Plainfield Substation Capacity Increase	Change Distribution Substation Interconnection	Dec-08
T997	Weber #1 60 kV Line	Reconductor and reconfigure the Weber #1 60 kV Line	Dec-08
T1096	Camanche Pumping Plant Interconnection	Interconnect Customer Substation	Mar-09
T998	Potrero Bus Parallel Circuit Breaker Project	Add a second parallel breaker	Mar-09
T897	Martin-Hunters Point 115 kV Cable	Construct New Underground Cable	Apr-09
T1020	7th Standard Substation Capacity Increase	Interconnect Distribution Substation	May-09
T964	Borden - Madera 70 kV Reinforcement	Install 70 kV Breaker and Construct Additional Line	May-09
T772	Contra Costa - Las Positas 230 kV Line (Scope Change)	Reconductor Contra Costa - Las Positas and Contra Costa - Lone Tree 230 kV Lines	May-09
T444B	Gold Hill - Clarksville 115 kV Line Reconductoring	Reconductor 115 kV Lines	May-09
T458C	Hollister 115 kV Reconductoring	Reconductor 115 kV Lines	May-09
T945	Humboldt Reactive Support (Scope Change)	Install SVC at Humboldt Substation	May-09
T994	Lakeville - Ignacio #2 230 kV Line Project	Re-establish Lakeville - Ignacio #2 230 kV Line	May-09
T1037	Menlo 60 kV Switch Upgrade	Replace 60 kV switches at Menlo 60 kV Substation	May-09
T965	Mesa 115 kV Shunt Capacitor	Instant Shunt Capacitors	May-09
T995	North Coast Breaker and Switch Upgrades (Canceled)	Breaker Replacement & Line Rerate	May-09
T444	Placer - Gold Hill 115 kV Line Reinforcement	Reconductor Placer - Gold Hill 115 kV Lines	May-09
T1055	Stone Substation Capacity Increase	Change Distribution Substation Interconnection	May-09
T680B	Tesla 115 kV Capacity Increase	Increase Transmission Capacity	May-09
T880B	West Point - Valley Springs 60 kV Line	Reconductor 60 kV Line	May-09
T177B	West Sacramento - Brighton 115 kV Reconductoring	Reconductor 115 kV Lines	May-09
T258A	Gregg 230 kV Reactor	Install Shunt Reactors	Oct-09
T758A	Brighton 230/115 kV Transformer Replacement	Transformer Replacement	Nov-09
T759	Atlantic-Lincoln Transmission Projects	Convert 60 kV facilities to 115 kV and Construct New 115 kV Line	Dec-09
T686A	Palermo-Rio Oso 115 kV Line Reconductoring	Reconductor 115 kV Lines	Dec-09

T#	Project Name	Project Scope	EDRO
T815	Pease - Marysville 60 kV Line	Construct New 60 kV Line	Dec-09
T982	Newark - Ravenswood 230 kV Line (Scope Change)	Reconductor Newark - Ravenswood and Tesla - Ravenswood 230 kV Line	Feb-10
T1031	San Francisco 115 kV Recabling Project	Reconductor 115 kV Cables	Mar-10
T249	Bay Meadows 115 kV Reconductoring	Reconductor 115 kV Lines	May-10
T993	Mendocino Coast Reactive Support	Install 10 to 15 MVars of reactive support at Big River 60 kV Substations	May-10
T983	Oakland Underground Cable	Construct New Underground Cable	May-10
T984	Pittsburg - Tesla 230 kV Reconductoring	Increase 230 kV Capacity	May-10
T1030	Table Mountain - Rio Oso 230 kV Line Reconductor and Tower	Increase substation equipment capacity	May-10
T1042	West Fresno Reactive Support	Install Caps At West Fresno	May-10
T996A	Soledad 115/60 kV Transformer Capacity	Replace transformers at Soledad Substation with 200 MVA Transformers	Jan-11
T1033	Cooley Landing 115/60 kV Transformer Capacity Upgrade	Replace Cooley Landing 115/60 kV Transformer No. 1 by 2010 and No. 2 by 2011	May-11
T346A	Cortina 60 kV Reliability	Install Additional Transformer	May-11
T970	Crazy Horse Switching Station	Construct New Switching Station	May-11
T962	East Nicolaus 115 kV Area Reinforcement	Increase 115 kV Transmission Capacity	May-11
T979	Half Moon Bay Reactive Support	Increase 60 kV Transmission Capacity	May-11
T981	Monta Vista - Los Altos 60 kV Reconductoring	Reconductor 60 kV Line	May-11
T999	Pittsburg 230/115 kV Transformer Capacity Increase	Install a third 230/115 kV transformer at Pittsburg.	May-11
T444D	Placer-Horseshoe 115 kV Reinforcement Project	Reconductor Placer to Horseshoe of Placer-Gold Hill Nos. 1 & 115 kV Lines	May-11
T985B	Rio Oso 230/115 kV Transformer Upgrades	Transformer Replacements	May-11
T920A	South of San Mateo Capacity Increase	Increase 115 kV Transmission Capacity	May-11
T670B	Tesla - Newark 230 kV Path Upgrade	Increase 230 kV Capacity	May-11
T972	Vaca Dixon- Birds Landing 230 kV Reconductoring	Reconductor 230 kV Lines	May-11
T1000	Wheeler Ridge 230/70 kV Transformer	Add a Second 230/70 kV	May-11
T692	Metcalf - Piercy & Swift and Newark - Dixon Landing 115 kV Upgrade	Reconductor 115 kV Lines	May-12
T854	Metcalf-Evergreen 115 kV	Reconductor 115 kV Lines	May-12
T990	Moraga Transformer Capacity Increase	Replace Moraga 230/115 kV Banks	Dec-12
T991	Contra Costa - Moraga 230 kV	Reconductor 230 kV Lines	May-13

T#	Project Name	Project Scope	EDRO
	Line Reconductoring		

Appendix A

Study Plan

Transition Cluster

Phase I Interconnection

Study Plan

DRAFT

November 11, 2008

1. Study Scope Summary

In accordance with the FERC-approved Generation Interconnection Process Reform (GIPR) Large Generator Interconnection Procedures (LGIP), the Interconnection Customer, CAISO, and PG&E, SCE and SDG&E will perform a Transition Cluster Phase I Interconnection Study (Phase I Study) to determine the impact of the Projects in the Transition Cluster on the CAISO controlled transmission grid. This study plan defines the scope, content, and assumptions for this Phase I Study. This Phase I Study will:

1. Identify transmission system impacts caused by the addition of a proposed project or grouping of projects.

2. Identify the system reinforcements, if any, necessary to mitigate the adverse impact of a proposed project or grouping of projects under various system conditions.

3. Preliminarily evaluate the feasibility of the proposed interconnection on the CAISO transmission grid.

4. Provide a list of required facilities and assign cost responsibility to each generation project and a non-binding, good faith estimated time to construct.

2. Schedule

Table 4-1 shows the tentative milestones/schedule associated with the study.

Table 4-1: Study Schedule

See attached MS excel spreadsheet and MS Project files.

3. Project and Interconnection Information

Transition Cluster Projects General Information listed below is attached.

- Project Location
- PG&E Planning Area
- Number and Type of Generators
- Maximum Generator Output
- Maximum Net Output to Grid
- Power Factor

- Step-up Transformer
- Description Of Interconnection Configuration
- Connection Voltage
- map for the Project and the transmission facilities in the vicinity
- single line diagram of the Project

4. Study Assumptions

5. Power Flow Study Base Cases

Power flow base cases representing the 2013 Summer Peak load conditions and 2013 Off-Peak load conditions will be used to evaluate the feasibility of the proposed interconnection and the transmission system impacts of the Project. While it is impractical to study all combinations of system load and generation levels during all seasons and at all times of the day, several base cases will be developed to represent extreme loading and generation conditions for the study group area.

The CAISO cannot guarantee that the Project can operate at maximum rated output 24 hours a day, year round, without system impacts, nor can the CAISO guarantee that the Project will not have system impacts during the times and seasons not studied in this Phase I Study.

2013 Summer Peak Full Loop Base Case:

Power flow analysis will be performed using the PTO's 2013 Summer Peak Full Loop Base Case (in General Electric Power Flow format). This base case is developed from the PTO's 2008 base case series. For the Deliverabilty Study, the base case will have a 1-in-5 year heat wave load forecast for the entire CAISO Control Area. For the Reliability Studies, the base case will have a 1-in-10 year heat wave load forecast for each of the PTO areas or sub-areas. A preliminary base case modeling all Serial Group projects will be built first. Then the peak Deliverability Study base cases will be built, modeling 96% of the 1-in-5 PTO area peak load level. After the CAISO merges the cases together to create the master peak Deliverabilty base case, then the Reliability cases will be built from the master Deliverability Study base case. A more detailed description of these cases is described below.

New Transmission Projects to be modeled in the base case

All CAISO-approved transmission projects expected to be operational by 2013 should be modeled in the base case. Transmission mitigation plans to mitigate deliverability problems identified in the previous Deliverability Studies should also be modeled in the base case. In addition, all Reliability and Delivery Network Upgrades identified in generation Interconnection Studies for generation projects modeled should be included in the base case if they are needed to mitigate impacts identified under summer peak load conditions. If several alternative projects were identified in the Interconnection System Impact Study (ISIS) that solve the same summer peak problem, and the generation developer has not yet selected a preferred option, then the project with the lowest expected cost that resolves the overload should be modeled, and noted in the case documentation. All transmission projects to mitigate non-summer peak congestion problems, already committed to by generation developers should also be modeled. Each of the PTOs will ensure that these projects are accurately modeled in the base case that they return to the CAISO. A list of new transmission projects included in the base case, along with their approval history, should be provided to the CAISO.

Transmission Facility Ratings

The PTOs will ensure that transmission facility ratings are identical to the ratings in the CAISO Transmission Register. CAISO-approved planned transmission facility upgrades that will increase the existing facility rating should be modeled in the base case. A list of new transmission projects, including reconductorings and re-ratings, that are included in the base case should be provided to the CAISO.

Load Modeling

For the Peak Deliverability Study, a coincident 1-in-5-year heat wave CAISO Control Area load will be modeled in the base case. Each of the PTOs will modify the load in their area of the starting base case to be 96% of their areas coincident 1-in-5 year heat wave load level. The 96% represents a diversity factor to convert the three area peak load levels to a coincident CAISO peak load level.

The PTOs will build the Reliability Study base case by scaling the load in the study area to a 1-in-10 load level. The load in the rest of the CAISO system will be the same as in the Deliverabilty Study base cases.

Generation Capacity (Pmax) and behind the meter load in the base case

The generation capacity values used in the Phase II Deliverability baseline study will also be used for this Phase I Study unless more accurate data is available. Wind generation Pmax data will be updated using available data for the maximum production during summer peak load hours used to calculate the average production for Qualified Capacity valuation. The generation capacity values used in the 2007Q3 Deliverability Study should be modeled in the base case.

Reliability Study base case Pmax values for wind generation will be based on nameplate.

Generation Dispatch in the base cases

Existing generation previously determined to be deliverable should be dispatched similar to the 2007Q3 Deliverability Study base case. New generation in the interconnection queue should be dispatched to balance load and resources. During the Phase I Study, new generation will be grouped geographically and dispatched together in geographic groups, at a level similar to the existing generation, to balance loads and resources in the base case. Several base cases may be needed to assess the deliverability of each of the generation groups. In all cases, all new generation modeled should be available to be dispatched to full output, based on the study methodology, during the Phase I Study.

Reliability Study base case generation dispatch levels will typically be based on dispatching generation in the study area at Pmax.

Import Levels

The Peak Deliverability Study base case will model the 2008 Maximum Import Capability for each branch group, based on the methodology for Import Capability Assignment Process for resource adequacy (CAISO Tariff Section 40.5.2.2.1), and has been modeled as fully utilized in the base case. Appendix D describes the amount and modeling of imports included in this study.

Import levels for the Reliability Study base cases can be modified to create a more stressed local system condition.

2013 Off-Peak Full Loop Base Case:

Power flow analysis will be performed using the PTO's 2013 Summer Off-Peak Full Loop Base Cases. A more detailed description of these cases for the Reliability Study and Deliverability Study is shown below.

New Transmission Projects to be modeled in the base case

Same network model as the peak case.

Transmission Facility Ratings

Same network model as the peak case.

Load Modeling

For the Off-Peak Deliverability Study, CAISO Control Area load of approximately 50% of the load in the Peak Deliverability Study case will be modeled in the base case. For study

areas with solar generation, the study area load may be increased to represent weekend day-time off-peak load levels.

The Off-Peak Reliability Study base cases load levels may vary slightly to create a more stressed local system condition.

Generation Capacity (Pmax) and behind the meter load in the base case

The generation capacity values used in the original WECC base case will also be used for this study unless more accurate data is available.

Generation Dispatch in the base cases

For the off-peak Deliverability Study base cases:

- Wind generation at its maximum nameplate output
- Solar generation at its maximum nameplate output
- Hydro generation at its high hydro dispatch level for the spring off-peak load period
- Gas fired combustion turbines off-line
- Gas fired combined cycle units at minimum load or off-line
- QF's at historical output for off-peak period
- Imports at average historical schedules for off-peak period

Generation dispatch levels for the Reliability Studies will typically maximize all generation in the study area.

Import Levels

For the off-peak Deliverability Study base case, imports should be at average historical schedules for the off-peak period.

Import levels for the Reliability Study base cases can be modified to create localized stress conditions.

These three base cases will model all CAISO-approved transmission projects that will be operational by 2013. CAISO-approved projects that are expected to be operational after that time or PTO-approved projects can be included if the CAISO and PTOs agree to the reasons for including the projects. These three base cases will also model all generation projects in the Serial Group and Transition Cluster. However, some generation projects that are electrically far from the proposed project or grouping of projects, may be either turned off or modeled with reduced generation to balance the loads and resources in the power flow model. The new generation projects included are shown in Attachment 1.

6. Study Scope

This Phase I Study will determine the impact of the Project on the CAISO transmission system. The specific studies conducted are outlined below:

6.1 Peak and Off Peak Deliverability Analysis

Contingencies to be analyzed

The PTOs will provide contingency files with all NERC Category B, C.5 contingencies, and WECC-S2 contingencies on the 500 kV system (common corridor 500 kV lines) in a computer readable format along with a description of the format. The contingency files should include accurate modeling of all existing and CAISO approved RAS/SPS assuming generation is at full output. The contingency files should be tested by the PTOs on the base case that they provide to the CAISO for this study, to ensure that they are consistent.

Updated detailed descriptions of the RAS/SPS included in the contingency files should also be provided by the PTOs.

Deliverability Study Methodology

The Deliverability Study methodology is described in Generation and Import Deliverability to the Aggregate of Load (Baseline) Study Methodology on the CAISO Website: http://www.caiso.com/docs/2005/05/03/2005050317085664 10.pdf.

6.2 System Protection Analysis

A short circuit study will be performed to determine the maximum fault currents on various buses in the vicinity of the Project. This study will assess the impact of increased fault duty resulting from the added generation. Equipment that may become overstressed as a result of the added generation will be identified.

Preliminary system protection requirements will be provided.

6.3 Post Transient Reactive Power Deficiency Analysis

With the proposed projects included in the system model, CAISO Category "B" and "C" contingencies will be analyzed to identify any reactive power deficiency:

- If they result in voltage drops of 5% or more from the pre-project levels, or
- If they fail to meet applicable voltage criteria.

A post-transient power flow analysis will be performed, if deemed necessary, after considering the network topology or power transfer paths involved when a significant amount of power transfer occurs.

6.4 Dynamic Stability Analysis

Dynamic stability studies will be conducted using the 2013 Summer Peak Full Loop Base Case to ensure that the transmission system remains in operating equilibrium through abnormal operating conditions after the new facility begins operation.

Disturbance simulations will be performed for a study period of up to 20 seconds to determine whether the new facility will create any system instability during the following line and generator outages.

6.4.1 Contingencies to be Analyzed

- Full load rejection of the Project.
- Selected transmission system contingencies near the new generation added to the model will be analyzed as agreed to by the CAISO and PTOs.

6.5 Substation Evaluation

The substation evaluation will identify any existing equipment requiring upgrades to mitigate problems caused by overstress or overload by the interconnection of the Project, if any.

6.6 Transmission Line Evaluation

PTO's transmission line evaluation will identify any existing equipment requiring upgrades to mitigate overload or overstress by the interconnection of the Project, if any.

6.7 Land Evaluation

For the Phase I Study, PTO's Corporate Real Estate Department will <u>not</u> perform an evaluation to determine if any new land rights are necessary to upgrade PTO facilities that may be impacted by the interconnection of the Project, such as constructing the new generator tie line and reconductoring of existing PTO transmission lines, if required.

A land right evaluation will be provided when the Project progresses to the Phase II Study.

7. Costs and Construction Schedule Estimates

The Phase I Study will provide a list of required facilities and cost responsibility and a non-binding good faith estimated time to construct.

8. Other Study Principles and Assumptions

Q: How should a generator who selects "Energy Only" be modeled in the power flow cases?

A: Energy Only units should be initially dispatched in the ISO Deliverability analysis and then turned down, if necessary, to mitigate constraints. The ISO would then assess the capability of MRTU to turn these units down and maintain reliable operation of the grid.

Only generation needs to be modeled on line at full MW capacity in the Reliability Network Upgrade analyses.

Q: How should a generator who selects "Energy Only" be modeled in SCD data bases?

A: Since violations related to SCD are reliability in nature, the generator should be modeled in the SCD data base.

Transition Cluster Group 1 Phase I Interconnection Study Report

Mirant Delta, LLC

Pittsburg Power Plant –

Combined Cycle Units Project

Final Report

California ISO
Your Link to Power

July 28, 2009

This study has been completed in coordination with Pacific Gas & Electric per CAISO Tariff Appendix Y Large Generator Interconnection Procedures (LGIP) for Interconnection Requests in a Queue Cluster Window

Table of Contents

1. Executive Summary 1
2. Project and Interconnection Information 4
3. Study Assumptions 6
4. Power Flow Study Base cases 8
5. Study Criteria Summary 9
   5.1 Steady State Study Criteria – Normal Overloads 9
   5.2 Steady State Study Criteria – Emergency Overloads 9
6. Steady State Power Flow Study and Results 9
   6.1 Contingencies 9
   6.2 Study Results 10
7. Short Circuit Current Calculation 19
   7.1 System Protection Study Input Data 20
   7.2 Results 20
8. Reactive Power Deficiency Analysis 20
9. Dynamic Stability Evaluation 20
   9.1 Dynamic Stability Study Scenarios 21
   9.2 Parameters Monitored to Evaluate System Stability Performance 21
   9.3 Results 22
10. Deliverability Evaluations 22
   10.1 On Peak Deliverability Assessment 22
11. Transition Cluster Group 1 Overload Mitigations 24
   11.1 Mitigation for Category Normal Overloads Category "A" 24
   11.2 Mitigation for New Category "B" Emergency Overload 30
   11.3 Mitigation for New Category "C" Emergency Overload 34

11.4 Summary of Network Upgrade Cost Estimates 37

11.5 Mitigation for Dynamic Stability Study Category "C" Emergency 39

11.6 Mitigation for Fault Duty 39

12. Network Upgrades and Overload Mitigation Responsibility By the Project 39

13. Preliminary Protection Requirements 41

14. Transmission Line Evaluation 41

15. Substation Evaluation 42

15.1 Overstressed Breakers 42

15.2 Substation Evaluation 42

16. Environmental Evaluation/Permitting 43

16.1 CPUC General Order 131-D 43

16.2 CPUC Section 851 44

17. Cost and Construction Schedule Estimates 44

17.1 Interconnection Facilities Costs 44

17.2 Network Upgrades Costs 45

17.3 Construction Schedule Estimate 45

18. Standby Power 46

Appendices:

A. Study Plan
B. Base Case Assumptions
C. Contingency Lists for Outages - Autocon Input File
D. Steady State Power Flow Plots
E. Generator Machine Dynamic Data
F. Dynamic Stability Plots
G. Preliminary Protection Requirement
H. Short Circuit Calculation Study Results
I. Deliverability Assessment Results
J. Allocation of Network Upgrades for Cost Estimates

1. Executive Summary

Mirant Delta, LLC, an Interconnection Customer (IC), has submitted a completed Interconnection Request (IR) to the California Independent System Operator Corporation (CAISO) for their proposed Pittsburg Power Plant – Combined Cycle Units Project (Project), interconnecting to the CAISO Controlled Grid. The Project consists of two gas turbines 242 MW each, and two steam turbines 71 MW each. These are operated in one-on-one combined cycle mode with a total rated output of 626 MW. With a 15 MW plant auxiliary load, the maximum output to the CAISO Controlled Grid is 611 MW. The proposed Commercial Operation Date of the Project is September 30, 2012. The primary point of interconnection (POI) is the 230 kV bus at Pacific Gas & Electric Company's (PG&E) Pittsburg Power Plant Switchyard in Contra Costa County, California. The IC did not select an alternate POI.

In accordance with Federal Energy Regulatory Commission (FERC) approved Generation Interconnection Process Reform (GIPR) Large Generator Interconnection Procedures (LGIP), the IC, CAISO, and PG&E have agreed to perform the Transition Cluster Phase 1 Interconnection Study (Phase 1 Study) to determine the impact of the Project on the CAISO Controlled Grid.

Under the new process, Interconnection Requests were processed together in Clusters. Transition Cluster projects are initially grouped for study purposes[1] according to their geographical locations. There were twelve (12) generation projects, including this Project, located in the Greater Bay Area that were assigned to the Transition Cluster Group 1 (Group 1) for the Phase 1 Study. This study report provides the following:

1. Transmission system impacts caused by the addition of the Group 1 projects,
2. System reinforcements necessary to mitigate the adverse impacts of the Group 1 projects under various system conditions,
3. Preliminary evaluation on the feasibility of the Group 1 projects on the CAISO Controlled Grid, and
4. A list of required facilities and a non-binding, good faith estimate of this Project's cost responsibility and time to construct these facilities.

To determine the system impacts caused by the interconnection of the Group 1 projects, the Phase 1 study for Group 1 was performed using the following full-loop base cases:

- 2013 Summer Peak Conditions
- 2013 Summer Off-Peak Conditions

[1] These initial groupings of generation projects were primarily for the purpose of organizing the work to be done by various CAISO and PG&E engineers. Grouping of the generation projects for cost allocation purposes are based on study results. For example, the Groupings for cost allocation of Delivery Network Upgrades are based on the CAISO's Deliverability Assessment Methodologies posted on the CAISO website: http://www.caiso.com/1c44/1c44b5c31cce0.html

The studies performed for the Group 1 projects included:

- Steady State Power Flow Analyses
- System Fault Duty Analyses
- Dynamic Stability Analyses
- Reactive Power Deficiency Analyses
- On-Peak Deliverability Assessment
- System Protection Requirements
- Substation Evaluation
- Transmission Line Evaluation
- Land/Environment Evaluation

The Phase 1 study results have determined that the interconnection of the Group 1 projects to the CAISO Controlled Grid causes new overloads on the following transmission facilities:

Category "A"

- Castro Valley - Newark 230 kV Line
- Cayetano - North Dublin 230 kV Line
- Contra Costa - Brentwood 230 kV Line
- Contra Costa - Delta Pumps 230 kV Line (Contra Costa - Windmaster)
- Contra Costa - Delta Pumps 230 kV Line (Windmaster - Delta Pumps)
- Delta Pumps - Tesla 230 kV Line (Altamont - Delta Pumps)
- Delta Pumps - Tesla 230 kV Line (Altamont - Tesla)
- Kelso - Tesla 230 kV Line (Kelso - USWP RLF)
- Kelso - Tesla 230 kV Line (USWP RLF - Tesla)
- Las Positas - Newark 230 kV Line
- Lonetree - Cayetano 230 kV Line (Lonetree - USWP JRW)
- Lonetree - Cayetano 230 kV Line (USWP JRW - Cayetano)
- Moraga-Castro Valley 230 kV Line
- North Dublin-Vineyard 230 kV Line
- T171 - Tesla 500 kV Line
- Trimble - San Jose B 115 kV Line
- Vineyard - Newark 230 kV Line

Category "B"

- Birds Landing - Contra Costa 230 kV Line
- Brentwood - Kelso 230 kV Line
- Castro Valley - Newark 230 kV Line
- Cayetano - North Dublin 230 kV Line
- Contra Costa - Brentwood 230 kV Line
- Contra Costa - Contra Costa Sub 230 kV Line

- Contra Costa - Delta Pumps 230 kV Line (Contra Costa - Windmaster)
- Contra Costa - Delta Pumps 230 kV Line (Windmaster - Delta Pumps)
- Contra Costa - Las Positas 230 kV Line
- Cooley Landing - Stanford 60 kV Line (Cooley Landing - SRI)
- Delta Pumps - Tesla 230 kV Line (Altamont - Tesla)
- Delta Pumps - Tesla 230 kV Line (Delta Pumps - Altamont)
- Kelso - Tesla 230 kV Line (Kelso - USWP RLF)
- Kelso - Tesla 230 kV Line (USWP RLF - Tesla)
- Las Positas - Newark 230 kV Line
- Lonetree - Cayetano 230 kV Line (Lonetree - USWP JRW)
- Lonetree - Cayetano 230 kV Line (USWP JRW - Cayetano)
- Moraga - Castro Valley 230 kV Line
- Newark 230/115 kV Bank 11
- North Dublin - Vineyard 230 kV Line
- Oakland C - Oakland L 115 kV Line
- Pittsburg 230/181 kV TBC Bank
- Potrero 115/181 kV TBC Bank
- Sobrante - El Cerrito 115 kV Line No. 1
- Sobrante - El Cerrito 115 kV Line No. 2
- Table Mountain - Tesla 500 kV Line
- Tesla - T171 500 kV Line
- Trimble - San Jose B 115 kV Line
- Vaca Dixon – T171 500 kV Line
- Vaca Dixon - T275 230 kV Line No. 1
- Vaca Dixon - T275 230 kV Line No. 2
- Vineyard - Newark 230 kV Line

Category "C"

- Birds Landing - Contra Costa 230 KV Line
- Birds Landing - Contra Costa Sub 230 kV Line
- Brentwood - Kelso 230 kV Line
- Castro Valley - Newark 230 kV Line
- Cayetano - North Dublin 230 kV Line
- Contra Costa - Brentwood 230 kV Line
- Contra Costa - Contra Costa Sub 230 kV Line
- Contra Costa - Delta Pumps 230 kV Line (Contra Costa - Windmaster)
- Contra Costa - Delta Pumps 230 kV Line (Windmaster - Delta Pumps)
- Contra Costa - Las Positas 230 kV Line
- Delta Pumps - Tesla 230 kV Line (Altamont - Tesla)
- Delta Pumps - Tesla 230 kV Line (Delta Pumps - Altamont)
- Eastshore - San Mateo 230 kV Line
- Kelso - Tesla 230 kV Line (Kelso - USWP RLF)
- Kelso - Tesla 230 kV Line (USWP RLF - Tesla)
- Lambie - Birds Landing 230 kV Line
- Las Positas - Newark 230 kV Line
- Lonetree - Cayetano 230 kV Line (Lonetree - USWP JRW)
- Lonetree - Cayetano 230 kV Line (USWP JRW - Cayetano)
- Moraga - Castro Valley 230 kV Line
- Moraga - Claremont 115 kV Line No. 1
- Moraga - Claremont 115 kV Line No. 2
- Newark 230/115 kV Bank 11
- North Dublin - Vineyard 230 kV Line

- Oakland C - Oakland L 115 kV Line
- Oleum - North Tower - Christie 115 kV Line (Christie - Martinez Jct)
- Sobrante - Christie 115 kV Line
- Sobrante - El Cerrito 115 kV Line No. 1 (El Cerrito Jct - Sobrante)
- Sobrante - El Cerrito 115 kV Line No. 2
- T171 - Tesla 500 kV Line
- Table Mountain - Tesla 500 kV Line
- Trimble - San Jose B 115 kV Line
- Vaca-Dixon - T275 230 kV Line No. 1
- Vaca-Dixon - T275 230 kV Line No. 2
- Vineyard - Newark 230 kV Line
- Westley - Los Banos 230 kV Line

The non-binding construction schedule to engineer and construct the facilities is approximately 24-36 months from the signing of the Large Generator Interconnection Agreement (LGIA).

The non-binding cost estimate of Interconnection Facilities[2] to interconnect the Project would be approximately **$** exclusive of ITCC[3]. The non-binding cost estimate for the Network Upgrades[4] to interconnect the Project would be approximately **$**

2. Project and Interconnection Information

Table 2-1 provides general information about the Project.

Table 2-1: Pittsburg Power Plant - Combined Cycle Units Project General Information

Project Location	696 West Tenth Street, Pittsburg, California 94565
PG&E Planning Area	San Francisco Greater Bay Area
Number and Type of Generators	Two Gas Turbines (each rated for 242 MW) and Two Steam Turbines (each rated for 71 MW)
Maximum Generator Output	626 MW
Generator Auxiliary Load	15 MW
Maximum Net Output to Grid	611 MW
Power Factor Range	0.85
Step-up Transformer	Two 168/224/280 MVA, 16.5/230 kV and two 54/72/90 MVA, 13.8/230 kV Transformers
Description Of Interconnection Configuration	230 kV Bus at Pittsburg Power Plant Switchyard
Connection Voltage	230 kV

[2] The transmission facilities necessary to physically and electrically interconnect the Project to the CAISO Controlled Grid at the point of interconnection.

[3] Income Tax Component of Contribution

[4] The transmission facilities, other than Interconnection Facilities, beyond the point of interconnection necessary to physically and electrically interconnect the Project safely and reliably to the CAISO Controlled Grid

Figure 2-1 provides the map for the Project and the transmission facilities in the vicinity. Figure 2-2 shows the conceptual single line diagram of the Project.

Figure 2-1 : Map of the Project

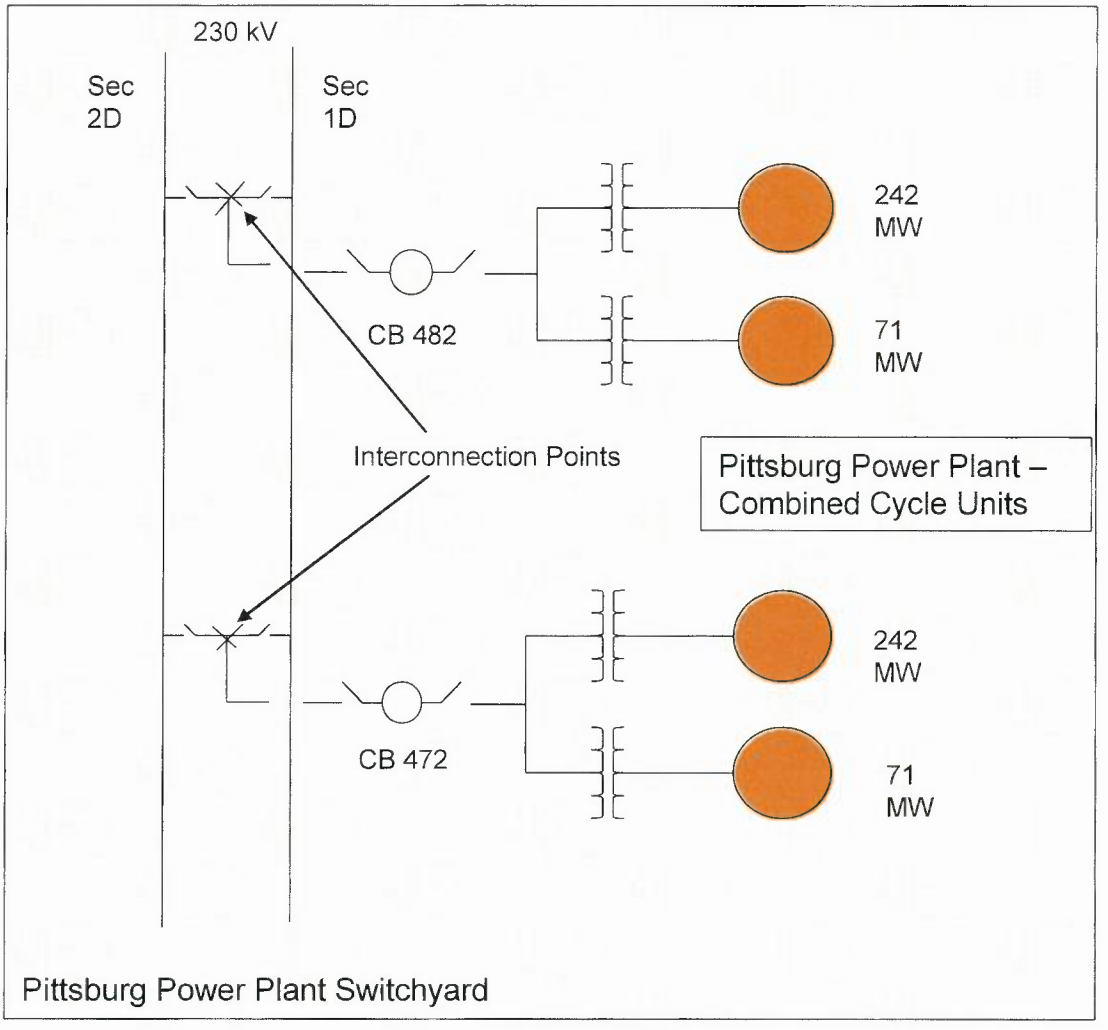

Figure 2-2: Proposed Single Line Diagram

3. Study Assumptions

Under the direction of the CAISO, PG&E conducted the Phase 1 Study using the following assumptions:

1. The Project consists of two gas turbines 242 MW each, and two steam turbines 71 MW each. These are operated in one-on-one combined cycle mode with a total rated output of 626 MW. With a 15 MW plant auxiliary load, the maximum output to the CAISO Controlled Grid is 611 MW.

2. The expected Commercial Operation Date of the Project is September 30, 2012.

3. The Project has two three-phase 16.5/230 kV and two three-phase 13.8/230 kV transformers. The two 16.5/230 kV transformers are each rated for 168/224/280 MVA OA/FA/FA @ 65 degree C temperature rise with an impedance of 9% at 168 MVA base. The two 13.8/230 kV transformers are each rated for 54/72/90 MVA OA/FA/FA @ 65 degree C temperature rise with an impedance of 9% at 54 MVA base.

4. The IC will engineer, procure, construct, own, and maintain its project facility, including a new switchyard.

5. The IC will engineer, procure, construct, own, operate, and maintain the two generator tie lines from Pittsburg Power Plant Switchyard to the Project facility. Each generator tie line is about 0.57 miles long with 1590 kcmil ACSR (Falcon) conductor or equivalent.

6. The generating units will be connected to the 230 kV bus at the Pittsburg Power Plant Switchyard by occupying CB 472 and CB 482 to be vacated by Mirant's Pittsburg Power Plant Units 3 & 4.

7. The Phase 1 Study for Transition Cluster Group 1 is based on twelve projects including this Project. Table 3-1 is the list of the projects in this group.

3-1: Transition Cluster Phase I Group 1 Generation Interconnection Projects in the Greater Bay Area

Queue	MW	Point of Interconnection	Online Date
171	500	Vaca-Tesla 500 kV Line	12/31/2011
222	60	Birds Landing Substation 230 kV Bus	12/31/2010
257	575	Loop Ignacio-Sobrante and Lakeville-Sobrante #2 230 kV Lines	6/1/2011
258	520	Contra Costa Substation 230 kV Bus	2/1/2012
269	371.3	Tesla Substation 230 kV Bus	4/15/2012
275	630	Loop Vaca Dixon-Peabody and Vaca-Lambie 230 kV Lines	9/1/2012
305	611	Contra Costa Power Plant 230 kV Switchyard	7/30/2012
320	476	Contra Costa Power Plant 230 kV Switchyard	4/29/2011
322	611	Pittsburg Power Plant 230 kV Switchyard	9/30/2012
334	193.6	Kelso Substation 230 kV Bus	6/1/2012

378	123	Los Esteros Substation 115 kV Bus	6/1/2011
417	36	Pittsburg-Tesla 230 kV Line	9/30/2010

4. Power Flow Study Base cases

Two power flow base cases were used to evaluate the transmission system impacts of the Group 1 projects. While it is impractical to study all combinations of system load and generation levels during all seasons and at all times of the day, these two base cases represented extreme loading and generation conditions for the study area.

The CAISO and PG&E cannot guarantee that the Group 1 projects can operate at maximum rated output 24 hours a day, year round, without adverse system impacts, nor can the CAISO and PG&E guarantee that these projects would not have adverse system impacts during the times and seasons not studied in the Phase 1 Study.

The following power flow base cases were used for the analysis in the Phase 1 Study:

- **2013 Summer Peak Full Loop Base Case:**

  Power flow analysis were performed using PG&E's 2013 summer peak full loop base case (in General Electric Power Flow format). This base case was developed from PG&E's 2008 base case series. It has a 1-in-10 year heat wave load forecast for PG&E's Greater Bay Area.

- **2013 Summer Off-Peak Full Loop Base Case:**

  Power flow analysis were performed using the 2013 summer off peak full loop base case in order to evaluate the potential congestion on transmission facilities during the lightest loading conditions during the year. The summer 2013 off peak loads are about 50% of the summer peak loads.

These base cases modeled all approved PG&E transmission projects that would be operational by 2013. The base cases also modeled all proposed generation projects that would be operational by 2013 along with their associated transmission upgrades required for their interconnection. The base case assumptions are provided in Appendix B. . However, some generation projects that are electrically far from the proposed project were either turned off or modeled with reduced generation to balance the loads and resources in the power flow model.

5. Study Criteria Summary

The CAISO Controlled Grid Reliability Criteria, which incorporate the Western Electricity Coordinating Council (WECC) and the North American Electric Reliability Council (NERC) planning criteria, were used to evaluate the impact of Group 1 on the CAISO Controlled Grid.

5.1 Steady State Study Criteria – Normal Overloads

Normal overloads are those that exceed 100 percent of normal facility ratings. The CAISO Controlled Grid Reliability Criteria requires the loading of all transmission system facilities be within their normal ratings.

5.2 Steady State Study Criteria – Emergency Overloads

Emergency overloads are those that exceed 100 percent of emergency ratings. The emergency overloads refer to overloads that occur during single element contingencies (Category "B") and multiple element contingencies (Category "C").

6. Steady State Power Flow Study and Results

6.1 Contingencies

The Category "B" and "C" contingencies used in this analysis are provided in Appendix C. The single (Category "B") and selected multiple (Category "C") contingencies are summarized in Table 6-1:

Table 6-1: Summary of Planning Standards

Contingencies	Description
CAISO Category "A"	All facilities in service – Normal Conditions
CAISO Category "B"	• B1 - All single generator outages. • B2 - All single transmission circuit outages. • B3 - All single transformer outages. • Selected overlapping single generator and transmission circuit outages for the transmission lines and generators.
CAISO Category "C"	• C1 - SLG Fault, with Normal Clearing: Bus outages (60-230 kV) • C2 - SLG Fault, with Normal Clearing: Breaker failures (excluding bus tie and sectionalizing breakers) at the same bus section above. • C3 - Combination of any two-generator/transmission line/transformer outages. • C4 - Bipolar (dc) Line • C5 - Outages of double circuit tower lines (60-230 kV) • C6 - SLG Fault, with Delayed Clearing: Generator • C7 - SLG Fault, with Delayed Clearing: Transmission Line • C8 - SLG Fault, with Delayed Clearing: Transformer • C9 - SLG Fault, with Delayed Clearing: Bus Section

Although most of the CAISO Category "C" contingencies have been considered as part of this study, it is impractical to study all the CAISO Category "C" contingencies. For this reason, selected critical Category C contingencies (C1 – C9) were evaluated as part of this study.

6.2 Study Results

The overloads caused by the Transition Cluster Group 1 projects and the overload plots are shown in Appendix D. The worst overloads for each facility under the contingencies studied are summarized in Tables 6-2-1, 6-2-2, and 6-2-3.

6.2.1 Normal Overloads (Category "A")

- Under projected 2013 summer peak conditions, the Group 1 projects caused seventeen (17) new Category "A" normal overloads. Under projected 2013 summer off-peak conditions, the Group 1 projects caused four (4) normal overloads which are already shown in the summer peak conditions. The Category "A" normal overloads are summarized in Table 6-2-1.

Table 6-2-1: Summer Peak and Off-Peak Study Category "A" Normal Violations

Over Loaded Component	Rating (Amps)	Pre- Project Loading(Amps |%Rating)	Post- Project Loading(Amps |%Rating)	% Change from Pre-Project Loading	Mitigation
Category A Normal Overloads – 2013 Summer Peak Greater Bay Area Transition Cluster					

Castro Valley - Newark 230 kV Line	743	503	67%	781	105%	38%	Reconductor with 795 ACSS or equivalent (23 miles)
Cayetano - North Dublin 230 kV Line	1004	707	70%	1023	102%	32%	Install 230 kV Switching Station. Loop Lonetree-Cayetano, Contra Costa-Las Positas, and North Dublin Vineyard 230 kV Lines. No reconductor.
Contra Costa - Brentwood 230 kV Line	826	718	87%	1108	134%	47%	Reconductor with 954 ACSS or equivalent (10 miles)
Contra Costa - Delta Pumps 230 kV Line (Contra Costa - Windmaster)	826	637	77%	1287	156%	79%	Reconductor with 1113 ACSS or equivalent (17 miles)
Contra Costa - Delta Pumps 230 kV Line (Windmaster - Delta Pumps)	826	634	77%	1285	156%	79%	Reconductor with 1113 ACSS or equivalent (1.4 miles)
Delta Pumps - Tesla 230 kV Line (Altamont - Delta Pumps)	996	631	63%	1282	129%	66%	Reconductor with 1113 ACSS or equivalent (4.7 miles)
Delta Pumps - Tesla 230 kV Line (Altamont - Tesla)	996	631	63%	1281	129%	66%	Reconductor with 1113 ACSS or equivalent (3 miles)
Kelso - Tesla 230 kV Line (Kelso - USWP RLF)	997	399	40%	1261	127%	87%	Reconductor with 1113 ACSS or equivalent (3.3 miles)
Kelso - Tesla 230 kV Line (USWP RLF - Tesla)	997	412	41%	1277	128%	87%	Reconductor with 1113 ACSS or equivalent (4.7 miles)
Las Positas - Newark 230 kV Line	743	743	83%	999	134%	51%	Reconductor with 954 ACSS or equivalent (21 miles)
Lonetree - Cayetano 230 kV Line (Lonetree - USWP JRW)	886	767	87%	1083	122%	35%	Install 230 kV Switching Station. Loop Lonetree-Cayetano, Contra Costa-Las Positas, and North Dublin Vineyard 230 kV Lines. Reconductor with 954 ACSS (12 miles)
Lonetree - Cayetano 230 kV Line (USWP JRW - Cayetano)	886	764	86%	1081	122%	36%	Install 230 kV Switching Station. Loop Lonetree-Cayetano, Contra Costa-Las Positas, and North Dublin Vineyard 230 kV Lines. Reconductor with 954 ACSS (3 miles)
Moraga - Castro Valley 230 kV Line	911	688	76%	965	106%	30%	Reconductor with 795 ACSS or equivalent (15 miles)

North Dublin - Vineyard 230 kV Line	886	654	74%	969	109%	35%	Install 230 kV Switching Station. Loop Lonetree-Cayetano, Contra Costa-Las Positas, and North Dublin Vineyard 230 kV Lines. Reconductor with 954 ACSS (10 miles)
T171 - Tesla 500 kV Line	2430	1821	75%	2636	108%	33%	Congestion Management
Trimble - San Jose B 115 kV Line	703	427	61%	728	104%	43%	Reconductor with 477 ACSS or equivalent (2.5 miles)
Vineyard - Newark 230 kV Line	743	440	59%	749	101%	42%	Install 230 kV Switching Station. Loop North Dublin-Vineyard, Cayetano, Las Positas-Newark, and Vineyard-Newark 230 kV Lines. Reconductor with 954 ACSS (14 miles)
Category A Normal Overloads – 2013 Summer Off Peak Greater Bay Area Transition Cluster							
Contra Costa - Delta Pumps 230 kV Line (Contra Costa - Windmaster)	826	86	10%	1187	144%	134%	Reconductor with 1113 ACSS or equivalent (17 miles)
Contra Costa - Delta Pumps 230 kV Line (Windmaster - Delta Pumps	826	169	21%	1279	155%	134%	Reconductor with 1113 ACSS or equivalent (1.4 miles)
Kelso - Tesla 230 kV Line (Kelso - USWP RLF)	997	81	8%	1178	118%	110%	Reconductor with 1113 ACSS or equivalent (3.3 miles)
Kelso - Tesla 230 kV Line (USWP RLF - Tesla)	997	74	7%	1200	120%	113%	Reconductor with 1113 ACSS or equivalent (4.7 miles)

6.2.2 Emergency Overloads (Category "B")

Under projected 2013 summer peak conditions, the Group 1 projects caused thirty five (35) new Category "B" emergency overloads. Under projected 2013 summer off-peak conditions, the Group 1 projects caused nine (9) new Category "B" emergency overloads which also showed up in the summer peak conditions. The Category "B" emergency overloads are summarized in Table 6-2-2.

Table 6-2-2: Summer Peak and Off Peak Study, Category "B" Emergency Overloads

Over Loaded Component	Contingency	Rating (Amps)	Pre- Project Loading (Amps |%Rating)		Post-Project Loading (Amps |%Rating)		% Change from Pre-Project Loading	Mitigations
Worst Category B Emergency Overloads - 2013 Summer Peak Greater Bay Area Transition Cluster								
Birds Landing-Contra Costa 230 kV Line	Contra Costa - Contra Costa Sub 230 kV Line and Gateway PP	1893	1713	90%	2597	137%	47%	Loop Contra Costa-Moraga No. 1 230 kV Line into Contra Costa Sub.

Over Loaded Component	Contingency	Rating (Amps)	Pre- Project Loading (Amps)	%Rating	Post-Project Loading (Amps)	%Rating	% Change from Pre-Project Loading	Mitigations
Brentwood - Kelso 230 kV Line	Contra Costa - Delta Pumps 230 kV Line	1129	584	52%	1136	101%	49%	Congestion Management
Castro Valley - Newark 230 kV Line	T171 - Tesla 500 kV Line	851	636	75%	1022	120%	45%	Reconductor with 795 ACSS or equivalent (23 miles)
Castro Valley - Newark 230 kV Line	Contra Costa - Las Positas 230 kV Line and RCEC STG1	851	652	77%	977	115%	38%	Reconductor with 795 ACSS or equivalent (23 miles)
Cayetano - North Dublin 230 kV Line	Contra Costa - Las Positas 230 kV Line and RCEC STG1	1004	875	87%	1249	124%	37%	Install 230 kV Switching Station. Loop Lonetree-Cayetano, Contra Costa-Las Positas, and North Dublin Vineyard 230 kV Lines. No reconductor.
Contra Costa - Brentwood 230 kV Line	Delta Pumps - Tesla 230 kV Line	1130	876	78%	1434	127%	49%	Reconductor with 954 ACSS or equivalent (10 miles)
Contra Costa - Contra Costa Sub 230 kV Line	Birds Landing - Contra Costa 230 kV Line and Gateway PP	1893	1599	84%	2786	147%	63%	Loop Contra Costa-Moraga No. 1 230 kV Line into Contra Costa Sub.
Contra Costa - Delta Pumps 230 kV Line (Contra Costa - Windmaster)	Kelso - Tesla 230 kV Line	1130	754	67%	1667	148%	81%	Reconductor with 1113 ACSS or equivalent (17 miles)
Contra Costa - Delta Pumps 230 kV Line (Windmaster - Delta Pumps)	Kelso - Tesla 230 kV Line	1130	752	67%	1665	147%	80%	Reconductor with 1113 ACSS or equivalent (1.4 miles)
Contra Costa - Las Positas 230 kV Line	Contra Costa - Lonetree 230 kV Line and DEC	1714	1186	69%	1650	96%	27%	None (Corrected rating)
Cooley Landing-Stanford 60 kV Line (Cooley Landing-SRI)	Cardinal Units #1 and #2	600	553	92%	622	104%	12%	PG&E project will replace limiting 600A switches to utilize conductor emergency rating of 703A.
Delta Pumps - Tesla 230 kV Line (Altamont - Tesla)	Kelso - Tesla 230 kV Line	1130	748	66%	1662	147%	81%	Reconductor with 1113 ACSS or equivalent (3 miles)
Delta Pumps - Tesla 230 kV Line (Delta Pumps - Altamont)	Kelso - Tesla 230 kV Line	1130	748	66%	1663	147%	81%	Reconductor with 1113 ACSS or equivalent (4.7 miles)
Kelso- Tesla 230 kV Line (Kelso - USWP RLF)	Contra Costa - Delta Pumps 230 kV Line	1129	557	49%	1599	140%	91%	Reconductor with 1113 ACSS or equivalent (3.3 miles)
Kelso - Tesla 230 kV Line (USWP RLF - Tesla)	Contra Costa - Delta Pumps 230 kV Line	1129	571	51%	1599	140%	89%	Reconductor with 1113 ACSS or equivalent (4.7 miles)
Las Positas - Newark 230 kV Line	Contra Costa - Lonetree 230 kV Line	851	788	93%	1228	144%	51%	Reconductor with 954 ACSS or equivalent (21 miles)

Over Loaded Component	Contingency	Rating (Amps)	Pre- Project Loading (Amps)	(%Rating)	Post-Project Loading (Amps)	(%Rating)	% Change from Pre-Project Loading	Mitigations
Lonetree - Cayetano 230 kV Line (Lonetree - USWP JRW)	Contra Costa - Las Positas 230 kV Line and RCEC STG1	1005	934	93%	1310	130%	37%	Install 230 kV Switching Station. Loop Lonetree-Cayetano, Contra Costa-Las Positas, and North Dublin Vineyard 230 kV Lines. Reconductor with 954 ACSS (12 miles)
Lonetree - Cayetano 230 kV Line (USWP JRW - Cayetano)	Contra Costa - Las Positas 230 kV Line and RCEC STG1	1005	932	93%	1307	130%	37%	Install 230 kV Switching Station. Loop Lonetree-Cayetano, Contra Costa-Las Positas, and North Dublin Vineyard 230 kV Lines. Reconductor with 954 ACSS (3 miles)
Moraga - Castro Valley 230 kV Line	T171 - Tesla 500 kV Line	1021	823	81%	1210	119%	38%	Reconductor with 795 ACSS or equivalent (15 miles)
Moraga - Castro Valley 230 kV Line	Contra Costa - Las Positas 230 kV Line and RCEC STG1	1021	837	82%	1163	114%	32%	Reconductor with 795 ACSS or equivalent (15 miles)
Newark 230/115 kV Bank 11	Newark 230/115 kV Bank 7	462 MVA	443 MVA	96%	502 MVA	109%	13%	Congestion Management
North Dublin - Vineyard 230 kV Line	Contra Costa - Las Positas 230 kV Line and RCEC STG1	1005	822	82%	1196	119%	37%	Install 230 kV Switching Station. Loop Lonetree-Cayetano, Contra Costa-Las Positas, and North Dublin Vineyard 230 kV Lines. Reconductor with 954 ACSS (10 miles)
Oakland C - Oakland L 115 kV Line	Moraga - San Ramon 230 kV Line and DEC	790	772	98%	828	105%	7%	Congestion Management
Pittsburg 230/181 kV TBC Bank	Pittsburg - San Mateo 230 kV Line and DEC	450 MVA	427 MVA	95%	462 MVA	103%	8%	Congestion Management
Potrero 115/181 kV TBC Bank	Moraga - San Ramon 230 kV Line	450 MVA	408 MVA	94%	456 MVA	101%	7%	Congestion Management
Sobrante - El Cerrito #1 115 kV Line	Sobrante - El Cerrito #2 115 kV Line	600	570	95%	619	103%	8%	Replace 600A disconnect switches to use full line capability of 802A emergency rating.
Sobrante - El Cerrito #2 115 kV Line	Sobrante - El Cerrito #1 115 kV Line	600	571	95%	620	103%	8%	Replace 600A disconnect switches to use full line capability of 802A emergency rating.
Table Mountain - Tesla 500 kV Line	T171- Tesla 500 kV Line	2964	2501	84%	3071	104%	20%	Congestion Management
Tesla - T171 500 kV Line	Olinda - Tracy 500 kV Line	2816	2663	95%	3559	126%	31%	Congestion Management

Over Loaded Component	Contingency	Rating (Amps)	Pre- Project Loading (Amps)	%Rating	Post-Project Loading (Amps)	%Rating	% Change from Pre-Project Loading	Mitigations
Trimble - San Jose B 115 kV Line	Tesla - Metcalf 500 kV Line	924	614	67%	1071	116%	49%	Reconductor with 477 ACSS or equivalent (2.5 miles) Rerate underground section to match rating of overhead conductors.
Vaca-Dixon - T171 500 kV Line	Olinda - Tracy 500 kV Line	2816	2663	95%	3007	107%	12%	Congestion Management
Vaca-Dixon - T275 #1 230 kV Line	Vaca-Dixon - T275 #2 230 kV Line	1893	657	35%	2269	120%	85%	Reconductor with 2-795 ACSS (5 Miles)
Vaca-Dixon - T275 #2 230 kV Line	Vaca-Dixon - T275 #1 230 kV Line	1893	349	19%	2269	120%	101%	Reconductor with 2-795 ACSS (5 Miles)
Vineyard - Newark 230 kV Line	Contra Costa - Las Positas 230 kV Line and RCEC STG1	851	607	71%	975	115%	44%	Install 230 kV Switching Station. Loop North Dublin-Vineyard, Cayetano, Las Positas-Newark, and Vineyard-Newark 230 kV Lines. Reconductor with 954 ACSS (14 miles)
Category B Emergency Overloads - 2013 Summer Off Peak Greater Bay Area Transition Cluster								
Contra Costa - Delta Pumps 230 kV Line (Contra Costa - Windmaster)	Kelso - Tesla 230 kV Line	1130	81	7%	1542	136%	129%	Reconductor with 1113 ACSS or equivalent (17 miles)
Contra Costa - Delta Pumps 230 kV Line (Windmaster - Delta Pumps)	Kelso - Tesla 230 kV Line	1130	155	14%	1633	145%	131%	Reconductor with 1113 ACSS or equivalent (1.4 miles)
Contra Costa Sub - Contra Costa 230 kV Line	Birds Landing - Contra Costa 230 kV Line	1893	1360	72%	2025	107%	35%	Loop Contra Costa-Moraga No. 1 230 kV Line into Contra Costa Sub.
Delta Pumps - Tesla 230 kV Line (Altamont - Tesla)	Kelso - Tesla 230 kV Line	1130	261	23%	1266	112%	89%	Reconductor with 1113 ACSS or equivalent (3 miles)
Delta Pumps - Tesla 230 kV Line (Delta Pumps - Altamont)	Kelso - Tesla 230 kV Line	1130	260	23%	1267	112%	89%	Reconductor with 1113 ACSS or equivalent (4.7 miles)
Kelso - Tesla 230 kV Line (Kelso - USWP RLF)	Contra Costa - Delta Pumps 230 kV Line	1129	74	7%	1480	131%	124%	Reconductor with 1113 ACSS or equivalent (3.3 miles)
Kelso - Tesla 230 kV Line (USWP RLF - Tesla)	Contra Costa - Delta Pumps 230 kV Line	1129	73	7%	1503	133%	126%	Reconductor with 1113 ACSS or equivalent (4.7 miles)
Vaca-Dixon - T275 #1 230 kV Line	Vaca-Dixon - T275 #2 230 kV Line	1893	484	26%	2747	145%	119%	Reconductor with 2-795 ACSS (5 Miles)
Vaca-Dixon - T275 #2 230 kV Line	Vaca-Dixon - T275 #1 230 kV Line	1893	338	18%	2747	145%	127%	Reconductor with 2-795 ACSS (5 Miles)

6.2.3 Emergency Overloads (Category "C")

Under projected 2013 summer peak conditions, the Group 1 projects caused thirty nine (39) new Category "C" emergency overloads. Under projected 2013 summer off peak conditions, the Group 1 projects caused fourteen (14) Category "C" emergency overloads which also showed up in the summer peak conditions. The Category "C" emergency overloads are summarized in Table 6-2-3. .

Table 6-2-3: Summer Peak and Off-Peak Study, Category "C" Overloads

Over Loaded Component	Contingency	Rating (Amps)	Pre- Project Loading (Amps	%Rating)	Post-Project Loading (Amps	%Rating)	% Change from Pre-Project Loading	Mitigations
Worst Category C Emergency Overloads - 2013 Summer Peak Greater Bay Area Transition Cluster								
Birds Landing - Contra Costa 230 KV Line	Contra Costa Sub 230 kV Bus Section 2	1893	1465	77%	2370	125%	48%	Install SPS to drop generation.
Birds Landing - Contra Costa Sub 230 kV Line	Vaca-Dixon - T275 #1 and #2 230 kV Lines	1893	1340	71%	1992	105%	34%	Install SPS to drop generation.
Brentwood - Kelso 230 kV Line	Contra Costa 230 kV Bus Section 2F	1129	515	46%	1289	114%	68%	Congestion Management
Castro Valley - Newark 230 kV Line	Contra Costa - Las Positas and Contra Costa - Lonetree 230 kV Lines	851	812	95%	1198	141%	46%	Reconductor with 795 ACSS or equivalent (23 miles)
Cayetano - North Dublin 230 kV Line	Contra Costa - Brentwood and Contra Costa - Delta Pumps 230 kV Lines	1004	873	87%	1323	132%	45%	Install 230 kV Switching Station. Loop Lonetree-Cayetano, Contra Costa-Las Positas, and North Dublin Vineyard 230 kV Lines. No reconductor.
Contra Costa - Brentwood 230 kV Line	Contra Costa 230 kV Bus Section 2F	1130	803	71%	1590	141%	70%	Reconductor with 954 ACSS or equivalent (10 miles)
Contra Costa - Contra Costa Sub 230 kV Line	Vaca-Dixon - T275 #1 and #2 230 kV Lines	1893	1265	67%	2973	157%	90%	Loop Contra Costa-Moraga No. 1 230 kV Line into Contra Costa Sub.
Contra Costa - Delta Pumps 230 kV Line (Contra Costa - Windmaster)	Vaca-Dixon - T275 #1 and #2 230 kV Lines	1130	802	71%	1858	164%	93%	Reconductor with 1113 ACSS or equivalent (17 miles)
Contra Costa - Delta Pumps 230 kV Line (Windmaster - Delta Pumps)	Table Mountain-Tesla & T171-Tesla 500 kV DLO	1130	987	87%	1870	166%	79%	Reconductor with 1113 ACSS or equivalent (1.4 miles)
Contra Costa - Delta Pumps 230 kV Line (Windmaster - Delta Pumps)	Vaca-Dixon - T275 #1 and #2 230 kV Lines	1130	799	71%	1856	164%	93%	Reconductor with 1113 ACSS or equivalent (1.4 miles)
Contra Costa - Las Positas 230 kV Line	Contra Costa - Brentwood and Contra Costa - Delta Pumps 230 kV Lines	1714	1207	70%	1786	104%	34%	Install SPS to drop generation.
Contra Costa - Lonetree 230 kV Line	Contra Costa - Brentwood and Contra Costa - Delta Pumps 230 kV Lines	1714	1106	65%	1563	91%	26%	None. Corrected rating.

Over Loaded Component	Contingency	Rating (Amps)	Pre- Project Loading (Amps)	%Rating	Post-Project Loading (Amps)	%Rating	% Change from Pre-Project Loading	Mitigations
Delta Pumps - Tesla 230 kV Line (Altamont - Tesla)	Table Mountain-Tesla & T171-Tesla 500 kV DLO	1130	986	87%	1869	165%	78%	Reconductor with 1113 ACSS or equivalent (3 miles)
Delta Pumps - Tesla 230 kV Line (Altamont - Tesla)	Vaca-Dixon - T275 #1 and #2 230 kV Lines	1130	795	70%	1852	164%	94%	Reconductor with 1113 ACSS or equivalent (3 miles)
Delta Pumps - Tesla 230 kV Line (Delta Pumps - Altamont)	Table Mountain-Tesla & T171-Tesla 500 kV DLO	1130	986	87%	1869	166%	79%	Reconductor with 1113 ACSS or equivalent (4.7 miles)
Delta Pumps - Tesla 230 kV Line (Delta Pumps - Altamont)	Vaca-Dixon - T275 #1 and #2 230 kV Lines	1130	796	70%	1853	164%	94%	Reconductor with 1113 ACSS or equivalent (4.7miles)
East Shore - San Mateo 230 kV Line	Newark - Ravenswood and Tesla - Ravenswood 230 kV Lines	1742	1715	98%	1776	102%	4%	Install SPS to drop generation.
Kelso - Tesla 230 kV Line (Kelso - USWP RLF)	Contra Costa 230 kV Bus Section 2F	1129	489	43%	1735	154%	111%	Reconductor with 1113 ACSS or equivalent (3.3 miles)
Kelso - Tesla 230 kV Line (USWP RLF - Tesla)	Contra Costa 230 kV Bus Section 2F	1129	501	44%	1751	155%	111%	Reconductor with 1113 ACSS or equivalent (4.7 miles)
Lambie - Birds Landing 230 kV Line	Contra Costa Sub - Contra Costa and Birds Landing - Contra Costa 230 kV Lines	1893	1182	63%	2077	110%	47%	Install SPS to drop generation.
Las Positas - Newark 230 kV Line	Contra Costa - Brentwood and Contra Costa - Delta Pumps 230 kV Lines	851	818	96%	1359	160%	64%	Reconductor with 954 ACSS or equivalent (21 miles)
Lonetree - Cayetano 230 kV Line (Lonetree - USWP JRW)	Contra Costa - Brentwood and Contra Costa - Delta Pumps 230 kV Lines	1005	933	93%	1382	137%	44%	Install 230 kV Switching Station. Loop Lonetree-Cayetano, Contra Costa-Las Positas, and North Dublin Vineyard 230 kV Lines. Reconductor with 954 ACSS (12 miles)
Lonetree - Cayetano 230 kV Line (USWP JRW - Cayetano)	Contra Costa - Brentwood and Contra Costa - Delta Pumps 230 kV Lines	1005	930	93%	1380	137%	44%	Install 230 kV Switching Station. Loop Lonetree-Cayetano, Contra Costa-Las Positas, and North Dublin Vineyard 230 kV Lines. Reconductor with 954 ACSS (3 miles)
Moraga - Castro Valley 230 kV Line	Contra Costa - Las Positas and Contra Costa - Lonetree 230 kV Lines	1021	997	98%	1383	135%	37%	Reconductor with 795 ACSS or equivalent (15 miles)
Moraga - Claremont #1 115 kV Line	Oakland C 115 kV Bus Section E	472	456	97%	490	104%	7%	Rerate with 4 fps wind speed.
Moraga - Claremont #2 115 kV Line	Oakland C 115 kV Bus Section E	472	456	97%	490	104%	7%	Rerate with 4 fps wind speed.
Newark 230/115 kV Bank 11	Newark 230 kV Bus Section 1D	462 MVA	450 MVA	97%	507 MVA	110%	13%	Congestion Management.

Over Loaded Component	Contingency	Rating (Amps)	Pre- Project Loading (Amps)	Pre- Project Loading (%Rating)	Post-Project Loading (Amps)	Post-Project Loading (%Rating)	% Change from Pre-Project Loading	Mitigations
North Dublin - Vineyard 230 kV Line	Contra Costa - Brentwood and Contra Costa - Delta Pumps 230 kV Lines	1005	820	82%	1268	126%	44%	Install 230 kV Switching Station. Loop Lonetree-Cayetano, Contra Costa-Las Positas, and North Dublin Vineyard 230 kV Lines. Reconductor with 954 ACSS (10 miles)
Oakland C-Oakland L 115 kV Line	Sobrante 115 kV Bus Section 2	790	847	107%	883	112%	5%	Congestion Management
Oleum - North Tower - Christie 115 kV Line (Christie - Martinez Jct)	Sobrante - El Cerrito #1 and #2 115 kV Lines	522	460	88%	536	103%	15%	Rerate with 4 fps wind speed.
Sobrante - Christie 115 kV Line	Sobrante - El Cerrito #1 and #2 115 kV Lines	523	532	102%	596	114%	12%	Rerate with 4 fps wind speed.
Sobrante - El Cerrito #1 115 kV Line (El Cerrito Jct - Sobrante)	El Cerrito 115 kV Bus Section E	600	581	97%	619	103%	6%	Replace 600A disconnect switches to use full line capability of 802A emergency rating.
Sobrante - El Cerrito #2 115 kV Line	Sobrante 115 kV Bus Section 1	600	694	116%	794	132%	16%	Replace 600A disconnect switches to use full line capability of 802A emergency rating.
T171 - Tesla 500 kV Line	Contra Costa Sub - Contra Costa and Birds Landing - Contra Costa 230 kV Lines	2816	2151	76%	3205	114%	38%	Congestion Management
Table Mountain - Tesla 500 kV Line	T171 - Tesla 500 kV and Peabody - Birds Landing 230 kV Lines	2763	2411	81%	3041	103%	22%	Congestion Management
Trimble - San Jose B 115 kV Line	Metcalf - El Patio #1 and #2 115 kV Lines	924	957	104%	1160	126%	22%	Rerate new 477 ACSS with 4 fps wind speed. Rerate underground section to match rating of the overhead conductors.
Vaca-Dixon - T275 #1 230 kV Line	Contra Costa Sub - Contra Costa and Birds Landing - Contra Costa 230 kV Lines	1893	1529	81%	2616	138%	57%	Reconductor with 2-795 ACSS (5 Miles)
Vaca-Dixon - T275 #2 230 kV Line	Contra Costa Sub - Contra Costa and Birds Landing - Contra Costa 230 kV Lines	1893	778	41%	2616	138%	97%	Reconductor with 2-795 ACSS (5 Miles)
Vineyard - Newark 230 kV Line	Contra Costa - Brentwood and Contra Costa - Delta Pumps 230 kV Lines	851	604	71%	1047	123%	52%	Install 230 kV Switching Station. Loop North Dublin-Vineyard, Cayetano, Las Positas-Newark, and Vineyard-Newark 230 kV Lines. Reconductor with 954 ACSS (14 miles)
Westley - Los Banos 230 kV Line	Tesla-Los Banos & Tracy-Los Banos 500 kV DLO	1700	888	52%	2220	131%	79%	Install SPS to drop generation.

Over Loaded Component	Contingency	Rating (Amps)	Pre- Project Loading (Amps | %Rating)		Post-Project Loading (Amps | %Rating)		% Change from Pre-Project Loading	Mitigations
Category C Emergency Overloads - 2013 Summer Off Peak Greater Bay Area Transition Cluster								
Birds Landing - Contra Costa 230 KV Line	Vaca-Dixon - T275 #1 and #2 230 kV Lines	1893	1214	64%	2218	117%	53%	Install SPS to drop generation.
Brentwood - Kelso 230 kV Line	Vaca-Dixon - T275 #1 and #2 230 kV Lines	1129	94	8%	1252	111%	103%	Congestion Management
Contra Costa - Brentwood 230 kV Line	Vaca-Dixon - T275 #1 and #2 230 kV Lines	1130	172	15%	1349	119%	104%	Reconductor with 954 ACSS or equivalent (10 miles)
Contra Costa - Delta Pumps 230 kV Line (Contra Costa - Windmaster)	Vaca-Dixon - T275 #1 and #2 230 kV Lines	1130	217	19%	1870	166%	147%	Reconductor with 1113 ACSS or equivalent (17 miles)
Contra Costa - Delta Pumps 230 kV Line (Windmaster - Delta Pumps)	Vaca-Dixon - T275 #1 and #2 230 kV Lines	1130	305	27%	1963	174%	147%	Reconductor with 1113 ACSS or equivalent (1.4 miles)
Contra Costa Sub - Contra Costa 230 kV Line	Vaca-Dixon - T275 #1 and #2 230 kV Lines	1893	1040	55%	3037	160%	105%	Loop Contra Costa-Moraga No. 1 230 kV Line into Contra Costa Sub.
Delta Pumps - Tesla 230 kV Line (Altamont - Tesla)	Vaca-Dixon - T275 #1 and #2 230 kV Lines	1130	144	13%	1591	141%	128%	Reconductor with 1113 ACSS or equivalent (3 miles)
Delta Pumps - Tesla 230 kV Line (Delta Pumps - Altamont)	Vaca-Dixon - T275 #1 and #2 230 kV Lines	1130	142	13%	1592	141%	128%	Reconductor with 1113 ACSS or equivalent (4.7 miles)
Kelso - Tesla 230 kV Line (Kelso - USWP RLF)	Vaca-Dixon - T275 #1 and #2 230 kV Lines	1129	82	7%	1705	151%	144%	Reconductor with 1113 ACSS or equivalent (3.3 miles)
Kelso - Tesla 230 kV Line (USWP RLF - Tesla)	Vaca-Dixon - T275 #1 and #2 230 kV Lines	1129	100	9%	1726	153%	144%	Reconductor with 1113 ACSS or equivalent (4.7 miles)
Lambie - Birds Landing 230 kV Line	Contra Costa Sub - Contra Costa and Birds Landing - Contra Costa 230 kV Lines	1893	1368	72%	2244	119%	47%	Install SPS to drop generation.
Las Positas - Newark 230 kV Line	Vaca-Dixon - T275 #1 and #2 230 kV Lines	851	277	33%	1026	121%	88%	Reconductor with 954 ACSS or equivalent (21 miles)
Vaca-Dixon - T275 #1 230 kV Line	Contra Costa Sub - Contra Costa and Birds Landing - Contra Costa 230 kV Lines	1893	1367	72%	2588	137%	65%	Reconductor with 2-795 ACSS (5 Miles)
Vaca-Dixon - T275 #2 230 kV Line	Contra Costa Sub - Contra Costa and Birds Landing - Contra Costa 230 kV Lines	1893	882	47%	2588	137%	90%	Reconductor with 2-795 ACSS (5 Miles)

7. Short Circuit Current Calculation

Short circuit studies were performed to determine the impact of adding the Group 1 projects to the transmission system and to ensure system coordination. The fault duties were calculated before and after the projects to identify for any equipment overstress conditions.

7.1 System Protection Study Input Data

The following input data provided by the Applicant of this Project was used in this study.

CTG Short Circuit Data @ 285 MVA Base:

- Positive Sequence Subtransient reactance (X"1) = 0.1931p.u.
- Negative Sequence Subtransient reactance (X"2) = 0.1931p.u.
- Zero Sequence Subtransient reactance (X"0) = 0.1162p.u.

STG Short Circuit Data @ 83 MVA Base:

- Positive Sequence Subtransient reactance (X"1) = 0.1560p.u.
- Negative Sequence Subtransient reactance (X"2) = 0.1560p.u.
- Zero Sequence Subtransient reactance (X"0) = 0.098p.u.

Station Step-up Transformers (total of four)

- Two 16.5/230, 168/224/280 MVA OA/FA/FOA transformers @ 65 degree C temperature rise with 9% impedance on 168 MVA base and two 13.8/230 kV, 54/72/90 MVA, OA/FA/FOA transformers @ 65 degree temperature rise with 9% impedance on 54 MVA base.

7.2 Results

The available short circuit duty at the buses electrically adjacent to the Group 1 projects is listed in Appendix H. This data was used to determine if any equipment is projected to be overstressed by the interconnection of the Group 1 projects.

8. Reactive Power Deficiency Analysis

The power flow studies of Category "B" and "C" contingencies indicate that the Group 1 projects did not cause voltage drops of 5% or more from the pre-project levels, or cause the PG&E system to fail to meet applicable voltage criteria

9. Dynamic Stability Evaluation

Dynamic stability studies were conducted using the 2013 summer peak full loop base cases to ensure that the transmission system remains in operating equilibrium, as well as operating in a coordinated fashion through abnormal operating conditions after the Group 1 projects begin operation. The generator dynamic data used for the study is shown in Appendix E.

9.1 Dynamic Stability Study Scenarios

Disturbance simulations were performed for a study period of up to 20 seconds to determine whether the Group 1 projects will create any system instability during a variety of line and generator outages. For this Project, the following line and generator outages were evaluated:

Category "B" Contingencies:

- Full load rejection of the 611 MW Project.
- A three-phase close-in fault on the Pittsburg - Tesla 230 kV Line No. 2 at Pittsburg Power Plant 230 kV bus with normal clearing time followed by loss of the Pittsburg - Tesla 230 kV Line No. 2.

Category "C" Contingencies:

- A three-phase fault on the Pittsburg PP Switchyard 230 kV bus with normal clearing time.

9.2 Parameters Monitored to Evaluate System Stability Performance

9.2.1 Rotor Angle

The rotor angle plots shown in Appendix F provide a measure for determining how the proposed generation units would swing with respect to one another. The plots also provide a measure of how the units would swing with respect to other generation units in the area.

9.2.2 Bus Voltage

The bus voltage plots, in conjunction with the relative rotor angle plots, also shown in Appendix F, provide a means of detecting out-of-step conditions. The bus voltage plots are useful in assessing the magnitude and the duration of post disturbance voltage dips and peak-to-peak voltage oscillations. The bus voltage plots also give an indication of system damping and the level to which voltages are expected to recover in steady state conditions.

9.2.3 Bus Frequency

The bus frequency plots, also shown in Appendix F, provide information on the magnitude and the duration of post fault frequency swings with the Project in service. These plots indicate the extent of possible over-frequency or under-frequency, which can occur because of the imbalance between the generation and load within an area.

9.2.4 Other Parameters

- Generator Terminal Power
- Generator Terminal Voltage
- Generator Rotor Speed
- Generator Field Voltage
- Bus Angle
- Line Flow
- Voltage Spread
- Frequency Spread

9.3 Results

Dynamic stability studies were conducted using the 2013 summer peak base cases described in Section 4 and the generator models shown in Appendix E to determine whether the transmission system would maintain operating equilibrium following selected outages.

The study concluded that the Project would not cause the transmission system to go unstable under Category "B" and Category "C" outages. However, the GE wind models experienced the numerical stability problem for the load rejection case. This problem is within the GE model itself because it also appears in the pre-project case.

- The results of the study are provided in the form of plots in Appendix F.

10. Deliverability Evaluations

10.1 On Peak Deliverability Assessment

CAISO performed an On-Peak Deliverability Assessment. The power flow study results for Category "A", "B", and "C" are detailed in Appendix I.

A modified version of the power flow 2013 Summer Peak base case prepared by PG&E for the reliability analysis was used to evaluate the deliverability of the proposed interconnection and the transmission system impacts of the Project. A description of the modifications follows.

- **Load Modeling**: For the On-Peak Deliverability Study, a coincident 1-in-5-year heat wave was modeled in the base case.

- **Generation Capacity (Pmax)**: The Net Qualified Capacity (NQC) was used for generation capacity values. Capacity values for intermittent generation were modeled as described in the On-Peak Deliverability Assessment Methodology: http://www.caiso.com/1c44/1c44b5c31cce0.html

- **Generation Dispatch in the base cases**: Please refer to the On-Peak Deliverability Assessment methodology document on the CAISO web-site: http://www.caiso.com/1c44/1c44b5c31cce0.html

- **Import Levels**: The On-Peak Deliverability Study base case modeled the 2009 Maximum Import Capability for each branch group based on the methodology for Import Capability Assignment Process for resource adequacy (CAISO Tariff Section 40.4.6.2.1). These import capabilities were modeled as fully utilized in the base case. These import levels are listed in Table 10-1.

10-1: On-Peak Deliverability Assessment Import Target

BG Name	BG Import Dir	Net Import MW	Import Unused ETC MW
Lugo_victrville_BG	N-S	1047	523
COI_BG	N-S	3770	548
BLYTHE_BG	E-W	106	0
CASCADE_BG	N-S	23	0
CFE_BG	S-N	-154	0
ELDORADO_BG	E-W	935	0
IID-SCE_BG	E-W	268	0
IID-SDGE_BG	E-W	-174	163
INYO_BG	E-W	0	0
LAUGHLIN_BG	E-W	0	0
MCCULLGH_BG	E-W	-15	316
MEAD_BG	E-W	539	516
MERCHANT_BG	E-W	425	0
N.GILABK4_BG	E-W	-170	168
NOB_BG	N-S	1449	0
PALOVRDE_BG	E-W	2984	233
PARKER_BG	E-W	66	52
SILVERPK_BG	E-W	9	0
SUMMIT_BG	E-W	-32	15
SYLMAR-AC_BG	E-W	-351	471
Total		**10726**	**3005**

11. Transition Cluster Group 1 Overload Mitigations

The preferred method to mitigate these normal as well as Category "B" emergency overloads is to re-conductor these overloaded lines with higher capacity conductors.

For CAISO Category "C" contingencies (according to WECC reliability criteria), the overloads may be mitigated by load shedding or generation dropping. PG&E or CAISO or both may require new generators to take part in and be responsible for the costs of operating procedures and/or Special Protection Systems (SPS) for the Category "C" emergency overloads caused by this Project. Only new Category "C" overload mitigation will be provided in the Phase 1 Study.

11.1 Mitigation for Category Normal Overloads Category "A"

11.1.1 Castro Valley - Newark 230 kV Line

Limiting Factor		795 ACSR at 2 fps wind speed summer interior rating 743/851 Amps Normal/Emergency. (0.34 miles)	
Pre-project Normal Loading	503 Amps (67%)	Post-project Normal Loading	781 Amps (105%)
Pre-project Emergency Loading	631 Amps (75%)	Post-project Emergency Loading	1022 Amps (120%)
Worst Contingency		T171-Tesla 500 kV Line	
Worst Overload Condition		2013 Summer Peak	

Solution: Re-conductor a total of 22.8 miles of the Castro Valley – Newark 230 kV Line with 795 ACSS or equivalent conductors. The 795 ACSS conductors are rated for 1517 Amps normal/emergency at 2 fps wind speed summer interior. Substation terminal equipment will also be upgraded to match or exceed the ampacity rating of the new conductors.

11.1.2 Cayetano – North Dublin 230 kV Line

Limiting Factor		1004 Amps Underground at 2 fps wind speed summer interior rating Normal/Emergency (2.8 miles)	
Pre-project Normal Loading	707 Amps (67%)	Post-project Normal Loading	1023 Amps (102%)
Pre-project Emergency Loading	875 Amps (87%)	Post-project Emergency Loading	1249 Amps (124%)
Worst Contingency		Contra Costa-Las Positas 230 kV Line and RCEC STG1	
Worst Overload Condition		2013 Summer Peak	

Solution: Install a 230 kV switching station with a 3-bay BAAH configuration and loop the Lonetree-Cayetano, Contra Costa-Las Positas, and North Dublin-Vineyard 230 kV Lines.

11.1.3 Contra Costa – Brentwood 230 kV Line

Limiting Factor		1113 Al at 2 fps wind speed summer interior rating 825 Normal (3.2 miles). 954 ACSR at 4 fps wind speed summer interior rating 1130 Amps Emergency (6.8 miles).	
Pre-project Normal Loading	718 Amps (87%)	Post-project Normal Loading	1108 Amps (134%)
Pre-project Emergency Loading	876 Amps (78%)	Post-project Emergency Loading	1434 Amps (127%)
Worst Contingency		Delta Pumps-Tesla 230 kV Line	
Worst Overload Condition		2013 Summer Peak	

Solution: Re-conductor a total of 10 miles of the Contra Costa - Brentwood 230 kV Line with 954 ACSS or equivalent conductors. The 954 ACSS conductors are rated for 1714 Amps normal/emergency at 2 fps wind speed summer interior. Substation terminal equipment will also be upgraded to match or exceed the ampacity rating of the new conductors.

11.1.4 Contra Costa – Delta Pumps 230 kV Line (Contra Costa – Windmaster)

Limiting Factor		1113 Al at 2 fps wind speed summer interior rating 825 Amps Normal(0.3 miles) 954 ACSR at 4 fps wind speed summer interior rating 1130 Amps Emergency (16.7miles)	
Pre-project Normal Loading	637 Amps (77%)	Post-project Normal Loading	1287 Amps (156%)
Pre-project Emergency Loading	754 Amps (67%)	Post-project Emergency Loading	1667 Amps (148%)
Worst Contingency		Kelso-Tesla 230 kV Line	
Worst Overload Condition		2013 Summer Peak	

Solution: Re-conductor a total of 17 miles of the Contra Costa - Windmaster 230 kV Line section with 1113 ACSS or equivalent conductors. The 1113 ACSS conductors are rated for 1893 Amps normal/emergency at 2 fps wind speed summer interior. Substation terminal equipment will also be upgraded to match or exceed the ampacity rating of the new conductors.

11.1.5 Contra Costa – Delta Pumps 230 kV Line (Windmaster – Delta Pumps)

Limiting Factor		1113 Al at 2 fps wind speed summer interior rating 825 Amps Normal (1.1 miles) 954 ACSR at 4 fps wind speed summer interior rating 1130 Amps Emergency (0.3 miles)	
Pre-project Normal Loading	634 Amps (77%)	Post-project Normal Loading	1285 Amps (156%)

Pre-project Emergency Loading	752 Amps (67%)	Post-project Emergency Loading	1665 Amps (147%)
Worst Contingency		Kelso-Tesla 230 kV Line	
Worst Overload Condition		2013 Summer Peak	

Solution: Re-conductor a total of 1.4 miles of the Windmaster – Delta Pumps 230 kV Line section with 1113 ACSS or equivalent conductors. The 1113 ACSS conductors are rated for 1893 Amps normal/emergency at 2 fps wind speed summer interior. Substation terminal equipment will also be upgraded to match or exceed the ampacity rating of the new conductors.

11.1.6 Delta Pumps – Tesla 230 kV Line (Altamont - Delta Pumps)

Limiting Factor		954 ACSR at 4 fps wind speed summer interior rating 996/1130 Amps Normal/Emergency (4.7 miles)	
Pre-project Normal Loading	631 Amps (63%)	Post-project Normal Loading	1282 Amps (129%)
Pre-project Emergency Loading	748 Amps (66%)	Post-project Emergency Loading	1663 Amps (147%)
Worst Contingency		Kelso-Tesla 230 kV Line	
Worst Overload Condition		2013 Summer Peak	

Solution: Re-conductor a total of 4.7 miles of the Altamont – Delta Pumps 230 kV Line section with 1113 ACSS or equivalent conductors. The 1113 ACSS conductors are rated for 1893 Amps normal/emergency at 2 fps wind speed summer interior. Substation terminal equipment will also be upgraded to match or exceed the ampacity of the new conductors.

11.1.7 Delta Pumps – Tesla 230 kV Line (Altamont - Tesla)

Limiting Factor		954 ACSR at 4 fps wind speed summer interior rating 996/1130 Amps Normal/Emergency (3 miles)	
Pre-project Normal Loading	631 Amps (63%)	Post-project Normal Loading	1281 Amps (129%)
Pre-project Emergency Loading	748 Amps (66%)	Post-project Emergency Loading	1662 Amps (147%)
Worst Contingency		Kelso-Tesla 230 kV Line	
Worst Overload Condition		2013 Summer Peak	

Solution: Re-conductor a total of 3 miles of the Altamont – Tesla 230 kV Line section with 1113 ACSS or equivalent conductors. The 1113 ACSS conductors are rated for 1893 Amps normal/emergency at 2 fps wind speed summer interior. Substation terminal equipment will also be upgraded to match or exceed the ampacity of the new conductors.

11.1.8 Kelso – Tesla 230 kV Line (Kelso – USWP RLF)

Limiting Factor		954 ACSR at 4 fps wind speed summer interior rating 997/1129 Amps Normal/Emergency (0.73 miles)	
Pre-project Normal Loading	399 Amps (40%)	Post-project Normal Loading	1261 Amps (127%)
Pre-project Emergency Loading	557 Amps (49%)	Post-project Emergency Loading	1599 Amps (140%)
Worst Contingency		Contra Costa-Delta Pumps 230 kV Line	
Worst Overload Condition		2013 Summer Peak	

Solution: Re-conductor a total of 3 miles of the Kelso – USWP RLF 230 kV Line section with 1113 ACSS or equivalent conductors. The 1113 ACSS conductors are rated for 1893 Amps normal/emergency at 2 fps wind speed summer interior. Substation terminal equipment will also be upgraded to match or exceed the ampacity of the new

11.1.9 Kelso – Tesla 230 kV Line (USWP RLF - Tesla)

Limiting Factor		954 ACSR at 4 fps wind speed summer interior rating 997/1129 Amps Normal/Emergency (0.73 miles)	
Pre-project Normal Loading	412 Amps (41%)	Post-project Normal Loading	1277 Amps (128%)
Pre-project Emergency Loading	571 Amps (51%)	Post-project Emergency Loading	1599 Amps (140%)
Worst Contingency		Contra Costa-Delta Pumps 230 kV Line	
Worst Overload Condition		2013 Summer Peak	

Solution: Re-conductor a total of 5 miles of the USWP RLF - Tesla 230 kV Line section with 1113 ACSS or equivalent conductors. The 1113 ACSS conductors are rated for 1893 Amps normal/emergency at 2 fps wind speed summer interior. Substation terminal equipment will also be upgraded to match or exceed the ampacity rating of the new conductors.

11.1.10 Las Positas - Newark 230 kV Line

Limiting Factor		795 ACSR at 2 fps wind speed summer interior rating 743/851 Amps Normal/Emergency (21.3 miles)	
Pre-project Normal Loading	743 Amps (83%)	Post-project Normal Loading	999 Amps (134%)
Pre-project Emergency Loading	788 Amps (93%)	Post-project Emergency Loading	1228 Amps (144%)
Worst Contingency		Contra Costa-Lonetree 230 kV Line	
Worst Overload Condition		2013 Summer Peak	

Solution: Re-conductor a total of 21 miles of the Las Positas – Newark 230 kV Line with 954 ACSS or equivalent conductors. The 954 ACSS conductors are rated for 1714 Amps normal/emergency at 2 fps wind speed summer interior. Substation terminal equipment will also be

upgraded to match or exceed the ampacity rating of the new conductors.

11.1.11 Lonetree - Cayetano 230 kV Line (Lonetree – USWP JRW)

Limiting Factor		795 ACSR at 4 fps wind speed summer interior rating 886/1005 Amps Normal/Emergency (total 12 miles)	
Pre-project Normal Loading	767 Amps (87%)	Post-project Normal Loading	1083 Amps (122%)
Pre-project Emergency Loading	932 Amps (93%)	Post-project Emergency Loading	1307 Amps (130%)
Worst Contingency		Contra Costa-Las Positas 230 kV Line and RCEC STG1	
Worst Overload Condition		2013 Summer Peak	

Solution: Re-conductor a total of 12 miles of the Lonetree – USWP JRW 230 kV Line section with 954 ACSS or equivalent conductors. The 954 ACSS conductors are rated for 1714 Amps normal/emergency at 2 fps wind speed summer interior. Substation terminal equipment will also be upgraded to match or exceed the ampacity rating of the new conductors.

11.1.12 Lonetree - Cayetano 230 kV Line (USWP JRW – Cayetano)

Limiting Factor		795 ACSR at 4 fps wind speed summer interior rating 886/1005 Amps Normal/Emergency (3 miles). 1004 Amps Underground at 2 fps wind speed summer interior rating Normal/Emergency (2.4 miles)	
Pre-project Normal Loading	764 Amps (88%)	Post-project Normal Loading	1081 Amps (122%)
Pre-project Emergency Loading	932 Amps (93%)	Post-project Emergency Loading	1307 Amps (130%)
Worst Contingency		Contra Costa-Lonetree 230 kV Line	
Worst Overload Condition		2013 Summer Peak	

Solution: Install a 230 kV switching station with a 3-bay BAAH configuration and loop the Lonetree-Cayetano, Contra Costa-Las Positas, and North Dublin-Vineyard 230 kV Lines. Re-conductor a total of 3 miles of the USWP JRW-Cayetano 230 kV Line section with 954 ACSS or equivalent conductors. The 954 ACSS conductors are rated for 1714 Amps normal/emergency at 2 fps wind speed summer interior. Substation terminal equipment will also be upgraded to match or exceed the ampacity rating of the new conductors.

11.1.13 Moraga – Castro Valley 230 kV Line

Limiting Factor	954 ACSR at 2 fps wind speed summer coastal rating 911/1021 Amps

		Normal/Emergency (15 miles).	
Pre-project Normal Loading	688 Amps (76%)	Post-project Normal Loading	965 Amps (106%)
Pre-project Emergency Loading	823 Amps (93%)	Post-project Emergency Loading	1210 Amps (119%)
Worst Contingency		T171-Tesla 500 kV Line	
Worst Overload Condition		2013 Summer Peak	

Solution: Re-conductor a total of 15 miles of the Moraga – Castro Valley 230 kV Line with 795 ACSS or equivalent conductors. The 795 ACSS conductors are rated for 1542 Amps normal/emergency at 2 fps wind speed summer coastal. Substation terminal equipment will also be upgraded to match or exceed the ampacity rating of the new conductors.

11.1.14 North Dublin – Vineyard 230 kV Line

Limiting Factor		2000 kcmil CU underground cable at summer rating 1004/1004 Amps Normal/Emergency (5.4 miles) 795 ACSR at 4 fps wind speed summer interior rating 886/1005 Amps Normal/Emergency (10 miles).	
Pre-project Normal Loading	654 Amps (74%)	Post-project Normal Loading	969 Amps (109%)
Pre-project Emergency Loading	875 Amps (87%)	Post-project Emergency Loading	1249 Amps (124%)
Worst Contingency		Contra Costa-Las Positas 230 kV Line and RCEC STG1	
Worst Overload Condition		2013 Summer Peak	

Solution: Install a 230 kV switching station with a 3-bay BAAH configuration and loop the North Dublin - Vineyard, Las Positas – Newark, and Vineyard - Newark 230 kV Lines. Re-conductor a total of 10 miles of the North Dublin-Vineyard 230 kV Line section with 954 ACSS or equivalent conductors. The 954 ACSS conductors are rated for 1714 Amps normal/emergency at 2 fps wind speed summer interior. Substation terminal equipment will also be upgraded to match or exceed the ampacity rating of the new conductors.

11.1.15 T171 – Tesla 500 kV Line

Limiting Factor		2-2300 Al at 2 fps wind speed summer interior rating 2430/2816 Amps Normal/Emergency (limited by series capacitors)	
Pre-project Normal Loading	1821 Amps (75%)	Post-project Normal Loading	2636 Amps (108%)
Pre-project Emergency Loading	2663 Amps (95%)	Post-project Emergency Loading	3559 Amps (126%)
Worst Contingency		Olinda-Tracy 500 kV Line	
Worst Overload Condition		2013 Summer Peak	

Solution: Congestion management.

11.1.16 **Trimble – San Jose B 115 kV Line**

Limiting Factor		715 Al at 2 fps wind speed summer coastal rating 703 Amps Normal and 100 deg conductor temperature 924 Amps Emergency (1.1 miles). 3000 MCM AL Underground with 965 Amps normal and emergency ratings (1.1 miles)	
Pre-project Normal Loading	427 Amps (61%)	Post-project Normal Loading	728 Amps (104%)
Pre-project Emergency Loading	614 Amps (67%)	Post-project Emergency Loading	1071 Amps (116%)
Worst Contingency		Tesla-Metcalf 500 kV Line	
Worst Overload Condition		2013 Summer Peak	

Solution: Re-conductor a total of 1.1 miles of the Trimble – San Jose B 115 kV Line with 477 ACSS or equivalent conductors. The 477 ACSS conductors are rated for 1144 Amps normal/emergency at 2 fps wind speed summer coastal. Re-rate the underground cable section for 1160 Amps emergency rating (needed also for Category C emergency overload mitigation). Substation terminal equipment will also be upgraded to match or exceed the ampacity rating of the new conductors.

11.1.17 **Vineyard – Newark 230 kV Line**

Limiting Factor		2000 kcmil CU underground cable at summer rating 1004/1004 Amps Normal/Emergency (5.7 miles) 795 ACSR at 4 fps wind speed summer interior rating 886/1005 Amps Normal/Emergency (14 miles).	
Pre-project Normal Loading	427 Amps (61%)	Post-project Normal Loading	728 Amps (104%)
Pre-project Emergency Loading	614 Amps (67%)	Post-project Emergency Loading	1071 Amps (116%)
Worst Contingency		Contra Costa-Las Positas 230 kV Line and RCEC STG1	
Worst Overload Condition		2013 Summer Peak	

Solution: Install a 230 kV switching stations with a 3-bay BAAH configuration and loop the North Dublin-Vineyard, Las Positas-Newark, and Vineyard-Newark 230 kV Lines. Re-conductor a total of 14 miles of the Vineyard-Newark 230 kV Line section with 954 ACSS or equivalent conductors. The 954 ACSS conductors are rated for 1714 Amps normal/emergency at 2 fps wind speed summer interior. Substation terminal equipment will also be upgraded to match or exceed the ampacity rating of the new conductors.

11.2 **Mitigation for New Category "B" Emergency Overload**

The mitigations for new Category "B" emergency overload listed below are in addition to the mitigations for new normal overloads Category "A" described in Section 11.1 which also mitigate the Category "B" emergency overloads.

11.2.1 Birds Landing – Contra Costa 230 kV Line

Limiting Factor		1113 ACSS at 2 fps wind speed summer interior rating 1893 Amps Emergency	
Pre-project Emergency Loading	1713 Amps (90%)	Post-project Emergency Loading	2597 Amps (137%)
Worst Contingency		Contra Costa-Contra Costa Sub 230 kV Line and Gateway PP	
Overload Condition		2013 Summer Peak	

Solution: Loop the Contra Costa – Moraga 230 kV Line No. 1 into the Contra Costa Substation. Install one 230 kV bay BAAH configuration at Contra Costa Sub.

11.2.2 Brentwood – Kelso 230 kV Line

Limiting Factor		954 ACSR at 4 fps wind speed summer interior rating 1130 Amps Emergency.	
Pre-project Emergency Loading	584 Amps (52%)	Post-project Emergency Loading	1136 Amps (101%)
Worst Contingency		Contra Costa-Delta Pumps 230 kV Line	
Overload Condition		2013 Summer Peak	

Solution: Congestion management.

11.2.3 Contra Costa – Contra Costa Sub 230 kV Line

Limiting Factor		1113 ACSS at 2 fps wind speed summer interior rating 1893 Amps Emergency	
Pre-project Emergency Loading	1599 Amps (84%)	Post-project Emergency Loading	2786 Amps (147%)
Worst Contingency		Birds Landing-Contra Costa 230 kV Line and Gateway PP	
Overload Condition		2013 Summer Peak	

Solution: Loop the Contra Costa – Moraga 230 kV Line No. 1 into the Contra Costa Substation. Convert Contra Costa Substation 230 kV bus into a six-bay, eighteen-breaker BAAH configuration.

11.2.4 Cooley Landing – Stanford 60 kV Line (Cooley Landing-SRI)

Limiting Factor		600 Amps switches	
Pre-project Emergency Loading	553 Amps (92%)	Post-project Emergency Loading	622 Amps (104%)
Worst Contingency		Cardinal Units #1 and #2	
Overload Condition		2013 Summer Peak	

Solution: PG&E project will replace the 600 Amps switches to utilize the emergency conductor coastal ratings of 703 Amps.

11.2.5 Newark 230/115 kV Bank No. 11

Limiting Factor		462 MVA emergency rating	
Pre-project Emergency Loading	443 MVA (96%)	Post-project Emergency Loading	502 MVA (109%)
Worst Contingency		Newark 230/115 kV Bank No. 7	
Overload Condition		2013 Summer Peak	

Solution: Congestion management.

11.2.6 Oakland C – Oakland L 115 kV Line

Limiting Factor		790 Amps underground cable emergency rating	
Pre-project Emergency Loading	772 Amps (98%)	Post-project Emergency Loading	828 Amps (105%)
Worst Contingency		Moraga-San Ramon 230 kV Line and DEC	
Overload Condition		2013 Summer Peak	

Solution: Congestion management.

11.2.7 Pittsburg 230/181 kV TBC Bank

Limiting Factor		450 MVA emergency rating	
Pre-project Emergency Loading	427 MVA (95%)	Post-project Emergency Loading	462 MVA (103%)
Worst Contingency		Pittsburg-San Mateo 230 kV Line and DEC	
Overload Condition		2013 Summer Peak	

Solution: Congestion management.

11.2.8 Potrero 115/181 kV TBC Bank

Limiting Factor		450 MVA emergency rating	
Pre-project Emergency Loading	408 MVA (94%)	Post-project Emergency Loading	456 MVA (101%)
Worst Contingency		Moraga-San Ramon 230 kV Line	
Overload Condition		2013 Summer Peak	

Solution: Congestion management.

11.2.9 Sobrante – El Cerrito No. 1 115 kV Line

Limiting Factor		600 Amps switches	
Pre-project Emergency Loading	570 Amps (95%)	Post-project Emergency Loading	619 Amps (103%)
Worst Contingency		Sobrante-El Cerrito No. 2 115 kV Line	
Overload Condition		2013 Summer Peak	

Solution: Replace the 600 Amps switches to utilize the emergency conductor coastal ratings of 802 Amps.

11.2.10 **Sobrante – El Cerrito No. 2 115 kV Line**

Limiting Factor		600 Amps switches	
Pre-project Emergency Loading	571 Amps (95%)	Post-project Emergency Loading	620 Amps (103%)
Worst Contingency		Sobrante-El Cerrito No. 1 115 kV Line	
Overload Condition		2013 Summer Peak	

Solution: Replace the 600 Amps switches to utilize conductor emergency coastal rating of 802 Amps.

11.2.11 **Table Mountain – Tesla 500 kV Line**

Limiting Factor		2-2300 Al at 2 fps wind speed summer interior rating 2964 Amps Emergency.	
Pre-project Emergency Loading	2501Amps (84%)	Post-project Emergency Loading	3071 Amps (104%)
Worst Contingency		T171-Tesla 500 kV Line	
Overload Condition		2013 Summer Peak	

Solution: Congestion management.

11.2.12 **Vaca Dixon – T171 500 kV Line**

Limiting Factor		2-2300 Al at 2 fps wind speed summer interior rating 2816 (series capacitor) Amps Emergency.	
Pre-project Emergency Loading	2663Amps (95%)	Post-project Emergency Loading	3007 Amps (107%)
Worst Contingency		Olinda-Tracy 500 kV Line	
Overload Condition		2013 Summer Peak	

Solution: Congestion management.

11.2.13 **Vaca Dixon – T275 No. 1 230 kV Line**

Limiting Factor		1113 ACSS at 2 fps wind speed summer interior rating 1893 Amps Emergency (5 miles)	
Pre-project Emergency Loading	484 Amps (26%)	Post-project Emergency Loading	2747 Amps (120%)
Worst Contingency		Vaca Dixon-T275 No. 2 230 kV Line	
Overload Condition		2013 Summer Off-Peak	

Solution: Re-conductor a total of 5 miles of the Vaca Dixon-T275 230 kV Line No. 1 with bundled 795 ACSS or equivalent conductors. The bundled 795 ACSS conductors are rated for 3984 Amps normal/emergency at 2 fps wind speed summer interior. New double circuit towers will be installed and the existing towers will be removed. Substation terminal equipment will also be upgraded to match or exceed the ampacity rating of the new conductors.

11.2.14 Vaca Dixon – T275 No. 2 230 kV Line

Limiting Factor		1113 ACSS at 2 fps wind speed summer interior rating 1893 Amps Emergency (5 miles)	
Pre-project Emergency Loading	338 Amps (18%)	Post-project Emergency Loading	2747 Amps (120%)
Worst Contingency		Vaca Dixon-T275 No. 1 230 kV Line	
Overload Condition		2013 Summer Off-Peak	

Solution: Re-conductor a total of 5 miles of the Vaca Dixon-T275 230 kV Line No. 2 with bundled 795 ACSS or equivalent conductors. The bundled 795 ACSS conductors are rated for 3984 Amps normal/emergency at 2 fps wind speed summer interior. New double circuit towers will be installed and the existing towers will be removed. Substation terminal equipment will also be upgraded to match or exceed the ampacity rating of the new conductors.

11.3 Mitigation for New Category "C" Emergency Overload

The mitigation for the new Category "C" emergency overloads listed below are in addition to the mitigations for new Category "A" normal overloads and Category "B" emergency overloads described in Sections 11.1 and 11.2 which also mitigate the Category "C" emergency overloads.

11.3.1 Birds Landing – Contra Costa 230 kV Line

Limiting Factor		1113 ACSS at 2 fps wind speed summer interior rating 1893 Amps Emergency	
Pre-project Emergency Loading	1465 Amps (77%)	Post-project Emergency Loading	2370 Amps (125%)
Worst Contingency		Contra Costa Sub 230 kV Bus Section 2	
Overload Condition		2013 Summer Peak	

Solution: Install SPS to drop generation.

11.3.2 Birds Landing – Contra Costa Sub 230 kV Line

Limiting Factor		1113 ACSS at 2 fps wind speed summer interior rating 1893 Amps Emergency	
Pre-project Emergency Loading	1340 Amps (71%)	Post-project Emergency Loading	1992 Amps (105%)
Worst Contingency		Vaca Dixon-T275 Nos. 1 and 2 230 kV Lines	
Overload Condition		2013 Summer Peak	

Solution: Install SPS to drop generation.

11.3.3 Brentwood - Kelso 230 kV Line

Limiting Factor	954 ACSR at 4 fps wind speed summer

		interior rating 1130 Amps Emergency.	
Pre-project Emergency Loading	515 Amps (46%)	Post-project Emergency Loading	1289 Amps (114%)
Worst Contingency		Contra Costa Sub 230 kV Bus Section 2F	
Overload Condition		2013 Summer Peak	

Solution: Congestion management.

11.3.4 Contra Costa – Las Positas 230 kV Line

Limiting Factor		954 ACSS at 2 fps wind speed summer interior rating 1714 Amps Emergency.	
Pre-project Emergency Loading	1207 Amps (46%)	Post-project Emergency Loading	1786 Amps (104%)
Worst Contingency		Contra Costa Sub 230 kV Bus Section 2F	
Overload Condition		2013 Summer Peak	

Solution: Install SPS to drop generation.

11.3.5 East Shore – San Mateo 230 kV Line

Limiting Factor		954 ACSS at 2 fps wind speed summer coastal rating 1742 Amps Emergency.	
Pre-project Emergency Loading	1715 Amps (98%)	Post-project Emergency Loading	1776 Amps (102%)
Worst Contingency		Newark-Ravenswood and Tesla-Ravenswood 230 kV Lines	
Overload Condition		2013 Summer Peak	

Solution: Install SPS to drop generation.

11.3.6 Lambie – Birds Landing 230 kV Line

Limiting Factor		1113 ACSS at 2 fps wind speed summer interior rating 1893 Amps Emergency	
Pre-project Emergency Loading	1182 Amps (63%)	Post-project Emergency Loading	2077 Amps (110%)
Worst Contingency		Contra Costa Sub-Contra Costa and Birds Landing-Contra Costa 230 kV Lines	
Overload Condition		2013 Summer Peak	

Solution: Install SPS to drop generation.

11.3.7 Oleum – North Tower – Christie 115 kV Line

Limiting Factor		250 CU at 2 fps wind speed summer coastal rating 522 Amps Emergency	
Pre-project Emergency	1182 Amps (63%)	Post-project	2077 Amps (110%)

Loading		Emergency Loading	
Worst Contingency		Sobrante-El Cerrito Nos. 1 and 2 115 kV Lines	
Overload Condition		2013 Summer Peak	

Solution: Rerate the Oleum – North Tower – Christie 115 kV Line with 4 feet per second (fps) wind speed.

11.3.8 Sobrante – Christie 115 kV Line

Limiting Factor		250 CU at 2 fps wind speed summer coastal rating 522 Amps Emergency	
Pre-project Emergency Loading	532 Amps (102%)	Post-project Emergency Loading	596 Amps (114%)
Worst Contingency		Sobrante-El Cerrito Nos. 1 and 2 115 kV Lines	
Overload Condition		2013 Summer Peak	

Solution: The Category "C" emergency overload is Pre-Project. PG&E will rerate Sobrante – Christie 115 kV Line with 4 fps wind speed.

11.3.9 Trimble – San Jose B 115 kV Line

Limiting Factor		715 Al at 2 fps wind speed summer coastal rating 703 Amps Normal and 100 deg conductor temperature 924 Amps Emergency (1.1 miles). 3000 MCM AL Underground with 965 Amps normal and emergency ratings (1.1 miles)	
Pre-project Emergency Loading	957 Amps (104%)	Post-project Emergency Loading	1160 Amps (126%)
Worst Contingency		Metcalf-El Patio Nos. 1 and 2 115 kV Lines	
Overload Condition		2013 Summer Peak	

Solution: The Category "C" emergency overload is Pre-Project. The Trimble – San Jose B 115 kV Line will be reconductored with 477 ACSS (1144 Amps coastal normal and emergency ratings) to mitigate normal Category "A" and "B" emergency overloads for the Group 1 projects. PG&E will rerate the new 477 ACSS conductors with 4 fps wind speed and the underground cable to match the ratings of the overhead conductors.

11.3.10 Westley – Los Banos 230 kV Line

Limiting Factor		1700 Amps emergency rating.	
Pre-project Emergency Loading	888 Amps (52%)	Post-project Emergency Loading	2220 Amps (131%)
Worst Contingency		Tesla-Los Banos and Tracy-Los Banos 500 kV Lines	

Overload Condition	2013 Summer Peak

Solution: Install SPS to drop generation.

11.4 Summary of Network Upgrade Cost Estimates

Table 11-1 Summary of Transition Cluster Group 1 Network Upgrade Cost Estimates

Over Loaded Component	Overloads		Existing Conductor			Post-Project Loading N/E (Amps)	Re-conductor To			Cost Estimates
	Normal	Cat "B"	Size	Ratings (Amps) N	Ratings (Amps) E		Size	Ratings (Amps) N	Ratings (Amps) E	
Birds Landing-Contra Costa 230 kV Line	N/A	Yes	1113 ACSS	1893	1893	N/A/2597	Loop Line	N/A	N/A	$ (Note 1)
Brentwood-Kelso 230 kV Line	N/A	Yes	954 ACSR	826	1130 (4fps)	N/A/1136	N/A	N/A	N/A	Note 2
Castro Valley-Newark 230 kV Line (23 miles)	Yes	Yes	795 ACSR	743	851	781/1022	795 ACSS	1517	1517	$
Cayetano-North Dublin 230 kV Line	Yes	Yes	1004A (UG)	1004	1004	1023/1249	N/A	N/A	N/A	$ (Note 3)
Contra Costa-Brentwood 230 kV Line (10 miles)	Yes	Yes	954 ACSR	826	1130 (4fps)	1108/1434	954 ACSS	1714	1714	$
Contra Costa-Contra Costa Sub 230 kV Line	N/A	Yes	1113 ACSS	1893	1893	N/A/2786	Loop Line	N/A	N/A	$ (Note 1)
Contra Costa - Delta Pumps 230 kV Line (Contra Costa - Windmaster) – 17 miles	Yes	Yes	954 ACSR	826	1130 (4fps)	12871667	1113 ACSS	1893	1893	$
Contra Costa - Delta Pumps 230 kV Line (Windmaster - Delta Pumps) – 1.4 miles	Yes	Yes	954 ACSR	826	1130 (4fps)	1285/1665	1113 ACSS	1893	1893	$
Contra Costa – RossmoorTap1	N/A	Yes	954 ACSS	1714	1714	N/A/1748	Loop Line	N/A	N/A	$ (Note 1)
Cooley Landing-Stanford 60 kV Line (Cooley Landing-SRI)	N/A	Yes	715 AL	600 (switch)	600 (switch)	N/A/622	Replace Switch	703	802	$
Delta Pumps - Tesla 230 kV Line (Altamont - Tesla) – 4.7 miles	Yes	Yes	954 ACSR	996 (4fps)	1130 (4fps)	1282/1662	1113 ACSS	1893	1893	$
Delta Pumps - Tesla 230 kV Line (Delta Pumps - Altamont) – 3 miles	Yes	Yes	954 ACSR	996 (4fps)	1130 (4fps)	1281/1663	1113 ACSS	1893	1893	$
Kelso- Tesla 230 kV Line (Kelso - USWP RLF) – 3.3 miles	Yes	Yes	954 ACSR	997 (4fps)	1129 (4fps)	1261/1599	1113 ACSS	1893	1893	$
Kelso - Tesla 230 kV Line (USWP RLF - Tesla) – 4.7 miles	Yes	Yes	954 ACSR	997 (4fps)	1129 (4fps)	1277/1599	1113 ACSS	1893	1893	$
Las Positas - Newark 230 kV Line (21 miles)	Yes	Yes	795 ACSR	743	851	999/1228	954 ACSS	1714	1714	$
Lonetree - Cayetano 230 kV Line (Lonetree - USWP JRW) – 12 miles	Yes	Yes	795 ACSR	886 (4fps)	1005 (4fps)	1083/1310	954 ACSS	1714	1714	$ (Recond. Portion only)
Lonetree - Cayetano 230 kV Line (USWP JRW - Cayetano) – 3 miles	Yes	Yes	795 ACSR	886 (4fps)	1005 (4fps)	1081/1307	954 ACSS	1714	1714	

Over Loaded Component	Overloads		Existing Conductor			Post-Project Loading N/E (Amps)	Re-conductor To			Cost Estimates
	Normal	Cat "B"	Size	Ratings (Amps) N	Ratings (Amps) E		Size	Ratings (Amps) N	Ratings (Amps) E	
Moraga - Castro Valley 230 kV Line (15 miles)	Yes	Yes	954 ACSR	911	1021	965/1210	795 ACSS	1542	1542	$
Newark 230/115 kV Bank 11	N/A	Yes	462 MVA	420 (MVA)	462 (MVA)	N/A/502 (MVA)	N/A	N/A	N/A	Note 2
North Dublin - Vineyard 230 kV Line (10 miles)	Yes	Yes	795 ACSR	886 (4fps)	1005 (4fps)	969/1196	954 ACSS	1714	1714	$ (Note 4)
Oakland C - Oakland L 115 kV Line	N/A	Yes	790A (UG)	790	790	N/A/828	N/A	N/A	N/A	Note 2
Pittsburg 230/181 kV TBC Bank	N/A	Yes	450 MVA	N/A	450	N/A/462 (MVA)	N/A	N/A	N/A	Note 2
Potrero 115/181 kV TBC Bank	N/A	Yes	450 MVA	N/A	450	N/A/456 (MVA)	N/A	N/A	N/A	Note 2
Sobrante 230/115 kV #1	N/A	Yes	403	403	463	N/A/495	Add 420 MVA Bank	420	420	$
Sobrante 230/115 kV #2	N/A	Yes	403	403	463	N/A/482				
Sobrante - El Cerrito #1 115 kV Line	N/A	Yes	715 AL	600 (switch)	600 (switch)	N/A/619	Replace switch	703	802	$
Sobrante - El Cerrito #2 115 kV Line	N/A	Yes	715 AL	600 (switch)	600 (switch)	N/A/619	Replace switch	703	802	$
Table Mountain - Tesla 500 kV Line	N/A	Yes	2-2300 AL	N/A	2964	N/A/3071	N/A	N/A	N/A	Note 2
Tesla - T171 500 kV Line	Yes	Yes	2-2300 AL	2430	2816 (series cap)	2636/3559	N/A	N/A	N/A	Note 2
Trimble - San Jose B 115 kV Line (1.1 miles)	Yes	Yes	715 AL	703	924 (col. B)	728/1071	477 ACSS	1144	1144	$ (Note 5)
Vaca-Dixon - T171 500 kV Line	N/A	Yes	2-2300 AL	N/A	2816 (series cap)	N/A/3007	N/A	N/A	N/A	Note 2
Vaca-Dixon - T275 #1 230 kV Line (5 miles)	N/A	Yes	1113 ACSS	1893	1893	N/A/2269	2-795 ACSS	3034	3034	$ (Note 6)
Vaca-Dixon - T275 #2 230 kV Line	N/A	Yes	1113 ACSS	1893	1893	N/A/2269	2-795 ACSS	3034	3034	
Vineyard - Newark 230 kV Line (14 miles)	Yes	Yes	795 ACSR	743	851	749/975	954 ACSS	1714	1714	$ (Recond. Portion only)

NOTES:

1. Convert Contra Costa Substation 230 kV bus into a six-bay, eighteen-breaker BAAH configuration. Loop Contra Costa – Moraga 230 kV Line No. 1 into Contra Costa Substation.

2. Congestion management.

3. Install a 230 kV switching station and loop the Lonetree – Cayetano, Contra Costa – Las Positas, and North Dublin – Vineyard 230 kV lines. The cost to build a switching station and looped the 230 kV lines is estimated at $ because the switching station will be located in highly developed area which may require undergrounding the looped lines.

4. Install a 230 kV switching station and loop the North Dublin – Vineyard, Las Positas – Newark, and Vineyard – Newark 230 kV lines. The cost to build a switching station and looped the 230 kV lines is estimated at $ because the switching station will be located in highly developed area which may require undergrounding the looped lines.

5. Re-rate the underground section (1.1 miles) to match the ratings of the overhead line section.

6. Build new double circuit tower line on the existing right-of-ways (5 miles) and remove existing towers.

11.5 Mitigation for Dynamic Stability Study Category "C" Emergency

11.5.1 Category "C" Voltage Violation

Solution: None.

11.5.2 Category "C" Frequency violation

Solution: None.

11.6 Mitigation for Fault Duty

Solution: Replace overstressed circuit breakers at Pittsburg substation.

12. Network Upgrades and Overload Mitigation Responsibility By the Project

The cost of the Network Upgrades associated with Group 1 will be divided among the projects in Group 1. To determine the cost responsibility of each generation project assigned to the Groups, the CAISO developed cost allocation factors based on the individual contribution of each project (Appendix J). The cost allocation of this Project for the Network Upgrades for Group 1 is as follows:

- **Contra Costa – Delta Pumps 230 kV Line (Windmaster – Delta Pumps): Reconductor 1.4 miles with 1113 ACSS conductors.**

  The total cost of the project to reconductor the Windmaster – Delta Pumps 230 kV Line section is $ The Project's responsibility based on 7.3% of the total cost per Appendix J is approximately $

- **Contra Costa – Delta Pumps 230 kV Line (Contra Costa - Windmaster): Reconductor 17 miles with 1113 ACSS conductors.**

  The total cost of the project to reconductor the Contra Costa - Windmaster 230 kV Line section is $ The Project's responsibility based on 7.3% of the total cost per Appendix J is approximately $

- **Sobrante No. 1 230 kV Transformer: Install new 230/115 kV transformer No. 3 at Sobrante Substation**

  The total cost of the project to install a new 230/115 kV transformer at Sobrante Substation is $ The Project's responsibility based on 29.4% of the total cost per Appendix J is approximately $

- **Contra Costa – Brentwood 230 kV Line: Reconductor 10 miles with 954 ACSS conductors.**

  The total cost of the project to reconductor the Contra Costa - Brentwood 230 kV Line is $ The Project's responsibility based on 7.4% of the total cost per Appendix J is approximately $

- **Delta Pumps – Tesla 230 kV Line (Altamont - Tesla): Reconductor 3 miles with 1113 ACSS conductors.**

  The total cost of the project to reconductor the Altamont - Tesla 230 kV Line section is $ The Project's responsibility based on 7.3% of the total cost per Appendix J is approximately $

- **Delta Pumps – Tesla 230 kV Line (Delta - Altamont): Reconductor 4.7 miles with 1113 ACSS conductors.**

  The total cost of the project to reconductor the Altamont - Tesla 230 kV Line section is $ The Project's responsibility based on 7.3% of the total cost per Appendix J is approximately $

- **Kelso – Tesla 230 kV Line (Kelso - USWP RLF): Reconductor 3.3 miles with 1113 ACSS conductors.**

  The total cost of the project to reconductor the Kelso – USWP RLF 230 kV Line section is $ The Project's responsibility based on 5% of the total cost per Appendix J is approximately $

- **Kelso – Tesla 230 kV Line (USWP RLF - Tesla): Reconductor 4.7 miles with 1113 ACSS conductors.**

  The total cost of the project to reconductor the USWP RLF - Tesla 230 kV Line section is $ The Project's responsibility based on 5% of the total cost per Appendix J is approximately $

- **Moraga – Castro Valley 230 kV Line: Reconductor 15 miles with 795 ACSS conductors.**

The total cost of the project to reconductor the Moraga-Castro Valley 230 kV Line section is $ The Project's responsibility based on 15.5% of the total cost per Appendix J is approximately $

- **Castro Valley – Newark 230 kV Line: Reconductor 22.8 miles with 795 ACSS conductors.**

  The total cost of the project to reconductor the Castro Valley-Newark 230 kV Line section is $ The Project's responsibility based on 15.5% of the total cost per Appendix J is approximately $

- **Sobrante – Moraga 115 kV Line: Reconductor 4 miles with 795 ACSS conductors.**

  The total cost of the project to reconductor the Sobrante – Moraga 115 kV Line is $ The Project's responsibility based on 37.9% of the total cost per Appendix J is approximately $

The Project is responsible for approximately $ of the total cost of the Network Upgrades associated with Group 1.

13. Preliminary Protection Requirements

Per Section G2.1 of the PG&E Interconnection Handbook, PG&E protection requirements are designed and intended to protect PG&E's system only. The applicant is responsible for the protection of its own system and equipment and must meet the requirements in the PG&E Interconnection Handbook.

The Preliminary Protection Requirements are detailed in Appendix G.

14. Transmission Line Evaluation

The transmission line evaluation included the following work:

- Reconductor the Castro Valley - Newark 230 kV Line
- Reconductor the Contra Costa - Brentwood 230 kV Line
- Reconductor the Contra Costa - Delta Pumps 230 kV Line (Contra Costa - Windmaster)
- Reconductor the Contra Costa - Delta Pumps 230 kV Line (Windmaster - Delta Pumps)
- Reconductor the Delta Pumps - Tesla 230 kV Line (Altamont - Delta Pumps)
- Reconductor the Delta Pumps - Tesla 230 kV Line (Altamont - Tesla)
- Reconductor the Kelso - Tesla 230 kV Line (Kelso - USWP RLF)
- Reconductor the Kelso - Tesla 230 kV Line (USWP RLF - Tesla)
- Reconductor the Las Positas - Newark 230 kV Line
- Reconductor the Lonetree - Cayetano 230 kV Line (Lonetree - USWP JRW)
- Reconductor the Lonetree - Cayetano 230 kV Line (USWP JRW - Cayetano)
- Reconductor the Moraga-Castro Valley 230 kV Line

- Reconductor the North Dublin - Vineyard 230 kV Line
- Reconductor the Vineyard - Newark 230 kV Line
- Reconductor the Vaca Dixon - T275 230 kV Line No. 1
- Reconductor the Vaca Dixon - T275 230 kV Line No. 2
- Loop the Contra Costa - Moraga No. 1 230 kV Line into Contra Costa - Substation
- Loop the Contra Costa - Las Positas, Lonetree - Cayetano, North Dublin - Vineyard, Cayetano - Las Positas, Las Positas - Newark, and Vineyard - Newark into new 230 kV switching stations.

15. Substation Evaluation

15.1 Overstressed Breakers

PG&E uses the following policy to allocate breaker replacement responsibility for projects that overstress or increase overstress[5] on existing circuit breakers:

- If a breaker is not overstressed before the project, and the project results in an overstressed condition of the breaker, then the project is responsible for the cost of replacement.
- If a breaker is already overstressed, and a project increases the overstress by 5% or more, or the post-project overstress level exceeds 25%, then the project is responsible for the cost of replacement.
- If the overstress level exceeds 25% before the project, and for all other circumstances, PG&E or other generation projects will be responsible for any replacement costs.

Using the short-circuit study results of the System Fault Duties Study in Appendix H, an initial breaker evaluation found that the Project contributes more than 100 Amps to the following breakers to be overstressed.

- Pittsburg PP 230 kV CB452, CB472, CB492, and CB 672

15.2 Substation Evaluation

The non binding cost estimate for these Network Upgrades is included in the Substation work scope as detailed in Appendix E.

[5] Overstressed Circuit Breaker – The percent of overstress, or level of overstress, is the percent of maximum fault current above the breaker's nameplate rating. For example, a breaker rated at 40,000 amps symmetrical current interrupting a 44,000 amp symmetrical fault is overstressed by 10%.

16. Environmental Evaluation/Permitting

16.1 CPUC General Order 131-D

PG&E is subject to the jurisdiction of the California Public Utilities Commission (CPUC) and must comply with CPUC General Order 131-D (Order) on the construction, modification, alteration, or addition of all electric transmission facilities (i.e., lines, substations, switchyards, etc.). This includes facilities to be constructed by others and deeded to PG&E. In most cases where PG&E's electric facilities are under 200 kV and are part of a larger project (i.e., electric generation plant), the Order exempts PG&E from obtaining an approval from the CPUC provided its planned facilities have been included in the larger project's California Environmental Quality Act (CEQA) review, the review has included circulation with the State Clearinghouse, and the project's lead agency (i.e., California Energy Commission) finds no significant unavoidable environmental impacts. PG&E or the project developer may proceed with construction once PG&E has filed notice with the CPUC and the public on the project's exempt status, and the public has had a chance to protest PG&E's claim of exemption. If PG&E facilities are not included in the larger project's CEQA review, or if the project does not qualify for the exemption, PG&E may need to seek approval from the CPUC (i.e., Permit to Construct) taking as much as 18 months or more since the CPUC would need to conduct its own environmental evaluation (i.e., Negative Declaration or Environmental Impact Report).

When PG&E's transmission lines are designed for immediate or eventual operation at 200 kV or more, the Order requires PG&E to obtain a Certificate of Pubic Convenience and Necessity (CPCN) from the CPUC unless one of the following exemptions applies: the replacement of existing power line facilities or supporting structures with equivalent facilities or structures, the minor relocation of existing facilities, the conversion of existing overhead lines (greater than 200 kV) to underground, or the placing of new or additional conductors, insulators, or their accessories on or replacement of supporting structures already built. Obtaining a CPCN can take as much as 18 months or more if the CPUC needs to conduct its own CEQA review, while a CPCN with the environmental review already done takes only 4-6 months or less.

Regardless of the voltage of PG&E's interconnection facilities, PG&E recommends that the project proponent include those facilities in its project description and application to the lead agency performing CEQA review on the project. The lead agency must consider the environmental impacts of the interconnection electric facility, whether built by the developer with the intent to transfer ownership to PG&E or to be built and owned by PG&E directly. If the lead agency makes a finding of no significant unavoidable environmental impacts from construction of substation or under-200 kV power line facilities, PG&E may be able to file an Advice Letter with the CPUC and publish public notice of the proposed construction of the facilities. The noticing process takes about 90 days if no protests are filed, but should be done as early as

possible so that a protest does not delay construction. PG&E has no control over the time it takes the CPUC to respond when issues arise. If the protest is granted, PG&E may then need to apply for a formal permit to construct the project (i.e., Permit to Construct). Facilities built under this procedure must also be designed to include consideration of electric and magnetic field (EMF) mitigation measures pursuant to PG&E "EMF Design Guidelines for New Electrical Facilities: Transmission, Substation and Distribution". For projects that are not eligible for the Advice Letter/notice process but have already undergone CEQA review, PG&E would likely be able to file a "short-form" CPCN or PTC application, which takes about 4-6 months to process.

Please see Section III, in General Order 131-D. This document can be found in the CPUC's web page at:

http://www.cpuc.ca.gov/PUBLISHED/GENERAL_ORDER/589.htm

16.2 CPUC Section 851

Because PG&E is subject to the jurisdiction of the CPUC, it must also comply with Public Utilities Code Section 851. Among other things, this code provision requires PG&E to obtain CPUC approval of leases and licenses to use PG&E property, including rights-of-way granted to third parties for Interconnection Facilities. Obtaining CPUC approval for a Section 851 application can take several months, and requires compliance with the California Environmental Quality Act (CEQA). PG&E recommends that Section 851 issues be identified as early as possible so that the necessary application can be prepared and processed. As with GO 131-D compliance, PG&E recommends that the project proponent include any facilities that may be affected by Section 851 in the lead agency CEQA review so that the CPUC does not need to undertake additional CEQA review in connection with its Section 851 approval.

17. Cost and Construction Schedule Estimates

17.1 Interconnection Facilities Costs

Table 17-1 details the Interconnection Facilities costs to interconnect the Project.

Table 17-1 Interconnection Facilities Costs

Substation Work at Customer 's Substation	
Pre-parallel inspection, testing, SCADA/EMS setup, meters, etc.	$
Subtotal Substation Work	$
Transmission Work	
Construct gen-tie line	**Note 1**
Building & Land Work	
Land engineering support and permitting activities	$
Subtotal Building & Land Work	$

Total Interconnection Facilities Cost before ITCC	**$**

Note 1: This study assumes that the IC will engineer, procure, construct, own, and maintain its project facility including the generator tap line and their switchyard. Therefore the cost will be the IC's responsibility.

17.2 Network Upgrades Costs

Table 17-2 details the Network Upgrade costs to interconnect the Project.

Table 17-2 Network Upgrade Costs

Substation Work	
Share to replace 4 overstressed breakers	$
Subtotal Substation Work	**$**
Transmission Work	
Share of Network Upgrade costs shown in Section 12.	$
Subtotal Transmission Work	**$**
Communications Work	
SCADA/EMS, programming, testing, screening at TOC and Switching Center	$
Subtotal Communications Work	**$**
Total Network Upgrades Interconnection Cost	**$**

17.3 Construction Schedule Estimate

The non-binding construction schedule to engineer and construct the facilities based on the assumptions outlined in the Transition Cluster Phase 1 Study is approximately 24-36 months from the signing of the Large Generator Interconnection Agreement (LGIA). This is based upon the assumption that the environmental permitting obtained by the IC is adequate for permitting all PG&E activities.

Note that if CPUC may require PG&E to obtain a Permit to Construct (PTC) or a Certificate of Public Convenience and Necessity (CPCN) for the generator tie line and Network Upgrades work associated with the project. Hence, the facilities needed for the project interconnection could require an additional two years to three years to complete. The cost for obtaining any of this type of permitting is not included in the above estimates

18. Standby Power

The Phase 1 Study does not address any requirements for standby power that the Project may require. The IC should contact their PG&E Generation Interconnection Services representative regarding this service.

Note: The IC is urged to contact their PG&E Generation Interconnection Services representative promptly regarding standby service in order to ensure its availability for the Project's start up date.

California ISO
Your Link to Power

California Independent
System Operator Corporation

July 28, 2009

Chuck Hicklin
Engineering Manager
Mirant Delta, LLC
696 West Tenth Street
Pittsburg, CA 94565

Subject: Pittsburg Power Plant - Combined Cycle Units Transition Cluster Phase I Interconnection Study

Dear Chuck Hicklin:

Attached is the Transition Cluster Phase I Interconnection Study Report for the interconnection of the proposed Pittsburg Power Plant - Combined Cycle Units (Project) to the CAISO Controlled Grid. The CAISO and PG&E performed the Phase I Interconnection Study in accordance with the CAISO's LGIP tariff.

Results of the Phase I Interconnection Study establish the maximum cost responsibility for Network Upgrades assigned to the Project in accordance with the CAISO's LGIP tariff. The cost for Network Upgrades assigned to the Project is $ In addition, the study report provides a non-binding cost estimate of the Interconnection Facilities to interconnect the Project to the CAISO Controlled Grid.

Please review the report and prepare comments and questions for the Results Meeting. The Phase I Interconnection Study Results Meeting will be coordinated and scheduled within 60 calendar days following receipt of this Phase I Interconnection Study report.

Sincerely,

Edward T. Fishback

Edward T. Fishback
Project Manager

Attachment

via e-mail:

Chuck Hicklin (chuck.hicklin@mirant.com)
John Vardanian (jav7@pge.com)
Arcy Palomares (ADP5@pge.com)
Nisar Shah (Nshah@caiso.com)
CAISO Regional Transmission North (Regional Transmission – North@caiso.com)
Ed Fishback (efishback@caiso.com)

Appendix J

Allocation of Network Upgrades For Cost Estimates

Note: (1) Delivery Network Upgrades are shared based on the flow impact of each project on the Network Upgrade
(2) Reliability Network Upgrades are shared based on the MW size of each project on the Network Upgrade

Cost Allocation factors for Transition Cluster Projects in the Greater Bay Area

Upgrades	Type	Needed For	Group	Flow Impact on Network Upgrade (MW)	Cost Allocation Factor	
			Gen ID		Total Flow Impact (MW)	Cost Share
Reconductor WND MSTR - DELTAPMP 230 kV line with 1113 ACSS conductor	Delivery	Mitigation of Category B overload under several contingencies		6	390	1.4%
				2		0.6%
				30		7.7%
				90		22.9%
				39		9.9%
				109		27.9%
				86		22.1%
			T322GT1	29		7.3%
				0		0.1%
Reconductor C.COSTA -WND MSTR 230 kV line with 1113 ACSS conductor	Delivery	Mitigation of Category B overload under several contingencies		6	390	1.4%
				2		0.6%
				30		7.7%
				90		22.9%
				39		9.9%
				109		27.9%
				86		22.1%
			T322GT1	29		7.3%
				0		0.1%
Reconductor T275SWST -VACA-DIX 230 kV line #1 with 2-795 ACSS conductor	Delivery	Mitigation of Category B overload under several contingencies		3	449	0.8%
				64		14.2%
				245		54.6%
				72		16.0%
				57		12.7%
				8		1.8%
Reconductor T275SWST -VACA-DIX 230 kV line #2 with 2-795 ACSS conductor	Delivery	Mitigation of Category B overload under several contingencies		3	449	0.8%
				64		14.2%
				245		54.6%
				72		16.0%

				57		12.7%
				8		1.8%
Loop C.COSTA -ROSSTAP1 230 kV line into CC Sub	Delivery	Mitigation of Category B overloads of Contra Costa-Rosstap1 and Contra Costa-Contra Costa Sub lines under several contingencies		1	200	0.7%
				66		33.2%
				9		4.3%
				65		32.4%
				51		25.7%
				7		3.7%
Add new 230/115 kV transformer #3 at Sobrante substation	Delivery	Mitigation of Category B overload of existing transfrormer #1 and #2		44	62	70.6%
			T322GT1	18		29.4%
Reconductor USWP-RLF- TESLA D 230 kV line with 1113 ACSS conductor	Delivery	Mitigation of Normal and Category C overload under several contingencies		2	444	0.4%
				24		5.3%
				70		15.7%
				30		6.8%
				85		19.1%
				67		15.2%
			T322GT1	22		5.0%
				144		32.5%
Reconductor KELSO-USWP-RLF 230 kV line with 1113 ACSS conductor	Delivery	Mitigation of Normal and Category C overload under several contingencies		2	445	0.4%
				24		5.3%
				70		15.7%
				30		6.8%
				85		19.1%
				67		15.1%
			T322GT1	22		5.0%
				145		32.5%
Reconductor C.COSTA-BRENTWOD 230 kV line with 954 ACSS conductor	Delivery	Mitigation of Normal and Category C overload under several contingencies		2	301	0.6%
				24		7.9%
				70		23.3%
				30		10.0%
				85		28.3%
				67		22.4%
			T322GT1	22		7.4%
Reconductor ALTM MDW-TESLA D 230 kV line with 1113 ACSS conductor	Delivery	Mitigation of Category C overload under several contingencies		6	390	1.4%
				2		0.6%
				30		7.7%
				90		23.0%
				39		9.9%

				109		27.9%
				86		22.1%
			T322GT1	29		7.3%
Reconductor ALTM MDW-DELTAPMP 230 kV line with 1113 ACSS conductor	Delivery	Mitigation of Category C overload under several contingencies		6	390	1.4%
				2		0.6%
				30		7.7%
				90		22.9%
				39		9.9%
				109		27.9%
				86		22.1%
			T322GT1	29		7.3%
				0		0.1%
Reconductor MORAGA-CASTROVL 230 kV line with 795 ACSS conductor	Delivery	Mitigation of Category C overload under several contingencies		1	144	0.5%
				31		21.6%
				24		16.3%
				21		14.4%
				25		17.7%
				20		14.0%
			T322GT1	22		15.5%
Reconductor CASTROVL-NEWARK E 230 kV line with 795 ACSS conductor	Delivery	Mitigation of Category C overload under several contingencies		1	144	0.5%
				31		21.6%
				24		16.3%
				21		14.4%
				25		17.7%
				20		14.0%
			T322GT1	22		15.5%
Reconductor SOBRANTE-MORAGA 115 kV line with 2-477 ACSS conductor	Delivery	Mitigation of Category C overload under several contingencies		68	109	62.1%
				41		37.9%
Reconductor TRIMBLE-SJB E 115 kV line with 477 ACSS conductor or use SPS to drop generation	Delivery	Mitigation of Category C overload under several contingencies		123	123	100.0%
Construct two new switching stations in the North Dublin, Vineyard areas and loop several transmission lines as shown in the attached map in and out of these switching stations to relieve overloading of several	Delivery	Mitigation of Normal, Category B and Category C overloads of the following circuits under several contingencies. 1. LS PSTAS-NEWARK D 230 KV 2. LONETREE-USWP-JRW 230 KV 3. NDUBLIN-VINEYD_D 230 KV		9	1302	0.7%
				357		27.4%
				151		11.6%

transmission lines with limiting underground cables. Also upgrade overhead looped lines with 954 ACSS conductors		4. NEWARK-VINEYARD 230 KV 5. C.COSTA-LS PSTAS 230 KV 6. CAYETANO-USWP-JRW 230 KV 7. LS PSTAS-NEWARK 230 KV 8. CAYETANO-NDUBLIN 230 KV		438		33.6%
				347		26.6%

Upgrades	Type	Needed For	Group		Cost Allocation Factor	
			Gen ID	MW Size	Total MW	Cost Share
Install SPS	Reliability	Mitigation of Overloading of MARTNZ D-ALHAMTP2 115 kV line under several contingencies	T322GT1	611	611	100.0%
Install SPS	Reliability	Mitigation of Overloading of EASTSHRE-DUMBARTN 115 kV line under several contingencies	T322GT1	611	611	100.0%
Install SPS	Reliability	Mitigation of Overloading of Birds Landing-Contra Costa 230 kV line in the off-peak case under several contingencies		500	1190	42.0%
				60		5.0%
				630		52.9%
Install SPS	Reliability	Mitigation of Overloading of Birds Landing-Contra Costa Sub 230 kV line in the off-peak case under several contingencies		500	1190	42.0%
				60		5.0%
				630		52.9%